DAHLGREN DIVISION
NAVAL SURFACE WARFARE CENTER

DAHLGREN, VIRGINIA 22448-5100

NSWCDD/TR-03/81

APPLICATION OF THE LAMBERT PROBLEM TO INVERSE-SQUARE GRAVITY

BY ISAAC SOFAIR

STRATEGIC AND STRIKE SYSTEMS DEPARTMENT

December 2003

Approved for public release; distribution is unlimited

REPORT DOCUMENTATION PAGE

Form Approved
OBM No. 0704-0188

Public reporting burden for this collection of information is estimated to average 1 hour per response, including the time for reviewing instructions, search existing data sources, gathering and maintaining the data needed, and completing and reviewing the collection of information. Send comments regarding this burden or any other aspect of this collection of information, including suggestions for reducing this burden, to Washington Headquarters Services. Directorate for information Operations and Reports, 1215 Jefferson Davis Highway, Suite 1204, Arlington, VA 22202-4302, and to the Office of Management and Budget, Paperwork Reduction Project (0704-0188), Washington, DC 20503.

1. AGENCY USE ONLY *(Leave blank)*	2. REPORT DATE	3. REPORT TYPE AND DATES COVERED
	December 2003	

4. TITLE AND SUBTITLE

Application of the Lambert Problem to Inverse-Square Gravity

5. FUNDING NUMBERS

6. AUTHOR(s)

Isaac Sofair

7. PERFORMING ORGANIZATION NAMES(S) AND ADDRESS(ES)

Commander
Dahlgren Division, Naval Surface Warfare Center
Attn: K41
17320 Dahlgren Road
Dahlgren, VA 22448-5100

8. PERFORMING ORGANIZATION REPORT NUMBER

NSWCDD/TR-03/81

9. SPONSORING/MONITORING AGENCY NAME(S) AND ADDRESS(ES)

10. SPONSORING/MONITORING AGENCY REPORT NUMBER

11. SUPPLEMENTARY NOTES

12a. DISTRIBUTION/AVAILABILITY STATEMENT

Approved for public release; distribution is unlimited.

12b. DISTRIBUTION CODE

13. ABSTRACT *(Maximum 200 words)*

The Lambert Problem is to determine $\vec{\mathbf{v}}_c$, given $\vec{\mathbf{r}}_1$, $\vec{\mathbf{r}}_2$, and t_f. $\vec{\mathbf{v}}_c$ can be determined by employing an iterative procedure that utilizes the Newton-Raphson method. Three candidates for the iteration variable are considered. Equations for an elliptical trajectory in terms of each of the iteration variables are derived. Equations for hyperbolic and parabolic trajectories are then deduced, and it is demonstrated how the type of trajectory can be determined from the given parameters.

14. SUBJECT TERMS

Lambert, trajectory, correlated velocity, null-miss, time of flight, eccentric anomaly, reentry, target, release, impact, elliptical, hyperbolic, parabolic

15. NUMBER OF PAGES

114

16. PRICE CODE

17. SECURITY CLASSIFICATION OF REPORT	18. SECURITY CLASSIFICATION OF THIS PAGE	19. SECURITY CLASSIFICATION OF ABSTRACT	20. LIMITATION OF ABSTRACT
UNCLASSIFIED	UNCLASSIFIED	UNCLASSIFIED	UL

FOREWORD

The computations described in this report were performed in the Fire Control Formulation Branch (K41), Submarine-Launched Ballistic Missile (SLBM) Research and Analysis Division, Strategic and Strike Systems Department. This report is a compilation of all the important mathematical results and their derivations pertaining to the application of the Lambert Problem to inverse-square gravity. In particular, expressions for the correlated velocity and the null-miss vector in terms of known parameters are derived. The treatment is carried out in detail for elliptical, parabolic, and hyperbolic trajectories. The appendices include background material needed for the main report, alternative derivations of or expressions for some key variables, and a derivation of an expression for the rate of change of the null-miss vector.

It is intended that this report will serve as a comprehensive reference guide for all those who desire easy access to the Keplerian trajectory equations simulating the trajectory of a free-fall reentry vehicle in an inverse-square gravitational field.

The author would like to acknowledge the assistance of Davis Owen and William Davis in providing important feedback. He is also indebted to the Documentation Management System (DMS) group whose patient assistance in editing the report to conform with accepted format was crucial to its completion, and to the Technical Information Division for proofreading the report to ensure that the correct format was adhered to.

Approved by:

SHEILA D. YOUNG, Head
Strategic and Strike Systems Department

CONTENTS

Page

INTRODUCTION 1

TIME OF FLIGHT, CORRELATED VELOCITY, VELOCITY AT IMPACT 2

NULL-MISS DIRECTION 6

REENTRY FLIGHT PATH ANGLE, ANGLE OF ATTACK, AND YA 9

TIME OF FLIGHT IN TERMS OF $v_{c\theta}$ 11

TIME OF FLIGHT IN TERMS OF p 14

EQUATIONS FOR A HYPERBOLIC TRAJECTORY 15

EQUATIONS FOR A PARABOLIC TRAJECTORY 18

DETERMINATION OF TYPE OF TRAJECTORY 21

REFERENCES 23

BIBLIOGRAPHY 24

APPENDIXES

A - TIME OF FLIGHT BETWEEN TWO POINTS OF AN ELLIPTICAL TRAJECTORY A-1

B - AN ALTERNATIVE DERIVATION OF THE TIME OF FLIGHT B-1

C - EXPRESSIONS FOR f, g, $\dot{f}$, AND $\dot{g}$ IN TERMS OF $\vec{r}_1$, $\vec{r}_2$, AND p C-1

D - TWO DIFFERENT SETS OF INITIAL CONDITIONS D-1

E - DERIVATION AND COMPUTATION OF THE ELEMENTS ARISING IN THE *Q*-GUIDANCE MATRIX E-1

F - DERIVATION OF AN ANALYTIC EXPRESSION FOR $\left(\frac{\partial v_{c\theta}}{\partial \theta_R}\right)_{t_f}$ F-1

G - A GENERAL EXPRESSION FOR THE NULL-MISS DIRECTION G-1

H - DETERMINATION OF FOOTPRINT ACHIEVABILITY IN CONNECTION WITH TIME OF FLIGHT AND CANTING ANGLE H-1

I - COMPUTATION OF THE RATE OF CHANGE OF THE NULL-MISS VECTOR I-1

J - DERIVATION OF SECOND PARTIALS OF $v_{c\theta}$ AND v_{cr} J-1

K - DERIVATION OF $\frac{\partial}{\partial \theta_R}\frac{d\theta_R}{dt_f}$, $\frac{\partial}{\partial \beta_b}\frac{d\theta_R}{dt_f}$, $\frac{\partial}{\partial \theta_R}\frac{d\beta}{dt_f}$, AND $\frac{\partial}{\partial \beta_b}\frac{d\beta}{dt_f}$ K-1

DISTRIBUTION ..... (1)

ILLUSTRATIONS

Figure		Page
1	PARABOLA WHOSE FOCUS IS AT THE ORIGIN AND WHOSE VERTEX IS AT $(r_0,0)$	19
A-1	POSITION AND VELOCITY OF AN OBJECT UNDERGOING ELLIPTICAL MOTION WITH THE CENTER OF THE EARTH AS THE FOCUS OF THE ELLIPSE	A-3
A-2	ECCENTRIC ANOMALY VERSUS TRUE ANOMALY	A-4
G-1	REPRESENTATION OF A SMALL PERTURBATION IN THE TARGET VECTOR	G-4
H-1	CANTING ANGLE AS A MEASURE OF THE DEVIATION OF $\bar{\mathbf{r}}_2'$ FROM THE DOWNRANGE ARC, θ_R	H-3

INTRODUCTION

The correlated velocity, $\vec{\mathbf{v}}_c$, is that velocity which will carry a reentry body on a free-fall trajectory from the initial position (at release), $\vec{\mathbf{r}}_1$, to the target position, $\vec{\mathbf{r}}_2$, in a specified time, t_f. A guidance computer steers the missile in a direction which will cause the difference between the correlated velocity and the true velocity to approach zero. When this difference, which is called the velocity to be gained, is zero, the reentry body is released.

The Lambert Problem is to determine $\vec{\mathbf{v}}_c$, given $\vec{\mathbf{r}}_1$, $\vec{\mathbf{r}}_2$, and t_f. It is well-known that there is no closed-form expression for $\vec{\mathbf{v}}_c$ in terms of the given parameters. However, $\vec{\mathbf{v}}_c$ can be determined by employing an iterative procedure that utilizes the Newton-Raphson method.

In this report, three candidates for the iteration variable will be considered. They are:

(i) x^2, where $x = \dfrac{\Delta E}{2}$, ΔE being the change in the eccentric anomaly;

(ii) $v_{c\theta}$, which is the tangential component of $\vec{\mathbf{v}}_c$;

(iii) p, known as the semi-latus rectum, where $p = \dfrac{h^2}{\mu}$, $h = \left|\vec{\mathbf{r}}_1 \times \vec{\mathbf{v}}_c\right|$, and $\mu = GM$, G being the universal gravitational constant and M the mass of the earth.

It will be shown that x, $v_{c\theta}$, and p are related by the equations

$$p = \frac{r_1^{\,2} v_{c\theta}^2}{\mu} = \frac{2 r_1 r_2 \sin^2 \dfrac{\theta_R}{2}}{r_1 + r_2 - 2\sqrt{r_1 r_2}\,\cos x \cos \dfrac{\theta_R}{2}},$$

where θ_R is the range angle defined by

$$\theta_R = \arccos \frac{\vec{\mathbf{r}}_1 \cdot \vec{\mathbf{r}}_2}{r_1 r_2} = \arccos(\hat{\mathbf{r}}_1 \cdot \hat{\mathbf{r}}_2),\ 0 < \theta_R < \pi .$$

Using the above relations, we will derive the equations for an elliptical trajectory in terms of each of the above iteration variables. We will then deduce the equations for hyperbolic and parabolic trajectories, and demonstrate how the type of trajectory can be determined from the given parameters. Since we will be using results that are derived in Appendix A, it is advisable to read Appendix A before delving into the derivations that follow. Note that all the equations in this report are based on the hypothesis of an inverse-square gravitational field.

TIME OF FLIGHT, CORRELATED VELOCITY, VELOCITY AT IMPACT

It is shown in Appendix A that the time of flight for an elliptical trajectory is given by

$$t_{fe} = \frac{ab}{h}\left\{E_2 - E_1 - e\left(\sin E_2 - \sin E_1\right)\right\} = \sqrt{\frac{a^3}{\mu}}\left(\Delta E - 2e\sin\frac{\Delta E}{2}\cos\frac{E_1+E_2}{2}\right)$$
$$= 2\sqrt{\frac{a^3}{\mu}}\left\{x - e\sin x\cos\left(x+E_1\right)\right\},\ x = \frac{\Delta E}{2}. \tag{1}$$

Now

$$r_1 + r_2 = a\left(1 - e\cos E_1\right) + a\left(1 - e\cos E_2\right) = a\left\{2 - e\left(\cos E_1 + \cos E_2\right)\right\} = 2a\left\{1 - e\cos x\cos\left(x+E_1\right)\right\}$$
$$\Rightarrow e\cos\left(x+E_1\right) = \left(1 - \frac{r_1+r_2}{2a}\right)\sec x. \tag{2}$$

$$\cos\frac{\theta_R}{2} = \cos\frac{\theta_2-\theta_1}{2} = \cos\frac{\theta_1}{2}\cos\frac{\theta_2}{2} + \sin\frac{\theta_1}{2}\sin\frac{\theta_2}{2}$$
$$= \sqrt{\frac{a\left(1-e\right)}{r_1}}\cos\frac{E_1}{2}\sqrt{\frac{a\left(1-e\right)}{r_2}}\cos\frac{E_2}{2} + \sqrt{\frac{a\left(1+e\right)}{r_1}}\sin\frac{E_1}{2}\sqrt{\frac{a\left(1+e\right)}{r_2}}\sin\frac{E_2}{2}$$
$$= \frac{a}{\sqrt{r_1r_2}}\left\{\left(1-e\right)\cos\frac{E_1}{2}\cos\frac{E_2}{2} + \left(1+e\right)\sin\frac{E_1}{2}\sin\frac{E_2}{2}\right\}$$
$$= \frac{a}{\sqrt{r_1r_2}}\left\{\cos\frac{E_2-E_1}{2} - e\cos\frac{E_1+E_2}{2}\right\} = \frac{a}{\sqrt{r_1r_2}}\left\{\cos x - e\cos\left(x+E_1\right)\right\}.$$

$$\therefore\quad r_1 + r_2 - 2\sqrt{r_1r_2}\cos x\cos\frac{\theta_R}{2} = 2a\sin^2 x \quad \Rightarrow a = \frac{1}{2}\csc^2 x\left(r_1 + r_2 - 2\sqrt{r_1r_2}\cos x\cos\frac{\theta_R}{2}\right).$$

For the sake of brevity, put $S = r_1 + r_2 - 2\sqrt{r_1r_2}\cos x\cos\frac{\theta_R}{2}$, as this expression will be used frequently. Then

$$a = \frac{1}{2}S\csc^2 x. \tag{3}$$

Substituting Equations (2) and (3) into Equation (1), we obtain

$$
\begin{aligned}
t_{fe} &= \sqrt{\frac{S^3}{2\mu}}\csc^3 x\left\{x-\tan x\left(1-\frac{r_1+r_2}{S}\sin^2 x\right)\right\} \\
&= \sqrt{\frac{S}{2\mu}}\csc^2 x\left[\begin{array}{l}\left(r_1+r_2-2\sqrt{r_1r_2}\cos x\cos\frac{\theta_R}{2}\right)x\csc x \\ -\sec x\left\{\left(r_1+r_2\right)\cos^2 x-2\sqrt{r_1r_2}\cos x\cos\frac{\theta_R}{2}\right\}\end{array}\right] \\
&= \sqrt{\frac{S}{2\mu}}\csc^2 x\left\{\left(r_1+r_2\right)\left(x\csc x-\cos x\right)+2\sqrt{r_1r_2}\cos\frac{\theta_R}{2}\left(1-x\cot x\right)\right\}. \qquad (4)
\end{aligned}
$$

Differentiating Equation (4) with respect to x, we obtain

$$
\frac{\partial t_{fe}}{\partial x}=\frac{1}{\sqrt{2\mu S}}\csc x\left[\begin{array}{l}\left(r_1+r_2\right)^2\left\{3\csc^2 x\left(1-x\cot x\right)-1\right\} \\ +2r_1r_2\cos^2\frac{\theta_R}{2}\left\{6\csc^2 x-5-3x\cot x\left(2\csc^2 x-1\right)\right\} \\ +\sqrt{r_1r_2}\left(r_1+r_2\right)\cos\frac{\theta_R}{2}\left\{3x\csc x\left(4\csc^2 x-3\right)-\left(12\csc^2 x-1\right)\cos x\right\}\end{array}\right]. \qquad (5)
$$

The expressions (4) and (5) are analytic in the region $0 \le x < \pi$. x^2 is updated by the standard Newton-Raphson method as follows:

$$
x_{n+1}^2 = x_n^2 + \frac{t_f - t_{fe}\left(x_n\right)}{\left(\frac{\partial t_{fe}}{\partial x^2}\right)_{x=x_n}} = x_n^2 + \frac{2x_n\left\{t_f - t_{fe}\left(x_n\right)\right\}}{\left(\frac{\partial t_{fe}}{\partial x}\right)_{x=x_n}},
$$

where a good initial guess for x^2, according to Reference 1, is

$$
x_1^2 = t_f\left\{1.333\times10^{-4} + t_f\left(4.5\times10^{-7} - t_f\cdot 8.333\times10^{-11}\right)\right\}.
$$

The iteration continues until t_{fe} is infinitesimally close to t_f, at which point we obtain the correct value of x. Usually, four iterations are sufficient for convergence.

Proposition: The correlated velocity is given by

$$\vec{\mathbf{v}}_c = \frac{\vec{\mathbf{r}}_2 - f\vec{\mathbf{r}}_1}{g},$$

where

$$f = -\frac{r_2}{r_1} + 2\sqrt{\frac{r_2}{r_1}}\cos x \cos\frac{\theta_R}{2},\ g = \sqrt{\frac{2r_1r_2S}{\mu}}\cos\frac{\theta_R}{2}.$$

Proof: Since $\vec{\mathbf{r}}_1$, $\vec{\mathbf{r}}_2$, and $\vec{\mathbf{v}}_c$ are coplanar vectors, each of them may be written as a linear combination of the other two. Let $\vec{\mathbf{r}}_2 = f\vec{\mathbf{r}}_1 + g\vec{\mathbf{v}}_c$. Then

$$\left|\vec{\mathbf{r}}_2 \times \vec{\mathbf{v}}_c\right| = \left|\vec{\mathbf{r}}_2 \times \dot{\vec{\mathbf{r}}}_1\right| = f\left|\vec{\mathbf{r}}_1 \times \vec{\mathbf{v}}_c\right| = fh,\ \left|\vec{\mathbf{r}}_1 \times \vec{\mathbf{r}}_2\right| = g\left|\vec{\mathbf{r}}_1 \times \vec{\mathbf{v}}_c\right| = gh.$$

Let

$$\vec{\mathbf{r}}_1 = \begin{bmatrix} x_1 \\ y_1 \\ 0 \end{bmatrix},\ \dot{\vec{\mathbf{r}}}_1 = \begin{bmatrix} \dot{x}_1 \\ \dot{y}_1 \\ 0 \end{bmatrix},$$

with similar expressions for $\vec{\mathbf{r}}_2$ and $\dot{\vec{\mathbf{r}}}_2$. Then

$$x_1 = r_1\cos\theta_1 = a\left(\cos E_1 - e\right),\ y_1 = r_1\sin\theta_1 = b\sin E_1,$$

with similar expressions for x_2 and y_2. Using the fact that $\dot{E} = \frac{h}{br}$, we obtain

$$\dot{x}_1 = -a\dot{E}_1\sin E_1 = -\frac{ah}{br_1}\sin E_1,\ \dot{y}_1 = b\dot{E}_1\cos E_1 = \frac{h}{r_1}\cos E_1,$$

with similar expressions for $\dot{x}_2$ and $\dot{y}_2$. Hence,

$$\begin{aligned} f &= \frac{\left|\vec{\mathbf{r}}_2 \times \dot{\vec{\mathbf{r}}}_1\right|}{h} = \frac{x_2\dot{y}_1 - \dot{x}_1 y_2}{h} = \frac{a}{r_1}\left\{\cos E_1\left(\cos E_2 - e\right) + \sin E_1 \sin E_2\right\} \\ &= \frac{a}{r_1}\left\{\cos\left(E_2 - E_1\right) - e\cos E_1\right\} = \frac{a}{r_1}\left\{\cos\left(E_2 - E_1\right) - 1 + \frac{r_1}{a}\right\} \\ &= 1 - \frac{a}{r_1}\left\{1 - \cos\left(E_2 - E_1\right)\right\} = 1 - \frac{2a}{r_1}\sin^2 x = 1 - \frac{S}{r_1} = -\frac{r_2}{r_1} + 2\sqrt{\frac{r_2}{r_1}}\cos x \cos\frac{\theta_R}{2}, \end{aligned}$$

$$g = \frac{\left|\vec{\mathbf{r}}_1 \times \vec{\mathbf{r}}_2\right|}{h} = \frac{x_1 y_2 - x_2 y_1}{h} = \frac{ab}{h}\left\{\left(\cos E_1 - e\right)\sin E_2 - \left(\cos E_2 - e\right)\sin E_1\right\}$$
$$= \sqrt{\frac{a^3}{\mu}}\left\{\sin\left(E_2 - E_1\right) - e\left(\sin E_2 - \sin E_1\right)\right\} = 2\sqrt{\frac{a^3}{\mu}}\sin x\left\{\cos x - e\cos\left(x + E_1\right)\right\}$$
$$= 2\sqrt{\frac{a^3}{\mu}}\sin x\frac{\sqrt{r_1 r_2}}{a}\cos\frac{\theta_R}{2} = 2\sqrt{\frac{a r_1 r_2}{\mu}}\sin x\cos\frac{\theta_R}{2} = \sqrt{\frac{2 r_1 r_2 S}{\mu}}\cos\frac{\theta_R}{2}.$$

The magnitude of the correlated velocity is given by

$$v_c = \sqrt{\mu\left(\frac{2}{r_1} - \frac{1}{a}\right)} = \sqrt{\mu\left(\frac{2}{r_1} - \frac{1}{|a|}\right)},$$

where a is given by Equation (3).

Proposition: The velocity at impact is given by

$$\vec{\mathbf{v}}_t = \dot{f}\vec{\mathbf{r}}_1 + \dot{g}\vec{\mathbf{v}}_c,$$

where

$$\dot{f} = -\frac{\cos x}{r_1 r_2}\sqrt{2\mu S},\ \dot{g} = -\frac{r_1}{r_2} + 2\sqrt{\frac{r_1}{r_2}}\cos x\cos\frac{\theta_R}{2}.$$

First proof:

$$\dot{f} = \frac{\left|\vec{\mathbf{v}}_t \times \vec{\mathbf{v}}_c\right|}{h} = \frac{\left|\dot{\vec{\mathbf{r}}}_2 \times \dot{\vec{\mathbf{r}}}_1\right|}{h} = \frac{\dot{x}_2\dot{y}_1 - \dot{x}_1\dot{y}_2}{h} = -\frac{ah}{b r_1 r_2}\sin\left(E_2 - E_1\right) = -\frac{\sqrt{\mu a}}{r_1 r_2}\sin\left(2x\right) = -\frac{\cos x}{r_1 r_2}\sqrt{2\mu S},$$
$$\dot{g} = \frac{\left|\vec{\mathbf{r}}_1 \times \vec{\mathbf{v}}_t\right|}{h} = \frac{\left|\vec{\mathbf{r}}_1 \times \dot{\vec{\mathbf{r}}}_2\right|}{h} = 1 - \frac{2a}{r_2}\sin^2 x = 1 - \frac{S}{r_2} = -\frac{r_1}{r_2} + 2\sqrt{\frac{r_1}{r_2}}\cos x\cos\frac{\theta_R}{2}.$$

Second proof: By considering the reverse trajectory, we have

$$\vec{\mathbf{v}}_t = -\frac{\vec{\mathbf{r}}_1 - f'\vec{\mathbf{r}}_2}{g'},$$

where

$$f' = 1 - \frac{S}{r_2},\ g' = \sqrt{\frac{2 r_1 r_2 S}{\mu}}\cos\frac{\theta_R}{2} = g.$$

Now

$$\vec{\mathbf{v}}_t = \dot{f}\vec{\mathbf{r}}_1 + \dot{g}\vec{\mathbf{v}}_c = \dot{f}\vec{\mathbf{r}}_1 + \frac{\dot{g}}{g}\left(\vec{\mathbf{r}}_2 - f\vec{\mathbf{r}}_1\right) = \left(\dot{f} - \frac{f\dot{g}}{g}\right)\vec{\mathbf{r}}_1 + \frac{\dot{g}}{g}\vec{\mathbf{r}}_2 \quad \Rightarrow \dot{f} - \frac{f\dot{g}}{g} = -\frac{1}{g'},\ \frac{\dot{g}}{g} = \frac{f'}{g'}.$$

The second equation yields immediately $\dot{g} = f'$. The first equation yields

$$\dot{f} = \frac{f\dot{g} - 1}{g} = \frac{ff' - 1}{g} = \frac{1}{g}\left\{\left(1 - \frac{S}{r_1}\right)\left(1 - \frac{S}{r_2}\right) - 1\right\} = \frac{S}{gr_1r_2}\left(S - r_1 - r_2\right) = -\frac{2S}{g\sqrt{r_1r_2}}\cos x \cos\frac{\theta_R}{2}$$
$$= -\frac{\cos x}{r_1r_2}\sqrt{2\mu S}.$$

Third proof: The expressions for $\dot{f}$ and $\dot{g}$ may also be obtained from

$$\dot{f} = \frac{\partial f}{\partial E_2}\dot{E}_2,\ \dot{g} = \frac{\partial g}{\partial E_2}\dot{E}_2,$$

where

$$f = 1 - \frac{2a}{r_1}\sin^2\frac{E_2 - E_1}{2},\ g = \sqrt{\frac{a^3}{\mu}}\left\{\sin\left(E_2 - E_1\right) - e\left(\sin E_2 - \sin E_1\right)\right\},\ \dot{E}_2 = \frac{1}{r_2}\sqrt{\frac{\mu}{a}}.$$

The magnitude of the velocity at impact is given by

$$v_t = \sqrt{\mu\left(\frac{2}{r_2} - \frac{1}{a}\right)} = \sqrt{\mu\left(\frac{2}{r_2} - \frac{1}{|a|}\right)}.$$

NULL-MISS DIRECTION

The null-miss direction is the direction along which a velocity error, $\Delta\vec{\mathbf{v}}_c$, at release can exist and the reentry body will still hit a target on a rotating earth. It is assumed that the atmosphere is moving with the earth and no winds exist. The null-miss direction is defined by the unit vector $\hat{\mathbf{P}}_{DK}$, where

$$\hat{\mathbf{P}}_{DK} = \frac{-\dfrac{\Delta\vec{\mathbf{v}}_c}{\Delta t_f}}{\left|\dfrac{\Delta\vec{\mathbf{v}}_c}{\Delta t_f}\right|} = \frac{\Delta\vec{\mathbf{v}}_c}{\left|\Delta\vec{\mathbf{v}}_c\right|},\ \Delta t_f = -1.$$

Since $t_{fe} = t_{fe}(x, \theta_R)$, we have

$$\Delta t_f = \frac{\partial t_{fe}}{\partial x}\Delta x + \frac{\partial t_{fe}}{\partial \theta_R}\Delta\theta_R,$$

where

$$\Delta\theta_R = \vec{\mathbf{\Omega}} \cdot \hat{\mathbf{n}}\Delta t_f = -\vec{\mathbf{\Omega}} \cdot \hat{\mathbf{n}},\ \hat{\mathbf{n}} = \frac{\vec{\mathbf{r}}_1 \times \vec{\mathbf{r}}_2}{\left|\vec{\mathbf{r}}_1 \times \vec{\mathbf{r}}_2\right|} = \hat{\mathbf{r}}_1 \times \hat{\mathbf{r}}_2 \csc\theta_R,$$

and $\vec{\mathbf{\Omega}}$ is the vector representing the earth rotation around itself.

$$\therefore \quad \Delta x = \frac{\Delta t_f - \dfrac{\partial t_{fe}}{\partial \theta_R}\Delta\theta_R}{\dfrac{\partial t_{fe}}{\partial x}} = -\frac{1 + \dfrac{\partial t_{fe}}{\partial \theta_R}\Delta\theta_R}{\dfrac{\partial t_{fe}}{\partial x}},$$

where $\dfrac{\partial t_{fe}}{\partial x}$ is given by Equation (5), and

$$\frac{\partial t_{fe}}{\partial \theta_R} = -\frac{1}{2}\sqrt{\frac{r_1 r_2}{2\mu S}}\sin\frac{\theta_R}{2}\begin{bmatrix} (r_1 + r_2)\left\{3\csc^2 x\left(1 - x\cot x\right) - 1\right\} \\ -6\sqrt{r_1 r_2}\cos\dfrac{\theta_R}{2}\csc x\cot x\left(1 - x\cot x\right) \end{bmatrix}. \tag{6}$$

Similarly, by taking differentials of both sides of the equation $\vec{\mathbf{v}}_c = \dfrac{\vec{\mathbf{r}}_2 - f\vec{\mathbf{r}}_1}{g}$, we obtain

$$\Delta\vec{\mathbf{v}}_c = \frac{\Delta\vec{\mathbf{r}}_2}{g} - \frac{\Delta f}{g}\vec{\mathbf{r}}_1 - \frac{\Delta g}{g}\vec{\mathbf{v}}_c,$$

where

$$\Delta\vec{\mathbf{r}}_2 = \vec{\mathbf{\Omega}} \times \vec{\mathbf{r}}_2\Delta t_f = -\vec{\mathbf{\Omega}} \times \vec{\mathbf{r}}_2,\ \Delta f = \frac{\partial f}{\partial x}\Delta x + \frac{\partial f}{\partial \theta_R}\Delta\theta_R,\ \Delta g = \frac{\partial g}{\partial x}\Delta x + \frac{\partial g}{\partial \theta_R}\Delta\theta_R.$$

Now

$$\frac{\partial f}{\partial x} = -2\sqrt{\frac{r_2}{r_1}}\sin x\cos\frac{\theta_R}{2},\ \frac{\partial f}{\partial \theta_R} = -\sqrt{\frac{r_2}{r_1}}\cos x\sin\frac{\theta_R}{2},$$

$$\frac{\partial g}{\partial x} = \sqrt{\frac{2}{\mu S}}r_1 r_2\sin x\cos^2\frac{\theta_R}{2},\ \frac{\partial g}{\partial \theta_R} = \sqrt{\frac{r_1 r_2}{2\mu S}}\sin\frac{\theta_R}{2}\left(3\sqrt{r_1 r_2}\cos x\cos\frac{\theta_R}{2} - r_1 - r_2\right).$$

Hence,

$$\Delta f = -2\sqrt{\frac{r_2}{r_1}}\left(\sin x\cos\frac{\theta_R}{2}\Delta x + \cos x\sin\frac{\theta_R}{2}\frac{\Delta\theta_R}{2}\right),$$

$$\Delta g = \sqrt{\frac{2}{\mu S}}r_1 r_2 \sin x\cos^2\frac{\theta_R}{2}\Delta x + \sqrt{\frac{r_1 r_2}{2\mu S}}\sin\frac{\theta_R}{2}\left(3\sqrt{r_1 r_2}\cos x\cos\frac{\theta_R}{2} - r_1 - r_2\right)\Delta\theta_R$$

$$\Rightarrow \frac{\Delta g}{g} = \frac{\sqrt{\frac{2}{\mu S}}r_1 r_2 \sin x\cos^2\frac{\theta_R}{2}\Delta x + \sqrt{\frac{r_1 r_2}{2\mu S}}\sin\frac{\theta_R}{2}\left(3\sqrt{r_1 r_2}\cos x\cos\frac{\theta_R}{2} - r_1 - r_2\right)\Delta\theta_R}{\sqrt{\frac{2r_1 r_2 S}{\mu}}\cos\frac{\theta_R}{2}}$$

$$= \frac{\sqrt{r_1 r_2}}{S}\sin x\cos\frac{\theta_R}{2}\Delta x + \frac{1}{2S}\tan\frac{\theta_R}{2}\left(3\sqrt{r_1 r_2}\cos x\cos\frac{\theta_R}{2} - r_1 - r_2\right)\Delta\theta_R$$

$$= \frac{\sqrt{r_1 r_2}}{S}\left(\sin x\cos\frac{\theta_R}{2}\Delta x + \cos x\sin\frac{\theta_R}{2}\frac{\Delta\theta_R}{2}\right) - \tan\frac{\theta_R}{2}\frac{\Delta\theta_R}{2}.$$

Putting $z = \sin x\cos\frac{\theta_R}{2}\Delta x + \cos x\sin\frac{\theta_R}{2}\frac{\Delta\theta_R}{2}$, we obtain

$$\Delta\vec{\mathbf{v}}_c = -\frac{\vec{\mathbf{\Omega}}\times\vec{\mathbf{r}}_2}{g} + \frac{2z}{g}\sqrt{\frac{r_2}{r_1}}\vec{\mathbf{r}}_1 + \left(\tan\frac{\theta_R}{2}\frac{\Delta\theta_R}{2} - \frac{\sqrt{r_1 r_2}}{S}z\right)\vec{\mathbf{v}}_c. \tag{7}$$

Equation (7) may be written in terms of $\hat{\mathbf{r}}_1$, $\hat{\boldsymbol{\theta}}_1$, and $\hat{\mathbf{n}}$ which form a right-handed orthogonal coordinate system. We have

$$\Delta\vec{\mathbf{v}}_c = \left(\Delta\vec{\mathbf{v}}_c\cdot\hat{\mathbf{r}}_1\right)\hat{\mathbf{r}}_1 + \left(\Delta\vec{\mathbf{v}}_c\cdot\hat{\boldsymbol{\theta}}_1\right)\hat{\boldsymbol{\theta}}_1 + \left(\Delta\vec{\mathbf{v}}_c\cdot\hat{\mathbf{n}}\right)\hat{\mathbf{n}}.$$

Now

$$\vec{\mathbf{\Omega}}\times\vec{\mathbf{r}}_2\cdot\hat{\mathbf{r}}_1 = \vec{\mathbf{\Omega}}\cdot\vec{\mathbf{r}}_2\times\hat{\mathbf{r}}_1 = -r_2\vec{\mathbf{\Omega}}\cdot\hat{\mathbf{r}}_1\times\hat{\mathbf{r}}_2 = -r_2\vec{\mathbf{\Omega}}\cdot\hat{\mathbf{n}}\sin\theta_R = r_2\sin\theta_R\Delta\theta_R,$$

$$\vec{\mathbf{\Omega}}\times\vec{\mathbf{r}}_2\cdot\hat{\boldsymbol{\theta}}_1 = \vec{\mathbf{\Omega}}\cdot\vec{\mathbf{r}}_2\times\hat{\boldsymbol{\theta}}_1 = \vec{\mathbf{\Omega}}\cdot\vec{\mathbf{r}}_2\times\frac{\hat{\mathbf{r}}_2 - \hat{\mathbf{r}}_1\cos\theta_R}{\sin\theta_R} = r_2\vec{\mathbf{\Omega}}\cdot\hat{\mathbf{r}}_1\times\hat{\mathbf{r}}_2\cot\theta_R = r_2\vec{\mathbf{\Omega}}\cdot\hat{\mathbf{n}}\cos\theta_R = -r_2\cos\theta_R\Delta\theta_R.$$

$$\begin{aligned}\therefore\quad \vec{\mathbf{\Omega}}\times\vec{\mathbf{r}}_2 &= \left(\vec{\mathbf{\Omega}}\times\vec{\mathbf{r}}_2\cdot\hat{\mathbf{r}}_1\right)\hat{\mathbf{r}}_1 + \left(\vec{\mathbf{\Omega}}\times\vec{\mathbf{r}}_2\cdot\hat{\boldsymbol{\theta}}_1\right)\hat{\boldsymbol{\theta}}_1 + \left(\vec{\mathbf{\Omega}}\times\vec{\mathbf{r}}_2\cdot\hat{\mathbf{n}}\right)\hat{\mathbf{n}}\\ &= r_2\sin\theta_R\Delta\theta_R\hat{\mathbf{r}}_1 - r_2\cos\theta_R\Delta\theta_R\hat{\boldsymbol{\theta}}_1 + \left(\vec{\mathbf{\Omega}}\times\vec{\mathbf{r}}_2\cdot\hat{\mathbf{n}}\right)\hat{\mathbf{n}}.\end{aligned}$$

$$
\begin{aligned}
\vec{\mathbf{v}}_c &= \frac{\vec{\mathbf{r}}_2 - f\vec{\mathbf{r}}_1}{g} = \frac{r_2\left(\hat{\mathbf{r}}_1\cos\theta_R + \hat{\boldsymbol{\theta}}_1\sin\theta_R\right) - fr_1\hat{\mathbf{r}}_1}{g} = \frac{\left(r_2\cos\theta_R - fr_1\right)\hat{\mathbf{r}}_1 + r_2\sin\theta_R\hat{\boldsymbol{\theta}}_1}{g} \\
&= \frac{\left(r_2\cos\theta_R + r_2 - 2\sqrt{r_1r_2}\cos x\cos\frac{\theta_R}{2}\right)\hat{\mathbf{r}}_1 + r_2\sin\theta_R\hat{\boldsymbol{\theta}}_1}{g} \\
&= \frac{\left(2r_2\cos^2\frac{\theta_R}{2} - 2\sqrt{r_1r_2}\cos x\cos\frac{\theta_R}{2}\right)\hat{\mathbf{r}}_1 + 2r_2\sin\frac{\theta_R}{2}\cos\frac{\theta_R}{2}\hat{\boldsymbol{\theta}}_1}{\sqrt{\frac{2r_1r_2S}{\mu}}\cos\frac{\theta_R}{2}} \\
&= \sqrt{\frac{2\mu}{S}}\left(\sqrt{\frac{r_2}{r_1}}\cos\frac{\theta_R}{2} - \cos x\right)\hat{\mathbf{r}}_1 + \sqrt{\frac{2\mu r_2}{r_1S}}\sin\frac{\theta_R}{2}\hat{\boldsymbol{\theta}}_1.
\end{aligned}
$$

Substituting the expressions for $\vec{\boldsymbol{\Omega}}\times\vec{\mathbf{r}}_2$ and $\vec{\mathbf{v}}_c$ into Equation (7), we obtain

$$
\begin{aligned}
\Delta\vec{\mathbf{v}}_c &= -\frac{1}{g}\left\{r_2\sin\theta_R\Delta\theta_R\hat{\mathbf{r}}_1 - r_2\cos\theta_R\Delta\theta_R\hat{\boldsymbol{\theta}}_1 + \left(\vec{\boldsymbol{\Omega}}\times\vec{\mathbf{r}}_2\cdot\hat{\mathbf{n}}\right)\hat{\mathbf{n}}\right\} + \frac{2z}{g}\sqrt{r_1r_2}\hat{\mathbf{r}}_1 \\
&\quad + \left(\tan\frac{\theta_R}{2}\frac{\Delta\theta_R}{2} - \frac{\sqrt{r_1r_2}}{S}z\right)\left\{\sqrt{\frac{2\mu}{S}}\left(\sqrt{\frac{r_2}{r_1}}\cos\frac{\theta_R}{2} - \cos x\right)\hat{\mathbf{r}}_1 + \sqrt{\frac{2\mu r_2}{r_1S}}\sin\frac{\theta_R}{2}\hat{\boldsymbol{\theta}}_1\right\} \\
&= \begin{bmatrix} \sqrt{\frac{2\mu}{S^3}}\sin x\left(r_1 + r_2\sin^2\frac{\theta_R}{2} - \sqrt{r_1r_2}\cos x\cos\frac{\theta_R}{2}\right)\Delta x \\ -\sqrt{\frac{\mu r_2}{2r_1S^3}}\sin\frac{\theta_R}{2}\left(r_1\sin^2 x + r_2 - \sqrt{r_1r_2}\cos x\cos\frac{\theta_R}{2}\right)\Delta\theta_R \end{bmatrix}\hat{\mathbf{r}}_1 \\
&\quad + \left[-\sqrt{\frac{\mu}{2S^3}}r_2\sin x\sin\theta_R\Delta x + \sqrt{\frac{\mu r_2}{2r_1S^3}}\left\{\left(r_1 + r_2\right)\cos\frac{\theta_R}{2} - \sqrt{r_1r_2}\cos x\left(1 + \cos^2\frac{\theta_R}{2}\right)\right\}\Delta\theta_R\right]\hat{\boldsymbol{\theta}}_1 \\
&\quad - \frac{1}{g}\left(\vec{\boldsymbol{\Omega}}\times\vec{\mathbf{r}}_2\cdot\hat{\mathbf{n}}\right)\hat{\mathbf{n}}.
\end{aligned}
\tag{8}
$$

REENTRY FLIGHT PATH ANGLE, ANGLE OF ATTACK, AND YA

These three angles are computed at reentry, i.e., at 400,000 ft. Let $\vec{\mathbf{r}}_2'$ be the position vector corresponding to that altitude. Then

$$E_2' = 2\pi - \arccos\frac{1-\frac{r_2'}{a}}{e},\ x' = \frac{1}{2}\left(E_2' - E_1\right),\ t_{fe}' = \frac{ab}{h}\left\{2x' - e\left(\sin E_2' - \sin E_1\right)\right\},$$

$$f' = 1 - \frac{2a}{r_1}\sin^2 x',\ g' = \frac{ab}{h}\left\{\sin\left(2x'\right) - e\left(\sin E_2' - \sin E_1\right)\right\},\ \vec{\mathbf{r}}_2' = f'\vec{\mathbf{r}}_1 + g'\vec{\mathbf{v}}_c,$$

$$\dot{f}' = -\frac{ah}{br_1r_2'}\sin\left(2x'\right),\ \dot{g}' = 1 - \frac{2a}{r_2'}\sin^2 x',\ \vec{\mathbf{v}}_t' = \dot{f}'\vec{\mathbf{r}}_1 + \dot{g}'\vec{\mathbf{v}}_c,\ \theta_R' = \arccos\left(\hat{\mathbf{r}}_1 \cdot \hat{\mathbf{r}}_2'\right).$$

The velocity at reentry takes into account the earth rotation. It is given by

$$\vec{\mathbf{v}}_r' = \vec{\mathbf{v}}_t' - \vec{\mathbf{\Omega}} \times \vec{\mathbf{r}}_2'.$$

The reentry flight path angle is the angle between $\vec{\mathbf{v}}_r'$ and the plane normal to the instantaneous local geodetic vertical, $\hat{\mathbf{h}}$ (Reference 2). It is given by

$$\gamma_r = \frac{\pi}{2} - \arccos\left(\hat{\mathbf{h}} \cdot \hat{\mathbf{v}}_r'\right).$$

The null-miss angle of attack is the angle between $\hat{\mathbf{P}}_{DK}$ at release and $\vec{\mathbf{v}}_r'$. It is given by

$$\alpha = \arccos\left(\hat{\mathbf{P}}_{DK} \cdot \hat{\mathbf{v}}_r'\right).$$

If $\vec{\mathbf{v}}_r$ is the analog of $\vec{\mathbf{v}}_r'$ at impact, then

$$\vec{\mathbf{v}}_r = \vec{\mathbf{v}}_t - \vec{\mathbf{\Omega}} \times \vec{\mathbf{r}}_2$$

and the zero-angle of attack is given by

$$\alpha_0 = \arccos\left(\hat{\mathbf{v}}_r \cdot \hat{\mathbf{v}}_r'\right).$$

Let $\left(\hat{\mathbf{n}}', \hat{\mathbf{u}}, \hat{\mathbf{v}}_r'\right)$ be a right-handed orthogonal reference frame, where

$$\hat{\mathbf{n}}' = \frac{\vec{\mathbf{r}}_2' \times \vec{\mathbf{v}}_r'}{\left|\vec{\mathbf{r}}_2' \times \vec{\mathbf{v}}_r'\right|};$$

then $\hat{\mathbf{u}} = \hat{\mathbf{v}}_r' \times \hat{\mathbf{n}}'$. Let YA be the angle between $\hat{\mathbf{u}}$ and the projection of $\hat{\mathbf{P}}_{DK}$ on the $\hat{\mathbf{n}}'\hat{\mathbf{u}}$ plane, to be measured clockwise from $\hat{\mathbf{u}}$ in the $\hat{\mathbf{n}}'\hat{\mathbf{u}}$ plane. It can easily be shown that

$$YA = \arctan\frac{\hat{\mathbf{P}}_{DK} \cdot \hat{\mathbf{n}}'}{\hat{\mathbf{P}}_{DK} \cdot \hat{\mathbf{u}}}.$$

TIME OF FLIGHT IN TERMS OF $v_{c\theta}$

From the expression for $\bar{\mathbf{v}}_c$ on page 9, we have

$$v_{c\theta} = \sqrt{\frac{2\mu r_2}{r_1 S}} \sin\frac{\theta_R}{2}$$

$$\Rightarrow S = r_1 + r_2 - 2\sqrt{r_1 r_2}\cos x \cos\frac{\theta_R}{2} = \frac{2\mu r_2 \sin^2\frac{\theta_R}{2}}{r_1 v_{c\theta}^2} \tag{9}$$

$$\Rightarrow \cos x = \frac{r_1\left(r_1 + r_2\right)v_{c\theta}^2 - 2\mu r_2 \sin^2\frac{\theta_R}{2}}{2r_1\sqrt{r_1 r_2}\, v_{c\theta}^2 \cos\frac{\theta_R}{2}} \tag{10}$$

$$\Rightarrow \sin x = \sqrt{1-\cos^2 x} = \frac{\sqrt{4r_1^3 r_2 v_{c\theta}^4 \cos^2\frac{\theta_R}{2} - \left\{r_1\left(r_1+r_2\right)v_{c\theta}^2 - 2\mu r_2 \sin^2\frac{\theta_R}{2}\right\}^2}}{2r_1\sqrt{r_1 r_2}\, v_{c\theta}^2 \cos\frac{\theta_R}{2}}$$

$$= \frac{\sqrt{-r_1^2 v_{c\theta}^4\left(r_1^2 + r_2^2 - 2r_1 r_2\cos\theta_R\right) + 4\mu r_1 r_2\left(r_1+r_2\right)v_{c\theta}^2 \sin^2\frac{\theta_R}{2} - 4\mu^2 r_2^2 \sin^4\frac{\theta_R}{2}}}{2r_1\sqrt{r_1 r_2}\, v_{c\theta}^2 \cos\frac{\theta_R}{2}}$$

$$= \frac{\sqrt{\left\{2\mu r_2 \sin^2\frac{\theta_R}{2} - r_1 v_{c\theta}^2\left(r_1 + r_2 - 2\sqrt{r_1 r_2}\cos\frac{\theta_R}{2}\right)\right\}\left\{r_1 v_{c\theta}^2\left(r_1 + r_2 + 2\sqrt{r_1 r_2}\cos\frac{\theta_R}{2}\right) - 2\mu r_2 \sin^2\frac{\theta_R}{2}\right\}}}{2r_1\sqrt{r_1 r_2}\, v_{c\theta}^2 \cos\frac{\theta_R}{2}}.$$

Put

$$F = \left\{2\mu r_2 \sin^2\frac{\theta_R}{2} - r_1 v_{c\theta}^2\left(r_1 + r_2 - 2\sqrt{r_1 r_2}\cos\frac{\theta_R}{2}\right)\right\}\left\{r_1 v_{c\theta}^2\left(r_1 + r_2 + 2\sqrt{r_1 r_2}\cos\frac{\theta_R}{2}\right) - 2\mu r_2 \sin^2\frac{\theta_R}{2}\right\}.$$

Then

$$\sin x = \frac{\sqrt{F}}{2r_1\sqrt{r_1 r_2}\, v_{c\theta}^2 \cos\frac{\theta_R}{2}}, \tag{11}$$

$$\tan x = \frac{\sqrt{F}}{r_1\left(r_1+r_2\right)v_{c\theta}^2 - 2\mu r_2 \sin^2\frac{\theta_R}{2}} \quad \Rightarrow x = \arctan\frac{\sqrt{F}}{r_1\left(r_1+r_2\right)v_{c\theta}^2 - 2\mu r_2 \sin^2\frac{\theta_R}{2}}. \tag{12}$$

Substituting Equations (9), (10), (11), and (12) into Equation (4), we obtain

$$t_{fe} = \frac{r_1 r_2 v_{c\theta}\sin\theta_R}{F}\left\{\begin{array}{l} 2\mu r_2\left(r_1+r_2\right)\sin^2\frac{\theta_R}{2} - r_1 v_{c\theta}^2\left(r_1^2+r_2^2-2r_1r_2\cos\theta_R\right) \\ +\frac{2\mu r_1^2 r_2^2 v_{c\theta}^2 \sin^2\theta_R}{\sqrt{F}}\arctan\frac{\sqrt{F}}{r_1\left(r_1+r_2\right)v_{c\theta}^2 - 2\mu r_2\sin^2\frac{\theta_R}{2}} \end{array}\right\}. \tag{13}$$

Differentiating Equation (13) with respect to $v_{c\theta}$, we obtain

$$\begin{aligned} \frac{\partial t_{fe}}{\partial v_{c\theta}} = \frac{1}{F}&\left\{r_1^2 v_{c\theta}^4\left(r_1^2+r_2^2-2r_1r_2\cos\theta_R\right) - 4\mu^2 r_2^2\sin^4\frac{\theta_R}{2}\right\}. \\ &\left\{\frac{t_{fe}}{v_{c\theta}} + \frac{4\mu r_1^3 r_2^3 v_{c\theta}^2\sin^3\theta_R}{F\sqrt{F}}\arctan\frac{\sqrt{F}}{r_1\left(r_1+r_2\right)v_{c\theta}^2 - 2\mu r_2\sin^2\frac{\theta_R}{2}}\right\} \\ &-\frac{16\mu^2 r_1^3 r_2^4 v_{c\theta}^2\sin^3\theta_R\sin^2\frac{\theta_R}{2}}{F^2}. \end{aligned} \tag{14}$$

Note that

$$v_{c\theta}^2 = \frac{2\mu r_2\sin^2\frac{\theta_R}{2}}{r_1 S} = \frac{2\mu r_2\sin^2\frac{\theta_R}{2}}{r_1\left(r_1+r_2-2\sqrt{r_1r_2}\cos x\cos\frac{\theta_R}{2}\right)}$$

$$\Rightarrow \frac{2\mu r_2\sin^2\frac{\theta_R}{2}}{r_1\left(r_1+r_2+2\sqrt{r_1r_2}\cos\frac{\theta_R}{2}\right)} < v_{c\theta}^2 < \frac{2\mu r_2\sin^2\frac{\theta_R}{2}}{r_1\left(r_1+r_2-2\sqrt{r_1r_2}\cos\frac{\theta_R}{2}\right)}.$$

Observing the expression for F, we see immediately that the above inequality implies that F is positive for elliptical trajectories.

$v_{c\theta}$ is updated by the Newton-Raphson method, where a good initial estimate, according to Reference 3, is

$$v_{c\theta} = \sqrt{\frac{2\mu r_2 \sin^2 \frac{\theta_R}{2}}{r_1\left(r_1 + r_2 + 2\sqrt{r_1 r_2}\cos\frac{\theta_R}{2}\right)}} + \frac{r_2 \sin\theta_R}{t_f}$$

which, by the above inequality, holds provided that

$$t_f > \frac{1}{2}\sqrt{\frac{r_1^2 + r_2^2 - 2r_1 r_2 \cos\theta_R}{2\mu}}\left(\sqrt{r_1 + r_2 - 2\sqrt{r_1 r_2}\cos\frac{\theta_R}{2}} + \sqrt{r_1 + r_2 + 2\sqrt{r_1 r_2}\cos\frac{\theta_R}{2}}\right).$$

v_{cr}, the radial component of $\vec{\mathbf{v}}_c$, may be expressed in terms of $v_{c\theta}$. From the expression for $\vec{\mathbf{v}}_c$ on page 9, we have

$$v_{cr} = \sqrt{\frac{2\mu}{S}}\left(\sqrt{\frac{r_2}{r_1}}\cos\frac{\theta_R}{2} - \cos x\right).$$

Substituting Equations (9) and (10) into the above expression, we obtain

$$v_{cr} = \left(\cot\theta_R - \frac{r_1}{r_2}\csc\theta_R\right)v_{c\theta} + \frac{\mu}{r_1 v_{c\theta}}\tan\frac{\theta_R}{2}.$$

Hence, $\vec{\mathbf{v}}_c = v_{cr}\hat{\mathbf{r}}_1 + v_{c\theta}\hat{\boldsymbol{\theta}}_1$, where $\hat{\boldsymbol{\theta}}_1 = \hat{\mathbf{n}} \times \hat{\mathbf{r}}_1 = \hat{\mathbf{r}}_2 \csc\theta_R - \hat{\mathbf{r}}_1 \cot\theta_R$. By considering the reverse trajectory and using the fact that $h = r_1 v_{c\theta} = r_2 v_{t\theta}$, we obtain for the velocity at impact

$$\vec{\mathbf{v}}_t = v_{tr}\hat{\mathbf{r}}_2 + v_{t\theta}\hat{\boldsymbol{\theta}}_2,$$

where

$$v_{t\theta} = \frac{r_1}{r_2}v_{c\theta},$$

$$v_{tr} = \left(\frac{r_2}{r_1}\csc\theta_R - \cot\theta_R\right)v_{t\theta} - \frac{\mu}{r_2 v_{t\theta}}\tan\frac{\theta_R}{2} = \left(\csc\theta_R - \frac{r_1}{r_2}\cot\theta_R\right)v_{c\theta} - \frac{\mu}{r_1 v_{c\theta}}\tan\frac{\theta_R}{2},$$

$$\hat{\boldsymbol{\theta}}_2 = \hat{\mathbf{n}} \times \hat{\mathbf{r}}_2 = \hat{\mathbf{n}} \times \left(\hat{\mathbf{r}}_1 \cos\theta_R + \hat{\boldsymbol{\theta}}_1 \sin\theta_R\right) = \hat{\boldsymbol{\theta}}_1 \cos\theta_R - \hat{\mathbf{r}}_1 \sin\theta_R = \hat{\mathbf{r}}_2 \cot\theta_R - \hat{\mathbf{r}}_1 \csc\theta_R.$$

TIME OF FLIGHT IN TERMS OF p

We have

$$v_{c\theta} = \frac{h}{r_1} = \frac{\sqrt{\mu p}}{r_1}.$$

Substituting this value of $v_{c\theta}$ into Equations (13) and (14), we obtain

$$t_{fe} = \sqrt{\frac{p}{\mu}} \frac{r_1 r_2 \sin\theta_R}{F'} \left\{ \begin{array}{l} 2r_1 r_2 \left(r_1 + r_2\right) \sin^2 \frac{\theta_R}{2} - p\left(r_1^2 + r_2^2 - 2r_1 r_2 \cos\theta_R\right) \\ + \frac{2pr_1^2 r_2^2 \sin^2\theta_R}{\sqrt{F'}} \arctan \frac{\sqrt{F'}}{\left(r_1 + r_2\right) p - 2r_1 r_2 \sin^2 \frac{\theta_R}{2}} \end{array} \right\}, \tag{15}$$

$$\begin{aligned} \frac{\partial t_{fe}}{\partial p} &= \frac{\partial t_{fe}}{\partial v_{c\theta}} \frac{\partial v_{c\theta}}{\partial p} = \frac{1}{2r_1} \sqrt{\frac{\mu}{p}} \frac{\partial t_{fe}}{\partial v_{c\theta}} \\ &= \frac{1}{F'} \left\{ p^2 \left(r_1^2 + r_2^2 - 2r_1 r_2 \cos\theta_R\right) - 4r_1^2 r_2^2 \sin^4 \frac{\theta_R}{2} \right\}. \\ &\quad \left\{ \frac{t_{fe}}{2p} + \sqrt{\frac{p}{\mu}} \frac{2r_1^3 r_2^3 \sin^3\theta_R}{F'\sqrt{F'}} \arctan \frac{\sqrt{F'}}{\left(r_1 + r_2\right) p - 2r_1 r_2 \sin^2 \frac{\theta_R}{2}} \right\} \\ &\quad - \sqrt{\frac{p}{\mu}} \frac{8r_1^4 r_2^4 \sin^3\theta_R \sin^2 \frac{\theta_R}{2}}{F'^2}, \end{aligned} \tag{16}$$

where

$$\begin{aligned} F' &= \left\{ 2r_1 r_2 \sin^2 \frac{\theta_R}{2} - p\left(r_1 + r_2 - 2\sqrt{r_1 r_2} \cos \frac{\theta_R}{2} \right) \right\} \left\{ p\left(r_1 + r_2 + 2\sqrt{r_1 r_2} \cos \frac{\theta_R}{2} \right) - 2r_1 r_2 \sin^2 \frac{\theta_R}{2} \right\} \\ &= \frac{r_1^2}{\mu^2} F. \end{aligned}$$

p is updated by the Newton-Raphson method, and a good initial estimate is $p = \frac{r_1^2 v_{c\theta}^2}{\mu}$, where $v_{c\theta}$ is initialized as on page 13.

EQUATIONS FOR A HYPERBOLIC TRAJECTORY

From Appendix A, we have

$$\cos E = \frac{e+\cos\theta}{1+e\cos\theta},\ \sin E = \frac{\sqrt{1-e^2}\sin\theta}{1+e\cos\theta}.$$

From the expression for $\sin E$, we observe that since $e>1$ for a hyperbola, E is imaginary in this case, i.e., E^2 is negative. Since $x=\frac{\Delta E}{2}$, it follows that x is imaginary, and hence x^2 is negative. Also, $a=\frac{h^2}{\mu\left(1-e^2\right)}<0.$

Let $H=\sqrt{-E^2},\ y=\sqrt{-x^2}$; then $E=iH,\ x=iy,\ \sin E=i\sinh H,\ \cos x=\cosh y,$ $\sin x=i\sinh y,\ \tan x=i\tanh y,\ x\csc x=y\ \mathrm{csch}\, y,\ x\cot x=y\coth y,\ \csc^2 x=-\mathrm{csch}^2 y$; also, $\frac{\arctan(iu)}{iu}=\frac{\mathrm{arctanh}\, u}{u}=\frac{1}{2u}\ln\frac{1+u}{1-u}$ for $|u|<1.$ Using the fact that

$$v_{c\theta}^2=\frac{2\mu r_2\sin^2\frac{\theta_R}{2}}{r_1\left(r_1+r_2-2\sqrt{r_1r_2}\cosh y\cos\frac{\theta_R}{2}\right)}>\frac{2\mu r_2\sin^2\frac{\theta_R}{2}}{r_1\left(r_1+r_2-2\sqrt{r_1r_2}\cos\frac{\theta_R}{2}\right)},$$

we see immediately that F and F' are negative. Putting

$$u=\frac{\sqrt{-F}}{r_1\left(r_1+r_2\right)v_{c\theta}^2-2\mu r_2\sin^2\frac{\theta_R}{2}}=\frac{\sqrt{-F'}}{\left(r_1+r_2\right)p-2r_1r_2\sin^2\frac{\theta_R}{2}}$$

and noting that $r_1\left(r_1+r_2\right)v_{c\theta}^2-2\mu r_2\sin^2\frac{\theta_R}{2}>0,$ it is easy to verify that $u<1.$ We have

$$-F-\left\{r_1\left(r_1+r_2\right)v_{c\theta}^2-2\mu r_2\sin^2\frac{\theta_R}{2}\right\}^2=-4r_1^3r_2v_{c\theta}^4\cos^2\frac{\theta_R}{2}<0$$

$$\Rightarrow\left\{\sqrt{-F}+r_1\left(r_1+r_2\right)v_{c\theta}^2-2\mu r_2\sin^2\frac{\theta_R}{2}\right\}\left\{\sqrt{-F}-r_1\left(r_1+r_2\right)v_{c\theta}^2+2\mu r_2\sin^2\frac{\theta_R}{2}\right\}<0$$

$$\Rightarrow\sqrt{-F}<r_1\left(r_1+r_2\right)v_{c\theta}^2-2\mu r_2\sin^2\frac{\theta_R}{2}\quad\Rightarrow u<1.$$

Putting $S' = r_1 + r_2 - 2\sqrt{r_1 r_2}\cosh y \cos\frac{\theta_R}{2}$, we obtain the following expressions for the hyperbolic time of flight:

$$
\begin{aligned}
t_{fh} &= a\sqrt{\frac{-a}{\mu}}\left\{H_2 - H_1 - e\left(\sinh H_2 - \sinh H_1\right)\right\} \\
&= \sqrt{\frac{S'}{2\mu}}\operatorname{csch}^2 y\left\{\left(r_1 + r_2\right)\left(\cosh y - y\ \operatorname{csch} y\right) + 2\sqrt{r_1 r_2}\cos\frac{\theta_R}{2}\left(y\coth y - 1\right)\right\} \\
&= \frac{r_1 r_2 v_{c\theta}\sin\theta_R}{F}\left\{2\mu r_2\left(r_1 + r_2\right)\sin^2\frac{\theta_R}{2} - r_1 v_{c\theta}^2\left(r_1^2 + r_2^2 - 2r_1 r_2\cos\theta_R\right) + \frac{\mu r_1^2 r_2^2 v_{c\theta}^2\sin^2\theta_R}{\sqrt{-F}}\ln\frac{1+u}{1-u}\right\} \\
&= \sqrt{\frac{p}{\mu}}\frac{r_1 r_2\sin\theta_R}{F'}\left\{2r_1 r_2\left(r_1 + r_2\right)\sin^2\frac{\theta_R}{2} - p\left(r_1^2 + r_2^2 - 2r_1 r_2\cos\theta_R\right) + \frac{p r_1^2 r_2^2\sin^2\theta_R}{\sqrt{-F'}}\ln\frac{1+u}{1-u}\right\}.
\end{aligned}
$$

Also,

$$
\frac{\partial t_{fh}}{\partial y} = \frac{1}{\sqrt{2\mu S'}}\operatorname{csch} y\begin{bmatrix}
\left(r_1 + r_2\right)^2\left\{3\operatorname{csch}^2 y\left(y\coth y - 1\right) - 1\right\} \\
+2r_1 r_2\cos^2\frac{\theta_R}{2}\left\{3y\coth y\left(2\operatorname{csch}^2 y + 1\right) - 6\operatorname{csch}^2 y - 5\right\} \\
+\sqrt{r_1 r_2}\left(r_1 + r_2\right)\cos\frac{\theta_R}{2}\left\{\left(12\operatorname{csch}^2 y + 1\right)\cosh y - 3y\operatorname{csch} y\left(4\operatorname{csch}^2 y + 3\right)\right\}
\end{bmatrix},
$$

$$
\begin{aligned}
\frac{\partial t_{fh}}{\partial v_{c\theta}} &= \frac{1}{F}\left\{r_1^2 v_{c\theta}^4\left(r_1^2 + r_2^2 - 2r_1 r_2\cos\theta_R\right) - 4\mu^2 r_2^2\sin^4\frac{\theta_R}{2}\right\}\left(\frac{t_{fh}}{v_{c\theta}} + \frac{2\mu r_1^3 r_2^3 v_{c\theta}^2\sin^3\theta_R}{F\sqrt{-F}}\ln\frac{1+u}{1-u}\right) \\
&\qquad - \frac{16\mu^2 r_1^3 r_2^4 v_{c\theta}^2\sin^3\theta_R\sin^2\frac{\theta_R}{2}}{F^2}, \\
\frac{\partial t_{fh}}{\partial p} &= \frac{1}{F'}\left\{p^2\left(r_1^2 + r_2^2 - 2r_1 r_2\cos\theta_R\right) - 4r_1^2 r_2^2\sin^4\frac{\theta_R}{2}\right\}\left(\frac{t_{fh}}{2p} + \sqrt{\frac{p}{\mu}}\frac{r_1^3 r_2^3\sin^3\theta_R}{F'\sqrt{-F'}}\ln\frac{1+u}{1-u}\right) \\
&\qquad - \sqrt{\frac{p}{\mu}}\frac{8r_1^4 r_2^4\sin^3\theta_R\sin^2\frac{\theta_R}{2}}{F'^2},
\end{aligned}
$$

$$
\frac{\partial t_{fh}}{\partial\theta_R} = -\frac{1}{2}\sqrt{\frac{r_1 r_2}{2\mu S'}}\sin\frac{\theta_R}{2}\begin{bmatrix}
\left(r_1 + r_2\right)\left\{3\operatorname{csch}^2 y\left(y\coth y - 1\right) - 1\right\} \\
-6\sqrt{r_1 r_2}\cos\frac{\theta_R}{2}\operatorname{csch} y\coth y\left(y\coth y - 1\right)
\end{bmatrix}.
$$

y^2, $v_{c\theta}$, and p may be updated by the Newton-Raphson method as follows:

$$y_{n+1}^2 = y_n^2 + \frac{2y_n\left\{t_f - t_{fh}\left(y_n\right)\right\}}{\left(\dfrac{\partial t_{fh}}{\partial y}\right)_{y=y_n}},\ \left(v_{c\theta}\right)_{n+1} = \left(v_{c\theta}\right)_n + \frac{t_f - t_{fh}\left\{\left(v_{c\theta}\right)_n\right\}}{\left(\dfrac{\partial t_{fh}}{\partial v_{c\theta}}\right)_{v_{c\theta}=\left(v_{c\theta}\right)_n}},\ p_{n+1} = p_n + \frac{t_f - t_{fh}\left(p_n\right)}{\left(\dfrac{\partial t_{fh}}{\partial p}\right)_{p=p_n}},$$

where the usual initial guesses may be used.

The correlated velocity and velocity at impact are given by

$$\vec{\mathbf{v}}_c = \frac{\vec{\mathbf{r}}_2 - f_h\vec{\mathbf{r}}_1}{g_h},\ \vec{\mathbf{v}}_t = \dot{f}_h\vec{\mathbf{r}}_1 + \dot{g}_h\vec{\mathbf{v}}_c\,,$$

where

$$f_h = -\frac{r_2}{r_1} + 2\sqrt{\frac{r_2}{r_1}}\cosh y\cos\frac{\theta_R}{2},\ g_h = \sqrt{\frac{2r_1r_2S'}{\mu}}\cos\frac{\theta_R}{2},\ \dot{f}_h = -\frac{\cosh y}{r_1r_2}\sqrt{2\mu S'},\ \dot{g}_h = -\frac{r_1}{r_2} + 2\sqrt{\frac{r_1}{r_2}}\cosh y\cos\frac{\theta_R}{2}.$$

Alternatively, $\vec{\mathbf{v}}_c = v_{cr}\hat{\mathbf{r}}_1 + v_{c\theta}\hat{\boldsymbol{\theta}}_1$, $\vec{\mathbf{v}}_t = v_{tr}\hat{\mathbf{r}}_2 + v_{t\theta}\hat{\boldsymbol{\theta}}_2$, where v_{cr}, $v_{c\theta}$, v_{tr}, and $v_{t\theta}$ are given on page 13. Also,

$$v_c = \sqrt{\mu\left(\frac{2}{r_1} - \frac{1}{a}\right)} = \sqrt{\mu\left(\frac{2}{r_1} + \frac{1}{|a|}\right)},\ v_t = \sqrt{\mu\left(\frac{2}{r_2} - \frac{1}{a}\right)} = \sqrt{\mu\left(\frac{2}{r_2} + \frac{1}{|a|}\right)}.$$

The null-miss vector is given by

$$\begin{aligned}
\Delta\vec{\mathbf{v}}_c &= -\frac{\vec{\boldsymbol{\Omega}}\times\vec{\mathbf{r}}_2}{g_h} + \frac{2z'}{g_h}\sqrt{\frac{r_2}{r_1}}\vec{\mathbf{r}}_1 + \left(\tan\frac{\theta_R}{2}\frac{\Delta\theta_R}{2} - \frac{\sqrt{r_1r_2}}{S'}z'\right)\vec{\mathbf{v}}_c \\
&= -\left[\begin{array}{l}\sqrt{\dfrac{2\mu}{S'^3}}\sinh y\left(r_1 + r_2\sin^2\dfrac{\theta_R}{2} - \sqrt{r_1r_2}\cosh y\cos\dfrac{\theta_R}{2}\right)\Delta y \\ +\sqrt{\dfrac{\mu r_2}{2r_1S'^3}}\sin\dfrac{\theta_R}{2}\left(-r_1\sinh^2 y + r_2 - \sqrt{r_1r_2}\cosh y\cos\dfrac{\theta_R}{2}\right)\Delta\theta_R\end{array}\right]\hat{\mathbf{r}}_1 \\
&\quad + \left[\sqrt{\frac{\mu}{2S'^3}}r_2\sinh y\sin\theta_R\Delta y + \sqrt{\frac{\mu r_2}{2r_1S'^3}}\left\{\left(r_1 + r_2\right)\cos\frac{\theta_R}{2} - \sqrt{r_1r_2}\cosh y\left(1 + \cos^2\frac{\theta_R}{2}\right)\right\}\Delta\theta_R\right]\hat{\boldsymbol{\theta}}_1 \\
&\quad - \frac{1}{g_h}\left(\vec{\boldsymbol{\Omega}}\times\vec{\mathbf{r}}_2\cdot\hat{\mathbf{n}}\right)\hat{\mathbf{n}},
\end{aligned}$$

where

$$\Delta\theta_R = -\vec{\boldsymbol{\Omega}}.\hat{\mathbf{n}},\ \Delta y = -\frac{1 + \dfrac{\partial t_{fh}}{\partial\theta_R}\Delta\theta_R}{\dfrac{\partial t_{fh}}{\partial y}},\ z' = -\sinh y\cos\frac{\theta_R}{2}\Delta y + \cosh y\sin\frac{\theta_R}{2}\frac{\Delta\theta_R}{2}.$$

EQUATIONS FOR A PARABOLIC TRAJECTORY

Since the time of flight is a well-behaved function of x^2, it follows from Equation (4) that the time of flight for a parabolic trajectory is given by

$$t_{fp} = \lim_{x\to 0} t_{fe} = \lim_{x\to 0}\left[\sqrt{\frac{S}{2\mu}}\csc^2 x\left\{\left(r_1+r_2\right)\left(x\csc x-\cos x\right)+2\sqrt{r_1r_2}\cos\frac{\theta_R}{2}\left(1-x\cot x\right)\right\}\right]$$

$$= \sqrt{\frac{S_0}{2\mu}}\lim_{x\to 0}\left[\left(\frac{1}{x^2}+\frac{1}{3}+\frac{x^2}{15}+\ldots\right)\left\{\left(r_1+r_2\right)\left(\frac{2}{3}x^2-\frac{x^4}{45}+\ldots\right)+2\sqrt{r_1r_2}\cos\frac{\theta_R}{2}\left(\frac{x^2}{3}+\frac{x^4}{45}+\ldots\right)\right\}\right]$$

$$= \frac{1}{3}\sqrt{\frac{2S_0}{\mu}}\left(r_1+r_2+\sqrt{r_1r_2}\cos\frac{\theta_R}{2}\right),\ \text{where}\ \ S_0 = r_1+r_2-2\sqrt{r_1r_2}\cos\frac{\theta_R}{2}. \tag{17}$$

Also, from Equations (5) and (6),

$$\lim_{x\to 0}\frac{\partial t_{fe}}{\partial x^2} = \frac{1}{5\sqrt{2\mu S_0}}\left\{\left(r_1+r_2\right)^2 - r_1r_2\cos^2\frac{\theta_R}{2}+\sqrt{r_1r_2}\left(r_1+r_2\right)\cos\frac{\theta_R}{2}\right\},$$

$$\lim_{x\to 0}\frac{\partial t_{fe}}{\partial v_{c\theta}} = \lim_{x\to 0}\frac{\frac{\partial t_{fe}}{\partial x^2}}{\frac{\partial v_{c\theta}}{\partial x^2}} = -\frac{2S_0}{5\mu r_2\sin\theta_R}\left\{\left(r_1+r_2\right)^2 - r_1r_2\cos^2\frac{\theta_R}{2}+\sqrt{r_1r_2}\left(r_1+r_2\right)\cos\frac{\theta_R}{2}\right\},$$

$$\lim_{x\to 0}\frac{\partial t_{fe}}{\partial p} = \lim_{x\to 0}\frac{\frac{\partial t_{fe}}{\partial x^2}}{\frac{\partial p}{\partial x^2}} = -\frac{1}{5r_1r_2\sin\theta_R\sin\frac{\theta_R}{2}}\sqrt{\frac{S_0^3}{2\mu r_1r_2}}\left\{\left(r_1+r_2\right)^2 - r_1r_2\cos^2\frac{\theta_R}{2}+\sqrt{r_1r_2}\left(r_1+r_2\right)\cos\frac{\theta_R}{2}\right\},$$

$$\lim_{x\to 0}\frac{\partial t_{fe}}{\partial \theta_R} = \frac{r_1r_2\sin\theta_R}{2\sqrt{2\mu S_0}}.$$

The correlated velocity and velocity at impact are given by

$$\vec{\mathbf{v}}_c = \frac{\vec{\mathbf{r}}_2 - f_0\vec{\mathbf{r}}_1}{g_0},\ \vec{\mathbf{v}}_t = \dot{f}_0\vec{\mathbf{r}}_1 + \dot{g}_0\vec{\mathbf{v}}_c,$$

where

$$f_0 = 1-\frac{S_0}{r_1},\ g_0 = \sqrt{\frac{2r_1r_2S_0}{\mu}}\cos\frac{\theta_R}{2},\ \dot{f}_0 = -\frac{\sqrt{2\mu S_0}}{r_1r_2},\ \dot{g}_0 = 1-\frac{S_0}{r_2}.$$

Since $a = \dfrac{h^2}{\mu\left(1-e^2\right)}$ and $e=1$ for a parabola, it follows that $a=\infty$ for a parabola. Hence, $v_c = \lim_{a\to\infty}\sqrt{\mu\left(\frac{2}{r_1}-\frac{1}{a}\right)} = \sqrt{\frac{2\mu}{r_1}}$, which is known as the escape velocity. Similarly, $v_t = \sqrt{\frac{2\mu}{r_2}}$.

The null-miss vector is given by

$$\Delta\vec{\mathbf{v}}_c = -\frac{\vec{\mathbf{\Omega}}\times\vec{\mathbf{r}}_2}{g_0} + \frac{2z_0}{g_0}\sqrt{\frac{r_2}{r_1}}\vec{\mathbf{r}}_1 + \left(\tan\frac{\theta_R}{2}\frac{\Delta\theta_R}{2} - \frac{\sqrt{r_1 r_2}}{S_0}z_0\right)\vec{\mathbf{v}}_c$$

$$= \left[\sqrt{\frac{\mu}{2S_0^3}}\left(r_1 + r_2\sin^2\frac{\theta_R}{2} - \sqrt{r_1 r_2}\cos\frac{\theta_R}{2}\right)\Delta x^2 - \sqrt{\frac{\mu r_2}{2r_1 S_0^3}}\sin\frac{\theta_R}{2}\left(r_2 - \sqrt{r_1 r_2}\cos\frac{\theta_R}{2}\right)\Delta\theta_R\right]\hat{\mathbf{r}}_1$$

$$+\left[-\frac{1}{2}\sqrt{\frac{\mu}{2S_0^3}}r_2\sin\theta_R\Delta x^2 + \sqrt{\frac{\mu r_2}{2r_1 S_0^3}}\left\{\left(r_1 + r_2\right)\cos\frac{\theta_R}{2} - \sqrt{r_1 r_2}\left(1+\cos^2\frac{\theta_R}{2}\right)\right\}\Delta\theta_R\right]\hat{\boldsymbol{\theta}}_1$$

$$-\frac{1}{g_0}\left(\vec{\mathbf{\Omega}}\times\vec{\mathbf{r}}_2\cdot\hat{\mathbf{n}}\right)\hat{\mathbf{n}},$$

where

$$\Delta x^2 = -\frac{1+\lim\limits_{x\to 0}\dfrac{\partial t_{fe}}{\partial\theta_R}\Delta\theta_R}{\lim\limits_{x\to 0}\dfrac{\partial t_{fe}}{\partial x^2}},\ z_0 = \frac{1}{2}\left(\cos\frac{\theta_R}{2}\Delta x^2 + \sin\frac{\theta_R}{2}\Delta\theta_R\right).$$

The equation for the time of flight for a parabolic trajectory may be derived directly from the equation of a parabola in polar coordinates, namely, $r = r_0\sec^2\frac{\theta}{2}$, obtained by setting $e = 1$ in the conic equation $r = \frac{r_0(1+e)}{1+e\cos\theta}$ (Figure 1).

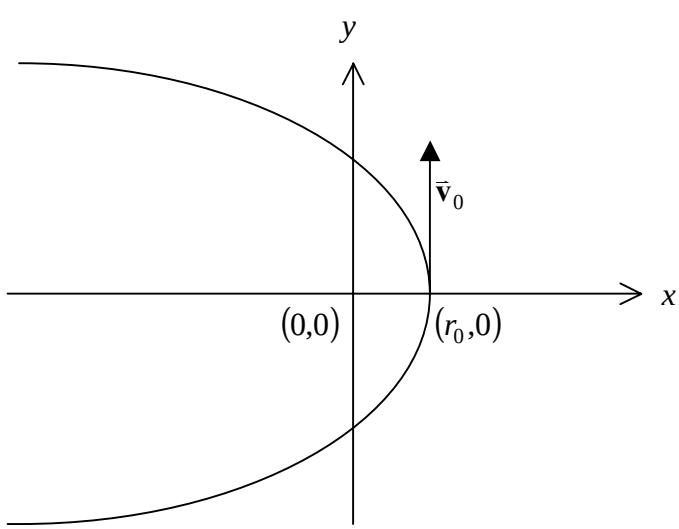

Figure 1. Parabola whose focus is at the origin and whose vertex is at $(r_0,0)$

We have

$$t_{fp} = \int_{\theta_1}^{\theta_2} \frac{d\theta}{\dot{\theta}} = \frac{1}{h}\int_{\theta_1}^{\theta_2} r^2 d\theta = \frac{r_0^2}{h}\int_{\theta_1}^{\theta_2} \sec^4\frac{\theta}{2}\,d\theta = \frac{r_0^2}{h}\int_{\theta_1}^{\theta_2} \sec^2\frac{\theta}{2}\left(1+\tan^2\frac{\theta}{2}\right)d\theta$$

$$= \frac{r_0^2}{h}\left(\int_{\theta_1}^{\theta_2} \sec^2\frac{\theta}{2}\,d\theta + \int_{\theta_1}^{\theta_2} \sec^2\frac{\theta}{2}\tan^2\frac{\theta}{2}\,d\theta\right) = \frac{r_0^2}{h}\left(2\tan\frac{\theta}{2} + \frac{2}{3}\tan^3\frac{\theta}{2}\right)_{\theta_1}^{\theta_2}$$

$$= \frac{2r_0^2}{h}\left\{\tan\frac{\theta_2}{2} - \tan\frac{\theta_1}{2} + \frac{1}{3}\left(\tan^3\frac{\theta_2}{2} - \tan^3\frac{\theta_1}{2}\right)\right\},\ 0 \le \theta_1 < \theta_2 < \pi.$$

Now

$$\tan\frac{\theta_2}{2} - \tan\frac{\theta_1}{2} = \sec\frac{\theta_1}{2}\sec\frac{\theta_2}{2}\sin\frac{\theta_R}{2},\ \ \tan\frac{\theta_R}{2} = \tan\frac{\theta_2-\theta_1}{2} = \frac{\tan\frac{\theta_2}{2} - \tan\frac{\theta_1}{2}}{1+\tan\frac{\theta_1}{2}\tan\frac{\theta_2}{2}}$$

$$\Rightarrow 1+\tan\frac{\theta_1}{2}\tan\frac{\theta_2}{2} = \left(\tan\frac{\theta_2}{2} - \tan\frac{\theta_1}{2}\right)\cot\frac{\theta_R}{2} = \sec\frac{\theta_1}{2}\sec\frac{\theta_2}{2}\cos\frac{\theta_R}{2}$$

$$\Rightarrow \tan\frac{\theta_2}{2} - \tan\frac{\theta_1}{2} + \frac{1}{3}\left(\tan^3\frac{\theta_2}{2} - \tan^3\frac{\theta_1}{2}\right)$$

$$= \left(\tan\frac{\theta_2}{2} - \tan\frac{\theta_1}{2}\right)\left\{1 + \frac{1}{3}\left(\tan^2\frac{\theta_1}{2} + \tan^2\frac{\theta_2}{2} + \tan\frac{\theta_1}{2}\tan\frac{\theta_2}{2}\right)\right\}$$

$$= \frac{1}{3}\sec\frac{\theta_1}{2}\sec\frac{\theta_2}{2}\sin\frac{\theta_R}{2}\left(1+\tan\frac{\theta_1}{2}\tan\frac{\theta_2}{2} + \sec^2\frac{\theta_1}{2} + \sec^2\frac{\theta_2}{2}\right)$$

$$= \frac{1}{3}\sec\frac{\theta_1}{2}\sec\frac{\theta_2}{2}\sin\frac{\theta_R}{2}\left(\sec^2\frac{\theta_1}{2} + \sec^2\frac{\theta_2}{2} + \sec\frac{\theta_1}{2}\sec\frac{\theta_2}{2}\cos\frac{\theta_R}{2}\right)$$

$$= \frac{\sqrt{r_1 r_2}}{3r_0^2}\sin\frac{\theta_R}{2}\left(r_1 + r_2 + \sqrt{r_1 r_2}\cos\frac{\theta_R}{2}\right) \quad \Rightarrow t_{fp} = \frac{2\sqrt{r_1 r_2}}{3h}\sin\frac{\theta_R}{2}\left(r_1 + r_2 + \sqrt{r_1 r_2}\cos\frac{\theta_R}{2}\right).$$

Also,

$$S_0 = r_1 + r_2 - 2\sqrt{r_1 r_2}\cos\frac{\theta_R}{2} = r_0\left(\sec^2\frac{\theta_1}{2} + \sec^2\frac{\theta_2}{2} - 2\sec\frac{\theta_1}{2}\sec\frac{\theta_2}{2}\cos\frac{\theta_2-\theta_1}{2}\right)$$

$$= r_0\sec^2\frac{\theta_1}{2}\sec^2\frac{\theta_2}{2}\left(\cos^2\frac{\theta_1}{2} + \cos^2\frac{\theta_2}{2} - 2\cos\frac{\theta_1}{2}\cos\frac{\theta_2}{2}\cos\frac{\theta_2-\theta_1}{2}\right)$$

$$= r_0\sec^2\frac{\theta_1}{2}\sec^2\frac{\theta_2}{2}\sin^2\frac{\theta_2-\theta_1}{2} = r_0\sec^2\frac{\theta_1}{2}\sec^2\frac{\theta_2}{2}\sin^2\frac{\theta_R}{2} = \frac{r_1 r_2\sin^2\frac{\theta_R}{2}}{r_0}.$$

$$\therefore \quad h = r_0 v_0 = r_0\sqrt{\frac{2\mu}{r_0}} = \sqrt{2\mu r_0} = \sqrt{\frac{2\mu r_1 r_2}{S_0}}\sin\frac{\theta_R}{2} \quad \Rightarrow t_{fp} = \frac{1}{3}\sqrt{\frac{2S_0}{\mu}}\left(r_1 + r_2 + \sqrt{r_1 r_2}\cos\frac{\theta_R}{2}\right)$$

which is Equation (17).

DETERMINATION OF TYPE OF TRAJECTORY

Proposition: If $\bar{\mathbf{r}}_1$ and $\bar{\mathbf{r}}_2$ are given, then $t_{fh} < t_{fp} < t_{fe}$.

Proof: First consider Equation (4), namely,

$$t_{fe} = \sqrt{\frac{S}{2\mu}}\csc^2 x\left\{(r_1 + r_2)(x\csc x - \cos x) + 2\sqrt{r_1 r_2}\cos\frac{\theta_R}{2}(1 - x\cot x)\right\}.$$

It is clear that

$$r_1 + r_2 - 2\sqrt{r_1 r_2}\cos x\cos\frac{\theta_R}{2} > r_1 + r_2 - 2\sqrt{r_1 r_2}\cos\frac{\theta_R}{2} > r_1 + r_2 - 2\sqrt{r_1 r_2}\cosh y\cos\frac{\theta_R}{2}$$
$$\Rightarrow S > S_0 > S'. \tag{18}$$

Now

$$\csc^2 x(1 - x\cot x) = \left(\frac{1}{x^2} + \frac{1}{3} + \frac{x^2}{15} + \ldots\right)\left(\frac{x^2}{3} + \frac{x^4}{45} + \ldots\right) > \frac{1}{3} \tag{19}$$

$$\Rightarrow \frac{d}{dx}\left\{\csc^2 x\left(x\csc x - \cos x\right)\right\} = \csc x\left\{3\csc^2 x\left(1 - x\cot x\right) - 1\right\} > 0,\ 0 < x < \pi.$$

Hence, $\csc^2 x(x\csc x - \cos x)$ increases monotonically in the interval $[0, \pi)$. Since $\lim_{x\to 0}\left\{\csc^2 x\left(x\csc x - \cos x\right)\right\} = \frac{2}{3}$, it follows that

$$\csc^2 x\left(x\csc x - \cos x\right) > \frac{2}{3},\ 0 < x < \pi. \tag{20}$$

Observing Equations (18), (19), and (20) in conjunction with Equation (4), we conclude that $t_{fe} > t_{fp}$. Now consider the expression for t_{fh} derived on page 15, namely,

$$t_{fh} = \sqrt{\frac{S'}{2\mu}}\operatorname{csch}^2 y\left\{\left(r_1 + r_2\right)\left(\cosh y - y\ \operatorname{csch} y\right) + 2\sqrt{r_1 r_2}\cos\frac{\theta_R}{2}\left(y\coth y - 1\right)\right\}. \tag{21}$$

We have

$$\begin{aligned}
\frac{d}{dy}\left\{\operatorname{csch}^2 y\left(y\coth y-1\right)\right\} &= \operatorname{csch}^2 y\left\{y-3\coth y\left(y\coth y-1\right)\right\} \\
&= \operatorname{csch}^4 y\left(y\sinh^2 y-3y\cosh^2 y+3\cosh y\sinh y\right) \\
&= \frac{1}{2}\operatorname{csch}^4 y\left[y\left\{\cosh\left(2y\right)-1\right\}-3y\left\{\cosh\left(2y\right)+1\right\}+3\sinh\left(2y\right)\right] \\
&= \frac{1}{2}\operatorname{csch}^4 y\left\{3\sinh\left(2y\right)-2y\cosh\left(2y\right)-4y\right\} \\
&= \frac{1}{2}\operatorname{csch}^4 y\left[3\left\{2y+\frac{\left(2y\right)^3}{3!}+\ldots\right\}-2y\left\{1+\frac{\left(2y\right)^2}{2!}+\ldots\right\}-4y\right] \\
&= \frac{1}{2}\operatorname{csch}^4 y\sum_{n=2}^{\infty}\left\{\frac{3}{\left(2n+1\right)!}-\frac{1}{\left(2n\right)!}\right\}\left(2y\right)^{2n+1} \\
&= -\operatorname{csch}^4 y\sum_{n=1}^{\infty}\frac{n}{\left(2n+3\right)!}\left(2y\right)^{2n+3} < 0.
\end{aligned}$$

Hence, $\operatorname{csch}^2 y\left(y\coth y-1\right)$ decreases monotonically in the interval $\left[0,\infty\right)$. Since $\lim_{y\to 0}\left\{\operatorname{csch}^2 y\left(y\coth y-1\right)\right\}=\frac{1}{3}$, it follows that

$$\operatorname{csch}^2 y\left(y\coth y-1\right)<\frac{1}{3},\ y>0. \tag{22}$$

$$\therefore\quad \frac{d}{dy}\left\{\operatorname{csch}^2 y\left(\cosh y-y\ \operatorname{csch} y\right)\right\}=\operatorname{csch} y\left\{3\operatorname{csch}^2 y\left(y\coth y-1\right)-1\right\}<0.$$

Hence, $\operatorname{csch}^2 y\left(\cosh y-y\ \operatorname{csch} y\right)$ decreases monotonically in the interval $\left[0,\infty\right)$. Since $\lim_{y\to 0}\left\{\operatorname{csch}^2 y\left(\cosh y-y\ \operatorname{csch} y\right)\right\}=\frac{2}{3}$, it follows that

$$\operatorname{csch}^2 y\left(\cosh y-y\ \operatorname{csch} y\right)<\frac{2}{3},\ y>0. \tag{23}$$

Observing Equations (18), (22), and (23) in conjunction with Equation (21), we conclude that $t_{fh}<t_{fp}$. Hence,

$$t_{fh}<t_{fp}<t_{fe}.$$

Therefore, given $\vec{\mathbf{r}}_1$, $\vec{\mathbf{r}}_2$, and t_f, one can immediately determine the type of trajectory by computing t_{fp} from Equation (17) and comparing it with t_f.

REFERENCES

1. Hand, George L., *The Guidance Problem – Solution for All Types of Trajectories with Oblate Gravity (Addendum)*, CSDL-C-5560, Charles Stark Draper Laboratory, Cambridge, MA, Mar 1984.

2. Owen, Davis L., *Geometry of the Ellipsoid*, K40 Training Guide 4084.3, Naval Surface Weapons Center,* Dahlgren, VA, Dec 1984.

3. Davis, W. L., *An Efficient Algorithm for Computing the Q-Guidance Matrix*, NSWC/DL TR-3844, Naval Surface Weapons Center,* Dahlgren, VA, Jan 1979.

* Currently Naval Surface Warfare Center, Dahlgren Division

BIBLIOGRAPHY

Bate, Roger R.; Mueller, Donald D.; and White, Jerry E., *Fundamentals of Astrodynamics*, Dover Publications, Inc., New York, NY, 1971.

Cohen, C. J. and Lyddane, R. H., *The Q-Guidance Matrix and Its Symmetry*, NPG-TM-K-59/006, Naval Proving Ground,* Dahlgren, VA, Jun 1959.

Davis, W. L., *An Efficient Algorithm for Computing the Q-Guidance Matrix*, NSWC/DL TR-3844, Naval Surface Weapons Center,* Dahlgren, VA, Jan 1979.

Davis, W. L., *Computation of* $\frac{d}{dt}\vec{\mathbf{P}}_{DK}$ *and* $\frac{\partial \vec{\mathbf{P}}}{\partial R^*}$, Naval Surface Weapons Center,* Strategic Systems Department, Dahlgren, VA (unpublished).

Fowles, Grant R., *Analytical Mechanics*, Third Edition, Holt, Rinehart and Winston, NY, 1977.

Hand, George L., *The Guidance Problem – Solution for All Types of Trajectories with Oblate Gravity*, and *Addendum*, CSDL-C-5560, Charles Stark Draper Laboratory, Cambridge, MA, Oct 1982 and Mar 1984.

Owen, Davis L., *Geometry of the Ellipsoid*, K40 Training Guide 4084.3, Naval Surface Weapons Center,* Dahlgren, VA, Dec 1984.

* Currently Naval Surface Warfare Center, Dahlgren Division

APPENDIX A

TIME OF FLIGHT BETWEEN TWO POINTS OF AN ELLIPTICAL TRAJECTORY

For an inverse-square gravitational field, given $\vec{\mathbf{r}}_1$, $\vec{\mathbf{v}}_c$, and $|\vec{\mathbf{r}}_2|$ at arbitrary points P_1 and P_2, it is possible to derive a closed-form expression for the time of flight between P_1 and P_2, namely,

$$t_{fe} = \frac{ab}{h}\{E_2 - E_1 - e(\sin E_2 - \sin E_1)\},$$

where

$$h = |\vec{\mathbf{r}}_1 \times \vec{\mathbf{v}}_c|,\ p = \frac{h^2}{\mu},\ a = \left(\frac{2}{r_1} - \frac{v_c^2}{\mu}\right)^{-1},\ e = \sqrt{1 - \frac{p}{a}},\ b = \sqrt{ap},$$

$$E_1 = \arctan\frac{b\vec{\mathbf{r}}_1 \cdot \vec{\mathbf{v}}_c}{h(a - r_1)},\ E_2 = 2\pi - \arccos\left\{\frac{1}{e}\left(1 - \frac{r_2}{a}\right)\right\}.$$

It is a well-known fact that the focus of the elliptical trajectory is the center of the earth, and this can be taken as the origin of the $r\theta$ coordinate system (Figure A-1).

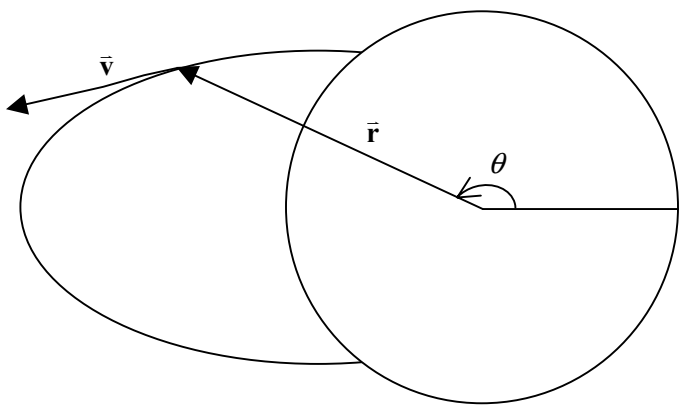

Figure A-1. Position and velocity of an object undergoing elliptical motion with the center of the earth as the focus of the ellipse

The derivation is facilitated by introducing the so-called eccentric anomaly, E. Choose the center of the ellipse to be at the origin of the xy coordinate system, and draw the circle circumscribing the ellipse (Figure A-2). The radius of this circle is clearly a, where a is the semimajor axis of the ellipse. If r is the magnitude of the radius vector at P and θ the angle between $\vec{\mathbf{r}}$ and the x axis, then $r^2 = (x - ae)^2 + y^2$, where e is the eccentricity of the ellipse. If the perpendicular from P to the x axis cuts the circle in (x, y'), then since the equation of the ellipse is $\frac{x^2}{a^2} + \frac{y^2}{b^2} = 1$, where b is the semiminor axis of the ellipse, and the equation of the circle is $x^2 + y'^2 = a^2$, we have, for the same value of x, $1 - \frac{y'^2}{a^2} + \frac{y^2}{b^2} = 1 \quad \Rightarrow \frac{y}{y'} = \frac{b}{a}$.

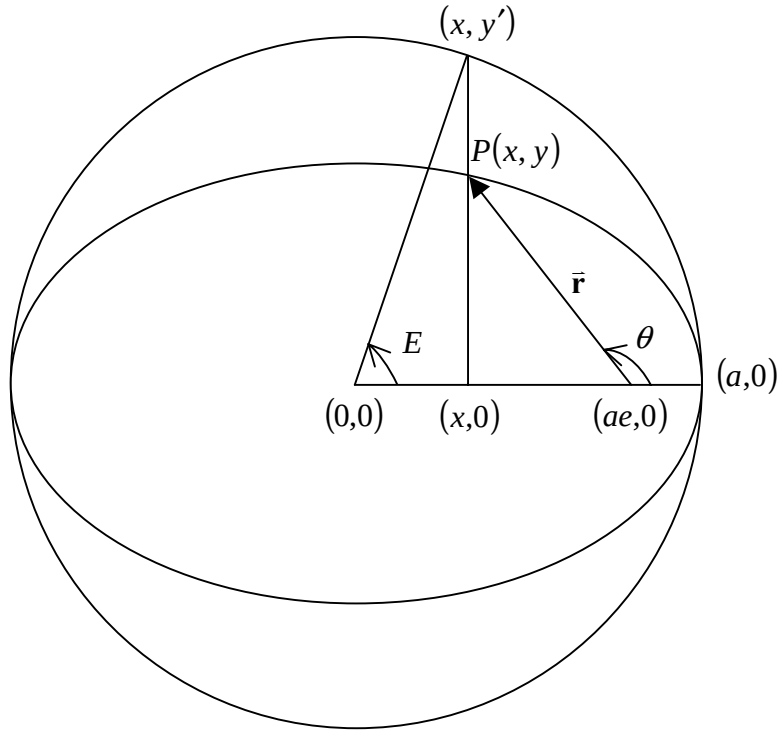

Figure A-2. Eccentric anomaly versus true anomaly

From Figure A-2, it is clear that $x = a\cos E,\ y = \frac{b}{a}y' = b\sin E.$ Hence,

$$r^2 = (x-ae)^2 + y^2 = (a\cos E - ae)^2 + b^2\sin^2 E = a^2(\cos E - e)^2 + a^2(1-e^2)\sin^2 E$$
$$= a^2\left(1 - 2e\cos E + e^2\cos^2 E\right) = a^2(1-e\cos E)^2 \quad \Rightarrow r = a(1-e\cos E).$$

Now

$$\cos\theta = \frac{x-ae}{r} = \frac{a}{r}(\cos E - e) = \frac{\cos E - e}{1-e\cos E},\ \sin\theta = \frac{y}{r} = \frac{b}{r}\sin E = \frac{\sqrt{1-e^2}\sin E}{1-e\cos E},$$
$$1+\cos\theta = 1 + \frac{\cos E - e}{1-e\cos E} = \frac{(1-e)(1+\cos E)}{1-e\cos E} = \frac{a}{r}(1-e)(1+\cos E)$$
$$\Rightarrow 2\cos^2\frac{\theta}{2} = \frac{2a}{r}(1-e)\cos^2\frac{E}{2},\ \text{or}\ \cos\frac{\theta}{2} = \sqrt{\frac{a(1-e)}{r}}\cos\frac{E}{2},$$
$$1-\cos\theta = 1 - \frac{\cos E - e}{1-e\cos E} = \frac{(1+e)(1-\cos E)}{1-e\cos E} = \frac{a}{r}(1+e)(1-\cos E)$$
$$\Rightarrow 2\sin^2\frac{\theta}{2} = \frac{2a}{r}(1+e)\sin^2\frac{E}{2},\ \text{or}\ \sin\frac{\theta}{2} = \sqrt{\frac{a(1+e)}{r}}\sin\frac{E}{2}.$$
$$\therefore\quad \tan\frac{\theta}{2} = \sqrt{\frac{1+e}{1-e}}\tan\frac{E}{2}.$$

Differentiating the expression for $\cos\theta$ with respect to time, we obtain

$$-\dot{\theta}\sin\theta = \frac{-\dot{E}\sin E\left(1-e\cos E\right)-e\dot{E}\sin E\left(\cos E-e\right)}{\left(1-e\cos E\right)^2} = -\frac{\left(1-e^2\right)\dot{E}\sin E}{\left(1-e\cos E\right)^2} = -\frac{b^2}{r^2}\dot{E}\sin E$$

$$\Rightarrow \frac{b}{r}\dot{\theta}\sin E = \frac{b^2}{r^2}\dot{E}\sin E \quad \Rightarrow \dot{E} = \frac{r\dot{\theta}}{b}.$$

Now, conservation of angular momentum implies that $r^2\dot{\theta} = \text{constant} = h$.

$$\therefore \quad \dot{E} = \frac{h}{br} = \frac{h}{ab\left(1-e\cos E\right)}$$

$$\Rightarrow t_{fe} = \frac{ab}{h}\int_{E_1}^{E_2}\left(1-e\cos E\right)dE = \frac{ab}{h}\left\{E_2 - E_1 - e\left(\sin E_2 - \sin E_1\right)\right\}.$$

Now

$$\cos\theta = \frac{\cos E - e}{1-e\cos E} \quad \Rightarrow \cos E = \frac{e+\cos\theta}{1+e\cos\theta},\ 1-e\cos E = \frac{1-e^2}{1+e\cos\theta}$$

$$\Rightarrow r = a\left(1-e\cos E\right) = \frac{a\left(1-e^2\right)}{1+e\cos\theta} = \frac{p}{1+e\cos\theta},\ \text{where } p = a\left(1-e^2\right).$$

$$\dot{r} = ae\dot{E}\sin E = \frac{aeh\sin E}{br} = \frac{pe\dot{\theta}\sin\theta}{\left(1+e\cos\theta\right)^2} = \frac{eh\sin\theta}{p}$$

$$\Rightarrow E = \arcsin\frac{br\dot{r}}{aeh},\ \theta = \arcsin\frac{p\dot{r}}{eh}.$$

Since $\vec{\mathbf{r}} = r\hat{\mathbf{r}}$, $\vec{\mathbf{v}} = \dot{r}\hat{\mathbf{r}} + r\dot{\theta}\hat{\boldsymbol{\theta}}$, it follows that $\vec{\mathbf{r}}\cdot\vec{\mathbf{v}} = r\dot{r}$. Hence,

$$E = \arcsin\frac{b\vec{\mathbf{r}}\cdot\vec{\mathbf{v}}}{aeh} = \arccos\left\{\frac{1}{e}\left(1-\frac{r}{a}\right)\right\} = \arctan\frac{b\vec{\mathbf{r}}\cdot\vec{\mathbf{v}}}{h\left(a-r\right)},$$

$$\theta = \arcsin\frac{p\vec{\mathbf{r}}\cdot\vec{\mathbf{v}}}{reh} = \arccos\left\{\frac{1}{e}\left(\frac{p}{r}-1\right)\right\} = \arctan\frac{\vec{\mathbf{r}}\cdot\vec{\mathbf{v}}}{h\left(1-\frac{r}{p}\right)}.$$

The energy equation is

$$\frac{1}{2}mv^2 - \frac{\mu m}{r} = \varepsilon,$$

where ε is the total energy.

$$\therefore \quad \frac{1}{2}m\left(\dot{r}^2 + r^2\dot{\theta}^2\right) - \frac{\mu m}{r} = \varepsilon.$$

Now

$$\dot{\theta} = \frac{h}{r^2},\ \dot{r} = \dot{\theta}\frac{dr}{d\theta} = \frac{h}{r^2}\frac{dr}{d\theta} \quad \Rightarrow \dot{r}^2 + r^2\dot{\theta}^2 = \frac{h^2}{r^4}\left\{\left(\frac{dr}{d\theta}\right)^2 + r^2\right\}.$$

Putting $r = \frac{1}{u}$, we have

$$\frac{dr}{d\theta} = -\frac{1}{u^2}\frac{du}{d\theta} \quad \Rightarrow \dot{r}^2 + r^2\dot{\theta}^2 = h^2\left\{\left(\frac{du}{d\theta}\right)^2 + u^2\right\}.$$

Thus, the energy equation becomes

$$\frac{1}{2}mh^2\left\{\left(\frac{du}{d\theta}\right)^2 + u^2\right\} - \mu m u = \varepsilon \quad \Rightarrow \frac{du}{d\theta} = \sqrt{\frac{2\varepsilon}{mh^2} + \frac{2\mu u}{h^2} - u^2}$$

$$\Rightarrow \theta - \theta_0 = \int \frac{du}{\sqrt{\frac{2\varepsilon}{mh^2} + \frac{2\mu u}{h^2} - u^2}} = \arcsin\frac{h^2 u - \mu}{\sqrt{\mu^2 + \frac{2\varepsilon h^2}{m}}}$$

$$\Rightarrow u = \frac{\mu}{h^2}\left\{1 + \sqrt{1 + \frac{2\varepsilon h^2}{\mu^2 m}}\sin\left(\theta - \theta_0\right)\right\} \quad \Rightarrow r = \frac{h^2}{\mu\left\{1 + \sqrt{1 + \frac{2\varepsilon h^2}{\mu^2 m}}\sin\left(\theta - \theta_0\right)\right\}}.$$

Putting $\theta_0 = -\frac{\pi}{2}$, we obtain the polar equation of the orbit, namely,

$$r = \frac{h^2}{\mu\left\{1 + \sqrt{1 + \frac{2\varepsilon h^2}{\mu^2 m}}\cos\theta\right\}}.$$

Comparing the above equation with the equation for r on page A-5, namely,

$$r = \frac{p}{1 + e\cos\theta},$$

we have

$$p = \frac{h^2}{\mu},\ e = \sqrt{1 + \frac{2\varepsilon h^2}{\mu^2 m}}$$

$$\Rightarrow a\left(1 - e^2\right) = \frac{h^2}{\mu} = -\frac{2a\varepsilon h^2}{\mu^2 m} = \frac{ah^2}{\mu}\left(\frac{2}{r_1} - \frac{v_c^2}{\mu}\right) \quad \Rightarrow a = \left(\frac{2}{r_1} - \frac{v_c^2}{\mu}\right)^{-1},\ e = \sqrt{1 - \frac{p}{a}}.$$

This completes our derivation. One can determine whether the orbiting object is before or past apogee by testing whether $\vec{\mathbf{r}} \cdot \vec{\mathbf{v}}$ is positive or negative. If it is positive, the object is before apogee, and if it is negative, the object is past apogee. To prove this, we have $\vec{\mathbf{r}} \cdot \vec{\mathbf{v}} = r\dot{r}$. Since r is increasing in the region $0 \le \theta \le \pi$ and decreasing in the region $\pi \le \theta \le 2\pi$, it follows that $\dot{r}$ is positive in the first region and negative in the second region, which proves the proposition.

As a relevant mathematical digression, the author derived the condition that a circle of radius R intersects an ellipse whose focus is the center of the circle, as in Figure A-1. The required condition is $|\eta| < 1$, where $\eta = \frac{1}{e}\left(1 - \frac{R}{a}\right)$, $e = \sqrt{1 - \frac{b^2}{a^2}}$, in which case the overlapping area is

$$R^2 \arccos \frac{e - \eta}{1 - e\eta} + ab\left(\arccos \eta - e\sqrt{1 - \eta^2}\right).$$

THIS PAGE INTENTIONALLY LEFT BLANK

APPENDIX B

AN ALTERNATIVE DERIVATION OF THE TIME OF FLIGHT

First, the following compact relation will be derived:

$$\left(\frac{1}{p}-\frac{1}{r_2}\right)\sin\theta_D-\left(\frac{1}{p}-\frac{1}{r}\right)\sin\theta_R=\left(\frac{1}{p}-\frac{1}{r_1}\right)\sin(\theta_D-\theta_R), \tag{B-1}$$

where $\theta_D=\arccos(\hat{\mathbf{r}}_1\cdot\hat{\mathbf{r}})$, $\theta_R=\arccos(\hat{\mathbf{r}}_1\cdot\hat{\mathbf{r}}_2)$. From Appendix A,

$$e\cos\theta=\frac{p}{r}-1,\ e\sin\theta=\frac{p\dot{r}}{h}=\sqrt{\frac{p}{\mu}}v_r\,.$$

Put $\theta=\theta_1+\theta_D$; then

$$e\cos\theta=e\cos(\theta_1+\theta_D)=e\cos\theta_1\cos\theta_D-e\sin\theta_1\sin\theta_D=\left(\frac{p}{r_1}-1\right)\cos\theta_D-\sqrt{\frac{p}{\mu}}v_{cr}\sin\theta_D$$

$$\Rightarrow r=\frac{p}{1+\left(\frac{p}{r_1}-1\right)\cos\theta_D-\sqrt{\frac{p}{\mu}}v_{cr}\sin\theta_D},\ r_2=\frac{p}{1+\left(\frac{p}{r_1}-1\right)\cos\theta_R-\sqrt{\frac{p}{\mu}}v_{cr}\sin\theta_R}$$

$$\Rightarrow\sqrt{\frac{p}{\mu}}v_{cr}=\left(1-\frac{p}{r_2}\right)\csc\theta_R-\left(1-\frac{p}{r_1}\right)\cot\theta_R$$

$$\Rightarrow r=\frac{p}{1-\left(1-\frac{p}{r_1}\right)\cos\theta_D+\left\{\left(1-\frac{p}{r_1}\right)\cot\theta_R-\left(1-\frac{p}{r_2}\right)\csc\theta_R\right\}\sin\theta_D}$$

which yields Equation (B-1). Now,

$$h=\sqrt{\mu p}=r^2\dot{\theta}\quad\Rightarrow\sqrt{\mu p}dt=r^2d\theta$$

$$\Rightarrow t_f=\frac{1}{\sqrt{\mu p}}\int_0^{\theta_R}r^2(\theta_D)\ d\theta_D$$

$$=\sqrt{\frac{p^3}{\mu}}\int_0^{\theta_R}\frac{d\theta_D}{\left[1-\left(1-\frac{p}{r_1}\right)\cos\theta_D+\left\{\left(1-\frac{p}{r_1}\right)\cot\theta_R-\left(1-\frac{p}{r_2}\right)\csc\theta_R\right\}\sin\theta_D\right]^2}$$

$$=D\int_0^{\theta_R}\frac{d\theta}{(A+B\cos\theta+C\sin\theta)^2},$$

where

$$A=1,\ B=\frac{p}{r_1}-1,\ C=\left(1-\frac{p}{r_1}\right)\cot\theta_R-\left(1-\frac{p}{r_2}\right)\csc\theta_R,\ D=\sqrt{\frac{p^3}{\mu}}\,.$$

It can be shown after some algebra that

$$t_f = \frac{D}{A^2 - B^2 - C^2}\left(\frac{-B\sin\theta_R + C\cos\theta_R}{A + B\cos\theta_R + C\sin\theta_R} - \frac{C}{A+B} + \frac{2A}{\sqrt{A^2 - B^2 - C^2}} \arctan \frac{\sqrt{A^2 - B^2 - C^2}\tan\frac{\theta_R}{2}}{A + B + C\tan\frac{\theta_R}{2}} \right)$$

$$= \sqrt{\frac{p}{\mu}}\frac{r_1 r_2 \sin\theta_R}{F'}\left\{ \begin{array}{l} 2r_1 r_2 \left(r_1 + r_2\right)\sin^2\frac{\theta_R}{2} - p\left(r_1^2 + r_2^2 - 2r_1 r_2\cos\theta_R\right) \\ + \frac{2pr_1^2 r_2^2 \sin^2\theta_R}{\sqrt{F'}} \arctan \frac{\sqrt{F'}}{\left(r_1 + r_2\right)p - 2r_1 r_2 \sin^2\frac{\theta_R}{2}} \end{array} \right\},$$

where

$$F' = \left\{ 2r_1 r_2 \sin^2\frac{\theta_R}{2} - p\left(r_1 + r_2 - 2\sqrt{r_1 r_2}\cos\frac{\theta_R}{2} \right) \right\}\left\{ p\left(r_1 + r_2 + 2\sqrt{r_1 r_2}\cos\frac{\theta_R}{2} \right) - 2r_1 r_2 \sin^2\frac{\theta_R}{2} \right\}.$$

This is Equation (15) of the main text.

APPENDIX C

EXPRESSIONS FOR f, g, $\dot{f}$, AND $\dot{g}$ IN TERMS OF $\bar{\mathbf{r}}_1$, $\bar{\mathbf{r}}_2$, AND p

Proposition:

$$f = 1 - \frac{2r_2}{p}\sin^2\frac{\theta_R}{2},\ g = \frac{r_1 r_2}{\sqrt{\mu p}}\sin\theta_R,\ \dot{f} = \sqrt{\frac{\mu}{p}}\tan\frac{\theta_R}{2}\left(\frac{1-\cos\theta_R}{p} - \frac{1}{r_1} - \frac{1}{r_2}\right),\ \dot{g} = 1 - \frac{2r_1}{p}\sin^2\frac{\theta_R}{2},$$

where $\theta_R = \arccos(\hat{\mathbf{r}}_1 \cdot \hat{\mathbf{r}}_2)$.

Proof: From Appendix A,

$$\sin E = \frac{r}{b}\sin\theta,\ \cos E = \frac{r}{p}(e+\cos\theta),\ \sin\frac{E}{2} = \sqrt{\frac{r(1-e)}{p}}\sin\frac{\theta}{2},\ \cos\frac{E}{2} = \sqrt{\frac{r(1+e)}{p}}\cos\frac{\theta}{2}$$

$$\begin{aligned}
\Rightarrow \sin x &= \sin\frac{E_2 - E_1}{2} = \sin\frac{E_2}{2}\cos\frac{E_1}{2} - \sin\frac{E_1}{2}\cos\frac{E_2}{2} \\
&= \sqrt{\frac{r_2(1-e)}{p}}\sin\frac{\theta_2}{2}\sqrt{\frac{r_1(1+e)}{p}}\cos\frac{\theta_1}{2} - \sqrt{\frac{r_1(1-e)}{p}}\sin\frac{\theta_1}{2}\sqrt{\frac{r_2(1+e)}{p}}\cos\frac{\theta_2}{2} \\
&= \frac{\sqrt{r_1 r_2(1-e^2)}}{p}\sin\frac{\theta_2-\theta_1}{2} = \frac{\sqrt{r_1 r_2}}{b}\sin\frac{\theta_R}{2},
\end{aligned} \tag{C-1}$$

$$\begin{aligned}
\sin(2x) &= \sin(E_2 - E_1) = \sin E_2\cos E_1 - \sin E_1\cos E_2 \\
&= \frac{r_2}{b}\sin\theta_2\frac{r_1}{p}(e+\cos\theta_1) - \frac{r_1}{b}\sin\theta_1\frac{r_2}{p}(e+\cos\theta_2) = \frac{r_1 r_2}{bp}\{e(\sin\theta_2 - \sin\theta_1) + \sin(\theta_2-\theta_1)\} \\
&= \frac{2r_1 r_2}{bp}\sin\frac{\theta_2-\theta_1}{2}\left(e\cos\frac{\theta_1+\theta_2}{2} + \cos\frac{\theta_2-\theta_1}{2}\right) = \frac{2r_1 r_2}{bp}\sin\frac{\theta_R}{2}\left(\cos\frac{\theta_R}{2} + e\cos\frac{\theta_1+\theta_2}{2}\right).
\end{aligned}$$

Now

$$\begin{aligned}
r_1 + r_2 &= \frac{p}{1+e\cos\theta_1} + \frac{p}{1+e\cos\theta_2} = p\frac{2+e(\cos\theta_1+\cos\theta_2)}{(1+e\cos\theta_1)(1+e\cos\theta_2)} = \frac{2r_1 r_2}{p}\left(1 + e\cos\frac{\theta_R}{2}\cos\frac{\theta_1+\theta_2}{2}\right) \\
&\Rightarrow e\cos\frac{\theta_1+\theta_2}{2} = \sec\frac{\theta_R}{2}\left\{\frac{p}{2}\left(\frac{1}{r_1}+\frac{1}{r_2}\right) - 1\right\}.
\end{aligned}$$

Substituting this into the formula for $\sin(2x)$, we obtain

$$\begin{aligned}
\sin(2x) &= \frac{2r_1 r_2}{bp}\sin\frac{\theta_R}{2}\left\{\frac{\frac{p}{2}\left(\frac{1}{r_1}+\frac{1}{r_2}\right) - 1}{\cos\frac{\theta_R}{2}} + \cos\frac{\theta_R}{2}\right\} = \frac{2r_1 r_2}{bp}\tan\frac{\theta_R}{2}\left\{\frac{p}{2}\left(\frac{1}{r_1}+\frac{1}{r_2}\right) - 1 + \cos^2\frac{\theta_R}{2}\right\} \\
&= \frac{r_1 r_2}{b}\tan\frac{\theta_R}{2}\left(\frac{1}{r_1}+\frac{1}{r_2} - \frac{2}{p}\sin^2\frac{\theta_R}{2}\right) = \frac{r_1 r_2}{b}\tan\frac{\theta_R}{2}\left(\frac{1}{r_1}+\frac{1}{r_2} - \frac{1-\cos\theta_R}{p}\right).
\end{aligned} \tag{C-2}$$

It has already been shown (pages 4 and 5 of the main text) that

$$f = 1 - \frac{2a}{r_1}\sin^2 x,\ g = 2\sqrt{\frac{ar_1r_2}{\mu}}\sin x\cos\frac{\theta_R}{2},\ \dot{f} = -\frac{\sqrt{\mu a}}{r_1r_2}\sin(2x),\ \dot{g} = 1 - \frac{2a}{r_2}\sin^2 x.$$

Using Equations (C-1) and (C-2), we obtain

$$f = 1 - \frac{2ar_2}{b^2}\sin^2\frac{\theta_R}{2} = 1 - \frac{2r_2}{p}\sin^2\frac{\theta_R}{2},$$

$$g = 2\sqrt{\frac{a}{\mu}}\frac{r_1r_2}{b}\sin\frac{\theta_R}{2}\cos\frac{\theta_R}{2} = \frac{r_1r_2}{\sqrt{\mu p}}\sin\theta_R,$$

$$\dot{f} = -\frac{\sqrt{\mu a}}{b}\tan\frac{\theta_R}{2}\left(\frac{1}{r_1} + \frac{1}{r_2} - \frac{1-\cos\theta_R}{p}\right) = \sqrt{\frac{\mu}{p}}\tan\frac{\theta_R}{2}\left(\frac{1-\cos\theta_R}{p} - \frac{1}{r_1} - \frac{1}{r_2}\right),$$

$$\dot{g} = 1 - \frac{2ar_1}{b^2}\sin^2\frac{\theta_R}{2} = 1 - \frac{2r_1}{p}\sin^2\frac{\theta_R}{2},$$

which are the desired results.

APPENDIX D

TWO DIFFERENT SETS OF INITIAL CONDITIONS

Set I. Given $\vec{\mathbf{r}}_1, \vec{\mathbf{r}}_2$, and $\left|\vec{\mathbf{v}}_c\right|$, determine the type of trajectory and its solution.

We have

$$a = \left(\frac{2}{r_1} - \frac{v_c^2}{\mu}\right)^{-1}.$$

If $a > 0$, the trajectory is elliptical; if $a < 0$, it is hyperbolic; and if $a = \infty$, it is parabolic.

In the elliptical case, we have

$$S = r_1 + r_2 - 2\sqrt{r_1 r_2}\cos x \cos\frac{\theta_R}{2} = 2a\sin^2 x = 2a\left(1 - \cos^2 x\right)$$

$$\Rightarrow 2a\cos^2 x - 2\sqrt{r_1 r_2}\cos x\cos\frac{\theta_R}{2} + r_1 + r_2 - 2a = 0$$

$$\Rightarrow x = \arccos\left[\frac{1}{2a}\left\{\sqrt{r_1 r_2}\cos\frac{\theta_R}{2} \pm \sqrt{r_1 r_2\cos^2\frac{\theta_R}{2} - 2a\left(r_1 + r_2 - 2a\right)}\right\}\right],$$

where $\theta_R = \arccos\left(\hat{\mathbf{r}}_1 \cdot \hat{\mathbf{r}}_2\right)$. Thus, the elliptical case is ambiguous.

In the hyperbolic case, since $a < 0$, it follows that

$$2a\left(r_1 + r_2 - 2a\right) < 0 \quad \Rightarrow \sqrt{r_1 r_2\cos^2\frac{\theta_R}{2} - 2a\left(r_1 + r_2 - 2a\right)} > \sqrt{r_1 r_2}\cos\frac{\theta_R}{2}.$$

Hence,

$$\frac{1}{2a}\left\{\sqrt{r_1 r_2}\cos\frac{\theta_R}{2} - \sqrt{r_1 r_2\cos^2\frac{\theta_R}{2} - 2a\left(r_1 + r_2 - 2a\right)}\right\} > 0,$$

$$\frac{1}{2a}\left\{\sqrt{r_1 r_2}\cos\frac{\theta_R}{2} + \sqrt{r_1 r_2\cos^2\frac{\theta_R}{2} - 2a\left(r_1 + r_2 - 2a\right)}\right\} < 0.$$

Putting $u = \frac{1}{2a}\left\{\sqrt{r_1 r_2}\cos\frac{\theta_R}{2} - \sqrt{r_1 r_2\cos^2\frac{\theta_R}{2} - 2a\left(r_1 + r_2 - 2a\right)}\right\}$ and noting that $\cosh y > 1$, we surmise that $u > 1$. To prove that this is indeed the case, we have

$$r_1 + r_2 > 2\sqrt{r_1 r_2}\cos\frac{\theta_R}{2} \quad \Rightarrow -2a\left(r_1 + r_2\right) > -4a\sqrt{r_1 r_2}\cos\frac{\theta_R}{2}$$

$$\Rightarrow r_1 r_2\cos^2\frac{\theta_R}{2} - 2a\left(r_1 + r_2 - 2a\right) > \left(\sqrt{r_1 r_2}\cos\frac{\theta_R}{2} - 2a\right)^2$$

$$\Rightarrow \sqrt{r_1 r_2\cos^2\frac{\theta_R}{2} - 2a\left(r_1 + r_2 - 2a\right)} > \sqrt{r_1 r_2}\cos\frac{\theta_R}{2} - 2a$$

$$\Rightarrow \sqrt{r_1 r_2\cos^2\frac{\theta_R}{2} - 2a\left(r_1 + r_2 - 2a\right)} - \sqrt{r_1 r_2}\cos\frac{\theta_R}{2} > -2a \quad \Rightarrow u > 1 \quad \Rightarrow y = \operatorname{arccosh} u = \ln\left(u + \sqrt{u^2 - 1}\right).$$

Set II. Given $\vec{\mathbf{r}}_1$, $\vec{\mathbf{v}}_c$, and t_f, determine the type of trajectory and its solution.

As in I,

$$a = \left(\frac{2}{r_1} - \frac{v_c^2}{\mu} \right)^{-1}$$

and the type of trajectory is determined by the sign of a. Now, from Appendix A,

$$e\cos E_1 = 1 - \frac{r_1}{a},\ e\sin E_1 = \frac{b\vec{\mathbf{r}}_1 \cdot \vec{\mathbf{v}}_c}{ah} = \frac{\vec{\mathbf{r}}_1 \cdot \vec{\mathbf{v}}_c}{\sqrt{\mu a}}.$$

Hence,

$$\begin{aligned} r_2 &= a\left(1 - e\cos E_2\right) = a\left\{1 - e\cos\left(2x + E_1\right)\right\} = a\left\{1 - e\cos E_1 \cos\left(2x\right) + e\sin E_1 \sin\left(2x\right)\right\} \\ &= a\left\{1 - \left(1 - \frac{r_1}{a}\right)\cos\left(2x\right) + \frac{\vec{\mathbf{r}}_1 \cdot \vec{\mathbf{v}}_c}{\sqrt{\mu a}}\sin\left(2x\right)\right\} = a - \left(a - r_1\right)\cos\left(2x\right) + \sqrt{\frac{a}{\mu}}\vec{\mathbf{r}}_1 \cdot \vec{\mathbf{v}}_c \sin\left(2x\right). \end{aligned}$$

From Equation (1) of the main text,

$$\begin{aligned} t_{fe} &= 2\sqrt{\frac{a^3}{\mu}}\left\{x - e\sin x\cos\left(x + E_1\right)\right\} = 2\sqrt{\frac{a^3}{\mu}}\left(x - e\sin x\cos x\cos E_1 + e\sin^2 x\sin E_1\right) \\ &= \sqrt{\frac{a^3}{\mu}}\left\{2x - e\sin\left(2x\right)\cos E_1 + 2e\sin^2 x\sin E_1\right\} \\ &= \sqrt{\frac{a^3}{\mu}}\left\{2x - \left(1 - \frac{r_1}{a}\right)\sin\left(2x\right) + \frac{2\vec{\mathbf{r}}_1 \cdot \vec{\mathbf{v}}_c}{\sqrt{\mu a}}\sin^2 x\right\} = \sqrt{\frac{a}{\mu}}\left\{2ax - \left(a - r_1\right)\sin\left(2x\right)\right\} + \frac{2a}{\mu}\vec{\mathbf{r}}_1 \cdot \vec{\mathbf{v}}_c \sin^2 x \end{aligned}$$

$$\Rightarrow \frac{\partial t_{fe}}{\partial x} = 2\sqrt{\frac{a}{\mu}}\left\{a - \left(a - r_1\right)\cos\left(2x\right)\right\} + \frac{2a}{\mu}\vec{\mathbf{r}}_1 \cdot \vec{\mathbf{v}}_c \sin\left(2x\right) = 2\sqrt{\frac{a}{\mu}}r_2.$$

Referring to pages 4 and 5 of the main text, $\vec{\mathbf{r}}_2 = f\vec{\mathbf{r}}_1 + g\vec{\mathbf{v}}_c$, $\dot{\vec{\mathbf{r}}}_2 = \dot{f}\vec{\mathbf{r}}_1 + \dot{g}\vec{\mathbf{v}}_c$, where

$$f = 1 - \frac{2a}{r_1}\sin^2 x,$$

$$g = \sqrt{\frac{a^3}{\mu}}\left\{\sin\left(E_2 - E_1\right) - e\left(\sin E_2 - \sin E_1\right)\right\} = t_{fe} - \sqrt{\frac{a^3}{\mu}}\left\{2x - \sin\left(2x\right)\right\},$$

$$\dot{f} = -\frac{\sqrt{\mu a}}{r_1 r_2}\sin\left(2x\right),\ \dot{g} = 1 - \frac{2a}{r_2}\sin^2 x,$$

where x is updated by the Newton-Raphson method as follows:

$$x_{n+1} = x_n + \frac{t_f - t_{fe}(x_n)}{\left(\frac{\partial t_{fe}}{\partial x}\right)_{x=x_n}} = x_n + \frac{1}{2r_2(x_n)}\sqrt{\frac{\mu}{a}}\left\{t_f - t_{fe}(x_n)\right\},$$

and a good initial guess is $x_1 = 0$.

The corresponding equations for a hyperbolic trajectory are:

$$r_2 = a - (a - r_1)\cosh(2y) + \sqrt{\frac{-a}{\mu}}\vec{\mathbf{r}}_1 \cdot \vec{\mathbf{v}}_c \sinh(2y),$$

$$t_{fh} = \sqrt{\frac{-a}{\mu}}\left\{2ay - (a - r_1)\sinh(2y)\right\} - \frac{2a}{\mu}\vec{\mathbf{r}}_1 \cdot \vec{\mathbf{v}}_c \sinh^2 y,\ \frac{\partial t_{fh}}{\partial y} = 2\sqrt{\frac{-a}{\mu}}r_2,$$

$$f = 1 + \frac{2a}{r_1}\sinh^2 y,\ g = t_{fh} + a\sqrt{\frac{-a}{\mu}}\left\{\sinh(2y) - 2y\right\},$$

$$\dot{f} = -\frac{\sqrt{-\mu a}}{r_1 r_2}\sinh(2y),\ \dot{g} = 1 + \frac{2a}{r_2}\sinh^2 y,$$

where y is updated as follows:

$$y_{n+1} = y_n + \frac{t_f - t_{fh}(y_n)}{\left(\frac{\partial t_{fh}}{\partial y}\right)_{y=y_n}} = y_n + \frac{1}{2r_2(y_n)}\sqrt{\frac{\mu}{-a}}\left\{t_f - t_{fh}(y_n)\right\},$$

and a good initial guess is $y_1 = 0$.

THIS PAGE INTENTIONALLY LEFT BLANK

APPENDIX E

DERIVATION AND COMPUTATION OF THE ELEMENTS ARISING IN THE *Q*-GUIDANCE MATRIX

Suppose that the position vector at release is slightly perturbed. Let $\vec{\mathbf{r}}_0$ and $\vec{\mathbf{r}}_1$ denote the unperturbed and perturbed position vectors at release, respectively, and $\vec{\mathbf{r}}_2$ the position vector at impact. Then

$$\theta_{R0} = \arccos\left(\hat{\mathbf{r}}_0 \cdot \hat{\mathbf{r}}_2\right),\ \hat{\boldsymbol{\theta}}_0 = \hat{\mathbf{r}}_2 \csc\theta_{R0} - \hat{\mathbf{r}}_0 \cot\theta_{R0},\ \hat{\mathbf{n}}_0 = \hat{\mathbf{r}}_0 \times \hat{\boldsymbol{\theta}}_0,\ \hat{\mathbf{r}}_1 = \frac{1}{r_1}\left(r_{1r}\hat{\mathbf{r}}_0 + r_{1\theta}\hat{\boldsymbol{\theta}}_0 + r_{1p}\hat{\mathbf{n}}_0\right),$$

$$r_1 = \sqrt{r_{1r}^2 + r_{1\theta}^2 + r_{1p}^2},\ \theta_R = \arccos\left(\hat{\mathbf{r}}_1 \cdot \hat{\mathbf{r}}_2\right),\ \hat{\boldsymbol{\theta}}_1 = \hat{\mathbf{r}}_2 \csc\theta_R - \hat{\mathbf{r}}_1 \cot\theta_R.$$

$$\frac{\partial r_1}{\partial r_{1r}} = \frac{r_{1r}}{r_1},\ \frac{\partial r_1}{\partial r_{1\theta}} = \frac{r_{1\theta}}{r_1},\ \frac{\partial r_1}{\partial r_{1p}} = \frac{r_{1p}}{r_1} \quad \Rightarrow \left(\frac{\partial r_1}{\partial r_{1r}}\right)_{\vec{\mathbf{r}}_1=\vec{\mathbf{r}}_0} = 1,\ \left(\frac{\partial r_1}{\partial r_{1\theta}}\right)_{\vec{\mathbf{r}}_1=\vec{\mathbf{r}}_0} = \left(\frac{\partial r_1}{\partial r_{1p}}\right)_{\vec{\mathbf{r}}_1=\vec{\mathbf{r}}_0} = 0.$$

$$\frac{\partial \hat{\mathbf{r}}_1}{\partial r_{1r}} = \frac{1}{r_1^3}\left\{\left(r_1^2 - r_{1r}^2\right)\hat{\mathbf{r}}_0 - r_{1r}\left(r_{1\theta}\hat{\boldsymbol{\theta}}_0 + r_{1p}\hat{\mathbf{n}}_0\right)\right\} \quad \Rightarrow \left(\frac{\partial \hat{\mathbf{r}}_1}{\partial r_{1r}}\right)_{\vec{\mathbf{r}}_1=\vec{\mathbf{r}}_0} = 0,$$

$$\frac{\partial \hat{\mathbf{r}}_1}{\partial r_{1\theta}} = \frac{1}{r_1^3}\left\{\left(r_1^2 - r_{1\theta}^2\right)\hat{\boldsymbol{\theta}}_0 - r_{1\theta}\left(r_{1p}\hat{\mathbf{n}}_0 + r_{1r}\hat{\mathbf{r}}_0\right)\right\} \quad \Rightarrow \left(\frac{\partial \hat{\mathbf{r}}_1}{\partial r_{1\theta}}\right)_{\vec{\mathbf{r}}_1=\vec{\mathbf{r}}_0} = \frac{\hat{\boldsymbol{\theta}}_0}{r_0},$$

$$\frac{\partial \hat{\mathbf{r}}_1}{\partial r_{1p}} = \frac{1}{r_1^3}\left\{\left(r_1^2 - r_{1p}^2\right)\hat{\mathbf{n}}_0 - r_{1p}\left(r_{1r}\hat{\mathbf{r}}_0 + r_{1\theta}\hat{\boldsymbol{\theta}}_0\right)\right\} \quad \Rightarrow \left(\frac{\partial \hat{\mathbf{r}}_1}{\partial r_{1p}}\right)_{\vec{\mathbf{r}}_1=\vec{\mathbf{r}}_0} = \frac{\hat{\mathbf{n}}_0}{r_0}.$$

Differentiating $\cos\theta_R = \hat{\mathbf{r}}_1 \cdot \hat{\mathbf{r}}_2$, we have

$$-\sin\theta_R \frac{\partial \theta_R}{\partial r_{1r}} = \frac{\partial \hat{\mathbf{r}}_1}{\partial r_{1r}} \cdot \hat{\mathbf{r}}_2$$

$$\Rightarrow \frac{\partial \theta_R}{\partial r_{1r}} = -\csc\theta_R \frac{\partial \hat{\mathbf{r}}_1}{\partial r_{1r}} \cdot \hat{\mathbf{r}}_2 = -\frac{\csc\theta_R}{r_1^3}\left\{\left(r_1^2 - r_{1r}^2\right)\hat{\mathbf{r}}_0 \cdot \hat{\mathbf{r}}_2 - r_{1r}\left(r_{1\theta}\hat{\boldsymbol{\theta}}_0 \cdot \hat{\mathbf{r}}_2 + r_{1p}\hat{\mathbf{n}}_0 \cdot \hat{\mathbf{r}}_2\right)\right\}$$

$$= -\frac{\csc\theta_R}{r_1^3}\left\{\left(r_1^2 - r_{1r}^2\right)\cos\theta_{R0} - r_{1r}r_{1\theta}\sin\theta_{R0}\right\} \quad \Rightarrow \left(\frac{\partial \theta_R}{\partial r_{1r}}\right)_{\vec{\mathbf{r}}_1=\vec{\mathbf{r}}_0} = 0;$$

$$\frac{\partial \theta_R}{\partial r_{1\theta}} = -\csc\theta_R \frac{\partial \hat{\mathbf{r}}_1}{\partial r_{1\theta}} \cdot \hat{\mathbf{r}}_2 = -\frac{\csc\theta_R}{r_1^3}\left\{\left(r_1^2 - r_{1\theta}^2\right)\hat{\boldsymbol{\theta}}_0 \cdot \hat{\mathbf{r}}_2 - r_{1\theta}\left(r_{1p}\hat{\mathbf{n}}_0 \cdot \hat{\mathbf{r}}_2 + r_{1r}\hat{\mathbf{r}}_0 \cdot \hat{\mathbf{r}}_2\right)\right\}$$

$$= -\frac{\csc\theta_R}{r_1^3}\left\{\left(r_1^2 - r_{1\theta}^2\right)\sin\theta_{R0} - r_{1r}r_{1\theta}\cos\theta_{R0}\right\} \quad \Rightarrow \left(\frac{\partial \theta_R}{\partial r_{1\theta}}\right)_{\vec{\mathbf{r}}_1=\vec{\mathbf{r}}_0} = -\frac{1}{r_0};$$

$$\frac{\partial \theta_R}{\partial r_{1p}} = -\csc\theta_R \frac{\partial \hat{\mathbf{r}}_1}{\partial r_{1p}} \cdot \hat{\mathbf{r}}_2 = -\frac{\csc\theta_R}{r_1^3}\left\{\left(r_1^2 - r_{1p}^2\right)\hat{\mathbf{n}}_0 \cdot \hat{\mathbf{r}}_2 - r_{1p}\left(r_{1r}\hat{\mathbf{r}}_0 \cdot \hat{\mathbf{r}}_2 + r_{1\theta}\hat{\boldsymbol{\theta}}_0 \cdot \hat{\mathbf{r}}_2\right)\right\}$$

$$= \frac{r_{1p}\csc\theta_R}{r_1^3}\left(r_{1r}\cos\theta_{R0} + r_{1\theta}\sin\theta_{R0}\right) \quad \Rightarrow \left(\frac{\partial \theta_R}{\partial r_{1p}}\right)_{\vec{\mathbf{r}}_1=\vec{\mathbf{r}}_0} = 0.$$

$$\frac{\partial\hat{\boldsymbol{\theta}}_1}{\partial r_{1r}} = -\hat{\mathbf{r}}_2 \csc\theta_R \cot\theta_R \frac{\partial\theta_R}{\partial r_{1r}} + \hat{\mathbf{r}}_1 \csc^2\theta_R \frac{\partial\theta_R}{\partial r_{1r}} - \frac{\partial\hat{\mathbf{r}}_1}{\partial r_{1r}} \cot\theta_R$$

$$= \csc\theta_R \left(\hat{\mathbf{r}}_1 \csc\theta_R - \hat{\mathbf{r}}_2 \cot\theta_R\right) \frac{\partial\theta_R}{\partial r_{1r}} - \cot\theta_R \frac{\partial\hat{\mathbf{r}}_1}{\partial r_{1r}}$$

$$= -\hat{\boldsymbol{\theta}}_2 \csc\theta_R \frac{\partial\theta_R}{\partial r_{1r}} - \cot\theta_R \frac{\partial\hat{\mathbf{r}}_1}{\partial r_{1r}} = \csc\theta_R \left(\hat{\mathbf{r}}_1 \sin\theta_R - \hat{\boldsymbol{\theta}}_1 \cos\theta_R\right) \frac{\partial\theta_R}{\partial r_{1r}} - \cot\theta_R \frac{\partial\hat{\mathbf{r}}_1}{\partial r_{1r}}$$

$$= \left(\hat{\mathbf{r}}_1 - \hat{\boldsymbol{\theta}}_1 \cot\theta_R\right) \frac{\partial\theta_R}{\partial r_{1r}} - \cot\theta_R \frac{\partial\hat{\mathbf{r}}_1}{\partial r_{1r}} \quad \Rightarrow \left(\frac{\partial\hat{\boldsymbol{\theta}}_1}{\partial r_{1r}}\right)_{\bar{\mathbf{r}}_1=\bar{\mathbf{r}}_0} = 0.$$

Similarly,

$$\frac{\partial\hat{\boldsymbol{\theta}}_1}{\partial r_{1\theta}} = \left(\hat{\mathbf{r}}_1 - \hat{\boldsymbol{\theta}}_1 \cot\theta_R\right) \frac{\partial\theta_R}{\partial r_{1\theta}} - \cot\theta_R \frac{\partial\hat{\mathbf{r}}_1}{\partial r_{1\theta}}$$

$$\Rightarrow \left(\frac{\partial\hat{\boldsymbol{\theta}}_1}{\partial r_{1\theta}}\right)_{\bar{\mathbf{r}}_1=\bar{\mathbf{r}}_0} = -\frac{1}{r_0}\left(\hat{\mathbf{r}}_0 - \hat{\boldsymbol{\theta}}_0 \cot\theta_{R0}\right) - \frac{\cot\theta_{R0}}{r_0}\hat{\boldsymbol{\theta}}_0 = -\frac{\hat{\mathbf{r}}_0}{r_0},$$

$$\frac{\partial\hat{\boldsymbol{\theta}}_1}{\partial r_{1p}} = \left(\hat{\mathbf{r}}_1 - \hat{\boldsymbol{\theta}}_1 \cot\theta_R\right) \frac{\partial\theta_R}{\partial r_{1p}} - \cot\theta_R \frac{\partial\hat{\mathbf{r}}_1}{\partial r_{1p}} \quad \Rightarrow \left(\frac{\partial\hat{\boldsymbol{\theta}}_1}{\partial r_{1p}}\right)_{\bar{\mathbf{r}}_1=\bar{\mathbf{r}}_0} = -\frac{\cot\theta_{R0}}{r_0}\hat{\mathbf{n}}_0.$$

$$\frac{\partial v_{ci}}{\partial r_{1r}} = \frac{\partial v_{ci}}{\partial r_1}\frac{\partial r_1}{\partial r_{1r}} + \frac{\partial v_{ci}}{\partial\theta_R}\frac{\partial\theta_R}{\partial r_{1r}} \quad \Rightarrow \left(\frac{\partial v_{ci}}{\partial r_{1r}}\right)_{\bar{\mathbf{r}}_1=\bar{\mathbf{r}}_0} = \left(\frac{\partial v_{ci}}{\partial r_1}\right)_{\bar{\mathbf{r}}_1=\bar{\mathbf{r}}_0},$$

$$\frac{\partial v_{ci}}{\partial r_{1\theta}} = \frac{\partial v_{ci}}{\partial r_1}\frac{\partial r_1}{\partial r_{1\theta}} + \frac{\partial v_{ci}}{\partial\theta_R}\frac{\partial\theta_R}{\partial r_{1\theta}} \quad \Rightarrow \left(\frac{\partial v_{ci}}{\partial r_{1\theta}}\right)_{\bar{\mathbf{r}}_1=\bar{\mathbf{r}}_0} = -\frac{1}{r_0}\left(\frac{\partial v_{ci}}{\partial\theta_R}\right)_{\bar{\mathbf{r}}_1=\bar{\mathbf{r}}_0},$$

$$\frac{\partial v_{ci}}{\partial r_{1p}} = \frac{\partial v_{ci}}{\partial r_1}\frac{\partial r_1}{\partial r_{1p}} + \frac{\partial v_{ci}}{\partial\theta_R}\frac{\partial\theta_R}{\partial r_{1p}} \quad \Rightarrow \left(\frac{\partial v_{ci}}{\partial r_{1p}}\right)_{\bar{\mathbf{r}}_1=\bar{\mathbf{r}}_0} = 0.$$

Differentiating $\bar{\mathbf{v}}_c = v_{cr}\hat{\mathbf{r}}_1 + v_{c\theta}\hat{\boldsymbol{\theta}}_1$, we have

$$\frac{\partial\bar{\mathbf{v}}_c}{\partial r_{1r}} = \frac{\partial v_{cr}}{\partial r_{1r}}\hat{\mathbf{r}}_1 + v_{cr}\frac{\partial\hat{\mathbf{r}}_1}{\partial r_{1r}} + \frac{\partial v_{c\theta}}{\partial r_{1r}}\hat{\boldsymbol{\theta}}_1 + v_{c\theta}\frac{\partial\hat{\boldsymbol{\theta}}_1}{\partial r_{1r}} \quad \Rightarrow \left(\frac{\partial\bar{\mathbf{v}}_c}{\partial r_{1r}}\right)_{\bar{\mathbf{r}}_1=\bar{\mathbf{r}}_0} = \left(\frac{\partial v_{cr}}{\partial r_1}\right)_{\bar{\mathbf{r}}_1=\bar{\mathbf{r}}_0}\hat{\mathbf{r}}_0 + \left(\frac{\partial v_{c\theta}}{\partial r_1}\right)_{\bar{\mathbf{r}}_1=\bar{\mathbf{r}}_0}\hat{\boldsymbol{\theta}}_0;$$

$$\frac{\partial\bar{\mathbf{v}}_c}{\partial r_{1\theta}} = \frac{\partial v_{cr}}{\partial r_{1\theta}}\hat{\mathbf{r}}_1 + v_{cr}\frac{\partial\hat{\mathbf{r}}_1}{\partial r_{1\theta}} + \frac{\partial v_{c\theta}}{\partial r_{1\theta}}\hat{\boldsymbol{\theta}}_1 + v_{c\theta}\frac{\partial\hat{\boldsymbol{\theta}}_1}{\partial r_{1\theta}}$$

$$\Rightarrow \left(\frac{\partial\bar{\mathbf{v}}_c}{\partial r_{1\theta}}\right)_{\bar{\mathbf{r}}_1=\bar{\mathbf{r}}_0} = -\frac{1}{r_0}\left\{\left(\frac{\partial v_{cr}}{\partial\theta_R}\right)_{\bar{\mathbf{r}}_1=\bar{\mathbf{r}}_0} + v_{c\theta 0}\right\}\hat{\mathbf{r}}_0 - \frac{1}{r_0}\left\{\left(\frac{\partial v_{c\theta}}{\partial\theta_R}\right)_{\bar{\mathbf{r}}_1=\bar{\mathbf{r}}_0} - v_{cr0}\right\}\hat{\boldsymbol{\theta}}_0;$$

$$\frac{\partial\bar{\mathbf{v}}_c}{\partial r_{1p}} = \frac{\partial v_{cr}}{\partial r_{1p}}\hat{\mathbf{r}}_1 + v_{cr}\frac{\partial\hat{\mathbf{r}}_1}{\partial r_{1p}} + \frac{\partial v_{c\theta}}{\partial r_{1p}}\hat{\boldsymbol{\theta}}_1 + v_{c\theta}\frac{\partial\hat{\boldsymbol{\theta}}_1}{\partial r_{1p}} \quad \Rightarrow \left(\frac{\partial\bar{\mathbf{v}}_c}{\partial r_{1p}}\right)_{\bar{\mathbf{r}}_1=\bar{\mathbf{r}}_0} = \frac{1}{r_0}\left(v_{cr0} - v_{c\theta 0}\cot\theta_{R0}\right)\hat{\mathbf{n}}_0.$$

The Q-Guidance matrix is given by

$$Q = \left\{ \left(\frac{\partial \vec{\mathbf{v}}_c}{\partial \vec{\mathbf{r}}_1} \right)_{t_f} \right\}_{\vec{\mathbf{r}}_1 = \vec{\mathbf{r}}_0} = \left\{ \left(\frac{\partial \vec{\mathbf{v}}_c}{\partial r_{1r}} \right)_{t_f}, \left(\frac{\partial \vec{\mathbf{v}}_c}{\partial r_{1\theta}} \right)_{t_f}, \left(\frac{\partial \vec{\mathbf{v}}_c}{\partial r_{1p}} \right)_{t_f} \right\}_{\vec{\mathbf{r}}_1 = \vec{\mathbf{r}}_0}$$

$$= \begin{pmatrix} \left(\frac{\partial v_{cr}}{\partial r_1} \right)_{t_f} & -\frac{1}{r_1} \left\{ \left(\frac{\partial v_{cr}}{\partial \theta_R} \right)_{t_f} + v_{c\theta} \right\} & 0 \\ \left(\frac{\partial v_{c\theta}}{\partial r_1} \right)_{t_f} & -\frac{1}{r_1} \left\{ \left(\frac{\partial v_{c\theta}}{\partial \theta_R} \right)_{t_f} - v_{cr} \right\} & 0 \\ 0 & 0 & \frac{1}{r_1} \left(v_{cr} - v_{c\theta} \cot \theta_R \right) \end{pmatrix}_{\vec{\mathbf{r}}_1 = \vec{\mathbf{r}}_0} .$$

It is desired to evaluate the partial derivatives $\left(\frac{\partial v_{c\theta}}{\partial r_1} \right)_{t_f}$, $\left(\frac{\partial v_{c\theta}}{\partial \theta_R} \right)_{t_f}$, $\left(\frac{\partial v_{cr}}{\partial r_1} \right)_{t_f}$, and $\left(\frac{\partial v_{cr}}{\partial \theta_R} \right)_{t_f}$.

Differentiating the formulas

$$v_{c\theta} = \sqrt{\frac{2\mu r_2}{r_1 S}} \sin \frac{\theta_R}{2}, \; v_{cr} = \sqrt{\frac{2\mu}{S}} \left(\sqrt{\frac{r_2}{r_1}} \cos \frac{\theta_R}{2} - \cos x \right), \; v_{tr} = \sqrt{\frac{2\mu}{S}} \left(\cos x - \sqrt{\frac{r_1}{r_2}} \cos \frac{\theta_R}{2} \right),$$

we have

$$\frac{\partial v_{c\theta}}{\partial x} = -\sqrt{\frac{\mu}{2S^3}} r_2 \sin x \sin \theta_R , \tag{E-1}$$

$$\left(\frac{\partial v_{c\theta}}{\partial r_1} \right)_x = -\sqrt{\frac{\mu r_2}{2 r_1^3 S^3}} \sin \frac{\theta_R}{2} \left(2r_1 + r_2 - 3\sqrt{r_1 r_2} \cos x \cos \frac{\theta_R}{2} \right), \tag{E-2}$$

$$\left(\frac{\partial v_{c\theta}}{\partial \theta_R} \right)_x = \sqrt{\frac{\mu r_2}{2 r_1 S^3}} \left\{ (r_1 + r_2) \cos \frac{\theta_R}{2} - \sqrt{r_1 r_2} \cos x \left(1 + \cos^2 \frac{\theta_R}{2} \right) \right\}, \tag{E-3}$$

$$\frac{\partial v_{cr}}{\partial x} = \sqrt{\frac{2\mu}{S^3}} \sin x \left(r_1 + r_2 \sin^2 \frac{\theta_R}{2} - \sqrt{r_1 r_2} \cos x \cos \frac{\theta_R}{2} \right), \tag{E-4}$$

$$\left(\frac{\partial v_{cr}}{\partial \theta_R} \right)_x = -\sqrt{\frac{\mu r_2}{2 r_1 S^3}} \sin \frac{\theta_R}{2} \left(r_1 \sin^2 x + r_2 - \sqrt{r_1 r_2} \cos x \cos \frac{\theta_R}{2} \right), \tag{E-5}$$

$$\frac{\partial v_{tr}}{\partial x} = -\sqrt{\frac{2\mu}{S^3}} \sin x \left(r_1 \sin^2 \frac{\theta_R}{2} + r_2 - \sqrt{r_1 r_2} \cos x \cos \frac{\theta_R}{2} \right), \tag{E-6}$$

$$\left(\frac{\partial v_{tr}}{\partial \theta_R} \right)_x = \sqrt{\frac{\mu r_1}{2 r_2 S^3}} \sin \frac{\theta_R}{2} \left(r_1 + r_2 \sin^2 x - \sqrt{r_1 r_2} \cos x \cos \frac{\theta_R}{2} \right). \tag{E-7}$$

Now

$$\left(\frac{\partial v_{c\theta}}{\partial r_1}\right)_{t_f} = \left(\frac{\partial v_{c\theta}}{\partial r_1}\right)_x + \frac{\partial v_{c\theta}}{\partial x}\left(\frac{\partial x}{\partial r_1}\right)_{t_f}, \quad \left(\frac{\partial v_{c\theta}}{\partial \theta_R}\right)_{t_f} = \left(\frac{\partial v_{c\theta}}{\partial \theta_R}\right)_x + \frac{\partial v_{c\theta}}{\partial x}\left(\frac{\partial x}{\partial \theta_R}\right)_{t_f},$$

with similar expressions for $\left(\frac{\partial v_{cr}}{\partial \theta_R}\right)_{t_f}$ and $\left(\frac{\partial v_{tr}}{\partial \theta_R}\right)_{t_f}$. Using a well-known theorem in partial derivatives, we have

$$\left(\frac{\partial x}{\partial r_1}\right)_{t_f}\left(\frac{\partial r_1}{\partial t_f}\right)_x\left(\frac{\partial t_f}{\partial x}\right)_{r_1} = -1 \quad \Rightarrow \left(\frac{\partial x}{\partial r_1}\right)_{t_f} = -\frac{\left(\frac{\partial t_f}{\partial r_1}\right)_x}{\left(\frac{\partial t_f}{\partial x}\right)_{r_1}} = -\frac{\left(\frac{\partial t_f}{\partial r_1}\right)_x}{\frac{\partial t_f}{\partial x}},$$

where $\frac{\partial t_f}{\partial x}$ is given by Equation (5) of the main text for elliptical trajectories, and

$$\left(\frac{\partial t_f}{\partial r_1}\right)_x = \frac{\csc^2 x}{2\sqrt{2\mu S}}\left[\begin{array}{l} 3(r_1+r_2)(x\csc x - \cos x) - 6r_2\cos^2\frac{\theta_R}{2}\cos x(1 - x\cot x) \\ \quad + \sqrt{\frac{r_2}{r_1}}\cos\frac{\theta_R}{2}\left\{3(3r_1+r_2)(1-x\cot x) - (5r_1+r_2)\sin^2 x\right\} \end{array}\right],$$

obtained by differentiating Equation (4) of the main text. Similarly,

$$\left(\frac{\partial x}{\partial \theta_R}\right)_{t_f} = -\frac{\left(\frac{\partial t_f}{\partial \theta_R}\right)_x}{\frac{\partial t_f}{\partial x}},$$

where $\left(\frac{\partial t_f}{\partial \theta_R}\right)_x$ is given by Equation (6) of the main text.

Using the above results, It is straightforward though tedious to verify the following three identities:

$$\left(\frac{\partial v_{cr}}{\partial \theta_R}\right)_{t_f} + v_{c\theta} + r_1\left(\frac{\partial v_{c\theta}}{\partial r_1}\right)_{t_f} = 0, \tag{E-8}$$

$$v_{cr}\left(\frac{\partial v_{cr}}{\partial \theta_R}\right)_{t_f} + v_{c\theta}\left(\frac{\partial v_{c\theta}}{\partial \theta_R}\right)_{t_f} + r_1\frac{\partial v_{c\theta}}{\partial t_f} = 0, \tag{E-9}$$

$$\left(\frac{\partial v_{cr}}{\partial \theta_R}\right)_{t_f} - \frac{r_2}{r_1}\left(\frac{\partial v_{tr}}{\partial \theta_R}\right)_{t_f} + \frac{1}{2}v_{c\theta} = \frac{3}{2}t_f\frac{\partial v_{c\theta}}{\partial t_f}. \tag{E-10}$$

From Equation (E-8), we have

$$\left(\frac{\partial v_{c\theta}}{\partial r_1}\right)_{t_f} = -\frac{1}{r_1}\left\{\left(\frac{\partial v_{cr}}{\partial \theta_R}\right)_{t_f} + v_{c\theta}\right\}, \tag{E-8′}$$

which proves the symmetry of the Q-Guidance matrix.

Eliminating $\left(\frac{\partial v_{cr}}{\partial \theta_R}\right)_{t_f}$ between Equations (E-8) and (E-9),

$$v_{cr}\left(\frac{\partial v_{c\theta}}{\partial r_1}\right)_{t_f} = \frac{v_{c\theta}}{r_1}\left\{\left(\frac{\partial v_{c\theta}}{\partial \theta_R}\right)_{t_f} - v_{cr}\right\} + \frac{\partial v_{c\theta}}{\partial t_f}. \tag{E-11}$$

Writing Equation (E-8) for the reverse trajectory, we have

$$\left(\frac{\partial v_{tr}}{\partial \theta_R}\right)_{t_f} - v_{t\theta} - r_2\left(\frac{\partial v_{t\theta}}{\partial r_2}\right)_{t_f} = 0.$$

Now

$$v_{t\theta} = \frac{r_1}{r_2} v_{c\theta}, \quad \left(\frac{\partial v_{t\theta}}{\partial r_2}\right)_{t_f} = \frac{r_1}{r_2}\left\{\left(\frac{\partial v_{c\theta}}{\partial r_2}\right)_{t_f} - \frac{v_{c\theta}}{r_2}\right\} \tag{E-12}$$

$$\Rightarrow \left(\frac{\partial v_{tr}}{\partial \theta_R}\right)_{t_f} = v_{t\theta} + r_2\left(\frac{\partial v_{t\theta}}{\partial r_2}\right)_{t_f} = r_1\left(\frac{\partial v_{c\theta}}{\partial r_2}\right)_{t_f}. \tag{E-13}$$

Using Equations (E-8) and (E-13) to eliminate $\left(\frac{\partial v_{cr}}{\partial \theta_R}\right)_{t_f}$ and $\left(\frac{\partial v_{tr}}{\partial \theta_R}\right)_{t_f}$ from Equation (E-10),

$$\left(\frac{\partial v_{c\theta}}{\partial r_2}\right)_{t_f} = -\frac{1}{r_2}\left\{\frac{1}{2} v_{c\theta} + r_1\left(\frac{\partial v_{c\theta}}{\partial r_1}\right)_{t_f} + \frac{3}{2} t_f \frac{\partial v_{c\theta}}{\partial t_f}\right\}. \tag{E-14}$$

Writing Equation (E-11) for the reverse trajectory,

$$-v_{tr}\left(\frac{\partial v_{t\theta}}{\partial r_2}\right)_{t_f} = \frac{v_{t\theta}}{r_2}\left\{\left(\frac{\partial v_{t\theta}}{\partial \theta_R}\right)_{t_f} + v_{tr}\right\} + \frac{\partial v_{t\theta}}{\partial t_f}.$$

Substituting the system of equations (E-12) into the above equation,

$$\left(\frac{\partial v_{c\theta}}{\partial r_2}\right)_{t_f} = -\frac{1}{r_2 v_{tr}}\left\{\frac{r_1}{r_2} v_{c\theta}\left(\frac{\partial v_{c\theta}}{\partial \theta_R}\right)_{t_f} + r_2 \frac{\partial v_{c\theta}}{\partial t_f}\right\}. \tag{E-15}$$

Eliminating $\left(\frac{\partial v_{c\theta}}{\partial r_2}\right)_{t_f}$ between Equations (E-14) and (E-15),

$$\frac{r_1 v_{c\theta}}{r_2 v_{tr}}\left(\frac{\partial v_{c\theta}}{\partial \theta_R}\right)_{t_f} - \frac{1}{2}v_{c\theta} + \left(\frac{r_2}{v_{tr}} - \frac{3}{2}t_f\right)\frac{\partial v_{c\theta}}{\partial t_f} - r_1\left(\frac{\partial v_{c\theta}}{\partial r_1}\right)_{t_f} = 0.$$

Eliminating $\left(\frac{\partial v_{c\theta}}{\partial r_1}\right)_{t_f}$ between Equation (E-11) and the above equation,

$$\left(\frac{\partial v_{c\theta}}{\partial \theta_R}\right)_{t_f} = \frac{\frac{1}{2}v_{cr}v_{c\theta} - \left\{r_1 - v_{cr}\left(\frac{r_2}{v_{tr}} - \frac{3}{2}t_f\right)\right\}\frac{\partial v_{c\theta}}{\partial t_f}}{v_{c\theta}\left(1 - \frac{r_1 v_{cr}}{r_2 v_{tr}}\right)}. \tag{E-16}$$

The expression (E-16) is indeterminate when

$$r_1 v_{cr} = r_2 v_{tr} \quad \Rightarrow \vec{\mathbf{r}}_1 \cdot \vec{\mathbf{v}}_c = \vec{\mathbf{r}}_2 \cdot \vec{\mathbf{v}}_t \quad \Rightarrow \sin E_1 = \sin E_2 \quad \Rightarrow E_1 + E_2 = 3\pi$$

(see Appendix A), which can occur when E_1 is in the third quadrant and E_2 is in the fourth quadrant. Therefore, it is desirable to derive an expression for the above partial which is analytic everywhere. This is done in Appendix F.

The remaining partials in the Q-Guidance matrix are now readily obtained. Employing the equations for v_{cr} and v_{tr} in terms of $v_{c\theta}$, namely,

$$v_{cr} = \left(\cot\theta_R - \frac{r_1}{r_2}\csc\theta_R\right)v_{c\theta} + \frac{\mu}{r_1 v_{c\theta}}\tan\frac{\theta_R}{2},$$

$$v_{tr} = \left(\csc\theta_R - \frac{r_1}{r_2}\cot\theta_R\right)v_{c\theta} - \frac{\mu}{r_1 v_{c\theta}}\tan\frac{\theta_R}{2} = \left(1 - \frac{r_1}{r_2}\right)v_{c\theta}\cot\frac{\theta_R}{2} - v_{cr},$$

we deduce

$$\left(\frac{\partial v_{cr}}{\partial \theta_R}\right)_{t_f} = -v_{tr}\csc\theta_R + \left\{\frac{v_{tr}}{v_{c\theta}} - \left(1 + \frac{r_1}{r_2}\right)\tan\frac{\theta_R}{2}\right\}\left(\frac{\partial v_{c\theta}}{\partial \theta_R}\right)_{t_f}, \tag{E-17}$$

$$\left(\frac{\partial v_{c\theta}}{\partial r_1}\right)_{t_f} = -\frac{1}{r_1}\left\{\left(\frac{\partial v_{cr}}{\partial \theta_R}\right)_{t_f} + v_{c\theta}\right\}, \tag{E-8′}$$

$$\left(\frac{\partial v_{cr}}{\partial r_1}\right)_{t_f} = \frac{1}{r_1}\left[v_{tr} - \left\{\left(1+\frac{r_1}{r_2}\right)\tan\frac{\theta_R}{2} + \cot\theta_R\right\}v_{c\theta}\right] + \left\{\frac{v_{tr}}{v_{c\theta}} - \left(1+\frac{r_1}{r_2}\right)\tan\frac{\theta_R}{2}\right\}\left(\frac{\partial v_{c\theta}}{\partial r_1}\right)_{t_f}$$

$$= \left\{\frac{v_{tr}}{v_{c\theta}} - \left(1+\frac{r_1}{r_2}\right)\tan\frac{\theta_R}{2}\right\}\left\{\frac{v_{c\theta}}{r_1} + \left(\frac{\partial v_{c\theta}}{\partial r_1}\right)_{t_f}\right\} - \frac{1}{r_1}v_{c\theta}\cot\theta_R$$

$$= -\frac{1}{r_1}\left[\left\{\frac{v_{tr}}{v_{c\theta}} - \left(1+\frac{r_1}{r_2}\right)\tan\frac{\theta_R}{2}\right\}\left(\frac{\partial v_{cr}}{\partial \theta_R}\right)_{t_f} + v_{c\theta}\cot\theta_R\right], \tag{E-18}$$

where Equation (E-8) has been used. Substituting Equation (E-8′) into Equation (E-14),

$$\left(\frac{\partial v_{c\theta}}{\partial r_2}\right)_{t_f} = \frac{1}{r_2}\left\{\frac{1}{2}v_{c\theta} + \left(\frac{\partial v_{cr}}{\partial \theta_R}\right)_{t_f} - \frac{3}{2}t_f\frac{\partial v_{c\theta}}{\partial t_f}\right\}. \tag{E-19}$$

Finally,

$$\left(\frac{\partial v_{cr}}{\partial r_2}\right)_{t_f} = \frac{r_1}{r_2^2}v_{c\theta}\csc\theta_R + \left\{\frac{v_{tr}}{v_{c\theta}} - \left(1+\frac{r_1}{r_2}\right)\tan\frac{\theta_R}{2}\right\}\left(\frac{\partial v_{c\theta}}{\partial r_2}\right)_{t_f}. \tag{E-20}$$

THIS PAGE INTENTIONALLY LEFT BLANK

APPENDIX F

DERIVATION OF AN ANALYTIC EXPRESSION FOR $\left(\frac{\partial v_{c\theta}}{\partial \theta_R}\right)_{t_f}$

As stated in Appendix E, the expression (E-16) is indeterminate when $r_1 v_{cr} = r_2 v_{tr}$. An analytic expression for $\left(\frac{\partial v_{c\theta}}{\partial \theta_R}\right)_{t_f}$ will now be derived in two ways.

First method: From Appendix A,

$$r_1 = a\left(1 - e\cos E_1\right),\ r_2 = a\left(1 - e\cos E_2\right). \tag{F-1}$$

From Equation (C-1),

$$\sin\frac{\theta_R}{2} = \frac{b}{\sqrt{r_1 r_2}}\sin x\,. \tag{F-2}$$

From page 2 of the main text,

$$\cos\frac{\theta_R}{2} = \frac{a}{\sqrt{r_1 r_2}}\left\{\cos x - e\cos\left(x + E_1\right)\right\}. \tag{F-3}$$

$$\begin{aligned}\sin\theta_R &= 2\sin\frac{\theta_R}{2}\cos\frac{\theta_R}{2} = \frac{2ab}{r_1 r_2}\sin x\left\{\cos x - e\cos\left(x + E_1\right)\right\}\\ &= \frac{ab}{r_1 r_2}\left\{\sin\left(E_2 - E_1\right) - e\left(\sin E_2 - \sin E_1\right)\right\}.\end{aligned} \tag{F-4}$$

$$\begin{aligned}\cos\theta_R &= 1 - 2\sin^2\frac{\theta_R}{2} = 1 - \frac{2b^2}{r_1 r_2}\sin^2 x\\ &= \frac{a^2}{r_1 r_2}\left\{\left(1 - e\cos E_1\right)\left(1 - e\cos E_2\right) - 2\left(1 - e^2\right)\sin^2 x\right\}\\ &= \frac{a^2}{r_1 r_2}\left\{\cos\left(E_2 - E_1\right) - e\left(\cos E_1 + \cos E_2\right) + e^2\left(1 - \sin E_1 \sin E_2\right)\right\}.\end{aligned} \tag{F-5}$$

$$\begin{aligned}r_1^2 + r_2^2 - 2r_1 r_2\cos\theta_R &= \left(r_1 + r_2 + 2\sqrt{r_1 r_2}\cos\frac{\theta_R}{2}\right)\left(r_1 + r_2 - 2\sqrt{r_1 r_2}\cos\frac{\theta_R}{2}\right)\\ &= a^2\left\{2 - e\left(\cos E_1 + \cos E_2\right) + 2\cos x - 2e\cos\left(x + E_1\right)\right\}.\\ &\quad\left\{2 - e\left(\cos E_1 + \cos E_2\right) - 2\cos x + 2e\cos\left(x + E_1\right)\right\}\\ &= 4a^2\sin^2 x\left\{1 - e^2\cos^2\left(x + E_1\right)\right\}.\end{aligned} \tag{F-6}$$

From Appendix A,

$$v_{c\theta} = r_1\dot{\theta}_1 = \frac{h}{r_1} = \frac{\sqrt{\mu p}}{r_1} = \frac{b}{r_1}\sqrt{\frac{\mu}{a}}\,, \tag{F-7}$$

$$v_{cr} = \dot{r}_1 = \frac{ah}{br_1} e \sin E_1 = \frac{\sqrt{\mu a}}{r_1} e \sin E_1 , \tag{F-8}$$

$$v_{tr} = \dot{r}_2 = \frac{\sqrt{\mu a}}{r_2} e \sin E_2 . \tag{F-9}$$

Substituting Equations (F-3) and (F-7) into Equation (11) of the main text and using Equation (F-4),

$$\begin{aligned}\sqrt{F} &= 2r_1\sqrt{r_1 r_2}\, v_{c\theta}^2 \cos\frac{\theta_R}{2} \sin x = \frac{2\mu b^2}{r_1} \sin x \left\{\cos x - e\cos\left(x + E_1\right)\right\} \\ &= \frac{\mu b^2}{r_1}\left\{\sin\left(E_2 - E_1\right) - e\left(\sin E_2 - \sin E_1\right)\right\}\end{aligned} \tag{F-10}$$

$$\Rightarrow \sin\theta_R = \frac{a}{\mu b r_2}\sqrt{F} . \tag{F-4′}$$

From Equations (F-2), (F-6), (F-7), and (F-10),

$$\begin{aligned}&r_1^2 v_{c\theta}^4 \left(r_1^2 + r_2^2 - 2r_1 r_2 \cos\theta_R\right) - 4\mu^2 r_2^2 \sin^4\frac{\theta_R}{2} = \frac{4\mu^2 b^4}{r_1^2}\sin^2 x\left\{\cos^2 x - e^2\cos^2\left(x + E_1\right)\right\} \\ &= \frac{\mu^2 b^4}{r_1^2}\left\{\sin^2\left(E_2 - E_1\right) - e^2\left(\sin E_2 - \sin E_1\right)^2\right\} \\ &= \frac{\mu b^2}{r_1}\sqrt{F}\left\{\sin\left(E_2 - E_1\right) + e\left(\sin E_2 - \sin E_1\right)\right\}.\end{aligned} \tag{F-11}$$

Also,

$$t_f = \sqrt{\frac{a^3}{\mu}}\left\{E_2 - E_1 - e\left(\sin E_2 - \sin E_1\right)\right\}, \tag{F-12}$$

$$\arctan\frac{\sqrt{F}}{r_1\left(r_1 + r_2\right)v_{c\theta}^2 - 2\mu r_2 \sin^2\frac{\theta_R}{2}} = x = \frac{E_2 - E_1}{2} \text{ (Equation (12) of the main text).}$$

Substituting Equations (F-2), (F-4′), (F-7), (F-11), (F-12), and (12) of the main text into Equation (14) of the main text, namely,

$$\begin{aligned}\frac{\partial t_f}{\partial v_{c\theta}} &= \frac{1}{F}\left\{r_1^2 v_{c\theta}^4\left(r_1^2 + r_2^2 - 2r_1 r_2\cos\theta_R\right) - 4\mu^2 r_2^2 \sin^4\frac{\theta_R}{2}\right\}. \\ &\left\{\frac{t_f}{v_{c\theta}} + \frac{4\mu r_1^3 r_2^3 v_{c\theta}^2 \sin^3\theta_R}{F\sqrt{F}}\arctan\frac{\sqrt{F}}{r_1\left(r_1 + r_2\right)v_{c\theta}^2 - 2\mu r_2\sin^2\frac{\theta_R}{2}}\right\} - \frac{16\mu^2 r_1^3 r_2^4 v_{c\theta}^2 \sin^3\theta_R \sin^2\frac{\theta_R}{2}}{F^2},\end{aligned}$$

we obtain

$$\frac{\partial t_f}{\partial v_{c\theta}} = \frac{a^2 b}{\sqrt{F}} \begin{bmatrix} \left\{\sin\left(E_2 - E_1\right) + e\left(\sin E_2 - \sin E_1\right)\right\}. \\ \left\{3\left(E_2 - E_1\right) - e\left(\sin E_2 - \sin E_1\right)\right\} - 16\sin^2 x \end{bmatrix}. \tag{F-13}$$

Substituting Equations (F-7), (F-8), (F-9), and (F-12) into Equation (E-16), namely,

$$\left(\frac{\partial v_{c\theta}}{\partial \theta_R}\right)_{t_f} = \frac{\frac{1}{2} v_{cr} v_{c\theta} - \left\{ r_1 - v_{cr}\left(\frac{r_2}{v_{tr}} - \frac{3}{2} t_f\right)\right\} \frac{\partial v_{c\theta}}{\partial t_f}}{v_{c\theta}\left(1 - \frac{r_1 v_{cr}}{r_2 v_{tr}}\right)},$$

we obtain

$$\left(\frac{\partial v_{c\theta}}{\partial \theta_R}\right)_{t_f} = \frac{1}{2 r_1^2 v_{c\theta}\left(\sin E_2 - \sin E_1\right)} \begin{bmatrix} \mu b e \sin E_1 \sin E_2 \\ -r_1 \begin{Bmatrix} 2\left(r_1^2 \sin E_2 - r_2^2 \sin E_1\right) \\ +3a^2 e \sin E_1 \sin E_2 \left[E_2 - E_1 - e\left(\sin E_2 - \sin E_1\right)\right] \end{Bmatrix} \frac{\partial v_{c\theta}}{\partial t_f} \end{bmatrix}.$$

From Equations (F-1),

$$\begin{aligned} r_1^2 \sin E_2 - r_2^2 \sin E_1 &= a^2 \left\{\left(1 - e\cos E_1\right)^2 \sin E_2 - \left(1 - e\cos E_2\right)^2 \sin E_1\right\} \\ &= a^2 \left[\left(\sin E_2 - \sin E_1\right)\left\{1 + e^2\left(1 + \sin E_1 \sin E_2\right)\right\} - 2e\sin\left(E_2 - E_1\right)\right] \end{aligned}$$

$$\begin{aligned} &\Rightarrow 2\left(r_1^2 \sin E_2 - r_2^2 \sin E_1\right) + 3a^2 e \sin E_1 \sin E_2 \left\{E_2 - E_1 - e\left(\sin E_2 - \sin E_1\right)\right\} \\ &= a^2 \left[\left(\sin E_2 - \sin E_1\right)\left\{2 + e^2\left(2 - \sin E_1 \sin E_2\right)\right\} + e\left\{3\left(E_2 - E_1\right)\sin E_1 \sin E_2 - 4\sin\left(E_2 - E_1\right)\right\}\right]. \end{aligned}$$

$$\therefore \quad \left(\frac{\partial v_{c\theta}}{\partial \theta_R}\right)_{t_f} = \frac{1}{2 r_1^2 v_{c\theta}\left(\sin E_2 - \sin E_1\right)} \frac{\partial v_{c\theta}}{\partial t_f} \begin{bmatrix} \mu b e \sin E_1 \sin E_2 \frac{\partial t_f}{\partial v_{c\theta}} \\ -a^2 r_1 \begin{Bmatrix} \left(\sin E_2 - \sin E_1\right)\left[2 + e^2\left(2 - \sin E_1 \sin E_2\right)\right] \\ +e\left[3\left(E_2 - E_1\right)\sin E_1 \sin E_2 - 4\sin\left(E_2 - E_1\right)\right] \end{Bmatrix} \end{bmatrix}.$$

Substituting Equations (F-10) and (F-13) into the above equation,

$$\left(\frac{\partial v_{c\theta}}{\partial \theta_R}\right)_{t_f} = \frac{\mu a^2 b^2}{2 r_1^2 v_{c\theta}\left(\sin E_2 - \sin E_1\right)\sqrt{F}} \frac{\partial v_{c\theta}}{\partial t_f} \left[\begin{array}{l} e \sin E_1 \sin E_2 \left\{ \begin{array}{l} \left[\sin\left(E_2 - E_1\right) + e\left(\sin E_2 - \sin E_1\right)\right]. \\ \left[3\left(E_2 - E_1\right) - e\left(\sin E_2 - \sin E_1\right)\right] - 16 \sin^2 x \end{array} \right\} \\ -\left\{\sin\left(E_2 - E_1\right) - e\left(\sin E_2 - \sin E_1\right)\right\}. \\ \left\{ \begin{array}{l} \left(\sin E_2 - \sin E_1\right)\left[2 + e^2\left(2 - \sin E_1 \sin E_2\right)\right] \\ + e\left[3\left(E_2 - E_1\right)\sin E_1 \sin E_2 - 4 \sin\left(E_2 - E_1\right)\right] \end{array} \right\} \end{array} \right]$$

$$= \frac{\mu a^2 b^2}{r_1^2 v_{c\theta}\sqrt{F}} \frac{\partial v_{c\theta}}{\partial t_f} \left\{ \begin{array}{r} e\left(\sin E_2 - \sin E_1\right)\left(3 + e^2 - e^2 \sin E_1 \sin E_2\right) - \left(3e^2 + 1\right)\sin\left(E_2 - E_1\right) \\ + 3e^2\left(E_2 - E_1\right)\sin E_1 \sin E_2 \end{array} \right\}.$$

Using Equation (F-7) in the above equation,

$$\left(\frac{\partial v_{c\theta}}{\partial \theta_R}\right)_{t_f} = \frac{a^3}{\sqrt{F}} v_{c\theta} \frac{\partial v_{c\theta}}{\partial t_f} \left\{ \begin{array}{l} e\left(\sin E_2 - \sin E_1\right)\left(3 + e^2 - e^2 \sin E_1 \sin E_2\right) \\ -\left(3e^2 + 1\right)\sin\left(E_2 - E_1\right) + 3e^2\left(E_2 - E_1\right)\sin E_1 \sin E_2 \end{array} \right\}. \quad \text{(F-14)}$$

Note that a and b can be computed from Equations (3), (9), (11) of the main text, and (F-7). We have

$$a = \frac{1}{2} S \csc^2 x = \frac{\mu r_1^2 r_2^2 v_{c\theta}^2 \sin^2 \theta_R}{F}, \; b = r_1 v_{c\theta}\sqrt{\frac{a}{\mu}} = \frac{r_1^2 r_2 v_{c\theta}^2 \sin \theta_R}{\sqrt{F}}.$$

Second method: Equation (F-14) may also be derived from the identity

$$\left(\frac{\partial v_{c\theta}}{\partial \theta_R}\right)_{t_f} \left(\frac{\partial \theta_R}{\partial t_f}\right)_{v_{c\theta}} \left(\frac{\partial t_f}{\partial v_{c\theta}}\right)_{\theta_R} = -1.$$

$\left(\frac{\partial t_f}{\partial v_{c\theta}}\right)_{\theta_R}$ is given by Equation (F-13). Differentiating Equation (13) of the main text, namely,

$$t_f = \frac{r_1 r_2 v_{c\theta} \sin \theta_R}{F} \left\{ \begin{array}{l} 2\mu r_2\left(r_1 + r_2\right)\sin^2 \frac{\theta_R}{2} - r_1 v_{c\theta}^2\left(r_1^2 + r_2^2 - 2 r_1 r_2 \cos \theta_R\right) \\ + \frac{2\mu r_1^2 r_2^2 v_{c\theta}^2 \sin^2 \theta_R}{\sqrt{F}} \arctan \frac{\sqrt{F}}{r_1\left(r_1 + r_2\right) v_{c\theta}^2 - 2\mu r_2 \sin^2 \frac{\theta_R}{2}} \end{array} \right\},$$

we obtain

$$\left(\frac{\partial t_f}{\partial \theta_R}\right)_{v_{c\theta}} = t_f\left(\cot\theta_R - \frac{1}{F}\frac{\partial F}{\partial \theta_R}\right) +$$

$$\frac{r_1 r_2^2 v_{c\theta}\sin^2\theta_R}{F}\left[\begin{array}{l} \mu\left(r_1+r_2\right) - 2r_1^2 v_{c\theta}^2 + \dfrac{2\mu^2 r_2}{r_1 v_{c\theta}^2}\sin^2\dfrac{\theta_R}{2} \\ + \dfrac{\mu}{2r_1 v_{c\theta}^2 F}\tan\dfrac{\theta_R}{2}\left\{r_1\left(r_1+r_2\right)v_{c\theta}^2 - 2\mu r_2\sin^2\dfrac{\theta_R}{2}\right\}\dfrac{\partial F}{\partial\theta_R} \\ + \dfrac{\mu r_1^2 r_2 v_{c\theta}^2\sin\theta_R}{\sqrt{F}}\left(4\cot\theta_R - \dfrac{1}{F}\dfrac{\partial F}{\partial\theta_R}\right)\arctan\dfrac{\sqrt{F}}{r_1\left(r_1+r_2\right)v_{c\theta}^2 - 2\mu r_2\sin^2\dfrac{\theta_R}{2}} \end{array}\right]. \tag{F-15}$$

Differentiating the expression for F on page 11 of the main text, namely,

$$F = \left\{2\mu r_2\sin^2\frac{\theta_R}{2} - r_1 v_{c\theta}^2\left(r_1+r_2-2\sqrt{r_1 r_2}\cos\frac{\theta_R}{2}\right)\right\}\left\{r_1 v_{c\theta}^2\left(r_1+r_2+2\sqrt{r_1 r_2}\cos\frac{\theta_R}{2}\right) - 2\mu r_2\sin^2\frac{\theta_R}{2}\right\},$$

we have

$$\frac{\partial F}{\partial\theta_R} = 2r_2\sin\theta_R\left\{-r_1^3 v_{c\theta}^4 + \mu r_1\left(r_1+r_2\right)v_{c\theta}^2 - 2\mu^2 r_2\sin^2\frac{\theta_R}{2}\right\}.$$

Substituting Equations (F-1), (F-2), (F-4′), and (F-7) into the above equation,

$$\frac{\partial F}{\partial\theta_R} = \frac{2\mu ab}{r_1}\sqrt{F}\left\{\cos\left(E_2-E_1\right) - e\left(\cos E_1+\cos E_2\right)+e^2\right\}. \tag{F-16}$$

From Equations (F-1), (F-2), and (F-7),

$$\mu\left(r_1+r_2\right) - 2r_1^2 v_{c\theta}^2 + \frac{2\mu^2 r_2}{r_1 v_{c\theta}^2}\sin^2\frac{\theta_R}{2} = \mu a\left\{1-\cos\left(E_2-E_1\right) - e\left(\cos E_1+\cos E_2\right)+2e^2\right\}. \tag{F-17}$$

From Equations (F-2) and (F-4′),

$$\tan\frac{\theta_R}{2} = \frac{\sin\dfrac{\theta_R}{2}}{\cos\dfrac{\theta_R}{2}} = \frac{2\sin^2\dfrac{\theta_R}{2}}{\sin\theta_R} = \frac{2\mu b^3\sin^2 x}{a r_1\sqrt{F}}. \tag{F-18}$$

From Equations (F-7), (F-16), (F-18), and (12) of the main text,

$$\frac{\mu}{2r_1 v_{c\theta}^2 F}\tan\frac{\theta_R}{2}\left\{r_1\left(r_1+r_2\right)v_{c\theta}^2 - 2\mu r_2\sin^2\frac{\theta_R}{2}\right\}\frac{\partial F}{\partial\theta_R} = \frac{\mu^2 ab^2}{r_1\sqrt{F}}\sin\left(2x\right)\left\{\cos\left(E_2-E_1\right) - e\left(\cos E_1+\cos E_2\right)+e^2\right\}.$$

Substituting Equation (F-10) into the above equation,

$$\frac{\mu}{2r_1 v_{c\theta}^2 F}\tan\frac{\theta_R}{2}\left\{r_1\left(r_1+r_2\right)v_{c\theta}^2-2\mu r_2\sin^2\frac{\theta_R}{2}\right\}\frac{\partial F}{\partial\theta_R}$$
$$=\frac{\mu a\sin\left(E_2-E_1\right)}{\sin\left(E_2-E_1\right)-e\left(\sin E_2-\sin E_1\right)}\left\{\cos\left(E_2-E_1\right)-e\left(\cos E_1+\cos E_2\right)+e^2\right\}. \tag{F-19}$$

From Equations (F-4′), (F-5), and (F-16),

$$4\cos\theta_R-\frac{1}{F}\frac{\partial F}{\partial\theta_R}\sin\theta_R=\frac{2a^2}{r_1r_2}\left\{\cos\left(E_2-E_1\right)-e\left(\cos E_1+\cos E_2\right)+e^2\left(1-2\sin E_1\sin E_2\right)\right\}.$$

Dividing the above equation by $\sin\theta_R$ and using Equation (F-4),

$$4\cot\theta_R-\frac{1}{F}\frac{\partial F}{\partial\theta_R}=\frac{2a^2}{r_1r_2\sin\theta_R}\left\{\cos\left(E_2-E_1\right)-e\left(\cos E_1+\cos E_2\right)+e^2\left(1-2\sin E_1\sin E_2\right)\right\}$$
$$=\frac{2a}{b}\frac{\cos\left(E_2-E_1\right)-e\left(\cos E_1+\cos E_2\right)+e^2\left(1-2\sin E_1\sin E_2\right)}{\sin\left(E_2-E_1\right)-e\left(\sin E_2-\sin E_1\right)}. \tag{F-20}$$

From Equations (F-4′), (F-7), (F-20), and (12) of the main text,

$$\frac{\mu r_1^2 r_2 v_{c\theta}^2\sin\theta_R}{\sqrt{F}}\left(4\cot\theta_R-\frac{1}{F}\frac{\partial F}{\partial\theta_R}\right)\arctan\frac{\sqrt{F}}{r_1\left(r_1+r_2\right)v_{c\theta}^2-2\mu r_2\sin^2\frac{\theta_R}{2}}$$
$$=\mu a\left(E_2-E_1\right)\frac{\cos\left(E_2-E_1\right)-e\left(\cos E_1+\cos E_2\right)+e^2\left(1-2\sin E_1\sin E_2\right)}{\sin\left(E_2-E_1\right)-e\left(\sin E_2-\sin E_1\right)}. \tag{F-21}$$

From Equations (F-4′) and (F-10),

$$\frac{r_1r_2^2v_{c\theta}\sin^2\theta_R}{F}=\frac{a^2r_1v_{c\theta}}{\mu^2b^2}=\frac{a^2v_{c\theta}}{\mu\sqrt{F}}\left\{\sin\left(E_2-E_1\right)-e\left(\sin E_2-\sin E_1\right)\right\}. \tag{F-22}$$

From Equations (F-4′), (F-5), and (F-16),

$$\cot\theta_R-\frac{1}{F}\frac{\partial F}{\partial\theta_R}=\frac{a^2}{r_1r_2\sin\theta_R}\left\{-\cos\left(E_2-E_1\right)+e\left(\cos E_1+\cos E_2\right)-e^2\left(1+\sin E_1\sin E_2\right)\right\}$$
$$=\frac{\mu ab}{r_1\sqrt{F}}\left\{-\cos\left(E_2-E_1\right)+e\left(\cos E_1+\cos E_2\right)-e^2\left(1+\sin E_1\sin E_2\right)\right\}. \tag{F-23}$$

From Equations (F-7), (F-12), and (F-23),

$$t_f\left(\cot\theta_R-\frac{1}{F}\frac{\partial F}{\partial\theta_R}\right)=\frac{a^2b}{r_1}\sqrt{\frac{\mu a}{F}}\left\{E_2-E_1-e\left(\sin E_2-\sin E_1\right)\right\}.$$
$$\left\{-\cos\left(E_2-E_1\right)+e\left(\cos E_1+\cos E_2\right)-e^2\left(1+\sin E_1\sin E_2\right)\right\}$$
$$=\frac{a^3v_{c\theta}}{\sqrt{F}}\left\{E_2-E_1-e\left(\sin E_2-\sin E_1\right)\right\}\left\{-\cos\left(E_2-E_1\right)+e\left(\cos E_1+\cos E_2\right)-e^2\left(1+\sin E_1\sin E_2\right)\right\}. \tag{F-24}$$

Substituting Equations (F-17), (F-19), (F-21), (F-22), and (F-24) into Equation (F-15),

$$\left(\frac{\partial t_f}{\partial\theta_R}\right)_{v_{c\theta}}=\frac{a^3v_{c\theta}}{\sqrt{F}}\begin{bmatrix}\left\{E_2-E_1-e\left(\sin E_2-\sin E_1\right)\right\}\left\{-\cos\left(E_2-E_1\right)+e\left(\cos E_1+\cos E_2\right)-e^2\left(1+\sin E_1\sin E_2\right)\right\}\\+\left\{\sin\left(E_2-E_1\right)-e\left(\sin E_2-\sin E_1\right)\right\}\left\{1-\cos\left(E_2-E_1\right)-e\left(\cos E_1+\cos E_2\right)+2e^2\right\}\\+\sin\left(E_2-E_1\right)\left\{\cos\left(E_2-E_1\right)-e\left(\cos E_1+\cos E_2\right)+e^2\right\}\\+\left(E_2-E_1\right)\left\{\cos\left(E_2-E_1\right)-e\left(\cos E_1+\cos E_2\right)+e^2\left(1-2\sin E_1\sin E_2\right)\right\}\end{bmatrix}$$
$$=\frac{a^3v_{c\theta}}{\sqrt{F}}\begin{bmatrix}\sin\left(E_2-E_1\right)\left\{3e^2+1-2e\left(\cos E_1+\cos E_2\right)\right\}\\-e\left(\sin E_2-\sin E_1\right)\left\{1-2\cos\left(E_2-E_1\right)+e^2\left(1-\sin E_1\sin E_2\right)\right\}-3\left(E_2-E_1\right)e^2\sin E_1\sin E_2\end{bmatrix}.$$

Now

$$\cos E_1+\cos E_2=2\cos x\cos\left(x+E_1\right)=2\cot x\sin x\cos\left(x+E_1\right)=\cot x\left(\sin E_2-\sin E_1\right)$$
$$\Rightarrow\sin\left(E_2-E_1\right)\left(\cos E_1+\cos E_2\right)=2\sin x\cos x\cot x\left(\sin E_2-\sin E_1\right)=2\cos^2 x\left(\sin E_2-\sin E_1\right)$$
$$=\left\{1+\cos\left(E_2-E_1\right)\right\}\left(\sin E_2-\sin E_1\right)$$
$$\Rightarrow\left(\frac{\partial t_f}{\partial\theta_R}\right)_{v_{c\theta}}=\frac{a^3v_{c\theta}}{\sqrt{F}}\left\{\begin{aligned}&-e\left(\sin E_2-\sin E_1\right)\left(3+e^2-e^2\sin E_1\sin E_2\right)+\left(3e^2+1\right)\sin\left(E_2-E_1\right)\\&-3e^2\left(E_2-E_1\right)\sin E_1\sin E_2\end{aligned}\right\}$$
$$\Rightarrow\left(\frac{\partial v_{c\theta}}{\partial\theta_R}\right)_{t_f}=-\frac{\partial v_{c\theta}}{\partial t_f}\left(\frac{\partial t_f}{\partial\theta_R}\right)_{v_{c\theta}}$$

which yields Equation (F-14).

Equation (F-14) is analytic everywhere provided that $\frac{\partial t_f}{\partial v_{c\theta}}\neq 0$. It will now be shown that $\frac{\partial t_f}{\partial v_{c\theta}}<0$ universally. From page 18 of the main text,

$$\lim_{x\to 0}\frac{\partial t_f}{\partial v_{c\theta}}=-\frac{2\left(r_1+r_2-2\sqrt{r_1r_2}\cos\frac{\theta_R}{2}\right)}{5\mu r_2\sin\theta_R}\left\{\left(r_1+r_2\right)^2-r_1r_2\cos^2\frac{\theta_R}{2}+\sqrt{r_1r_2}\left(r_1+r_2\right)\cos\frac{\theta_R}{2}\right\}<0,$$

which proves the proposition for a parabolic trajectory. For an elliptical trajectory, since $\frac{\partial t_f}{\partial v_{c\theta}} = \frac{\frac{\partial t_f}{\partial x}}{\frac{\partial v_{c\theta}}{\partial x}}$, where $\frac{\partial v_{c\theta}}{\partial x} < 0$ (from Equation (E-1)), it is desired to prove that $\frac{\partial t_f}{\partial x} > 0$. Now, from Equation (5) of the main text,

$$\frac{\partial t_f}{\partial x} = \frac{1}{\sqrt{2\mu S}} \csc x \begin{bmatrix} (r_1 + r_2)^2 \left\{3\csc^2 x (1 - x\cot x) - 1\right\} \\ +2r_1 r_2 \cos^2 \frac{\theta_R}{2} \left\{6\csc^2 x - 5 - 3x\cot x \left(2\csc^2 x - 1\right)\right\} \\ +\sqrt{r_1 r_2}\,(r_1 + r_2)\cos\frac{\theta_R}{2}\left\{3x\csc x\left(4\csc^2 x - 3\right) - \left(12\csc^2 x - 1\right)\cos x\right\} \end{bmatrix}.$$

To prove that the above expression is positive, the following theorem will be employed:* For all real values of u, the expression $Au^2 + Bu + C$ has the same sign as A, except when the roots of the equation $Au^2 + Bu + C = 0$ are real and unequal, and u has a value lying between them. Putting

$$u = \frac{r_1 + r_2}{\sqrt{r_1 r_2}} \sec\frac{\theta_R}{2},\ A = 3\csc^2 x (1 - x\cot x) - 1,\ B = 3x\csc x\left(4\csc^2 x - 3\right) - \left(12\csc^2 x - 1\right)\cos x,$$

$$C = 2\left\{6\csc^2 x - 5 - 3x\cot x\left(2\csc^2 x - 1\right)\right\},$$

we have

$$\frac{\partial t_f}{\partial x} = \frac{r_1 r_2}{\sqrt{2\mu S}} \cos^2\frac{\theta_R}{2} \csc x\left(Au^2 + Bu + C\right).$$

Clearly, $u > 1$. Since $A > 0$ (from Equation (19) of the main text), the above theorem implies that $\frac{\partial t_f}{\partial x} > 0$ when either $B^2 - 4AC \le 0$, or $B^2 - 4AC > 0$ and $u > w$, where $w = \frac{1}{2A}\left(-B + \sqrt{B^2 - 4AC}\right)$. Performing the computations,

$$\begin{aligned} B^2 - 4AC &= 9x^2\csc^2 x + 6x\cot x + \cos^2 x - 16 = \left(3x\csc x + \cos x\right)^2 - 16 \\ &= \left(3x\csc x + \cos x + 4\right)\left(3x\csc x + \cos x - 4\right). \end{aligned}$$

Now

$$\frac{d}{dx}\left(3x\csc x + \cos x - 4\right) = 3\csc x\left(1 - x\cot x\right) - \sin x = A\sin x > 0,\ 0 < x < \pi.$$

* Hall, H. S. and Knight, S. R., *Higher Algebra*, Fourth Edition, Macmillan, London, 1936.

Thus, $3x\csc x+\cos x-4$ increases monotonically in the interval $[0,\pi)$. Since $\lim_{x\to 0}(3x\csc x+\cos x-4)=0$, it follows that $3x\csc x+\cos x-4\geq 0$, where $0\leq x<\pi$. Hence, $B^2-4AC>0$. By expanding $\cos x$, $\csc x$, and $\cot x$ in powers of x, it can be shown that

$$\lim_{x\to 0} w=\frac{\sqrt{5}-1}{2}.$$

Also,

$$\lim_{x\to\pi} w=\lim_{x\to\pi}\frac{\left(12-\sin^2 x\right)\cos x\sin x-3x\left(4-3\sin^2 x\right)+\sin^2 x\sqrt{\left(3x+\cos x\sin x\right)^2-16\sin^2 x}}{2\left\{3\left(\sin x-x\cos x\right)-\sin^3 x\right\}}=-2\cdot$$

Plotting w versus x for $0<x<\pi$ reveals that w decreases monotonically in the interval $[0,\pi)$. Hence,

$$-2\leq w\leq\frac{\sqrt{5}-1}{2}<1<u\quad\Rightarrow\frac{\partial t_f}{\partial x}>0.$$

For a hyperbolic trajectory, $\dfrac{\partial t_f}{\partial v_{c\theta}}=\dfrac{\dfrac{\partial t_f}{\partial y}}{\dfrac{\partial v_{c\theta}}{\partial y}}$. Differentiating $v_{c\theta}=\sqrt{\dfrac{2\mu r_2}{r_1 S'}}\sin\dfrac{\theta_R}{2}$, where $S'=r_1+r_2-2\sqrt{r_1 r_2}\cosh y\cos\dfrac{\theta_R}{2}$, we have $\dfrac{\partial v_{c\theta}}{\partial y}=\sqrt{\dfrac{\mu}{2S'^3}}r_2\sinh y\sin\theta_R>0$. Thus, it is desired to prove that $\dfrac{\partial t_f}{\partial y}<0$. From page 16 of the main text,

$$\frac{\partial t_f}{\partial y}=\frac{1}{\sqrt{2\mu S'}}\operatorname{csch} y\begin{bmatrix}\left(r_1+r_2\right)^2\left\{3\operatorname{csch}^2 y\left(y\coth y-1\right)-1\right\}\\ +2r_1 r_2\cos^2\dfrac{\theta_R}{2}\left\{3y\coth y\left(2\operatorname{csch}^2 y+1\right)-6\operatorname{csch}^2 y-5\right\}\\ +\sqrt{r_1 r_2}\left(r_1+r_2\right)\cos\dfrac{\theta_R}{2}\left\{\left(12\operatorname{csch}^2 y+1\right)\cosh y-3y\operatorname{csch} y\left(4\operatorname{csch}^2 y+3\right)\right\}\end{bmatrix}$$

$$=\frac{r_1 r_2}{\sqrt{2\mu S'}}\cos^2\frac{\theta_R}{2}\operatorname{csch} y\left(A'u^2+B'u+C'\right),$$

where

$$A'=3\operatorname{csch}^2 y\left(y\coth y-1\right)-1,\ B'=\left(12\operatorname{csch}^2 y+1\right)\cosh y-3y\operatorname{csch} y\left(4\operatorname{csch}^2 y+3\right),$$
$$C'=2\left\{3y\coth y\left(2\operatorname{csch}^2 y+1\right)-6\operatorname{csch}^2 y-5\right\}.$$

Since $A' < 0$ (from Equation (22) of the main text), the theorem on page F-10 implies that $\frac{\partial t_f}{\partial y} < 0$ when either $B'^2 - 4A'C' \le 0,$ or $B'^2 - 4A'C' > 0$ and $u > w',$ where $w' = \frac{1}{2A'}\left(-B' - \sqrt{B'^2 - 4A'C'}\right)$. Performing the computations,

$$\begin{aligned} B'^2 - 4A'C' &= 9y^2\operatorname{csch}^2 y + 6y\coth y + \cosh^2 y - 16 = \left(3y\operatorname{csch} y + \cosh y\right)^2 - 16 \\ &= \left(3y\operatorname{csch} y + \cosh y + 4\right)\left(3y\operatorname{csch} y + \cosh y - 4\right). \end{aligned}$$

Now

$$\frac{d}{dy}\left(3y\operatorname{csch} y + \cosh y - 4\right) = \sinh y - 3\operatorname{csch} y\left(y\coth y - 1\right) = -A'\sinh y > 0,\ y > 0.$$

Thus, $3y\operatorname{csch} y + \cosh y - 4$ increases monotonically in the interval $[0,\infty)$. Since $\lim_{y\to 0}\left(3y\operatorname{csch} y + \cosh y - 4\right) = 0,$ it follows that $3y\operatorname{csch} y + \cosh y - 4 \ge 0,$ where $y \ge 0.$ Hence, $B'^2 - 4A'C' > 0.$ By expanding $\cosh y$, $\operatorname{csch} y$, and $\coth y$ in powers of $y,$ it can be shown that

$$\lim_{y\to 0} w' = \frac{\sqrt{5}-1}{2}.$$

However,

$$\lim_{y\to\infty} w' = \lim_{y\to\infty}\frac{\left(12 + \sinh^2 y\right)\cosh y\sinh y - 3y\left(4 + 3\sinh^2 y\right) + \sinh^2 y\sqrt{\left(3y + \cosh y\sinh y\right)^2 - 16\sinh^2 y}}{2\left\{\sinh^3 y - 3\left(y\cosh y - \sinh y\right)\right\}} = \infty,$$

and a snag is encountered. This snag can be circumvented by observing that

$$S' = r_1 + r_2 - 2\sqrt{r_1 r_2}\cosh y\cos\frac{\theta_R}{2} = \sqrt{r_1 r_2}\cos\frac{\theta_R}{2}\left(u - 2\cosh y\right) > 0 \quad \Rightarrow u > 2\cosh y,$$

which suggests finding $\lim_{y\to\infty}\frac{w'}{\cosh y}$. Using the above expression for $w',$ it can be shown that $\lim_{y\to\infty}\frac{w'}{\cosh y} = 1.$ Since $\lim_{y\to 0}\cosh y = 1,$ it follows that $\lim_{y\to 0}\frac{w'}{\cosh y} = \frac{\sqrt{5}-1}{2}.$ Plotting $w'\operatorname{sech} y$ versus y for $0 < y < \infty$ reveals that $w'\operatorname{sech} y$ increases monotonically in the interval $[0,\infty)$. Hence,

$$\frac{\sqrt{5}-1}{2} \le w'\operatorname{sech} y < 1 \quad \Rightarrow w' < \cosh y < \frac{u}{2} < u \quad \Rightarrow \frac{\partial t_f}{\partial y} < 0.$$

Thus, it has been proven that $\dfrac{\partial t_f}{\partial v_{c\theta}} < 0$ universally. A heuristic argument that this inequality is indeed valid was presented to the author by William Davis in a private communication. If either v_{cr} or $v_{c\theta}$ is increased while holding the other constant, θ_R will increase. Therefore, to keep θ_R constant, either v_{cr} has to be increased while decreasing $v_{c\theta}$ or vice versa. However, simultaneously increasing v_{cr} and decreasing $v_{c\theta}$ tends to increase t_f, while simultaneously decreasing v_{cr} and increasing $v_{c\theta}$ tends to decrease t_f. In either case, $\dfrac{\partial t_f}{\partial v_{c\theta}} < 0.$

To recapitulate, given $\vec{\mathbf{r}}_1, \vec{\mathbf{r}}_2$, and $v_{c\theta}$, the desired algorithm is

$$\theta_R = \arccos\left(\hat{\mathbf{r}}_1 \cdot \hat{\mathbf{r}}_2\right),\ v_{cr} = \left(\cot\theta_R - \frac{r_1}{r_2}\csc\theta_R\right)v_{c\theta} + \frac{\mu}{r_1 v_{c\theta}}\tan\frac{\theta_R}{2},\ v_{tr} = \left(1 - \frac{r_1}{r_2}\right)v_{c\theta}\cot\frac{\theta_R}{2} - v_{cr},$$

$$F = \left\{2\mu r_2 \sin^2\frac{\theta_R}{2} - r_1 v_{c\theta}^2\left(r_1 + r_2 - 2\sqrt{r_1 r_2}\cos\frac{\theta_R}{2}\right)\right\}\left\{r_1 v_{c\theta}^2\left(r_1 + r_2 + 2\sqrt{r_1 r_2}\cos\frac{\theta_R}{2}\right) - 2\mu r_2 \sin^2\frac{\theta_R}{2}\right\},$$

$$a = \frac{\mu r_1^2 r_2^2 v_{c\theta}^2 \sin^2\theta_R}{F},\ b = \frac{r_1^2 r_2 v_{c\theta}^2 \sin\theta_R}{\sqrt{F}},\ e^2 = 1 - \frac{b^2}{a^2},$$

$$e\sin E_1 = \frac{r_1 v_{cr}}{\sqrt{\mu a}},\ e\sin E_2 = \frac{r_2 v_{tr}}{\sqrt{\mu a}},\ E_2 - E_1 = 2\arctan\frac{\sqrt{F}}{r_1\left(r_1 + r_2\right)v_{c\theta}^2 - 2\mu r_2 \sin^2\frac{\theta_R}{2}},$$

$$\frac{\partial t_f}{\partial v_{c\theta}} = \frac{a^2 b}{\sqrt{F}}\left[\left\{\sin\left(E_2 - E_1\right) + e\left(\sin E_2 - \sin E_1\right)\right\}\left\{3\left(E_2 - E_1\right) - e\left(\sin E_2 - \sin E_1\right)\right\} - 16\sin^2\frac{E_2 - E_1}{2}\right],$$

$$\left(\frac{\partial v_{c\theta}}{\partial \theta_R}\right)_{t_f} = \frac{a^3}{\sqrt{F}} v_{c\theta}\frac{\partial v_{c\theta}}{\partial t_f}\left\{\begin{array}{l} e\left(\sin E_2 - \sin E_1\right)\left(3 + e^2 - e^2\sin E_1 \sin E_2\right) \\ -\left(3e^2 + 1\right)\sin\left(E_2 - E_1\right) + 3e^2\left(E_2 - E_1\right)\sin E_1 \sin E_2 \end{array}\right\}.$$

THIS PAGE INTENTIONALLY LEFT BLANK

APPENDIX G

A GENERAL EXPRESSION FOR THE NULL-MISS DIRECTION

The null-miss direction is defined by

$$\hat{\mathbf{P}}_{DK} = -\frac{\dfrac{d\vec{\mathbf{v}}_c}{dt_f}}{\left|\dfrac{d\vec{\mathbf{v}}_c}{dt_f}\right|},$$

where

$$\frac{d\vec{\mathbf{v}}_c}{dt_f} = \frac{\partial\vec{\mathbf{v}}_c}{\partial t_f} + \left(\frac{\partial\vec{\mathbf{v}}_c}{\partial\vec{\mathbf{r}}_2}\right)_{t_f}\frac{d\vec{\mathbf{r}}_2}{dt_f},$$

$$\frac{\partial\vec{\mathbf{v}}_c}{\partial t_f} = \frac{\partial v_{cr}}{\partial t_f}\hat{\mathbf{r}}_1 + \frac{\partial v_{c\theta}}{\partial t_f}\hat{\boldsymbol{\theta}}_1,$$

$$\frac{d\vec{\mathbf{r}}_2}{dt_f} = -\Delta\vec{\mathbf{r}}_2 = \vec{\boldsymbol{\Omega}}\times\vec{\mathbf{r}}_2,$$

$$\left(\frac{\partial\vec{\mathbf{v}}_c}{\partial\vec{\mathbf{r}}_2}\right)_{t_f} = \begin{pmatrix} \left(\dfrac{\partial v_{cr}}{\partial r_2}\right)_{t_f} & \dfrac{1}{r_2}\left(\dfrac{\partial v_{cr}}{\partial\theta_R}\right)_{t_f} & 0 \\ \left(\dfrac{\partial v_{c\theta}}{\partial r_2}\right)_{t_f} & \dfrac{1}{r_2}\left(\dfrac{\partial v_{c\theta}}{\partial\theta_R}\right)_{t_f} & 0 \\ 0 & 0 & \dfrac{v_{c\theta}}{r_2\sin\theta_R} \end{pmatrix}\begin{pmatrix} \cos\theta_R & \sin\theta_R & 0 \\ -\sin\theta_R & \cos\theta_R & 0 \\ 0 & 0 & 1 \end{pmatrix}. \tag{G-1}$$

$\left(\dfrac{\partial v_{c\theta}}{\partial\theta_R}\right)_{t_f}$ is given by either Equation (E-16) or (F-14), $\left(\dfrac{\partial v_{cr}}{\partial\theta_R}\right)_{t_f}$ is given by Equation (E-17), $\left(\dfrac{\partial v_{c\theta}}{\partial r_2}\right)_{t_f}$ is given by Equation (E-19), and $\left(\dfrac{\partial v_{cr}}{\partial r_2}\right)_{t_f}$ is given by Equation (E-20). We will now show that $\dfrac{d\vec{\mathbf{v}}_c}{dt_f} = -\Delta\vec{\mathbf{v}}_c$, where $\Delta\vec{\mathbf{v}}_c$ is given by either Equation (7) or (8) of the main text.

Suppose that the target vector $\vec{\mathbf{r}}_2$ is perturbed by a small amount $\delta\vec{\mathbf{r}}_2$ (Figure G-1). Let $\vec{\mathbf{r}}_2'$ be the new target vector, $\delta\theta_R = \theta_R' - \theta_R$, and $\delta\beta = \beta' - \beta$. Then $\delta\vec{\mathbf{r}}_2 = \vec{\mathbf{r}}_2' - \vec{\mathbf{r}}_2 \approx r_2\delta\theta_R\hat{\boldsymbol{\theta}}_2 + \delta r_p\hat{\mathbf{n}}$, where $\operatorname{sgn}(\delta r_p) = -\operatorname{sgn}(\delta\beta)$, the minus sign being attributed to the fact that a positive change in β points in the opposite direction as $\hat{\mathbf{n}}$. From Figure G-1, we have

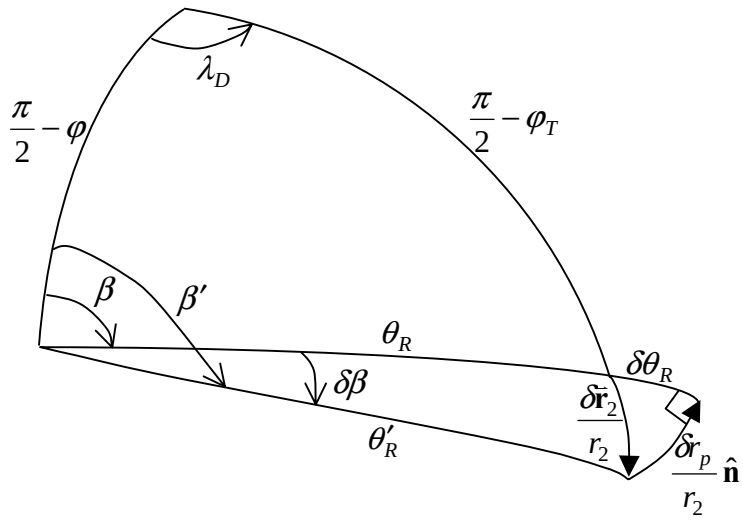

Figure G-1. Representation of a small perturbation in the target vector

$$\sin\frac{\delta r_p}{r_2} = -\sin\theta'_R \sin(\delta\beta).$$

If these finite changes are made infinitesimal, then

$$\sin\frac{\delta r_p}{r_2} = \sin\frac{dr_p}{r_2} = \frac{dr_p}{r_2},\ \ \sin(\delta\beta) = \sin d\beta = d\beta,\ \ \theta'_R = \theta_R + d\theta_R = \theta_R$$

$$\Rightarrow dr_p = -r_2 \sin\theta_R d\beta,\ \text{or}\ \frac{dr_p}{d\beta} = -r_2 \sin\theta_R.$$

From Equation (G-1), we have

$$\frac{\partial\vec{\mathbf{v}}_c}{\partial r_p} = \frac{v_{c\theta}}{r_2 \sin\theta_R}\hat{\mathbf{n}}$$

$$\Rightarrow \frac{\partial\vec{\mathbf{v}}_c}{\partial\beta} = \frac{\partial\vec{\mathbf{v}}_c}{\partial r_p}\frac{dr_p}{d\beta} = -v_{c\theta}\hat{\mathbf{n}}. \tag{G-2}$$

We will now evaluate $\frac{d\theta_R}{dt_f}$ and $\frac{d\beta}{dt_f}$ for which we need the following identities:*

$$\cos\theta_R = \sin\varphi\sin\varphi_T + \cos\varphi\cos\varphi_T\cos\lambda_D, \tag{G-3}$$

$$\sin\theta_R \sin\beta = \cos\varphi_T \sin\lambda_D, \tag{G-4}$$

$$\cos\varphi_T\cos\lambda_D = \cos\varphi\cos\theta_R - \sin\varphi\sin\theta_R\cos\beta, \tag{G-5}$$

$$\cos\varphi_T\cos\beta_b = \sin\varphi\sin\theta_R - \cos\varphi\cos\theta_R\cos\beta, \tag{G-6}$$

$$\sin\varphi_T = \sin\varphi\cos\theta_R + \cos\varphi\sin\theta_R\cos\beta, \tag{G-7}$$

* Sofair, Isaac, K40 Training Guide 4085.1, *A Detailed Derivation of Formulae Arising in Spherical Trigonometry*, Naval Surface Weapons Center, Dahlgren, VA, May 1986 (currently Naval Surface Warfare Center, Dahlgren Division).

where $\lambda_D = \lambda_T - \lambda$, λ and λ_T being the longitudes at release and impact, respectively; φ and φ_T are the corresponding spherical latitudes (i.e., latitudes corresponding to a spherical earth), and β_b is the back bearing. Differentiating Equation (G-3) with respect to t_f and using Equation (G-4) and the fact that $\frac{d\lambda_D}{dt_f} = \Omega$, we have

$$-\sin\theta_R \frac{d\theta_R}{dt_f} = -\cos\varphi\cos\varphi_T \sin\lambda_D \frac{d\lambda_D}{dt_f} = -\Omega\cos\varphi\sin\theta_R\sin\beta$$

$$\Rightarrow \frac{d\theta_R}{dt_f} = \Omega\cos\varphi\sin\beta. \tag{G-8}$$

Differentiating Equation (G-4) with respect to t_f and using Equations (G-5), (G-6), and (G-8), we have

$$\sin\theta_R\cos\beta\frac{d\beta}{dt_f} + \Omega\cos\varphi\cos\theta_R\sin^2\beta = \Omega\cos\varphi_T\cos\lambda_D$$

$$\begin{aligned}
\Rightarrow \sin\theta_R\cos\beta\frac{d\beta}{dt_f} &= \Omega\left(\cos\varphi_T\cos\lambda_D - \cos\varphi\cos\theta_R\sin^2\beta\right)\\
&= \Omega\left(\cos\varphi_T\cos\lambda_D - \cos\varphi\cos\theta_R + \cos\varphi\cos\theta_R\cos^2\beta\right)\\
&= \Omega\left(\cos\varphi\cos\theta_R\cos^2\beta - \sin\varphi\sin\theta_R\cos\beta\right)\\
&= -\Omega\cos\varphi_T\cos\beta\cos\beta_b\\
\Rightarrow \frac{d\beta}{dt_f} &= -\Omega\csc\theta_R\cos\varphi_T\cos\beta_b.
\end{aligned} \tag{G-9}$$

Now if $\hat{\mathbf{P}}$ is a unit vector in the direction of the North Pole, then $\vec{\boldsymbol{\Omega}} = \hat{\mathbf{P}}\Omega$.

$$\begin{aligned}
\hat{\mathbf{P}}\times\hat{\mathbf{r}}_2\cdot\hat{\mathbf{n}} &= \hat{\mathbf{P}}\cdot\hat{\mathbf{r}}_2\times\hat{\mathbf{n}} = -\hat{\mathbf{P}}\cdot\hat{\boldsymbol{\theta}}_2 = \hat{\mathbf{P}}\cdot\left(\hat{\mathbf{r}}_1\csc\theta_R - \hat{\mathbf{r}}_2\cot\theta_R\right) = \hat{\mathbf{P}}\cdot\hat{\mathbf{r}}_1\csc\theta_R - \hat{\mathbf{P}}\cdot\hat{\mathbf{r}}_2\cot\theta_R\\
&= \sin\varphi\csc\theta_R - \sin\varphi_T\cot\theta_R\\
&= \sin\varphi\csc\theta_R - \left(\sin\varphi\cos\theta_R + \cos\varphi\sin\theta_R\cos\beta\right)\cot\theta_R \text{ (from Equation (G-7))}\\
&= \sin\varphi\sin\theta_R - \cos\varphi\cos\theta_R\cos\beta = \cos\varphi_T\cos\beta_b \text{ (from Equation (G-6))}
\end{aligned}$$

$$\Rightarrow \vec{\boldsymbol{\Omega}}\times\vec{\mathbf{r}}_2\cdot\hat{\mathbf{n}} = \Omega r_2\hat{\mathbf{P}}\times\hat{\mathbf{r}}_2\cdot\hat{\mathbf{n}} = -r_2\sin\theta_R\frac{d\beta}{dt_f} \text{ (from Equation (G-9))}. \tag{G-10}$$

Since β is the angle between $\hat{\mathbf{P}}\times\hat{\mathbf{r}}_1$ and $\hat{\mathbf{r}}_1\times\hat{\mathbf{r}}_2$, it follows that

$$\begin{aligned}
\left|\left(\hat{\mathbf{P}}\times\hat{\mathbf{r}}_1\right)\times\left(\hat{\mathbf{r}}_1\times\hat{\mathbf{r}}_2\right)\right| &= \left|\hat{\mathbf{P}}\times\hat{\mathbf{r}}_1\right|\left|\hat{\mathbf{r}}_1\times\hat{\mathbf{r}}_2\right|\sin\beta = \cos\varphi\sin\theta_R\sin\beta\\
&= \left|\left(\hat{\mathbf{P}}\times\hat{\mathbf{r}}_1\cdot\hat{\mathbf{r}}_2\right)\hat{\mathbf{r}}_1 - \left(\hat{\mathbf{P}}\times\hat{\mathbf{r}}_1\cdot\hat{\mathbf{r}}_1\right)\hat{\mathbf{r}}_2\right| = \left|\left(\hat{\mathbf{P}}\cdot\hat{\mathbf{r}}_1\times\hat{\mathbf{r}}_2\right)\hat{\mathbf{r}}_1 - \left(\hat{\mathbf{P}}\cdot\hat{\mathbf{r}}_1\times\hat{\mathbf{r}}_1\right)\hat{\mathbf{r}}_2\right|\\
&= \hat{\mathbf{P}}\cdot\hat{\mathbf{r}}_1\times\hat{\mathbf{r}}_2 = \hat{\mathbf{P}}\cdot\hat{\mathbf{n}}\sin\theta_R \quad \Rightarrow \hat{\mathbf{P}}\cdot\hat{\mathbf{n}} = \cos\varphi\sin\beta.
\end{aligned}$$

Referring to page 7 of the main text and Equation (G-8), we have

$$\Delta\theta_R = -\vec{\mathbf{\Omega}}\cdot\hat{\mathbf{n}} = -\Omega\hat{\mathbf{P}}\cdot\hat{\mathbf{n}} = -\Omega\cos\varphi\sin\beta = -\frac{d\theta_R}{dt_f}, \tag{G-11}$$

$$\Delta x = -\frac{1+\left(\dfrac{\partial t_f}{\partial\theta_R}\right)_x \Delta\theta_R}{\dfrac{\partial t_f}{\partial x}} = -\frac{\partial x}{\partial t_f}\left\{1-\left(\frac{\partial t_f}{\partial\theta_R}\right)_x \frac{d\theta_R}{dt_f}\right\}. \tag{G-12}$$

From page 8 of the main text and Equations (G-10) and (G-11),

$$\begin{aligned}\frac{d\vec{\mathbf{r}}_2}{dt_f} &= \vec{\mathbf{\Omega}}\times\vec{\mathbf{r}}_2 = r_2\sin\theta_R\Delta\theta_R\hat{\mathbf{r}}_1 - r_2\cos\theta_R\Delta\theta_R\hat{\boldsymbol{\theta}}_1 + \left(\vec{\mathbf{\Omega}}\times\vec{\mathbf{r}}_2\cdot\hat{\mathbf{n}}\right)\hat{\mathbf{n}} \\ &= -r_2\sin\theta_R\frac{d\theta_R}{dt_f}\hat{\mathbf{r}}_1 + r_2\cos\theta_R\frac{d\theta_R}{dt_f}\hat{\boldsymbol{\theta}}_1 - r_2\sin\theta_R\frac{d\beta}{dt_f}\hat{\mathbf{n}}.\end{aligned} \tag{G-13}$$

From Equations (G-1), (G-2), and (G-13), it is easy to see that

$$\left(\frac{\partial\vec{\mathbf{v}}_c}{\partial\vec{\mathbf{r}}_2}\right)_{t_f}\frac{d\vec{\mathbf{r}}_2}{dt_f} = \left(\frac{\partial v_{cr}}{\partial\theta_R}\right)_{t_f}\frac{d\theta_R}{dt_f}\hat{\mathbf{r}}_1 + \left(\frac{\partial v_{c\theta}}{\partial\theta_R}\right)_{t_f}\frac{d\theta_R}{dt_f}\hat{\boldsymbol{\theta}}_1 - v_{c\theta}\frac{d\beta}{dt_f}\hat{\mathbf{n}} = \left(\frac{\partial\vec{\mathbf{v}}_c}{\partial\theta_R}\right)_{t_f}\frac{d\theta_R}{dt_f} + \frac{\partial\vec{\mathbf{v}}_c}{\partial\beta}\frac{d\beta}{dt_f}.$$

$$\begin{aligned}\therefore\quad \frac{d\vec{\mathbf{v}}_c}{dt_f} &= \frac{\partial\vec{\mathbf{v}}_c}{\partial t_f} + \left(\frac{\partial\vec{\mathbf{v}}_c}{\partial\vec{\mathbf{r}}_2}\right)_{t_f}\frac{d\vec{\mathbf{r}}_2}{dt_f} = \frac{\partial\vec{\mathbf{v}}_c}{\partial t_f} + \left(\frac{\partial\vec{\mathbf{v}}_c}{\partial\theta_R}\right)_{t_f}\frac{d\theta_R}{dt_f} + \frac{\partial\vec{\mathbf{v}}_c}{\partial\beta}\frac{d\beta}{dt_f} \\ &= \frac{dv_{cr}}{dt_f}\hat{\mathbf{r}}_1 + \frac{dv_{c\theta}}{dt_f}\hat{\boldsymbol{\theta}}_1 - v_{c\theta}\frac{d\beta}{dt_f}\hat{\mathbf{n}}.\end{aligned} \tag{G-14}$$

Now

$$\begin{aligned}\frac{dv_{cr}}{dt_f} &= \frac{\partial v_{cr}}{\partial t_f} + \left(\frac{\partial v_{cr}}{\partial\theta_R}\right)_{t_f}\frac{d\theta_R}{dt_f} = \frac{\partial v_{cr}}{\partial x}\frac{\partial x}{\partial t_f} + \left\{\left(\frac{\partial v_{cr}}{\partial\theta_R}\right)_x + \frac{\partial v_{cr}}{\partial x}\left(\frac{\partial x}{\partial\theta_R}\right)_{t_f}\right\}\frac{d\theta_R}{dt_f} \\ &= \frac{\partial v_{cr}}{\partial x}\left\{\frac{\partial x}{\partial t_f} + \left(\frac{\partial x}{\partial\theta_R}\right)_{t_f}\frac{d\theta_R}{dt_f}\right\} + \left(\frac{\partial v_{cr}}{\partial\theta_R}\right)_x\frac{d\theta_R}{dt_f} = \frac{\partial v_{cr}}{\partial x}\frac{\partial x}{\partial t_f}\left\{1-\left(\frac{\partial t_f}{\partial\theta_R}\right)_x\frac{d\theta_R}{dt_f}\right\} + \left(\frac{\partial v_{cr}}{\partial\theta_R}\right)_x\frac{d\theta_R}{dt_f} \\ &= -\frac{\partial v_{cr}}{\partial x}\Delta x - \left(\frac{\partial v_{cr}}{\partial\theta_R}\right)_x\Delta\theta_R \text{ (from Equations (G-11) and (G-12)).}\end{aligned}$$

Substituting for $\dfrac{\partial v_{cr}}{\partial x}$ and $\left(\dfrac{\partial v_{cr}}{\partial\theta_R}\right)_x$ from Equations (E-4) and (E-5) and using Equation (8) of the main text, we obtain

$$\frac{dv_{cr}}{dt_f} = -\sqrt{\frac{2\mu}{S^3}}\sin x\left(r_1 + r_2\sin^2\frac{\theta_R}{2} - \sqrt{r_1 r_2}\cos x\cos\frac{\theta_R}{2}\right)\Delta x$$
$$+\sqrt{\frac{\mu r_2}{2r_1 S^3}}\sin\frac{\theta_R}{2}\left(r_1\sin^2 x + r_2 - \sqrt{r_1 r_2}\cos x\cos\frac{\theta_R}{2}\right)\Delta\theta_R$$
$$= -\Delta\vec{\mathbf{v}}_c\cdot\hat{\mathbf{r}}_1 . \tag{G-15}$$

Similarly, from Equations (E-1) and (E-3), we have

$$\frac{dv_{c\theta}}{dt_f} = -\frac{\partial v_{c\theta}}{\partial x}\Delta x - \left(\frac{\partial v_{c\theta}}{\partial\theta_R}\right)_x \Delta\theta_R$$
$$= \sqrt{\frac{\mu}{2S^3}}r_2\sin x\sin\theta_R\Delta x - \sqrt{\frac{\mu r_2}{2r_1 S^3}}\left\{\left(r_1 + r_2\right)\cos\frac{\theta_R}{2} - \sqrt{r_1 r_2}\cos x\left(1+\cos^2\frac{\theta_R}{2}\right)\right\}\Delta\theta_R$$
$$= -\Delta\vec{\mathbf{v}}_c\cdot\hat{\boldsymbol{\theta}}_1 . \tag{G-16}$$

From Equation (F-7) and the expression for g in Appendix C, namely,

$$g = \frac{r_1 r_2}{\sqrt{\mu p}}\sin\theta_R ,$$

we have

$$g = \frac{r_2\sin\theta_R}{v_{c\theta}} . \tag{G-17}$$

Substituting Equation (G-17) into Equation (G-10), we obtain

$$\frac{\vec{\boldsymbol{\Omega}}\times\vec{\mathbf{r}}_2\cdot\hat{\mathbf{n}}}{g} = -v_{c\theta}\frac{d\beta}{dt_f} = -\Delta\vec{\mathbf{v}}_c\cdot\hat{\mathbf{n}}$$
$$\Rightarrow v_{c\theta}\frac{d\beta}{dt_f} = \Delta\vec{\mathbf{v}}_c\cdot\hat{\mathbf{n}} . \tag{G-18}$$

Substituting Equations (G-15), (G-16), and (G-18) into Equation (G-14), we finally obtain

$$\frac{d\vec{\mathbf{v}}_c}{dt_f} = -\left(\Delta\vec{\mathbf{v}}_c\cdot\hat{\mathbf{r}}_1\right)\hat{\mathbf{r}}_1 - \left(\Delta\vec{\mathbf{v}}_c\cdot\hat{\boldsymbol{\theta}}_1\right)\hat{\boldsymbol{\theta}}_1 - \left(\Delta\vec{\mathbf{v}}_c\cdot\hat{\mathbf{n}}\right)\hat{\mathbf{n}} = -\Delta\vec{\mathbf{v}}_c ,$$

which proves the identity.

Note that the expression for $\hat{\mathbf{P}}_{DK}$ on page G-3 is general in that it is applicable to all three types of trajectories.

THIS PAGE INTENTIONALLY LEFT BLANK

APPENDIX H

DETERMINATION OF FOOTPRINT ACHIEVABILITY IN CONNECTION WITH TIME OF FLIGHT AND CANTING ANGLE

Assume a scenario consisting of two targets whose spacing is δs. Let $\vec{\mathbf{r}}_1$ be the position vector at first release, $\vec{\mathbf{r}}_2$ the first target vector, $\vec{\mathbf{r}}_2'$ the second target vector, θ_R and β the range and bearing corresponding to the first target, and θ_R' and β' the range and bearing corresponding to the second target (Figure H-1).

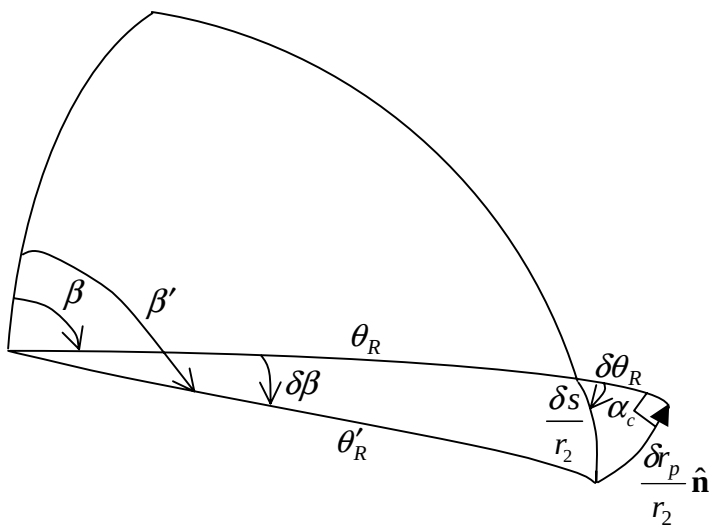

Figure H-1. Canting angle as a measure of the deviation of $\vec{\mathbf{r}}_2'$ from the downrange arc, θ_R

The canting angle, α_c, measured clockwise from the downrange direction at first impact, is the angle between the trajectory plane formed by $\vec{\mathbf{r}}_1$ and $\vec{\mathbf{r}}_2$ and the plane formed by $\vec{\mathbf{r}}_2$ and $\vec{\mathbf{r}}_2'$. Its domain is $0 \le \alpha_c < 2\pi$. It is easy to show that

$$\alpha_c = \arctan \frac{\operatorname{sgn}(\delta\beta)\left|(\hat{\mathbf{r}}_1 \times \hat{\mathbf{r}}_2)\times(\hat{\mathbf{r}}_2 \times \hat{\mathbf{r}}_2')\right|}{(\hat{\mathbf{r}}_1 \times \hat{\mathbf{r}}_2)\cdot(\hat{\mathbf{r}}_2 \times \hat{\mathbf{r}}_2')} = \arctan \frac{\sin\theta_R' \sin(\delta\beta)}{\cos\theta_R \sin\theta_R' \cos(\delta\beta) - \sin\theta_R \cos\theta_R'} .$$

For a given canting angle, α_c, it is possible to predict the relative capability of a missile for different times of flight by determining the relative sizes of the velocity gains necessary to produce a given increment in impact position. Minimum velocity gain reflects optimum missile capability. Specifically, the magnitudes of the minimum velocity changes necessary for the given times of flight must be compared. The minimum velocity change is achieved by considering the effect of changing t_f.

Suppose that a definite trajectory defined by $\vec{\mathbf{r}}_1$, $\vec{\mathbf{r}}_2$, and t_f has been selected, as well as a fixed small change in impact position, $\delta\vec{\mathbf{r}}_2$. For any small change δt_f in t_f, we have, using the results of Appendix G,

$$\delta\bar{\mathbf{v}}_c = \frac{d\bar{\mathbf{v}}_c}{dt_f}\delta t_f + \frac{\partial\bar{\mathbf{v}}_c}{\partial\bar{\mathbf{r}}_2}\delta\bar{\mathbf{r}}_2 = -\hat{\mathbf{P}}_{DK}\left|\frac{d\bar{\mathbf{v}}_c}{dt_f}\right|\delta t_f + \frac{\partial\bar{\mathbf{v}}_c}{\partial\theta_R}\delta\theta_R + \frac{\partial\bar{\mathbf{v}}_c}{\partial\beta}\delta\beta\,,$$

where it is implied that $\frac{\partial\bar{\mathbf{v}}_c}{\partial\theta_R}$ and $\frac{\partial\bar{\mathbf{v}}_c}{\partial\beta}$ are evaluated at constant t_f. The value of δt_f that will minimize $\delta\bar{\mathbf{v}}_c$ is the one for which $\delta\bar{\mathbf{v}}_c$ is perpendicular to $\frac{d\bar{\mathbf{v}}_c}{dt_f}$, i.e.,

$$\delta\bar{\mathbf{v}}_c\cdot\frac{d\bar{\mathbf{v}}_c}{dt_f} = 0, \text{ or } \delta\bar{\mathbf{v}}_c\cdot\hat{\mathbf{P}}_{DK} = 0 \quad \Rightarrow \delta t_f = \left|\frac{d\bar{\mathbf{v}}_c}{dt_f}\right|^{-1}\left(\hat{\mathbf{P}}_{DK}\cdot\frac{\partial\bar{\mathbf{v}}_c}{\partial\theta_R}\delta\theta_R + \hat{\mathbf{P}}_{DK}\cdot\frac{\partial\bar{\mathbf{v}}_c}{\partial\beta}\delta\beta\right).$$

Substituting this value of δt_f into the expression for $\delta\bar{\mathbf{v}}_c$, we obtain

$$\left(\delta\bar{\mathbf{v}}_c\right)_{\min} = \left\{\frac{\partial\bar{\mathbf{v}}_c}{\partial\theta_R} - \hat{\mathbf{P}}_{DK}\left(\hat{\mathbf{P}}_{DK}\cdot\frac{\partial\bar{\mathbf{v}}_c}{\partial\theta_R}\right)\right\}\delta\theta_R + \left\{\frac{\partial\bar{\mathbf{v}}_c}{\partial\beta} - \hat{\mathbf{P}}_{DK}\left(\hat{\mathbf{P}}_{DK}\cdot\frac{\partial\bar{\mathbf{v}}_c}{\partial\beta}\right)\right\}\delta\beta\,.$$

If these finite changes are made infinitesimal, then

$$\frac{d\left(\bar{\mathbf{v}}_c\right)_{\min}}{d\theta_R} = \frac{\partial\bar{\mathbf{v}}_c}{\partial\theta_R} - \hat{\mathbf{P}}_{DK}\left(\hat{\mathbf{P}}_{DK}\cdot\frac{\partial\bar{\mathbf{v}}_c}{\partial\theta_R}\right),$$

$$\frac{d\left(\bar{\mathbf{v}}_c\right)_{\min}}{d\beta} = \frac{\partial\bar{\mathbf{v}}_c}{\partial\beta} - \hat{\mathbf{P}}_{DK}\left(\hat{\mathbf{P}}_{DK}\cdot\frac{\partial\bar{\mathbf{v}}_c}{\partial\beta}\right) = v_{c\theta}\left\{\hat{\mathbf{P}}_{DK}\left(\hat{\mathbf{P}}_{DK}\cdot\hat{\mathbf{n}}\right) - \hat{\mathbf{n}}\right\}, \text{ using Equation (G-2).}$$

From Figure H-1, we have

$$\sin\frac{\delta r_p}{r_2} = -\sin\theta_R'\sin\left(\delta\beta\right) = -\sin\frac{\delta s}{r_2}\sin\alpha_c,\ \cos\frac{\delta r_p}{r_2}\sin\left(\delta\theta_R\right) = \sin\frac{\delta s}{r_2}\cos\alpha_c\,.$$

If these finite changes are made infinitesimal, the above equations reduce to

$$dr_p = -r_2\sin\theta_R d\beta = -ds\sin\alpha_c,\ r_2 d\theta_R = ds\cos\alpha_c \quad \Rightarrow \frac{\partial\theta_R}{\partial s} = \frac{\cos\alpha_c}{r_2},\ \frac{\partial\beta}{\partial s} = \frac{\sin\alpha_c}{r_2\sin\theta_R}\,.$$

Hence,

$$\frac{d\left(\bar{\mathbf{v}}_c\right)_{\min}}{ds} = \frac{d\left(\bar{\mathbf{v}}_c\right)_{\min}}{d\theta_R}\frac{\partial\theta_R}{\partial s} + \frac{d\left(\bar{\mathbf{v}}_c\right)_{\min}}{d\beta}\frac{\partial\beta}{\partial s} = \frac{1}{r_2}\left\{\cos\alpha_c\frac{d\left(\bar{\mathbf{v}}_c\right)_{\min}}{d\theta_R} + \frac{\sin\alpha_c}{\sin\theta_R}\frac{d\left(\bar{\mathbf{v}}_c\right)_{\min}}{d\beta}\right\}$$

$$= \frac{1}{r_2}\left[\cos\alpha_c\left\{\frac{\partial\bar{\mathbf{v}}_c}{\partial\theta_R} - \hat{\mathbf{P}}_{DK}\left(\hat{\mathbf{P}}_{DK}\cdot\frac{\partial\bar{\mathbf{v}}_c}{\partial\theta_R}\right)\right\} + \frac{\sin\alpha_c}{\sin\theta_R}v_{c\theta}\left\{\hat{\mathbf{P}}_{DK}\left(\hat{\mathbf{P}}_{DK}\cdot\hat{\mathbf{n}}\right) - \hat{\mathbf{n}}\right\}\right].$$

With the knowledge that a lower value of $\left|\frac{d\left(\bar{\mathbf{v}}_c\right)_{\min}}{ds}\right|$ implies a greater missile capability, the values of $\left|\frac{d\left(\bar{\mathbf{v}}_c\right)_{\min}}{ds}\right|$ corresponding to a specific canting angle for different times of flight can be compared. Thus, $\left|\frac{d\left(\bar{\mathbf{v}}_c\right)_{\min}}{ds}\right|$ can be used to determine the dependence of missile capability on the time of flight.

THIS PAGE INTENTIONALLY LEFT BLANK

APPENDIX I

COMPUTATION OF THE RATE OF CHANGE OF THE NULL-MISS VECTOR

Since $\hat{\mathbf{P}}_{DK}$ is the direction in which the guidance system is attempting to steer the missile, $\frac{d\vec{\mathbf{P}}_{DK}}{dt_f}$ predicts how the missile is turning, i.e., how the direction of thrust is changing. In this appendix, a closed-form expression for $\frac{d\vec{\mathbf{P}}_{DK}}{dt_f}$ in the local coordinate frame will be derived. The results of Appendices E, G, J, and K will be used. In Appendix G, it was shown that

$$\vec{\mathbf{P}}_{DK} = -\frac{d\vec{\mathbf{v}}_c}{dt_f} = -\left(\frac{\partial v_{cr}}{\partial t_f} + \frac{\partial v_{cr}}{\partial \theta_R}\frac{d\theta_R}{dt_f}\right)\hat{\mathbf{r}}_1 - \left(\frac{\partial v_{c\theta}}{\partial t_f} + \frac{\partial v_{c\theta}}{\partial \theta_R}\frac{d\theta_R}{dt_f}\right)\hat{\boldsymbol{\theta}}_1 + v_{c\theta}\frac{d\beta}{dt_f}\hat{\mathbf{n}}\,, \tag{I-1}$$

where $\frac{\partial v_{cr}}{\partial \theta_R}$ and $\frac{\partial v_{c\theta}}{\partial \theta_R}$ imply $\left(\frac{\partial v_{cr}}{\partial \theta_R}\right)_{t_f}$ and $\left(\frac{\partial v_{c\theta}}{\partial \theta_R}\right)_{t_f}$, respectively. The derivative of $\vec{\mathbf{P}}_{DK}$ with respect to t_f can be expressed as

$$\begin{aligned}\frac{d\vec{\mathbf{P}}_{DK}}{dt_f} &= \frac{\partial \vec{\mathbf{P}}_{DK}}{\partial t_f} + \frac{\partial \vec{\mathbf{P}}_{DK}}{\partial \vec{\mathbf{r}}_1}\frac{d\vec{\mathbf{r}}_1}{dt_f} = \frac{\partial \vec{\mathbf{P}}_{DK}}{\partial t_f} + \frac{\partial \vec{\mathbf{P}}_{DK}}{\partial r_1}\frac{dr_1}{dt_f} + \frac{\partial \vec{\mathbf{P}}_{DK}}{\partial \theta_R}\frac{d\theta_R}{dt_f} + \frac{\partial \vec{\mathbf{P}}_{DK}}{\partial \beta_b}\frac{d\beta_b}{dt_f} \\ &= \frac{\partial \vec{\mathbf{P}}_{DK}}{\partial t_f} + v_{cr}\frac{\partial \vec{\mathbf{P}}_{DK}}{\partial r_1} + \frac{\partial \vec{\mathbf{P}}_{DK}}{\partial \theta_R}\frac{d\theta_R}{dt_f} + \frac{\partial \vec{\mathbf{P}}_{DK}}{\partial \beta_b}\frac{d\beta_b}{dt_f}\,,\end{aligned} \tag{I-2}$$

where the partials are with respect to a fixed target $\vec{\mathbf{r}}_2$ and a changing initial position $\vec{\mathbf{r}}_1$.

We now proceed to derive expressions for $\frac{\partial \vec{\mathbf{P}}_{DK}}{\partial t_f}$, $\frac{\partial \vec{\mathbf{P}}_{DK}}{\partial r_1}$, $\frac{\partial \vec{\mathbf{P}}_{DK}}{\partial \theta_R}$, and $\frac{\partial \vec{\mathbf{P}}_{DK}}{\partial \beta_b}$. The first two partials are straightforward. A change in t_f without changing $\vec{\mathbf{r}}_1$ does not change the local coordinate frame. Since $\vec{\mathbf{r}}_1$ and $\vec{\mathbf{r}}_2$ are both constant in this case, θ_R and β – and therefore $\frac{d\theta_R}{dt_f}$ and $\frac{d\beta}{dt_f}$ – remain constant $\Rightarrow \frac{\partial}{\partial t_f}\frac{d\theta_R}{dt_f} = \frac{\partial}{\partial t_f}\frac{d\beta}{dt_f} = 0$. Hence,

$$\frac{\partial \vec{\mathbf{P}}_{DK}}{\partial t_f} = -\left(\frac{\partial^2 v_{cr}}{\partial t_f^2} + \frac{\partial^2 v_{cr}}{\partial \theta_R \partial t_f}\frac{d\theta_R}{dt_f}\right)\hat{\mathbf{r}}_1 - \left(\frac{\partial^2 v_{c\theta}}{\partial t_f^2} + \frac{\partial^2 v_{c\theta}}{\partial \theta_R \partial t_f}\frac{d\theta_R}{dt_f}\right)\hat{\boldsymbol{\theta}}_1 + \frac{\partial v_{c\theta}}{\partial t_f}\frac{d\beta}{dt_f}\hat{\mathbf{n}}\,. \tag{I-3}$$

Similarly, a change in r_1 does not change the local frame. Since θ_R and β – and hence their derivatives – are independent of r_1, $\frac{\partial}{\partial r_1}\frac{d\theta_R}{dt_f} = \frac{\partial}{\partial r_1}\frac{d\beta}{dt_f} = 0$. Hence,

$$\frac{\partial \vec{\mathbf{P}}_{DK}}{\partial r_1} = -\left(\frac{\partial^2 v_{cr}}{\partial r_1 \partial t_f} + \frac{\partial^2 v_{cr}}{\partial r_1 \partial \theta_R}\frac{d\theta_R}{dt_f}\right)\hat{\mathbf{r}}_1 - \left(\frac{\partial^2 v_{c\theta}}{\partial r_1 \partial t_f} + \frac{\partial^2 v_{c\theta}}{\partial r_1 \partial \theta_R}\frac{d\theta_R}{dt_f}\right)\hat{\boldsymbol{\theta}}_1 + \frac{\partial v_{c\theta}}{\partial r_1}\frac{d\beta}{dt_f}\hat{\mathbf{n}}\,. \tag{I-4}$$

In computing $\frac{\partial \vec{\mathbf{P}}_{DK}}{\partial \theta_R}$, observe that a change $\delta\theta_R$ in θ_R is due to a change in $\vec{\mathbf{r}}_1$ so that the local coordinate frame changes. Let $\hat{\mathbf{r}}_1'$, $\hat{\boldsymbol{\theta}}_1'$, $\hat{\mathbf{n}}$ be the new local coordinate frame. Then, $\hat{\mathbf{r}}_1' \approx \hat{\mathbf{r}}_1 \cos(\delta\theta_R) - \hat{\boldsymbol{\theta}}_1 \sin(\delta\theta_R)$, the minus sign being attributed to the fact that a positive change in θ_R points in the opposite direction as $\hat{\boldsymbol{\theta}}_1$. If $\delta\theta_R$ is made infinitesimal, then $\hat{\mathbf{r}}_1' = \hat{\mathbf{r}}_1 - \hat{\boldsymbol{\theta}}_1 d\theta_R$, $\hat{\boldsymbol{\theta}}_1' = \hat{\mathbf{n}} \times \hat{\mathbf{r}}_1' = \hat{\boldsymbol{\theta}}_1 + \hat{\mathbf{r}}_1 d\theta_R$. Let $\vec{\mathbf{P}}_{DK}'$ be the counterpart of $\vec{\mathbf{P}}_{DK}$ in the new frame. Neglecting terms in $(d\theta_R)^2$, we have

$$
\begin{aligned}
\vec{\mathbf{P}}_{DK}' &= \vec{\mathbf{P}}_{DK} + \frac{\partial \vec{\mathbf{P}}_{DK}}{\partial \theta_R} d\theta_R \\
&= \left\{ (P_{DK})_r + \frac{\partial (P_{DK})_r}{\partial \theta_R} d\theta_R \right\} \hat{\mathbf{r}}_1' + \left\{ (P_{DK})_\theta + \frac{\partial (P_{DK})_\theta}{\partial \theta_R} d\theta_R \right\} \hat{\boldsymbol{\theta}}_1' + \left\{ (P_{DK})_p + \frac{\partial (P_{DK})_p}{\partial \theta_R} d\theta_R \right\} \hat{\mathbf{n}} \\
&= \left\{ (P_{DK})_r + \frac{\partial (P_{DK})_r}{\partial \theta_R} d\theta_R \right\} \left(\hat{\mathbf{r}}_1 - \hat{\boldsymbol{\theta}}_1 d\theta_R \right) + \left\{ (P_{DK})_\theta + \frac{\partial (P_{DK})_\theta}{\partial \theta_R} d\theta_R \right\} \left(\hat{\boldsymbol{\theta}}_1 + \hat{\mathbf{r}}_1 d\theta_R \right) \\
&\qquad + \left\{ (P_{DK})_p + \frac{\partial (P_{DK})_p}{\partial \theta_R} d\theta_R \right\} \hat{\mathbf{n}} \\
&= \vec{\mathbf{P}}_{DK} + \left[\left\{ \frac{\partial (P_{DK})_r}{\partial \theta_R} + (P_{DK})_\theta \right\} \hat{\mathbf{r}}_1 + \left\{ \frac{\partial (P_{DK})_\theta}{\partial \theta_R} - (P_{DK})_r \right\} \hat{\boldsymbol{\theta}}_1 + \frac{\partial (P_{DK})_p}{\partial \theta_R} \hat{\mathbf{n}} \right] d\theta_R
\end{aligned}
$$

$$
\begin{aligned}
\Rightarrow \frac{\partial \vec{\mathbf{P}}_{DK}}{\partial \theta_R} &= \left\{ \frac{\partial (P_{DK})_r}{\partial \theta_R} + (P_{DK})_\theta \right\} \hat{\mathbf{r}}_1 + \left\{ \frac{\partial (P_{DK})_\theta}{\partial \theta_R} - (P_{DK})_r \right\} \hat{\boldsymbol{\theta}}_1 + \frac{\partial (P_{DK})_p}{\partial \theta_R} \hat{\mathbf{n}} \\
&= -\left\{ \frac{\partial^2 v_{cr}}{\partial \theta_R \partial t_f} + \frac{\partial v_{c\theta}}{\partial t_f} + \left(\frac{\partial^2 v_{cr}}{\partial \theta_R^2} + \frac{\partial v_{c\theta}}{\partial \theta_R} \right) \frac{d\theta_R}{dt_f} \right\} \hat{\mathbf{r}}_1 \\
&\quad - \left\{ \frac{\partial^2 v_{c\theta}}{\partial \theta_R \partial t_f} - \frac{\partial v_{cr}}{\partial t_f} + \left(\frac{\partial^2 v_{c\theta}}{\partial \theta_R^2} - \frac{\partial v_{cr}}{\partial \theta_R} \right) \frac{d\theta_R}{dt_f} \right\} \hat{\boldsymbol{\theta}}_1 \\
&\quad + \left(\frac{\partial v_{c\theta}}{\partial \theta_R} \frac{d\beta}{dt_f} + v_{c\theta} \frac{\partial}{\partial \theta_R} \frac{d\beta}{dt_f} \right) \hat{\mathbf{n}}.
\end{aligned}
\tag{I-5}
$$

Note that Equation (I-5) should contain additional terms involving $\frac{\partial}{\partial \theta_R} \frac{d\theta_R}{dt_f}$; however, it is shown in Appendix K that $\frac{\partial}{\partial \theta_R} \frac{d\theta_R}{dt_f} = 0$.

Similarly, in computing $\frac{\partial \vec{\mathbf{P}}_{DK}}{\partial \beta_b}$, a change in β_b is due to a change in $\vec{\mathbf{r}}_1$. Let $\hat{\mathbf{r}}_1'$, $\hat{\boldsymbol{\theta}}_1'$, $\hat{\mathbf{n}}'$ be the new local coordinate frame. Consider a perturbation $\delta\vec{\mathbf{r}}_1$ resulting in a small change $\delta\beta_b$ without changing θ_R. By an analysis similar to that on pages G-3 and G-4 for a perturbation in the target vector, $\delta\vec{\mathbf{r}}_1 = \vec{\mathbf{r}}_1' - \vec{\mathbf{r}}_1 \approx \delta r_{1p}\hat{\mathbf{n}}$. Since a positive change in β_b points in the same direction as $\hat{\mathbf{n}}$, $\operatorname{sgn}\left(\delta r_{1p}\right) = \operatorname{sgn}\left(\delta\beta_b\right) \quad \Rightarrow \sin\frac{\delta r_{1p}}{r_1} = \sin\theta_R \sin\left(\delta\beta_b\right)$. Also, $\hat{\boldsymbol{\theta}}_2' \approx \hat{\boldsymbol{\theta}}_2 \cos\left(\delta\beta_b\right) - \hat{\mathbf{n}}\sin\left(\delta\beta_b\right)$. If these finite changes are made infinitesimal, then

$$dr_{1p} = r_1 \sin\theta_R d\beta_b \quad \Rightarrow \hat{\mathbf{r}}_1' = \hat{\mathbf{r}}_1 + \hat{\mathbf{n}}\sin\theta_R d\beta_b,$$

$$\hat{\boldsymbol{\theta}}_2' = \hat{\boldsymbol{\theta}}_2 - \hat{\mathbf{n}} d\beta_b \quad \Rightarrow \hat{\boldsymbol{\theta}}_1'\cos\theta_R - \hat{\mathbf{r}}_1'\sin\theta_R = \hat{\boldsymbol{\theta}}_1\cos\theta_R - \hat{\mathbf{r}}_1\sin\theta_R - \hat{\mathbf{n}} d\beta_b$$

$$\Rightarrow \hat{\boldsymbol{\theta}}_1'\cos\theta_R = \hat{\boldsymbol{\theta}}_1\cos\theta_R + \left(\hat{\mathbf{r}}_1' - \hat{\mathbf{r}}_1\right)\sin\theta_R - \hat{\mathbf{n}} d\beta_b = \hat{\boldsymbol{\theta}}_1\cos\theta_R - \hat{\mathbf{n}}\left(1 - \sin^2\theta_R\right) d\beta_b$$

$$= \hat{\boldsymbol{\theta}}_1\cos\theta_R - \hat{\mathbf{n}}\cos^2\theta_R d\beta_b \quad \Rightarrow \hat{\boldsymbol{\theta}}_1' = \hat{\boldsymbol{\theta}}_1 - \hat{\mathbf{n}}\cos\theta_R d\beta_b,$$

$$\hat{\mathbf{n}}' = \hat{\mathbf{r}}_1' \times \hat{\boldsymbol{\theta}}_1' = \left(\hat{\mathbf{r}}_1 + \hat{\mathbf{n}}\sin\theta_R d\beta_b\right) \times \left(\hat{\boldsymbol{\theta}}_1 - \hat{\mathbf{n}}\cos\theta_R d\beta_b\right) = \hat{\mathbf{n}} + \left(\hat{\boldsymbol{\theta}}_1\cos\theta_R - \hat{\mathbf{r}}_1\sin\theta_R\right) d\beta_b = \hat{\mathbf{n}} + \hat{\boldsymbol{\theta}}_2 d\beta_b .$$

Again letting $\vec{\mathbf{P}}_{DK}'$ be the counterpart of $\vec{\mathbf{P}}_{DK}$ in the new frame and neglecting terms in $\left(d\beta_b\right)^2$, we have

$$\begin{aligned}
\vec{\mathbf{P}}_{DK}' &= \vec{\mathbf{P}}_{DK} + \frac{\partial \vec{\mathbf{P}}_{DK}}{\partial \beta_b} d\beta_b \\
&= \left\{\left(P_{DK}\right)_r + \frac{\partial\left(P_{DK}\right)_r}{\partial\beta_b} d\beta_b\right\}\hat{\mathbf{r}}_1' + \left\{\left(P_{DK}\right)_\theta + \frac{\partial\left(P_{DK}\right)_\theta}{\partial\beta_b} d\beta_b\right\}\hat{\boldsymbol{\theta}}_1' + \left\{\left(P_{DK}\right)_p + \frac{\partial\left(P_{DK}\right)_p}{\partial\beta_b} d\beta_b\right\}\hat{\mathbf{n}}' \\
&= \left\{\left(P_{DK}\right)_r + \frac{\partial\left(P_{DK}\right)_r}{\partial\beta_b} d\beta_b\right\}\left(\hat{\mathbf{r}}_1 + \hat{\mathbf{n}}\sin\theta_R d\beta_b\right) + \left\{\left(P_{DK}\right)_\theta + \frac{\partial\left(P_{DK}\right)_\theta}{\partial\beta_b} d\beta_b\right\}\left(\hat{\boldsymbol{\theta}}_1 - \hat{\mathbf{n}}\cos\theta_R d\beta_b\right) \\
&\qquad + \left\{\left(P_{DK}\right)_p + \frac{\partial\left(P_{DK}\right)_p}{\partial\beta_b} d\beta_b\right\}\left\{\hat{\mathbf{n}} + \left(\hat{\boldsymbol{\theta}}_1\cos\theta_R - \hat{\mathbf{r}}_1\sin\theta_R\right) d\beta_b\right\} \\
&= \vec{\mathbf{P}}_{DK} + \left[\begin{array}{c}\left\{\frac{\partial\left(P_{DK}\right)_r}{\partial\beta_b} - \left(P_{DK}\right)_p\sin\theta_R\right\}\hat{\mathbf{r}}_1 + \left\{\frac{\partial\left(P_{DK}\right)_\theta}{\partial\beta_b} + \left(P_{DK}\right)_p\cos\theta_R\right\}\hat{\boldsymbol{\theta}}_1 \\ + \left\{\frac{\partial\left(P_{DK}\right)_p}{\partial\beta_b} + \left(P_{DK}\right)_r\sin\theta_R - \left(P_{DK}\right)_\theta\cos\theta_R\right\}\hat{\mathbf{n}}\end{array}\right] d\beta_b
\end{aligned}$$

$$\Rightarrow \frac{\partial \bar{\mathbf{P}}_{DK}}{\partial \beta_b} = \left\{ \frac{\partial \left(P_{DK}\right)_r}{\partial \beta_b} - \left(P_{DK}\right)_p \sin\theta_R \right\} \hat{\mathbf{r}}_1 + \left\{ \frac{\partial \left(P_{DK}\right)_\theta}{\partial \beta_b} + \left(P_{DK}\right)_p \cos\theta_R \right\} \hat{\boldsymbol{\theta}}_1 + \left\{ \frac{\partial \left(P_{DK}\right)_p}{\partial \beta_b} + \left(P_{DK}\right)_r \sin\theta_R - \left(P_{DK}\right)_\theta \cos\theta_R \right\} \hat{\mathbf{n}}.$$

Since v_{cr} and $v_{c\theta}$ – and hence their derivatives – do not change with either β or β_b when θ_R is fixed, it follows that

$$\frac{\partial v_{c\theta}}{\partial \beta_b} = \frac{\partial}{\partial \beta_b}\frac{\partial v_{cr}}{\partial t_f} = \frac{\partial}{\partial \beta_b}\frac{\partial v_{cr}}{\partial \theta_R} = \frac{\partial}{\partial \beta_b}\frac{\partial v_{c\theta}}{\partial t_f} = \frac{\partial}{\partial \beta_b}\frac{\partial v_{c\theta}}{\partial \theta_R} = 0.$$

Hence,

$$\begin{aligned}\frac{\partial \bar{\mathbf{P}}_{DK}}{\partial \beta_b} = &-\left(\frac{\partial v_{cr}}{\partial \theta_R}\frac{\partial}{\partial \beta_b}\frac{d\theta_R}{dt_f} + v_{c\theta}\sin\theta_R \frac{d\beta}{dt_f} \right)\hat{\mathbf{r}}_1 - \left(\frac{\partial v_{c\theta}}{\partial \theta_R}\frac{\partial}{\partial \beta_b}\frac{d\theta_R}{dt_f} - v_{c\theta}\cos\theta_R \frac{d\beta}{dt_f} \right)\hat{\boldsymbol{\theta}}_1 \\ &+ \left\{ v_{c\theta}\frac{\partial}{\partial \beta_b}\frac{d\beta}{dt_f} + \frac{\partial v_{c\theta}}{\partial t_f}\cos\theta_R - \frac{\partial v_{cr}}{\partial t_f}\sin\theta_R + \left(\frac{\partial v_{c\theta}}{\partial \theta_R}\cos\theta_R - \frac{\partial v_{cr}}{\partial \theta_R}\sin\theta_R \right)\frac{d\theta_R}{dt_f} \right\}\hat{\mathbf{n}}.\end{aligned} \tag{I-6}$$

Substituting Equations (I-3), (I-4), (I-5), and (I-6) into Equation (I-2), we finally obtain

$$\begin{aligned}\frac{d\bar{\mathbf{P}}_{DK}}{dt_f} = &-\left[\begin{aligned} &\frac{\partial^2 v_{cr}}{\partial t_f^2} + v_{cr}\frac{\partial^2 v_{cr}}{\partial r_1 \partial t_f} + \left\{ 2\frac{\partial^2 v_{cr}}{\partial \theta_R \partial t_f} + v_{cr}\frac{\partial^2 v_{cr}}{\partial r_1 \partial \theta_R} + \frac{\partial v_{c\theta}}{\partial t_f} + \left(\frac{\partial^2 v_{cr}}{\partial \theta_R^2} + \frac{\partial v_{c\theta}}{\partial \theta_R} \right)\frac{d\theta_R}{dt_f} \right\}\frac{d\theta_R}{dt_f} \\ &+ \left(\frac{\partial v_{cr}}{\partial \theta_R}\frac{\partial}{\partial \beta_b}\frac{d\theta_R}{dt_f} + v_{c\theta}\sin\theta_R\frac{d\beta}{dt_f} \right)\frac{d\beta_b}{dt_f} \end{aligned} \right]\hat{\mathbf{r}}_1 \\ &-\left[\begin{aligned} &\frac{\partial^2 v_{c\theta}}{\partial t_f^2} + v_{cr}\frac{\partial^2 v_{c\theta}}{\partial r_1 \partial t_f} + \left\{ 2\frac{\partial^2 v_{c\theta}}{\partial \theta_R \partial t_f} + v_{cr}\frac{\partial^2 v_{c\theta}}{\partial r_1 \partial \theta_R} - \frac{\partial v_{cr}}{\partial t_f} + \left(\frac{\partial^2 v_{c\theta}}{\partial \theta_R^2} - \frac{\partial v_{cr}}{\partial \theta_R} \right)\frac{d\theta_R}{dt_f} \right\}\frac{d\theta_R}{dt_f} \\ &+ \left(\frac{\partial v_{c\theta}}{\partial \theta_R}\frac{\partial}{\partial \beta_b}\frac{d\theta_R}{dt_f} - v_{c\theta}\cos\theta_R\frac{d\beta}{dt_f} \right)\frac{d\beta_b}{dt_f} \end{aligned} \right]\hat{\boldsymbol{\theta}}_1 \\ &+\left[\begin{aligned} &v_{c\theta}\left(\frac{d\theta_R}{dt_f}\frac{\partial}{\partial \theta_R}\frac{d\beta}{dt_f} + \frac{d\beta_b}{dt_f}\frac{\partial}{\partial \beta_b}\frac{d\beta}{dt_f} \right) + \left(\frac{\partial v_{c\theta}}{\partial t_f} + \frac{\partial v_{c\theta}}{\partial \theta_R}\frac{d\theta_R}{dt_f} + v_{cr}\frac{\partial v_{c\theta}}{\partial r_1} \right)\frac{d\beta}{dt_f} \\ &+ \left\{ \frac{\partial v_{c\theta}}{\partial t_f}\cos\theta_R - \frac{\partial v_{cr}}{\partial t_f}\sin\theta_R + \left(\frac{\partial v_{c\theta}}{\partial \theta_R}\cos\theta_R - \frac{\partial v_{cr}}{\partial \theta_R}\sin\theta_R \right)\frac{d\theta_R}{dt_f} \right\}\frac{d\beta_b}{dt_f} \end{aligned} \right]\hat{\mathbf{n}},\end{aligned}$$

where all the required derivatives are derived in Appendices E, G, J, and K.

APPENDIX J

DERIVATION OF SECOND PARTIALS OF $v_{c\theta}$ AND v_{cr}

Put $v_{cr} = \zeta\left(v_{c\theta}\left(t_f, \theta_R, r_1\right), \theta_R, r_1\right)$. Using the equations

$$v_{cr} = \left(\cot\theta_R - \frac{r_1}{r_2}\csc\theta_R\right)v_{c\theta} + \frac{\mu}{r_1 v_{c\theta}}\tan\frac{\theta_R}{2},\ v_{tr} = \left(1 - \frac{r_1}{r_2}\right)v_{c\theta}\cot\frac{\theta_R}{2} - v_{cr},$$

we have

$$\frac{\partial\zeta}{\partial v_{c\theta}} = \frac{v_{tr}}{v_{c\theta}} - \left(1 + \frac{r_1}{r_2}\right)\tan\frac{\theta_R}{2},\ \frac{\partial\zeta}{\partial\theta_R} = -v_{tr}\csc\theta_R \text{ (from Equation (E-17))},$$

$$\frac{\partial v_{tr}}{\partial v_{c\theta}} = \left(1 - \frac{r_1}{r_2}\right)\cot\frac{\theta_R}{2} - \frac{\partial\zeta}{\partial v_{c\theta}} = \frac{v_{cr} + v_{tr}}{v_{c\theta}} - \frac{\partial\zeta}{\partial v_{c\theta}} = \frac{v_{cr}}{v_{c\theta}} + \left(1 + \frac{r_1}{r_2}\right)\tan\frac{\theta_R}{2},$$

$$\frac{\partial^2\zeta}{\partial v_{c\theta}^2} = \frac{1}{v_{c\theta}}\left(\frac{\partial v_{tr}}{\partial v_{c\theta}} - \frac{v_{tr}}{v_{c\theta}}\right),\ \frac{\partial^2\zeta}{\partial v_{c\theta}\partial\theta_R} = -\frac{\partial v_{tr}}{\partial v_{c\theta}}\csc\theta_R,$$

$$\begin{aligned}
\frac{\partial^2\zeta}{\partial\theta_R^2} &= \left\{v_{tr}\cot\theta_R + \frac{\partial\zeta}{\partial\theta_R} + \frac{1}{2}\left(1 - \frac{r_1}{r_2}\right)v_{c\theta}\csc^2\frac{\theta_R}{2}\right\}\csc\theta_R \\
&= \left\{v_{tr}\left(\cot\theta_R - \csc\theta_R\right) + \frac{1}{2}\left(v_{cr} + v_{tr}\right)\tan\frac{\theta_R}{2}\csc^2\frac{\theta_R}{2}\right\}\csc\theta_R \\
&= \left\{v_{tr}\left(\cot\theta_R - \csc\theta_R\right) + \left(v_{cr} + v_{tr}\right)\csc\theta_R\right\}\csc\theta_R \\
&= \left(v_{cr} + v_{tr}\cos\theta_R\right)\csc^2\theta_R.
\end{aligned}$$

$$\frac{\partial v_{cr}}{\partial t_f} = \frac{\partial\zeta}{\partial v_{c\theta}}\frac{\partial v_{c\theta}}{\partial t_f},\ \frac{\partial v_{tr}}{\partial t_f} = \frac{\partial v_{tr}}{\partial v_{c\theta}}\frac{\partial v_{c\theta}}{\partial t_f},$$

$$\frac{\partial v_{cr}}{\partial\theta_R} = \frac{\partial\zeta}{\partial\theta_R} + \frac{\partial\zeta}{\partial v_{c\theta}}\frac{\partial v_{c\theta}}{\partial\theta_R},\ \frac{\partial v_{cr}}{\partial r_1} = -\frac{1}{r_1}\left(\frac{\partial\zeta}{\partial v_{c\theta}}\frac{\partial v_{cr}}{\partial\theta_R} + v_{c\theta}\cot\theta_R\right) \text{ (Equations (E-17) and (E-18))},$$

$$\frac{\partial v_{tr}}{\partial\theta_R} = r_1\frac{\partial v_{c\theta}}{\partial r_2} = \frac{r_1}{r_2}\left(\frac{1}{2}v_{c\theta} + \frac{\partial v_{cr}}{\partial\theta_R} - \frac{3}{2}t_f\frac{\partial v_{c\theta}}{\partial t_f}\right) \text{ (by Equations (E-13) and (E-19))}.$$

Another expression for $\frac{\partial v_{tr}}{\partial\theta_R}$ is obtained by direct differentiation of the expression for v_{tr} above. We have

$$\begin{aligned}
\frac{\partial v_{tr}}{\partial\theta_R} &= -\frac{\partial v_{cr}}{\partial\theta_R} - \frac{1}{2}\left(1 - \frac{r_1}{r_2}\right)v_{c\theta}\csc^2\frac{\theta_R}{2} + \left(1 - \frac{r_1}{r_2}\right)\frac{\partial v_{c\theta}}{\partial\theta_R}\cot\frac{\theta_R}{2} \\
&= -\frac{\partial\zeta}{\partial\theta_R} - \frac{1}{2}\left(1 - \frac{r_1}{r_2}\right)v_{c\theta}\csc^2\frac{\theta_R}{2} + \left\{\left(1 - \frac{r_1}{r_2}\right)\cot\frac{\theta_R}{2} - \frac{\partial\zeta}{\partial v_{c\theta}}\right\}\frac{\partial v_{c\theta}}{\partial\theta_R} \\
&= -v_{cr}\csc\theta_R + \frac{\partial v_{tr}}{\partial v_{c\theta}}\frac{\partial v_{c\theta}}{\partial\theta_R}.
\end{aligned}$$

$\dfrac{\partial^2 t_f}{\partial v_{c\theta}^2}$ is obtained by differentiating Equation (14) of the main text. To facilitate the computation, it is convenient to define some recurring terms. Put

$$A = r_1\left(r_1 + r_2\right),\ B = 2r_1\sqrt{r_1 r_2}\cos\frac{\theta_R}{2},\ C = 2\mu r_2 \sin^2\frac{\theta_R}{2},\ D = 4\mu r_1^3 r_2^3 \sin^3\theta_R .$$

Then $F = \left\{C - \left(A - B\right)v_{c\theta}^2\right\}\left\{\left(A + B\right)v_{c\theta}^2 - C\right\}$ and Equations (13) and (14) of the main text can be expressed as

$$t_f = \frac{Dv_{c\theta}}{2F}\left\{\frac{AC - \left(A^2 - B^2\right)v_{c\theta}^2}{B^2 C} + \frac{v_{c\theta}^2}{\sqrt{F}}\arctan\frac{\sqrt{F}}{Av_{c\theta}^2 - C}\right\},$$

$$\frac{\partial t_f}{\partial v_{c\theta}} = \frac{\left(A^2 - B^2\right)v_{c\theta}^4 - C^2}{F}\left(\frac{t_f}{v_{c\theta}} + \frac{Dv_{c\theta}^2}{F\sqrt{F}}\arctan\frac{\sqrt{F}}{Av_{c\theta}^2 - C}\right) - \frac{2CD}{F^2}v_{c\theta}^2.$$

Differentiating the second expression yields

$$\frac{\partial^2 t_f}{\partial v_{c\theta}^2} = -\frac{Dv_{c\theta}}{F^3}\left[\begin{array}{l}\dfrac{1}{B^2 C}\left\{\begin{array}{r}\left(A^2 - B^2\right)^3 v_{c\theta}^8 - 3C^2\left(A^2 - B^2\right)\left(2A^2 - 7B^2\right)v_{c\theta}^4 \\ +8AC^3\left(A^2 - 2B^2\right)v_{c\theta}^2 - C^4\left(3A^2 + 8B^2\right)\end{array}\right\} \\ +3\sqrt{F}\left\{2\left(A^2 - B^2\right)v_{c\theta}^4 + 5ACv_{c\theta}^2 + C^2 - \dfrac{10B^2C^2v_{c\theta}^4}{F}\right\}\arctan\dfrac{\sqrt{F}}{Av_{c\theta}^2 - C}\end{array}\right].$$

$$\frac{\partial^2 v_{c\theta}}{\partial t_f^2} = \frac{\partial}{\partial t_f}\frac{\partial v_{c\theta}}{\partial t_f} = \frac{\partial}{\partial t_f}\left(\frac{\partial t_f}{\partial v_{c\theta}}\right)^{-1} = \frac{\partial}{\partial v_{c\theta}}\left(\frac{\partial t_f}{\partial v_{c\theta}}\right)^{-1}\frac{\partial v_{c\theta}}{\partial t_f} = -\left(\frac{\partial v_{c\theta}}{\partial t_f}\right)^3\frac{\partial^2 t_f}{\partial v_{c\theta}^2}.$$

Differentiating Equation (E-16), namely,

$$\frac{\partial v_{c\theta}}{\partial \theta_R} = \frac{\dfrac{1}{2}v_{cr}v_{c\theta} - \left\{r_1 - v_{cr}\left(\dfrac{r_2}{v_{tr}} - \dfrac{3}{2}t_f\right)\right\}\dfrac{\partial v_{c\theta}}{\partial t_f}}{v_{c\theta}\left(1 - \dfrac{r_1 v_{cr}}{r_2 v_{tr}}\right)},$$

with respect to t_f and θ_R, respectively, we obtain

$$\begin{aligned}\frac{\partial^2 v_{c\theta}}{\partial \theta_R \partial t_f} &= \left(\frac{\partial^2 v_{c\theta}}{\partial t_f^2}\frac{\partial t_f}{\partial v_{c\theta}} - \frac{1}{v_{c\theta}}\frac{\partial v_{c\theta}}{\partial t_f}\right)\frac{\partial v_{c\theta}}{\partial \theta_R} \\ &+ \frac{1}{1 - \dfrac{r_1 v_{cr}}{r_2 v_{tr}}}\left\{\begin{array}{r}\left(\dfrac{1}{v_{cr}}\dfrac{\partial v_{cr}}{\partial t_f} - \dfrac{r_1 v_{cr}}{r_2 v_{tr}^2}\dfrac{\partial v_{tr}}{\partial t_f}\right)\dfrac{\partial v_{c\theta}}{\partial \theta_R} + \dfrac{1}{v_{c\theta}}\left(\dfrac{r_1}{v_{cr}}\dfrac{\partial v_{cr}}{\partial t_f} - \dfrac{r_2 v_{cr}}{v_{tr}^2}\dfrac{\partial v_{tr}}{\partial t_f} - v_{cr}\right)\dfrac{\partial v_{c\theta}}{\partial t_f} \\ -\dfrac{1}{2}v_{cr}\dfrac{\partial^2 v_{c\theta}}{\partial t_f^2}\dfrac{\partial t_f}{\partial v_{c\theta}}\end{array}\right\},\end{aligned}$$

$$\frac{\partial^2 v_{c\theta}}{\partial \theta_R^2} = \left(\frac{\partial^2 v_{c\theta}}{\partial \theta_R \partial t_f} \frac{\partial t_f}{\partial v_{c\theta}} - \frac{1}{v_{c\theta}} \frac{\partial v_{c\theta}}{\partial \theta_R} \right) \frac{\partial v_{c\theta}}{\partial \theta_R}$$

$$+ \frac{1}{1 - \frac{r_1 v_{cr}}{r_2 v_{tr}}} \left\{ \begin{array}{r} \left(\frac{1}{v_{cr}} \frac{\partial v_{cr}}{\partial \theta_R} - \frac{r_1 v_{cr}}{r_2 v_{tr}^2} \frac{\partial v_{tr}}{\partial \theta_R} + \frac{2 v_{cr}}{v_{c\theta}} \right) \frac{\partial v_{c\theta}}{\partial \theta_R} + \frac{1}{v_{c\theta}} \left(\frac{r_1}{v_{cr}} \frac{\partial v_{cr}}{\partial \theta_R} - \frac{r_2 v_{cr}}{v_{tr}^2} \frac{\partial v_{tr}}{\partial \theta_R} \right) \frac{\partial v_{c\theta}}{\partial t_f} \\ - \frac{1}{2} v_{cr} \frac{\partial^2 v_{c\theta}}{\partial \theta_R \partial t_f} \frac{\partial t_f}{\partial v_{c\theta}} \end{array} \right\}.$$

$$\frac{\partial^2 v_{cr}}{\partial t_f^2} = \frac{\partial^2 \zeta}{\partial v_{c\theta}^2} \left(\frac{\partial v_{c\theta}}{\partial t_f} \right)^2 + \frac{\partial \zeta}{\partial v_{c\theta}} \frac{\partial^2 v_{c\theta}}{\partial t_f^2},$$

$$\frac{\partial^2 v_{cr}}{\partial \theta_R \partial t_f} = \frac{\partial \zeta}{\partial v_{c\theta}} \frac{\partial^2 v_{c\theta}}{\partial \theta_R \partial t_f} + \left(\frac{\partial^2 \zeta}{\partial v_{c\theta} \partial \theta_R} + \frac{\partial^2 \zeta}{\partial v_{c\theta}^2} \frac{\partial v_{c\theta}}{\partial \theta_R} \right) \frac{\partial v_{c\theta}}{\partial t_f},$$

$$\frac{\partial^2 v_{cr}}{\partial \theta_R^2} = \frac{\partial^2 \zeta}{\partial \theta_R^2} + \frac{\partial \zeta}{\partial v_{c\theta}} \frac{\partial^2 v_{c\theta}}{\partial \theta_R^2} + \left(2 \frac{\partial^2 \zeta}{\partial v_{c\theta} \partial \theta_R} + \frac{\partial^2 \zeta}{\partial v_{c\theta}^2} \frac{\partial v_{c\theta}}{\partial \theta_R} \right) \frac{\partial v_{c\theta}}{\partial \theta_R}.$$

Differentiating Equation (E-8′), namely,

$$\frac{\partial v_{c\theta}}{\partial r_1} = -\frac{1}{r_1} \left(\frac{\partial v_{cr}}{\partial \theta_R} + v_{c\theta} \right),$$

we obtain

$$\frac{\partial^2 v_{c\theta}}{\partial r_1 \partial t_f} = -\frac{1}{r_1} \left(\frac{\partial^2 v_{cr}}{\partial \theta_R \partial t_f} + \frac{\partial v_{c\theta}}{\partial t_f} \right), \quad \frac{\partial^2 v_{c\theta}}{\partial r_1 \partial \theta_R} = -\frac{1}{r_1} \left(\frac{\partial^2 v_{cr}}{\partial \theta_R^2} + \frac{\partial v_{c\theta}}{\partial \theta_R} \right).$$

Differentiating Equation (E-18), namely,

$$\frac{\partial v_{cr}}{\partial r_1} = -\frac{1}{r_1} \left(\frac{\partial \zeta}{\partial v_{c\theta}} \frac{\partial v_{cr}}{\partial \theta_R} + v_{c\theta} \cot \theta_R \right),$$

we obtain

$$\frac{\partial^2 v_{cr}}{\partial r_1 \partial t_f} = -\frac{1}{r_1} \left\{ \frac{\partial \zeta}{\partial v_{c\theta}} \frac{\partial^2 v_{cr}}{\partial \theta_R \partial t_f} + \left(\frac{\partial^2 \zeta}{\partial v_{c\theta}^2} \frac{\partial v_{cr}}{\partial \theta_R} + \cot \theta_R \right) \frac{\partial v_{c\theta}}{\partial t_f} \right\},$$

$$\frac{\partial^2 v_{cr}}{\partial r_1 \partial \theta_R} = -\frac{1}{r_1} \left\{ \left(\frac{\partial^2 \zeta}{\partial v_{c\theta} \partial \theta_R} + \frac{\partial^2 \zeta}{\partial v_{c\theta}^2} \frac{\partial v_{c\theta}}{\partial \theta_R} \right) \frac{\partial v_{cr}}{\partial \theta_R} + \frac{\partial \zeta}{\partial v_{c\theta}} \frac{\partial^2 v_{cr}}{\partial \theta_R^2} + \frac{\partial v_{c\theta}}{\partial \theta_R} \cot \theta_R - v_{c\theta} \csc^2 \theta_R \right\}.$$

THIS PAGE INTENTIONALLY LEFT BLANK

APPENDIX K

DERIVATION OF $\frac{\partial}{\partial \theta_R}\frac{d\theta_R}{dt_f}$, $\frac{\partial}{\partial \beta_b}\frac{d\theta_R}{dt_f}$, $\frac{\partial}{\partial \theta_R}\frac{d\beta}{dt_f}$, AND $\frac{\partial}{\partial \beta_b}\frac{d\beta}{dt_f}$

The following identities will be needed* (Appendix G):

$$\cos\theta_R = \sin\varphi\sin\varphi_T + \cos\varphi\cos\varphi_T\cos\lambda_D, \tag{K-1}$$

$$\cos\beta\sin\theta_R = \cos\varphi\sin\varphi_T - \sin\varphi\cos\varphi_T\cos\lambda_D, \tag{K-2}$$

$$\sin\theta_R\sin\beta_b = -\cos\varphi\sin\lambda_D, \tag{K-3}$$

$$\cos\lambda_D = -\cos\beta\cos\beta_b - \sin\beta\sin\beta_b\cos\theta_R, \tag{K-4}$$

$$\sin\theta_R\sin\beta = \cos\varphi_T\sin\lambda_D, \tag{K-5}$$

$$\cos\varphi\sin\beta = -\cos\varphi_T\sin\beta_b, \tag{K-6}$$

$$\cos\varphi_T\cos\beta_b = \sin\varphi\sin\theta_R - \cos\varphi\cos\theta_R\cos\beta. \tag{K-7}$$

Note that Equations (K-1), (K-5), and (K-7) are identical to Equations (G-3), (G-4), and (G-6), respectively. It is clear that φ, φ_T, and λ_D are independent of each other so that $\frac{\partial\varphi_T}{\partial\varphi} = \frac{\partial\varphi_T}{\partial\lambda_D} = \frac{\partial\lambda_D}{\partial\varphi} = 0$. We have from Equations (G-8) and (G-9), respectively,

$$\frac{\partial\theta_R}{\partial\lambda_D} = \frac{1}{\Omega}\frac{d\theta_R}{dt_f} = \cos\varphi\sin\beta, \quad \frac{\partial\beta}{\partial\lambda_D} = \frac{1}{\Omega}\frac{d\beta}{dt_f} = -\csc\theta_R\cos\varphi_T\cos\beta_b.$$

Differentiating Equation (K-1) with respect to φ and using Equation (K-2), we have

$$-\sin\theta_R\frac{\partial\theta_R}{\partial\varphi} = \cos\varphi\sin\varphi_T - \sin\varphi\cos\varphi_T\cos\lambda_D = \cos\beta\sin\theta_R \quad \Rightarrow \frac{\partial\theta_R}{\partial\varphi} = -\cos\beta.$$

Differentiating Equation (K-3) with respect to λ_D and using Equation (K-4), we have

$$\cos\theta_R\sin\beta_b\frac{\partial\theta_R}{\partial\lambda_D} + \sin\theta_R\cos\beta_b\frac{\partial\beta_b}{\partial\lambda_D} = -\cos\varphi\cos\lambda_D$$

$$\Rightarrow \sin\theta_R\cos\beta_b\frac{\partial\beta_b}{\partial\lambda_D} = -\cos\varphi\left(\cos\lambda_D + \sin\beta\sin\beta_b\cos\theta_R\right) = \cos\varphi\cos\beta\cos\beta_b$$

$$\Rightarrow \frac{\partial\beta_b}{\partial\lambda_D} = \csc\theta_R\cos\varphi\cos\beta \quad \Rightarrow \frac{d\beta_b}{dt_f} = \Omega\csc\theta_R\cos\varphi\cos\beta.$$

Differentiating Equation (K-3) with respect to φ and using Equations (K-5), (K-6), and (K-7), we have

$$\cos\theta_R\sin\beta_b\frac{\partial\theta_R}{\partial\varphi} + \sin\theta_R\cos\beta_b\frac{\partial\beta_b}{\partial\varphi} = \sin\varphi\sin\lambda_D$$

* Sofair, Isaac, K40 Training Guide 4085.1, *A Detailed Derivation of Formulae Arising in Spherical Trigonometry*, Naval Surface Weapons Center, Dahlgren, VA, May 1986 (currently Naval Surface Warfare Center, Dahlgren Division).

$$\Rightarrow \sin\theta_R \cos\beta_b \frac{\partial\beta_b}{\partial\varphi} = \sin\varphi \sin\lambda_D + \cos\theta_R \cos\beta \sin\beta_b = \frac{\sin\beta}{\cos\varphi_{\mathrm{T}}}\left(\sin\varphi \sin\theta_R - \cos\varphi \cos\theta_R \cos\beta\right)$$

$$= \sin\beta \cos\beta_b \quad \Rightarrow \frac{\partial\beta_b}{\partial\varphi} = \csc\theta_R \sin\beta.$$

$$\frac{\partial^2\theta_R}{\partial\lambda_D^2} = \cos\varphi \cos\beta \frac{\partial\beta}{\partial\lambda_D} = -\csc\theta_R \cos\varphi \cos\varphi_T \cos\beta \cos\beta_b.$$

$$\frac{\partial^2\theta_R}{\partial\lambda_D\partial\varphi} = \sin\beta \frac{\partial\beta}{\partial\lambda_D} = -\sin\varphi \sin\beta + \cos\varphi \cos\beta \frac{\partial\beta}{\partial\varphi} = -\csc\theta_R \cos\varphi_T \sin\beta \cos\beta_b$$

$$\Rightarrow \cos\varphi \cos\beta \frac{\partial\beta}{\partial\varphi} = \sin\beta\left(\sin\varphi - \csc\theta_R \cos\varphi_T \cos\beta_b\right)$$

$$= \csc\theta_R \sin\beta\left(\sin\varphi \sin\theta_R - \cos\varphi_T \cos\beta_b\right)$$

$$= \cot\theta_R \cos\varphi \cos\beta \sin\beta \text{ (from Equation (K-7))}$$

$$\Rightarrow \frac{\partial\beta}{\partial\varphi} = \cot\theta_R \sin\beta.$$

$$\frac{\partial^2\beta}{\partial\lambda_D^2} = -\cos\varphi_T \frac{\partial}{\partial\lambda_D}\left(\csc\theta_R \cos\beta_b\right) = \cos\varphi_T \csc\theta_R \left(\cos\beta_b \cot\theta_R \frac{\partial\theta_R}{\partial\lambda_D} + \sin\beta_b \frac{\partial\beta_b}{\partial\lambda_D}\right)$$

$$= \csc^2\theta_R \cos\varphi \cos\varphi_T \left(\cos\beta \sin\beta_b + \sin\beta \cos\beta_b \cos\theta_R\right).$$

$$\frac{\partial^2\beta}{\partial\lambda_D\partial\varphi} = -\cos\varphi_T \frac{\partial}{\partial\varphi}\left(\csc\theta_R \cos\beta_b\right)$$

$$= \csc^2\theta_R \cos\varphi_T \left(\cos\theta_R \cos\beta_b \frac{\partial\theta_R}{\partial\varphi} + \sin\theta_R \sin\beta_b \frac{\partial\beta_b}{\partial\varphi}\right)$$

$$= \csc^2\theta_R \cos\varphi_T \left(\sin\beta \sin\beta_b - \cos\beta \cos\beta_b \cos\theta_R\right).$$

It is desired to compute $\frac{\partial}{\partial\theta_R}\frac{\partial\theta_R}{\partial\lambda_D}$, $\frac{\partial}{\partial\beta_b}\frac{\partial\theta_R}{\partial\lambda_D}$, $\frac{\partial}{\partial\theta_R}\frac{\partial\beta}{\partial\lambda_D}$, and $\frac{\partial}{\partial\beta_b}\frac{\partial\beta}{\partial\lambda_D}$, where the partials with respect to θ_R imply a constant value of β_b, and the partials with respect to β_b imply a constant value of θ_R. Since θ_R and β – and hence their derivatives – depend on φ, φ_T, and λ_D, these partials cannot be found by direct differentiation. In general, if a function is defined by $\rho\left(y_1(x_1,x_2), y_2(x_1,x_2), x_1, x_2\right) = \text{constant}$, then

$$\frac{\partial\rho}{\partial y_1}\frac{\partial y_1}{\partial x_1} + \frac{\partial\rho}{\partial y_2}\frac{\partial y_2}{\partial x_1} + \frac{\partial\rho}{\partial x_1} = 0, \quad \frac{\partial\rho}{\partial y_1}\frac{\partial y_1}{\partial x_2} + \frac{\partial\rho}{\partial y_2}\frac{\partial y_2}{\partial x_2} + \frac{\partial\rho}{\partial x_2} = 0.$$

Solving these two equations simultaneously yields

$$\frac{\partial\rho}{\partial y_1}=\frac{\dfrac{\partial\rho}{\partial x_2}\dfrac{\partial y_2}{\partial x_1}-\dfrac{\partial\rho}{\partial x_1}\dfrac{\partial y_2}{\partial x_2}}{\dfrac{\partial y_1}{\partial x_1}\dfrac{\partial y_2}{\partial x_2}-\dfrac{\partial y_1}{\partial x_2}\dfrac{\partial y_2}{\partial x_1}},\quad \frac{\partial\rho}{\partial y_2}=\frac{\dfrac{\partial\rho}{\partial x_1}\dfrac{\partial y_1}{\partial x_2}-\dfrac{\partial\rho}{\partial x_2}\dfrac{\partial y_1}{\partial x_1}}{\dfrac{\partial y_1}{\partial x_1}\dfrac{\partial y_2}{\partial x_2}-\dfrac{\partial y_1}{\partial x_2}\dfrac{\partial y_2}{\partial x_1}}.$$

Putting $x_1=\varphi,\ x_2=\lambda_D,\ y_1=\theta_R,\ y_2=\beta_b,$ and $\rho=\dfrac{\partial\theta_R}{\partial\lambda_D}$, we obtain

$$\frac{\partial}{\partial\theta_R}\frac{\partial\theta_R}{\partial\lambda_D}=\frac{\dfrac{\partial^2\theta_R}{\partial\lambda_D^2}\dfrac{\partial\beta_b}{\partial\varphi}-\dfrac{\partial^2\theta_R}{\partial\lambda_D\partial\varphi}\dfrac{\partial\beta_b}{\partial\lambda_D}}{\dfrac{\partial\theta_R}{\partial\varphi}\dfrac{\partial\beta_b}{\partial\lambda_D}-\dfrac{\partial\theta_R}{\partial\lambda_D}\dfrac{\partial\beta_b}{\partial\varphi}}=0,$$

$$\frac{\partial}{\partial\beta_b}\frac{\partial\theta_R}{\partial\lambda_D}=\frac{\dfrac{\partial^2\theta_R}{\partial\lambda_D\partial\varphi}\dfrac{\partial\theta_R}{\partial\lambda_D}-\dfrac{\partial^2\theta_R}{\partial\lambda_D^2}\dfrac{\partial\theta_R}{\partial\varphi}}{\dfrac{\partial\theta_R}{\partial\varphi}\dfrac{\partial\beta_b}{\partial\lambda_D}-\dfrac{\partial\theta_R}{\partial\lambda_D}\dfrac{\partial\beta_b}{\partial\varphi}}=\cos\varphi_T\cos\beta_b.$$

Similarly by putting $\rho=\dfrac{\partial\beta}{\partial\lambda_D}$, we obtain

$$\frac{\partial}{\partial\theta_R}\frac{\partial\beta}{\partial\lambda_D}=\frac{\dfrac{\partial^2\beta}{\partial\lambda_D^2}\dfrac{\partial\beta_b}{\partial\varphi}-\dfrac{\partial^2\beta}{\partial\lambda_D\partial\varphi}\dfrac{\partial\beta_b}{\partial\lambda_D}}{\dfrac{\partial\theta_R}{\partial\varphi}\dfrac{\partial\beta_b}{\partial\lambda_D}-\dfrac{\partial\theta_R}{\partial\lambda_D}\dfrac{\partial\beta_b}{\partial\varphi}}=-\csc\theta_R\cot\theta_R\cos\varphi_T\cos\beta_b,$$

$$\frac{\partial}{\partial\beta_b}\frac{\partial\beta}{\partial\lambda_D}=\frac{\dfrac{\partial^2\beta}{\partial\lambda_D\partial\varphi}\dfrac{\partial\theta_R}{\partial\lambda_D}-\dfrac{\partial^2\beta}{\partial\lambda_D^2}\dfrac{\partial\theta_R}{\partial\varphi}}{\dfrac{\partial\theta_R}{\partial\varphi}\dfrac{\partial\beta_b}{\partial\lambda_D}-\dfrac{\partial\theta_R}{\partial\lambda_D}\dfrac{\partial\beta_b}{\partial\varphi}}=-\csc\theta_R\cos\varphi_T\sin\beta_b.$$

Hence,

$$\frac{\partial}{\partial\theta_R}\frac{d\theta_R}{dt_f}=0,\quad \frac{\partial}{\partial\beta_b}\frac{d\theta_R}{dt_f}=\Omega\cos\varphi_T\cos\beta_b,$$

$$\frac{\partial}{\partial\theta_R}\frac{d\beta}{dt_f}=-\Omega\csc\theta_R\cot\theta_R\cos\varphi_T\cos\beta_b,\quad \frac{\partial}{\partial\beta_b}\frac{d\beta}{dt_f}=-\Omega\csc\theta_R\cos\varphi_T\sin\beta_b.$$

THIS PAGE INTENTIONALLY LEFT BLANK

DISTRIBUTION

	Copies
ATTN SP23 DIRECTOR STRATEGIC SYSTEMS PROGRAMS NEBRASKA AVENUE COMPLEX 287 SOMERS COURT NW SUITE 10041 WASHINGTON DC 20393-5446	4
ATTN DTIC-OMI DEFENSE TECHNICAL INFORMATION CENTER 8725 JOHN J. KINGMAN ROAD FORT BELVOIR VA 22060-6218	2
ATTN TECHNICAL LIBRARY (CODE A76) COMMANDING OFFICER CSSDD NSWC 6703 W HIGHWAY 98 PANAMA CITY FL 32407-7001	1
ATTN JOHN CHIN GOVERNMENT DOCUMENTS SECTION LIBRARY OF CONGRESS 101 INDEPENDENCE AVENUE SE WASHINGTON DC 20540-4172	25
ATTN DOCUMENT CENTER THE CNA CORPORATION 4825 MARK CENTER DRIVE ALEXANDRIA VA 22311-1850	1
ATTN MARTIN BOELITZ (CODE MS 27) CHARLES STARK DRAPER LABORATORY 555 TECHNOLOGY SQUARE CAMBRIDGE MA 02139-3563	1
ATTN DAVID LEVINSON (CODE L9-24/201) LOCKHEED MARTIN SPACE SYSTEMS COMPANY 3251 HANOVER STREET PALO ALTO CA 94304-1121	1
INTERNAL	
B60 (TECHNICAL LIBRARY)	3
K	1
K41 (SOFAIR)	20
K42	1
K43	1
K44	1
K60	1
N14 (SERAKOS)	1
T12 (EVANS, O'TOOLE)	2

THIS PAGE INTENTIONALLY LEFT BLANK

NAVSEA

DAHLGREN

Surface Warfare Center Division