NASA CASE NO. LAR 14221-1

PRINT FIG. 1

NOTICE

The invention disclosed in this document resulted from research in aeronautical and space activities performed under programs of the National Aeronautics and Space Administration. The invention is owned by NASA and is, therefore, available for licensing in accordance with the NASA Patent Licensing Regulation (14 Code of Federal Regulations 1245.2).

To encourage commercial utilization of NASA-owned inventions, it is NASA policy to grant licenses to commercial concerns. Although NASA encourages nonexclusive licensing to promote competition and achieve the widest possible utilization, NASA will provide the necessary incentive to the licensee to achieve early practical application of the invention.

Address inquiries and all applications for license for this invention to **NASA Patent Counsel, Langley Research Center, Code 143, Hampton, Virginia 23681-0001.**

Serial No.: 08/000,064
01-04-93 LaRC

(NASA-Case-LAR-14221-1) STALL DEPARTURE RESISTANCE ENHANCER Patent Application (NASA) 10 p

N93-19023

Unclas

G3/06 0149922

NASA Case No. LAR 14221-1

STALL DEPARTURE RESISTANCE ENHANCER

AWARDS ABSTRACT

A stall departure resistance enhancer ("SDRE") for private, military or commercial aircraft, or for non-aerospace utility such as in flow defusers for turbines and other fluid flow apparatus. The device is used to induce vortical flow for delaying stall at or near the stall angle of attack.

The present invention employs a flat triangular plate mounted to and extending from a leading edge of a wing of an aircraft. The flat triangular plate may be hingedly mounted on the leading edge of the wing, and a stop provided to prevent the plate from pivoting once the stall angle is approached.

The SDRE of the present invention reduces drag forces associated with conventional apparatus since the device is a flat triangular plate mounted to a leading edge of a wing or other lift producing body. If the plate is hingedly secured to the leading edge, and a stop is provided for preventing hinged movement once the stall angle is approached, the drag is further reduced with no penalty in cruise or climb performance.

Inventors:	Holly M. Ross	Joseph L. Johnson, Jr.
Address:	116 Grays Landing Hampton, VA 23666 ss: [redacted]	111 Central Parkway Newport News, VA 23606 ss: [redacted]
Employer:	LESC	Retired NASA
	Long P. Yip 1324 Lake James Drive Virginia Beach, VA 23464 ss: [redacted] NASA LaRC	H. Paul Stough, III 107 Chuckatuck Turn Yorktown, VA 23693 ss: [redacted] NASA LaRC

Initial Evaluator: J. Chambers

Serial No.: 08/000,064
Filed: 01-04-93

STALL DEPARTURE RESISTANCE ENHANCER

Origin of the Invention

The invention described herein was jointly made by employees of the United States Government and a contract employee in the performance of work under a NASA Contract and is subject to the provisions of Section 305 of the National Aeronautics and Space Act of 1958, as amended, Public Law 85-568 (72 Stat. 435; 42 USC 2457).

Background of the Invention

The present invention is directed to a stall departure resistance enhancer ("SDRE") for aircraft for delaying or controlling air flow separation by inducing vortical flow over a surface of the aircraft's wing.

Conventional apparatus of this type (generally referred to as "vortex flow generators") consist of small wedges mounted on, and vertical to, the upper surface of the wing. The vortical flow produced by the wedges delays flow separation as the aircraft approaches the stall angle of attack.

In the above described conventional device, since the wedges are affixed to the upper surface of the wing and extend vertically therefrom, they produce drag forces which reduce airspeed and fuel efficiency. These drag forces are always present since the wedges are fixed in place on the upper surface of the wing, i.e., they cannot be removed from the flow when desired.

Summary of the Invention

The object of the present invention is to provide a stall departure resistance enhancer or vortex flow generator with superior characteristics for

preventing stalls, but which does not create significant drag.

The above object has been obtained by employing a flat triangular plate mounted to the leading edge of the wing, which plate is rigid and has a sharp tip and thin, sharp edges. The tip is pointed forwardly, and the centerline of the plate extends through the tip in alignment with the freestream direction. Since the plate is thin and is mounted on the leading edge of the wing, the drag is reduced without sacrificing stall resistance characteristics.

In another embodiment, the plate is hingedly mounted to the leading edge of the wing, and a stop is provided which prevents pivotal movement of the plate at the predetermined stall angle. This embodiment is particularly well suited for reducing drag.

Brief Description of the Drawings

FIG. 1 is a perspective view of an aircraft wing illustrating an aerodynamic concept of the present invention;

FIG. 2 is an overhead view of a stall departure resistance enhancer according to a first embodiment of the present invention;

FIG. 3 is an enlarged overhead view of the stall departure resistance enhancer shown in FIG. 2;

FIG. 4 is a sectional view of the stall departure resistance enhancer and wing shown in FIGS. 2 and 3, taken along sectional line A-A;

FIG. 5 is an overhead view of an aircraft wing employing the stall departure resistance enhancer according to the first embodiment of the present invention, including other leading edge modifications;

FIG. 6 is a graph showing lift characteristics for various angles of attack for the wing shown in FIG. 5;

FIG. 7 is an overhead view of a stall departure resistance enhancer according to a second embodiment of the present invention;

FIG. 8 is an enlarged overhead view of the stall departure resistance

enhancer shown in FIG. 7;

FIG. 9 is a sectional view of the stall departure resistance enhancer shown in FIGS. 7 and 8, taken along sectional line A-A;

FIG. 10 is another enlarged overhead view of the stall departure resistance enhancer shown in FIGS. 7-9;

FIG. 11 is an enlarged front view of the stall departure resistance enhancer shown in FIGS. 7-10; and

FIG. 12 is an enlarged side view of the stall departure resistance enhancer shown in FIGS. 7-11.

Detailed Description of the Embodiments

The stall departure resistance enhancer or "SDRE" of the present invention (Fig. 1) induces vortical flow over the upper surface of a wing 1. The vortical flow adds energy into the boundary layer by mixing some of the high energy fluid from the external flow into the low energy shear layer near the wing's upper surface and also acts as an aerodynamic fence which prevents separated flow from spreading to the outboard wing. Thus, the wing 1 has flow that remains attached at higher angles of attack and improves the aircraft's stall departure resistance.

In the first embodiment (Figs. 2-4), the SDRE (shown within circle "A" in Figs. 2 and 3) is simply a flat triangular plate pointing forwardly from a leading edge of the aircraft wing 1. The triangular plate is shown with a 60° sweep as measured between left and right leading edges 2, 3 (Fig. 3), although it is possible to employ different sweep angles for the triangular plate. The tip 4 is sharp, and the left and right leading edges 2, 3 are thin and sharp in order to induce vortical flow. The thickness of the plate is minimal (Fig. 4), but it is sufficient to keep the device rigid at all angles of attack. When mounted to an aircraft wing 1, the device's centerline should be aligned with the freestream direction, so that on a straight wing (Fig. 2),

the centerline is perpendicular to the leading edge of the wing 1, and for tapered or swept wings, the centerline is at a predetermined angle to the leading edge of the wing 1.

The inventors have conducted wind tunnel tests on the SDRE of the present invention which show the device to work very well on a wing with a leading edge sweep angle of 26° (Fig. 5). Two SDRE's were used on the inboard section on each side of the wing 1 in combination with other leading edge modifications 5, 6. Flow visualization using small yarn tufts showed that the SDRE's worked to produce vortices which kept the flow organized even at high attack angles. Testing performed using a free-to-roll apparatus showed that the SDRE's were necessary in order to provide stable roll damping for the configuration that they were tested on. Static force test results showed that, with the leading edge modifications 5, 6 shown in Fig. 5, resistance to autorotative moments was gained as shown by the flat top lift curve (modified wing curve with square boxes) in Fig. 6.

In the second embodiment of the SDRE of the present invention (Figs. 7-12), the triangular plate (shown within circle "A" in Figs. 7 and 8) is modified so that it may be hingedly attached (Fig. 10) to the leading edge of the wing 1. A stop (not shown) is incorporated so that, as the stall angle of attack is approached, the plate is prevented from pivoting and begins to induce vortical flow. The advantage of this type of device as compared to the SDRE of the first embodiment is that, due to the hinged action, no drag penalty in cruise or climb performance is incurred prior to the employment of the SDRE for preventing stalls.

Figs. 8 and 9 are overhead views of the SDRE of the second embodiment, similar to the overhead views shown in Figs. 2-4 with respect to the first embodiment, while Figs. 10-12 are enlarged top, front and side views, respectively, of the SDRE of the second embodiment. The same reference numerals are used for the first and second embodiments to identify similar features.

Fig. 10 shows a mounting rod 7 having a boss portion 8 secured at an end thereof. The rod 7 is secured at a base end to the leading edge of the wing 1, and the triangular plate has a slit cut along the plate's centerline with a pin 9 bridging the slit near the tip end 4 of the triangular plate. The pin 9 is inserted into the boss portion 8 so that the triangular plate is hingedly mounted to the mounting rod 7. As noted above, a stop (not shown) is used to limit the hinged movement of the plate.

The SDRE of the present invention has been shown to increase the lift by up to 30% at angles of attack that would otherwise be in the post stall region. In other words, the device is excellent for delaying stalls. It prevents the wing lift from suddenly dropping, after near what would be the stall angle, and keeps the lift at around its maximum value. Also, the SDRE improves the flight handling characteristics near the stall angle of attack.

The SDRE of the present invention is clearly suitable for use in civilian, military and commercial aircraft. In fact, there is great potential for improved maneuverability and flight handling characteristics for fighter aircraft in the so-called "post-stall" regime, which is of great interest at this time.

The SDRE of the present invention also has other non-aerospace applications such as for controlling flow separation in flow defusers to be used in combustion power generators and hydro-electric turbines. For these applications, the SDRE might lay flat on the surface until needed, and then deflect into the flow to produce vortical flow for delaying or suppressing stall. There may also be other applications that will occur to engineers involved in fluid machinery design, fluid flows in processing plants, etc., and the above description is thus not intended to limit the many potential applications of the invention.

STALL DEPARTURE RESISTANCE ENHANCER

Astract of the Disclosure

A stall departure resistance enhancer for an aircraft for controlling flow separation by inducing vortical flow over the upper surface of the wing. A flat triangular plate is secured to a leading edge of the wing to reduce drag, and the tip of the triangular plate is sharp and the edges are thin and sharp to induce good vortical flow. The thickness of the plate is minimal, but it is sufficient so that the plate remains rigid for all angles of attack. A tip of the triangular plate protrudes forward from the leading edge of the wing, and the centerline of the triangular plate extending through the tip is aligned in the freestream direction. In a second embodiment, the triangular plate is hingedly secured to the leading edge of the wing, and a stop is provided to limit the hinged movement of the plate at or near the stall angle of attack.

FIG. 1

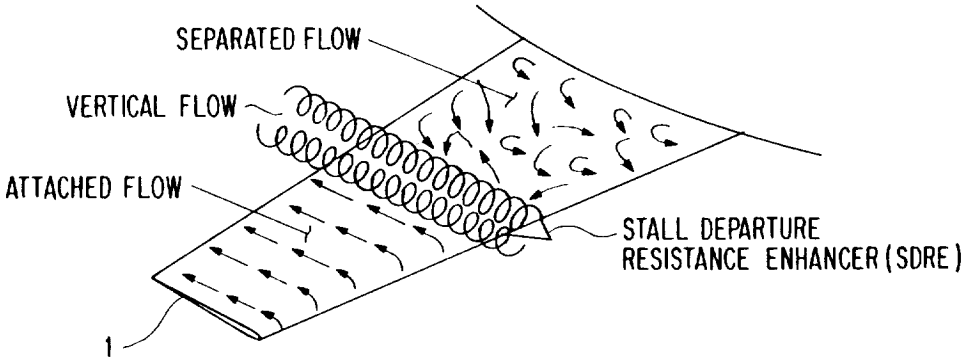

FIG. 2

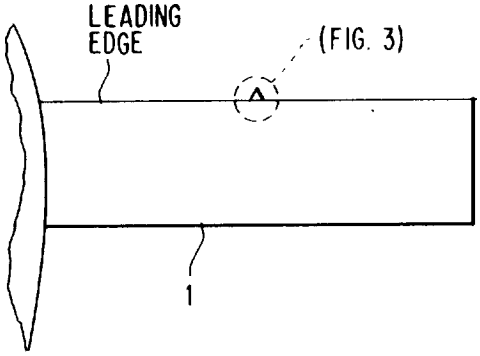

FIG. 3

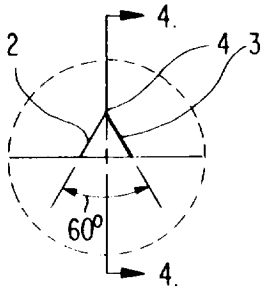

FIG. 4

FIG. 7

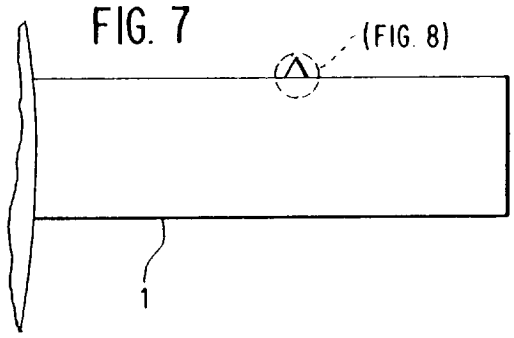

FIG. 5

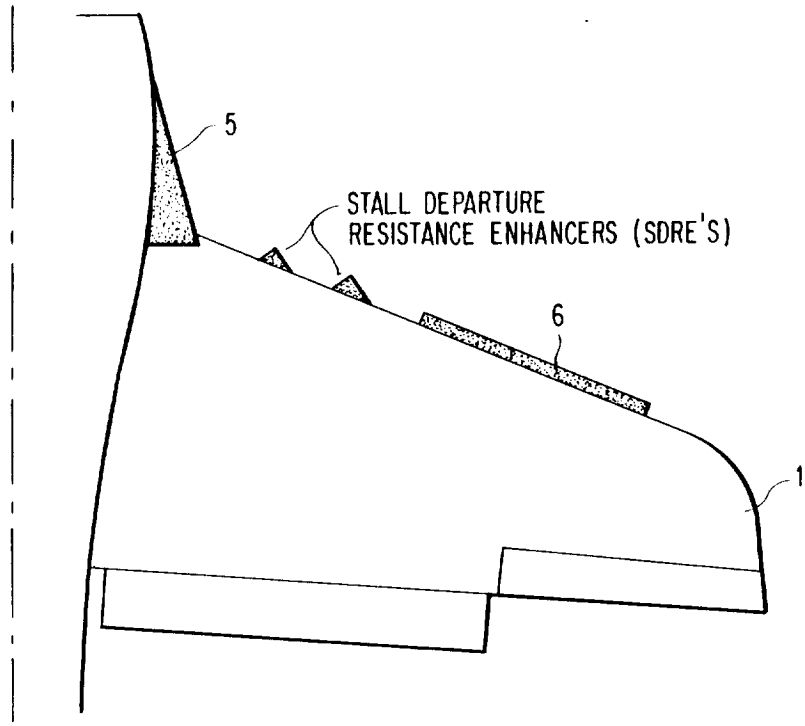
5
STALL DEPARTURE
RESISTANCE ENHANCERS (SDRE'S)
6
1

FIG. 6

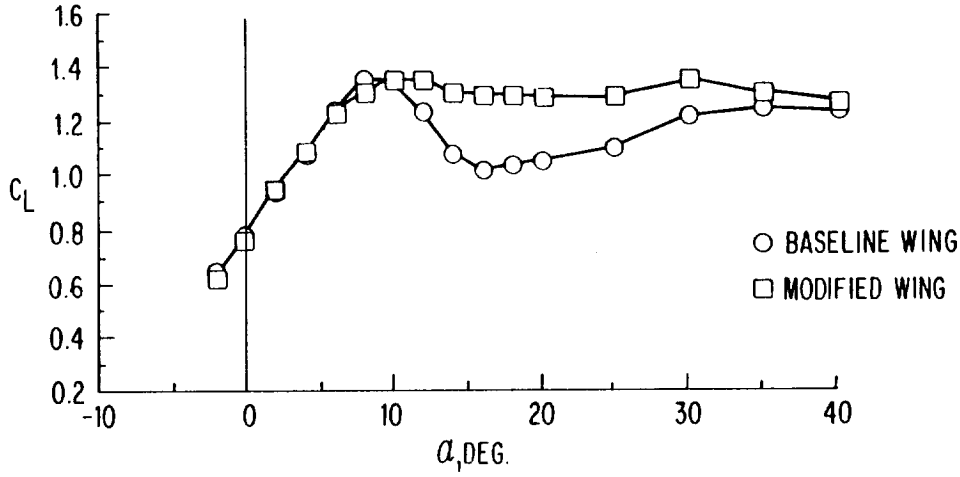
1.6
1.4
1.2
1.0
0.8
0.6
0.4
0.2
C_L
-10
0
10
20
30
40
α, DEG.
BASELINE WING
MODIFIED WING

FIG. 10

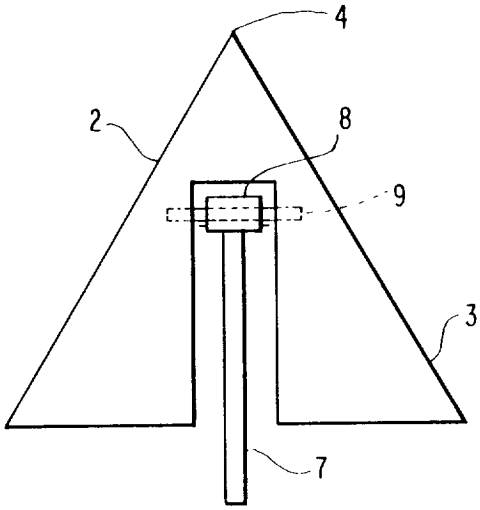

FIG. 12

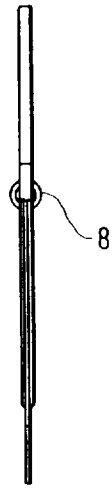

FIG. 11

FIG. 8

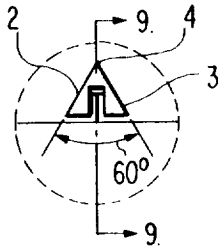

FIG. 9