ARMY RESEARCH LABORATORY

Human Performance Model Development of a Battalion Tactical Operations Center

by Josephine Q. Wojciechowski, Beth Plott, and Patricia W. Kilduff

ARL-TR-2635 August 2005

Approved for public release; distribution is unlimited.

Report Documentation Page

Form Approved
OMB No. 0704-0188

Public reporting burden for the collection of information is estimated to average 1 hour per response, including the time for reviewing instructions, searching existing data sources, gathering and maintaining the data needed, and completing and reviewing the collection of information. Send comments regarding this burden estimate or any other aspect of this collection of information, including suggestions for reducing this burden, to Washington Headquarters Services, Directorate for Information Operations and Reports, 1215 Jefferson Davis Highway, Suite 1204, Arlington VA 22202-4302. Respondents should be aware that notwithstanding any other provision of law, no person shall be subject to a penalty for failing to comply with a collection of information if it does not display a currently valid OMB control number.

1. REPORT DATE **AUG 2005**	2. REPORT TYPE **N/A**	3. DATES COVERED **-**
4. TITLE AND SUBTITLE **Human Performance Model Development of a Battalion Tactical Operations Center**		5a. CONTRACT NUMBER 5b. GRANT NUMBER 5c. PROGRAM ELEMENT NUMBER
6. AUTHOR(S)		5d. PROJECT NUMBER 5e. TASK NUMBER 5f. WORK UNIT NUMBER
7. PERFORMING ORGANIZATION NAME(S) AND ADDRESS(ES) **U.S. Army Research Laboratory Human Research and Engineering Directorate Aberdeen Proving Ground, MD 21005-5425**		8. PERFORMING ORGANIZATION REPORT NUMBER
9. SPONSORING/MONITORING AGENCY NAME(S) AND ADDRESS(ES)		10. SPONSOR/MONITOR'S ACRONYM(S) 11. SPONSOR/MONITOR'S REPORT NUMBER(S)
12. DISTRIBUTION/AVAILABILITY STATEMENT **Approved for public release, distribution unlimited**		
13. SUPPLEMENTARY NOTES		
14. ABSTRACT		
15. SUBJECT TERMS		

16. SECURITY CLASSIFICATION OF:			17. LIMITATION OF ABSTRACT	18. NUMBER OF PAGES	19a. NAME OF RESPONSIBLE PERSON
a. REPORT **unclassified**	b. ABSTRACT **unclassified**	c. THIS PAGE **unclassified**	**UU**	**150**	

Standard Form 298 (Rev. 8-98)
Prescribed by ANSI Std Z39-18

NOTICES

Disclaimers

The findings in this report are not to be construed as an official Department of the Army position unless so designated by other authorized documents.

Citation of manufacturer's or trade names does not constitute an official endorsement or approval of the use thereof.

DESTRUCTION NOTICE—Destroy this report when it is no longer needed. Do not return it to the originator.

Army Research Laboratory
Aberdeen Proving Ground, MD 21005-5425

ARL-TR-2635 **August 2005**

Human Performance Model Development of a Battalion Tactical Operations Center

Josephine Q. Wojciechowski and Patricia W. Kilduff
Human Research and Engineering Directorate, ARL

Beth Plott
Micro Analysis & Design, Inc.

Approved for public release; distribution is unlimited.

REPORT DOCUMENTATION PAGE

Form Approved
OMB No. 0704-0188

Public reporting burden for this collection of information is estimated to average 1 hour per response, including the time for reviewing instructions, searching existing data sources, gathering and maintaining the data needed, and completing and reviewing the collection information. Send comments regarding this burden estimate or any other aspect of this collection of information, including suggestions for reducing the burden, to Department of Defense, Washington Headquarters Services, Directorate for Information Operations and Reports (0704-0188), 1215 Jefferson Davis Highway, Suite 1204, Arlington, VA 22202-4302. Respondents should be aware that notwithstanding any other provision of law, no person shall be subject to any penalty for failing to comply with a collection of information if it does not display a currently valid OMB control number.
PLEASE DO NOT RETURN YOUR FORM TO THE ABOVE ADDRESS.

1. REPORT DATE *(DD-MM-YYYY)* August 2005	**2. REPORT TYPE**	**3. DATES COVERED (From - To)** January 2004 to January 2005
4. TITLE AND SUBTITLE Human Performance Model Development of a Battalion Tactical Operations Center		**5a. CONTRACT NUMBER** **5b. GRANT NUMBER** **5c. PROGRAM ELEMENT NUMBER**
6. AUTHOR(S) Josephine Q. Wojciechowski (ARL); Beth Plott (MA&D); Patricia Kilduff (ARL)		**5d. PROJECT NUMBER** 622716AH70 **5e. TASK NUMBER** **5f. WORK UNIT NUMBER**
7. PERFORMING ORGANIZATION NAME(S) AND ADDRESS(ES) U.S. Army Research Laboratory Human Research and Engineering Directorate Aberdeen Proving Ground, MD 21005-5425		**8. PERFORMING ORGANIZATION REPORT NUMBER** ARL-TR-2635
9. SPONSORING/MONITORING AGENCY NAME(S) AND ADDRESS(ES)		**10. SPONSOR/MONITOR'S ACRONYM(S)** **11. SPONSOR/MONITOR'S REPORT NUMBER(S)**

12. DISTRIBUTION/AVAILABILITY STATEMENT

Approved for public release; distribution is unlimited.

13. SUPPLEMENTARY NOTES

14. ABSTRACT

A multi-year research and development effort was undertaken by the U.S. Army Research Laboratory in evaluating trade-offs between various configurations of Soldiers and equipment in the command and control (C2) environment. The work consisted of a series of phases (e.g., task-network design, performance data collection, model programming, etc.), which resulted in a number of computer-based C2 models. Two of the models built were identified for use in evaluating the impact of Soldiers conducting their C2 functions in a moving vehicle. This report documents the task analysis that was completed in the creation of those models and simulations. It includes all the assumptions, input to the models, and output capabilities. The model runs can be used for comparative "what if" analyses to determine the impact of Soldiers conducting their C2 functions in a moving vehicle. While these models do not predict exact results, the analyses of the different movement profiles can be compared to assess the effect of C2 in a moving vehicle. The objective of this report, in particular, is to describe the simulations themselves and to document their development. No model runs or data analysis are provided in this report.

15. SUBJECT TERMS

battalion tactical operations center; command and control; human performance; model and simulation

16. SECURITY CLASSIFICATION OF:			**17. LIMITATION OF ABSTRACT**	**18. NUMBER OF PAGES**	**19a. NAME OF RESPONSIBLE PERSON**
a. REPORT	**b. ABSTRACT**	**c. THIS PAGE**			Josephine Q. Wojciechowski
Unclassified	Unclassified	Unclassified	SAR	85	**19b. TELEPHONE NUMBER** (*Include area code*) 410-278-5878

Standard Form 298 (Rev. 8/98)
Prescribed by ANSI Std. Z39.1

Contents

List of Figures v

List of Tables v

1. Introduction vii

2. Preliminary Task Analysis 2

3. Detailed Task Analysis 3

4. Task Analysis by Operator and Staff Section 4

4.1 Configurations 6

4.1.1 Analog 6

4.1.2 Digital 7

4.2 Personnel 7

4.3 Scenario 7

5. Model Development 7

5.1 Operator Data 8

5.2 Task Data 8

5.3 Task Degradation Data 9

5.4 Scenario Data 10

5.5 Application Constructs and Assumptions 11

6. Conclusions 19

7. References 21

Appendix A. Task Analysis of TOC 23

Appendix B: Analog and Digital Model Personnel 29

Appendix C. Workload Scenario Development Project 39

Appendix D. Analog and Digital Task Lists **113**

Appendix E. Time Degradation Factors **131**

Appendix F. Message-Routing Variable Definitions **133**

Acronyms **137**

Distribution List **139**

List of Figures

Figure 1. Work flow diagram for a staff section (adapted from Knapp et al., 1997). 2
Figure 2. Analog TOC diagram. 5
Figure 3. Digital TOC diagram. 5
Figure 4. Command group (commander and S3 in their vehicles) task networks. 14
Figure 5. S2 and S3 task networks. 15
Figure 6. Fire support and engineer task networks. 16
Figure 7. XO and ALO task networks. 17
Figure 8. Staff huddle task networks. 18
Figure 9. CTCP task networks. 19

List of Tables

Table 1. List of personnel in battalion tactical operation center as modeled. 6
Table 2. Operator types used in the model. 8
Table 3. Model operator and operator type assignments. 8
Table 4. Detailed job functions used in the models. 9
Table 5. Queue and “in process too long” times. 19
Table A-1. Task analysis of TOC. 23
Table B-1. Analog model personnel. 29
Table B-2. Digital model personnel. 33

INTENTIONALLY LEFT BLANK

Acknowledgments

The authors would like to acknowledge several people for their contributions. Although this report is limited to documenting the model developed to support the project, "On-the-Move Performance Modeling of Heavy Maneuver Battalion C2V Equipped Tactical Operations Center," we would like to recognize those who contributed to model development and those who contributed to the overall project.

We would like to thank Dr. Beverly Knapp, Joyce Johnson, and Jennifer Swoboda from the U.S. Army Research Laboratory (ARL) and Ms Annette Ensing from Mitre Corporation for contributions that were useful to the model development. Dr. Knapp, Ms. Johnson, and Ms. Ensing were instrumental in the preliminary task analysis that led to the task flows represented in this model. Dr. Knapp's guidance in preparation for the analysis phase improved the development of the model itself. Ms. Swoboda developed the task degradation factors used in the model from data in literature.

We would like to thank Dr. Knapp, Sam Middlebrooks, Jennifer Swoboda, and Diane Barnette of ARL for their contributions to the overall project. Dr. Knapp provided guidance during the analysis phase. Mr. Middlebrooks was the team leader and provided project management. He interfaced directly with the customer and worked to ensure that all aspects of the project would meet the customer's expectations. Ms. Swoboda and Ms. Barnette completed the analysis of the output data from the model.

INTENTIONALLY LEFT BLANK

1. Introduction

In 1991, the U.S. Army participated in Operation Desert Storm. This engagement resulted in long-movement battles (i.e., fast moving battles fought over long distances) in the desert. The normal doctrine of tactical operations was not sufficient for the command and control (C2) of an operation that moves forward at such a rapid pace. To remedy this problem, the Army proposed a C2 vehicle (C2V) that would take the place of the "typical" maneuver battalion tactical operations center (TOC). Soldiers performing C2 functions would remain in the vehicle and perform these functions while moving along the battlefield if necessary. A method was needed to determine if the human operator could perform C2 tasks while moving.

A multi-year research and development effort was undertaken by the Human Research and Engineering Directorate of the U.S. Army Research Laboratory (ARL) to assist the U.S. Army Armor Center in evaluating trade-offs between various configurations of Soldiers and equipment in the C2 environment. The work consisted of a series of phases (e.g., task-network design, performance data collection, model programming, etc.), which resulted in a number of computer-based C2 models. Several human performance simulation models were developed to represent maneuver unit C2, starting with a baseline model to reflect the battalion command post of that time period and then several alternatives, each designed to portray selected variations in unit personnel, equipment, and organizational dynamics. At the completion of that effort, two of the models built were identified for use in the evaluation of the impact of Soldiers conducting their C2 functions in a moving vehicle.

The objective of the second effort was to model C2 Soldier task performance and workload in a "typical" maneuver battalion task force configuration for the Army at that time via a computer-based application environment for modeling. Then, with the same basic methods, we would build a model of a battalion outfitted with C2Vs. The models were to be used to assess the efficiency of information flow and task loading during a 24-hour long-movement mission. The model runs were to be used for comparative "what if" analyses to determine the impact of Soldiers conducting their C2 functions in a moving vehicle. These models do not predict exact results; however, the analyses of the different movement profiles can be compared to assess the effect of C2 in a moving vehicle. The objective of this report, in particular, is to describe these models and to document their development. No model runs or data analysis are provided in this report.

2. Preliminary Task Analysis

The first step in creating a "good" human performance model (HPM) is task analysis. A thorough task analysis is needed to adequately represent the human operator in the HPM. Task analysis can be performed in many different ways, depending on the purpose and how the results are to be used. Task and task flow data were gathered for the model development process. Many resources were used to determine the task and task flows conducted in a TOC during a long-movement mission (24 hours). These included subject matter experts, training manuals, doctrine, standing operating procedures, and many other sources (Kilduff et al., 1999). The information gathered from all these sources was consolidated into a basic task and work flow diagram shown in figure 1. The task and work flow are representative of collective accomplishments in each of the staff sections or battlefield operating system and individual accomplishments by each operator.

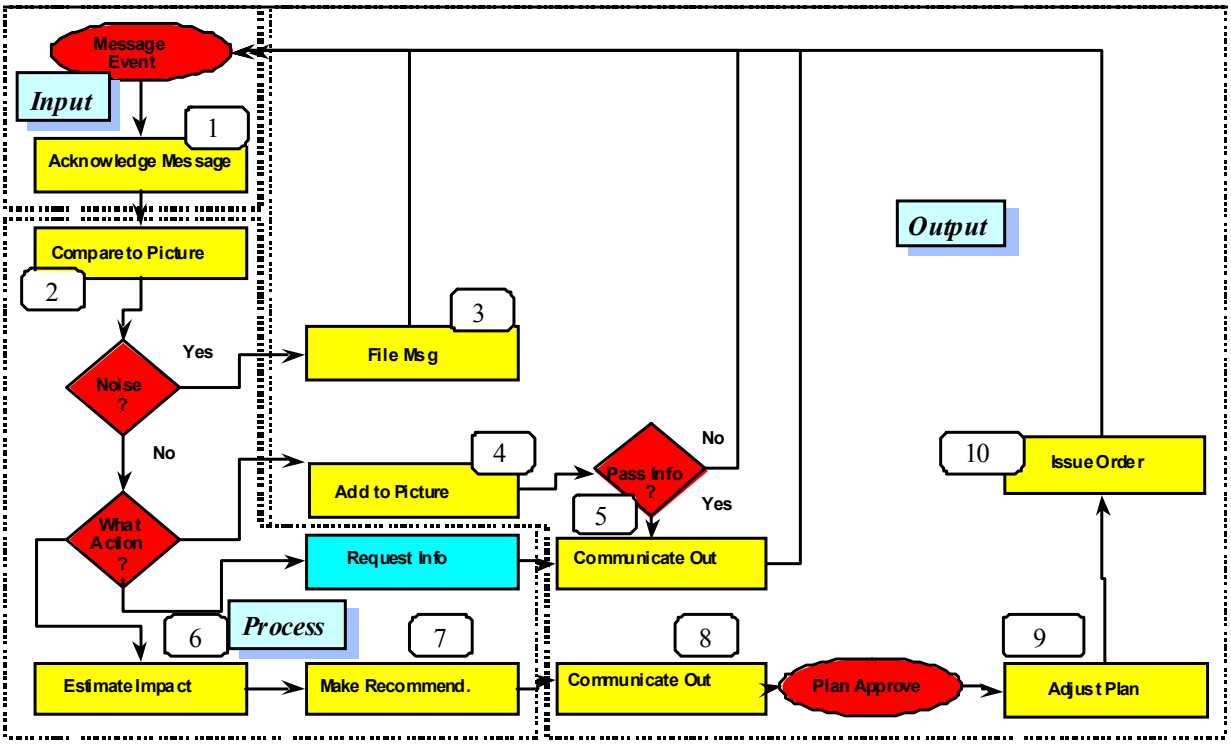

Figure 1. Work flow diagram for a staff section (adapted from Knapp et al., 1997).

Figure 1 shows the tasks associated with information processing and the resultant actions. The diagram begins at task 1. A message or piece of information is received by the TOC. It is acknowledged and compared to what is currently known, and a decision is made about any additional action. If the message is a request for information as shown by the "Request Information" box, the result goes directly to "Communicate Out." The information may be

needed to revise the battlefield picture before it is passed to someone else. If the message contains relevant information, the operator must determine the impact and make another decision. If the current plan must be adjusted, the operator will convene other staff members in a "staff huddle" (Adjust Plan). They will follow a process that includes defining the problem, gathering data, finding options, comparing alternatives, making recommendations, and communicating their decisions. Upon completion, each flow path returns to task 1, and the process begins again.

3. Detailed Task Analysis

A detailed task analysis for the TOC was developed from the flow diagram in figure 1. Each of the tasks listed in figure 1 was assessed for a description, starting cue, information requirements, skills required, operator decisions made, operator actions, system feedback, information sources, and difficulties or errors. All this is presented in appendix A.

Additionally for these models, the skills required by the operators who perform the tasks were determined. A taxonomy developed by Fleishman and Quaintance (1984) was used to assign the performance data to each task. This taxonomy represents tasks by a subset of 50 total skills and abilities. A task is described by the skills required to perform the task and by the level of each of those skills. A detailed description of the process for developing the task flow diagram and how the skill and ability data were attributed to each task is given in Kilduff et al. (1999).

This task flow was built into a model via a computer-based simulation package called MicroSaint[1] to determine such things as how much time messages require to be processed or where operators spend most of their time. A scenario of actual messages coming into the TOC during a 24-hour long-movement mission drives this model. By comparing the task, task times, skill and ability of the Soldiers during this mission while they are stationary and moving, we can measure the impact on the operator of performing C2 functions during movement.

This type of analysis is useful but limited. The time for each task will vary with the message and message content. It is easy to describe the flow of tasks for each message; however, the dynamic nature of the C2 environment would not be captured. In actuality, C2 personnel can receive several messages in a short time span. To capture these dynamics, the interruptions and re-routing on the flow path (because of the number and time of each message entering the TOC) need to be determined. Messages flow into the TOC and are processed. Messages may enter at a rate that prevents operators from completing one before having to work on the next. To account for multiple messages, interruptions, and loss of information, the model must have rules for message priority and for handling priority. These rules were also collected from the same

[1]MicroSaint is a trademark of MicroAnalysis and Design.

multiple sources as the task analysis. They are the assumptions that are used to develop the model.

4. Task Analysis by Operator and Staff Section

The battalion TOC is responsible for C2 with 24 personnel represented. Figures 2 and 3 represent the staff sections included in the analyses. Figure 2 is a representation of an analog TOC or one in which all communication is by radio or voice. Figure 3 represents a digital TOC or one in which digital equipment has been added for communicating information. Personnel in each of the sections are listed inside the box for that section. See table 1 for personnel definitions. The radio nets or equipment associated with each section are listed to the immediate left or right of that section. Generally, in each of the five functional areas[2], the messages arrive by various radio nets and are written on formatted message pads and logged into a log book by a designated radio-telephone operator (RTO). The RTO then passes the message to the next senior person within his or her section by distributing the message to the next senior person's in-box or by interrupting the person and speaking the message. The next senior person may also be monitoring the radio to filter messages; s/he distributes messages to other sections as deemed appropriate, scans map and status boards for changes, and makes the changes on the basis of message traffic. Map revisions or changes are made with "stickies" (similar to "post-it" notes) posted on map overlays; personnel make status board changes by erasing information and rewriting it. If a third (more senior) person is in a section, this individual monitors radios, scans map and status boards, decision support templates, and other action lists such as the commander's critical information requirements. In addition, this person estimates the impact of the changes, makes decisions, may initiate staff huddles, and directs actions in the form of verbal orders or radio messages sent. In the two-person section, the senior person estimates the impact of the changes, makes decisions, may initiate staff huddles, and directs actions in the form of information sent. In the digital TOC, the same process occurs with some messages received and sent via the digital systems versus the radio nets.

[2]intelligence staff section [S2], operations staff section [S3], fire support element [FSE], engineer staff section [ENG], and air liaison officer [ALO] sections

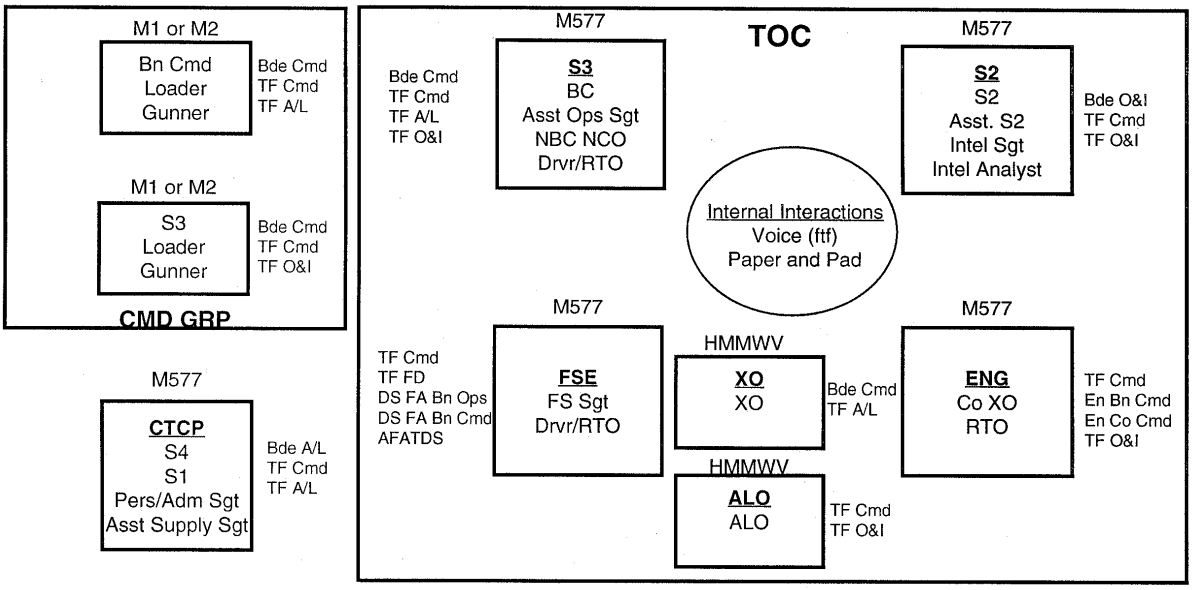

Figure 2. Analog TOC diagram.

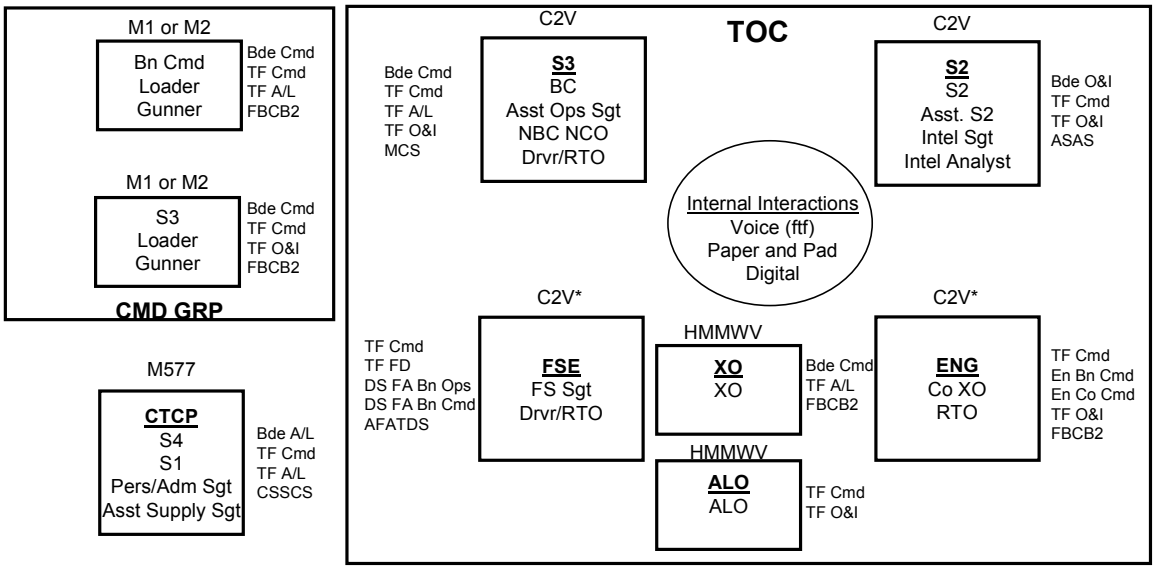

Figure 3. Digital TOC diagram.

Table 1. List of personnel in battalion tactical operation center as modeled.

Section	Definition	Personnel	Definition
S1	Personnel Section	S1	Personnel Officer
		Per/Adm Sgt	Personnel and Administrative Sergeant
S2	Intelligence Section	S2	Intelligence Officer
		Asst S2	Assistant Intelligence Officer
		Intel Sgt	Intelligence Sergeant
		Intel Analyst	Intelligence Analyst
S3	Operations Section	BC	Battle Captain
		Asst Ops Sgt	Assistant Operations Sergeant
		NBC NCO	Nuclear, Biological, and Chemical Non-Commissioned Officer
		Drvr/RTO	Driver/Radio Telephone Operator
S4	Supply Section	S4	Supply Officer
		Asst Supply Sgt	Assistant Supply Sergeant
FSE	Fire Support Section	FS Sgt	Fire Support Sergeant
		Drvr/RTO	Driver/Radio Telephone Operator
ENG	Engineer's Section	Co XO	Engineer's Company Executive Officer
		RTO	Radio Telephone Operator
ALO	Air Liaison Section	ALO	Air Liaison Officer
Other		XO	Battalion Executive Officer
M1 or M2	Commander's Vehicle	Bn Cmd	Battalion Commander
		Loader	Vehicle Loader
		Gunner	Vehicle Gunner
M1 or M2	S3's Vehicle	S3	Operations Officer
		Loader	Vehicle Loader
		Gunner	Vehicle Gunner

The combat train's command post (CTCP) is responsible for issuing periodic status reports and keeping copies of maps and status boards representing the S3 data. The CTCP has two RTOs. One RTO monitors the brigade and the battalion administrative/logistics (A/L) net for personnel messages, and the other RTO monitors both A/L nets for logistics messages. Both pass information to the next senior person, who in turn, revises the boards. In the digital TOC, one RTO monitors the digital traffic and one operates the radio for personnel and logistics messages.

In his/her vehicle, the commander periodically scans the battlefield, looking at the synchronization of his/her forces against the opposing force. S/he monitors the radio and keeps a knee board (small map/status board). The loader jots messages from the battalion command net, while the gunner monitors the brigade net for the commander's call sign. The S3 operates in a similar method in his or her vehicle. The commander also monitors the digital system for information in the digital TOC.

4.1 Configurations

4.1.1 Analog

As shown in figure 2, the battalion task force C2 consists of three "nodes" that encompass eight command and staff elements. The command group node consists of six Soldiers in two vehicles, including the commander. The C2 TOC consists of 14 Soldiers partitioned into five staff

sections (S3, S2, fire support, engineer, and ALO) and includes an executive officer (XO). Finally, a stand-alone support operations node consists of four Soldiers who conduct S1 and S4 operations. Altogether, 24 Soldiers are modeled: 11 officers, five junior officers or non-commissioned officers (NCOs), and eight enlisted personnel.

4.1.2 Digital

As shown in figure 3, the battalion C2V configuration consists of the same three "nodes" and eight command and staff elements. They are, however, divided among seven vehicles encompassing command group M1s or M2s, three C2Vs, and two high mobility multipurpose wheeled vehicles (HMMWVs). The command group consists of six Soldiers in two vehicles, including the commander. The C2 TOC consists of 14 Soldiers using three C2Vs for operations, intelligence, fire support, engineering, and HMMWVs for the XO and ALO. A M577 is dedicated for administrative and logistics operations, with four Soldiers. Altogether, 24 Soldiers are modeled: 11 officers, five junior officers or NCOs, and eight enlisted personnel. Digital equipment has also been added.

4.2 Personnel

Each operator or Soldier in the TOC is listed in tables B-1 and B-2 in appendix B for the analog and digital models, respectively. Included in these tables are the section, person, equipment that the person interfaces with, and the tasks for which that person is responsible.

4.3 Scenario

The simulation is driven by a force-on-force operation occurring over 24 hours and consisting of voice messages or digital information traffic expected to occur during this type of mission. The scenario input includes the time each message occurs, where it is received and who receives it, as well as the subsequent routing and task flow initiated by the message. Tasks performed in response to messages that are from an external source (usually a radio or from a co-worker) are considered "reactive". In addition to external voice messages, the scenario file also contains "internal information messages" that are mental "triggers" for personnel to periodically perform "proactive" (self-initiated) tasks that are an essential part of C2 operations. Examples of these proactive tasks are situation assessment checks, contacts and discussions with other personnel, and preparation of status reports. The complete message scenario list for both the digital and analog models is provided in appendix C.

5. Model Development

At the completion of the task analysis, it was necessary to develop a human performance model to represent this process. In order to represent this process in a flexible and useful manner for

answering the questions proposed by Operational Test and Evaluation Command (OPTEC), input data were characterized as described in the following sections.

5.1 Operator Data

Operators were categorized according to the type of tasks completed. There are 17 operator types in a typical battalion TOC. For example, RTOs in the S3, S2, and FS sections are all considered "Operator Type – RTO." Table 2 is a list of operator types. Table 3 is a list of the Soldiers in the model, the identifying number of the operator in the model, and their operator type.

Table 2. Operator types used in the model.

Operator Type	Type Identifier
Commander	1
XO	2
S1	3
S2	4
S3	5
S4	6
BC	7
ENO	8
ALO	9
FSO	10
S1NCO	11
S2NCO	12
S3NCO	13
S4NCO	14
NBCNCO	15
FSNCO	16
RTO	17

5.2 Task Data

Every task in the model that accounts for time worked is categorized as one of 32 detailed job functions (DJFs). The DFJs are listed in table 4. Therefore, skill and ability data are entered in the model for each task, according to which operator type and DJF are associated with that task. Data required for each task include the operator(s) who can perform the task, time to perform the task, whether the task can be interrupted, and to which DJF the task corresponds. A complete list of tasks and associated parameters such as operator, DJF, task time, task interrupt type, and task weighting is given in appendix D. Task interruption types determine if a task can or cannot be interrupted and if interrupted, whether it will be restarted. Task weightings are used in the calculation of the skill and ability totals for the operator-task combination.

Table 3. Model operator and operator type assignments.

Operator Name	Operator Number	Operator Type
S1NCO	1	11
S1	2	3
	3	
S2RTO	4	17
S2NCO	5	12
S2A	6	4
S2O	7	4
	8	
S3RTO	9	17
NBCNCO	10	15
S3NCO	11	13
BC	12	7
XO	13	2
	14	
S4NCO	15	14
S4	16	6
	17	
ALO	18	9
	19	
FSRTO	20	17
FSO	21	10
	22	
	23	
ENRTO	24	17
ENO	25	8
	26	
CDRLDR	27	17
CDRGNR	28	17
CDR	29	1
	30	
S3VLDR	31	17
S3VGNR	32	17
S3V	33	5

5.3 Task Degradation Data

Research completed at ARL indicates that task time and performance degrade over time while cognitive tasks are completed in a moving vehicle (Schipani, Bruno, Lattin, King, & Patton, 1998). Data from this study were used to determine the rate at which task times would increase as a function of length of time that the vehicle has been moving and predominant skill demand required in completing that task. Predominant skill demand was determined from the DJF for each task. A description of the process used to calculate degradation rates in given in Schipani (1998). The rate at which each of the DJFs degrades by hour in a moving vehicle is given in appendix E.

Table 4. Detailed job functions used in the models.

Top Level Function	Detailed Job Function (DJF)
Communicate and Report	1 – Receive and Record (Analog)
	2 – Pass Information
	3 – Listen, Receive Information
	4 – Secondary Monitor
	5 – Log Message
	6 – Route (outside the section)
	7 – Send Message
	8 – Verbal Order
	9 – Roll up Reports
	10 – Call to Conference
	26 – Receive Digital Message
	27 – Input Data into Computer
	28 – Send Digital Information
Decide and Recommend or Direct	11 – Decide Action
	12 – Decide
	13 – Recommend Action
Evaluate and Estimate Impact	14 – Estimate Impact
	15 – Data Gathering (Analog)
	29 – Data Gathering (Digital)
	16 – Find Options
	17 – Compare Alternatives
	18 – Discuss
Identify or Understand Situational Picture	19 – Read (Analog)
	30 – Read (Digital)
	20 – Scan
	21 – Update (Analog)
	22 – Check Status
	23 – Problem Definition
	24 – Listen / Monitor (Analog)
	31 – Scan Digital
	32 – Monitor Digital
Manage Resources	25 – Manage Resources

5.4 Scenario Data

As these messages are fed into the model, the simulation determines which tasks will be done and in which order. The task flow described by figure 1 is built into the model. The tasks are human operator tasks performed by people. The variables or attributes of the message determine the path that the message will take, therefore initiating the tasks associated with that path. When messages overlap or interrupt each other, priorities are determined by the routing characteristics of the message. Skill and ability demands associated with each task are then collected over time. Operator performance indicators such as utilization measures (number of messages processed,

number of messages dropped, number of interruptions, etc.) and task processing times can be compared with other simulated conditions.

There are many fields describing each message in the scenario. Some are used in the model and some are used only in following the tactical situation. Fields that are of use in the simulation are event time, where the message enters the model, to whom the message is intended, if and whom should be interrupted, routing variables that indicate the path the message will take and tasks it will initiate, and the number of words included in the message. Other data fields such as whom the message is from, the text of the message and the scenario elapsed time, are used to determine what handling (i.e., routing variables) should be assigned to the message. A definition of the routing variables and the options for each are given in appendix F.

5.5 Application Constructs and Assumptions

The way in which multiple concurrent tasks are completed needed to be defined to best represent what happens during information processing. There are several different theories about how multiple tasks are handled by humans. In this model, an assumption was made that operators would only complete one task at a time, except for listening to or monitoring the radio. This task can be done in parallel with any other task. The model is coded so that at the completion of the monitoring task, if the operator is not performing any other task, s/he will continue to process the monitored message. If the operator is performing another task, it is assumed that s/he would attend to the current message and continue with that task. The new information from the monitored task will be passed to him or her later.

Task interruptions happen frequently in real life and in the simulation. Rules were required to determine how the interruptions would be handled. Each task is assigned an "Interrupt Type". Tasks of type 0 can be interrupted and do not need to be restarted. Tasks of type 1 can be interrupted, but the model should attempt to restart the task. Tasks of type 2 cannot be interrupted. Type 2 are tasks such as talking on the radio or talking to another individual. When an operator is interrupted, s/he will suspend the message being worked on and will receive the new message. At that point, the operator will compare the priority of the suspended message and the new message and continue with the higher priority message. The other will be suspended. If an operator already has a suspended message and is interrupted again, the lower priority message will be dropped and the higher priority message will be suspended. Once an operator has successfully completed the required tasks on a message, s/he will restart a suspended task if there is one. If not, the operator will begin working with any queued messages.

The priority of each message was determined by routing variables assigned to that message. The model looks at the routing variable of estimate impact and staff huddle. A message that triggers a staff huddle has the highest priority. A message that requires "estimate impact" but no staff huddle has the next highest priority. A message that does not trigger "estimate impact" or staff huddle has the lowest priority. If two messages have the same priority, the more recent message is considered to be the higher priority message.

Staff huddles are triggered by messages that require group input and consensus. The operator who receives the message initiates a staff huddle. S/he interrupts the XO and explains the problem to the XO. The XO calls the commander on the radio and discusses the information with him or her. They decide who should be involved in the huddle, and the XO interrupts those staff officers and calls them to conference. A minor staff huddle consists of the XO, BC, and the S2O. A major huddle additionally includes the FSO, the ENO, and the ALO. The officers meet and perform a series of tasks that include problem definition, data gathering, finding options, comparing alternatives, and reaching a decision. The XO then calls the commander on the radio and gets his or her approval for the new course of action. The XO then gives the staff officers final direction, and everyone returns to their appropriate tasks.

Proactive tasks, as previously described, are called "internal triggers". When operators use this type of message to communicate with other operators in the model, the originator interrupts the receiver. The receiver listens, discusses the information, and then returns to his or her section and processes the information according to the routing logic assigned to that message.

The models do not track message content. Message type, content, and context are used before simulation to determine how operators would handle messages. Routing variables are then established for input into the model. In the simulation run, the content of the message is not addressed. Operators are assumed to correctly perform the tasks they are triggered to perform. If a task is triggered, it will be finished and assumed to be finished correctly unless interrupted.

Queues are used in the model to measure the time that messages are waiting to be processed. Some queues represent actual physical locations such as an in-box or a stack of messages to be logged. Some are operators waiting to interrupt other operators and still others represent waiting for an operator or radio net to become available. The times for the "wait" queues are given in the task lists for the models (see appendix D).

The simulation will determine the flow of messages and the interaction between each message, based on the routing variables. This means that messages can be delayed from their ideal path and processing time because of interruptions, operator availability, or radio net availability. For these reasons, messages or events may not be handled in a timely fashion. If a message is overcome by events, it is dropped from processing and the reason is recorded. The specific reasons are

- in a queue too long,
- taking too long to reach a specific place in the process,
- interrupted and not restarted,
- proactive task that was not started because operator was working on other tasks.

The following diagrams (see figures 4 through 9) show the message-handling path for each of the sections in the model and staff huddle. The figures show the tasks that can be triggered and

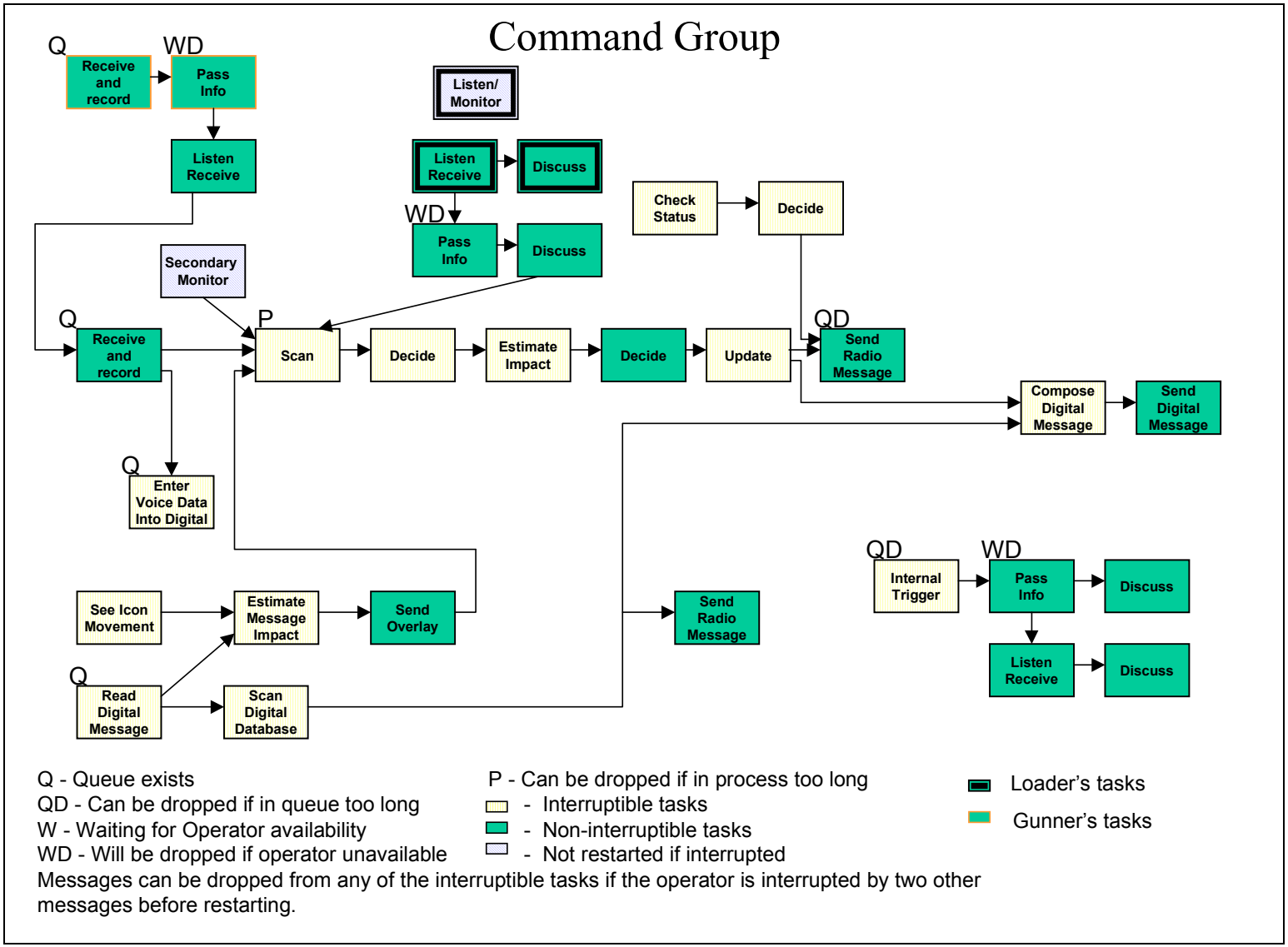

Figure 4. Command group (commander and S3 in their vehicles) task networks.

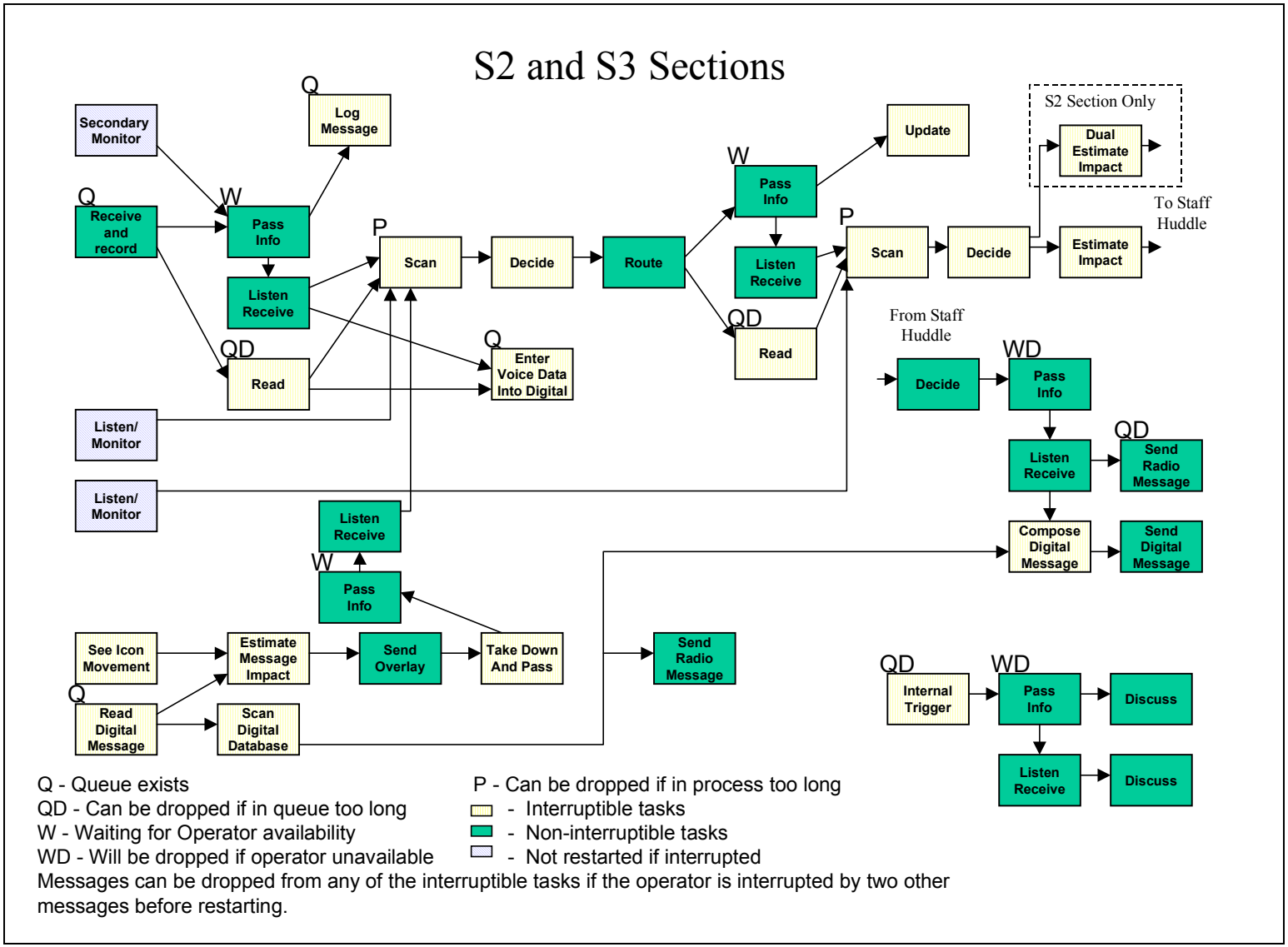

Figure 5. S2 and S3 task networks.

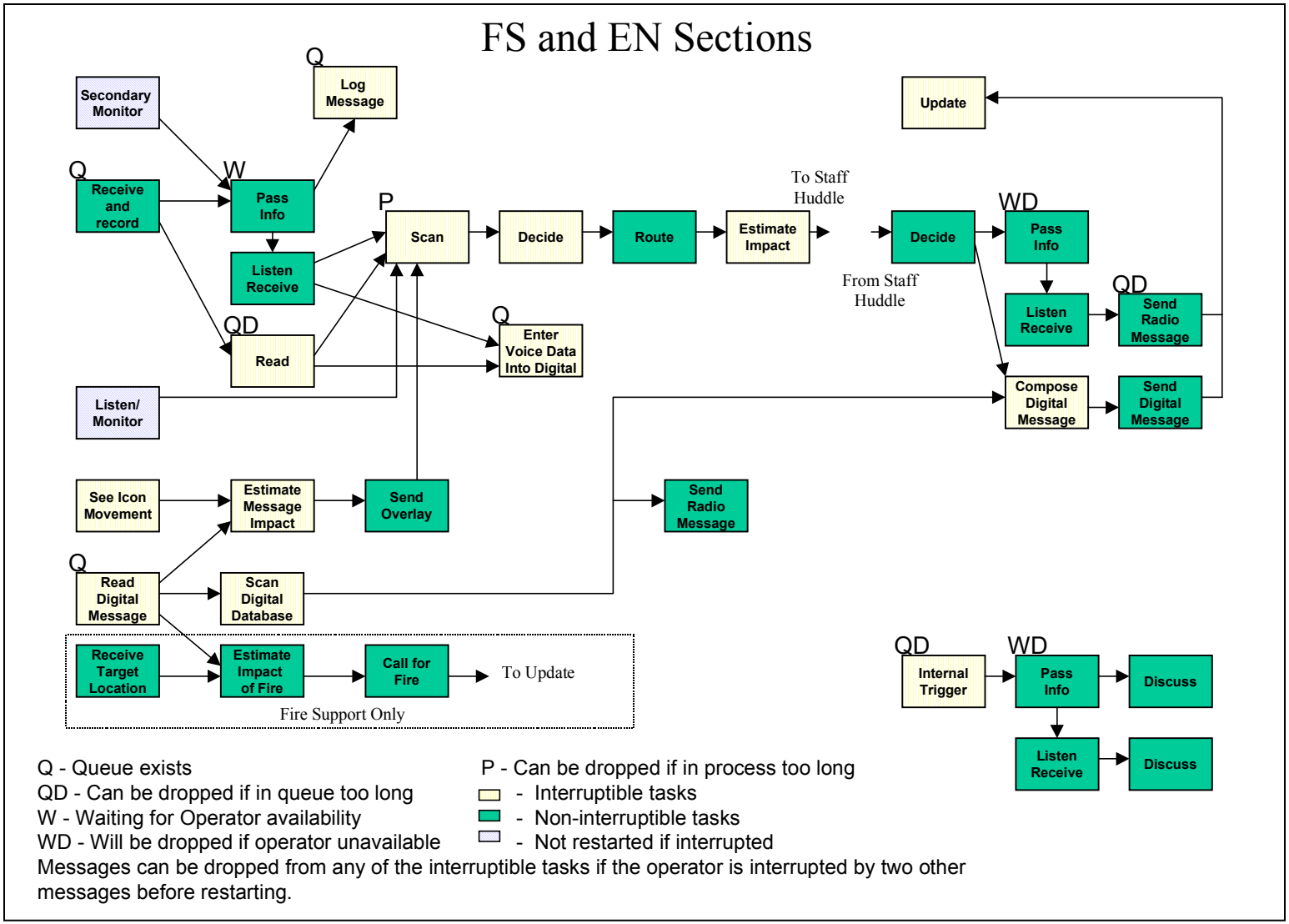

Figure 6. Fire support and engineer task networks.

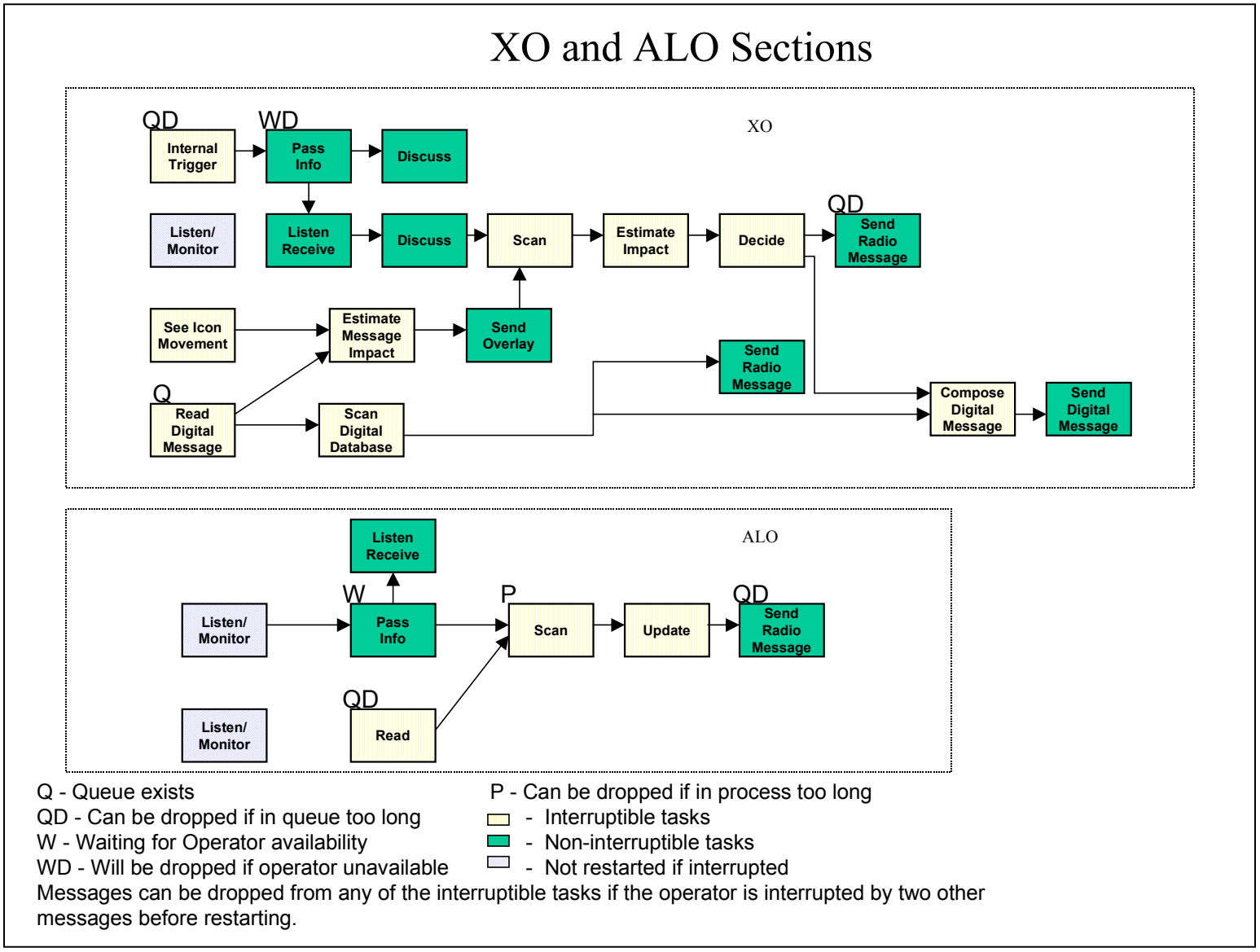

Figure 7. XO and ALO task networks.

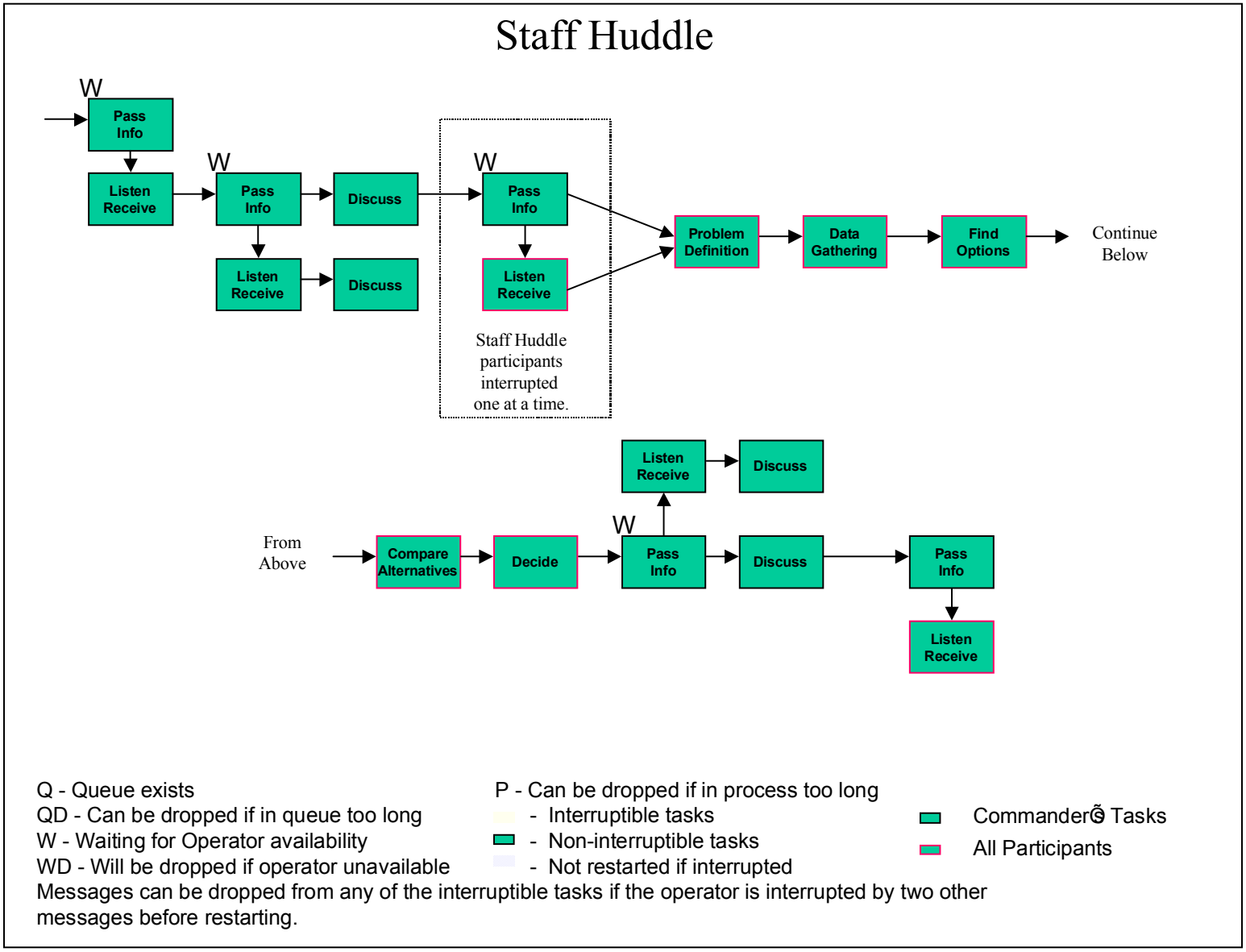

Figure 8. Staff huddle task networks.

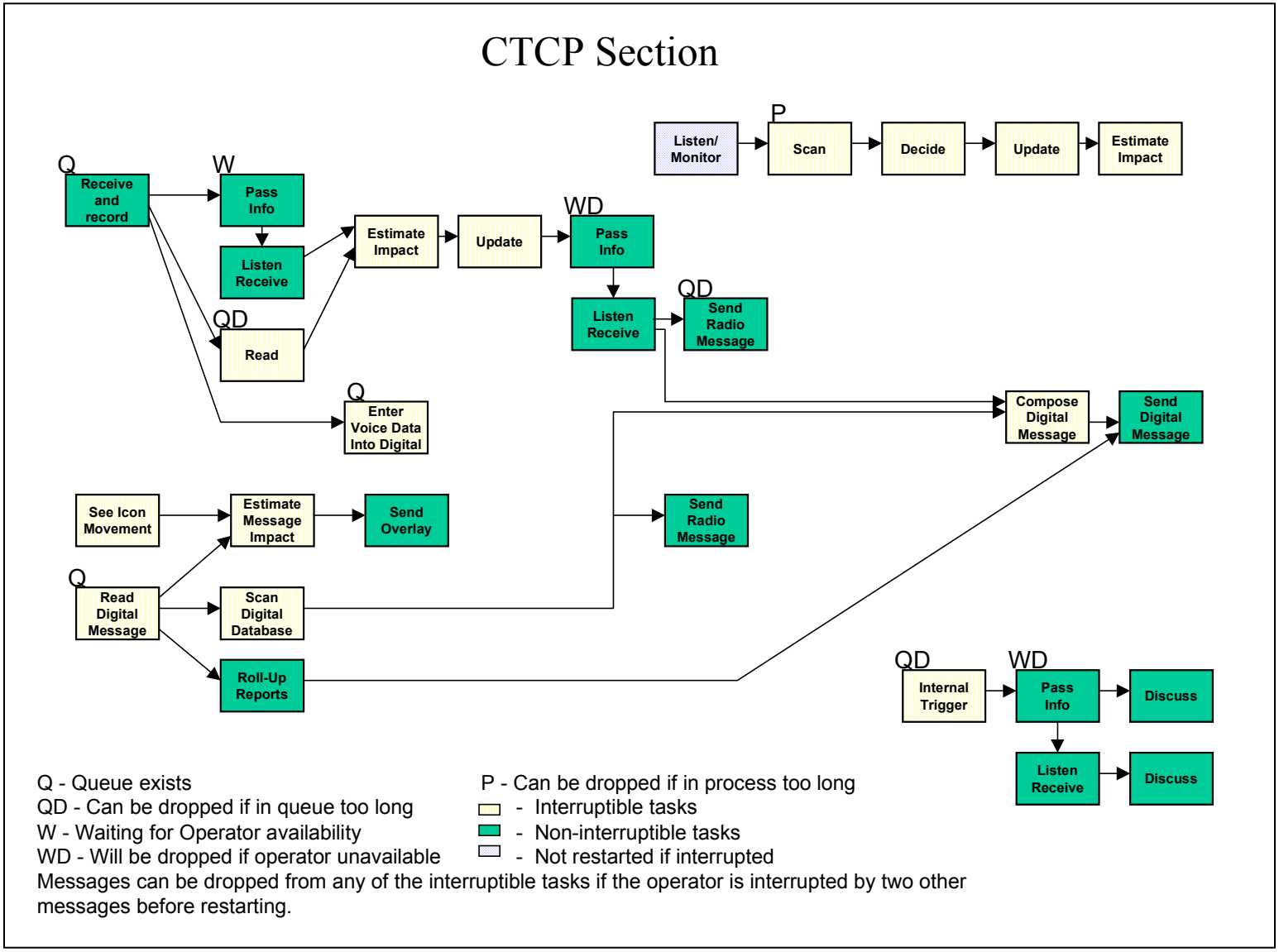

Figure 9. CTCP task networks.

the order in which they would happen. Not all tasks are triggered by every message. Specific tasks triggered by individual messages are determined by routing variables. These diagrams display the locations of the queues and indicate where and why messages can be dropped. Again, messages are dropped if they have taken too long to reach a certain task in the process or if they have spent too much time in a queue. The maximum waiting times for the queues and the "in process too long" drops are given in table 5. The tasks in these figures are each assigned a mean time with a standard deviation of 10%. A normal distribution is used for task time selection.

Table 5. Queue and "in process too long" times.

Section	Operator	Location	Time (seconds)
CTCP	S1	Scan "in process too long"	900
ALO	ALO	Read queue	800
ALO	ALO	Scan "in process too long"	900
S3	NCO	Read queue	900
S3	NCO	Scan "in process too long"	900
S3	BC	Scan "in process too long"	1200
S2	NCO	Read queue	800
S2	NCO	Scan "in process too long"	900
S2	S20 OR S2A	Scan "in process too long"	1200
FS	FSO	Read queue	800
FS	FSO	Scan "in process too long"	900
EN	ENO	Read queue	800
EN	ENO	Scan "in process too long"	900
CMD	CDR	Scan "in process too long"	900
CMD	CDR	Check status time	800
S3V	S3	Scan "in process too long"	900
S3V	S3	Check status time	800

6. Conclusions

A good task analysis is critical to good human performance modeling. Understanding the functions and tasks that the human is expected to perform is the core of the human performance model. In this case, the operators involved in the battalion TOC perform many tasks. A human performance model that represents 24 individuals and the multiple numbers of tasks that they perform is a huge undertaking, particularly in a C2 environment. The described input to the models shows how the characteristics of the tasks and of the people were represented in the models. The detailed task analysis provided the basis of the work system so that the necessary assumptions for this analysis could be implemented in the simulations. The issues of interest or

questions to be answered for OPTEC led to this specific application. It is important that these input and assumptions be documented as they apply to this use of the task analysis. The basic task analysis will not change if the questions to be answered change, but the means of representing the tasks or people in the model could change. Documentation of the applications helps to prevent use of the models for issues that the models cannot adequately address.

7. References

Fleishman, E. A.; Quaintance, M. K. *Taxonomies of human performance. The description of human tasks*. Orlando, FL: Academic Press, 1984.

Kilduff, P. W.; Wojciechowski, J. Q.; Knapp, B. G.; Barnette, B. D.; Middlebrooks, S. E.; Swoboda, J. *A validation of the methodology used in building the command and control (c2) baseline model*; (unpublished manuscript); U.S. Army Research Laboratory: Aberdeen Proving Ground, MD, 1999.

Knapp, B.; Johnson, J.; Barnette, D.; Wojciechowski, J.; Kilduff, P.; Swoboda, J. *Information Management and Workload Modeling for the Command and Control Vehicle (C2V) and Force XXI Battle Command Concepts, Vols. 1 and 2*; (unpublished manuscript); US Army Research Laboratory: Aberdeen Proving Ground, MD, 1997.

Micro Analysis & Design, Inc. *MicroSaint 3.0*. Boulder, CO: Author, 1998.

Schipani, S. P.; Bruno, R. S.; Lattin, M. A.; King, B. M.; Patton, D. J. *Quantification of cognitive process degradation while mobile, attributable to the environmental stressors endurance, vibration, and noise*; ARL-TR-1603; U.S. Army Research Laboratory: Aberdeen Proving Ground, MD, 1998.

Schipani, S. Rationale for the Construction of Model Weighting Coefficients, proposed for Use in Adjusting to Reflect (Human) Performance Degradation due to Motion while considering Fleishman Skill & Ability 'Categories', within the ARL-HRED 'Workload' Model. White paper, July 1998

INTENTIONALLY LEFT BLANK

Table A-1. Task analysis of TOC.

Task	Description	Start Cue	Information Requirements	Skills Used and Operator Decisions	Operator Actions	System Feedback	Information Sources	Difficulties or Errors
1. Ack-nowledge Message	Operator responds to an incoming radio message, digital message, or person speaking to him or her. Operator records pertinent information contained in the message.	Hear call sign on the radio or hear name called or cued that a new digital message is received.	Operator needs to know what his or her call sign is. Operator needs to know how to operate the radio or digital equipment. Operator needs to know proper protocol for radio traffic.	Operator uses auditory, perceptual and cognitive skills to interpret message and distinguish pertinent information. Operator used psychomotor and visual skills to operate the radio or computer and record the pertinent information.	Operator hears call sign or name or sees indication of new digital message. Operator responds. Operator listens to or reads message and records appropriate information. Operator signs off.	Auditory feedback from the radio and the sender. Tactile feedback from the radio controls. Visual feedback from the message record and writing or computer screen. Tactile feedback from the writing instrument or keyboard.	Training resources. Manuals for the radio and digital system. Other personnel in the TOC.	Miss call sign. Operate radio or computer incorrectly. Interpret or record incorrect data. Incorrectly trained or untrained operator. Inexperienced operators.
2. Compare to Picture	Operator reads the message and looks at the current state of the battle-field to compare and decide what further action is required.	Information is received from the radio, digital or verbal message.	Operator needs to know where to look to find the current state of the battle-field. Operator needs to understand the informa-tion in the message.	Operator uses visual, perceptual, and cognitive skills to read message, assimilate the information and compare to the current state.	Operator reads message or listens to RTO Operator scans map and/or status board to compare to what is already known. Operator may consult additional resources such as critical events list, decision support template, etc. Operator decides what further action is required on this message.	Visual feedback from displayed informa-tion.	Training resources. Maps. Status Boards. Other written documenta-tion. Other personnel in the TOC.	Incorrect interpretation of the information. Incorrect decisions about what further action is required. Operator looked at the wrong resource. Incorrectly trained or untrained operator. Inexperienced operators.

3. File Message	Operator logs the incoming message.	No further action is required for this message.	Operator needs to know where the log is. Operator needs to know how to properly log incoming messages	Operator uses visual, perceptual, and cognitive skills to determine what is to be entered into the log. Operator uses visual and psychomotor skills to enter that infor-mation	Operator enters information into the logbook recording this incoming message.	Visual feedback from the logbook and writing. Tactile feedback from the writing instrument.	Training resources. Other personnel in the TOC.	Entered record in wrong book. Entered record incorrectly. Did not enter record at all. Incorrectly trained or untrained operator. Inexperienced operators.
4. Add To Picture	Operator revises the record of the current state of battlefield.	Message contains information that changes the situa-tional picture.	Operator needs to know what part of the picture to revise. Operator needs to know how to revise picture.	Operator uses visual, perceptual, and cognitive skills to determine what needs to be revised. Operator uses visual and psycho-motor skills to write on the map, board, or other informa-tion display or to enter data into computer database.	Operator may erase and/or write on the status board. Operator may add a new "post-it," move one or remove one from the map. Operator may change an entry in a resource such as a collection plan. Operator may enter data into the digital system.	Visual feedback from the information display and writing. Tactile feedback from the writing instrument or keyboard.	Training resources. Other personnel in the TOC.	Incorrect entry on the information display. Revised the wrong information display. Did not revise the display. Incorrectly trained or untrained operator. Inexperienced operators.
5. Com-municate	Operator transmits information to another person(s).	Operator determines that someone needs this information or interpreta-tion of this information.	Operator needs to know to whom to transmit message. Operator needs to know how to com-municate this message to desired person(s). If radio message to be sent, operator needs to know how to operate the radio. If digital	Operator uses auditory, perceptual, and verbal communica-tion skills to transmit this message. Operator uses psycho-motor skills to operate the radio or computer keyboard.	If message transmitted by radio, operator adjusts radio, delivers call sign of desired recipient, sends message, signs off. If message verbally transmitted, operator calls recipient's name,	Auditory feedback from the radio and/or the receiver. Tactile feedback from the radio controls or digital controls.	Training resources. Manuals for the radio or digital system. Other personnel in the TOC.	Wrong call sign. Operated radio or digital system incorrectly. Sent to the wrong person(s). Sent incorrect information. Incorrectly trained or untrained operator. Inexperienced operators.

			information to be sent, operator needs to know how to operate digital system.		listens for reply and delivers message. If message transmitted digitally, operator must enter correct data and key strokes into the system.			
6. Estimate Impact	Operator reviews the message and determines the impact of this piece of information on the battle.	Message requires analysis of the impact on the battle.	Operator needs to know the current state of the battle. Operator needs to know how to determine the impact of this new information. Operator needs to know where to find additional information.	Operator uses visual, perceptual, and cognitive skills to interpret information available from many resources.	Operator checks map and status board to compare current message with displayed state of the battle. Operator analyzes how this message changes what is known about the battle. Operator decides if further input is needed from other personnel in the TOC. Operator decides if other person(s) need this information.	Visual feedback from the information display and written text.	Training resources. Maps. Status Boards. Other written documenta-tion. Other personnel in the TOC.	Incorrect analysis of the message. Incorrect decision of further processing. Incorrectly trained or untrained operator. Inexperienced operators.
7. Make Recom-menda-tions	Operator cognitively decides what actions should be taken or what message should be relayed.	Operator completes estimation of the impact of this informa-tion on the battle.	Operator needs to know how this information impacts the battle.	Operator uses cognitive skills to make decision.	No actions.	No system feedback.	Training resources. Maps. Status Boards. Other written documenta-tion. Other personnel in the TOC.	Wrong interpretation of impact. Incorrect decision. Incorrectly trained or untrained operator. Inexperienced operators.

8. Com-municate	Operator transmits information to another person(s).	Operator determines that someone needs this information or interpreta-tion of this information.	Operator needs to know to whom to transmit message. Operator needs to know how to communicate this message to desired person(s). If radio message to be sent, operator needs to know how to operate the radio. If digital information to be sent, operator needs to know how to operate digital system.	Operator uses auditory, perceptual, and verbal communica-tion skills to transmit this message. Operator uses psychomotor skills to operate the radio or computer keyboard.	If message transmitted by radio, operator adjusts radio, delivers call sign of desired recipient, sends message, signs off. If message verbally transmitted, operator calls recipient's name, listens for reply and delivers message. If message transmitted digitally, operator must enter correct data and key strokes into the system.	Auditory feedback from the radio and/or the receiver. Tactile feedback from the radio controls or digital controls.	Training resources. Manuals for the radio or digital system. Other personnel in the TOC.	Wrong call sign. Operated radio or digital system incorrectly. Sent to the wrong person(s). Sent incorrect information. Incorrectly trained or untrained operator. Inexperienced operators.
9. Adjust Plan	Several operators meet to determine the changes necessary, based on this message.	An operator has deter-mined that he or she needs input from other TOC personnel to fully analyze the changes in the battle plan required on the basis of this message.	Need to know which operators are necessary. Need to know what input is available from each operator. Need to know who will direct and lead the discussion.	Operators use auditory, perceptual, and verbal communica-tion skills to discuss the problem, the options, and reach a decision. Operators use visual and psycho-motor skills to gather data. Operators use visual and cognitive skills to interpret the data.	Operators are called together by the leader. Operators collectively define the problem, gather data, discuss, find options, and make recom-mendations.	Visual feedback from the information display and writing. Auditory feedback from other operators.	Training resources. Maps. Status Boards. Other written documenta-tion. Other personnel in the TOC.	Wrong operators. Incorrect leader. Poor definition of the problem. Incorrect information gathered. Incorrect decision. Incorrectly trained or untrained operator. Inexperienced operators.

10. Issue Order	Operator transmits information to another person(s).	Operator determines that someone needs this information or interpretation of this information.	Operator needs to know to whom to transmit message. Operator needs to know how to communicate this message to desired person(s). If radio message to be sent, operator needs to know how to operate the radio. If digital information to be sent, operator needs to know how to operate digital system.	Operator uses auditory, perceptual, and verbal communica-tion skills to transmit this message. Operator uses psycho-motor skills to operate the radio or computer keyboard.	If message transmitted by radio, operator adjusts radio, delivers call sign of desired recipient, sends message, signs off. If message verbally transmitted, operator calls recipient's name, listens for reply and delivers message. If message transmitted digitally, operator must enter correct data and key strokes into the system.	Auditory feedback from the radio and/or the receiver. Tactile feedback from the radio controls or digital controls.	Training resources. Manuals for the radio or digital system. Other personnel in the TOC.	Wrong call sign. Operated radio or digital system incorrectly. Sent to the wrong person(s). Sent incorrect information. Incorrectly trained or untrained operator. Inexperienced operators.

INTENTIONALLY LEFT BLANK

Appendix B: Analog and Digital Model Personnel

Table B-1. Analog model personnel.

Section	Person	Equipment	Task Description
COMMANDER'S VEHICLE	**Commander (Cdr)**	Monitors brigade and battalion command nets and sends messages as appropriate, monitors task force (TF) operations/ intelligence (O/I) and fire support (FS) nets; knee board.	Periodically scans the battlefield (at predetermined intervals), looking at locations and progress of the operations. Listens and talks on battalion command net. Gets missed data from Loader. Gunner informs Cdr when his or her call sign comes up on the brigade net so Cdr can reply to brigade. Maintains knee board with key data. Monitors the TF O/I and FS nets. In communica-tion with XO on staff huddle information.
	Loader (CdrLDR)	Battalion command net to monitor; note pad	Monitors the battalion command net, jotting information for Cdr. Gives Cdr the data.
	Gunner (CdrGNR)	Brigade command net to monitor	Monitors the net, listening for Cdr's call sign; informs Cdr when he or she hears it.
S3 VEHICLE	**Operations Officer (S3 in vehicle or S3V)**	Brigade and battalion command nets to monitor and talk; TF O/I and FS nets to monitor; knee board	Periodically scans the battlefield (at predetermined intervals), looking at locations and progress of the operations. Listens and talks on battalion command net. Gets missed data from Loader. Gunner informs S3 when his or her call sign comes up on the brigade net so S3 can reply to brigade. Maintains knee board with key data. Monitors the TF O/I and FS nets. Acts as backup to Cdr.
	Loader (S3VLDR)	Battalion command net to monitor; note pad	Monitors the battalion command net, jotting information for S3. Gives S3 the data.
	Gunner (S3VGNR)	Brigade command net to monitor	Monitors the net, listening for S3's call sign; informs S3 when he or she hears it.
S3 SECTION	**Executive Officer (XO)**	Battalion command nets to monitor and talk; boards to view	Serves as TOC officer in charge (OIC). Monitors the battalion command net. Periodically walks to a section and reviews map and boards. Will initiate a discussion with person or other staff officers in the CTCP or command group. Estimates the impact of new information. May initiate a staff huddle. Directs all staff huddles. Communicates on the radio when appropriate. Assumed to be performing other non-modeled duties such as integration and synchronization of resources.
	Battle Captain (BC)	Brigade and battalion command nets to monitor and talk; boards to view	Serves as TOC OIC during absence of the XO. Monitors the radios while performing other duties. Scans the status board, map board, decision support template, intelligence officer (S2) action board, and estimates the impact of message, performing analysis of defense strength and weaknesses. Has discussion with other staff as appropriate. Decides actions and has messages sent by RTO. Communicates directly on radio as needed.

	Non-commis-sioned OIC (S3NCO)	Brigade and battalion command nets to monitor; map board and status board, stickies, marker and eraser	Monitors the radio while performing other duties. When a message comes in via nets, message stack, or verbally from the RTO, he or she scans the map and status boards for changes due to message. Distributes messages by carrying them to appropriate sections and setting message on section's incoming message pile. Revises the map by moving, changing, or adding stickies; revises the status boards by erasing and writing data with a marker. Passes appropriate messages to the BC.
	RTO for battalion command net (S3RTO)	Battalion command net to monitor and talk; TF O/I and FS nets for secondary monitoring; pre-formatted, multi-copy message pad; log book	Monitors radios and receives and records all voice messages on the battalion command net on a pre-formatted message pad, with a variable message length. Tears copy for log and puts on log pile; puts rest on the S3NCO's incoming message pile; verbally tells S3NCO when specific important messages come in. Logs message when time is available. Sends messages upon direction. Monitors TF O/I and FS nets as time allows; records message.
	RTO for brigade command net (NBCNCO)	Brigade command net to monitor; preformatted, multi-copy message pad; log book	Monitors radios, receives and records all voice messages on the brigade command net on a pre-formatted message pad, with a variable message length. Tears copy for log and sets on log pile; puts rest on the S3NCO's incoming message pile; verbally tells S3NCO if message is important. Logs message when time is available.
INTELLIGENCE (S2) SECTION	**Intelligence Officer (S2O)**	Battalion and brigade O/I nets to monitor; maps and boards to view	Monitors the radio while performing other duties. Scans the status board, map board, decision support template, and an S2 action board and estimates the impact of message, performing analysis of enemy potential. If assistant S2 is available, these two individuals will estimate the impact of the message and perform analysis of the enemy potential together. Tells XO key information, talks to other staff as appropriate, may initiate or participate in staff huddles. Decides actions and has messages sent by RTO.
	Assistant S2 (S2A)	Battalion and brigade O/I nets to monitor; maps and boards to view	Monitors the radio while performing other duties. Scans the status board, map board, decision support template, and an S2 action board and estimates the impact of message, performing analysis of enemy potential. If S2 is available, these two individuals will estimate the impact of the message and perform analysis of the enemy potential together. Decides actions and has messages sent by RTO.
	Non-com-missioned officer in charge (S2NCO)	Battalion and brigade O/I nets to monitor; map board and status board, stickies, marker and eraser	Monitors the radio while performing other duties. When a message comes in via nets, message stack, or verbally from the RTO, he or she scans the map and status boards for changes. Distributes messages by carrying them to appropriate sections and setting message on section's incoming message pile. Revises the map by moving, changing, or adding stickies; revises the status boards by erasing and writing data with a marker. Passes appropriate messages to the S2.

	RTO (S2RTO)	Battalion and brigade O/I nets to monitor and talk; TF command and FS nets to monitor; pre-formatted, multi-copy message pad; log book	Monitors radios and receives and records all voice messages on both the battalion and brigade O/I nets on a pre-formatted message pad, with a variable message length. Tears copy for log and places on log pile; places rest of message copies on the S2NCO's incoming message pile; verbally tells S2NCO if message is important. Logs message when time is available. Sends messages as directed. Monitors TF command and FS nets as time allows; records message.
FIRE SUPPORT	**Fire Support Officer (FSO)**	Battalion FD, battalion and brigade FS nets to monitor; map board and status board, stickies, marker and eraser	Monitors the radio while performing other duties. When a message comes in via nets, message stack, or verbally from the RTO, he or she scans the map and status boards for changes. Distributes messages by carrying them to appropriate sections and setting message on section's incoming message pile. Revises the map by moving, changing, or adding stickies. Revises the status boards by erasing and writing data with a marker. Estimates impact of message, handles calls for fire, and decides action; directs message be sent; participates in staff huddles.
	RTO (FSRTO)	Battalion FD, battalion and brigade FS nets to monitor and talk; TF command net to monitor; pre-formatted, multi-copy message pad; log book	Monitors radios and receives and records all voice messages on the battalion FD, battalion and brigade FS nets on a pre-formatted message pad, with a variable message length. Tears copy for log and places on log pile; places rest of message copies on the FSO incoming pile; verbally tells FSO if message is important. Logs message when time is available. Sends messages upon direction. Monitors TF command net as time allows; records message.
AIR LIAISON	Air Liaison Officer (ALO)	Battalion command and Air Force nets to monitor; map board and status board, stickies, marker and eraser	Monitors the radio while performing other duties. When a message comes in from nets, message stack, he or she scans the map and status boards for changes. Revises the map by moving, changing, or adding stickies: revises the status boards by erasing and writing data with a marker. Informs the XO if he or she gets information that impacts the operation; participates in staff huddles.
ENGINEERING (EN)	**Engineer Officer (ENO)**	Battalion command and En Co nets to monitor; map board and status board, stickies, marker and eraser	Monitors the radio while performing other duties. When a message comes in from nets, message stack, or verbally from the RTO, scans the map and status boards for changes. Distributes messages by carrying them to appropriate sections and placing message on section's incoming message pile. Revises the map by moving, changing, or adding stickies. Revises the status boards by erasing and writing data with a marker. Estimates impact of message and decides action; directs message be sent; participates in staff huddles.

	RTO (ENRTO)	Battalion and brigade En Co nets to monitor and talk; pre-formatted, multi-copy message pad; log book	Monitors radios and receives and records all voice messages on both the battalion command and En Co nets on a pre-formatted message pad, with a variable message length. Tears copy for log and places on log pile; places rest of message copies on the ENO's incoming pile; verbally tells ENO Officer if message is important. Logs message when time is available. Sends messages upon direction.
COMBAT TRAINS COMMAND POST (CTCP)	**Logistics Officer (S4)**	Battalion and brigade A/L nets to monitor; map boards and status board, stickies	Monitors both A/L nets for personnel and logistics messages while performing other duties. Receives information from assistant supply sergeant, revises map, estimates impact, makes decisions and directs that messages are sent. Coordinates closely with the XO.
	Personnel Officer (S1)	Battalion command net to monitor; map board and status board, stickies, marker and eraser	Acting as a backup TOC, monitors the battalion command net, writing data on stickies and revising the map and status board, and performing an estimate of the message impact. Receives informa-tion from the personnel administra-tive sergeant (Pers/Adm Sgt), estimates impact, makes decisions, and directs that messages are sent. Coordinates closely with the XO.
	Pers/Adm Sgt (S1NCO)	Battalion and brigade A/L nets to monitor and talk; log/report book	Monitors radios, receives and records all voice messages on both the battalion and brigade A/L nets on a pre-formatted log/report , with a variable message length. Tears copy for report and places rest of message copies on S1's incoming message pile; verbally tells S1 if message is important. Assembles a consolidated report on a blank report page and sends to brigade when all subordinate reports are in. Sends messages upon direction.
COMBAT TRAINS COMMAND POST (CTCP)	**Asst Supply Sgt (S4NCO)**	Battalion and brigade A/L to monitor and talk; log/report book	Monitors radios, receives and records all voice messages on both the battalion and brigade A/I nets on a pre-formatted log/report, with a variable message length. Tears copy for report and places rest of message copies on S4 incoming message pile; verbally tells S4 if message is important. Assembles a consolidated report on a blank report page and sends to brigade when all subordinate reports are in. Sends messages upon direction.

Table B-2. Digital model personnel.

Section	Person	*Equipment*	Task Description
COMMANDER'S VEHICLE	**Commander (Cdr)**	FBCB2 terminal. Monitors brigade and battalion command nets and sends messages as appropriate, monitors TF, O/I and FS nets; knee board.	Reads message traffic and reviews digital overlays being routed through the FBCB2 terminal. Monitors the radio while performing these duties. When a message comes in via FBCB2, he or she scans the map and status board for changes due to message. Distributes messages by forwarding them electronically. Composes digital messages and forwards them to appropriate staff. Communicates directly on the radio. Periodically scans the battlefield (at predetermined intervals), looking at locations and progress of the operations. Listens and talks on battalion command net. Gunner informs Cdr when his or her call sign comes up on the brigade net so Cdr can reply to brigade. Maintains knee board with key data. In communication with XO and TOC operations officer on huddle information.
	Loader (CdrLDR)	Battalion command net to monitor; note pad	Monitors the battalion command net, jotting information for Cdr. Gives Cdr the data.
	Gunner (CdrGNR)	Brigade command net to monitor	Monitors the net, listening for Cdr's call sign; informs Cdr when he or she hears it.
S3 VEHICLE	**Operations Officer (S3V)**	FBCB2 terminal. Battalion command nets to monitor and talk; knee board	Reads message traffic and reviews digital overlays being routed through the FBCB2 terminal. Monitors the radio while performing these duties. When a message comes in via FBCB2, he or she scans the digital map for changes due to message. Distributes messages by forwarding them electronically. Composes digital messages and forwards them to appropriate staff. Communicates directly on the radio. Periodically scans battlefield (at predetermined intervals), looking at locations and progress of the operations. Listens and talks on battalion command net. Gets missed data from loader. Maintains knee board with key data. Acts as backup to Cdr.
	Loader (S3VLDR)	Battalion command net to monitor; note pad	Monitors the battalion command net, jotting information for S3. Gives S3 the data.
	Gunner (S3VGNR)	Brigade command net to monitor	Monitors the net, listening for S3's call sign; informs S3 when he or she hears it.

S3 SECTION	**Executive Officer (XO)**	FBCB2 terminal.	Serves as TOC OIC. Monitors the battalion command net. Periodically walks to a section and reviews map and boards. Will initiate a discussion with person or with other staff officers in the CTCP or command group. Estimates the impact of new information. May initiate a staff huddle. Communicates on the radio when appropriate. Reads message traffic and reviews digital overlays being routed through the FBCB2 terminal. When a message comes in via FBCB2, he or she scans the digital map for changes due to message. Distributes messages by forwarding them electronically. Composes digital messages and forwards them to appropriate staff. Performs battlefield integration duties such as synchronization of resources; he or she is included in and directs all the staff huddles.
	Battle Captain (BC)	Battalion and brigade command nets to monitor and talk; boards to view	Serves as TOC OIC during absence of the XO. Monitors the radios while performing other duties. Scans the status board, map board, decision support template, intelligence officer (S2) action board, and estimates the impact of message, performing analysis of defense strength and weaknesses. Has discussion with other staff as appropriate. Decides actions and has messages sent by RTO or via MCS-P. Communicates directly on radio as needed.
	Non-com-missioned officer in charge (S3NCO)	Battalion and brigade com-mand nets to monitor; map board and status board, stickies, marker and eraser	Monitors the radio while performing other duties. When a message comes in via nets, message stack, or verbally from the RTO or NBCNCO, he or she scans the map and status boards for changes due to message. Distributes messages by carrying them to appropriate sections and setting message on section's incoming message pile. Revises the map by moving, changing, or adding stickies; revises the status boards by erasing and writing data with a marker. Passes appropriate messages to the BC.
	RTO for Bn Cmd net (S3RTO)	Battalion and brigade command nets to monitor and talk; TF O/I and FS nets for secondary monitoring; pre-formatted, multi-copy message pad; log book	Monitors radios and receives and records all voice messages on the battalion and brigade command nets on a pre-formatted message pad, with a variable message length. Tears copy for log and puts on log pile; puts rest on the S3NCO's incoming message pile; verbally tells S3NCO when specific important messages come in. Logs message when time is available. Sends messages upon direction. Monitors TF O/I and FS nets as time allows; records message.
	NBCNCO	MCS-P terminal	Reads message traffic and reviews digital overlays being routed through the MCS-P terminal. When a message comes in via MCS-P, he or she scans the digital map for changes due to message. Distributes messages by forwarding them electronically. Composes digital messages at the command of the BC and forwards them to appropriate staff.

INTELLIGENCE (S2) SECTION	**Intelligence Officer (S2O)**	Battalion and brigade O/I nets to monitor; maps and boards to view	Monitors the radio while performing other duties. Scans the status board, map board, decision support template, and an S2 action board and estimates the impact of message, performing analysis of enemy potential. Tells battalion Cdr key information; may initiate and participate in staff huddles. Decides actions and has messages sent by RTO. If S2A is available, these two individuals will estimate the impact of the message and perform analysis of the enemy potential together.
	Assistant S2 (S2A)	Battalion and brigade O/I nets to monitor; maps and boards to view	Monitors the radio while performing other duties. Scans the status board, map board, decision support template, and an S2 action board and estimates the impact of message, performing analysis of enemy potential. Decides actions and has messages sent by RTO. If S2O is available, these two individuals will estimate the impact of the message and perform analysis of the enemy potential together.
	S2NCO	ASAS terminal.	Reads message traffic and reviews digital overlays being routed through the ASAS terminal. When a message comes in via ASAS, he or she scans the digital map for changes due to message. Distributes messages by forwarding them electronically. Composes digital messages at the command of the S2O and forwards them to appropriate staff. Composes digital messages at the command of the S2O and forwards them to appropriate staff.
	S2RTO	Battalion and brigade O/I nets to monitor and talk; pre-formatted, multi-copy message pad; log book	Monitors radios and receives and records all voice messages on both the battalion and brigade O/I nets on a pre-formatted message pad, with a variable message length. Tears copy for log and places on log pile; places rest of message copies on the S2O/S2A incoming message pile; verbally tells S2O/S2A if message is important. Logs message when time is available. Sends messages as directed.
FIRE SUPPORT	**Fire Support Officer (FSO)**	Advanced field artillery tactical data system (AFATDS) terminal, map board and status board, stickies, marker and eraser	Monitors the radio while performing other duties. When a message comes in via nets, message stack, or verbally from the RTO, he or she scans the map and status boards for changes. Distributes messages by carrying them to appropriate sections and setting message on section's incoming message pile. Revises the map by moving, changing, or adding stickies. Revises the status boards by erasing and writing data with a marker. Estimates impact of message, handles calls for fire, and decides action; directs message be sent; participates in staff huddles. Reads message traffic and reviews digital overlays being routed through the AFATDS terminal. When a message comes in via AFATDS, he or she scans the digital map for changes due to message. Distributes messages by forwarding them electronically. Composes digital messages and forwards them to appropriate staff.

	FSRTO	Battalion FD, battalion and brigade FS nets to monitor and talk; TF command net to monitor; pre-formatted, multi-copy message pad; log book	Monitors radios and receives and records all voice messages on the battalion FD, battalion and brigade FS nets on a pre-formatted message pad, with a variable message length. Tears copy for log and places on log pile; places rest of message copies on the FSO incoming pile; verbally tells FSO if message is important. Logs message when time is available. Sends messages upon direction. Monitors TF command net as time allows; records message.
AIR LIAISON	**Air Liaison Officer (ALO)**	Battalion command and Air Force nets to monitor; map board and status board, stickies, marker and eraser	Monitors the radio while performing other duties. When a message comes in from nets, message stack, he or she scans the map and status boards for changes. Revises the map by moving, changing, or adding stickies: revises the status boards by erasing and writing data with a marker. Informs the XO if he or she gets information that impacts the operation; participates in staff huddles.
ENGINEERING	**Engineer Officer (ENO)**	FBCB2 terminal, map board and status board, stickies, marker and eraser	Monitors the radio while performing other duties. When a message comes in via nets, message stack, or verbally from the RTO, he or she scans the map and status boards for changes. Distributes messages by carrying them to appropriate sections and setting message on section's incoming message pile. Revises the map by moving, changing, or adding stickies. Revises the status boards by erasing and writing data with a marker. Estimates impact of message, decides action, directs message be sent, and participates in staff huddles. Reads message traffic and reviews digital overlays being routed through the FBCB2 terminal. When a message comes in via FBCB2, he or she scans the digital map for changes due to message. Distributes messages by forwarding them electronically. Composes digital messages and forwards them to appropriate staff.
	ENRTO	Battalion and brigade Eng Co nets to monitor and talk; pre-formatted, multi-copy message pad; log book	Monitors radios and receives and records all voice messages on both the battalion command and Eng Co nets on a pre-formatted message pad, with a variable message length. Tears copy for log and places on log pile; places rest of message copies on the Eng incoming pile; verbally tells Eng Officer if message is important. Logs message when time is available. Sends messages upon direction.
COMBAT TRAINS COMMAND POST (CTCP)	**Logistics Officer (S4)**	Battalion and brigade A/L nets to monitor; map boards and status board, stickies	Monitors both A/L nets for personnel and logistics messages while performing other duties. Receives information from asst. supply sergeant and the pers/adm sergeant; revises map, estimates impact, makes decisions and directs that messages are sent. Coordinates closely with the XO.
	Personnel Officer (S1)	Battalion command net to monitor; map board and status board, stickies, marker and eraser	Acting as a backup TOC, monitors the battalion command net, writing data on stickies and revising the map and status board, and performing an estimate of the message impact. Receives information from the pers/adm sergeant and the asst supply sergeant, estimates impact, makes decisions, and directs that messages are sent. Coordinates closely with the XO.

	Pers/Adm Sgt (S1NCO)	Battalion and brigade A/L nets to monitor and talk; log/report book	Monitors radios, receives and records all voice messages on both the battalion and brigade A/L nets. Places message on S1's or S4's incoming message pile; verbally tells S1 or S4 if message is important. Sends messages upon direction. Passes pertinent information to the S4NCO for entry into CSSCS.
	Asst Supply Sgt (S4NCO)	CSSCS terminal	Reads message traffic and reviews digital overlays being routed through the CSSCS terminal. When a message comes in via CSSCS, he or she scans the digital map for changes due to message. Distributes messages by forwarding them electronically. Composes digital messages at the command of the S1 or S4 and forwards them to appropriate staff. Assembles a consolidated report and sends to brigade when all subordinate reports are in.

INTENTIONALLY LEFT BLANK

	A	B	C	D	E	F	G	H	I	J	K	L	M	N	O	P	Q	R	S	T	U	V
1	Msg Number	Start	H+ Time Seconds	Net	Interrupt	From	To	Message Type	Text	Pass	Scan	Route	Update	EI	SH	Send	Enter	OTM	Word	Digital	Time	H+ Time Minutes
2	1	200	6.0	MSE		Bde S2	TF S2	Green 2	Increased enemy activity noted along Krasnovian Border	1	1	1	1	0	0	0	0	0	7	0	15:00	0.1
3	2	300	72.0	TF_Cmd		A 1-10	TF BC	Blue 2 abb	No change in status, commo, etc, is green	0	2	0	0	0	0	0	0	0	8	0	15:01	1.2
4	3	300	84.0	TF_Cmd		B 1-10	TF BC	Blue 2 abb	No change in status, commo, etc, is green	0	2	0	0	0	0	0	0	0	8	0	15:01	1.4
5	4	300	120.0	TF_Cmd		C 1-10	TF BC	Blue 2 abb	No change in status, commo, etc, is green	0	2	0	0	0	0	0	0	0	8	0	15:02	2.0
6	5	300	132.0	TF_Cmd		Tm EN	TF BC	Blue 2 abb	No change in status, commo, etc, is green	0	2	0	0	0	0	0	0	0	8	0	15:02	2.2
7	6	300	144.0	TF_Cmd		Sct Plt	TF BC	Blue 2 abb	No change in status, commo, etc, is green	0	2	0	0	0	0	0	0	0	8	0	15:02	2.4
8	7	300	156.0	TF_Cmd		Mtr Plt	TF BC	Blue 2 abb	No change in status, commo, etc, is green	0	2	0	0	0	0	1	0	0	8	0	15:02	2.6
9	8	300	162.0	TF_Cmd		ADA OFF	TF BC	Blue 2 abb	No change in status, commo, etc, is green	0	2	0	0	0	0	0	0	0	8	0	15:02	2.7
10	9	760	240.0	BdeEN		EN OFF	ABE	Internal trigger	No change in status, commo, etc, is green	0	0	0	0	0	0	1	0	0	8	0	15:04	4.0
11	10	280	258.0	TF_OI		TF S2	A, B, C	Internal trigger	Enemy activity increasing along border.	0	0	0	0	0	0	1	0	0	5	0	15:04	4.3
12	11	400	300.0	TF_AL		A 1SG	TF S4	Commo Check	Commo Check	0	0	0	0	0	0	0	0	0	2	0	15:05	5.0
13	12	400	330.0	TF_AL		B 1SG	TF S4	Commo Check	Commo Check	0	0	0	0	0	0	0	0	0	2	0	15:05	5.5
14	13	650	360.0	AFA TDS		A FIST	TF FSE	C400 Cdr Sit Rpt	No change in status, commo, etc, is green	2	2	0	0	0	0	0	0	0	8	3	15:06	6.0
15	14	650	372.0	AFA TDS		B FIST	TF FSE	C400 Cdr Sit Rpt	No change in status, commo, etc, is green	2	2	0	0	0	0	0	0	0	8	3	15:06	6.2
16	15	650	378.0	AFA TDS		C FIST	TF FSE	C400 Cdr Sit Rpt	No change in status, commo, etc, is green	2	2	0	0	0	0	0	0	0	8	3	15:06	6.3
17	16	650	390.0	AFA TDS		COLT 2	TF FSE	C400 Cdr Sit Rpt	No change in status, commo, etc, is green	2	2	0	0	0	0	0	0	0	8	3	15:06	6.5
18	17	400	402.0	TF_AL		C 1SG	TF S4	Commo Check	Commo Check	0	0	0	0	0	0	0	0	0	2	0	15:06	6.7
19	18	400	408.0	TF_AL		A 23 EN 1SG	TF S4	Commo Check	Commo Check	0	0	0	0	0	0	0	0	0	2	0	15:06	6.8
20	19	400	414.0	TF_AL		BMO	TF S4	Commo Check	Commo Check	0	0	0	0	0	0	0	0	0	2	0	15:06	6.9
21	20	400	426.0	TF_AL		Spt Plt	TF S4	Commo Check	Commo Check	0	0	0	0	0	0	0	0	0	2	0	15:07	7.1
22	21	100	438.0	TF_AL		Med Plt	TF S1	Commo Check	Commo Check	0	0	0	0	0	0	0	0	0	2	0	15:07	7.3
23	22	400	450.0	TF_AL		HHC Cdr	TF S4	Commo Check	Commo Check	0	0	0	0	0	0	0	0	0	2	0	15:07	7.5
24	23	650	540.0	AFA TDS		2-3 CP	TF FSE	C400 Cdr Sit Rpt	No change in status, commo, etc, is green	2	2	0	0	0	0	0	0	0	8	3	15:09	9.0
25	24	650	552.0	AFA TDS		2-3 CP	TF FSE	C400 Cdr Sit Rpt	One FAASV broke down, no other change	2	2	0	1	0	0	0	0	0	7	2	15:09	9.2
26	25	760	576.0	BdeEN		EN OFF	ABE	Internal trigger	No change in status, commo, etc, is green	0	0	0	0	0	0	1	0	0	8	0	15:09	9.6
27	26	650	600.0	AFA TDS		2-3 CP	TF FSE	C400 Cdr Sit Rpt	No change in status, commo, etc, is green	2	2	0	1	0	0	0	0	0	8	2	15:10	10.0
28	27	380	624.0	BdeOI		TF BC	Bde BC	Internal trigger	No change in status, commo, etc, is green	0	0	0	0	0	0	1	0	0	8	0	15:10	10.4
29	28	450	660.0	BdeAL		TF S4	Bde S4	Internal trigger	No change in status, commo, etc, is green	0	0	0	0	0	0	1	0	0	7	0	15:11	11.0
30	29	650	720.0	AFA TDS		2-8 FA	TF FSE	C400 Cdr Sit Rpt	2-8 FA will close on AA at 2100 hours, no change in status	2	3	1	1	0	0	0	0	0	13	2	15:12	12.0
31	30	700	1200.0	BdeEN		ABE	EN OFF	Report	A 358 EN will close w/ bridges 1830	1	3	1	1	0	0	0	0	0	8	0	15:20	20.0
32	31	200	1320.0	MSE		Bde S2	TF S2	Report	Krasnovian Div confirmed massed on border to our front.	1	1	1	1	0	0	1	0	0	9	0	15:22	22.0
33	32	300	1326.0	TF_Cmd		ADA OFF	TF BC	Alert	Maintain AD Weapons Control Status at White.	2	2	0	1	0	0	0	0	0	7	0	15:22	22.1
34	33	280	1620.0	MSE		TF S2	Bde S2	Internal trigger	Request 3-92 take coverage of gap at NJ7786.	0	0	0	0	0	0	1	0	0	7	0	15:27	27.0
35	34	300	1800.0	TF_Cmd		ADA OFF	TF BC	Alert	Two Krasnovian flights, 3 AC each, paralleling IB South to North, no intrusion expected.	2	1	0	1	0	0	0	0	0	14	0	15:30	30.0
36	35	820	2100.0	BdeCmd		Bde Cdr	TF Cdr	Alert	We are being tasked to execute OPORD NLT 1700, report your status ASAP.	0	3	0	0	0	0	0	0	0	13	0	15:35	35.0
37	36	860	2130.0	TF_Cmd	12	TF Cdr	TF BC	Internal trigger	We are being tasked to execute OPORD NLT 1700, gather the staff for a meeting - I am on the way.	2	4	1	0	0	2	1	0	0	16	0	15:35	35.5
38	37	860	2160.0	TF_Cmd		TF Cdr	A, B, C EN, Sct Plt, Mtr Plt	Internal trigger	We have been tasked to execute OPORD NLT 1700. Get ready to go. Report your status ASAP.	0	0	0	0	0	0	1	0	0	15	0	15:36	36.0
39	38	280	2220.0	TF_OI		TF S2	Sct Plt	Internal trigger	We have been tasked to execute OPORD NLT 1700. You will need to be ready to move NLT 1630 to set CPs.	0	0	0	0	0	0	1	0	0	20	0	15:37	37.0

	A	B	C	D	E	F	G	H	I	J	K	L	M	N	O	P	Q	R	S	T	U	V
1	Msg Number	Start	H+ Time Seconds	Net	Interrupt	From	To	Message Type	Text	Pass	Scan	Route	Update	EI	SH	Send	Enter	OTM	Word	Digital	Time	H+ Time Minutes
40	39	600	2280.0	BdeFS		Bde FSE	TF FSE	Alert	B de move out has been upped to 1700. Update your status ASAP. 2-8 FA(R) is not going to be in position at that time. Further instructions/information will follow.	2	2	0	1	0	0	1	0	0	29	0	15:38	38.0
41	40	200	2340.0	TF_OI		Sct Plt	TF S2	Request	Do I take the GSRs with me at this time?	2	1	0	0	0	0	1	0	0	10	0	15:39	39.0
42	41	300	2400.0	BdeOI		BDE BC	TF BC	Order	Air defense warning is yellow. WCS is tight.	2	2	1	1	0	0	1	0	0	8	0	15:40	40.0
43	42	300	2460.0	BdeCmd		Bde S3	TF S3	Alert	1-22 Cav will be contacting you on your net to coordinate routes through your AA.	2	3	0	0	0	0	0	0	0	15	0	15:41	41.0
44	43	600	2520.0	BdeFS		B 2-3 FA	TF FSE	Blue 2	Redcon 3.	2	2	0	1	0	0	0	0	0	2	0	15:42	42.0
45	44	600	2580.0	BdeFS		A 2-3 FA	TF FSE	Blue 2	Redcon 2.	2	2	0	1	0	0	0	0	0	2	0	15:43	43.0
46	45	600	2640.0	BdeFS		C 2-3 FA	TF FSE	Blue 2	Redcon 2.	2	2	1	1	0	0	0	0	0	2	0	15:44	44.0
47	46	300	2700.0	TF_Cmd		A 1-10	TF BC	Blue 2	Redcon 2.	2	2	0	1	0	0	0	0	0	2	0	15:45	45.0
48	47	300	2706.0	TF_Cmd		B 1-10	TF BC	Blue 2	Redcon 2.	2	2	0	1	0	0	0	0	0	2	0	15:45	45.1
49	48	300	2760.0	TF_Cmd		C 1-10	TF BC	Blue 2	Redcon 2	2	2	0	1	0	0	0	0	0	2	0	15:46	46.0
50	49	300	2772.0	TF_Cmd		Tm EN	TF BC	Blue 2	Redcon 2	2	2	0	1	0	0	0	0	0	2	0	15:46	46.2
51	50	400	2820.0	BdeAL		Bde S4	TF S4	Alert	FSB 5000 gal. tankers will not be returning to BSA until 2100 hrs tonight.	2	2	0	1	0	0	0	0	0	14	0	15:47	47.0
52	51	300	2862.0	TF_Cmd		Mtr Plt	TF BC	Blue 2	Redcon 2	2	3	0	1	0	0	1	0	0	2	0	15:47	47.7
53	52	860	2880.0	BdeCmd		TF Cdr	Bde Cdr	Internal trigger	TF 1-10 is Green, Redcon 2.	0	0	0	0	0	0	1	0	0	5	0	15:48	48.0
54	53	300	3360.0	TF_Cmd		1-22 Cav Cdr	TF S3	Request	Request coordination for routes forward to LD and during movement.	0	1	0	0	0	0	0	0	0	10	0	15:56	56.0
55	54	200	3600.0	MSE		Bde S2	TF S2	Green 1	Krasnovian forces have significantly increased buildup along border during the last 12 hours.	2	4	1	1	0	2	1	0	0	12	0	16:00	60.0
56	55	400	3660.0	TF_AL		A 1SG	TF S4	Yellow 2	9/4 up, 1 M1 NMCM	2	2	0	1	0	0	0	0	0	6	0	16:01	61.0
57	56	400	3780.0	TF_AL		B 1SG	TF S4	Yellow 2	14 up	2	2	0	1	0	0	0	0	0	2	0	16:03	63.0
58	57	400	3792.0	TF_AL		B 1SG	TF S4	Yellow 3	Green	2	2	0	1	0	0	0	0	0	1	0	16:03	63.2
59	58	550	3840.0	AirForce		Bde ALO	TF ALO	Alert	No attack aircraft available until 0600; recon effort in your sector being planned for 0100 to 0300, ATO being redone now.	2	0	0	1	0	0	0	0	0	18	0	16:04	64.0
60	59	400	3900.0	TF_AL		C 1SG	TF S4	Yellow 2	14 up	2	2	0	1	0	0	0	0	0	2	0	16:05	65.0
61	60	400	3918.0	TF_AL		A 1SG	TF S4	Yellow 3	Green	2	2	0	1	0	0	0	0	0	1	0	16:05	65.3
62	61	400	3942.0	TF_AL		C 1SG	TF S4	Yellow 3	Green	2	2	0	1	0	0	0	0	0	1	0	16:05	65.7
63	62	400	3960.0	TF_AL		A 23 EN 1SG	TF S4	Yellow 2	All equipment up.	2	2	0	1	0	0	0	0	0	3	0	16:06	66.0
64	63	400	4020.0	TF_AL		Sct Plt	TF S4	Yellow 2	6 up	2	2	0	1	0	0	0	0	0	2	0	16:07	67.0
65	64	400	4044.0	TF_AL		Mtr Plt	TF S4	Yellow 2	4 up	2	2	0	1	0	0	0	0	0	2	0	16:07	67.4
66	65	400	4080.0	TF_AL		Sct Plt	TF S4	Yellow 3	Green	2	2	0	1	0	0	0	0	0	1	0	16:08	68.0
67	66	400	4140.0	TF_AL		ADA OFF	TF S4	Yellow 2	4 up	2	2	0	1	0	0	1	0	0	2	0	16:09	69.0
68	67	400	4176.0	TF_AL		Mtr Plt	TF S4	Yellow 3	Green	2	2	0	1	0	0	1	0	0	1	0	16:09	69.6
69	68	400	4200.0	TF_AL		A 1SG	TF S4	Yellow 4	Green	2	2	0	1	0	0	0	0	0	1	0	16:10	70.0
70	69	300	4224.0	TF_Cmd		A 1-10	TF BC	Blue 2 abb	Redcon 1	2	2	0	1	0	0	0	0	0	2	0	16:10	70.4
71	70	400	4260.0	TF_AL		B 1SG	TF S4	Yellow 4	Green	1	2	0	1	0	0	1	0	0	2	0	16:11	71.0
72	71	300	4302.0	TF_Cmd		Tm EN	TF BC	Blue 2 abb	Redcon 1	2	2	0	1	0	0	0	0	0	2	0	16:11	71.7
73	72	400	4320.0	TF_AL		C 1SG	TF S4	Yellow 4	Green	2	2	0	1	0	0	1	0	0	1	0	16:12	72.0
74	73	600	4320.0	BdeFS		A 2-3 FA	TF FSE	Blue 2	Redcon 1	2	2	0	1	0	0	0	0	0	2	0	16:12	72.0
75	74	300	4332.0	TF_Cmd		Sct Plt	TF BC	Blue 2 abb	Redcon 1	2	2	0	1	0	0	0	0	0	2	0	16:12	72.2
76	75	600	4380.0	BdeFS		B 2-3 FA	TF FSE	Blue 2 abb	Redcon 1	2	2	0	1	0	0	0	0	0	2	0	16:13	73.0
77	76	300	4386.0	TF_Cmd		B 1-10	TF BC	Blue 2 abb	Redcon 1	2	2	0	1	0	0	0	0	0	2	0	16:13	73.1

	A	B	C	D	E	F	G	H	I	J	K	L	M	N	O	P	Q	R	S	T	U	V
1	Msg Number	Start	H+ Time Seconds	Net	Interrupt	From	To	Message Type	Text	Pass	Scan	Route	Update	EI	SH	Send	Enter	OTM	Word	Digital	Time	H+ Time Minutes
78	77	300	4416.0	TF_Cmd		Mtr Plt	TF BC	Blue 2 abb	Redcon 1	2	2	0	1	0	0	0	0	0	2	0	16:13	73.6
79	78	600	4440.0	BdeFS		C 2-3 FA	TF FSE	Blue 2 abb	Redcon 1	2	2	1	1	0	0	0	0	0	2	0	16:14	74.0
80	79	300	4464.0	TF_Cmd		C 1-10	TF BC	Blue 2 abb	Redcon 1	2	2	0	1	0	0	1	0	0	2	0	16:14	74.4
81	80	820	4800.0	BdeCmd		Bde Cdr	TF Cdr	FRAGO	Execute OPORD effective 1900 hrs. Notify this HQ on SP.	0	3	0	1	0	0	1	0	0	10	0	16:20	80.0
82	81	860	4824.0	TF_Cmd	12	TF Cdr	TF BC	Internal trigger	Execute OPORD effective 1900 hrs. Notify Bde HQ on SP.	2	3	1	1	0	2	1	0	0	10	0	16:20	80.4
83	82	200	4830.0	BdeOI		BRT	TF S2	Blue 2 abb	SP now to PL Apple.	1	1	0	1	0	0	0	0	0	5	0	16:20	80.5
84	83	400	4980.0	BdeAL		Bde S4	TF S4	Alert	BSA will be breaking down at 1700 and will begin movement at 1900.	2	1	0	1	0	0	0	0	0	13	0	16:23	83.0
85	84	200	5040.0	TF_OI		Sct Plt	TF S2	Blue 2 abb	Moving now to man CPs.	2	4	1	1	0	0	0	0	0	5	0	16:24	84.0
86	85	300	6480.0	BdeCmd		Bde S3	TF S3	Blue 2 abb	3-92 will be 15 minutes late hitting SP.	0	1	0	0	0	0	0	0	0	8	0	16:48	108.0
87	86	300	6600.0	TF_Cmd		A 1-10	TF BC	Blue 2 abb	Moving now to SP.	2	1	0	0	0	0	0	0	0	4	0	16:50	110.0
88	87	300	7080.0	TF_Cmd		C 1-10	TF BC	Blue 2 abb	Moving now to SP.	2	1	0	0	0	0	0	0	0	4	0	16:58	118.0
89	88	300	7140.0	TF_Cmd		Mtr Plt	TF BC	Blue 2 abb	Moving now to SP.	2	1	0	0	0	0	0	0	0	4	0	16:59	119.0
90	89	300	7200.0	TF_Cmd		A 1-10	TF BC	Blue 2 abb	SP now.	2	1	0	1	0	0	1	0	1	2	0	17:00	120.0
91	90	760	7266.0	BdeEN		EN OFF	ABE	Internal trigger	Moving now to SP.	0	0	0	0	0	0	1	0	1	4	0	17:01	121.1
92	91	300	7302.0	TF_Cmd		Tm EN	TF BC	Blue 2 abb	Moving now to SP.	2	1	0	0	0	0	0	0	1	4	0	17:01	121.7
93	92	300	7440.0	TF_Cmd		A 1-10	TF BC	Blue 2 abb	CP 1 now.	2	1	0	1	0	0	0	0	1	3	0	17:04	124.0
94	93	600	7500.0	BdeFS		2-3 CP	TF FSE	Blue 2	Batteries beginning movement from AA	2	1	0	0	0	0	0	0	1	5	0	17:05	125.0
95	94	300	7518.0	TF_Cmd		Sct Plt	TF BC	Alert	Rock slide has blocked the road 2 kms short of CP 4.	2	1	0	1	2	1	0	0	1	12	0	17:05	125.3
96	95	960	7536.0	TF_Cmd		TF S3	Sct Plt, Tm EN	Internal trigger	Scouts, find alternate route; engineers check extent of obstacle.	0	0	0	0	0	0	1	0	1	9	0	17:05	125.6
97	96	960	7560.0	TF_Cmd		TF S3	A, B, C, EN, Mtr Plt	Internal trigger	Continue on current route. Be prepared to move on alternate route.	0	0	0	0	0	0	1	0	1	11	0	17:06	126.0
98	97	960	7620.0	BdeCmd		TF S3	Bde S3	Internal trigger	Rock slide has blocked the road 2 kms short of CP 4. Scouts checking alternate route.	0	0	0	0	0	0	1	0	1	13	0	17:07	127.0
99	98	300	7644.0	BdeCmd		Bde S3	TF S3	Order	Continue movement. Have your engineers clear obstacle.	0	1	0	0	0	0	4	0	1	7	0	17:07	127.4
100	99	300	7680.0	TF_Cmd		C 1-10	TF BC	Blue 2 abb	SP now.	2	1	0	1	0	0	0	0	1	2	0	17:08	128.0
101	100	300	7920.0	TF_Cmd		C 1-10	TF BC	Blue 2 abb	CP 1 now.	2	1	0	1	0	0	0	0	1	3	0	17:12	132.0
102	101	300	8160.0	TF_Cmd		Mtr Plt	TF BC	Blue 2 abb	SP now.	2	1	0	1	0	0	0	0	1	2	0	17:16	136.0
103	102	300	8280.0	BdeCmd		Bde S3	TF S3	Blue 2 abb	3-92 lead element SP.	0	1	0	1	0	0	0	0	1	4	0	17:18	138.0
104	103	300	8400.0	TF_Cmd		B 1-10	TF BC	Blue 2 abb	SP now.	2	1	0	1	0	0	0	0	1	2	0	17:20	140.0
105	104	300	8424.0	TF_Cmd		Mtr Plt	TF BC	Blue 2 abb	CP 1 now.	2	1	0	1	0	0	0	0	1	3	0	17:20	140.4
106	105	200	8640.0	BdeOI		Bde S2	TF S2	Green 2	Enemy brigades forming in possible attack positions; remaining on their side of the border.	2	4	0	1	0	0	0	0	1	14	0	17:24	144.0
107	106	280	8658.0	TF_Cmd	29	TF S2	TF Cdr	Internal trigger	Enemy brigades forming in possible attack positions; remaining on their side of the border.	0	1	0	0	0	0	0	0	1	14	0	17:24	144.3
108	107	300	8658.0	TF_Cmd		B 1-10	TF BC	Blue 2 abb	CP 1 now.	2	1	0	1	0	0	0	0	1	3	0	17:24	144.3
109	108	300	8700.0	TF_Cmd		A 1-10	TF BC	Blue 2 abb	CP 2 now.	2	1	0	1	0	0	0	0	1	3	0	17:25	145.0
110	109	300	8820.0	TF_Cmd		Sct Plt	TF S3	Blue 2 abb	Alternate route clear. CPs 5 & 6 established on alternate route.	0	1	0	1	0	0	1	0	1	11	0	17:27	147.0
111	110	960	8940.0	BdeCmd		TF S3	Bde S3	Internal trigger	TF moving along alternate route.	0	0	0	0	0	0	1	0	0	5	0	17:29	149.0
112	111	300	9180.0	TF_Cmd		C 1-10	TF BC	Blue 2 abb	CP 2 now.	2	1	0	1	0	0	0	0	1	3	0	17:33	153.0
113	112	300	9300.0	TF_Cmd		A 1-10	TF BC	Blue 2 abb	CP 3 now.	2	1	0	1	0	0	0	0	1	3	0	17:35	155.0

	A	B	C	D	E	F	G	H	I	J	K	L	M	N	O	P	Q	R	S	T	U	V
1	Msg Number	Start	H+ Time Seconds	Net	Interrupt	From	To	Message Type	Text	Pass	Scan	Route	Update	EI	SH	Send	Enter	OTM	Word	Digital	Time	H+ Time Minutes
114	113	300	9420.0	TF_Cmd		Tm EN	TF BC	Blue 2 abb	SP now.	2	1	0	1	0	0	0	0	1	2	0	17:37	157.0
115	114	300	9540.0	TF_Cmd		ADA OFF	TF BC	Alert	Increased enemy air activity along border. Air defense warning Red.	2	3	0	1	0	0	0	0	1	10	0	17:39	159.0
116	115	300	9660.0	TF_Cmd		Tm EN	TF BC	Blue 2 abb	CP 1 now.	2	1	0	1	0	0	0	0	1	3	0	17:41	161.0
117	116	300	9672.0	TF_Cmd		Mtr Plt	TF BC	Blue 2 abb	CP 2 now.	2	1	0	1	0	0	0	0	1	3	0	17:41	161.2
118	117	300	9684.0	TF_Cmd		TF S4	TF BC	Blue 2 abb	SP now.	2	1	0	1	0	0	0	0	1	2	0	17:41	161.4
119	118	300	9696.0	TF_Cmd		C 1-10	TF BC	Blue 2 abb	CP 3 now.	2	1	0	1	0	0	0	0	1	3	0	17:41	161.6
120	119	300	9702.0	TF_Cmd		A 1-10	TF BC	Blue 2 abb	CP 5 now.	2	1	0	1	0	0	0	0	1	3	0	17:41	161.7
121	120	300	9900.0	TF_Cmd		B 1-10	TF BC	Blue 2 abb	CP 2 now.	2	1	0	1	0	0	1	0	1	3	0	17:45	165.0
122	121	300	9936.0	TF_Cmd		TF S4	TF BC	Blue 2 abb	CP 1 now.	2	1	0	1	0	0	0	0	1	3	0	17:45	165.6
123	122	300	10020.0	TF_Cmd		C 1-10	TF BC	Blue 2 abb	CP 5 now.	2	1	0	1	0	0	0	0	1	3	0	17:47	167.0
124	123	300	10152.0	TF_Cmd		Mtr Plt	TF BC	Blue 2 abb	CP 3 now.	2	1	0	1	0	0	0	0	1	3	0	17:49	169.2
125	124	300	10170.0	TF_Cmd		A 1-10	TF BC	Blue 2 abb	CP 6 now.	2	1	0	1	0	0	0	0	1	3	0	17:49	169.5
126	125	300	10380.0	TF_Cmd		B 1-10	TF BC	Blue 2 abb	CP 3 now.	2	1	0	1	0	0	0	0	1	3	0	17:53	173.0
127	126	300	10500.0	TF_Cmd		Mtr Plt	TF BC	Blue 2 abb	CP 5 now.	2	1	0	1	0	0	0	0	1	3	0	17:55	175.0
128	127	300	10542.0	TF_Cmd		C 1-10	TF BC	Blue 2 abb	CP 6 now.	2	1	0	1	0	0	0	0	1	3	0	17:55	175.7
129	128	300	10620.0	TF_Cmd		A 1-10	TF BC	Blue 2 abb	CP 4 now.	2	1	0	1	0	0	0	0	1	3	0	17:57	177.0
130	129	300	10680.0	TF_Cmd		Tm EN	TF BC	Blue 2 abb	CP 2 now.	2	1	0	1	0	0	0	0	1	3	0	17:58	178.0
131	130	300	10740.0	TF_Cmd		B 1-10	TF BC	Blue 2 abb	CP 5 now.	2	1	0	1	0	0	0	0	1	3	0	17:59	179.0
132	131	200	10800.0	BdeOI		Bde S2	TF S2	Green 3 abb	Weather report; dry, clear, 85 degrees.	1	2	0	1	0	0	4	0	1	6	0	18:00	180.0
133	132	300	10824.0	TF_Cmd		ADA OFF	TF BC	Alert	Air defense warning Red.	0	3	0	1	0	0	0	0	1	4	0	18:00	180.4
134	133	300	10860.0	BdeCmd		Bde S3	TF S3	Blue 2 abb	2-10 lead element SP.	0	1	0	1	0	0	0	0	1	4	0	18:01	181.0
135	134	300	10980.0	TF_Cmd		Mtr Plt	TF BC	Blue 2 abb	CP 6 now.	2	1	0	1	0	0	0	0	1	3	0	18:03	183.0
136	135	300	11118.0	TF_Cmd		C 1-10	TF BC	Blue 2 abb	CP 4 now.	2	1	0	1	0	0	0	0	1	3	0	18:05	185.3
137	136	300	11130.0	TF_Cmd		A 1-10	TF BC	Blue 2 abb	RP now.	2	1	0	1	0	0	0	0	1	2	0	18:05	185.5
138	137	800	11142.0	TF_Cmd		B 1-10	TF Cdr	Blue 2 abb	One tank slid off road, recovery operations underway.	0	2	0	1	0	0	0	0	1	8	0	18:05	185.7
139	138	300	11184.0	TF_Cmd		TF S4	TF BC	Blue 2 abb	CP 2 now.	2	1	0	1	0	0	0	0	1	3	0	18:06	186.4
140	139	300	11202.0	TF_Cmd		Tm EN	TF BC	Blue 2 abb	CP 3 now.	2	1	0	1	0	0	0	0	1	3	0	18:06	186.7
141	140	300	11220.0	TF_Cmd		B 1-10	TF BC	Blue 2 abb	CP 6 now.	2	1	0	1	0	0	0	0	1	3	0	18:07	187.0
142	141	860	11400.0	TF_Cmd		TF Cdr	A, B, C, EN, Sct Plt, Mtr Plt, CPs	Internal trigger	Pause in ATK Griffin; conduct attack position activities.	0	0	0	0	0	0	1	0	1	8	0	18:10	190.0
143	142	400	11436.0	TF_AL		B 1SG	TF S4	Alert	One tank slid off road 300 meters past CP 5; company M88 attempting to recover.	0	3	0	1	0	0	0	0	1	15	0	18:10	190.6
144	143	300	11460.0	TF_Cmd		C 1-10	TF BC	Blue 2 abb	RP now.	2	1	0	1	0	0	0	0	1	2	0	18:11	191.0
145	144	300	11580.0	TF_Cmd		Mtr Plt	TF BC	Blue 2 abb	CP 4 now.	2	1	0	1	0	0	0	0	1	3	0	18:13	193.0
146	145	300	11640.0	TF_Cmd		TF S4	TF BC	Blue 2 abb	CP 3 now.	2	1	0	1	0	0	0	0	1	3	0	18:14	194.0
147	146	300	11760.0	TF_Cmd		ADA OFF	TF BC	Alert	Division has increased ADWCS to Tight.	2	2	0	1	0	0	0	0	1	4	0	18:16	196.0
148	147	300	11802.0	TF_Cmd		Tm EN	TF BC	Blue 2 abb	Arrived at road block, estimate 30 - 40 minutes to open a lane.	2	4	0	1	2	0	0	0	1	10	0	18:16	196.7
149	148	300	11820.0	TF_Cmd		B 1-10	TF BC	Blue 2 abb	CP 4 now.	2	1	0	1	0	0	0	0	1	3	0	18:17	197.0
150	149	380	11880.0	TF_Cmd		TF B C	A, B, C, EN, Sct Plt, Mtr Plt	Internal trigger	ADWCS increased to Tight.	0	0	0	0	0	0	1	0	1	4	0	18:18	198.0
151	150	300	11940.0	TF_Cmd		Mtr Plt	TF BC	Blue 2 abb	RP now.	2	1	0	1	0	0	0	0	1	2	0	18:19	199.0
152	151	300	12000.0	TF_Cmd		TF S4	TF BC	Blue 2 abb	CP 5 now.	2	1	0	1	0	0	0	0	1	3	0	18:20	200.0

	A	B	C	D	E	F	G	H	I	J	K	L	M	N	O	P	Q	R	S	T	U	V
1	Msg Number	Start	H+ Time Seconds	Net	Interrupt	From	To	Message Type	Text	Pass	Scan	Route	Update	EI	SH	Send	Enter	OTM	Word	Digital	Time	H+ Time Minutes
153	152	300	12012.0	TF_Cmd		A 1-10	TF BC	Blue 2 abb	Set ATK Griffin.	2	3	0	1	0	0	1	0	1	3	0	18:20	200.2
154	153	300	12180.0	TF_Cmd		B 1-10	TF BC	Blue 2 abb	RP now.	2	1	0	1	0	0	0	0	1	2	0	18:23	203.0
155	154	450	12300.0	TF_AL		TF S4	B 1SG	Internal trigger	Your tank's been recovered, we'll bring it with us to join you in ATK Griffin	0	0	0	0	0	0	1	0	1	13	0	18:25	205.0
156	155	150	12342.0	TF_AL		TF S1	A, B, C, EN, HHC 1SGs	Internal trigger	Send changes to previous Red 1 report.	0	0	0	0	0	0	1	0	0	7	0	18:25	205.7
157	156	300	12360.0	TF_Cmd		C 1-10	TF BC	Blue 2 abb	Set ATK Griffin.	2	3	0	1	0	0	0	0	1	3	0	18:26	206.0
158	157	300	12420.0	TF_Cmd		Mtr Plt	TF BC	Blue 2 abb	Set ATK Griffin.	2	3	0	1	0	0	0	0	1	3	0	18:27	207.0
159	158	600	12456.0	TF_FS		Mtr Plt	TF FSE	Blue 2 abb	Set ATK Griffin.	2	3	0	1	0	0	0	0	1	3	0	18:27	207.6
160	159	100	12480.0	TF_AL		A 1SG	TF S1	Red 1	No change.	2	2	0	0	0	0	0	0	1	2	0	18:28	208.0
161	160	100	12498.0	TF_AL		B 1SG	TF S1	Red 1	No change.	2	2	0	0	0	0	0	0	1	2	0	18:28	208.3
162	161	150	12528.0	TF_Cmd	12	TF S1	TF BC	Internal trigger	CP 6 now.	2	1	0	1	0	0	0	0	1	3	0	18:28	208.8
163	162	100	12600.0	TF_AL		C 1SG	TF S1	Red 1	No change.	2	2	0	0	0	0	0	0	1	2	0	18:30	210.0
164	163	760	12780.0	BdeEN		EN OFF	ABE	Internal trigger	No change.	0	0	0	0	0	0	1	0	1	2	0	18:33	213.0
165	164	100	12840.0	TF_AL		ADA OFF	TF S1	Red 1	No change.	2	2	0	0	0	0	0	0	1	2	0	18:34	214.0
166	165	100	12900.0	TF_AL		HHC 1-10	TF S1	Red 1	No change.	2	2	0	0	0	0	1	0	1	2	0	18:35	215.0
167	166	450	12960.0	TF_AL		TF S4	A 1SG	Internal trigger	Tm A NMCM tank is now mission capable.	0	0	0	0	0	0	1	0	1	7	0	18:36	216.0
168	167	300	12996.0	TF_Cmd		B 1-10	TF BC	Blue 2 abb	Set ATK Griffin.	2	3	0	1	0	0	0	0	1	3	0	18:36	216.6
169	168	450	13080.0	TF_Cmd	12	TF S4	TF BC	Internal trigger	CP 4 now.	2	1	0	1	0	0	0	0	1	3	0	18:38	218.0
170	169	350	13320.0	TF_AL	16	TF XO		Internal trigger	What's the status of TF trains?	0	0	0	0	0	0	1	0	1	6	0	18:42	222.0
171	170	300	13440.0	TF_Cmd		TF S4	TF BC	Blue 2 abb	RP now.	2	1	0	1	0	0	0	0	1	2	0	18:44	224.0
172	171	300	13524.0	BdeCmd		Bde S3	TF S3	Alert	LD time remains at 1900.	0	1	0	0	0	0	0	0	1	5	0	18:45	225.4
173	172	300	13560.0	TF_Cmd		ADA OFF	TF BC	Blue 2 abb	Set ATK Griffin.	2	3	0	1	0	0	0	0	1	3	0	18:46	226.0
174	173	300	13620.0	TF_Cmd		Tm EN	TF BC	Blue 2 abb	Obstacle cleared, proceeding to CP 4 now.	2	1	0	1	0	0	1	0	1	7	0	18:47	227.0
175	174	960	13740.0	TF_Cmd		TF S3	Sct Plt	Internal trigger	Scouts need to move ahead of company/teams.	0	0	0	0	0	0	1	0	1	8	0	18:49	229.0
176	175	300	13800.0	TF_Cmd		Tm EN	TF BC	Blue 2 abb	CP 4 now.	2	1	0	1	0	0	0	0	1	3	0	18:50	230.0
177	176	960	13842.0	TF_Cmd		TF S3	Sct Plt	Internal trigger	Move to LD.	0	0	0	0	0	0	1	0	1	3	0	18:50	230.7
178	177	350	13920.0	TF_Cmd	12	TF XO	TF BC	Internal trigger	Have the Main come to a short halt.	0	0	0	0	0	0	0	0	1	8	0	18:52	232.0
179	178	200	14040.0	TF_OI		Sct Plt	TF S2	Blue 2 abb	Set along LD.	2	3	1	1	0	0	1	0	0	3	0	18:54	234.0
180	179	300	14064.0	TF_Cmd		Sct Plt	TF S3	Blue 2 abb	Set along LD.	0	3	0	1	0	0	0	0	0	3	0	18:54	234.4
181	180	860	14100.0	TF_Cmd		TF Cdr	Sct Plt	Internal trigger	Move out from LD.	0	0	0	0	0	0	1	0	1	4	0	18:55	235.0
182	181	300	14160.0	TF_Cmd		Tm EN	TF BC	Blue 2 abb	RP now.	2	1	0	1	0	0	1	0	0	2	0	18:56	236.0
183	182	860	14220.0	BdeCmd		TF Cdr	Bde Cdr	Internal trigger	All companies at ATK Griffin	0	0	0	0	0	0	1	0	0	5	0	18:57	237.0
184	183	860	14280.0	TF_Cmd		TF Cdr	A, B, C, EN, Sct	Internal trigger	Move now, hit LD 1900.	0	0	0	0	0	0	1	0	1	5	0	18:58	238.0
185	184	300	14400.0	TF_Cmd		ADA OFF	TF BC	Alert	Air defense warning Red.	1	3	0	1	0	0	1	0	1	4	0	19:00	240.0
186	185	300	14436.0	TF_Cmd		A 1-10	TF BC	Blue 2 abb	LD now.	2	1	0	1	0	0	1	0	1	2	0	19:00	240.6
187	186	860	14442.0	BdeCmd		TF Cdr	Bde Cdr	Internal trigger	Lead company LD.	0	0	0	0	0	0	1	0	1	2	0	19:00	240.7
188	187	400	14460.0	BdeAL		FSB Spt Ops	TF S4	Blue 2 abb	BSA beginning to displace.	2	4	0	1	0	0	0	0	1	4	0	19:01	241.0
189	188	300	14520.0	TF_Cmd		C 1-10	TF BC	Blue 2 abb	LD now.	2	1	0	1	0	0	0	0	1	2	0	19:02	242.0
190	189	300	14538.0	TF_Cmd		B 1-10	TF BC	Blue 2 abb	LD now.	2	1	0	1	0	0	0	0	1	2	0	19:02	242.3
191	190	600	14562.0	TF_FS		Mtr Plt	TF FSE	Blue 2 abb	LD now.	2	1	0	1	0	0	0	0	1	2	0	19:02	242.7
192	191	200	14700.0	BdeOI		BRT	TF S2	Alert	In Bde sector terrain is extremely restricted north of 05 east west gridline along PL Tulip. Recommend you pass to the south.	2	1	0	0	0	0	1	0	1	22	0	19:05	245.0

	A	B	C	D	E	F	G	H	I	J	K	L	M	N	O	P	Q	R	S	T	U	V
1	Msg Number	Start	H+ Time Seconds	Net	Interrupt	From	To	Message Type	Text	Pass	Scan	Route	Update	EI	SH	Send	Enter	OTM	Word	Digital	Time	H+ Time Minutes
193	192	800	14760.0	TF_Cmd		Sct Plt	TF Cdr	Alert	O&I channels report extremely restricted terrain north of 05 east-west gridline along PL Tulip. Checking routes in the south.	0	1	0	0	0	0	0	0	1	20	0	19:06	246.0
194	193	300	15000.0	TF_Cmd		Tm EN	TF BC	Blue 2 abb	LD now.	2	1	0	1	0	0	0	0	1	2	0	19:10	250.0
195	194	760	15060.0	BdeEN		EN OFF	ABE	Internal trigger	LD now.	0	0	0	0	0	0	1	0	1	2	0	19:11	251.0
196	195	300	15300.0	TF_Cmd		Sct Plt	TF S3	Alert	PL Tulip now, looking for routes.	0	1	0	1	0	0	0	0	1	6	0	19:15	255.0
197	196	600	15480.0	BdeFS		2-3 CP	TF FSE	Blue 2	2-3 FA has cleared RP.	2	1	0	1	0	0	0	0	1	5	0	19:18	258.0
198	197	860	15498.0	TF_Cmd		TF Cdr	Tm EN	Internal trigger	Check, mark, and improve as feasible for follow-on forces.	0	0	0	0	0	0	1	0	1	9	0	19:18	258.3
199	198	300	15540.0	BdeOI		Bde B C	TF BC	Alert	Radars have picked up low-level enemy rotary-winged aircraft moving east toward 21st AD zone.	2	1	0	1	2	0	1	0	1	16	0	19:19	259.0
200	199	600	15576.0	BdeFS		2-3 CP	TF FSE	Blue 2 abb	All batteries moving.	2	3	0	1	0	0	0	0	1	3	0	19:19	259.6
201	200	300	15600.0	BdeOI		3-92 BC	TF BC	Blue 2 abb	TF 3-92 has cleared RP.	2	1	0	0	0	0	0	0	1	5	0	19:20	260.0
202	201	200	15840.0	BdeOI		Bde S2	TF S2	Green 2	Enemy attack imminent within next 12 hours. We will be facing elements of Krasnovian 231st Mech Division. Their main effort appears to be in southern portion of 21st AD zone.	2	4	0	1	2	0	0	0	1	30	0	19:24	264.0
203	202	820	15900.0	BdeCmd		Bde Cdr	TF Cdr	Blue 2 abb	TF 3-92 LD.	0	1	0	1	0	0	0	0	1	3	0	19:25	265.0
204	203	280	15912.0	TF_Cmd	29	TF S2	TF Cdr	Internal trigger	Enemy attack imminent within next 12 hours. We will be facing elements of Krasnovian 231st Mech Division. Their main effort appears to be in southern portion of 21st AD zone.	0	1	0	1	2	0	0	0	1	30	0	19:25	265.2
205	204	600	15960.0	BdeFS		2-3 CP	TF FSE	Blue 2 abb	All batteries LD.	2	3	0	1	0	0	0	0	1	3	0	19:26	266.0
206	205	300	16380.0	TF_Cmd		A 1-10	TF BC	Blue 2 abb	Crossing 20 north-south gridline	2	1	0	1	0	0	0	0	1	5	0	19:33	273.0
207	206	800	16500.0	TF_Cmd		Sct Plt	TF Cdr	Alert	Have identified two routes through PL Tulip. North linkup point NK156051. South link-up NK148007.	0	1	0	1	0	0	1	0	1	14	0	19:35	275.0
208	207	200	16680.0	TF_OI		Sct Plt	TF S2	Route report	Route needs improvement for follow-on forces to move along.	2	1	0	0	0	0	1	0	1	10	0	19:38	278.0
209	208	280	16716.0	TF_Cmd	29	TF S2	TF Cdr	Internal trigger	Routes through lava beds in our zone need improvement for follow-on forces. B de informed on O&I.	0	1	0	0	2	0	1	0	1	14	0	19:38	278.6
210	209	300	16740.0	TF_Cmd		B 1-10	TF BC	Blue 2 abb	Crossing 20 north-south gridline	2	1	0	1	0	0	0	0	1	5	0	19:39	279.0
211	210	200	16800.0	BdeOI		BRT	TF S2	Blue 2 abb	Crossing PL Pear, nothing seen. In TF 3-92 sector terrain is extremely restrictive. Recommend 3-92 go along road at NJ082854.	2	1	0	1	0	0	0	0	1	20	0	19:40	280.0
212	211	280	16842.0	TF_Cmd	29	TF S2	TF Cdr	Internal trigger	BRT crossing PL Pear, nothing seen.	0	1	0	1	0	0	0	0	1	6	0	19:40	280.7
213	212	300	16860.0	TF_Cmd		C 1-10	TF BC	Blue 2 abb	Crossing 20 north-south gridline.	2	1	0	1	0	0	0	0	1	5	0	19:41	281.0
214	213	600	16920.0	TF_FS		Mtr Plt	TF FSE	Blue 2 abb	Crossing 20 north-south gridline	2	1	0	1	0	0	0	0	1	5	0	19:42	282.0
215	214	300	16980.0	BdeOI		Bde B C	TF BC	Alert	Radars have picked up mid-level enemy fixed winged aircraft along PL Oats. Appears to be recce.	2	3	0	1	0	0	1	0	1	16	0	19:43	283.0
216	215	300	17160.0	TF_Cmd		A 1-10	TF BC	Blue 2 abb	Have linked with Scouts at northern point; proceeding along route.	2	1	0	1	0	0	0	0	1	10	0	19:46	286.0
217	216	300	17220.0	TF_Cmd		Tm EN	TF BC	Blue 2 abb	Crossing 20 north-south gridline	2	1	0	1	0	0	0	0	1	5	0	19:47	287.0
218	217	300	17520.0	TF_Cmd		B 1-10	TF BC	Blue 2 abb	Have linked with Scouts at southern point; proceeding along route.	2	1	0	1	0	0	0	0	1	10	0	19:52	292.0
219	218	350	17520.0	TF_Cmd	12	TF XO	TF BC	Internal trigger	Have the Main come to a short halt.	2	0	0	0	0	0	0	0	1	8	0	19:53	292.0

	A	B	C	D	E	F	G	H	I	J	K	L	M	N	O	P	Q	R	S	T	U	V
1	Msg Number	Start	H+ Time Seconds	Net	Interrupt	From	To	Message Type	Text	Pass	Scan	Route	Update	EI	SH	Send	Enter	OTM	Word	Digital	Time	H+ Time Minutes
220	219	300	17640.0	TF_Cmd		C 1-10	TF BC	Blue 2 abb	Have linked with Scouts at northern point; proceeding along route.	2	1	0	1	0	0	0	0	1	10	0	19:54	294.0
221	220	450	17820.0	TF_Cmd	12	TF S4	TF BC	Internal trigger	Crossing 20 north-south gridline	2	1	0	1	0	0	0	0	1	5	0	19:57	297.0
222	221	300	18000.0	TF_Cmd		Tm EN	TF BC	Blue 2 abb	Have linked with Scouts at southern point; proceeding along route.	2	1	1	1	0	0	0	0	0	10	0	20:00	300.0
223	222	760	18060.0	BdeEN		EN OFF	ABE	Internal trigger	PL Tulip now.	0	0	0	0	0	0	1	0	1	3	0	20:01	301.0
224	223	300	18600.0	BdeOI		2-10 BC	TF BC	Blue 2 abb	2-10 has cleared RP.	2	1	1	0	0	0	0	0	0	4	0	20:10	310.0
225	224	450	18720.0	TF_Cmd	12	TF S4	TF BC	Internal trigger	Have linked with Scouts at southern point; proceeding along route.	2	1	1	1	0	0	0	0	0	10	0	20:12	312.0
226	225	200	18960.0	BdeOI		Bde S2	TF S2	Green 2	Enemy attack imminent within next 3 hours. We will be facing elements of Krasnovian 231st Mech Division. Their main effort appears to be in southern portion of 21st AD	2	4	1	1	2	2	1	0	0	30	0	20:16	316.0
227	226	200	19020.0	BdeOI		BRT	TF S2	Alert	PL Rice; traces of recent occupation by enemy long range recon patrols vicinity NJ9093.	2	4	1	1	2	1	1	0	0	14	0	20:17	317.0
228	227	760	19530.0	BdeEN		EN OFF	ABE	Internal trigger	Routes through PL Tulip have been improved and marked.	0	0	0	0	0	0	1	0	0	9	0	20:25	325.5
229	228	300	19560.0	TF_Cmd		A 1-10	TF BC	Blue 2 abb	PL MUM; moving to re-establish TF diamond.	2	1	1	1	0	0	0	0	0	6	0	20:26	326.0
230	229	300	19560.0	TF_Cmd		Tm EN	TF BC	Blue 2 abb	Routes through PL Tulip have been improved and marked.	0	1	0	1	0	0	1	0	0	9	0	20:25	326.0
231	230	860	19596.0	TF_Cmd		TF Cdr	A 1-10	Internal trigger	Slow pace to allow rest of TF at catch up.	0	0	0	0	0	0	1	0	1	10	0	20:26	326.6
232	231	600	19680.0	TF_FS		Mtr Plt	TF FSE	Blue 2 abb	PL Mum; moving to re-establish TF diamond.	2	1	1	1	0	0	0	0	0	6	0	20:28	328.0
233	232	300	19800.0	TF_Cmd		B 1-10	TF BC	Blue 2 abb	PL Mum; moving to re-establish TF diamond.	2	1	0	1	0	0	0	0	1	6	0	20:30	330.0
234	233	280	19920.0	BdeOI		TF S2	Bde S2	Internal trigger	Scouts along PL Pear, nothing seen.	0	0	0	0	0	0	1	0	1	6	0	20:32	332.0
235	234	300	19980.0	BdeOI		Bde BC	TF BC	Blue 2 abb	JTF Mojave FLOT to our north, along 00 north-south gridline.	2	1	0	1	0	0	1	0	1	11	0	20:33	333.0
236	235	380	20004.0	TF_Cmd	29	TF BC	TF Cdr	Internal trigger	JTF Mojave FLOT to our north, along 00 north-south gridline.	0	1	0	1	0	0	0	0	1	11	0	20:33	333.4
237	236	200	20100.0	TF_OI		Sct Plt	TF S2	Blue 2 abb	PL Pear, nothing seen. Continuing mission	2	1	0	1	0	0	1	0	1	6	0	20:35	335.0
238	237	300	20160.0	TF_Cmd		C 1-10	TF BC	Blue 2 abb	PL Mum; moving to re-establish TF diamond.	2	1	0	1	0	0	0	0	1	6	0	20:36	336.0
239	238	300	20760.0	BdeOI		3-92 BC	TF BC	Blue 2 abb	3-92 at PL Pear, expect significant decrease in movement due to slow-go terrain.	2	1	0	1	0	0	1	0	1	13	0	20:46	346.0
240	239	380	20790.0	TF_Cmd	29	TF BC	TF Cdr	Internal trigger	3-92 at PL Pear, expect significant decrease in movement due to slow-go terrain.	0	1	0	1	0	0	0	0	1	13	0	20:46	346.5
241	240	300	20880.0	BdeOI		BRT	TF BC	Alert	Road is cratered at NJ777948; minefield located at NJ776952 to NJ776957.	2	1	0	1	0	0	0	0	1	11	0	20:48	348.0
242	241	380	20940.0	TF_Cmd	29	TF BC	TF Cdr	Internal trigger	BRT reports road is cratered at NJ777948; minefield located at NJ776952 to NJ776957. Recommend we use engineers to clear.	0	1	0	1	0	0	1	0	1	19	0	20:49	349.0
243	242	760	21000.0	BdeEN		EN OFF	ABE	Internal trigger	BRT has identified road crater at NJ777948; minefield located at NJ776952 to NJ776957. We will conduct in-stride breach.	0	0	0	0	0	0	1	0	1	16	0	20:50	350.0
244	243	300	21060.0	TF_Cmd		A 1-10	TF BC	Blue 2 abb	PL Pear, continuing mission	2	1	0	1	0	0	1	0	1	4	0	20:51	351.0
245	244	960	21102.0	BdeOI		TF S3	BRT	Internal trigger	Have Scout linkup with BRT at NJ819951.	0	0	0	0	0	0	1	0	1	8	0	20:51	351.7
246	245	660	21120.0	BdeFS		TF FSE	2-3 S3	Internal trigger	BRT reports road cratered at NJ777948; minefield located at NJ776952 to NJ776957. TF 1-10 will conduct in-stride breach.	0	0	0	0	0	0	1	0	1	16	0	20:52	352.0

	A	B	C	D	E	F	G	H	I	J	K	L	M	N	O	P	Q	R	S	T	U	V
1	Msg Number	Start	H+ Time Seconds	Net	Interrupt	From	To	Message Type	Text	Pass	Scan	Route	Update	EI	SH	Send	Enter	OTM	Word	Digital	Time	H+ Time Minutes
247	246	280	21156.0	TF_OI		TF S2	Sct Plt	Internal trigger	TF S3 has coordinated linkup with BRT at NJ819951.	0	0	0	0	0	0	1	0	1	9	0	20:52	352.6
248	247	380	21180.0	TF_Cmd	29	TF B C	TF Cdr	Internal trigger	BRT will linkup with our Scouts at NJ819951.	0	1	0	1	0	0	0	0	1	8	0	20:53	353.0
249	248	600	21204.0	TF_FS		Mtr Plt	TF FSE	Blue 2 abb	PL Pear, continuing mission	2	1	0	1	0	0	0	0	1	4	0	20:53	353.4
250	249	960	21240.0	BdeCmd		TF S3	Bde Cdr	Internal trigger	1-10 will conduct in-stride breach and repair crater vicinity NJ7795.	0	0	0	0	0	0	1	0	1	8	0	20:54	354.0
251	250	300	21300.0	TF_Cmd		B 1-10	TF BC	Blue 2 abb	PL Pear, continuing mission	2	1	0	1	0	0	0	0	1	4	0	20:55	355.0
252	251	450	21336.0	TF_Cmd	12	TF S4	TF BC	Internal trigger	PL Mum; moving to re-establish TF diamond.	2	1	0	1	0	0	0	0	1	6	0	20:55	355.6
253	252	300	21720.0	TF_Cmd		C 1-10	TF BC	Blue 2 abb	PL Pear, continuing mission	2	1	0	1	0	0	0	0	1	4	0	21:02	362.0
254	253	400	21960.0	BdeAL		Bde S4	TF S4	Alert	BSA beginning to displace.	2	3	0	1	0	0	0	0	1	4	0	21:06	366.0
255	254	200	22020.0	BdeOI		Bde S2	TF S2	Green 2	Significant enemy mechanized and motorized forces reported crossing border at 2045 hours.	2	4	0	1	2	0	0	0	1	9	0	21:07	367.0
256	255	280	22062.0	TF_Cmd	29	TF S2	TF Cdr	Internal trigger	Significant enemy mechanized and motorized forces reported crossing border at 2045 hours.	0	1	0	1	2	0	0	0	1	9	0	21:07	367.7
257	256	300	22320.0	BdeOI		Bde B C	TF BC	Blue 2 abb	JTF Mojave FLOT cleared to our north along 80 north-south gridline.	2	1	0	1	0	0	0	0	1	12	0	21:12	372.0
258	257	380	22356.0	TF_Cmd	29	TF B C	TF Cdr	Internal trigger	JTF Mojave FLOT cleared to our north along 80 north-south gridline.	0	1	0	1	0	0	0	0	1	12	0	21:12	372.6
259	258	300	22500.0	TF_Cmd		Sct Plt	TF BC	Blue 2 abb	PL Rice now. Have checked previously reported possible enemy recon at NJ9093; nothing found. Continuing mission.	2	1	0	1	0	0	0	0	1	16	0	21:15	375.0
260	259	200	22524.0	TF_OI		Sct Plt	TF S2	Blue 2 abb	PL Rice now. Have checked previously reported possible enemy recon at NJ9093; nothing found. Continuing mission.	2	1	0	1	0	0	1	0	1	16	0	21:15	375.4
261	260	860	22554.0	TF_Cmd		TF Cdr	A, B, C, EN, Sct Plt, Mtr Plt, CPs	Internal trigger	Tm A establish SBF at NJ817953; Co B establish SBF NJ807928; Tm C establish SBF NJ796953. Scouts linkup with Engineers at NJ819951. Establish FP at NJ820952.	0	0	0	0	0	0	1	0	1	20	0	21:15	375.9
262	261	600	22740.0	BdeFS		2-3 CP	TF FSE	Blue 2 abb	A Btry PL Pear.	2	1	0	1	0	0	1	0	1	4	0	21:19	379.0
263	262	450	22800.0	BdeAL		TF S4	Bde S4	Internal trigger	PL Pear.	0	0	0	0	0	0	1	0	1	2	0	21:20	380.0
264	263	200	22824.0	BdeOI		Bde S2	TF S2	Alert	Division EW identified low-level voice intercept vicinity NJ9093, 30 minutes ago.	2	3	0	1	0	0	0	0	1	12	0	21:20	380.4
265	264	450	22836.0	TF_Cmd	12	TF S4	TF BC	Internal trigger	PL Pear.	2	1	0	1	0	0	0	0	1	2	0	21:20	380.6
266	265	300	23100.0	TF_Cmd		A 1-10	TF BC	Blue 2 abb	PL Rice, continuing mission	2	1	0	1	0	0	1	0	1	2	0	21:25	385.0
267	266	300	23142.0	TF_Cmd		Sct Plt	TF BC	Alert	Have linked with BRT at NJ819951.	2	1	0	1	0	0	0	0	1	6	0	21:25	385.7
268	267	600	23280.0	TF_FS		Mtr Plt	TF FSE	Blue 2 abb	PL Rice, continuing mission	2	1	0	1	0	0	0	0	1	4	0	21:28	388.0
269	268	300	23400.0	TF_Cmd		B 1-10	TF BC	Blue 2 abb	PL Rice, continuing mission	2	1	0	1	0	0	0	0	1	4	0	21:30	390.0
270	269	200	23700.0	TF_OI		Sct Plt	TF S2	Blue 2 abb	Have established screen along PL Berry.	2	1	0	1	0	0	1	0	1	6	0	21:35	395.0
271	270	300	23712.0	TF_Cmd		Sct Plt	TF BC	Blue 2 abb	Have established screen along PL Berry.	2	1	0	1	0	0	1	0	1	6	0	21:35	395.2
272	271	300	23820.0	TF_Cmd		C 1-10	TF BC	Blue 2 abb	PL Rice, continuing mission	2	1	0	1	0	0	0	0	1	4	0	21:37	397.0
273	272	800	24000.0	TF_Cmd		A 1-10	TF Cdr	Blue 2 abb	Set in SBF.	2	1	0	1	0	0	0	0	0	3	0	21:40	400.0
274	273	860	24060.0	TF_Cmd	12	TF Cdr	TF BC	Internal trigger	TF BC stop the TOC.	0	0	0	0	0	2	1	0	0	5	0	21:41	401.0
275	274	300	24300.0	TF_Cmd		Tm EN	TF BC	Blue 2 abb	PL Rice.	2	1	0	1	0	0	0	0	0	2	0	21:45	405.0
276	275	800	24600.0	TF_Cmd		B 1-10	TF Cdr	Blue 2 abb	Set in SBF.	2	1	0	1	0	0	0	0	0	3	0	21:50	410.0
277	276	600	24642.0	TF_FS		Mtr Plt	TF FSE	Blue 2 abb	Occupying FP at NJ820951.	2	1	0	1	0	0	0	0	0	4	0	21:50	410.7
278	277	450	24900.0	BdeAL		TF S4	Bde S4	Internal trigger	PL Rice, continuing mission	0	0	0	0	0	0	1	0	0	4	0	21:55	415.0
279	278	450	24924.0	TF_Cmd	12	TF S4	TF BC	Internal trigger	PL Rice, continuing mission	2	1	0	1	0	0	0	0	0	4	0	21:55	415.4
280	279	600	25080.0	BdeFS		2-3 CP	TF FSE	Alert	A Btry laid at NJ914923.	2	3	0	1	0	0	0	0	0	5	0	21:58	418.0
281	280	650	25092.0	AFA TDS		Bde FSO	TF FSE	C400 Cdr Sit Rpt	A Btry laid at NJ914923.	0	0	0	0	0	0	0	0	0	5	3	21:58	418.2

	A	B	C	D	E	F	G	H	I	J	K	L	M	N	O	P	Q	R	S	T	U	V
1	Msg Number	Start	H+ Time Seconds	Net	Interrupt	From	To	Message Type	Text	Pass	Scan	Route	Update	EI	SH	Send	Enter	OTM	Word	Digital	Time	H+ Time Minutes
282	281	800	25140.0	TF_Cmd		C 1-10	TF Cdr	Blue 2 abb	Set in SBF.	2	1	0	1	0	0	0	0	0	3	0	21:59	419.0
283	282	300	25200.0	BdeOI		3-92 BC	TF BC	Blue 2 abb	3-92 at PL Rice.	2	1	0	1	0	0	1	0	0	4	0	22:00	420.0
284	283	800	25212.0	TF_Cmd		TF B C	TF Cdr	Blue 2 abb	3-92 at PL Rice.	0	1	0	1	0	0	0	0	0	4	0	22:00	420.2
285	284	800	26400.0	TF_Cmd		Tm EN	TF Cdr	Alert	Have arrived at breach site. Beginning breaching operations,	0	1	0	1	0	0	0	0	0	8	0	22:20	440.0
286	285	760	26418.0	BdeEN		EN OFF	ABE	Internal trigger	Beginning breaching operations	0	0	0	0	0	0	1	0	0	3	0	22:20	440.3
287	286	300	26940.0	TF_Cmd		Tm EN	TF BC	Alert	Plow tanks beginning to proof lanes.	2	0	0	0	0	0	1	0	0	6	0	22:29	449.0
288	287	200	27000.0	BdeOI		BRT	TF S2	Blue 2 abb	PL Oats, continuing mission.	2	1	0	1	0	0	1	0	0	4	0	22:30	450.0
289	288	280	27042.0	TF_Cmd	29	TF S2	TF Cdr	Internal trigger	BRT at PL Oats.	0	1	0	1	0	0	0	0	0	4	0	22:30	450.7
290	289	200	27120.0	BdeOI		Bde S2	TF S2	Green 2	Enemy division, believed to be 231st MRD moving toward 21 AD zone. Lead battalions along MK60 north-south gridline.	2	4	1	1	0	1	1	0	0	19	0	22:32	452.0
291	290	100	27300.0	TF_AL		Tm EN	TF S1	Medevac request	Engineer injured during obstacle breaching, company medic treating.	2	2	0	1	0	0	0	0	0	8	0	22:35	455.0
292	291	800	27324.0	TF_Cmd		Tm EN	TF Cdr	Alert	Engineer injured during obstacle breaching, company medic treating.	0	0	0	0	0	0	0	0	0	8	0	22:35	455.4
293	292	760	27420.0	BdeEN		EN OFF	ABE	Internal trigger	One personnel injured	0	0	0	0	0	0	1	0	0	3	0	22:37	457.0
294	293	300	27540.0	TF_Cmd		Tm EN	TF BC	Alert	Proofing and marking is complete	2	0	1	1	0	0	1	0	0	5	0	22:39	459.0
295	294	860	27576.0	TF_Cmd	12	TF Cdr		Internal trigger	Get TF BC to find out what the FLOT of 3-92 and BRT is?	0	0	0	0	0	0	1	0	0	14	0	22:39	459.6
296	295	380	27636.0	BdeOI		TF B C	3-92, BRT	Internal trigger	What's your FLOT?	0	0	0	0	0	0	1	0	0	3	0	22:40	460.6
297	296	300	27720.0	BdeOI		3-92 BC	TF BC	Blue 2 abb	3-92 PL Berry, continuing mission	2	1	0	1	0	0	0	0	0	5	0	22:42	462.0
298	297	300	27780.0	BdeOI		Bde B C	TF BC	Blue 2 abb	BRT five kms east of Churchill and Pimlico	2	1	0	1	0	0	1	0	0	8	0	22:43	463.0
299	298	380	27840.0	TF_Cmd	29	TF B C	TF Cdr	Internal trigger	3-92 at PL Berry. BRT five kms east of Churchill and Pimlico.	0	1	0	1	0	0	0	0	0	12	0	22:44	464.0
300	299	300	28080.0	TF_Cmd		A 1-10	TF BC	Blue 2 abb	Beginning to move along marked lanes	2	1	0	1	0	0	1	0	0	6	0	22:48	468.0
301	300	300	28200.0	TF_Cmd		Tm EN	TF BC	Alert	Crater is filled in.	2	1	0	1	0	0	0	0	0	4	0	22:50	470.0
302	301	380	28218.0	TF_Cmd	29	TF B C	TF Cdr	Internal trigger	Recommend we send Co B along the road.	0	1	0	0	0	0	1	0	0	8	0	22:50	470.3
303	302	760	28320.0	BdeEN		EN OFF	ABE	Internal trigger	Obstacle cleared, proofed, and marked at NJ774960. Follow-on engineers need to improve. We're moving out with TF 1-10.	0	0	0	0	0	0	1	0	0	15	0	22:52	472.0
304	303	300	28380.0	BdeOI		BRT	TF BC	Blue 2 abb	On OBJs Churchill and Pimlico; nothing seen	2	1	1	1	0	0	0	0	0	7	0	22:53	473.0
305	304	380	28416.0	TF_Cmd	29	TF B C	TF Cdr	Internal trigger	BRT on OBJs Churchill and Pimlico; nothing seen	0	1	0	1	0	0	0	0	0	8	0	22:53	473.6
306	305	820	28428.0	BdeCmd		Bde Cdr	TF Cdr	Order	BRT will linkup with 1-10 Scouts on Churchill. Once linkup is complete, shift entire BRT to 3-92 sector, they're going to have slow-go terrain between PL Berry and OBJ Pimlico.	0	1	0	1	0	0	1	0	0	30	0	22:53	473.8
307	306	800	28500.0	TF_Cmd		A 1-10	TF Cdr	Blue 2 abb	Set, far side of minefield.	0	1	0	1	0	0	1	0	0	5	0	22:55	475.0
308	307	300	29124.0	TF_Cmd		B 1-10	TF BC	Blue 2 abb	Set at NJ764937.	2	1	0	1	0	0	0	0	1	3	0	23:05	485.4
309	308	350	29160.0	TF_Cmd	16	TF XO	TF S4	Internal trigger	Begin movement through marked lanes.	0	0	0	0	0	0	0	0	1	5	0	23:06	486.0
310	309	800	29760.0	TF_Cmd		C 1-10	TF Cdr	Blue 2 abb	Set NJ740947.	0	1	0	1	0	0	1	0	1	3	0	23:16	496.0
311	310	380	29820.0	BdeOI		TF B C	Bde BC	Internal trigger	All co/tms on far side of obstacle; continuing mission.	0	0	0	0	0	0	1	0	1	7	0	23:17	497.0
312	311	660	29940.0	AFA TDS		TF FSE	Bde FSO	Internal trigger	TF 1-10 beginning movement on west side of obstacle.	0	0	0	0	0	0	2	0	1	8	0	23:19	499.0
313	312	300	30060.0	TF_Cmd		ADA OFF	TF BC	Alert	Radars identifying one hostile slow entering 1st Bde sector in the south.	2	1	0	1	0	0	0	0	1	12	0	23:21	501.0
314	313	600	30120.0	BdeFS		Bde FSO	TF FSE	Blue 2 abb	A Battery beginning to move	2	3	0	1	0	0	0	0	1	5	0	23:22	502.0
315	314	650	30138.0	AFA TDS		Bde FSO	TF FSE	C400 Cdr Sit Rpt	A Battery beginning to move	0	0	0	0	0	0	0	0	1	5	2	23:22	502.3
316	315	300	30300.0	TF_Cmd		Sct Plt	TF BC	Blue 2 abb	PL Oats, continuing mission.	2	1	0	1	0	0	0	0	1	4	0	23:25	505.0

	A	B	C	D	E	F	G	H	I	J	K	L	M	N	O	P	Q	R	S	T	U	V
1	Msg Number	Start	H+ Time Seconds	Net	Interrupt	From	To	Message Type	Text	Pass	Scan	Route	Update	EI	SH	Send	Enter	OTM	Word	Digital	Time	H+ Time Minutes
317	316	450	30480.0	TF_Cmd	12	TF S4	TF BC	Internal trigger	Have completed movement through obstacle	2	1	0	1	0	0	0	0	1	5	0	23:28	508.0
318	317	300	30720.0	BdeOI		3-92 BC	TF BC	Blue 2 abb	3-92 at PL Oats, beginning to move companies in column through gap at NJ6684.	2	1	0	1	0	0	0	0	1	14	0	23:32	512.0
319	318	800	30840.0	TF_Cmd		TF BC	TF Cdr	Blue 2 abb	3-92 at PL Oats, beginning to move companies in column through gap at NJ6684.	0	1	0	1	0	0	0	0	1	14	0	23:33	514.0
320	319	400	31320.0	BdeAL		Bde S4	TF S4	Blue 2 abb	FSB crossing LD.	2	1	0	1	0	0	0	0	1	3	0	23:42	522.0
321	320	300	31380.0	TF_Cmd		A 1-10	TF BC	Blue 2 abb	PL Oats, continuing mission.	2	1	0	1	0	0	1	0	1	4	0	23:43	523.0
322	321	660	31620.0	BdeFS		TF FSE	Bde FSO	Internal trigger	PL Oats, continuing mission.	0	0	0	0	0	0	1	0	1	4	0	23:47	527.0
323	322	300	31650.0	TF_Cmd		B 1-10	TF BC	Blue 2 abb	PL Oats, continuing mission.	2	1	0	1	0	0	0	0	1	4	0	23:47	527.5
324	323	300	31680.0	TF_Cmd		C 1-10	TF BC	Blue 2 abb	PL Oats, continuing mission.	2	1	0	1	0	0	0	0	1	4	0	23:48	528.0
325	324	600	31704.0	TF_FS		Mtr Plt	TF FSE	Blue 2 abb	PL Oats, continuing mission.	2	1	0	1	0	0	0	0	1	4	0	23:48	528.4
326	325	300	31920.0	TF_Cmd		Sct Plt	TF BC	Blue 2 abb	OBJ Churchill; no sign of enemy.	2	1	0	1	0	0	1	0	1	6	0	23:52	532.0
327	326	350	31980.0	TF_AL	16	TF XO	TF S4	Internal trigger	Ensure our fuel HEMTTs get refueled by FSB tankers after we top-off at OBJ Churchill. Will need fuel again at OBJ Gold.	0	0	0	0	0	1	0	0	1	22	0	23:53	533.0
328	327	350	32010.0	TF_AL	16	TF XO		Internal trigger	What's the linkup point for empty fuel HEMTTs and 5,000 gallon FSB tankers?	0	0	0	0	0	0	1	0	1	13	0	23:53	533.5
329	328	380	32028.0	TF_Cmd	29	TF BC	TF Cdr	Internal trigger	Recommend we send scouts out.	0	1	0	0	0	0	1	0	1	5	0	23:53	533.8
330	329	300	32580.0	TF_Cmd		A 1-10	TF BC	Blue 2 abb	Set Churchill - A.	2	1	0	1	0	0	0	0	1	5	0	0:03	543.0
331	330	300	32700.0	TF_Cmd		S4	TF BC	Blue 2 abb	PL Oats, continuing mission.	2	1	0	1	0	0	0	0	1	4	0	0:05	545.0
332	331	300	32820.0	TF_Cmd		B 1-10	TF BC	Blue 2 abb	Set Churchill - B.	2	1	0	1	0	0	0	0	1	3	0	0:07	547.0
333	332	300	32880.0	TF_Cmd		ADA OFF	TF BC	Alert	Air corridor established along Bde southern boundary.	2	1	0	1	0	0	0	0	1	7	0	0:08	548.0
334	333	300	32940.0	TF_Cmd		C 1-10	TF BC	Blue 2 abb	Set Churchill - C.	2	1	0	1	0	0	0	0	1	3	0	0:09	549.0
335	334	600	33000.0	TF_FS		Mtr Plt	TF FSE	Blue 2 abb	Set Churchill - M.	2	1	0	1	0	0	1	0	1	3	0	0:10	550.0
336	335	380	33120.0	BdeOI		TF BC	Bde BC	Internal trigger	Set on OBJ Churchill; beginning refueling operations	0	0	0	0	0	0	1	0	1	7	0	0:12	552.0
337	336	300	33300.0	TF_Cmd		Tm EN	TF BC	Blue 2 abb	Set Churchill - E.	2	1	0	1	0	0	0	0	1	3	0	0:15	555.0
338	337	300	33378.0	BdeOI		3-92 BC	TF BC	Blue 2 abb	3-92 set on OBJ Pimlico; beginning refueling operations.	2	1	0	1	0	0	0	0	0	8	0	0:16	556.3
339	338	650	33420.0	AFA TDS		2-3 CP	TF FSE	C400 Cdr Sit Rpt	A Battery laid at NJ721871.	2	1	0	1	0	0	0	0	0	5	2	0:17	557.0
340	339	600	33456.0	BdeFS		Bde FSO	TF FSE	Blue 2 abb	A Battery laid at NJ721871.	0	0	0	0	0	0	0	0	0	5	0	0:17	557.6
341	340	450	33480.0	TF_Cmd	12	TF S4	TF BC	Internal trigger	Set NJ682853.	2	1	0	1	0	0	0	0	0	2	0	0:18	558.0
342	341	300	33492.0	BdeOI		2-10 BC	TF BC	Blue 2 abb	TF 2-10 conducting refueling operations along PL Berry.	2	1	0	1	0	0	0	0	0	8	0	0:18	558.2
343	342	200	33600.0	TF_OI		Sct Plt	TF S2	Blue 2 abb	Screen established.	2	0	1	1	0	0	0	0	0	2	0	0:20	560.0
344	343	300	33624.0	BdeOI		Bde BC	TF BC	Alert	JTF Mojave FLOT cleared to our north along 80 north-south gridline.	2	1	0	1	0	0	0	0	0	12	0	0:20	560.4
345	344	300	33660.0	BdeCmd		Bde BC	TF BC	Order	Division reports heaviest enemy force building toward Barstow and I-15, I-40 junction. Enemy motorized and light forces moving toward northern area of Division zone and along Corps boundary. BRT establish screen along Bde southern boundary between OBJ Pimlico and south end of Coyote Lake.	0	1	1	1	2	1	0	0	0	44	0	0:21	561.0
346	345	820	33720.0	BdeCmd		Bde Cdr	TF Cdr	Order	Resume movement at 0130 hours.	2	1	1	1	0	0	0	0	0	5	0	0:22	562.0
347	346	200	33780.0	BdeOI		Bde S2	TF S2	Green 2	Lead enemy reinforced battalion reported crossing the MK80 north-south gridline at 00:10; tentatively identified as a forward detachment.	2	1	1	1	2	2	1	0	0	19	0	0:23	563.0

	A	B	C	D	E	F	G	H	I	J	K	L	M	N	O	P	Q	R	S	T	U	V
1	Msg Number	Start	H+ Time Seconds	Net	Interrupt	From	To	Message Type	Text	Pass	Scan	Route	Update	EI	SH	Send	Enter	OTM	Word	Digital	Time	H+ Time Minutes
348	347	380	33804.0	TF_Cmd		TF B C	A, B, C, EN, Sct Plt, Mtr Plt	Internal trigger	Lead enemy reinforced battalion reported crossing the MK80 north-south gridline at 00:10; tentatively identified as a forward detachment.	0	0	0	0	0	0	1	0	0	17	0	0:23	563.4
349	348	300	33828.0	TF_Cmd		ADA OFF	TF B C	Alert	One hostile rotary-winged aircraft vicinity NJ3189, moving east.	2	1	1	1	0	0	1	0	0	9	0	0:23	563.8
350	349	860	33840.0	TF_Cmd	6	TF Cdr	TF S2	Internal trigger	Where will the FD be when we meet him; will all of the FD be in my zone?	0	3	0	0	0	0	1	0	0	14	0	0:24	564.0
351	350	300	33900.0	TF_Cmd		ADA OFF	TF B C	Alert	Friendly air moving east to west along air corridor in southern portion of Bde zone. Do not engage. Weapons hold on Air Axis Tom.	2	1	1	1	0	0	1	0	0	23	0	0:25	565.0
352	351	300	33930.0	BdeOI		Bde B C	TF B C	Alert	3d Bde reports seizing OBJ Fox, NJ5647 at 2350 hours.	2	1	1	1	0	0	0	0	0	10	0	0:25	565.5
353	352	300	33948.0	BdeOI		3-92 B C	TF B C	Blue 2 abb	3-92 PL Oats, continuing mission.	2	1	1	1	0	0	0	0	0	5	0	0:25	565.8
354	353	650	34200.0	AFA TDS		2-3 CP	TF FSE	C400 Cdr Sit Rpt	2-8 FA reports crossing PL Pear.	2	1	0	1	0	0	0	0	0	6	2	0:30	570.0
355	354	600	34218.0	BdeFS		2-3 CP	TF FSE	Blue 2 abb	2-8 FA reports crossing PL Pear.	0	0	0	0	0	0	0	0	0	6	0	0:30	570.3
356	355	300	34500.0	BdeOI		Bde B C	TF B C	Alert	1-22 Cav screening with air troops between Kiwi and Rice. Ground troops between Oats and Berry conducting refuel operations.	2	1	1	1	0	0	1	0	0	19	0	0:35	575.0
357	356	300	34620.0	TF_Cmd		1-22 Cav B C	TF B C	Alert	1-22 screening with air troops to your north out to Kiwi. When 1-10 hits Kiwi, 1-22 will move ground troops to screen northern flank.	0	0	0	0	0	0	1	0	0	24	0	0:37	577.0
358	357	600	34698.0	BdeFS		2-3 CP	TF FSE	Blue 2 abb	All batteries refueled and report REDCON 1.	2	2	0	1	0	0	0	0	0	7	0	0:38	578.3
359	358	650	34716.0	AFA TDS		2-3 CP	TF FSE	C400 Cdr Sit Rpt	All batteries refueled and report REDCON 1.	0	0	0	0	0	0	0	0	0	7	3	0:38	578.6
360	359	300	35040.0	TF_Cmd		ADA OFF	TF B C	Alert	Friendly air moving west to east along air corridor in southern portion of Bde zone. Do not engage.	2	1	1	1	0	0	1	0	0	19	0	0:44	584.0
361	360	300	35640.0	TF_Cmd		ADA OFF	TF B C	Alert	Helicopter IFF as enemy. Destroyed vicinity NJ568854. Two missiles.	2	1	0	1	0	0	0	0	0	9	0	0:54	594.0
362	361	860	35700.0	TF_Cmd		TF Cdr	Sct Plt	Internal trigger	Check out destroyed enemy helicopter at NJ568854.	0	0	0	0	0	0	1	0	0	7	0	0:55	595.0
363	362	300	36000.0	TF_Cmd		Tm EN	TF B C	Blue 2 abb	Refuel complete; REDCON 1.	2	2	0	1	0	0	0	0	0	4	0	1:00	600.0
364	363	300	36300.0	TF_Cmd		Sct Plt	TF B C	Blue 1	One enemy helicopter destroyed, no survivors. Appears to be a MI-8.	0	0	0	0	0	0	1	0	0	11	0	1:05	605.0
365	364	760	36342.0	BdeEN		EN OFF	ABE	Internal trigger	Refuel complete; REDCON 1.	0	0	0	0	0	0	1	0	0	4	0	1:05	605.7
366	365	300	36600.0	TF_Cmd		A 1-10	TF B C	Blue 2 abb	Refuel complete; REDCON 1.	2	2	0	1	0	0	0	0	0	4	0	1:10	610.0
367	366	400	36612.0	BdeAL		FSB Spt Ops	TF S4	Alert	2-8 FA consumed more fuel than anticipated when they linked up with Bde. Will not be able to fill up all of each TF's HEMTTs.	2	4	0	1	0	0	0	0	0	25	0	1:10	610.2
368	367	300	36960.0	TF_Cmd		B 1-10	TF B C	Blue 2 abb	Refuel complete; REDCON 1.	2	2	0	1	0	0	0	0	0	4	0	1:16	616.0
369	368	300	37320.0	TF_Cmd		C 1-10	TF B C	Blue 2 abb	Refuel complete; REDCON 1.	2	2	0	1	0	0	0	0	0	4	0	1:22	622.0
370	369	600	37560.0	BdeFS		2-3 CP	TF FSE	Blue 2 abb	Batteries crossing PL Daisy .	2	1	0	1	0	0	0	0	0	4	0	1:26	626.0
371	370	650	37584.0	AFA TDS		2-3 CP	TF FSE	C400 Cdr Sit Rpt	Batteries crossing PL Daisy .	0	0	0	0	0	0	0	0	0	4	4	1:26	626.4
372	371	300	37800.0	TF_Cmd		A 1-10	TF B C	Blue 2 abb	Beginning movement from Churchill - A	2	1	0	1	0	0	1	0	1	5	0	1:30	630.0
373	372	860	37860.0	TF_Cmd		TF Cdr	Sct Plt	Internal trigger	Begin movement and screen forward.	0	0	0	0	0	0	1	0	1	5	0	1:31	631.0
374	373	200	37980.0	BdeOI		Bde S2	TF S2	Green 2	Reinforced enemy battalion moving east vicinity Superior Lake, NK9700.	2	1	0	1	0	1	1	0	1	9	0	1:33	633.0
375	374	860	38220.0	TF_Cmd		TF Cdr	A, B, C, Tm EN	Internal trigger	Begin your movement to reform diamond.	0	0	0	0	0	0	1	0	0	6	0	1:37	637.0
376	375	450	38280.0	TF_Cmd	12	TF S4	TF B C	Internal trigger	Beginning movement	2	1	0	1	0	0	0	0	1	2	0	1:38	638.0
377	376	200	38400.0	TF_OI		Sct Plt	TF S2	Blue 1	Enemy infantry at NJ513891.	2	3	0	1	0	0	1	0	1	4	0	1:40	640.0

	A	B	C	D	E	F	G	H	I	J	K	L	M	N	O	P	Q	R	S	T	U	V
1	Msg Number	Start	H+ Time Seconds	Net	Interrupt	From	To	Message Type	Text	Pass	Scan	Route	Update	EI	SH	Send	Enter	OTM	Word	Digital	Time	H+ Time Minutes
378	377	300	38460.0	TF_Cmd		Sct Plt	TF BC	Blue 1	Enemy infantry at NJ513891.	2	1	0	0	0	0	0	0	1	4	0	1:41	641.0
379	378	300	38580.0	TF_Cmd		Sct Plt	TF BC	Blue 1	Two BRDMs at NJ489883.	2	1	0	0	0	0	0	0	1	4	0	1:43	643.0
380	379	200	38592.0	TF_OI		Sct Plt	TF S2	Blue 1	Two BRDMs at NJ489883.	2	3	0	1	0	1	1	0	1	4	0	1:43	643.2
381	380	300	38700.0	TF_Cmd		Sct Plt	TF BC	Blue 2 abb	PL Kiwi, continuing mission	2	1	0	1	0	0	0	0	1	4	0	1:45	645.0
382	381	600	38760.0	BdeFS		2-3 CP	TF FSE	Blue 2 abb	All batteries beginning movement.	2	3	0	1	0	0	0	0	1	4	0	1:46	646.0
383	382	650	38778.0	AFATDS		Bde FSO	TF FSE	C400 Cdr Sit Rpt	All batteries beginning movement.	2	2	0	1	0	0	0	0	1	4	4	1:46	646.3
384	383	300	38820.0	BdeOI		3-92 BC	TF BC	Blue 2 abb	Beginning movement from Pimlico	2	2	0	1	0	0	0	0	1	4	0	1:47	647.0
385	384	300	38880.0	TF_Cmd		B 1-10	TF BC	Contact	Two BRDMs west NJ489883.	2	1	0	1	0	0	1	0	1	4	0	1:48	648.0
386	385	350	38898.0	TF_Cmd	12	TF XO	TF BC	Internal trigger	Have the Main come to a short halt.	2	0	0	0	0	2	0	0	1	7	0	1:48	648.3
387	386	300	38910.0	BdeOI		2-10 BC	TF BC	Blue 2 abb	Beginning movement; lead company 70 north-south gridline.	2	1	0	1	0	0	0	0	0	8	0	1:48	648.5
388	387	800	38940.0	TF_Cmd		B 1-10	TF Cdr	Blue 1	Two BRDMs destroyed NJ489883.	0	3	0	1	0	0	1	0	1	4	0	1:49	649.0
389	388	380	38958.0	BdeOI		TF BC	Bde BC	Internal trigger	Two BRDMs destroyed NJ489883.	0	0	0	0	0	0	1	0	0	4	0	1:49	649.3
390	389	860	39060.0	TF_Cmd		TF Cdr	B 1-10	Internal trigger	Sweep area where BRDMs are destroyed.	0	0	0	0	0	0	1	0	1	6	0	1:51	651.0
391	390	400	39180.0	BdeAL		Bde S4	TF S4	Alert	TF fuel HEMTTs can receive not more than 1500 gallons due to 2-8 FA fuel requirements.	2	2	0	1	0	1	0	0	0	16	0	1:53	653.0
392	391	200	39240.0	TF_OI		Sct Plt	TF S2	Blue 2 abb	Have linked with 3-92 scouts at NJ480870.	2	1	0	1	0	0	0	0	0	7	0	1:54	654.0
393	392	300	39600.0	TF_Cmd		A 1-10	TF BC	Blue 2 abb	PL Kiwi, continuing mission.	2	1	0	1	0	0	1	0	1	4	0	2:00	660.0
394	393	300	39840.0	TF_Cmd		C 1-10	TF BC	Blue 2 abb	PL Kiwi, continuing mission	2	1	0	1	0	0	0	0	1	4	0	2:04	664.0
395	394	800	39876.0	TF_Cmd		B 1-10	TF Cdr	Blue 2 abb	Have swept area; it is clear.	0	0	0	0	0	0	0	0	1	5	0	2:04	664.6
396	395	300	40080.0	BdeOI		Bde BC	TF BC	Alert	1-22 moving ground troops to screen your northern flank.	2	1	0	1	0	0	0	0	1	9	0	2:08	668.0
397	396	300	40440.0	BdeOI		3-92 BC	TF BC	Blue 1	Contact BRDM NJ425847.	2	1	0	1	0	0	0	0	1	3	0	2:14	674.0
398	397	300	40620.0	TF_Cmd		B 1-10	TF BC	Blue 2 abb	PL Kiwi, continuing mission	2	1	0	1	0	0	0	0	1	4	0	2:17	677.0
399	398	300	40680.0	BdeOI		3-92 BC	TF BC	Blue 1	Movement at NJ427855.	2	1	0	1	0	0	0	0	1	3	0	2:18	678.0
400	399	300	40800.0	BdeOI		3-92 BC	TF BC	Blue 2 abb	PL Kiwi.	2	1	0	1	0	0	0	0	1	2	0	2:20	680.0
401	400	300	41100.0	BdeOI		Bde BC	TF BC	Alert	JTF Mojave FLOT cleared to our north along 60 north-south gridline.	2	1	0	1	0	0	0	0	1	12	0	2:25	685.0
402	401	300	41124.0	TF_Cmd		Tm EN	TF BC	Blue 2 abb	PL Kiwi, continuing mission	2	1	0	1	0	0	0	0	1	4	0	2:25	685.4
403	402	300	41700.0	TF_Cmd		Sct Plt	TF BC	Blue 2 abb	PL Daisy, nothing seen, continuing mission.	2	1	0	1	0	0	0	0	1	6	0	2:35	695.0
404	403	300	41712.0	BdeOI		Bde BC	TF BC	Blue 2 abb	1-22 reports PL Kiwi.	2	1	0	1	0	0	0	0	1	4	0	2:35	695.2
405	404	380	41724.0	TF_Cmd	29	TF BC	TF Cdr	Internal trigger	1-22 reports PL Kiwi.	0	1	0	1	0	0	0	0	1	4	0	2:35	695.4
406	405	300	42600.0	TF_Cmd		A 1-10	TF BC	Blue 2 abb	PL Daisy, continuing mission	2	1	0	1	0	0	0	0	1	4	0	2:50	710.0
407	406	600	42660.0	BdeFS		2-3 CP	TF FSE	Blue 2 abb	Batteries crossing PL Kiwi .	2	3	0	1	0	0	0	0	1	4	0	2:51	711.0
408	407	650	42678.0	AFATDS		Bde FSO	TF FSE	C400 Cdr Sit Rpt	Batteries crossing PL Kiwi .	0	0	0	0	0	0	0	0	1	4	4	2:51	711.3
409	408	300	42780.0	TF_Cmd		C 1-10	TF BC	Blue 2 abb	PL Daisy, continuing mission	2	1	0	1	0	0	0	0	1	4	0	2:53	713.0
410	409	300	42900.0	BdeOI		Bde BC	TF BC	Alert	1-22 has contact with BRDM at NJ501992.	2	1	0	1	0	0	0	0	1	7	0	2:55	715.0
411	410	380	42930.0	TF_Cmd	29	TF BC	TF Cdr	Internal trigger	1-22 has contact with BRDM at NJ501992.	0	1	0	1	0	0	0	0	1	7	0	2:55	715.5
412	411	300	43140.0	TF_Cmd		Sct Plt	TF BC	Blue 2 abb	PL Bran, nothing seen, continuing mission	2	1	0	1	0	0	0	0	1	6	0	2:59	719.0
413	412	300	43164.0	TF_Cmd		B 1-10	TF BC	Blue 2 abb	PL Daisy, continuing mission	2	1	0	1	0	0	0	0	1	4	0	2:59	719.4
414	413	400	43200.0	BdeAL		FSB Spt Ops	TF S4	Blue 2 abb	FSB crossing PL Berry.	2	1	0	1	0	0	0	0	1	4	0	3:00	720.0
415	414	400	43500.0	TF_AL		B 1SG	TF S4	Alert	Tank stuck in wadi at NJ402902, M88 recovering.	1	1	0	1	0	0	0	0	1	8	0	3:05	725.0
416	415	300	43560.0	TF_Cmd		B 1-10	TF BC	Blue 2 abb	Tank stuck in wadi at NJ402902, M88 recovering.	2	1	0	1	0	0	0	0	1	8	0	3:06	726.0
417	416	300	43740.0	TF_Cmd		Tm EN	TF BC	Blue 2 abb	PL Daisy, continuing mission	2	1	0	1	0	0	0	0	1	4	0	3:09	729.0
418	417	300	43860.0	BdeOI		Bde BC	TF BC	Blue 2 abb	1-22 reports PL Daisy.	2	1	0	1	0	0	0	0	1	4	0	3:11	731.0
419	418	380	43866.0	TF_Cmd	29	TF BC	TF Cdr	Internal trigger	1-22 reports PL Daisy.	0	1	0	1	0	0	0	0	1	4	0	3:11	731.1
420	419	200	43872.0	TF_OI		Sct Plt	TF S2	Blue 1	Two BRDMs at NJ273949 moving east.	2	3	0	1	0	0	1	0	1	6	0	3:11	731.2

	A	B	C	D	E	F	G	H	I	J	K	L	M	N	O	P	Q	R	S	T	U	V
1	Msg Number	Start	H+ Time Seconds	Net	Interrupt	From	To	Message Type	Text	Pass	Scan	Route	Update	EI	SH	Send	Enter	OTM	Word	Digital	Time	H+ Time Minutes
421	420	300	43884.0	TF_Cmd		Sct Plt	TF BC	Blue 1	Two BRDMs at NJ273949 moving east.	2	1	0	1	0	0	0	0	1	6	0	3:11	731.4
422	421	200	44100.0	BdeOI		3-92 S2	TF S2	Blue 2 abb	3-92 Scouts at PL Bran.	2	1	0	1	0	0	0	0	1	4	0	3:15	735.0
423	422	200	44460.0	TF_OI		Sct Plt	TF S2	Blue 1	Two BRDMs moving east-southeast at NJ239954.	2	1	0	1	0	0	0	0	1	7	0	3:21	741.0
424	423	200	44520.0	TF_OI		Sct Plt	TF S2	Blue 1	BRDM at NJ298957.	2	1	0	1	0	0	0	0	1	3	0	3:22	742.0
425	424	200	44544.0	BdeOI		3-92 S2	TF S2	Blue 1	3-92 scouts identifying enemy scouts at NJ245885 and NJ186796 moving east.	2	3	0	1	0	0	0	0	1	12	0	3:22	742.4
426	425	300	44568.0	TF_Cmd		Sct Plt	TF BC	Blue 1	BRDM at NJ298957.	2	1	0	1	0	0	0	0	1	3	0	3:22	742.8
427	426	860	44580.0	TF_Cmd		TF Cdr	A, B, C, Sct Plt	Internal trigger	Guidons, we're probably picking up scouts of a reinforced battalion. Be prepared to establish ABF or act as flanking element. A and B continue movement and set short of Plum. C move north of hill at NJ2695. Scouts, look for the main body following enemy scouts.	0	0	0	0	0	0	1	0	1	46	0	3:23	743.0
428	427	300	45000.0	TF_Cmd		B 1-10	TF BC	Blue 2 abb	Tank is recovered.	1	2	0	1	0	0	0	0	1	3	0	3:30	750.0
429	428	400	45012.0	TF_AL		B 1SG	TF S4	Alert	Tank is recovered.	1	2	0	1	0	0	0	0	1	3	0	3:30	750.2
430	429	300	45036.0	TF_Cmd		A 1-10	TF BC	Blue 2 abb	PL Bran, nothing seen, continuing mission	2	1	0	1	0	0	1	0	1	6	0	3:30	750.6
431	430	300	45180.0	TF_Cmd		C 1-10	TF BC	Blue 2 abb	PL Bran, nothing seen, continuing mission	2	1	0	1	0	0	0	0	1	6	0	3:33	753.0
432	431	200	45240.0	TF_OI		Sct Plt	TF S2	Contact	Tracked vehicles west, NJ232968.	2	1	0	1	0	0	0	0	1	4	0	3:34	754.0
433	432	300	45252.0	TF_Cmd		Sct Plt	TF BC	Contact	Tracked vehicles west, NJ232968.	2	1	0	1	0	0	0	0	1	4	0	3:34	754.2
434	433	300	45270.0	TF_Cmd		B 1-10	TF BC	Blue 2 abb	PL Bran, nothing seen, continuing mission	2	1	0	1	0	0	0	0	1	6	0	3:34	754.5
435	434	300	45300.0	BdeOI		Bde BC	TF BC	Blue 2 abb	1-22 Cav reports valley south of Tiefort Mountain is clear. Lead troop PL Bran.	2	1	0	1	0	0	0	0	1	14	0	3:35	755.0
436	435	600	45336.0	TF_FS		Mtr Plt	TF FSE	Blue 2 abb	PL Bran.	2	1	0	1	0	0	0	0	1	6	0	3:35	755.6
437	436	300	45360.0	TF_Cmd		Tm EN	TF BC	Blue 2 abb	PL Bran, continuing mission	2	1	0	1	0	0	0	0	1	6	0	3:36	756.0
438	437	600	45378.0	BdeFS		Bde FSO	TF FSE	Blue 2 abb	Batteries crossing PL Daisy.	2	1	0	1	0	0	0	0	1	4	0	3:36	756.3
439	438	650	45390.0	AFATDS		Bde FSO	TF FSE	C400 Cdr Sit Rpt	Batteries crossing PL Daisy.	0	0	0	0	0	0	0	0	1	4	4	3:36	756.5
440	439	300	45420.0	BdeOI		3-92 BC	TF BC	Blue 2 abb	3-92 identifying two enemy companies at NJ200855 and NJ165800.	2	3	0	1	0	0	0	0	1	9	0	3:37	757.0
441	440	380	45450.0	TF_Cmd	29	TF BC	TF Cdr	Internal trigger	3-92 has identified two enemy companies at NJ200855 and NJ165800.	0	1	0	1	0	0	0	0	1	9	0	3:37	757.5
442	441	280	45540.0	TF_Cmd	29	TF S2	TF Cdr	Internal trigger	Believe we will make contact with the third enemy company from a forward detachment in the next 5-10 minutes.	0	1	0	0	2	0	1	0	1	20	0	3:39	759.0
443	442	200	45660.0	TF_OI		Sct Plt	TF S2	Blue 2 abb	PL Plum, nothing seen, continuing mission	2	1	0	1	0	0	0	0	1	6	0	3:41	761.0
444	443	300	45684.0	TF_Cmd		Sct Plt	TF BC	Blue 2 abb	PL Plum, nothing seen, continuing mission	2	1	0	1	0	0	0	0	1	6	0	3:41	761.4
445	444	300	45780.0	TF_Cmd		Sct Plt	TF BC	Blue 1	Nine MTIs moving southeast on road at NJ185945.	2	1	0	1	0	0	0	0	1	8	0	3:43	763.0
446	445	200	45798.0	TF_OI		Sct Plt	TF S2	Blue 1	Nine MTIs moving southeast on road at NJ185945.	2	1	0	1	0	0	1	0	1	8	0	3:43	763.3
447	446	860	45822.0	TF_Cmd		TF Cdr	A, B, C, EN, Sct Plt, Mtr Plt	Internal trigger	Scouts, go to ground, keep eyes on enemy. A occupy SBF at NJ260955. B occupy SBF at NJ249925. C maneuver to southwest along Plum, hit enemy flank; do not move south of 96 east-west gridline. Mortars, establish fire position road junction NJ283933. Engineers, move at NJ303937, TF reserve.	0	0	0	0	0	0	1	0	1	49	0	3:43	763.7
448	447	350	45882.0	TF_Cmd	12	TF XO	TF BC	Internal trigger	Have the Main CP stop.	0	0	0	0	0	0	0	0	1	8	0	3:44	764.7
449	448	960	45906.0	BdeCmd		TF S3	Bde Cdr	Internal trigger	Scouts have identified enemy company at NJ185945 moving east. We're establishing SBFs at NJ260955 and NJ249925 with two companies. Third company moving northeast to southwest along Plum to flank.	0	0	0	0	0	0	1	0	1	29	0	3:45	765.1

	A	B	C	D	E	F	G	H	I	J	K	L	M	N	O	P	Q	R	S	T	U	V
1	Msg Number	Start	H+ Time Seconds	Net	Interrupt	From	To	Message Type	Text	Pass	Scan	Route	Update	EI	SH	Send	Enter	OTM	Word	Digital	Time	H+ Time Minutes
450	449	200	46020.0	TF_OI		Sct Plt	TF S2	Blue 1	Nine MTIs identified as B TRs and T-80s; stopped on road at NJ200945.	2	3	0	1	0	2	1	0	0	12	0	3:47	767.0
451	450	800	46050.0	TF_Cmd		Sct Plt	TF Cdr	Blue 1	Nine MTIs identified as B TRs and T-80s; stopped on road at NJ200945.	0	1	0	1	0	0	0	0	0	12	0	3:47	767.5
452	451	600	46080.0	BdeFS		2-3 CP	TF FSE	Blue 2 abb	2-3 batteries ready to fire in five minutes; 2-8 batteries ready in 12.	2	2	1	1	0	0	0	0	0	13	0	3:48	768.0
453	452	650	46098.0	AFA TDS		Bde FSO	TF FSE	C400 Cdr Sit Rpt	2-3 batteries ready to fire in five minutes; 2-8 batteries ready in 12.	0	0	0	0	0	0	0	0	0	13	2	3:48	768.3
454	453	300	46140.0	BdeOI		3-92 BC	TF BC	Alert	3-92 in contact with two enemy company-sized units at NJ235844 and NJ202788.	2	1	1	1	0	0	1	0	0	13	0	3:49	769.0
455	454	380	46188.0	TF_Cmd	29	TF BC	TF Cdr	Internal trigger	3-92 in contact with two enemy company-sized units at NJ235844 and NJ202788.	0	1	0	0	0	0	0	0	0	13	0	3:49	769.8
456	455	600	46500.0	TF_FS		Mtr Plt	TF FSE	Blue 2 abb	Ready to fire at NJ283933.	2	1	1	1	0	0	0	0	0	5	0	3:55	775.0
457	456	200	46620.0	TF_OI		Sct Plt	TF S2	Blue 1	Previously reported B TRs and T-80s starting to move slowly east.	2	1	1	1	0	0	0	0	0	10	0	3:57	777.0
458	457	800	46638.0	TF_Cmd		Sct Plt	TF Cdr	Blue 1	Previously reported B TRs and T-80s starting to move slowly east.	0	1	0	1	0	0	1	0	0	10	0	3:57	777.3
459	458	200	46920.0	TF_OI		Sct Plt	TF S2	Blue 1	Previously reported B TRs and T-80s crossing Plum at NJ228946 in battle formation.	2	3	1	1	0	0	0	0	0	12	0	4:02	782.0
460	459	800	46944.0	TF_Cmd		Sct Plt	TF Cdr	Blue 1	Previously reported B TRs and T-80s crossing Plum at NJ228946 in battle formation.	0	1	0	1	0	0	0	0	0	12	0	4:02	782.4
461	460	800	46980.0	TF_Cmd		B 1-10	TF Cdr	Blue 2 abb	Set in SBF; can identify enemy	0	1	0	1	0	0	1	0	0	6	0	4:03	783.0
462	461	800	47040.0	TF_Cmd		A 1-10	TF Cdr	Blue 2 abb	Set in SBF; can identify enemy	0	1	0	1	0	0	0	0	0	6	0	4:04	784.0
463	462	600	47100.0	TF_FD		B FIST	TF FSE	Fires	Fire mission NJ234943, three tanks, seven B TRs moving east, HE quick at my command.	2	3	0	1	0	0	1	0	0	14	0	4:05	785.0
464	463	800	47160.0	TF_Cmd		B 1-10	TF Cdr	Blue 1	Two T-80s destroyed at NJ237940.	0	1	0	1	0	0	0	0	0	5	0	4:06	786.0
465	464	800	47196.0	TF_Cmd		A 1-10	TF Cdr	Blue 1	Two B TRs destroyed at NJ238947.	0	1	0	1	0	0	0	0	0	5	0	4:06	786.6
466	465	600	47220.0	TF_FD		B FIST	TF FSE	Fires	Drop 100, right 50, fire for effect.	2	0	0	1	0	0	0	0	0	7	0	4:07	787.0
467	466	800	47226.0	TF_Cmd		C 1-10	TF Cdr	Blue 2 abb	Current position NJ250980.	0	1	0	1	0	0	1	0	0	3	0	4:07	787.1
468	467	380	47262.0	BdeOI		TF BC	Bde BC	Internal trigger	Engaging T-80s and B TRs at NJ237940 and NJ238947.	0	0	0	0	0	0	1	0	0	7	0	4:07	787.7
469	468	600	47280.0	TF_FD		B FIST	TF FSE	Fires	Repeat.	2	0	0	1	0	0	0	0	0	1	0	4:08	788.0
470	469	300	47340.0	BdeOI		Bde BC	TF BC	Blue 2 abb	1-22 reports Plum; no enemy encountered.	2	1	1	1	0	0	0	0	0	6	0	4:09	789.0
471	470	860	47400.0	TF_Cmd		TF Cdr	C 1-10	Internal trigger	C assault enemy flank, do not cross south of 96 east-west gridline; A and B make sure you have positive ID before engaging enemy.	0	0	0	0	0	0	1	0	0	25	0	4:10	790.0
472	471	860	47442.0	TF_Cmd	21	TF Cdr	TF FSE	Internal trigger	Hold all fire.	2	0	0	0	0	0	1	0	0	3	0	4:10	790.7
473	472	600	47454.0	TF_FD		Mtr Plt	TF FSE	Fires	End of mission.	2	3	0	1	0	0	0	0	0	3	0	4:10	790.9
474	473	300	47460.0	TF_Cmd		A 1-10	TF BC	Blue 1	Indirect fire on my position	2	1	1	1	0	0	0	0	0	5	0	4:11	791.0
475	474	800	47520.0	TF_Cmd		C 1-10	TF Cdr	Blue 1	One tank and two B TRs destroyed at NJ227955.	0	1	0	1	0	0	0	0	0	8	0	4:12	792.0
476	475	200	47640.0	TF_OI		Sct Plt	TF S2	Blue 1	Three tracked vehicles withdrawing to the northwest NJ219968.	2	3	1	1	0	0	0	0	0	10	0	4:14	794.0
477	476	380	47700.0	TF_Cmd	29	TF BC	TF Cdr	Internal trigger	1-22 at Plum, no enemy encountered.	0	1	0	1	0	0	0	0	0	6	0	4:15	795.0
478	477	800	47742.0	TF_Cmd		C 1-10	TF Cdr	Blue 2 abb	One BFV was hit, two KIA, four WIA.	0	3	0	1	0	0	0	0	0	8	0	4:15	795.7
479	478	100	47760.0	TF_AL		A 1SG	TF S1	Red 2	One WIA, medics are treating.	2	2	0	1	0	0	0	0	0	5	0	4:16	796.0
480	479	300	47820.0	TF_Cmd		C 1-10	TF BC	EPW rpt	Two EPWs captured at NJ232975.	2	1	1	0	0	0	1	0	0	5	0	4:17	797.0
481	480	300	47838.0	BdeOI		3-92 BC	TF BC	Blue 2 abb	3-92 continuing to engage two enemy companies, receiving heavy indirect fire.	2	1	0	1	0	0	0	0	0	11	0	4:17	797.3

	A	B	C	D	E	F	G	H	I	J	K	L	M	N	O	P	Q	R	S	T	U	V
1	Msg Number	Start	H+ Time Seconds	Net	Interrupt	From	To	Message Type	Text	Pass	Scan	Route	Update	EI	SH	Send	Enter	OTM	Word	Digital	Time	H+ Time Minutes
482	481	860	47862.0	TF_Cmd		TF Cdr	A, B, C	Internal trigger	Give me your SITREP.	0	0	0	0	0	0	1	0	0	4	0	4:17	797.7
483	482	800	47880.0	TF_Cmd		A 1-10	TF Cdr	Blue 2 abb	Green; 10/4/1, one WIA.	0	2	0	1	0	0	0	0	0	6	0	4:18	798.0
484	483	800	47916.0	TF_Cmd		B 1-10	TF Cdr	Blue 2 abb	Green; 10/0/1.	0	2	0	1	0	0	0	0	0	4	0	4:18	798.6
485	484	800	47940.0	TF_Cmd		C 1-10	TF Cdr	Blue 2 abb	Green; 4/9/1; two KIA, four WIA.	0	2	0	1	0	0	0	0	0	8	0	4:19	799.0
486	485	800	47964.0	TF_Cmd		Tm EN	TF Cdr	Blue 2 abb	Green.	0	2	0	1	0	0	0	0	0	1	0	4:19	799.4
487	486	100	48240.0	TF_AL		C 1SG	TF S1	Red 2	Two KIA, four WIA, medics are treating.	2	2	0	1	0	0	0	0	0	7	0	4:24	804.0
488	487	400	48264.0	TF_AL		C 1SG	TF S4	Yellow 1	One BFV destroyed.	2	2	0	1	0	0	0	0	0	3	0	4:24	804.4
489	488	380	48300.0	BdeOI		TF B C	Bde BC	Internal trigger	Green; 30/13/3; one BFV destroyed; two KIA, 5 WIA. Defeated enemy company, three enemy vehicles withdrawing to northwest. Captured two EPWs.	0	0	0	0	0	0	1	0	0	23	0	4:25	805.0
490	489	100	48360.0	TF_AL		C 1SG	TF S1	EPW rpt	Have two EPWs, moving them to your location	2	2	0	1	0	0	0	0	0	9	0	4:26	806.0
491	490	200	48600.0	BdeOI		Bde S2	TF S2	Green 1	1st Bde engaging battalion-sized Forward Detachment. Lead enemy brigade no less than four hours from PL Crow. We can expect no more than one enemy brigade in our zone. Enemy 231 MRD main effort in 3d Bde zone. JTF Mojave encountering isolated motorized enemy vicinity NK3517.	2	4	1	1	0	2	1	0	0	49	0	4:30	810.0
492	491	100	48648.0	BdeAL		Bde S4	TF S1	Alert	EPW collection point at NJ486875.	1	2	0	1	0	0	1	0	0	5	0	4:30	810.8
493	492	820	48720.0	BdeCmd		Bde Cdr	TF Cdr	Order	Hold current position. Consolidate. Wait for 3-92 to finish fight. Anticipate moving at 0500	0	1	0	0	0	0	0	0	0	14	0	4:32	812.0
494	493	860	48750.0	BdeCmd		TF Cdr	Bde Cdr	Internal trigger	Request to move my scouts out to 20 north-south gridline.	0	0	0	0	0	0	1	0	0	11	0	4:32	812.5
495	494	960	49020.0	TF_Cmd	29	TF S3	TF Cdr	Internal trigger	Recommend we call Bde and request 1-22 move to PL Rose to screen our north.	0	1	0	0	0	0	1	0	0	12	0	4:37	817.0
496	495	960	49080.0	BdeCmd		TF S3	Bde S3	Internal trigger	Request you call Division and have 1-22 move to Rose to screen our north.												4:38	818.0
497	496	300	49260.0	BdeOI		3-92 BC	TF B C	Blue 2 abb	3-92 reports enemy companies defeated and withdrawing to the west.	2	1	1	1	0	0	1	0	0	10	0	4:41	821.0
498	497	800	49320.0	TF_Cmd		TF B C	TF Cdr	Blue 2 abb	Enemy in 3-92 zone defeated and withdrawing to the west.	0	1	0	1	0	0	0	0	0	10	0	4:42	822.0
499	498	300	49680.0	BdeOI		Bde B C	TF B C	Alert	1-22 extending screen to PL Rose.	2	1	1	1	0	0	0	0	0	6	0	4:48	828.0
500	499	380	49698.0	TF_Cmd	29	TF B C	TF Cdr	Internal trigger	1-22 extending screen to PL Rose.	0	1	0	1	0	0	0	0	0	6	0	4:48	828.3
501	500	820	49800.0	BdeCmd		Bde Cdr	TF Cdr	Order	Resume movement at 0500.	0	1	0	0	0	0	0	0	0	4	0	4:50	830.0
502	501	860	49920.0	TF_Cmd		TF Cdr	A, B, C, Tm EN	Internal trigger	Report REDCON.	0	0	0	0	0	0	1	0	0	2	0	4:52	832.0
503	502	300	49938.0	TF_Cmd		A 1-10	TF B C	Alert	REDCON 1.	0	2	0	1	0	0	0	0	0	2	0	4:52	832.3
504	503	300	49956.0	TF_Cmd		B 1-10	TF B C	Alert	REDCON 1.	0	2	0	1	0	0	0	0	0	2	0	4:52	832.6
505	504	300	49968.0	TF_Cmd		C 1-10	TF B C	Alert	REDCON 1.	0	2	0	1	0	0	0	0	0	2	0	4:52	832.8
506	505	300	49980.0	TF_Cmd		Tm EN	TF B C	Alert	REDCON 1.	0	2	0	1	0	0	1	0	0	2	0	4:53	833.0
507	506	400	50400.0	BdeAL		FSB Spt Ops	TF S4	Blue 2 abb	FSB crossing PL Kiwi.	1	1	0	1	0	0	1	0	0	4	0	5:00	840.0
508	507	860	50424.0	TF_Cmd		TF Cdr	A, B, C, EN	Internal trigger	Begin movement, reform TF diamond.	0	0	0	0	0	0	1	0	0	5	0	5:00	840.4
509	508	300	51000.0	TF_Cmd		A 1-10	TF B C	Blue 2 abb	PL Plum, nothing seen, continuing mission	2	1	0	1	0	0	1	0	1	6	0	5:10	850.0
510	509	600	51120.0	TF_FS		Mtr Plt	TF FSE	Blue 2 abb	PL Plum, continuing mission	2	1	0	1	0	0	0	0	1	4	0	5:12	852.0
511	510	300	51180.0	BdeOI		3-92 BC	TF B C	Blue 2 abb	3-92 crossing Plum.	2	1	0	1	0	0	1	0	1	4	0	5:13	853.0
512	511	800	51198.0	TF_Cmd		TF B C	TF Cdr	Blue 2 abb	3-92 crossing Plum.	0	1	0	1	0	0	0	0	1	4	0	5:13	853.3
513	512	300	51240.0	TF_Cmd		B 1-10	TF B C	Blue 2 abb	PL Plum, nothing seen, continuing mission	2	1	0	1	0	0	0	0	1	6	0	5:14	854.0

	A	B	C	D	E	F	G	H	I	J	K	L	M	N	O	P	Q	R	S	T	U	V
1	Msg Number	Start	H+ Time Seconds	Net	Interrupt	From	To	Message Type	Text	Pass	Scan	Route	Update	EI	SH	Send	Enter	OTM	Word	Digital	Time	H+ Time Minutes
514	513	300	51300.0	TF_Cmd		C 1-10	TF BC	Blue 2 abb	PL Plum, nothing seen, continuing mission	2	1	0	1	0	0	0	0	1	6	0	5:15	855.0
515	514	600	51360.0	BdeFS		2-3 CP	TF FSE	Blue 2 abb	Lead batteries starting to cross Bran.	2	1	0	1	0	0	0	0	1	6	0	5:16	856.0
516	515	650	51402.0	AFA TDS		Bde FSO	TF FSE	C400 Cdr Sit Rpt	2-3 batteries starting to cross Bran.	0	0	0	0	0	0	0	0	1	6	4	5:16	856.7
517	516	300	51720.0	TF_Cmd		Tm EN	TF BC	Blue 2 abb	PL Plum, continuing mission	2	1	0	1	0	0	0	0	1	4	0	5:22	862.0
518	517	300	51780.0	TF_Cmd		TF S4	TF BC	Blue 2 abb	PL Bran, continuing mission	2	1	0	1	0	0	0	0	1	4	0	5:23	863.0
519	518	300	51840.0	BdeOI		3-92 BC	TF BC	Blue 2 abb	3-92 at PL Plum.	2	1	0	1	0	0	0	0	1	4	0	5:24	864.0
520	519	300	51900.0	BdeOI		2-10 BC	TF BC	Blue 2 abb	2-10 crossing PL Bran.	2	1	0	1	0	0	0	0	1	4	0	5:25	865.0
521	520	380	51924.0	TF_Cmd	29	TF BC	TF Cdr	Internal trigger	2-10 crossing PL Bran.	0	1	0	1	0	0	0	0	1	4	0	5:25	865.4
522	521	200	51960.0	TF_OI		Sct Plt	TF S2	Blue 2 abb	PL Rose, nothing seen; have linked with 1-22 at NK178004.	2	1	0	1	0	0	0	0	1	11	0	5:26	866.0
523	522	300	51990.0	TF_Cmd		Sct Plt	TF BC	Blue 2 abb	PL Rose, nothing seen; have linked with 1-22 at NK178004.	2	1	0	1	0	0	0	0	1	11	0	5:26	866.5
524	523	300	52440.0	BdeOI		Bde BC	TF BC	Blue 1	Two to three possible enemy vehicles identified by 1-22 Air Troop at NJ134996.	2	1	0	1	0	0	0	0	1	13	0	5:34	874.0
525	524	300	52476.0	BdeOI		3-92 BC	TF BC	Blue 2 abb	3-92 in contact with enemy platoon at NJ122852.	2	1	0	1	0	0	0	0	1	8	0	5:34	874.6
526	525	300	52500.0	TF_Cmd		A 1-10	TF BC	Blue 2 abb	PL Rose, nothing seen, continuing mission	2	1	0	1	0	0	0	0	1	6	0	5:35	875.0
527	526	380	52518.0	TF_Cmd	29	TF BC	TF Cdr	Internal trigger	Two to three possible enemy vehicles identified by 1-22 Air Troop at NJ134996.	0	1	0	1	0	0	0	0	1	13	0	5:35	875.3
528	527	300	52542.0	TF_Cmd		C 1-10	TF BC	Blue 2 abb	PL Rose, nothing seen, continuing mission	2	1	0	1	0	0	0	0	1	6	0	5:35	875.7
529	528	800	52620.0	TF_Cmd		Sct Plt	TF Cdr	Blue 1	Two tracked vehicles moving east at NJ108955.	0	1	0	1	0	0	0	0	1	7	0	5:37	877.0
530	529	200	52632.0	TF_OI		Sct Plt	TF S2	Blue 1	Two tracked vehicles moving east at NJ108955.	2	3	0	1	0	0	1	0	1	7	0	5:37	877.2
531	530	300	52740.0	TF_Cmd		B 1-10	TF BC	Blue 2 abb	PL Rose, nothing seen, continuing mission	2	1	0	1	0	0	0	0	1	6	0	5:39	879.0
532	531	800	52752.0	TF_Cmd		Sct Plt	TF Cdr	Blue 1	The two vehicles at NJ108955 are now moving northwest.	0	0	0	1	0	0	0	0	1	9	0	5:39	879.2
533	532	200	52770.0	TF_OI		Sct Plt	TF S2	Blue 1	The two vehicles at NJ108955 are now moving northwest.	2	1	0	1	0	0	1	0	1	9	0	5:39	879.5
534	533	800	53160.0	TF_Cmd		Sct Plt	TF Cdr	Blue 1	Three tracked vehicles moving northwest on road at NJ120015.	0	1	0	1	0	0	0	0	1	9	0	5:46	886.0
535	534	200	53178.0	TF_OI		Sct Plt	TF S2	Blue 1	Three tracked vehicles moving northwest on road at NJ120015.	2	1	0	1	0	0	1	0	1	9	0	5:46	886.3
536	535	380	53202.0	TF_Cmd	29	TF BC	TF Cdr	Internal trigger	1-22 Cav has identified same vehicles scouts have ID'ed. They will engage.	0	1	0	0	0	0	0	0	1	12	0	5:46	886.7
537	536	300	53220.0	TF_Cmd		Tm EN	TF BC	Blue 2 abb	PL Rose, nothing seen, continuing mission.	2	1	0	1	0	0	0	0	1	6	0	5:47	887.0
538	537	280	53245.0	TF_Cmd	29	TF S2	TF Cdr	Internal trigger	Vehicles identified by scouts probably enemy brigade recon patrol.	0	1	0	1	0	0	0	0	1	9	0	5:47	887.4
539	538	280	53340.0	BdeOI		TF S2	Bde S2	Internal trigger	Believe enemy brigade recon patrol operating along 11 north-south gridline in our zone	0	0	0	0	0	0	1	0	1	15	0	5:49	889.0
540	539	450	53400.0	TF_Cmd	12	TF S4	TF BC	Internal trigger	PL Rose, continuing mission.	2	1	0	1	0	0	0	0	1	4	0	5:50	890.0
541	540	800	53412.0	TF_Cmd		Sct Plt	TF Cdr	Blue 2 abb	PL Barley, lost contact with enemy vehicles in south.	0	1	0	0	0	0	0	0	1	9	10	5:50	890.2
542	541	300	53430.0	BdeOI		Bde BC	TF BC	Blue 2 abb	1-22 at PL Barley.	2	1	0	1	0	0	0	0	1	4	0	5:50	890.5
543	542	380	53436.0	TF_Cmd	29	TF BC	TF Cdr	Internal trigger	1-22 at PL Barley.	0	1	0	1	0	0	0	0	1	4	0	5:50	890.6
544	543	200	53442.0	TF_OI		Sct Plt	TF S2	Blue 2 abb	PL Barley, lost contact with enemy vehicles in south.	2	1	0	1	0	0	0	0	1	9	0	5:50	890.7
545	544	300	53520.0	BdeOI		3-92 BC	TF BC	Blue 2 abb	3-92 has destroyed enemy platoon at NJ112882.	2	1	0	1	0	0	0	0	1	7	0	5:52	892.0
546	545	800	53544.0	TF_Cmd		Sct Plt	TF Cdr	Blue 1	Have reacquired two enemy vehicles at NJ079994.	0	1	0	1	0	0	0	0	1	7	0	5:52	892.4
547	546	200	53562.0	TF_OI		Sct Plt	TF S2	Blue 1	Have reacquired two enemy vehicles at NJ079994.	2	1	0	1	0	0	0	0	1	7	0	5:52	892.7
548	547	350	53580.0	TF_Cmd	12	TF XO	TF BC	Internal trigger	Have the Main come to a short halt.	0	0	0	0	0	0	0	0	1	8	0	5:53	893.0
549	548	300	53622.0	BdeOI		Bde BC	TF BC	Alert	1-22 destroyed two enemy vehicles at NK102045.	2	1	1	1	0	0	0	0	0	7	0	5:53	893.7

	A	B	C	D	E	F	G	H	I	J	K	L	M	N	O	P	Q	R	S	T	U	V
1	Msg Number	Start	H+ Time Seconds	Net	Interrupt	From	To	Message Type	Text	Pass	Scan	Route	Update	EI	SH	Send	Enter	OTM	Word	Digital	Time	H+ Time Minutes
550	549	860	53640.0	TF_Cmd		TF Cdr	Sct Plt, A, B, C	Internal trigger	Scouts, keep eyes on but bypass to north, get up on Gold; B move to destroy enemy at NJ079994, A occupy SBF at NJ104974; C occupy SBF at NJ105988. Engineers TF reserve NJ127976.	0	1	0	0	0	0	1	0	0	33	0	5:54	894.0
551	550	600	53700.0	BdeFS		2-3 CP	TF FSE	Blue 2 abb	Lead batteries starting to cross Plum.	2	1	0	1	0	0	0	0	0	6	0	5:55	895.0
552	551	650	53718.0	AFA TDS		Bde FSO	TF FSE	C400 Cdr Sit Rpt	2-3 batteries starting to cross Plum.	0	0	0	0	0	0	0	0	0	0	4	5:55	895.3
553	552	300	53724.0	TF_Cmd		A 1-10	TF BC	Blue 2 abb	PL Barley, continuing mission.	2	1	0	1	0	0	1	0	0	4	0	5:55	895.4
554	553	300	53880.0	TF_Cmd		B 1-10	TF BC	Blue 2 abb	PL Barley, continuing mission.	2	1	0	1	0	0	0	0	0	4	0	5:58	898.0
555	554	300	53940.0	TF_Cmd		C 1-10	TF BC	Blue 2 abb	PL Barley, continuing mission.	2	1	0	1	0	0	0	0	0	4	0	5:59	899.0
556	555	300	53982.0	TF_Cmd		A 1-10	TF BC	Blue 2 abb	Set in SBF.	2	1	0	1	0	0	0	0	0	3	0	5:59	899.7
557	556	200	54000.0	BdeOI		Bde S2	TF S2	Green 3	Clear day, high of 85, no rain.	1	2	1	1	0	0	0	0	0	7	0	6:00	900.0
558	557	300	54180.0	TF_Cmd		C 1-10	TF BC	Blue 2 abb	Set in SBF.	2	1	0	1	0	0	0	0	0	3	0	6:03	903.0
559	558	300	54240.0	TF_Cmd		C 1-10	TF BC	Blue 1	Identifying five to eight dismounts at NJ084988	0	1	0	1	0	0	0	0	0	7	0	6:04	904.0
560	559	300	54270.0	TF_Cmd		B 1-10	TF BC	Contact	Contact, BRDMs, northwest.	0	1	0	1	0	0	1	0	0	3	0	6:04	904.5
561	560	800	54480.0	TF_Cmd		A 1-10	TF Cdr	Alert	Identifying B coming up on my left	0	1	0	1	2	0	0	0	0	7	0	6:08	908.0
562	561	800	54492.0	TF_Cmd		C 1-10	TF Cdr	Alert	Identify B also.	0	1	0	1	2	0	1	0	0	3	0	6:08	908.2
563	562	300	54540.0	BdeOI		2-10 BC	TF BC	Blue 2 abb	2-10 crossing PL Plum.	1	1	0	1	0	0	0	0	0	4	0	6:09	909.0
564	563	800	54600.0	TF_Cmd		B 1-10	TF Cdr	Blue 2 abb	On objective, two BRDMs destroyed at NJ079994, nine enemy soldiers surrendering.	0	1	0	1	0	0	1	0	0	11	0	6:10	910.0
565	564	380	54660.0	BdeOI		TF BC	Bde BC	Internal trigger	Two BRDMs destroyed at NJ079994. Nine enemy soldiers surrendering; TF continuing move to Gold	0	0	0	0	0	0	1	0	1	14	0	6:11	911.0
566	565	300	54720.0	BdeOI		3-92 BC	TF BC	Blue 2 abb	3-92 main body crossing PL Barley.	2	1	0	1	0	0	0	0	1	6	0	6:12	912.0
567	566	380	54756.0	TF_Cmd	29	TF BC	TF Cdr	Internal trigger	3-92 main body crossing PL Barley.	0	1	0	1	0	0	0	0	1	6	0	6:12	912.6
568	567	300	54840.0	BdeOI		2-10 BC	TF BC	Alert	2-10 is increasing rate of march.	2	1	0	0	0	0	0	0	1	6	0	6:14	914.0
569	568	300	54960.0	TF_Cmd		Sct Plt	TF BC	Blue 2 abb	Have clear Goldstone at NJ080059; deployed along 08 north-south gridline, continuing mission.	2	1	0	1	0	0	0	0	1	13	0	6:16	916.0
570	569	200	54984.0	TF_OI		Sct Plt	TF S2	Blue 2 abb	Have clear Goldstone at NJ080059; deployed along 08 north-south gridline, continuing mission.	2	1	0	1	0	0	1	0	1	13	0	6:16	916.4
571	570	300	55080.0	TF_Cmd		Tm EN	TF BC	Blue 2 abb	PL Barley.	2	1	0	1	0	0	0	0	1	2	0	6:18	918.0
572	571	860	55122.0	TF_Cmd		TF Cdr	Sct Plt	Internal trigger	Continue movement to Gold. Link with 1-22 in the north and 3-92 in the south.	0	0	0	0	0	0	1	0	0	15	0	6:18	918.7
573	572	300	55200.0	BdeCmd		Bde S3	TF S3	Alert	On-order boundary from Barley to Crow is in effect	0	1	0	1	0	0	0	0	1	10	0	6:20	920.0
574	573	400	55800.0	BdeAL		FSB Spt Ops	TF S4	Alert	FSB starting to set up vicinity NJ2493.	2	1	0	1	0	0	1	0	1	7	0	6:30	930.0
575	574	450	55830.0	TF_Cmd	12	TF S4	TF BC	Internal trigger	PL Barley.	2	1	0	1	0	0	0	0	1	2	0	6:30	930.5
576	575	300	56100.0	TF_Cmd		Sct Plt	TF BC	Blue 2 abb	Starting to enter Gold.	2	1	0	1	0	0	1	0	1	4	0	6:35	935.0
577	576	200	56112.0	TF_OI		Sct Plt	TF S2	Blue 2 abb	Starting to enter Gold.	2	1	0	1	0	0	1	0	1	4	0	6:35	935.2
578	577	300	56160.0	TF_Cmd		ADA OFF	TF BC	Alert	Radars report inbound fixed winged 35 kms out from the northwest. Should arrive within next five minutes.	2	1	0	1	0	0	1	0	1	17	0	6:36	936.0
579	578	860	56190.0	TF_Cmd		TF Cdr	A, B, C, EN, Mtr Plt, CTCP	Internal trigger	Radars report inbound fixed winged 35 kms out from the northwest. Should arrive within next five minutes. ADWCS if Red Free. Stop movement.	0	0	0	0	0	0	1	0	1	17	0	6:36	936.5
580	579	300	56280.0	TF_Cmd		ADA OFF	TF BC	Blue 2 abb	BSFVs stopped and deployed.	2	0	0	0	0	0	0	0	1	4	0	6:38	938.0
581	580	300	56340.0	TF_Cmd		Sct Plt	TF BC	Blue 1	Enemy fixed winged northwest	2	0	0	1	0	0	0	0	1	4	0	6:39	939.0
582	581	300	56400.0	TF_Cmd		ADA OFF	TF BC	Blue 1	Stinger 2 identifying inbound fixed winged, northwest.	2	0	0	0	0	0	0	0	1	7	0	6:40	940.0
583	582	300	56460.0	TF_Cmd		ADA OFF	TF BC	Blue 2 abb	One enemy fixed winged destroyed NJ055997, possible parachute.	2	1	0	1	0	0	1	0	1	8	0	6:41	941.0

	A	B	C	D	E	F	G	H	I	J	K	L	M	N	O	P	Q	R	S	T	U	V
1	Msg Number	Start	H+ Time Seconds	Net	Interrupt	From	To	Message Type	Text	Pass	Scan	Route	Update	EI	SH	Send	Enter	OTM	Word	Digital	Time	H+ Time Minutes
584	583	860	56520.0	TF_Cmd		TF Cdr	A, B, C, EN, Mtr Plt, CTCP	Internal trigger	Resume movement to Gold.	0	0	0	0	0	0	1	0	0	4	0	6:42	942.0
585	584	300	56700.0	BdeOI		2-10 BC	TF BC	Blue 2 abb	2-10 crossing Barley.	2	1	0	1	0	0	0	0	1	3	0	6:45	945.0
586	585	380	56712.0	TF_Cmd	29	TF B C	TF Cdr	Internal trigger	2-10 crossing Barley.	0	1	0	1	0	0	0	0	1	3	0	6:45	945.2
587	586	600	57120.0	BdeFS		2-3 CP	TF FSE	Blue 2 abb	Lead batteries starting to cross Barley.	2	1	0	1	0	0	0	0	0	6	0	6:52	952.0
588	587	650	57132.0	AFA TDS		Bde FSO	TF FSE	C400 Cdr Sit Rpt	2-3 batteries starting to cross Barley.	0	0	0	0	0	0	0	0	0	0	4	6:52	952.2
589	588	700	57540.0	BdeEN		ABE	EN OFF	Alert	Obstacle material due to arrive at Gold at 0900.	2	0	0	0	0	0	0	0	1	9	0	6:59	959.0
590	589	300	57600.0	TF_Cmd		Sct Plt	TF BC	Blue 2 abb	Gold clear of enemy.	2	1	0	1	0	0	0	0	1	4	0	7:00	960.0
591	590	200	57624.0	TF_OI		Sct Plt	TF S2	Blue 2 abb	Gold clear of enemy.	2	1	0	1	0	0	1	0	1	4	0	7:00	960.4
592	591	960	57660.0	BdeCmd		TF S3	Bde S3	Internal trigger	Scouts report Gold clear of enemy.	0	0	0	0	0	0	1	0	0	6	0	7:01	961.0
593	592	860	57840.0	TF_Cmd		TF Cdr	A, B, C, EN, Mtr Plt, CTCP	Internal trigger	Occupy assigned positions on Gold. Begin refuel, rearm operations ASAP.	0	0	0	0	0	0	1	0	0	10	0	7:04	964.0
594	593	200	58080.0	BdeOI		Bde S2	TF S2	Green 2	Enemy motorized brigade expected in our sector 1.5 to 2.5 hours. Enemy division effort expected to our south.	2	4	0	1	2	0	1	0	1	18	0	7:08	968.0
595	594	280	58140.0	TF_Cmd	29	TF S2	TF Cdr	Internal trigger	Enemy motorized brigade expected in our sector 1.5 to 2.5 hours. Enemy division effort expected to our south.	0	1	0	1	2	0	0	0	1	18	0	7:09	969.0
596	595	350	58320.0	TF_Cmd	29	TF XO		Internal trigger	The small valley at NK0114 needs engineer effort to prevent enemy lateral movement into our sector	0	0	0	0	0	0	1	0	1	7	0	7:12	972.0
597	596	300	58344.0	TF_Cmd		B 1-10	TF BC	Blue 2 abb	Pulling into Gold-B, starting to occupy	2	1	0	1	0	0	1	0	1	6	0	7:12	972.4
598	597	860	58368.0	TF_Cmd		TF Cdr	B, Tm EN	Internal trigger	Engineers, detach tank platoon back to B.	0	0	0	0	0	0	1	0	1	7	0	7:12	972.8
599	598	350	58440.0	TF_Cmd	29	TF XO	TF Cdr	Internal trigger	Recommend small valley at NK0114 for engineer effort to prevent enemy lateral movement into our sector.	0	1	0	0	0	0	1	0	1	16	0	7:14	974.0
600	599	300	58488.0	TF_Cmd		A 1-10	TF BC	Blue 2 abb	Pulling into Gold-A, starting to occupy	2	1	0	1	0	0	0	0	1	6	0	7:14	974.8
601	600	350	58500.0	TF_AL	16	TF XO	A, B, C, EN, HHC 1SGs	Internal trigger	Send in data for Yellow 2, 3, and 4.	0	0	0	0	0	0	1	0	0	9	0	7:15	975.0
602	601	400	58620.0	TF_AL		A 1SG	TF S4	Yellow 2	10, 4, 1	2	2	0	1	0	0	0	0	1	3	0	7:17	977.0
603	602	400	58740.0	TF_AL		A 1SG	TF S4	Yellow 3	4 Sabot., 4 HEAT, 25mm 850 HE	2	2	0	1	0	0	0	0	1	7	0	7:19	979.0
604	603	300	58800.0	BdeOI		Bde B C	TF BC	Blue 2 abb	3d Bde on OBJ Tiger.	2	1	0	1	0	0	0	0	1	5	0	7:20	980.0
605	604	400	58920.0	TF_AL		A 1SG	TF S4	Yellow 4	3400 diesel	2	2	0	1	0	0	0	0	1	2	0	7:22	982.0
606	605	300	58944.0	TF_Cmd		C 1-10	TF BC	Blue 2 abb	Pulling into Gold-C, starting to occupy	2	1	0	1	0	0	0	0	1	6	0	7:22	982.4
607	606	300	58962.0	BdeOI		3-92 BC	TF BC	Blue 2 abb	3-92 starting to occupy Silver.	2	1	0	1	0	0	1	0	1	5	0	7:22	982.7
608	607	600	59040.0	TF_FS		Mtr Plt	TF FSE	Blue 2 abb	Arrived at firing position, NK032072.	2	1	0	1	0	0	0	0	1	5	0	7:24	984.0
609	608	400	59082.0	TF_AL		B 1SG	TF S4	Yellow 2	10, 4, 1	2	2	0	1	0	0	0	0	1	3	0	7:24	984.7
610	609	400	59160.0	TF_AL		B 1SG	TF S4	Yellow 3	2 Sabot., 4 HEAT	2	2	0	1	0	0	0	0	1	4	0	7:26	986.0
611	610	300	59220.0	TF_Cmd		Tm EN	TF BC	Blue 2 abb	Pulling into Gold, starting priority of work to A	1	2	0	1	0	0	1	0	1	9	0	7:27	987.0
612	611	760	59244.0	BdeEN		EN OFF	ABE	Internal trigger	Pulling into Gold, starting priority of work	0	0	0	0	0	0	1	0	1	8	0	7:27	987.4
613	612	960	59280.0	TF_Cmd		TF S3	Sct Plt	Internal trigger	Deploy screen MK971095 to MK959075 to MK975053. Coordinate with 3-92 scouts at MK975053. Establish OP	0	0	0	0	0	0	1	0	0	17	0	7:28	988.0
614	613	400	59316.0	TF_AL		B 1SG	TF S4	Yellow 4	2500 diesel	2	2	0	1	0	0	0	0	1	2	0	7:28	988.6
615	614	300	59340.0	BdeOI		Bde B C	TF BC	Blue 2 abb	1-22 screen established from NK073111 to NK256006.	2	1	0	1	0	0	0	0	1	7	0	7:29	989.0
616	615	380	59364.0	TF_Cmd	29	TF B C	TF Cdr	Internal trigger	1-22 screen established from NK073111 to NK256006.	0	1	0	1	0	0	0	0	1	7	0	7:29	989.4

	A	B	C	D	E	F	G	H	I	J	K	L	M	N	O	P	Q	R	S	T	U	V
1	Msg Number	Start	H+ Time Seconds	Net	Interrupt	From	To	Message Type	Text	Pass	Scan	Route	Update	EI	SH	Send	Enter	OTM	Word	Digital	Time	H+ Time Minutes
617	616	400	59400.0	TF_AL		C 1SG	TF S4	Yellow 2	4, 9, 1	2	2	0	1	0	0	0	0	1	3	0	7:30	990.0
618	617	400	59520.0	TF_AL		C 1SG	TF S4	Yellow 3	4 Sabot., 4 HEAT, 25mm 1800 HE	2	2	0	1	0	0	1	0	1	7	0	7:32	992.0
619	618	350	59700.0	TF_Cmd	12	TF XO	A, B, C, EN, Mtr Plt, CTCP	Internal trigger	Main CP setting up at NK080059.	0	0	0	0	0	0	1	0	0	6	0	7:35	995.0
620	619	380	59760.0	BdeOI		TF B C	Bde BC	Internal trigger	Main CP setting up at NK080059.	0	0	0	0	0	0	1	0	0	6	0	7:36	996.0
621	620	400	59796.0	TF_AL		C 1SG	TF S4	Yellow 4	2800 diesel	2	2	0	1	0	0	0	0	0	2	0	7:36	996.6
622	621	400	59880.0	TF_AL		A 23 EN 1SG	TF S4	Yellow 2	4, all engineer equipment up.	2	2	0	1	0	0	0	1	0	5	0	7:38	998.0
623	622	760	59940.0	BdeEN		EN OFF	ABE	Internal trigger	Starting to put in Volcano minefield at NK009139	0	0	0	0	0	0	1	0	0	8	0	7:39	999.0
624	623	400	60000.0	TF_AL		A 23 EN 1SG	TF S4	Yellow 3	One MICLIC charge.	2	2	0	1	0	0	0	0	0	3	0	7:40	1000.0
625	624	600	60060.0	BdeFS		2-3 CP	TF FSE	Blue 2 abb	A Battery occupying into NK113031.	2	1	0	1	0	0	0	0	0	5	0	7:41	1001.0
626	625	650	60072.0	AFA TDS		Bde FSO	TF FSE	C400 Cdr Sit Rpt	A Battery occupying into NK113031.	0	0	0	0	0	0	0	0	0	0	4	7:41	1001.2
627	626	400	60120.0	TF_AL		A 23 EN 1SG	TF S4	Yellow 4	2400 diesel	2	2	0	1	0	0	0	0	0	2	0	7:42	1002.0
628	627	400	60240.0	TF_AL		HHC 1SG	TF S4	Yellow 2	All equipment up.	2	2	0	1	0	0	0	1	0	5	0	7:44	1004.0
629	628	860	60300.0	TF_OI		TF Cdr	Sct Plt	Internal trigger	Reminder to report any enemy activity in NAIs 17 and 18.	0	0	0	0	0	0	1	0	0	11	0	7:45	1005.0
630	629	400	60360.0	TF_AL		HHC 1SG	TF S4	Yellow 3	2 stingers, 36 mortar HE	2	2	0	1	0	0	1	0	0	5	0	7:46	1006.0
631	630	450	60420.0	TF_AL		TF S4	A, B, C, EN, Mtr Plt, CTCP	Internal trigger	CTCP setting up at NK079086.	0	0	0	0	0	0	1	0	0	5	0	7:47	1007.0
632	631	300	60480.0	TF_Cmd		Sct Plt	TF S3	Blue 2 abb	Screen established as directed. Contact has been made with 3-92 Scouts.	0	1	0	1	0	0	0	0	0	11	0	7:48	1008.0
633	632	200	60492.0	TF_OI		Sct Plt	TF S2	Blue 2 abb	Screen established as directed. Contact has been made with 3-92 Scouts.	2	1	0	1	0	0	1	0	0	11	0	7:48	1008.2
634	633	400	60522.0	TF_AL		HHC 1SG	TF S4	Yellow 4	3000 diesel.	2	2	0	1	0	0	0	0	0	2	0	7:48	1008.7
635	634	300	60900.0	BdeOI		2-10 BC	TF BC	Blue 2 abb	2-10 starting to occupy Zinc.	2	1	1	1	0	0	0	0	0	5	0	7:55	1015.0
636	635	760	60900.0	BdeEN		EN OFF	ABE	Internal trigger	Putting in volcano minefield at NK009139	0	0	0	0	0	0	1	0	0	6	0	7:55	1015.0
637	636	380	60918.0	TF_Cmd	29	TF B C	TF Cdr	Internal trigger	2-10 starting to occupy Zinc.	0	1	0	1	0	0	0	0	0	5	0	7:55	1015.3
638	637	600	60942.0	TF_FS		Mtr Plt	TF FSE	Blue 2 abb	Refuel complete, prepared to fire.	1	2	0	1	0	0	0	0	0	5	0	7:55	1015.7
639	638	300	61500.0	BdeOI		Bde B C	TF BC	Blue 2 abb	JTF Mojave establishing security zone from MK953328 to NK060380.	2	1	1	1	0	0	0	0	0	9	0	8:05	1025.0
640	639	380	61524.0	TF_Cmd	29	TF B C	TF Cdr	Internal trigger	JTF Mojave establishing security zone from MK953328 to NK060380.	0	1	0	1	0	0	0	0	0	9	0	8:05	1025.4
641	640	200	62100.0	BdeOI		Bde S2	TF S2	Green 2	Enemy battalion-sized element at MK7009, moving east, march formation. Forward elements estimated 15-20 kms ahead.	2	1	1	1	2	2	0	0	0	17	0	8:15	1035.0
642	641	280	62130.0	TF_Cmd	29	TF S2	TF Cdr	Internal trigger	Enemy battalion-sized element at MK7009, moving east, march formation. Forward elements estimated 15-20 kms ahead.	0	1	0	1	2	0	0	0	0	17	0	8:15	1035.5
643	642	300	62160.0	TF_Cmd		B 1-10	TF BC	Blue 2 abb	Rearm, refuel complete; 14, 0, 1.	1	2	0	1	0	0	0	0	0	6	0	8:16	1036.0
644	643	300	62340.0	TF_Cmd		A 1-10	TF BC	Blue 2 abb	Rearm, refuel complete; 10, 4, 1.	1	2	0	1	0	0	0	0	0	6	0	8:19	1039.0
645	644	300	62400.0	TF_Cmd		Tm EN	TF BC	Minefield	Volcano minefield in at NK009139.	2	1	1	1	0	0	0	0	0	5	0	8:20	1040.0
646	645	760	62460.0	BdeEN		EN OFF	ABE	Internal trigger	Volcano minefield in at NK009139	0	0	0	0	0	0	1	0	0	5	0	8:21	1041.0
647	646	300	62520.0	TF_Cmd		C 1-10	TF BC	Blue 2 abb	Rearm, refuel complete; 9, 4, 1.	1	2	0	1	0	0	0	0	0	6	0	8:22	1042.0

	A	B	C	D	E	F	G	H	I	J	K	L	M	N	O	P	Q	R	S	T	U	V
1	Msg Number	Start	H+ Time Seconds	Net	Interrupt	From	To	Message Type	Text	Pass	Scan	Route	Update	EI	SH	Send	Enter	OTM	Word	Digital	Time	H+ Time Minutes
648	647	300	62880.0	TF_Cmd		Sct Plt	TF BC	Blue 1	GSR identifying four MTIs at MK874106 heading east.	2	1	0	1	0	0	0	0	0	8	0	8:28	1048.0
649	648	200	62898.0	TF_OI		Sct Plt	TF S2	Blue 1	GSR identifying four MTIs at MK874106 heading east.	2	1	0	1	0	0	1	0	0	8	0	8:28	1048.3
650	649	860	62964.0	TF_Cmd		TF Cdr	Sct Plt	Internal trigger	Continue to track. Let me know any change of direction.	0	0	0	0	0	0	1	0	0	10	0	8:29	1049.4
651	650	300	63060.0	TF_Cmd		Tm EN	TF BC	Alert	Four hull down positions finished in A BP	1	2	0	0	0	0	0	0	0	7	0	8:31	1051.0
652	651	800	63180.0	TF_Cmd		Sct Plt	TF Cdr	Blue 1	The four MTIs are now at MK900103 continuing east along road.	0	1	0	1	0	0	0	0	0	11	0	8:33	1053.0
653	652	200	63204.0	TF_OI		Sct Plt	TF S2	Blue 1	The four MTIs are now at MK900103 continuing east along road.	2	1	0	1	0	0	1	0	0	11	0	8:33	1053.4
654	653	860	63300.0	TF_Cmd		TF Cdr	A, C	Internal trigger	Let me know when you can identify Scout's MTIs. If they continue to the north of our sector, I want one company volley fire to kill what is probably their CRP.	0	0	0	0	0	0	1	0	0	31	0	8:35	1055.0
655	654	300	63600.0	BdeOI		Bde BC	TF BC	Blue 2 abb	3-92 and 2-10 report nothing in their sectors.	0	0	0	0	0	0	0	0	0	8	0	8:40	1060.0
656	655	200	63660.0	TF_OI		Sct Plt	TF S2	Blue 1	MTIs identified as one T-80 and three BRDMs continuing east on road MK925107.	2	1	0	1	0	0	1	0	0	13	0	8:41	1061.0
657	656	800	63684.0	TF_Cmd		Sct Plt	TF Cdr	Blue 1	MTIs identified as one T-80 and three BRDMs continuing east on road MK925107.	0	1	0	1	0	0	0	0	0	13	0	8:41	1061.4
658	657	200	63900.0	TF_OI		Sct Plt	TF S2	Blue 1	Enemy vehicles leaving road moving east southeast, MK952109.	2	1	0	1	0	0	1	0	0	8	0	8:45	1065.0
659	658	800	63924.0	TF_Cmd		Sct Plt	TF Cdr	Blue 1	Enemy vehicles leaving road moving east southeast, MK952109.	0	1	0	1	0	0	0	0	0	8	0	8:45	1065.4
660	659	200	63960.0	TF_OI		Sct Plt	TF S2	Blue 1	GSR identifying eight MTIs at MK857106 moving east.	2	1	0	1	0	0	1	0	0	8	0	8:46	1066.0
661	660	800	63978.0	TF_Cmd		Sct Plt	TF Cdr	Blue 1	GSR identifying eight MTIs at MK857106 moving east.	0	1	0	1	0	0	0	0	0	8	0	8:46	1066.3
662	661	380	63990.0	BdeOI		TF BC	Bde BC	Internal trigger	GSR identifying eight MTIs at MK857106 moving east.	0	0	0	0	0	0	1	0	0	8	0	8:46	1066.5
663	662	960	64080.0	TF_Cmd		TF S3	Tm EN	Internal trigger	Shift priority of work to B.	0	0	0	0	0	0	1	0	0	6	0	8:48	1068.0
664	663	200	64140.0	TF_OI		Sct Plt	TF S2	Blue 1	Enemy vehicles moving south southeast on the road at MK961100.	2	1	0	1	0	0	1	0	0	10	0	8:49	1069.0
665	664	800	64164.0	TF_Cmd		Sct Plt	TF Cdr	Blue 1	Enemy vehicles moving south southeast on the road at MK961100.	0	1	0	1	0	0	0	0	0	10	0	8:49	1069.4
666	665	960	64200.0	TF_Cmd		TF S3	Sct Plt	Internal trigger	Move back scouts in southern portion of sector to withdraw to Gold. Stay masked from enemy.	0	0	0	0	0	0	1	0	0	16	0	8:50	1070.0
667	666	800	64380.0	TF_Cmd		A 1-10	TF Cdr	Blue 1	One T-80 three BRDMs moving south southeast on road at MK962095, 3480 meters.	0	1	0	1	2	0	1	0	0	13	0	8:53	1073.0
668	667	860	64440.0	TF_Cmd	21	TF Cdr	TF FSE	Internal trigger	Can the Colt team lase to the FSE?	0	0	0	0	0	0	1	0	0	8	0	8:54	1074.0
669	668	600	64500.0	TF_FS		COLT 2	TF FSE	Alert	Yes, I identify and can lase.	0	1	0	0	0	0	0	0	0	6	0	8:55	1075.0
670	669	660	64536.0	TF_Cmd	29	TF FSE	TF Cdr	Internal trigger	Colt team identifies and can lase.	0	0	0	0	0	0	0	0	0	6	0	8:55	1075.6
671	670	800	64560.0	TF_Cmd		A 1-10	TF Cdr	Blue 1	One T-80, three BRDMs moving south southeast on road at MK965084, 2500 meters.	0	1	0	1	0	0	0	0	0	13	0	8:56	1076.0
672	671	800	64578.0	TF_Cmd		Sct Plt	TF Cdr	Blue 1	Two T-80s, seven BTRs at MK890104 on the road moving east.	0	1	0	1	0	0	0	0	0	11	0	8:56	1076.3
673	672	200	64596.0	TF_OI		Sct Plt	TF S2	Blue 1	Two T-80s, seven BTRs, and three unknown vehicles at MK890104 on the road moving east.	2	1	0	1	0	0	1	0	0	15	0	8:56	1076.6
674	673	960	64632.0	TF_Cmd	21	TF S3	TF FSE	Internal trigger	Are batteries prepared to fire?	0	0	0	0	0	0	1	0	0	5	0	8:57	1077.2
675	674	860	64680.0	TF_Cmd		TF Cdr	A, B, C, Sct Plt	Internal trigger	Priority of fires to Scouts.	0	0	0	0	0	0	1	0	0	5	0	8:58	1078.0

	A	B	C	D	E	F	G	H	I	J	K	L	M	N	O	P	Q	R	S	T	U	V
1	Msg Number	Start	H+ Time Seconds	Net	Interrupt	From	To	Message Type	Text	Pass	Scan	Route	Update	EI	SH	Send	Enter	OTM	Word	Digital	Time	H+ Time Minutes
676	675	660	64704.0	TF_FS		TF FSE	A, B, C FISTs, COLT 2	Internal trigger	Priority of fires to Scouts.	0	0	0	0	0	0	1	0	0	5	0	8:58	1078.4
677	676	800	64860.0	TF_Cmd		A 1-10	TF Cdr	Blue 2 abb	Enemy vehicles at MK983066, engaging.	0	1	0	1	0	0	0	0	0	5	0	9:01	1081.0
678	677	800	64902.0	TF_Cmd		A 1-10	TF Cdr	Alert	One T-80 three BRDMs destroyed at MK983066.	0	1	0	1	0	0	0	0	0	7	0	9:01	1081.7
679	678	380	64920.0	BdeOI		TF B C	Bde BC	Internal trigger	One T-80 three BRDMs destroyed at MK983066.	0	0	0	0	0	0	1	0	0	7	0	9:02	1082.0
680	679	800	64980.0	TF_Cmd		Sct Plt	TF Cdr	Blue 1	Enemy company-sized element starting to deploy in battle formation at MK922106, continuing to move to east.	0	1	0	1	2	0	0	0	0	17	0	9:03	1083.0
681	680	200	65004.0	TF_OI		Sct Plt	TF S2	Blue 1	Enemy company-sized element starting to deploy in battle formation at MK922106, continuing to move to east.	2	1	0	1	2	0	1	0	0	17	0	9:03	1083.4
682	681	280	65040.0	TF_OI		TF S2	Sct Plt	Internal trigger	AGMB should be coming out of gap at MK8902, let me know when you see them.	0	0	0	0	0	0	1	0	0	14	0	9:04	1084.0
683	682	550	65100.0	AirForce		Bde ALO	TF ALO	Alert	Two CAS sorties on station in 20 minutes. Ordnance is 30mm, eight CBUs. Can stay on station 20 minutes.	2	2	1	1	0	2	1	0	0	19	0	9:05	1085.0
684	683	820	65160.0	BdeCmd		Bde Cdr	TF Cdr	Order	I need to know when you identify the AGMB.	0	0	0	0	2	0	0	0	0	9	0	9:06	1086.0
685	684	350	65220.0	TF_Cmd	29	TF XO	TF Cdr	Internal trigger	Two CAS sorties on station in 20 minutes.	0	1	0	0	0	0	0	0	0	8	0	9:07	1087.0
686	685	200	65340.0	TF_OI		Sct Plt	TF S2	Blue 1	Enemy company-sized element moving east at MK940104,	2	1	0	1	2	1	1	0	0	20	0	9:09	1089.0
687	686	800	65364.0	TF_Cmd		Sct Plt	TF Cdr	Blue 1	Enemy company-sized element moving east at MK940104, deployed. Dust cloud stopped at MK8509, GSR starting to pick up something.	0	1	0	1	2	0	1	0	0	20	0	9:09	1089.4
688	687	860	65400.0	TF_Cmd	6	TF Cdr		Internal trigger	That has to be the AGMB.	0	0	0	0	0	0	1	0	0	6	0	9:10	1090.0
689	688	660	65448.0	TF_FS		TF FSE	A, B, C FISTs, COLT 2	Internal trigger	Priority of fires to A.	0	0	0	0	0	0	1	0	0	5	0	9:10	1090.8
690	689	660	65454.0	AFA TDS		TF FSE	2-3 CP	Internal trigger	Priority of fires to A.	0	0	0	0	0	0	2	0	0	5	0	9:10	1090.9
691	690	860	65460.0	TF_Cmd	13	TF Cdr		Internal trigger	If we have to pull back, how do we do it?	0	0	0	0	0	0	0	0	0	11	0	9:11	1091.0
692	691	300	65580.0	BdeOI		Bde B C	TF B C	Blue 2 abb	No enemy activity in 3-92 or 2-10 sectors.	0	1	0	0	0	0	0	0	0	8	0	9:13	1093.0
693	692	380	65592.0	TF_Cmd	29	TF B C	TF Cdr	Internal trigger	No enemy activity in 3-92 or 2-10 sectors.	0	1	0	0	0	0	0	0	0	8	0	9:13	1093.2
694	693	800	65700.0	TF_Cmd		Sct Plt	TF Cdr	Blue 1	At least 20-30 BTRs and T-80s moving east along the road at MK894102.	0	1	0	1	2	0	1	0	0	14	0	9:15	1095.0
695	694	200	65724.0	TF_OI		Sct Plt	TF S2	Blue 1	At least 20-30 BTRs and T-80s moving east along the road at MK894102.	2	1	0	1	2	1	1	0	0	14	0	9:15	1095.4
696	695	380	65736.0	BdeOI		TF B C	Bde BC	Internal trigger	Scouts report 20-30 BTRs and T-80s moving east along the road at MK894102.	0	0	0	0	0	0	1	0	0	14	0	9:15	1095.6
697	696	200	65940.0	TF_OI		Sct Plt	TF S2	Blue 1	Enemy company-sized element has left road moving east vicinity MK967091 in battle formation. Previously reported unknown vehicles are 2S1s, five of them.	2	1	0	1	2	1	1	0	0	23	0	9:19	1099.0
698	697	800	65964.0	TF_Cmd		Sct Plt	TF Cdr	Blue 1	Enemy company-sized element has left road moving east vicinity MK967091 in battle formation. Previously reported unknown vehicles are 2S1s, five of them.	0	1	0	1	2	0	0	0	0	23	0	9:19	1099.4
699	698	380	65982.0	BdeOI		TF B C	Bde BC	Internal trigger	Enemy company-sized element has left road moving east vicinity MK967091 in battle formation. Previously reported unknown vehicles are 2S1s, five of them.	0	0	0	0	0	0	1	0	0	23	0	9:19	1099.7
700	699	860	66060.0	TF_Cmd		TF Cdr	A, C	Internal trigger	Trigger line for engagement is 2000 meters. Priority of fires to C.	0	0	0	0	0	0	1	0	0	12	0	9:21	1101.0

	A	B	C	D	E	F	G	H	I	J	K	L	M	N	O	P	Q	R	S	T	U	V
1	Msg Number	Start	H+ Time Seconds	Net	Interrupt	From	To	Message Type	Text	Pass	Scan	Route	Update	EI	SH	Send	Enter	OTM	Word	Digital	Time	H+ Time Minutes
701	700	550	66300.0	AirForce		Bde ALO	TF ALO	Alert	Two sorties A-10s on station at NK0697.	2	1	1	1	0	0	1	0	0	7	0	9:25	1105.0
702	701	350	66318.0	TF_Cmd	29	TF XO	TF Cdr	Internal trigger	Two sorties A-10s on station at NK0697.	0	1	0	1	0	0	0	0	0	7	0	9:25	1105.3
703	702	650	66342.0	AFA TDS		A FIST	TF FSE	Fires	Fire for effect, battalion three, DPICM, company in the open, at MJ992094, AB1578.	0	1	0	0	2	0	0	0	0	13	1	9:25	1105.7
704	703	800	66360.0	TF_Cmd		A 1-10	TF Cdr	Alert	Artillery in the air preparing to engage direct fire	0	0	0	0	2	0	0	0	0	9	0	9:26	1106.0
705	704	350	66378.0	TF_Cmd	29	TF XO	TF Cdr	Internal trigger	Artillery in the air.	0	0	0	0	0	0	0	0	0	4	0	9:26	1106.3
706	705	650	66480.0	AFA TDS		A FIST	TF FSE	Fires	Repeat, right 200, add 100 fire for effect.	0	2	0	0	0	0	0	0	0	8	1	9:28	1108.0
707	706	800	66540.0	TF_Cmd		A 1-10	TF Cdr	Blue 2 abb	Destroyed two T-80s, four BTRs vicinity MK992092.	0	1	0	1	0	0	0	0	0	7	0	9:29	1109.0
708	707	800	66600.0	TF_Cmd		Sct Plt	TF Cdr	Blue 1	30 enemy vehicles starting to speed up, moving east at MK9110.	0	1	0	1	2	0	0	0	0	11	0	9:30	1110.0
709	708	200	66618.0	TF_OI		Sct Plt	TF S2	Blue 1	30 enemy vehicles starting to speed up, moving east at MK9110.	2	1	0	1	2	0	1	0	0	11	0	9:30	1110.3
710	709	800	66660.0	TF_Cmd		C 1-10	TF Cdr	Blue 2 abb	Destroyed one T-80, two BTRs vicinity MK993091.	0	1	0	1	0	0	0	0	0	7	0	9:31	1111.0
711	710	380	66720.0	BdeOI		TF BC	Bde BC	Internal trigger	Two T-80s, four BTRs destroyed vicinity MK993091.	0	0	0	0	0	0	1	0	0	7	0	9:32	1112.0
712	711	860	66780.0	TF_Cmd	13	TF Cdr	TF XO, Sct Plt	Internal trigger	Have the A-10s come up on the command net. Scouts will designate target.	0	0	0	0	0	0	1	0	0	13	0	9:33	1113.0
713	712	300	66840.0	TF_Cmd		A 1-10	TF BC	Blue 2 abb	Artillery falling MK999078	2	1	0	1	0	0	0	0	0	3	0	9:34	1114.0
714	713	960	66858.0	BdeCmd		TF S3	Bde Cdr	Internal trigger	Have destroyed half of what we believe is the FSE, the rest has gone to ground. AGMB spotted at MK9110, moving east, we're getting A-10s in on them.	0	0	0	0	0	0	1	0	0	25	0	9:34	1114.3
715	714	800	66900.0	TF_Cmd		Iceman Lead	TF Cdr	Alert	Iceman Lead on your net.	0	0	0	0	2	0	1	0	0	5	0	9:35	1115.0
716	715	600	66960.0	BdeFS		Bde FSO	TF FSE	Fires	Air Corridor 1203 established. SEAD program in effect.	2	1	1	1	0	0	0	0	0	8	0	9:36	1116.0
717	716	650	66972.0	AFA TDS		A FIST	TF FSE	Fires	Repeat, fire for effect.	0	2	0	0	0	0	0	0	0	4	1	9:36	1116.2
718	717	350	66978.0	TF_Cmd	21	TF XO		Internal trigger	A-10s are coming in.	0	0	0	0	0	0	0	0	0	4	0	9:36	1116.3
719	718	300	66996.0	TF_Cmd		C 1-10	TF BC	Blue 2 abb	Three 2S1s destroyed MK985098.	2	1	0	1	0	0	0	0	0	4	0	9:36	1116.6
720	719	550	67014.0	AirForce		TF ALO	Iceman Lead	Internal trigger	IP is MK885145. Target is 120 degrees from there, five kms. Ingress C1, C2, C3. Egress B4, B5, B6.	0	0	0	0	0	0	1	0	0	15	0	9:36	1116.9
721	720	660	67020.0	BdeFS		TF FSE	2-3 CP	Internal trigger	A-10s coming in from southeast. Check fires after current mission.	0	0	0	0	0	0	1	0	0	9	0	9:37	1117.0
722	721	550	67050.0	TF_Cmd		Sct Plt	TF ALO	Alert	Two 2S6s identified traveling with enemy, MK9210, one in center of formation, one at south end.	2	1	0	1	2	0	1	0	0	16	0	9:37	1117.5
723	722	350	67080.0	TF_Cmd	12	TF XO	A, B, C, Sct Plt, Mtr Plt	Internal trigger	ADWCS is Hold. A-10s coming in.	0	0	0	0	0	0	1	0	0	6	0	9:38	1118.0
724	723	650	67104.0	AFA TDS		A FIST	TF FSE	Fires	End of mission. Three vehicles destroyed, five damaged.	0	2	0	0	0	0	0	0	0	8	1	9:38	1118.4
725	724	800	67140.0	TF_Cmd		A 1-10	TF Cdr	Blue 2 abb	One M2 hit and destroyed, one M1 damaged.	0	1	0	1	2	0	0	0	0	8	0	9:39	1119.0
726	725	550	67320.0	AirForce		Iceman Lead	TF ALO	Alert	IP one minute.	2	1	0	2	2	0	1	0	0	3	0	9:42	1122.0
727	726	550	67380.0	TF_Cmd		Iceman Lead	TF ALO	Alert	Have eyes on target.	0	0	0	0	2	0	0	0	0	4	0	9:43	1123.0
728	727	300	67440.0	TF_Cmd		Sct Plt	TF BC	Blue 2 abb	A-10s attacking.	0	1	0	1	2	0	0	0	0	2	0	9:44	1124.0
729	728	550	67620.0	TF_Cmd		Iceman Lead	TF ALO	Alert	Ordnance expended, leaving area.	0	0	0	1	0	0	0	0	0	4	0	9:47	1127.0
730	729	300	67632.0	TF_Cmd		Sct Plt	TF BC	Blue 1	Thirty plus enemy vehicles damaged or destroyed at MK947106. Fifteen plus vehicles in disarray.	2	1	0	1	2	1	1	0	0	14	0	9:47	1127.2

	A	B	C	D	E	F	G	H	I	J	K	L	M	N	O	P	Q	R	S	T	U	V
1	Msg Number	Start	H+ Time Seconds	Net	Interrupt	From	To	Message Type	Text	Pass	Scan	Route	Update	EI	SH	Send	Enter	OTM	Word	Digital	Time	H+ Time Minutes
731	730	960	67650.0	BdeCmd		TF S3	Bde Cdr	Internal trigger	Thirty plus enemy vehicles damaged or destroyed at MK947106. Fifteen plus vehicles in disarray.	0	0	0	0	0	0	1	0	0	12	0	9:47	1127.5
732	731	800	67800.0	TF_Cmd		Sct Plt	TF Cdr	Blue 1	One T-80, three BTRs, two 2S1s quickly withdrawing to the west at MK968096.	2	1	0	1	0	0	1	0	0	14	0	9:50	1130.0
733	732	200	67824.0	TF_OI		Sct Plt	TF S2	Blue 1	One T-80, three BTRs, two 2S1s quickly withdrawing to the west at MK968096.	2	1	0	1	0	0	0	0	0	14	0	9:50	1130.4
734	733	600	67860.0	BdeFS		Bde FSO	TF FSE	Fires	Air Corridor 1203 no longer in effect.	2	1	1	1	0	0	0	0	0	7	0	9:51	1131.0
735	734	380	67866.0	BdeOI		TF BC	Bde BC	Internal trigger	One T-80, three BTRs, two 2S1s quickly withdrawing to the west at MK968096.	0	0	0	0	0	0	1	0	0	14	0	9:51	1131.1
736	735	860	67878.0	TF_Cmd	12	TF Cdr	TF BC	Internal trigger	Enemy is defeated and withdrawing. What's my combat power?	0	0	0	0	0	0	1	0	0	6	0	9:51	1131.3
737	736	100	67902.0	TF_AL		A 1SG	TF S1	MEDEVAC	Five WIA being medevaced by ground ambulance to TF aid station.	2	1	0	1	2	0	0	0	0	11	0	9:51	1131.7
738	737	300	67980.0	TF_Cmd		A 1-10	TF BC	Blue 2 abb	9, 3, 1	2	1	0	1	0	0	0	0	0	3	0	9:53	1133.0
739	738	300	68040.0	TF_Cmd		B 1-10	TF BC	Blue 2 abb	14, 0, 1	2	1	0	1	0	0	0	0	0	3	0	9:54	1134.0
740	739	100	68076.0	TF_AL		C 1SG	TF S1	MEDEVAC	Two WIA being medevaced by ground ambulance to TF aid station.	2	1	0	1	2	0	0	0	0	11	0	9:54	1134.6
741	740	300	68100.0	TF_Cmd		C 1-10	TF BC	Blue 2 abb	4, 8, 1; One M2 damaged.	2	1	0	1	0	0	1	0	0	3	0	9:55	1135.0
742	741	300	68400.0	BdeOI		Bde BC	TF BC	WARNO	Enemy second echelon battalions identified center mass at MK7510 and stopped. Enemy appears to be reorganizing. 1st Bde continue to defend. If enemy masses north of Solcum Mountain, we defend with 1-10 and 3-92; on order 2-10 counterattacks to destroy BRAG and trains. If enemy masses south of Solcum, we defend with 3-92 and 2-10; 1-10 counterattacks to destroy BRAG and trains. FRAGO will be issued via MSE 1030.	2	1	1	1	2	2	1	0	0	69	0	10:00	1140.0
743	742	350	68460.0	TF_Cmd	29	TF XO		Internal trigger	Is this a good time to rearm?	0	0	0	0	0	0	1	0	0	7	0	10:01	1141.0
744	743	300	68520.0	BdeOI		Bde BC	TF BC	Alert	Enemy appears to be going to ground in front of 3d Bde.	2	1	0	1	0	0	1	0	0	12	0	10:02	1142.0
745	744	380	68544.0	TF_Cmd	29	TF BC	TF Cdr	Internal trigger	Enemy appears to be going to ground in front of 3d Bde.	0	1	0	1	0	0	0	0	0	12	0	10:02	1142.4
746	745	860	68568.0	TF_Cmd	13	TF Cdr	TF XO	Internal trigger	Have the CTCP send up the HEMTTs to rearm and finish any refueling.	0	0	0	0	0	0	1	0	0	13	0	10:02	1142.8
747	746	350	68580.0	TF_AL	16	TF XO	TF S4	Internal trigger	Send up the HEMTTs to rearm and finish any refueling.	2	0	0	0	0	0	0	0	0	10	0	10:03	1143.0
748	747	100	68760.0	TF_AL		A 1SG	TF S1	Red 2 abb	Two KIA, five WIA.	2	1	0	1	0	0	0	0	0	4	0	10:06	1146.0
749	748	100	68880.0	TF_AL		C 1SG	TF S1	Red 2 abb	One KIA, two WIA.	2	1	0	1	0	0	1	0	0	4	0	10:08	1148.0
750	749	400	69000.0	TF_AL		A 1SG	TF S4	Yellow 1	9, 3, 1. One M1 damaged, one M2 destroyed. Green	2	1	0	1	0	0	0	0	0	10	0	10:10	1150.0
751	750	400	69120.0	TF_AL		B 1SG	TF S4	Yellow 1	14, 0, 1. Green	2	1	0	1	0	0	0	0	0	4	0	10:12	1152.0
752	751	400	69240.0	TF_AL		C 1SG	TF S4	Yellow 1	4, 8, 1. One M2 damaged. Green	2	1	0	1	0	0	1	0	0	7	0	10:14	1154.0
753	752	860	69324.0	TF_Cmd		TF Cdr	A, B, C, EN, Sct Plt, Mtr Plt, Staff	Internal trigger	Orders group 1100, Main CP.	0	0	0	0	0	0	1	0	0	5	0	10:15	1155.4
754	753	380	69396.0	TF_Cmd	33	TF BC	TF S3	Internal trigger	Redeploying scout sections to screen southern portion of TF sector. They link with 3-92 scouts at MK973022.	0	1	0	1	0	0	0	0	0	17	0	10:16	1156.6

	A	B	C	D	E	F	G	H	I	J	K	L	M	N	O	P	Q	R	S	T	U	V
1	Msg Number	Start	H+ Time Seconds	Net	Interrupt	From	To	Message Type	Text	Pass	Scan	Route	Update	EI	SH	Send	Enter	OTM	Word	Digital	Time	H+ Time Minutes
755	754	280	69420.0	BdeOI		TF S2	Bde S2	Internal trigger	Redeploying scouts in southern portion of sector. Linking with 3-92 scouts at MK973022.	0	0	0	0	0	0	1	0	0	12	0	10:17	1157.0
756	755	350	69438.0	BdeCmd	33	TF XO	Bde S3	Internal trigger	Redeploying scouts in southern portion of sector. Linking with 3-92 scouts at MK973022.	0	0	0	0	0	0	1	0	0	13	0	10:17	1157.3
757	756	860	69480.0	TF_Cmd		TF Cdr	Tm EN	Internal trigger	Resume original priority of effort with A	0	0	0	0	0	0	1	0	0	7	0	10:18	1158.0
758	757	300	69900.0	BdeOI		Bde BC	TF BC	Blue 1	Rest of enemy brigade still stopped at MK7510.	2	1	1	1	0	0	0	0	0	8	0	10:25	1165.0
759	758	300	70200.0	MSE		Bde BC	TF BC	FRAGO	1st Bde defends from MK897876 to NK015125. 1-10 defends in sector from PL Crow to PL Barley. 3-92 defends in sector from PL Crow to PL Barley. 2-10 defends in sector from PL Crow to PL Barley. 1-10 be prepared to counterattack along Axis Shoe to OBJ Cobalt and destroy BRAG. 2-10 be prepared to counterattack along Axis Boot to OBJ Tin and destroy BRAG. AH-64s will be on station. Bde decision point is the commitment of enemy brigade north or south of Solcum Mountain.	2	1	1	1	2	2	1	0	0	85	0	10:30	1170.0
760	759	600	71220.0	TF_FS		Mtr Plt	TF FSE	Blue 2 abb	Rearm, refuel complete.	2	1	0	1	0	0	0	0	0	3	0	10:47	1187.0
761	760	400	71400.0	TF_AL		B 1SG	TF S4	Alert	Rearm, refuel complete.	2	1	0	1	0	0	0	0	0	3	0	10:50	1190.0
762	761	300	71442.0	TF_Cmd		B 1-10	TF BC	Blue 2 abb	Rearm, refuel complete.	2	1	0	1	0	0	0	0	0	3	0	10:50	1190.7
763	762	300	71520.0	TF_Cmd		C 1-10	TF BC	Blue 2 abb	Rearm, refuel complete.	2	1	0	1	0	0	0	0	0	3	0	10:52	1192.0
764	763	400	71538.0	TF_AL		C 1SG	TF S4	Alert	Rearm, refuel complete.	2	1	0	1	0	0	0	0	0	3	0	10:52	1192.3
765	764	300	71640.0	TF_Cmd		A 1-10	TF BC	Blue 2 abb	Rearm, refuel complete.	2	1	0	1	0	0	0	0	0	3	0	10:54	1194.0
766	765	400	71670.0	TF_AL		A 1SG	TF S4	Alert	Rearm, refuel complete.	2	1	0	1	0	0	0	0	0	3	0	10:54	1194.5
767	766	600	71700.0	BdeFS		2-3 CP	TF FSE	Blue 2 abb	All batteries rearmed and refueled.	2	1	0	1	0	0	0	0	0	3	0	10:55	1195.0
768	767	650	71706.0	AFA TDS		Bde FSO	TF FSE	C400 Cdr Sit Rpt	2-3 and 2-8 batteries rearmed and refueled.	2	1	0	1	0	0	0	0	0	7	2	10:55	1195.1
769	768	400	72000.0	BdeAL		Bde S4	TF S4	Alert	FSB's 5000 tankers refueled and returned to BSA.	2	0	0	0	0	0	0	0	0	8	0	11:00	1200.0
770	769	300	72240.0	BdeOI		Bde BC	TF BC	Blue 1	Enemy brigade vicinity MK7510 beginning possible movement.	2	1	1	1	0	1	0	0	0	7	0	11:04	1204.0
771	770	380	72258.0	TF_Cmd	29	TF BC	TF Cdr	Internal trigger	Enemy brigade vicinity MK7510 beginning possible movement.	0	1	0	1	0	1	0	0	0	7	0	11:04	1204.3
772	771	300	73380.0	BdeOI		Bde BC	TF BC	Blue 1	Enemy brigade showing definite movement southeast toward south of Solcum Mountain.	2	1	1	1	0	2	0	0	0	11	0	11:23	1223.0
773	772	380	73398.0	TF_Cmd	29	TF BC	TF Cdr	Internal trigger	Enemy brigade showing definite movement southeast toward south of Solcum Mountain.	0	1	0	1	0	2	0	0	0	11	0	11:23	1223.3
774	773	600	73440.0	BdeFS		Bde FSO	TF FSE	Alert	1-10 will only have one battery to range forward of current BP.	2	1	1	1	2	0	0	0	0	12	0	11:24	1224.0
775	774	660	73464.0	TF_Cmd	29	TF FSE	TF Cdr	Internal trigger	1-10 will only have one battery to range forward of current BP.	0	1	0	0	0	0	0	0	0	12	0	11:24	1224.4
776	775	300	74040.0	BdeOI		2-10 BC	TF BC	Blue 1	2-10 GSRs report MTIs moving south, southeast at MJ818998.	2	1	1	1	0	0	0	0	0	9	0	11:34	1234.0
777	776	300	74100.0	BdeOI		3-92 BC	TF BC	Blue 2 abb	3-92 reports REDCON1.	0	0	0	0	0	0	0	0	0	4	0	11:35	1235.0
778	777	300	74220.0	BdeOI		2-10 BC	TF BC	Blue 2 abb	2-10 reports REDCON1.	0	0	0	0	0	0	0	0	0	4	0	11:37	1237.0
779	778	300	74400.0	TF_Cmd		A 1-10	TF BC	Blue 2 abb	REDCON 1.	2	1	0	1	0	0	0	0	0	2	0	11:40	1240.0
780	779	300	74442.0	TF_Cmd		B 1-10	TF BC	Blue 2 abb	REDCON 1.	2	1	0	1	0	0	0	0	0	2	0	11:40	1240.7
781	780	300	74460.0	TF_Cmd		C 1-10	TF BC	Blue 2 abb	REDCON 1.	2	1	0	1	0	0	1	0	0	2	0	11:41	1241.0
782	781	600	74520.0	TF_FS		Mtr Plt	TF FSE	Blue 2 abb	REDCON 1.	2	1	0	1	0	0	0	0	0	2	0	11:42	1242.0
783	782	300	74760.0	BdeOI		2-10 BC	TF BC	Blue 1	2-10 Scouts report enemy battalion in battle formation moving east at MJ831975.	2	1	1	1	0	0	0	0	0	12	0	11:46	1246.0

	A	B	C	D	E	F	G	H	I	J	K	L	M	N	O	P	Q	R	S	T	U	V
1	Msg Number	Start	H+ Time Seconds	Net	Interrupt	From	To	Message Type	Text	Pass	Scan	Route	Update	EI	SH	Send	Enter	OTM	Word	Digital	Time	H+ Time Minutes
784	783	300	75240.0	BdeOI		2-10 BC	TF BC	Blue 1	2-10 Scouts report one enemy battalion in battle formation moving east at MJ857962. Second battalion moving east at MJ825980.	2	1	1	1	0	0	0	0	0	19	0	11:54	1254.0
785	784	820	75300.0	BdeCmd		Bde Cdr	TF Cdr	Order	On order, attack along Axis Shoe to OBJ Tin. Destroy enemy BRAG. 3-92 and 2-10 will defend current sectors.	0	1	0	1	2	0	1	0	0	19	0	11:55	1255.0
786	785	820	75600.0	BdeCmd		Bde Cdr	TF Cdr	Order	Begin your attack along Axis Shoe now.	0	0	0	0	2	0	1	0	0	7	0	12:00	1260.0
787	786	860	75684.0	TF_Cmd		TF Cdr	A, B, C, EN, Sct Plt, Mtr Plt	Internal trigger	Move out, begin attack along Axis Shoe. Tm A move slow, allow other companies to come on line. Engineers follow A, Main follow Engineers.	0	0	0	0	0	0	1	0	0	24	0	12:01	1261.4
788	787	300	75780.0	TF_Cmd		A 1-10	TF BC	Blue 2 abb	LD now.	2	1	0	1	0	0	1	0	1	2	0	12:03	1263.0
789	788	300	75840.0	BdeOI		2-10 BC	TF BC	Blue 2 abb	2-10 receiving artillery fire	2	1	0	0	0	0	0	0	0	4	0	12:04	1264.0
790	789	350	75852.0	TF_AL	16	TF XO	TF S4	Internal trigger	Move initially to MK025091. Close with TF upon occupation of OBJ Tin.	0	1	0	1	0	0	0	0	0	12	0	12:04	1264.2
791	790	300	75870.0	BdeOI		Bde BC	TF BC	Blue 1	Lead enemy battalion at MJ885943. Second battalion coming on line at MJ875965.	2	1	0	2	2	0	1	0	1	12	0	12:04	1264.5
792	791	380	75894.0	TF_Cmd	29	TF BC	TF Cdr	Internal trigger	Lead enemy battalion at MJ885943. Second battalion coming on line at MJ875965.	0	1	0	1	2	0	0	0	1	12	0	12:04	1264.9
793	792	300	76140.0	TF_Cmd		C 1-10	TF BC	Blue 2 abb	LD now.	2	1	0	1	0	0	0	0	1	2	0	12:09	1269.0
794	793	300	76260.0	TF_Cmd		B 1-10	TF BC	Blue 2 abb	LD now.	2	1	0	1	0	0	0	0	1	2	0	12:11	1271.0
795	794	200	76266.0	TF_OI		Sct Plt	TF S2	Blue 1	Twelve BRDMs moving east at MJ863996.	2	1	0	1	0	0	1	0	1	6	0	12:11	1271.1
796	795	300	76278.0	TF_Cmd		Sct Plt	TF BC	Blue 1	Twelve BRDMs moving east at MJ863996.	0	1	0	1	0	0	1	0	0	6	0	12:11	1271.3
797	796	300	76320.0	BdeOI		Bde BC	TF BC	Alert	Four AH-64s on station for attack into Engagement Areas Dave and Ken.	2	1	0	1	0	0	0	0	1	11	0	12:12	1272.0
798	797	380	76326.0	TF_Cmd	29	TF BC	TF Cdr	Internal trigger	Four AH-64s on station for attack into Engagement Areas Dave and Ken.	0	1	0	1	0	0	0	0	1	11	0	12:12	1272.1
799	798	820	76338.0	BdeCmd		2-10 Cdr	TF Cdr	Contact	2-10 has contact with tanks.	0	1	0	1	0	0	0	0	1	5	0	12:12	1272.3
800	799	650	76350.0	AFA TDS		2-3 CP	TF FSE	Fires	Firefinder radars identified possible BRAG at MJ8199.	2	1	0	1	0	0	1	0	1	7	2	12:12	1272.5
801	800	660	76374.0	TF_Cmd	29	TF FSE	TF Cdr	Internal trigger	Firefinder radars identified possible BRAG at MJ8199.	0	1	0	1	0	0	0	0	1	7	0	12:12	1272.9
802	801	300	76380.0	TF_Cmd		Tm EN	TF BC	Blue 2 abb	LD now.	2	1	0	1	0	0	0	0	1	2	0	12:13	1273.0
803	802	300	76440.0	BdeOI		Bde BC	TF BC	Alert	Batteries firing into EA Dave.	2	1	0	1	0	0	0	0	1	5	0	12:14	1274.0
804	803	380	76458.0	TF_Cmd	29	TF BC	TF Cdr	Internal trigger	Batteries firing into EA Dave.	0	1	0	1	0	0	0	0	1	5	0	12:14	1274.3
805	804	600	76500.0	TF_FS		Mtr Plt	TF FSE	Blue 2 abb	LD now.	2	1	0	1	0	0	0	0	1	2	0	12:15	1275.0
806	805	600	76560.0	BdeFS		2-3 CP	TF FSE	Blue 2 abb	Four batteries firing into EA Dave	2	1	0	1	0	0	0	0	1	6	0	12:16	1276.0
807	806	650	76578.0	AFA TDS		Bde FSO	TF FSE	C400 Cdr Sit Rpt	Four batteries firing into EA Dave	0	0	0	0	0	0	0	0	1	6	2	12:16	1276.3
808	807	300	76620.0	BdeOI		Bde BC	TF BC	Blue 2 abb	Enemy in front of 3d Bde sector going to ground or withdrawing.	2	1	0	1	0	0	0	0	1	12	0	12:17	1277.0
809	808	380	76680.0	TF_Cmd	29	TF BC	TF Cdr	Internal trigger	Main CP, LD now.	0	1	0	0	0	0	0	0	1	4	0	12:18	1278.0
810	809	300	76800.0	BdeOI		2-10 BC	TF BC	Blue 2 abb	2-10 engaging one enemy battalion in EA Dave along with AH-64s. Second battalion moving to the east, north of Dave.	2	1	0	1	0	0	0	0	1	20	0	12:20	1280.0
811	810	300	76860.0	BdeCmd		Bde Cdr	TF S3	Alert	2-10 engaging one enemy battalion in EA Dave along with AH-64s. Second battalion moving to the east, north of Dave. What's your location?	0	2	0	1	0	0	1	0	1	20	0	12:21	1281.0
812	811	200	76920.0	TF_OI		Sct Plt	TF S2	Blue 1	Eight BRDMs establishing hasty defense vicinity MK894004. Missiles on top of vehicles.	2	1	0	1	2	0	1	0	1	12	0	12:22	1282.0

	A	B	C	D	E	F	G	H	I	J	K	L	M	N	O	P	Q	R	S	T	U	V
1	Msg Number	Start	H+ Time Seconds	Net	Interrupt	From	To	Message Type	Text	Pass	Scan	Route	Update	EI	SH	Send	Enter	OTM	Word	Digital	Time	H+ Time Minutes
813	812	800	76944.0	TF_Cmd		Sct Plt	TF Cdr	Blue 1	Eight BRDMs establishing hasty defense vicinity MK894004. Missiles on top of vehicles.	0	1	0	1	2	0	1	0	1	12	0	12:22	1282.4
814	813	350	76950.0	TF_Cmd	12	TF XO	TF BC	Internal trigger	Have the Main come to a short halt.	2	0	0	0	0	0	0	0	1	8	0	12:22	1282.5
815	814	860	76962.0	TF_Cmd		TF Cdr	Sct Plt	Internal trigger	AT battery has AT-5s. How am I going to attack him?	0	0	0	0	0	0	1	0	1	11	0	12:22	1282.7
816	815	650	77100.0	AFATDS		Colt Tm 2	TF FSE	Fires	Fire for effect, battery two, DPICM, AT battery in hasty defense, at MK894004, Target A065.	0	2	0	0	0	0	0	0	1	8	1	12:25	1285.0
817	816	860	77220.0	TF_Cmd		TF Cdr	A, B, C, EN, Mtr Plt	Internal trigger	C establish SBF at MK893045. A and B slow pace, do not cross road vicinity MK9102 until artillery lifts. On order assault south, then west to AT battery vicinity MK894004. Priority of fires to scouts until B reaches road. Priority then shifts to B.	0	0	0	0	0	0	1	0	1	44	0	12:27	1287.0
818	817	300	77280.0	BdeOI		Bde BC	TF BC	Blue 2 abb	2-10 continuing to engage MIBN in EA Dave. AH-64s engaging second MIBN in EA Ken MJ947976.	2	1	0	1	0	0	0	0	0	16	0	12:28	1288.0
819	818	350	77328.0	TF_Cmd	12	TF XO		Internal trigger	Have the Main stop, but not set up.	0	0	0	0	0	0	1	0	1	8	0	12:28	1288.8
820	819	960	77340.0	BdeCmd		TF S3	Bde Cdr	Internal trigger	Engaging AT battery with indirect fire at MK894004. TF Cdr maneuvering companies to assault.	0	0	0	0	0	0	1	0	1	14	0	12:29	1289.0
821	820	650	77400.0	AFATDS		Colt Tm 2	TF FSE	Fires	Repeat.	0	2	0	0	0	0	0	0	0	1	1	12:30	1290.0
822	821	800	77460.0	TF_Cmd		A 1-10	TF Cdr	Blue 2 abb	Set along road.	0	1	0	1	0	0	0	0	0	3	0	12:31	1291.0
823	822	800	77484.0	TF_Cmd		B 1-10	TF Cdr	Blue 2 abb	Set along road.	0	1	0	1	0	0	0	0	0	3	0	12:31	1291.4
824	823	800	77520.0	TF_Cmd		C 1-10	TF Cdr	Blue 2 abb	Set, SBF MK893045. Four BRDMs identified to front. Indirect fire impacting	0	1	0	1	0	0	1	0	0	11	0	12:32	1292.0
825	824	650	77526.0	AFATDS		Colt Tm 2	TF FSE	Fires	Repeat.	0	2	0	0	0	0	0	0	0	1	1	12:32	1292.1
826	825	800	77550.0	TF_Cmd		Sct Plt	TF Cdr	Alert	Last repeat request just sent out.	0	0	0	0	0	0	1	0	0	6	0	12:32	1292.5
827	826	800	77700.0	TF_Cmd		A 1-10	TF Cdr	Blue 2 abb	Beginning assault.	0	0	0	0	2	0	0	0	0	2	0	12:35	1295.0
828	827	800	77712.0	TF_Cmd		B 1-10	TF Cdr	Blue 2 abb	Beginning assault.	0	0	0	0	2	0	0	0	0	2	0	12:35	1295.2
829	828	960	77712.0	BdeCmd		TF S3	Bde Cdr	Internal trigger	Beginning assault on suspected AT Battery.	0	0	0	0	0	0	1	0	0	6	0	12:35	1295.2
830	829	650	77724.0	AFATDS		A FIST	TF FSE	Fires	End of mission. One vehicle destroyed, three damaged.	0	2	0	0	0	0	0	0	0	8	1	12:35	1295.4
831	830	860	77736.0	TF_Cmd		TF Cdr	C 1-10	Internal trigger	Make sure you track A and B's movement. Do not fire on them.	0	0	0	0	0	0	1	0	1	13	0	12:35	1295.6
832	831	800	77880.0	TF_Cmd		C 1-10	TF Cdr	Blue 2 abb	Two BRDMs destroyed vicinity MK894004. Another already destroyed.	0	1	0	1	0	0	0	0	0	8	0	12:38	1298.0
833	832	800	77940.0	TF_Cmd		B 1-10	TF Cdr	Blue 2 abb	Engaged and destroyed two BRDMs MK882002.	0	1	0	1	0	0	0	0	0	6	0	12:39	1299.0
834	833	800	77970.0	TF_Cmd		Sct Plt	TF Cdr	Blue 1	Six BRDMs destroyed MK894004 to MK882002.	0	1	0	1	0	0	0	0	0	6	0	12:39	1299.5
835	834	200	77982.0	TF_OI		Sct Plt	TF S2	Blue 1	Six BRDMs destroyed MK894004 to MK882002.	2	1	0	1	0	0	1	0	0	6	0	12:39	1299.7
836	835	860	78060.0	TF_Cmd		TF Cdr	C 1-10	Internal trigger	Cease fire, A and B closing.	0	0	0	0	0	0	1	0	0	5	0	12:41	1301.0
837	836	800	78120.0	TF_Cmd		A 1-10	TF Cdr	Blue 1	Enemy dismounts running from vehicles, launchers pointed skyward, I think these guys have had it.	0	0	0	0	2	0	0	0	0	15	0	12:42	1302.0
838	837	960	78156.0	BdeCmd		TF S3	Bde Cdr	Internal trigger	AT battery appears to be defeated, seven BRDMs destroyed, the rest are surrendering. Continuing mission.	0	0	0	0	0	0	1	0	0	14	0	12:42	1302.6
839	838	300	78180.0	BdeOI		Bde BC	TF BC	Blue 2 abb	1-22 has extended northern screen to PL Corn with ground and air troops.	2	1	0	1	0	0	0	0	0	13	0	12:43	1303.0
840	839	380	78204.0	TF_Cmd	29	TF BC	TF Cdr	Internal trigger	1-22 has extended northern screen to PL Corn with ground and air troops.	0	1	0	1	0	0	1	0	0	13	0	12:43	1303.4
841	840	300	78240.0	TF_Cmd		B 1-10	TF BC	Alert	We have the EPWs covered, but there's too many for us to take care of, need help.	2	0	0	1	0	0	0	0	1	17	0	12:44	1304.0
842	841	350	78252.0	TF_Cmd	12	TF XO	Tm EN	Internal trigger	What are we going to do with the EPWs?	0	0	0	0	0	0	1	0	0	9	0	12:44	1304.2

	A	B	C	D	E	F	G	H	I	J	K	L	M	N	O	P	Q	R	S	T	U	V
1	Msg Number	Start	H+ Time Seconds	Net	Interrupt	From	To	Message Type	Text	Pass	Scan	Route	Update	EI	SH	Send	Enter	OTM	Word	Digital	Time	H+ Time Minutes
843	842	960	78258.0	TF_Cmd	6	TF S3	TF S2	Internal trigger	What's the latest on the BRAG location?	2	1	0	0	0	0	1	0	1	7	0	12:44	1304.3
844	843	200	78360.0	BdeOI		Bde S2	TF S2	Blue 1	BRAG suspected to be at MJ8393 grid square.	2	1	0	1	2	0	0	0	1	8	0	12:46	1306.0
845	844	280	78378.0	TF_Cmd	33	TF S2	TF S3	Internal trigger	BRAG suspected to be at MJ8393 grid square.	0	1	0	1	2	0	0	0	1	8	0	12:46	1306.3
846	845	350	78480.0	TF_Cmd		TF XO	Tm EN	Internal trigger	Use one of your line platoons to guard the EPWs. Once TF is on Tin, move them to your company AA.	0	0	0	0	0	0	1	0	1	18	0	12:48	1308.0
847	846	350	78540.0	TF_AL	2	TF XO	TF S1	Internal trigger	Find out if the Bde EPW collection point has moved	2	1	0	1	0	0	1	0	0	10	0	12:49	1309.0
848	847	300	78552.0	BdeOI		Bde BC	TF BC	Alert	EA Dave and Ken no longer in effect.	2	1	0	1	0	0	0	0	1	8	0	12:49	1309.2
849	848	380	78564.0	TF_Cmd	29	TF BC	TF Cdr	Internal trigger	EA Dave and Ken no longer in effect.	0	1	0	1	0	0	0	0	1	8	0	12:49	1309.4
850	849	100	78624.0	BdeAL		Bde S1	TF S1	Alert	EPW collection point at NJ063964.	2	1	0	1	0	0	0	0	0	5	0	12:50	1310.4
851	850	350	78636.0	TF_AL	2	TF S1	TF XO	Alert	EPW collection point at NJ063964.	0	1	0	1	0	0	0	0	1	5	0	12:50	1310.6
852	851	300	78642.0	BdeOI		2-10 BC	TF BC	Blue 1	MIBN in EA Dave defeated, company-size element moving south out of Bde sector	2	1	0	1	0	0	0	0	1	14	0	12:50	1310.7
853	852	300	78660.0	BdeOI		3-92 BC	TF BC	Blue 1	MIBN in EA Ken destroyed. 3-92 moving forward to sweep for surviving enemy.	2	1	0	1	0	0	0	0	1	13	0	12:51	1311.0
854	853	380	78708.0	TF_Cmd	29	TF BC	TF Cdr	Internal trigger	MIBN in EA Ken destroyed. 3-92 moving forward to sweep for surviving enemy. MIBN in EA Dave defeated, company-size element moving south out of Bde sector.	0	1	0	1	0	0	0	0	1	27	0	12:51	1311.8
855	854	300	79200.0	TF_Cmd		Sct Plt	TF BC	Blue 1	Unidentified elements moving west at MJ8099	2	1	0	1	0	0	0	0	1	6	0	13:00	1320.0
856	855	200	79224.0	TF_OI		Sct Plt	TF S2	Blue 1	Unidentified elements moving west at MJ8099	2	1	0	1	0	0	1	0	1	6	0	13:00	1320.4
857	856	300	79680.0	TF_Cmd		Sct Plt	TF BC	Blue 1	Fifteen enemy artillery pieces preparing to move at MJ823940.	2	1	0	1	0	0	0	0	1	9	0	13:08	1328.0
858	857	200	79716.0	TF_OI		Sct Plt	TF S2	Blue 1	Fifteen enemy artillery pieces preparing to move at MJ823940.	2	1	0	1	0	0	1	0	1	9	0	13:08	1328.6
859	858	860	79782.0	TF_Cmd		TF Cdr	Sct Plt	Internal trigger	Keep eyes on the artillery.	0	0	0	0	0	0	1	0	1	5	0	13:09	1329.7
860	859	860	79800.0	TF_Cmd		TF Cdr	A, B, C	Internal trigger	Continue movement to OBJ Tin. B continue to assigned objective. C establish SBF at MJ815965, orient south. A assault BRAG at MJ823940.	0	0	0	0	0	0	1	0	1	17	0	13:10	1330.0
861	860	960	79920.0	BdeCmd		TF S3	Bde Cdr	Internal trigger	Have identified stationary BRAG at MJ823940. Maneuvering to destroy.	0	0	0	0	0	0	1	0	1	9	0	13:12	1332.0
862	861	860	80040.0	BdeCmd		TF Cdr	Bde Cdr	Internal trigger	Request permission to go beyond the LOA to the 80 north-south gridline.	0	0	0	0	0	0	1	0	1	12	0	13:14	1334.0
863	862	800	80064.0	TF_Cmd		Sct Plt	TF Cdr	Blue 1	Enemy artillery beginning to move due west.	0	1	0	1	0	0	0	0	1	7	0	13:14	1334.4
864	863	200	80070.0	TF_OI		Sct Plt	TF S2	Blue 1	Enemy artillery beginning to move due west	2	1	0	1	0	0	1	0	1	7	0	13:14	1334.5
865	864	820	80100.0	BdeCmd		Bde Cdr	TF Cdr	Alert	You can move as far west as the 80 north-south. Do not go beyond unless you call me.	0	1	0	1	0	0	0	0	1	19	0	13:15	1335.0
866	865	300	80136.0	TF_Cmd		C 1-10	TF BC	Blue 2 abb	PL Corn, continuing mission	2	1	0	1	0	0	0	0	1	4	0	13:15	1335.6
867	866	800	80400.0	TF_Cmd		C 1-10	TF Cdr	Blue 2 abb	Set SBF at MJ815965. Identifying enemy artillery, 15-20 vehicles moving northwest at MJ812949.	0	1	0	1	0	0	1	0	1	14	0	13:20	1340.0
868	867	860	80460.0	TF_Cmd		TF Cdr	A 1-10	Internal trigger	Once you cross Corn, bear due west. You should be able to engage trail of enemy artillery	0	0	0	0	0	0	1	0	1	16	0	13:21	1341.0
869	868	380	80496.0	BdeOI		TF BC	Bde BC	Internal trigger	Engaging enemy artillery with direct fire at MJ812949	0	0	0	0	0	0	1	0	1	8	0	13:21	1341.6
870	869	800	80586.0	TF_Cmd		C 1-10	TF Cdr	Blue 2 abb	Engaged and destroyed four artillery pieces and eight trucks.	0	1	0	1	0	0	1	0	1	9	0	13:23	1343.1
871	870	300	80640.0	TF_Cmd		B 1-10	TF BC	Blue 2 abb	Entering OBJ Tin at MJ870920.	2	1	0	1	0	0	0	0	1	5	0	13:24	1344.0
872	871	800	80760.0	TF_Cmd		A 1-10	TF Cdr	Blue 2 abb	Engaging artillery and trucks at MJ815945.	0	1	0	1	0	0	1	0	1	6	0	13:26	1346.0
873	872	800	80784.0	TF_Cmd		C 1-10	TF Cdr	Blue 1	Three artillery pieces and four trucks escaping to the west to MJ785964. Do I go after them?	0	1	0	1	0	0	1	0	1	17	0	13:26	1346.4

	A	B	C	D	E	F	G	H	I	J	K	L	M	N	O	P	Q	R	S	T	U	V
1	Msg Number	Start	H+ Time Seconds	Net	Interrupt	From	To	Message Type	Text	Pass	Scan	Route	Update	EI	SH	Send	Enter	OTM	Word	Digital	Time	H+ Time Minutes
874	873	800	80820.0	TF_Cmd		A 1-10	TF Cdr	Blue 2 abb	Identifying eight artillery pieces and eight trucks destroyed vicinity MJ810955.	0	1	0	1	0	0	0	0	1	10	0	13:27	1347.0
875	874	380	80850.0	BdeOI		TF B C	B de BC	Internal trigger	Eight artillery pieces and eight trucks destroyed vicinity MJ810955. Companies starting to enter Tin.	0	0	0	0	0	0	1	0	1	14	0	13:27	1347.5
876	875	350	80916.0	TF_AL	16	TF XO		Internal trigger	Need to have the CTCP come forward.	0	0	0	0	0	0	0	0	1	7	0	13:28	1348.6
877	876	960	80922.0	BdeCmd		TF S3	B de Cdr	Internal trigger	Eight artillery pieces and eight trucks destroyed vicinity MJ810955. Three artillery pieces and four trucks escaping to the west, not pursuing. One company on Tin, other two moving to occupy.	0	0	0	0	0	0	1	0	1	30	0	13:28	1348.7
878	877	350	80940.0	TF_AL	16	TF XO	TF S4	Internal trigger	Move along Axis Shoe to MJ858939.	2	1	0	0	0	0	0	0	0	6	0	13:29	1349.0
879	878	860	81000.0	TF_Cmd		TF Cdr	Sct Plt	Internal trigger	Establish screen line from MJ801935 to MK830010.	0	0	0	0	0	0	1	0	1	7	0	13:30	1350.0
880	879	820	81300.0	BdeCmd		B de Cdr	TF Cdr	WARNO	Brigade establishes new FLOT along PL Corn. Two bn/tfs along Corn, one bn/tf in reserve. FRAGO at 1355 on this net.	0	1	0	1	0	0	1	0	1	21	0	13:35	1355.0
881	880	350	81360.0	TF_Cmd	12	TF XO		Internal trigger	Have the Main come to a short halt.	2	0	0	0	0	0	0	0	1	8	0	13:36	1356.0
882	881	300	81372.0	TF_Cmd		B 1-10	TF B C	Blue 2 abb	Occupying Tin-B, no enemy sighted. 14, 0, 1	2	1	0	1	0	0	0	0	0	8	0	13:36	1356.2
883	882	300	81720.0	TF_Cmd		Sct Plt	TF B C	Blue 2 abb	Occupying screen line from MJ801935 to MK830010.	2	1	0	1	0	0	0	0	0	7	0	13:42	1362.0
884	883	200	81756.0	TF_OI		Sct Plt	TF S2	Blue 2 abb	Occupying screen line from MJ801935 to MK830010.	2	1	0	1	0	0	1	0	0	7	0	13:42	1362.6
885	884	300	82080.0	TF_Cmd		C 1-10	TF B C	Blue 2 abb	Occupying Tin-C, no enemy sighted. 4, 8, 1.	2	1	0	1	0	0	0	0	0	8	0	13:48	1368.0
886	885	300	82380.0	TF_Cmd		A 1-10	TF B C	Blue 2 abb	Occupying Tin-A, no enemy sighted. 9, 3, 1.	2	1	0	1	0	0	1	0	0	8	0	13:53	1373.0
887	886	300	82500.0	BdeOI		B de S3	TF S3	Order	Enemy attack along I-15 and Superior Valley avenues of approach stopped. Enemy withdrawing west. 1st B de defends along PL Corn with two TFs forward and one battalion in depth NLT 1600 hours today. 3-92 defends from MK885146 to MK820057. 1-10 defends from MK820057 to MJ802935. 2-10 occupies AA Zinc and is B de reserve.	0	1	0	1	2	0	0	0	0	53	0	13:55	1375.0
888	887	860	82860.0	BdeCmd		TF Cdr	B de Cdr	Internal trigger	Request permission to establish screen out to 75 north-south gridline in sector.	0	0	0	0	0	0	1	0	0	13	0	14:01	1381.0
889	888	820	82920.0	BdeCmd		B de Cdr	TF Cdr	Alert	Permission granted.	0	1	0	1	0	0	1	0	0	2	0	14:02	1382.0
890	889	300	83700.0	TF_Cmd		B 1-10	TF B C	Blue 2 abb	Beginning movement to new BP	1	0	0	1	0	0	0	0	1	5	0	14:15	1395.0
891	890	300	84180.0	TF_Cmd		A 1-10	TF B C	Blue 2 abb	Beginning movement to new BP	1	0	0	1	0	0	0	0	1	5	0	14:23	1403.0
892	891	300	84420.0	TF_Cmd		C 1-10	TF B C	Blue 2 abb	Beginning movement to new BP	1	0	0	1	0	0	0	0	1	5	0	14:27	1407.0
893	892	300	85020.0	TF_Cmd		TF S4	TF B C	Blue 2 abb	Arrived at MJ858939.	2	1	0	1	0	0	0	0	1	3	0	14:37	1417.0
894	893	300	85080.0	TF_Cmd		C 1-10	TF B C	Blue 2 abb	BP 11, beginning to occupy.	2	1	0	1	0	0	1	0	1	5	0	14:38	1418.0
895	894	200	85110.0	TF_OI		Sct Plt	TF S2	Blue 2 abb	Screen established along 75 north-south gridline in sector.	2	1	0	1	0	0	1	0	1	9	0	14:38	1418.5
896	895	450	85128.0	BdeAL		TF S4	B de S4	Internal trigger	Arrived at MJ858939.	0	0	0	0	0	0	1	0	1	3	0	14:38	1418.8
897	896	400	85200.0	TF_AL		Sct Plt	TF S4	Yellow 1	Need 150 diesel.	2	1	0	1	0	0	0	0	0	3	0	14:40	1420.0
898	897	760	85224.0	BdeEN		EN OFF	ABE	Internal trigger	Beginning engineer effort with 1-10 along now defensive sector from MK820057 to MJ802935.	0	0	0	0	0	0	1	0	0	13	0	14:40	1420.4
899	898	380	85320.0	TF_Cmd		TF B C	A, B, C EN, Sct Plt, Mtr Plt, CPs	Internal trigger	Arrived at MJ863995, beginning to set up.	0	0	0	0	0	0	1	0	0	6	0	14:42	1422.0
900	899	380	85338.0	BdeOI		TF B C	B de BC	Internal trigger	Arrived at MJ863995, beginning to set up.	0	0	0	0	0	0	1	0	0	6	0	14:42	1422.3
901	900	300	85440.0	TF_Cmd		B 1-10	TF B C	Blue 2 abb	BP 13, beginning to occupy.	2	1	0	1	0	0	0	0	0	5	0	14:44	1424.0
902	901	300	85620.0	TF_Cmd		A 1-10	TF B C	Blue 2 abb	BP 12, beginning to occupy.	2	1	0	1	0	0	1	0	0	5	0	14:47	1427.0

	A	B	C	D	E	F	G	H	I	J	K	L	M	N	O	P	Q	R	S	T	U	V
1	Msg Number	Start	H+ Time Seconds	Net	Interrupt	From	To	Message Type	Text	Pass	Scan	Route	Update	EI	SH	Send	Enter	OTM	Word	Digital	Time	H+ Time Minutes
903	902	400	85680.0	TF_AL		A 1SG	TF S4	Yellow 1	Request 1000 diesel, eight HEAT, 600 25mm HE, three TOWs.	2	1	0	1	0	0	0	0	0	10	0	14:48	1428.0
904	903	400	85728.0	TF_AL		C 1SG	TF S4	Yellow 1	Request 800 diesel, four HEAT, 1200 25mm HE, seven TOWs.	2	1	0	1	0	0	0	0	0	10	0	14:48	1428.8
905	904	400	85860.0	TF_AL		B 1SG	TF S4	Yellow 1	Request 1600 diesel, ten HEAT.	2	1	0	1	0	0	0	0	0	5	0	14:51	1431.0
906	905	600	86040.0	TF_FS		Mtr Plt	TF FSE	Blue 2 abb	New firing point occupied as per TF FRAGO.	2	1	1	1	0	0	0	0	0	8	0	14:54	1434.0
907	906	860	86400.0	BdeCmd		TF Cdr	Bde Cdr	Internal trigger	TF 1-10 occupying new sector.	0	0	0	0	0	0	1	0	0	5	0	15:00	1440.0
908																						
909																						
910	**Outgoing Messages**																					
911		o	27600.0	TF_Cmd	out	TF Cdr	A 1-10	Order	Move along marked lanes and set at NJ774960.												22:40	460.0
912		o	64420.0	TF_Cmd	out	TF Cdr	A 1-10	Order	Keep tracking, hold fire until enemy is within 2000 meters.												8:53	1073.7
913		o	29880.0	TF_Cmd	out	TF Cdr	A 1-10	Order	Begin movement; take TF lead; reform diamond												23:18	498.0
914		o	67920.0	TF_Cmd	out	TF BC	A, B, C	Order	Report combat power.												9:52	1132.0
915		o	46668.0	TF_Cmd	out	TF Cdr	A, B, C	Order	Sprint to SBFs.												3:57	777.8
916		o	81420.0	TF_Cmd	out	TF Cdr	A, B, C EN, Sct Plt, Mtr Plt	WARNO	Brigade to establish defensive positions along PL Corn. TF FRAGO at 1410 hours on this net.												13:37	1357.0
917		o	8862.0	TF_Cmd	out	TF S3	A, B, C EN, Sct Plt, Mtr Plt, CPs	FRAGO	Change route of march to alternate route.												17:27	147.7
918		o	4620.0	TF_Cmd	out	TF BC	A, B, C EN, Sct Plt, Mtr Plt, CPs	Green 1	Report summarizing Bde Green 1 as applicable to TF.												16:17	77.0
919		o	83400.0	TF_Cmd	out	TF Cdr	A, B, C EN, Sct Plt, Mtr Plt, CPs	Order	TF 1-10 defends from MK820057 to MJ802935. A occupies BP 12 at MJ817970. B occupies BP 13 at MK830006. C occupies BP 11 at MJ793945. Mortars occupy FP at MJ824965. Scouts establish screen along 75 north-south gridline. Priority of engineer effort to A, C, B. Main CP at MJ863995. CTCP at MJ858939. Begin movement NLT 1430. Report when moving from current position, and when new position occupied.										14:10	1390.0
920		o	2304.0	TF_FS	out	TF FSE	A, B, C FISTs, COLT Tm, Mtr Plt	Alert	Bde move out has been upped to 1700. Update your status ASAP. 2-8 FA(R) is not going to be in place at that time. Further instructions/information will follow.												15:38	38.4
921		o	48660.0	TF_AL	out	TF S1	A, B, C, 1SGs	Alert	EPW collection point at NJ486875.												4:31	811.0
922		o	55812.0	TF_AL	out	TF S4	A, B, C, EN, HHC 1SGs	Alert	FSB starting to set up vicinity NJ2493.												6:30	930.2

	A	B	C	D	E	F	G	H	I	J	K	L	M	N	O	P	Q	R	S	T	U	V
1	Msg Number	Start	H+ Time Seconds	Net	Interrupt	From	To	Message Type	Text	Pass	Scan	Route	Update	EI	SH	Send	Enter	OTM	Word	Digital	Time	H+ Time Minutes
923		o	5058.0	TF_Cmd	out	TF B C	A, B, C, EN, Mtr Plt	Blue 2 abb	Scouts are moving now to man CPs.												16:24	84.3
924		o	14418.0	TF_Cmd	out	TF B C	A, B, C, EN, Sct Plt, Mtr Plt	Alert	Air defense warning Red.												19:00	240.3
925		o	17004.0	TF_Cmd	out	TF B C	A, B, C, EN, Sct Plt, Mtr Plt	Alert	Radars have picked up mid-level enemy fixed winged aircraft along PL Oats. Appears to be recce.												19:43	283.4
926		o	33852.0	TF_Cmd	out	TF B C	A, B, C, EN, Sct Plt, Mtr Plt	Alert	Radars identifying enemy rotary-winged aircraft vicinity NJ3189, moving east.												0:24	564.2
927		o	34680.0	TF_Cmd	out	TF B C	A, B, C, EN, Sct Plt, Mtr Plt	Alert	1-22 screening with air troops to your north out to Kiwi. When 1-10 hits Kiwi, 1-22 will move ground troops to screen northern flank.												0:38	578.0
928		o	26700.0	TF_Cmd	out	Tm EN	A, B, C, EN, Sct Plt, Mtr Plt	Alert	MICLIC - fire in the hole.												22:25	445.0
929		o	4920.0	TF_Cmd	out	TF Cdr	A, B, C, EN, Sct Plt, Mtr Plt	FRAGO	Execute OPORD effective 1900 hrs. Sct Plt to route CPs now, lead Tm SP at 1700.												16:22	82.0
930		o	75420.0	TF_Cmd	out	TF Cdr	A, B, C, EN, Sct Plt, Mtr Plt	Order	Enemy is committing to Bde's southern sector. On order, we attack along Axis Shoe to OBJ Tin. Destroy enemy BRAG. 3-92 and 2-10 will defend.												11:57	1257.0
931		o	16620.0	TF_Cmd	out	TF Cdr	A, B, C, EN, Sct Plt, Mtr Plt	Order	A, Mortars, C linkup with Scouts at northern point. B, Main CP, Engineers and CTCP linkup with Scouts at southern point.												19:37	277.0
932		o	15564.0	TF_Cmd	out	TF B C	A, B, C, EN, Sct Plt, Mtr Plt		Radars have picked up low-level enemy rotary-winged aircraft moving east toward 21st AD zone.												19:19	259.4
933		o	33924.0	TF_Cmd	out	TF B C	A, B, C, EN, Sct Plt, Mtr Plt, CPs	Alert	Friendly air moving east to west along air corridor in southern portion of Bde zone. Do not engage. Weapons hold on Air Axis Tom.												0:25	565.4
934		o	35070.0	TF_Cmd	out	TF B C	A, B, C, EN, Sct Plt, Mtr Plt, CPs	Alert	Friendly air moving west to east along air corridor in southern portion of Bde zone. Do not engage.												0:44	584.5

	A	B	C	D	E	F	G	H	I	J	K	L	M	N	O	P	Q	R	S	T	U	V
1	Msg Number	Start	H+ Time Seconds	Net	Interrupt	From	To	Message Type	Text	Pass	Scan	Route	Update	EI	SH	Send	Enter	OTM	Word	Digital	Time	H+ Time Minutes
935		o	38004.0	TF_Cmd	out	TF S2	A, B, C, EN, Sct Plt, Mtr Plt, CPs	Green 2	Reinforced enemy battalion moving east vicinity Superior Lake, NK9700.												1:33	633.4
936		o	20988.0	TF_Cmd	out	TF Cdr	A, B, C, EN, Sct Plt, Mtr Plt, CPs	WARNO	We will conduct in-stride breach of reported obstacles. Scouts linkup with BRT at obstacle. Tm EN pick up the pace and move directly behind Tm A. FRAGO at 2115.												20:49	349.8
937		o	78222.0	TF_Cmd	out	TF Cdr	A, B, C, EN, Sct Plt, Mtr Plt, Main CP	Order	Continue mission.												12:43	1303.7
938		o	65436.0	TF_Cmd	out	TF Cdr	A, B, C, Sct Plt, FSE	Order	Keep tracking the FSE. I want them to close in order volley fire and kill and draw in the AGMB. Priority of fires to A.												9:10	1090.6
939		o	54510.0	TF_Cmd	out	TF Cdr	A, C	Order	A, C hold fire.												6:08	908.5
940		o	80880.0	TF_Cmd	out	TF Cdr	A, C	Order	Move to and sweep your assigned objectives on Tin. A move east, then south to get to your objective. Engineers occupy AA at MJ855938.												13:28	1348.0
941		o	33360.0	BdeEN	out	EN OFF	ABE	Blue 2 abb	Set Churchill - E.												0:16	556.0
942		o	54642.0	TF_Cmd	out	TF Cdr	B 1-10	Order	Have your trains police them up, wait until A and C reach your location, diamond. A, C, Engineers move to reform diamond.												6:10	910.7
943		o	28260.0	TF_Cmd	out	TF Cdr	B 1-10	Order	Move now, move along road where crater was filled in; set at NJ764937.												22:51	471.0
944		o	47004.0	TF_Cmd	out	TF Cdr	B 1-10	Order	B engage at 2000 meters; A engage after B; C hold at NJ250980. C at my command assault flank and rear of enemy, do cross south of 96 east-west gridline. Priority of fires to B.												4:03	783.4
945		o	16698.0	BdeOI	out	TF S2	Bde S2	Route report	Routes through lava beds in our zone need improvement for follow-on forces.												19:38	278.3
946		o	65136.0	AirForce	out	TF ALO	Bde ALO	Alert	We should have a battalion-size target for you vicinity MK9110.												9:05	1085.6
947		o	28098.0	BdeCmd	out	TF B C	Bde BC	Alert	Beginning to move through breached obstacles												22:48	468.3
948		o	7260.0	BdeCmd	out	TF B C	Bde BC	Blue 2 abb	SP now.												17:01	121.0
949		o	10140.0	BdeCmd	out	TF B C	Bde BC	Blue 2 abb	TF 1-10 is clear of SP.												17:49	169.0
950		o	13644.0	BdeOI	out	TF B C	Bde BC	Alert	Obstacle on route of march has been cleared.												18:47	227.4
951		o	19608.0	BdeOI	out	TF B C	Bde BC	Alert	Routes through PL Tulip have been improved and marked.												20:25	326.8
952		o	26952.0	BdeOI	out	TF B C	Bde BC	Alert	Plow tanks beginning to proof lanes.												22:29	449.2
953		o	27552.0	BdeOI	out	TF B C	Bde BC	Alert	Proofing and marking is complete												22:39	459.2
954		o	50100.0	BdeOI	out	TF B C	Bde BC	Alert	REDCON 1.												4:55	835.0
955		o	56484.0	BdeOI	out	TF B C	Bde BC	Alert	One enemy fixed winged destroyed NJ05599, 3-92 sector, possible parachute.												6:41	941.4
956		o	36318.0	BdeOI	out	TF B C	Bde BC	Blue 1	One enemy helicopter destroyed, no survivors. Appears to be a MI-8, NJ568854.												1:05	605.3

	A	B	C	D	E	F	G	H	I	J	K	L	M	N	O	P	Q	R	S	T	U	V
1	Msg Number	Start	H+ Time Seconds	Net	Interrupt	From	To	Message Type	Text	Pass	Scan	Route	Update	EI	SH	Send	Enter	OTM	Word	Digital	Time	H+ Time Minutes
957		o	80148.0	BdeOI	out	TF B C	Bde BC	Blue 1	Enemy artillery at MJ823940 beginning to move due west.												13:15	1335.8
958		o	180.0	BdeOI	out	TF B C	Bde BC	Blue 2 abb	No change in status, commo, etc, is green												15:03	3.0
959		o	12048.0	BdeOI	out	TF B C	Bde BC	Blue 2 abb	Lead company set ATK Griffin.												18:20	200.8
960		o	14244.0	BdeOI	out	TF B C	Bde BC	Blue 2 abb	TF 1-10 has cleared RP.												18:57	237.4
961		o	21078.0	BdeOI	out	TF B C	Bde BC	Blue 2 abb	PL Pear, continuing mission												20:51	351.3
962		o	23112.0	BdeOI	out	TF B C	Bde BC	Blue 2 abb	Lead company, PL Rice.												21:25	385.2
963		o	31422.0	BdeOI	out	TF B C	Bde BC	Blue 2 abb	Lead company, PL Oats.												23:43	523.7
964		o	39612.0	BdeOI	out	TF B C	Bde BC	Blue 2 abb	PL Kiwi, continuing mission												2:00	660.2
965		o	45042.0	BdeOI	out	TF B C	Bde BC	Blue 2 abb	Lead company PL Bran.												3:30	750.7
966		o	51012.0	BdeOI	out	TF B C	Bde BC	Blue 2 abb	Lead company crossing PL Plum.												5:10	850.2
967		o	53730.0	BdeOI	out	TF B C	Bde BC	Blue 2 abb	Lead company, PL Barley, continuing mission.												5:55	895.5
968		o	58980.0	BdeOI	out	TF B C	Bde BC	Blue 2 abb	All companies starting to occupy Gold.												7:23	983.0
969		o	67638.0	BdeOI	out	TF B C	Bde BC	Blue 2 abb	Thirty plus enemy vehicles damaged or destroyed at MK947106. Fifteen plus vehicles in disarray.												9:47	1127.3
970		o	68220.0	BdeOI	out	TF B C	Bde BC	Blue 2 abb	Combat power is 29, 11, 3.												9:57	1137.0
971		o	74580.0	BdeOI	out	TF B C	Bde BC	Blue 2 abb	REDCON 1.												11:43	1243.0
972		o	75822.0	BdeOI	out	TF B C	Bde BC	Blue 2 abb	Lead company LD.												12:03	1263.7
973		o	82440.0	BdeOI	out	TF B C	Bde BC	Blue 2 abb	All companies on OBJ Tin, no enemy sighted												13:54	1374.0
974		o	85098.0	BdeOI	out	TF B C	Bde BC	Blue 2 abb	First company beginning to occupy new sector.												14:38	1418.3
975		o	85656.0	BdeOI	out	TF B C	Bde BC	Blue 2 abb	All companies beginning to occupy new sector												14:47	1427.6
976		o	58380.0	BdeOI	out	TF B C	Bde BC	Blue 2 abb	First company starting to occupy Gold.												7:13	973.0
977		o	37818.0	BdeOI	out	TF B C	Bde BC	Blue 2 abb	Beginning movement from Churchill.												1:30	630.3
978		o	54282.0	BdeOI	out	TF B C	Bde BC	Contact	B in contact with BRDMs.												6:04	904.7
979		o	76902.0	BdeCmd	out	TF S3	Bde Cdr	Blue 2 abb	Lead elements crossing 06 east-west on Axis Shoe.												12:21	1281.7
980		o	29976.0	BdeFS	out	TF FSE	Bde FSO	Blue 2 abb	TF 1-10 beginning movement on west side of obstacle.												23:19	499.6
981		o	33060.0	BdeFS	out	TF FSE	Bde FSO	Blue 2 abb	TF 1-10 set on OBJ Churchill.												0:11	551.0
982		o	78600.0	BdeAL	out	TF S1	Bde S1	Alert	Where is current EPW collection point?												12:50	1310.0
983		o	13500.0	BdeAL	out	TF S1	Bde S1	Red 1	No change.												18:45	225.0
984		o	68934.0	BdeAL	out	TF S1	Bde S1	Red 2 abb	Three KIA, seven WIA.												10:08	1148.9
985		o	78276.0	BdeOI	out	TF S2	Bde S2	Alert	What's the latest on the BRAG location?												12:44	1304.6
986		o	38640.0	BdeOI	out	TF S2	Bde S2	Blue 1	Enemy infantry at NJ513891; two BRDMs at NJ489883.												1:44	644.0
987		o	43920.0	BdeOI	out	TF S2	Bde S2	Blue 1	Two BRDMs at NJ273949 moving east.												3:12	732.0
988		o	45816.0	BdeOI	out	TF S2	Bde S2	Blue 1	Nine MTIs moving southeast on road at NJ185945.												3:43	763.6
989		o	46032.0	BdeOI	out	TF S2	Bde S2	Blue 1	Nine MTIs identified as BTRs and T-80s; stopped on road at NJ200945.												3:47	767.2
990		o	52656.0	BdeOI	out	TF S2	Bde S2	Blue 1	Scouts report two tracked vehicles moving east at NJ108955.												5:37	877.6
991		o	62940.0	BdeOI	out	TF S2	Bde S2	Blue 1	GSR identifying four MTIs at MK874106 heading east.												8:29	1049.0
992		o	64620.0	BdeOI	out	TF S2	Bde S2	Blue 1	Two T-80s, seven BTRs, and three unknown vehicles at MK890104 on the road moving east.												8:57	1077.0
993		o	65412.0	BdeOI	out	TF S2	Bde S2	Blue 1	Enemy company-sized element moving east at MK940104, deployed. Dust cloud stopped at MK8509, GSR starting to pick up something.												9:10	1090.2
994		o	66642.0	BdeOI	out	TF S2	Bde S2	Blue 1	30 enemy vehicles starting to speed up, moving east at MK9110.												9:30	1110.7
995		o	76296.0	BdeOI	out	TF S2	Bde S2	Blue 1	Twelve BRDMs moving east at MJ863996.												12:11	1271.6

	A	B	C	D	E	F	G	H	I	J	K	L	M	N	O	P	Q	R	S	T	U	V
1	Msg Number	Start	H+ Time Seconds	Net	Interrupt	From	To	Message Type	Text	Pass	Scan	Route	Update	EI	SH	Send	Enter	OTM	Word	Digital	Time	H+ Time Minutes
996		o	76950.0	BdeOI	out	TF S2	Bde S2	Blue 1	Eight BRDMs establishing hasty defense vicinity MK894004. Missiles on top of vehicles.												12:22	1282.5
997		o	79260.0	BdeOI	out	TF S2	Bde S2	Blue 1	Unidentified elements moving west at MJ8099												13:01	1321.0
998		o	79740.0	BdeOI	out	TF S2	Bde S2	Blue 1	Fifteen enemy artillery pieces preparing to move at MJ823940.												13:09	1329.0
999		o	65028.0	BdeOI	out	TF S2	Bde S2	Blue 1	Enemy company-sized element starting to deploy in battle formation at MK922106, continuing to move to east.												9:03	1083.8
1000		o	78000.0	BdeOI	out	TF S2	Bde S2	Blue 1	Six BRDMs destroyed MK894004 to MK882002.												12:40	1300.0
1001		o	80082.0	BdeOI	out	TF S2	Bde S2	Blue 1	Enemy artillery beginning to move due west.												13:14	1334.7
1002		o	55008.0	BdeOI	out	TF S2	Bde S2	Blue 2 abb	Scouts have clear Goldstone at NJ080059; deployed along 08 north-south gridline, continuing mission.												6:16	916.8
1003		o	56124.0	BdeOI	out	TF S2	Bde S2	Blue 2 abb	Scouts starting to enter Gold.												6:35	935.4
1004		o	57684.0	BdeOI	out	TF S2	Bde S2	Blue 2 abb	Scouts report Gold clear of enemy.												7:01	961.4
1005		o	60540.0	BdeOI	out	TF S2	Bde S2	Blue 2 abb	Scouts have established screen from MK971095 to												7:49	1009.0
1006		o	81780.0	BdeOI	out	TF S2	Bde S2	Blue 2 abb	Scout Plt occupying screen line from MJ801935 to MK830010.												13:43	1363.0
1007		o	85140.0	BdeOI	out	TF S2	Bde S2	Blue 2 abb	Scout screen established along 75 north-south gridline in sector.												14:39	1419.0
1008		o	14070.0	BdeOI	out	TF S2	Bde S2	Blue 2 abb	Scouts set along LD.												18:54	234.5
1009		o	20118.0	BdeOI	out	TF S2	Bde S2	Blue 2 abb	Scouts along PL Pear, nothing seen.												20:35	335.3
1010		o	22548.0	BdeOI	out	TF S2	Bde S2	Blue 2 abb	Scouts at PL Rice now. Have checked previously reported possible enemy recon at NJ9093; nothing found. Continuing mission.												21:15	375.8
1011		o	23730.0	BdeOI	out	TF S2	Bde S2	Blue 2 abb	Scouts have established screen along PL Berry.												21:35	395.5
1012		o	63420.0	BdeOI	out	TF S2	Bde S2	Green 2	Scouts have identified what we believe is a CRP moving east at MK900103.												8:37	1057.0
1013		o	1380.0	MSE	out	TF S2	Bde S2	Request	Request guidance for shift of responsibility for handover of NAI 15, NJ7994 between BRT and TF 1-10.												15:23	23.0
1014		o	56136.0	BdeCmd	out	TF S3	Bde S3	Blue 2 abb	Scouts starting to enter Gold.												6:35	935.6
1015		o	59640.0	BdeAL	out	TF S4	Bde S4	Blue 2 abb	CTCP setting up at NK079086.												7:34	994.0
1016		o	69300.0	BdeAL	out	TF S4	Bde S4	Yellow 1	29, 11, 3. One M1 damaged, one M2 damaged, one M2 destroyed. Green												10:15	1155.0
1017		o	60924.0	BdeAL	out	TF S4	Bde S4	Yellow 2	30, 13, 3												7:55	1015.4
1018		o	61020.0	BdeAL	out	TF S4	Bde S4	Yellow 3	10 sabot, 12 HEAT, 2650 25mm HE, 2 stingers, one MICLIC												7:57	1017.0
1019		o	61140.0	BdeAL	out	TF S4	Bde S4	Yellow 4	14,100 diesel												7:59	1019.0
1020		o	47238.0	TF_Cmd	out	TF Cdr	C 1-10	Order	Hold at current position.												4:07	787.3
1021		o	58560.0	TF_Cmd	out	TF Cdr	C 1-10	Order	Coordinate with Tm Engineer for assistance is blocking enemy lateral movement along the valley to your north at NK0111.												7:16	976.0
1022		o	80808.0	TF_Cmd	out	TF Cdr	C 1-10	Order	Negative, do not pursue.												13:26	1346.8
1023		o	80442.0	TF_Cmd	out	TF Cdr	C 1-10	Order	Engage.												13:20	1340.7
1024		o	64470.0	TF_FS	out	TF FSE	COLT 2	Alert	Can you lase to enemy vehicles to the west?												8:54	1074.5

	A	B	C	D	E	F	G	H	I	J	K	L	M	N	O	P	Q	R	S	T	U	V
1	Msg Number	Start	H+ Time Seconds	Net	Interrupt	From	To	Message Type	Text	Pass	Scan	Route	Update	EI	SH	Send	Enter	OTM	Word	Digital	Time	H+ Time Minutes
1025		o	67062.0	AirForce	out	TF ALO	Iceman Lead	Alert	Two 2S6s identified traveling with enemy, MK9210, one in center of formation, one at south end.												9:37	1117.7
1026		o	67332.0	AirForce	out	TF ALO	Iceman Lead	Alert	Target should be at MK9410.												9:42	1122.2
1027		o	66924.0	TF_Cmd	out	TF Cdr	Iceman Lead	Order	Scouts will direct you to target, 30 plus vehicles vicinity MK9110.												9:35	1115.4
1028		o	47118.0	TF_FD	out	TF FSE	Mtr Plt	Fires	Fire the mission.												4:05	785.3
1029		o	29100.0	TF_Cmd	out	TF Cdr	Mtr Plt	Order	Follow Tm C along road. Move to NJ760945.												23:05	485.0
1030		o	76320.0	TF_Cmd	out	TF B C	Sct Plt	Order	Keep eyes on, probably AT Battery.												12:12	1272.0
1031		o	28560.0	TF_Cmd	out	TF Cdr	Sct Plt	Order	Continue screening operations. Move no further than OBJ Churchill.												22:56	476.0
1032		o	32040.0	TF_Cmd	out	TF Cdr	Sct Plt	Order	Screen from NJ545863 to NJ595964.												23:54	534.0
1033		o	48900.0	TF_Cmd	out	TF Cdr	Sct Plt	Order	Establish screen along 20 north-south.												4:35	815.0
1034		o	52560.0	TF_Cmd	out	TF Cdr	Sct Plt	Order	Check out report of possible enemy vehicles at NJ134996.												5:36	876.0
1035		o	75660.0	TF_Cmd	out	TF Cdr	Sct Plt	Order	Press your screen forward. Screen TF right flank during movement. Keep eyes on avenue of approach north of Solcum Mountain.												12:01	1261.0
1036		o	45576.0	TF_Cmd	out	TF Cdr	Sct Plt	Order	Find the enemy company.												3:39	759.6
1037		o	14730.0	TF_OI	out	TF S2	Sct Plt	Alert	BRT reports terrain is extremely restricted north of 05 east-west gridline along PL Tulip. Check routes to the south.												19:05	245.5
1038		o	69360.0	TF_OI	out	TF S2	Sct Plt	Internal trigger	Redeploy sections to screen southern portion of TF sector. Link with 3-92 scouts at MK973022.	0	0	0	0	0	0	1	0	0	15	0	10:16	1156.0
1039		o	53190.0	TF_OI	out	TF S2	Sct Plt	Order	1-22 Cav has identified same. Keep eyes on, 1-22 will engage.												5:46	886.5
1040		out	77580.0	TF_Cmd	out	TF Cdr	A, B	Order	Once rounds impact, begin your assault.												12:33	1293.0
1041			16734.0	TF_Cmd	out	TF Cdr	Tm EN	Order	Leave assets along routes to mark and improve.												19:38	278.9

	A	B	C	D	E	F	G	H	I	J	K	L	M	N	O	P	Q	R	S	T	U	V
1	Msg Num	Start	H+ Time Seconds	Net	Interrupt	From	To	Message Type	Text	Pass	Scan	Route	Update	EI	SH	Send	Enter	OTM	Word	Digital	Time	H+ Time Minutes
2	1	270	6.0	ASAS		B de S2	TF S2	C110 Intel Report	Increased enemy activity noted along Krasnovian	1	1	1	1	1	0	2	0	0	7	2	15:00	0.1
3	2	370	10.0	FB CB 2		A 1-10	TF BC	Digital Connectivity	Digital connectivity check.	0	0	0	0	0	0	0	0	0	3	2	15:00	0.2
4	3	370	12.0	FB CB 2		B 1-10	TF BC	Digital Connectivity	Digital connectivity check.	0	0	0	0	0	0	0	0	0	3	2	15:00	0.2
5	4	370	14.0	FB CB 2		C 1-10	TF BC	Digital Connectivity	Digital connectivity check.	0	0	0	0	0	0	0	0	0	3	2	15:00	0.3
6	5	370	18.0	FB CB 2		Tm EN	TF BC	Digital Connectivity	Digital connectivity check.	0	0	0	0	0	0	0	0	0	3	2	15:00	0.3
7	6	370	22.0	FB CB 2		Sct Plt	TF BC	Digital Connectivity	Digital connectivity check.	0	0	0	0	0	0	0	0	0	3	2	15:00	0.4
8	7	370	25.0	FB CB 2		Mtr Plt	TF BC	Digital Connectivity	Digital connectivity check.	0	0	0	0	0	0	0	0	0	3	2	15:00	0.4
9	8	370	30.0	FB CB 2		ADA OFF	TF BC	Digital Connectivity	Digital connectivity check.	0	0	0	0	0	0	0	0	0	3	2	15:00	334.0
10	9	370	72.0	FB CB 2		A 1-10	TF BC	C400 Cdr's SitRep	No change in status, commo, etc, is green	0	2	0	0	0	0	0	0	0	8	2	15:01	339.0
11	10	370	84.0	FB CB 2		B 1-10	TF BC	C400 Cdr's SitRep	No change in status, commo, etc, is green	0	2	0	0	0	0	0	0	0	8	2	15:01	1.4
12	11	370	120.0	FB CB 2		C 1-10	TF BC	C400 Cdr's SitRep	No change in status, commo, etc, is green	0	2	0	0	0	0	0	0	0	8	2	15:02	2.0
13	12	370	132.0	FB CB 2		Tm EN	TF BC	C400 Cdr's SitRep	No change in status, commo, etc, is green	0	2	0	0	0	0	0	0	0	8	2	15:02	2.2
14	13	370	144.0	FB CB 2		Sct Plt	TF BC	C400 Cdr's SitRep	No change in status, commo, etc, is green	0	2	0	0	0	0	0	0	0	8	2	15:02	2.4
15	14	370	156.0	FB CB 2		Mtr Plt	TF BC	C400 Cdr's SitRep	No change in status, commo, etc, is green	0	2	0	0	0	0	0	0	0	8	2	15:02	2.6
16	15	370	162.0	FB CB 2		ADA OFF	TF BC	C400 Cdr's SitRep	No change in status, commo, etc, is green	0	2	0	0	0	0	2	0	0	8	2	15:02	2.7
17	16	760	240.0	FB CB 2		EN OFF	ABE	Internal trigger	No change in status, commo, etc, is green	0	0	0	0	0	0	2	0	0	8	2	15:04	4.0
18	17	400	300.0	TF_AL		A 1SG	TF S4	Commo Check	Commo Check	0	0	0	0	0	0	0	0	0	2	0	15:05	5.0
19	18	400	330.0	TF_AL		B 1SG	TF S4	Commo Check	Commo Check	0	0	0	0	0	0	0	0	0	2	0	15:05	5.5
20	19	420	334.0	CSSCS		A 1SG	TF S4	Digital Connectivity	Digital connectivity check.	0	0	0	0	0	0	0	0	0	3	2	15:05	5.5
21	20	420	339.0	CSSCS		B 1SG	TF S4	Digital Connectivity	Digital connectivity check.	0	0	0	0	0	0	0	0	0	3	2	15:05	5.6
22	21	650	360.0	AFATDS		A FIST	TF FSE	C400 Cdr Sit Rpt	No change in status, commo, etc, is green	2	2	0	0	0	0	0	0	0	8	2	15:06	6.0
23	22	420	361.0	CSSCS		C 1SG	TF S4	Digital Connectivity	Digital connectivity check.	0	0	0	0	0	0	0	0	0	3	2	15:06	6.0
24	23	420	365.0	CSSCS		A 23 EN 1SG	TF S4	Digital Connectivity	Digital connectivity check.	0	0	0	0	0	0	0	0	0	3	2	15:06	6.1
25	24	420	367.0	CSSCS		BMO	TF S4	Digital Connectivity	Digital connectivity check.	0	0	0	0	0	0	0	0	0	3	2	15:06	6.1
26	25	420	369.0	CSSCS		Spt Plt	TF S4	Digital Connectivity	Digital connectivity check.	0	0	0	0	0	0	0	0	0	3	2	15:06	6.1
27	26	650	372.0	AFATDS		B FIST	TF FSE	C400 Cdr Sit Rpt	No change in status, commo, etc, is green	2	2	0	0	0	0	0	0	0	8	2	15:06	6.2
28	27	420	375.0	CSSCS		Med Plt	TF S4	Digital Connectivity	Digital connectivity check.	0	0	0	0	0	0	0	0	0	3	2	15:06	6.2
29	28	420	377.0	CSSCS		HHC Cdr	TF S4	Digital Connectivity	Digital connectivity check.	0	0	0	0	0	0	0	0	0	3	2	15:06	6.2
30	29	650	378.0	AFATDS		C FIST	TF FSE	C400 Cdr Sit Rpt	No change in status, commo, etc, is green	2	2	0	0	0	0	0	0	0	8	2	15:06	6.3
31	30	650	390.0	AFATDS		COL T 2	TF FSE	C400 Cdr Sit Rpt	No change in status, commo, etc, is green	2	2	0	0	0	0	0	0	0	8	2	15:06	6.5
32	31	400	402.0	TF_AL		C 1SG	TF S4	Commo Check	Commo Check	0	0	0	0	0	0	0	0	0	2	0	15:06	6.7
33	32	400	408.0	TF_AL		A 23 EN 1SG	TF S4	Commo Check	Commo Check	0	0	0	0	0	0	0	0	0	2	0	15:06	6.8
34	33	400	414.0	TF_AL		BMO	TF S4	Commo Check	Commo Check	0	0	0	0	0	0	0	0	0	2	0	15:06	6.9
35	34	400	426.0	TF_AL		Spt Plt	TF S4	Commo Check	Commo Check	0	0	0	0	0	0	0	0	0	2	0	15:07	7.1
36	35	100	438.0	TF_AL		Med Plt	TF S1	Commo Check	Commo Check	0	0	0	0	0	0	0	0	0	2	0	15:07	7.3
37	36	400	450.0	TF_AL		HHC Cdr	TF S4	Commo Check	Commo Check	0	0	0	0	0	0	0	0	0	2	0	15:07	7.5
38	37	650	540.0	AFATDS		2-3 CP	TF FSE	C400 Cdr Sit Rpt	No change in status, commo, etc, is green	2	2	0	0	0	0	0	0	0	8	2	15:09	9.0
39	38	650	552.0	AFATDS		2-3 CP	TF FSE	C400 Cdr Sit Rpt	One FAASV broke down, no other change	2	2	0	1	1	0	0	0	0	7	2	15:09	9.2
40	39	450	660.0	CSSCS		TF S4	B de S4	Internal trigger	No change in status, commo, etc, is green	0	0	0	0	0	0	2	0	0	7	2	15:11	11.0
41	40	650	720.0	AFATDS		2-8 FA	TF FSE	C400 Cdr Sit Rpt	2-8 FA will close on AA at 2100 hours, no change in status	2	3	1	1	1	0	0	0	0	13	2	15:12	12.0

	A	B	C	D	E	F	G	H	I	J	K	L	M	N	O	P	Q	R	S	T	U	V
1	Msg Num	Start	H+ Time Seconds	Net	Interrupt	From	To	Message Type	Text	Pass	Scan	Route	Update	EI	SH	Send	Enter	OTM	Word	Digital	Time	H+ Time Minutes
42	41	750	1200.0	FB CB 2		ABE	EN OFF	S507L SitRep / Slant	A 358 EN will close w/ bridges 1830	1	3	1	1	1	0	0	0	0	8	2	15:20	20.0
43	42	270	1320.0	ASAS		Bde S2	TF S2	C110 Intel Report	Krasnovian Div confirmed massed on border to our front.	1	1	1	1	1	0	0	0	0	9	2	15:22	22.0
44	43	370	1326.0	FB CB 2		ADA OFF	TF BC	A692 Weapon Control Order	Maintain AD Weapons Control Status at White.	2	2	0	1	0	0	0	0	0	7	2	15:22	22.1
45	44	280	1380.0	ASAS		TF S2	Bde S2	Internal trigger	Request guidance for shift of responsibility for handover of NAI 15, NJ7994, between BRT and TF 1-10	0	0	0	0	0	0	2	0	0	14	0	15:23	23.0
46	45	280	1620.0	ASAS		TF S2	Bde S2	Internal trigger	Request 3-92 take coverage of gap at NJ7786.	0	0	0	0	0	0	2	0	0	7	0	15:27	27.0
47	46	370	1800.0	FB CB 2		ADA OFF	TF BC	K10.01 Hostile A/C Report	Two Krasnovian flights, 3 AC each, paralleling IB South to North, no intrusion expected.	2	1	0	1	0	0	0	0	0	14	2	15:30	30.0
48	47	820	2100.0	BdeCmd		Bde Cdr	TF Cdr	Alert	We are being tasked to execute OPORD NLT 1700, report your status ASAP.	0	3	0	0	1	0	0	0	0	13	0	15:35	35.0
49	48	860	2130.0	TF_Cmd	12	TF Cdr	TF BC	Internal trigger	We are being tasked to execute OPORD NLT 1700, gather the staff for a meeting - I am on the way.	2	4	1	0	1	2	1	0	0	16	0	15:35	35.5
50	49	860	2160.0	TF_Cmd		TF Cdr	A, B, C EN, Sct Plt, Mtr Plt	Internal trigger	We have been tasked to execute OPORD NLT 1700. Get ready to go. Report your status ASAP.	0	0	0	0	0	0	1	0	0	15	0	15:36	36.0
51	50	280	2220.0	ASAS		TF S2	Sct Plt	Internal trigger	We have been tasked to execute OPORD NLT 1700. You will need to be ready to move NLT 1630 to set CPs.	0	0	0	0	0	0	2	0	0	20	2	15:37	37.0
52	51	600	2280.0	BdeFS		Bde FSE	TF FSE	Alert	Bde move out has been upped to 1700. Update your status ASAP. 2-8 FA(R) is not going to be in position at that time. Further instructions/information will follow.	2	2	0	1	1	0	1	0	0	29	0	15:38	38.0
53	52	270	2340.0	ASAS		Sct Plt	TF S2	F014 RFI	Do I take the GSRs with me at this time?	2	1	0	0	1	0	2	0	0	10	2	15:39	39.0
54	53	370	2400.0	MCS		Bde BC	TF BC	A692 Weapon Control Order	Air defense warning is yellow. WCS is tight.	2	2	1	1	1	0	2	0	0	8	2	15:40	40.0
55	54	920	2460.0	BdeCmd		Bde S3	TF S3	Alert	1-22 Cav will be contacting you on your net to coordinate routes through your AA.	2	3	0	0	1	0	0	0	0	15	0	15:41	41.0
56	55	600	2520.0	BdeFS		B 2-3 FA	TF FSE	Blue 2	Redcon 3.	2	2	0	1	1	0	0	0	0	2	0	15:42	42.0
57	56	600	2580.0	BdeFS		A 2-3 FA	TF FSE	Blue 2	Redcon 2.	2	2	0	1	1	0	0	0	0	2	0	15:43	43.0
58	57	600	2640.0	BdeFS		C 2-3 FA	TF FSE	Blue 2	Redcon 2.	2	2	1	1	1	0	0	0	0	2	0	15:44	44.0
59	58	370	2700.0	FB CB 2		A 1-10	TF BC	C400 Cdr's SitRep	Redcon 2.	2	2	0	1	0	0	0	0	0	2	2	15:45	45.0
60	59	370	2706.0	FB CB 2		B 1-10	TF BC	C400 Cdr's SitRep	Redcon 2.	2	2	0	1	0	0	0	0	0	2	2	15:45	45.1
61	60	370	2760.0	FB CB 2		C 1-10	TF BC	C400 Cdr's SitRep	Redcon 2	2	2	0	1	0	0	0	0	0	2	2	15:46	46.0
62	61	370	2772.0	FB CB 2		Tm EN	TF BC	C400 Cdr's SitRep	Redcon 2	2	2	0	1	0	0	0	0	0	2	2	15:46	46.2
63	62	420	2820.0	CSSCS		Bde S4	TF S4	S507 Resources Location	FSB 5000 gal. tankers will not be returning to BSA until 2100 hrs tonight.	2	2	0	1	1	0	0	0	0	14	2	15:47	47.0
64	63	370	2862.0	FB CB 2		Mtr Plt	TF BC	C400 Cdr's SitRep	Redcon 2	2	3	0	1	0	0	1	0	0	2	2	15:47	47.7
65	64	860	2880.0	BdeCmd		TF Cdr	Bde Cdr	Internal trigger	TF 1-10 is Green, Redcon 2.	0	0	0	0	0	0	1	0	0	5	0	15:48	48.0
66	65	900	3360.0	TF_Cmd		1-22 Cav Cdr	TF S3	Request	Request coordination for routes forward to LD and during movement.	0	1	0	0	1	0	0	0	0	10	0	15:56	56.0

	A	B	C	D	E	F	G	H	I	J	K	L	M	N	O	P	Q	R	S	T	U	V
1	Msg Num	Start	H+ Time Seconds	Net	Interrupt	From	To	Message Type	Text	Pass	Scan	Route	Update	E1	SH	Send	Enter	OTM	Word	Digital	Time	H+ Time Minutes
67	66	270	3600.0	ASAS		B de S2	TF S2	G131 Intel Summary	Krasnovian forces have significantly increased buildup along border during the last 12 hours.	2	4	1	1	1	2	2	0	0	12	2	16:00	60.0
68	67	420	3660.0	CSSCS		A 1SG	TF S4	C802 Logistics SitRep	9/4 up, 1 M1 NMCM	2	2	0	1	1	0	0	0	0	6	2	16:01	61.0
69	68	420	3780.0	CSSCS		B 1SG	TF S4	C802 Logistics SitRep	14 up	2	2	0	1	1	0	0	0	0	2	2	16:03	63.0
70	69	420	3792.0	CSSCS		B 1SG	TF S4	B875 Munitions StatRep	Green	2	2	0	1	1	0	0	0	0	1	2	16:03	63.2
71	70	550	3840.0	AirForce		B de ALO	TF ALO	Alert	No attack aircraft available until 0600; recon effort in your sector being planned for 0100 to 0300, ATO being redone now.	2	0	0	1	0	0	0	0	0	18	0	16:04	64.0
72	71	420	3900.0	CSSCS		C 1SG	TF S4	C802 Logistics SitRep	14 up	2	2	0	1	1	0	0	0	0	2	2	16:05	65.0
73	72	420	3918.0	CSSCS		A 1SG	TF S4	B875 Munitions StatRep	Green	2	2	0	1	1	0	0	0	0	1	2	16:05	65.3
74	73	420	3942.0	CSSCS		C 1SG	TF S4	B875 Munitions StatRep	Green	2	2	0	1	1	0	0	0	0	1	2	16:05	65.7
75	74	420	3960.0	CSSCS		A 23 EN 1SG	TF S4	C802 Logistics SitRep	All equipment up.	2	2	0	1	1	0	0	0	0	3	2	16:06	66.0
76	75	420	4020.0	CSSCS		Sct Plt	TF S4	C802 Logistics SitRep	6 up	2	2	0	1	1	0	0	0	0	2	2	16:07	67.0
77	76	420	4044.0	CSSCS		Mtr Plt	TF S4	C802 Logistics SitRep	4 up	2	2	0	1	1	0	0	0	0	2	2	16:07	67.4
78	77	420	4080.0	CSSCS		Sct Plt	TF S4	B875 Munitions StatRep	Green	2	2	0	1	1	0	0	0	0	1	2	16:08	68.0
79	78	420	4140.0	CSSCS		ADA OFF	TF S4	C802 Logistics SitRep	4 up	2	2	0	1	1	0	5	0	0	2	2	16:09	69.0
80	79	420	4176.0	CSSCS		Mtr Plt	TF S4	B875 Munitions StatRep	Green	2	2	0	1	1	0	5	0	0	1	2	16:09	69.6
81	80	420	4200.0	CSSCS		A 1SG	TF S4	C802 Logistics SitRep	Green	2	2	0	1	1	0	0	0	0	1	2	16:10	70.0
82	81	370	4224.0	FB CB 2		A 1-10	TF BC	C400 Cdr's SitRep	Redcon 1	2	2	0	1	0	0	0	0	0	2	2	16:10	70.4
83	82	420	4260.0	CSSCS		B 1SG	TF S4	C802 Logistics SitRep	Green	1	2	0	1	1	0	2	0	0	2	2	16:11	71.0
84	83	370	4302.0	FB CB 2		Tm EN	TF BC	C400 Cdr's SitRep	Redcon 1	2	2	0	1	0	0	0	0	0	2	2	16:11	71.7
85	84	420	4320.0	CSSCS		C 1SG	TF S4	C802 Logistics SitRep	Green	2	2	0	1	0	0	5	0	0	1	2	16:12	72.0
86	85	600	4320.0	B deFS		A 2-3 FA	TF FSE	Blue 2	Redcon 1	2	2	0	1	0	0	0	0	0	2	0	16:12	72.0
87	86	370	4332.0	FB CB 2		Sct Plt	TF BC	C400 Cdr's SitRep	Redcon 1	2	2	0	1	0	0	0	0	0	2	2	16:12	72.2
88	87	600	4380.0	B deFS		B 2-3 FA	TF FSE	Blue 2 abb	Redcon 1	2	2	0	1	0	0	0	0	0	2	0	16:13	73.0
89	88	370	4386.0	FB CB 2		B 1-10	TF BC	C400 Cdr's SitRep	Redcon 1	2	2	0	1	0	0	0	0	0	2	2	16:13	73.1
90	89	370	4416.0	FB CB 2		Mtr Plt	TF BC	C400 Cdr's SitRep	Redcon 1	2	2	0	1	0	0	0	0	0	2	2	16:13	73.6
91	90	600	4440.0	B deFS		C 2-3 FA	TF FSE	Blue 2 abb	Redcon 1	2	2	1	1	0	0	0	0	0	2	0	16:14	74.0
92	91	370	4464.0	FB CB 2		C 1-10	TF BC	C400 Cdr's SitRep	Redcon 1	2	2	0	1	0	0	2	0	0	2	2	16:14	74.4

	A	B	C	D	E	F	G	H	I	J	K	L	M	N	O	P	Q	R	S	T	U	V
1	Msg Num	Start	H+ Time Seconds	Net	Interrupt	From	To	Message Type	Text	Pass	Scan	Route	Update	EI	SH	Send	Enter	OTM	Word	Digital	Time	H+ Time Minutes
93	92	380	4620.0	FB CB 2		TF BC	A, B, C EN, Sct Plt, Mtr Plt, CPs	Internal trigger	Report summarizing B de G131 as applicable to TF.	0	0	0	0	0	0	2	0	0	8	2	16:17	77.0
94	93	820	4800.0	B deCmd		B de Cdr	TF Cdr	FRAGO	Execute OPORD effective 1900 hrs. Notify this HQ on SP.	0	3	0	1	1	0	1	0	0	10	0	16:20	80.0
95	94	860	4824.0	TF_Cmd	12	TF Cdr	TF BC	Internal trigger	Execute OPORD effective 1900 hrs. Notify B de HQ on SP.	2	3	1	1	1	2	1	0	0	10	0	16:20	80.4
96	95	270	4830.0	ASAS		BRT	TF S2	C400 C dr's SitRep	SP now to PL Apple.	1	1	0	1	1	0	0	0	0	5	2	16:20	80.5
97	96	420	4980.0	CSSCS		B de S4	TF S4	S507 Resources Location	BSA will be breaking down at 1700 and will begin movement at 1900.	2	1	0	1	1	0	0	0	0	13	2	16:23	83.0
98	97	270	5040.0	ASAS		Sct Plt	TF S2	C400 C dr's SitRep	Moving now to man CPs.	2	4	1	1	1	0	0	0	0	5	2	16:24	84.0
99	98	380	5058.0	FB CB 2		TF BC	A, B, C, EN, Mtr Plt	Internal trigger	Scouts are moving now to man CPs.	0	0	0	0	0	0	2	0	0	7	0	16:24	84.3
100	99	920	6480.0	B deCmd		B de S3	TF S3	Blue 2 abb	3-92 will be 15 minutes late hitting SP.	0	1	0	0	1	0	0	0	0	8	0	16:48	108.0
101	100	370	6600.0	FB CB 2		A 1-10	TF BC	Icon Movement	Moving now to SP.	2	1	0	0	0	0	0	0	0	0	4	16:50	110.0
102	101	370	7080.0	FB CB 2		C 1-10	TF BC	Icon Movement	Moving now to SP.	2	1	0	0	0	0	0	0	0	0	4	16:58	118.0
103	102	370	7140.0	FB CB 2		Mtr Plt	TF BC	Icon Movement	Moving now to SP.	2	1	0	0	0	0	0	0	0	0	4	16:59	119.0
104	103	370	7200.0	FB CB 2		A 1-10	TF BC	Icon Movement	SP now.	2	1	0	1	1	0	2	0	1	0	4	17:00	120.0
105	104	760	7266.0	FB CB 2		EN OFF	ABE	Internal trigger	Moving now to SP.	0	0	0	0	0	0	2	0	1	4	0	17:01	121.1
106	105	370	7302.0	FB CB 2		Tm EN	TF BC	Icon Movement	Moving now to SP.	2	1	0	0	0	0	0	0	1	0	4	17:01	121.7
107	106	370	7440.0	FB CB 2		A 1-10	TF BC	Icon Movement	CP 1 now.	2	1	0	1	1	0	0	0	1	0	4	17:04	124.0
108	107	600	7500.0	B deFS		2-3 CP	TF FSE	Blue 2	Batteries beginning movement from AA.	2	1	0	0	1	0	0	0	1	5	0	17:05	125.0
109	108	370	7518.0	FB CB 2		Sct Plt	TF BC	K04.03 Obstacle Rpt	Rock slide has blocked the road 2 Kms short of CP 4.	2	1	0	1	2	1	0	0	1	12	2	17:05	125.3
110	109	960	7536.0	TF_Cmd		TF S3	Sct Plt, Tm EN	Internal trigger	Scouts, find alternate route; engineers check extent of obstacle.	0	0	0	0	0	0	1	0	1	9	0	17:05	125.6
111	110	960	7560.0	TF_Cmd		TF S3	A, B, C, EN, Mtr Plt	Internal trigger	Continue on current route. Be prepared to move on alternate route.	0	0	0	0	0	0	1	0	1	11	0	17:06	126.0
112	111	960	7620.0	B deCmd		TF S3	B de S3	Internal trigger	Rock slide has blocked the road 2 Kms short of CP 4. Scouts checking alternate route.	0	0	0	0	0	0	1	0	1	13	0	17:07	127.0
113	112	920	7644.0	B deCmd		B de S3	TF S3	Order	Continue movement. Have your engineers clear obstacle.	0	1	0	0	1	0	1	0	1	7	0	17:07	127.4
114	113	370	7680.0	FB CB 2		C 1-10	TF BC	Icon Movement	SP now.	2	1	0	1	1	0	0	0	1	0	4	17:08	128.0
115	114	370	7920.0	FB CB 2		C 1-10	TF BC	Icon Movement	CP 1 now.	2	1	0	1	1	0	0	0	1	0	4	17:12	132.0
116	115	370	8160.0	FB CB 2		Mtr Plt	TF BC	Icon Movement	SP now.	2	1	0	1	1	0	0	0	1	0	4	17:16	136.0
117	116	920	8280.0	B deCmd		B de S3	TF S3	Blue 2 abb	3-92 lead element SP.	0	1	0	1	1	0	0	0	1	4	0	17:18	138.0
118	117	370	8400.0	FB CB 2		B 1-10	TF BC	Icon Movement	SP now.	2	1	0	1	1	0	0	0	1	0	4	17:20	140.0
119	118	370	8424.0	FB CB 2		Mtr Plt	TF BC	Icon Movement	CP 1 now.	2	1	0	1	1	0	0	0	1	0	4	17:20	140.4
120	119	270	8640.0	ASAS		B de S2	TF S2	C110 Intel Report	Enemy brigades forming in possible attack positions; remaining on their side of the border.	2	4	0	1	1	0	2	0	1	14	2	17:24	144.0

	A	B	C	D	E	F	G	H	I	J	K	L	M	N	O	P	Q	R	S	T	U	V
1	Msg Num	Start	H+ Time Seconds	Net	Interrupt	From	To	Message Type	Text	Pass	Scan	Route	Update	EI	SH	Send	Enter	OTM	Word	Digital	Time	H+ Time Minutes
121	120	870	8658.0	FB CB 2		TF S2	TF Cdr	C110 Intel Report	Enemy brigades forming in possible attack positions; remaining on their side of the border.	0	1	0	0	1	0	0	0	1	14	2	17:24	144.3
122	121	370	8659.0	FB CB 2		B 1-10	TF BC	Icon Movement	CP 1 now.	2	1	0	1	1	0	0	0	1	0	4	17:24	144.3
123	122	370	8700.0	FB CB 2		A 1-10	TF BC	Icon Movement	CP 2 now.	2	1	0	1	1	0	0	0	1	0	4	17:25	145.0
124	123	970	8820.0	FB CB 2		Sct Plt	TF S3	K04.02 Land Route Rpt	Alternate route clear. CPs 5 & 6 established on alternate route.	0	1	0	1	1	0	1	0	1	11	2	17:27	147.0
125	124	960	8940.0	BdeCmd		TF S3	Bde S3	Internal trigger	TF moving along alternate route.	0	0	0	0	0	0	1	0	0	5	0	17:29	149.0
126	125	370	9180.0	FB CB 2		C 1-10	TF BC	Icon Movement	CP 2 now.	2	1	0	1	1	0	0	0	1	0	4	17:33	153.0
127	126	370	9300.0	FB CB 2		A 1-10	TF BC	Icon Movement	CP 3 now.	2	1	0	1	1	0	0	0	1	0	4	17:35	155.0
128	127	370	9420.0	FB CB 2		Tm EN	TF BC	Icon Movement	SP now.	2	1	0	1	1	0	0	0	1	0	4	17:37	157.0
129	128	370	9540.0	FB CB 2		ADA OFF	TF BC	K10.01 Hostile A/C Report	Increased enemy air activity along border. Air defense warning Red.	2	3	0	1	1	0	0	0	1	10	2	17:39	159.0
130	129	370	9660.0	FB CB 2		Tm EN	TF BC	Icon Movement	CP 1 now.	2	1	0	1	1	0	0	0	1	0	4	17:41	161.0
131	130	370	9672.0	FB CB 2		Mtr Plt	TF BC	Icon Movement	CP 2 now.	2	1	0	1	1	0	0	0	1	0	4	17:41	161.2
132	131	370	9684.0	FB CB 2		TF S4	TF BC	Icon Movement	SP now.	2	1	0	1	1	0	2	0	1	0	4	17:41	161.4
133	132	370	9696.0	FB CB 2		C 1-10	TF BC	Icon Movement	CP 3 now.	2	1	0	1	1	0	0	0	1	0	4	17:41	161.6
134	133	370	9702.0	FB CB 2		A 1-10	TF BC	Icon Movement	CP 5 now.	2	1	0	1	1	0	0	0	1	0	4	17:41	161.7
135	134	370	9900.0	FB CB 2		B 1-10	TF BC	Icon Movement	CP 2 now.	2	1	0	1	1	0	0	0	1	0	4	17:45	165.0
136	135	370	9936.0	FB CB 2		TF S4	TF BC	Icon Movement	CP 1 now.	2	1	0	1	1	0	0	0	1	0	4	17:45	165.6
137	136	370	10020.0	FB CB 2		C 1-10	TF BC	Icon Movement	CP 5 now.	2	1	0	1	1	0	0	0	1	0	4	17:47	167.0
138	137	370	10152.0	FB CB 2		Mtr Plt	TF BC	Icon Movement	CP 3 now.	2	1	0	1	1	0	0	0	1	0	4	17:49	169.2
139	138	370	10170.0	FB CB 2		A 1-10	TF BC	Icon Movement	CP 6 now.	2	1	0	1	1	0	0	0	1	0	4	17:49	169.5
140	139	370	10380.0	FB CB 2		B 1-10	TF BC	Icon Movement	CP 3 now.	2	1	0	1	1	0	0	0	1	0	4	17:53	173.0
141	140	370	10500.0	FB CB 2		Mtr Plt	TF BC	Icon Movement	CP 5 now.	2	1	0	1	1	0	0	0	1	0	4	17:55	175.0
142	141	370	10542.0	FB CB 2		C 1-10	TF BC	Icon Movement	CP 6 now.	2	1	0	1	1	0	0	0	1	0	4	17:55	175.7
143	142	370	10620.0	FB CB 2		A 1-10	TF BC	Icon Movement	CP 4 now.	2	1	0	1	1	0	0	0	1	0	4	17:57	177.0
144	143	370	10680.0	FB CB 2		Tm EN	TF BC	Icon Movement	CP 2 now.	2	1	0	1	1	0	0	0	1	0	4	17:58	178.0
145	144	370	10740.0	FB CB 2		B 1-10	TF BC	Icon Movement	CP 5 now.	2	1	0	1	1	0	0	0	1	0	4	17:59	179.0
146	145	270	10800.0	ASAS		Bde S2	TF S2	C521 Weather Forecast	Weather report; dry, clear, 85 degrees.	1	2	0	1	1	0	2	0	1	6	2	18:00	180.0
147	146	370	10824.0	FB CB 2		ADA OFF	TF BC	K10.01 Hostile A/C Report	Air defense warning Red.	0	3	0	1	1	0	0	0	1	4	2	18:00	180.4
148	147	920	10860.0	BdeCmd		Bde S3	TF S3	Blue 2 abb	2-10 lead element SP.	0	1	0	1	1	0	0	0	1	4	0	18:01	181.0
149	148	370	10980.0	FB CB 2		Mtr Plt	TF BC	Icon Movement	CP 6 now.	2	1	0	1	1	0	0	0	1	0	4	18:03	183.0
150	149	370	11118.0	FB CB 2		C 1-10	TF BC	Icon Movement	CP 4 now.	2	1	0	1	1	0	0	0	1	0	4	18:05	185.3
151	150	370	11130.0	FB CB 2		A 1-10	TF BC	Icon Movement	RP now.	2	1	0	1	1	0	0	0	1	0	4	18:05	185.5
152	151	800	11142.0	TF_Cmd		B 1-10	TF Cdr	Blue 2 abb	One tank slid off road, recovery operations underway.	0	2	0	1	1	0	0	0	1	8	0	18:05	185.7
153	152	370	11184.0	FB CB 2		TF S4	TF BC	Icon Movement	CP 2 now.	2	1	0	1	1	0	0	0	1	0	4	18:06	186.4
154	153	370	11202.0	FB CB 2		Tm EN	TF BC	Icon Movement	CP 3 now.	2	1	0	1	1	0	0	0	1	0	4	18:06	186.7
155	154	370	11220.0	FB CB 2		B 1-10	TF BC	Icon Movement	CP 6 now.	2	1	0	1	1	0	0	0	1	0	4	18:07	187.0

	A	B	C	D	E	F	G	H	I	J	K	L	M	N	O	P	Q	R	S	T	U	V
1	Msg Num	Start	H+ Time Seconds	Net	Interrupt	From	To	Message Type	Text	Pass	Scan	Route	Update	EI	SH	Send	Enter	OTM	Word	Digital	Time	H+ Time Minutes
156	155	860	11400.0	FB CB 2		TF Cdr	A, B, C, EN, Sct Plt, Mtr Plt, CPs	Internal trigger	Pause in ATK Griffin; conduct attack position activities.	0	0	0	0	0	0	2	0	1	8	0	18:10	190.0
157	156	420	11436.0	CSSCS		B 1SG	TF S4	K01.01 Free Text	One tank slid off road 300 meters past CP 5; company M88 attempting to recover.	0	3	0	1	1	0	0	0	1	15	2	18:10	190.6
158	157	370	11460.0	FB CB 2		C 1-10	TF BC	Icon Movement	RP now.	2	1	0	1	1	0	0	0	1	0	4	18:11	191.0
159	158	370	11580.0	FB CB 2		Mtr Plt	TF BC	Icon Movement	CP 4 now.	2	1	0	1	1	0	0	0	1	0	4	18:13	193.0
160	159	370	11640.0	FB CB 2		TF S4	TF BC	Icon Movement	CP 3 now.	2	1	0	1	1	0	0	0	1	0	4	18:14	194.0
161	160	370	11760.0	FB CB 2		ADA OFF	TF BC	A692 Weapon Control Order	Division has increased ADWCS to Tight.	2	2	0	1	1	0	2	0	1	4	2	18:16	196.0
162	161	370	11802.0	FB CB 2		Tm EN	TF BC	K04.03 Obstacle Rpt	Arrived at road block, estimate 30 - 40 minutes to open a lane.	2	4	0	1	2	0	0	0	1	10	2	18:16	196.7
163	162	370	11820.0	FB CB 2		B 1-10	TF BC	Icon Movement	CP 4 now.	2	1	0	1	1	0	0	0	1	0	4	18:17	197.0
164	163	370	11940.0	FB CB 2		Mtr Plt	TF BC	Icon Movement	RP now.	2	1	0	1	1	0	0	0	1	0	4	18:19	199.0
165	164	370	12000.0	FB CB 2		TF S4	TF BC	Icon Movement	CP 5 now.	2	1	0	1	1	0	0	0	1	0	4	18:20	200.0
166	165	300	12012.0	TF_Cmd		A 1-10	TF BC	Blue 2 abb	Set ATK Griffin.	2	3	0	1	1	0	2	0	1	3	0	18:20	200.2
167	166	370	12180.0	FB CB 2		B 1-10	TF BC	Icon Movement	RP now.	2	1	0	1	1	0	0	0	1	0	4	18:23	203.0
168	167	450	12300.0	CSSCS		TF S4	B 1SG	Internal trigger	Your tank's been recovered, we'll bring it with us to join you in ATK Griffin.	0	0	0	0	0	0	2	0	1	13	0	18:25	205.0
169	168	150	12342.0	FB CB 2		TF S1	A, B, C, EN, HHC 1SGs	Internal trigger	Send changes to previous Red 1 report.	0	0	0	0	0	0	2	0	0	7	0	18:25	205.7
170	169	300	12360.0	TF_Cmd		C 1-10	TF BC	Blue 2 abb	Set ATK Griffin.	2	3	0	1	1	0	0	0	1	3	0	18:26	206.0
171	170	300	12420.0	TF_Cmd		Mtr Plt	TF BC	Blue 2 abb	Set ATK Griffin.	2	3	0	1	1	0	0	0	1	3	0	18:27	207.0
172	171	600	12456.0	TF_FD		Mtr Plt	TF FSE	Blue 2 abb	Set ATK Griffin.	2	3	0	1	1	0	0	0	1	3	0	18:27	207.6
173	172	420	12480.0	FB CB 2		A 1SG	TF S1	G880 Pers StatRep	No change.	2	2	0	0	0	0	0	0	1	2	2	18:28	208.0
174	173	420	12498.0	FB CB 2		B 1SG	TF S1	G880 Pers StatRep	No change.	2	2	0	0	0	0	0	0	1	2	2	18:28	208.3
175	174	150	12528.0	FB CB 2		TF S1	TF BC	Internal trigger	CP 6 now.	0	0	0	0	0	0	2	0	1	3	0	18:28	208.8
176	175	370	12540.0	FB CB 2		TF S1	TF BC	K05.14 SitRep	CP 6 now.	2	1	0	1	1	0	0	0	1	3	2	18:29	209.0
177	176	420	12600.0	FB CB 2		C 1SG	TF S1	G880 Pers StatRep	No change.	2	2	0	0	0	0	0	0	1	2	2	18:30	210.0
178	177	760	12780.0	FB CB 2		EN OFF	ABE	Internal trigger	No change.	0	0	0	0	0	0	2	0	1	2	2	18:33	213.0
179	178	420	12840.0	FB CB 2		ADA OFF	TF S1	G880 Pers StatRep	No change.	2	2	0	0	0	0	0	0	1	2	2	18:34	214.0
180	179	420	12900.0	FB CB 2		HHC 1-10	TF S1	G880 Pers StatRep	No change.	2	2	0	0	0	0	5	0	1	2	2	18:35	215.0
181	180	450	12960.0	CSSCS		TF S4	A 1SG	Internal trigger	Tm A NMCM tank is now mission capable.	0	0	0	0	0	0	2	0	1	7	0	18:36	216.0
182	181	300	12996.0	TF_Cmd		B 1-10	TF BC	Blue 2 abb	Set ATK Griffin.	2	3	0	1	1	0	0	0	1	3	0	18:36	216.6
183	182	450	13080.0	FB CB 2		TF S4	TF BC	Internal trigger	CP 4 now.	0	0	0	0	0	0	2	0	1	0	0	18:38	218.0
184	183	370	13100.0	FB CB 2		TF S4	TF BC	K05.14 SitRep	CP 4 now.	2	1	0	1	1	0	0	0	1	3	2	18:38	218.2
185	184	3000	13320.0	CSSCS		TF XO	TF S4	Internal trigger	What's the status of TF trains?	0	0	0	0	0	0	2	0	1	6	2	18:42	222.0
186	185	370	13440.0	FB CB 2		TF S4	TF BC	Icon Movement	RP now.	2	1	0	1	1	0	0	0	1	0	4	18:44	224.0
187	186	920	13524.0	BdeCmd		Bde S3	TF S3	Alert	LD time remains at 1900.	0	1	0	0	1	0	0	0	1	5	0	18:45	225.4
188	187	300	13560.0	TF_Cmd		ADA OFF	TF BC	Blue 2 abb	Set ATK Griffin.	2	3	0	1	1	0	0	0	1	3	0	18:46	226.0

	A	B	C	D	E	F	G	H	I	J	K	L	M	N	O	P	Q	R	S	T	U	V
1	Msg Num	Start	H+ Time Seconds	Net	Interrupt	From	To	Message Type	Text	Pass	Scan	Route	Update	EI	SH	Send	Enter	OTM	Word	Digital	Time	H+ Time Minutes
189	188	370	13620.0	FB CB 2		Tm EN	TF BC	K04.03 Obstacle Rpt	Obstacle cleared, proceeding to CP 4 now.	2	1	0	1	1	0	2	0	1	7	2	18:47	227.0
190	189	960	13740.0	TF_Cmd		TF S3	Sct Plt	Internal trigger	Scouts need to move ahead of company/teams.	0	0	0	0	0	0	1	0	1	8	0	18:49	229.0
191	190	370	13800.0	FB CB 2		Tm EN	TF BC	Icon Movement	CP 4 now.	2	1	0	1	1	0	0	0	1	0	4	18:50	230.0
192	191	960	13842.0	FB CB 2		TF S3	Sct Plt	Internal trigger	Move to LD.	0	0	0	0	0	0	2	0	1	3	2	18:50	230.7
193	192	3000	13920.0	TF_Cmd	12	TF XO	TF BC	Internal trigger	Have the Main come to a short halt.	0	0	0	0	0	0	0	0	1	8	0	18:52	232.0
194	193	270	14040.0	ASAS		Sct Plt	TF S2	C400 Cdr's SitRep	Set along LD.	2	3	1	1	1	0	2	0	0	3	2	18:54	234.0
195	194	970	14064.0	FB CB 2		Sct Plt	TF S3	C400 Cdr's SitRep	Set along LD.	0	3	0	1	1	0	0	0	0	3	2	18:54	234.4
196	195	860	14100.0	TF_Cmd		TF Cdr	Sct Plt	Internal trigger	Move out from LD.	0	0	0	0	0	0	1	0	1	4	0	18:55	235.0
197	196	370	14160.0	FB CB 2		Tm EN	TF BC	Icon Movement	RP now.	2	1	0	1	1	0	2	0	0	0	4	18:56	236.0
198	197	860	14220.0	BdeCmd		TF Cdr	Bde Cdr	Internal trigger	All companies at ATK Griffin.	0	0	0	0	0	0	1	0	0	5	0	18:57	237.0
199	198	860	14280.0	TF_Cmd		TF Cdr	A, B, C, EN, Sct Plt, Mtr Plt	Internal trigger	Move now, hit LD 1900.	0	0	0	0	0	0	1	0	1	5	0	18:58	238.0
200	199	370	14400.0	FB CB 2		ADA OFF	TF BC	K10.01 Hostile A/C Report	Air defense warning Red.	1	3	0	1	1	0	2	0	1	4	2	19:00	240.0
201	200	370	14436.0	FB CB 2		A 1-10	TF BC	Icon Movement	LD now.	2	1	0	1	1	0	2	0	1	0	4	19:00	240.6
202	201	860	14442.0	BdeCmd		TF Cdr	Bde Cdr	Internal trigger	Lead company LD.	0	0	0	0	0	0	1	0	1	2	0	19:00	240.7
203	202	420	14460.0	CSSCS		FSB Spt Ops	TF S4	S507 Resources Location	BSA beginning to displace.	2	4	0	1	1	0	0	0	1	4	2	19:01	241.0
204	203	370	14520.0	FB CB 2		C 1-10	TF BC	Icon Movement	LD now.	2	1	0	1	1	0	0	0	1	0	4	19:02	242.0
205	204	370	14538.0	FB CB 2		B 1-10	TF BC	Icon Movement	LD now.	2	1	0	1	1	0	0	0	1	0	4	19:02	242.3
206	205	650	14562.0	AFATDS		Mtr Plt	TF FSE	Icon Movement	LD now.	2	1	0	1	1	0	0	0	1	0	4	19:02	242.7
207	206	270	14700.0	ASAS		BRT	TF S2	K01.01 Free Text	In Bde sector terrain is extremely restricted north of 05 east-west gridline along PL Tulip. Recommend you pass to the south.	2	1	0	0	1	0	2	0	1	22	2	19:05	245.0
208	207	870	14760.0	FB CB 2		Sct Plt	TF Cdr	K01.01 Free Text	BRT reports extremely restricted terrain north of 05 east-west gridline along PL Tulip. Checking routes in the south.	0	1	0	0	1	0	0	0	1	19	2	19:06	246.0
209	208	370	15000.0	FB CB 2		Tm EN	TF BC	Icon Movement	LD now.	2	1	0	1	1	0	0	0	1	0	4	19:10	250.0
210	209	900	15300.0	TF_Cmd		Sct Plt	TF S3	Alert	PL Tulip now, looking for routes.	0	1	0	1	1	0	0	0	1	6	0	19:15	255.0
211	210	600	15480.0	BdeFS		2-3 CP	TF FSE	Blue 2	2-3 FA has cleared RP.	2	1	0	1	1	0	0	0	1	5	0	19:18	258.0
212	211	860	15498.0	TF_Cmd		TF Cdr	Tm EN	Internal trigger	Check, mark, and improve as feasible for follow-on forces.	0	0	0	0	0	0	1	0	1	9	0	19:18	258.3
213	212	370	15540.0	MCS		Bde BC	TF BC	K10.01 Hostile A/C Report	Radars have picked up low-level enemy rotary-winged aircraft moving east toward 21st AD zone.	2	1	0	1	2	0	2	0	1	16	2	19:19	259.0
214	213	600	15576.0	BdeFS		2-3 CP	TF FSE	Blue 2 abb	All batteries moving.	2	3	0	1	1	0	0	0	1	3	0	19:19	259.6
215	214	370	15600.0	MCS		3-92 BC	TF BC	K05.14 SitRep	TF 3-92 has cleared RP.	2	1	0	0	1	0	0	0	1	5	2	19:20	260.0
216	215	270	15840.0	ASAS		Bde S2	TF S2	C110 Intel Report	Enemy attack imminent within next 12 hours. We will be facing elements of Krasnovian 231st Mech Division. Their main effort appears to be in southern portion of 21st AD zone.	2	4	0	1	2	0	2	0	1	30	2	19:24	264.0

	A	B	C	D	E	F	G	H	I	J	K	L	M	N	O	P	Q	R	S	T	U	V
1	Msg Num	Start	H+ Time Seconds	Net	Interrupt	From	To	Message Type	Text	Pass	Scan	Route	Update	E1	SH	Send	Enter	OTM	Word	Digital	Time	H+ Time Minutes
217	216	820	15900.0	BdeCmd		Bde Cdr	TF Cdr	Blue 2 abb	TF 3-92 LD.	0	1	0	1	1	0	0	0	1	3	0	19:25	265.0
218	217	870	15912.0	FB CB 2		TF S2	TF Cdr	C110 Intel Report	Enemy attack imminent within next 12 hours. We will be facing elements of Krasnovian 231st Mech Division. Their main effort appears to be in southern portion of 21st AD zone.	0	1	0	1	2	0	0	0	1	30	2	19:25	265.2
219	218	600	15960.0	BdeFS		2-3 CP	TF FSE	Blue 2 abb	All batteries LD.	2	3	0	1	1	0	0	0	1	3	0	19:26	266.0
220	219	370	16380.0	FB CB 2		A 1-10	TF BC	Icon Movement	Crossing 20 north-south gridline.	2	1	0	1	1	0	0	0	1	0	4	19:33	273.0
221	220	870	16500.0	FB CB 2		Sct Plt	TF Cdr	K01.01 Free Text	Have identified two routes through PL Tulip. North linkup point NK156051. South link-up NK148007.	0	1	0	1	1	0	1	0	1	14	2	19:35	275.0
222	221	270	16680.0	ASAS		Sct Plt	TF S2	K01.01 Free Text	Route needs improvement for follow-on forces to move along.	2	1	0	0	1	0	2	0	1	10	2	19:38	278.0
223	222	280	16716.0	FB CB 2		TF S2	TF Cdr	Internal trigger	Routes through lava beds in our zone need improvement for follow-on forces. Bde informed.	0	1	0	1	0	0	0	0	1	14	0	19:38	278.6
224	223	370	16740.0	FB CB 2		B 1-10	TF BC	Icon Movement	Crossing 20 north-south gridline.	2	1	0	1	0	0	0	0	1	0	4	19:39	279.0
225	224	270	16800.0	ASAS		BRT	TF S2	K01.01 Free Text	Crossing PL Pear, nothing seen. In TF 3-92 sector terrain is extremely restrictive. Recommend 3-92 go along road at NJ082854.	2	1	0	1	1	0	2	0	1	20	2	19:40	280.0
226	225	870	16842.0	FB CB 2		TF S2	TF Cdr	K01.01 Free Text	BRT crossing PL Pear, nothing seen.	0	1	0	1	0	0	0	0	1	6	2	19:40	280.7
227	226	370	16860.0	FB CB 2		C 1-10	TF BC	Icon Movement	Crossing 20 north-south gridline.	2	1	0	1	0	0	0	0	1	0	4	19:41	281.0
228	227	650	16920.0	AFATDS		Mtr Plt	TF FSE	Icon Movement	Crossing 20 north-south gridline.	2	1	0	1	0	0	0	0	1	0	4	19:42	282.0
229	228	370	16980.0	MCS		Bde BC	TF BC	K10.01 Hostile A/C Report	Radars have picked up mid-level enemy fixed winged aircraft along PL Oats. Appears to be recce.	2	3	0	1	1	0	2	0	1	16	2	19:43	283.0
230	229	300	17160.0	TF_Cmd		A 1-10	TF BC	Blue 2 abb	Have linked with Scouts at northern point; proceeding along route.	2	1	0	1	1	0	0	0	1	10	0	19:46	286.0
231	230	370	17220.0	FB CB 2		Tm EN	TF BC	Icon Movement	Crossing 20 north-south gridline.	2	1	0	1	0	0	0	0	1	0	4	19:47	287.0
232	231	300	17520.0	TF_Cmd		B 1-10	TF BC	Blue 2 abb	Have linked with Scouts at southern point; proceeding along route.	2	1	0	1	1	0	0	0	1	10	0	19:52	292.0
233	232	3000	17580.0	TF_Cmd	12	TF XO	TF BC	Internal trigger	Have the Main come to a short halt.	2	0	0	0	0	0	0	0	1	8	0	19:53	293.0
234	233	300	17640.0	TF_Cmd		C 1-10	TF BC	Blue 2 abb	Have linked with Scouts at northern point; proceeding along route.	2	1	0	1	1	0	0	0	1	10	0	19:54	294.0
235	234	450	17820.0	FB CB 2		TF S4	TF BC	Internal trigger	Crossing 20 north-south gridline.	0	0	0	0	0	0	2	0	1	5	0	19:57	297.0
236	235	370	17830.0	FB CB 2		TF S4	TF BC	K05.14 SitRep	Crossing 20 north-south gridline.	2	1	0	1	0	0	0	0	1	5	2	19:57	297.0
237	236	300	18000.0	TF_Cmd		Tm EN	TF BC	Blue 2 abb	Have linked with Scouts at southern point; proceeding along route.	2	1	1	1	1	0	0	0	0	10	0	20:00	300.0
238	237	760	18060.0	FB CB 2		EN OFF	ABE	Internal trigger	PL Tulip now.	0	0	0	0	0	0	2	0	1	3	2	20:01	301.0
239	238	370	18600.0	MCS		2-10 BC	TF BC	K05.14 SitRep	2-10 has cleared RP.	2	1	1	0	0	0	0	0	0	4	2	20:10	310.0
240	239	450	18720.0	TF_Cmd	12	TF S4	TF BC	Internal trigger	Have linked with Scouts at southern point; proceeding along route.	2	1	1	1	1	0	0	0	0	10	0	20:12	312.0
241	240	270	18960.0	ASAS		Bde S2	TF S2	C110 Intel Report	Enemy attack imminent within next 3 hours. We will b facing elements of Krasnovian 231st Mech Division. Their main effort appears to be in southern portion of 21st AD zone.	2	4	1	1	2	2	2	0	0	30	2	20:16	316.0

	A	B	C	D	E	F	G	H	I	J	K	L	M	N	O	P	Q	R	S	T	U	V
1	Msg Num	Start	H+ Time Seconds	Net	Interrupt	From	To	Message Type	Text	Pass	Scan	Route	Update	EI	SH	Send	Enter	OTM	Word	Digital	Time	H+ Time Minutes
242	241	270	19020.0	ASAS		BRT	TF S2	C115 Spot Intel Rpt	PL Rice; traces of recent occupation by enemy long range recon patrols vicinity NJ9093.	2	4	1	1	2	1	2	0	0	14	2	20:17	317.0
243	242	760	19530.0	FB CB 2		EN OFF	ABE	Internal trigger	Routes through PL Tulip have been improved and marked.	0	0	0	0	0	0	2	0	0	9	2	20:25	325.5
244	243	300	19560.0	TF_Cmd		A 1-10	TF BC	Blue 2 abb	PL MUM; moving to re-establish TF diamond.	2	1	1	1	1	0	0	0	0	6	0	20:26	326.0
245	244	370	19560.0	FB CB 2		Tm EN	TF BC	K05.52 Overlay Msg	Routes through PL Tulip have been improved and marked.	0	1	0	1	1	0	2	0	0	9	2	20:25	326.0
246	245	860	19596.0	TF_Cmd		TF Cdr	A 1-10	Internal trigger	Slow pace to allow rest of TF at catch up.	0	0	0	0	0	0	1	0	1	10	0	20:26	326.6
247	246	600	19680.0	TF_FD		Mtr Plt	TF FSE	Blue 2 abb	PL Mum; moving to re-establish TF diamond.	2	1	1	1	0	0	0	0	0	6	0	20:28	328.0
248	247	300	19800.0	TF_Cmd		B 1-10	TF BC	Blue 2 abb	PL Mum; moving to re-establish TF diamond.	2	1	0	1	0	0	0	0	1	6	0	20:30	330.0
249	248	280	19920.0	ASAS		TF S2	Bde S2	Internal trigger	Scouts along PL Pear, nothing seen.	0	0	0	0	0	0	2	0	1	6	2	20:32	332.0
250	249	370	19980.0	MCS		Bde BC	TF BC	K05.14 SitRep	JTF Mojave FLOT to our north, along 00 north-south gridline.	2	1	0	1	1	0	2	0	1	11	2	20:33	333.0
251	250	870	20004.0	FB CB 2		TF BC	TF Cdr	K05.14 SitRep	JTF Mojave FLOT to our north, along 00 north-south gridline.	0	1	0	1	0	0	0	0	1	11	2	20:33	333.4
252	251	270	20100.0	ASAS		Sct Plt	TF S2	K05.14 SitRep	PL Pear, nothing seen. Continuing mission.	2	1	0	1	0	0	2	0	1	6	2	20:35	335.0
253	252	370	20160.0	FB CB 2		C 1-10	TF BC	Icon Movement	PL Mum; moving to re-establish TF diamond.	2	1	0	1	0	0	0	0	1	0	4	20:36	336.0
254	253	370	20760.0	MCS		3-92 BC	TF BC	K05.14 SitRep	3-92 at PL Pear; expect significant decrease in movement due to slow-go terrain.	2	1	0	1	1	0	2	0	1	13	2	20:46	346.0
255	254	870	20790.0	FB CB 2		TF BC	TF Cdr	K05.14 SitRep	3-92 at PL Pear; expect significant decrease in movement due to slow-go terrain.	0	1	0	1	1	0	0	0	1	13	2	20:46	346.5
256	255	370	20880.0	FB CB 2		BRT	TF BC	K04.03 Obstacle Rpt	Road is cratered at NJ777948; minefield located at NJ776952 to NJ776957.	2	1	0	1	1	0	2	0	1	11	2	20:48	348.0
257	256	870	20940.0	FB CB 2		TF BC	TF Cdr	K04.03 Obstacle Rpt	BRT reports road is cratered at NJ777948; minefield located at NJ776952 to NJ776957. Recommend we use engineers to clear.	0	1	0	1	1	0	1	0	1	19	2	20:49	349.0
258	257	760	21000.0	FB CB 2		EN OFF	ABE	Internal trigger	BRT has identified road crater at NJ777948; minefield located at NJ776952 to NJ776957. We will conduct in-stride breach.	0	0	0	0	0	0	2	0	1	16	2	20:50	350.0
259	258	370	21060.0	FB CB 2		A 1-10	TF BC	Icon Movement	PL Pear, continuing mission.	2	1	0	1	0	0	2	0	1	0	4	20:51	351.0
260	259	960	21102.0	BdeOI		TF S3	BRT	Internal trigger	Have Scout linkup with BRT at NJ819951.	0	0	0	0	0	0	1	0	1	8	0	20:51	351.7
261	260	660	21120.0	BdeFS		TF FSE	2-3 S3	Internal trigger	BRT reports road cratered at NJ777948; minefield located at NJ776952 to NJ776957. TF 1-10 will conduct in-stride breach.	0	0	0	0	0	0	1	0	1	16	0	20:52	352.0
262	261	280	21156.0	TF_OI		TF S2	Sct Plt	Internal trigger	TF S3 has coordinated linkup with BRT at NJ819951.	0	0	0	0	0	0	1	0	1	9	0	20:52	352.6
263	262	380	21180.0	TF_Cmd	29	TF BC	TF Cdr	Internal trigger	BRT will linkup with our Scouts at NJ819951.	0	1	0	1	1	0	0	0	1	8	0	20:53	353.0
264	263	650	21204.0	AFATDS		Mtr Plt	TF FSE	Icon Movement	PL Pear, continuing mission.	2	1	0	1	0	0	0	0	1	0	4	20:53	353.4
265	264	960	21240.0	BdeCmd		TF S3	Bde Cdr	Internal trigger	1-10 will conduct in-stride breach and repair crater vicinity NJ7795.	0	0	0	0	0	0	1	0	1	8	0	20:54	354.0
266	265	370	21300.0	FB CB 2		B 1-10	TF BC	Icon Movement	PL Pear, continuing mission.	2	1	0	1	0	0	0	0	1	0	4	20:55	355.0
267	266	450	21336.0	TF_Cmd	12	TF S4	TF BC	Internal trigger	PL Mum; moving to re-establish TF diamond.	2	1	0	1	0	0	0	0	1	6	0	20:55	355.6
268	267	370	21720.0	FB CB 2		C 1-10	TF BC	Icon Movement	PL Pear, continuing mission.	2	1	0	1	0	0	0	0	1	0	4	21:02	362.0

	A	B	C	D	E	F	G	H	I	J	K	L	M	N	O	P	Q	R	S	T	U	V
1	Msg Num	Start	H+ Time Seconds	Net	Interrupt	From	To	Message Type	Text	Pass	Scan	Route	Update	EI	SH	Send	Enter	OTM	Word	Digital	Time	H+ Time Minutes
269	268	420	21960.0	CSSCS		B de S4	TF S4	S507 Resources Location	BSA beginning to displace.	2	3	0	1	1	0	0	0	1	4	2	21:06	366.0
270	269	270	22020.0	ASAS		B de S2	TF S2	C110 Intel Report	Significant enemy mechanized and motorized forces reported crossing border at 2045 hours.	2	4	0	1	2	0	2	0	1	9	2	21:07	367.0
271	270	870	22062.0	FB CB 2		TF S2	TF Cdr	C110 Intel Report	Significant enemy mechanized and motorized forces reported crossing border at 2045 hours.	0	1	0	1	2	0	0	0	1	9	2	21:07	367.7
272	271	370	22320.0	MCS		B de BC	TF BC	K05.14 SitRep	JTF Mojave FLOT cleared to our north along 80 north-south gridline.	2	1	0	1	0	0	2	0	1	12	2	21:12	372.0
273	272	870	22356.0	FB CB 2		TF BC	TF Cdr	K05.14 SitRep	JTF Mojave FLOT cleared to our north along 80 north-south gridline.	0	1	0	1	0	0	0	0	1	12	2	21:12	372.6
274	273	370	22500.0	FB CB 2		Sct Plt	TF BC	C115 Spot Intel Rpt	PL Rice now. Have checked previously reported possible enemy recon at NJ9093; nothing found. Continuing mission.	2	1	0	1	0	0	0	0	1	16	2	21:15	375.0
275	274	270	22524.0	ASAS		Sct Plt	TF S2	C115 Spot Intel Rpt	PL Rice now. Have checked previously reported possible enemy recon at NJ9093; nothing found. Continuing mission.	2	1	0	1	0	0	2	0	1	16	2	21:15	375.4
276	275	860	22554.0	TF_Cmd		TF Cdr	A, B, C, EN, Sct Plt, Mtr Plt, CPs	Internal trigger	Tm A establish SBF at NJ817953; Co B establish SBF NJ807928; Tm C establish SBF NJ796953. Scouts linkup with Engineers at NJ819951. Establish FP at NJ820952.	0	0	0	0	0	0	1	0	1	20	0	21:15	375.9
277	276	600	22740.0	BdeFS		2-3 CP	TF FSE	Blue 2 abb	A Btry PL Pear.	2	1	0	1	0	0	1	0	1	4	0	21:19	379.0
278	277	450	22800.0	CSSCS		TF S4	B de S4	Internal trigger	PL Pear.	0	0	0	0	0	0	2	0	1	2	2	21:20	380.0
279	278	270	22824.0	ASAS		B de S2	TF S2	K04.06 ELINT Event	Division EW identified low-level voice intercept vicinity NJ9093, 30 minutes ago.	2	3	0	1	1	0	0	0	1	12	2	21:20	380.4
280	279	370	22836.0	FB CB 2		TF S4	TF BC	Icon Movement	PL Pear.	2	1	0	1	0	0	0	0	1	0	4	21:20	380.6
281	280	370	23100.0	FB CB 2		A 1-10	TF BC	Icon Movement	PL Rice, continuing mission.	2	1	0	1	0	0	2	0	1	0	4	21:25	385.0
282	281	300	23142.0	TF_Cmd		Sct Plt	TF BC	Alert	Have linked with BRT at NJ819951.	2	1	0	1	1	0	0	0	1	6	0	21:25	385.7
283	282	650	23280.0	AFATDS		Mtr Plt	TF FSE	Icon Movement	PL Rice, continuing mission.	2	1	0	1	0	0	0	0	1	0	4	21:28	388.0
284	283	370	23400.0	FB CB 2		B 1-10	TF BC	Icon Movement	PL Rice, continuing mission.	2	1	0	1	0	0	0	0	1	0	4	21:30	390.0
285	284	270	23700.0	ASAS		Sct Plt	TF S2	K05.14 SitRep	Have established screen along PL Berry.	2	1	0	1	1	0	2	0	1	6	2	21:35	395.0
286	285	370	23712.0	FB CB 2		Sct Plt	TF BC	K05.14 SitRep	Have established screen along PL Berry.	2	1	0	1	1	0	2	0	1	6	2	21:35	395.2
287	286	370	23820.0	FB CB 2		C 1-10	TF BC	Icon Movement	PL Rice, continuing mission.	2	1	0	1	0	0	0	0	1	0	4	21:37	397.0
288	287	800	24000.0	TF_Cmd		A 1-10	TF Cdr	Blue 2 abb	Set in SBF.	2	1	0	1	1	0	0	0	0	3	0	21:40	400.0
289	288	860	24060.0	TF_Cmd	12	TF Cdr	TF BC	Internal trigger	TF BC stop the TOC.	0	0	0	0	0	2	1	0	0	5	0	21:41	401.0
290	289	370	24300.0	FB CB 2		Tm EN	TF BC	Icon Movement	PL Rice.	2	1	0	1	0	0	0	0	0	0	4	21:45	405.0
291	290	800	24600.0	TF_Cmd		B 1-10	TF Cdr	Blue 2 abb	Set in SBF.	2	1	0	1	1	0	0	0	0	3	0	21:50	410.0
292	291	650	24642.0	AFATDS		Mtr Plt	TF FSE	K05.14 SitRep	Occupying FP at NJ820951.	2	1	0	1	1	0	0	0	0	4	2	21:50	410.7
293	292	450	24900.0	CSSCS		TF S4	B de S4	Internal trigger	PL Rice, continuing mission.	0	0	0	0	0	0	2	0	0	4	2	21:55	415.0
294	293	370	24924.0	FB CB 2		TF S4	TF BC	Icon Movement	PL Rice, continuing mission.	2	1	0	1	0	0	0	0	0	0	4	21:55	415.4
295	294	600	25080.0	BdeFS		2-3 CP	TF FSE	Alert	A Btry laid at NJ914923.	2	3	0	1	1	0	0	0	0	5	0	21:58	418.0
296	295	650	25092.0	AFATDS		B de FSO	TF FSE	C400 Cdr Sit Rpt	A Btry laid at NJ914923.	0	0	0	0	0	0	0	0	0	5	2	21:58	418.2
297	296	800	25140.0	TF_Cmd		C 1-10	TF Cdr	Blue 2 abb	Set in SBF.	2	1	0	1	1	0	0	0	0	3	0	21:59	419.0
298	297	370	25200.0	MCS		3-92 BC	TF BC	C400 Cdr Sit Rpt	3-92 at PL Rice.	2	1	0	1	1	0	2	0	0	4	2	22:00	420.0
299	298	870	25212.0	FB CB 2		TF BC	TF Cdr	C400 Cdr Sit Rpt	3-92 at PL Rice.	0	1	0	1	0	0	0	0	0	4	2	22:00	420.2

	A	B	C	D	E	F	G	H	I	J	K	L	M	N	O	P	Q	R	S	T	U	V
1	Msg Num	Start	H+ Time Seconds	Net	Interrupt	From	To	Message Type	Text	Pass	Scan	Route	Update	EI	SH	Send	Enter	OTM	Word	Digital	Time	H+ Time Minutes
300	299	800	26400.0	TF_Cmd		Tm EN	TF Cdr	Alert	Have arrived at breach site. Beginning breaching operations,	0	1	0	1	0	0	0	0	0	8	0	22:20	440.0
301	300	760	26418.0	BdeEN		EN OFF	ABE	Internal trigger	Beginning breaching operations.	0	0	0	0	0	0	1	0	0	3	0	22:20	440.3
302	301	300	26940.0	TF_Cmd		Tm EN	TF BC	Alert	Plow tanks beginning to proof lanes.	2	0	0	0	0	0	2	0	0	6	0	22:29	449.0
303	302	270	27000.0	ASAS		BRT	TF S2	K05.14 SitRep	PL Oats, continuing mission.	2	1	0	1	0	0	2	0	0	4	2	22:30	450.0
304	303	870	27042.0	FB CB2		TF S2	TF Cdr	K05.14 SitRep	BRT at PL Oats.	0	1	0	1	0	0	0	0	0	4	2	22:30	450.7
305	304	270	27120.0	ASAS		Bde S2	TF S2	C110 Intel Report	Enemy division, believed to be 231st MRD moving toward 21 AD zone. Lead battalions along MK60 north south gridline.	2	4	1	1	1	1	2	0	0	19	2	22:32	452.0
306	305	420	27300.0	FB CB2		Tm EN	TF S1	K01.01 Free Text	Engineer injured during obstacle breaching, company medic treating.	2	2	0	1	0	0	0	0	0	8	2	22:35	455.0
307	306	870	27324.0	FB CB2		Tm EN	TF Cdr	K01.01 Free Text	Engineer injured during obstacle breaching, company medic treating.	0	0	0	0	0	0	0	0	0	8	2	22:35	455.4
308	307	760	27420.0	FB CB2		EN OFF	ABE	Internal trigger	One personnel injured.	0	0	0	0	0	0	2	0	0	3	2	22:37	457.0
309	308	370	27540.0	FB CB2		Tm EN	TF BC	K01.01 Free Text	Proofing and marking is complete.	2	0	1	1	1	0	2	0	0	5	2	22:39	459.0
310	309	860	27576.0	TF_Cmd	12	TF Cdr	TF BC	Internal trigger	Get TF BC to find out what the FLOT of 3-92 and BRT is?	0	0	0	0	0	0	1	0	0	14	0	22:39	459.6
311	310	860	27600.0	TF_Cmd		TF Cdr	A 1-10	Internal trigger	Move along marked lanes and set at NJ774960.	0	0	0	0	0	0	1	0	0	8	0	22:40	460.0
312	311	380	27636.0	MCS		TF BC	3-92, BRT	Internal trigger	What's your FLOT?	0	0	0	0	0	0	2	0	0	3	2	22:40	460.6
313	312	370	27720.0	MCS		3-92 BC	TF BC	K05.14 SitRep	3-92 PL Berry, continuing mission.	2	1	0	1	0	0	0	0	0	5	2	22:42	462.0
314	313	370	27780.0	MCS		Bde BC	TF BC	K05.14 SitRep	BRT five Kms east of Churchill and Pimlico.	2	1	0	1	0	0	2	0	0	8	2	22:43	463.0
315	314	870	27840.0	FB CB2		TF BC	TF Cdr	K05.14 SitRep	3-92 at PL Berry. BRT five Kms east of Churchill and Pimlico.	0	1	0	1	1	0	0	0	0	12	2	22:44	464.0
316	315	300	28080.0	TF_Cmd		A 1-10	TF BC	Blue 2 abb	Beginning to move along marked lanes.	2	1	0	1	0	0	2	0	0	6	0	22:48	468.0
317	316	300	28200.0	TF_Cmd		Tm EN	TF BC	Alert	Crater is filled in.	2	1	0	1	1	0	0	0	0	4	0	22:50	470.0
318	317	380	28218.0	TF_Cmd	29	TF BC	TF Cdr	Internal trigger	Recommend we send Co B along the road.	0	1	0	0	1	0	1	0	0	8	0	22:50	470.3
319	318	760	28320.0	FB CB2		EN OFF	ABE	Internal trigger	Obstacle cleared, proofed, and marked at NJ774960. Follow-on engineers need to improve. We're moving out with TF 1-10.	0	0	0	0	0	0	2	0	0	15	2	22:52	472.0
320	319	370	28380.0	MCS		BRT	TF BC	K05.14 SitRep	On OBJs Churchill and Pimlico; nothing seen.	2	1	1	1	0	0	0	0	0	7	2	22:53	473.0
321	320	380	28416.0	TF_Cmd	29	TF BC	TF Cdr	Internal trigger	BRT on OBJs Churchill and Pimlico; nothing seen.	0	1	0	1	1	0	0	0	0	8	0	22:53	473.6
322	321	820	28428.0	BdeCmd		Bde Cdr	TF Cdr	Order	BRT will linkup with 1-10 Scouts on Churchill. Once linkup is complete, shift entire BRT to 3-92 sector, they're going to have slow-go terrain between PL Berry and OBJ Pimlico.	0	1	0	1	1	0	1	0	0	30	0	22:53	473.8
323	322	800	28500.0	TF_Cmd		A 1-10	TF Cdr	Blue 2 abb	Set, far side of minefield.	0	1	0	1	0	0	1	0	0	5	0	22:55	475.0
324	323	300	29124.0	TF_Cmd		B 1-10	TF BC	Blue 2 abb	Set at NJ764937.	2	1	0	1	1	0	0	0	1	3	0	23:05	485.4
325	324	3000	29160.0	TF_Cmd	16	TF XO	TF S4	Internal trigger	Begin movement through marked lanes.	0	0	0	0	0	0	0	0	1	5	0	23:06	486.0
326	325	800	29760.0	TF_Cmd		C 1-10	TF Cdr	Blue 2 abb	Set NJ740947.	0	1	0	1	1	0	1	0	1	3	0	23:16	496.0
327	326	380	29820.0	MCS		TF BC	Bde BC	Internal trigger	All co/tms on far side of obstacle; continuing mission.	0	0	0	0	0	0	2	0	1	7	2	23:17	497.0
328	327	660	29940.0	AFATDS		TF FSE	Bde FSO	Internal trigger	TF 1-10 beginning movement on west side of obstacle.	0	0	0	0	0	0	2	0	1	8	0	23:19	499.0

	A	B	C	D	E	F	G	H	I	J	K	L	M	N	O	P	Q	R	S	T	U	V
1	Msg Num	Start	H+ Time Seconds	Net	Interrupt	From	To	Message Type	Text	Pass	Scan	Route	Update	EI	SH	Send	Enter	OTM	Word	Digital	Time	H+ Time Minutes
329	328	660	29976.0	BdeFS		TF FSE	Bde FSO	Internal trigger	TF 1-10 beginning movement on west side of obstacle.	0	0	0	0	0	0	1	0	1	8	0	23:19	499.6
330	329	370	30060.0	FB CB2		ADA OFF	TF BC	K10.01 Hostile A/C Report	Radars identifying one hostile slow entering 1st Bde sector in the south.	2	1	0	1	1	0	0	0	1	12	2	23:21	501.0
331	330	600	30120.0	BdeFS		Bde FSO	TF FSE	Blue 2 abb	A Battery beginning to move.	2	3	0	1	1	0	0	0	1	5	0	23:22	502.0
332	331	650	30138.0	AFATDS		Bde FSO	TF FSE	C400 Cdr Sit Rpt	A Battery beginning to move.	0	0	0	0	0	0	0	0	1	5	2	23:22	502.3
333	332	370	30300.0	FB CB2		Sct Plt	TF BC	Icon Movement	PL Oats, continuing mission.	2	1	0	1	0	0	0	0	1	0	4	23:25	505.0
334	333	450	30480.0	TF_Cmd	12	TF S4	TF BC	Internal trigger	Have completed movement through obstacle.	2	1	0	1	0	0	0	0	1	5	0	23:28	508.0
335	334	370	30720.0	MCS		3-92 BC	TF BC	K05.14 SitRep	3-92 at PL Oats, beginning to move companies in column through gap at NJ6684.	2	1	0	1	1	0	2	0	1	14	2	23:32	512.0
336	335	870	30840.0	FB CB2		TF BC	TF Cdr	K05.14 SitRep	3-92 at PL Oats, beginning to move companies in column through gap at NJ6684.	0	1	0	1	0	0	0	0	1	14	2	23:33	514.0
337	336	420	31320.0	CSSCS		Bde S4	TF S4	S507 Resources Location	FSB crossing LD.	2	1	0	1	0	0	0	0	1	3	2	23:42	522.0
338	337	370	31380.0	FB CB2		A 1-10	TF BC	Icon Movement	PL Oats, continuing mission.	2	1	0	1	0	0	2	0	1	0	4	23:43	523.0
339	338	660	31620.0	BdeFS		TF FSE	Bde FSO	Internal trigger	PL Oats, continuing mission.	0	0	0	0	0	0	1	0	1	4	0	23:47	527.0
340	339	370	31650.0	FB CB2		B 1-10	TF BC	Icon Movement	PL Oats, continuing mission.	2	1	0	1	0	0	0	0	1	0	4	23:47	527.5
341	340	370	31680.0	FB CB2		C 1-10	TF BC	Icon Movement	PL Oats, continuing mission.	2	1	0	1	0	0	0	0	1	0	4	23:48	528.0
342	341	650	31704.0	AFATDS		Mtr Plt	TF FSE	Icon Movement	PL Oats, continuing mission.	2	1	0	1	0	0	0	0	1	0	4	23:48	528.4
343	342	370	31920.0	FB CB2		Sct Plt	TF BC	K05.14 SitRep	OBJ Churchill; no sign of enemy.	2	1	0	1	0	0	2	0	1	6	2	23:52	532.0
344	343	3000	31980.0	CSSCS		TF XO	TF S4	Internal trigger	Ensure our fuel HEMTTs get refueled by FSB tankers after we top-off at OBJ Churchill. Will need fuel again at OBJ Gold.	0	0	0	0	0	0	2	0	1	22	0	23:53	533.0
345	344	420	31990.0	CSSCS		TF XO	TF S4	K01.01 Free Text	Ensure our fuel HEMTTs get refueled by FSB tankers after we top-off at OBJ Churchill. Will need fuel again at OBJ Gold.	0	0	0	0	1	1	2	0	1	22	2	23:53	533.2
346	345	380	32028.0	TF_Cmd	29	TF BC	TF Cdr	Internal trigger	Recommend we send scouts out.	0	1	0	0	1	0	1	0	1	5	0	23:53	533.8
347	346	3000	32100.0	CSSCS		TF XO	TF S4	Internal trigger	What's the linkup point for empty fuel HEMTTs and 5,000 gallon FSB tankers?	0	0	0	0	0	0	2	0	1	13	0	23:55	535.0
348	347	420	32120.0	CSSCS		TF XO	TF S4	K01.01 Free Text	What's the linkup point for empty fuel HEMTTs and 5,000 gallon FSB tankers?	0	0	0	0	0	0	2	0	1	13	2	23:55	535.2
349	348	300	32580.0	TF_Cmd		A 1-10	TF BC	Blue 2 abb	Set Churchill - A.	2	1	0	1	0	0	0	0	1	5	0	0:03	543.0
350	349	370	32700.0	FB CB2		TF S4	TF BC	Icon Movement	PL Oats, continuing mission.	2	1	0	1	0	0	0	0	1	0	4	0:05	545.0
351	350	300	32820.0	TF_Cmd		B 1-10	TF BC	Blue 2 abb	Set Churchill - B.	2	1	0	1	0	0	0	0	1	3	0	0:07	547.0
352	351	370	32880.0	FB CB2		ADA OFF	TF BC	K05.52 Overlay Msg	Air corridor established along Bde southern boundary.	2	1	0	1	1	0	0	0	1	7	2	0:08	548.0
353	352	300	32940.0	TF_Cmd		C 1-10	TF BC	Blue 2 abb	Set Churchill - C.	2	1	0	1	0	0	0	0	1	3	0	0:09	549.0
354	353	600	33000.0	TF_FD		Mtr Plt	TF FSE	Blue 2 abb	Set Churchill - M.	2	1	0	1	0	0	1	0	1	3	0	0:10	550.0
355	354	380	33120.0	MCS		TF BC	Bde BC	Internal trigger	Set on OBJ Churchill; beginning refueling operations.	0	0	0	0	0	0	2	0	1	7	2	0:12	552.0
356	355	300	33300.0	TF_Cmd		Tm EN	TF BC	Blue 2 abb	Set Churchill - E.	2	1	0	1	0	0	0	0	1	3	0	0:15	555.0
357	356	370	33378.0	MCS		3-92 BC	TF BC	K05.14 SitRep	3-92 set on OBJ Pimlico; beginning refueling	2	1	0	1	0	0	0	0	0	8	2	0:16	556.3
358	357	650	33420.0	AFATDS		2-3 CP	TF FSE	C400 Cdr Sit Rpt	A Battery laid at NJ721871.	2	1	0	1	0	0	0	0	0	5	2	0:17	557.0
359	358	600	33456.0	BdeFS		Bde FSO	TF FSE	Blue 2 abb	A Battery laid at NJ721871.	0	0	0	0	0	0	0	0	0	5	0	0:17	557.6

	A	B	C	D	E	F	G	H	I	J	K	L	M	N	O	P	Q	R	S	T	U	V
1	Msg Num	Start	H+ Time Seconds	Net	Interrupt	From	To	Message Type	Text	Pass	Scan	Route	Update	E1	SH	Send	Enter	OTM	Word	Digital	Time	H+ Time Minutes
360	359	450	33480.0	TF_Cmd	12	TF S4	TF BC	Internal trigger	Set NJ682853.	2	1	0	1	0	0	0	0	0	2	0	0:18	558.0
361	360	370	33492.0	MCS		2-10 BC	TF BC	K05.14 SitRep	TF 2-10 conducting refueling operations along PL Berry.	2	1	0	1	0	0	0	0	0	8	2	0:18	558.2
362	361	270	33600.0	ASAS		Sct Plt	TF S2	K05.14 SitRep	Screen established.	2	0	1	1	1	0	0	0	0	2	2	0:20	560.0
363	362	370	33624.0	MCS		Bde BC	TF BC	K05.14 SitRep	JTF Mojave FLOT cleared to our north along 80 north-south gridline.	2	1	0	1	0	0	0	0	0	12	2	0:20	560.4
364	363	370	33660.0	MCS		Bde BC	TF BC	E400 OPLAN / OPORD Change	Division reports heaviest enemy force building toward Barstow and I-15, I-40 junction. Enemy motorized and light forces moving toward northern area of Division zone and along Corps boundary. BRT establish screen along Bde southern boundary between OBJ Pimlico and south end of Coyote Lake.	0	1	1	1	2	1	0	0	0	44	2	0:21	561.0
365	364	820	33720.0	BdeCmd		Bde Cdr	TF Cdr	Order	Resume movement at 0130 hours.	2	1	1	1	1	0	0	0	0	5	0	0:22	562.0
366	365	270	33780.0	ASAS		Bde S2	TF S2	C110 Intel Report	Lead enemy reinforced battalion reported crossing the MK80 north-south gridline at 00:10; tentatively identified as a forward detachment.	2	1	1	1	2	2	2	0	0	19	2	0:23	563.0
367	366	380	33804.0	FB CB2		TF BC	A, B, C, FN, Sct Plt, Mtr Plt	Internal trigger	Lead enemy reinforced battalion reported crossing the MK80 north-south gridline at 00:10; tentatively identified as a forward detachment.	0	0	0	0	0	0	2	0	0	17	2	0:23	563.4
368	367	370	33828.0	FB CB2		ADA OFF	TF BC	K10.01 Hostile A/C Report	One hostile rotary-winged aircraft vicinity NJ3189, moving east.	2	1	1	1	1	0	2	0	0	9	2	0:23	563.8
369	368	860	33840.0	TF_Cmd	6	TF Cdr	TF S2	Internal trigger	Where will the FD be when we meet him; will all of the FD be in my zone?	0	3	0	0	0	0	1	0	0	14	0	0:24	564.0
370	369	370	33900.0	FB CB2		ADA OFF	TF BC	A692 Weapon Control Order	Friendly air moving east to west along air corridor in southern portion of Bde zone. Do not engage. Weapons hold on Air Axis Tom.	2	1	1	1	1	0	2	0	0	23	2	0:25	565.0
371	370	370	33930.0	MCS		Bde BC	TF BC	K05.14 SitRep	3d Bde reports seizing OBJ Fox, NJ5647 at 2350 hours.	2	1	1	1	0	0	0	0	0	10	2	0:25	565.5
372	371	370	33948.0	MCS		3-92 BC	TF BC	K05.14 SitRep	3-92 PL Oats, continuing mission.	2	1	1	1	0	0	0	0	0	5	2	0:25	565.8
373	372	650	34200.0	AFATDS		2-3 CP	TF FSE	C400 Cdr Sit Rpt	2-8 FA reports crossing PL Pear.	2	1	0	1	0	0	0	0	0	6	2	0:30	570.0
374	373	600	34218.0	BdeFS		2-3 CP	TF FSE	Blue 2 abb	2-8 FA reports crossing PL Pear.	0	0	0	0	0	0	0	0	0	6	0	0:30	570.3
375	374	370	34500.0	MCS		Bde BC	TF BC	K05.14 SitRep	1-22 Cav screening with air troops between Kiwi and Rice. Ground troops between Oats and Berry conducting refuel operations.	2	1	1	1	1	0	0	0	0	19	2	0:35	575.0
376	375	370	34620.0	MCS		1-22 Cav BC	TF BC	K05.14 SitRep	1-22 screening with air troops to our north out to Kiwi. When 1-10 hits Kiwi, 1-22 will move ground troops to screen northern flank.	0	0	0	0	0	0	2	0	0	24	2	0:37	577.0
377	376	600	34698.0	BdeFS		2-3 CP	TF FSE	Blue 2 abb	All batteries refueled and report REDCON 1.	2	2	0	1	1	0	0	0	0	7	0	0:38	578.3
378	377	650	34716.0	AFATDS		2-3 CP	TF FSE	C400 Cdr Sit Rpt	All batteries refueled and report REDCON 1.	0	0	0	0	0	0	0	0	0	7	2	0:38	578.6
379	378	370	35040.0	FB CB2		ADA OFF	TF BC	A692 Weapon Control Order	Friendly air moving west to east along air corridor in southern portion of Bde zone. Do not engage.	2	1	1	1	1	0	2	0	0	19	2	0:44	584.0

	A	B	C	D	E	F	G	H	I	J	K	L	M	N	O	P	Q	R	S	T	U	V
1	Msg Num	Start	H+ Time Seconds	Net	Interrupt	From	To	Message Type	Text	Pass	Scan	Route	Update	EI	SH	Send	Enter	OTM	Word	Digital	Time	H+ Time Minutes
380	379	370	35640.0	FB CB 2		ADA OFF	TF BC	C602 Engagement of Hostile A/C	Helicopter IFF as enemy. Destroyed vicinity NJ568854. Two missiles.	2	1	0	1	1	0	0	0	0	9	2	0:54	594.0
381	380	860	35700.0	TF_Cmd		TF Cdr	Sct Plt	Internal trigger	Check out destroyed enemy helicopter at NJ568854.	0	0	0	0	0	0	1	0	0	7	0	0:55	595.0
382	381	370	36000.0	FB CB 2		Tm EN	TF BC	C400 Cdr Sit Rpt	Refuel complete; REDCON 1.	2	2	0	1	0	0	0	0	0	4	2	1:00	600.0
383	382	370	36300.0	FB CB 2		Sct Plt	TF BC	C115 Spot Intel Rpt	One enemy helicopter destroyed, no survivors. Appears to be a MI-8.	0	0	0	0	1	0	2	0	0	11	2	1:05	605.0
384	383	760	36342.0	FB CB 2		EN OFF	ABE	Internal trigger	Refuel complete; REDCON 1.	0	0	0	0	0	0	2	0	0	4	2	1:05	605.7
385	384	370	36600.0	FB CB 2		A 1-10	TF BC	C400 Cdr Sit Rpt	Refuel complete; REDCON 1.	2	2	0	1	1	0	0	0	0	4	2	1:10	610.0
386	385	420	36612.0	CSSCS		FSB Spt Ops	TF S4	K01.01 Free Text	2-8 FA consumed more fuel than anticipated when they linked up with Bde. Will not be able to fill up all of each TF's HEMTTs.	2	4	0	1	1	0	0	0	0	25	2	1:10	610.2
387	386	370	36960.0	FB CB 2		B 1-10	TF BC	C400 Cdr Sit Rpt	Refuel complete; REDCON 1.	2	2	0	1	1	0	0	0	0	4	2	1:16	616.0
388	387	370	37320.0	FB CB 2		C 1-10	TF BC	C400 Cdr Sit Rpt	Refuel complete; REDCON 1.	2	2	0	1	1	0	0	0	0	4	2	1:22	622.0
389	388	600	37560.0	BdeFS		2-3 CP	TF FSE	Blue 2 abb	Batteries crossing PL Daisy.	2	1	0	1	1	0	0	0	0	4	0	1:26	626.0
390	389	650	37584.0	AFA TDS		2-3 CP	TF FSE	C400 Cdr Sit Rpt	Batteries crossing PL Daisy.	0	0	0	0	0	0	0	0	0	4	2	1:26	626.4
391	390	370	37800.0	FB CB 2		A 1-10	TF BC	Icon Movement	Beginning movement from Churchill - A.	2	1	0	1	1	0	2	0	1	0	4	1:30	630.0
392	391	860	37860.0	TF_Cmd		TF Cdr	Sct Plt	Internal trigger	Begin movement and screen forward.	0	0	0	0	0	0	1	0	1	5	0	1:31	631.0
393	392	270	37980.0	ASAS		Bde S2	TF S2	C110 Intel Report	Reinforced enemy battalion moving east vicinity Superior Lake, NK9700.	2	1	0	1	1	1	2	0	1	9	2	1:33	633.0
394	393	860	38220.0	TF_Cmd		TF Cdr	A, B, C, Tm EN	Internal trigger	Begin your movement to reform diamond.	0	0	0	0	0	0	1	0	0	6	0	1:37	637.0
395	394	450	38280.0	TF_Cmd	12	TF S4	TF BC	Internal trigger	Beginning movement.	2	1	0	1	1	0	0	0	1	2	0	1:38	638.0
396	395	270	38400.0	ASAS		Sct Plt	TF S2	SALT	Enemy infantry at NJ513891.	2	3	0	1	1	0	0	0	1	4	2	1:40	640.0
397	396	370	38460.0	FB CB 2		Sct Plt	TF BC	SALT	Enemy infantry at NJ513891.	2	1	0	0	1	0	0	0	1	4	2	1:41	641.0
398	397	370	38580.0	FB CB 2		Sct Plt	TF BC	SALT	Two BRDMs at NJ489883.	2	1	0	0	1	0	0	0	1	4	2	1:43	643.0
399	398	270	38592.0	ASAS		Sct Plt	TF S2	SALT	Two BRDMs at NJ489883.	2	3	0	1	1	1	2	0	1	4	2	1:43	643.2
400	399	370	38700.0	FB CB 2		Sct Plt	TF BC	Icon Movement	PL Kiwi, continuing mission.	2	1	0	1	1	0	0	0	1	0	4	1:45	645.0
401	400	600	38760.0	BdeFS		2-3 CP	TF FSE	Blue 2 abb	All batteries beginning movement.	2	3	0	1	1	0	0	0	1	4	0	1:46	646.0
402	401	650	38778.0	AFA TDS		Bde FSO	TF FSE	C400 Cdr Sit Rpt	All batteries beginning movement.	2	2	0	1	1	0	0	0	1	4	2	1:46	646.3
403	402	370	38820.0	MCS		3-92 BC	TF BC	C400 Cdr Sit Rpt	Beginning movement from Pimlico.	2	2	0	1	0	0	0	0	1	4	2	1:47	647.0
404	403	300	38880.0	TF_Cmd		B 1-10	TF BC	Contact	Two BRDMs west NJ489883.	2	1	0	1	1	0	1	0	1	4	0	1:48	648.0
405	404	3000	38898.0	TF_Cmd	12	TF XO	TF BC	Internal trigger	Have the Main come to a short halt.	2	0	0	0	0	2	0	0	1	7	0	1:48	648.3
406	405	370	38910.0	MCS		2-10 BC	TF BC	C400 Cdr Sit Rpt	Beginning movement; lead company 70 north-south gridline.	2	1	0	1	0	0	0	0	0	8	2	1:48	648.5
407	406	800	38940.0	TF_Cmd		B 1-10	TF Cdr	Blue 1	Two BRDMs destroyed NJ489883.	0	3	0	1	1	0	2	0	1	4	0	1:49	649.0
408	407	380	38958.0	MCS		TF BC	Bde BC	Internal trigger	Two BRDMs destroyed NJ489883.	0	0	0	0	0	0	2	0	1	4	0	1:49	649.3
409	408	860	39060.0	TF_Cmd		TF Cdr	B 1-10	Internal trigger	Sweep area where BRDMs are destroyed.	0	0	0	0	0	0	1	0	1	6	0	1:51	651.0
410	409	420	39180.0	CSSCS		Bde S4	TF S4	K01.01 Free Text	TF fuel HEMTTs can receive not more than 1500 gallons due to 2-8 FA fuel requirements.	2	2	0	1	1	1	0	0	0	16	2	1:53	653.0
411	410	270	39240.0	ASAS		Sct Plt	TF S2	K05.14 SitRep	Have linked with 3-92 scouts at NJ480870.	2	1	0	1	1	0	0	0	0	7	2	1:54	654.0
412	411	370	39600.0	FB CB 2		A 1-10	TF BC	Icon Movement	PL Kiwi, continuing mission.	2	1	0	1	0	0	2	0	1	0	4	2:00	660.0
413	412	370	39840.0	FB CB 2		C 1-10	TF BC	Icon Movement	PL Kiwi, continuing mission.	2	1	0	1	0	0	0	0	1	0	4	2:04	664.0
414	413	800	39876.0	TF_Cmd		B 1-10	TF Cdr	Blue 2 abb	Have swept area; it is clear.	0	0	0	0	1	0	0	0	1	5	0	2:04	664.6

	A	B	C	D	E	F	G	H	I	J	K	L	M	N	O	P	Q	R	S	T	U	V
1	Msg Num	Start	H+ Time Seconds	Net	Interrupt	From	To	Message Type	Text	Pass	Scan	Route	Update	E1	SH	Send	Enter	OTM	Word	Digital	Time	H+ Time Minutes
415	414	370	40080.0	MCS		Bde BC	TF BC	K05.14 SitRep	1-22 moving ground troops to screen your northern flank.	2	1	0	1	1	0	0	0	1	9	2	2:08	668.0
416	415	370	40440.0	MCS		3-92 BC	TF BC	SALT	Contact BRDM NJ425847.	2	1	0	1	1	0	0	0	1	3	2	2:14	674.0
417	416	370	40620.0	FB CB 2		B 1-10	TF BC	Icon Movement	PL Kiwi, continuing mission.	2	1	0	1	0	0	0	0	1	0	4	2:17	677.0
418	417	370	40680.0	MCS		3-92 BC	TF BC	SALT	Movement at NJ427855.	2	1	0	1	1	0	0	0	1	3	2	2:18	678.0
419	418	370	40800.0	MCS		3-92 BC	TF BC	K05.14 SitRep	PL Kiwi.	2	1	0	1	0	0	0	0	1	2	2	2:20	680.0
420	419	370	41100.0	MCS		Bde BC	TF BC	K05.14 SitRep	JTF Mojave FLOT cleared to our north along 60 north-south gridline.	2	1	0	1	0	0	0	0	1	12	2	2:25	685.0
421	420	370	41124.0	FB CB 2		Tm EN	TF BC	Icon Movement	PL Kiwi, continuing mission.	2	1	0	1	0	0	0	0	1	0	4	2:25	685.4
422	421	370	41700.0	FB CB 2		Sct Plt	TF BC	K05.14 SitRep	PL Daisy, nothing seen, continuing mission.	2	1	0	1	0	0	0	0	1	6	2	2:35	695.0
423	422	370	41712.0	MCS		Bde BC	TF BC	K05.14 SitRep	1-22 reports PL Kiwi.	2	1	0	1	0	0	2	0	1	4	2	2:35	695.2
424	423	870	41724.0	FB CB 2		TF BC	TF Cdr	K05.14 SitRep	1-22 reports PL Kiwi.	0	1	0	1	0	0	0	0	1	4	2	2:35	695.4
425	424	370	42600.0	FB CB 2		A 1-10	TF BC	Icon Movement	PL Daisy, continuing mission.	2	1	0	1	0	0	0	0	1	0	4	2:50	710.0
426	425	600	42660.0	BdeFS		2-3 CP	TF FSE	Blue 2 abb	Batteries crossing PL Kiwi .	2	3	0	1	0	0	0	0	1	4	0	2:51	711.0
427	426	650	42678.0	AFATDS		Bde FSO	TF FSE	C400 Cdr Sit Rpt	Batteries crossing PL Kiwi .	0	0	0	0	0	0	0	0	1	4	4	2:51	711.3
428	427	370	42780.0	FB CB 2		C 1-10	TF BC	Icon Movement	PL Daisy, continuing mission.	2	1	0	1	0	0	0	0	1	0	4	2:53	713.0
429	428	370	42900.0	MCS		Bde BC	TF BC	C115 Spot Intel Rpt	1-22 has contact with BRDM at NJ501992.	2	1	0	1	1	0	2	0	1	7	2	2:55	715.0
430	429	870	42930.0	FB CB 2		TF BC	TF Cdr	C115 Spot Intel Rpt	1-22 has contact with BRDM at NJ501992.	0	1	0	1	1	0	0	0	1	7	2	2:55	715.5
431	430	370	43140.0	FB CB 2		Sct Plt	TF BC	K05.14 SitRep	PL Bran, nothing seen, continuing mission.	2	1	0	1	0	0	0	0	1	6	2	2:59	719.0
432	431	370	43164.0	FB CB 2		B 1-10	TF BC	Icon Movement	PL Daisy, continuing mission.	2	1	0	1	0	0	0	0	1	0	4	2:59	719.4
433	432	420	43200.0	CSSCS		FSB Spt Ops	TF S4	S507 Resources Location	FSB crossing PL Berry.	2	1	0	1	0	0	0	0	1	4	2	3:00	720.0
434	433	420	43500.0	CSSCS		B 1SG	TF S4	K01.01 Free Text	Tank stuck in wadi at NJ402902, M88 recovering.	1	1	0	1	1	0	0	0	1	8	2	3:05	725.0
435	434	300	43560.0	TF_Cmd		B 1-10	TF BC	Blue 2 abb	Tank stuck in wadi at NJ402902, M88 recovering.	2	1	0	1	1	0	0	0	1	8	0	3:06	726.0
436	435	370	43740.0	FB CB 2		Tm EN	TF BC	Icon Movement	PL Daisy, continuing mission.	2	1	0	1	0	0	0	0	1	0	4	3:09	729.0
437	436	370	43860.0	MCS		Bde BC	TF BC	K05.14 SitRep	1-22 reports PL Daisy.	2	1	0	1	0	0	2	0	1	4	2	3:11	731.0
438	437	870	43866.0	FB CB 2		TF BC	TF Cdr	K05.14 SitRep	1-22 reports PL Daisy.	0	1	0	1	0	0	0	0	1	4	2	3:11	731.1
439	438	270	43872.0	ASAS		Sct Plt	TF S2	SALT	Two BRDMs at NJ273949 moving east.	2	3	0	1	1	0	2	0	1	6	2	3:11	731.2
440	439	370	43884.0	FB CB 2		Sct Plt	TF BC	SALT	Two BRDMs at NJ273949 moving east.	2	1	0	1	1	0	0	0	1	6	2	3:11	731.4
441	440	270	44100.0	ASAS		3-92 S2	TF S2	K05.14 SitRep	3-92 Scouts at PL Bran.	2	1	0	1	0	0	0	0	1	4	2	3:15	735.0
442	441	270	44460.0	ASAS		Sct Plt	TF S2	SALT	Two BRDMs moving east-southeast at NJ239954.	2	1	0	1	1	0	0	0	1	7	2	3:21	741.0
443	442	270	44520.0	ASAS		Sct Plt	TF S2	SALT	BRDM at NJ298957.	2	1	0	1	1	0	0	0	1	3	2	3:22	742.0
444	443	270	44544.0	ASAS		3-92 S2	TF S2	SALT	3-92 scouts identifying enemy scouts at NJ245885 and NJ186796 moving east.	2	3	0	1	0	0	0	0	1	12	2	3:22	742.4
445	444	370	44568.0	FB CB 2		Sct Plt	TF BC	SALT	BRDM at NJ298957.	2	1	0	1	1	0	0	0	1	3	2	3:22	742.8
446	445	860	44580.0	TF_Cmd		TF Cdr	A, B, C, Sct Plt	Internal trigger	Guidons, we're probably picking up scouts of a reinforced battalion. Be prepared to establish ABF or act as flanking element. A and B continue movement and set short of Plum. C move north of hill at NJ2695. Scouts, look for the main body following enemy scouts.	0	0	0	0	0	0	1	0	1	46	0	3:23	743.0
447	446	300	45000.0	TF_Cmd		B 1-10	TF BC	Blue 2 abb	Tank is recovered.	1	2	0	1	0	0	0	0	1	3	0	3:30	750.0

	A	B	C	D	E	F	G	H	I	J	K	L	M	N	O	P	Q	R	S	T	U	V
1	Msg Num	Start	H+ Time Seconds	Net	Interrupt	From	To	Message Type	Text	Pass	Scan	Route	Update	EI	SH	Send	Enter	OTM	Word	Digital	Time	H+ Time Minutes
448	447	420	45012.0	CSSCS		B 1SG	TF S4	K01.01 Free Text	Tank is recovered.	1	2	0	1	0	0	0	0	1	3	2	3:30	750.2
449	448	300	45036.0	TF_Cmd		A 1-10	TF BC	Blue 2 abb	PL Bran, nothing seen, continuing mission.	2	1	0	1	0	0	2	0	1	6	0	3:30	750.6
450	449	300	45180.0	TF_Cmd		C 1-10	TF BC	Blue 2 abb	PL Bran, nothing seen, continuing mission.	2	1	0	1	0	0	0	0	1	6	0	3:33	753.0
451	450	270	45240.0	ASAS		Sct Plt	TF S2	SALT	Tracked vehicles west, NJ232968.	2	1	0	1	0	0	0	0	1	4	2	3:34	754.0
452	451	370	45252.0	FB CB 2		Sct Plt	TF BC	SALT	Tracked vehicles west, NJ232968.	2	1	0	1	0	0	0	0	1	4	2	3:34	754.2
453	452	300	45270.0	TF_Cmd		B 1-10	TF BC	Blue 2 abb	PL Bran, nothing seen, continuing mission.	2	1	0	1	0	0	0	0	1	6	0	3:34	754.5
454	453	370	45300.0	MCS		Bde BC	TF BC	K05.14 SitRep	1-22 Cav reports valley south of Tiefort Mountain is clear. Lead troop PL Bran.	2	1	0	1	0	0	0	0	1	14	2	3:35	755.0
455	454	650	45336.0	AFATDS		Mtr Plt	TF FSE	Icon Movement	PL Bran.	2	1	0	1	0	0	0	0	1	0	4	3:35	755.6
456	455	370	45360.0	FB CB 2		Tm EN	TF BC	Icon Movement	PL Bran, continuing mission.	2	1	0	1	0	0	0	0	1	0	4	3:36	756.0
457	456	600	45378.0	BdeFS		Bde FSO	TF FSE	Blue 2 abb	Batteries crossing PL Daisy.	2	1	0	1	0	0	0	0	1	4	0	3:36	756.3
458	457	650	45390.0	AFATDS		Bde FSO	TF FSE	C400 Cdr Sit Rpt	Batteries crossing PL Daisy.	0	0	0	0	0	0	0	0	1	4	2	3:36	756.5
459	458	370	45420.0	MCS		3-92 BC	TF BC	C115 Spot Intel Rpt	3-92 identifying two enemy companies at NJ200855 and NJ165800.	2	3	0	1	1	0	2	0	1	9	2	3:37	757.0
460	459	870	45450.0	FB CB 2		TF BC	TF Cdr	C115 Spot Intel Rpt	3-92 has identified two enemy companies at NJ200855 and NJ165800.	0	1	0	1	1	0	0	0	1	9	2	3:37	757.5
461	460	280	45540.0	FB CB 2		TF S2	TF Cdr	Internal trigger	Believe we will make contact with the third enemy company from a forward detachment in the next 5-10 minutes.	0	0	0	0	0	0	2	0	1	20	2	3:39	759.0
462	461	870	45560.0	FB CB 2		TF S2	TF Cdr	K01.01 Free Text	Believe we will make contact with the third enemy company from a forward detachment in the next 5-10 minutes.	0	1	0	0	2	0	1	0	1	20	2	3:39	759.3
463	462	270	45660.0	ASAS		Sct Plt	TF S2	K05.14 SitRep	PL Plum, nothing seen, continuing mission.	2	1	0	1	1	0	0	0	1	6	2	3:41	761.0
464	463	370	45684.0	FB CB 2		Sct Plt	TF BC	K05.14 SitRep	PL Plum, nothing seen, continuing mission.	2	1	0	1	1	0	0	0	1	6	2	3:41	761.4
465	464	370	45780.0	FB CB 2		Sct Plt	TF BC	SALT	Nine MTIs moving southeast on road at NJ185945.	2	1	0	1	1	0	0	0	1	8	2	3:43	763.0
466	465	270	45798.0	ASAS		Sct Plt	TF S2	SALT	Nine MTIs moving southeast on road at NJ185945.	2	1	0	1	1	0	2	0	1	8	2	3:43	763.3
467	466	860	45822.0	TF_Cmd		TF Cdr	A, B, C, EN, Sct Plt, Mtr Plt	Internal trigger	Scouts, go to ground, keep eyes on enemy. A occupy SBF at NJ260955. B occupy SBF at NJ249925. C maneuver to southwest along Plum, hit enemy flank; do not move south of 96 east-west gridline. Mortars, establish fire position road junction NJ283933. Engineers, move at NJ303937, TF reserve.	0	0	0	0	0	0	1	0	1	49	0	3:43	763.7
468	467	3000	45882.0	TF_Cmd	12	TF XO	TF BC	Internal trigger	Have the Main CP stop.	0	0	0	0	0	0	0	0	1	8	0	3:44	764.7
469	468	960	45906.0	BdeCmd		TF S3	Bde Cdr	Internal trigger	Scouts have identified enemy company at NJ185945 moving east. We're establishing SBFs at NJ260955 and NJ249925 with two companies. Third company moving northeast to southwest along Plum to flank.	0	0	0	0	0	0	1	0	1	29	0	3:45	765.1
470	469	270	46020.0	ASAS		Sct Plt	TF S2	SALT	Nine MTIs identified as BTRs and T-80s; stopped on road at NJ200945.	2	3	0	1	1	2	2	0	0	12	2	3:47	767.0

	A	B	C	D	E	F	G	H	I	J	K	L	M	N	O	P	Q	R	S	T	U	V
1	Msg Num	Start	H+ Time Seconds	Net	Interrupt	From	To	Message Type	Text	Pass	Scan	Route	Update	EI	SH	Send	Enter	OTM	Word	Digital	Time	H+ Time Minutes
471	470	870	46050.0	FB CB 2		Sct Plt	TF Cdr	SALT	Nine MTIs identified as B TRs and T-80s; stopped on road at NJ200945.	0	1	0	1	1	0	0	0	0	12	2	3:47	767.5
472	471	600	46080.0	B deFS		2-3 CP	TF FSE	Blue 2 abb	2-3 batteries ready to fire in five minutes; 2-8 batteries ready in 12.	2	2	1	1	1	0	0	0	0	13	0	3:48	768.0
473	472	650	46098.0	AFATDS		B de FSO	TF FSE	C400 Cdr Sit Rpt	2-3 batteries ready to fire in five minutes; 2-8 batteries ready in 12.	0	0	0	0	0	0	0	0	0	13	2	3:48	768.3
474	473	370	46140.0	MCS		3-92 B C	TF B C	K05.14 SitRep	3-92 in contact with two enemy company-sized units at NJ235844 and NJ202788.	2	1	1	1	1	0	2	0	0	13	2	3:49	769.0
475	474	870	46188.0	FB CB 2		TF B C	TF Cdr	K05.14 SitRep	3-92 in contact with two enemy company-sized units at NJ235844 and NJ202788.	0	1	0	0	1	0	0	0	0	13	2	3:49	769.8
476	475	600	46500.0	TF_FD		Mtr Plt	TF FSE	Blue 2 abb	Ready to fire at NJ283933.	2	1	1	1	1	0	0	0	0	5	0	3:55	775.0
477	476	270	46620.0	ASAS		Sct Plt	TF S2	SALT	Previously reported B TRs and T-80s starting to move slowly east.	2	1	1	1	1	0	0	0	0	10	2	3:57	777.0
478	477	870	46638.0	FB CB 2		Sct Plt	TF Cdr	SALT	Previously reported B TRs and T-80s starting to move slowly east.	0	1	0	1	1	0	1	0	0	10	2	3:57	777.3
479	478	270	46920.0	ASAS		Sct Plt	TF S2	SALT	Previously reported B TRs and T-80s crossing Plum at NJ228946 in battle formation.	2	3	1	1	1	0	0	0	0	12	2	4:02	782.0
480	479	870	46944.0	FB CB 2		Sct Plt	TF Cdr	SALT	Previously reported B TRs and T-80s crossing Plum at NJ228946 in battle formation.	0	1	0	1	1	0	0	0	0	12	2	4:02	782.4
481	480	800	46980.0	TF_Cmd		B 1-10	TF Cdr	Blue 2 abb	Set in SBF; can identify enemy.	0	1	0	1	1	0	1	0	0	6	0	4:03	783.0
482	481	800	47040.0	TF_Cmd		A 1-10	TF Cdr	Blue 2 abb	Set in SBF; can identify enemy.	0	1	0	1	1	0	0	0	0	6	0	4:04	784.0
483	482	600	47100.0	TF_FD		B FIST	TF FSE	Fires	Fire mission NJ234943, three tanks, seven B TRs moving east, HE quick at my command.	2	3	0	1	1	0	1	0	0	14	0	4:05	785.0
484	483	800	47160.0	TF_Cmd		B 1-10	TF Cdr	Blue 1	Two T-80s destroyed at NJ237940.	0	1	0	1	1	0	0	0	0	5	0	4:06	786.0
485	484	800	47196.0	TF_Cmd		A 1-10	TF Cdr	Blue 1	Two B TRs destroyed at NJ238947.	0	1	0	1	1	0	0	0	0	5	0	4:06	786.6
486	485	600	47220.0	TF_FD		B FIST	TF FSE	Fires	Drop 100, right 50, fire for effect.	2	0	0	1	0	0	0	0	0	7	0	4:07	787.0
487	486	870	47226.0	FB CB 2		C 1-10	TF Cdr	Icon Movement	Current position NJ250980.	0	1	0	1	1	0	1	0	0	0	4	4:07	787.1
488	487	380	47262.0	MCS		TF B C	B de B C	Internal trigger	Engaging T-80s and B TRs at NJ237940 and NJ238947.	0	0	0	0	0	0	2	0	0	7	2	4:07	787.7
489	488	600	47280.0	TF_FD		B FIST	TF FSE	Fires	Repeat.	2	0	0	1	0	0	0	0	0	1	0	4:08	788.0
490	489	370	47340.0	MCS		B de B C	TF B C	K05.14 SitRep	1-22 reports Plum; no enemy encountered.	2	1	1	1	0	0	2	0	0	6	2	4:09	789.0
491	490	860	47400.0	TF_Cmd		TF Cdr	C 1-10	Internal trigger	C assault enemy flank, do not cross south of 96 east-west gridline; A and B make sure you have positive ID before engaging enemy.	0	0	0	0	0	0	1	0	0	25	0	4:10	790.0
492	491	860	47442.0	TF_Cmd	21	TF Cdr	TF FSE	Internal trigger	Hold all fire.	2	0	0	0	0	0	1	0	0	3	0	4:10	790.7
493	492	650	47454.0	AFATDS		Mtr Plt	TF FSE	K02.16 End of Mission	End of mission.	2	3	0	1	0	0	0	0	0	3	2	4:10	790.9
494	493	300	47460.0	TF_Cmd		A 1-10	TF B C	Blue 1	Indirect fire on my position.	2	1	1	1	1	0	0	0	0	5	0	4:11	791.0
495	494	800	47520.0	TF_Cmd		C 1-10	TF Cdr	Blue 1	One tank and two B TRs destroyed at NJ227955.	0	1	0	1	1	0	0	0	0	8	0	4:12	792.0
496	495	270	47640.0	ASAS		Sct Plt	TF S2	SALT	Three tracked vehicles withdrawing to the northwest NJ219968.	2	3	1	1	1	0	0	0	0	10	2	4:14	794.0
497	496	870	47700.0	FB CB 2		TF B C	TF Cdr	K05.14 SitRep	1-22 at Plum, no enemy encountered.	0	1	0	1	1	0	0	0	0	6	2	4:15	795.0
498	497	800	47742.0	TF_Cmd		C 1-10	TF Cdr	Blue 2 abb	One BFV was hit; two KIA, four WIA.	0	3	0	1	1	0	0	0	0	8	0	4:15	795.7

	A	B	C	D	E	F	G	H	I	J	K	L	M	N	O	P	Q	R	S	T	U	V
1	Msg Num	Start	H+ Time Seconds	Net	Interrupt	From	To	Message Type	Text	Pass	Scan	Route	Update	EI	SH	Send	Enter	OTM	Word	Digital	Time	H+ Time Minutes
499	498	420	47760.0	FB CB 2		A 1SG	TF S1	B907 Medical Stat Rep	One WIA, medics are treating.	2	2	0	1	1	0	0	0	0	5	2	4:16	796.0
500	499	300	47820.0	TF_Cmd		C 1-10	TF BC	EPW Rpt	Two EPWs captured at NJ232975.	2	1	1	0	0	0	1	0	0	5	0	4:17	797.0
501	500	370	47838.0	MCS		3-92 BC	TF BC	K05.14 SitRep	3-92 continuing to engage two enemy companies, receiving heavy indirect fire.	2	1	0	1	1	0	0	0	0	11	2	4:17	797.3
502	501	860	47862.0	TF_Cmd		TF Cdr	A, B, C	Internal trigger	Give me your SITREP.	0	0	0	0	0	0	1	0	0	4	0	4:17	797.7
503	502	800	47880.0	TF_Cmd		A 1-10	TF Cdr	Blue 2 abb	Green; 10/4/1, one WIA.	0	2	0	1	1	0	0	0	0	6	0	4:18	798.0
504	503	800	47916.0	TF_Cmd		B 1-10	TF Cdr	Blue 2 abb	Green; 10/0/1.	0	2	0	1	1	0	0	0	0	4	0	4:18	798.6
505	504	800	47940.0	TF_Cmd		C 1-10	TF Cdr	Blue 2 abb	Green; 4/9/1; two KIA, four WIA.	0	2	0	1	1	0	0	0	0	8	0	4:19	799.0
506	505	800	47964.0	TF_Cmd		Tm EN	TF Cdr	Blue 2 abb	Green.	0	2	0	1	1	0	0	0	0	1	0	4:19	799.4
507	506	420	48240.0	FB CB 2		C 1SG	TF S1	B907 Medical Stat Rep	Two KIA, four WIA, medics are treating.	2	2	0	1	1	0	0	0	0	7	2	4:24	804.0
508	507	420	48264.0	CSSCS		C 1SG	TF S4	C802 Logistics SitRep	One BFV destroyed.	2	2	0	1	1	0	0	0	0	3	2	4:24	804.4
509	508	380	48300.0	MCS		TF BC	Bde BC	Internal trigger	Green; 30/13/3; one BFV destroyed; two KIA, 5 WIA. Defeated enemy company, three enemy vehicles	0	0	0	0	0	0	2	0	0	23	2	4:25	805.0
510	509	420	48360.0	FB CB 2		C 1SG	TF S1	K01.01 Free Text	Have two EPWs, moving them to your location.	2	2	0	1	1	0	0	0	0	9	2	4:26	806.0
511	510	270	48600.0	ASAS		Bde S2	TF S2	G131 Intel Summary	1st Bde engaging battalion-sized Forward Detachment. Lead enemy brigade no less than four hours from PL Crow. We can expect no more than one enemy brigade in our zone. Enemy 231 MRD main effort in 3d Bde zone. JTF Mojave encountering isolated motorized enemy vicinity NK3517.	2	4	1	1	1	2	2	0	0	49	2	4:30	810.0
512	511	420	48648.0	CSSCS		Bde S1	TF S1	S507 Resources Location	EPW collection point at NJ486875.	1	2	0	1	1	0	2	0	0	5	2	4:30	810.8
513	512	820	48720.0	BdeCmd		Bde Cdr	TF Cdr	Order	Hold current position. Consolidate. Wait for 3-92 to finish fight. Anticipate moving at 0500.	0	1	0	0	1	0	0	0	0	14	0	4:32	812.0
514	513	860	48750.0	BdeCmd		TF Cdr	Bde Cdr	Internal trigger	Request to move my scouts out to 20 north-south gridline.	0	0	0	0	0	0	1	0	0	11	0	4:32	812.5
515	514	960	49020.0	TF_Cmd	29	TF S3	TF Cdr	Internal trigger	Recommend we call Bde and request 1-22 move to PL Rose to screen our north.	0	1	0	0	1	0	1	0	0	12	0	4:37	817.0
516	515	960	49080.0	BdeCmd		TF S3	Bde S3	Internal trigger	Request you call Division and have 1-22 move to Rose to screen our north.	0	0	0	0	0	0	1	0	0	13	0	4:38	818.0
517	516	370	49260.0	MCS		3-92 BC	TF BC	K05.14 SitRep	3-92 reports enemy companies defeated and withdrawing to the west.	2	1	1	1	1	0	2	0	0	10	2	4:41	821.0
518	517	870	49320.0	FB CB 2		TF BC	TF Cdr	K05.14 SitRep	Enemy in 3-92 zone defeated and withdrawing to the west.	0	1	0	1	1	0	0	0	0	10	2	4:42	822.0
519	518	370	49680.0	MCS		Bde BC	TF BC	K05.14 SitRep	1-22 extending screen to PL Rose.	2	1	1	1	1	0	2	0	0	6	2	4:48	828.0
520	519	870	49698.0	FB CB 2		TF BC	TF Cdr	K05.14 SitRep	1-22 extending screen to PL Rose.	0	1	0	1	1	0	0	0	0	6	2	4:48	828.3
521	520	820	49800.0	BdeCmd		Bde Cdr	TF Cdr	Order	Resume movement at 0500.	0	1	0	0	1	0	0	0	0	4	0	4:50	830.0
522	521	860	49920.0	TF_Cmd		TF Cdr	A, B, C, Tm EN	Internal trigger	Report REDCON.	0	0	0	0	0	0	1	0	0	2	0	4:52	832.0
523	522	300	49938.0	TF_Cmd		A 1-10	TF BC	Alert	REDCON 1.	0	2	0	1	0	0	0	0	0	2	0	4:52	832.3

	A	B	C	D	E	F	G	H	I	J	K	L	M	N	O	P	Q	R	S	T	U	V
1	Msg Num	Start	H+ Time Seconds	Net	Interrupt	From	To	Message Type	Text	Pass	Scan	Route	Update	EI	SH	Send	Enter	OTM	Word	Digital	Time	H+ Time Minutes
524	523	300	49956.0	TF_Cmd		B 1-10	TF BC	Alert	REDCON 1.	0	2	0	1	0	0	0	0	0	2	0	4:52	832.6
525	524	300	49968.0	TF_Cmd		C 1-10	TF BC	Alert	REDCON 1.	0	2	0	1	0	0	0	0	0	2	0	4:52	832.8
526	525	300	49980.0	TF_Cmd		Tm EN	TF BC	Alert	REDCON 1.	0	2	0	1	0	0	2	0	0	2	0	4:53	833.0
527	526	420	50400.0	CSSCS		FSB Spt Ops	TF S4	S507 Resources Location	FSB crossing PL Kiwi.	1	1	0	1	0	0	2	0	0	4	2	5:00	840.0
528	527	860	50424.0	TF_Cmd		TF Cdr	A, B, C, EN	Internal trigger	Begin movement, reform TF diamond.	0	0	0	0	0	0	1	0	0	5	0	5:00	840.4
529	528	370	51000.0	FB CB 2		A 1-10	TF BC	Icon Movement	PL Plum, nothing seen, continuing mission.	2	1	0	1	0	0	2	0	1	0	4	5:10	850.0
530	529	650	51120.0	AFATDS		Mtr Plt	TF FSE	Icon Movement	PL Plum, continuing mission.	2	1	0	1	0	0	0	0	1	0	4	5:12	852.0
531	530	370	51180.0	MCS		3-92 BC	TF BC	K05.14 SitRep	3-92 crossing Plum.	2	1	0	1	0	0	2	0	1	4	2	5:13	853.0
532	531	870	51198.0	FB CB 2		TF BC	TF Cdr	K05.14 SitRep	3-92 crossing Plum.	0	1	0	1	0	0	0	0	1	4	2	5:13	853.3
533	532	370	51240.0	FB CB 2		B 1-10	TF BC	Icon Movement	PL Plum, nothing seen, continuing mission.	2	1	0	1	0	0	0	0	1	0	4	5:14	854.0
534	533	370	51300.0	FB CB 2		C 1-10	TF BC	Icon Movement	PL Plum, nothing seen, continuing mission.	2	1	0	1	0	0	0	0	1	0	4	5:15	855.0
535	534	600	51360.0	B deFS		2-3 CP	TF FSE	Blue 2 abb	Lead batteries starting to cross Bran.	2	1	0	1	0	0	0	0	1	6	0	5:16	856.0
536	535	650	51402.0	AFATDS		B de FSO	TF FSE	C400 Cdr Sit Rpt	2-3 batteries starting to cross Bran.	0	0	0	0	0	0	0	0	1	6	4	5:16	856.7
537	536	370	51720.0	FB CB 2		Tm EN	TF BC	Icon Movement	PL Plum, continuing mission.	2	1	0	1	0	0	0	0	1	0	4	5:22	862.0
538	537	370	51780.0	FB CB 2		TF S4	TF BC	Icon Movement	PL Bran, continuing mission.	2	1	0	1	0	0	0	0	1	0	4	5:23	863.0
539	538	370	51840.0	MCS		3-92 BC	TF BC	K05.14 SitRep	3-92 at PL Plum.	2	1	0	1	0	0	0	0	1	4	2	5:24	864.0
540	539	370	51900.0	MCS		2-10 BC	TF BC	K05.14 SitRep	2-10 crossing PL Bran.	2	1	0	1	0	0	2	0	1	4	2	5:25	865.0
541	540	870	51924.0	FB CB 2		TF BC	TF Cdr	K05.14 SitRep	2-10 crossing PL Bran.	0	1	0	1	0	0	0	0	1	4	2	5:25	865.4
542	541	270	51960.0	ASAS		Sct Plt	TF S2	K05.14 SitRep	PL Rose, nothing seen; have linked with 1-22 at NK178004.	2	1	0	1	0	0	0	0	1	11	2	5:26	866.0
543	542	370	51990.0	FB CB 2		Sct Plt	TF BC	K05.14 SitRep	PL Rose, nothing seen; have linked with 1-22 at NK178004.	2	1	0	1	0	0	0	0	1	11	2	5:26	866.5
544	543	370	52440.0	MCS		B de BC	TF BC	C115 Spot Intel Rpt	Two to three possible enemy vehicles identified by 1-22 Air Troop at NJ134996.	2	1	0	1	1	0	2	0	1	13	2	5:34	874.0
545	544	370	52476.0	MCS		3-92 BC	TF BC	C115 Spot Intel Rpt	3-92 in contact with enemy platoon at NJ122852.	2	1	0	1	1	0	0	0	1	8	2	5:34	874.6
546	545	370	52500.0	FB CB 2		A 1-10	TF BC	Icon Movement	PL Rose, nothing seen, continuing mission.	2	1	0	1	0	0	0	0	1	0	4	5:35	875.0
547	546	870	52518.0	FB CB 2		TF BC	TF Cdr	C115 Spot Intel Rpt	Two to three possible enemy vehicles identified by 1-22 Air Troop at NJ134996.	0	1	0	1	1	0	1	0	1	13	2	5:35	875.3
548	547	370	52542.0	FB CB 2		C 1-10	TF BC	Icon Movement	PL Rose, nothing seen, continuing mission.	2	1	0	1	0	0	0	0	1	0	4	5:35	875.7
549	548	870	52620.0	FB CB 2		Sct Plt	TF Cdr	SALT	Two tracked vehicles moving east at NJ108955.	0	1	0	1	1	0	0	0	1	7	2	5:37	877.0
550	549	270	52632.0	ASAS		Sct Plt	TF S2	SALT	Two tracked vehicles moving east at NJ108955.	2	3	0	1	1	0	2	0	1	7	2	5:37	877.2
551	550	370	52740.0	FB CB 2		B 1-10	TF BC	Icon Movement	PL Rose, nothing seen, continuing mission.	2	1	0	1	0	0	0	0	1	0	4	5:39	879.0
552	551	870	52752.0	FB CB 2		Sct Plt	TF Cdr	SALT	The two vehicles at NJ108955 are now moving northwest.	0	0	0	1	1	0	0	0	1	9	2	5:39	879.2
553	552	270	52770.0	ASAS		Sct Plt	TF S2	SALT	The two vehicles at NJ108955 are now moving northwest.	2	1	0	1	1	0	0	0	1	9	2	5:39	879.5
554	553	870	53160.0	FB CB 2		Sct Plt	TF Cdr	SALT	Three tracked vehicles moving northwest on road at NJ120015.	0	1	0	1	1	0	0	0	1	9	2	5:46	886.0
555	554	270	53178.0	ASAS		Sct Plt	TF S2	SALT	Three tracked vehicles moving northwest on road at NJ120015.	2	1	0	1	1	0	2	0	1	9	2	5:46	886.3

	A	B	C	D	E	F	G	H	I	J	K	L	M	N	O	P	Q	R	S	T	U	V
1	Msg Num	Start	H+ Time Seconds	Net	Interrupt	From	To	Message Type	Text	Pass	Scan	Route	Update	EI	SH	Send	Enter	OTM	Word	Digital	Time	H+ Time Minutes
556	555	380	53202.0	FB CB2		TF BC	TF Cdr	Internal trigger	1-22 Cav has identified same vehicles scouts have ID'ed. They will engage.	0	0	0	0	0	0	2	0	1	12	2	5:46	886.7
557	556	870	53215.0	FB CB2		TF BC	TF Cdr	K01.01 Free Text	1-22 Cav has identified same vehicles scouts have ID'ed. They will engage.	0	1	0	0	1	0	0	0	1	12	2	5:46	886.9
558	557	370	53220.0	FB CB2		Trn EN	TF BC	Icon Movement	PL Rose, nothing seen, continuing mission.	2	1	0	1	0	0	0	0	1	0	4	5:47	887.0
559	558	280	53245.0	FB CB2		TF S2	TF Cdr	Internal trigger	Vehicles identified by scouts probably enemy brigade recon patrol.	0	0	0	0	0	0	2	0	1	9	0	5:47	887.4
560	559	870	53280.0	FB CB2		TF S2	TF Cdr	K01.01 Free Text	Vehicles identified by scouts probably enemy brigade recon patrol.	0	1	0	1	1	0	0	0	1	9	2	5:47	888.0
561	560	280	53340.0	ASAS		TF S2	Bde S2	Internal trigger	Believe enemy brigade recon patrol operating along 11 north-south gridline in our zone.	0	0	0	0	0	0	2	0	1	15	2	5:49	889.0
562	561	370	53400.0	FB CB2		TF S4	TF BC	Icon Movement	PL Rose, continuing mission.	2	1	0	1	0	0	0	0	1	0	4	5:50	890.0
563	562	870	53412.0	FB CB2		Sct Plt	TF Cdr	C115 Spot Intel Rpt	PL Barley, lost contact with enemy vehicles in south.	0	1	0	0	1	0	0	0	1	9	2	5:50	890.2
564	563	370	53430.0	MCS		Bde BC	TF BC	K05.14 SitRep	1-22 at PL Barley.	2	1	0	1	0	0	2	0	1	4	2	5:50	890.5
565	564	870	53436.0	FB CB2		TF BC	TF Cdr	K05.14 SitRep	1-22 at PL Barley.	0	1	0	1	0	0	0	0	1	4	2	5:50	890.6
566	565	270	53442.0	ASAS		Sct Plt	TF S2	C115 Spot Intel Rpt	PL Barley, lost contact with enemy vehicles in south.	2	1	0	1	1	0	0	0	1	9	2	5:50	890.7
567	566	370	53520.0	MCS		3-92 BC	TF BC	C115 Spot Intel Rpt	3-92 has destroyed enemy platoon at NJ112882.	2	1	0	1	1	0	0	0	1	7	2	5:52	892.0
568	567	870	53544.0	FB CB2		Sct Plt	TF Cdr	SALT	Have reacquired two enemy vehicles at NJ079994.	0	1	0	1	1	0	0	0	1	7	2	5:52	892.4
569	568	270	53562.0	ASAS		Sct Plt	TF S2	SALT	Have reacquired two enemy vehicles at NJ079994.	2	1	0	1	1	0	0	0	1	7	2	5:52	892.7
570	569	3000	53580.0	TF_Cmd	12	TF XO	TF BC	Internal trigger	Have the Main come to a short halt.	0	0	0	0	0	0	0	0	1	8	0	5:53	893.0
571	570	370	53622.0	MCS		Bde BC	TF BC	C115 Spot Intel Rpt	1-22 destroyed two enemy vehicles at NK102045.	2	1	1	1	1	0	0	0	0	7	2	5:53	893.7
572	571	860	53640.0	TF_Cmd		TF Cdr	Sct Plt, A, B, C	Internal trigger	Scouts, keep eyes on but bypass to north, get up on Gold; B move to destroy enemy at NJ079994, A occupy SBF at NJ104974; C occupy SBF at NJ105988. Engineers TF reserve NJ127976.	0	1	0	0	0	0	1	0	0	33	0	5:54	894.0
573	572	600	53700.0	BdeFS		2-3 CP	TF FSE	Blue 2 abb	Lead batteries starting to cross Plum.	2	1	0	1	0	0	0	0	0	6	0	5:55	895.0
574	573	650	53718.0	AFATDS		Bde FSO	TF FSE	C400 Cdr Sit Rpt	2-3 batteries starting to cross Plum.	0	0	0	0	0	0	0	0	0	0	2	5:55	895.3
575	574	370	53724.0	FB CB2		A 1-10	TF BC	Icon Movement	PL Barley, continuing mission.	2	1	0	1	0	0	2	0	0	0	4	5:55	895.4
576	575	370	53880.0	FB CB2		B 1-10	TF BC	Icon Movement	PL Barley, continuing mission.	2	1	0	1	0	0	0	0	0	0	4	5:58	898.0
577	576	370	53940.0	FB CB2		C 1-10	TF BC	Icon Movement	PL Barley, continuing mission.	2	1	0	1	0	0	0	0	0	0	4	5:59	899.0
578	577	300	53982.0	TF_Cmd		A 1-10	TF BC	Blue 2 abb	Set in SBF.	2	1	0	1	1	0	0	0	0	3	0	5:59	899.7
579	578	270	54000.0	ASAS		Bde S2	TF S2	C521 Weather	Clear day, high of 85, no rain.	1	2	1	1	0	0	0	0	0	7	2	6:00	900.0
580	579	300	54180.0	TF_Cmd		C 1-10	TF BC	Blue 2 abb	Set in SBF.	2	1	0	1	1	0	0	0	0	3	0	6:03	903.0
581	580	370	54240.0	FB CB2		C 1-10	TF BC	SALT	Identifying five to eight dismounts at NJ084988.	0	1	0	1	1	0	0	0	0	7	2	6:04	904.0
582	581	300	54270.0	TF_Cmd		B 1-10	TF BC	Contact	Contact, BRDMs, northwest.	0	1	0	1	1	0	2	0	0	3	0	6:04	904.5
583	582	800	54480.0	TF_Cmd		A 1-10	TF Cdr	Alert	Identifying B coming up on my left.	0	1	0	1	2	0	0	0	0	7	0	6:08	908.0
584	583	800	54492.0	TF_Cmd		C 1-10	TF Cdr	Alert	Identify B also.	0	1	0	1	2	0	1	0	0	3	0	6:08	908.2
585	584	370	54540.0	MCS		2-10 BC	TF BC	K05.14 SitRep	2-10 crossing PL Plum.	1	1	0	1	0	0	0	0	0	4	2	6:09	909.0
586	585	800	54600.0	TF_Cmd		B 1-10	TF Cdr	Blue 2 abb	On objective, two BRDMs destroyed at NJ079994, nine enemy soldiers surrendering.	0	1	0	1	1	0	1	0	0	11	0	6:10	910.0

	A	B	C	D	E	F	G	H	I	J	K	L	M	N	O	P	Q	R	S	T	U	V
1	Msg Num	Start	H+ Time Seconds	Net	Interrupt	From	To	Message Type	Text	Pass	Scan	Route	Update	E1	SH	Send	Enter	OTM	Word	Digital	Time	H+ Time Minutes
587	586	380	54660.0	MCS		TF BC	Bde BC	Internal trigger	Two BRDMs destroyed at NJ079994. Nine enemy soldiers surrendering; TF continuing move to Gold.	0	0	0	0	0	0	2	0	1	14	0	6:11	911.0
588	587	370	54720.0	MCS		3-92 BC	TF BC	K05.14 SitRep	3-92 main body crossing PL Barley.	2	1	0	1	0	0	2	0	1	6	2	6:12	912.0
589	588	870	54756.0	FB CB 2		TF BC	TF Cdr	K05.14 SitRep	3-92 main body crossing PL Barley.	0	1	0	1	0	0	0	0	1	6	2	6:12	912.6
590	589	370	54840.0	MCS		2-10 BC	TF BC	K01.01 Free Text	2-10 is increasing rate of march.	2	1	0	0	0	0	0	0	1	6	2	6:14	914.0
591	590	370	54960.0	FB CB 2		Sct Plt	TF BC	K05.14 SitRep	Have clear Goldstone at NJ080059; deployed along 08 north-south gridline, continuing mission.	2	1	0	1	0	0	0	0	1	13	2	6:16	916.0
592	591	270	54984.0	ASAS		Sct Plt	TF S2	K05.14 SitRep	Have clear Goldstone at NJ080059; deployed along 08 north-south gridline, continuing mission.	2	1	0	1	0	0	2	0	1	13	2	6:16	916.4
593	592	370	55080.0	FB CB 2		Tm EN	TF BC	Icon Movement	PL Barley.	2	1	0	1	0	0	0	0	1	0	4	6:18	918.0
594	593	860	55122.0	TF_Cmd		TF Cdr	Sct Plt	Internal trigger	Continue movement to Gold. Link with 1-22 in the north and 3-92 in the south.	0	0	0	0	0	0	1	0	0	15	0	6:18	918.7
595	594	370	55200.0	MCS		Bde S3	TF S3	k05.52 Overlay Msg	On-order boundary from Barley to Crow is in effect.	0	1	0	1	0	0	0	0	1	10	2	6:20	920.0
596	595	420	55800.0	CSSCS		FSB Spt Ops	TF S4	S507 Resources Location	FSB starting to set up vicinity NJ2493.	2	1	0	1	1	0	2	0	1	7	2	6:30	930.0
597	596	370	55830.0	FB CB 2		TF S4	TF BC	Icon Movement	PL Barley.	2	1	0	1	0	0	0	0	1	0	4	6:30	930.5
598	597	370	56100.0	FB CB 2		Sct Plt	TF BC	K05.14 SitRep	Starting to enter Gold.	2	1	0	1	0	0	0	0	1	4	2	6:35	935.0
599	598	270	56112.0	ASAS		Sct Plt	TF S2	K05.14 SitRep	Starting to enter Gold.	2	1	0	1	0	0	2	0	1	4	2	6:35	935.2
600	599	960	56136.0	FB CB 2		TF S3	Bde S3	Internal trigger	Scouts starting to enter Gold.	0	0	0	0	0	0	2	0	1	4	0	6:35	935.6
601	600	870	56160.0	FB CB 2		ADA OFF	TF Cdr	K10.01 Hostile A/C Report	Radars report inbound fixed winged 35 Kms out from the northwest. Should arrive within next five minutes.	2	1	0	1	1	0	1	0	1	17	2	6:36	936.0
602	601	300	56280.0	TF_Cmd		ADA OFF	TF BC	Blue 2 abb	BSFVs stopped and deployed.	2	0	0	0	1	0	0	0	1	4	0	6:38	938.0
603	602	300	56340.0	TF_Cmd		Sct Plt	TF BC	Blue 1	Enemy fixed winged northwest.	2	0	0	1	1	0	0	0	1	4	0	6:39	939.0
604	603	300	56400.0	TF_Cmd		ADA OFF	TF BC	Blue 1	Stinger 2 identifying inbound fixed winged, northwest.	2	0	0	0	1	0	0	0	1	7	0	6:40	940.0
605	604	370	56460.0	FB CB 2		ADA OFF	TF BC	C602 Engagement of Hostile A/C	One enemy fixed winged destroyed NJ055997, possible parachute.	2	1	0	1	0	0	2	0	1	8	2	6:41	941.0
606	605	860	56520.0	TF_Cmd		TF Cdr	A, B, C, EN, Mtr Plt, CTCP	Internal trigger	Resume movement to Gold.	0	0	0	0	0	0	1	0	0	4	0	6:42	942.0
607	606	370	56700.0	MCS		2-10 BC	TF BC	K05.14 SitRep	2-10 crossing Barley.	2	1	0	1	0	0	2	0	1	3	2	6:45	945.0
608	607	870	56712.0	FB CB 2		TF BC	TF Cdr	K05.14 SitRep	2-10 crossing Barley.	0	1	0	1	0	0	0	0	1	3	2	6:45	945.2
609	608	600	57120.0	BdeFS		2-3 CP	TF FSE	Blue 2 abb	Lead batteries starting to cross Barley.	2	1	0	1	0	0	0	0	0	6	0	6:52	952.0
610	609	650	57132.0	AFATDS		Bde FSO	TF FSE	C400 Cdr Sit Rpt	2-3 batteries starting to cross Barley.	0	0	0	0	0	0	0	0	0	0	4	6:52	952.2
611	610	750	57540.0	FB CB 2		ABE	EN OFF	S507 Resources Location	Obstacle material due to arrive at Gold at 0900.	2	0	0	0	1	0	0	0	1	9	2	6:59	959.0
612	611	370	57600.0	FB CB 2		Sct Plt	TF BC	K05.14 SitRep	Gold clear of enemy.	2	1	0	1	0	0	0	0	1	4	2	7:00	960.0
613	612	270	57624.0	ASAS		Sct Plt	TF S2	K05.14 SitRep	Gold clear of enemy.	2	1	0	1	0	0	2	0	1	4	2	7:00	960.4
614	613	960	57660.0	MCS		TF S3	Bde S3	Internal trigger	Scouts report Gold clear of enemy.	0	0	0	0	0	0	2	0	0	6	2	7:01	961.0

	A	B	C	D	E	F	G	H	I	J	K	L	M	N	O	P	Q	R	S	T	U	V
1	Msg Num	Start	H+ Time Seconds	Net	Interrupt	From	To	Message Type	Text	Pass	Scan	Route	Update	EI	SH	Send	Enter	OTM	Word	Digital	Time	H+ Time Minutes
615	614	860	57840.0	TF_Cmd		TF Cdr	A, B, C, EN, Mtr Plt, CTCP	Internal trigger	Occupy assigned positions on Gold. Begin refuel, rearm operations ASAP.	0	0	0	0	0	0	1	0	0	10	0	7:04	964.0
616	615	270	58080.0	ASAS		B de S2	TF S2	C110 Intel Report	Enemy motorized brigade expected in our sector 1.5 to 2.5 hours. Enemy division effort expected to our south.	2	4	0	1	2	0	2	0	1	18	2	7:08	968.0
617	616	870	58140.0	FB CB 2		TF S2	TF Cdr	C110 Intel Report	Enemy motorized brigade expected in our sector 1.5 to 2.5 hours. Enemy division effort expected to our south.	0	1	0	1	2	0	0	0	1	18	2	7:09	969.0
618	617	3000	58320.0	TF_Cmd	29	TF XO	TF Cdr	Internal trigger	The small valley at NK0114 needs engineer effort to prevent enemy lateral movement into our sector.	0	0	0	0	0	0	1	0	1	7	0	7:12	972.0
619	618	300	58344.0	TF_Cmd		B 1-10	TF BC	Blue 2 abb	Pulling into Gold-B, starting to occupy.	2	1	0	1	0	0	2	0	1	6	0	7:12	972.4
620	619	860	58368.0	TF_Cmd		TF Cdr	B, Tm EN	Internal trigger	Engineers, detach tank platoon back to B.	0	0	0	0	0	0	1	0	1	7	0	7:12	972.8
621	620	300	58488.0	TF_Cmd		A 1-10	TF BC	Blue 2 abb	Pulling into Gold-A, starting to occupy.	2	1	0	1	0	0	0	0	1	6	0	7:14	974.8
622	621	3050	58500.0	FB CB 2		TF XO	A, B, C, EN, HHC 1SGs	Internal trigger	Send in data for Yellow 2, 3, and 4.	0	0	0	0	0	0	2	0	0	9	2	7:15	975.0
623	622	420	58620.0	CSSCS		A 1SG	TF S4	C802 Logistics SitRep	10, 4, 1	2	2	0	1	0	0	0	0	1	3	2	7:17	977.0
624	623	420	58740.0	CSSCS		A 1SG	TF S4	B875 Munitions StatRep	4 Sabot., 4 HEAT, 25mm 850 HE	2	2	0	1	0	0	0	0	1	7	2	7:19	979.0
625	624	370	58800.0	MCS		B de BC	TF BC	K05.14 SitRep	3d B de on OBJ Tiger.	2	1	0	1	0	0	0	0	1	5	2	7:20	980.0
626	625	420	58920.0	CSSCS		A 1SG	TF S4	C802 Logistics SitRep	3400 diesel	2	2	0	1	0	0	0	0	1	2	2	7:22	982.0
627	626	300	58944.0	TF_Cmd		C 1-10	TF BC	Blue 2 abb	Pulling into Gold-C, starting to occupy.	2	1	0	1	0	0	2	0	1	6	0	7:22	982.4
628	627	370	58962.0	MCS		3-92 BC	TF BC	K05.14 SitRep	3-92 starting to occupy Silver.	2	1	0	1	0	0	0	0	1	5	2	7:22	982.7
629	628	650	59040.0	AFATDS		Mtr Plt	TF FSE	K05.14 SitRep	Arrived at firing position, NK032072.	2	1	0	1	0	0	0	0	1	5	2	7:24	984.0
630	629	420	59082.0	CSSCS		B 1SG	TF S4	C802 Logistics SitRep	10, 4, 1	2	2	0	1	0	0	0	0	1	3	2	7:24	984.7
631	630	420	59160.0	CSSCS		B 1SG	TF S4	B875 Munitions StatRep	2 Sabot., 4 HEAT	2	2	0	1	0	0	0	0	1	4	2	7:26	986.0
632	631	300	59220.0	TF_Cmd		Tm EN	TF BC	Blue 2 abb	Pulling into Gold, starting priority of work to A.	1	2	0	1	0	0	2	0	1	9	0	7:27	987.0
633	632	760	59244.0	FB CB 2		EN OFF	ABE	Internal trigger	Pulling into Gold, starting priority of work.	0	0	0	0	0	0	2	0	1	8	0	7:27	987.4
634	633	960	59280.0	FB CB 2		TF S3	Sct Plt	Internal trigger	Deploy screen MK971095 to MK959075 to MK975053. Coordinate with 3-92 scouts at MK975053. Establish OP at MK005113.	0	0	0	0	0	0	2	0	0	17	0	7:28	988.0
635	634	420	59316.0	CSSCS		B 1SG	TF S4	C802 Logistics SitRep	2500 diesel	2	2	0	1	0	0	0	0	1	2	2	7:28	988.6
636	635	370	59340.0	MCS		B de BC	TF BC	K05.14 SitRep	1-22 screen established from NK073111 to NK256006.	2	1	0	1	1	0	2	0	1	7	2	7:29	989.0
637	636	870	59364.0	FB CB 2		TF BC	TF Cdr	K05.14 SitRep	1-22 screen established from NK073111 to NK256006.	0	1	0	1	1	0	0	0	1	7	2	7:29	989.4

	A	B	C	D	E	F	G	H	I	J	K	L	M	N	O	P	Q	R	S	T	U	V
1	Msg Num	Start	H+ Time Seconds	Net	Interrupt	From	To	Message Type	Text	Pass	Scan	Route	Update	EI	SH	Send	Enter	OTM	Word	Digital	Time	H+ Time Minutes
638	637	420	59400.0	CSSCS		C 1SG	TF S4	C802 Logistics SitRep	4, 9, 1	2	2	0	1	0	0	0	0	1	3	2	7:30	990.0
639	638	420	59520.0	CSSCS		C 1SG	TF S4	B875 Munitions StatRep	4 Sabot., 4 HEAT, 25mm 1800 HE	2	2	0	1	0	0	1	0	1	7	2	7:32	992.0
640	639	450	59640.0	CSSCS		TF S4	B de S4	Internal trigger	CTCP setting up at NK079086.	0	0	0	0	0	0	2	0	1	5	0	7:34	994.0
641	640	3000	59700.0	FB CB 2		TF XO	A, B, C, EN, Mtr Plt, CTCP	Internal trigger	Main CP setting up at NK080059.	0	0	0	0	0	0	2	0	0	6	0	7:35	995.0
642	641	380	59760.0	MCS		TF BC	B de BC	Internal trigger	Main CP setting up at NK080059.	0	0	0	0	0	0	2	0	0	6	0	7:36	996.0
643	642	420	59796.0	CSSCS		C 1SG	TF S4	C802 Logistics SitRep	2800 diesel	2	2	0	1	0	0	0	0	0	2	2	7:36	996.6
644	643	420	59880.0	CSSCS		A 23 EN 1SG	TF S4	C802 Logistics SitRep	4, all engineer equipment up.	2	2	0	1	0	0	0	1	0	5	2	7:38	998.0
645	644	760	59940.0	FB CB 2		EN OFF	ABE	Internal trigger	Starting to put in Volcano minefield at NK009139.	0	0	0	0	0	0	2	0	0	8	0	7:39	999.0
646	645	420	60000.0	CSSCS		A 23 EN 1SG	TF S4	B875 Munitions StatRep	One MICLIC charge.	2	2	0	1	0	0	0	0	0	3	2	7:40	1000.0
647	646	600	60060.0	BdeFS		2-3 CP	TF FSE	Blue 2 abb	A Battery occupying into NK113031.	2	1	0	1	0	0	0	0	0	5	0	7:41	1001.0
648	647	650	60072.0	AFATDS		B de FSO	TF FSE	C400 Cdr Sit Rpt	A Battery occupying into NK113031.	0	0	0	0	0	0	0	0	0	5	2	7:41	1001.2
649	648	420	60120.0	CSSCS		A 23 EN 1SG	TF S4	C802 Logistics SitRep	2400 diesel	2	2	0	1	0	0	0	0	0	2	2	7:42	1002.0
650	649	420	60240.0	CSSCS		HHC 1SG	TF S4	C802 Logistics SitRep	All equipment up.	2	2	0	1	0	0	5	1	0	5	2	7:44	1004.0
651	650	860	60300.0	TF_OI		TF Cdr	Sct Plt	Internal trigger	Reminder to report any enemy activity in NAIs 17 and 18.	0	0	0	0	0	0	1	0	0	11	0	7:45	1005.0
652	651	420	60360.0	CSSCS		HHC 1SG	TF S4	B875 Munitions StatRep	2 stingers, 36 mortar HE	2	2	0	1	0	0	5	0	0	5	2	7:46	1006.0
653	652	450	60420.0	CSSCS		TF S4	A, B, C, EN, Mtr Plt, CTCP	Internal trigger	CTCP setting up at NK079086.	0	0	0	0	0	0	2	0	0	5	2	7:47	1007.0
654	653	970	60480.0	FB CB 2		Sct Plt	TF S3	K05.14 SitRep	Screen established as directed. Contact has been made with 3-92 Scouts.	0	1	0	1	0	0	0	0	0	11	2	7:48	1008.0
655	654	270	60492.0	ASAS		Sct Plt	TF S2	K05.14 SitRep	Screen established as directed. Contact has been made with 3-92 Scouts.	2	1	0	1	0	0	2	0	0	11	2	7:48	1008.2
656	655	420	60522.0	CSSCS		HHC 1SG	TF S4	C802 Logistics SitRep	3000 diesel.	2	2	0	1	0	0	5	0	0	2	2	7:48	1008.7
657	656	370	60900.0	MCS		2-10 BC	TF BC	K05.14 SitRep	2-10 starting to occupy Zinc.	2	1	1	1	0	0	2	0	0	5	2	7:55	1015.0
658	657	760	60900.0	FB CB 2		EN OFF	ABE	Internal trigger	Putting in volcano minefield at NK009139.	0	0	0	0	0	0	2	0	0	6	2	7:55	1015.0
659	658	870	60918.0	FB CB 2		TF BC	TF Cdr	K05.14 SitRep	2-10 starting to occupy Zinc.	0	1	0	1	0	0	0	0	0	5	2	7:55	1015.3
660	659	650	60942.0	AFATDS		Mtr Plt	TF FSE	K05.14 SitRep	Refuel complete, prepared to fire.	1	2	0	1	0	0	0	0	0	5	2	7:55	1015.7
661	660	370	61500.0	MCS		B de BC	TF BC	K05.14 SitRep	JTF Mojave establishing security zone from MK953328 to NK060380.	2	1	1	1	0	0	2	0	0	9	2	8:05	1025.0
662	661	870	61524.0	FB CB 2		TF BC	TF Cdr	K05.14 SitRep	JTF Mojave establishing security zone from MK953328 to NK060380.	0	1	0	1	0	0	0	0	0	9	2	8:05	1025.4

	A	B	C	D	E	F	G	H	I	J	K	L	M	N	O	P	Q	R	S	T	U	V
1	Msg Num	Start	H+ Time Seconds	Net	Interrupt	From	To	Message Type	Text	Pass	Scan	Route	Update	EI	SH	Send	Enter	OTM	Word	Digital	Time	H+ Time Minutes
663	662	270	62100.0	ASAS		Bde S2	TF S2	C110 Intel Report	Enemy battalion-sized element at MK7009, moving east, march formation. Forward elements estimated 15-20 Kms ahead.	2	1	1	1	2	2	2	0	0	17	2	8:15	1035.0
664	663	870	62130.0	FB CB 2		TF S2	TF Cdr	C110 Intel Report	Enemy battalion-sized element at MK7009, moving east, march formation. Forward elements estimated 15-20 Kms ahead.	0	1	0	1	2	0	0	0	0	17	2	8:15	1035.5
665	664	370	62160.0	FB CB 2		B 1-10	TF BC	C400 Cdr Sit Rpt	Rearm, refuel complete; 14, 0, 1.	1	2	0	1	0	0	0	0	0	6	2	8:16	1036.0
666	665	370	62340.0	FB CB 2		A 1-10	TF BC	C400 Cdr Sit Rpt	Rearm, refuel complete; 10, 4, 1.	1	2	0	1	0	0	0	0	0	6	2	8:19	1039.0
667	666	370	62400.0	FB CB 2		Tm EN	TF BC	K05.16 Land Mine Laying Report	Volcano minefield in at NK009139.	2	1	1	1	1	0	3	0	0	5	2	8:20	1040.0
668	667	760	62460.0	FB CB 2		EN OFF	ABE	Internal trigger	Volcano minefield in at NK009139.	0	0	0	0	0	0	2	0	0	5	0	8:21	1041.0
669	668	300	62520.0	TF_Cmd		C 1-10	TF BC	C400 Cdr Sit Rpt	Rearm, refuel complete; 9, 4, 1.	1	2	0	1	0	0	0	0	0	6	2	8:22	1042.0
670	669	370	62880.0	FB CB 2		Sct Plt	TF BC	SALT	GSR identifying four MTIs at MK874106 heading east.	2	1	0	1	1	0	0	0	0	8	2	8:28	1048.0
671	670	270	62898.0	ASAS		Sct Plt	TF S2	SALT	GSR identifying four MTIs at MK874106 heading east.	2	1	0	1	1	0	2	0	0	8	2	8:28	1048.3
672	671	860	62964.0	TF_Cmd		TF Cdr	Sct Plt	Internal trigger	Continue to track. Let me know any change of direction.	0	0	0	0	0	0	1	0	0	10	0	8:29	1049.4
673	672	370	63060.0	FB CB 2		Tm EN	TF BC	K01.01 Free Text	Four hull down positions finished in A BP.	1	2	0	0	0	0	0	0	0	7	2	8:31	1051.0
674	673	870	63180.0	FB CB 2		Sct Plt	TF Cdr	SALT	The four MTIs are now at MK900103 continuing east along road.	0	1	0	1	1	0	0	0	0	11	2	8:33	1053.0
675	674	270	63204.0	ASAS		Sct Plt	TF S2	SALT	The four MTIs are now at MK900103 continuing east along road.	2	1	0	1	1	0	2	0	0	11	2	8:33	1053.4
676	675	860	63300.0	TF_Cmd		TF Cdr	A, C	Internal trigger	Let me know when you can identify Scout's MTIs. If they continue to the north of our sector, I want one company volley fire to kill what is probably their CRP.	0	0	0	0	0	0	1	0	0	31	0	8:35	1055.0
677	676	370	63600.0	MCS		Bde BC	TF BC	K05.14 SitRep	3-92 and 2-10 report nothing in their sectors.	0	0	0	0	0	0	0	0	0	8	2	8:40	1060.0
678	677	270	63660.0	ASAS		Sct Plt	TF S2	SALT	MTIs identified as one T-80 and three BRDMs continuing east on road MK925107.	2	1	0	1	1	0	2	0	0	13	2	8:41	1061.0
679	678	870	63684.0	FB CB 2		Sct Plt	TF Cdr	SALT	MTIs identified as one T-80 and three BRDMs continuing east on road MK925107.	0	1	0	1	1	0	0	0	0	13	2	8:41	1061.4
680	679	270	63900.0	ASAS		Sct Plt	TF S2	SALT	Enemy vehicles leaving road moving east southeast, MK952109.	2	1	0	1	1	0	2	0	0	8	2	8:45	1065.0
681	680	870	63924.0	FB CB 2		Sct Plt	TF Cdr	SALT	Enemy vehicles leaving road moving east southeast, MK952109.	0	1	0	1	1	0	0	0	0	8	2	8:45	1065.4
682	681	270	63960.0	ASAS		Sct Plt	TF S2	SALT	GSR identifying eight MTIs at MK857106 moving east.	2	1	0	1	1	0	2	0	0	8	2	8:46	1066.0
683	682	870	63978.0	FB CB 2		Sct Plt	TF Cdr	SALT	GSR identifying eight MTIs at MK857106 moving east.	0	1	0	1	1	0	0	0	0	8	2	8:46	1066.3
684	683	380	63990.0	MCS		TF BC	Bde BC	Internal trigger	GSR identifying eight MTIs at MK857106 moving east.	0	0	0	0	0	0	2	0	0	8	0	8:46	1066.5
685	684	960	64080.0	TF_Cmd		TF S3	Tm EN	Internal trigger	Shift priority of work to B.	0	0	0	0	0	0	1	0	0	6	0	8:48	1068.0

	A	B	C	D	E	F	G	H	I	J	K	L	M	N	O	P	Q	R	S	T	U	V
1	Msg Num	Start	H+ Time Seconds	Net	Interrupt	From	To	Message Type	Text	Pass	Scan	Route	Update	EI	SH	Send	Enter	OTM	Word	Digital	Time	H+ Time Minutes
686	685	270	64140.0	ASAS		Sct Plt	TF S2	SALT	Enemy vehicles moving south southeast on the road at MK961100.	2	1	0	1	1	0	1	0	0	10	2	8:49	1069.0
687	686	870	64164.0	FB CB 2		Sct Plt	TF Cdr	SALT	Enemy vehicles moving south southeast on the road at MK961100.	0	1	0	1	1	0	0	0	0	10	2	8:49	1069.4
688	687	960	64200.0	TF_Cmd		TF S3	Sct Plt	Internal trigger	Move back scouts in southern portion of sector to withdraw to Gold. Stay masked from enemy.	0	0	0	0	0	0	1	0	0	16	0	8:50	1070.0
689	688	870	64380.0	FB CB 2		A 1-10	TF Cdr	SALT	One T-80 three BRDMs moving south southeast on road at MK962095, 3480 meters.	0	1	0	1	2	0	1	0	0	13	2	8:53	1073.0
690	689	860	64440.0	TF_Cmd	21	TF Cdr	TF FSE	Internal trigger	Can the Colt team lase to the FSE?	0	0	0	0	1	0	1	0	0	8	0	8:54	1074.0
691	690	600	64500.0	TF_FS		COLT 2	TF FSE	Alert	Yes, I identify and can lase.	0	1	0	0	1	0	0	0	0	6	0	8:55	1075.0
692	691	660	64536.0	TF_Cmd	29	TF FSE	TF Cdr	Internal trigger	Colt team identifies and can lase.	0	0	0	0	1	0	0	0	0	6	0	8:55	1075.6
693	692	870	64560.0	FB CB 2		A 1-10	TF Cdr	SALT	One T-80, three BRDMs moving south southeast on road at MK965084, 2500 meters.	0	1	0	1	1	0	0	0	0	13	2	8:56	1076.0
694	693	870	64578.0	FB CB 2		Sct Plt	TF Cdr	SALT	Two T-80s, seven BTRs at MK890104 on the road moving east.	0	1	0	1	1	0	0	0	0	11	2	8:56	1076.3
695	694	270	64596.0	ASAS		Sct Plt	TF S2	SALT	Two T-80s, seven BTRs, and three unknown vehicles at MK890104 on the road moving east.	2	1	0	1	1	0	2	0	0	15	2	8:56	1076.6
696	695	960	64632.0	TF_Cmd	21	TF S3	TF FSE	Internal trigger	Are batteries prepared to fire?	0	0	0	0	0	0	1	0	0	5	0	8:57	1077.2
697	696	860	64680.0	TF_Cmd		TF Cdr	A, B, C, Sct Plt	Internal trigger	Priority of fires to Scouts.	0	0	0	0	0	0	1	0	0	5	0	8:58	1078.0
698	697	660	64704.0	TF_FS		TF FSE	A, B, C FISTs, COLT 2	Internal trigger	Priority of fires to Scouts.	0	0	0	0	0	0	1	0	0	5	0	8:58	1078.4
699	698	800	64860.0	TF_Cmd		A 1-10	TF Cdr	Blue 2 abb	Enemy vehicles at MK983066, engaging.	0	1	0	1	1	0	0	0	0	5	0	9:01	1081.0
700	699	800	64902.0	TF_Cmd		A 1-10	TF Cdr	Alert	One T-80 three BRDMs destroyed at MK983066.	0	1	0	1	1	0	0	0	0	7	0	9:01	1081.7
701	700	380	64920.0	MCS		TF BC	B de BC	Internal trigger	One T-80 three BRDMs destroyed at MK983066.	0	0	0	0	0	0	2	0	0	8	0	9:02	1082.0
702	701	870	64980.0	FB CB 2		Sct Plt	TF Cdr	SALT	Enemy company-sized element starting to deploy in battle formation at MK922106, continuing to move to east.	0	1	0	1	2	0	0	0	0	17	2	9:03	1083.0
703	702	270	65004.0	ASAS		Sct Plt	TF S2	SALT	Enemy company-sized element starting to deploy in battle formation at MK922106, continuing to move to east.	2	1	0	1	2	0	2	0	0	17	2	9:03	1083.4
704	703	280	65040.0	FB CB 2		TF S2	Sct Plt	Internal trigger	AGMB should be coming out of gap at MK8902, let me know when you see them.	0	0	0	0	0	0	2	0	0	14	2	9:04	1084.0
705	704	550	65100.0	AirForce		B de ALO	TF ALO	Alert	Two CAS sorties on station in 20 minutes. Ordnance is 30mm, eight CBUs. Can stay on station 20 minutes.	2	2	1	1	1	2	1	0	0	19	0	9:05	1085.0
706	705	820	65160.0	BdeCmd		B de Cdr	TF Cdr	Order	I need to know when you identify the AGMB.	0	0	0	0	2	0	0	0	0	9	0	9:06	1086.0
707	706	3000	65220.0	TF_Cmd	29	TF XO	TF Cdr	Internal trigger	Two CAS sorties on station in 20 minutes.	0	1	0	0	1	0	0	0	0	8	0	9:07	1087.0
708	707	270	65340.0	ASAS		Sct Plt	TF S2	SALT	Enemy company-sized element moving east at MK940104, deployed. Dust cloud stopped at MK8509, GSR starting to pick up something.	2	1	0	1	2	1	2	0	0	20	2	9:09	1089.0

	A	B	C	D	E	F	G	H	I	J	K	L	M	N	O	P	Q	R	S	T	U	V
1	Msg Num	Start	H+ Time Seconds	Net	Interrupt	From	To	Message Type	Text	Pass	Scan	Route	Update	EI	SH	Send	Enter	OTM	Word	Digital	Time	H+ Time Minutes
709	708	870	65364.0	FB CB 2		Sct Plt	TF Cdr	SALT	Enemy company-sized element moving east at MK940104, deployed. Dust cloud stopped at MK8509, GSR starting to pick up something.	0	1	0	1	2	0	1	0	0	20	2	9:09	1089.4
710	709	860	65400.0	TF_Cmd	6	TF Cdr	TF S2	Internal trigger	That has to be the AGMB.	0	0	0	0	0	0	1	0	0	6	0	9:10	1090.0
711	710	660	65448.0	TF_FS		TF FSE	A, B, C FISTs, COLT 2	Internal trigger	Priority of fires to A.	0	0	0	0	0	0	1	0	0	5	0	9:10	1090.8
712	711	660	65454.0	AFATDS		TF FSE	2-3 CP	Internal trigger	Priority of fires to A.	0	0	0	0	0	0	2	0	0	5	0	9:10	1090.9
713	712	860	65460.0	TF_Cmd	13	TF Cdr	TF XO	Internal trigger	If we have to pull back, how do we do it?	0	0	0	0	0	0	0	0	0	11	0	9:11	1091.0
714	713	370	65580.0	MCS		B de BC	TF BC	K05.14 SitRep	No enemy activity in 3-92 or 2-10 sectors.	0	1	0	0	0	0	2	0	0	8	2	9:13	1093.0
715	714	870	65592.0	FB CB 2		TF BC	TF Cdr	K05.14 SitRep	No enemy activity in 3-92 or 2-10 sectors.	0	1	0	0	0	0	0	0	0	8	2	9:13	1093.2
716	715	870	65700.0	FB CB 2		Sct Plt	TF Cdr	SALT	At least 20-30 B TRs and T-80s moving east along the road at MK894102.	0	1	0	1	2	0	1	0	0	14	2	9:15	1095.0
717	716	270	65724.0	ASAS		Sct Plt	TF S2	SALT	At least 20-30 B TRs and T-80s moving east along the road at MK894102.	2	1	0	1	2	1	2	0	0	14	2	9:15	1095.4
718	717	380	65736.0	MCS		TF BC	B de BC	Internal trigger	Scouts report 20-30 B TRs and T-80s moving east along the road at MK894102.	0	0	0	0	0	0	2	0	0	14	0	9:15	1095.6
719	718	270	65940.0	ASAS		Sct Plt	TF S2	SALT	Enemy company-sized element has left road moving east vicinity MK967091 in battle formation. Previously reported unknown vehicles are 2S1s, five of them.	2	1	0	1	2	1	2	0	0	23	2	9:19	1099.0
720	719	870	65964.0	FB CB 2		Sct Plt	TF Cdr	SALT	Enemy company-sized element has left road moving east vicinity MK967091 in battle formation. Previously reported unknown vehicles are 2S1s, five of them.	0	1	0	1	2	0	0	0	0	23	2	9:19	1099.4
721	720	380	65982.0	MCS		TF BC	B de BC	Internal trigger	Enemy company-sized element has left road moving east vicinity MK967091 in battle formation. Previously reported unknown vehicles are 2S1s, five of them.	0	0	0	0	0	0	2	0	0	23	0	9:19	1099.7
722	721	860	66060.0	TF_Cmd		TF Cdr	A, C	Internal trigger	Trigger line for engagement is 2000 meters. Priority of fires to C.	0	0	0	0	0	0	1	0	0	12	0	9:21	1101.0
723	722	550	66300.0	AirForce		B de ALO	TF ALO	Alert	Two sorties A-10s on station at NK0697.	2	1	1	1	1	0	1	0	0	7	0	9:25	1105.0
724	723	3000	66318.0	TF_Cmd	29	TF XO	TF Cdr	Internal trigger	Two sorties A-10s on station at NK0697.	0	1	0	1	1	0	0	0	0	7	0	9:25	1105.3
725	724	650	66342.0	AFATDS		A FIST	TF FSE	K02.04 Call For Fire	Fire for effect, battalion three, DPICM, company in the open, at MJ992094, AB 1578.	0	1	0	0	2	0	0	0	0	13	1	9:25	1105.7
726	725	800	66360.0	TF_Cmd		A 1-10	TF Cdr	Alert	Artillery in the air preparing to engage direct fire.	0	0	0	0	2	0	0	0	0	9	0	9:26	1106.0
727	726	3000	66378.0	TF_Cmd	29	TF XO	TF Cdr	Internal trigger	Artillery in the air.	0	0	0	0	1	0	0	0	0	4	0	9:26	1106.3
728	727	650	66480.0	AFATDS		A FIST	TF FSE	K02.04 Call For Fire	Repeat, right 200, add 100 fire for effect.	0	2	0	0	1	0	0	0	0	8	1	9:28	1108.0
729	728	800	66540.0	TF_Cmd		A 1-10	TF Cdr	Blue 2 abb	Destroyed two T-80s, four B TRs vicinity MK992092.	0	1	0	1	1	0	0	0	0	7	0	9:29	1109.0
730	729	870	66600.0	FB CB 2		Sct Plt	TF Cdr	SALT	30 enemy vehicles starting to speed up, moving east at MK9110.	0	1	0	1	2	0	0	0	0	11	2	9:30	1110.0
731	730	270	66618.0	ASAS		Sct Plt	TF S2	SALT	30 enemy vehicles starting to speed up, moving east at MK9110.	2	1	0	1	2	0	2	0	0	11	2	9:30	1110.3

	A	B	C	D	E	F	G	H	I	J	K	L	M	N	O	P	Q	R	S	T	U	V
1	Msg Num	Start	H+ Time Seconds	Net	Interrupt	From	To	Message Type	Text	Pass	Scan	Route	Update	EI	SH	Send	Enter	OTM	Word	Digital	Time	H+ Time Minutes
732	731	800	66660.0	TF_Cmd		C 1-10	TF Cdr	Blue 2 abb	Destroyed one T-80, two BTRs vicinity MK993091.	0	1	0	1	1	0	0	0	0	7	0	9:31	1111.0
733	732	380	66720.0	MCS		TF BC	Bde BC	Internal trigger	Two T-80s, four BTRs destroyed vicinity MK993091.	0	0	0	0	0	0	2	0	0	7	0	9:32	1112.0
734	733	860	66780.0	TF_Cmd	13	TF Cdr	TF XO, Sct Plt	Internal trigger	Have the A-10s come up on the command net. Scouts will designate target.	0	0	0	0	0	0	1	0	0	13	0	9:33	1113.0
735	734	300	66840.0	TF_Cmd		A 1-10	TF BC	Blue 2 abb	Artillery falling MK999078.	2	1	0	1	1	0	0	0	0	3	0	9:34	1114.0
736	735	960	66858.0	BdeCmd		TF S3	Bde Cdr	Internal trigger	Have destroyed half of what we believe is the FSE, the rest has gone to ground. AGMB spotted at MK9110, moving east, we're getting A-10s in on them.	0	0	0	0	0	0	1	0	0	25	0	9:34	1114.3
737	736	800	66900.0	TF_Cmd		Iceman Lead	TF Cdr	Alert	Iceman Lead on your net.	0	0	0	0	2	0	1	0	0	5	0	9:35	1115.0
738	737	600	66960.0	BdeFS		Bde FSO	TF FSE	Fires	Air Corridor 1203 established. SEAD program in effect.	2	1	1	1	1	0	0	0	0	8	0	9:36	1116.0
739	738	650	66972.0	AFATDS		A FIST	TF FSE	K02.04 Call For Fire	Repeat, fire for effect.	0	2	0	0	1	0	0	0	0	4	1	9:36	1116.2
740	739	3000	66978.0	TF_Cmd	21	TF XO	TF FSE	Internal trigger	A-10s are coming in.	0	0	0	0	0	0	0	0	0	4	0	9:36	1116.3
741	740	300	66996.0	TF_Cmd		C 1-10	TF BC	Blue 2 abb	Three 2S1s destroyed MK985098.	2	1	0	1	1	0	0	0	0	4	0	9:36	1116.6
742	741	550	67014.0	AirForce		TF ALO	Iceman Lead	Internal trigger	IP is MK885145. Target is 120 degrees from there, five Kms. Ingress C1, C2, C3. Egress B4, B5, B6.	0	0	0	0	0	0	1	0	0	15	0	9:36	1116.9
743	742	660	67020.0	BdeFS		TF FSE	2-3 CP	Internal trigger	A-10s coming in from southeast. Check fires after current mission.	0	0	0	0	0	0	1	0	0	9	0	9:37	1117.0
744	743	550	67050.0	TF_Cmd		Sct Plt	TF ALO	Alert	Two 2S6s identified traveling with enemy, MK9210, one in center of formation, one at south end.	2	1	0	1	2	0	1	0	0	16	0	9:37	1117.5
745	744	3000	67080.0	TF_Cmd	12	TF XO	A, B, C, Sct Plt, Mtr Plt	Internal trigger	ADWCS is Hold. A-10s coming in.	0	0	0	0	0	0	1	0	0	6	0	9:38	1118.0
746	745	650	67104.0	AFATDS		A FIST	TF FSE	K02.16 End of Mission	End of mission. Three vehicles destroyed, five damaged.	0	2	0	0	1	0	0	0	0	8	2	9:38	1118.4
747	746	800	67140.0	TF_Cmd		A 1-10	TF Cdr	Blue 2 abb	One M2 hit and destroyed, one M1 damaged.	0	1	0	1	2	0	0	0	0	8	0	9:39	1119.0
748	747	550	67320.0	AirForce		Iceman Lead	TF ALO	Alert	IP one minute.	2	1	0	2	2	0	1	0	0	3	0	9:42	1122.0
749	748	550	67380.0	TF_Cmd		Iceman Lead	TF ALO	Alert	Have eyes on target.	0	0	0	0	2	0	0	0	0	4	0	9:43	1123.0
750	749	300	67440.0	TF_Cmd		Sct Plt	TF BC	Blue 2 abb	A-10s attacking.	0	1	0	1	2	0	0	0	0	2	0	9:44	1124.0
751	750	550	67620.0	TF_Cmd		Iceman Lead	TF ALO	Alert	Ordnance expended, leaving area.	0	0	0	1	1	0	0	0	0	4	0	9:47	1127.0
752	751	370	67632.0	FB CB2		Sct Plt	TF BC	SALT	Thirty plus enemy vehicles damaged or destroyed at MK947106. Fifteen plus vehicles in disarray.	2	1	0	1	2	1	2	0	0	14	2	9:47	1127.2
753	752	960	67650.0	BdeCmd		TF S3	Bde Cdr	Internal trigger	Thirty plus enemy vehicles damaged or destroyed at MK947106. Fifteen plus vehicles in disarray.	0	0	0	0	0	0	1	0	0	12	0	9:47	1127.5
754	753	870	67800.0	FB CB2		Sct Plt	TF Cdr	SALT	One T-80, three BTRs, two 2S1s quickly withdrawing to the west at MK968096.	2	1	0	1	1	0	1	0	0	14	2	9:50	1130.0
755	754	270	67824.0	ASAS		Sct Plt	TF S2	SALT	One T-80, three BTRs, two 2S1s quickly withdrawing to the west at MK968096.	2	1	0	1	1	0	0	0	0	14	2	9:50	1130.4
756	755	600	67860.0	BdeFS		Bde FSO	TF FSE	Fires	Air Corridor 1203 no longer in effect.	2	1	1	1	1	0	0	0	0	7	0	9:51	1131.0

	A	B	C	D	E	F	G	H	I	J	K	L	M	N	O	P	Q	R	S	T	U	V
1	Msg Num	Start	H+ Time Seconds	Net	Interrupt	From	To	Message Type	Text	Pass	Scan	Route	Update	E1	SH	Send	Enter	OTM	Word	Digital	Time	H+ Time Minutes
757	756	380	67866.0	MCS		TF BC	Bde BC	Internal trigger	One T-80, three BTRs, two 2S1s quickly withdrawing to the west at MK968096.	0	0	0	0	0	0	2	0	0	14	0	9:51	1131.1
758	757	860	67878.0	TF_Cmd	12	TF Cdr	TF BC	Internal trigger	Enemy is defeated and withdrawing. What's my comba power?	0	0	0	0	0	0	1	0	0	6	0	9:51	1131.3
759	758	420	67902.0	FB CB 2		A 1SG	TF S1	B907 Medical Stat Rep	Five WIA being medevaced by ground ambulance to TF aid station.	2	1	0	1	2	0	0	0	0	11	2	9:51	1131.7
760	759	300	67980.0	TF_Cmd		A 1-10	TF BC	Blue 2 abb	9, 3, 1	2	1	0	1	1	0	0	0	0	3	0	9:53	1133.0
761	760	300	68040.0	TF_Cmd		B 1-10	TF BC	Blue 2 abb	14, 0, 1	2	1	0	1	1	0	0	0	0	3	0	9:54	1134.0
762	761	420	68076.0	FB CB 2		C 1SG	TF S1	B907 Medical Stat Rep	Two WIA being medevaced by ground ambulance to TF aid station.	2	1	0	1	2	0	0	0	0	11	2	9:54	1134.6
763	762	300	68100.0	TF_Cmd		C 1-10	TF BC	Blue 2 abb	4, 8, 1; One M2 damaged.	2	1	0	1	1	0	2	0	0	3	0	9:55	1135.0
764	763	370	68400.0	MCS		Bde BC	TF BC	K01.01 Free Text	WARNO - Enemy second echelon battalions identified center mass at MK7510 and stopped. Enemy appears to be reorganizing. 1st Bde continue to defend. If enemy masses north of Solcum Mountain, we defend with 1-10 and 3-92; on order 2-10 counterattacks to destroy BRAG and trains. If enemy masses south of Solcum, we defend with 3-92 and 2-10; 1-10 counterattacks to destroy BRAG and trains. FRAGO will be issued via MSE 1030.	2	1	1	1	2	2	2	0	0	70	2	10:00	1140.0
765	764	3000	68460.0	TF_Cmd	29	TF XO	TF Cdr	Internal trigger	Is this a good time to rearm?	0	0	0	0	0	0	1	0	0	7	0	10:01	1141.0
766	765	370	68520.0	MCS		Bde BC	TF BC	C115 Spot Intel Rpt	Enemy appears to be going to ground in front of 3d Bde.	2	1	0	1	0	0	2	0	0	12	2	10:02	1142.0
767	766	870	68544.0	FB CB 2		TF BC	TF Cdr	C115 Spot Intel Rpt	Enemy appears to be going to ground in front of 3d Bde.	0	1	0	1	0	0	0	0	0	12	2	10:02	1142.4
768	767	860	68568.0	TF_Cmd	13	TF Cdr	TF XO	Internal trigger	Have the CTCP send up the HEMTTs to rearm and finish any refueling.	0	0	0	0	0	0	1	0	0	13	0	10:02	1142.8
769	768	3000	68580.0	TF_AL	16	TF XO	TF S4	Internal trigger	Send up the HEMTTs to rearm and finish any refueling	2	0	0	0	1	0	0	0	0	10	0	10:03	1143.0
770	769	420	68760.0	FB CB 2		A 1SG	TF S1	S507L SitRep / Slant	Two KIA, five WIA.	2	1	0	1	1	0	0	0	0	4	2	10:06	1146.0
771	770	420	68880.0	FB CB 2		C 1SG	TF S1	S507L SitRep / Slant	One KIA, two WIA.	2	1	0	1	1	0	5	0	0	4	2	10:08	1148.0
772	771	420	69000.0	CSSCS		A 1SG	TF S4	C802 Logistics SitRep	9, 3, 1. One M1 damaged, one M2 destroyed. Green	2	1	0	1	1	0	0	0	0	10	2	10:10	1150.0
773	772	420	69120.0	CSSCS		B 1SG	TF S4	C802 Logistics SitRep	14, 0, 1. Green	2	1	0	1	1	0	0	0	0	4	2	10:12	1152.0
774	773	420	69240.0	CSSCS		C 1SG	TF S4	C802 Logistics SitRep	4, 8, 1. One M2 damaged. Green	2	1	0	1	1	0	5	0	0	7	2	10:14	1154.0
775	774	860	69324.0	TF_Cmd		TF Cdr	A, B, C, EN, Sct Plt, Mtr Plt, Staff	Internal trigger	Orders group 1100, Main CP.	0	0	0	0	0	0	1	0	0	5	0	10:15	1155.4

	A	B	C	D	E	F	G	H	I	J	K	L	M	N	O	P	Q	R	S	T	U	V
1	Msg Num	Start	H+ Time Seconds	Net	Interrupt	From	To	Message Type	Text	Pass	Scan	Route	Update	EI	SH	Send	Enter	OTM	Word	Digital	Time	H+ Time Minutes
776	775	280	69360.0	ASAS		TF S2	Sct Plt	Internal trigger	Redeploy sections to screen southern portion of TF sector. Link with 3-92 scouts at MK973022.	0	0	0	0	0	0	2	0	0	15	2	10:16	1156.0
777	776	380	69396.0	FB CB2		TF BC	TF S3	Internal trigger	Redeploying scout sections to screen southern portion of TF sector. They link with 3-92 scouts at MK973022.	0	0	0	0	0	0	2	0	0	17	0	10:16	1156.6
778	777	280	69420.0	ASAS		TF S2	Bde S2	Internal trigger	Redeploying scouts in southern portion of sector. Linking with 3-92 scouts at MK973022.	0	0	0	0	0	0	2	0	0	12	0	10:17	1157.0
779	778	970	69420.0	FB CB2		TF BC	TF S3	K01.01 Free Text	Redeploying scout sections to screen southern portion of TF sector. They link with 3-92 scouts at MK973022.	0	1	0	1	1	0	0	0	0	17	2	10:16	1157.0
780	779	960	69438.0	BdeCmd		TF S3	Bde S3	Internal trigger	Redeploying scouts in southern portion of sector. Linking with 3-92 scouts at MK973022.	0	0	0	0	0	0	1	0	0	13	0	10:17	1157.3
781	780	860	69480.0	TF_Cmd		TF Cdr	Tm EN	Internal trigger	Resume original priority of effort with A.	0	0	0	0	0	0	1	0	0	7	0	10:18	1158.0
782	781	370	69900.0	MCS		Bde BC	TF BC	C115 Spot Intel Rpt	Rest of enemy brigade still stopped at MK7510.	2	1	1	1	0	0	0	0	0	8	2	10:25	1165.0
783	782	370	70200.0	MCS		Bde BC	TF BC	E400 OPORD Change	1st Bde defends from MK897876 to NK015125. 1-10 defends in sector from PL Crow to PL Barley. 3-92 defends in sector from PL Crow to PL Barley. 2-10 defends in sector from PL Crow to PL Barley. 1-10 be prepared to counterattack along Axis Shoe to OBJ Cobalt and destroy BRAG. 2-10 be prepared to counterattack along Axis Boot to OBJ Tin and destroy BRAG. AH-64s will be on station. Bde decision point is the commitment of enemy brigade north or south of Solcum Mountain.	2	1	1	1	2	2	3	0	0	85	2	10:30	1170.0
784	783	650	71220.0	AFATDS		Mtr Plt	TF FSE	C400 Cdr Sit Rpt	Rearm, refuel complete.	2	1	0	1	0	0	0	0	0	3	2	10:47	1187.0
785	784	420	71400.0	CSSCS		B 1SG	TF S4	C400 Cdr Sit Rpt	Rearm, refuel complete.	2	1	0	1	0	0	0	0	0	3	2	10:50	1190.0
786	785	370	71442.0	FB CB2		B 1-10	TF BC	C400 Cdr Sit Rpt	Rearm, refuel complete.	2	1	0	1	0	0	0	0	0	3	2	10:50	1190.7
787	786	370	71520.0	FB CB2		C 1-10	TF BC	C400 Cdr Sit Rpt	Rearm, refuel complete.	2	1	0	1	0	0	0	0	0	3	2	10:52	1192.0
788	787	420	71538.0	CSSCS		C 1SG	TF S4	C400 Cdr Sit Rpt	Rearm, refuel complete.	2	1	0	1	0	0	0	0	0	3	2	10:52	1192.3
789	788	370	71640.0	FB CB2		A 1-10	TF BC	C400 Cdr Sit Rpt	Rearm, refuel complete.	2	1	0	1	0	0	0	0	0	3	2	10:54	1194.0
790	789	420	71670.0	CSSCS		A 1SG	TF S4	C400 Cdr Sit Rpt	Rearm, refuel complete.	2	1	0	1	0	0	0	0	0	3	2	10:54	1194.5
791	790	600	71700.0	BdeFS		2-3 CP	TF FSE	C400 Cdr Sit Rpt	All batteries rearmed and refueled.	2	1	0	1	0	0	0	0	0	3	0	10:55	1195.0
792	791	650	71706.0	AFATDS		Bde FSO	TF FSE	C400 Cdr Sit Rpt	2-3 and 2-8 batteries rearmed and refueled.	2	1	0	1	0	0	0	0	0	7	2	10:55	1195.1
793	792	420	72000.0	CSSCS		Bde S4	TF S4	S507 Resources Location	FSB's 5000 tankers refueled and returned to BSA.	2	0	0	0	0	0	0	0	0	8	2	11:00	1200.0
794	793	370	72240.0	MCS		Bde BC	TF BC	C115 Spot Intel Rpt	Enemy brigade vicinity MK7510 beginning possible movement.	2	1	1	1	1	1	2	0	0	7	2	11:04	1204.0
795	794	870	72258.0	FB CB2		TF BC	TF Cdr	C115 Spot Intel Rpt	Enemy brigade vicinity MK7510 beginning possible movement.	0	1	0	1	1	1	0	0	0	7	2	11:04	1204.3
796	795	370	73380.0	MCS		Bde BC	TF BC	C115 Spot Intel Rpt	Enemy brigade showing definite movement southeast toward south of Solcum Mountain.	2	1	1	1	1	2	2	0	0	11	2	11:23	1223.0
797	796	870	73398.0	FB CB2		TF BC	TF Cdr	C115 Spot Intel Rpt	Enemy brigade showing definite movement southeast toward south of Solcum Mountain.	0	1	0	1	1	2	0	0	0	11	2	11:23	1223.3

	A	B	C	D	E	F	G	H	I	J	K	L	M	N	O	P	Q	R	S	T	U	V
1	Msg Num	Start	H+ Time Seconds	Net	Interrupt	From	To	Message Type	Text	Pass	Scan	Route	Update	EI	SH	Send	Enter	OTM	Word	Digital	Time	H+ Time Minutes
798	797	600	73440.0	BdeFS		Bde FSO	TF FSE	Alert	1-10 will only have one battery to range forward of current BP.	2	1	1	1	2	0	0	0	0	12	0	11:24	1224.0
799	798	660	73464.0	TF_Cmd	29	TF FSE	TF Cdr	Internal trigger	1-10 will only have one battery to range forward of current BP.	0	1	0	0	1	0	0	0	0	12	0	11:24	1224.4
800	799	370	74040.0	MCS		2-10 BC	TF BC	SALT	2-10 GSRs report MTIs moving south, southeast at MJ818998.	2	1	1	1	1	0	0	0	0	9	2	11:34	1234.0
801	800	370	74100.0	MCS		3-92 BC	TF BC	C400 Cdr Sit Rpt	3-92 reports REDCON1.	2	0	0	0	0	0	0	0	0	4	2	11:35	1235.0
802	801	370	74220.0	MCS		2-10 BC	TF BC	C400 Cdr Sit Rpt	2-10 reports REDCON1.	2	0	0	0	0	0	0	0	0	4	2	11:37	1237.0
803	802	300	74400.0	TF_Cmd		A 1-10	TF BC	Blue 2 abb	REDCON 1.	2	1	0	1	0	0	0	0	0	2	0	11:40	1240.0
804	803	300	74442.0	TF_Cmd		B 1-10	TF BC	Blue 2 abb	REDCON 1.	2	1	0	1	0	0	0	0	0	2	0	11:40	1240.7
805	804	300	74460.0	TF_Cmd		C 1-10	TF BC	Blue 2 abb	REDCON 1.	2	1	0	1	0	0	2	0	0	2	0	11:41	1241.0
806	805	650	74520.0	AFATDS		Mtr Plt	TF FSE	Blue 2 abb	REDCON 1.	2	1	0	1	0	0	0	0	0	2	2	11:42	1242.0
807	806	370	74760.0	MCS		2-10 BC	TF BC	C115 Spot Intel Rpt	2-10 Scouts report enemy battalion in battle formation moving east at MJ831975.	2	1	1	1	0	0	0	0	0	12	2	11:46	1246.0
808	807	370	75240.0	MCS		2-10 BC	TF BC	C115 Spot Intel Rpt	2-10 Scouts report one enemy battalion in battle formation moving east at MJ857962. Second battalion moving east at MJ825980.	2	1	1	1	0	0	0	0	0	19	2	11:54	1254.0
809	808	820	75300.0	BdeCmd		Bde Cdr	TF Cdr	Order	On order, attack along Axis Shoe to OBJ Tin. Destroy enemy BRAG. 3-92 and 2-10 will defend current sectors.	0	1	0	1	2	0	1	0	0	19	0	11:55	1255.0
810	809	820	75600.0	BdeCmd		Bde Cdr	TF Cdr	Order	Begin your attack along Axis Shoe now.	0	0	0	0	2	0	1	0	0	7	0	12:00	1260.0
811	810	860	75684.0	TF_Cmd		TF Cdr	A, B, C, EN, Sct Plt, Mtr Plt	Internal trigger	Move out, begin attack along Axis Shoe. Tm A move slow, allow other companies to come on line. Engineers follow A, Main follow Engineers.	0	0	0	0	0	0	1	0	0	24	0	12:01	1261.4
812	811	370	75780.0	FB CB 2		A 1-10	TF BC	Icon Movement	LD now.	2	1	0	1	0	0	2	0	1	0	4	12:03	1263.0
813	812	370	75840.0	MCS		2-10 BC	TF BC	K05.14 SitRep	2-10 receiving artillery fire.	2	1	0	0	0	0	0	0	0	4	2	12:04	1264.0
814	813	3000	75852.0	CSSCS		TF XO	TF S4	Internal trigger	Move initially to MK025091. Close with TF upon occupation of OBJ Tin.	0	1	0	1	0	0	0	0	0	12	2	12:04	1264.2
815	814	370	75870.0	MCS		Bde BC	TF BC	C115 Spot Intel Rpt	Lead enemy battalion at MJ885943. Second battalion coming on line at MJ875965.	2	1	0	2	2	0	2	0	1	12	2	12:04	1264.5
816	815	870	75894.0	FB CB 2		TF BC	TF Cdr	C115 Spot Intel Rpt	Lead enemy battalion at MJ885943. Second battalion coming on line at MJ875965.	0	1	0	1	2	0	0	0	1	12	2	12:04	1264.9
817	816	370	76140.0	FB CB 2		C 1-10	TF BC	Icon Movement	LD now.	2	1	0	1	0	0	0	0	1	0	4	12:09	1269.0
818	817	370	76260.0	FB CB 2		B 1-10	TF BC	Icon Movement	LD now.	2	1	0	1	0	0	0	0	1	0	4	12:11	1271.0
819	818	270	76266.0	ASAS		Sct Plt	TF S2	SALT	Twelve BRDMs moving east at MJ863996.	2	1	0	1	1	0	2	0	1	6	2	12:11	1271.1
820	819	370	76278.0	FB CB 2		Sct Plt	TF BC	SALT	Twelve BRDMs moving east at MJ863996.	0	1	0	1	1	0	1	0	0	6	2	12:11	1271.3
821	820	370	76320.0	MCS		Bde BC	TF BC	K05.14 SitRep	Four AH-64s on station for attack into Engagement Areas Dave and Ken.	2	1	0	1	1	0	2	0	1	11	2	12:12	1272.0
822	821	870	76326.0	FB CB 2		TF BC	TF Cdr	K05.14 SitRep	Four AH-64s on station for attack into Engagement Areas Dave and Ken.	0	1	0	1	1	0	0	0	1	11	2	12:12	1272.1
823	822	800	76338.0	BdeCmd		2-10 Cdr	TF Cdr	Contact	2-10 has contact with tanks.	0	1	0	1	1	0	0	0	1	5	0	12:12	1272.3
824	823	650	76350.0	AFATDS		2-3 CP	TF FSE	C115 Spot Intel Rpt	Firefinder radars identified possible BRAG at MJ8199.	2	1	0	1	1	0	2	0	1	7	2	12:12	1272.5

	A	B	C	D	E	F	G	H	I	J	K	L	M	N	O	P	Q	R	S	T	U	V
1	Msg Num	Start	H+ Time Seconds	Net	Interrupt	From	To	Message Type	Text	Pass	Scan	Route	Update	EI	SH	Send	Enter	OTM	Word	Digital	Time	H+ Time Minutes
825	824	870	76374.0	FB CB 2		TF FSE	TF Cdr	C115 Spot Intel Rpt	Firefinder radars identified possible BRAG at MJ8199.	0	1	0	1	1	0	0	0	1	7	2	12:12	1272.9
826	825	370	76380.0	FB CB 2		Tm EN	TF BC	Icon Movement	LD now.	2	1	0	1	0	0	0	0	1	0	4	12:13	1273.0
827	826	370	76440.0	MCS		B de BC	TF BC	K02.24 In Progress Mission Notification	Batteries firing into EA Dave.	2	1	0	1	1	0	2	0	1	5	2	12:14	1274.0
828	827	870	76458.0	FB CB 2		TF BC	TF Cdr	K02.24 In Progress Mission Notification	Batteries firing into EA Dave.	0	1	0	1	1	0	0	0	1	5	2	12:14	1274.3
829	828	650	76500.0	AFATDS		Mtr Plt	TF FSE	Icon Movement	LD now.	2	1	0	1	0	0	0	0	1	0	4	12:15	1275.0
830	829	600	76560.0	B deFS		2-3 CP	TF FSE	Blue 2 abb	Four batteries firing into EA Dave.	2	1	0	1	1	0	0	0	1	6	0	12:16	1276.0
831	830	650	76578.0	AFATDS		B de FSO	TF FSE	K02.24 In Progress Mission Notification	Four batteries firing into EA Dave.	0	0	0	0	0	0	0	0	1	6	2	12:16	1276.3
832	831	370	76620.0	MCS		B de BC	TF BC	C115 Spot Intel Rpt	Enemy in front of 3d B de sector going to ground or withdrawing.	2	1	0	1	0	0	0	0	1	12	2	12:17	1277.0
833	832	380	76680.0	TF_Cmd	29	TF BC	TF Cdr	Internal trigger	Main CP, LD now.	0	1	0	0	0	0	0	0	1	4	0	12:18	1278.0
834	833	370	76800.0	MCS		2-10 BC	TF BC	K05.14 SitRep	2-10 engaging one enemy battalion in EA Dave along with AH-64s. Second battalion moving to the east, north of Dave.	2	1	0	1	1	0	2	0	1	20	2	12:20	1280.0
835	834	870	76830.0	FB CB 2		TF BC	TF Cdr	K05.14 SitRep	2-10 engaging one enemy battalion in EA Dave along with AH-64s. Second battalion moving to the east, north of Dave.	0	1	0	1	1	0	0	0	1	20	2	12:20	1280.5
836	835	920	76860.0	B deCmd		B de Cdr	TF S3	Alert	2-10 engaging one enemy battalion in EA Dave along with AH-64s. Second battalion moving to the east, north of Dave. What's your location?	0	2	0	1	1	0	1	0	1	20	0	12:21	1281.0
837	836	270	76920.0	ASAS		Sct Plt	TF S2	SALT	Eight BRDMs establishing hasty defense vicinity MK894004. Missiles on top of vehicles.	2	1	0	1	2	0	2	0	1	12	2	12:22	1282.0
838	837	870	76944.0	FB CB 2		Sct Plt	TF Cdr	SALT	Eight BRDMs establishing hasty defense vicinity MK894004. Missiles on top of vehicles.	0	1	0	1	2	0	1	0	1	12	2	12:22	1282.4
839	838	3000	76950.0	TF_Cmd	12	TF XO	TF BC	Internal trigger	Have the Main come to a short halt.	2	0	0	0	0	0	0	0	1	8	0	12:22	1282.5
840	839	650	77100.0	AFATDS		Colt Tm 2	TF FSE	K02.04 Call For Fire	Fire for effect, battery two, DPICM, AT battery in hasty defense, at MK894004, Target A065.	0	2	0	0	1	0	0	0	1	8	1	12:25	1285.0
841	840	860	77220.0	TF_Cmd		TF Cdr	A, B, C, EN, Mtr Plt	Internal trigger	C establish SBF at MK893045. A and B slow pace, do not cross road vicinity MK9102 until artillery lifts. On	0	0	0	0	0	0	1	0	1	44	0	12:27	1287.0
842	841	370	77280.0	MCS		B de BC	TF BC	K05.14 SitRep	2-10 continuing to engage MIBN in EA Dave. AH-64s engaging second MIBN in EA Ken MJ947976.	2	1	0	1	1	0	0	0	0	16	2	12:28	1288.0
843	842	3000	77328.0	TF_Cmd	12	TF XO	TF BC	Internal trigger	Have the Main stop, but not set up.	0	0	0	0	0	0	1	0	1	8	0	12:28	1288.8
844	843	960	77340.0	B deCmd		TF S3	B de Cdr	Internal trigger	Engaging AT battery with indirect fire at MK894004. TF Cdr maneuvering companies to assault.	0	0	0	0	0	0	1	0	1	14	2	12:29	1289.0
845	844	650	77400.0	AFATDS		Colt Tm 2	TF FSE	K02.04 Call For Fire	Repeat.	0	2	0	0	1	0	0	0	0	1	1	12:30	1290.0

	A	B	C	D	E	F	G	H	I	J	K	L	M	N	O	P	Q	R	S	T	U	V
1	Msg Num	Start	H+ Time Seconds	Net	Interrupt	From	To	Message Type	Text	Pass	Scan	Route	Update	EI	SH	Send	Enter	OTM	Word	Digital	Time	H+ Time Minutes
846	845	800	77460.0	TF_Cmd		A 1-10	TF Cdr	Blue 2 abb	Set along road.	0	1	0	1	1	0	0	0	0	3	0	12:31	1291.0
847	846	800	77484.0	TF_Cmd		B 1-10	TF Cdr	Blue 2 abb	Set along road.	0	1	0	1	1	0	0	0	0	3	0	12:31	1291.4
848	847	800	77520.0	TF_Cmd		C 1-10	TF Cdr	Blue 2 abb	Set, SBF MK893045. Four BRDMs identified to front. Indirect fire impacting.	0	1	0	1	1	0	1	0	0	11	0	12:32	1292.0
849	848	650	77526.0	AFATDS		Colt Tm 2	TF FSE	K02.04 Call For Fire	Repeat.	0	2	0	0	1	0	0	0	0	1	1	12:32	1292.1
850	849	800	77550.0	TF_Cmd		Sct Plt	TF Cdr	Alert	Last repeat request just sent out.	0	0	0	0	1	0	1	0	0	6	0	12:32	1292.5
851	850	800	77700.0	TF_Cmd		A 1-10	TF Cdr	Blue 2 abb	Beginning assault.	0	0	0	0	2	0	0	0	0	2	0	12:35	1295.0
852	851	800	77712.0	TF_Cmd		B 1-10	TF Cdr	Blue 2 abb	Beginning assault.	0	0	0	0	2	0	0	0	0	2	0	12:35	1295.2
853	852	960	77712.0	BdeCmd		TF S3	Bde Cdr	Internal trigger	Beginning assault on suspected AT Battery.	0	0	0	0	0	0	1	0	0	6	0	12:35	1295.2
854	853	650	77724.0	AFATDS		A FIST	TF FSE	K02.25 End Of Mission	End of mission. One vehicle destroyed, three damaged.	0	2	0	0	0	0	0	0	0	8	2	12:35	1295.4
855	854	860	77736.0	TF_Cmd		TF Cdr	C 1-10	Internal trigger	Make sure you track A and B's movement. Do not fire	0	0	0	0	0	0	1	0	1	13	0	12:35	1295.6
856	855	800	77880.0	TF_Cmd		C 1-10	TF Cdr	Blue 2 abb	Two BRDMs destroyed vicinity MK894004. Another	0	1	0	1	1	0	0	0	0	8	0	12:38	1298.0
857	856	800	77940.0	TF_Cmd		B 1-10	TF Cdr	Blue 2 abb	Engaged and destroyed two BRDMs MK882002.	0	1	0	1	1	0	0	0	0	6	0	12:39	1299.0
858	857	870	77970.0	FB CB 2		Sct Plt	TF Cdr	SALT	Six BRDMs destroyed MK894004 to MK882002.	0	1	0	1	1	0	0	0	0	6	2	12:39	1299.5
859	858	270	77982.0	ASAS		Sct Plt	TF S2	SALT	Six BRDMs destroyed MK894004 to MK882002.	2	1	0	1	1	0	2	0	0	6	2	12:39	1299.7
860	859	860	78060.0	TF_Cmd		TF Cdr	C 1-10	Internal trigger	Cease fire, A and B closing.	0	0	0	0	0	0	1	0	0	5	0	12:41	1301.0
861	860	800	78120.0	TF_Cmd		A 1-10	TF Cdr	Blue 1	Enemy dismounts running from vehicles, launchers pointed skyward, I think these guys have had it.	0	0	0	0	2	0	0	0	0	15	0	12:42	1302.0
862	861	960	78156.0	BdeCmd		TF S3	Bde Cdr	Internal trigger	AT battery appears to be defeated, seven BRDMs destroyed, the rest are surrendering. Continuing mission.	0	0	0	0	0	0	1	0	0	14	0	12:42	1302.6
863	862	370	78180.0	MCS		Bde BC	TF BC	K05.14 SitRep	1-22 has extended northern screen to PL Corn with ground and air troops.	2	1	0	1	0	0	2	0	0	13	2	12:43	1303.0
864	863	870	78204.0	FB CB 2		TF BC	TF Cdr	K05.14 SitRep	1-22 has extended northern screen to PL Corn with ground and air troops.	0	1	0	1	0	0	1	0	0	13	2	12:43	1303.4
865	864	300	78240.0	TF_Cmd		B 1-10	TF BC	Alert	We have the EPWs covered, but there's too many for us to take care of, need help.	2	0	0	1	1	0	0	0	1	17	0	12:44	1304.0
866	865	3000	78252.0	TF_Cmd	12	TF XO	Tm EN	Internal trigger	What are we going to do with the EPWs?	0	0	0	0	0	0	1	0	0	9	0	12:44	1304.2
867	866	960	78258.0	TF_Cmd	6	TF S3	TF S2	Internal trigger	What's the latest on the BRAG location?	2	1	0	0	1	0	2	0	1	7	0	12:44	1304.3
868	867	270	78360.0	ASAS		Bde S2	TF S2	C110 Intel Report	BRAG suspected to be at MJ8393 grid square.	2	1	0	1	2	0	2	0	1	8	2	12:46	1306.0
869	868	970	78378.0	FB CB 2		TF S2	TF S3	C110 Intel Report	BRAG suspected to be at MJ8393 grid square.	0	1	0	1	2	0	0	0	1	8	2	12:46	1306.3
870	869	3000	78480.0	TF_Cmd		TF XO	Tm EN	Internal trigger	Use one of your line platoons to guard the EPWs. Once TF is on Tin, move them to your company AA.	0	0	0	0	0	0	1	0	1	18	0	12:48	1308.0
871	870	3000	78540.0	TF_AL	2	TF XO	TF S1	Internal trigger	Find out if the Bde EPW collection point has moved.	2	1	0	1	0	0	2	0	0	10	0	12:49	1309.0
872	871	370	78552.0	MCS		Bde BC	TF BC	K01.01 Free Text	EA Dave and Ken no longer in effect.	2	1	0	1	1	0	2	0	1	8	2	12:49	1309.2
873	872	870	78564.0	FB CB 2		TF BC	TF Cdr	K01.01 Free Text	EA Dave and Ken no longer in effect.	0	1	0	1	1	0	0	0	1	8	2	12:49	1309.4
874	873	420	78624.0	CSSCS		Bde S1	TF S1	K07.05 EPW Evac Request/Response	EPW collection point at NJ063964.	2	1	0	1	0	0	2	0	0	5	2	12:50	1310.4

	A	B	C	D	E	F	G	H	I	J	K	L	M	N	O	P	Q	R	S	T	U	V
1	Msg Num	Start	H+ Time Seconds	Net	Interrupt	From	To	Message Type	Text	Pass	Scan	Route	Update	EI	SH	Send	Enter	OTM	Word	Digital	Time	H+ Time Minutes
875	874	3050	78636.0	FB CB 2		TF S1	TF XO	K07.05 EPW Evac Request/Response	EPW collection point at NJ063964.	0	1	0	1	0	0	0	0	1	5	2	12:50	1310.6
876	875	370	78642.0	MCS		2-10 BC	TF BC	C115 Intel Spot Report	MIBN in EA Dave defeated, company-size element moving south out of B de sector	2	1	0	1	1	0	0	0	1	14	2	12:50	1310.7
877	876	370	78660.0	MCS		3-92 BC	TF BC	C115 Intel Spot Report	MIBN in EA Ken destroyed. 3-92 moving forward to sweep for surviving enemy.	2	1	0	1	1	0	2	0	1	13	2	12:51	1311.0
878	877	870	78708.0	FB CB 2		TF BC	TF Cdr	C115 Intel Spot Report	MIBN in EA Ken destroyed. 3-92 moving forward to sweep for surviving enemy. MIBN in EA Dave defeated, company-size element moving south out of B de sector.	0	1	0	1	1	0	0	0	1	27	2	12:51	1311.8
879	878	370	79200.0	FB CB 2		Sct Plt	TF BC	SALT	Unidentified elements moving west at MJ8099.	2	1	0	1	0	0	0	0	1	6	2	13:00	1320.0
880	879	270	79224.0	ASAS		Sct Plt	TF S2	SALT	Unidentified elements moving west at MJ8099.	2	1	0	1	0	0	2	0	1	6	2	13:00	1320.4
881	880	370	79680.0	FB CB 2		Sct Plt	TF BC	SALT	Fifteen enemy artillery pieces preparing to move at MJ823940.	2	1	0	1	0	0	0	0	1	9	2	13:08	1328.0
882	881	270	79716.0	ASAS		Sct Plt	TF S2	SALT	Fifteen enemy artillery pieces preparing to move at MJ823940.	2	1	0	1	0	0	2	0	1	9	2	13:08	1328.6
883	882	860	79782.0	TF_Cmd		TF Cdr	Sct Plt	Internal trigger	Keep eyes on the artillery.	0	0	0	0	0	0	1	0	1	5	0	13:09	1329.7
884	883	860	79800.0	TF_Cmd		TF Cdr	A, B, C	Internal trigger	Continue movement to OBJ Tin. B continue to assigned objective. C establish SBF at MJ815965, orient south. A assault BRAG at MJ823940.	0	0	0	0	0	0	1	0	1	17	0	13:10	1330.0
885	884	960	79920.0	B deCmd		TF S3	B de Cdr	Internal trigger	Have identified stationary BRAG at MJ823940. Maneuvering to destroy.	0	0	0	0	0	0	1	0	1	9	0	13:12	1332.0
886	885	860	80040.0	B deCmd		TF Cdr	B de Cdr	Internal trigger	Request permission to go beyond the LOA to the 80 north-south gridline.	0	0	0	0	0	0	1	0	1	12	0	13:14	1334.0
887	886	870	80064.0	FB CB 2		Sct Plt	TF Cdr	SALT	Enemy artillery beginning to move due west.	0	1	0	1	1	0	0	0	1	7	2	13:14	1334.4
888	887	270	80070.0	ASAS		Sct Plt	TF S2	SALT	Enemy artillery beginning to move due west.	2	1	0	1	1	0	2	0	1	7	2	13:14	1334.5
889	888	820	80100.0	B deCmd		B de Cdr	TF Cdr	Alert	You can move as far west as the 80 north-south. Do not go beyond unless you call me.	0	1	0	1	1	0	0	0	1	19	0	13:15	1335.0
890	889	370	80136.0	FB CB 2		C 1-10	TF BC	Icon Movement	PL Corn, continuing mission.	2	1	0	1	0	0	0	0	1	0	4	13:15	1335.6
891	890	380	80148.0	MCS		TF BC	B de BC	Internal trigger	Enemy artillery at MJ823940 beginning to move due west.	0	0	0	0	0	0	2	0	1	9	0	13:15	1335.8
892	891	800	80400.0	TF_Cmd		C 1-10	TF Cdr	Blue 2 abb	Set SBF at MJ815965. Identifying enemy artillery, 15-20 vehicles moving northwest at MJ812949.	0	1	0	1	1	0	1	0	1	14	0	13:20	1340.0
893	892	860	80460.0	TF_Cmd		TF Cdr	A 1-10	Internal trigger	Once you cross Corn, bear due west. You should be able to engage trail of enemy artillery.	0	0	0	0	0	0	1	0	1	16	0	13:21	1341.0
894	893	380	80496.0	MCS		TF BC	B de BC	Internal trigger	Engaging enemy artillery with direct fire at MJ812949.	0	0	0	0	0	0	2	0	1	8	2	13:21	1341.6
895	894	800	80586.0	TF_Cmd		C 1-10	TF Cdr	Blue 2 abb	Engaged and destroyed four artillery pieces and eight trucks.	0	1	0	1	1	0	1	0	1	9	0	13:23	1343.1
896	895	300	80640.0	TF_Cmd		B 1-10	TF BC	Blue 2 abb	Entering OBJ Tin at MJ870920.	2	1	0	1	0	0	0	0	1	5	0	13:24	1344.0
897	896	800	80760.0	TF_Cmd		A 1-10	TF Cdr	Blue 2 abb	Engaging artillery and trucks at MJ815945.	0	1	0	1	1	0	1	0	1	6	0	13:26	1346.0
898	897	800	80784.0	TF_Cmd		C 1-10	TF Cdr	Blue 1	Three artillery pieces and four trucks escaping to the	0	1	0	1	0	0	1	0	1	17	0	13:26	1346.4

	A	B	C	D	E	F	G	H	I	J	K	L	M	N	O	P	Q	R	S	T	U	V
1	Msg Num	Start	H+ Time Seconds	Net	Interrupt	From	To	Message Type	Text	Pass	Scan	Route	Update	EI	SH	Send	Enter	OTM	Word	Digital	Time	H+ Time Minutes
899	898	800	80820.0	TF_Cmd		A 1-10	TF Cdr	Blue 2 abb	Identifying eight artillery pieces and eight trucks destroyed vicinity MJ810955.	0	1	0	1	1	0	0	0	1	10	0	13:27	1347.0
900	899	380	80850.0	MCS		TF BC	B de BC	Internal trigger	Eight artillery pieces and eight trucks destroyed vicinity MJ810955. Companies starting to enter Tin.	0	0	0	0	0	0	0	0	1	14	2	13:27	1347.5
901	900	3000	80916.0	TF_AL	16	TF XO	TF S4	Internal trigger	Need to have the CTCP come forward.	0	0	0	0	0	0	1	0	1	7	0	13:28	1348.6
902	901	960	80922.0	BdeCmd		TF S3	B de Cdr	Internal trigger	Eight artillery pieces and eight trucks destroyed vicinity MJ810955. Three artillery pieces and four trucks	0	0	0	0	0	0	1	0	1	30	0	13:28	1348.7
903	902	3000	80940.0	CSSCS		TF XO	TF S4	Internal trigger	Move along Axis Shoe to MJ858939.	0	0	0	0	0	0	2	0	1	6	2	13:29	1349.0
904	903	420	80955.0	CSSCS		TF XO	TF S4	K01.01 Free Text	Move along Axis Shoe to MJ858939.	2	1	0	0	0	0	1	0	1	6	2	13:29	1349.2
905	904	860	81000.0	TF_Cmd		TF Cdr	Sct Plt	Internal trigger	Establish screen line from MJ801935 to MK830010.	0	0	0	0	0	0	1	0	1	7	0	13:30	1350.0
906	905	820	81300.0	BdeCmd		B de Cdr	TF Cdr	WARNO	Brigade establishes new FLOT along PL Corn. Two bn/tfs along Corn, one bn/tf in reserve. FRAGO at	0	1	0	1	1	0	1	0	1	21	0	13:35	1355.0
907	906	3000	81360.0	TF_Cmd	12	TF XO	TF BC	Internal trigger	Have the Main come to a short halt.	2	0	0	0	0	0	0	0	1	8	0	13:36	1356.0
908	907	370	81372.0	FB CB 2		B 1-10	TF BC	K05.14 SitRep	Occupying Tin-B, no enemy sighted. 14, 0, 1.	2	1	0	1	0	0	0	0	0	8	2	13:36	1356.2
909	908	370	81720.0	FB CB 2		Sct Plt	TF BC	K05.14 SitRep	Occupying screen line from MJ801935 to MK830010.	2	1	0	1	0	0	0	0	0	7	2	13:42	1362.0
910	909	270	81756.0	ASAS		Sct Plt	TF S2	K05.14 SitRep	Occupying screen line from MJ801935 to MK830010.	2	1	0	1	0	0	2	0	0	7	2	13:42	1362.6
911	910	370	82080.0	FB CB 2		C 1-10	TF BC	K05.14 SitRep	Occupying Tin-C, no enemy sighted. 4, 8, 1.	2	1	0	1	0	0	0	0	0	8	2	13:48	1368.0
912	911	370	82380.0	FB CB 2		A 1-10	TF BC	K05.14 SitRep	Occupying Tin-A, no enemy sighted. 9, 3, 1.	2	1	0	1	0	0	2	0	0	8	2	13:53	1373.0
913	912	970	82500.0	FB CB 2		B de S3	TF S3	A423 Order	Enemy attack along I-15 and Superior Valley avenues of approach stopped. Enemy withdrawing west. 1st B de defends along PL Corn with two TFs forward and one battalion in depth NLT 1600 hours today. 3-92 defends from MK885146 to MK820057. 1-10 defends from MK820057 to MJ802935. 2-10 occupies AA Zinc and is B de reserve.	0	1	0	1	2	0	3	0	0	53	2	13:55	1375.0
914	913	860	82860.0	BdeCmd		TF Cdr	B de Cdr	Internal trigger	Request permission to establish screen out to 75 north-south gridline in sector.	0	0	0	0	0	0	1	0	0	13	0	14:01	1381.0
915	914	820	82920.0	BdeCmd		B de Cdr	TF Cdr	Alert	Permission granted.	0	1	0	1	0	0	2	0	0	2	0	14:02	1382.0
916	915	370	83700.0	FB CB 2		B 1-10	TF BC	Icon Movement	Beginning movement to new BP.	1	0	0	1	0	0	0	0	1	0	4	14:15	1395.0
917	916	370	84180.0	FB CB 2		A 1-10	TF BC	Icon Movement	Beginning movement to new BP.	1	0	0	1	0	0	0	0	1	0	4	14:23	1403.0
918	917	370	84420.0	FB CB 2		C 1-10	TF BC	Icon Movement	Beginning movement to new BP.	1	0	0	1	0	0	0	0	1	0	4	14:27	1407.0
919	918	450	85020.0	FB CB 2		TF S4	TF BC	Internal trigger	Arrived at MJ858939.	0	0	0	0	0	0	2	0	0	3	0	14:37	1417.0
920	919	370	85030.0	FB CB 2		TF S4	TF BC	K05.14 SitRep	Arrived at MJ858939.	2	1	0	1	0	0	0	0	0	3	2	14:37	1417.2
921	920	370	85080.0	FB CB 2		C 1-10	TF BC	K05.14 SitRep	BP 11, beginning to occupy.	2	1	0	1	0	0	2	0	1	5	2	14:38	1418.0
922	921	270	85110.0	ASAS		Sct Plt	TF S2	K05.14 SitRep	Screen established along 75 north-south gridline in sector.	2	1	0	1	0	0	2	0	1	9	2	14:38	1418.5
923	922	450	85128.0	CSSCS		TF S4	B de S4	Internal trigger	Arrived at MJ858939.	0	0	0	0	0	0	2	0	1	3	2	14:38	1418.8
924	923	420	85200.0	CSSCS		Sct Plt	TF S4	C802 Logistics SitRep	Need 150 diesel.	2	1	0	1	0	0	0	0	0	3	2	14:40	1420.0

	A	B	C	D	E	F	G	H	I	J	K	L	M	N	O	P	Q	R	S	T	U	V
1	Msg Num	Start	H+ Time Seconds	Net	Interrupt	From	To	Message Type	Text	Pass	Scan	Route	Update	EI	SH	Send	Enter	OTM	Word	Digital	Time	H+ Time Minutes
925	924	760	85224.0	FB CB 2		EN OFF	ABE	Internal trigger	Beginning engineer effort with 1-10 along now defensive sector from MK820057 to MJ802935.	0	0	0	0	0	0	2	0	0	13	2	14:40	1420.4
926	925	380	85320.0	FB CB 2		TF BC	A, B, C EN, Sct Plt, Mtr Plt, CPs	Internal trigger	Arrived at MJ863995, beginning to set up.	0	0	0	0	0	0	2	0	0	6	2	14:42	1422.0
927	926	380	85338.0	MCS		TF BC	Bde BC	Internal trigger	Arrived at MJ863995, beginning to set up.	0	0	0	0	0	0	2	0	0	6	2	14:42	1422.3
928	927	370	85440.0	FB CB 2		B 1-10	TF BC	K05.14 SitRep	BP 13, beginning to occupy.	2	1	0	1	0	0	0	0	0	5	2	14:44	1424.0
929	928	370	85620.0	FB CB 2		A 1-10	TF BC	K05.14 SitRep	BP 12, beginning to occupy.	2	1	0	1	0	0	2	0	0	5	2	14:47	1427.0
930	929	420	85680.0	CSSCS		A 1SG	TF S4	C802 Logistics SitRep	Request 1000 diesel, eight HEAT, 600 25mm HE, three TOWs.	2	1	0	1	0	0	0	0	0	10	2	14:48	1428.0
931	930	420	85728.0	CSSCS		C 1SG	TF S4	C802 Logistics SitRep	Request 800 diesel, four HEAT, 1200 25mm HE, seven TOWs.	2	1	0	1	0	0	0	0	0	10	2	14:48	1428.8
932	931	420	85860.0	CSSCS		B 1SG	TF S4	C802 Logistics SitRep	Request 1600 diesel, ten HEAT.	2	1	0	1	0	0	0	0	0	5	2	14:51	1431.0
933	932	650	86040.0	AFATDS		Mtr Plt	TF FSE	K05.14 SitRep	New firing point occupied as per TF FRAGO.	2	1	1	1	0	0	0	0	0	8	2	14:54	1434.0
934	933	860	86400.0	BdeCmd		TF Cdr	Bde Cdr	Internal trigger	TF 1-10 occupying new sector.	0	0	0	0	0	0	1	0	0	5	0	15:00	1440.0
935																						
936																						
937																						
938																						
939																						
940	**utgoing Msgs**																					
941			180.0	MCS	out	TF BC	Bde BC	C400 Cdr's SitRep	No change in status, commo, etc, is green												15:03	3.0
942			258.0	ASAS	out	TF S2	A, B, C EN, Sct Plt, Mtr Plt	C110 Intel Report	Enemy activity increasing along border.												15:04	4.3
943			2304.0	TF FS	out	TF FSE	A, B, C FISTs, COLT Tm, Mtr Plt	Alert	Bde move out has been upped to 1700. Update your status ASAP. 2-8 FA(R) is not going to be in place at that time. Further instructions/information will follow.												15:38	38.4
944			4920.0	TF_Cmd	out	TF Cdr	A, B, C, EN, Sct Plt, Mtr Plt	FRAGO	Execute OPORD effective 1900 hrs. Sct Plt to route CPs now, lead Tm SP at 1700.												16:22	82.0
945			7260.0	MCS	out	TF BC	Bde BC	C400 Cdr's SitRep	SP now.												17:01	121.0
946			8862.0	TF_Cmd	out	TF S3	A, B, C EN, Sct Plt, Mtr Plt, CPs	FRAGO	Change route of march to alternate route.												17:27	147.7
947			10140.0	MCS	out	TF BC	Bde BC	C400 Cdr's SitRep	TF 1-10 is clear of SP.												17:49	169.0
948			11880.0	FB CB 2	out	TF BC	A, B, C, EN, Sct Plt, Mtr Plt	A692 Weapon Control Order	ADWCS increased to Tight.												18:18	198.0

	A	B	C	D	E	F	G	H	I	J	K	L	M	N	O	P	Q	R	S	T	U	V
1	Msg Num	Start	H+ Time Seconds	Net	Interrupt	From	To	Message Type	Text	Pass	Scan	Route	Update	EI	SH	Send	Enter	OTM	Word	Digital	Time	H+ Time Minutes
949			12048.0	MCS	out	TF BC	Bde BC	C400 Cdr's SitRep	Lead company set ATK Griffin.												18:20	200.8
950			13500.0	CSSCS	out	TF S1	Bde S1	G880 Pers StatRep	No change.												18:45	225.0
951			13644.0	MCS	out	TF BC	Bde BC	K04.03 Obstacle Rpt	Obstacle on route of march has been cleared.												18:47	227.4
952			14070.0	ASAS	out	TF S2	Bde S2	K01.01 Free Text	Scouts set along LD.												18:54	234.5
953			14244.0	MCS	out	TF BC	Bde BC	C400 Cdr's SitRep	TF 1-10 has cleared RP.												18:57	237.4
954			14418.0	FB CB2	out	TF BC	A, B, C, EN, Sct Plt, Mtr Plt	K10.01 Hostile A/C Report	Air defense warning Red.												19:00	240.3
955			14730.0	FB CB2	out	TF S2	Sct Plt	K01.01 Free Text	BRT reports terrain is extremely restricted north of 05 east-west gridline along PL Tulip. Check routes to the south.												19:05	245.5
956			15564.0	FB CB2	out	TF BC	A, B, C, EN, Sct Plt, Mtr Plt	K10.01 Hostile A/C Report	Radars have picked up low-level enemy rotary-winged aircraft moving east toward 21st AD zone.												19:19	259.4
957			16620.0	TF_Cmd	out	TF Cdr	A, B, C, EN, Sct Plt, Mtr Plt	Order	A, Mortars, C linkup with Scouts at northern point. B, Main CP, Engineers and CTCP linkup with Scouts at southern point.												19:37	277.0
958			16698.0	MCS	out	TF S2	Bde S2	K01.01 Free Text	Routes through lava beds in our zone need improvement for follow-on forces.												19:38	278.3
959			16734.0	TF_Cmd	out	TF Cdr	Tm EN	Order	Leave assets along routes to mark and improve.												19:38	278.9
960			17004.0	FB CB2	out	TF BC	A, B, C, EN, Sct Plt, Mtr Plt	K10.01 Hostile A/C Report	Radars have picked up mid-level enemy fixed winged aircraft along PL Oats. Appears to be recce.												19:43	283.4
961			19608.0	MCS	out	TF BC	Bde BC	K05.52 Overlay Msg	Routes through PL Tulip have been improved and marked.												20:25	326.8
962			20118.0	ASAS	out	TF S2	Bde S2	K05.14 SitRep	Scouts along PL Pear, nothing seen.												20:35	335.3
963			20988.0	TF Cmd	out	TF Cdr	A, B, C, EN, Sct Plt, Mtr Plt, CPs	WARNO	We will conduct in-stride breach of reported obstacles. Scouts linkup with BRT at obstacle. Tm EN pick up the pace and move directly behind Tm A. FRAGO at 2115.												20:49	349.8
964			21078.0	MCS	out	TF BC	Bde BC	K05.14 SitRep	PL Pear, continuing mission.												20:51	351.3
965			22548.0	ASAS	out	TF S2	Bde S2	C115 Spot Intel Rpt	Scouts at PL Rice now. Have checked previously reported possible enemy recon at NJ9093; nothing found. Continuing mission.												21:15	375.8
966			23112.0	MCS	out	TF BC	Bde BC	K05.14 SitRep	Lead company, PL Rice.												21:25	385.2
967			23730.0	ASAS	out	TF S2	Bde S2	K05.14 SitRep	Scouts have established screen along PL Berry.												21:35	395.5
968			26700.0	TF_Cmd	out	Tm EN	A, B, C, EN, Sct Plt, Mtr Plt	Alert	MICLIC - fire in the hole.												22:25	445.0
969			26952.0	MCS	out	TF BC	Bde BC	K01.01 Free Text	Plow tanks beginning to proof lanes.												22:29	449.2
970			27552.0	MCS	out	TF BC	Bde BC	K01.01 Free Text	Proofing and marking is complete.												22:39	459.2
971			28098.0	MCS	out	TF BC	Bde BC	K05.14 SitRep	Beginning to move through breached obstacles.												22:48	468.3

	A	B	C	D	E	F	G	H	I	J	K	L	M	N	O	P	Q	R	S	T	U	V
1	Msg Num	Start	H+ Time Seconds	Net	Interrupt	From	To	Message Type	Text	Pass	Scan	Route	Update	EI	SH	Send	Enter	OTM	Word	Digital	Time	H+ Time Minutes
972			28260.0	TF_Cmd	out	TF Cdr	B 1-10	Order	Move now, move along road where crater was filled in; set at NJ764937.												22:51	471.0
973			28560.0	TF_Cmd	out	TF Cdr	Sct Plt	Order	Continue screening operations. Move no further than OBJ Churchill.												22:56	476.0
974			29100.0	TF_Cmd	out	TF Cdr	Mtr Plt	Order	Follow Tm C along road. Move to NJ760945.												23:05	485.0
975			29880.0	TF_Cmd	out	TF Cdr	A 1-10	Order	Begin movement; take TF lead; reform diamond.												23:18	498.0
976			31422.0	MCS	out	TF BC	Bde BC	K05.14 SitRep	Lead company, PL Oats.												23:43	523.7
977			32040.0	TF_Cmd	out	TF Cdr	Sct Plt	Order	Screen from NJ545863 to NJ595964.												23:54	534.0
978			33060.0	Bde FS	out	TF FSE	Bde FSO	Blue 2 abb	TF 1-10 set on OBJ Churchill.												0:11	551.0
979			33360.0	Bde EN	out	EN OFF	ABE	Blue 2 abb	Set Churchill - E.												0:16	556.0
980			33852.0	FB CB 2	out	TF BC	A, B, C,	K10.01 Hostile A/C	Radars identifying enemy rotary-winged aircraft												0:24	564.2
981			33924.0	FB CB 2	out	TF BC	A, B, C,	A692 Weapon	Friendly air moving east to west along air corridor in												0:25	565.4
982			34680.0	FB CB 2	out	TF BC	A, B, C,	K05.14 SitRep	1-22 screening with air troops to your north out to												0:38	578.0
983			35070.0	FB CB 2	out	TF BC	A, B, C, EN, Sct Plt, Mtr Plt, CPs	A692 Weapon Control Order	Friendly air moving west to east along air corridor in southern portion of Bde zone. Do not engage.												0:44	584.5
904			36318.0	MCS	out	TF BC	Bde BC	C115 Spot Intel Rpt	One enemy helicopter destroyed, no survivors. Appear to be a MI-8, NJ568854.												1:05	605.3
985			37818.0	MCS	out	TF BC	Bde BC	C400 Cdr Sit Rpt	Beginning movement from Churchill.												1:30	630.3
986			38004.0	ASAS	out	TF S2	A, B, C, EN, Sct Plt, Mtr Plt	C110 Intel Report	Reinforced enemy battalion moving east vicinity Superior Lake, NK9700.												1:33	633.4
987			38640.0	ASAS	out	TF S2	Bde S2	SALT	Enemy infantry at NJ513891; two BRDMs at [illegible]												1:44	644.0
988			39612.0	MCS	out	TF BC	Bde BC	K05.14 SitRep	PL Kiwi, continuing mission.												2:00	660.2
989			43920.0	ASAS	out	TF S2	Bde S2	SALT	Two BRDMs at NJ273949 moving east.												3:12	732.0
990			45042.0	MCS	out	TF BC	Bde BC	K05.14 SitRep	Lead company PL Bran.												3:30	750.7
991			45576.0	TF Cmd	out	TF Cdr	Sct Plt	Order	Find the enemy company.												3:39	759.6
992			45816.0	ASAS	out	TF S2	Bde S2	SALT	Nine MTIs moving southeast on road at NJ185945.												3:43	763.6
993			46032.0	ASAS	out	TF S2	Bde S2	SALT	Nine MTIs identified as BTRs and T-80s; stopped on road at NJ200945.												3:47	767.2
994			46668.0	TF Cmd	out	TF Cdr	A, B, C	Order	Sprint to SBFs.												3:57	777.8
995			47004.0	TF Cmd	out	TF Cdr	B 1-10	Order	B engage at 2000 meters; A engage after B; C hold at NJ250980. C at my command assault flank and rear of enemy, do cross south of 96 east-west gridline. Priority of fires to B.												4:03	783.4
996			47118.0	TF FD	out	TF FSE	Mtr Plt	Fires	Fire the mission.												4:05	785.3
997			47238.0	TF_Cmd	out	TF Cdr	C 1-10	Order	Hold at current position.												4:07	787.3
998			48660.0	FB CB 2	out	TF S1	A, B, C,	S507 Resources	EPW collection point at NJ486875.												4:31	811.0
999			48900.0	TF_Cmd	out	TF Cdr	Sct Plt	Order	Establish screen along 20 north-south.												4:35	815.0
1000			50100.0	MCS	out	TF BC	Bde BC	C400 Cdr Sit Rpt	REDCON 1.												4:55	835.0

	A	B	C	D	E	F	G	H	I	J	K	L	M	N	O	P	Q	R	S	T	U	V
1	Msg Num	Start	H+ Time Seconds	Net	Interrupt	From	To	Message Type	Text	Pass	Scan	Route	Update	EI	SH	Send	Enter	OTM	Word	Digital	Time	H+ Time Minutes
1001			51012.0	MCS	out	TF BC	B de BC	K05.14 SitRep	Lead company crossing PL Plum.												5:10	850.2
1002			52560.0	TF_Cmd	out	TF Cdr	Sct Plt	Order	Check out report of possible enemy vehicles at NJ134996.												5:36	876.0
1003			52656.0	ASAS	out	TF S2	B de S2	C115 Spot Intel Rpt	Scouts report two tracked vehicles moving east at NJ108955.												5:37	877.6
1004			53190.0	ASAS	out	TF S2	Sct Plt	K01.01 Free Text	1-22 Cav has identified same. Keep eyes on, 1-22 will engage.												5:46	886.5
1005			53730.0	MCS	out	TF BC	B de BC	K05.14 SitRep	Lead company, PL Barley, continuing mission.												5:55	895.5
1006			54282.0	MCS	out	TF BC	B de BC	K05.14 SitRep	B in contact with BRDMs.												6:04	904.7
1007			54510.0	TF_Cmd	out	TF Cdr	A, C	Order	A, C hold fire.												6:08	908.5
1008			54642.0	TF_Cmd	out	TF Cdr	B 1-10	Order	Have your trains police them up, wait until A and C reach your location, diamond. A, C, Engineers move to reform diamond.												6:10	910.7
1009			55008.0	ASAS	out	TF S2	B de S2	K05.14 SitRep	Scouts have clear Goldstone at NJ080059; deployed along 08 north-south gridline, continuing mission.												6:16	916.8
1010			55812.0	CSSCS	out	TF S4	A, B, C,	S507 Resources	FSB starting to set up vicinity NJ2493.												6:30	930.2
1011			56124.0	ASAS	out	TF S2	B de S2	K05.14 SitRep	Scouts starting to enter Gold.												6:35	935.4
1012			56484.0	MCS	out	TF BC	B de BC	C602 Engagement of	One enemy fixed winged destroyed NJ05599, 3-92												6:41	941.4
1013			57684.0	ASAS	out	TF S2	B de S2	C115 Spot Intel Rpt	Scouts report Gold clear of enemy.												7:01	961.4
1014			58380.0	MCS	out	TF BC	B de BC	C400 Cdr Sit Rpt	First company starting to occupy Gold.												7:13	973.0
1015			58560.0	TF_Cmd	out	TF Cdr	C 1-10	Order	Coordinate with Tm Engineer for assistance is blocking												7:16	976.0
1016			58980.0	MCS	out	TF BC	B de BC	C400 Cdr Sit Rpt	All companies starting to occupy Gold.												7:23	983.0
1017			60540.0	ASAS	out	TF S2	B de S2	K05.14 SitRep	Scouts have established screen from MK971095 to												7:49	1009.0
1018			60924.0	CSSCS	out	TF S4	B de S4	C802 Logistics SitRep	30, 13, 3												7:55	1015.4
1019			61020.0	CSSCS	out	TF S4	B de S4	B875 Munitions	10 sabot, 12 HEAT, 2650 25mm HE, 2 stingers, one												7:57	1017.0
1020			61140.0	CSSCS	out	TF S4	B de S4	C802 Logistics SitRep	14,100 diesel												7:59	1019.0
1021			62940.0	ASAS	out	TF S2	B de S2	SALT	GSR identifying four MTIs at MK874106 heading east.												8:29	1049.0
1022			63420.0	ASAS	out	TF S2	B de S2	C110 Intel Report	Scouts have identified what we believe is a CRP moving east at MK900103.												8:37	1057.0
1023			64420.0	TF_Cmd	out	TF Cdr	A 1-10	Order	Keep tracking, hold fire until enemy is within 2000 meters.												8:53	1073.7
1024			64470.0	TF FS	out	TF FSE	COLT 2	Alert	Can you lase to enemy vehicles to the west?												8:54	1074.5
1025			64620.0	ASAS	out	TF S2	B de S2	C110 Intel Report	Two T-80s, seven BTRs, and three unknown vehicles a MK890104 on the road moving east.												8:57	1077.0
1026			65028.0	ASAS	out	TF S2	B de S2	C115 Spot Intel Rpt	Enemy company-sized element starting to deploy in battle formation at MK922106, continuing to move to east.												9:03	1083.8
1027			65136.0	Air Force	out	TF ALO	B de ALO	Alert	We should have a battalion-size target for you vicinity												9:05	1085.6
1028			65412.0	ASAS	out	TF S2	B de S2	C115 Spot Intel Rpt	Enemy company-sized element moving east at MK940104, deployed. Dust cloud stopped at MK8509, GSR starting to pick up something												9:10	1090.2

	A	B	C	D	E	F	G	H	I	J	K	L	M	N	O	P	Q	R	S	T	U	V
1	Msg Num	Start	H+ Time Seconds	Net	Interrupt	From	To	Message Type	Text	Pass	Scan	Route	Update	EI	SH	Send	Enter	OTM	Word	Digital	Time	H+ Time Minutes
1029			65436.0	TF_Cmd	out	TF Cdr	A, B, C, Sct Plt, FSE	Order	Keep tracking the FSE. I want them to close in order volley fire and kill and draw in the AGMB. Priority of fires to A.												9:10	1090.6
1030			66642.0	ASAS	out	TF S2	Bde S2	SALT	30 enemy vehicles starting to speed up, moving east at												9:30	1110.7
1031			66924.0	TF_Cmd	out	TF Cdr	Iceman Lead	Order	Scouts will direct you to target, 30 plus vehicles vicinity MK9110.												9:35	1115.4
1032			67062.0	Air Force	out	TF ALO	Iceman Lead	Alert	Two 2S6s identified traveling with enemy, MK9210, one in center of formation, one at south end.												9:37	1117.7
1033			67332.0	Air Force	out	TF ALO	Iceman	Alert	Target should be at MK9410.												9:42	1122.2
1034			67638.0	MCS	out	TF BC	Bde BC	SALT	Thirty plus enemy vehicles damaged or destroyed at MK947106. Fifteen plus vehicles in disarray.												9:47	1127.3
1035			67920.0	TF Cmd	out	TF BC	A, B, C	Order	Report combat power.												9:52	1132.0
1036			68220.0	MCS	out	TF BC	Bde BC	C400 Cdr Sit Rpt	Combat power is 29, 11, 3.												9:57	1137.0
1037			68934.0	CSSCS	out	TF S1	Bde S1	S507L SitRep / Slant	Three KIA, seven WIA.												10:08	1148.9
1038			69300.0	CSSCS	out	TF S4	Bde S4	C802 Logistics SitRep	29, 11, 3. One M1 damaged, one M2 damaged, one M2 destroyed. Green												10:15	1155.0
1039			74580.0	MCS	out	TF BC	Bde BC	C400 Cdr Sit Rpt	REDCON 1.												11:43	1243.0
1040			75420.0	TF_Cmd	out	TF Cdr	A, B, C, EN, Sct Plt, Mtr Plt	Order	Enemy is committing to Bde's southern sector. On order, we attack along Axis Shoe to OBJ Tin. Destroy enemy BRAG. 3-92 and 2-10 will defend.												11:57	1257.0
1041			75660.0	TF_Cmd	out	TF Cdr	Sct Plt	Order	Press your screen forward. Screen TF right flank during movement. Keep eyes on avenue of approach north of Solcum Mountain.												12:01	1261.0
1042			75822.0	MCS	out	TF BC	Bde BC	K05.14 SitRep	Lead company LD.												12:03	1263.7
1043			76296.0	ASAS	out	TF S2	Bde S2	SALT	Twelve BRDMs moving east at MJ863996.												12:11	1271.6
1044			76320.0	TF_Cmd	out	TF BC	Sct Plt	Order	Keep eyes on, probably AT Battery.												12:12	1272.0
1045			76902.0	Bde Cmd	out	TF S3	Bde Cdr	Blue 2 abb	Lead elements crossing 06 east-west on Axis Shoe.												12:21	1281.7
1046			76950.0	ASAS	out	TF S2	Bde S2	SALT	Eight BRDMs establishing hasty defense vicinity												12:22	1282.5
1047			76962.0	TF Cmd	out	TF Cdr	Sct Plt		AT battery has AT-5s. How am I going to attack him?												12:22	1282.7
1048			77580.0	TF_Cmd	out	TF Cdr	A, B	Order	Once rounds impact, begin your assault.												12:33	1293.0
1049			78000.0	ASAS	out	TF S2	Bde S2	SALT	Six BRDMs destroyed MK894004 to MK882002.												12:40	1300.0
1050			78222.0	TF_Cmd	out	TF Cdr	A, B, C,	Order	Continue mission.												12:43	1303.7
1051			78276.0	ASAS	out	TF S2	Bde S2	K01.03 RFI	What's the latest on the BRAG location?												12:44	1304.6
1052			78600.0	CSSCS	out	TF S1	Bde S1	K07.05 EPW Evac	Where is current EPW collection point?												12:50	1310.0
1053			79260.0	ASAS	out	TF S2	Bde S2	SALT	Unidentified elements moving west at MJ8099.												13:01	1321.0
1054			79740.0	ASAS	out	TF S2	Bde S2	SALT	Fifteen enemy artillery pieces preparing to move at												13:09	1329.0
1055			80082.0	ASAS	out	TF S2	Bde S2	SALT	Enemy artillery beginning to move due west.												13:14	1334.7
1056			80442.0	TF_Cmd	out	TF Cdr	C 1-10	Order	Engage.												13:20	1340.7
1057			80808.0	TF_Cmd	out	TF Cdr	C 1-10	Order	Negative, do not pursue.												13:26	1346.8
1058			80880.0	TF_Cmd	out	TF Cdr	A, C	Order	Move to and sweep your assigned objectives on Tin. A												13:28	1348.0
1059			81420.0	TF_Cmd	out	TF Cdr	A, B, C EN,	WARNO	Brigade to establish defensive positions along PL Corn												13:37	1357.0

	A	B	C	D	E	F	G	H	I	J	K	L	M	N	O	P	Q	R	S	T	U	V
1	Msg Num	Start	H+ Time Seconds	Net	Interrupt	From	To	Message Type	Text	Pass	Scan	Route	Update	E1	SH	Send	Enter	OTM	Word	Digital	Time	H+ Time Minutes
1060			81780.0	ASAS	out	TF S2	B de S2	K05.14 SitRep	Scout Plt occupying screen line from MJ801935 to												13:43	1363.0
1061			82440.0	MCS	out	TF B C	B de B C	K05.14 SitRep	All companies on OBJ Tin, no enemy sighted.												13:54	1374.0
1062			83400.0	FB CB 2	out	TF Cdr	A, B, C EN,	A423 Order	TF 1-10 defends from MK820057 to MJ802935. A												14:10	1390.0
1063			85098.0	MCS	out	TF B C	B de B C	K05.14 SitRep	First company beginning to occupy new sector.												14:38	1418.3
1064			85140.0	ASAS	out	TF S2	B de S2	K05.14 SitRep	Scout screen established along 75 north-south gridline in sector.												14:39	1419.0
1065			85656.0	MCS	out	TF B C	B de B C	C400 Cdr's SitRep	All companies beginning to occupy new sector.												14:47	1427.6
1066		o	56190.0	TF_Cmd	out	TF Cdr	A, B, C, EN, Mtr Plt, CTCP	Order	Radars report inbound fixed winged 35 Kms out from the northwest. Should arrive within next five minutes. ADWCS if Red Free. Stop movement.												6:36	936.5

Appendix D. Analog and Digital Task Lists

Analog Model

Task/ Network	Upper Network	Number	Name	Operator1	Operator2	Function	WtFac	Mean/ Wait Time	Interrupt Type
Task	0	1	S1NCO						
Task	0	2	S1						
Task	0	4	S2RTO						
Task	0	5	S2NCO						
Task	0	6	S2O						
Task	0	7	S2A						
Task	0	9	S3RTO						
Task	0	10	NBCNCO						
Task	0	11	S3NCO						
Task	0	12	BC						
Task	0	13	XO						
Task	0	15	S4NCO						
Task	0	16	S4						
Task	0	18	ALO						
Task	0	20	FSRTO						
Task	0	21	FSO						
Task	0	24	ENRTO						
Task	0	25	ENO						
Task	0	27	Loader						
Task	0	28	Gunner						
Task	0	29	CMD						
Task	0	31	Loader						
Task	0	32	Gunner						
Task	0	33	S3V						
Task	0	100	Incoming message S1						
Task	0	101	S1NCO Receive and Record	1		1	A	0.42	2
Task	0	102	Interrupt	2				30	
Task	0	103	Pass Info	1		2	A	22.68	2
Task	0	104	Listen Receive	2		3	A	22.68	2
Task	0	105	Roll Up Reports	1		9	A	157	1
Task	0	106	S1 Read/Rpt Eval	2		19	B	0.5	2
Task	0	107	S1 Estimate Impact	2		14	D	96.89	2
Task	0	109	Interrupt S1NCO	1				60	
Task	0	110	Pass Info	2		2	A	16.38	2
Task	0	111	Listen Receive	1		3	A	16.38	2
Task	0	112	S1NCO Send Msg	1		7	A	21.77	2
Task	0	113	S1 L/M TF Net	2		24	A	24.94	1
Task	125	114	Branch						
Task	125	115	Scan Board	2		20	B	16.58	1
Task	125	116	Scan Map	2		20	B	4.02	1
Task	125	119	Decide Action	2		11	C	1.21	2
Task	125	120	End						
Task	0	121	Update	2		21	B	18.36	1
Task	0	122	Estimate Impact	2		14	D	63.19	2
Netwrk	0	125	S1 Scan						
Task	0	200	Incoming message S2						
Task	0	201	Receive and Record	4		1	A	0.42	2
Task	0	202	Interrupt	5				30	
Task	0	203	Pass Info	4		2	A	18.48	2
Task	0	204	Listen Receive	5		3	A	18.48	2
Task	0	205	Read	5		19	B	0.5	2
Task	0	206	Log	4		5	A	13.84	2
Task	263	207	Branch						
Task	263	208	Scan Board	5		20	B	16.58	1
Task	263	209	Scan Map	5		20	B	4.02	1
Task	263	210	Scan DST	5		20	B	8.52	1
Task	263	211	Scan CEL	5		20	B	30.57	1
Task	263	212	Decide Action	5		11	C	0.28	1
Task	0	213	Route	5		6	C	24.52	1

Task	0	214	Update	5		21	B	9.73	1
Task	0	215	Interrupt	6	7			60	2
Task	0	216	Pass Info	5		2	A	39.96	2
Task	0	217	Listen Receive	6	7	3	A	39.96	2
Task	0	218	Read	6	7	19	B	0.5	2
Task	264	219	Branch	6	7				
Task	264	220	Scan Board	6	7	20	B	16.58	1
Task	264	221	Scan Map	6	7	20	B	4.02	1
Task	264	222	Scan DST	6	7	20	B	8.52	1
Task	264	223	Scan CEL	6	7	20	B	30.57	1
Task	264	224	Decide Action	6	7	11	C	0.07	1
Task	0	225	Estimate Impact	6	7	14	D	267.16	2
Task	265	226	Begin Dual Est Impact	6					
Task	265	227	Pass Info	7		2	D	33.6	2
Task	265	228	Listen Receive	6		3	D	33.6	2
Task	265	229	Discuss	6		18	D	102.3	2
Task	265	230	Discuss	7		18	D	102.3	2
Task	265	231	Estimate Impact	6		14	D	72	2
Task	265	232	Estimate Impact	7		14	D	72	2
Task	265	233	Discuss	6		18	D	80	2
Task	265	234	Discuss	7		18	D	80	2
Task	266	235	Branch						
Task	266	236	Interrupt	6				500	
Task	266	237	Pass Info	7		2	A	3.5	2
Task	266	238	Listen Receive	6		3	A	3.5	2
Task	266	239	Discuss	7		18	D	140.8	2
Task	266	240	Discuss	6		18	D	140.8	2
Task	266	241	Return From SH	6					
Task	0	242	Decide Action	6	7	11	C	0.28	1
Task	0	243	Listen Receive	4		3	A	16.38	2
Task	0	244	Send Msg	4		7	A	21.77	2
Task	0	245	Pass Info	6		2	A	16.38	2
Task	0	246	Listen Receive	7		3	A	16.38	2
Task	264	247	Is S2 or S2A avail?					60	
Task	264	248	End						
Task	0	249	Interrupt RTO	4				60	
Task	0	250	Interrupt S2A	7				60	
Task	0	251	NCO Listen/Monitor	5		24	A	24.94	1
Task	0	252	S2A Listen/Monitor	7		24	A	24.94	1
Task	0	253	S2O Listen/Monitor	6		24	A	24.94	1
Task	263	254	Drop Message						
Task	0	255	Secondary Monitor	4		24	A		
Task	0	262	to other sections						
Netwrk	0	263	Prelim. Scan						
Netwrk	0	264	Officer Scan						
Netwrk	0	265	Dual Est Imp						
Netwrk	0	266	To Staff Huddle						
Task	0	300	Incoming message S3						
Task	0	301	Receive and Record	9		1	A	0.42	2
Task	0	302	Interrupt	11				30	
Task	0	303	Pass Info	9		2	A	22.68	2
Task	0	304	Listen Receive	11		3	A	22.68	2
Task	0	305	Read	11		19	B	0.7	2
Task	0	306	Log	9		5	A	13.84	2
Task	346	307	Branch						
Task	346	308	Scan Board	11		20	B	16.58	1
Task	346	309	Scan Map	11		20	B	4.02	1
Task	346	310	Scan DST	11		20	B	8.52	1
Task	346	311	Scan CEL	11		20	B	30.57	1
Task	346	312	Decide Action	11		11	C	0.28	2
Task	0	313	Route	11		6	C	24.45	1
Task	0	314	Update	11		21	B	18.36	1

Task	0	315	Interrupt	12				60	2
Task	0	316	Pass Info	11		2	A	18.48	2
Task	0	317	Listen Receive	12		3	A	18.48	2
Task	0	318	Read	12		19	B	0.7	2
Task	347	319	Branch						
Task	347	320	Scan Board	12		20	B	16.58	1
Task	347	321	Scan Map	12		20	B	4.02	1
Task	347	322	Scan DST	12		20	B	8.52	1
Task	347	323	Scan CEL	12		20	B	30.57	1
Task	347	324	Decide Action	12		11	C	0.07	2
Task	0	325	Estimate Impact	12		14	D	193.35	1
Task	346	326	Drop Message						
Task	0	327	Decide Action	12		11	C	0.28	2
Task	0	328	Interrupt RTO	9				60	
Task	0	329	Listen Receive	9		3	A	16.38	2
Task	0	330	Send Msg	9		7	A	21.77	2
Task	0	331	Interrupt NBCNCO	10				60	
Task	0	332	Listen Receive	10		3	A	16.38	2
Task	0	333	Send Bde Cmd Net	10		7	A	21.77	2
Task	0	334	Pass Info	12		2	A	16.38	2
Task	368	335	Go To Staff Huddle						
Task	0	336	NCO Listen/Monitor	11		24	A	24.94	
Task	0	337	BC Listen/Monitor	12		24	A	24.94	
Task	0	338	Receive and Record	10		1	A	0.42	2
Task	0	339	Interrupt	11				30	
Task	0	340	Pass Info	10		2	A	22.68	2
Task	368	341	Return From SH	12					
Task	0	342	Log	10		5	A	13.84	2
Task	0	343	to other sections						
Task	0	344	Interrupt S3NCO	11				60	
Task	0	345	Listen Receive	11		3	A	16.38	2
Netwrk	0	346	Prelim. Scan						
Netwrk	0	347	Officer Scan						
Task	347	348	End						
Task	0	349	Secondary Monitor	9		24	A		
Task	0	350	Check Status						
Task	0	351	XO Begin	13					
Task	0	352	Scan Board	13		20	B	16.58	1
Task	0	353	Scan Map	13		20	B	4.02	1
Task	0	354	Interrupt					60	
Task	0	355	Pass Info	13		2	A	1.68	2
Task	0	356	Listen Receive			3	A	1.68	2
Task	0	357	Discuss	13		18	C	45	2
Task	0	358	Discuss			18	C	45	2
Task	0	359	Estimate Impact	13		14	D	193.35	2
Task	369	360	Branch						
Task	369	361	Return from SH	13					
Task	0	362	Decide Action	13		11	C	0.28	2
Task	0	363	Interrupt	9				30	
Task	0	364	Pass Info	13		2	A	16.38	2
Task	0	365	Listen Receive	9		3	A	16.38	2
Task	0	366	Send Message	9		7	A	21.77	2
Task	0	367	XO Listen/Monitor	13		24	A	24.94	1
Netwrk	0	368	To Staff Huddle						
Netwrk	0	369	To Staff Huddle						
Task	0	400	Incoming message S4						
Task	0	401	S4NCO Receive and Record	15		1	A	0.42	2
Task	0	402	Interrupt	16				30	
Task	0	403	Pass Info	15		2	A	22.68	2
Task	0	404	Listen Receive	16		3	A	22.68	2
Task	0	405	Roll Up Reports	15		9	A	157	1
Task	0	406	S4 Read/Rpt Eval	16		19	B	63.9	1

Task	0	407	S4 Update	16		21	B	18.36	1
Task	0	408	S4 Estimate Impact	16		14	D	96.89	1
Task	0	410	Interrupt S4NCO	15				60	
Task	0	411	Pass Info	16		2	A	16.38	2
Task	0	412	Listen Receive	15		3	A	16.38	2
Task	0	413	S4NCO Send Msg	15		7	A	21.77	2
Task	0	501	Listen Net	18		24	A	0.42	2
Task	0	502	Interrupt	13				30	
Task	0	503	Pass Info	18		2	A	22.68	2
Task	0	504	Listen Receive	13		3	A	22.68	2
Task	0	505	Read	18		19	B	0.52	2
Task	515	506	Branch						
Task	515	507	Scan Board	18		20	B	16.58	1
Task	515	508	Scan Map	18		20	B	4.02	1
Task	515	509	Scan DST	18		20	B	8.52	1
Task	515	510	Scan CEL	18		20	B	30.57	1
Task	515	511	Decide Action	18		11	C	0.28	2
Task	0	512	Update	18		21	B	18.36	2
Task	0	513	Listen TF Net/Secondary Monitor	18		24	A	0.42	2
Task	515	514	Drop Msg						
Netwrk	0	515	ALO Scan						
Task	0	550	Incoming message AL						
Task	0	600	Incoming message FS						
Task	0	601	Receive and Record	20		1	A	0.42	2
Task	0	602	Interrupt	21				30	
Task	0	603	Pass Info	20		2	A	22.68	2
Task	0	604	Listen Receive	21		3	A	22.68	2
Task	0	605	Read	21		19	B	1.15	2
Task	0	606	Log	20		5	A	13.84	2
Task	646	607	Branch						
Task	646	608	Scan Board	21		20	B	16.58	1
Task	646	609	Scan Map	21		20	B	4.02	1
Task	646	610	Scan DST	21		20	B	8.52	1
Task	646	611	Scan CEL	21		20	B	30.57	1
Task	646	612	Decide Action	21		11	C	0.28	2
Task	0	613	Route	21		6	C	24.45	1
Task	0	614	Update	21		21	B	18.36	1
Task	646	615	End Msg						
Task	0	616	Estimate Impact	21		14	D	193.35	2
Task	647	617	Go to Staff Huddle						
Task	0	618	Decide Action	21		11	C	0.28	2
Task	0	619	Interrupt RTO	20				60	
Task	0	620	Listen Receive	20		3	A	16.38	2
Task	0	621	Pass Info	21		2	A	16.38	2
Task	0	622	Send Msg	20		7	A	21.77	2
Task	0	623	FSO Listen/Monitor	21		24	A	24.94	1
Task	0	624	to other sections						
Task	0	625	Enter Data From Voice	21		27	A	44.91	1
Task	0	626	Receive Digital Msg	21		26	A	1.52	2
Task	0	627	Monitor Digital	21		32	A		1
Task	0	628	Pull Up Msg	21		26	A	38.25	2
Task	0	629	Interrupt	21				60	
Task	0	630	Read Digital Msg	21		30	A	1.2	1
Task	0	631	Scan Digital	21		31	A	1.84	1
Task	0	632	Send Radio	21		7	A	21.77	2
Task	0	633	Get Out of Msg	21		27	A	2.84	2
Task	0	634	Estimate Msg Impact	21		14	A	3.19	2
Task	0	635	Estimate Impact of Fires	21		14	A	33.95	2
Task	0	636	Call for Fires	21		11	A	142.3	2
Task	0	637	Fix Unformatted	21		27	A	18.4	1
Task	0	638	Send Overlay	21		28	A	58.42	2
Task	0	639	Take Down and Pass	21		1	A	27.08	2

Task	0	640	Compose Digital Msg	21		27	A	43.36	2
Task	647	641	Return From SH						
Task	0	642	Send Digital	21		28	A	3.62	2
Task	0	643	Receive Digital - low priority	21		26	A	1.52	2
Task	0	644	Icon Mvt/Color Chg	21		26	A	5	2
Task	0	645	Secondary Monitor	20		24	A		
Netwrk	0	646	FSO Scan						
Netwrk	0	647	To Staff Huddle						
Task	0	650	Incoming Digital Msg						
Task	0	700	Incoming message EN						
Task	0	701	Receive and Record	24		1	A	0.42	2
Task	0	702	Interrupt	25				30	
Task	0	703	Pass Info	24		2	A	22.68	2
Task	0	704	Listen Receive	25		3	A	22.68	2
Task	0	705	Read	25		19	B	1.15	2
Task	0	706	Log	24		5	A	13.84	2
Task	716	707	Branch						
Task	716	708	Scan Board	25		20	B	16.58	1
Task	716	709	Scan Map	25		20	B	4.02	1
Task	716	710	Scan DST	25		20	B	8.52	1
Task	716	711	Scan CEL	25		20	B	30.57	1
Task	716	712	Decide Action	25		11	C	0.28	1
Task	0	713	Route	25		6	C	24.45	2
Task	0	714	Update	25		21	B	9.73	1
Task	716	715	Drop Msg						
Netwrk	0	716	Prelim. Scan						
Netwrk	0	717	To Staff Huddle						
Task	0	725	Estimate Impact	25		14	D	193.35	1
Task	717	735	Go to SH						
Task	717	741	Return From SH						
Task	0	742	Decide Action	25		11	C	0.28	2
Task	0	743	Listen Receive	24		3	A	16.38	2
Task	0	744	Send Msg	24		7	A	21.77	2
Task	0	745	Pass Info	25		2	A	16.38	2
Task	0	749	Interrupt RTO	24				60	
Task	0	751	ENO Listen/Monitor	25		24	A		0
Task	0	762	to other sections						
Task	0	800	Incoming message Cmd						
Task	0	801	Interrupt	29				60	
Task	0	802	Receive and Record	29		1	A	0.42	2
Task	830	803	Branch						
Task	830	804	Scan Board	29		20	B	16.58	1
Task	830	805	Scan Map	29		20	B	4.02	1
Task	830	806	Decide Action	29		11	C	0.07	1
Task	830	807	End						
Task	0	808	Estimate Impact	29		14	D	193.35	1
Task	0	809	Decide Action	29		11	C	0.14	1
Task	0	810	Update	29		21	B	9.73	1
Task	0	811	Send Msg	29		7	A	21.77	2
Task	0	812	Check Status	29		22	B	94.55	1
Task	0	813	Decide Action	29		11	C	15.3	
Task	0	814	Secondary Monitor	29		4	A		
Task	0	815	Ldr Listen/Monitor	27		24	A		0
Task	0	816	Interrupt	27				30	
Task	0	817	Pass Info	29		2	A	1.68	1
Task	0	818	Listen Receive	27		3	A	1.68	2
Task	0	819	Discuss	29		18	A	16	1
Task	0	820	Incoming message Bde Cmd						
Task	0	821	Gunner Receive	28		24	A		0
Task	0	822	Interrupt	29				30	
Task	0	823	Pass Info	28		2	A	1.68	2
Task	0	824	Listen Receive	29		3	A	1.68	2

Task	0	825	Receive and Record	29		1	A	0.42	2
Task	0	826	Discuss	27		18	A	16	2
Netwrk	0	830	Officer Scan						
Task	0	850	Incoming Int Trigger						
Task	0	900	Incoming message S3V						
Task	0	901	Interrupt	33				60	
Task	0	902	Receive and Record	33		1	A	0.42	2
Task	931	903	Branch						
Task	931	904	Scan Board	33		20	B	16.58	1
Task	931	905	Scan Map	33		20	B	4.02	1
Task	931	906	Decide Action	33		11	C	0.07	1
Task	931	907	End						
Task	0	908	Estimate Impact	33		14	D	193.35	2
Task	0	909	Decide Action	33		11	C	0.14	2
Task	0	910	Update	33		21	B	9.73	1
Task	0	911	Send Msg	33		7	A	21.77	2
Task	0	912	Check Status	33		22	B	94.55	2
Task	0	913	Decide Action	33		11	C	15.3	2
Task	0	914	Secondary Monitor	33		4	A		1
Task	0	915	Ldr Listen/Monitor	31		24	A		1
Task	0	916	Interrupt	31				30	
Task	0	917	Pass Info	33		2	A	1.68	2
Task	0	918	Listen Receive	31		3	A	1.68	2
Task	0	919	Discuss	33		18	A	16	2
Task	0	920	Incoming message Bde Cmd						
Task	0	921	Gunner Receive	32		24	A		2
Task	0	922	Interrupt	33				30	
Task	0	923	Pass Info	32		2	A	1.68	2
Task	0	924	Listen Receive	33		3	A	1.68	2
Task	0	925	Receive and Record	33		1	A		2
Task	0	926	Discuss	31		18	A	16	2
Netwrk	0	931	Officer Scan						
Task	0	950	Incoming Int Trigger						
Task	0	1001	Incoming Message						
Task	0	1002	End Incoming Messages						
Task	0	1003	Interrupt Data						
Task	0	1004	Message DJF Data						
Task	0	1005	End Message Data						
Task	0	1006	Utilization						
Netwrk	1999	1100	Call to conf						
Task	1100	1101	Begin SH						
Task	1100	1102	Interrupt XO	13				100000	
Task	1100	1103	Interrupt CMD	29				100000	
Task	1100	1104	Officer tells prob to XO			2	A	10.42	2
Task	1100	1105	XO listens	13		3	A	10.42	2
Task	1100	1106	Waiting to start SH						2
Task	1100	1107	Pass Info	13		2	A	16.8	2
Task	1100	1108	Listen Receive	29		3	A	16.8	2
Task	1100	1109	Discuss	13		18	A	69.16	2
Task	1100	1110	Discuss	29		18	A	69.16	2
Task	1100	1111	decide who comes	13		11	A	0.07	2
Task	1100	1112	XO int. S2O	6				100000	2
Task	1100	1113	XO int. BC	12				100000	2
Task	1100	1114	XO int. FSO	21				100000	2
Task	1100	1115	XO int. ALO	18				100000	2
Task	1100	1116	XO int ENO	25				100000	2
Task	1100	1117	Waiting for all SH parties						2
Netwrk	1999	1200	Problem definition						
Task	1200	1201	start						
Task	1200	1202	XO Problem definition	13		23	B	56.54	2
Task	1200	1203	BC Problem definition	12		23	B	56.54	2
Task	1200	1204	S2O Problem definition	6		23	B	56.54	2

Task	1200	1205	FSO Problem definition	21		23	B	56.54	2
Task	1200	1206	ALO Problem definition	18		23	B	56.54	2
Task	1200	1207	ENO Problem definition	25		23	B	56.54	2
Netwrk	1999	1300	Data Gathering						
Task	1300	1301	Branch						
Task	1300	1302	XO Data Gathering	13		15	A	47.08	2
Task	1300	1303	BC Data Gathering	12		15	A	47.08	2
Task	1300	1304	S2O Data Gathering	6		15	A	47.08	2
Task	1300	1305	FSO Data Gathering	21		15	A	47.08	2
Task	1300	1306	ALO Data Gathering	18		15	A	47.08	2
Task	1300	1307	ENO Data Gathering	25		15	A	47.08	2
Netwrk	1999	1400	Find Options						
Task	1400	1401	begin find options						
Task	1400	1402	XO find options	13		16	D	203.24	2
Task	1400	1403	BC find options	12		16	D	203.24	2
Task	1400	1404	S2O find options	6		16	D	203.24	2
Task	1400	1405	FSO find options	21		16	D	203.24	2
Task	1400	1406	ALO find options	18		16	D	203.24	2
Task	1400	1407	ENO find options	25		16	D	203.24	2
Netwrk	1999	1500	Compare Alternatives						
Task	1500	1501	begin compare alternatives						
Task	1500	1502	XO compare alternatives	13		17	D	170.82	2
Task	1500	1503	BC compare alternatives	12		17	D	170.82	2
Task	1500	1504	S2O compare alternatives	6		17	D	170.82	2
Task	1500	1505	FSO compare alternatives	21		17	D	170.82	2
Task	1500	1506	ALO compare alternatives	18		17	D	170.82	2
Task	1500	1507	ENO compare alternatives	25		17	D	170.82	2
Netwrk	1999	1600	Decide						
Task	1600	1601	begin decide						
Task	1600	1602	XO decide	13		12	D	74.65	2
Task	1600	1603	BC decide	12		12	D	74.65	2
Task	1600	1604	S2O decide	6		12	D	74.65	2
Task	1600	1605	FSO decide	21		12	D	74.65	2
Task	1600	1606	ALO decide	18		12	D	74.65	2
Task	1600	1607	ENO decide	25		12	D	74.65	2
Netwrk	1999	1700	Recommend Action						
Task	1700	1701	Interrupt CMD	29				100000	
Task	1700	1702	Pass Info	13		2	C	16.8	2
Task	1700	1703	Discuss	13		18	C	70.84	2
Task	1700	1704	Listen Receive	29		3	C	16.8	2
Task	1700	1705	Discuss	29		18	C	70.84	2
Netwrk	1999	1800	Plans & Orders						
Task	1800	1801	begin plans& orders						
Task	1800	1802	XO replies	13		2	C	22.73	2
Task	1800	1803	BC listens	12		3	C	22.73	2
Task	1800	1804	S2O listens	6		3	C	22.73	2
Task	1800	1805	FSO listens	21		3	C	22.73	2
Task	1800	1806	ALO listens	18		3	C	22.73	2
Task	1800	1807	ENO listens	25		3	C	22.73	2
Netwrk	0	1999	Staff Huddle						
Task	0	Analog	NOTES						

Digital Model

Task/ Network	Upper Network	Number	Name	Operator1	Operator2	Function	WtFac	Mean/ Wait Time	Interrupt Type
Task	0	1	S1NCO						
Task	0	2	S1						
Task	0	4	S2RTO						
Task	0	5	S2NCO						
Task	0	6	S2O						
Task	0	7	S2A						
Task	0	9	S3RTO						
Task	0	10	NBCNCO						
Task	0	11	S3NCO						
Task	0	12	BC						
Task	0	13	XO						
Task	0	15	S4NCO						
Task	0	16	S4						
Task	0	18	ALO						
Task	0	20	FSRTO						
Task	0	21	FSO						
Task	0	24	ENRTO						
Task	0	25	ENO						
Task	0	27	Loader						
Task	0	28	Gunner						
Task	0	29	CMD						
Task	0	31	Loader						
Task	0	32	Gunner						
Task	0	33	S3V						
Task	0	100	Incoming message S1						
Task	0	101	S1NCO Receive and Record	1		1	A	0.42	2
Task	0	102	Interrupt	2				30	
Task	0	103	Pass Info	1		2	A	22.68	2
Task	0	104	Listen Receive	2		3	A	22.68	2
Task	0	106	S1 Read	2		19	B	0.7	1
Task	0	107	S1 Estimate Impact	2		14	D	193.35	1
Task	0	109	Interrupt S1NCO	1				60	
Task	0	110	Pass Info	2		2	A	22.68	2
Task	0	111	Listen Receive	1		3	A	22.68	2
Task	0	112	S1NCO Send Msg	1		7	A	21.77	2
Task	0	113	S1 L/M TF Net	2		24	A		
Task	125	114	Branch						
Task	125	115	Scan Board	2		20	B	16.58	1
Task	125	116	Scan Map	2		20	B	4.02	1
Task	125	119	Decide Action	2		11	C	0.28	1
Task	125	120	End						
Task	0	121	Update	2		21	B	18.36	1
Task	0	122	Estimate Impact	2		14	D	98.1	1
Netwrk	0	125	S1 Scan						
Task	0	150	Internal Trigger						
Task	0	151	S1 Begin	2					
Task	0	152	Interrupt					30	2
Task	0	153	Pass Info	2		2	A	1.68	2
Task	0	154	Listen Receive			3	A	1.68	2
Task	0	155	Discuss	2		18	C	45	2
Task	0	156	Discuss			18	C	45	2
Task	0	200	Incoming message S2						
Task	0	201	Receive and Record	4		1	A	0.42	2

Digital Model

Task	0	202	Interrupt S2NCO	5				60	
Task	0	203	Listen Receive	5		3	A	16.38	2
Task	0	204	Compose Digital Msg	5		27	A	43.36	1
Task	0	205	Send Digital	5		28		3.62	2
Task	0	206	Log	4		5	A	13.84	1
Task	0	207	Interrupt	6	7			60	
Task	0	208	Pass Info	5		2	A	16.38	2
Task	264	213	Route	6	7	6	C	24.45	2
Task	0	214	Update	6	7	21	B	18.36	1
Task	0	215	Interrupt	6	7			60	
Task	0	216	Pass Info	4		2	A	22.68	2
Task	0	217	Listen Receive	6	7	3	A	22.68	2
Task	0	218	Read	6	7	19	B	0.7	1
Task	264	219	Branch						
Task	264	220	Scan Board	6	7	20	B	16.58	1
Task	264	221	Scan Map	6	7	20	B	4.02	1
Task	264	222	Scan DST	6	7	20	B	8.52	1
Task	264	223	Scan CEL	6	7	20	B	30.57	1
Task	264	224	Decide Action	6	7	11	C	0.28	1
Task	0	225	Estimate Impact	6	7	14	D	267.16	2
Task	265	226	Begin Dual Est Impact	6					
Task	265	227	Pass Info	7		2	D	33.6	2
Task	265	228	Listen Receive	6		3	D	33.6	2
Task	265	229	Discuss	6		18	D	102.3	2
Task	265	230	Discuss	7		18	D	102.3	2
Task	265	231	Estimate Impact	6		14	D	72	2
Task	265	232	Estimate Impact	7		14	D	72	2
Task	265	233	Discuss	6		18	D	80	2
Task	265	234	Discuss	7		18	D	80	2
Task	266	235	Branch						
Task	266	236	Interrupt	6				100000	
Task	266	237	Pass Info	7		2	A	3.5	2
Task	266	238	Listen Receive	6		3	A	3.5	2
Task	266	239	Discuss	7		18	D	140.8	2
Task	266	240	Discuss	6		18	D	140.8	2
Task	266	241	Return From SH	6					2
Task	0	242	Decide Action	6	7	11	C	0.28	2
Task	0	243	Listen Receive	4		3	A	16.38	2
Task	0	244	Send Msg	4		7	A	21.77	2
Task	0	245	Pass Info	6	7	2	A	16.38	2
Task	0	246	Listen Receive	7		3	A	16.38	2
Task	264	247	Is S2 or S2A avail?					60	
Task	264	248	End						
Task	0	249	Interrupt RTO	4				60	
Task	0	250	Interrupt S2A	7				60	
Task	0	252	S2A Listen/Monitor	7		24	A		0
Task	0	253	S2O Listen/Monitor	6		24	A		0
Task	0	255	Secondary Monitor	4		4	A		0
Task	0	262	to other sections						
Netwrk	0	264	Officer Scan						
Netwrk	0	265	Dual Est Imp						
Netwrk	0	266	To Staff Huddle						
Task	0	270	Incoming ASAS						
Task	0	271	Interrupt	5				60	
Task	0	272	Pull Up Msg	5		27	A	38.25	1
Task	0	273	Receive Digital - low priority	5		26	A	1.52	2

Digital Model

Task	0	274	Icon Mvt/Color Chg	5					
Task	0	275	Monitor Digital	5		32	A		1
Task	0	277	Read Digital Msg	5		30	C	59.82	1
Task	0	278	Enter Data From Voice	5		27	A	44.91	1
Task	0	279	Scan Digital	5		31	A	1.84	1
Task	0	280	Internal Trigger						
Task	0	281	S2O Begin	6					2
Task	0	282	Interrupt						
Task	0	283	Pass Info	6		2	A	16.38	2
Task	0	284	Listen Receive			3	A	16.38	2
Task	0	285	Discuss	6		18	C	15	2
Task	0	286	Discuss			18	C	15	2
Task	0	290	Estimate Msg Impact	5		14	D	3.19	1
Task	0	291	Fix Unformatted	5		27	A	18.4	1
Task	0	292	Send Overlay	5		27	A	58.42	2
Task	0	293	Take Down and Pass	5		5	A	27.08	1
Task	0	294	Get Out of Msg	5		27	A	2.84	2
Task	0	295	Send Radio	5		7	A	21.77	2
Task	0	300	Incoming message S3						
Task	0	301	Receive and Record	9		1	A	0.42	2
Task	0	302	Interrupt	11				30	
Task	0	303	Pass Info	9		2	A	22.68	2
Task	0	304	Listen Receive	11		3	A	22.68	2
Task	0	305	Read	11		19	B	0.7	1
Task	0	306	Log	9		5	A	13.84	2
Task	346	307	Branch						
Task	346	308	Scan Board	11		20	B	16.58	1
Task	346	309	Scan Map	11		20	B	4.02	1
Task	346	310	Scan DST	11		20	B	8052	1
Task	346	311	Scan CEL	11		20	B	30.57	1
Task	346	312	Decide Action	11		11	C	0.28	1
Task	0	313	Route	11		6	C	24.45	2
Task	0	314	Update	11		21	B	18.36	1
Task	0	315	Interrupt	12				60	
Task	0	316	Pass Info	11		2	A	18.48	2
Task	0	317	Listen Receive	12		3	A	18.48	2
Task	0	318	Read	12		19	B	0.7	1
Task	347	319	Branch						
Task	347	320	Scan Board	12		20	B	16.58	1
Task	347	321	Scan Map	12		20	B	4.02	1
Task	347	322	Scan DST	12		20	B	8052	1
Task	347	323	Scan CEL	12		20	B	30.57	1
Task	347	324	Decide Action	12		11	C	0.07	1
Task	0	325	Estimate Impact	12		14	D	193.35	1
Task	346	326	Message End						
Task	0	327	Decide Action	12		11	C	0.28	2
Task	0	328	Interrupt RTO	9				60	
Task	0	329	Listen Receive	9		3	A	16.38	2
Task	0	330	Send Msg	9		7	A	21.77	2
Task	0	331	Interrupt NBCNCO	10					
Task	0	332	Listen Receive	10		3	A	16.38	2
Task	0	334	Pass Info			2	A	16.38	2
Task	368	335	Go To Staff Huddle	12					
Task	0	336	NCO Listen/Monitor	11		24	A		
Task	0	337	BC Listen/Monitor	12		24	A		
Task	0	338	Interrupt	11				60	

Task	0	339	Pass Info	10		2	A	16.38	2
Task	368	341	Return From SH	12					
Task	0	343	to other sections						
Task	0	344	Interrupt S3NCO	11				60	
Task	0	345	Listen Receive	11		3	A	16.38	2
Netwrk	0	346	Prelim. Scan						
Netwrk	0	347	Officer Scan						
Task	347	348	End						
Task	0	349	Secondary Monitor	9		4	A		
Netwrk	0	368	To Staff Huddle						
Task	0	370	Incoming MCS						
Task	0	371	Interrupt	10				60	
Task	0	372	Recieve Digital - now	10		26	A	1.52	2
Task	0	373	Receive Digital - low priority	10		26	A	1.52	2
Task	0	374	Icon Mvt/Color Chg	10					
Task	0	375	Monitor Digital	10		32	A		1
Task	0	376	Pull Up Msg	10		27	A	38.25	1
Task	0	377	Read Digital Msg	10		30	B	59.82	1
Task	0	378	Enter Data From Voice	10		27	A	44.91	1
Task	0	379	Scan Digital	10		31	A	1.84	1
Task	0	380	Internal Trigger						
Task	0	381	BC Begin	12					2
Task	0	382	Interrupt						
Task	0	383	Pass Info	12		2	A	16.38	2
Task	0	384	Listen Receive			3	A	16.38	2
Task	0	385	Discuss	12		18	D	15	2
Task	0	386	Discuss			18	D	15	2
Task	0	387	Compose Digital Msg	10		27	A	43.36	1
Task	0	388	Send Digital	10		28	A	3.62	2
Task	0	390	Estimate Msg Impact	10		14	D	3.19	1
Task	0	391	Fix Unformatted	10		27	A	18.4	1
Task	0	392	Send Overlay	10		27	A	58.42	2
Task	0	393	Take Down and Pass	10		5	A	27.08	1
Task	0	394	Get Out of Msg	10		27	A	2.84	2
Task	0	395	Send Radio	10		7	A	21.77	2
Task	0	400	Incoming message S4						
Task	0	401	S1NCO Receive and Record	1		1	A	0.42	2
Task	0	402	Interrupt	16				30	
Task	0	403	Pass Info	1		2	A	22.68	2
Task	0	404	Listen Receive	16		3	A	22.68	2
Task	0	406	S4 Read	16		19	B	0.7	1
Task	0	407	S4 Update	16		21	B	18.36	1
Task	0	408	S4 Estimate Impact	16		14	D	3.19	1
Task	0	410	Interrupt S4NCO	15				30	
Task	0	411	Pass Info	16		2	A	22.68	2
Task	0	412	Listen Receive	15		3	A	22.68	2
Task	0	413	Compose Digital	15		27	A	43.36	1
Task	0	414	Send Digital Msg	15		28	A	3.62	2
Task	0	418	S4 Icon Movement						
Task	0	419	S4NCO Receive Digital - now	15		26	A	1.52	2
Task	0	420	Incoming CSSCS						
Task	0	421	S4NCO Receive Digital	15		26	A	1.52	2
Task	0	422	Pull Up Msg	15		27	A	38.25	1
Task	0	423	Read Digital Msg	15		30	B	59.82	1
Task	0	424	Roll Up Reports	15		27	A	20.45	2
Task	0	425	Scan Digital for Info	15		31	A	1.84	1

Digital Model

Task	0	426	S4NCO Send Message	15		28	A	3.62	2
Task	0	427	Estimate Msg Impact	15		14	D	3.19	1
Task	0	428	Fix Unformatted	15		27	A	18.4	1
Task	0	429	Take Down and Pass	15		5	A	27.08	1
Task	0	430	Get Out of Msg	15		27	A	2.84	2
Task	0	431	Monitor Digital	15		32	A		
Task	0	432	S4NCO Enter Data From Voice	15		27	A	44.91	1
Task	0	450	Internal Trigger						
Task	0	451	S4 Begin	16					
Task	0	452	Interrupt					30	2
Task	0	453	Pass Info	16		2	A	1.68	2
Task	0	454	Listen Receive			3	A	1.68	2
Task	0	455	Discuss	16		18	C	45	2
Task	0	456	Discuss			18	C	45	2
Task	0	501	Listen Net	18		24	A	0.42	2
Task	0	502	Interrupt	13				30	
Task	0	503	Pass Info	18		2	A	22.68	2
Task	0	504	Listen Receive	13		3	A	22.68	2
Task	0	505	Read	18		19	B	0.52	2
Task	515	506	Branch						
Task	515	507	Scan Board	18		20	B	16.58	1
Task	515	508	Scan Map	18		20	B	4.02	1
Task	515	509	Scan DST	18		20	B	8.52	1
Task	515	510	Scan CEL	18		20	B	30.57	1
Task	515	511	Decide Action	18		11	C	0.28	2
Task	0	512	Update	18		21	B	18.36	2
Task	0	513	Listen TF Net/Secondary Monitor	18		24	A	0.42	2
Task	515	514	Drop Msg						
Netwrk	0	515	ALO Scan						
Task	0	516	ALO Send	18		7	A	21.77	2
Task	0	550	Incoming message AL						
Task	0	600	Incoming message FS						
Task	0	601	Receive and Record	20		1	A	0.42	2
Task	0	602	Interrupt	21				30	
Task	0	603	Pass Info	20		2	A	22.68	2
Task	0	604	Listen Receive	21		3	A	22.68	2
Task	0	605	Read	21		19	B	1.15	2
Task	0	606	Log	20		5	A	13.84	2
Task	646	607	Branch						
Task	646	608	Scan Board	21		20	B	16.58	1
Task	646	609	Scan Map	21		20	B	4.02	1
Task	646	610	Scan DST	21		20	B	8.52	1
Task	646	611	Scan CEL	21		20	B	30.57	1
Task	646	612	Decide Action	21		11	C	0.28	2
Task	0	613	Route	21		6	C	24.45	1
Task	0	614	Update	21		21	B	18.36	1
Task	646	615	End Msg						
Task	0	616	Estimate Impact	21		14	D	193.35	2
Task	647	617	Go to Staff Huddle						
Task	0	618	Decide Action	21		11	C	0.28	2
Task	0	619	Interrupt RTO	20				60	
Task	0	620	Listen Receive	20		3	A	16.38	2
Task	0	621	Pass Info	21		2	A	16.38	2
Task	0	622	Send Msg	20		7	A	21.77	2
Task	0	623	FSO Listen/Monitor	21		24	A	24.94	1
Task	0	624	to other sections						

Digital Model

Task	0	625	Enter Data From Voice	21		27	A	44.91	1
Task	0	626	Receive Digital Msg	21		26	A	1.52	2
Task	0	627	Monitor Digital	21		32	A		1
Task	0	628	Pull Up Msg	21		26	A	38.25	2
Task	0	629	Interrupt	21				60	
Task	0	630	Read Digital Msg	21		30	A	1.2	1
Task	0	631	Scan Digital	21		31	A	1.84	1
Task	0	632	Send Radio	21		7	A	21.77	2
Task	0	633	Get Out of Msg	21		27	A	2.84	2
Task	0	634	Estimate Msg Impact	21		14	A	3.19	2
Task	0	635	Estimate Impact of Fires	21		14	A	33.95	2
Task	0	636	Call for Fires	21		11	A	142.3	2
Task	0	637	Fix Unformatted	21		27	A	18.4	1
Task	0	638	Send Overlay	21		28	A	58.42	2
Task	0	639	Take Down and Pass	21		1	A	27.08	2
Task	0	640	Compose Digital Msg	21		27	A	43.36	2
Task	647	641	Return From SH						
Task	0	642	Send Digital	21		28	A	3.62	2
Task	0	643	Receive Digital - low priority	21		26	A	1.52	2
Task	0	644	Icon Mvt/Color Chg	21		26	A	5	2
Task	0	645	Secondary Monitor	20		4	A		
Netwrk	0	646	FSO Scan						
Netwrk	0	647	To Staff Huddle						
Task	0	650	Incoming Digital Msg						
Task	0	660	Internal Trigger						
Task	0	661	FSO Begin	21					
Task	0	662	Interrupt					30	2
Task	0	663	Pass Info	21		2	A	1.68	2
Task	0	664	Listen Receive			3	A	1.68	2
Task	0	665	Discuss	21		18	C	45	2
Task	0	666	Discuss			18	C	45	2
Task	0	700	Incoming message EN						
Task	0	701	Receive and Record	24		1	A	0.42	2
Task	0	702	Interrupt	25				30	
Task	0	703	Pass Info	24		2	A	22.68	2
Task	0	704	Listen Receive	25		3	A	22.68	2
Task	0	705	Read	25		19	B	1.15	2
Task	0	706	Log	24		5	A	13.84	2
Task	716	707	Branch						
Task	716	708	Scan Board	25		20	B	16.58	1
Task	716	709	Scan Map	25		20	B	4.02	1
Task	716	710	Scan DST	25		20	B	8.52	1
Task	716	711	Scan CEL	25		20	B	30.57	1
Task	716	712	Decide Action	25		11	C	0.28	1
Task	0	713	Route	25		6	C	24.45	2
Task	0	714	Update	25		21	B	9.73	1
Task	716	715	Drop Msg						
Netwrk	0	716	Prelim. Scan						
Netwrk	0	717	To Staff Huddle						
Task	0	725	Estimate Impact	25		14	D	193.35	1
Task	717	735	Go to SH	25					
Task	717	741	Return From SH	25					
Task	0	742	Decide Action	25		11	C	0.28	2
Task	0	743	Listen Receive	24		3	A	16.38	2
Task	0	744	Send Msg	24		7	A	21.77	2
Task	0	745	Pass Info	25		2	A	16.38	2

Task	0	746	to other sections						
Task	0	749	Interrupt RTO	24				60	
Task	0	750	Incoming FBCB2 Msg						
Task	0	751	ENO Listen/Monitor	25		24	A		0
Task	0	760	Internal Trigger						
Task	0	761	EN Begin	25					
Task	0	762	Interrupt					60	
Task	0	763	Pass Info	25		2	A	16.38	2
Task	0	764	Listen Receive			3	A	16.38	2
Task	0	765	Discuss	25		18	A	15	2
Task	0	766	Discuss			18	A	15	2
Task	0	775	Enter Data From Voice	25		27	A	44.91	1
Task	0	776	Receive Digital Msg	25		31	A	1.52	2
Task	0	777	Monitor Digital	25		32	A		1
Task	0	778	Pull Up Msg	25		27	A	38.25	1
Task	0	779	Interrupt	25				60	
Task	0	780	Read Digital Msg	25		30	B	59.82	1
Task	0	781	Scan Digital	25		31	A	1.84	1
Task	0	782	Send Radio	25		7	A	21.77	2
Task	0	783	Get Out of Msg	25		27	A	2.84	2
Task	0	784	Estimate Msg Impact	25		11	D	3.19	1
Task	0	787	Fix Unformatted	25		27	A	18.4	1
Task	0	788	Send Overlay	25		27	A	58.42	1
Task	0	790	Compose Digital Msg	25		28	A	43.36	1
Task	0	792	Send Digital	25		27	A	3.62	1
Task	0	793	Receive Digital - low priority	25		31	A	1.52	2
Task	0	794	Icon Mvt/Color Chg						
Task	0	800	Incoming message Cmd						
Task	0	801	Interrupt	29					
Task	0	802	Receive and Record	29		1	A	0.42	2
Task	830	803	Branch						
Task	830	804	Scan Board	29		20	B	16.58	1
Task	830	805	Scan Map	29		20	B	4.02	1
Task	830	806	Decide Action	29		11	C	0.28	1
Task	830	807	End						
Task	0	808	Estimate Impact	29		14	D	193.36	1
Task	0	809	Decide Action	29		11	C	0.07	1
Task	0	810	Update	29		21	B	18.36	1
Task	0	811	Send Msg	29		7	A	21.77	2
Task	0	812	Check Status	29		22	B	94.55	1
Task	0	813	Decide Action	29		11	C	15.3	1
Task	0	814	Secondary Monitor	29		4	A		0
Task	0	815	Ldr Listen/Monitor	27		24	A		0
Task	0	816	Interrupt	27				60	
Task	0	817	Pass Info	29		2	A	1.68	2
Task	0	818	Listen Receive	27		3	A	1.68	2
Task	0	819	Discuss	29		18	A	16	2
Task	0	820	Incoming message Bde Cmd						
Task	0	821	Gunner Receive	28		1	A	1.68	2
Task	0	822	Interrupt	29					
Task	0	823	Pass Info	28		2	A	1.68	2
Task	0	824	Listen Receive	29		3	A	1.68	2
Task	0	825	Receive and Record	29		1	A	0.42	2
Task	0	826	Discuss	27		18	A	16	2
Netwrk	0	830	Officer Scan						
Task	0	850	Incoming Int Trigger						

Digital Model

Task	0	860	Internal Trigger						
Task	0	861	CDR Begin	29					2
Task	0	862	Interrupt						
Task	0	863	Pass Info	29		2	A	16.38	2
Task	0	864	Listen Receive			3	A	16.38	2
Task	0	865	Discuss	29		18	A	15	2
Task	0	866	Discuss			18	A	15	2
Task	0	870	Incoming FBCB2 Msg						
Task	0	871	Receive Digital Msg	29		26	A	1.52	2
Task	0	872	Monitor Digital	29		32	A		1
Task	0	873	Pull Up Msg	29		27	A	38.25	1
Task	0	874	Interrupt	29				100	
Task	0	875	Read Digital Msg	29		30	B	59.82	1
Task	0	876	Scan Digital	29		31	A	1.84	1
Task	0	877	Send Radio	29		7	A	21.77	2
Task	0	878	Get Out of Msg	29		27	A	2.84	2
Task	0	879	Estimate Msg Impact	29		14	D	3.19	1
Task	0	880	Fix Unformatted	29		27	A	18.4	1
Task	0	881	Send Overlay	29		27	A	58.42	2
Task	0	882	Compose Digital Msg	29		27	A	43.36	1
Task	0	883	Send Digital	29		28	A	3.62	2
Task	0	884	Receive Digital - low priority	29		26	A	1.52	2
Task	0	885	Icon Mvt/Color Chg	29					
Task	0	900	Incoming message S3V						
Task	0	901	Interrupt	33					
Task	0	902	Receive and Record	33		1	A	0.42	2
Task	931	903	Branch						
Task	931	904	Scan Board	33		20	B	16.58	1
Task	931	905	Scan Map	33		20	B	4.02	1
Task	931	906	Decide Action	33		11	C	0.28	1
Task	931	907	End						
Task	0	908	Estimate Impact	33		14	D	193.36	1
Task	0	909	Decide Action	33		11	C	0.07	1
Task	0	910	Update	33		21	B	18.36	1
Task	0	911	Send Msg	33		7	A	21.77	2
Task	0	912	Check Status	33		22	B	94.55	1
Task	0	913	Decide Action	33		11	C	15.3	1
Task	0	914	Secondary Monitor	33		4	A		0
Task	0	915	Ldr Listen/Monitor	31		24	A		0
Task	0	916	Interrupt	31				60	
Task	0	917	Pass Info	33		2	A	1.68	2
Task	0	918	Listen Receive	31		3	A	1.68	2
Task	0	919	Discuss	33		18	A	16	2
Task	0	920	Incoming message Bde Cmd						
Task	0	921	Gunner Receive	32		1	A	1.68	2
Task	0	922	Interrupt	33					
Task	0	923	Pass Info	32		2	A	1.68	2
Task	0	924	Listen Receive	33		3	A	1.68	2
Task	0	925	Receive and Record	33		1	A	0.42	2
Task	0	926	Discuss	31		18	A	16	2
Netwrk	0	931	Officer Scan						
Task	0	950	Incoming Int Trigger						
Task	0	960	Internal Trigger						
Task	0	961	S3V Begin	33					2
Task	0	962	Interrupt						
Task	0	963	Pass Info	33		2	A	16.38	2

Digital Model

Task	0	964	Listen Receive			3	A	16.38	2
Task	0	965	Discuss	33		18	A	15	2
Task	0	966	Discuss			18	A	15	2
Task	0	970	Incoming FBCB2 Msg						
Task	0	971	Receive Digital Msg	33		26	A	1.52	2
Task	0	972	Monitor Digital	33		32	A		1
Task	0	973	Pull Up Msg	33		27	A	38.25	1
Task	0	974	Interrupt	33				100	
Task	0	975	Read Digital Msg	33		30	B	59.82	1
Task	0	976	Scan Digital	33		31	A	1.84	1
Task	0	977	Send Radio	33		7	A	21.77	2
Task	0	978	Get Out of Msg	33		27	A	2.84	2
Task	0	979	Estimate Msg Impact	33		14	D	3.19	1
Task	0	980	Fix Unformatted	33		27	A	18.4	1
Task	0	981	Send Overlay	33		27	A	58.42	2
Task	0	982	Compose Digital Msg	33		27	A	43.36	1
Task	0	983	Send Digital	33		28	A	3.62	2
Task	0	984	Receive Digital - low priority	33		26	A	1.52	2
Task	0	985	Icon Mvt/Color Chg	33					
Task	0	1001	Incoming Message						
Task	0	1002	End Incoming Messages						
Task	0	1003	Interrupt Data						
Task	0	1004	Message DJF Data - Start						
Task	0	1005	End Message Data						
Task	0	1006	Utilization						
Task	0	1007	Message DJF Data - End						
Netwrk	1999	1100	Call to conf						
Task	1100	1101	Begin SH						
Task	1100	1102	Interrupt XO	13				100000	
Task	1100	1103	Interrupt CMD	29				100000	
Task	1100	1104	Officer tells prob to XO			2	A	10.42	2
Task	1100	1105	XO listens	13		3	A	10.42	2
Task	1100	1106	Waiting to start SH						2
Task	1100	1107	Pass Info	13		2	A	16.8	2
Task	1100	1108	Listen Receive	29		3	A	16.8	2
Task	1100	1109	Discuss	13		18	A	69.16	2
Task	1100	1110	Discuss	29		18	A	69.16	2
Task	1100	1111	decide who comes	13		11	A	0.07	2
Task	1100	1112	XO int. S2O	6				100000	2
Task	1100	1113	XO int. BC	12				100000	2
Task	1100	1114	XO int. FSO	21				100000	2
Task	1100	1115	XO int. ALO	18				100000	2
Task	1100	1116	XO int ENO	25				100000	2
Task	1100	1117	Waiting for all SH parties						2
Netwrk	1999	1200	Problem definition						
Task	1200	1201	start						
Task	1200	1202	XO Problem definition	13		23	B	56.54	2
Task	1200	1203	BC Problem definition	12		23	B	56.54	2
Task	1200	1204	S2O Problem definition	6		23	B	56.54	2
Task	1200	1205	FSO Problem definition	21		23	B	56.54	2
Task	1200	1206	ALO Problem definition	18		23	B	56.54	2
Task	1200	1207	ENO Problem definition	25		23	B	56.54	2
Netwrk	1999	1300	Data Gathering						
Task	1300	1301	Branch						
Task	1300	1302	XO Data Gathering	13		29	A	47.08	2
Task	1300	1303	BC Data Gathering	12		29	A	47.08	2

Task	1300	1304	S2O Data Gathering	6		29	A	47.08	2
Task	1300	1305	FSO Data Gathering	21		29	A	47.08	2
Task	1300	1306	ALO Data Gathering	18		29	A	47.08	2
Task	1300	1307	ENO Data Gathering	25		29	A	47.08	2
Netwrk	1999	1400	Find Options						
Task	1400	1401	begin find options						
Task	1400	1402	XO find options	13		16	D	203.24	2
Task	1400	1403	BC find options	12		16	D	203.24	2
Task	1400	1404	S2O find options	6		16	D	203.24	2
Task	1400	1405	FSO find options	21		16	D	203.24	2
Task	1400	1406	ALO find options	18		16	D	203.24	2
Task	1400	1407	ENO find options	25		16	D	203.24	2
Netwrk	1999	1500	Compare Alternatives						
Task	1500	1501	begin compare alternatives						
Task	1500	1502	XO compare alternatives	13		17	D	170.82	2
Task	1500	1503	BC compare alternatives	12		17	D	170.82	2
Task	1500	1504	S2O compare alternatives	6		17	D	170.82	2
Task	1500	1505	FSO compare alternatives	21		17	D	170.82	2
Task	1500	1506	ALO compare alternatives	18		17	D	170.82	2
Task	1500	1507	ENO compare alternatives	25		17	D	170.82	2
Netwrk	1999	1600	Decide						
Task	1600	1601	begin decide						
Task	1600	1602	XO decide	13		12	D	74.65	2
Task	1600	1603	BC decide	12		12	D	74.65	2
Task	1600	1604	S2O decide	6		12	D	74.65	2
Task	1600	1605	FSO decide	21		12	D	74.65	2
Task	1600	1606	ALO decide	18		12	D	74.65	2
Task	1600	1607	ENO decide	25		12	D	74.65	2
Netwrk	1999	1700	Recommend Action						
Task	1700	1701	Interrupt CMD	29				100000	
Task	1700	1702	Pass Info	13		2	C	16.8	2
Task	1700	1703	Discuss	13		18	C	70.84	2
Task	1700	1704	Listen Receive	29		3	C	16.8	2
Task	1700	1705	Discuss	29		18	C	70.84	2
Netwrk	1999	1800	Plans & Orders						
Task	1800	1801	begin plans& orders						
Task	1800	1802	XO replies	13		2	C	22.73	2
Task	1800	1803	BC listens	12		3	C	22.73	2
Task	1800	1804	S2O listens	6		3	C	22.73	2
Task	1800	1805	FSO listens	21		3	C	22.73	2
Task	1800	1806	ALO listens	18		3	C	22.73	2
Task	1800	1807	ENO listens	25		3	C	22.73	2
Netwrk	0	1999	Staff Huddle						
Task	0	3000	Check Status						
Task	0	3001	XO Begin	13					
Task	0	3002	Scan Board	13		20	B	16.58	1
Task	0	3003	Scan Map	13		20	B	4.02	1
Task	0	3004	Interrupt					60	
Task	0	3005	Pass Info	13		2	A	1.68	2
Task	0	3006	Listen Receive			3	A	1.68	2
Task	0	3007	Discuss	13		18	A	45	2
Task	0	3008	Discuss			18	A	45	2
Task	0	3009	Estimate Impact	13		14	D	193.35	1
Task	0	3010	Decide Action	13		11	C	0.28	1
Task	0	3011	Send Message	13		7	A	21.77	2
Task	0	3012	XO Listen/Monitor	13		24	A		0

Digital Model

Task	0	3013	Interrupt	13				100	
Task	0	3014	Receive Digital Msg	13		26	A	1.52	2
Task	0	3015	Receive Digital - low priority	13		26	A	1.52	2
Task	0	3016	Icon Mvt/Color Chg	13					
Task	0	3017	Monitor Digital	13		32	A		1
Task	0	3018	Pull Up Msg	13		27	A	38.25	1
Task	0	3019	Read Digital Msg	13		30	B	59.82	1
Task	0	3020	Estimate Msg Impact	13		14	D	3.19	1
Task	0	3021	Fix Unformatted	13		27	A	18.4	1
Task	0	3022	Send Overlay	13		27	A	58.42	2
Task	0	3023	Scan Digital	13		31	A	1.84	1
Task	0	3024	Send Radio	13		7	A	21.77	2
Task	0	3025	Get Out of Msg	13		27	A	2.84	2
Task	0	3026	Compose Digital Msg	13		27	A	43.36	1
Task	0	3027	Send Digital	13		28	A	3.62	2
Task	0	3050	Incoming FBCB2 Msg						
Task	0	Tradiational	NOTES						

Appendix E. Time Degradation Factors

				Time Degradation Factors								
Detailed Job Function	**Scenario Hour 0-1**	**Scenario Hour 1-2**	**Scenario Hour 2-3**	**Scenario Hour 3-4**	**Scenario Hour 4-5**	**Scenario Hour 5-6**	**Scenario Hour 6-7**	**Scenario Hour 7-8**	**Scenario Hour 8-9**	**Scenario Hour 9-10**	**Scenario Hour 10-11**	**Scenario Hour 11-12**
1	1.00	1.01	1.03	1.05	1.10	1.12	1.16	1.19	1.20	1.21	1.21	1.22
2	1.00	1.01	1.03	1.05	1.10	1.12	1.16	1.19	1.20	1.21	1.21	1.22
3	1.00	1.01	1.03	1.05	1.10	1.12	1.16	1.19	1.20	1.21	1.21	1.22
4	1.00	1.01	1.03	1.05	1.10	1.12	1.16	1.19	1.20	1.21	1.21	1.22
5	1.00	1.01	1.03	1.05	1.10	1.12	1.16	1.19	1.20	1.21	1.21	1.22
6	1.01	1.08	1.10	1.11	1.12	1.18	1.25	1.33	1.33	1.34	1.34	1.35
7	1.00	1.01	1.03	1.05	1.10	1.12	1.16	1.19	1.20	1.21	1.21	1.22
8	1.00	1.01	1.03	1.05	1.10	1.12	1.16	1.19	1.20	1.21	1.21	1.22
9	1.00	1.12	1.14	1.16	1.18	1.20	1.22	1.25	1.26	1.26	1.27	1.28
10	1.00	1.01	1.03	1.05	1.10	1.12	1.16	1.19	1.20	1.21	1.21	1.22
11	1.00	1.12	1.14	1.16	1.18	1.20	1.22	1.25	1.26	1.26	1.27	1.28
12	1.00	1.12	1.14	1.16	1.18	1.20	1.22	1.25	1.26	1.26	1.27	1.28
13	1.00	1.12	1.14	1.16	1.18	1.20	1.22	1.25	1.26	1.26	1.27	1.28
14	1.00	1.12	1.14	1.16	1.18	1.20	1.22	1.25	1.26	1.26	1.27	1.28
15	1.00	1.12	1.14	1.16	1.18	1.20	1.22	1.25	1.26	1.26	1.27	1.28
16	1.00	1.12	1.14	1.16	1.18	1.20	1.22	1.25	1.26	1.26	1.27	1.28
17	1.00	1.01	1.04	1.06	1.11	1.14	1.16	1.17	1.18	1.19	1.20	1.20
18	1.00	1.12	1.14	1.16	1.18	1.20	1.22	1.25	1.26	1.26	1.27	1.28
19	1.00	1.08	1.09	1.11	1.12	1.17	1.23	1.32	1.32	1.33	1.33	1.34
20	1.00	1.12	1.14	1.16	1.18	1.20	1.22	1.25	1.26	1.26	1.27	1.28
21	1.00	1.08	1.09	1.11	1.12	1.17	1.23	1.32	1.32	1.33	1.33	1.34
22	1.00	1.12	1.14	1.16	1.18	1.20	1.22	1.25	1.26	1.26	1.27	1.28
23	1.00	1.12	1.14	1.16	1.18	1.20	1.22	1.25	1.26	1.26	1.27	1.28
24	1.00	1.08	1.09	1.11	1.12	1.17	1.23	1.32	1.32	1.33	1.33	1.34
25	1.00	1.00	1.00	1.00	1.00	1.00	1.00	1.00	1.00	1.00	1.00	1.00
26	1.00	1.08	1.09	1.11	1.12	1.17	1.23	1.32	1.32	1.33	1.33	1.34
27	1.00	1.01	1.04	1.06	1.11	1.14	1.16	1.17	1.18	1.19	1.20	1.20
28	1.00	1.01	1.04	1.06	1.11	1.14	1.16	1.17	1.18	1.19	1.20	1.20
29	1.00	1.12	1.14	1.16	1.18	1.20	1.22	1.25	1.26	1.26	1.27	1.28
30	1.00	1.01	1.04	1.06	1.11	1.14	1.16	1.17	1.18	1.19	1.20	1.20
31	1.00	1.01	1.04	1.06	1.11	1.14	1.16	1.17	1.18	1.19	1.20	1.20
32	1.00	1.12	1.14	1.16	1.18	1.20	1.22	1.25	1.26	1.26	1.27	1.28

				Time Degradation Factors								
Detailed Job Function	**Scenario Hour 12-13**	**Scenario Hour 13-14**	**Scenario Hour 14-15**	**Scenario Hour 15-16**	**Scenario Hour 16-17**	**Scenario Hour 17-18**	**Scenario Hour 18-19**	**Scenario Hour 19-20**	**Scenario Hour 20-21**	**Scenario Hour 21-22**	**Scenario Hour 22-23**	**Scenario Hour 23-24**
1	1.23	1.24	1.25	1.25	1.26	1.27	1.28	1.28	1.29	1.30	1.31	1.32
2	1.23	1.24	1.25	1.25	1.26	1.27	1.28	1.28	1.29	1.30	1.31	1.32
3	1.23	1.24	1.25	1.25	1.26	1.27	1.28	1.28	1.29	1.30	1.31	1.32
4	1.23	1.24	1.25	1.25	1.26	1.27	1.28	1.28	1.29	1.30	1.31	1.32
5	1.23	1.24	1.25	1.25	1.26	1.27	1.28	1.28	1.29	1.30	1.31	1.32
6	1.35	1.36	1.36	1.36	1.37	1.37	1.38	1.38	1.39	1.39	1.39	1.40
7	1.23	1.24	1.25	1.25	1.26	1.27	1.28	1.28	1.29	1.30	1.31	1.32
8	1.23	1.24	1.25	1.25	1.26	1.27	1.28	1.28	1.29	1.30	1.31	1.32
9	1.28	1.29	1.29	1.30	1.31	1.31	1.32	1.33	1.33	1.34	1.34	1.35
10	1.23	1.24	1.25	1.25	1.26	1.27	1.28	1.28	1.29	1.30	1.31	1.32
11	1.28	1.29	1.29	1.30	1.31	1.31	1.32	1.33	1.33	1.34	1.34	1.35
12	1.28	1.29	1.29	1.30	1.31	1.31	1.32	1.33	1.33	1.34	1.34	1.35
13	1.28	1.29	1.29	1.30	1.31	1.31	1.32	1.33	1.33	1.34	1.34	1.35
14	1.28	1.29	1.29	1.30	1.31	1.31	1.32	1.33	1.33	1.34	1.34	1.35
15	1.28	1.29	1.29	1.30	1.31	1.31	1.32	1.33	1.33	1.34	1.34	1.35
16	1.28	1.29	1.29	1.30	1.31	1.31	1.32	1.33	1.33	1.34	1.34	1.35
17	1.21	1.22	1.23	1.24	1.25	1.25	1.26	1.27	1.28	1.29	1.29	1.30
18	1.28	1.29	1.29	1.30	1.31	1.31	1.32	1.33	1.33	1.34	1.34	1.35
19	1.34	1.35	1.35	1.36	1.36	1.37	1.37	1.37	1.38	1.38	1.39	1.39
20	1.28	1.29	1.29	1.30	1.31	1.31	1.32	1.33	1.33	1.34	1.34	1.35
21	1.34	1.35	1.35	1.36	1.36	1.37	1.37	1.37	1.38	1.38	1.39	1.39
22	1.28	1.29	1.29	1.30	1.31	1.31	1.32	1.33	1.33	1.34	1.34	1.35
23	1.28	1.29	1.29	1.30	1.31	1.31	1.32	1.33	1.33	1.34	1.34	1.35
24	1.34	1.35	1.35	1.36	1.36	1.37	1.37	1.37	1.38	1.38	1.39	1.39
25	1.00	1.00	1.00	1.00	1.00	1.00	1.00	1.00	1.00	1.00	1.00	1.00
26	1.34	1.35	1.35	1.36	1.36	1.37	1.37	1.37	1.38	1.38	1.39	1.39
27	1.21	1.22	1.23	1.24	1.25	1.25	1.26	1.27	1.28	1.29	1.29	1.30
28	1.21	1.22	1.23	1.24	1.25	1.25	1.26	1.27	1.28	1.29	1.29	1.30
29	1.28	1.29	1.29	1.30	1.31	1.31	1.32	1.33	1.33	1.34	1.34	1.35
30	1.21	1.22	1.23	1.24	1.25	1.25	1.26	1.27	1.28	1.29	1.29	1.30
31	1.21	1.22	1.23	1.24	1.25	1.25	1.26	1.27	1.28	1.29	1.29	1.30
32	1.28	1.29	1.29	1.30	1.31	1.31	1.32	1.33	1.33	1.34	1.34	1.35

Appendix F. Message-Routing Variable Definitions

Message Path Variables

Pass - Set this variable to describe how the message is passed from level of evaluation to the next (i.e. from the RTO to the NCO or Officer, and from the NCO to the Officer).

0—None
1—Paper
2—Verbal

Scan – Set this variable to describe what the soldier will scan to help understand the message. The prescribed action is done at the NCO level and the Officer level in the S2 and S3 sections. In other sections, it is done at the Officer level.

0—None
1—Map
2—Board
3—Map and Board
4—All (map, board, decision support template, and critical events list)

Route (outside of section) – Set this variable to determine if the section receiving the message will route a paper copy of this message to other sections.

0—No
1—Yes

Update (map or board) - Set this variable to determine if the map or board is updated by this message.

0—No
1—Yes

Estimate Impact – Set this variable to yes if the message will cause the Officer to evaluate the impact of this information on the battle.

0—No
1—Yes

Staff Huddle – If the officer will consult with the XO and Commander as a result of his impact estimation, set this variable appropriately. A mini staff huddle is the XO, S2O, BC and Commander. A Major staff huddle brings FSO, ALO, ENO into the discussion of the issue.

0—None
1—Mini
2—Major

Send - As a result of the incoming message, some output may be sent out of the section. If the output is a radio message, set the variable to one. If a digital message is to be sent, set the variable to two. If a digital overlay is to be forwarded to another section, set the variable to three. If the officer is going to interrupt the NCO and give him instructions and send a radio message, set the variable to four.

0—None
1—Radio
2—Digital
3—Overlay
4—Verbal Order and send radio message

Enter Radio Message/Unformatted Message – Set this variable to yes if the information in a radio message is to be entered into the digital database, or if a digital message must be reformatted in order to be stored in the database.

0—No
1—Yes

Words

Enter # or words in message

Digital Message Type – This distinguishes the way a digital message is handled. Alerts will come into the operator and block the screen. The operator will not be able to see anything but this message. In AFATDS, target selection is displayed through this path. The now or later choices represent something on the screen changing that would indicate to the operator that he has a new message coming in. The operator would decide based on the situation whether to read now or later. The scenario must indicate the operator's decision. Icon movements are visual changes on the screen other than those described above. RFI is a request for information. This will take the same path and a read now message but will take an alternate path after the operator has read the message.

1—Alert/CFF
2—Now
3—Later
4—Icon Movement
5—RFI

Nets

Command
Bde command
Oper/Intel
Bde Oper/Intel
Admin/Log
Bde Admin/Log
Fire Spt
Fire Direction
Eng
Bde Eng
Air Force
Air Def A

INTENTIONALLY LEFT BLANK

Acronyms

A/L	administrative/logistics
ALO	air liaison officer
ARL	Army Research Laboratory
BC	battle captain
C2	command and control
C2V	command and control vehicle
Cdr	commander
CdrGNR	gunner in the commander's vehicle
CdrLDR	loader in the commander's vehicle
CTCP	Combat Trains Command Post
DJF	detailed job function
Eng	engineer staff section
ENO	engineer officer
ENRTO	radio telephone operator in engineer staff section
FS	fire support staff section
FSE	
FSNCO	non-commissioned officer in fire support staff section
FSO	fire support officer
FSRTO	radio telephone operator in fire support staff section
HMMWV	high mobility multipurpose vehicle
HPM	human performance model
M1	Abrams main battle tank
M2	Bradley fighting vehicle
NBCNCO	nuclear, biological, chemical non-commissioned officer (operations section)
NCO	non-commissioned officer
OPTEC	Operational Test and Evaluation Command
RTO	radio telephone operator
S1	personnel staff section (also officer in personnel staff section)
S1NCO	non-commissioned officer in personnel staff section
S2	intelligence staff section
S2A	junior (assistant) officer in intelligence staff section
S2NCO	non-commissioned officer in intelligence staff section
S2O	officer in intelligence staff section
S2RTO	radio telephone operator in intelligence staff section
S3	operations staff section (also officer in operations staff section)
S3NCO	non-commissioned officer in operations staff section
S3RTO	radio telephone operator in operations staff section

S3V	operations officer in his command vehicle (M1 or M2)
S3VGNR	gunner in the S3V vehicle
S3VLDR	loader in the S3V vehicle
S4	supply and logistics staff section (also officer in supply and logistics staff section)
S4NCO	non-commissioned officer in supply and logistics staff section
TOC	tactical operations center
XO	executive officer

NO. OF COPIES	ORGANIZATION
*	ADMINISTRATOR DEFENSE TECHNICAL INFO CTR ATTN DTIC OCA 8725 JOHN J KINGMAN RD STE 0944 FT BELVOIR VA 22060-6218 *pdf file only
1	DIRECTOR US ARMY RSCH LABORATORY ATTN IMNE ALC IMS MAIL & REC MGMT 2800 POWDER MILL RD ADELPHI MD 20783-1197
1	DIRECTOR US ARMY RSCH LABORATORY ATTN AMSRD ARL CI OK TL TECH LIB 2800 POWDER MILL RD ADELPHI MD 20783-1197
1	ARMY RSCH LABORATORY - HRED ATTN AMSRD ARL HR M DR M STRUB 6359 WALKER LANE SUITE 100 ALEXANDRIA VA 22310
1	ARMY RSCH LABORATORY - HRED ATTN AMSRD ARL HR MA J MARTIN MYER CENTER RM 2D311 FT MONMOUTH NJ 07703-5630
1	ARMY RSCH LABORATORY - HRED ATTN AMSRD ARL HR MC A DAVISON 320 MANSCEN LOOP STE 166 FT LEONARD WOOD MO 65473-8929
1	ARMY RSCH LABORATORY - HRED ATTN AMSRD ARL HR MD T COOK BLDG 5400 RM C242 REDSTONE ARSENAL AL 35898-7290
1	COMMANDANT USAADASCH ATTN ATSA CD ATTN AMSRD ARL HR ME MS A MARES 5800 CARTER RD FT BLISS TX 79916-3802
1	ARMY RSCH LABORATORY - HRED ATTN AMSRD ARL HR MI J MINNINGER BLDG 5400 RM C242 REDSTONE ARSENAL AL 35898-7290

NO. OF COPIES	ORGANIZATION
1	ARMY RSCH LABORATORY - HRED ATTN AMSRD ARL HR MM DR V RICE BLDG 4011 RM 217 1750 GREELEY RD FT SAM HOUSTON TX 78234-5094
1	ARMY RSCH LABORATORY - HRED ATTN AMSRD ARL HR MG R SPINE BUILDING 333 PICATINNY ARSENAL NJ 07806-5000
1	ARL HRED ARMC FLD ELMT ATTN AMSRD ARL HR MH C BURNS BLDG 1467B ROOM 336 THIRD AVENUE FT KNOX KY 40121
1	ARMY RSCH LABORATORY - HRED AVNC FIELD ELEMENT ATTN AMSRD ARL HR MJ D DURBIN BLDG 4506 (DCD) RM 107 FT RUCKER AL 36362-5000
1	ARMY RSCH LABORATORY - HRED ATTN AMSRD ARL HR MK MR J REINHART 10125 KINGMAN RD FT BELVOIR VA 22060-5828
1	ARMY RSCH LABORATORY - HRED ATTN AMSRD ARL HR MV HQ USAOTC S MIDDLEBROOKS 91012 STATION AVE ROOM 111 FT HOOD TX 76544-5073
1	ARMY RSCH LABORATORY - HRED ATTN AMSRD ARL HR MY M BARNES 2520 HEALY AVE STE 1172 BLDG 51005 FT HUACHUCA AZ 85613-7069
1	ARMY RSCH LABORATORY - HRED ATTN AMSRD ARL HR MP D UNGVARSKY BATTLE CMD BATTLE LAB 415 SHERMAN AVE UNIT 3 FT LEAVENWORTH KS 66027-2326
1	ARMY RSCH LABORATORY - HRED ATTN AMSRD ARL HR M DR B KNAPP ARMY G1 MANPRINT DAPE MR 300 ARMY PENTAGON ROOM 2C489 WASHINGTON DC 20310-0300

NO. OF COPIES	ORGANIZATION
1	ARMY RSCH LABORATORY - HRED ATTN AMSRD ARL HR MJK MS D BARNETTE JFCOM JOINT EXPERIMENTATION J9 JOINT FUTURES LAB 115 LAKEVIEW PARKWAY SUITE B SUFFOLK VA 23435
1	ARMY RSCH LABORATORY - HRED ATTN AMSRD ARL HR MQ M R FLETCHER US ARMY SBCCOM NATICK SOLDIER CTR AMSRD NSC SS E BLDG 3 RM 341 NATICK MA 01760-5020
1	ARMY RSCH LABORATORY - HRED ATTN AMSRD ARL HR MT DR J CHEN 12350 RESEARCH PARKWAY ORLANDO FL 32826-3276
1	ARMY RSCH LABORATORY - HRED ATTN AMSRD ARL HR MS MR C MANASCO SIGNAL TOWERS RM 303A FORT GORDON GA 30905-5233
1	ARMY RSCH LABORATORY - HRED ATTN AMSRD ARL HR MU M SINGAPORE 6501 E 11 MILE RD MAIL STOP 284 BLDG 200A 2ND FL RM 2104 WARREN MI 48397-5000
1	ARMY RSCH LABORATORY - HRED ATTN AMSRD ARL HR MF MR C HERNANDEZ BLDG 3040 RM 220 FORT SILL OK 73503-5600
1	ARMY RSCH LABORATORY - HRED ATTN AMSRD ARL HR MW E REDDEN BLDG 4 ROOM 332 FT BENNING GA 31905-5400
1	ARMY RSCH LABORATORY - HRED ATTN AMSRD ARL HR MN R SPENCER DCSFDI HF HQ USASOC BLDG E2929 FORT BRAGG NC 28310-5000
1	ARL-HRED LIAISON PHYSICAL SCIENCES LAB PO BOX 30002 LAS CRUCES NM 88003-8002

NO. OF COPIES	ORGANIZATION
5	MICROANALYSIS & DESIGN ATTN BETH PLOTT 4949 PEARL E CIRCLE STE 300 BOULDER CO 80301
1	US ARMY SAFETY CTR ATTN CSSC SE FORT RUCKER AL 36362
	ABERDEEN PROVING GROUND
1	DIRECTOR US ARMY RSCH LABORATORY ATTN AMSRD ARL CI OK (TECH LIB) BLDG 4600
1	DIRECTOR US ARMY RSCH LABORATORY ATTN AMSRD ARL CI OK TP S FOPPIANO BLDG 459
1	US ATEC RYAN BLDG APG-AA
1	DIRECTOR US ARMY RSCH LABORATORY ATTN AMSRD ARL HR M F PARAGALLO BLDG 459
1	DIRECTOR US ARMY RSCH LABORATORY ATTN AMSRD ARL HR MB J NAWLEY BLDG 459
5	DIRECTOR US ARMY RSCH LABORATORY ATTN AMSRD ARL HR MB J WOJCIECHOWSKI BLDG 459
5	DIRECTOR US ARMY RSCH LABORATORY ATTN AMSRD ARL HR SE P KILDUFF BLDG 459