EPA-430/9-75-014

DISPOSAL OF ORGANOCHLORINE WASTES BY INCINERATION AT SEA

JULY 1975

Office of Water and Hazardous Materials
U.S. ENVIRONMENTAL PROTECTION AGENCY
Washington, D. C. 20460

DISCLAIMER

This report has been reviewed by the Office of Water and Hazardous Materials, EPA, and approved for publication. Mention of trade names or commercial products does not constitute endorsement or recommendation for use.

DISTRIBUTION STATEMENT

Document is available in limited quantities through the U. S. Environmental Protection Agency, Forms and Publication Center, Route 8, Box 116, Raleigh, North Carolina 27607. It is also available to the public through the National Technical Information Service, Springfield, Virginia 22151.

EPA-430/9-75-014

DISPOSAL OF ORGANOCHLORINE WASTES BY INCINERATION AT SEA

BY:
T. A. Wastler
Carolyn K. Offutt
Charles K. Fitzsimmons
Paul E. Des Rosiers

JULY 1975

Division of Oil and Special Materials Control
Office of Water and Hazardous Materials
U.S. ENVIRONMENTAL PROTECTION AGENCY
Washington, D. C. 20460

ABSTRACT

The first officially sanctioned incident of ocean incineration in the United States occurred aboard the M/T Vulcanus in the Gulf of Mexico from October 1974 through January 1975 under an ocean dumping permit issued by the U.S. Environmental Protection Agency under the authority of the Marine Protection, Research, and Sanctuaries Act of 1972, as amended, to the Shell Chemical Company in Deer Park, Texas, for ocean incineration of organochlorine wastes.

This report describes the monitoring activities undertaken to evaluate ocean incineration as a disposal method. A total of 16,800 metric tons of waste were incinerated at a maximum rate of 25 metric tons per hour with a 1200°C minimum and a 1350°C average flame temperature. Stack gas emissions were monitored for plume dispersion characteristics and to determine combustion efficiency. The findings indicate that more than 99.9 percent of the wastes were oxidized. Marine monitoring surveys indicate that there were no measurable increases in concentrations of trace metals and organochlorides in the water and marine life.

Results of the project indicate that ocean incineration could be a viable alternative of waste disposal which should be considered along with other disposal methods including direct ocean disposal, land disposal, and land incineration.

Foreword

The controlled oxidation by incineration of combustible waste products on land and from certain offshore mining facilities has been a world-wide practice for many years. The incineration of highly toxic chemical wastes on board specially designed vessels has been practiced off European coasts only within the past few years. This technology was demonstrated off U. S. coasts, for the first time during October 1974 through January 1975, sanctioned by an ocean dumping permit issued by the U. S. Environmental Protection Agency under the authority of the Marine Protection, Research, and Sanctuaries Act of 1972, as amended.

A review was made of the European monitoring procedures for stack gas emissions and possible impacts by the emissions on both the air and marine environment in the immediate vicinity of the operating incineration vessel. These procedures were not totally adequate for the purpose of assessing conformity with this country's ocean dumping criteria. Consequently, a major monitoring and surveillance program was implemented by the Oil and Special Materials Control Division (OSMCD), Office of Water and Hazardous Materials, in connection with the first and second "burns" of the chemical waste in the Gulf of Mexico by the M/T Vulcanus.

Assisting in the program's conceptual design, analyses, and interpretation of results from the two research burns were the following agencies:

U. S. Environmental Protection Agency:

Office of the Director, OSMCD, Hdqtrs.
Marine Protection Branch, OSMCD, Hdqtrs.
Spill Prevention and Control Branch, OSMCD, Hdqtrs.
Office of General Counsel, Hdqtrs.
Office of Research and Development, Hdqtrs.
National Environmental Center, Research Triangle Park, North Carolina
National Environmental Research Center, Las Vegas, Nevada
National Environmental Research Center, Cincinnati, Ohio
Gulf Breeze Environmental Research Laboratory, Gulf Breeze, Florida
National Field Investigation Center, Denver, Colorado
Region II, Edison Laboratory, Edison, New Jersey
Region III, Annapolis Field Station, Annapolis, Maryland
Region IV, Athens Laboratory, Athens, Georgia

Region VI: Regional Office, Dallas, Texas; Lower Mississippi River Project, Slidell, Louisiana; and Houston Facility, Houston, Texas

National Aeronautics and Space Administration:
Langley Research Center, Hampton, Virginia
Goddard Space Flight Center, Greenbelt, Maryland

U.S. Coast Guard, Hdqtrs.
U.S. Coast Guard, District VIII, Air Station, Corpus Christi, Texas
National Oceanic and Atmospheric Administration, National Ocean Survey, Pascagoula, Mississippi
U.S. Department of the Interior, Patuxent Wildlife Research Center, Patuxent, Maryland

State environmental agencies:
Louisiana, Florida, Alabama, and Texas

National Wildlife Federation, Washington, D.C.
American University, Washington, D.C.
Raytheon Company, Portsmouth, Rhode Island
TerEco Corporation, College Station, Texas
Shell Chemical Co., Houston, Texas

Participation of all these agencies is acknowledged, with particular appreciation to the Coast Guard Air Station in Corpus Christi, Texas, for aerial surveillance and navigational assistance for EPA aircraft, and to the Shell Chemical Company for its cooperation and commitment of resources on all aspects of this project and for its permission to include, as Appendix A of this report, the April 1975 Shell report "At Sea Incineration of Shell Chemical Organic Chloride Waste: Stack Monitoring Aboard the M/T Vulcanus."

Special appreciation is extended to Irene Keefer for her editorial services and the secretarial staff of the Oil and Special Materials Control Division for their efforts in typing many drafts and revisions to this report.

Kenneth E. Biglane, Director
Oil & Special Materials Control Division
Office of Water & Hazardous Materials
Environmental Protection Agency
Washington, D.C. 20460

TABLE OF CONTENTS

		Page
I.	Summary, Conclusions, and Recommendations	1
	Summary	1
	Conclusions	3
	Recommendations	5
	Incineration Design and Operation	5
	Monitoring	6
	Communication and Navigation Aids	8
II.	Introduction	9
III.	Description of Vulcanus	17
	Tanks and Pumps	17
	Incinerators	20
	Recording and Control E uipment	21
IV.	Permit Requirements During Vulcanus Missions	23
V.	Results of Research Permit Burns	29
	Feed Rates and Combustion Temperatures	29
	Efficiency of Incineration	38
	Stack Sampling Problems	39
	Results from Burn I	42
	Results from Burn II	43
	Plume Characteristics	47
	Oregon II Cruises - Burn I	47
	Aerial Monitoring - Burn II	52
	Chemical and Biological Impact on Marine Environment	59
	Short-Term Effects	60
	Long-Term Effects	71
	Effects on Birds	74
VI.	Results of Interim Permit Burns Monitoring Activities	75
	Feed Rates and Combustion Termperature	75
	Monitoring Activities	77
Appendix A.	At-Sea Incineration of Shell Chemical Organic Chloride Waste	81
Appendix B.	Loss of Organochlorides in Teflon Bags	173
Appendix C.	Equipment, Calibration Procedures, and Aircraft Data From Aerial Monitoring of Research Burn II	179

		Page
Appendix D.	Equipment and Procedures From Sea-Level Monitoring of Effects on Marine Environment	197
Appendix E.	Additional Data From Oregon II Monitoring of Marine Environment	211
Appendix F.	Log Sheets From Interim Permit Burns	219
Bibliography		225
Technical Report Data		227

FIGURES

		Page
Figure III-1	M/T Vulcanus Incinerating Organochlorine Wastes of the Shell Chemical Company in the Gulf of Mexico	18
Figure IV-1	Incineration Site for Vulcanus Missions	24
Figure V-1	Sampling Train for Stack Gas Analysis, Research Burn I	41
Figure V-2	Sampling Train for Stack Gas Analysis, Research Burn II	45
Figure V-3	Environmental Protection Agency NERC Las Vegas Aircraft With Sampling Probes and Monitoring Instruments	53
Figure V-4	Plume of Ammonium Chloride From M/T Vulcanus Induced by Addition of Ammonia to Stack Emissions	56
Figure V-5	Vulcanus Plume Elevation, December 4, 1974	58
Figure V-6	Illustration of Transit Sampling Pattern Run by Orca, Research Burn I	64
Figure V-7	Illustration of Axial Sampling and Axial Control Sampling Patterns Run by Orca, Research Burn I	65
Figure V-8	Sampling Pattern Run by the Orca To Determine Immediate Effects, Research Burn II	68
Figure VI-1	Natural Plume of Stack Emissions Due to Meteorological Conditions	78

TABLES

		Page
Table II-1	Chronology of Ocean Incineration of Shell Organochlorine Wastes on Gulf of Mexico, August 1973-January 7, 1975	11
Table III-1	Specifications of M/T Vulcanus Incineration Vessel	19
Table V-1	Chronology of Research Permit Burns, October 19, 1974 - December 12, 1974	30
Table V-2	Elemental Analysis of Waste Feeds in Research Burns	32
Table V-3	Major Components of Waste Feeds in Research Burns	34
Table V-4	Incinerator Temperatures During Research Burns	35
Table V-5	Overall Efficiency of Combustion of Hydrocarbons	43
Table V-6	Analysis of Stack Gas Emissions in Research Burn II	44
Table V-7	Monitoring of Vulcanus Plume in Research Burn II	51
Table V-8	Short-Term Effects From Incineration, First Cruise of Oregon During Research Burn I	61
Table V-9	Short-Term Effects From Incineration, Second Cruise of Oregon During Research Burn I	63
Table V-10	Short-Term Effects From Incineration, Orca Cruise During Research Burn I	67
Table V-11	Analysis of Trace Metals in Sea Water, Orca Cruise During Research Burn II	70
Table V-12	Analysis of Trace Metals and Organochlorides in Plankton, Orca Cruise During Research Burn II	73
Table VI-1	Chronology of Interim Permit Burns, December 18, 1974-January 9, 1975	76

I. SUMMARY, CONCLUSIONS, AND RECOMMENDATIONS

SUMMARY

On September 27, 1974, the U. S. Environmental Protection Agency (EPA) determined that ocean incineration of wastes is under the purview of the Marine, Protection, Research, and Sanctuaries Act of 1972, as amended. On October 10, 1974, EPA issued a research permit for incineration at sea of 4,200 metric tons (MT) of organochlorine wastes from Shell Chemical Company's Deer Park, Tex., plant. The wastes--a mixture of chlorinated hydrocarbons with trichloropropane, trichloroethane, and dichloroethane predominating--result from the plant's production of glycerin, vinyl chloride, epichlorohydrin, and epoxy resins.

The incineration took place during October 20-28, 1974, in the Gulf of Mexico at a new dumping site approximately 241 kilometers (130 nautical miles) from the nearest land. The wastes were incinerated aboard the M/T Vulcanus, which is owned by Ocean Combustion Services, B.V., of The Netherlands. For 2 years, the vessel had incinerated similar wastes in the North Sea for companies in The Netherlands, Great Britain, and Scandinavia. The two high-temperature incinerators aboard the Vulcanus are designed to oxidize upwards of 99.9 percent of organochlorine wastes. The resulting emissions consisted primarily of hydrogen chloride, carbon dioxide, and water; they were discharged directly into the atmosphere without scrubbing.

In accordance with conditions of the permit, a substantial monitoring effort was undertaken to determine the feasibility of this waste disposal technique and the impact of the emissions on the marine environment. A large amount of data was gathered during the incineration. Following review of the results, EPA concluded that the conditions and criteria of the initial research permit had been met, although there were some shortcomings in the monitoring efforts, and that the incineration resulted in no significant adverse impact on the environment. On November 27, 1974, EPA granted a second research permit to incinerate another shipload (4,200 MT); the conditions were slightly different from those of the first shipload. The monitoring requirements were modified to correct some gaps in the information gathered on the first incineration.

The second research burn took place December 2-9, 1974. The following day EPA scientists and representatives of Alabama, Florida, Louisiana, and Texas met and unanimously concluded that incineration by the Vulcanus of Shell's remaining organochlorine wastes, under the conditions imposed by the two research permits, was an environmentally compatible means of disposing of the wastes. On December 12, EPA issued an interim permit for incineration of the remaining 8,400 MT. The wastes were incinerated in two loads, on December 19-26, 1974, and on December 31, 1974-January 7, 1975.

CONCLUSIONS

1. The design and operation of the Vulcanus incinerator were adequate for controlled oxidation of organochlorine wastes of the type produced by Shell Chemical Company.
2. The ship's design did not include provisions for monitoring stack emissions, wind speed, and excess air flow to the incinerators. In addition, the Vulcanus was not equipped with sufficient navigation aids and communication systems. Appropriate systems were subsequently provided.
3. The waste feed rates did not exceed the permit limit of 25 metric tons per hour, and the flame temperatures complied with the 1,200° C minimum and 1,350° C average temperature requirements.
4. Stack gas emissions were monitored for oxygen, carbon monoxide, carbon dioxide, chlorine, hydrogen chloride, and unburned organochlorine compounds. The findings indicate that more than 99.9 percent of the wastes were oxidized.
5. Plume dispersion characteristics were difficult to determine since the natural plume was not visible except during surveillance overflights made on the last interim permit burn. A specially equipped EPA aircraft determined the configuration of the invisible plume by collecting emissions data at cross-sectional and longitudinal points downwind from the vessel.

6. The natural plume trailed back from the Vulcanus stack at an angle of about 20° from the horizontal, reaching a maximum altitude of 850 meters, mean sea level. The plume fanned out horizontally to a width of about 1,200 meters, at a distance of 2,400 meters downwind from the stack. Maximum hydrogen chloride concentrations measured by the aircraft occurred between 100 to 240 meters altitude and zero to 400 meters downwind, with a maximum value of 3 parts per million (ppm). Sea-surface monitoring indicated a maximum concentration of 7 ppm at 6 meters above sea level.

7. Ammonia was added to the gaseous emissions above the stack, and the ammonium chloride cloud generated showed a comparable configuration to that determined by the aerial monitoring of the natural plume.

8. Four marine monitoring surveys indicate that there were no measurable increases in concentrations of trace metals and organochlorides in the water and marine life. Additionally, no adverse effects on migratory birds were observed.

9. The monitoring requirements imposed by EPA were appropriate to determine the impact on the marine environment, the characteristics of the plume, and the degree of waste oxidation by incineration of the Shell wastes.

10. Results of the project indicate that at-sea incineration of the Shell wastes was compatible with the intent of the Marine

Protection, Research, and Sanctuaries Act, and that ocean incineration could be a viable alternative which should be considered along with other disposal methods, including direct ocean disposal, land disposal, and land incineration.

RECOMMENDATIONS

As a result of the information acquired during the two research permit burns, a number of deficiencies, as well as desirable features, were noted in the design and operation of the Vulcanus. Anticipating that other applications will be submitted for incineration of liquid waste by the Vulcanus or other incinerator ships, EPA is at this time delineating preliminary recommendations relating to incinerator design and operation, monitoring, and communication and navigation aids. These recommendations do not include requirements that might be imposed for an applicant to provide additional monitoring of the marine environment, plume, and waste characteristics, as well as other information. Final requirements will not be established until additional investigations and studies are completed.

The following recommendations address those areas of major interest to EPA. They do not include ship design and operation requirements that may be imposed by the U. S. Coast Guard.

Incinerator Design and Operation

1. The incinerator shall be designed to operate at a temperature range of 1,300° to 1,500° C, with a dwell time

range of 0.5 to 1.5 seconds. Dwell time is to be determined from incinerator volume and volumetric flow rate at the specified temperature.

2. Special incinerator tests to determine profiles of stack gas emissions and temperature within the incinerator may be required for all new designs. Testing requirements for existing incinerators will be considered on a case by case basis.
3. Automatic controls shall be installed to prevent incinerator operation at temperatures below 1,200° C.
4. Equipment may need to be installed to control excess air feed rates,if wastes with high chlorine levels are to be incinerated.
5. Tankage, pumping systems, and piping shall be incorporated into the design of the vessel to permit addition of fuel oil for incineration of wastes with low heat values. The method of fuel addition must ensure complete mixing of fuel and wastes.
6. Feed rates, fuel requirements, and excess air shall be determined for each waste before incineration and before permit conditions are set.

Monitoring

1. Thermocouples shall be installed in the incinerator stack at two levels and calibrated to determine flame temperature and exit gas temperatures. Sufficient

thermocouples are to be installed to ensure monitoring of the temperatures throughout the burn period.

2. Sampling ports shall be provided in each stack to permit collection of the gaseous emissions for analysis. The system shall include the sample probes and equipment needed to withdraw samples from various points within the stack.

3. Appropriate conduits, cooling lines, and heating systems shall be provided from the sampling ports to the ship's laboratory. Provisions shall be incorporated in the design to permit easy removal and replacement of the sample transfer lines.

4. Laboratory space shall be available on the ship for devices to determine oxygen, chlorine, and carbon monoxide. In designing the laboratory, consideration should be given to special requirements such as ventilation, power supply, sample storage, and quarters for laboratory personnel.

5. Meters or equivalent methods to determine waste feed rates shall be installed.

6. Wind speed and direction monitoring devices shall be installed at an appropriate location on the ship to minimize interference with true readings, and all data shall be transmitted to a continuous recorder.

7. All data on temperature, feed rate, pump status (on-off), time, date, location (if possible), and wind speed and

direction shall be automatically recorded in an enclosed chamber which can be sealed by government officials. In addition, all data transmitted to the sealed chamber shall also be transmitted to a secondary readout point where they can be recorded by the ship's crew.

8. Equipment and piping shall be provided to permit release of ammonia into the gaseous emissions at a point above the incinerator stack.

Communication and Navigation Aids

1. The ship shall be equipped with a LORAN system to determine its position at any time.
2. Equipment shall be installed to permit radio telephone communications with commercial marine radio systems and the U.S. Coast Guard. The system shall be capable of ship-to-shore and ship-to-ship voice communications.

II. INTRODUCTION

About 9 million metric tons (MT) of toxic chemical wastes are generated annually in the United States. (1) Their tonnages have steadily increased over the years, generally paralleling increased industrial production. At the same time, growing concern in protecting public health and the environment has made disposal more difficult.

For industrial plants located near coastlines--the Shell Chemical Company plant in Deer Park, Tex., for example--ocean dumping has been a long-standing practice. Since 1954, the Shell plant, which manufactures glycerin, vinyl chloride, epichlorohydrin, and epoxy resins, had dumped wastes directly into the Gulf of Mexico. At first, the dumping was with the qualified approval of the U.S. Army Corps of Engineers and the U.S. Coast Guard. Following passage of the Marine Protection, Research, and Sanctuaries Act of 1972, as amended, the wastes were dumped under a permit granted by the U.S. Environmental Protection Agency (EPA). That permit expired in November 1973.

Shell applied for a permit to continue dumping, and, following a public hearing in Houston, Tex., on December 14, 1973, received a permit for dumping spent caustic and biological sludge.

1. Report to Congress on Hazardous Waste Disposal. U.S. Environmental Protection Agency, Office of Solid Waste Management Programs, Washington, D.C. June 30, 1973.

(For a chronology of disposal of the Shell wastes, see Table II-1.) However, EPA held in abeyance the permit for dumping the 1,900 metric tons (MT) of organochlorine wastes the Deer Park facility generates every month, pending detailed studies of the waste composition and continued investigation of alternative means of disposal. The wastes are a mixture of chlorinated hydrocarbons with trichloropropane, trichloroethane, and dichloroethane predominating. They do not contain vinyl chloride.(2) The emission of organochlorine compounds into the environment is generally undesirable because such compounds are extremely stable and persistent. They can enter the food chain and accumulate in some organisms. Even small quantities of some compounds can be acutely toxic.

In April 1974, Shell submitted additional information and renewed its application for a permit for ocean disposal. Shell pointed out that the wastes at Deer Park were being stored in above-ground tanks. Long-term storage of large amounts in these tanks carried the potential for leaks from corrosion, accidental ignition, and spills from natural disasters. Disposal on land was wholly unsuitable. There was no current market for the material. However, in 1975 Shell plans to upgrade as much as 20 percent of the wastes into useful products.

2. Miller, Taylor O. Report of the Presiding Officer. Public hearing held Oct. 4, 1974, in Houston, Tex., concerning Shell Chemical Co. application for Permit No. 730D008C to dispose of organochlorine wastes. U.S. Environmental Protection Agency, Oil and Special Materials Control Division, Washington, D.C. Oct. 9, 1974.

TABLE II-1

CHRONOLOGY OF OCEAN INCINERATION OF SHELL ORGANOCHLORINE WASTES IN GULF OF MEXICO, AUGUST 1973-JANUARY 7, 1975

August 30, 1973	Shell Chemical Co. applies for dumping permit
December 14, 1973	Public hearing; EPA holds permit in abeyance
January 23, 1974	EPA declares ocean incineration does not require dumping permit
April 1, 1974	Shell submits additional information and renews application
July 16, 1974	Shell contracts for incineration of wastes aboard Vulcanus
September 27, 1974	EPA modifies its decision, declaring ocean incineration does require dumping permit
September 27, 1974	Shell amends application
October 4, 1974	Public hearing on Shell's amended application
October 10, 1974	EPA grants research permit authorizing incineration of 4,200 metric tons
October 20-28, 1974	Research Burn I takes place
November 14, 1974	Results of Research Burn I reviewed at technical meeting
November 27, 1974	EPA grants research permit authorizing incineration of 4,200 metric tons
December 2-9, 1974	Research Burn II takes place
December 10, 1974	EPA technical staff and State representatives conclude ocean incineration of remaining wastes is environmentally sound
December 12, 1974	EPA grants permit for incineration of remaining 8,400 metric tons of wastes
December 19-26, 1974 Dec. 31, 1974-Jan. 7, 1975	Remaining wastes incinerated

Source: Records in EPA Headquarters, Oil and Special Materials Control Division, Washington, D.C.

Incineration was another approach to disposal, and Shell plans to have a high-temperature land-based incinerator in operation in 1977. Incineration on a temporary basis with waste disposal contractors was considered only a limited solution--not enough capacity was available to handle the tonnages Shell produces. A more promising approach appeared to be incineration on the high seas. At least three incinerator vessels are now in use in Europe.

In July 1974, Shell contracted with Ocean Combustion Services, B.V. (OCS) of The Netherlands, a wholly owned subsidiary of the Hansa Lines, for the services of the M/T Vulcanus. For 2 years, the vessel had incinerated similar wastes in the North Sea for companies in The Netherlands, Great Britain, and Scandinavia. The high-temperature incinerators aboard the Vulcanus are designed to oxidize upwards of 99.9 percent of organochlorine wastes. The resulting emissions consist primarily of hydrogen chloride, carbon dioxide and water; they are discharged directly into the atmosphere with no scrubbing.

Anticipating operating the Vulcanus in the United States, OCS requested, through an American representative, an opinion from EPA as to whether the Marine Protection Act applied to ocean incineration. In response to the request, which did not detail specifics, EPA's Office of General Counsel, on January 23, 1974, rendered the opinion that the Act did not apply. Subsequently, in response to questions raised by the National Wildlife Federation

and the Committee on Merchant Marine and Fisheries of the House of Representatives, and in view of certain new information that came to its attention, EPA modified its previous opinion. Shortly before September 27, 1974, when the Vulcanus was scheduled to arrive at the Port of Houston, EPA declared that ocean incineration does require a permit under the Act. On September 27, Shell amended its earlier application, requesting permission to burn 16,800 MT of organochlorine wastes at sea.

EPA scheduled a public hearing on the amended application in Houston on October 4, and at the same time (as required by Federal regulation) published its tentative determination to grant a research permit for incineration of 4,200 MT (one shipload). At the hearing, the presiding officer and a panel of five EPA technical personnel heard testimony and questioned 18 witnesses concerning the nature of the proposed incineration and the likely effects on the environment. The recommendations in summary form (2) of the presiding officer and the panel were to:

+ Issue a research permit for incineration of 4,200 MT of organochlorine wastes at a new site in the Gulf of Mexico.
+ Require detailed monitoring of the initial research burn, including monitoring of the efficiency of combustion (which must be greater than 99.9 percent), the dispersion characteristics of the gaseous emissions, and the effects of incineration on the environment.

+ Provide for a review by EPA of the data obtained and make the data available to the public.

+ Form a special EPA team of experts to oversee the monitoring requirements imposed under the permit to enable complete and rapid investigation of the effects of incineration.

+ Issue an interim permit for incineration of the remaining 12,600 MT of organochlorine wastes, if the basic conditions specified in the research permit were met.

+ Conduct a continuing review of monitoring requirements during the term of the research permit (and, if issued, the interim permit) to design the best possible monitoring scheme to determine the effects on the environment of high-temperature incineration of organochlorine wastes at sea.

On October 10, 1974, EPA granted a research permit in accordance with these recommendations. (3) The permit constitutes the first official sanction the United States has given to high-temperature ocean incineration. EPA also designated a new site previously unused for dumping (approximately 130 nautical miles or 241 kilometers from the nearest land) where the incineration was to take place. (4)

3. U.S. Environmental Protection Agency Research Permit No. 730D008C. Issued under Marine Protection, Research, and Sanctuaries Act (Ocean Dumping), Washington, D.C., Oct. 10, 1974.

4. Federal Register, Vol. 39, No 202, p 37057-8, Oct. 17, 1974.

The first 4,200 MT were burned during October 20-28. A great deal of data was gathered during Research Burn I, and the results were reviewed at a technical meeting in Houston on Novermber 14. Dissatisfaction was expressed with some aspects of the first burn, with the major criticisms coming from the Gulf Coast States. Principally, they objected to the short time they were given to consider issuance of the first permit, their limited participation in the monitoring activities, and the adequacy of the data gathered in monitoring.(5,6)

EPA concluded, nevertheless, that the conditions and criteria of the initial research permit had been met, and that no information gathered in Research Burn I in any way changed or called into question the findings and conclusions of the original hearing panel. Although there were some shortcomings in the monitoring efforts, the incineration resulted in no significant adverse impact on the environment. Therefore, the EPA staff at the technical meeting recommended granting a second research permit for Shell to burn an additional 4,200 MT under conditions slightly different from

5. Frick, G. William. Report of the Presiding Officer. Technical mee ting held Nov. 14, 1974, in Houston, Tex., regarding application of Shell Chemical Company Permit No. 730D008C pursuant to the Marine Protection, Research, and Sanctuaries Act of 1972. U.S. Environmental Protection Agency, Oil and Special Materials Control Division, Washington, D.C., Nov. 27, 1974.

6. Train, Russell E. Supplementary decision of the Administrator regarding application of Shell Chemical Company for Marine Protection, Research, and Sanctuaries Act Permit No. 730D008C. U.S. Environmental Protection Agency, Oil and Special Materials Control Division, Washington, D.C., Nov. 27, 1974.

those in the first burn. The monitoring requirements were modified, and a working group, which included State representatives, was established to review potential alternative monitoring approaches.(5) On November 27, EPA granted a research permit for incineration of an additional 4,200 MT.

Research Burn II took place December 2-9. On December 10, EPA scientists and representatives of Alabama, Florida, Louisiana, and Texas met in Dallas to consider the results. Their unanimous conclusion was that incineration by the Vulcanus of Shell's remaining 8,400 MT of organochlorine wastes, under the conditions imposed by EPA in the two research permits, was an environmentally compatible means of disposing of the wastes.(7,8)

On December 12, EPA issued an interim permit to Shell for incineration of the remaining wastes. The special conditions for disposal activities were the same as in the second research permit. The remaining wastes were incinerated in two loads, on December 19-26 and December 31, 1974-January 7, 1975.

---

7. Biglane, Kenneth E. Staff Report Regarding Application of Shell Chemical Company and Ocean Combustion Services, B.V., For Permit No. 730D008C Pursuant to the Marine Protection, Research, and Sanctuaries Act of 1972. U.S. Environmental Protection Agency, Oil and Special Materials Control Division, Washington, D.C., Dec. 12, 1974.

8. Preliminary Report, Marine Environmental Monitoring of Vulcanus Research Burn II, December 2, 1974. U.S. Environmental Protection Agency, Oil and Special Materials Control Division, Washington, D.C., Dec. 10, 1974.

III. DESCRIPTION OF VULCANUS

The M/T Vulcanus is a double-hull, double-bottom vessel that meets all applicable requirements of the Intergovernmental Maritime Consultative Organization (IMCO) concerning transport of dangerous cargo by tanker. (See Figure III-1 for photograph of Vulcanus and Table III-1 for specifications.) Before being permitted to operate in U.S. waters, she was modified to meet requirements of the U.S. Coast Guard. Originally a cargo ship, she was converted to her present use in 1972. Her size--an overall length of 102 meters, a beam of 14.4 meters, and a maximum draft of 7.4 meters--enables her to operate worldwide. She is also able to operate in rough weather. Her crew numbers 16--10 to operate the vessel and six solely to operate the incinerators. Two diesel engines drive the single propeller to give cruising speeds of 10 to 13 knots.

TANKS AND PUMPS

The vessel's cargo tank capacity of 3,503 cubic meters (cbm) is divided into 15 cargo tanks ranging in size from 115 to 574 cbm. The engine room is separated from the cargo tanks by double bulkheads; the pump room and generator are situated in between. Tanks are filled from above through a manifold on deck with the usual tank tops. The vessel is not fitted with a loading pump, although a portable pump can be brought on board. She requires 2 days

Figure III - 1

M/T "Vulcanus" incinerating organochloride wastes of the Shell Chemical Company in the Gulf of Mexico.

Source: U.S. Environmental Protection Agency, Region VI Laboratory, Houston, Texas

TABLE III-1

SPECIFICATIONS OF M/T VULCANUS INCINERATION VESSEL

Length overall	101.95 meters
Breadth	14.40 meters
Draft, maximum	7.40 meters
Deadweight	4,768 metric tons
Speed	10-13 knots
Tank capacity	3,503 cubic meters (cbm)
Number of tanks	15, ranging in size from 115 cbm to 574 cbm
Tank coating	No coating in tanks, pipes, pumps, etc. All equipment consists of low carbon steel
Loading equipment	Not available, but can be placed on board, if required
Hose connections	10.2, 15.2, and 20.3 centimeters (4, 6, 8 inches) in diameter
Safety equipment	Specially designed for this task and in accordance with latest regulations of IMCO, Scheepvaart-Inspectie (The Hague), and the U.S. Coast Guard
Waste to be processed	Must be liquid and pumpable. May contain solid substances in pieces up to 5 centimeters in size. Must not attack mild steel
Incinerators	2
Outside diameter	5.50 meters
Inside diameters	4.80 meters
Height	10.45 meters
Dwell time	0.5-1.5 seconds
Air supply	180,000 cubic meters/hour
Burners	3/incinerator (Saacke type)
Incinerator capacity	20-25 tons/hour

Source: Ocean Combustion Services

to load all tanks. Pipes leading from the tanks into the incinerators run through an elaborate manifold in the pump room, where another pipe system leads to the incinerators. The pumps can reduce lumps of soft materials as large as 5 centimeters to 0.2 centimeter. Generally, any tank can be connected to any incinerator. Safety mechanisms guard against spillage from tanks during loading. Tanks are not washed between loads, and the vessel is designed so that the tanks cannot discharge directly to the ocean except in emergency conditions.

INCINERATORS

Two combustion chambers lined with silica firebrick are located at the stern of the Vulcanus. Their maximum outer diameter is 5.5 meters, and the inside diameter is 4.8 meters. The total height, including the stack, is 10.45 meters. The volume of each combustion chamber is calculated to be 88 cbm, and the dwell time is 0.5-1.5 seconds. Each chamber has three burners with rotating cup fuel injection systems that provide vortex turbulence and distribution of feed throughout the entire chamber. It is theoretically possible to simultaneously burn six different wastes with different flashpoints. Total waste throughput is 20 to 25 MT per hour. About 9 days are required to burn a shipload of wastes.

In operation, the furnace is preheated with fuel oil to a minimum of 1,200° C. The wastes are fed to the incinerators using the injection pumps connected to one or more tanks. The feed rate

is regulated to maintain the desired temperature by manually adjusting the valves to the pumps. Fuel oil must be continuously injected for wastes having a heating value below 3,000 kilocalories per hour. If the temperature in the incinerators drops below the required temperature, the waste supply shuts off. If the flame in the burner goes out for any reason, an alarm sounds and a light goes on automatically.

During normal operation, each burner requires cleaning once during a 9-day burn; burners are usually cleaned sequentially to maintain high combustion temperatures. The waste tanks are gauged and logged manually by the operator. The total air feed capacity is 180,000 cbm per hour. An alarm light goes on if the air flow is insufficient, but there is no equipment for monitoring excess air flow to the incinerator. Two diesel generators with a total capacity of 750 kilowatts supply power for the two incinerator systems.

RECORDING AND CONTROL EQUIPMENT

A control panel on the Vulcanus contains meters recording temperatures inside the incinerators at two points, a time clock with date, control lamps showing when burners and pumps are switched on, and a Decca-Navigator MK21 for positioning. However, the Decca Navigator system is not compatible with the U.S. navigation system, so another means of navigation is required--LORAN equipment, for example. There is no equipment

to measure wind speed. The control panel is photographed by an automatic camera every 15 minutes. At the start of the voyage, government officials can seal the "black box" on the bridge which contains this gear, then inspect it at the end.

IV. PERMIT REQUIREMENTS DURING VULCANUS MISSIONS

The permits granted by EPA for incineration of the Shell wastes imposed special conditions.(9-11) In route to the prescribed site (Figure IV-1) the Vulcanus had to navigate around four reefs. During incineration, the Vulcanus had to:

+ Be within a prescribed site, which is from 26° 20 minutes minutes to 27° 00 minutes north latitude, and from 93° 20 minutes to 94 degrees 00 minutes west longitude. The 4,770 square kilometer site, designated by EPA and accepted by the U.S. Coast Guard and Army Corps of Engineers, is outside any existing dump site.(12)
+ Maintain a position downwind from any vessel other than those engaged in environmental monitoring.
+ Maintain an effective wind velocity over the incinerator stacks of 10 knots (to be comprised of wind or vessel speed or both).

9. U. S. Environmental Protection Agency Research Permit No. 730D008C. Issued under Marine Protection, Research, and Sanctuaries Act (Ocean Dumping), Washington, D. C., Oct. 10, 1974.
10. U. S. Environmental Protection Agency Research Permit No. 730D008C(2). Issued under Marine Protection, Research, and Sanctuaries Act (Ocean Dumping), Washington, D.C., Nov. 27, 1974.
11. U.S. Environmental Protection Agency Interim Permit No. 730D008C(3). Issued under Marine Protection, Research, and Sanctuaries Act (Ocean Dumping), Washington, D. C., Dec. 12, 1974.
12. Federal Register, Vol. 39, No. 202, p 37057-8, Oct. 17, 1974.

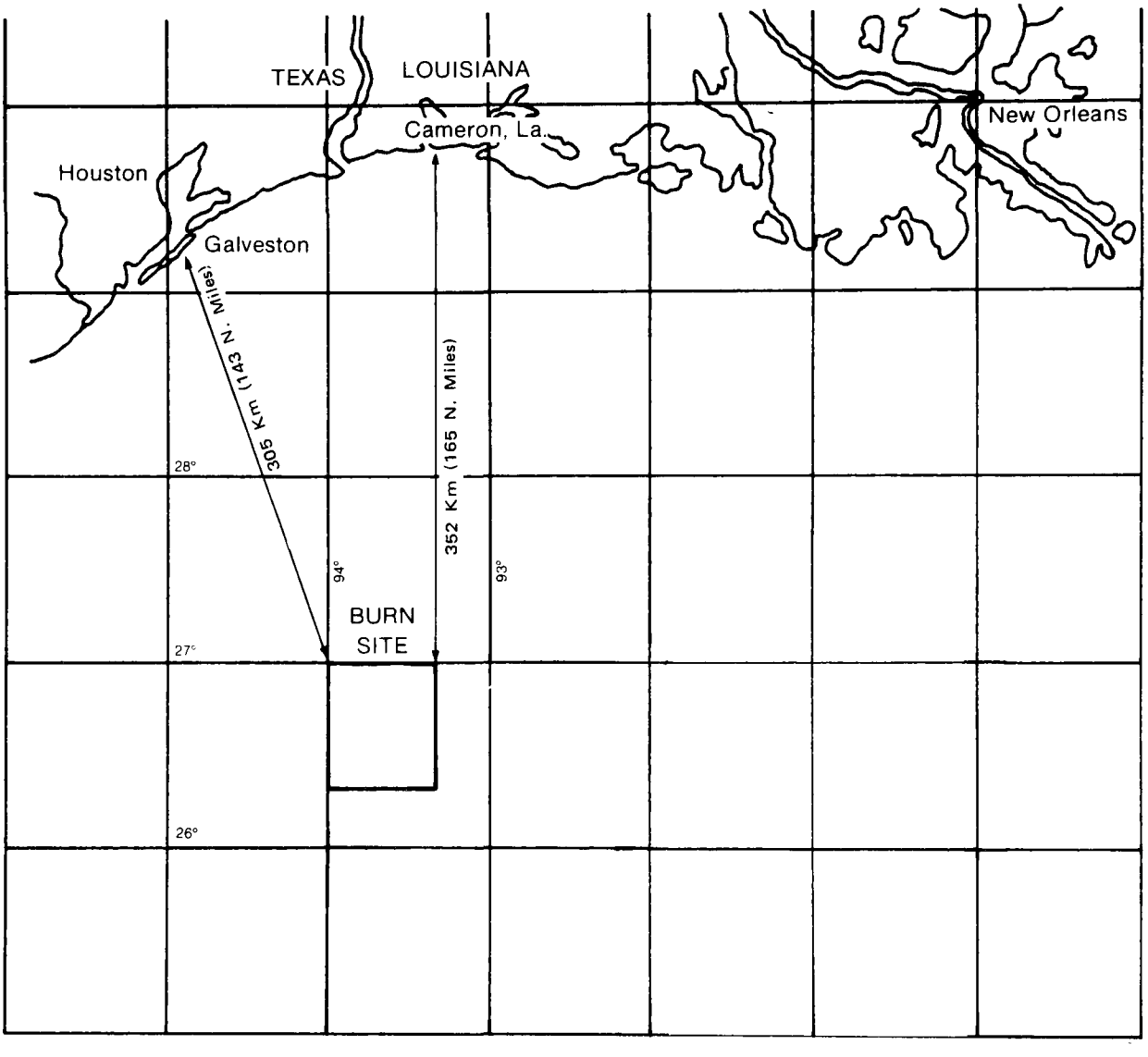

Figure IV-1 Incineration site for Vulcanus missions.

The incineration process itself had to meet certain requirements. Total feed rate of wastes was not to exceed 25 MT per hour. (The first research permit specified 20 MT, but conditions were revised during incineration to 25 MT to prevent operational problems.) No incineration was to occur below 1,200° C, except that during Research Burn I, eight 4-hour burns could be made to determine combustion efficiencies at different temperatures. The permits required that temperature be measured at two points within each incinerator. On Research Burn I, the minimum average combustion temperature had to be maintained at 1,400° C (a running 4-hour average). On subsequent burns the average temperature was dropped to 1,350° C.

On Research Burn I, combustion efficiency had to be maintained at no less than 99.9 percent. After reviewing the analyses of stack emissions from the first burn, and in response to comments from representatives of the Gulf States, EPA required several modifications in monitoring of stack emissions to better determine the combustion efficiencies. Oxygen and carbon monoxide were to be monitored continuously and the results recorded on strip charts. Oxygen levels in the stack gas were to be no lower than 3 percent to ensure complete combustion and no higher than 10 percent to minimize formation of chlorine gas. Another modification required by EPA was that emissions of unburned organochlorine compounds were not to exceed 10 ppm, and the sampling system was required

to demonstrate that it was trapping at least 50 percent of the organochlorine emissions. These emissions, along with chlorine levels were to be determined at least twice during each 24-hour incineration period. In addition, the sampling line was to be heated to eliminate condensation of stack gases.

A time clock with control lamps was required to show when the incinerators were operating The automatic camera was to photograph the control panel every 15 minutes, and the box on the bridge was to be sealed. In addition, the interim permit called for the Vulcanus to keep a separate log book and surrender it to EPA or the Coast Guard at the conclusion of each voyage or upon command. The Vulcanus Master was to enter the following information each watch:

+ Time and date.
+ Black box temperature readings in combustion room.
+ Controller temperature reading.
+ Waste feed rates.
+ Switching of waste tanks.
+ Wind speed and direction.
+ Location.

Monitoring the ambient air and the marine environment, an important part of the two research burns, was substantially reduced in the interim burns. To make the plume visible to monitoring

vessels and aircraft, the second research permit and the interim permit required the Vulcanus to carry a device for adding ammonia to incinerator emissions. The interim permit called for unannounced flights to be made over the vessel while it was incinerating.

V. RESULTS OF RESEARCH PERMIT BURNS

Shell Chemical, its contractor, and EPA, with the support of state and other Federal agencies, monitored the two research permit burns. (For a chronology of events in the two research burns, see Table V-1.) A two-man Shell research team on board the Vulcanus monitored incinerator conditions (feed rates and combustion temperatures) and combustion efficiencies, as well as meteorological conditions. An EPA observer was also on board. (A technical report on Shell's monitoring activities is attached as Appendix A.) Effects on the marine environment were monitored principally by scientists aboard the R/V Oregon II and the M/V Orca. During the second research burn, an aircraft from EPA's National Environmental Research Center (NERC) in Las Vegas, Nev., monitored the plume to detect its size, shape, and HCl concentration.

Many of the monitoring systems used were research prototypes designed especially to obtain data on this unique method of incineration. Numerous problems were encountered; nevertheless, enough information was collected to meet EPA's monitoring objectives.

FEED RATES AND COMBUSTION TEMPERATURES (13)

During Research Burn I, the waste feed rates averaged 21.2 MT per hour over the 8-day incineration. On Research Burn II, the rates averaged 24.5 MT per hour. Feed rates were measured by the time required to empty the tanks of a known volume.

13. Badley, J.H., A. Telfer, E.M. Fredericks. At-Sea Incineration of Shell Chemical Organic Chloride Waste, Stack Monitoring Aboard the M/T "Vulcanus". Technical Progress Report BRC-CORP 13-75-F. Shell Development Co., Bellaire Research Center, Houston, Tex., 1975.

TABLE V-1

CHRONOLOGY OF RESEARCH PERMIT BURNS, OCTOBER 14, 1974 - DECEMBER 12, 1974

Event	Time	Date (1974)
RESEARCH BURN I		
M/T Vulcanus departs Deer Park, Tex.	1100	Oct. 14
Incinerators start to heat	2100	Oct. 14
M/V Orca arrives burn site	1000	Oct. 15
M/T Vulcanus arrives burn site	1100	Oct. 15
U. S. Coast Guard conducts aerial monitoring	(PM)	Oct. 15
Incineration starts	0430	Oct. 16
Incineration stops temporarily	0630	Oct. 16
M/V Orca departs burn site	0038	Oct. 17
R/V Oregon II arrives burn site	2300	Oct. 17
Incinerators start to heat	2000	Oct. 19
Incineration restarts	0730	Oct. 20
R/V Oregon II conducts monitoring	-	Oct. 20
R/V Oregon II departs burn site	1930	Oct. 20
M/V Orca arrives burn site	0500	Oct. 21
M/V Orca conducts monitoring	-	Oct. 21
Meeting on monitoring, New Orleans, La.	1300	Oct. 22
M/V Orca conducts monitoring	-	Oct. 22
M/V Orca departs burn site	1730	Oct. 22
U. S. Coast Guard conducts aerial monitoring	1000	Oct. 24
R/V Oregon II arrives burn site	1900	Oct. 27
R/V Oregon II conducts monitoring	-	Oct. 27
R/V Oregon II conducts monitoring	-	Oct. 28
Incineration ends	0400	Oct. 28
M/T Vulcanus departs burn site	0900	Oct. 28
R/V Oregon II conducts monitoring	-	Oct. 28
R/V Oregon II departs burn site	2200	Oct. 28
M/T Vulcanus arrives Port of Houston, Tex.	0900	Oct. 29
Technical meeting to evaluate data, Washington, D. C.	1000	Nov. 7
Technical conference to evaluate Research Burn I, Houston, Tex.	1000	Nov. 14
EPA grants second research permit, effective Nov. 28-Dec. 16, 1974	-	Nov. 27

TABLE V-1 (CONT.)

Event	Time	Date (1974)
RESEARCH BURN II		
Meeting to develop monitoring program, Deer Park, Tex.	0800	Nov. 30
M/T Vulcanus departs Port of Houston, Tex.	1750	Nov. 30
Incinerators start to heat	1200	Dec. 1
Incineration starts	0710	Dec. 2
EPA aircraft departs on first mission	1140	Dec. 2
EPA aircraft departs on second mission	0930	Dec. 3
M/V Orca arrives burn site	1130	Dec. 3
M/V Orca conducts monitoring	-	Dec. 3
EPA aircraft departs on third mission	0910	Dec. 4
M/V Orca conducts monitoring	-	Dec. 4
M/V Orca conducts monitoring	-	Dec. 5
M/V Orca departs burn site	1250	Dec. 5
Laboratory analyses start	1400	Dec. 6
Incineration ends	0945	Dec. 9
M/T Vulcanus arrives Port of Houston, Tex.	1040	Dec. 10
Briefing to EPA, Region VI, Dallas, Tex.	1000	Dec. 10
Technical meeting on monitoring requirements for interim permit, Houston, Tex.	0800	Dec. 11
EPA grants interim permit, effective Dec. 12, 1974-Jan. 20, 1975	-	Dec. 12

Source: Records in EPA Headquarters, Oil and Special Materials Control Division, Washington, D.C.

The compositions of the waste feeds were similar during the two burns; both contained 63 percent chlorine, 29 percent carbon, 4 percent hydrogen, 4 percent oxygen, and traces of heavy metals (Table V-2). Chlorine and oxygen were determined by neutron activation, carbon and hydrogen by conventional combustion techniques, and trace metals--except arsenic--by atomic adsorption. Arsenic was converted to arsine and determined colorimetrically with silver diethyldithiocarbonate. The major components of the waste feeds

TABLE V-2

ELEMENTAL ANALYSIS OF WASTE FEEDS
IN RESEARCH BURNS

	Research Burn I	Research Burn II
	(% by weight)	
Carbon	29	29.3, 29.3
Hydrogen	4	4.1, 4.1
Oxygen	4	3.7
Chlorine	63	63.5
	(parts per million)	
Copper	0.51	1.1
Chromium	0.33	0.1
Nickel	0.25	0.3
Zinc	0.14	0.3
Lead	0.05	0.06
Cadmium	0.0014	0.001
Arsenic	<0.01	<0.01
Mercury	<0.001	<0.002

Source: Badley, J.H., A. Telfer, E.M. Fredericks. At-Sea Incineration of Shell Chemical Organic Chloride Waste, Stack Monitoring Aboard the M/T "Vulcanus." Technical Progress Report BRC-CORP 13-75-F. Shell Development Co., Bellaire Research Center, Houston, Tex. 1975.

were determined by gas chromatography. 1,2,3-Trichloropropane was the largest single component (Table V-3).

Except for brief periods, flame temperatures, as measured with an optical pyrometer, met permit conditions (Table V-4). Low temperatures occurred in Research Burn I when feed rates were reduced to conduct experimental burns called for in the permit and whenever the burners were cleaned. At lower temperatures, carbon accumulated, necessitating more frequent cleaning.

Two platinum-platinum/10 percent rhodium thermocouples were mounted in each incinerator. One, located about 5 centimeters from the inner surface of the firebrick, measures temperatures 200° to 350° C lower than flame temperatures; they were referred to as "indicator" temperatures since they were indicated on the panel of the combustion room and in the sealed box. The second thermocouple, located 1.3 centimeters from the surface, closed the feed shutoff valve when its temperature dropped below 800° C. It could also be used as a thermometer at higher temperatures by manually searching for the temperature setting at which the feed valve relay clicked. The temperatures thus measured--the "controller" temperatures--were 100° to 250° C lower than flame temperatures.

In addition, Shell mounted another thermocouple on the probe used to sample stack gases in each incinerator. However, the hot, acid conditions in the stacks were extremely destructive to these thermocouples, so they provided no useable data during the two research burns.

TABLE V-3

MAJOR COMPONENTS OF WASTE FEEDS
IN RESEARCH BURNS, PERCENT BY WEIGHT

	Research Burn I	Research Burn II
1,2,3 Trichloropropane	27	28
Tetrachloropropyl ether	6	6
1,2-Dichloroethane	11	10
1,1,2-Trichloroethane	13	13
Dichlorobutanes and heavier	11	10
Dichloropropenes and lighter	20	22
Allyl chloride	3	3
Dichlorohydrins	9	8
Specific gravity (25° F)	1.30	1.29

Source: Badley, J.H., A. Telfer, E.M. Fredericks. At-Sea Incineration of Shell Chemical Organic Chloride Waste, Stack Monitoring Aboard the M/T "Vulcanus." Technical Progress Report BRC-CORP 13-75-F. Shell Development Co., Bellaire Research Center, Houston, Tex. 1975.

TABLE V-4

INCINERATOR TEMPERATURES DURING RESEARCH BURNS, °C

Date	Hour	Starboard Oven, °C			Port Oven, °C		
		Indicator	Controller	Pyrometer	Indicator	Controller	Pyrometer
Research Burn I							
Oct. 22	5:00 p.m.	1150	1220	1500	1150	1260	1500
Oct. 24	4:30 p.m.	1150	1240	-	1150	1270	1450
Oct. 25	10:10 a.m.	1150	1230	1450	1165	1220	1450
	2:00 p.m.	1150	1240	1420	1165	1220	1450
	6:35 p.m.	1160	1250	1450	1170	1290	1440
Oct. 26	10:35 a.m.	1130	1110	1370	1110	1090	1340
	6:00 p.m.	1100	990	-	1130	1200	1450
Oct. 27	4:30 p.m.	1130	1310	1450	1150	1330	1450
	8:30 p.m.	1170	1190	1440	1170	1300	1500
Research Burn II							
Dec. 2	6:50 a.m.	850	-	-	900	-	-
	7:15 a.m.	900	-	-	940	-	-
	9:45 a.m.	1030	-	-	1060	-	-
	10:10 a.m.	1060	-	1500	1080	-	1570
	11:25 a.m.	1090	-	-	1110	-	-
	1:10 p.m.	1130	-	-	1140	-	-
	1:25 p.m.	1150	-	1550	1160	-	1590
	4:00 p.m.	1160	-	-	1160	-	-
	6:30 p.m.	1180	-	-	1180	-	-
	10:00 p.m.	1200	-	-	1200	-	-

TABLE V-4 (CONT'D)

INCINERATOR TEMPERATURES DURING RESEARCH BURNS, °C

Date	Hour	Starboard Oven, °C Indicator	Starboard Oven, °C Controller	Starboard Oven, °C Pyrometer	Port Oven, °C Indicator	Port Oven, °C Controller	Port Oven, °C Pyrometer
Research Burn II (cont.)							
Dec. 3	7:20 a.m.	1220	-	1600	1190	-	1590
	10:10 a.m.	1220	-	-	1200	-	-
	12:25 p.m.	1200	-	-	-	-	-
	1:00 p.m.	1200	-	1520	-	-	1480
	2:35 p.m.	1190	-	-	-	-	-
	4:00 p.m.	1190	-	-	-	-	-
	5:15 p.m.	1130	-	-	-	-	-
	6:45 p.m.	1200	-	-	-	-	-
	7:30 p.m.	1200	1270	1560	-	1270	1510
	8:45 p.m.	1200	-	-	-	-	-
	10:25 p.m.	1200	-	-	-	-	-
Dec. 4	6:40 a.m.	1240	1340	1580	-	1360	1590
	9:00 a.m.	1220	-	-	-	-	-
	12:00 a.m.	1190	-	-	-	-	-
	1:30 p.m.	1180	1260	1550	1180	1300	1580
	3:00 p.m.	-	1180	-	-	-	-
	5:00 p.m.	-	1180	-	-	-	-
	9:00 p.m.	1200	1300	1610	-	1220	1510
Dec. 5	3:00 a.m.	1190	-	-	-	-	-
	8:30 a.m.	1160	1180	1550	-	1220	1500
	10:30 a.m.	1180	-	-	-	-	-
	11:00 a.m.	1180	-	-	-	-	-
	2:00 p.m.	1180	-	-	-	-	-
	3:00 p.m.	1180	-	-	-	-	-
	3:40 p.m.	1180	1260	1520	-	1320	1570
	6:15 p.m.	1190	-	-	-	-	-
	10:00 p.m.	1200	1270	1570	-	1240	1560

TABLE V-4 (CONT'D)

INCINERATOR TEMPERATURES DURING RESEARCH BURNS, °C

Date	Hour	Starboard Oven, °C Indicator	Starboard Oven, °C Controller	Starboard Oven, °C Pyrometer	Port Oven, °C Indicator	Port Oven, °C Controller	Port Oven, °C Pyrometer
Research Burn II (cont.)							
Dec. 6	7:30 a.m.	1100	-	-	-	-	-
	8:00 a.m.	1160	1220	-	-	1180	-
	10:00 a.m.	1140	-	-	-	-	-
	11:15 a.m.	1140	-	-	-	-	-
	12:00 a.m.	1150	-	1500	-	-	1500
	4:00 p.m.	1150	-	-	-	-	-
	7:30 p.m.	1170	-	1550	-	-	1520
	11:30 p.m.	1180	-	-	-	-	-
Dec. 7	8:15 a.m.	1210	1180	1500	-	1320	1570
	11:15 a.m.	1160	-	-	-	-	-
	12:30 p.m.	1160	1250	1540	-	1240	1580
	4:00 p.m.	1160	-	1570	-	-	1510
	7:00 p.m.	1180	-	1590	1310	1340	1570
	11:00 p.m.	1200	-	-	1200	-	-
Dec. 8	8:30 a.m.	1210	-	1570	1210	-	1530
	10:15 a.m.	1190	-	-	1200	-	-
	12:15 p.m.	1180	-	1590	1200	-	1550
	2:50 p.m.	1160	-	-	1160	-	-
	4:30 p.m.	1180	-	1610	1180	-	1530
	8:00 p.m.	1180	-	1580	-	-	1520
	12:00 p.m.	1160	-	-	-	-	-
Dec. 9	6:30 a.m.	1160	-	1570	-	-	1480

Source: Badley, J.H., A. Telfer, E.M. Fredericks. At-Sea Incineration of Shell Chemical Organic Chloride Waste, Stack Monitoring Aboard the M/T "Vulcanus." Technical Progress Report BRC-CORP 13-75-F. Shell Development Co., Bellaire Research Center, Houston, Tex. 1975.

The optical pyrometer gave the most reliable temperature data. Because the controller and indicator thermocouples were insulated with firebrick and hence shielded from the acid, they were more dependable than the Shell thermocouples. One indicator thermocouple failed in the second burn, but enough data had been gathered to establish a correlation between pyrometer and controller readings. On the interim permit burn, EPA required that a log be kept of both controller and indicator temperatures to provide backup data.

EFFICIENCY OF INCINERATION

In Research Burn I, the efficiency of the incineration process was calculated in two ways--as the over-all efficiency of combustion and as the degree of oxidation of organochlorides.(13) The figures were calculated on the basis of carbon material balance and organochlorine material balance. (For details on the method of calculation, see Appendix A.) The unburned carbon atoms in the stack gas were assumed to be proportional to the number of carbon atoms in the waste itself. The amount of hydrochloric acid collected by a specially designed water scrubber was a measure of the amount of waste burned. Thus, the calculated efficiencies depend principally on the analysis of organic material in the feed, the analysis of hydrochloric acid collected, and the ratio of carbon atoms to chlorine atoms in the waste. The results do not depend on, or are insensitive to, the waste flow rate, the combustion air rate, the size of the stack gas sample, and analysis of carbon

dioxide or oxygen in the stack gas. They also do not depend on any assumed molecular weight or specific composition of the chemical compounds sampled.

In Research Burn II, combustion was considered complete if stack emissions contained less than 1,000 ppm of carbon monoxide, 3 to 10 percent oxygen, and less than 10 ppm of organochlorine compounds. (14)

Stack Sampling Problems

The experimental problems involved in sampling and analyzing the stack gases were formidable. (13) The exit gases were hot--in the range of 1,100° to 1,200° C--and corrosive, since they contained 5 to 6 percent hydrogen chloride (HCl). They were damaging to probes inserted into the stack, as well as to analytical equipment. The sample ports in the stacks were not suitable for conventional traversing of the stack diameter. They were inclined 20° from the horizontal and quite near the top of the stack. A probe inserted more than halfway emerged above the top rim. Furthermore, access to the stack during burning was limited because the exterior at the top was hot and exposed to high concentrations of HCl during wind gusts.

14. Frick, G. William. Report of the Presiding Officer. Technical meeting held Nov. 14, 1974, in Houston, Tex., regarding application of Shell Chemical Company for Permit No. 730D008C pursuant to the Marine Protection, Research, and Sanctuaries Act of 1972, Appendix A., U.S. Environmental Protection Agency, Oil and Special Materials Control Division, Washington, D.C. Nov. 27, 1974.

Shell used a water-cooled Vycor glass probe for sampling the gases. It was inserted into the port and rigged so it could traverse, by manipulations from the deck level, across part of the stack.

Another constraint was a crowded ship with no space provided for monitoring equipment to analyze the incinerator emissions. The only space available for the analytical equipment required a sample line of about 20 meters from the probe. The line--of 0.63 centimeter (1/4-inch), thin-walled Teflon tubing--carried the combustion products to the sample train for analysis.

The sample train for monitoring combustion efficiency in Research Burn I contained two water scrubbers for absorbing HCl, water-soluble unburned carbon compounds (most likely partially burned hydrocarbons or hydrocarbon fragments), and water-soluble organochlorides (Figure V-1). HCl was measured by titration with caustic. About 90 percent of the unburned carbon compounds were in the water scrubbers. The remaining 10 percent (most likely methane or methane-like fragments) were measured in a Beckman 109A flame ionization detector. The fractional combustion efficiency based on unburned hydrocarbons is one minus the sum of the ratios of soluble and insoluble hydrocarbons to carbon dioxide concentration.

Organochlorides were isolated from the water scrubber solution and concentrated over macroreticular resins, removed with methanol, and determined by combustion-microcoulometry.

Chlorine and water-insoluble organochlorides were determined in a separate section of the sampling train. Chlorine gas was absorbed

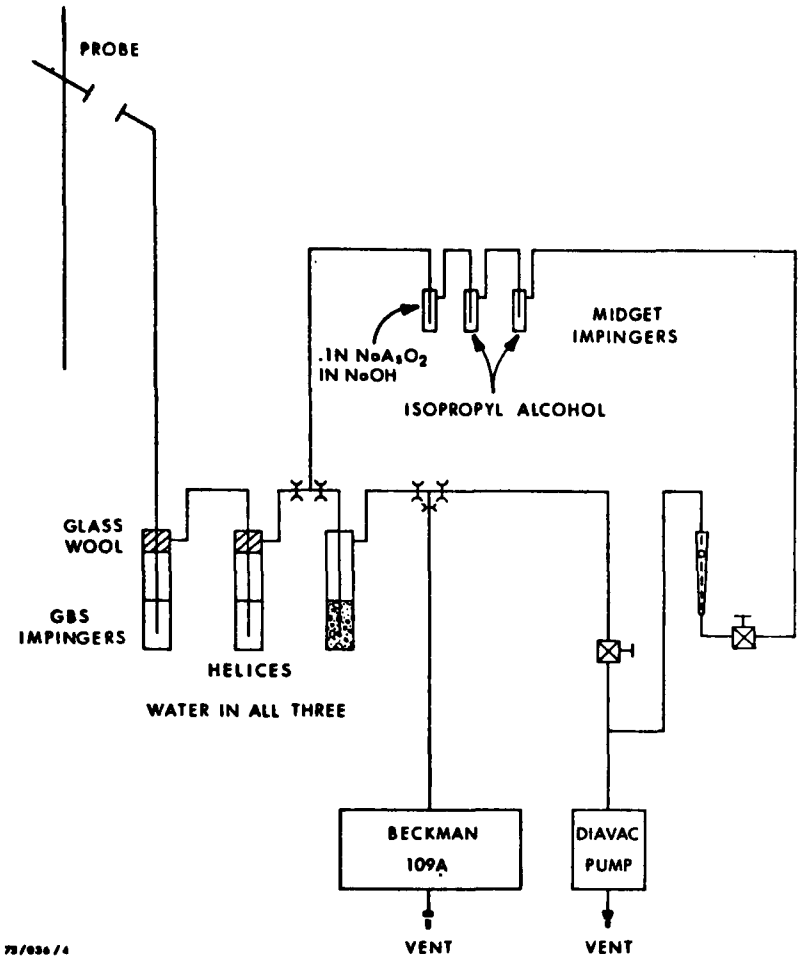

Figure V-1. Sampling Train for Stack Gas Analysis, Research Burn I

Source: Badley, J.H., A. Telfer, E.M. Fredericks. At-Sea Incineration of Shell Chemical Organic Chloride Waste, Stack Monitoring Aboard the M/T "Vulcanus." Technical Progress Report BRC-CORP 13-75-F. Shell Development Co., Bellaire Research Center, Houston, Tex. 1975.

in a sodium arsenite scrubber and excess arsenite determined iodometrically. The water-insoluble organochlorides were absorbed in an isopropyl alcohol scrubber and determined directly by combustion-microcoulometry. The fractional combustion efficiency based on unburned organochlorine compounds is one minus the ratio of unburned organochlorine in stack gas (as chloride) to the total chloride in stack gas.

Results From Burn I

Seven samples were taken during Research Burn I; in all cases, the probe was inserted 28 centimeters into the stack gas stream, and the combustion products were carried to the sampler train through 21.3 meters of Teflon tubing. Analysis indicated that the efficiency of combustion of hydrocarbons was in excess of 99.9 percent (Table V-5). (13) Analysis of the water and isopropyl alcohol scrubber solutions showed that, for the most part, the unburned materials were not organochlorides--destruction of organochlorides was also in excess of 99.9 percent. The burn was continuously monitored for 119 hours of the total of 190.5 hours required to incinerate the wastes. During 77 hours of monitoring, no organochlorides were detected. For the remaining 42 hours, 2 parts per million (ppm) were found in the water scrubber solution. No insoluble organochlorides were detected. Spot checks made for chlorine detected 60 to 140 ppm.

Spot checks of carbon dioxide and oxygen were made (using a Burrell Model B Industro Gas Analyzer) to determine the amount of excess air in the incinerator and to calculate the combustion efficiencies. Excess air valves of about 100 percent were calculated.

TABLE V-5

OVERALL EFFICIENCY OF COMBUSTION OF HYDROCARBONS, RESEARCH BURN I

Sample source	Analysis	Fraction uncombusted		Combustion efficiency, %	
		Range	Average	Range	Average
Water scrubber	Total organic carbon	0.00013-0.00065	0.00034	99.92-99.98	99.95
Flame ionization detector	Hydro-carbons	0.00007-0.00028	0.00014		

Source: Badley, J.H., A. Telfer, E.M. Fredericks. At-Sea Incineration of Shell Chemical Organic Chloride Waste, Stack Monitoring Aboard the M/T "Vulcanus." Technical Progress Report BRC-CORP 13-75-F. Shell Development Co., Bellaire Research Center, Houston, Tex. 1975.

Results From Burn II

Shell data on Research Burn II (Table V-6) show oxygen concentrations in the 9.0 to 12.5 percent range, which corresponds to 90 to 160 percent excess air. Measurements of oxygen and carbon monoxide were made with a Beckman Model 715 analyzer and a Beckman Model 864 analyzer, respectively (Figure V-2). These levels did not generally lead to higher chlorine concentrations. Except for single readings of 360 and 350 ppm, chlorine concentrations were below 200. The concentrations of carbon monoxide varied between 25 and 75 ppm, as measured by the Beckman analyzer 864, which uses a nondispersive infrared detector. The two Beckman instruments were interfaced with the sampling system to permit in-line dynamic calibration.

TABLE V-6

ANALYSIS OF STACK GAS EMISSIONS, RESEARCH BURN II

Series number	Probe location: Oven	Probe location: Depth, cm	CO, ppm	O_2, %	HCl, %	Cl_2, ppm	Unburned organochlorides,[1] % of feed
1-2	Stb'd	22	75	11.3	5.3	50	<0.002
3-5	Port	134	-	-	6.1	350	<0.002
6	Port	134	-	-	6.2	<10	<0.002
7-8	Stb'd	117	25	9.8	5.2	70	0.013
9-10	Stb'd	117	35	10.0	5.7	180	0.008
11-12	Stb'd	25	40	9.0	6.0	40	0.007
13-16	Port	134	35	10.6	5.3	360	<0.004
21-22	Port	134	50	12.5	4.0	50	<0.005

1. Organochlorides as Cl.

Source: Badley, J.H., A. Telfer, E.M. Fredericks. At-Sea Incineration of Shell Chemical Organic Chloride Waste, Stack Monitoring Aboard the M/T "Vulcanus." Technical Progress Report BRC-CORP 13-75-F. Shell Development Co., Bellaire Research Center, Houston, Tex., 1975.

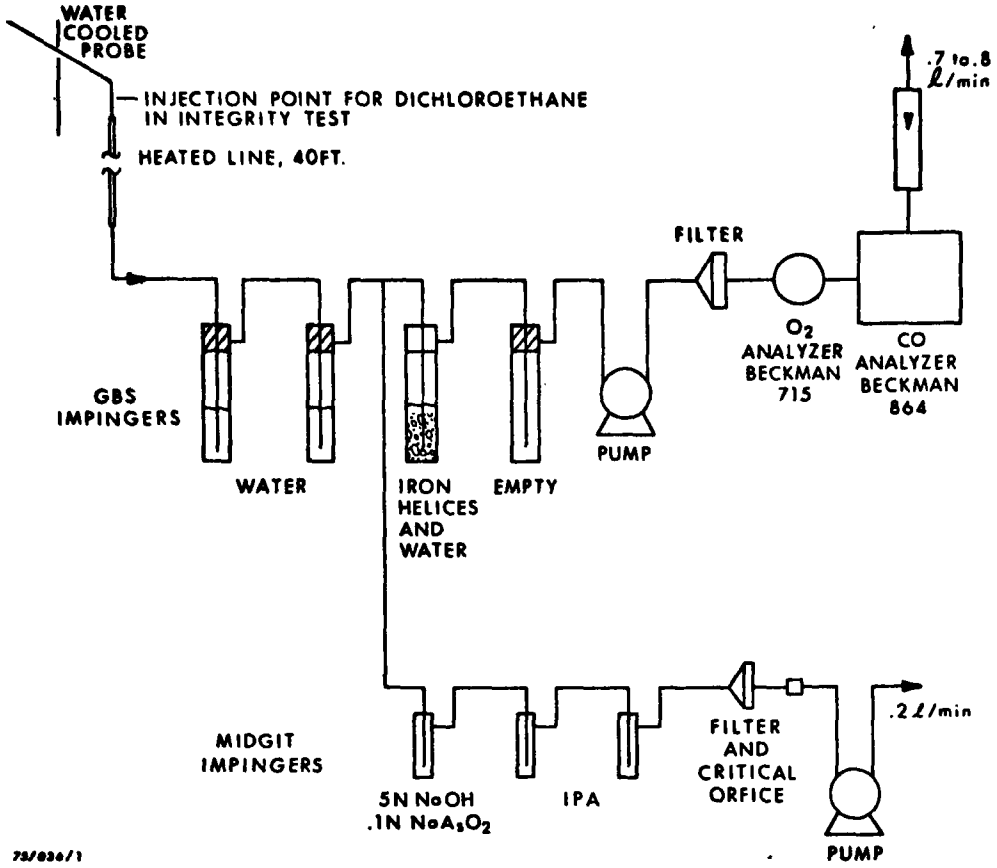

Figure V-2. Sampling Train for Stack Gas Analysis, Research Burn II

Source: Badley, J.H., A. Telfer, E.M. Fredericks. At-Sea Incineration of Shell Chemical Organic Chloride Waste, Stack Monitoring Aboard the M/T "Vulcanus." Technical Progress Report BRC-CORP 13-75-F. Shell Development Co., Bellaire Research Center, Houston, Tex. 1975.

Organochlorides in the stack gases were below the detection limit of 1 to 3 ppm, except for two excursions to 7 and 8 ppm. In the worst case, the ratio of organochloride atoms in the stack gas to those in the feed was 0.00015, which can be taken to indicate greater than 99.9 percent of the organochlorides were destroyed.

The samples in Research Burn II were transferred from the probe (inserted at distances ranging from 22 to 134 centimeters) to the scrubbers through 18.3 meters of Teflon tubing, all but the first and last 3 meters heated to 150° C. Crude traverse experiments suggest that the location of the probe did not significantly affect the results.

Two tests were run to measure the recoveries of organochlorides. In a field test, a concentrated vapor solution of 1,2-dichloroethane was injected into the sample line at the probe end; 72 percent was recovered in the scrubbers. In a second test, an experimental set-up was designed and assembled to test the absorption of known amounts of 1,2-dichloroethane in water and isopropyl alcohol under conditions simulating stack sampling aboard the Vulcanus. In this laboratory test, 90 percent of the chemical was recovered.

Following Research Burn I, Shell collected data for the loss of organochlorides stored in Teflon bags as a basis for estimating the loss of similar compounds during sampling of air through 21.4 meters of Teflon tubing. Assuming that the tubing and bag materials have similar absorption and permeation characteristics for organo-

chlorides, loss of these compounds in the sampling tube would be insignificant, according to the Shell data. (For details on performance tests on the sampling train and the bag loss tests, see Appendices A and B.)

PLUME CHARACTERISTICS

The stack gases were invisible, posing problems in tracking movement of the plume of pollutants downwind of the Vulcanus. Plans called for aerial monitoring during both burns, but equip- malfunctions prevented flights in the first burn. Consequently, data on the first burn were gathered at sea level by the R/V Oregon II. On the second burn, data were gathered by an EPA aircraft from NERC-Las Vegas.

Oregon II Cruises--Burn I(15)

During Research Burn I, a scientific party of 13, largely from EPA, was aboard the Oregon II, a fisheries research vessel owned and operated by the National Oceanic and Atmospheric Administration. She is 52 meters long, carries a crew of 18, and is equipped with the winches and cables needed for oceanographic work. The vessel carries LORAN for navigation and two radar sets. There are both wet and dry laboratories, as well as an aquarium room.

The Oregon II made two cruises--one at the beginning and one at the end of the first research burn. The first, October 17 to 20, emphasized identifying the plume and sampling to determine the immediate impact in the area directly affected. The second

15. Preliminary Technical Report on Incineration of Organochlorine Wastes in the Gulf of Mexico. U.S. Environmental Protection Agency, Oil and Special Materials Control Division, Washington, D.C. Nov. 13, 1974.

cruise, October 27 and 28, made similar measurements, but its primary mission was to systematically sample a large area to detect any long-range impacts.

The primary instrument used in the Oregon's plume studies was a Geomet hydrogen chloride monitor, which was provided and operated by the National Aeronautics and Space Administration's Langley Research Center in Hampton, Va. With the HCl monitor, the Oregon could run a search pattern around the Vulcanus and, to some extent, map the plume of stack emissions at sea level by direct measurement, rather than by inference from other factors. The plume could not be mapped completely, because with only one instrument, simultaneous measurements could not be made at several altitudes of the plume.

The Geomet monitor was located on the Oregon's foredeck 6 meters above the surface of the sea. This location protected it from any Oregon operating stack emissions and also permitted quick verbal transmittal of monitoring results to the ship's bridge. The sampling strategy was to approach the Vulcanus on its leeward side using a predetermined sampling pattern and to rely on the monitor to indicate when the plume was contacted. The data were then used to design the next sampling pass. Sampling was confined mainly to a 90 degree arc downwind of the Vulcanus beginning a few hundred meters behind the ship and extending to about 5.5 kilometers or 3 nautical miles (n.mi.).

The Geomet instrument uses a chemiluminescent reaction to monitor HCl in ambient air in concentrations ranging from below 50 parts per billion (ppb) to 100 ppm. Below 50 ppb, the instrument's accuracy is $\pm$ 10 percent; above 50 ppb, it is $\pm$ 5 percent. Repeatability of measurements is $\pm$ 2 percent. Minimum detection limit is 10 ppb. The instrument recorded continuously on a strip chart, and the chart was marked at 5-minute intervals simultaneously with navigational readings on the bridge. The raw data were used in the running plot, but the strip charts were analyzed later to eliminate any possible anomalies due to hysteresis of the instrument or to sunlight or salt spray.

The two cruises occurred under different sets of ambient conditions. During the first cruise, winds were from the East generally at speed of 8 to 10 knots, while during the second cruise they were from the East Southeast at speeds of 17 to 21 knots. In each case, the plume was found and transects run at several distances from the Vulcanus. During the first cruise, the plume was tracked both while the Vulcanus was drifting and while it was underway. Data from the second cruise were taken only while the Vulcanus was drifting.

The results from the two cruises were consistent. With the Vulcanus drifting, the plume was found directly downwind at distances apparently directly related to wind speed. With Vulcanus underway, the plume was found downwind at the resultant of the vectors of wind

speed and vessel movement. The plume appeared only as an intermittent faint yellow smudge; it moved downwind from the Vulcanus in a generally horizontal direction to a distance of about 360 meters (0.2 n.mi.), at a wind velocity of 10 knots, before it reached the surface of the ocean. During the second cruise, only the flames could be seen. At no time did the plume give any indication of moving straight up into the sky.

For the first cruise, with windspeeds generally 8 to 10 knots, the closest observations to Vulcanus were at about 460 meters (0.25 n.mi.). A comprehensive search pattern was run from 4,630 to 460 meters, (2.5 to 0.25 n.mi.) where HCl was detected. Concentrations measured were in the low ppb range. Later in the first cruise, a few
scattered instantaneous readings as high as 450 ppb were found at 2,780 meters (1.5 n.mi.) from the Vulcanus, but no plume pattern could be established. At the time, winds were gusting as high as 20 knots and beginning to shift direction.

On the second cruise, with reasonably steady winds, values higher than 3 ppm HCl were observed at a distance of 926 meters (0.5 n.mi.) from the Vulcanus; at 740 meters (0.4 n.mi.), values were as high as 7 ppm HCl. Similar values at 926 meters were found on two successive passes.

In all, the plume was contacted 17 separate times (Table V-7). Each contact ranged from 2 to 10 minutes. The maximum concentrations observed ranged from 0.01 to 7 ppm. Normal HCl back-

TABLE V-7

MONITORING OF VULCANUS PLUME RESEARCH BURN 1(1)

Date	Rise from baseline (local time)	Return to baseline (local time)	Maximum concentration (ppm)	Title of maximum (local time)
October 20	0811:45[2]	0813:45	0.010[3]	0812:15
(first cruise)	1151	1153:15	0.010	1152
	1348	1358	0.077	1352:15
	1429	1434	0.026	1431:30
	1454	1500	0.300	1454:45
	1557:30	1604	1.35	1600
	1759:15	1803	0.435	1801
	1804:30	1811	0.310	1850
	1817:15	1820	0.040	1817:45
October 27	2223	2233	2.9	2225:20
(second cruise)	2256:15	2300	0.100[4]	2256:45
	2323:45	2325:45	1.8	2324:25
	2337:15	2342:30	3.15	2341:25
	2347:15	2351:20	3.9	2349:25
	2354:10	2358	7.25	2354:50
October 28	0022:45	0027	0.680	0023:15
	9939:20	0034	0.390	0030:40

1. Data corrected for hysteresis.
2. 0811:45 = 0811 hours and 45 seconds
3. Minimum detection limit.
4. Maximum concentration between 0.1 and 0.2 ppm

Source: National Aeronautics and Space Administration, Langley Research Center, Hampton, Va.

ground in the Gulf of Mexico was below the monitor's detection limit of 10 ppb. There was no instrument response in the visible Vulcanus plume during stack warm-up and before any wastes were incinerated.

Aerial Monitoring--Burn II(16)

On Research Burn II, a twin Turbo-Beech aircraft from NERC-Las Vegas made crosswind and axial passes through the plume on December 2, 3, and 4, the first three days of incineration. Because of its previous experience in monitoring HCl in solid fuel rocket motor exhaust, the Air Force School of Aerospace Medicine at Brooks Air Force Base in Texas was asked to assist EPA in the monitoring. The Air Force provided a coulometer and a chemiluminescent analyzer for use on board the aircraft and provided technical assistance.

Additional details on equipment and procedures are given in Appendix C.

Equipment

The aircraft is equipped with two 4-centimeter (inside diameter) sampling probes extending about 2 meters beyond the nose. (Figure V-3) The probes duct air to the various sampling and monitoring instruments in the cabin. On the Vulcanus mission, three monitoring instruments and a "grab" sampler were carried.

16. Aerial Monitoring of the Plume Generated by at-Sea Incineration of Organochlorine Wastes. U.S. Environmental Protection Agency, National Environmental Research Center, Las Vegas, Nev. Feb. 5, 1975.

Figure V-3 Environmental Protection Agency NERC – Las Vegas aircraft with sampling probes and monitoring instruments.

Source: U.S. Environmental Protection Agency, National Environmental Research Center, Las Vegas, Nevada.

An Environment One Corporation condensation nuclei monitor (CNM) was used to track the plume. It is capable of detecting as low as a few hundred condensation nuclei per cubic centimeter (cm^3) and up to 10 million on the highest range. The most suitable range during this project was 100,000/cm^3full scale, where typical centerline concentrations were from 30,000 to 80,000/cm^3. The CNM was read out on a strip-chart recorder in front of the co-pilot's seat, from where the crew chief directed the sampling mission. The flight record, including altitude, positon, time, and other pertinent information, was kept on this chart.

The HCl concentration was monitored with a Geomet Model 401 chemiluminescent analyzer. Sample air was brought to the analyzer through a 0.5-centimeter (inside diameter) polypropylene tube. In order not to expose the sample air to metal, the tubing was placed inside one of the two aircraft sampling probes and secured at the inlet with a perforated stopper. HCl data were recorded on a strip chart and later compared to the CNM strip chart. The limit of detection is about 0.01 ppm.

A Dohrmann Model C-200-B coulometer, in a modified package for field use, was carried as a backup to the chemiluminescent instrument, and, more importantly, as the primary standard for calibration of the HCl monitoring system.

Grab bag air samples were collected in Tedlar bags with capacities of 0.1 cubic meters at about the same relative location

in the plume each day, 400 meters downwind at 210 to 240 meters mean sea level (MSL). The samples were taken from the same sampling probe as was used to monitor the condensation nuclei during maximum CNM deflection.

Axial passes were made to determine how far downwind the instruments could detect the plume and how steeply the plume rose. As the aircraft traversed the length of the plume, the looping of the plume showed up as a series of concentration maxima and minima on the CNM chart.

Distances were calculated by multiplying the time in the cloud (as shown by recorded CNM data) by the aircraft ground speed. Altitudes were taken directly from the aircraft pressure altimeter, which was set each day just before starting a mission.

Results

The data collected on concentrations of HCl and condensation nuclei showed that the top of the airborne plume trailed back from the Vulcanus stack at an angle of about 20 degrees from the horizontal, reached a maximum altitude of 850 meters MSL, and fanned out horizontally to a width of about 1,200 meters at a distance of 2,400 meters downwind from the stack.

Aerial photographs of the plume made visible when the Vulcanus injected ammonia showed that the plume was "looping," indicating an unstable temperature structure at the lower elevations (Figure V-4.) Axial passes through the length of the plume at 830 and 850 meters

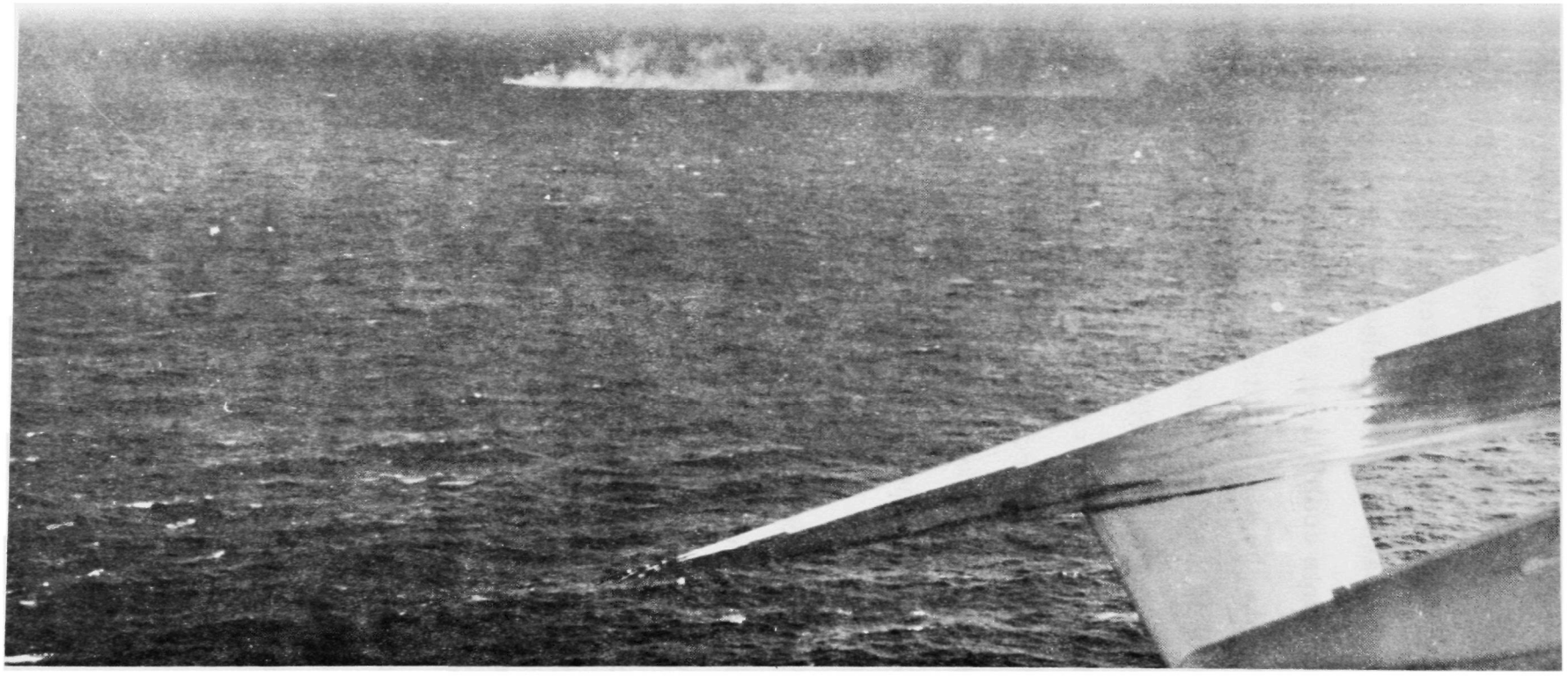

Figure V-4 Plume of ammonium chloride from M/T "Vulcanus" induced by addition of ammonia to the stack emissions.

Source: U.S. Coast Guard, Corpus Christi, Texas

MSL, near the maximum altitude of the plume, confirmed the looping phenomenon, and the monitoring instruments indicated that the distance between tops of successive loops averaged 1,400 meters. (These data are represented in Figure V-5.)

Where the plume began to level off at 850 meters, a small white cloud (also observed aboard the Vulcanus) formed. Several of these clouds followed the ship, all at about the same altitude. Two were measured, and the average dimensions were 860 meters wide and 60 meters thick. After the Vulcanus released ammonia, the clouds appeared to be at the tops of the loops in the plume and were probably condensed water vapor from the combustion process. Condensation nuclei were detected both in and out of these white clouds, as well as at altitudes greater than that of the clouds.

The maximum HCl concentration in the Vulcanus plume, measured on the first and third days of monitoring, was 3 ppm. The maximum on the second day was 1.8 ppm. All three maxima were encountered in about the same relative position each day--100 to 240 meters in altitude, and between zero and 400 meters downwind.

In areas of low HCl concentrations, the correlation between CNM and HCl concentrations was not good, probably because the HCl analyzer was operating at its limit of detection. However, in concentrations greater than 0.1 ppm, both instruments re-

VULCANUS PLUME ELEVATION

DECEMBER 4, 1974

(Plotted numbers are condensation nuclei maxima in 10^3/cc.)

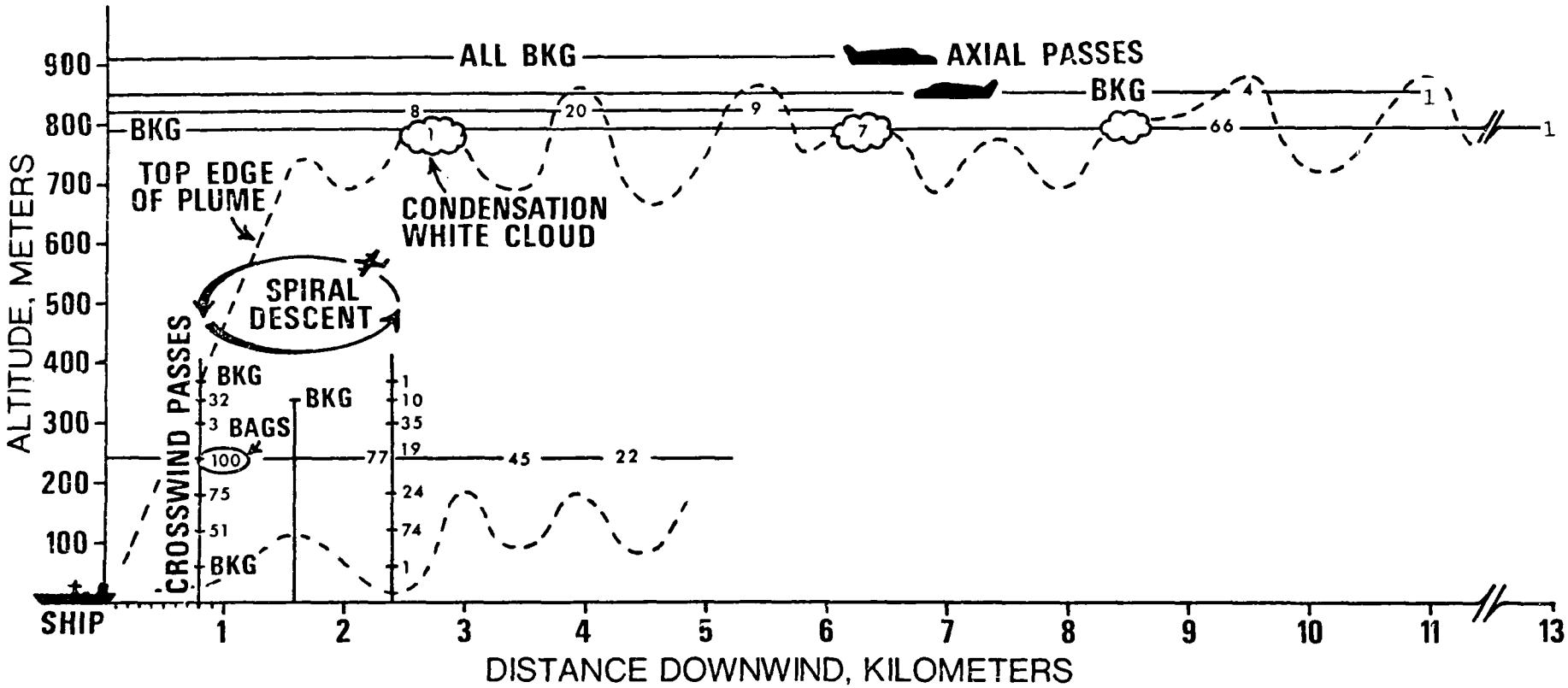

FIGURE V–5

NOTE: To portray all data on one sheet, abscissa has been reduced by a factor of five compared to the ordinate. Dotted lines represent extremities of plume based on axial pass data and visual observations.

Source: U.S. Environmental Protection Agency National Environmental Research Center, Las Vegas, Nevada.

sponded simultaneously to the plume.

The grab bag air samples were analyzed at the National Environmental Research Center in Research Triangle Park, N. C., by Fourier Transform Infrared Spectrometry. The results indicated that the samples were low in pollutants.

CHEMICAL AND BIOLOGICAL IMPACT ON THE MARINE ENVIRONMENT

The constituents of the Vulcanus plume that might damage the marine environment were:

+ HCl, exhausted from the stacks in large quantities.
+ Any organochlorides not destroyed during incineration.
+ Trace toxic metals in the waste.

All three constituents will be dissolved in the water where the stack emissions reach the ocean surface. Organochlorides and trace toxic metals may enter the food chain and be bioaccumulated, with potentially adverse effects on the marine ecosystem. All three constitutents can have immediate impacts in the area directly affected by the plume, but they may also have long-range impacts in the general area.

Determination of pH, chlorinity, organochlorides, and trace metals was used to detect both short-term and long-term effects; in addition, phytoplankton counts, zooplankton counts, and determination of chlorophyll-a and adenosine triphosphate (ATP) concentrations were used to assess long-term effects.

Additional details on equipment and procedures used are given in Appendix D. Additional data are given in Appendix E.

Short-Term Effects

pH and Chlorinity

The major component of stack emissions that would have an immediate impact on the ocean is HCl. As an acid, it might depress the pH slightly, despite the very strong buffering capacity of sea water. Should the pH change, it would be of slight duration. The addition of the chloride ion from HCl would be a permanent change in sea water. However, chloride ion is present in sea water at concentrations of about 20,000 ppm, so that any such changes would be hard to detect, particularly in view of the very rapid dilution occurring immediately after the HCl dissolves.

Oregon II cruises. On Research Burn I, the Oregon took four water samples at locations under high concentrations of HCl in the plume--one sample during the first cruise was taken at a location with a plume concentration of 450 ppb.(13) However, the plume was not positively identified on the run, so there may be some doubt as to whether the sample was actually taken in the plume. The pH and chloride data for the station were the same as for the two control stations for this cruise (Table V-8).

On the second cruise of the Oregon, three samples were taken in the plume at or near locations indicated by analysis of the plume data

TABLE V-8

SHORT-TERM EFFECTS FROM INCINERATION,

FIRST CRUISE OF OREGON DURING

RESEARCH BURN I

Parameter	Plume station I-3	Control stations I-1	Control stations I-2
Distance from Vulcanus-nautical miles (meters)	1.5 (2,780) west	1 (1,850) astern	1 (1,850) ahead
pH (standard units)	8.35	8.3	8.38
Chlorinity (parts per thousand)	20.09	20.09	20.09
Organochlorides (ppb)	<0.5	<0.5	<0.5
HCl in plume (ppb)	450		

Source: Preliminary Technical Report on Incineration of Organochlorine Wastes in the Gulf of Mexico. U.S. Environmental Protection Agency, Oil and Special Materials Control Division, Washington, D.C. Nov. 13, 1974.

to be the point where the plume initially touched down. Analysis of these three samples, as well as of samples from two control stations taken upwind from the Vulcanus immediately after the plume stations were taken, showed no significant differences (Table V-9). The depression of the pH by 0.15 unit and the increase of chlorinity by about 0.5 parts per thousand at one station over the controls are values well within the limits of detection of the methods. Even if the changes represented actual impact on the ocean, the impact was so slight as to be barely measurable and would pose no threat to the marine environment.

The grid of 16 stations designed primarily to examine long-term effects showed nothing other than random sampling and analytical variation in pH and chlorinity, as well as in organochlorides and trace toxic metals.

Orca cruises. The Orca, a 30-meter long oceanographic research vessel, had been operated for many years by the Scripps Institution of Oceanography and later by Texas A&M University. She is equipped with both LORAN and radar. Under contract to Shell, TerEco Corp., of College Station, Tex., leased the Orca for sea-level monitoring on Research Burn I. On Research Burn II, EPA contracted with TerEco for the services of the Orca.

On the first research burn, the Orca ran three types of sampling patterns--Transect, Axial, and Axial Control (Figures V-6 and V-7).(17)

17. A Field Monitoring Study of the Effects of Organic Chloride Waste Incineration on the Marine Environment in the Northern Gulf of Mexico. Prepared by TerEco Corp., College Station, Tex., under contract to Shell Chemical Co., Houston, Tex., Oct. 30, 1974.

TABLE V-9

SHORT-TERM EFFECTS FROM INCINERATION,

SECOND CRUISE OF OREGON DURING

RESEARCH BURN I

Parameter	Plume stations			Control stations	
	II-2	II-3	II-4	II-5	II-6
Distance from Vulcanus-nautical miles (meters)	0.75 (1,390)	0.5 (926)	0.25 (463)	5.5 (10,186)	7.5 (13,900)
	downwind			upwind	
pH (standard units)	8.05	8.2	8.2	8.2	8.2
Chlorinity (parts per thousand)	20.48	20.26	20.09	19.98	19.87
Organochlorides (ppb)	<0.5	<0.5	<0.5	<0.5	<0.5
HCl in plume (ppb)	2.5	7	4.5	-	-

Source: Preliminary Technical Report on Incineration of Organochlorine Wastes in the Gulf of Mexico. U.S. Environmental Protection Agency, Oil and Special Materials Control Division, Washington, D.C. Nov. 13, 1974.

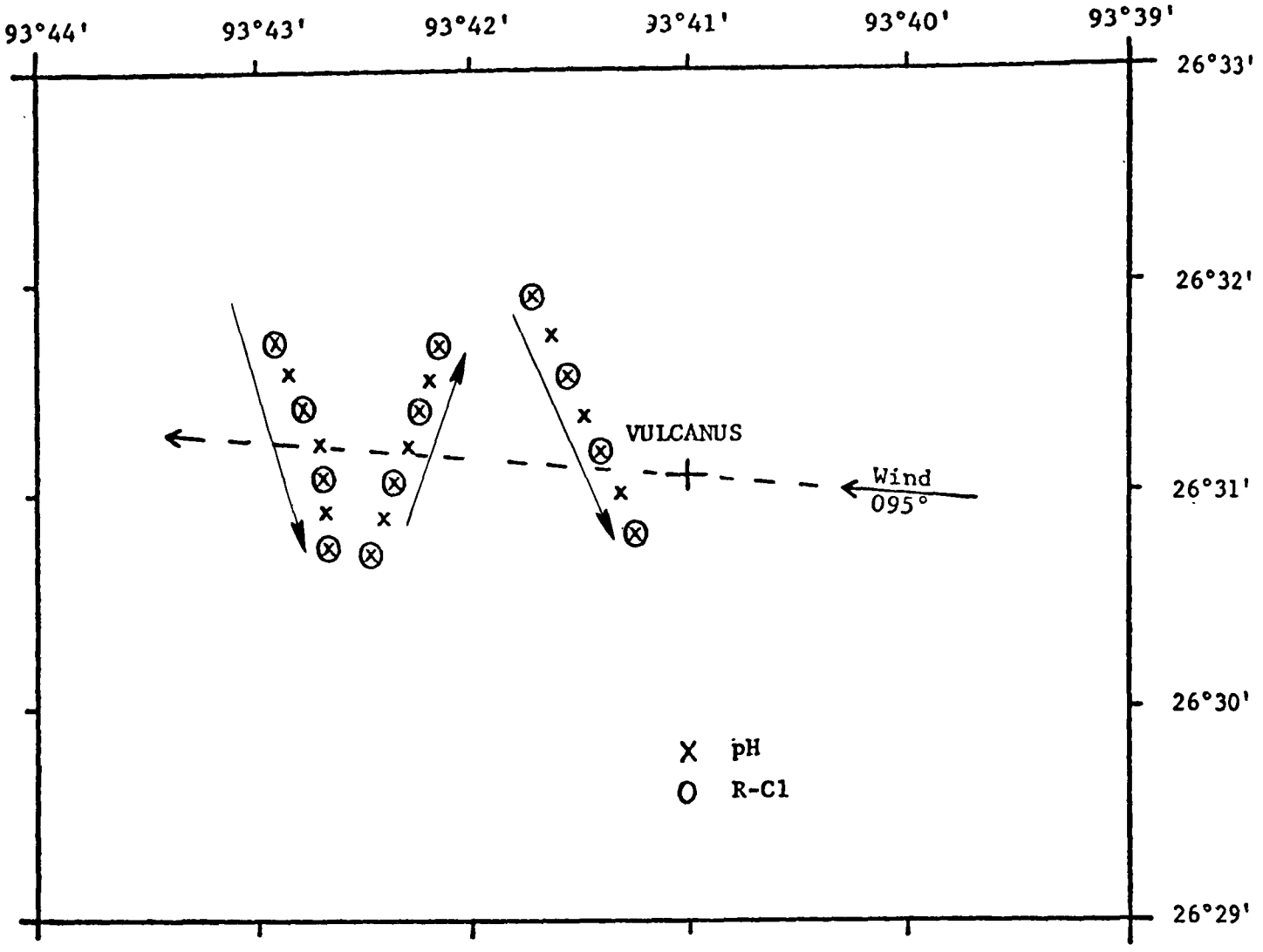

Figure V 6 Illustration of Transect sampling pattern run by the ORCA, Research Burn I

Source: A Field Monitoring Study of the Effects of Organic Chloride Waste Incineration on the Marine Environment on the Northern Gulf of Mexico. Prepared by TerEco Corporation, College Station, Texas. under contract to Shell Chemical Company, Houston, Texas. October 30, 1974

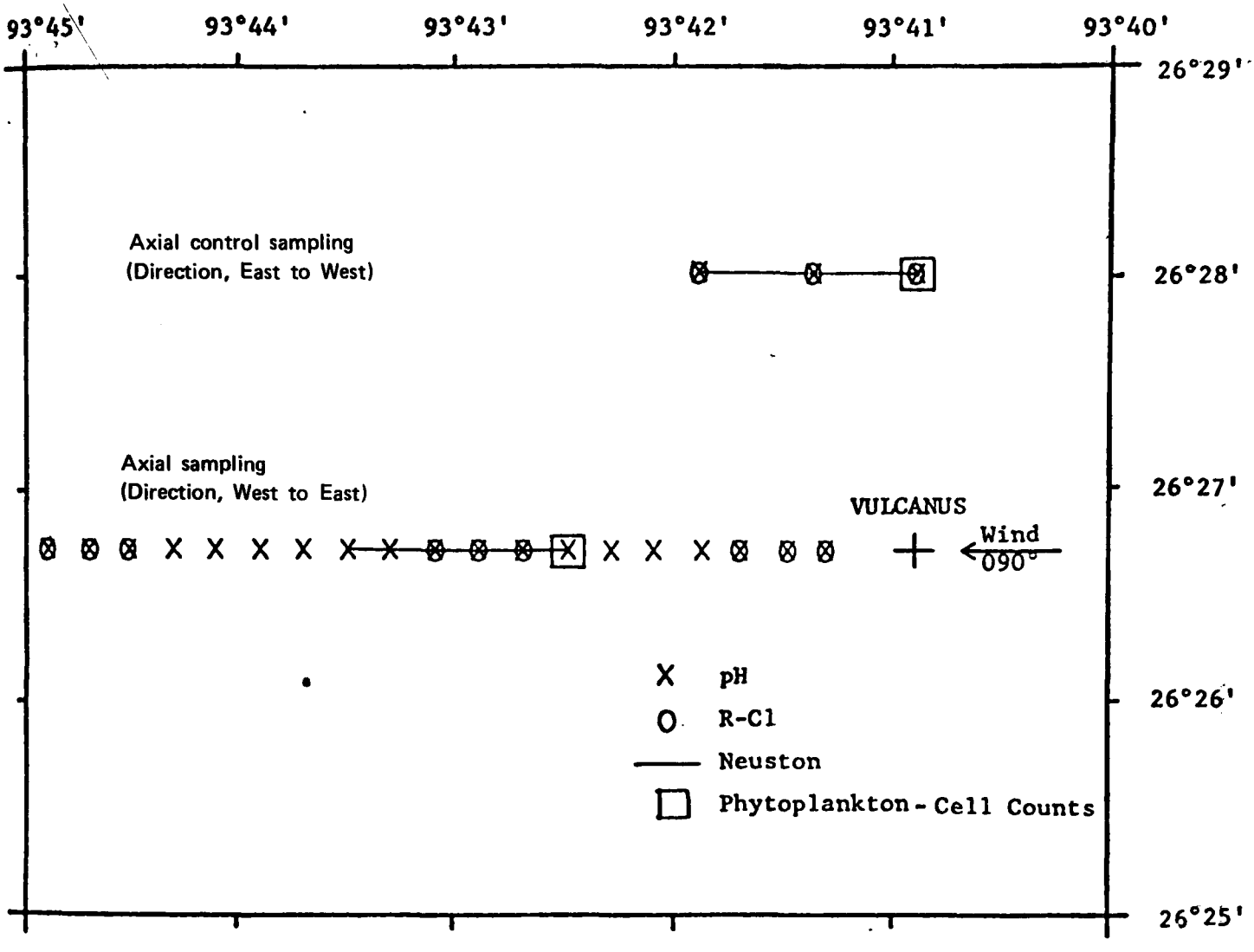

Figure V-7 Illustration of Axial and Axial Control sampling.

Patterns Run by the ORCA, Research Burn I

Source: A Field Monitoring Study of the Effects of Organic Chloride Waste Incineration on the Marine Environment in the Northern Gulf of Mexico. Prepared by TerEco Corporation, College Station, Texas., under contract to Shell Cheminal Company, Houston, Texas. October 30, 1974.

Analysis of about 100 sea water samples showed no differences between the fallout and control areas (Table V-10). In the fallout areas, pH ranged between 8.30 and 8.40; in control areas, the range was 8.32 to 8.37.

On the second research burn, the Orca made four test runs downwind of the Vulcanus and three control runs upwind to determine the immediate effects of incineration. Following a prescribed pattern (Figure V-8), the Orca took samples throughout a 24-hour period. No significant differences were detected between pH and chlorinity values of the test and associated control runs, even though the tests were able to delineate differences in sampling techniques (selective vs. random sampling) and to detect differences in day and night carbon dioxide content of the waters.(18)

Organochlorides

Samples collected by the Oregon on Research Burn I were analyzed for organochlorides using gas chromatographic-mass spectrographic techniques. Results were below the 0.5 ppb limit of detection.(15)

The organochloride content of the water samples gathered by the Orca was determined at the Shell Development's Bellaire Research Center.(17,18) The method involved concentration and separation from inorganic chlorides on macroreticular resins, elution with methanol,

18. Sea-Level Monitoring of the Incineration of Organic Chloride Waste by M/T Vulcanus in the Northern Gulf of Mexico, Shell Waste Burn No. 2 Prepared by TerEco Corp., College Station, Tex., under Contract No. 68-01-2829 with U.S. Environmental Protection Agency, Washington, D. C. Jan. 10, 1975.

TABLE V - 10

SHORT-TERM EFFECTS FROM INCINERATION,

ORCA CRUISE DURING RESEARCH BURN I

Location	pH Range	R-Cl	Cu
Transect 1	8.30-8.31	25 ppb	
Transect 2	8.30-8.31	25 ppb	
Transect 3	8.30-8.31	25 ppb	
Axial Run 1	8.35-8.40	25 ppb	6.7
[Axial Control 1	8.32-8.33	25 ppb	6.7
[Axial Run 2	8.32-8.33	25 ppb	5.0
Axial Control 2	8.35-8.36	25 ppb	6.7
[Axial Run 3	8.35-8.37	25 ppb	6.7
Axial Control 3	8.36-8.37	25 ppb	4.6
[Axial Run 4	8.37-8.40	25 ppb	2.2

[Sampling Pairs

Source: A Field Monitoring Study of the Effects of Organic Chloride Waste Incineration on the Marine Environment in the Northern Gulf of Mexico. Prepared by TerEco Corp., College Station, Tex., under contract to Shell Chemical Co., Houston, Tex. Oct. 30, 1974.

FIGURE V-8

SAMPLING PATTERN RUN BY THE ORCA TO DETERMINE IMMEDIATE EFFECTS

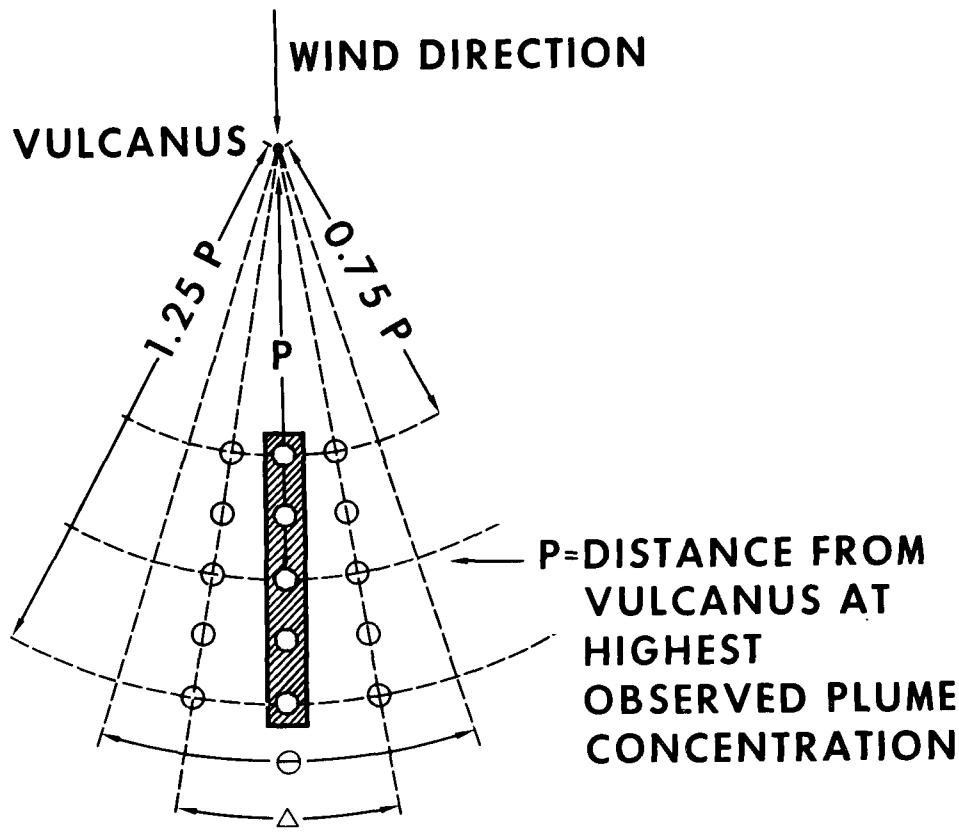

△ DISTANCE OVER WHICH READINGS WERE FOUND

⊖ SWEEP ANGLE

○ SAMPLING STATIONS FOR pH AND CHLORINITY

▨ PLANKTON TOW

DAY PHYTOPLANKTON
NIGHT ZOOPLANKTON

× SAMPLING STATIONS FOR TRACE METALS AND ORGANOHALOGENS

Source: Sea-Level Monitoring of the Incineration of Organic Chloride Waste by M/T "Vulcanus" in the Northern Gulf of Mexico, Shell Waste Burn No. 2 Prepared by TerEco Corporation, College Station, Texas, under Contract No. 68-01-2829 with U. S. Environmental Protection Agency, Washington, D. C. January 10, 1974.

and specific detection of organochlorides using microcoulometry; the limit of detection was 25 ppb of chloride. Results in 57 samples on Research Burn I and 12 in Research Burn II were below the detectable limit; samples were from both fallout and control areas.

Trace Metals

Samples gathered by the Oregon during Research Burn I were analyzed for eight trace toxic metals (arsenic, cadmium, chromium, copper, lead, mercury, nickel, and zinc) by atomic absorption techniques after extraction with methyl isobutyl ketone. No systematic changes were detected, although there were some apparently random variations.(15)

Copper at 510 ppb was the metal present at the highest concentration in the wastes incinerated in the first research burn. Shell used it as a tracer on samples collected by the Orca to establish concentrations of all the heavy metals in the ocean. Copper in sea water samples collected from the location of maximum fallout (1.8 to 2.2 nautical miles, or 3,340 to 4,080 meters from the Vulcanus) ranged from 2.2 to 6.7 ppb (Table V-10); the range in the control area was 4.6 to 6.7 ppb.(17) A total of 21 samples was analyzed by atomic absorption.

On Research Burn II, the Orca gathered 12 samples for analysis of copper and zinc by atomic absorption. Shell laboratories found no significant differences between the test and control samples (Table V-11).(18)

TABLE V-11

ANALYSIS OF TRACE METALS IN SEA WATER,

ORCA CRUISE DURING RESEARCH BURN II

Sample	Identification	Copper, µg/ml	Zinc, µg/ml
1	Test 1	0.006	0.007
2	Test 1	0.005	0.008
3	Test 1	0.005	0.004
10	Test 3	0.006	0.005
11	Test 3	0.005	0.007
12	Test 3	0.006	0.005
4	Control 1	0.005	0.005
5	Control 1	0.005	0.006
6	Control 1	0.005	0.004
7	Control 2	0.004	0.004
8	Control 2	0.003	0.004
9	Control 2	0.004	0.004

Source: Sea-Level Monitoring of the Incineration of Organic Chloride Waste by M/T Vulcanus in the Northeran Gulf of Mexico, Shell Waste Burn No. 2. Prepared by TerEco Corp., College Station, Tex., under Contract No. 68-01-2829 with U.S. Environmental Protection Agency, Washington, D.C., Jan. 10, 1975.

Long-Term Effects

Even if no effects can be detected immediately in the ocean there may still be long-term adverse effects from incineration. To identify any such effects, a sampling grid of 16 stations was laid out to include the area which the plume specifically covered during the last 24 hours of the first research burn. This area was also downwind and downcurrent of the dump site and therefore offered the greatest potential for picking up any cumulative effects. Points selected were 11,100 meters (6 n.mi.) apart in the area selected from drift estimates and other movements of the Vulcanus during the last 24 hours; the grid size was selected to assure that any impacts during this period would be found at stations within the grid. These stations, and six other stations, were sampled during the Oregon's second cruise. There were no significant changes in pH, chlorinity, organochlorides, and trace metals. Four phytoplankton samples were collected; no differences were detected between control and plume samples. (15)

In an effort to use some of the more subtle indicators of biological activity as possible guides to any impacts on the dump site, chlorophyll-a and ATP were included in the sampling program. Chlorophyll-a is recognized as an indicator for phytoplankton activity. While it is persistent even after cells have died, any suppression of chlorophyll-a in an impacted area would be a strong indicator of adverse impact. ATP is essential to life processes. Its use to

indicate effects of pollution, while still in the research stage, shows promise of being a sensitive and reliable indicator of subtle damage. Analysis of 20 samples for chlorophyll-a and 21 for ATP gave no evidence of any long-range impact from the incineration of organochlorine wastes.(15) However, there was very little life in the dump site. The chlorophyll-a and ATP levels were both generally low, and the phytoplankton counts were extremely low--500 to 1,140 organisms per liter. Thus, it is possible that effects could be observed in more abundantly populated areas. Furthermore, the dump site has drift currents, and it is likely that no single parcel of water ever had anything but momentary contact with the stack emissions. In an area of little or no net water movement, the results might be different.

Six phytoplankton and six zooplankton samples collected by the Orca during Research Burn I were also analyzed; again, no deleterious effects were observed.(17)

During the initial period of combustion on the second research burn (December 3 to 5), the Orca made tows in the test and control zones for phytoplankton and zooplankton.(18) On the phytoplankton samples, less than 3 ppm of organochlorides were detected, which is the limit of detection in the sample sizes provided for analysis (Table V-12). Analysis for copper and zinc revealed nothing to indicate with certainty that the plume fallout had caused any appreciable increases.

TABLE V-12

ANALYSIS OF TRACE METALS AND ORGANO-CHLORIDES IN PLANKTON, ORCA CRUISE DURING RESEARCH BURN II

Zooplankton	Whole sample, grams	Liquid %	Solid %	Liquid			Solid		
				Copper, mg/1	Zinc, mg/1	Organo-chlorides ppm	Copper, ppm	Zinc ppm	Organo-chlorides ppm
Tow 1 Test 1	454	90	10	0.15	0.16	1.4	85	19	3
Tow 2 Control 1	716	74	26	0.15	0.05	0.4	16	18	3
Tow 3 Test 4	2,162	71	29	0.67	0.20	0.2	6	13	3
Tow 4 Control 3	904	71	29	0.93	0.04	2.0	11	28	3

Phytoplankton	Whole sample, grams	Whole sample		
		Copper, mg/1	Zinc, mg/1	Organo-chlorides, ppm
Test 3	276	0.036	0.09	3
Control 2	281	0.030	0.08	3

Source: Personal communication. W.R. Harp, Jr., to B.N. Bastian, Shell Chemical Co., Houston, Tex., Dec. 19, 1974.

The zooplankton samples were separated into liquid and solid phases in a scheme devised by the Shell laboratories. No differences between test and control organisms were detected in the concentration of organochlorides in the solid phase. The concentrations in the liquid phases, however, varied from 0.2 to 2.0 ppm. This was probably not due to plume fallout because the level in one of the test samples was lower than its control. Also, the samples contained varying amounts of tar balls, despite attempts to avoid them in sampling. The tar materials were high in organochlorides, although for the most part they were of higher molecular weight than those in the Shell wastes.

Effects on Birds

Possible effects of the Vulcanus project on birds were considered. Of special concern were migrating birds--blue-winged teal and certain song birds, for example--that could traverse the site during their fall and spring migrations. According to a Shell wildlife specialist, the birds would generally migrate at 1,000 to 5,000 feet, where HCl concentrations would be very low.(19) Furthermore, the birds would probably be warned off areas of high concentrations when they encountered lower concentrations that are irritating but not toxic. With strong physiological drives to complete their migration, the birds would probably not linger in the incineration site.

19. Gusey, W.F. Potential Effects of at Sea Incineration of Organic Chloride Wastes on Migrating Birds, Shell Chemical Co., Houston, Tex., Nov. 1, 1974.

VI. RESULTS OF INTERIM PERMIT BURNS

FEED RATES AND COMBUSTION TEMPERATURES

The major reporting requirement of the interim permit was that the Master of the Vulcanus maintain log sheets on operating conditions, which were identical to those of the second research permit. These log sheets were transmitted to the EPA Regional Office in Dallas, Tex., at the end of the incineration. (For a chronology of events under the interim permit, see Table VI-I.) The waste feed rate log for the first load indicates that the discharge rate varied from 23.2 to 25.0 MT/hour, with consecutive discharge from the tanks. On the second load, discharge to the incinerators again was from one tank after another, but various tanks had to be mixed in order to maintain temperature because the wastes contained a large amount of slop water. The entire second load of 4,103 MT was discharged over a period of 167 hours, for an average rate of 24.5 MT/hour.

Once during each watch, entries were made on the operational log to indicate combustion temperatures, wind speed, direction, and position. (Copies of log sheets are shown in Appendix F.) The controller temperature never dropped below 1,230°C for either incinerator; the maximum temperature was 1,360°C. The wind speed was between 20 to 40 knots, with the exception of January 5 and 6, when the wind speed was 10 to 13 knots. For the first incineration period, the winds blew mostly from the

southeastern quadrant, and duringthe second period from both the northeastern and southeastern quadrants, with some apparent exceptions in each case.

TABLE VI-1

CHRONOLOGY OF INTERIM PERMIT BURNS, DECEMBER 18, 1974 - JANUARY 9, 1975

Event	Time	Date (1974-75)
M/T Vulcanus departs Port of Houston, Tex.	0705	Dec. 18
Incineration starts	0330	Dec. 19
U.S. Coast Guard conducts aerial monitoring	1804	Dec. 20
U.S. Coast Guard conducts aerial monitoring	1445	Dec. 23
U.S. Coast Guard conducts aerial monitoring	1451	Dec. 24
Incineration ends	0330	Dec. 26
M/T Vulcanus arrives Deer Park, Tex.	0300	Dec. 27
M/T Vulcanus departs Port of Houston, Tex.	1525	Dec. 30
Incineration starts	0900	Dec. 31
U.S. Coast Guard conducts aerial monitoring	1410	Jan. 3
U.S. Coast Guard conducts aerial monitoring	1044	Jan. 4
U.S. Coast Guard conducts aerial monitoring	1025	Jan. 6
Incineration ends	0800	Jan. 7
M/T Vulcanus arrives Port of Houston, Tex.	1405	Jan. 8
M/T Vulcanus departs Port of Houston, Tex., for Europe	0400	Jan. 9

Source: Records in EPA Headquarters, Oil and Special Materials Control Division, Washington, D.C.

MONITORING ACTIVITIES

As recommended by EPA after the research burns, the U.S. Coast Guard conducted unannounced aerial surveillance of the disposal site during incineration. Overflights occurred on December 20, 23, and 24 for the first load and on January 3, 4, and 6 for the second load. In each case, photographs and a sea state report were provided to EPA.

The report for the January 3 overflight by the U.S. Coast Guard Air Station at Corpus Christi, Tex., provided the first documented record that a visible plume was produced upon incineration. Theoretical models had predicted that under specific meteorological conditions, including high relative humidity, HCl gas would condense in water droplets to form a white cloud of HCl. Reports and photographs indicate a white plume had resulted from incineration of organochlorine wastes in Europe. However, incineration of the Shell wastes in the Gulf of Mexico under research permits, with both vessel and aircraft surveillance, had produced no natural plume during the monitoring and data gathering surveys. A notation on the photograph report forwarding the exposed film from January 3 stated that a plume was visible when the aircraft arrived on scene, the skies were overcast, with visibility of 1/2 mile (800 meters) in the rain, 3-foot (1 meter) seas, and a 15-knot wind. The photographs from that overflight show a dense white plume (Figure VI-1).

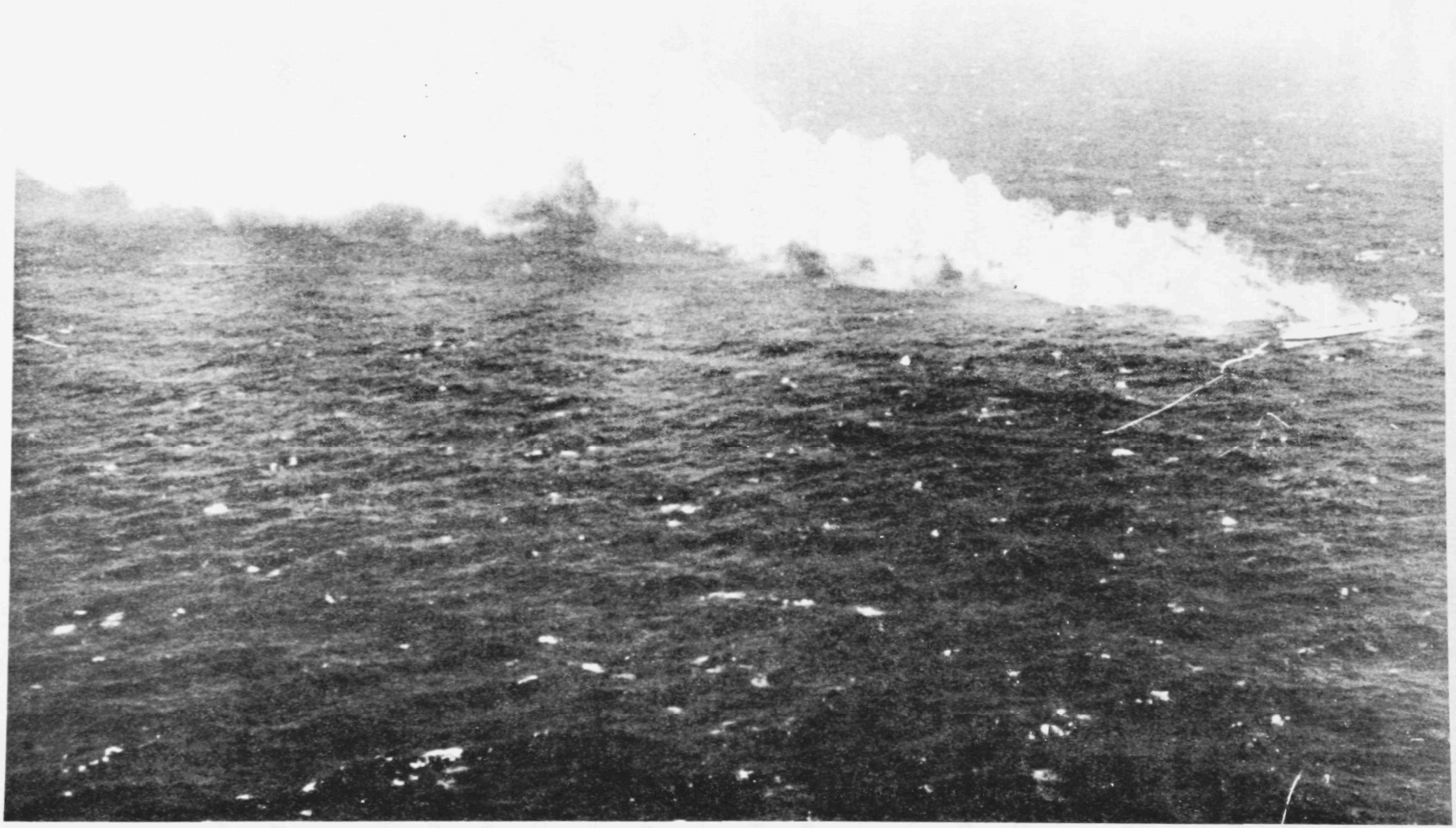

Figure VI-1 Natural plume of stack emissions due to meteorological conditions.

Source: U.S. Coast Guard, Corpus Christi, Texas.

The report from the flyover on the next day, January 4, indicates that, with a scattered cloud cover, no plume was visible. Ammonia was added for tracking the plume. Photographs show no plume upon arrival, but an induced plume of ammonium chloride after addition of ammonia. This cloud is thin and wispy, especially in comparison with the plume from the previous day. Again, on January 6 no plume was visible, and one was induced with ammonia. Although notations were not made on the reports of the overflights on December 20, 23, and 24, a comparison of the photographs from these flyovers to the January ones strongly suggests there was a visible plume on two of those days, which corresponds to the informal verbal reports.

APPENDIX A. AT-SEA INCINERATION OF SHELL CHEMICAL ORGANIC CHLORIDE WASTE

Stack Monitoring Aboard the M/T "Vulcanus"

BY

J.H. Badley, A. Telfer, E. M. Fredericks

TECHNICAL PROGRESS REPORT BRC-CORP 13-75-F

Project No. 83347
Dispersion Measurements (Ocean Disposal)

Reviewed by: M. A. Muhs
Participants: P. Glickstein, P. H. Hughes, J. D. Jobe, H. Joki, C. R. McGowin, J. C. Raia, W. T. Shebs
Released by: M. A. Muhs
Reference: Based on work through March 1975
RELR 1105, pp. 30-113

TABLE OF CONTENTS

	Page
Abstract	iii
Introduction	1
Summary and Conclusions	1
The M/T "Vulcanus"	2
Description	2
Operation	3
The Stack Sampling Problem	5
Calculation of Stack Gas Composition	6
Stoichiometry	6
Effect of Excess Air on Stack Gas Composition	6
First Voyage: Sampling Apparatus and Procedure	7
Sample Ports	7
Probe	7
Sample Line	10
Scrubber Train	10
Instruments	14
Procedure	14
Optical Pyrometer	15
First Voyage: Results	15
Sampling Targets	15
Data Summary Log	15
Feed Rates	15
Oven Temperatures	15
Experimental Difficulties	17
Treatment of Data	17
Combustion Efficiency	18

Second Voyage: Sampling Apparatus and Procedure 20

Sample Ports 20

Probe and Support Assemblies 20

Sample Line 20

Scrubber Train 20

Instruments 26

Procedure 27

Optical Pyrometer 27

Second Voyage: Results 27

Sampling Targets 27

Data Summary Log 27

Experimental Difficulties 27

Feed Rates 28

Oven Temperatures 29

Treatment of Data 29

Organic Chloride Destruction Efficiency 31

Sample Collecting System Integrity Tests 32

Field Test 32

Laboratory Test 33

Probe Failure Causes 35

First Voyage 35

Second Voyage 35

Comments 35

Appendix A-1

ABSTRACT

To aid in securing a permit for ocean burning of Shell Chemical's organic chloride waste, two stack sampling campaigns were conducted aboard the incinerator ship M/T "Vulcanus." The goal was to measure the extent of the destruction of the waste in the ship's incinerators.

Sampling conditions were severe as the stack gas was very hot and corrosive. Water cooled, glass lined probes were designed and used for satisfactorily extracting samples. On the first voyage organic compounds in the stack gas were found to be less than 0.1% of the feed, in accord with the requirements specified by the Environmental Protection Agency. On the second voyage, in addition to demonstrating compliance with the limit of 0.1% of feed in the stack gas, it was shown that gas taken from either of the two incinerators on the ship or from locations near the wall or center of the incinerators had essentially the same composition. Shipboard and laboratory tests of the integrity of the sampling system indicated that losses were not significant and within the limits allowed.

KEY WORDS: Stack gas monitoring, organic chlorides, waste material, ship, M/T Vulcanus, incineration, waste disposal, sampling, Environmental Protection Agency, effluent, marine environment.

TECHNICAL PROGRESS REPORT BRC-CORP 13-75-F

AT-SEA INCINERATION OF SHELL CHEMICAL ORGANIC CHLORIDE WASTE

BY

J. H. BADLEY, A. TELFER, AND E. M. FREDERICKS

INTRODUCTION

This report describes the stack gas sampling done on two voyages of the M/T "Vulcanus." The aim of this work was to measure the destruction of organic chloride wastes from the Shell Deer Park Manufacturing Complex during ocean combustion. This monitoring was a portion of a general study of the effect of the combustion products from the Vulcanus on the environment in the vicinity of the burn site. This study was done in accord with requirements of permits 730D008C and 730D008C (2) issued by the United States. Environmental Protection Agency, under the authority of the Marine Protection, Research and Sanctuaries (Ocean Dumping) Act. Copies of the permits are given in the Appendix. The location of the permit burn site was the rectangle between 26°20′ to 27° north latitude and 93°20′ to 94° west longitude. This is about 165 miles southeast of Galveston, Texas.

With regard to this monitoring program, the basic requirement of both permits was that at least 99.9% of the waste be destroyed in the incineration. To test conformance with this requirement required monitoring of the effluent stack gas for uncombusted feed during operation of the incinerators. While general emission monitoring techniques have been described for power plant stacks, municipal incinerators and many other kinds of combustion equipment, the unusually high temperatures and the corrosive gases involved made stack gas sampling much more difficult in this project. This required the design and use of special equipment and procedures which are described in this report.

SUMMARY AND CONCLUSIONS

Through the use of specially designed water cooled probes, the incinerator effluents were collected in impingers and analyzed chemically. Some constituents were also determined directly by instruments. Components monitored were unburned hydrocarbons and organic chlorides, hydrogen chloride, chlorine, oxygen and carbon monoxide. In addition, combustion temperatures and feed rates were observed. Experimental difficulties during the first of two monitoring missions prevented monitoring for periods of times deemed optimumal. However, because improved apparatus was used, monitoring was more complete during the second mission.

The following observations were made as a result of our monitoring program:

1) Feed rates and incinerator temperatures were within the ranges specified by the permits.

2) Oxygen concentrations in the effluent gases indicated about 100% excess air was used during combustion. This is in the range allowed by the permits and which permitted high combustion efficiencies.

3) From the measurement of organic carbon in the scrubbers and from measurements with a total hydrocarbon analyzer, the combustion efficiency of the organic carbon in the feed was found to be 99.92-99.98% safely more than the 99.9% required.

4) Generally, trace organic chlorides were not observed. Based on the limit of detection of the analytical procedure, destruction of organic chloride was 99.984-99.998% complete. This was greatly in excess of the 99.9% required by the permit.

5) Low concentrations of carbon monoxide (25-210 ppm) observed in the effluent gas were consistent with a highly efficient combustion process. The permit allowed concentrations up to 1000 ppm.

6) Chlorine concentrations ranged upwards to 890 ppm. These were in the range expected from combustion temperatures and did not present any hazard.

7) Emissions from both incinerators on the "Vulcanus" were similar and judging from the results of crude traverse experiments, the location of the probe did not have a significant effect on the values measured.

8) The recovery efficiency of the sampling system for a typical organic chloride in the waste (1,2-dichloroethane) in the low ppm range was 72% in a shipboard test and 90% in a laboratory test. This indicated no significant sampling line losses and both values were greater than 50% required by the permit.

In conclusion, we have devised a scheme for testing high temperature incinerator stack gases. From the results observed, it is apparent that the incinerators on the "Vulcanus" are highly efficient (> 99.9%) in the combustion of our organic chloride wastes. This is in agreement with earlier European studies where high combustion efficiencies were also observed.

THE M/T "VULCANUS"

Description

The Motor Tank "Vulcanus" is a chemical tanker fitted with two large incinerators aft of the bridge. Figure 1 is a picture of the vessel. Some of the ship's specifications are given in the table below.

Length overall	101.95 meters (334'6")
Breadth	14.40 meters (45'11")
Draft - max.	7.40 meters (24'5")
Deadweight	4,768 metric tons
Tank capacity	3,503 cubic meters

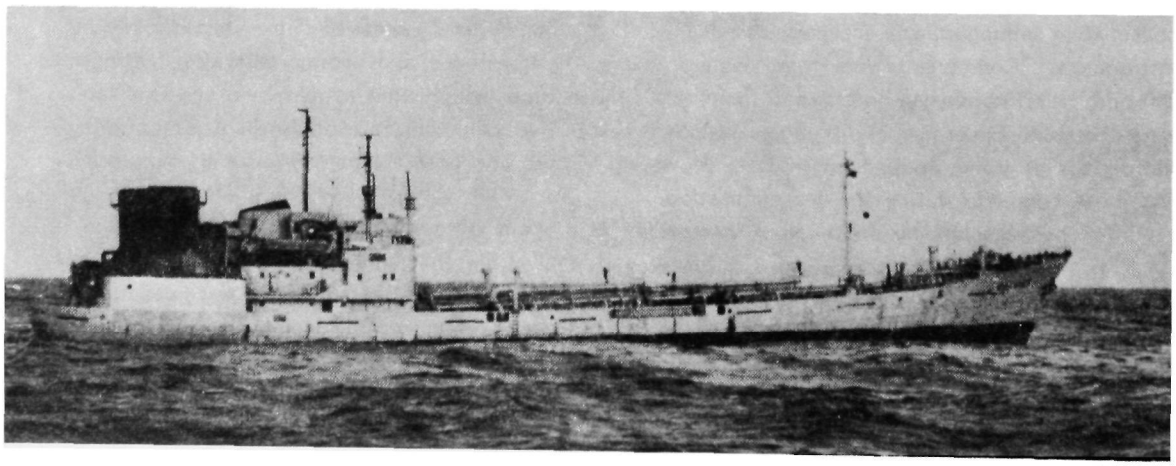

Figure 1. The M/T "Vulcanus"

The ship is managed by Ocean Combustion Services, B.V., P. O. Box 608, Rotterdam, The Netherlands.

The vessel is of double bottom construction with a clearance between tanks and hull of 1.1 meters. The engine room and cargo tanks are separated by rooms for the waste feed pumps and for the auxiliary generator which powers the incinerator system.

The cargo is carried in 15 tanks of size ranging from 574 down to 115 m^3. The tanks are filled from above through a manifold on the deck. Discharge lines from the tanks run through an elaborate manifold in the pump room. Generally, any tank can be connected to any of six burners in the incinerators. The only way the cargo tanks can be emptied is through the incinerators. This construction feature was required for operation out of Dutch ports. The pumps can reduce lumps of soft materials as large as 5 cm to 0.2 cm size.

Each incinerator has an outer diameter of 5.50 m (18.0 ft). The brick lining is 0.35 m thick, so the inside diameter is 4.8 m (15.7 ft). The ovens are 10.45 m (34.3 ft.) high and can be lifted out for repairs. Each incinerator is equipped with three burners located roughly symetrically abound the bottom of the ovens. These are directed toward the axis of the oven at a slight angle from the corresponding diameter of the oven. Small lumps in the feed from the pump room do not interfere with the burner performance.

Air for the combustion is supplied by large blowers of 90,000 m^3/hr capacity for each incinerator. Power for these blowers and other parts of the incinerator system is supplied by a separate auxiliary generator of 750 kw rating at 440v and 60 Hertz. (The main ship power system is 250v, 50 Hertz).

Temperatures during operation of the incinerators are measured by two platinum platinum/10% rhodium thermocouples in each oven. Each pair is located in a well opposite one of the burners. One of the thermocouples is about 1/2-inch from the inside surface of the fire brick. It is connected to a control system which will shut down the feed to the incinerator if the temperature falls below 800°C. This is a safety feature. However, above 800°C, the control unit can be used as a thermometer by moving the set point up to the existing temperature. Because this system responds comparatively rapidly to changes in temperature, it is used to determine temperatures at which waste feed is started and for other operational controls. These temperatures are referred to in the text as "controller temperatures."

Behind the control thermocouple in the same well, at a depth of about 2 inches below the inside surface of the fire brick, is a second, separate thermocouple. This is connected to two indicating meters, one in the incinerator control room and the second in a console on the ship's bridge. Because of its greater distance from the inner surface, this thermocouple registers lower temperatures and responds more slowly than the controller thermocouple. Temperatures from it are referred to in the text as "indicator temperatures."

On the bridge is a panel in an enclosure referred to as the "black box" which displays the necessary information to assure interested parties that wastes are being burned at proper temperatures, and, in Europe where the DECCA Navigator can receive suitable land based signals, at the proper location. A picture of the panel is shown in Figure 2. An 8 mm movie camera photographs this console each 15 minutes. The camera, or indeed access to the whole black box, can be sealed by government authorities. Notice that the panel shows merely where pumps to the six burners are on or off; no provision is made for measuring feed flow rates because meters would introduce potential for leaks and plugging. In practice, average feed rates are obtained by timing the emptying of each of the feed tanks.

Operation

The ship's tanks are normally loaded using the customer's onshore pumps, as the ship is not equipped with loading gear. This can be provided, however, in special cases of need. Loading time for each of the two voyages described here was about 48 hours. After traveling to the designated burn site at 11 knots, the ship warms up the incinerators while burning gas oil or other non-hazardous fuel. Warm-up time depends on the length of time between operations and how wet the brick lining is.

M/T "VULCANUS" - RECORDING EQUIPMENT

This panel is enclosed in a "black box", which can be sealed by the respective authorities.

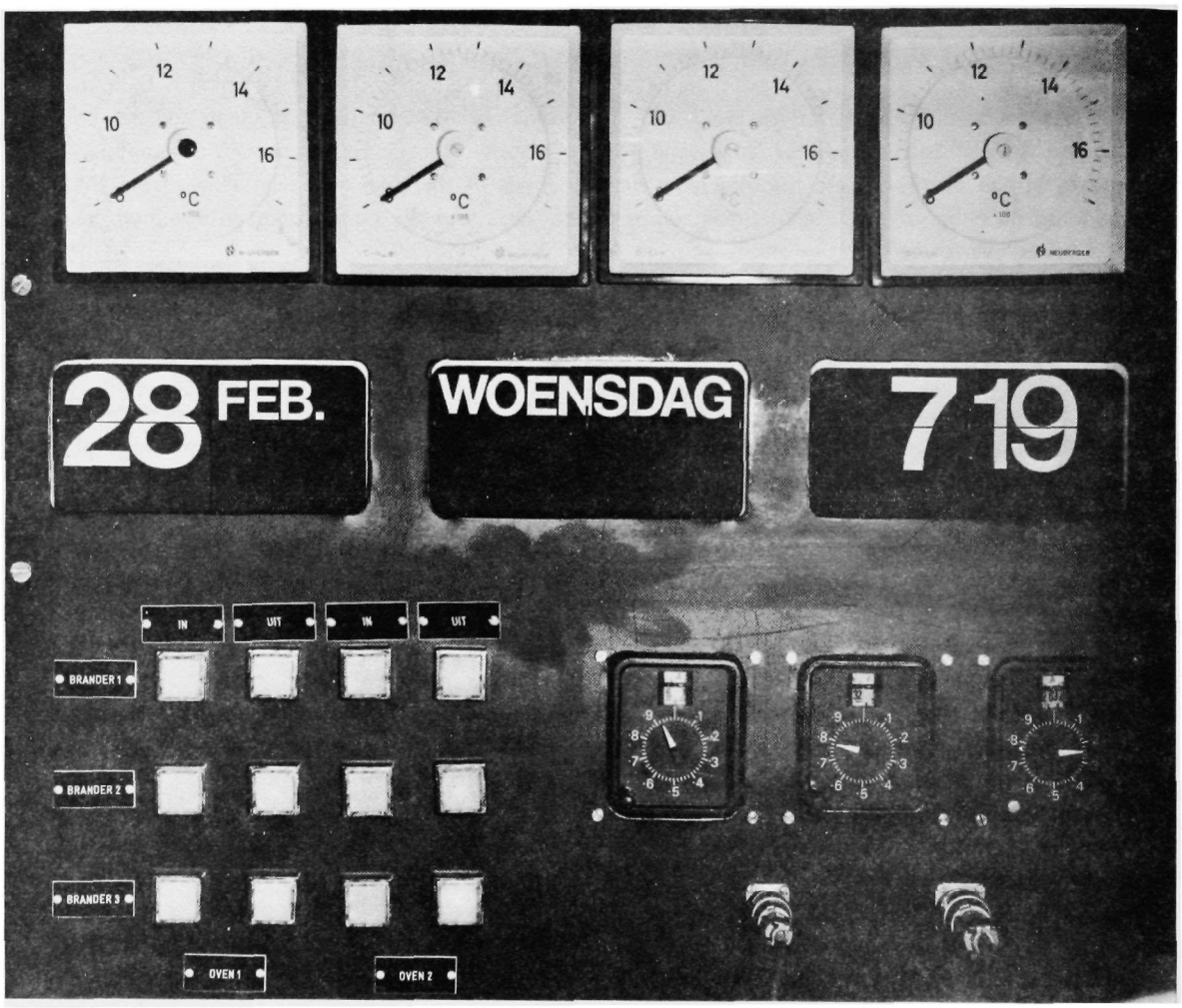

Data recorded by automatic camera:

Temperatures inside incinerators
Temperatures at outlet of incinerators
Day/Month/Time
Waste injection pumps on/off
Vessel's position (Decca Navigator Mk 21)

Camera takes photo automatically every 15 minutes.
All equipment is fed by vessel's own generators, but switches to built-in batteries automatically in case of black-out

Figure 2. "Black Box" Panel

The longest time required is about 24 hours. When the oven temperature reaches 1100 to 1200°C as shown by the controller, the burners are switched to waste feed one at a time. Feed rates are adjusted to achieve a controller temperature in excess of 1300°C.

The burners contain moving parts which become coated with coked feed and require periodic cleaning. Under normal operation, this is required once a day. The burners are taken out of service one at a time for this operation. Usually the operation is a short one and the oven temperature does not fall far below 1300°C.

The feed rates expressed in weight units, depend on the specific gravity of the feed, and also on its heat of combustion. Shell Chemical organic chloride wastes has a specific gravity of 1.3 and heat of combustion of about 3300 cal/g(6000 Btu/lb). The corresponding feed rates were in the range 20 to 25 metric tons/hr (1000 kg/hr) for the total feed rate.

Normally the excess air rate is not measured. The air for the combustion is also used to cool the burners and their driving motors so operation at the maximum possible air rate is beneficial in this respect. The available 180,000 m^3/hr corresponds to 110 to 170% excess air for the Shell Chemical feed composition.

When operating in Europe, a DECCA-Navigator MK21 is used to locate the ship in a designated area for waste burning. As the shore based signals needed for use of this system are not available on the Gulf Coast, the ship's personnel used celestial navigation, and when necessary, dead reckoning to position the ship during the first voyage. A LORAN Navigation unit was installed and used during the second voyage.

THE STACK SAMPLING PROBLEM

The permits required that the organic chloride waste be burned under conditions ensuring 99.9% combustion efficiency. It is clearly not possible to measure this efficiency directly by accounting for the amount of feed into the oven and the amount of HCl and CO_2 out because none of the variables involved can be measured with the requisite 0.1% or better accuracy. For example, feed rates cannot be measured in real time at all and the volumes pumped from the tanks are not known to the required accuracy. Measurement of the mass of combustion products requires estimation of stack gas concentrations, velocity and the diameter of the stack. Not even the diameter can be measured to 0.1% because the surface roughness of the fire bricks is greater than the 5 mm or so corresponding to the limit. Gas velocity measurements under much less difficult conditions are seldom better than 5% in accuracy, and stack gas compositions data reliable to 0.1% are very difficult to obtain.

The situation led to a different approach based solely on the analysis of the feed and the stack gas streams. The feed analysis permits the calculation of the number of moles of stoichiometric products, that is, moles of stack gas formed by combustion with exactly enough air to react with a mole of carbon in the feed and its associated hydrogen. Then an analysis of the stack gas for oxygen permits the calculation of the amount of excess air. The sum of the stoichiometric products and excess air is the total number of moles of stack gas formed per mole of carbon in the feed. In these tests it was of the order of 13 to 15 moles/mole. Then analysis of the stack gas for minor components in mole fraction of stack gas can be converted to mole fraction of the carbon by multiplying by the total moles of stack gas per mole of carbon in the feed.

The experimental problems involved in sampling and analyzing the stack gas are formidable. The stack gases are hot, i.e., in the range of 1100 to 1200°C, and corrosive as they contain 5-6% hydrogen chloride. Not only are the conditions within the stack inimical to probes inserted in the stack, but the corrosive gases are potentially damaging to analytical equipment such as the flame ionization detector for hydrocarbons. Another constraint on sampling the Vulcanus' incinerator stack gases is the lack of space aboard the ship. The only available room for the analytical equipment requires a sample line about 60 feet long. Finally, the sample ports are not suitable for conventional traversing of the stack

diameter. They are inclined about 20° from the horizontal and quite near the top of the stack. A probe inserted more than halfway into the stack emerges above the top rim. Furthermore, normal access to the stack during burning is not possible because the exterior at the top is hot and exposed to high concentrations of hydrogen chloride during wind gusts. These considerations led to the design of a water cooled probe and a system for moving the probe in and out of the stack which permits the operator to stand some distance away. As details of the design differ somewhat for probes used on the two voyages, the two probes are discussed separately in later sections.

CALCULATION OF STACK GAS COMPOSITION

Stoichiometry

The concentrations of the major components in the stack gas can be calculated from the feed composition by means of the equation:

$$CH_mCl_nO_p + \left(1 + \frac{m-n}{4} - \frac{p}{2}\right) O_2 + 3.76 \left(1 + \frac{m-n}{4} - \frac{p}{2}\right) N_2$$

$$= CO_2 + nHCl + \frac{m-n}{2} H_2O + 3.76 \left(1 + \frac{m-n}{4} - \frac{p}{2}\right) N_2 \qquad (1)$$

This is based on the reasonable assumption that all, or at least the major part of the chlorine goes to HCl, the carbon goes to CO_2 and the hydrogen is divided between H_2O and HCl. The actual chemical reactions involved are more complex. However, thermodynamic equilibrium calculations indicate that, at the high stack temperatures found here, HCl is indeed the major chlorine containing product and that the chlorine content should be low.

From Equation (1) it is seen that in the absence of excess air, the concentrations of the major components of the stack gas are:

$CO_2 = 100/S$	percent
$HCl = 100n/S$	percent
$H_2O = 100(m \quad n)/2S$	percent
$N_2 = 3.76 \ [1 + (m \quad n)/4 \quad p/2]/S$	percent

where

$$S \quad 1 + n + (m - n)/2 + 3.76 \ [1 + (m - n)/4 - p/2]$$

or

$$S = 4.76 + 1.44m - 0.44n - 1.88p$$

Suppose now there is a small fraction of the feed, say 0.001, which does not burn. Its concentrations in the stack gas in the absence of excess air will be $0.001/S'$ where $S' = 0.999S + 0.001$. Since S is of the order of 6.6, one can say $S = S'$ and that the concentration of the unburned material is $0.001/S$ without any significant error.

Effect of Excess Air on Stack Gas Composition

When excess air is present, the stack gas contains oxygen in the concentration:

$$\%O_2 = \frac{100(\text{moles } O_2)}{4.76(\text{moles } O_2) + S} \qquad (2)$$

and solving for the moles of O_2:

$$\text{moles } O_2 = \frac{S}{4.76}\left(\frac{\%O_2}{21 - \%O_2}\right) \tag{3}$$

Based on the observed $\%O_2$ the following concentrations can be calculated:

$$\%CO_2 = \frac{100}{4.76\,(\text{moles } O_2) + S}$$

$$= \frac{100}{S}\left[\frac{1}{1 + \left(\frac{\%O_2}{21 - \%O_2}\right)}\right] \tag{4}$$

$$= \frac{100}{S}\left[1 - \frac{\%O_2}{21}\right] \tag{5}$$

$$\%HCl = \frac{100n}{S}\left[1 - \frac{\%O_2}{21}\right] \tag{6}$$

Table 1 displays the compositions of the organic chlorides burned on the two voyages. Summarized below are numerical values for moles of stack gas per mole of carbon in the feed, and the concentrations of CO_2 and HCl, basis no excess air.

	Voyage	
	First	Second
Moles stack gas/mole carbon in feed	6.63	6.68
CO_2, %	15.1	15.0
HCl, %	11.0	10.9

FIRST VOYAGE: SAMPLING APPARATUS AND PROCEDURE

Sample Ports

The location of the sample ports and their dimensions are shown in Figure 3. Only the starboard oven was sampled.

Probe

The high temperature of the stack gas, 1100 to 1200°C, makes the use of a water cooled probe imperative. The corrosive nature of the stack gas requires the use of a glass liner. The probes used on the first voyage conformed to the general dimensions shown in Figure 4. The inner liner of the probe is Vycor glass, the water cooled parts type 316 stainless steel. Probe Number 1, shown in Figure 4, was equipped with a platinum, platinum 10% rhodium thermocouple. Unfortunately, this probe was damaged during the initial oven warm-up and probe Number 2 was needed for all of the actual sampling work. This probe was not equipped with a built-in thermocouple, but an 8 ga. chromel-alumel thermocouple was used instead.

Table 1. Waste Feed Properties

ELEMENTAL ANALYSIS

	Voyage 1	Voyage 2
	Percent	
C	29	29.3, 29.3
H	4	4.1, 4.1
O	4	3.7
Cl	63	63.5
	ppm	
Cu	0.51	1.1
Cr	0.33	0.1
Ni	0.25	0.3
Zn	0.14	0.3
Pb	0.05	0.06
Cd	0.0014	0.001
As	< 0.01	< 0.01
Hg	< 0.001	< 0.002

COMPONENT ANALYSIS

	Percent	
1,2,3 Trichloropropane	27	28
Tetrachloropropyl Ether	6	6
1,2-Dichloroethane	11	10
1,1,2-Trichloroethane	13	13
Dichlorobutanes & Heavier	11	10
Dichloropropenes & Lighter	20	22
Allyl Chloride	3	3
Dichlorohydrins	9	8

Empirical Formula $CH_{1.65}Cl_{0.73}O_{0.10}$ $CH_{1.68}Cl_{0.73}O_{0.094}$

Specific Gravity, $\frac{75F}{60F}$ 1.30 1.29

Heat of Combustion

cal/g 3300

BTU/lb 6000

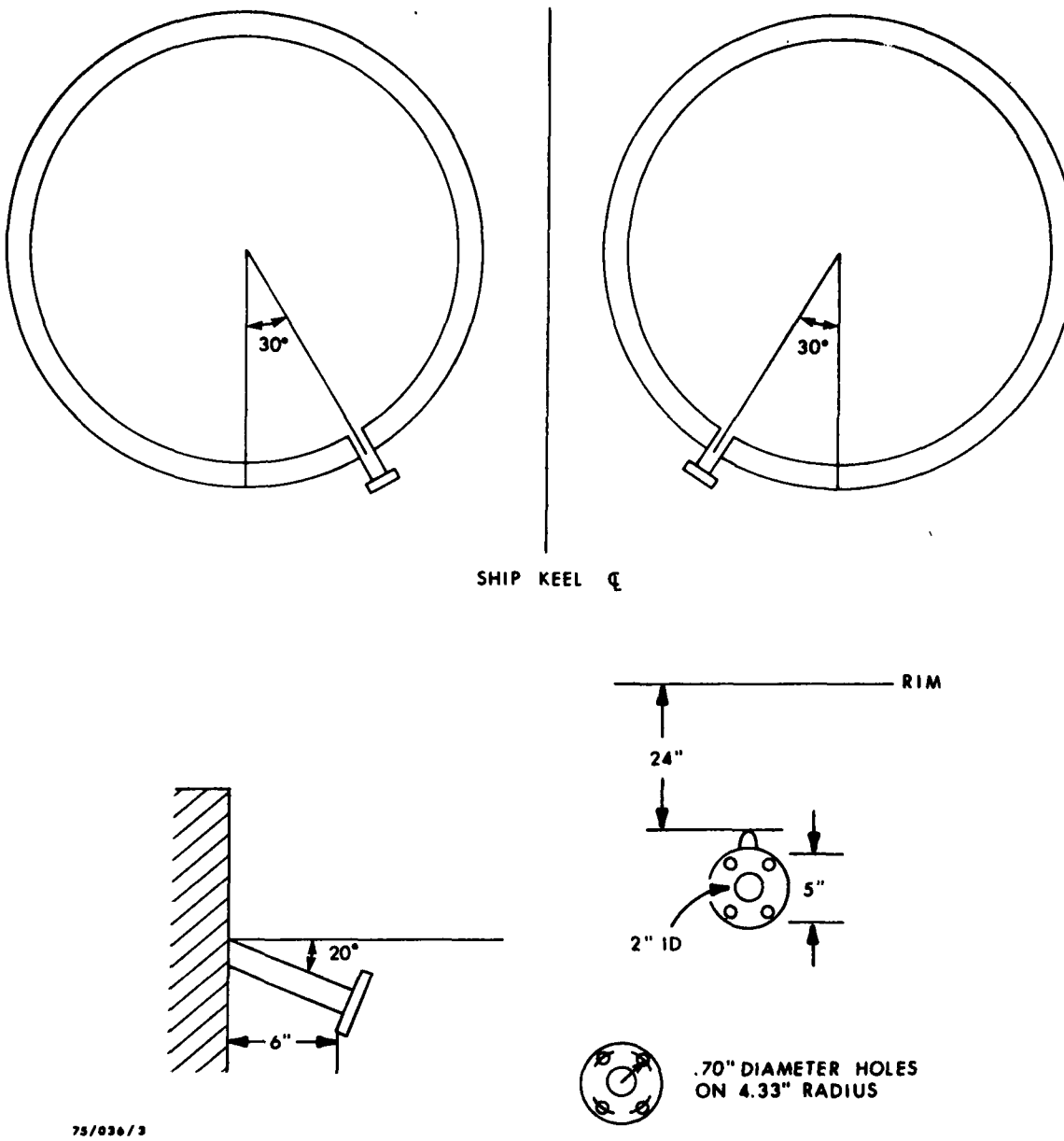

Figure 3. Port Locations and Dimensions

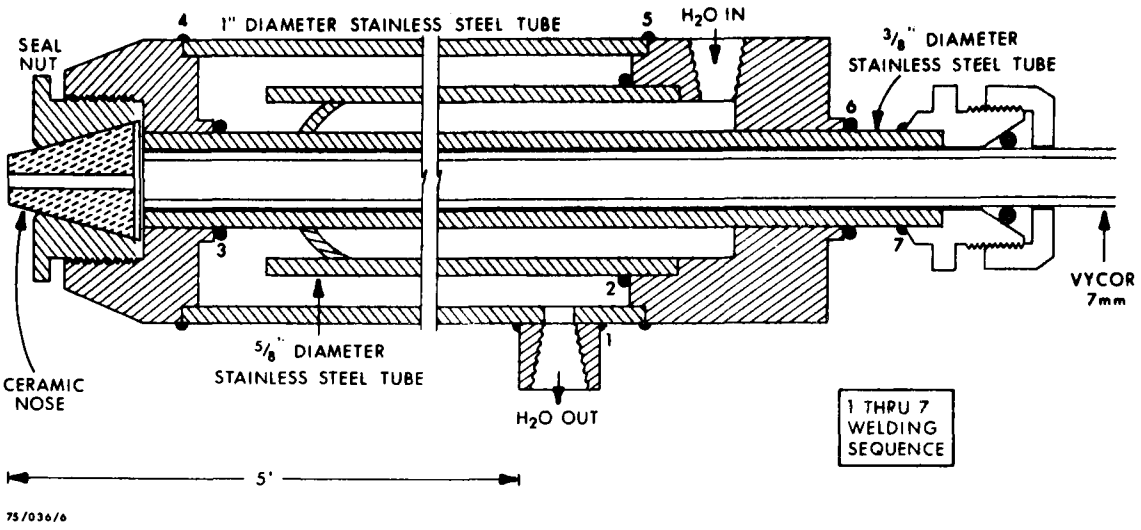

Figure 4. Probe Dimensions, First Voyage

The probe was rigged for partial traversing of the stack by manipulations from the deck level. Two cables permitted, respectively, pulling the probe further into the stack and withdrawing it. This arrangement is shown in Figure 5. Figures 6 and 7 are photographs of the probe in place in the starboard stack before the oven was heated up. After the initial probe failure demonstrated vividly the harsh conditions in and near the stack, plans to move the probe in and out of the stack during testing were canceled. Particularly, it was feared that the high temperatures near the stack wall would destroy the vinyl plastic water hose. All samples were taken with the probe inserted 11 inches into the stack gas stream as shown in Figure 7.

The 8 ga. chromel-alumel thermocouple failed after about 18 hours of waste burning.

Sample Line

Sample gas from the probe was withdrawn through a quarter inch, thin-walled Teflon line. This was supported by a 1-inch manilla rope rigged between the oven catwalk railing and a railing near a porthole in Room 9 of the ship. The length of the Teflon line required was about 70 feet.

Scrubber Train

The gas from the probe was passed through a scrubber train and then analyzed for gaseous hydrocarbons, chlorine and organic chlorides. Scrubber trains used in the first part of the test were not efficient in removing hydrochloric acid from the gas stream because fog, generated when the sample entered the water trap, was not removed by the filters then employed. The final train developed in this work is shown in Figure 8. The water scrubbers were Greenberg-Smith impingers (500 ml capacity) used in a somewhat novel way. The caps of the first two were firmly packed with glass wool to provide effective filters for the HCl fog. In the third "impinger", the impinger impactor plate was removed. About 150 cc of iron wire helices were added to improve the vapor liquid contact and to provide a reducing agent for the chlorine remaining in the gas. The helices were 1 to 3 turns, 1/4-inch diameter of Number 14 soft iron wire. Two hundred to 250 cc of deionized water were added to each Greenberg-Smith impinger before each experiment. The midget impingers were of 25 ml capacity and equipped with ball joint connectors.

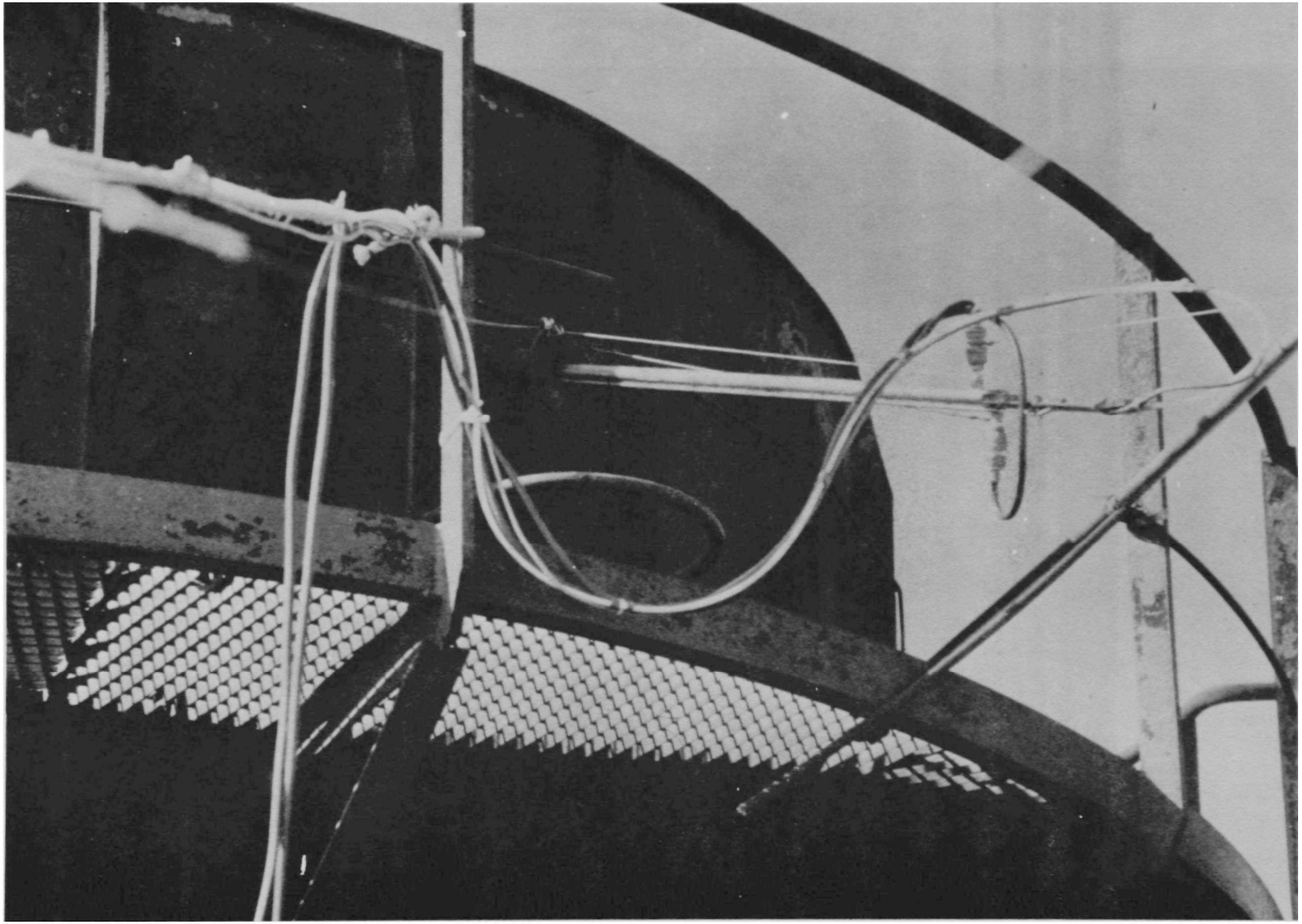

Figure 5. Probe Support System – First Voyage

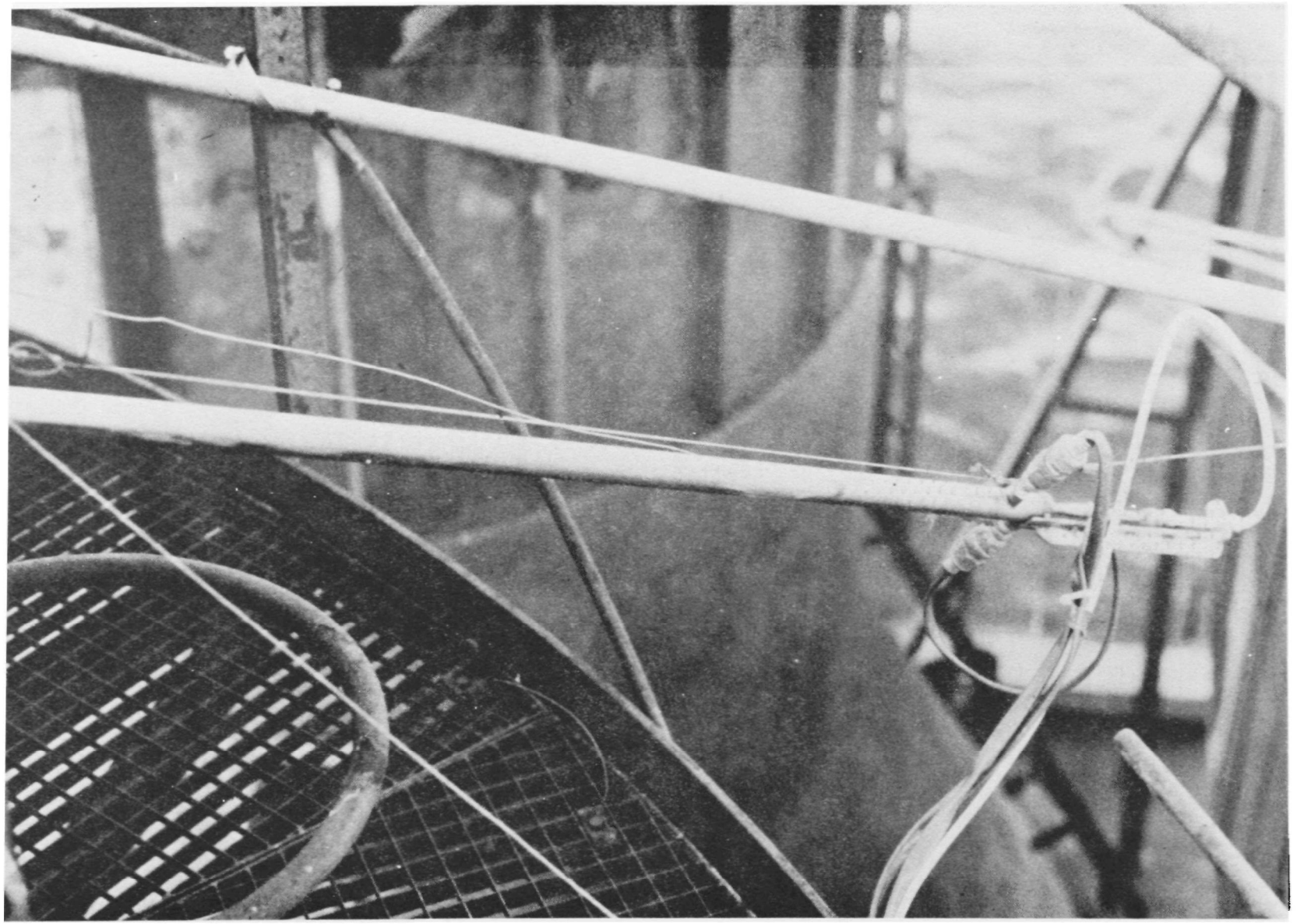

Figure 6. Hose and Sample Line Connections

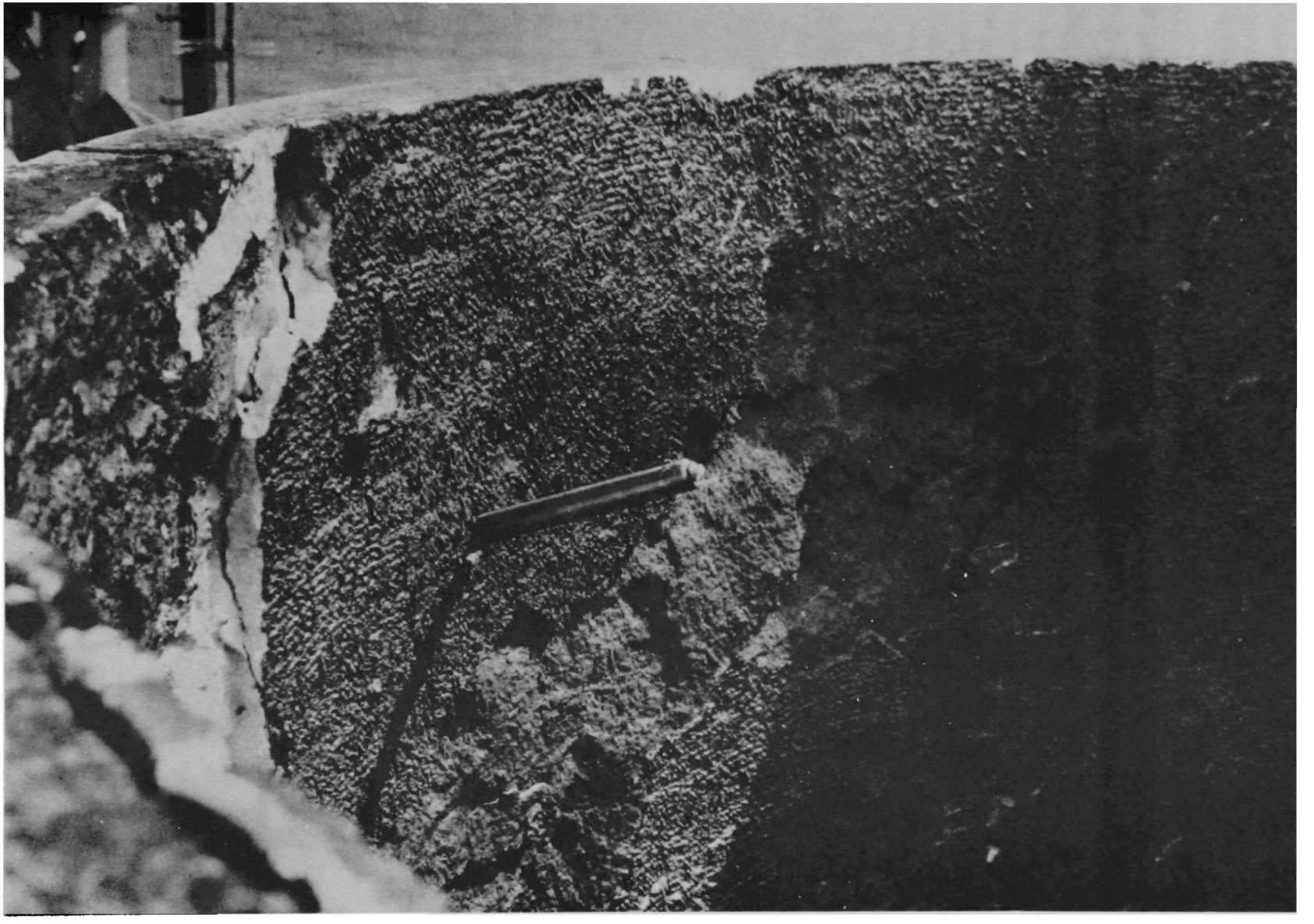

Figure 7. Location of Probe in Stack – First Voyage

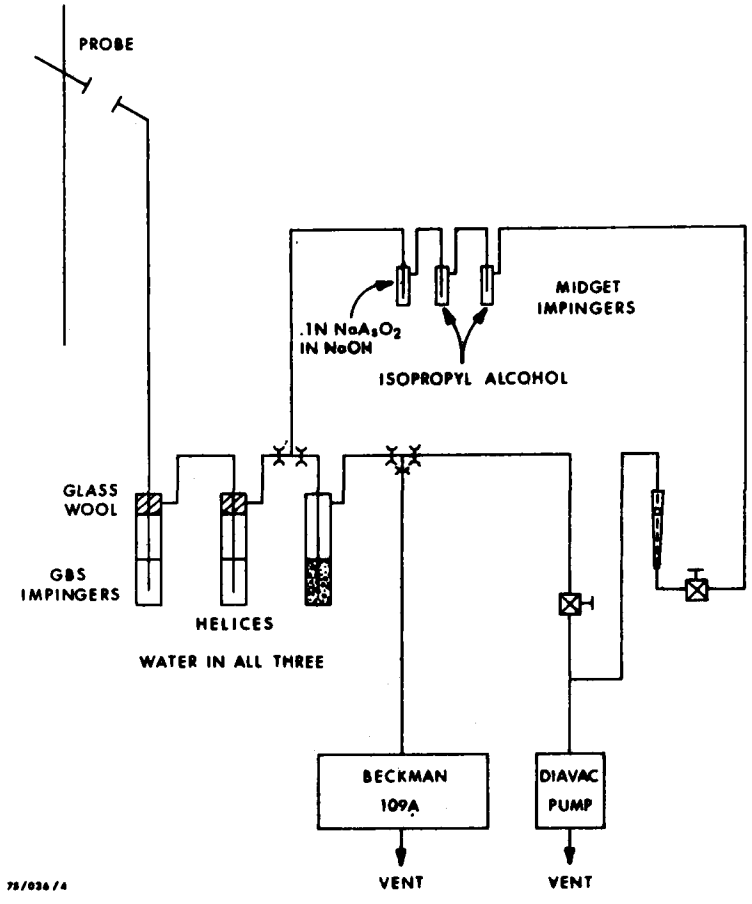

Figure 8. Scrubber Train – First Voyage

Instruments

Total hydrocarbons were measured in a side stream withdrawn through a Beckman 109A hydrocarbon analyzer.[a] Span gas (7.3 ppm methane) and ultrazero air were provided for standardization. The instrument was equipped with capillaries for use with 40% hydrogen, 60% nitrogen fuel. The output of the instrument was fed to one channel of a two channel Hewlett Packard Model 7128A recorder.[b] A nominal 10 mv recorder range was used, together with a 15-inch per hour chart speed.

The gas analyzer used for CO_2 and O_2 was a Burrell Model B Industro Gas Analyzer.[c] Fresh solutions were introduced into the apparatus before use.

Procedure

Gas was pulled continuously through the probe, sample line, water scrubbers and Beckman instrument at a rate of 1/2 to 1 liter/min. by a vacuum pump. From time to time, the scrubber water was changed and the "fat" solution reserved for analysis at the Bellaire Research Center. There it was analyzed for hydrochloric acid, total organic carbon and organic chloride contents. Methods for the last two determination are given in the Appendix.

---

[a] Beckman Instruments Corp., 2500 Harbor Blvd., Fullerton, CA 92634.

[b] Hewlett-Packard 195 Page Mill Road, Palo Alto, CA 94306.

[c] Burrell Corporation, 2223 Fifth Ave., Pittsburgh, PA 15219.

At intervals, a portion of the gas which passed through the water scrubber was withdrawn through the midget impinger train for 15 minutes at about 1 liter/min. The first impinger contents, containing an initially known amount of alkaline sodium arsenite, were back titrated in the standard manner at Bellaire Research Center to determine oxidants, reported as chlorine. The next two impingers, containing isopropyl alcohol, were analyzed for organic chloride.

Optical Pyrometer

An optical pyrometer (Pyro Optical Pyrometer, Model 85[d]) was used to measure the flame or firebrick surface temperature in the combustion zone. This model pyrometer is designed to measure temperatures up to 2500°F (1382°C). Almost all the actual firebox temperatures observed were off scale on the high side. An estimated value was recorded as the raw datum. These readings were corrected for losses in energy reaching the pyrometer by absorption of the furnace sight glass window and for the emissivity of the firebrick. Fifty °C was added to the raw data to make this correction. Optical transmission tests in the laboratory after the first voyage validated the use of the value for this correction.

FIRST VOYAGE: RESULTS

Sampling Targets

The specific targets of the sampling program for the first voyage were:

1) continuous monitoring of gaseous water insoluble hydrocarbons,
2) continuous monitoring of top of the stack temperature,
3) integrated total organic carbon analyses of stack gas, and
4) spot analyses of stack gas for organic chlorides, O_2, CO_2 and Cl_2.

In addition to this information from Shell personnel efforts, data obtained by the ship's crew were acquired. These included indicator and controller temperatures and estimates of average feed rates from the times required to empty various tanks.

Data Summary Log

A Summary Log of the data acquired by Shell personnel on the first voyage is given in the Appendix. This shows the chronological relationships among the observed values of total hydrocarbons, oven temperatures and the times the various scrubber samples were taken.

Feed Rates

The average waste feed rates are shown in Table 2. These are below the maximum value specified in the permit and its supplement.

Oven Temperatures

Representative indicator and controller temperatures and all the optical pyrometer temperatures are given in Table 3. All of the optical pyrometer values are 1370°C or higher. The occasional low controller values were said by the ship's engineers to be due to water in the feed or to taking a burner out of service for cleaning.

---

[d] The Pyrometer Instrument Co., Inc., Northvale NJ 07647.

Table 2. Waste Feed Rates — First Voyage

Tank Number	Volume M^3	Start		End		Time Hrs	Volume Burned M^3	Feed Rate t/hr[a]
		Day	Hr	Day	Hr			
2C	550	Oct. 20	0730	Oct. 21	1200	28.5	520	23.7
1C	436	21	1200	22	1430	26.5	420	20.6
4C	420	22	1430	23	1630	26.0	395	19.8
5C	425	23	1630	24	1800	25.5	400	20.4
3C	408	24	1800	25	1700	23.0	388	21.9
2S	244	25	1700	26	0600	13.0	230	23.0
3S + 4S	510	26	0600[b]	27	1000[c]	27.0	480	23.1
5S	226	27	1400	28	0400	14.0	210	19.5

a) t = metric tons (1000 kg)
b) Central Daylight Time
c) Central Standard Time

Table 3. Oven Temperatures — First Voyage

Date	Hour	Starboard Oven, °C			Port Oven, °C		
		Indicator	Controller	Pyrometer	Indicator	Controller	Pyrometer
Oct. 22	5:00 p.m.	1150	1220	1500	1150	1260	1500
Oct. 24	4:30 p.m.	1150	1240	-	1150	1270	1450
Oct. 25	10:10 a.m.	1150	1230	1450	1165	1220	1450
	2:00 p.m.	1150	1240	1420	1165	1220	1450
	6:35 p.m.	1160	1250	1450	1170	1290	1440
Oct. 26	10:35 a.m.	1130	1110	1370	1110	1090	1340
	6:00 p.m.	1100	990	-	1130	1200	1450
Oct. 27	4:30 p.m.	1130	1310	1450	1150	1330	1450
	8:30 p.m.	1170	1190	1440	1170	1300	1500

Experimental Difficulties

Many experimental difficulties were encountered. The first probe installed burned up in the gas oil warm-up on October 16 because the water cooling failed. This destroyed the Pt/Pt Rh thermocouple. The chromel-alumel thermocouple lasted about 18 hours.

Problems were encountered in cleaning up the stack gas for presentation to the Beckman 109A Hydrocarbon Analyzer. Intensive effort was required to keep the 109A running. The final gas scrubbing train devised seemed adequate, however, as there was no smell to the gas coming through it. The iron helices appear to be quite effective in removing chlorine and the two water and filter scrubbers appear to remove the HCl completely while passing the harmless carbon dioxide.

The second probe failed after 5 days of use for reasons that are poorly understood and are discussed briefly in a later section of this report.

The oxygen and carbon dioxide values were erratic. This may have been caused by leaks in the connection to the gas analyzer. For this reason, the measured oxygen and carbon dioxide values were not used in the calculations. Instead, estimated values were used, based on data obtained on the second voyage.

Treatment of Data

The following quantities were measured or tested for the contents of the water scrubbers: hydrochloric acid (HCl) equivalents/liter, total organic carbon (TOC_m) mg/liter, and organic chlorides (RCl_{mw}) mg/liter as chlorine. On the midget impinger contents the following quantities were determined: remaining reducing power of sodium arsenite solution (RP) equivalents/liter and organic chloride content of the isopropyl alcohol (RCl_{mi}) mg/liter as chlorine. Also measured were the average total hydrocarbon concentration of the scrubbed gas over the period during which the water scrubbers collected HCl, (THC_m) ppm. The volumes, (V_m) liters, of gas passed through the midget impingers were estimated from rates measured by a calibrated rotameter and the corresponding time.

The unburned carbon in the stack gas was measured in two parts: (1) water soluble carbon in the water scrubbers and (2) gaseous water insoluble carbon as determined by the total hydrocarbon instrument.

The ratios of the amounts of these materials to the CO_2 serve as the basis for the calculation of the ratio of unburned carbon to carbon in the feed.

For the first part, the ratio TOC/HCl was calculated by the relation:

$$TOC/HCl = \frac{(TOC_m) \times 10^{-3}}{12(HCl_m)} \tag{7}$$

As there are 0.73 moles of Cl per mole of carbon in the feed,

$$TOC/CO_2 = 0.73\ TOC/HCl \tag{8}$$

or

$$TOC/CO_2 = \frac{(0.73)(TOC_m) \times 10^{-3}}{12(HCl_m)} \tag{9}$$

In the second step, the ratio THC/CO_2 was calculated from (THC_m) and the stoichiometric concentration of CO_2. Two corrections were required in calculating this ratio. The first arose from the diminished response of the flame ionization detector to chlorine containing compounds.

O. L. Hollis and W. V. Hoyes[e] measured the response factors for a number of halogenated compounds relative to 2-methylpentane on a weight basis. Values ranged from 0.08 to 0.41. However, in this work, the flame ionization detector response was calibrated in terms of parts per million carbon (methane), whereas in Hollis and Hayes paper the response was measured relative to a given weight of sample. To convert their response factors to a ppm carbon basis, one multiplies them by the ratio 83.7/%C, where %C is the percent carbon in the compound. When this is done, it is found that the least responsive compound in their table (CH_2Cl_2) still gives a response of 0.6 of that of methane. Surprisingly, CCl_4 with a sample weight response factor of 0.08 has a carbon response factor of 0.86. Thus dividing the observed (THC_m) by 0.5 is a conservative correction for calculating a maximum THC concentration.

The (THC_m) values are concentrations of total hydrocarbons in stack gas that has been diluted by excess air. Accurate values of oxygen content of the stack gas were not obtained on the first voyage. In view of later work on the second voyage, a reasonable value for this parameter is 10%.

In accord with equation (5) developed in an earlier section, the stoichiometrically calculated concentration of CO_2 (151000 ppm) is divided by 2.

Introducing the above correction leads to:

$$THC/CO_2 = \frac{(THC_m)/0.5}{(151000)/2} = \frac{4(THC)_m}{151000} \qquad (10)$$

The percent unburned waste was calculated as $100[TOC/CO_2 + THC/CO_2]$ percent or unburned carbon per 100 mole carbon in the waste feed. The combustion efficiency was calculated as 100 minus the percent unburned waste.

The oxidation of arsenite was taken as due only to absorbed chlorine gas. From the equivalents of arsenite oxidized, the moles of chlorine were calculated and then divided by the moles of gas sampled ($V_m/24.5$) to determine concentration of Cl_2 in the stack gas.

Generally, no organic chlorides were detected by the methods specific for them. In two tests where they were detected, (water scrubbers in tests 7 and 8), the amounts were smaller by an order of magnitude than those found by the total organic carbon which also detected chlorine-free carbon compounds.

Combustion Efficiency

The results of the determination of combustion efficiency are shown in Table 4. It is seen that the efficiencies range from 99.92 to 99.98% based on the carbon analyses, and all are well over the 99.9% required by the permit.

No organic chlorides were found in the midget impinger contents during any of the tests. The limit of detection was 1 ppm of organic chloride in the gas. The water scrubbers for tests 7 and 8 were found to contain about 0.056 meq/liter chloride as organic chloride. The atomic ratio of Cl/C in the trapped organic compounds was about 0.02 while that of the feed was 0.73, indicating that destruction of the chlorine moiety is more complete than that of the carbon portion of the molecules.

The ratio of uncombusted chlorine to HCl is 16×10^{-6} and 50×10^{-6} for tests 7 and 8 respectively. If all of the water unsoluble carbon compounds are considered to be organic compounds with the minimum response factor of 0.6, one can calculate a measure of completeness of combustion based solely on organic chlorides detected. This is, for the worst case, $100[1 \quad THC/CO_2 - 35 \times 10^{-6}]$ or 99.97 or 99.98% which is, of course, much larger than the 99.9% specified in the permit.

---

[e] Anal. Chem. 34, 1223-1226 (1962).

Table 4. Stack Gas Composition – First Voyage

Sample No.	Time		Concentrations in Stack Gas		Impinger Catch		Ratios		Unburned Waste	Combustion Efficiency
	Start	End	THC ppm	Cl_2 ppm	TOC eq/l	HCl eq/l	TOC/CO_2	THC/CO_2	%	%
2	20/0900	20/1100	25	-	0.0005	0.711	0.00051	0.00017	0.07	99.93
3	20/1100	20/1900	10	60	0.0009	2.43	0.00027	0.00007	0.03	99.97
4	20/1900	21/1100	10	-	0.0028	7.83	0.00026	0.00007	0.03	99.97
5	21/1100	21/1800	10	140	0.0008	4.61	0.00013	0.00007	0.02	99.98
6	21/1800	23/1400	-	-	0.0014	3.23	0.00032	-	-	-
7	23/1400	24/0900	10	-	0.0013	3.43	0.00028	0.00007	0.04	99.96
8	24/0900	25/0800	15	130	0.0010	1.12	0.00065	0.00012	0.08	99.92

Table 4 also shows that the chlorine contents of the stack gas are low (60-140 ppm) as expected from the high combustion temperature and thermodynamic calculations.

SECOND VOYAGE: SAMPLING APPARATUS AND PROCEDURE

Sample Ports

Provisions were made to sample the stack gas from both ovens during the second voyage. These consisted of the installation of duplicate probe assemblies in ports in both ovens. These were located symetrically about the axis of the ship and in a position that allowed a single sample line to serve alternately each probe. Details of the ports are shown in Figure 3.

Probe and Support Assemblies

The second voyage probes were changed somewhat in design in an effort to avoid some of the problems encountered on the first trip. The probe design is shown in Figure 9. The probe is longer by two feet so that it will reach nearly the center of the stack, its outer wall is made of pipe instead of tubing for added strength and the glass liner protrudes slightly beyond the end of the jacket. The liner is mainly VYCOR glass tubing with a short length of vitreous silica tubing fused to the outer end.

The additional weight and length of the probe made a support system necessary. This is shown in Figures 10 and 11. One end of the support is bolted to the port flange, the outboard end is braced with cables to the catwalk.

The location of the tip of the probe in the stack is shown in Figure 12.

Sample Line

The outer ends of the probe assemblies were quite close together as is shown in Figure 13. A single heated line was connected alternately to one or the other. The connection was through about 10 feet of 1/4-inch then wall Teflon tubing. The heated line was electrically traced and thermally insulated 1/4-inch Teflon tubing.[f] The heated section was 40 feet long and equipped with an iron constanton thermocouple. A variable transformer was used to control the voltage supply to provide a temperature of over 80°C. The connecting ends of the tubing were stainless steel and corroded some during the test. The heated section was connected to the scrubber train by approximately 10 feet of bare 1/4-inch Teflon tubing. While the air temperature at the probe end of the line was high enough to prevent condensation there, there was some condensation in the line before the first trap. This probably came from the scrubber train end of the line. The line was always well drained into the first water scrubber.

Scrubber Train

The scrubber train used on the second voyage is shown in Figure 14. It was essentially the same as that used during the latter part of the first voyage with the addition of an empty large impinger at the end of the train. This was intended to prevent water from reaching the instruments if the impingers were accidentally hooked up backward.

Five N NaOH instead of 1N NaOH was used in the first midget impinger to assure an excess during the longer sampling periods used during the second voyage. The midget impingers were cooled in ice water.

---

[f] Dekoron 2150 Electrically Traced Bundle System, Samuel Moore and Co., Mantua, Ohio 44255.

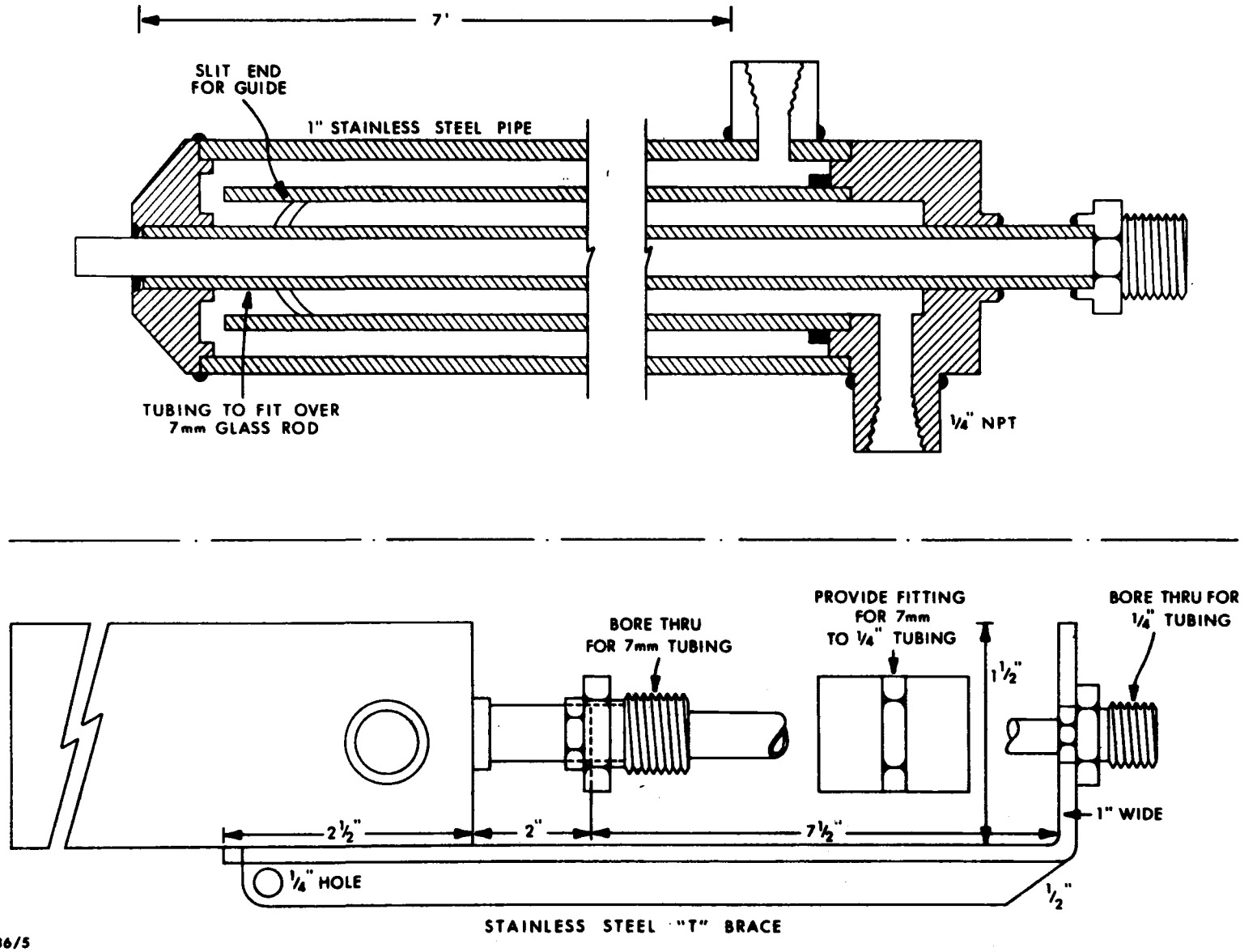

75/036/5

Figure 9. Probe Dimensions – Second Voyage

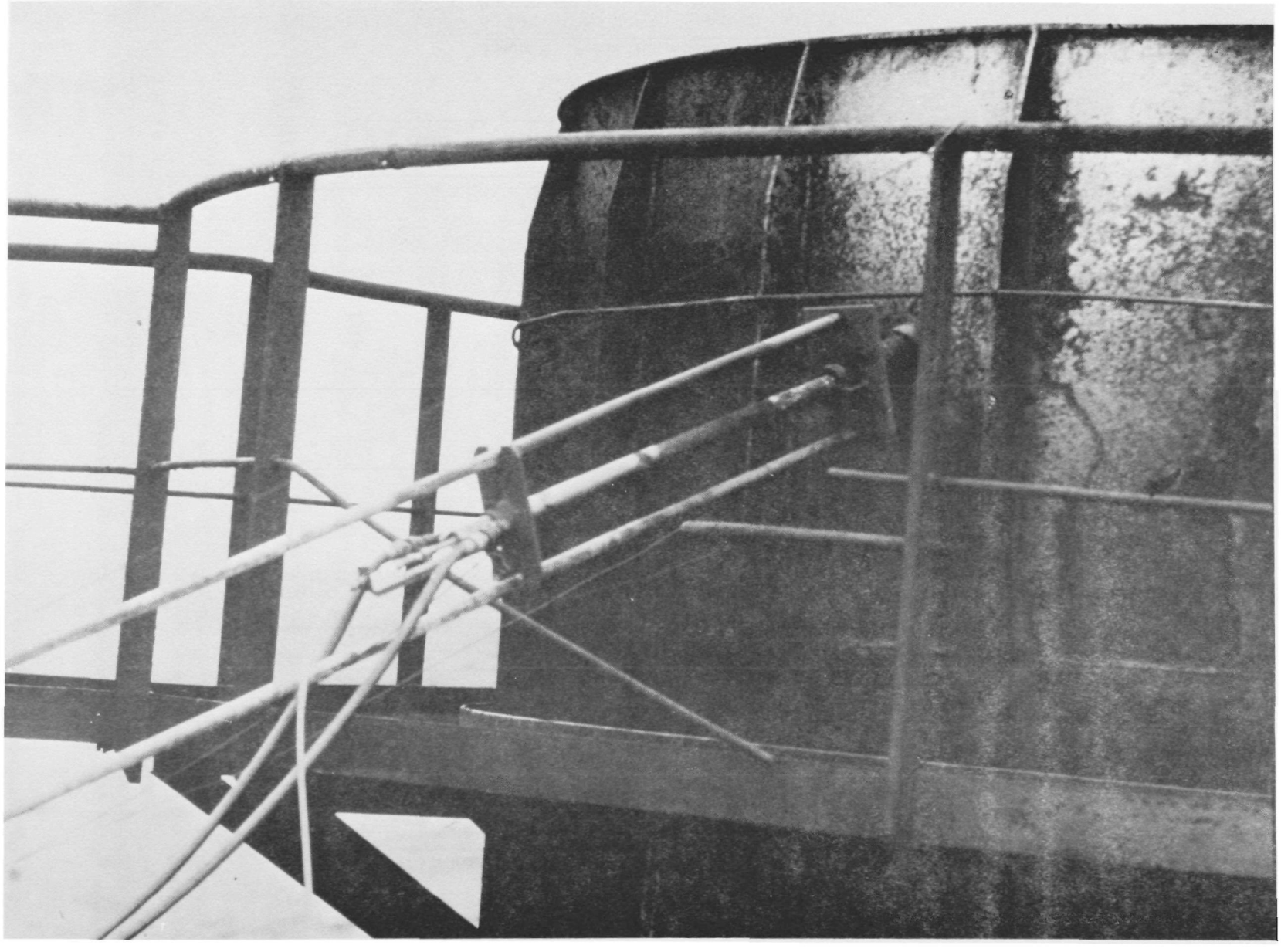

Figure 10. Probe Support Assembly – Oven End

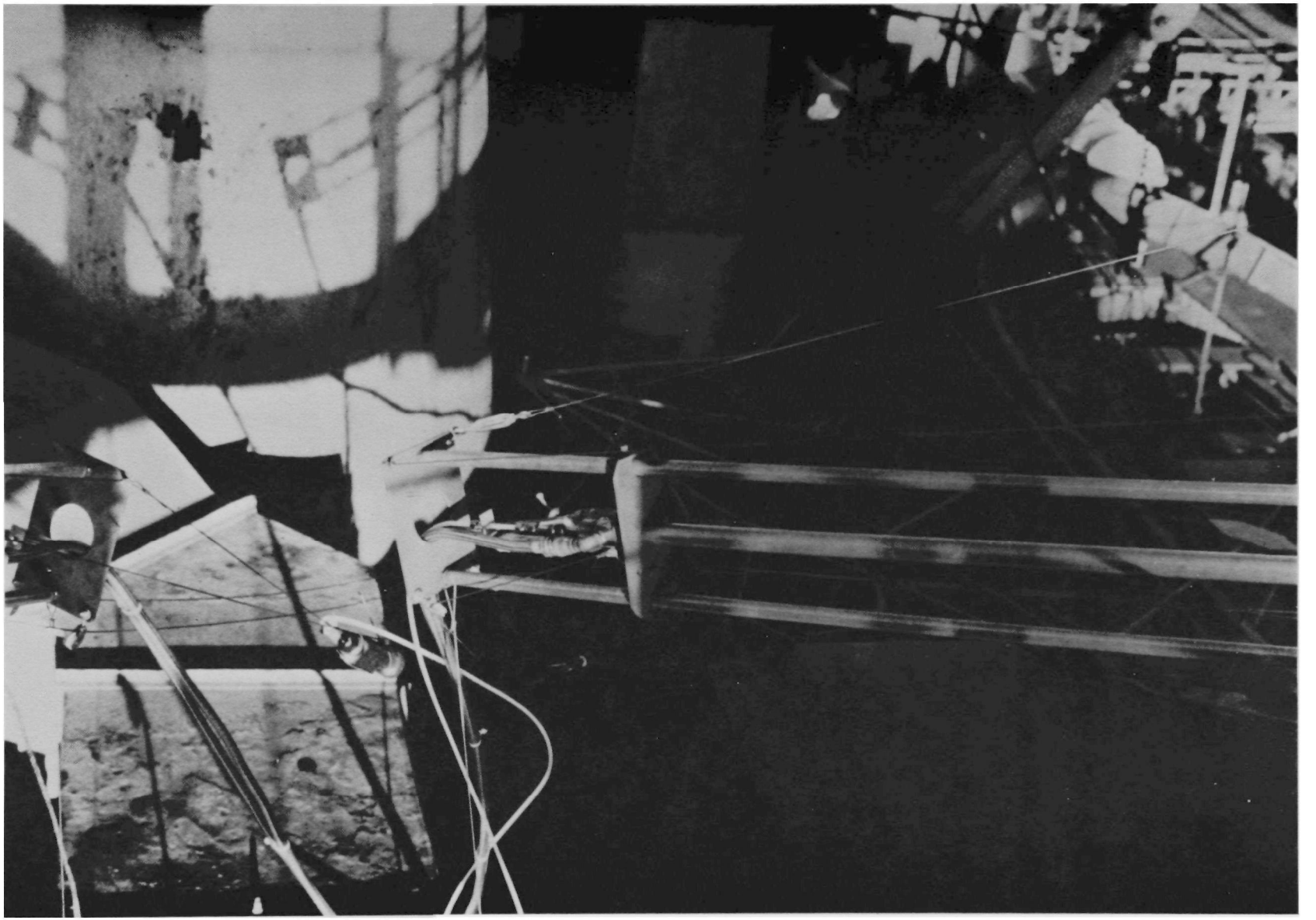

Figure 11. Probe Support Assembly – Outer End

Figure 12. Location of Probe in Stack – Second Voyage

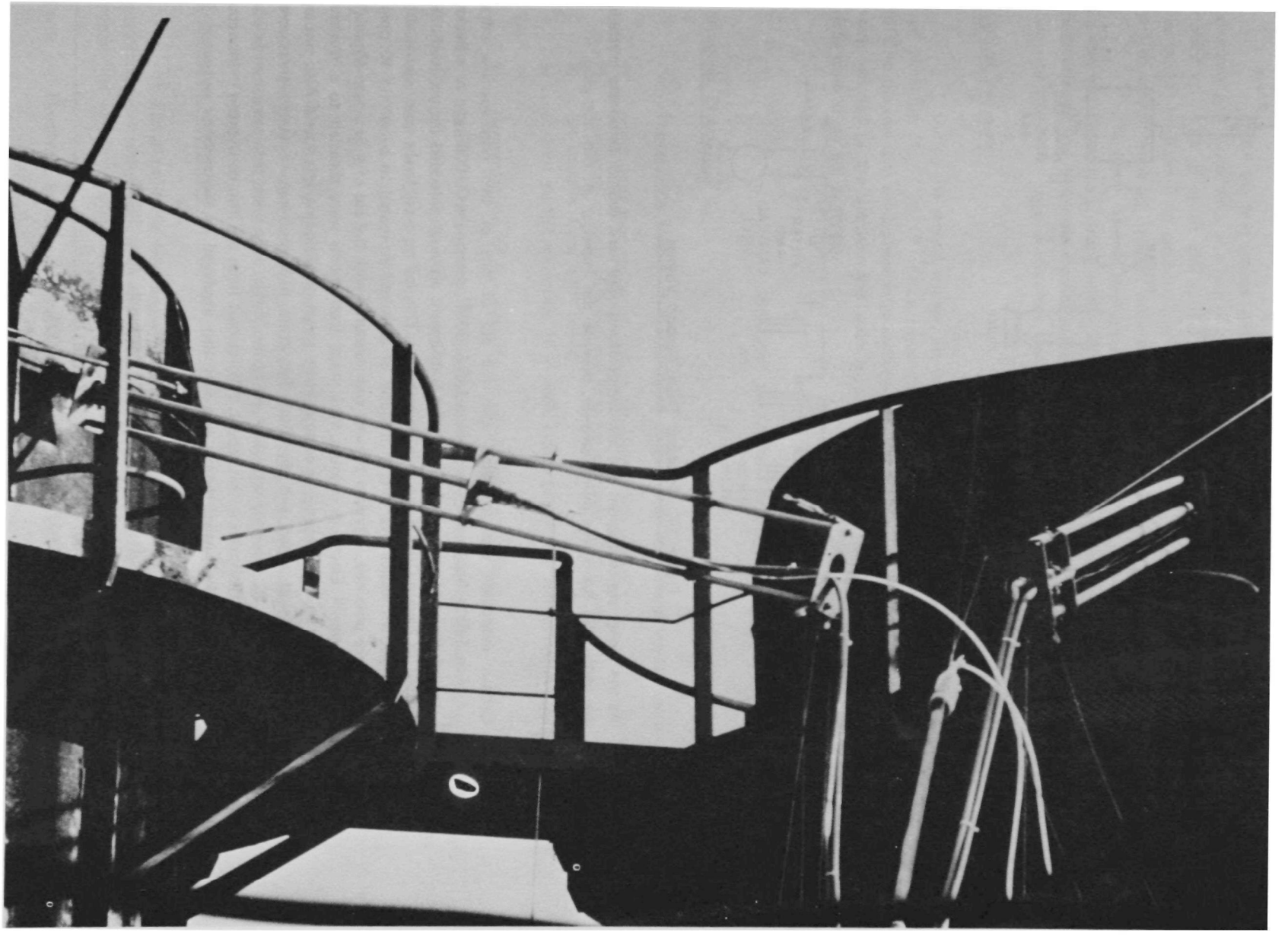

Figure 13. Sample Line Hookup

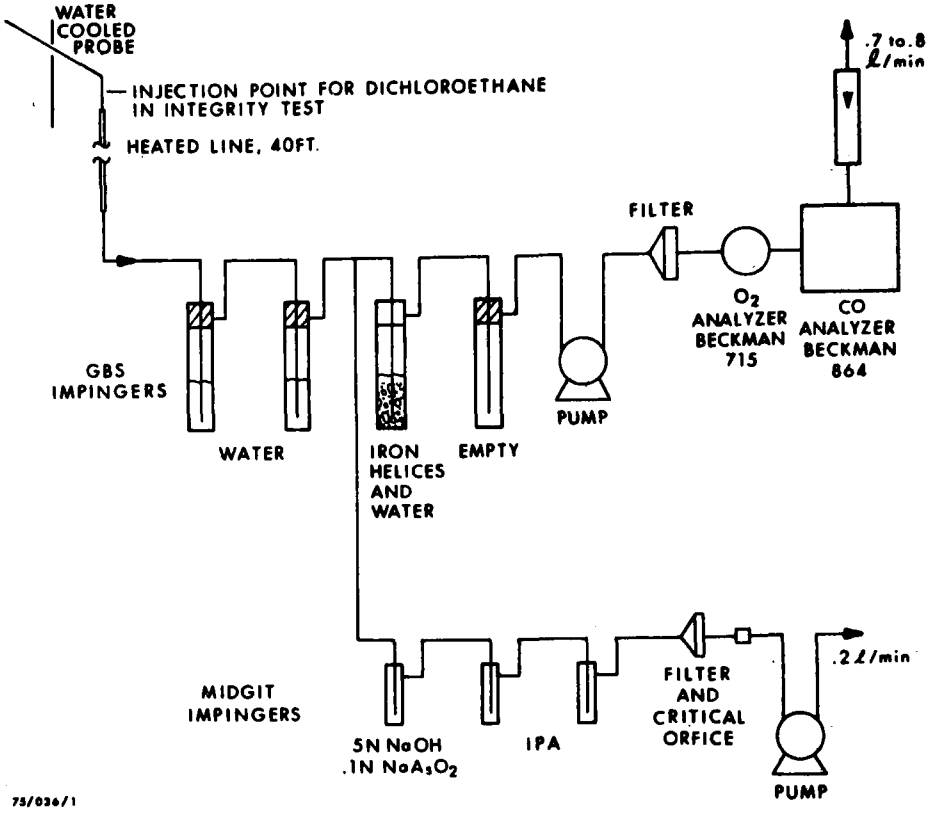

Figure 14. Scrubber Train, Second Voyage

At the higher concentrations and low temperatures used here, sodium carbonate crystallized out during the tests, No harm was done however, because the impinger jet did not plug.

Instruments

Carbon monoxide was measured with the aid of one of two nondispersive infrared instruments: a Mine Safety Appliances Corporation LIRA 303[g] instrument 0-1000 ppm or a Beckman Model 864[h] carbon monoxide analyzer. The latter instrument, although intended for use in the 0-5% range, was adjusted to have a 0-1000 range in these tests. This led to a relatively noisy signal output but by estimating median values over several minutes or so values estimated to be within 10 ppm of the correct result were obtained. Oxygen content was measured with the aid of a Beckman Model 715 Process Oxygen Analyzer.[h] Electrical outputs from these instruments were directed to a Westronics Model MIIE[i] 24 point recorder through a custom made signal conditioning interface. Also displayed on this recorder were wind speed and direction data from a Meteorology Research Incorporated Model 1074[j] Weather Sensor mounted on a mast aft of the bridge. The wind data were used in plume location studies but are not discussed in this report. The output from the iron constanton thermocouple embedded in the cover of the heated sample line was also displayed in the recorder output.

---

g) Mine Safety Appliances Co., 400 Penn Center Blvd., Pittsburgh, PA 15235.

h) Beckman Instruments, Inc., 2500 Harbor Blvd., Fullerton, CA 92634.

i) Westronics, Inc., P. O. Box 11250, Fort Worth, TX 76110.

j) Meteorology Research, Inc., Box 637, Altadena, CA 91001.

Procedure

As on the first voyage, gas was pulled continuously through the probe, sample line, water scrubbers and instruments at a rate of about 1 liter/min. The side stream through the midget impingers flowed at a rate of about 230 cc/min. Except for unavoidable interruptions, for changing solutions, the midget impinger train sampling was continuous when the instruments were working. Usually several sets of midget impinger samples were taken between changes of scrubber water.

The water, arsenite and isopropyl alcohol solutions were analyzed at the Bellaire Research Center for, respectively strong acidity as HCl, aresenite consumed as chlorine and organic chlorides in both arsenite and isopropyl alcohol solutions. Standard analytical techniques were used for the first two determinations; organic chlorides were determined by the method given in the Appendix.

Optical Pyrometer

During the second voyage, the fire box temperatures were measured with the aid of a Leeds and Northrup Model 8621[k] optical pyrometer. The reported values have been corrected by adding 50°C to the raw data as discussed in an earlier section for the first voyage. Although special thermocouples were installed in the fire box and stack of both ovens, none of them gave reliable readings and no data from them are reported.

SECOND VOYAGE: RESULTS

Sampling Targets

The specific targets of the sampling program for the second voyage were:

1) continuous monitoring of carbon monoxide and oxygen,
2) integrated organic chloride and chlorine contents of the stack gas,
3) gas samples from both ovens,
4) at least partial traversing of a stack radius to test for concentration gradients within the stack, and
5) demonstration of the integrity of sample recovery system.

As on the first voyage, the information obtained by Shell personnel was supplemented by data acquired by the ship's crew. These included indicator and controller temperatures and estimates of average feed rates from the times necessary to empty various tanks.

Data Summary Log

A Summary Log of the data obtained by Shell personnel on the second voyage is given in the Appendix. This shows the chronological relationships between observed values of carbon monoxide, oxygen, oven temperatures and the times various scrubber samples were taken.

Experimental Difficulties

Fewer problems were encountered on the second voyage than on the first. However, not everything went smoothly. When the first probe was inserted completely into the starboard stack, the sample line and first water scrubber filled up with probe cooling water. As discussed in more detail

k) Leeds and Northrup, Sunnytown Pike, North Wales, PA 19454.

in a later section this was probably caused by a weld failure in the probe. The probe was replaced by the back-up spare. The initial plan was to use the LIRA Model 303 carbon monoxide analyzer but an error in connecting up the scrubber train flooded the instrument with water. Even after clean up the instrument was not drift free. Later examination showed that the cell thermostat was not working. The Beckman instrument was used instead for the latter part of the work. At 2 points electrical noise problems developed which were traced to the custom recorder interface and fixed. These difficulties, while annoying, did not seriously impede the main effort to obtain data.

The probe in the port oven failed a few hours before the end of the burn because the water hose was damaged by the high temperature near the stack. Probes in both ovens distorted when inserted all the way. This problem is discussed in more detail in a later section. Even though the glass liner was broken, the seal of the glass tube at the outboard end ensured the withdrawal of undiluted stack gas.

Feed Rates

The waste feed rates observed during the second voyage are shown in Table 5. Within the limits of accuracy imposed by the errors in estimating the amount of waste left in a tank when the incinerator feed was switched to another, the feed rates are in compliance with the permit. The time of tank switching may have been in error for tank 3S, because one rate is high and the other low but the average is about the same as the other rates.

Table 5. Waste Feed Rates – Second Voyage

Tank Number	Volume M^3	Start		End		Time, Hrs.	Volume Burned M^3	Feed Rate t/hr[a)]
		Day	Hr.	Day	Hr.			
2C	550	Dec. 2	0755	Dec. 3	1225	28.5	520	23.7
4C	420	3	1225	4	0940	21.3	395	24.1
1C	436	4	0940	5	0820	21.7	420	25.2
5C	425	5	0820	6	0645	22.4	400	23.2
3C	408	6	0645	7	0400	21.3	388	23.7
2S	244	7	0400	7	1730	13.5	230	22.1
5S	226	7	1730	8	0600	12.5	210	21.8
3S	290	8	0600	8	1900	13.0	275	27.5
4S	220	8	1900	9	0930	14.5	205	18.4

a) t = metric tons (1000 kg)

Oven Temperatures

The oven temperatures shown in Table 6 followed the pattern established during the first voyage. Values of the pyrometer temperatures below 1400°C generally were associated with an interruption of feed to one or more burners. By inspection of the table it is seen that the controller temperatures were about 180°C higher than the indicator values. In a similar way the pyrometer temperatures were about 350°C higher than the indicator values. The initial indicator value of 850°C is more than 350°C below the flame temperature because the steady-state temperature had not been reached at the indicator sensor's location 2 inches in from the surface of the firebrick.

Treatment of Data

The following quantities were measured on the scrubber water corresponding to one or more midget impinger train samples: total organic chloride (RCl_w), microequivalents as chlorine, and total hydrochloric acid (HCl_w), equivalents. On the contents of the midget impinger train were measured: total reducing power of the remaining sodium arsenite solution (RP), microequivalents, and total organic chlorides, (RCl_i), microequivalents as chlorine.

The volumes (V_i), liters, of gas drawn through the midget impinger train was determined from flow rate observations and the corresponding times. Carbon monoxide (CO), ppm and oxygen ($\%O_2$) %v were measured continuously with the instruments listed earlier and the data over the indicated time periods averaged graphically on the recorder strip charts.

The concentration of organic chlorides in the stack gas was calculated from the sum of the contributions from the water scrubber contents and those from the midget impinger train using the following equations:

$$RCl_{s1} = \frac{(RCl_w)}{(HCl_w)} \left(1 - \frac{\%O_2}{21}\right) \times 0.109, \text{ ppm}$$

where

0.109 is the stoichiometric fraction of HCl in the stack gas, and

RCl_{s1} = contribution from the water scrubber,

$$RCl_{s2} = RCl_i \frac{24.5}{V_i}, \text{ ppm}$$

where

24.5 = the ideal gas volume (liters/mole) at 26°C, a value reasonably close to room temperature,

RCl_{s2} = contribution from the midget impinger train.

$$RCl_s = (R_{s1} + R_{s2}), \text{ ppm}$$

The concentration of all molecules containing chlorine atoms (assuming one Cl/molecule as in HCl) in the stack gas can be calculated from stoichiometry and the dilution due to excess air ($\%O_2$) according to equation (6) derived on page 7 by making appropriate substitutions and changing the multiplier from 100 to 10^6 to yield parts per million instead of percent:

$$\text{Concentration of Cl containing molecules or HCl} = \frac{0.73\left(1 - \frac{(\%O_2)}{21}\right) \times 10^6}{6.68}, \text{ ppm}$$

Table 6. Oven Temperatures – Second Voyage

Date	Hour	Starboard Oven, °C			Port Oven, °C		
		Indicator	Controller	Pyrometer	Indicator	Controller	Pyrometer
Dec. 2	6:50 a.m.	850			900		
	7:15 a.m.	900			940		
	9:45 a.m.	1030			1060		
	10:10 a.m.	1060		1500	1080		1570
	11:25 a.m.	1090			1110		
	1:10 p.m.	1130			1140		
	1:25 p.m.	1150		1590	1160		1590
	4:00 p.m.	1160			1160		
	6:30 p.m.	1180			1180		
	10:00 p.m.	1200			1200		
Dec. 3	7:20 a.m.	1220		1600	1190		1590
	10:10 a.m.	1220			1200		
	12:25 p.m.	1200					
	1:00 p.m.	1200		1520	-		1480
	2:35 p.m.	1190			-		
	4:00 p.m.	1190			-		
	5:15 p.m.	1190					
	6:45 p.m.	1200			-		
	7:30 p.m.	1200	1270	1560	-	1270	1510
	8:45 p.m.	1200					
	10:25 p.m.	1200					
Dec. 4	6:40 a.m.	1240	1340	1580		1360	1590
	9:00 a.m.	1220					
	12:00 a.m.	1190					
	1:30 p.m.	1180	1260	1550	1180	1300	1580
	3:00 p.m.		1180				
	5:00 p.m.		1180				
	9:00 p.m.	1200	1300	1610		1220	1510
Dec. 5	3:00 a.m.	1190					
	8:30 a.m.	1160	1180	1530		1220	1500
	10:30 a.m.	1180					
	11:00 a.m.	1180					
	2:00 p.m.	1180					
	3:00 p.m.	1180					
	3:40 p.m.	1180	1260	1520		1330	1570
	6:15 p.m.	1190					
	10:00 p.m.	1200	1270	1570		1240	1560
Dec. 6	7:30 a.m.	1100					
	8:00 a.m.	1160	1220			1180	
	10:00 a.m.	1140					
	11:15 a.m.	1140					
	12:00 a.m.	1150		1500			1500
	4:00 p.m.	1150					
	7:30 p.m.	1170		1550			1520
	11:30 p.m.	1180					
Dec. 7	8:15 a.m.	1210	1180	1500		1320	1570
	11:15 a.m.	1160					
	12:30 p.m.	1160	1250	1540		1240	1580
	4:00 p.m.	1160		1570			1510
	7:00 p.m.	1180		1590	1310	1340	1570
	11:00 p.m.	1200			1200		
Dec. 8	8:30 a.m.	1210		1570	1210		1530
	10:15 a.m.	1190			1200		
	12:15 p.m.	1180		1590	1200		1550
	2:50 p.m.	1160			1160		
	4:30 p.m.	1180		1610	1180		1530
	8:00 p.m.	1180		1580			1520
	12:00 p.m.	1160					
Dec. 9	6:30 a.m.	1160		1570			1480

Dividing the observed concentration (RCls, ppm) of organic chlorides in the stack gas by the concentration of Cl-containing molecules gives the fraction of unburned organic chloride. With unburned organic chloride expressed as a percentage ($\%RCl_{ub}$) the relation is:

$$(\%RCl_{UB}) = \frac{(RCl_s)(6.68)}{(0.73)\left(1 - \frac{(\%O_2)}{21}\right)} \times 10^{-4}$$

Destruction efficiencies are equal to 100 - $\%RCl_{ub}$.

Concentrations of O_2 and CO were observed directly and the concentration of Cl_2 was calculated in the same manner as in the first mission.

Organic Chloride Destruction Efficiency

Table 7 is a summary of the stack gas analyses and the values for organic chloride destruction efficiencies calculated from them. The destruction efficiencies are all much higher than the 99.9% specified in the permit. Furthermore, it is evident that the two ovens are equivalent and that moving the probe toward the center or toward the wall of the stack has no systematic effect on the levels of any of the gases tested. The values found for chlorine are quite erratic but at no time were they unexpectedly high. The oxygen levels correspond to 90 to 160% excess air. The levels of CO concentration are quite low and indicate again that the combustion efficiency is very high.

Table 7. Gas Analysis and Organic Chloride Destruction Efficiency

RCl Series Number	Probe Location		CO ppm	O_2 %	HCl %	Cl_2 ppm	RCl_{UB}[a] % of feed	Destruction %
	Oven	Depth, in						
1-2	Stb'd	9	75	11.3	5.3	50	< 0.002	>99.998
3-5	Port	55	-	-	6.1	350	< 0.002	>99.998
6	Port	55	-	-	6.2	<10	< 0.002	>99.998
7-8	Stb'd	48	25	9.8	5.2	70	0.013	99.987
9-10	Stb'd	48	35	10.0	5.7	180	0.008	99.992
11-12	Stb'd	10	40	9.0	6.0	40	0.007	99.993
13-16	Port	55	35	10.6	5.3	360	< 0.004	>99.996
21-22	Port	55	50	12.5	4.0	50	< 0.005	>99.995

a) Organic chlorides as Cl.

SAMPLE COLLECTING SYSTEM INTEGRITY TESTS

An important condition of the second permit is the requirement that the sample collecting system recover at least 50% of an organic chloride "spike" introduced into the stack end of the sample line.

Two such integrity tests were made, one in the field and one in the laboratory.

Field Test

During the collection of three sets of midget impinger samples and the associated scrubber water, a concentrated vapor solution of 1,2-dichloroethane (DCE) was injected into the sample line through a Tee at the probe end of the heated line. The vapor solution was generated by shaking liquid DCE in a 50 ml syringe. The syringe was then mounted on a motor drive and the plunger advanced at a rate corresponding to 0.109 cc vapor/min. The average temperature at the syringe during the tests was 26°C at which temperature the vapor pressure of DCE is 0.118 atm. The measured flow rate through the sampling system was 960 cc/min. Thus 0.109 cc/min of gas with a partial pressure of 0.118 atm injected into the sample stream gave a composition of (10^6) (0.109) (0.118)/960 = 13.3 ppm for the spiked gas.

During the total sample collection period, the gas flow as measured from the amount of HCl in the GBS impingers was 12.6 moles. The corresponding amount of the spike is 12.6 X 13.3 μ moles DCE or 12.6 X 26.6 μ eq Cl^- = 335 μ eq.

Although the DCE was fed into the line continuously over the 280 min of sampling time, the recovered material was found only in the last set of midget impingers. The nature of the delay is not understood, but as can be seen from the following calculations, 72% of the total amount of DCE introduced was recovered in the last set. This delay did not persist into later experiments as is indicated by the normal low levels of organic chloride found in later tests.

The flow rate through the midget impinger (MI) train was 200 ml/min, thus the total RCl in the gas stream was 42.2 X 960/200 or 203 μ/eq. The total recovery is shown in the following table.

Recovery System		RCl, μ eq Basis Side Stream	RCl, μ eq Basis Total Gas Stream
GBS Impingers			34.5
MI Impingers	NaOH	2.0	
	IPA-A	37.8	
	IPA-B	2.4	
Subtotal		42.2	203
Total		-	237.5
Fraction Recovered (237.5/335)			.72

Laboratory Test

An experimental set-up was designed and assembled to test the absorption of known amounts of 1,2-dichoroethane (DCE) in water and isopropyl alcohol (IPA) under conditions which simulate stack sampling aboard the ship.

The experimental set-up is shown in Figure 15. "Zero Air" and hydrogen chloride gas were metered into a manifold from high pressure cylinders. The zero gas flow was set at 2 liters/min and the hydrogen chloride at 50 ml/min, giving a concentration of HCl in air of 2.5%. It was difficult to measure the flow of the acid gas because of its corrosivity, so the regulated flow of HCl was absorbed in water and weighed until the proper flow had been obtained. DCE was placed in a 100 ml syringe, the syringe pumped back and forth several times until most of the liquid had been expelled but some droplets remained. The organic chloride vapor was sampled and analyzed by the combustion-microcoulometric technique described in the Appendix and found to contain 5.1% by volume of DCE. The syringe drive was set at 0.066 ml/min for the air-DCE mixture thus delivering 0.0033 ml/min of DCE into the 2 liter/min gas flow. This concentration of DCE in the acid stack gas, 1.6 ppm, approximates shipboard conditions.

Most of the synthetic gas was vented, but 220 ml/min was drawn through 40 ft of the sample line used on the first voyage. The gases were next drawn through two Greenburg-Smith impingers containing 250 ml of water. The impingers were immersed in an ice bath. The gases were next drawn through 24 ml of caustic sodium arsenite in a midget impinger in ice and then through two midget impingers in ice containing 24 ml each of nonograde isopropyl alcohol. Finally the gaseous mixture was drawn through a filter and a critical orifice which set the flow at 220 ml/min. All tubing was Teflon; all joints were either Teflon, glass, or polyproylene. No heating was employed and ambient temperature in the fume hood was 22°C.

The gases were turned on, flow rates checked, and allowed to flow to vent for 1 hour. At this time, the vacuum pump was turned on and the absorbers connected and the flow drawn through the absorption train. The experiment was continued for 10 hours. At the end of each hour, the first IPA scrubber was disconnected momentarily and 25 μl taken for analysis for organic chlorides by the combustion-coulometric method. The water absorbers were not disturbed. At the end of the experiment, both the water absorbers and the two IPA solutions were analyzed for organic chloride.

The amount of organic chloride added to the absorption train was calculated from the concentration of organic chloride in the syringe, the syringe flow rate, the total time, and the flow ratios of vent to absorption train. The value was found to be 0.222 ml or 9.2 μg moles. The entire 250 ml of each water absorber was passed through XAD-4 resin, the organic chlorides desorbed from the resin with methanol and the methanol analyzed for organic chloride by the combustion-microcoulometric technique. Each absorber was found to contain 1.7 μg moles. The IPA absorber, which was analyzed every hour, contained nothing for the first 5 hours then the concentration slowly increased until it reached 4.52 μg moles. The second IPA absorber, which was only analyzed at the tenth hour, contained 0.36 μg moles. The four values of recovered organic chlorides total 8.28 μg moles. Dividing this value by the amount added yields 90% recovery of the dichloroethane.

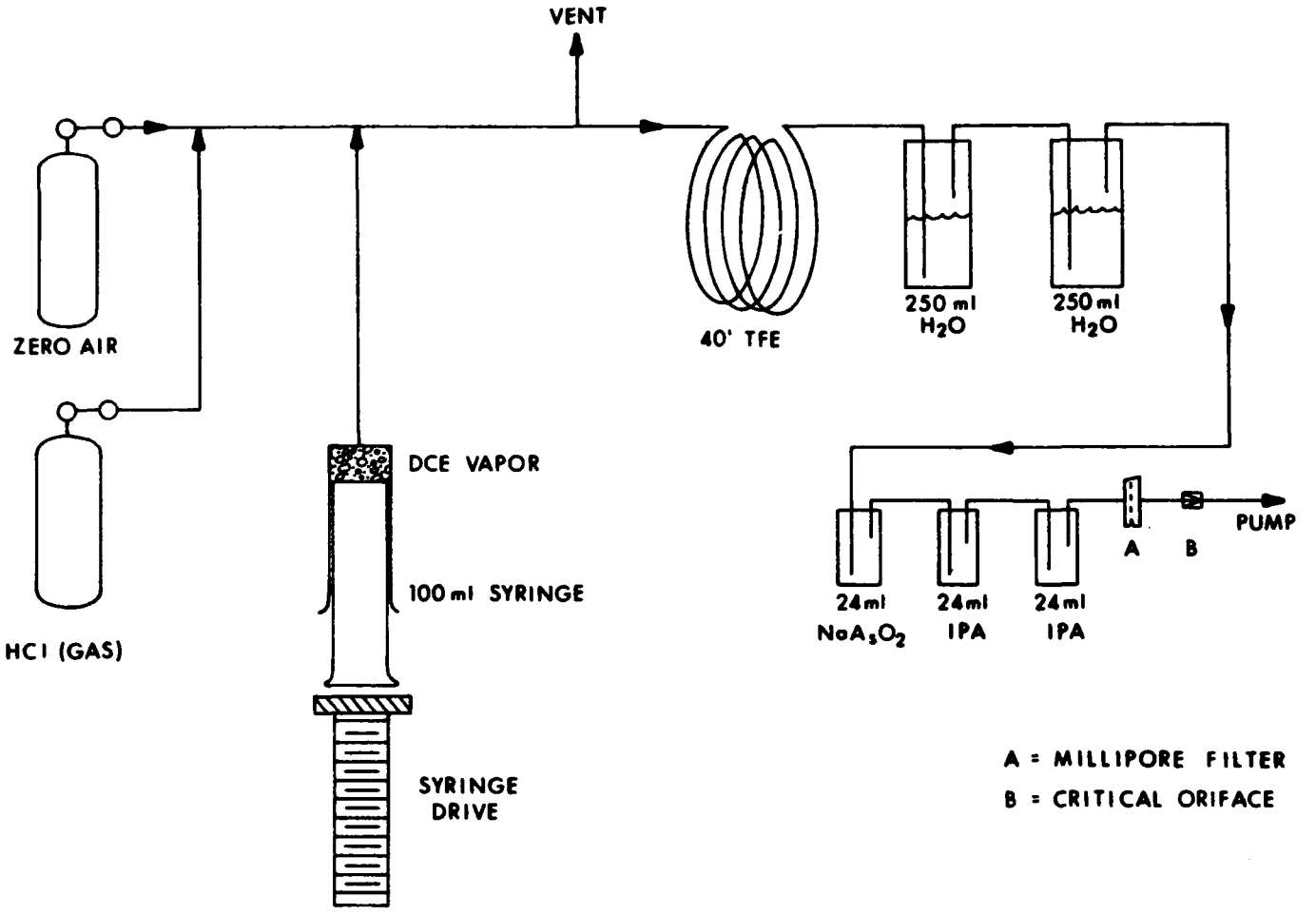

Figure 15. Laboratory Apparatus for Sample Recovery – Integrity Test

PROBE FAILURE CAUSES

Out of a total five sampling probes tried, only one lasted for the duration of the burn. The reasons for this are several and different for the two kinds of probes.

First Voyage

The first probe installed was damaged by overheating when the cooling water was accidentally turned off. The damage caused was severe warping of the probe and the separation of the thermocouple sheath formerly tack welded to the outside of the probe.

The second probe failed for more obscure reasons. About six days into the burn, water was observed coming from the port into which the probe was inserted. The flow increased to a point which necessitated sacrificing the probe. It seems unlikely that liquid condensate corroded the outside of the probe as suspected at the time. The cause of this failure is unknown at this time. The corrosive power of the hot gases is graphically shown in Figure 16. This is the remains of the probe in the stack after three days without cooling.

Second Voyage

The first probe inserted into the starboard oven probably failed because differential expansion of the outer and inner tubes broke the weld at the cold end. This caused the parts to separate, break the glass tubing and admit water to the sample line. This theory is supported by the fact that the flow of water into the sample line diminished when the probe was withdrawn.

Differential expansion probably caused the severe warping of the other probes used on the second voyage. The extent of the warping is shown in Figure 17. It appears possible that the outside of the probe extended in length sufficiently to stress the metal beyond its yield point and caused the observed bend.

The severity of the probe environment is again illustrated by the corrosion of the probe tip shown in Figure 18.

Comments

It is our belief that we have demonstrated (see Table 7) that the two ovens are equivalent and that it is unnecessary to traverse the diameter of the stack to secure reliable stack gas samples. If this is true, then probe construction for future tests can be greatly simplified. The probe can be shorter, and provisions need not be made for moving it in and out. Furthermore, the outside of the probe can be provided with a ceramic jacket to deflect the hot gases and a packing gland can be used to seal the inner tube to the outer one so that the tubes may move longitudinally relative to one another. These modifications seem likely to improve the chances of a new, water jacketed glass lined probe lasting through a sampling campaign. Care must be taken, however, to use heat resistant hose for the water lines near the oven as temperatures there will destroy ordinary vinyl tubing.

Figure 16. Probe in Stack After First Voyage

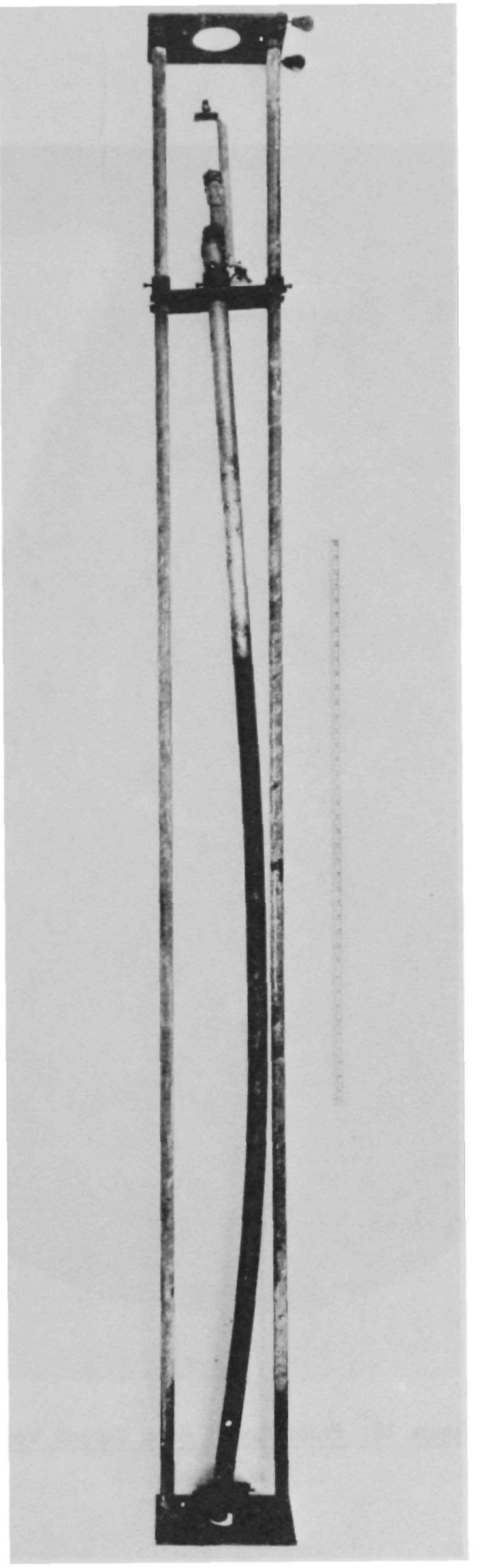

Figure 17. Bend in Probe After Second Voyage

Figure 18. Probe Nozzle After Second Voyage

APPENDIX

APPENDIX

Page

EPA Permit 730D008C A-1

EPA Permit 730D008C (2) A-15

Determination of Trace Organic Chlorides in Sea Water and Waste Water - Combustion-Coulometric Method A-21

Determination of Total Organic Carbon in Natural Waters Including Brines - Wet Oxidation Infrared Method A-27

Summary Log - First Voyage A-31

Summary Log - Second Voyage A-37

Stack Gas Analytical Results - Second Voyage A-45

UNITED STATES ENVIRONMENTAL PROTECTION AGENCY

Washington, D. C. 20460

Permit No.	730D008C
Name of Permittees	Shell Chemical Company, Inc., and Ocean Combustion Services, B.V.
Effective Date	October 10, 1974
Expiration Date	October 26, 1974

MARINE PROTECTION, RESEARCH, AND
SANCTUARIES ACT (OCEAN DUMPING) RESEARCH PERMIT

In reference to the following application:

Application Number: 730D008C

for a permit authorizing the transportation for incineration in compliance with the provisions of the Marine Protection, Research, and Sanctuaries Act of 1972, as amended (hereinafter referred to as the Act),

Shell Chemical Company ("Shell"), and
Ocean Combustion Services, B.V. ("OCS")

hereinafter called Permittees, are authorized to transport material for incineration from the Shell facility at P. O. Box 2633, Deer Park, Texas, all in accordance with the following general and special conditions:

General Conditions

1. All transportation and incineration authorized herein shall be consistent with the terms and conditions of this permit.

2. a. Transportation to, and incineration at any location other than that authorized by this permit shall constitute a violation of the terms and conditions of this permit.

b. Transportation and incineration of any material more frequently than, or in excess of, that identified and authorized by this permit, or incineration of material not authorized by this permit, shall constitute a violation of the terms and conditions of this permit.

3. The Permittees shall allow an authorized EPA representative and the U. S. Coast Guard representative:

a. To enter the Permittees' premises or vessels in which material to be discharged is located;

b. To have access to and copy any records required to be kept under the terms and conditions of this permit or the Act;

c. To inspect any monitoring equipment or monitoring method required in this permit;

d. To sample any materials discharged or to be discharged; or

e. To take such other action as is necessary or appropriate to determine whether the terms and conditions of this permit have been fulfilled.

4. The issuance of this permit does not convey any property rights in either real or personal property, or any exclusive privileges, nor does it authorize any injury to private or public property or any invasion of personal rights, nor any infringement of Federal, State or local laws or regulations.

5. If the dumping of material which is regulated by this permit is dumped due to emergency to safeguard life at sea in locations or in a manner not in accordance with the terms of this permit, the Permittees shall, in accordance with 40 C.F.R. Section 224.2(c), notify by radio, telephone or telegraph the Administrator and the appropriate U.S. Coast Guard district of the incident as soon as possible and make a full written report to the Administrator and the Coast Guard within 10 days.

6. Unless the context otherwise requires, terms used in this permit which are defined in Section 3 of the Act shall have the same meaning herein.

Special Conditions

1. Description of Material

a. The waste to be shipped for incineration is a mixture of organic chlorides from five process waste streams. The constituents of each waste stream are described in Appendix A and in the Analysis and Characterization of Five Organic Waste Streams Proposed for Deep-Sea Disposal submitted by the Permittees. The levels in the wastes to be incinerated shall not be in excess of the concentrations or amounts set forth in Appendix A.

b. The character of the material being discharged shall not be altered in its content from the amounts listed in Appendix A by the addition of wastewater from sources other than those identified above.

2. Amount of Material

a. The Permittees are authorized to transport and incinerate material described in Paragraph 1 in an amount not in excess of 4,200 metric tons.

3. Transportation and Barging Activities

a. The port of departure for the dumping of the material described herein is Houston, Texas. The Permittees are authorized to transport the material described herein from the Shell facility to such port of departure to ocean waters.

b. During loading operations, there shall be no loss of material to any waterway.

c. The Permittees are authorized to incinerate the described wastes in a site which is defined in longitude and latitude as follows:

From 26 degrees 20 minutes to 27 degrees 00 minutes north latitude

From 93 degrees 20 minutes to 94 degrees 00 minutes west longitude

d. Permittees shall navigate around, by a radius of 15 nautical miles, the reefs found at the following coordinates:

West Flower Gardens:

27 degrees 53 minutes north latitude

93 degrees 48 minutes west longitude

East Flower Gardens:

27 degrees 55 minutes north latitude

93 degrees 36 minutes west longitude

e. Permittees shall also navigate around by a radius of 5 nautical miles the reefs found at the following coordinates:

Stetson Bank:

28 degrees 10 minutes north latitude

94 degrees 18 minutes west longitude

Claypile Bank:

28 degrees 20 minutes north latitude

94 degrees 09 minutes west longitude

4. Means of Transportation

a. The means of transportation shall be the following named vessel:

Company	Ship	Capacity
Hansa Lines	Vulcanus	4,200 metric tons

b. The Permittees shall place this permit or a copy of this permit in a conspicuous place in the vessel which will be used for the transportation and incineration herein authorized.

5. Special Conditions

a. Permittees shall begin the incineration of the wastes only after the combustion chamber reaches a temperature of 1200 degrees C. There shall be no incineration at less than 1200 degrees C. The Permittees shall be required to maintain a minimum average combusion temperature of 1400°C (a running four-hour average), except that Permittees shall be allowed to determine the combusion efficiency as a function of average combustion temperatures of 1100°C, 1200°C, 1300°C, and 1500°C, during two four-hour burns at each such average combustion temperature.

b. Permittees shall maintain no less than a 99.9 percent combustion efficiency at any time except during evaluations of combustion efficiency pursuant to subparagraph a.

c. The toal feed rate of waste into the incinerators shall be no greater than 20 metric tons/hr.

d. Permittees shall so position and navigate the ship during incineration as to maintain a position downwind from any vessel other than those engaged in environmental monitoring. There shall be no less than an effective wind velocity of 10 knots to be passing the incinerator stacks (to be comprised of wind or vessel speed or both.)

e. Permittees shall insure their position within the discharge site at all times by on-board navigational aids, and shall maintain documentation of position at all times.

6. Monitoring Requirements

a. The Vulcanus shall have equipment installed and in use which shall constantly measure the temperature at two points inside each incinerator. The Vulcanus at two points shall have in operation a time clock with control lamps showing when the incinerators are in operation. There shall be an automatic camera which will photograph the control panel every 15 minutes. The monitoring equipment noted in this paragraph shall be sealed by the proper governmental authorities at the initiation of the voyage, and available for inspection at the conclusion of the voyage.

b. There shall be installed and in operation a Beckman 109A flame ionization detector device, calibrated on shore against standard mixtures of methane in air, which device shall make regular stack tests for emissions of total hydrocarbons.

c. The Permittees shall regularly monitor the combustion efficiency of the Vulcanus.

d. Permittees shall monitor the fallout of hydrogen chloride and other chemicals from the incineration by use of the oceanographic ship Miss Freeport, which shall be equipped with devices to measure pH levels, to make phytoplankton counts, and to take neuston net tows. Periodic measurements shall be made of pH, phytoplankton and zooplankton in the vicinity of the area in which there is fallout, and in areas outside the fallout zone within the dumping area consistent with the recommendations of the Presiding Officer dated October 9, 1974.

e. All data collected by or on behalf of Permittees and calculations by Permittees based thereon shall be retained and supplied to EPA and made available for public inspection as soon as possible.

f. In addition to the specific monitoring requirements set forth above, Permittees shall, after consultation with EPA, conduct such other monitoring or other studies as may be necessary or appropriate to carry out the recommendations set forth in the Report of the Presiding Officer dated October 10, 1974.

g. It is contemplated that extensive monitoring will be carried out by EPA and other federal agencies. The Permittees shall cooperate with all such monitoring personnel. This cooperation shall include communication of geographical position, assistance in navigation, and the making available of accomodations for one observer on board the Vulcanus during the period of the research permit, if so requested by EPA.

October 10, 1974

for John Quarles
Administrator

APPENDIX A

ANALYSIS OF C LIGHT ENDS
(Approximately 15% of Total Waste)

COMPONENT	%w
2-Chloropropane) Ethyl Chloride) 2-Chloropropene)	17
1-Chloropropane	22
3-Chloro-1-propene	18
Acrolein	5
1,1-Dichloroethane	4
Isopropyl Alcohol + Dichloromethane	0.7
Benzene	0.7
1,1-Dichloropropane	1
3,3-Dichloropropene + Acetonitrile + Chloroform	4
1,2-Dichloropropane	11
1,2-Dichloroethane	0.2
2,3-Dichloropropene	14
cis 1,3-Dichloropropene	0.4
Epichlorohydrin	0.4
2,3-Dichloro-1-propanol	0.2
1-Chloro-2,3-dihydroxy Propane	0.2
Water	0.6
Unidentified	0.6
	100

ANALYSIS OF C HEAVY ENDS
(Approximately 25% of Total Waste)

COMPONENT	%w
1,2-Dichloropropene	0.1
Epichlorohydrin	2
2-Chloroallyl Alcohol	0.5
1.2.3-Trichloropropane	70
1,3-Dichloro-2-propanol	0.7
1,2-Dichloro-3-propanol	10
1-Chloro-2,3-Dihydroxypropane	0.2
Tetrachloropropyl Ethers	14
Unidentified	2
Water	0.5
	100

ANALYSIS OF VCM HEAVY ENDS
(Approximately 25% of Total Waste)

COMPONENT	%w
1-Chlorobutane	0.3
Tetrachloroethylene	0.9
1,1,1-Trichloroethane	0.8
1,2-Dichloroethane	15
1,2-Dichlorobutane	0.7
Dichlorobutenes	5
Chlorobenzene	2
1,1,2-Trichloroethane + 1,1,1,2-Tetrachloroethane	58
1,2-Dichlorohexane	1
2-Chloroethanol + 1,4-Dichlorobutane	0.6
Pentachloroethane	0.5
Hexachloroethane	0.4
1,2,3-Trichlorobutane	0.9
1,2,3-Trichloropropene	0.8
1,1,2,2-Trichloroethane	5
bis(2-Chloroethyl)ether	1
1,2,4-Trichlorobutane	1
C_4-C_6Cl_x	4
Water	0.1
Unknowns	2
	100

ANALYSIS OF VCM TARS
(Approximately 25% of Total Waste)

COMPONENTS	%w
Trichloroethylene	0.2
Tetrachloroethylene	0.2
1,1,1-Trichloroethane	0.4
1,2-Dichloroethane	36
1,2-Dichlorobutane + Unknown Butadiene	0.3
Dichlorobutenes	1.8
Chlorobenzene	0.7
1,1,2-Trichloroethane + 1,1,1,2-Tetrachloroethane	15
1,2-Dichlorohexane	0.6
2-Chloroethanol + 1,4-Dichlorobutane	0.7
Pentachloroethane	0.6
Hexachloroethane	0.6
1,2,3-Trichlorobutane	1
1,2,3-Trichloropropane	0.8
1,1,2,2-Tetrachloroethane	5
bis(2-Chloroethyl)ether	3
1,2,4-Trichlorobutane	5
C_3-C_6Cl_x	14
Unspecified Aromatics	2
Unknowns	2
Freon-Soluble Material	4
Freon-Insoluble Material	6
Water	0.1
	100

ANALYSIS OF "D-D" FLASHER BOTTOMS
(Approximately 10% of Total Waste)

COMPONENT	%w
3-Chloro-1-propene	0.3
Benzene	0.2
3,3-Dichloro-1-propene	1.5
1,2-Dichloropropane	17
2,3-Dichloro-1-propene	2
cis-1,3-Dichloropropene	13
trans-1,3-Dichloropropene	15
Trichloropropenes	4
1,2,3-Trichloropropane	4
Unknowns	7
Freon-Soluble Material	24
Freon-Insoluble Material	12
	100

Metals	Average % by wt.
Chromium	0.15 ppm
Lead	2.0 ppm
Nickel	0.67ppm
Mercury	0.010ppm
Cadmium	0.002ppm
Zinc	0.28 ppm
Copper	1.2 ppm
Arsenic	0.03 ppm
Physical Chemical Properties	
Specific Gravity	1.10-1.35

TELEGRAPHIC MESSAGE

NAME OF AGENCY	PRECEDENCE	SECURITY CLASSIFICATION
ENVIRONMENTAL PROTECTION AGENCY	ACTION INFO	UNCLAS
ACCOUNTING CLASSIFICATION 6850106 512722E990	DATE FORWARD 10/25/74	TYPE OF MESSAGE ☐ SINGLE ☐ BOOK ☐ MULTIPLE ADDRESS
FOR INFORMATION CALL		
NAME James A. Rogers	PHONE NUMBER 755-0753	

THIS SPACE FOR USE OF COMMUNICATION UNIT

MESSAGE TO BE TRANSMITTED (Use double spacing and all capital letters)

TO:
MR. NORMAN D. RADFORD, JR., ESQUIRE
VINSON, ELKINS, SEARLS, CONNALLY & SMITH
FIRST CITY NATIONAL BANK BUILDING
HOUSTON, TEXAS 77002

THE PERMITTEES UNDER EPA OCEAN DISCHARGE PERMIT NO. 73CD008C, RELATING TO THE INCINERATION OF SHELL CHEMICAL COMPANY ORGANOCHLORINE WASTES BY THE OCEAN INCINERATION SHIP VULCANUS, HAVE REQUESTED MODIFICATIONS OF THE PERMIT TO ALLOW A MAXIMUM WASTE FEED RATE OF 25 METRIC TONS PER HOUR AND AN EXTENSION OF THE EFFECTIVE DATE OF THE PERMIT. THE PERMIT EXPIRES ON OCTOBER 26, 1974. BY COMMUNICATION OF OCTOBER 24, 1974, FROM MR. R. E. VAN INGEN OF SHELL CHEMICAL COMPANY, EPA HAS BEEN INFORMED THAT SHELL NO LONGER REQUESTS A MODIFICATION IN THE PERMIT'S REQUIRED OPERATING TEMPERATURES.

THE PURPOSE OF THE PERMIT WAS TO ALLOW SHELL AND OCS TO INCINERATE 4200 METRIC TONS OF SHELL'S WASTES ON AN EXPERIMENTAL BASIS. BECAUSE THE VULCANUS EXPERIENCED TECHNICAL DIFFICULTIES AND WAS UNABLE TO COMMENCE THE INCINERATION ON THE DAY CONTEMPLATED WHEN THE PERMIT WAS ISSUED, THE PERMITTEES WILL BE IN VIOLATION UNLESS AN EXTENSION IS GRANTED. THE ACTUAL NUMBER OF DAYS ON WHICH INCINERATION WILL BE CARRIED OUT IS NOT CHANGED.

PAGE NO.	NO. OF PGS.	SECURITY CLASSIFICATION
1	2	UNCLAS

STANDARD FORM 14
REVISED AUGUST 1967
GSA FPMR (41 CFR) 101-35.304

TELEGRAPHIC MESSAGE

NAME OF AGENCY	PRECEDENCE ACTION INFO	SECURITY CLASSIFICATION
ACCOUNTING CLASSIFICATION	DATE PREPARED	TYPE OF MESSAGE ☐ SINGLE ☐ BOOK ☐ MULTIPLE ADDRESS
FOR INFORMATION CALL		
NAME	PHONE NUMBER	

THIS SPACE FOR USE OF COMMUNICATION UNIT

MESSAGE TO BE TRANSMITTED (1 w double spacing and all capital letters)

TO:

THE REQUIREMENT OF A 20 METRIC TONS PER HOUR FEED RATE, CONTAINED IN THE EXISTING PERMIT, WAS BASED UPON THE TESTIMONY BY SHELL AT THE PUBLIC HEARING TO THE EFFECT THAT THIS THROUGHPUT RATE WOULD ALLOW ACHIEVEMENT OF THE DESIRED COMBUSTION TEMPERATURES. YOU HAVE STATED TO EPA THAT UNLESS THE FEED RATE IS ALLOWED TO FLUCTUATE TO 25 METRIC TONS PER HOUR THE COMBUSTION TEMPERATURES MANDATED BY THE EPA PERMIT MAY NOT BE ATTAINED.

BECAUSE THE SHELL REQUEST FOR MODIFICATIONS WILL NOT AFFECT THE TOTAL BURNING TIME CONTEMPLATED BY THE ORIGINAL PERMIT AND WILL NOT LESSEN THE EPA TEMPERATURE AND COMBUSTION EFFICIENCY REQUIREMENTS, PERMIT NO. 730D008C IS HEREBY AMENDED TO PROVIDE THAT THE EXPIRATION DATE IS 11:59 P.M., OCTOBER 30, 1974, AND THE MAXIMUM WASTE THROUGHPUT RATE SHALL BE 25 METRIC TONS PER HOUR. ALL OTHER CONDITIONS AND REQUIREMENTS OF THE PERMIT ISSUED ON OCTOBER 10, 1974, REMAIN IN EFFECT.

JOHN R. QUARLES
DEPUTY ADMINISTRATOR

OCTOBER 25, 1974

PAGE NO	NO OF PGS	SECURITY CLASSIFICATION
2	2	UNCLAS

STANDARD FORM 14
REVISED AUGUST 1967
GSA FPMR (41 CFR) 101-35.306

UNITED STATES ENVIRONMENTAL PROTECTION AGENCY

Washington, D. C. 20460

Permit No.	730D008C (2)
Name of Permittees	Shell Chemical Company, Inc., and Ocean Combustion Services, B. V.
Effective Date	November 28, 1974
Expiration Date	December 16, 1974

MARINE PROTECTION, RESEARCH, AND SANCTUARIES ACT (OCEAN DUMPING) RESEARCH PERMIT

In reference to the following application:

Application Number: 730D008C

for a permit authorizing the transportation for incineration in compliance with the provisions of the Marine Protection, Research, and Sanctuaries Act of 1972, as amended (hereinafter referred to as the Act).

Shell Chemical Company ("Shell"), and
Ocean Combustion Services, B. V. ("OCS")

hereinafter called Permittees, are authorized to transport material for incineration from the Shell facility at P. O. Box 2633, Deer Park, Texas, all in accordance with the following general and special conditions:

General Conditions

1. All transportation and incineration authorized herein shall be consistent with the terms and conditions of this permit.

2. a. Transportation to, and incineration at any location other than that auhtorized by this permit shall constitute a violation of the terms and conditions of this permit.

b. Transportation and incineration of any material more frequently than, or in excess of, that identified and authorized by this permit, or incineration of material not authorized by this permit, shall constitute a violation of the terms and conditions of this permit.

3. The Permittees shall allow an authorized EPA representative and the U.S. Coast Guard representative:

a. To enter the Permittees' premises or vessel in which material to be discharged is located;

b. To have access to and copy any records required to be kept under the terms and conditions of this permit or the Act;

c. To inspect any monitoring equipment or monitoring method required in this permit;

d. To sample any materials discharged or to be discharged; or

e. To take such other action as is necessary or appropriate to determine whether the terms and conditions of this permit have been fulfilled.

4. The issuance of this permit does not convey any property rights in either real or personal property, or any exclusive privileges, nor does it authorize any injury to private or public property or any invasion of personal rights, nor any infringement of Federal, State or local laws or regulations.

5. If the dumping of material which is regulated by this permit is dumped due to emergency to safeguard life at sea in locations or in a manner not in accordance with the terms of this permit, the Permittees shall, in accordance with 40 C.F.R. Section 224.2(c), notify by radio, telephone or telegraph the Administrator and the appropriate U.S. Coast Guard district of the incident as soon as possible and make a full written report to the Administrator and the Coast Guard within 10 days.

6. Unless the context otherwise requires, terms used in this permit which are defined in Section 3 of the Act shall have the same meaning herein.

Special Conditions

1. Description of Material

a. The waste to be shipped for incineration is a mixture of organic chlorides from five process waste streams. The constituents of each waste stream are described in Appendix A to the first research permit issued under application number 730D008C (effective October 10, 1974 to October 26, 1974) and in the Analysis and Characterization of Five Organic Waste Streams Proposed for Deep-Sea Disposal submitted

by the Permittees. The levels in the wastes to be incinerated shall not be in excess of the concentrations or amounts set forth in Appendix A.

b. The character of the material being discharged shall not be altered in its content from the amounts listed in Apendix A to permit no. 730D008C by the addition of wastewater from sources other than those identified above.

2. Amount of Material

a. The Permittees are authorized to transport and incinerate material described in Paragraph 1 in an amount not in excess of 4,200 metric tons.

3. Transportation and Barging Activities

a. The port of departure for the dumping of the material described herein is Houston, Texas. The Permittees are authorized to transport the material described herein from the Shell facility to such port of departure to ocean waters.

b. During loading operations, there shall be no loss of material to any waterway.

c. The Permittees are authorized to incinerate the described wastes in a site which is defined in longitude and latitude as follows:

From 26 degrees 20 minutes to 27 degrees 00 minutes north latitude

From 93 degrees 20 minutes to 94 degrees 00 minutes west longitude

d. Permittees shall navigate around, by a radius of 15 nautical miles, the reefs found at the following coordinates:

West Flower Gardens:

27 degrees 53 minutes north latitude

93 degrees 48 minutes west longitude

East Flower Gardens:

27 degrees 55 minutes north latitude

93 degrees 36 minutes west longitude

e. Permittees shall also navigate around by a radius of 5 nautical miles the reefs found at the following coordinates:

Stetson Bank:

28 degrees 10 minutes north latitude

94 degrees 18 minutes west longitude

Claypile Bank:

28 degrees 20 minutes north latitude

94 degrees 09 minutes west longitude

4. Means of Transportation

a. The means of transportation shall be the following named vessel:

Company	Ship	Capacity
Hansa Lines	Vulcanus	4,200 metric tons

b. The Permittees shall place this permit or a copy of this permit in a conspicuous place in the vessel which will be used for the transportation and incienration herein authorized.

5. Special Conditions

a. Permittees shall begin the incineration of the wastes only after the combustion chamber reaches a temperature of 1200 degrees C measured as a flame temperature, and there shall be no incineration at less than this temperature. The Permittees shall maintain at least an average flame temperature of 1350 C. while incinerating the wastes.

b. Permittees shall so operate the incinerators that there is no less than a 99.9 percent destruction of the wastes.

c. The total feed rate of waste into the incinerators shall be no greater than 25 metric tons/hr.

d. Permittees shall so position and navigate the ship during incineration as to maintain a position downwind from any vessel other than those engaged in environmental monitoring. There shall be no less than an effective wind velocity of 10 knotts to be passing the incinerator stacks (to be comprised of wind or vessel speed or both.)

e. Permittees shall insure their position within the discharge site at all times by on-board navigational aids, and shall maintain documentation of position at all times.

f. Permittees shall have installed and in operating condition a radio or other communications device which is capable of voice transmission to the mainland from the Vulcanus when in the discharge zone.

6. Monitoring Requirements

a. The Vulcanus shall have equipment installed and in use which shall constantly measure the temperature at two points inside each incinerator. The Vulcanus shall have in operation a time clock with control lamps showing when the incinerators are in operation. There shall be an automatic camera which will photograph the control panel every 15 minutes. The monitoring equipment noted in this paragraph shall be sealed by the proper governmental authorities at the initiation of the voyage, and available for inspection at the conclusion of the voyage.

b. The Permittees shall regularly monitor the organochlorine, carbon monoxide and oxygen emissions from the Vulcanus.

c. Permittees shall monitor the fallout of hydrogen chloride and other chemicals from the incineration by use of a monitoring ship, which shall be equipped with devices to measure pH levels and obtain samples to determine chlorinity. Periodic measurements shall be made of pH and chlorinity in the vicinity of the area in which there is fallout, and in areas outside the fallout zone.

d. All data collected by or on behalf of Permittees and calculations by Permittees based thereon shall be retained and supplied to EPA and made available for public inspection as soon as possible.

e. In addition to the specific monitoring requirements set forth above, Permittees shall, after consultation with EPA, conduct such other monitoring or other studies as may be necessary or appropriate to carry out the recommendations set forth in Appendix I to the Staff Report attached to the Supplementary Decision of the Administrator, both dated November 27, 1974.

f. It is contemplated that monitoring may be carried out by EPA and other federal agencies. The Permittees shall cooperate with all such monitoring personnel. This cooperation shall include communication of geographical position, assistance in navigation, and the making available of accomodations for two observers on board the Vulcanus during the period of this research permit, if so requested by EPA.

November 27, 1974 Administrator

SHELL DEVELOPMENT COMPANY
ANALYTICAL DEPARTMENT

DETERMINATION OF

TRACE ORGANIC CHLORIDES IN SEA WATER AND WASTE WATER COMBUSTION - COULOMETRIC METHOD

Scope

1) The method is applicable to the determination of organic chlorides in sea water and waste water in the range of 0.05-10 ppm. Inorganic halides do not interfere. Organic bromides, if present, will interfere.

Method Summary

2) The sea or waste water sample is passed through a small bed of macroreticular resin which passes the inorganic salts and retains the organic material. The bed is washed free of residual salts with de-ionized water and the organic material eluted with a small amount of methanol. A portion of the methanol solution is burned in a hot quartz tube with oxygen and the resulting hydrogen chloride titrated automatically with coulometrically generated silver ion.

Apparatus

3) a) Quartz combustion tube. The quartz combustion tube is made from General Electric type 204 clear fused quartz. The details of its construction are shown in Figure 1. Other types of quartz may require more frequent replacement, due to a higher rate of devitrification, but are otherwise suitable. The tube is heated to 950°C with a furnace 42 cm long and 2 cm ID. The furnace contains 50 feet of 16 ga Kanthal "A" wire and is operated, through a variable autotransformer, at 115 V ac. Any furnace of similar design is suitable.

b) Sample vaporization heater. The sample vaporization section of the combustion tube is heated to 225°C with a Briskeat High Temperature heating tape insulated with "Samox" fiber, 1/2 inch X 2 feet long. It is operated at 115 V ac and controlled with a variable autotransformer.

c) Detector. An automatic microcoulometer capable of generating silver ions with a suitable pair of indicating electrodes. (Dohrmann Microcoulometer, Model C-200B, with a T-300 titration cell, Dohrmann Instruments, 1062 Linda Vista, Mountain View, California.)

d) Oxygen humidifier. The oxygen is humidified by passage through a 500 ml gas washing bottle containing 200 ml of de-ionized water. Catalog No. K-65800, Kontes Glass Company, Vineland, New Jersey, or similar.

e) Integrator. An optical planimeter or disc integrator is required for measurement of peak areas.

f) Recorder. A 0-1 mv strip chart recording potentiometer, Hewlett Packard Model 1728 or similar.

g) Sample injector. Hamilton Microsyringe, 0-25 µl, Model 702N.

h) Serum cap. Size "A", 6 mm plug OD X 8 mm plug length X 10 mm top OD. Aloe Scientific Company Catalog Number 72400. Frequent replacement of the serum cap will be required.

i) Resin column. The chromatographic column used to carry out the salt separation is shown in Figure 2. Any similar column with the same diameter to length ratio will be suitable.

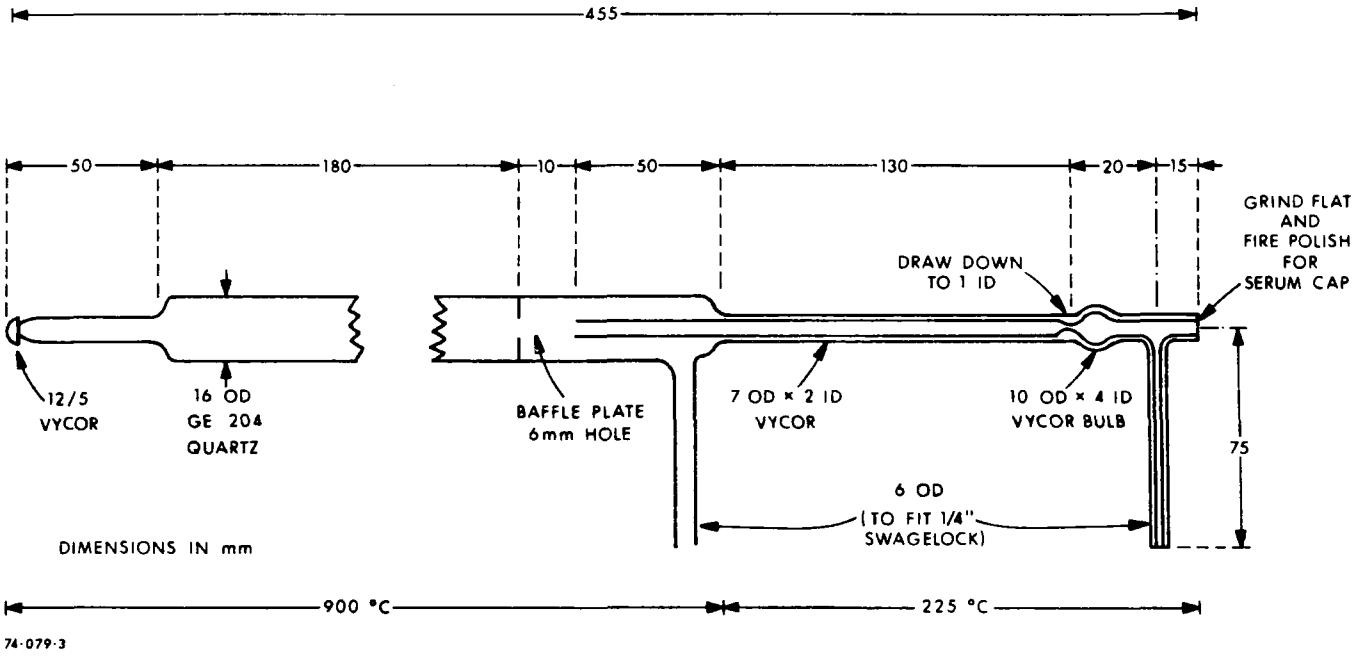

Figure 1. Quartz Tube for the Vaporization and Combustion of Trace Amounts of Organic Chlorides

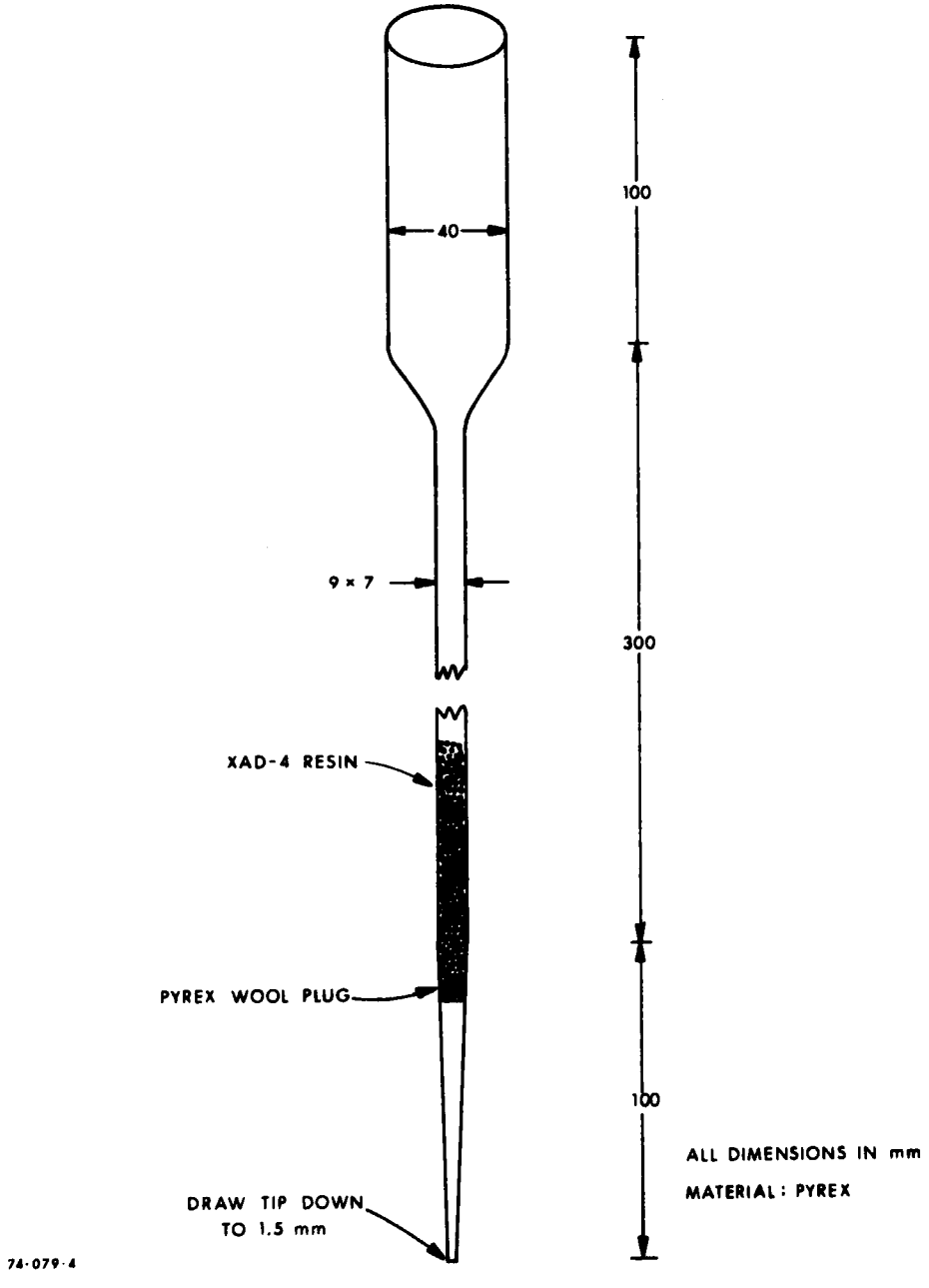

Figure 2. Resin Column

Reagents

4) a) Amberlite XAD-4. Nonionic Polymeric Adsorbent, Mallinckrodt No. 3412.

b) Methanol. Pesticide Quality. Matheson Coleman Bell No. 484.

c) Helium. Pure grade, pressure regulated.

d) Oxygen. Pure grade, pressure regulated.

Note 1. Oxygen lines are normally degreased with a chlorinated solvent. It is essential that all traces of this solvent be removed before application of this method.

e) Titration solvent. Seventy percent Reagent Grade acetic acid, 30 percent de-ionized water. It is better to make up small amounts (500 ml) of this reagent as required rather than to make a large amount which could become contaminated in storage.

f) Standards. Alkyl chlorides of the type that might be encountered in the waste water or sea water. A wide variety of these compounds is available from Eastman Kodak Company, Rochester, New York. Use highest purity available.

g) Silver nitrate. Ten percent solution of Reagent Grade crystals in de-ionized water.

Procedure

5) a) Assemble the apparatus as shown in Figure 3. Adjust the helium pressure and control valve so that 60 ml/min flows through the combustion tube and titration cell. Allow the combustion furnace to reach 950°C and the sample vaporization heater to reach 225°C.

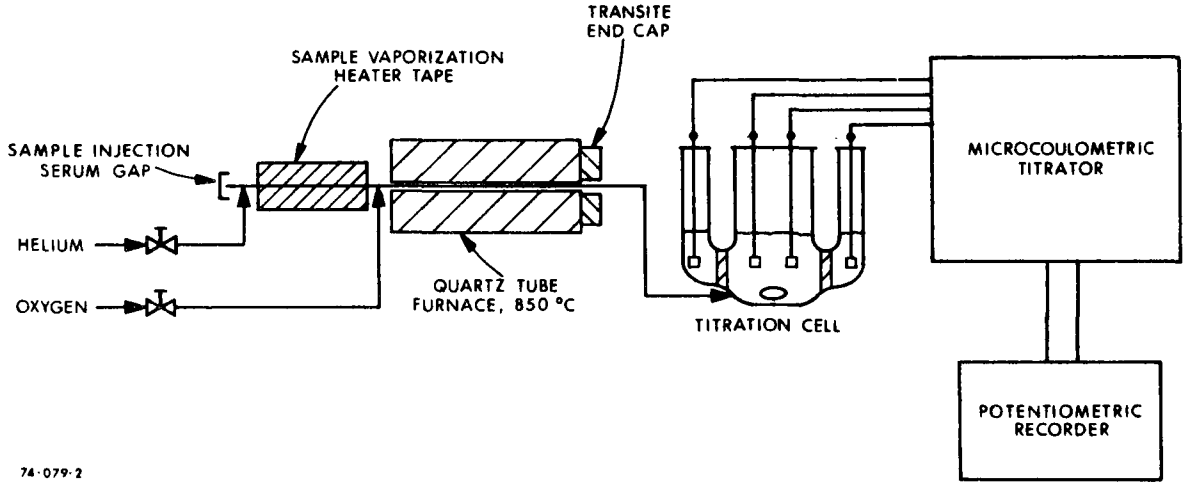

Figure 3. Combustion - Coulometric Apparatus for the Determination of Organic Chlorides

Note 2. Do not allow the sample vaporization zone to exceed 225°C because of the probable thermal dehydrochlorination of some of the more sensitive alkyl chlorides.

Adjust the oxygen flow to 400 ml/min. Clean the titration cell, fill the cell with fresh titration solvent, set the bias control at 235 mv, and allow the cell to come to a null balance.

Note 3. The operator should become completely familiar with the Dohrmann microcoulometer and the titration cell by a thorough study of the literature supplied with the instrument.

b) Set up a suitable number of resin columns. As the salt removal step requires approximately 2 hours and the combustion-titration step requires only a few minutes, it has been found convenient to have half as many columns as there are samples to be analyzed in a day. Plug the

end of each column with a small piece of glass wool, add 4 ml of Amberlite XAD-4 resin and tap the column lightly to settle the packing. Wash each column with three successive 50 ml portions of pesticide grade methanol. Save the last 10 ml from the last wash for a blank determination. Wash each column with three successive 50 ml portions of de-ionized water. The columns are now ready for use and should be lightly capped to prevent contamination.

Note 4. A strong amine odor will be present during the initial methanol washings and this operation should be done in a hood or well ventilated area if the odor is objectional to laboratory personnel.

c) Prepare a known concentration of a typical organic chloride in sea water or water of the same salt content as the waste water. The concentration should be approximately the same as that expected in the sample water (1-5 ppm). Prepare a mixture of the same organic chloride in pesticide grade methanol in a concentration that is 50 times higher than the standard prepared in water. Weigh 500 g of the water mixture in a suitable container and pass it through the resin bed. It is convenient to add 75-100 ml at a time to the reservoir on the top of the column. Do not allow the bed to go dry during this operation. It may be necessary to pump the entrapped air from the resin bed with a small rubber bulb to achieve free flow from the column. Wash the column with 50 ml of de-ionized water and test the latter portion of the effluent with 10 percent silver nitrate solution to ensure that no residual salt remains in the column. If the silver nitrate test is positive, continue washing until the test is negative. Allow the column to drain dry, place a 10 ml volumetric flask under the tip of the column, add 10 ml of pesticide grade methanol to the top of the column, and collect the effluent. It may be necessary to add a small additional portion of methanol to the top of the column to fill the volumetric flask to the mark.

d) Slowly inject (2-5 μl/sec) 25 μl of the methanol solutions retained from the final washing of the resin into the quartz tube with a Hamilton microsyringe. Adjust the sensitivity of the coulometer and recorder so that a small (5-10 percent of full scale) peak is recorded with a steady baseline. Calculate the apparent chloride content of the methanol as per section 6. It should be no greater than 0.1 ppm and be reproducible to ±3 percent. If the blank is appreciably higher, additional washing of the columns or an alternate source of methanol will be required. Slowly inject 25 μl portions of the methanol concentrate of the water standard and the methanol standard. Calculate the chloride content using the blank value determined above. Results should agree to within ±3 percent of the known values. Weigh 500 g of the sea water or waste water sample and analyze it in the same manner as has been descirbed for the standard samples. If the waste water samples contain a large amount of sediment, filter the sample before weighing through Whatman No. 1 paper. Wash the filter paper with a small portion of de-ionized water.

Calculation

6) a) Determine the area of the chloride peak in cm^2 with a planimeter or disc integrator.

b) Calculate the microequivalents of chloride in the sample in the following manner:

$$\mu \text{ eq of Cl} = \frac{(V)(S)(A) \times 10^6}{(R) \times 96,500}$$

where V = recorder sensitivity, volts/cm

A = peak area, cm^2

S = reciprocal of recorder chart speed, sec/cm

R = ohms, coulometer output, and

96,500 = Faraday's constant

c) Calculate the chloride content, ppm by weight, as follows:

$$\text{Cl, ppm} = \frac{(\text{microequivalents of Cl})(35.5) \times 10^3}{(\text{microliters of sample})(\text{sample density})} \times \frac{\text{grams of methanol}}{\text{grams of water}}$$

d) To calculate the results in terms of the individual organic chloride, substitute the appropriate molecular or equivalent weight for the value of 35.5, in the above equations.

e) In applying the method in a routine fashion, all values in the above equations will remain constant except the area of the chloride peak. It is convenient to derive a factor relating area in integrator counts or planimeter readings to ppm. Once the area factor has been found for several known mixtures, the chloride content of unknown samples may be quickly calculated.

DETERMINATION OF

TOTAL ORGANIC CARBON IN NATURAL WATERS INCLUDING BRINES - WET OXIDATION INFRARED METHOD

Method

The method consists of oxidizing a standard volume of acidified sample with potassium persulfate ($K_2S_2O_8$) in a sealed glass ampule. Oxidation is conducted in an autoclave at 175°C for 16 hours. The generated carbon dioxide is swept out of the ampule with nitrogen, passed through a washing and drying train, and subsequently into a nondispersive infrared analyzer where it is measured with a digital integrator. Standard solutions are used to establish a calibration curve which relates the response of the analyzer to organic carbon. About thirty samples can be run in a working day.

Apparatus

Illustrations of the ampule rack, and pressure vessel are given in Figure 1.[a] The pressure vessel serves to provide an external water vapor pressure that is of the same order of magnitude as the internal pressure within the glass ampule as the sample is oxidized by potassium persulfate.

A schematic diagram of the apparatus for determining the carbon dioxide generated by the wet oxidation procedure is shown in Figure 2. Compressed nitrogen is used to sweep the carbon dioxide through the system. A flow controller (Millaflow upstream controller) is used to adjust and maintain the gas flow at 250 cc/min; a constant flow through the infrared analyzer is essential for reproducible operation of the infrared analyzer and digitizer. The nitrogen is scrubbed with ascarite to remove any trace contamination of carbon dioxide. The T-assembly is used to open the ampule and permit quantitative removal of the carbon dioxide. The T is constructed of stainless steel and accommodates a 1/8-inch OD steel tube which can slide vertically through it; leakage around the tube is prevented by means of an "O" ring seal. The neck of the ampule containing the sample is inserted into a short section of tygon tubing (3/8-inch OD) attached to the bottom of the T-assembly. The gas washing bottle is filled with glass beads which serve to minimize dead volume in the system; it contains 25 ml of acidified potassium iodide solution (10 g KI in 25 ml-10% H_2SO_4). The potassium iodide solution removes any free chlorine from the generated gas and should be renewed frequently. Finally, the washed gas is dried by passing over magnesium perchlorate before it enters a Beckman Model 215A infrared analyzer which has been sensitized for the detection of carbon dioxide. The analyzer signal is measured by an Infotronics Model CRS-208 digital integrator and recorded on a 10-mv recorder. An injection port is included in the system to allow for the introduction of pure carbon dioxide to check instrument conditions.

Procedure

1) The glass ampules are cleaned batch-wise by heating in a muffle furnace at 625°C for 1/2 hour.

2) A volume of potassium persulfate equivalent to 600 mg of the reagent is added to a cleaned ampule by means of a glass scoop; 0.5 ml of 6 percent phosphoric acid is added followed by 2 ml of sample. The sample volume can be measured with sufficient accuracy with a 2 ml hypodermic syringe. The sample mixture is then purged with nitrogen for 3 min to remove inorganic carbon as carbon dioxide. The nitrogen is passed through a tube of silica gel immersed in liquid nitrogen to remove interfering impurities.

---

[a] This equipment can be purchased from Oceanography International, 512 West Loop, College Station, Texas 77840.

3) The ampule is stoppered with a septum pierced by a No. 22 gauge hypodermic needle. It is then sealed in a gas-oxygen flame. The septum protects the sample from combustion products of the flame, and the needle allows the gas in the stoppered ampule to expand sufficiently to prevent blowout of the glass wall during the operation. In this way the ampule is sealed without contamination of the sample from the flame.

4) When a sufficient number of ampules have been prepared they are placed in the rack and autoclaved in the pressure vessel for 16 hours at 175°C in an appropriate oven. About 1500 ml of water are added to the pressure vessel before the ampules are inserted.

5) The pressure vessel is allowed to cool to room temperature before being opened. The neck of a sealed ampule is then inserted into the typon tubing of the T-assembly shown in Figure 2, and the train purged with nitrogen until the analyzer indicates the absence of atmospheric carbon dioxide. With the sweep gas flowing, pressure is exerted at the neck of the ampule to break it open, and the steel tube is inserted into the sample mixture. The released carbon dioxide is swept out in the nitrogen gas stream and is detected by the analyzer. The output is integrated and digitized electronically.

6) A series of standards consisting of aqueous dextrose solutions and blanks are treated in the same manner as the samples. (Standards and blanks were prepared with water which had been freed of organic carbon by redistilling tap distilled water containing 1 ml of phosphoric acid and 10 g of potassium persulfate per liter; Silver Seal distilled water purchased from Houston Distilled Water Company was also found satisfactory.)

7) The organic carbon content in the sample is determined from the amount of carbon dioxide measured by means of a calibration curve established with the standard dextrose solutions. Variations in the sensitivity of the infrared analyzer require that the calibration curve be checked daily.

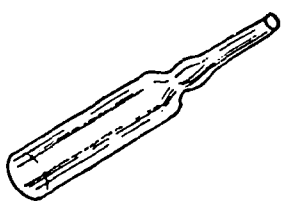

10 ml. GLASS AMPULE

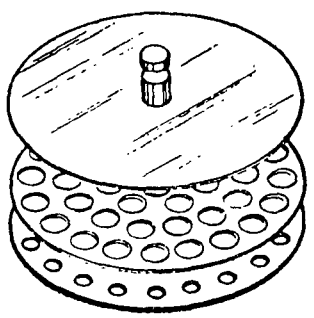

AMPULE RACK FOR PRESSURE VESSEL
(43 AMPULE CAPACITY)

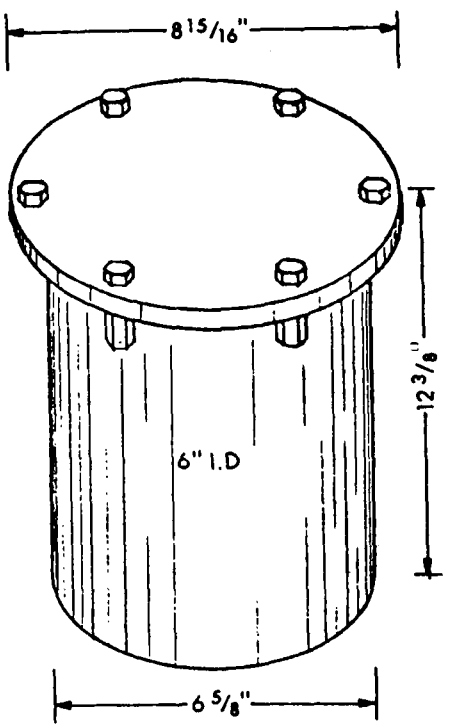

PRESSURE VESSEL FOR USE IN
GRAVITY CONVECTION OVEN.
(ACCOMODATES TWO AMPULE RACKS)

71-286-1

Figure 1. Illustrations of the Apparatus Used for the Wet Oxidation at 175°C of the Organic Matter in Water Samples

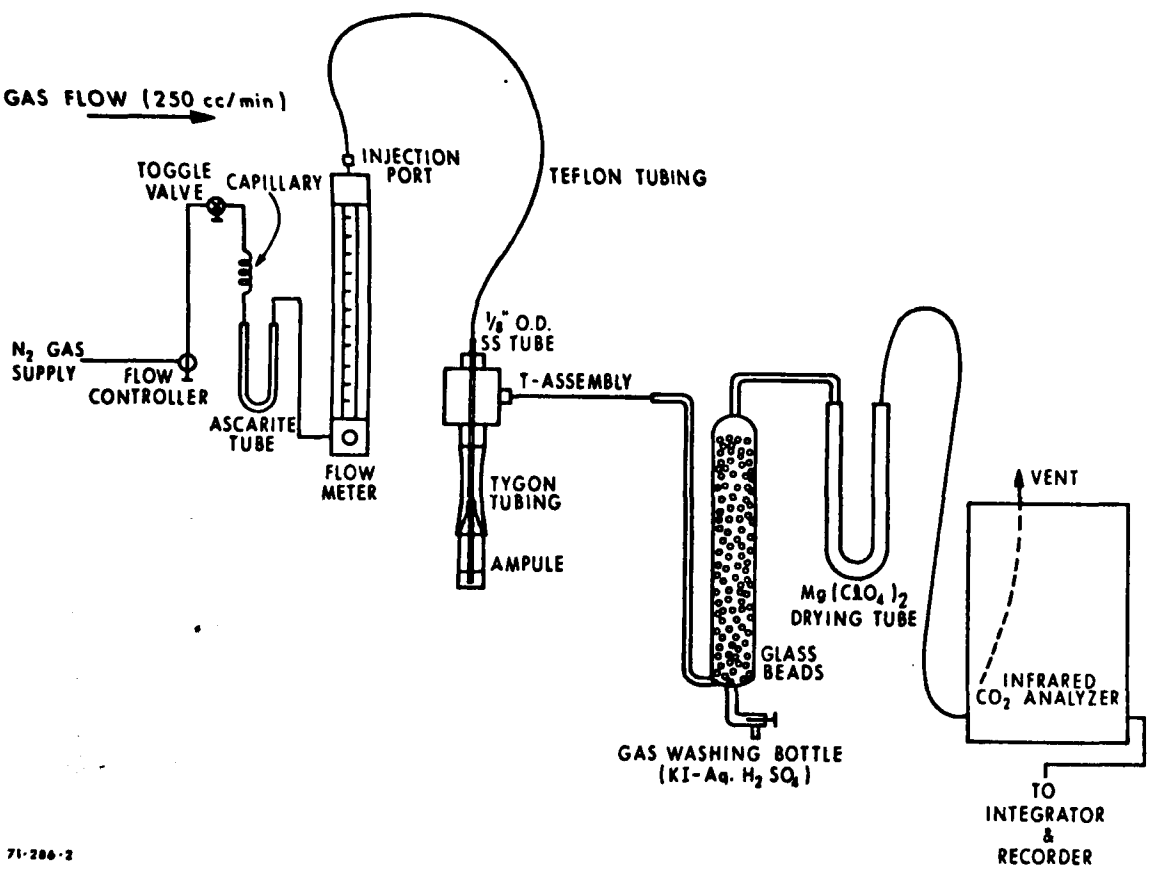

Figure 2. Flow Diagram of the Equipment Used for Determining the Carbon Dioxide Generated by the Wet Oxidation of Organic Matter in Water

Summary Log – First Voyage

Day	Hour	Temperature, °C							Analysis					CO_2, %v	O_2, %v	Feed Rate, t/hr	Remarks
		Stack	Starboard Oven			Port Oven			THC, ppm	Time to Stand'n hr	Water Sample		RCI Sample				
			Ind.	Contr.	Pyrom.	Ind.	Contr.	Pyrom.			Start	End					
Oct. 14																	Ship left Shell dock.
Oct. 15	2:00 PM																Attempted to burn waste. Failed due to plugged feed lines.
Oct. 16	5:00 AM																
Oct. 17																	Ship's engineers clearing feed lines and pumps.
Oct. 18																	
Oct. 19	10.00 PM																
Oct 20	7:00 AM		950	1120		910	1150										Start oven heat up.
	8:00 AM	1220	1000			950			8								Start burning waste at request of EPA monitoring personnel.
	9:00 AM	1220	1060	1320		1010	1320		6	–	2						
	10:00 AM	1250	1100	1340		1050	1340		6	-0.5							
	11:00 AM	1220							5	-1.5	3	2					Average THC = 6 ppm, Water 2 period.
	12:00 AM	1220							2	-2.5							
	1:00 PM	1230							2	-3.5				4.2	15.3		
	2:00 PM	1230							–								Replaced plugged capillary on 109A.
	3:00 PM	1220	1180	1370		1180	1370		1	-0.3						22	Feed rate from gaging tank.
	4:00 PM	1170		1360			1360		2	-0.5						24	Feed rate from gaging tank.
	5:00 PM	1220							3	+0.5							
	6:00PM	1170							3	-0.5							
	7:00 PM	1120		1300			1330		2	-1.5	4	3	1, 2				Average THC = 2 ppm, Water 3 period.
	8:00 PM	1120		1250			1250		2	-0.3			3				
	9:00 PM	1120							4	-1.3							
	10.00 PM	1120							4	-2.3							
	11:00 PM	TC Failed							4	-3.3							
	12:00 PM								4	-4.3							

Summary Log – First Voyage (Cont'd 1)

Day	Hour	Temperature, °C							Analysis					CO_2, %v	O_2, %v	Feed Rate, t/hr	Remarks
		Stack	Starboard Oven			Port Oven			THC, ppm	Time to Stand'n hr	Water Sample		RCI Sample				
			Ind.	Contr.	Pyrom.	Ind.	Contr.	Pyrom.			Start	End					
Oct 21	1:00 AM								4	-5.3							
	2:00 AM								3	-6.3							
	3:00 AM								3	-7.0							
	4:00 AM								3	-8.0							
	5:00 AM								2	-9.0							
	6:00 AM								1	-10							
	7:00 AM								1	-0.5							No adjustment in span needed.
	8:00 AM		1230			1230			2	-1.5							Feed rate reduced.
	9:00 AM								2	+0.5				3.7	14.2		
	10:00 AM								–								
	11:00 AM								0	-0.5	5	4					
	12:00 AM								1	-1.5				5.4	11.9	23.7	Tank 2C Empty.
Oct 21	1:00 PM		1130			1130			1	-0.3							
	2:00 PM								1	-1.3							
	3:00 PM		1210			1210			1	-2.3							
	4:00 PM		1230			1230			1	-0.5				6.9	9.7		Span gas through traps.
	5:00 PM								1	-1.5							
	6:00 PM								–		6	5					Average THC = 1 ppm, Water 5 period.
	7:00 PM								2	-3.5							
	8:00 PM								–								Rearranging sample train.
	9:00 PM		1240			1240			–							19.5	Feed rate by gaging.
	10:00 PM								–								
	11:00 PM								1	-0.5							
	12:00 PM								1	-1.5							Adjust of Span not reliable.

Summary Log – First Voyage (Cont'd 2)

Day	Hour	Temperature, °C							Analysis					CO_2, %v	O_2, %v	Feed Rate, t/hr	
		Stack	Starboard Oven			Port Oven			THC, ppm	Time to Stand'n hr	Water Sample		RCI Sample				
			Ind.	Contr.	Pyrom.	Ind.	Contr.	Pyrom.			Start	End					
Oct. 22	1:00 AM								0	-2.5							
	2:00 AM								0	+0.3							
	3:00 AM								0	-0.7							
	4:00 AM								0	-1.7							
	5:00 AM								0	-2.7							
	6:00 AM								0	-3.7							
	7:00 AM								–								Sample capillary plugged in 109. Replaced it by a needle valve.
	8:00 AM								–								
	9:00 AM								–								
	10:00 AM								–								
	11:00 AM								–								
	12:00 AM								–								
Oct. 22	1:00 PM								1	-0.3							Tank 1C empty.
	2:00 PM								10	-1.3			4,5,6			19.9	10-minute spike over 10 ppm THC
	3:00 PM								10	-2.3							5-minute spike over 10 ppm THC
	4:00 PM								9	-3.3							Cleaning a burner in oven.
	5:00 PM								14	-4.3							
	6:00 PM				1500			1500	–								Adjusting 109A span.
	7:00 PM								–								
	8:00 PM								–								
	9:00 PM								1	-0.3							
	10:00 PM								–								Recorder pen dry.
	11:00 PM								–								
	12:00 PM								–								Adjustment of span not reliable.

Summary Log - First Voyage (Cont'd 3)

Day	Hour	Temperature, °C							Analysis					CO_2, %v	O_2, %v	Feed Rate, t/hr	
		Stack	Starboard Oven			Port Oven			THC, ppm	Time to Stand'n hr	Water Sample		RCI Sample				
			Ind.	Contr.	Pyrom.	Ind.	Contr.	Pyrom.			Start	End					
Oct. 23	1:00 AM								–								
	2:00 AM								–								
	3:00 AM								–								Sample pressure regulator on 109A plugged. Shut 109A down.
	4:00 AM								–								
	5:00 AM								–								Cleaned up and overhauled 109A sample inlet system. It was very dirty. Installed improved traps.
	6:00 AM								–								
	7:00 AM								–								
	8:00 AM								–								
	9:00 AM								–								
	10:00 AM								–								
	11:00 AM								–								
	12:00 AM								–								
Oct. 23	1:00 PM								–								
	2:00 PM		1140	1220	–	1150	1260	1420	–		7	6					Average THC not available for water period 6.
	3:00 PM								–								
	4:00 PM								–							19.1	Tank 4C empty.
	5:00 PM								–								
	6:00 PM								–								
	7:00 PM								–								
	8:00 PM								3	–0.3							
	9:00 PM								5	–1.3							
	10:00 PM								2	–2.3							
	11:00 PM								1	–3.3							
	12:00 PM																

Summary Log – First Voyage (Cont'd 4)

Day	Hour	Temperature, °C							Analysis					CO_2, %v	O_2, %v	Feed Rate, t/hr.	Remarks
		Stack	Starboard Oven			Port Oven			THC, ppm	Time to Stand'n hr	Water Sample		RCI Sample				
			Ind.	Contr.	Pyrom.	Ind.	Contr.	Pyrom.			Start	End					
Oct. 24	1:00 AM								0	-5.3							
	2:00 AM								0	-0.3							2-minute spike in THC over 10 ppm.
	3:00 AM								3	-1.3							20-minute spike in THC over 10 ppm, 10 ppm taken for average.
	4:00 AM								6	-2.3							
	5:00 AM								4	-3.3							
	6:00 AM								3	-4.3							
	7:00 AM								3	-5.3							
	8:00 AM								3	-0.3							
	9:00 AM								3	-1.3	8	7					Average THC = 3 ppm, Water Period 7.
	10:00 AM								–								Adjusting span of 109A.
	11:00 AM								0	-0.3							
	12:00 AM								1	-1.3							
Oct. 24	1:00 PM								4	-2.3				3.7	6.0		
	2:00 PM								3	-3.3							
	3:00 PM								1	-4.3							
	4:00 PM		1150	1240	–	1170	1270	1450	0	-0.3			9				Zero gas gives HIGHER THC than test sample.
	5:00 PM								1	-1.3							THC = 10 ppm taken for average.
	6:00 PM								90	-2.3							Burner failure and cleanout, 24 min. THC > 10 ppm
	7:00 PM								7	-3.3							4-minute spike > 10 ppm.
	8:00 PM								15	-4.3							Burning gas oil here. THC value not in average.
	9:00 PM								4	-5.3							Burning waste.
	10:00 PM								3	-6.3							
	11:00 PM								5	-7.3							
	12:00 PM								3	-8.3							

Summary Log – First Voyage (Cont'd 5)

Day	Hour	Temperature, °C							Analysis					CO_2, %v	O_2, %v	Feed Rate, t/hr	Remarks
		Stack	Starboard Oven			Port Oven			THC, ppm	Time to Stand'n hr	Water Sample		RCI Sample				
			Ind.	Contr.	Pyrom.	Ind.	Contr.	Pyrom.			Start	End					
Oct. 25	1:00 AM								5	+7.5							
	2:00 AM								4	+6.5							
	3:00 AM								3	+5.5							
	4:00 AM								3	+4.5							
	5:00 AM								2	+3.5							
	6:00 AM								2	+2.5							
	7:00 AM								2	+1.5							Average THC = 4, for Water Period 8.
	8:00 AM								2	+0.5							3-minute spike over 10 ppm
	9:00 AM								–		9	8					Span found to be 16 ppm before adj. Adjusting span.
	10:00 AM		1150	1230	1450	1165	1220	1450	12	-0.5							Cleaning burner, 12 ppm is a max.
	11:00 AM								0	+3.0							
	12:00 AM								0	+2.0							
Oct. 25	1:00 PM								0	+1.0							
	2:00 PM		1150	1240	1420	1170	1220	1450									
	3:00 PM																
	4:00 PM													1.0	19.4		O_2 content indicates probe is not extracting stack gas.
	5:00 PM																
	6:00 PM		1160	1250	1450	1170	1290	1440									
Oct. 26	10:00 AM		1130	1110	1370	1110	1090	1340									Water in feed.
	2:00 PM		1150	1230	1330	1150	1230	–									Cleaning a burner in port oven.
Oct. 27	4:00 PM		1170	1190	1450	1170	1300	1450									
	8:00 PM																

Summary Log – Second Voyage

Day	Hour	Temperature, °C						Analysis				CO, ppm	O_2, %	Remarks
		Starboard Oven			Port Oven			Water		RCI				
		Indicator	Controller	Pyrometer	Indicator	Controller	Pyrometer	Start	End	Start	End			
Dec. 2 AM	1:00													
	2:00													
	3:00													
	4:00													
	5:00													
	6:00													
	7:00	850			900									Start Waste Feed
	8:00													
	9:00													
	10:00	1060		1500	1080		1570							
	11:00	1090			1110									
	12:00													
Dec. 2 PM	1:00	1130		1590	1140		1590							
	2:00													
	3:00													
	4:00	1160			1160									
	5:00													
	6:00	1180			1180									
	7:00													
	8:00													
	9:00													
	10:00	1200			1200									
	11:00													
	12:00													

Summary Log – Second Voyage (Cont'd 1)

Day	Hour	Temperature, °C						Analysis				CO, ppm	O_2, %	Remarks
		Starboard Oven			Port Oven			Water		RCI				
		Indicator	Controller	Pyrometer	Indicator	Controller	Pyrometer	Start	End	Start	End			
Dec. 3 AM	1:00											10	9.9	Starboard Probe, 9" Insertion
	2:00											25	9.8	
	3:00											25	10.1	
	4:00											25	10.4	
	5:00											25	9.6	
	6:00											30	9.9	
	7:00	1220		1600	1180		1590					25	10.2	
	8:00											20	9.2	
	9:00											20	9.8	
	10:00	1220			1200							–	–	
	11:00							1		1		70	12.0	
	12:00	1200										15	12.5	
Dec. 3 PM	1:00	1200		1520			1480				1	55	11.0	
	2:00											45	11.0	
	3:00	1190										50	11.0	
	4:00	1190								2		75	11.3	
	5:00	1190										75	10.0	
	6:00								1		2	65	10.0	
	7:00	1200	1270	1560		1270	1510					–	–	
	8:00											–	–	
	9:00	1200										25	10.5	
	10:00											35	11.3	
	11:00	1200										30	11.3	
	12:00											25	11.1	

Summary Log – Second Voyage (Cont'd 2)

Day	Hour	Temperature, °C						Analysis				CO, ppm	O_2, %	Remarks
		Starboard Oven			Port Oven			Water		RCI				
		Indicator	Controller	Pyrometer	Indicator	Controller	Pyrometer	Start	End	Start	End			
Dec. 4 AM	1:00											25	10.1	Starboard Probe, 9" Insertion
	2:00											30	10.2	
	3:00											35	9.5	
	4:00											40	9.4	
	5:00											30	10.0	
	6:00											35	9.5	
	7:00	1240	1340	1580		1360	1590					35	10.2	
	8:00											–	–	
	9:00	1220										–	–	
	10:00											–	–	Port Probe, 55" Insertion
	11:00											–	–	
	12:00	1190										–	–	
Dec. 4 PM	1:00							2		3		–	–	
	2:00	1180	1260	1550	1180	1300	1580			4	3	–	–	
	3:00	1180										–	–	
	4:00									5	4	–	–	
	5:00	1180										–	–	
	6:00							3	2	6	5	–	–	
	7:00											–	–	
	8:00								3		6	–	–	
	9:00	1200	1300	1610		1220	1510					–	–	
	10:00											170	10.5	
	11:00											170	10.0	
	12:00											180	9.5	

Summary Log – Second Voyage (Cont'd 3)

Day	Hour	Temperature, °C						Analysis				CO, ppm	O_2, %	Remarks
		Starboard Oven			Port Oven			Water		RCI				
		Indicator	Controller	Pyrometer	Indicator	Controller	Pyrometer	Start	End	Start	End			
Dec. 5 AM	1:00											190	9.5	Port Probe, 55" Insertion
	2:00											200	9.5	
	3:00	1190										200	9.5	
	4:00											200	9.2	
	5:00											200	9.2	
	6:00											210	9.5	
	7:00											180	10.0	
	8:00	1160	1180	1530		1220	1500					220	9.2	
	9:00											–	–	
	10:00	1180										–	–	
	11:00	1180										–	–	
	12:00											–	–	
Dec. 5 PM	1:00							4			–	–		
	2:00									7		35	10.5	
	3:00	1180										50	10.5	
	4:00	1180	1260	1520		1330	1570					30	10.1	
	5:00									8	7	25	9.8	
	6:00	1190										0	10.8	
	7:00											0	10.0	
	8:00								4		8	–	–	
	9:00											–	–	
	10:00	1200	1270	1570		1240	1560					–	–	
	11:00											90	10.0	
	12:00											90	10.0	

Summary Log – Second Voyage (Cont'd 4)

Day	Hour	Temperature, °C						Analysis				CO, ppm	O_2, %	Remarks
		Starboard Oven			Port Oven			Water		RCI				
		Indicator	Controller	Pyrometer	Indicator	Controller	Pyrometer	Start	End	Start	End			
Dec. 6 AM	1:00											70	9.5	Starboard Probe, 48" Insertion
	2:00											75	9.8	
	3:00											40	10.5	
	4:00											30	10.0	
	5:00											20	9.8	
	6:00											20	9.5	
	7:00	1110										170	13.0	
	8:00	1160	1220		1180							25	8.8	
	9:00											–	–	
	10:00	1140						5		9		–	–	
	11:00	1140										30	10.6	
	12:00	1150		1500			1500			10	9	35	10.0	
Dec. 6 PM	1:00											40	10.8	
	2:00										10	25	10.0	
	3:00									11		–	–	Starboard Probe, 10" Insertion
	4:00	1150										40	9.2	
	5:00									12	11	40	9.0	
	6:00											30	10.2	
	7:00								5		12	35	8.8	
	8:00	1120		1550			1520					35	10.5	
	9:00											–	–	
	10:00											–	–	
	11:00											–	–	
	12:00											25	9.2	

Summary Log – Second Voyage (Cont'd 5)

Day	Hour	Temperature, °C						Analysis				CO, ppm	O_2, %	Remarks
		Starboard Oven			Port Oven			Water		RCI				
		Indicator	Controller	Pyrometer	Indicator	Controller	Pyrometer	Start	End	Start	End			
Dec. 7 AM	1:00											35	9.0	
	2:00											30	9.6	
	3:00											30	11.0	
	4:00											35	11.0	
	5:00											30	9.5	
	6:00											35	9.5	
	7:00											55	8.6	
	8:00	1210	1180	1500		1320	1570					–	–	
	9:00											–	–	
	10:00											–	–	
	11:00	1160										–	–	
	12:00											–	–	
Dec. 7 PM	1:00	1160	1250	1540		1240	1580					–	–	
	2:00											–	–	
	3:00							6		13		–	–	Port Probe, 55" Insertion
	4:00	1160		1570			1510				13	35	12.0	
	5:00									14		50	11.0	
	6:00										14	15	10.5	
	7:00	1180	1310	1590		1340	1570			15		25	12.0	
	8:00									16	15	35	10.6	
	9:00								6		16	40	11.0	
	10:00											25	12.2	
	11:00	1200			1200							40	10.2	
	12:00											35	10.6	

Summary Log – Second Voyage (Cont'd 6)

Day	Hour	Temperature, °C						Analysis				CO, ppm	O_2, %	Remarks
		Starboard Oven			Port Oven			Water		RCI				
		Indicator	Controller	Pyrometer	Indicator	Controller	Pyrometer	Start	End	Start	End			
Dec. 8 AM	1:00											30	10.5	Port Probe, 55" Insertion
	2:00											25	10.2	
	3:00											15	10.2	
	4:00											25	10.5	
	5:00											35	11.0	
	6:00											40	9.0	
	7:00											25	10.0	
	8:00											35	10.0	
	9:00	1200		1570	1210		1530	7		17		30	11.5	
	10:00	1190			1200					18	17	40	11.8	
	11:00											–	–	
	12:00	1180		1590	1200		1550				18	25	12.0	
Dec. 8 PM	1:00									19		35	11.2	
	2:00								7		19	70	12.2	
	3:00	1160			1160			8		20		30	11.8	
	4:00										20	25	12.2	
	5:00	1180		1610	1180		1530			21		50	12.2	
	6:00										21	30	12.2	
	7:00									22		50	12.5	
	8:00	1180		1580			1520		8		22	35	12.5	
	9:00											–	–	
	10:00											45	12.5	
	11:00											50	12.7	
	12:00	1160										50	12.8	
Dec. 9 AM	1:00											40	12.8	
	2:00											30	12.3	
	3:00											40	12.5	
	4:00													Probe Failed at About 4:00 AM
	5:00													
	6:00	1160		1570			1480							Burn Completed at 7:00 AM

Stack Gas Analytical Results – Second Voyage

RCl Series Number	Concentration in Stack Gas				GBS Impingers				RCl in Gas ppm	Midget Impingers					Total RCL in Gas ppm	Fraction Feed RCL in Stack Gas
	CO ppm	O_2 %	HCl %	Cl_2 ppm	HCl, eq		RCl, μ eq			RCl, μ eq		IPA-B	Gas Volume, liters	RCl in Gas ppm		
					A	B	A	B		5NNaOH	IPA-A					
1	70	12.0	4.7	100						-	< 1.1		26	< 1.0	< 1.3	< 0.00003
2	75	11.3	5.0	30	0.275	0.01	0.62	0.77	0.26	-	< 1.1		24	< 1.0	< 1.3	< 0.00002
3	-	-	-	890						-	< 1.1		18	< 1.3	< 1.5	< 0.00003
4	-	-	-	600						-	< 1.1		18	< 1.3	< 1.5	< 0.00003
5	-	9.3	6.1	330	0.73	0.002	1.35	0.62	0.17	-	< 1.1		20	< 1.1	< 1.3	< 0.00002
6	-	9.0	6.2	< 10	0.132	-	0.31	-	0.13		< 1.1		20	< 1.1	< 1.2	< 0.00002
7	35	10.5	5.6	50						-	1.4	-	30	1.0	1.2	0.00002
8	25	9.8	5.8	70	0.821	0.019	2.9	-	0.21	10.0[a]	-	-	31	7.5	7.7	0.00013
9	-	10.0	5.7	60						-	0.8	-	20	0.9	3.6	-
10	35	10.0	5.7	170						4.0[a]	-	-	19	4.7	7.4	0.00008
11	-	10.0	5.7	60						2.5	2.0	-	25	4.0	6.7	0.00007
12	40	9.0	6.2	40	0.644	0.001	24.3	5.0	2.8		1.6	-	20	1.8	4.6	0.00007
13	-	11.5	4.9	650						2.3	-	-	20	2.2	2.6	0.00005
14	50	10.5	5.6	380						-	-	-	12	< 2.0	< 2.4	< 0.00004
15	25	12.0	4.7	380						-	-	-	12	< 2.0	< 2.4	< 0.00004
16	35	10.6	5.6	340	0.674	0.01	2.6	2.2	0.40	-	-	-	12	< 2.0	< 2.4	< 0.00004
17	30	11.5	4.9	90						-	-	-	18	< 1.3	< 4.0	< 0.00006
18	40	11.8	4.8	80						-	-	-	20	< 1.1	< 3.8	< 0.00006
19	35	11.2	5.1	30	0.554	-	20.7	13.8	3.2	2.0	37.8	2.4	18	52.5	55.7[b]	0.00109
20	30	11.8	4.8	14							1.3	-	18	1.6	2.3	0.00005
21	50	12.2	4.6	20							-	-	19	< 1.2	< 2.9	< 0.00005
22	50	12.5	4.4	40	0.606		23.1	0.7	1.7		-	-	18	< 1.3	< 3.0	< 0.00005

a) Probably due to contamination because the IPA solutions show no RCl.
b) Spiked sample.

APPENDIX B. LOSS OF ORGANOCHLORIDES IN TEFLON BAGS (1)

1. Personal communication. W. M. Anderson to technical superintendent, Deer Park manufacturing complex, Shell Chemical Co., Deer Park, Tex., Nov. 19, 1974.

Following Research Burn I, Shell collected data for the loss of organochlorides stored in Teflon bags as a basis for estimating the loss of similar compounds during sampling of air through 21.4 meters of Teflon tubing.

Loss of organochlorides was determined during storage in Teflon, FEP Type A, 0.13-millimeter thickness bags, 15.2 x 30.5 centimeters (928 square centimeters of surface area). A 1,000-cc mixture of all of the components to be tested was prepared in the Teflon bag and the bag contents were analyzed by gas chromatography using a 3 meter x 0.32 centimeter column packed with Durapak Carbowax 400/Porosil C, 100 to 120 mesh. The carrier gas flow rate was 30 cc/minute and the column temperature was programmed from 70° to 170°C at 4° C/minute.

A flame ionization detector was used. The bag contents were analyzed immediately after make-up and after storage for 8-and 24-hour periods. The decrease in area of the chromatographic peaks corresponding to the various components was calculated as percent bag loss. Bag loss data were obtained for mixtures containing the various organochloride components at concentration levels of 5 and 30 to 50 ppm(v). The bag losses (Table B-1) for most of the components tested at the 5 ppm(v) level were less than 10 percent. The loss of organochlorides was not instantaneous as would be the case for adsorption, but was time dependent, as would be expected for absorption or diffusion.

TABLE B-1

TEFLON BAG LOSS DATA FOR ORGANIC CHLORIDES (1)

Component	Initial ppm(v)	Storage time 8-Hour, % loss	24-Hour, % loss
Vinyl chloride	5	1	6
	43	2	7
Ethyl chloride	5	0	5
	46	4	7
Isopropyl chloride	6	0	4
	49	2	5
Allyl chloride	8	2	9
	54	4	9
Ethylene dichloride	4	8	19
	41	7	19
1, 2-Dichloropropane	5	4	15
	33	7	17
cis 1, 3-Dichloropropene	35	12	29
Epichlorohydrin	5	0	26
	27	2	28
trans 1, 3-Dichloropropene	5	18	42
	33	11	35
1, 2, 3-Trichloropropane	2	13	45
	11	22	47

1. FEP Type A Teflon, 0.13-millimeter thick; bag measured 15.2 x 30.5 centimeters; sample volume, 1,000 ml.

Source: Personal communication. W.M. Anderson to technical superintendent, Deer Park manufacturing complex, Shell Chemical Co., Deer Park, Tex., Nov. 19, 1974.

The Teflon tubing used for collecting air samples during incineration at sea with the Vulcanus was 21.4 meters x 0.64 centimeters outside diameter (0.48 centimeters inside diameter). The inside surface area of the tubing was therefore 3,225 square centimeters, or about 3.5 times the surface of the Teflon bags used in the Shell experiments. With a sampling rate of 5 liters/ minute, the residence time was calculated to be 4.7 seconds.

Assuming that the tubing and bag materials have similar absorption and permeation characteristics for organic chlorides, loss of these compounds in the 21.4-meter Teflon sampling tube would be insignificant considering the residence time of 4.7 seconds compared to the 8-hour storage time in Teflon bags.

APPENDIX C. EQUIPMENT, CALIBRATION PROCEDURES, AND AIRCRAFT DATA FROM AERIAL MONITORING OF RESEARCH BURN II (1)

1. Aerial Monitoring of the Plume Generated by at-Sea Incineration of Organochloride Wastes. U.S. Environmental Protection Agency, National Environmental Research Center, Las Vegas, Nev. Feb. 5, 1975

DESCRIPTION OF EQUIPMENT

Condensation Nuclei Monitor

The Environment One Corporation condensation nuclei monitor (CNM) operates on the same principle as a cloud chamber. Sample air is drawn into a humidifying chamber where it is saturated with water vapor. The moist air is then pulled into the detection chamber where it is expanded adiabatically to about 300 percent supersaturation. Any condensation nuclei in the sample air serve as embryos on which water droplets form. The number of particles per volume is estimated by the light attenuation across the chamber as detected by a photo cell monitoring a light source. The sample cycle is repeated once every second.

Chemiluminescent Analyzer

The Geomet Model 401 chemiluminescent analyzer detects HCl on the basis of the exothermic oxidation, by hypochlorous acid, of 5-amino-2, 3-dihydro-1, 4-phthalazinedione (luminol) in alkaline solution. The intensity of light generated by this reaction is linearly proportional to the HCl concentration in the incoming gas stream. The intensity is monitored by a photomultiplier detector containing two reaction cells, one for detection of HCl and the other for reference. The hypochlorous acid is formed in the inlet to the detector cell by reaction of HCl with a sodium bromate/bromide coating on an alumina tube (40 cm by 2mm, inside diameter); a similar, but uncoated, tube is employed in the reference cell to

account for any interfering gases; molecular chlorine is the only known signal contributor. At a nominal sample flow rate of 1,600 cubic centimeters per minute (cm^3/min), the response time of the chemiluminescent HCl detector is 1 second to 90 percent of full-scale deflection with a detection limit for HCl of about 0.01 ppm. However, the instrument may function on one of three operating ranges to provide nominal HCl detection capability over concentrations of 0 to 0.5 ppm (1X scale), 0 to 5 ppm (10X scale), and 0 to 50 ppm (100X scale).

Coulometer

A Dohrmann Environmental Corporation Model C-200-B coulometer, in a modified package for field use, was carried as a backup to the chemiluminescent instrument, and more importantly, as the primary standard for calibration of the HCl monitoring system. The microcoulometric detection of HCl is based on automatic titration of chloride ion as precipitated silver chloride. The continuous monitoring instrument consists of a microcoulometric titration cell, electronic control console, integrating recorder, air pump, and flow meter.

The heart of the system is the titration cell, which contains acetic acid electrolyte and four electrodes: a sensing pair (silver vs. silver acetate) and a generating pair (silver vs. platinum). The concentration of silver ions in the cell is adjusted to 10^{-7} Molar by applying a bias potential of 250 millivolts across the sensing

electrode pair. Any change in silver concentration (by precipitation of silver chloride) is detected by the sensing electrodes as a potential difference which leads through the coulometer amplifier to the generation of silver titrant at the generator electrode. The current required is recorded via a precision series resistance on a potentiometric recorder. Integration of the area under the peak of the recorded current yields the quantity of electricity, in coulombs, required for the reaction. Because Faraday's laws are obeyed and the reaction is stoichiometric, the microcoulometer is a primary standard for chloride, and the quantity of chloride in the sample is calculated from:

$$w = \frac{35.453}{96,501} \times 10^6 \frac{A}{R} = 367.4 \frac{A}{R} \qquad (1)$$

where w = weight of chloride, nanograms
A = coulogram peak area, millivolt-seconds
R = series resistance, ohms

The detection limit for batch samples injected by syringe is about 3 nanograms.

In the continuous sampling mode, the response and dynamic range of the microcoulometer can be varied by adjustment of the sample flow rate and/or instrument range (series resistance). Again, since Faraday's laws apply, the steady state concentration of HCl is calculated from:

$$Y = 13,927 \frac{E}{fR} \cdot \frac{T}{273} \times \frac{760}{P} \qquad (2)$$

where Y = HCl concentration, ppm
E = steady state response, millivolts
f = sample flow rate, cm^3/min.
R = range, resistance, ohms
T = sample temperature, ° K
P = ambient pressure, mm Hg

The smallest steady state deflection of the voltage recorder which can be detected accurately in about 0.03 millivolts. Substituting this value for E into equation (2), setting R to 50 ohms, and f to 100 cm^3/min, the steady state detection limit of the coulometer is found to be about 0.1 ppm HCl. The response time required for the instrument to indicate 90 percent of a change in sample concentration is approximately 40 seconds.

CALIBRATION PROCEDURES

The chemiluminescent analyzer and the microcoulometer were connected to the polypropylene sample line by means of glass tees and short lengths of polypropylene tubing. This manifold arrangement ensured that the two instruments were sampling from the same air stream. During calibration, the calibration gas was introduced through the inlet of the sampling probe at the front of the aircraft and pumped through with a small diaphragm pump at a rate of 2 liters per minute. During sampling missions, the pump was removed from the line because the ram air pressure of 10 mm

Hg above ambient provided an excess of sample air for both instruments.

The source of calibration gas was a cylinder containing a nominal 88 ppm of HCl in balance nitrogen gas: this was diluted with ambient air in a glass mixing chamber. Mixing was enhanced with a magnetic stirrer. A micrometer needle valve controlled the flow rate from the HCl cylinder and provided concentrations ranging from 0.14 to 16 ppm as determined by integrated coulometric data. The coulometer itself was calibrated by injecting 5 microliters of a standard aqueous solution of NaCl (26 nanograms/ microliter) prepared in the laboratory at Brooks Air Force Base. The daily average chloride recovery, utilizing at least three injections per day, resulted in the values, 99.2 $\pm$ 1.1 percent, 97.4 $\pm$ 4.3 percent, and 102.7 $\pm$ 4.7 percent for the three sampling days.

Calibration gas was introduced into the inlet probe for two reasons: to provide an *in situ* calibration and to condition the lines with HCl in order to minimize subsequent sample losses. The system was calibrated before and after each flight with the exception of the preflight calibration on the second day. In general, the HCl analyzer did not behave well over this time period. The sensitivity increased from about 0.02 ppm/volt on the first day to about 0.12 ppm/volt by the end of the third day.

AIRCRAFT DATA

Aircraft data for three missions are presented in Tables

C-1 through C-6. Data for crosswind passes through the Vulcanus plume are listed in Tables C-1, -3, and -5, whereas data for axial passes through the length of the plume are listed in Tables C-2, -4, and -6. For crosswind passes, each line of data represents one pass. In Table C-6, more than one line was needed to represent some of the axial passes. Here, each line represents a maximum in a succession of maximum and minimum concentrations encountered by the aircraft. These maxima are evidence of looping, which was also visible following injection of ammonia at the stack.

In tables of both crosswind and axial data, values listed in the "Distance" column are distances in meters downwind from the ship (as estimated by the aircraft pilot) where corresponding maximum concentrations of condensation nuclei (CN) and HCl were detected. The width of the plume was calculated by measuring the time base of the CNM recorder peaks resulting from crosswind passes and multiplying by the aircraft ground speed. The "1/2-Width" was calculated graphically by measuring the width of the same peaks at 1/2 the maximum peak height in order to provide an indication of the concentration gradient across the plume.

Using the same graphical methods outlined above, "intercept lengths" were calculated for axial passes. These values represent the distance in meters that the aircraft was recording positive CNM readings at the stated altitude. Passes 3, 4, and 5 of Table C-6 list three or more intercept lengths for each pass. This can

TABLE C-1

AERIAL MONITORING OF RESEARCH BURN II,

CROSSWIND PASSES ON FIRST MISSION (DEC. 2, 1974)

Time of day	Position: Downwind distance from ship, meters	Position: Altitude, meters	Max. conc.: CN[1], $10^3/cm^3$	Max. conc.: HCl, ppm	Plume: Width, meters	Plume: 1/2-Width, meters
1326	400	240	2	BKG[2]	660	450
1327.5	400	180	47	0.2[3]	1,100	500
1329	400	150	36	0.3[3]	950	530
1309	400	150	330	2[4]	1,800	480
1330.5	400	120	64	2[3]	980	580
1332	400	90	6	BKG[2]	950	610
1319	800	200	40	0.1[3]	1,100	530
1320	800	90	34	0.1	1,100	610
1318	2,400	300	25	0.07	900	530
1317	2,400	240	9	0.08	900	530
1319.5	2,400	180	19	0.1[3]	1,000	610
1312	3,200	200	3	-[5]	1,100	740
1314	3,200	120	12	-[5]	1,100	660
1314	3,200	90	4	-[5]	740	500

1. Condensation nuclei.
2. HCl base line averaged 0.11 ppm during first mission.
3. Extrapolated to off-scale value.
4. Off-scale; no extrapolation attempted.
5. Recorder disconnected.

Source: Aerial Monitoring of the Plume Generated by the at-Sea Incineration of Organochloride Wastes. U.S. Environmental Protection Agency, National Environmental Research Center, Las Vegas, Nev. Feb. 5, 1975

TABLE C-2

AERIAL MONITORING OF RESEARCH BURN II,

AXIAL PASSES ON FIRST MISSION (DEC. 2, 1974)

Time of day	Position: Location of max. conc., downwind distance from ship, meters	Position: Altitude, meters	Max. conc.: CN[1], $10^3/cm^3$	Max. conc.: HCl, ppm	Plume intercept length, meters
1352	0-400	430	5	-[2]	1,300
1350	0-400	370	44	-[2]	1,100
1348	0-400	300	70	-[2]	1,300
1346	0-400	240	110	2[3]	1,300
1344	0-400	180	140	2[3]	1,800
1342	0-400	120	58	0.8	2,700
1340	0-400	110	164	3[3]	6,900
1335	0-400	120	90	2[3]	3,400

1. Condensation nuclei.
2. Scale set too high to register.
3. Extrapolated to off-scale value.

Source: Aerial Monitoring of the Plume Generated by the at-Sea Incineration of Organochloride Wastes. U.S. Environmental Protection Agency, National Environmental Research Center, Las Vegas, Nev. Feb. 5, 1975.

TABLE C-3

AERIAL MONITORING OF RESEARCH BURN II, CROSSWIND PASSES ON SECOND MISSION (DEC. 3, 1974)

Time of day	Position: Downwind distance from ship, meters	Position: Altitude, meters	Max. conc. CN[1], $10^3/cm^3$	Max. conc. HCl[2], ppm	Plume: Width, meters	Plume: 1/2-Width, meters	Temp. °C
1148	400	340	-[3]	BKG[4]	-[3]	-[3]	
1149.5	400	300	-[3]	BKG[4]	-[3]	-[3]	
1151	400	240	30	0.4[5]	-[3]	530	14
1152.5	400	180	5	0.07	1,400	1,000	
1114	800	490	BKG[6]	BKG[4]			
1115.5	800	430	68	0.4	1,100	610	12
1117.5	800	370	56	0.2/0.1	1,200	660	13
1119	800	300	31	0.3	1,600	580	13
1120.5	800	240	50	0.4/0.1	1,200	610	14
1122.5	800	180	20	0.3/0.1	900	610	15
1124	800	120	40	0.4/0.1	1,100	610	15.5
1125.5	800	60	42	0.4	-[3]	1,100	
1110	1,600	300	1	BKG[4]	1,000	-[7]	
1102.3	1,600	240	36	0.02	1,100	660	
1104	1,600	180	27	BKG[4]	980	500	
1106	1,600	120	1	BKG[4]	1,200	-[7]	
1107	1,600	60	2	BKG[4]	740	500	
1201	2,400	240	21	BKG[4]	1,400	740	

1. Condensation nuclei.
2. Second value, where given, derived from coulometer data.
3. Monitor noisy; no usable data.
4. HCl baseline averaged 0.17 ppm during second mission.
5. Extrapolated to off-scale value.
6. Signifies baseline response, less than 10 /cm .
7. Monitor signal too small to estimate width at 1/2 maximum value.

Source: Aerial Monitoring of the Plume Generated by the at-Sea Incineration of Organochloride Wastes. U.S. Environmental Protection Agency, National Environmental Research Center, Las Vegas, Nev. Feb. 5, 1975

TABLE C-4

AERIAL MONITORING OF RESEARCH BURN II,

AXIAL PASSES ON SECOND MISSION (DEC. 3, 1974)

Time of day	Position: Location of max. conc., downwind distance from ship, meters	Altitude, meters	Max. conc.: CN[1], $10^3/cm^3$	Max. conc.: HCl[2], ppm	Plume intercept length, meters
1143	0-400	430	19	0.1/0.1	4,500
1156	0-400	240	45	0.4[3]	2,100
1159	0-400	240	64	0.8[3]/1.5	1,800
1203.5	0-400	210	80	0.3	2,700
1208	0-400	210	77	1[3]/1.6	2,100
1213	0-400	210	80	0.9/1.8	1,000
1214	0-400	210	68	0.8/1.3	1,000
1216	0-400	210	80	0.8/1.2	1,500

1. Condensation nuclei.
2. Second value, where given, derived from coulometer data.
3. Extrapolated to off-scale value.

Source: Aerial Monitoring of the Plume Generated by the at-Sea Incineration of Organochloride Wastes. U.S. Environmental Protection Agency, National Environmental Research Center, Las Vegas, Nev. Feb. 5, 1975.

TABLE C-5

AERIAL MONITORING OF RESEARCH BURN II, CROSSWIND PASSES ON THIRD MISSION (DEC. 4, 1974)

Time of day	Position: Downwind distance from ship, meters	Position: Altitude, meters	Max. conc.: CN[1], $10^3/cm^3$	Max. conc.: HCl, ppm	Plume: Width, meters	Plume: 1/2-Width, meters	Temp., °C
1100.5	800	370	BKG[2]	BKG[3]			14
1103	800	340	BKG[2]	BKG[3]			
1158.8	800	340	32	0.1			
1046	800	340	BKG[2]	BKG[3]			
1048	800	300	3	BKG[3]	270	510	
1056.5	800	300	BKG[2]	BKG[3]			15
1049.5	800	240	100	0.8/0.1[4]	1,200	470	15
1151	800	180	75	0.2	1,000	510	16
1053	800	120	51	0.2	950	510	16
1054	800	60	BKG[2]	0.08			
1045	1,600	340	BKG[2]	BKG[3]			
1101.5	2,400	370	1	BKG[3]	-[5]	-[5]	14
1059.5	2,400	340	10	BKG[3]	950	510	15
1057.5	2,400	300	22	BKG[3]	1,100	560	15
1047	2,400	300	35	BKG[3]	1,800	510	
1048.5	2,400	240	19	BKG[3]	1,100	560	15
1050	2,400	180	24	BKG[3]	900	430	16
1052	2,400	120	74	BKG[3]	1,100	470	
1054	2,400	60	1	0.1[6]	950	-[5]	18

1. Condensation nuclei.
2. Signifies baseline response, less than $1,000/cm^3$.
3. HCl baseline averaged 0.25 ppm during third mission.
4. Second value derived from coulometer data.
5. Monitor signal too low to estimate width of peak.
6. Estimate from microcoulometer data.

Source: Aerial Monitoring of the Plume Generated by the at-Sea Incineration of Organochloride Wastes. U.S. Environmental Protection Agency, National Environmental Research Center, Las Vegas, Nev. Feb. 5, 1975

TABLE C-6

AERIAL MONITORING OF RESEARCH BURN II,

AXIAL PASSES ON THIRD MISSION (DEC. 4, 1974)

Pass	Time of day	Position: Location of max. conc., downwind distance from ship, meters	Altitude, meters	Max. conc.: CN[1], $10^3/cm^3$	Max. conc.: HCl[2], ppm	Plume intercept length, meters	Remarks
1	1126.7	0	910	BKG[3]	BKG[4]		Above visible plume
	1128	6,100	910	BKG[3]	BKG[4]		End of visible plume
2	1130.5	11,000	850	0	BKG[4]		Entered visible NH_4Cl
	1130.8	9,500	850	4	BKG[4]		In NH_4Cl
	1131	8,400	850	BKG[3]	BKG[4]		Above little white cloud
3	1122.8	5,500	820	9	BKG	1,100	In NH_4Cl
	1123.2	3,900	820	20	BKG	1,300	In NH_4Cl
	1123.5	2,600	820	8	BKG	1,000	In NH_4Cl
4	1118	0	790	BKG[3]	BKG[4]		
	1118.6	2,700	790	1	BKG[4]	770	In little white cloud
	1119.4	6,300	790	7	BKG[4]	950	In little white cloud
	1120	9,300	790	66	BKG[4]	1,800	Out of visible plume
	1120.8	13,000	790	1	BKG[4]	2,200	Out of visible plume
5	1107	2,300	240	77	0.5	3,200	Bag #1
	1107.4	3,500	240	45	0.5/0.8		
	1107.7	4,300	240	22	0.5		
6	1105	400	240	100	0.3/0.6		
7	1109	400	240	37	0.4/0.5		

TABLE C-6 (cont.)

Pass	Time of day	Position: Location of max. conc., distance from ship, meters	Position: Altitude, meters	Max. conc.: CN[1], $10^3/cm^3$	Max. conc.: HCl[2], ppm	Plume intercept length, meters	Remarks
8	1136	400	240	69	0.6		Bag #2
9	1138	400	240	100	1[5]/3		Bag #3
10	1141	400	150	170	1[5]/3		Close-up photograph

1. Condensation nuclei.
2. Second value, where given, derived from coulometer data.
3. Signifies baseline response, less than $1,000/cm^3$.
4. HCl baseline averaged 0.25 ppm during third mission
5. Extrapolated to off-scale value.

Source: Aerial Monitoring of the Plume Generated by the at-Sea Incineration of Organochloride Wastes. U.S. Environmental Protection Agency, National Environmental Research Center, Las Vegas, Nev. Feb. 5, 1975.

be visualized by drawing a level path through the convolutions of the plume such that the path enters and leaves portions of the looping plume several times.

Although the data are presented in metric units, altitudes were measured by the aircraft pressure altimeter in feet, and distances downwind from the ship were estimated by the pilot in miles. The aircraft ground speed was calculated from the air speed indicator readings in knots and adjusted for average wind speeds, also reported in knots. As a test of the pilot's judgment for distance, range finder readings were taken at three different passes claimed by the pilot to be 1 mile from the ship. The range finder values were 1.10, 1.15, and 1.05 miles, indicating that the pilot's estimates were adequate for the purposes of this study.

The results of the Fourier Transform Infrared Spectrometry analyses are presented in Table C-7. In general, these results indicate that the air samples were low in pollutant concentration. In urban morning air, the concentrations of carbon monoxide and paraffinic hydrocarbons generally run higher than the highest measured from any of the bags. The only unusual aspect of the air in any of the bags was the 10 ppm benzene measured in bag #4 of December 2.

Several other compounds could have been measured, but were not detected in any of the samples. They are listed here, with their estimated lower limits of detectable concentrations: hydrochloric acid, 0.5 ppm; acetylene, 0.1 ppm; ethylene, 0.2 ppm; carbon tetrachloride, 0.05 ppm; phosgene, 0.1 ppm.

TABLE C-7

AERIAL MONITORING OF RESEARCH BURN II,

POLLUTANTS IN GRAB BAG SAMPLES (ppm)[1]

Bag no. and date	Carbon dioxide	Carbon monoxide	Methane	Non-methane paraffin carbon atoms	Benzene	Freon-11 ($CFCl_3$)
#1, 12/2/74	340 ± 10	1.9 ± 0.3	1.5 ± 0.2	0.5 ± 0.2	0.0	0.00
#2, 12/2/74	370 ± 20	2.9 ± 0.4	1.5 ± 0.2	1.0 ± 0.4	0.0	0.09
#3, 12/2/74	380 ± 20	3.4 ± 0.4	1.7 ± 0.3	1.0 ± 0.4	0.0	0.12
#4, 12/2/74	370 ± 20	2.8 ± 0.4	1.5 ± 0.2	1.0 ± 0.4	10.0 ± 2.0	0.07
#1, 12/3/74	330 ± 10	0.2 ± 0.2	1.5 ± 0.2	0.2 ± 0.2	0.0	0.00
#2, 12/3/74	330 ± 10	0.3 ± 0.1	1.5 ± 0.2	0.2 ± 0.2	0.0	0.00
#1, 12/4/74	370 ± 20	2.6 ± 0.3	1.5 ± 0.2	0.4 ± 0.2	0.0	0.00
#2, 12/4/74	330 ± 10	0.3 ± 0.1	1.5 ± 0.2	0.2 ± 0.2	0.0	0.00
#3, 12/4/74	Bag deflated during shipment					

1. Analysis by Fourier Transform Infrared Spectrometry performed by U.S. Environmental Protection Agency, National Environmental Research Center, Research Triangle Park, N.C.

Source: Aerial Monitoring of the Plume Generated by the at-Sea Incineration of Organochloride Wastes. U.S. Environmental Protection Agency, National Environmental Research Center, Las Vegas, Nev. Feb. 5, 1975.

APPENDIX D. EQUIPMENT AND PROCEDURES FROM SEA-LEVEL MONITORING OF EFFECTS ON MARINE ENVIRONMENT

The effects of incineration on the marine environment were monitored during the first research burn by both the R/V Oregon II(1) and the M/V Orca(2); on the second research burn, only the Orca was on the scene.(3)

R/V OREGON II

Ship Movements

On each of the Oregon's two cruises, the initial effort was to find the plume and to attempt to identify its limits and points of highest concentrataion. This required a systematic search by Oregon with very precise navigation at all times during the search pattern. To meet these requirements, the Oregon ran a search pattern in the quadrant downwind from the Vulcanus while it was drifting; a running plot was maintained of the Oregon's position relative to the Vulcanus and HCl readings in the air at each position.

Simultaneous readings of HCl concentration, Oregon's true course and pit log speed, and the radar range and bearing of the Vulcanus

1. Preliminary Technical Report on Incineration of Organochlorine Wastes in the Gulf of Mexico. U.S. Environmental Protection Agency, Oil and Special Materials Control Division, Washington, D.C. Nov. 13, 1974.

2. A Field Monitoring Study of the Effects of Organic Chloride Waste Incineration on the Marine Environment in the Northern Gulf of Mexico. Prepared by TerEco Corp., College Station, Tex., under contract to Shell Chemical Co., Houston, Tex. Oct. 30, 1974.

3. Sea-Level Monitoring of the Incineration of Organic Chloride Waste by M/T Vulcanus in the Northern Gulf of Mexico, Shell Waste Burn No. 2. Prepared by TerEco Corp., College Station, Tex., under Contract No. 68-01-2829 with U.S. Environmental Protection Agency, Washington, D.C. Jan. 10, 1975.

from the Oregon were recorded every 5 minutes while the Oregon was sweeping arcs at a constant distance from Vulcanus. The Oregon's speed was adjusted so that no more than a 12-degree change in relative bearing would occur in any 5-minute interval. (This was to avoid running the plume too rapidly to obtain good data on its dimensions.) Higher speeds than optimum were maintained on some arcs in the second cruise, however, because the sea conditions prevailing did not permit lower speeds.

With the Vulcanus underway, the Oregon did not have enough speed to run such a comprehensive systematic search pattern. The Oregon therefore paralleled the Vulcanus's course at a constant range, moving forward of the plume and then dropping back to pick it up again.

Wind speed and direction were obtained on the Oregon with a hand-held anemometer operated from the flying bridge; the data were correlated with vessel speed and course at the time of reading, and the true wind speed and direction calculated from these data at half-hour intervals during plume runs and at longer intervals during other operations. Similar observations were reported from Vulcanus at half-hour intervals.

Relative humidity was obtained by a sling psychrometer.

Water Movement

Data on water circulation and dispersion consisted of one experiment using a dye (Rhodamine WT) and the log of the movement of the Vulcanus

while drifting. Pilot charts for the area indicated a general southerly drift of about 0.5 knots throughout the dump site, but with a westerly component in the northern part of the site and an easterly component in the southern part.

The drift of the Vulcanus during the first cruise, when it was in the northeastern part of the dump site, suggested a strong surface current (about 2.4 knots) to the East or Southeast. In this part of the dump site, the surface water temperature decreased sharply (2° C.). Position data provided by the Vulcanus during this period suggested a current of this magnitude along the entire eastern side of the dump site, since dead reckoning positions were in error in the magnitude and direction attributable to the effects of such a current.

During the second Oregon cruise, the Vulcanus, while drifting, moved in a westerly direction at rates of 0.7 and 1.3 knots in the last day of the burn. Since the drift was with the wind, which was about 20 knots, the drift rate of the surface waters could not be estimated separately from that of the Vulcanus.

The experiment with the dye as a tracer was used to determine the diffusion processes in the surface layer. The diffusion rate at a wind speed of 10 knots was calculated to be about 7,000 times per hour--that is, any concentration of an inert constituent entering the ocean from the plume would be reduced by a factor of 7,000 within an hour after it entered the ocean. This implied that any direct impacts on the ocean of minor constituents of the stack emissions would be undetectable in a very short time.

Sampling Procedures

Water samples were taken below the plume itself and in a larger area exposed to plume constituents. On the first cruise, an area of probable contact was identified by a dye marker dropped overboard from the Oregon as it passed through an area of peak concentration. Samples were then taken in the area identified by the dye, but not in the dye patch itself. On the second cruise, the plume was much more stable, and it was possible to hold the Oregon in the plume during sampling.

To identify any long range impact, a sampling grid of 16 stations was laid out over the area that the plume specifically covered during the last 24 hours of the burn. The grid was also downwind and down-current of the dump site and therefore offered the greatest potential for picking up cumulative effects. Points selected were 1,852 meters (1 n. mi.) apart in the area, chosen on the basis of drift estimates and other movements of the Vulcanus during the last 24 hours; the grid size was selected to assure that any impacts during this period would be found at stations within the grid.

All samples were surface samples taken by a bucket lowered over the side by a rope. A metal bucket was used for organic chloride samples, a plastic bucket for all other samples. On the first cruise, all sampling was from the bow to avoid any possibility of disturbing the surface prior to sampling; on the second cruise, sampling was

from the afterdeck because the state of the sea made sampling from the bow unsafe.

Analytical Procedures

pH

Samples for pH were run immediately on at least two standard laboratory instruments--Fisher, Leeds and Northrup, or Beckman. The meters were standardized with buffers at pH 4.0, 7.0, and 10.0 prior to each use; electrodes were stored in sea water to avoid electrode shock.

Chlorinity

On the first cruise, chlorides were titrated on board, but the results proved unsatisfactory. Samples from the second cruise were stored in dry bottles previously rinsed with distilled water, then analyzed onshore by the Raytheon Company by the standard Mohr titration for chloride in sea water. The company uses the method routinely for primary calibration of its instruments.

Organochlorides

Organochloride samples were stored in acetone-washed bottles for analysis onshore. Samples of the upper 1 to 10 centimeters of the surface were preserved with petroleum ether for detection of any potential impact on the surface microbiological communities. Total organochlorides were determined in EPA laboratories by gas chromatographic-mass spectrographic techniques. Sensitivities for typical compounds are:

Vinyl chloride	0.5 ppb
Methylene chloride	0.4 ppb
Chloroform	0.1 ppb
Carbon tetrachloride	0.3 ppb
1,1,2-Trichloroethylene	0.1 ppb
1,1,2,2-Tetrachloroethylene	0.2 ppb

Trace Metals

Samples for trace metals analysis were stored in dry glass or plastic containers previously rinsed with distilled water. Samples were analyzed in EPA laboratories by atomic absorbtion techniques after extraction with methyl isobutyl ketone.

Phytoplankton

Phytoplankton samples were preserved with formalin or Lugol's solution, then counted in EPA laboratories by direct microscopic examination.

Chlorophyll-a

Chlorophyll-a samples were filtered through 0.45-micron millipore filter and dried for analysis by standard procedures at American University.

ATP

Levels of adenosine triphosphate (ATP) were determined onboard immediately by a research technique involving extraction of ATP from cell material and conversion of the ATP to an optically active compound. The NASA research team onboard the Oregon had used the technique previously in studying water pollution.

M/V ORCA

Research Burn I(2)

In Research Burn I, the Orca used three types of sampling patterns:

+ Transect--carried out downwind from the Vulcanus, running transversely across the axis of the atmospheric plume.
+ Axial--taken along the axis of the atmospheric plume, beginning 7,400 meters (4 n.mi.) directly downwind from the Vulcanus and proceeding into the wind, with the last sample being taken at 740 meters (0.4 n.mi.) from the Vulcanus.
+ Axial control--conducted parallel to the axis of the atmospheric plume and well outside the area affected by incineration.

Samples for pH, organic chloride, and zooplankton were collected while the Orca was underway at approximately 5 knots; phytoplankton samples were collected while the Orca was adrift. All sampling was while the Vulcanus was incinerating. The axial control runs consisted of a 1,850-meter (1-n.mi.) neuston tow, with a phytoplankton sample taken at the beginning of the tow, and organic chloride and pH samples at the beginning, middle, and end of the tow.

Samples for pH and organic chloride determinations were collected from surface waters in a 2-gallon porcelain bucket. For pH analysis,

the receiving 8-ounce bottles were thoroughly rinsed and filled to three-fourths capacity. Samples were analyzed aboard the Orca with an Orion Research Ionalyzer, Model 801/digital pH meter. The instrument was standardized with two buffers: pH 4.01 and 9.18. Samples were analyzed within 2 hours of collection. For organic chloride analysis, the receiving 32-ounce bottles were thoroughly rinsed and filled to capacity. The samples were analyzed by Shell Development's Bellaire Research Center.

Since any deleterious effects of the incineration process on marine organisms would be greatest in the surface waters, a special collecting device was used to collect zooplankton. With this sampling device, the neuston net, only the upper 1 meter of the water column was sampled. The neuston net consists of a nylon mesh bag attached to a rectangular aluminum frame. The net has a mouth opening of 1x2 meters, a length of 10 meters, and a mesh aperture of 1 millimeter. A sampling depth of 0.5 meters was sought; however, due to consistently high waves, the sampling depth varied from 0 to 1 meters. In all cases, the net was towed for 1,850 meters; thus the amount of surface area sampled was 3,700 square meters.

The neuston net was used only on Axial and Axial Control runs. On Axial runs the net was towed from a distance of 4,810 meters from the Vulcanus to 2,960 meters from the Vulcanus. During Axial Control runs, the net was towed the entire 1,850-meter distance of the run.

At the end of each tow, the zooplankton sample was placed into a 1-gallon jar. Within 10 minutes the sample was photographed with a movie camera. After the photography, the sample was grossly examined, and the approximate number and variety of living organisms were recorded. After 2 to 3 hours, the viability of the organisms was again checked visually. The sample was then preserved with buffered formaldehyde and returned to TerEco's land-based laboratory for an enumeration of the organisms.

Phytoplankton samples were collected from a depth of 1 meter with a Nisken bottle at the end of each Axial neuston tow and at the beginning of each Axial Control neuston tow.

Research Burn II(3)

Sampling Procedures

In four test runs in the second research burn, the Orca collected samples of surface water for determination of pH, chlorinity, alkalinity, organochlorides, copper, and zinc. The samples were collected by a 2-gallon polyethylene bucket slung from a nylon rope while the Orca was underway.

Zooplankton samples were collected with the neuston net weighted to ride just below the surface in order to avoid collecting large amounts of tar balls, plastics, and other extraneous materials. The net was towed at 3 knots. Samples, drained and transferred with some fluid to a glass jar, were frozen.

Phytoplankton samples were collected with a Hansen type net with

a mouth opening of 20 cm, a length of 1.5 meters, and a 35-micron mesh. It was towed just under the surface at 3 knots. Samples were stored in glass jars and frozen.

Analytical Procedures

The only analysis conducted aboard Orca was pH. Determinations were generally made within 8 minutes after collection. A Corning Model 112 digital pH meter standardized at pH 9.180 was utilized. Sample and buffer temperatures were always within 1° C at 23.7° ± 0.5° C. During the analyses conducted for Test Run I and Control Run I, the line voltage variation caused the meter to fluctuate ± 0.01 pH unit. During the remainder of the pH determinations, the instrument was connected to a 12-volt lead-acid battery via a 110-volt transistorized inverter. Fluctuations of the instrument were reduced to a maximum of ± 0.003 pH units.

Water samples were placed in thoroughly rinsed 8-ounce bottles, tightly capped, and returned to the shore laboratory for chlorinity analysis by the Mohr titration method. Samples were compared with Copenhagen standard sea water to obtain chlorinity values. A standard working curve was generated by using dilutions of Copenhagen standard sea water (19.3755 parts per thousand Cl). The precision of this method is ± 0.03 parts per thousand.

Water samples collected on Test Run II and Control Run II were analyzed for total alkalinity. A potentiometric titration method using mathematical determination of end points was utilized.

Organic chloride samples were placed in acetone-washed quart glass bottles and sealed with Teflon-lined caps.

Water samples collected for copper and zinc analyses were placed in quart polyethylene bottles to which 2 ml of redistilled concentrated nitric acid had been added as a preservative. These samples were analyzed by atomic absorption in the laboratories of Shell Development Company.

The frozen zooplankton and phytoplankton samples were also analyzed for organochlorides and metals by Shell. (4) The zooplankton samples were thawed and separated by decantation and filtration into solid and liquid phases. The liquid phase was clarified by ultracentrifugation and analyzed for zinc and copper by atomic absorption and organochlorides in same manner as sea water samples. Depending on the amount of liquid available for the organochloride analysis the limit of detection was 25 to 65 ppb.

Portions of the solid zooplankton samples were solubilized by oxidative digestion and analyzed by atomic absorption for copper and zinc. A second portion (50 grams) of the solid was added to a blender with 200 ml of 90/10 hexane-ethyl ether. The mixture was vigorously blended for 10 minutes, the solvent decanted and allowed to settle, and a portion specifically analyzed for organochlorides using the microcoulometric technique. Since there was

4. Personal communication. W. R. Harp. Jr., to B. N. Bastian, Shell Chemical Co., Houston, Tex., Dec. 19, 1974.

no concentration of the sample on the resin column with this technique, the limit of detection was 3 ppm.

In the case of phytoplankton analyses, the paucity of organisms in the sea water (and thus the samples) argued against separate analyses of water and organisms. The organochloride detection limit for the whole sample was estimated to be 3 ppm.

APPENDIX E.

ADDITIONAL DATA FROM OREGON II MONITORING OF MARINE ENVIRONMENT (1)

1. Preliminary Technical Report on Incineration of Organochlorine Wastes in the Gulf of Mexico. U.S. Environmental Protection Agency, Oil and Special Materials Control Division, Washington, D.C., Nov. 13, 1974.

TABLE E-1

SAMPLING STATIONS, FIRST CRUISE OF OREGON II

Station No.	Control Station I-1	Control Station I-2	Station I-3
Date	10/18/74	10/18/74	10/20/74
Time	1800	1845	1815
Location	27 01.0'N *	27 01.0'N	26 44'N
	93 43.5'W *	93 43.5' W	93 36'W
Water Depth	app. 480 fm	app. 480 fm	app. 480 fm
Air Temperature	-----	-----	-----
Wind Direction	NE	NE	ENE
Wind Velocity	8 kts	8 kts	10 kts
Relative Humidity	-----	-----	-----
Cloud Cover	-----	-----	-----
Sea State	light seas	light seas	light seas
Precipitation	none	none	none
Slicks	none	none	none
Water Temperature	-----	-----	-----
Chlorinity(‰)	20.09	20.09	20.09
pH	8.3	8.38	8.35
Secchi	>20m.	-----	-----
Organohalogens (ppb)	< 05	< 05	< 05
Metals (ppb) See note			
Arsenic	<1	<1	5.5
Cadmium	<0.03	<0.03	0.53
Chromium	<0.3	<0.3	<0.3
Copper	16.53	19.40	32.12
Lead	<0.30	69.00	<0.30
Mercury	<0.010	0.106	0.037
Nickel	1.87	1.87	1.25
Zinc	0.46	<0.03	<0.03
HCl	-----	-----	450 ppb
O II Position wrt VUL	1 n. mi. astern	1 n. mi. ahead	1.5 n. mi. west

Note: Preliminary analytical data not rounded off to significant figures.

TABLE E-2

SAMPLING STATIONS, SECOND CRUISE OF OREGON II

Station No.	Control Station 1	Station 2	Station 3	Station 4	Station 5	Station 6
Date	10/27/74	10/27/74	10/27-10/28/74	10/28/74	10/28/74	10/28/74
Time	0925-0955	2330-2340	2355-0015	0105-0115	0300	0320
Location	27° 54.6'N 91° 33.1'W	26° 38'N 93° 41'W 0.75mi fr. VUL.	26° 38'N 93° 41'W 0.5 mi fr. VUL	26° 38'N, 93° 41'W 0.2 mi fr. VUL	26° 39.5'N 93° 37.5'N 5.5 mi E. fr. VUL	26° 40'N 93° 37.5'W 7.5 mi E. fr. VUL
Water Depth	143 fm	app. 800 fm	app. 800 fm	app. 800 fm	app. 800 fm	app. 800 fm
Air Temperature	79° F	78° F	77° F	77° F	77° F	77° F
Wind Direction	90° T	150° T	157° T	140° T	160° T	160° T
Wind Velocity	13 kts	19 kts	22 kts.	20 kts	18 kts	18 kts
Relative Humidity	58%	73%	79%	77%	75%	75%
Cloud Cover	1/10	2/10	2/10	7/10	2/10	2/10
Sea State	1-2 ft. seas	3-5 ft. seas	4-5 ft. seas	4-5 ft. seas	5 ft. seas	5 ft. seas
Precipitation	none	none	none	rain shower	none	none
Slicks	none	none	none	none	none	none
Water Temperature	25.2 C Bucket	25 C	app. 26 C	app. 26° C	app. 26° C	app. 26° C
Chlorinity(‰)	20.37	20.48	20.26	20.09	19.98	19.87
pH	8.22	8.05	8.2	8.2	8.2	8.2
Secchi	>15m	-----	-----	-----	-----	-----
Organohalogens (ppb)	-----	<0.5	<0.5	<0.5	<0.5	<0.5
Metals (ppb)--See note						
Arsenic	-----	<1	2.5	3.7	<1	<1
Cadmium	-----	<0.02	<0.02	5.33	0.36	0.21
Chromium	-----	<0.4	<0.4	<0.4	<0.4	<0.4
Copper	-----	1.85	3.61	1.60	3.13	2.28
Lead	-----	0.66	<0.20	2.66	1.50	1.00
Mercury	-----	0.019	0.015	0.037	0.025	0.087
Nickel	-----	2.33	1.83	2.83	8.33	2.00
Zinc	----	1.70	3.16	5.88	6.33	7.70
Chlorophyll a	-----	0.42	-----	0.08	0.09	0.11
phytoplankton	540 (cells/l)	1140 (cells/l)	980 (cells/l)	870 (cells/l)	-----	-----
ATP bucket sample (ugATP/l. seawater)	0.014	0.056	0.046	0.067	0.016	0.032
HCl (ppm)	0	2.5 ppm	7 ppm	4.5 ppm	-----	-----
O II Position wrt. VUL.	-----	149-154° T	156-192° T	175° T	due east	due east
Trawl	-----	-----	-----	-----	-----	one jelly fish

Note: Preliminary analytical data not rounded off to significant figures.

TABLE E-2 (CONT'D)

SAMPLING STATIONS, SECOND CRUISE OF OREGON II

Station No.	Station II-7	Station II-8	Station II-9	Station II-10	Station II-11	Station II-12
Date	10/28/74	10/28/74	10/28/74	10/28/74	10/28/74	10/28/74
Time	0835-0845	0918-0924	1002-1007	1044 - 1210	1236	1337
Location	26° 38' N 93° 38' W	26° 44' N 93° 38' W	26° 50' N 93° 38' W	26° 56' N 93° 38' W	26° 56' N 93° 44' W	26° 50' N 93° 44' N
Water Depth	app. 800 fm	app. 800 fm	app. 800 fm	app. 800 fm	app. N800 fm	app. N800 fm
Air Temperature	72° F	app. 72° F	app. 72° F	-----	83° F	83° F
Wind Direction	168° T	-----	-----	-----	159° T	-----
Wind Velocity	28 kts	-----	-----	-----	24 kts	-----
Relative Humidity	71%	-----	-----	-----	67%	-----
Cloud Cover	1/10	-----	-----	-----	1/10	-----
Sea State	6 - 8 ft seas	-----	-----	-----	6 - 8 ft. seas	-----
Precipitation	none	-----	-----	-----	none	-----
Slicks	none	-----	-----	-----	none	-----
Water Temperature	app. 26° C	app. 26° C	app. 26° C	app. 26° C	app. 26° C	app. 26° C
Chlorinity(‰)	20.09	19.98	20.09	20.09	19.87	20.09
pH	8.2	8.2	8.2	8.2	8.2	8.2
Secchi	-----	-----	-----	-----	-----	-----
Organohalogens (ppb)	<0.5	<0.5	<0.5	<0.5	<0.5	<0.5
Metals (ppb) see Note						
Arsenic	3.7	3.7	<1	11.2	<1	<1
Cadmium	0.02	0.50	0.51	2.79	1.25	2.08
Chromium	<0.4	<0.4	<0.4	0.8	5.8	<0.4
Copper	0.71	1.60	4.23	6.75	7.29	9.37
Lead	2.16	2.00	1.00	130.00	2.50	<0.40
Mercury	0.025	0.037	0.062	Contaminated	0.050	0.025
Nickel	3.33	1.66	11.66	2.91	2.91	25.41
Zinc	2.08	6.87	1.25	12.18	23.43	22.39
Chlorophyll a	0.21	0.15	0.06	0.05	0.10	0.05
Phytoplankton	-----	-----	-----	-----	-----	-----
ATP bucket sample (ugATP/1. seawater)	0.051	0.034	0.070	0.039	0.032	0.047
HCl (ppm)	-----	-----	-----	-----	-----	-----
O II Position wrt. VUL.	-----	-----	-----	-----	-----	-----
Trawl	-----	-----	-----	nothing in net		

NOTE: Preliminary analytical data not rounded off to significant figures

TABLE E-2 (CONT'D)

SAMPLING STATIONS, SECOND CRUISE OF OREGON II

Station No.	Station II-13	Station II-14	Station II-15	Station II-16	Station II-17	Station II-18
Date	10/28/74	10/28/74	10/28/74	10/28/74	10/28/74	10/28/74
Time	1416	1511	1546	1635	1712	1800
Location	26° 44'N 93° 44'N	26° 38'N 93° 44'W	26° 28'N 93° 50'W	26° 44'N 93° 50'W	26° 50'N 93° 50'W	26° 56'N 93° 50'W
Water Depth	app. 800 fm	app. 800 fm	app. 800 fm	app. 800 fm	app. 800 fm	app. 800 fm
Air Temperature	app. 83° F	app. 83° F		-----	-----	79° F
Wind Direction	-----	-----		-----	-----	147° T
Wind Velocity	-----	-----		-----	-----	25 kts
Relative Humidity	-----	-----	-----	-----	-----	79%
Cloud Cover	-----	-----	-----	-----	-----	8/10
Sea State	-----	-----	-----	-----	-----	6-8 ft seas
Precipitation	-----	-----	-----	-----	-----	rain shower
Slicks	-----	-----	-----	-----		none
Water Temperature	app. 26° C	app. 26° C	app. 26° C	app. 26° C	app. 26° C	app. 26° C
Chlorinity(‰)	19.98	20.09	19.98	19.98	19.98	19.87
pH	8.2	8.2	8.2	8.2	8.2	8.2
Secchi	-----	-----	-----	-----	-----	-----
Organohalogens (ppb)	<0.5	<0.5	<0.5	<0.5	<0.5	<0.5
Metals (ppb) See note						
Arsenic	<1	<1	<1	5.5	<1	8.7
Cadmium	<0.04	<0.04	<0.04	<0.04	0.54	<0.04
Chromium	<0.4	<0.4	<0.4	<0.4	<0.4	<0.4
Copper	9.45	4.54	3.08	2.87	3.41	0.25
Lead	<0.40	1.25	<0.40	<0.40	12.00	<0.40
Mercury	Contaminated	0.037	<0.010	<0.010	Contaminated	<0.010
Nickel	31.66	2.91	3.75	2.50	3.75	2.50
Zinc	<0.05	<0.05	0.75	<0.05	31.66	0.15
Chlorophyll a	0.08	0.04	0.11	0.00	0.04	0.00
Phytoplankton	-----	-----	-----	-----	-----	-----
ATP bucket sample (ug ATP/l. seawater)	0.043	0.034	0.027	0.060	Lost	0.041
HCl (ppm)	-----	-----	-----	-----	-----	-----
O II Position wrt. VUL.	-----	-----	-----	-----	-----	-----
Trawl	-----	-----	-----	-----	-----	-----

Note: Preliminary analytical data not rounded off to significant figures.

TABLE E-2 (CONT'D)

SAMPLING STATIONS, SECOND CRUISE OF OREGON II

Station No.	Station II-19	Station II-20	Station II-21	Station II-22
Date	10/28/74	10/28/74	10/28/74	10/28/74
Time	1855	1950	2046	2145
Location	26° 56' N 93° 56' W	26° 50' N 93° 56' W	26° 44' N 93° 56' W	26° 38'N 93° 56'W
Water Depth	app. 800 fm	app. 800 fm	app. 800 fm	app. 800 fm
Air Temperature	app. 79° F	app. 79° F	-----	-----
Wind Direction	-----	-----	-----	-----
Wind Velocity	-----	-----	-----	-----
Relative Humiditty	-----	-----	-----	-----
Cloud Cover	-----	-----	-----	-----
Sea State	-----	-----	-----	-----
Precipitation	-----	-----	-----	-----
Slicks	-----	-----	-----	-----
Water Temperature	app. 26° C	app. 26° C	app. 26° C	app. 26° C
Chlorinity(‰)	19.87	19.98	19.87	20.09
pH	8.2	8.2	8.2	8.2
Secchi	-----	-----	-----	-----
Organohalogens (ppb)	<0.5	<0.5	<0.5	<0.5
Metals(ppb)-See Note				
Arsenic	<1	<1	2.5	-----
Cadmium	<0.04	<0.04	<0.04	-----
Chromium	<0.4	<0.4	<0.4	-----
Copper	5.29	3.50	4.45	-----
Lead	<0.40	<0.40	2.10	-----
Mercury	0.050	0.025	0.065	-----
Nickel	5.41	2.91	36.25	-----
Zinc	0.05	<0.05	<0.05	-----
Chlorophyll a	<0.05	0.02	0.00	0.00
Phytoplankton	-----	-----	-----	-----
ATP bucket sample (ugATP/1. seawater)	0.034	0.040	0.055	0.041
HCl (ppm)	-----	-----	-----	-----
O II Position wrt. VUL.	-----	-----	-----	-----
Trawl	-----	-----	-----	-----

NOTE: Preliminary analytical data not rounded off to significant figures.

APPENDIX F. LOG SHEETS FROM INTERIM PERMIT BURNS

OPERATIONAL LOG

(All Information To Be Recorded At Least Once Each Watch)
Waste Type: Organic Chloride
Waste Origin: Shell Deer Park Manufacturing Complex
Deer Park, Texas

Date	Time	Black Box Temp. as Read in Combustion Room Port	Black Box Temp. as Read in Combustion Room Stb.	Controller Temp. Port	Controller Temp. Stb.	Wind Speed	Wind Dir.	Location Lat. N		Location Long. W	
12/19/74	0400	-	-	-	-	39	205	26	50	93	52
	0800	1030	1020	1300	1300	24	210	26	37	93	41
	1200	1090	1110	1270	1290	17	175	26	35	93	39
	1600	1150	1170	1300	1300	20	180	26	33	93	38
	2000	1170	1180	1310	1290	18	180	26	32	93	37
12/20/74	0000	1180	1160	1320	1280	21	180	26	31	93	37
	6400	1200	1200	1330	1300	22	180	26	30	93	34
	0800	1200	1200	1320	1300	24	350	26	23	93	30
	1200	1200	1200	1330	1310	19	360	26	38	93	36
	1600	1180	1200	1300	1300	15	360	26	47	93	40
	2000	1195	1210	1300	1310	15	360	26	40	93	36
12/21/74	0000	1190	1220	1310	1330	21	040	26	33	93	31
	0400	1200	1210	1330	1310	19	045	26	30	93	33
	0800	1210	1220	1330	1310	14	050	26	24	93	34
	1200	1200	1200	1330	1310	16	035	26	42	93	42
	1600	1205	1215	1320	1320	20	070	26	52	93	44
	2000	1220	1220	1330	1350	12	130	26	47	93	42
12/21/74	0000	1210	1240	1310	1340	19	140	26	42	93	41
	0440	1215	1235	1330	1320	19	160	26	38	93	38
	0800	1200	1215	1310	1300	27	150	26	40	93	30
	1200	1200	1200	1300	1270	27	150	26	38	93	26
	1600	1200	1200	1310	1300	30	140	26	37	93	31
	2000	1200	1210	1300	1310	36	140	26	35	93	51
12/23/74	0000	1200	1200	1300	1290	19	140	26	42	93	41
	0400	1170	1190	1290	1270	19	160	26	38	93	38
	0800	1200	1170	1350	1290	27	160	26	35	93	35
	1200	1190	1190	1290	1310	37	180	26	36	93	33
	1600	1190	1200	1290	1300	35	140	26	42	93	28
	2000	1200	1210	1340	1360	34	160	26	30	93	23
12/24/74	0000	1175	1165	1230	1230	36	180	26	37	93	41
	0400	1190	1200	1290	1300	29	180	26	33	93	41
	0800	1190	1200	1320	1300	29	170	26	28	93	42
	1200	1200	1180	1300	1240	34	180	26	25	93	44
	1600	1180	1200	1310	1300	30	180	26	29	93	40
	2000	1185	1200	1320	1300	20	180	26	46	93	32
12/25/74	0000	1190	1185	1170	1170	14	195	26	41	93	32
	0400	1190	1190	1295	1250	20	180	26	37	93	34
	0800	1195	1200	1300	1300	12	120	26	30	93	30
	1200	1190	1190	1260	1260	15	140	26	23	93	31
	1600	1200	1200	1330	1350	18	150	26	37	93	33
	2000	1200	1200	1330	1320	26	160	26	33	93	40
12/26/74	0000	1200	1180	1290	1260	27	190	26	32	93	41

WASTE FEED RATE LOG

Waste Type: Organic Chloride
Waste Origin: Shell Deer Park Manufacturing Complex
Deer Park, Texas

Date	Tank Designation	Time Start Discharge	Time Stop Discharge	Volume Discharged Metric Tons	Discharge Rate Metric Tons/Hr.
19/12/74	2 C	0330	20-12 0830	710	24.4
20/12/74	4 C	0830	21-12 0630	526	23.9
21/12/74	1 C	0630	22-12 0630	556	23.2
22/12/74	5 C	0630	23-12 0430	525	23.9
23/12/74	3 C	0430	24-12-0130	518	24.7
24/12/74	2 p + s	0130	24-12 1300	301	25.0
24/12/74	3 p + s	1330	25-12 0130	300	24.8
25/12/74	4 p + s	0130	25-12 1530	347	24.8
25/12/74	5 p + s	1530	26-12 0330	300	24.8

OPERATIONAL LOG

(All Information To Be Recorded At Least Once Each Year)
Waste Type: Organic Chloride
Waste Origin: Shell Deer Park Manufacturing Complex, Deer Park, Texas

Date	Time	Black Box Temp. as Read in Combustion Room		Controller Temp.		Wind Speed	Wind Dir.	Location	
		Port	Stb.	Port	Stb.			Lat. N	Long. W
12/31/74	1200	990	995	1280	1250	18	135	26 39	93 39
	1600	1095	1110	1300	1300	18	150	26 38	93 37
	2000	1145	1160	1300	1295	15	140	26 37	93 37
02/01/75	0000	1175	1185	1310	1300	17	150	26 35	93 38
	0400	1190	1200	1310	1290	15	140	26 31	93 38
	0800	1200	1205	1310	1300	14	130	26 28	93 39
	1200	1200	1200	1300	1300	12	140	26 26	93 41
	1600	1200	1200	1290	1300	30	070	26 36	93 40
	2000	1200	1205	1300	1300	31	050	26 42	93 35
01/02/75	0000	1205	1200	1305	1305	13	130	26 38	93 35
	0400	1200	1210	1290	1310	24	160	26 37	93 36
	0800	1200	1195	1290	1280	28	150	26 35	93 35
	1200	1200	1200	1300	1290	20	135	26 35	93 34
	1600	1200	1200	1290	1320	20	135	26 35	93 30
	2000	1200	1200	1300	1330	22	160	26 33	93 26
01/03/75	0000	1200	1190	1310	1280	24	180	26 30	93 25
	0400	1200	1200	1300	1300	15	160	26 43	93 40
	0800	1200	1200	1310	1320	21	180	26 42	93 40
	1200	1195	1200	1300	1300	16	160	26 42	93 39
	1600	1195	1200	1290	1310	31	335	26 38	93 38
	2000	1200	1200	1320	1310	36	025	26 30	93 40
01/04/75	0000	1205	1210	1310	1310	38	010	26 31	93 40
	0400	1200	1195	1300	1280	30	340	26 43	93 40
	0800	1200	1200	1310	1330	32	350	26 34	93 40
	1200	1200	1200	1300	1320	34	020	26 28	93 43
	1600	1200	1200	1290	1310	24	360	26 33	93 41
	2000	1200	1200	1280	1290	15	030	26 39	93 40
01/05/75	0000	1200	1200	1290	1290	12	090	26 34	93 40
	0400	1195	1195	1200	1290	13	070	26 29	93 39
	0800	1200	1200	1290	1290	12	160	26 25	93 38
	1200	1200	1200	1290	1300	11	020	26 46	93 40
	1600	1195	1200	1280	1320	10	135	26 44	93 37
	2000	1200	1190	1290	1290	11	140	26 42	93 34
01/06/75	0000	1205	1200	1310	1300	10	130	26 39	93 33
	0400	1190	1200	1300	1290	11	160	26 38	93 29
	0800	1200	1205	1300	1300	13	110	26 34	93 27
	1200	1190	2300	1280	1290	13	140	26 24	93 26
	1600	1195	1195	1290	1290	11	135	26 31	93 25
	2000	1200	1205	1300	1310	14	140	26 29	93 24
01/07/75	0000	1210	1200	1310	1300	21	160	26 27	93 24
	0400	1200	1210	1300	1310	20	135	26 27	93 23
	0800	1140	1130	1250	1240	15	130	26 37	93 37

WASTE FEED RATE LOG

Waste Type: Organic Chloride
Waste Origin: Shell Deer Park Manufacturing Complex
Deer Park, Texas

Date	Tank Designation	Time Start Discharge	Time Stop Discharge	Total Volume Discharged Metric Tons	Discharge Rate Metric Tons/Hr
12/31/74	2 C	0900	1/1 1300	689.6	-
01/01/75	4 C	1300	1/2 1100	551.7	-
01/02/75	1 C	1100	1/3 1000	567.0	-
01/03/75	5 C	1000	1/4 0900	542.2	-
01/04/75	3 C	0900	1/5 0600	508.3	-
01/05/75	WT 2 pt + sb	0600	0/5 1850	311.6	-
01/05/75	WT 3 pt + sb	1830	1/6 0600	285.3	-
01/06/75	WT 4 pt + sb	0600	1/6 2030	357.6	-
01/06/75	WT 5 pt + sb	2030	1/7 0800	289.7	-
				4103.0 MT	

Total 4103 MT incinerated in 167 hours - 24.5 MT/h. average discharge rate. No discharge rate per tank can be given, as due to the large amount of slop water received, various tanks had to be mixed in order to maintain temperature.

A breakdown in the controlcurrent circuit occured in the night of 1/5 to 1/6. Various indicator lamps did extinguish.

BIBLIOGRAPHY

Report to congress on Hazardous Waste Disposal. U.S. Environmental Protection Agency, Office of Solid Waste Management Programs, Washington, D.C., June 30, 1973.

Miller, Taylor O. Report of the Presiding Officer. Public Hearing held Oct. 4, 1974, in Houston, Tex., concerning Shell Chemical Co. application for permit No. 730D008C to dispose of organochlorine wastes. U.S. Environmental Protection Agency, Oil and Special Materials Control Division, Washington, D.C., Oct. 9, 1974.

U.S. Environmental Protection Agency Research Permit No. 730D008C. Issued under Marine Protection, Research, and Sanctuaries Act (Ocean Dumping), Washington, D.C., Oct. 10, 1974.

Federal Register, Vol. 39, No. 202, p 37057-8, Oct. 17, 1974.

A Field Monitoring Study of the Effects of Organic Chloride Waste Incineration on the Marine Environment in the Northern Gulf of Mexico. Prepared by TerEco Corp., College Station, Tex., under contract to Shell Chemical Co., Houston, Tex., Oct. 30, 1974.

Gusey, W.F. Potential Effects of at Sea Incineration of Organic Chloride Wastes on Migrating Birds, Shell Chemical Co., Houston, Tex., Nov. 1, 1974.

Preliminary Technical Report on Incineration of Organochlorine Wastes in the Gulf of Mexico. U.S. Environmental Protection Agency, Oil and Special Materials Control Division, Washington, D.C., Nov. 13, 1874.

Frick, G. William. Report of the Presiding Officer Technical meeting held Nov. 14, 1974, in Houston, Tex., regarding application of Shell Chemical Company Permit No. 730D008C pursuant to the Marine Protection, Research, and Sanctuaries Act of 1972. U.S. Environmental Protection Agency, Oil and Special Materials Control Division, Washington, D.C., Nov. 27, 1974.

Train, Russell E. Supplementary decision of the Administrator regarding application of Shell Chemical Company for Marine Protection, Research, and Sanctuaries Act Permit No. 730D008C. U.S. Environmental Protection Agency, Oil and Special Materials Control Division, Washington, D.C., Nov. 27, 1974.

U. S. Environmental Protection Agency Research Permit No. 730D008C(2). Issued under Marine Protection, Research, and Sanctuaries Act (Ocean Dumping), Washington, D. C., Nov. 27, 1974.

Preliminary Report, Marine Environmental Monitoring of Vulcanus Research Burn II, December 2, 1974. U. S. Environmental Protection Agency, Oil and Special Materials Control Division, Washington, D. C., Dec. 10, 1974.

Biglane, Kenneth E. Staff Report Regarding Application of Shell Chemical Company and Ocean Combustion Services, B. V., For Permit No. 730D008C Pursuant to the Marine Protection, Research, and Sanctuaries Act of 1972. U. S. Environmental Protection Agency, Oil and Special Materials Control Division, Washington, D. C., Dec. 12, 1974.

U. S. Environmental Protection Agency Interim Permit No. 730D008C(3). Issued under Marine Protection, Research, and Sanctuaries Act (Ocean Dumping), Washington, D. C., Dec. 12, 1974.

Sea-Level Monitoring of the Incineration of Organic Chloride Waste by M/T Vulcanus in the Northern Gulf of Mexico, Shell Waste Burn No. 2. Prepared by TerEco Corp., College Station, Tex., under Contract No. 68-01-2829 with U. S. Environmental Protection Agency, Washington, D. C., Jan. 10, 1975.

Aerial Monitoring of the Plume Generated by at-Sea Incineration of Organochloride Wastes U. S. Environmental Protection Agency, National Environmental Research Center, Las Vegas, Nev., Feb. 5, 1975.

Badley, J. H., A. Telfer, E. M. Fredericks. At-Sea Incineration of Shell Chemical Organic Chloride Waste, Stack Monitoring Aboard the M/T "Vulcanus". Technical Progress Report BRC-CORP 13-75-F. Shell Development Co., Bellaire Research Center, Houston, Tex., 1975.

TECHNICAL REPORT DATA
(Please read Instructions on the reverse before completing)

1. REPORT NO. EPA-430/9-75-014	2.	3. RECIPIENT'S ACCESSION NO.
4. TITLE AND SUBTITLE Disposal of Organochlorine Wastes by Incineration At Sea		5. REPORT DATE July 1975 Date of Preparation
		6. PERFORMING ORGANIZATION CODE
7. AUTHOR(S) T.A. Wastler, Carolyn K. Offutt, Charles K. Fitzsimmons, Paul Des Rosiers		8. PERFORMING ORGANIZATION REPORT NO.
9. PERFORMING ORGANIZATION NAME AND ADDRESS Oil & Special Materials Control Division (WH-448) Office of Water and Hazardous Materials U.S. Environmental Protection Agency Washington, D.C. 20460		10. PROGRAM ELEMENT NO.
		11. CONTRACT/GRANT NO.
12. SPONSORING AGENCY NAME AND ADDRESS Oil & Special Materials Control Division (WH-448) Office of Water and Hazardous Materials U.S. Environmental Protection Agency Washington, D.C. 20460		13. TYPE OF REPORT AND PERIOD COVERED Final-Oct. 1974-Jan. 1975
		14. SPONSORING AGENCY CODE
15. SUPPLEMENTARY NOTES		

16. ABSTRACT : The first officially sanctioned incident of ocean incineration in the United States occurred aboard the M/T Vulcanus in the Gulf of Mexico from October 1974 through January 1975 under an ocean dumping permit issued by the U.S. Environmental Protection Agency under the authority of the Marine Protection, Research, and Sanctuaries Act of 1972, as amended, to the Shell Chemical Company in Deer Park, Texas, for ocean incineration of organochlorine wastes.

The report describes the monitoring activities undertaken to evaluate ocean incineration as a disposal method. A total of 16,800 metric tons of waste were incinerated at a maximum rate of 25 metric tons per hour with a 1200°C minimum and a 1350°C average flame temperature. Stack gas emissions were mentioned for plume dispersion characteristics and to determine combustion efficiency. The findings indicate that more than 99.9 percent of the wastes were oxidized. Marine monitoring surveys indicate that there were no measurable increases in concentrations of trace metals and organochlorides in the water and marine life.

Results of the project indicate that ocean incineration could be a viable alternative of waste disposal which should be considered along with other disposal methods including direct ocean disposal, land disposal, and land incineration.

17. KEY WORDS AND DOCUMENT ANALYSIS

a. DESCRIPTORS	b. IDENTIFIERS/OPEN ENDED TERMS	c. COSATI Field/Group
Ocean Waste Disposal Ocean Dumping Ocean Incineration Incineration Waste Disposal (Industrial) Gulf of Mexico Vulcanus Shell Chemical Company		

18. DISTRIBUTION STATEMENT Releasable to public	19. SECURITY CLASS *(This Report)* unclassified	21. NO. OF PAGES 238
	20. SECURITY CLASS *(This page)* unclassified	22. PRICE

EPA Form 2220-1 (9-73)

☆ U.S. GOVERNMENT PRINTING OFFICE: 1975— 210-810/30