United States Nuclear Regulatory Commission

*Protecting People and the Environment*

NUREG-2188

# U.S. Operating Experience with Thermally Treated Alloy 600 Steam Generator Tubes Through December 2013

Office of Nuclear Reactor Regulation

# AVAILABILITY OF REFERENCE MATERIALS IN NRC PUBLICATIONS

**NRC Reference Material**

As of November 1999, you may electronically access NUREG-series publications and other NRC records at NRC's Library at www.nrc.gov/reading-rm.html. Publicly released records include, to name a few, NUREG-series publications; *Federal Register* notices; applicant, licensee, and vendor documents and correspondence; NRC correspondence and internal memoranda; bulletins and information notices; inspection and investigative reports; licensee event reports; and Commission papers and their attachments.

NRC publications in the NUREG series, NRC regulations, and Title 10, "Energy," in the *Code of Federal Regulations* may also be purchased from one of these two sources.

1. **The Superintendent of Documents**
   U.S. Government Publishing Office
   Mail Stop IDCC
   Washington, DC 20402-0001
   Internet: bookstore.gpo.gov
   Telephone: (202) 512-1800
   Fax: (202) 512-2104

2. **The National Technical Information Service**
   5301 Shawnee Rd., Alexandria, VA 22312-0002
   www.ntis.gov
   1-800-553-6847 or, locally, (703) 605-6000

A single copy of each NRC draft report for comment is available free, to the extent of supply, upon written request as follows:

Address: **U.S. Nuclear Regulatory Commission**
Office of Administration
Publications Branch
Washington, DC 20555-0001
E-mail: distribution.resource@nrc.gov
Facsimile: (301) 415-2289

Some publications in the NUREG series that are posted at NRC's Web site address www.nrc.gov/reading-rm/doc-collections/nuregs are updated periodically and may differ from the last printed version. Although references to material found on a Web site bear the date the material was accessed, the material available on the date cited may subsequently be removed from the site.

**Non-NRC Reference Material**

Documents available from public and special technical libraries include all open literature items, such as books, journal articles, transactions, *Federal Register* notices, Federal and State legislation, and congressional reports. Such documents as theses, dissertations, foreign reports and translations, and non-NRC conference proceedings may be purchased from their sponsoring organization.

Copies of industry codes and standards used in a substantive manner in the NRC regulatory process are maintained at—

**The NRC Technical Library**
Two White Flint North
11545 Rockville Pike
Rockville, MD 20852-2738

These standards are available in the library for reference use by the public. Codes and standards are usually copyrighted and may be purchased from the originating organization or, if they are American National Standards, from—

**American National Standards Institute**
11 West 42nd Street
New York, NY 10036-8002
www.ansi.org
(212) 642-4900

Legally binding regulatory requirements are stated only in laws; NRC regulations; licenses, including technical specifications; or orders, not in NUREG-series publications. The views expressed in contractorprepared publications in this series are not necessarily those of the NRC.

The NUREG series comprises (1) technical and administrative reports and books prepared by the staff (NUREG–XXXX) or agency contractors (NUREG/CR–XXXX), (2) proceedings of conferences (NUREG/CP–XXXX), (3) reports resulting from international agreements (NUREG/IA–XXXX), (4) brochures (NUREG/BR–XXXX), and (5) compilations of legal decisions and orders of the Commission and Atomic and Safety Licensing Boards and of Directors' decisions under Section 2.206 of NRC's regulations (NUREG–0750).

**DISCLAIMER:** This report was prepared as an account of work sponsored by an agency of the U.S. Government. Neither the U.S. Government nor any agency thereof, nor any employee, makes any warranty, expressed or implied, or assumes any legal liability or responsibility for any third party's use, or the results of such use, of any information, apparatus, product, or process disclosed in this publication, or represents that its use by such third party would not infringe privately owned rights.

United States Nuclear Regulatory Commission

*Protecting People and the Environment*

NUREG-2188

# U.S. Operating Experience with Thermally Treated Alloy 600 Steam Generator Tubes Through December 2013

Manuscript Completed: September 2015
Date Published: February 2016

Prepared by:
K. J. Karwoski

Office of Nuclear Reactor Regulation

# ABSTRACT

Steam generators placed in service in the 1960s and 1970s primarily had mill-annealed Alloy 600 tubes. Over time, this material proved to be susceptible to stress corrosion cracking in the highly pure primary and secondary water chemistry environments of pressurized-water reactors. The corrosion ultimately led to the replacement of steam generators at many facilities, with the first U.S. replacement occurring in 1980. Many of the steam generators placed into service in the 1980s used tubes fabricated from thermally treated Alloy 600. This tube material was thought to be less susceptible to corrosion. NUREG-1771, "U.S. Operating Experience with Thermally Treated Alloy 600 Steam Generator Tubes," documented the operating experience associated with thermally treated Alloy 600 steam generator tubes as of December 2001. This document builds upon the information in NUREG-1771 and summarizes the operating experience with thermally treated Alloy 600 tubes through December 2013, with some information from 2014 included.

# CONTENTS

**ABSTRACT** ..... **iii**

**CONTENTS** ..... **v**

**LIST OF FIGURES** ..... **vii**

**LIST OF TABLES** ..... **ix**

**EXECUTIVE SUMMARY** ..... **xiii**

**ACKNOWLEDGMENTS** ..... **xv**

**ABBREVIATIONS AND ACRONYMS** ..... **xvii**

**1 INTRODUCTION** ..... **1-1**
1.1 Safety Significance ..... 1-1
1.2 General Steam Generator Design ..... 1-2
1.3 Steam Generator Program ..... 1-5
1.3.1 Regulatory Requirements ..... 1-5
1.3.2 Steam Generator Tube Inspections ..... 1-9
1.3.3 Tube Plugging/Repair Limits ..... 1-11
1.3.4 Tube Plugging and Repair ..... 1-13
1.4 Mill-Annealed Alloy 600 Steam Generator Operating Experience ..... 1-14
1.5 Thermally Treated Alloy 600 Tubes ..... 1-15
1.6 Thermally Treated Alloy 690 Tubes ..... 1-16
1.7 TSTF-449 ..... 1-16
1.8 TSTF-510 ..... 1-19

**2 STEAM GENERATOR DESIGNS IN UNITS WITH THERMALLY TREATED ALLOY 600 TUBES** ..... **2-1**
2.1 Introduction ..... 2-1
2.2 Model D5 Steam Generators ..... 2-1
2.3 Model F Steam Generators ..... 2-2
2.4 Replacement Steam Generators ..... 2-3

**3 THERMALLY TREATED ALLOY 600 STEAM GENERATOR TUBE OPERATING EXPERIENCE** ..... **3-1**
3.1 Data Gathering Methods and Introduction ..... 3-1
3.2 Model D5 Steam Generator Operating Experience ..... 3-1
3.2.1 Braidwood 2 ..... 3-1
3.2.2 Byron 2 ..... 3-21
3.2.3 Catawba 2 ..... 3-42
3.2.4 Comanche Peak 2 ..... 3-55
3.3 Model F Steam Generator Operating Experience ..... 3-64
3.3.1 Callaway ..... 3-64
3.3.2 Millstone 3 ..... 3-66
3.3.3 Seabrook ..... 3-83
3.3.4 Vogtle 1 ..... 3-98
3.3.5 Vogtle 2 ..... 3-115
3.3.6 Wolf Creek ..... 3-127
3.4 Replacement Model Steam Generator Operating Experience ..... 3-142
3.4.1 Indian Point 2 ..... 3-142
3.4.2 Point Beach 1 ..... 3-147

3.4.3 Robinson 2 ..... 3-159
3.4.4 Salem 1 ..... 3-168
3.4.5 Surry 1 ..... 3-176
3.4.6 Surry 2 ..... 3-193
3.4.7 Turkey Point 3 ..... 3-208
3.4.8 Turkey Point 4 ..... 3-214

**4 SUMMARY ..... 4-1**
4.1 Model D5 Summary ..... 4-1
4.2 Model F Summary ..... 4-2
4.3 Replacement Model Summary ..... 4-3
4.4 Overall Summary ..... 4-3
4.4.1 Forced outages and unplanned inspections ..... 4-3
4.4.2 Tubes removed for laboratory examination ..... 4-5
4.4.3 Corrosion of tubes ..... 4-7
4.4.4 Degradation in steam generator channel head ..... 4-10
4.4.5 Degradation of steam generator secondary-side internals ..... 4-12
4.4.6 Tube wear ..... 4-13
4.4.7 Selected findings ..... 4-14
4.4.8 Summary and observations ..... 4-16

**APPENDIX A: BIBLIOGRAPHY ..... A-1**

# LIST OF FIGURES


Figure 1-1: Typical Pressurized Water Reactor Power Plant ..... 1-35
Figure 1-2: Typical PWR Recirculating Steam Generator without a Preheater ..... 1-36
Figure 1-3: Typical PWR Once-Through Steam Generator ..... 1-37
Figure 1-4: U-Bend Features..... 1-38
Figure 1-5: Typical PWR Recirculating Steam Generator with a Preheater ..... 1-39
Figure 1-6: Typical Steam Generator Channel Head in a Recirculating Steam Generator ..... 1-40
Figure 1-7: Partial and Full Depth Expansions ..... 1-41
Figure 1-8: Typical Tubesheet Joint – Full Depth Expansion..... 1-42
Figure 1-9: Combustion Engineering Steam Generator..... 1-43
Figure 1-10: Typical Tube Support Configurations ..... 1-44
Figure 1-11: Illustration of H* Distance..... 1-45
Figure 1-12: Alloy 800 Tubesheet Sleeve ..... 1-46
Figure 1-13: Alloy 800 Tube Support Sleeve..... 1-47
Figure 1-14: Steam Generator Tube Degradation Mechanisms ..... 1-48
Figure 1-15: Number of Units with Thermally Treated Alloy 600 Steam Generator Tubes as a Function of Year..... 1-49
Figure 2-1: Westinghouse Model D5 Steam Generator Tube Support Locations ..... 2-6
Figure 2-2: Westinghouse Model D5 Steam Generator Tubesheet Map ..... 2-7
Figure 2-3: Preheater Region of Westinghouse Model D5 Steam Generator ..... 2-8
Figure 2-4: Westinghouse Model F Steam Generator Tube Support Locations..... 2-9
Figure 2-5: Westinghouse Model F Steam Generator Tubesheet Map..... 2-10
Figure 2-6: Westinghouse Model 44F Steam Generator Tube Support Locations..... 2-11
Figure 2-7: Westinghouse Model 44F Steam Generator Tubesheet Map..... 2-12
Figure 2-8: Westinghouse Model 51F Steam Generator Tube Support Locations..... 2-13
Figure 2-9: Westinghouse Model 51F Steam Generator Tubesheet Map..... 2-14
Figure 4-1: Model D5: Causes of Tube Plugging (12/2013)..... 4-55
Figure 4-2a: Model D5: Cumulative Plugging per Year (12/2013) ..... 4-56
Figure 4-2b: Model D5: Plugging per Year (12/2013)..... 4-57
Figure 4-3: Model D5: Cumulative Plugging per Refueling Outage (12/2013) ..... 4-58
Figure 4-4: Model D5: Causes of Tube Plugging per Year (12/2013) ..... 4-59
Figure 4-5: Model F: Causes of Tube Plugging (12/2013) ..... 4-60
Figure 4-6a: Model F: Cumulative Plugging per Year (12/2013)..... 4-61
Figure 4-6b: Model F: Plugging per Year (12/2013) ..... 4-62
Figure 4-7: Model F: Cumulative Plugging per Refueling Outage (12/2013)..... 4-63
Figure 4-8: Model F: Causes of Tube Plugging per Year (12/2013)..... 4-64
Figure 4-9: Replacement Models: Causes of Tube Plugging (12/2013)..... 4-65
Figure 4-10a: Replacement Models: Cumulative Plugging per Year (12/2013) ..... 4-66
Figure 4-10b: Replacement Models: Plugging per Year (12/2013)..... 4-67
Figure 4-11: Replacement Models: Cumulative Plugging per Refueling Outage (12/2013) ..... 4-68
Figure 4-12: Replacement Models: Causes of Tube Plugging per Year (12/2013) ..... 4-69
Figure 4-13: Number of Thermally Treated Alloy 600 Tubes in Service per Year (12/2013) ..... 4-70
Figure 4-14: All Models: Tubes Plugged Per Grouping/Model (12/2013)..... 4-71
Figure 4-15: All Models: Causes of Tube Plugging (12/2013) ..... 4-72
Figure 4-16: All Models: Number of Tubes Plugged per Year (12/2013) ..... 4-73
Figure 4-17: All Models: Percentage of Tubes Plugged per Year (12/2013)..... 4-74
Figure 4-18: All Models: Causes of Tube Plugging per Year (12/2013)..... 4-75

# LIST OF TABLES


Table 1-1: Unit Listing by PWR Vendor (12/2014) ..... 1-24
Table 1-2: Unit Listing by Tube Material (12/2014)..... 1-25
Table 1-3: Unit Listing by Tube Expansion Type and Material (12/2014) ..... 1-26
Table 1-4: Unit Listing by Tube Support Plate Material (12/2014) ..... 1-27
Table 1-5: History of H* Amendments (Part 1)..... 1-28
Table 1-5: History of H* Amendments (Part 2)..... 1-29
Table 1-6: Units with Replacement Steam Generators Part 1 (12/2014)..... 1-30
Table 1-6: Units with Replacement Steam Generators Part 2 (12/2014)..... 1-31
Table 1-6: Units with Replacement Steam Generators Part 3 (12/2014)..... 1-32
Table 1-7: Units with Thermally Treated Alloy 600 Tubes (12/2014)..... 1-33
Table 1-8: Age of Steam Generators at Units with Thermally Treated Alloy 600 Tubes (12/2013) ..... 1-34
Table 2-1: Steam Generator Design Information for Units with Thermally Treated Alloy 600 Tubes..... 2-5
Table 3-1: Braidwood 2: Summary of Bobbin Inspections and Tube Plugging ..... 3-222
Table 3-2: Braidwood 2: Causes of Tube Plugging ..... 3-223
Table 3-3: Braidwood 2: Tubes Plugged for Indications Other Than AVB Wear..... 3-224
Table 3-4: Byron 2: Summary of Bobbin Inspections and Tube Plugging..... 3-228
Table 3-5: Byron 2: Causes of Tube Plugging..... 3-229
Table 3-6: Byron 2: Tubes Plugged for Indications Other Than AVB Wear ..... 3-230
Table 3-7: Catawba 2: Summary of Bobbin Inspections and Tube Plugging ..... 3-236
Table 3-8: Catawba 2: Causes of Tube Plugging..... 3-237
Table 3-9: Catawba 2: Tubes Plugged for Indications Other Than AVB Wear..... 3-238
Table 3-10: Comanche Peak 2: Summary of Bobbin Inspections and Tube Plugging..... 3-249
Table 3-11: Comanche Peak 2: Causes of Tube Plugging..... 3-250
Table 3-12: Comanche Peak 2: Tubes Plugged for Indications Other Than AVB Wear .... 3-251
Table 3-13: Callaway: Summary of Bobbin Inspections and Tube Plugging (Thermally Treated Tubes Only)..... 3-253
Table 3-14: Callaway: Causes of Tube Plugging (Thermally Treated Tubes Only) ..... 3-254
Table 3-15: Callaway: Tubes Plugged for Indications Other Than AVB Wear (Thermally Treated Tubes Only)..... 3-255
Table 3-16: Millstone 3: Summary of Bobbin Inspections and Tube Plugging ..... 3-257
Table 3-17: Millstone 3: Causes of Tube Plugging..... 3-258
Table 3-18: Millstone 3: Tubes Plugged for Indications Other Than AVB Wear..... 3-259
Table 3-19: Seabrook: Summary of Bobbin Inspections and Tube Plugging..... 3-263
Table 3-20: Seabrook: Causes of Tube Plugging..... 3-264
Table 3-21: Seabrook: Tubes Plugged for Indications Other Than AVB Wear ..... 3-265
Table 3-22: Vogtle 1: Summary of Bobbin Inspections and Tube Plugging ..... 3-268
Table 3-23: Vogtle 1: Causes of Tube Plugging..... 3-269
Table 3-24: Vogtle 1: Tubes Plugged for Indications Other Than AVB Wear ..... 3-270
Table 3-25: Vogtle 2: Summary of Bobbin Inspections and Tube Plugging ..... 3-273
Table 3-26: Vogtle 2: Causes of Tube Plugging..... 3-274
Table 3-27: Vogtle 2: Tubes Plugged for Indications Other Than AVB Wear ..... 3-275
Table 3-28: Wolf Creek: Summary of Bobbin Inspections and Tube Pugging ..... 3-276
Table 3-29: Wolf Creek: Causes of Tube Plugging ..... 3-277
Table 3-30: Wolf Creek: Tubes Plugged for Indications Other Than AVB Wear..... 3-278
Table 3-31: Indian Point 2: Summary of Bobbin Inspections and Tube Plugging ..... 3-280
Table 3-32: Indian Point 2 Causes of Tube Plugging ..... 3-281

Table 3-33: Indian Point 2: Tubes Plugged for Indications Other Than AVB Wear ..... 3-282
Table 3-34: Point Beach 1: Summary of Bobbin Inspections and Tube Plugging ..... 3-283
Table 3-35: Point Beach 1: Causes of Tube Plugging ..... 3-284
Table 3-36: Point Beach 1: Tubes Plugged for Indications Other Than AVB Wear ..... 3-285
Table 3-37: Robinson 2: Summary of Bobbin Inspections and Tube Plugging ..... 3-286
Table 3-38: Robinson 2: Causes of Tube Plugging ..... 3-287
Table 3-39: Robinson 2: Tubes Plugged for Indications Other Than AVB Wear ..... 3-288
Table 3-40: Salem 1: Summary of Bobbin Inspections and Tube Plugging ..... 3-291
Table 3-41: Salem 1: Causes of Tube Plugging ..... 3-292
Table 3-42: Salem 1: Tubes Plugged for Indications Other Than AVB Wear ..... 3-293
Table 3-43: Surry 1: Summary of Bobbin Inspections and Tube Plugging ..... 3-295
Table 3-44: Surry 1: Causes of Tube Plugging ..... 3-296
Table 3-45: Surry 1: Tubes Plugged for Indications Other Than AVB Wear ..... 3-297
Table 3-46: Surry 2: Summary of Bobbin Inspections and Tube Plugging ..... 3-301
Table 3-47: Surry 2: Causes of Tube Plugging ..... 3-302
Table 3-48: Surry 2: Tubes Plugged for Indications Other Than AVB Wear ..... 3-303
Table 3-49: Turkey Point 3: Summary of Bobbin Inspections and Tube Plugging ..... 3-306
Table 3-50: Turkey Point 3: Causes of Tube Plugging ..... 3-307
Table 3-51: Turkey Point 3: Tubes Plugged for Indications Other Than AVB Wear ..... 3-308
Table 3-52: Turkey Point 4: Summary of Bobbin Inspections and Tube Plugging ..... 3-312
Table 3-53: Turkey Point 4: Causes of Tube Plugging ..... 3-313
Table 3-54: Turkey Point 4: Tubes Plugged for Indications Other Than AVB Wear ..... 3-314
Table 4-1: Model D5: Total Number and Percentage of Tubes Plugged (12/2013) ..... 4-18
Table 4-2: Model D5: Number of Tubes Plugged as a Function of Mechanism (Detailed) (12/2013) ..... 4-19
Table 4-3: Model D5: Cumulative Plugging per Year ..... 4-20
Table 4-4: Model D5: Plugging per Year ..... 4-21
Table 4-5: Model D5: Cumulative Plugging per RFO (12/2013) ..... 4-22
Table 4-6: Model D5: Number of Tubes Plugged as a Function of Mechanism per Year (Detailed) ..... 4-23
Table 4-7: Model D5: Number of Tubes Plugged as a Function of Mechanism per Year (Summary) ..... 4-24
Table 4-8: Model D5: Percentage of Tubes Plugged as a Function of Mechanism per Year ..... 4-25
Table 4-9: Model F: Total Number and Percentage of Tubes Plugged (12/2013) ..... 4-26
Table 4-10: Model F: Number of Tubes Plugged as a Function of Mechanism (Detailed) (12/2013) ..... 4-27
Table 4-11: Model F: Cumulative Plugging per Year ..... 4-28
Table 4-12: Model F: Plugging per Year ..... 4-29
Table 4-13: Model F: Cumulative Plugging per RFO (12/2013) ..... 4-30
Table 4-14: Model F: Number of Tubes Plugged as a Function of Mechanism per Year (Detailed) ..... 4-31
Table 4-15: Model F: Number of Tubes Plugged as a Function of Mechanism per Year ..... 4-32
Table 4-16: Model F: Percentage of Tubes Plugged as a Function of Mechanism ..... per Year ..... 4-33
Table 4-17: Replacement Models: Total Number and Percentage of Tubes Plugged (12/2013) ..... 4-34
Table 4-18: Replacement Models: Number of Tubes Plugged as a Function of Mechanism (Detailed) (12/2013) ..... 4-35
Table 4-19: Replacement Models: Cumulative Plugging per Year ..... 4-36
Table 4-20: Replacement Models: Plugging per Year ..... 4-37

Table 4-21: Replacement Models: Cumulative Plugging Per RFO (12/2013) ..... 4-38
Table 4-22: Replacement Models: Number of Tubes Plugged as a Function of Mechanism per Year (Detailed) ..... 4-39
Table 4-23: Replacement Models: Number of Tubes Plugged as a Function of Mechanism per Year (Summary) ..... 4-40
Table 4-24: Replacement Models: Percentage of Tubes Plugged as a Function of Mechanism per Year (Summary) ..... 4-41
Table 4-25: Cracking in Thermally Treated Alloy 600 Tubes (12/2013) ..... 4-42
Table 4-26: Tube End Cracking in Thermally Treated Alloy 600 Tubes (12/2013) ..... 4-43
Table 4-27: Non Tube-End Cracking in Thermally Treated Alloy 600 Tubes (Sorted by Plant) (12/2013) ..... 4-44
Table 4-28: Non Tube-End Cracking in Thermally Treated Alloy 600 Tubes (Sorted by Location) (12/2013) ..... 4-45
Table 4-29: Wear at the AVBs (12/2013) ..... 4-46
Table 4-30: All Models: Total Number and Percentage of Tubes Plugged (12/2013) ..... 4-47
Table 4-31: All Models: Number of Tubes Plugged as a Function of Mechanism (Detailed) (12/2013) ..... 4-48
Table 4-32: All Models: Number of Tubes Plugged as a Function of Mechanism (Summary) (12/2013) ..... 4-49
Table 4-33: All Models: Plugging per Year ..... 4-50
Table 4-34: All Models: Number of Tubes Plugged as a Function of Mechanism per Year (Detailed) ..... 4-52
Table 4-35: All Models: Number of Tubes Plugged as a Function of Mechanism per Year (Summary) ..... 4-53
Table 4-36: All Models: Percentage of Tubes Plugged as a Function of Mechanism per Year (Summary) ..... 4-54

# EXECUTIVE SUMMARY

The susceptibility of steam generator tubes to degradation is affected by various factors, including the steam generator design, the operating environment (temperature and water chemistry), and operating and residual stresses. Two of the most important factors affecting the susceptibility of a tube to degradation are the tube material and the tube's heat treatment.

Alloy 600 tubes installed in U.S. nuclear steam generators placed in service in the 1960s and 1970s were typically only mill-annealed (passed through a furnace at a high temperature). Operating experience has shown that mill-annealed Alloy 600 is susceptible to degradation in the steam generator operating environment. The degradation includes pitting, wear, thinning, wastage, and stress corrosion cracking.

The extensive tube degradation at pressurized-water reactors (PWRs) with mill-annealed Alloy 600 steam generator tubes resulted in numerous tube leaks, about nine tube ruptures, many midcycle steam generator tube inspections, and the replacement of steam generators at numerous units. In addition, extensive tube degradation contributed to the permanent shutdown of other units: Haddam Neck Plant; Maine Yankee; Trojan Nuclear; Zion, Units 1 and 2; and San Onofre Nuclear Generating Station, Unit 1.

As mill-annealed Alloy 600 steam generator tubes began exhibiting degradation in the early 1970s, the industry pursued improvements in the design of future steam generators to reduce the likelihood of corrosion. In the late 1970s, some mill-annealed Alloy 600 tubes were subjected to high temperatures for 10 to 15 hours to relieve fabrication stresses and to improve the tubes' microstructure. This thermal treatment process was first used on tubes installed in replacement steam generators put into service in the early 1980s. Thermally treated Alloy 600 is used in the steam generators at 17 units. At another unit, Callaway Plant, its original steam generators had thermally treated Alloy 600 tubes in the first 10 rows and mill-annealed Alloy 600 tubes in the remaining rows. The original steam generators at Callaway were replaced in 2005 because of degradation occurring in the mill annealed Alloy 600 tubes. The replacement steam generators at Callaway have thermally treated Alloy 690 tubes. Thermally treated Alloy 600 is used in about 26 percent of the operating PWRs (17 of 65).

The operating experience of units with mill-annealed Alloy 600 steam generator tubes is well documented. NUREG-1771, "U.S. Operating Experience with Thermally Treated Alloy 600 Steam Generator Tubes," was published in 2003 and summarized the operating experience with thermally treated Alloy 600 tubes as of December 2001. Section 3 of this report offers a detailed summary of the steam generator operating experience at each unit with thermally treated Alloy 600 steam generator tubes from December 2001 through December 2013, with some information from 2014 included. Section 4 of this report summarizes the overall operating experience with thermally treated Alloy 600 steam generator tubes since they were put in service. There is some information from early 2014 included in Section 3; however, it is typically not included in the tables and graphs contained within Section 4.

A review of operating experience identified only eight unplanned outages because of steam generator issues in units with thermally treated Alloy 600 tubes: three unplanned outages were because of primary-to-secondary leakage, and five were because of indications that a loose part may be present in a steam generator.

Of the 281,262 thermally treated Alloy 600 tubes placed in service at 18 units between 1980 and 2013, only 2,734 tubes (1.0 percent) have been plugged. All together, these 18 units have operated for about 468 calendar years (as of December 2013). On the average each of these units has commercially operated for approximately 26 calendar years (as of December 2013). The dominant degradation mode for thermally treated Alloy 600 tubes is wear at tube supports. Of the approximately 2,700 tubes plugged, approximately 42 percent of the tubes were plugged because of wear at a support structure (e.g., an anti-vibration bar). Wear can also occur because of a tube interacting with loose parts.

Far fewer tubes have been plugged in the steam generators with second-generation tube materials (i.e., thermally treated alloy 600) than in earlier steam generators with comparable operating times. Improvements in the design and operation of the second-generation steam generators appear to have increased the resistance of the tubes to degradation, as evidenced by the general lack of any significant amounts of degradation. The increased corrosion resistance of the tubes is largely because of the thermal treatment process that has superseded the mill annealing process used in earlier steam generator designs. The relatively good operating experience with thermally treated Alloy 600 steam generator tubes can also be attributed to several factors besides the heat treatment: hydraulic expansion of the tubes into the tubesheet, the quatrefoil design of the openings in the tube support plates, and the stainless steel material used to fabricate the plates.

During the writing of this report, one noteworthy event occurred in a unit with thermally treated Alloy 600 steam generator tubes. In the spring of 2014, H.B. Robinson Steam Electric Plant, Unit 2, had an unplanned outage attributed to primary-to-secondary leakage. The maximum primary-to-secondary leakage rate observed before the shutdown of the unit was 142 liters per day (37.5 gallons per day). The primary-to-secondary leak was attributed to wear from a loose part introduced during maintenance. As a result, the total number of unplanned outages (as of December 2013) because of steam generator issues in units with thermally treated Alloy 600 tubes is nine.

# ACKNOWLEDGMENTS

The author thanks Alan Huynh and Andrew Johnson for their assistance in compiling, summarizing, and graphing the information contained within this report. In addition, the author recognizes Thomas Morgan (former U.S. Nuclear Regulatory Commission employee) who compiled information and provided written analyses for this report.

# ABBREVIATIONS AND ACRONYMS

| | |
|---|---|
| ADAMS | Agencywide Documents Access and Management System |
| ADI | absolute drift indication |
| ADS | absolute drift signal |
| ASCA | Advanced Scale Conditioning Agent |
| ASTM | American Society for Testing and Materials |
| AVB | anti-vibration bar |
| BPC | cold-leg flow distribution baffle (baffle plate cold) |
| BPH | hot-leg flow distribution baffle (baffle plate hot) |
| CECIL | Consolidated Edison Combined Inspection and Lance |
| CFR | Code of Federal Regulations |
| CL | cold-leg |
| CLP | confirmed loose part |
| CM | condition monitoring |
| DNT | dent |
| ECT | eddy current testing |
| EFPY | effective full-power year |
| EPRI | Electric Power Research Institute |
| FBC | cold-leg flow distribution baffle |
| FBH | hot-leg flow distribution baffle (flow baffle hot) |
| FDB | flow distribution baffle |
| FOSAR | foreign object search and retrieval |
| FS | freespan |
| gpd | gallons per day |
| gpm | gallons per minute |
| HL | hot-leg |
| iARC | interim alternate repair criteria |
| ID | inside diameter |
| IN | Information Notice |
| kHz | kilohertz |
| kPa | kilopascals |
| ksi | kilopound per square inch |
| lb | pound |
| LCO | limiting condition(s) of operation |
| lpd | liters per day |
| lpm | liters per minute |
| MAI | multiple axial indication |
| MBM | manufacturing burnishing mark |
| MCI | multiple circumferential indications |
| mm | millimeters |
| NDF | no degradation found |
| NQI | non-quantifiable indication |
| NRC | Nuclear Regulatory Commission |
| OD | outside diameter |
| ODI | outside diameter indication |
| ODSCC | outside diameter stress corrosion cracking |
| PLP | possible loose part |
| PPC | pressure pulse cleaning |
| psi | pounds per square inch |
| psig | pounds per square inch gauge (pressure relative to atmospheric pressure) |

| | |
|---|---|
| PWR | pressurized-water reactor |
| PWSCC | primary water stress corrosion cracking |
| RAI | request for additional information |
| RCS | reactor coolant systems |
| RFO | refueling outage |
| RIS | regulatory issue summary |
| RPC | rotating pancake coil |
| SAI | single axial indication |
| SCC | stress corrosion cracking |
| SCI | single circumferential indication |
| SG | steam generator |
| SGOG | Steam Generator Owners Group |
| STS | standard technical specifications |
| TAC | technical assignment control |
| TEC | tube-end cold |
| TEH | tube-end hot |
| TS | technical specification |
| TSC | tubesheet cold |
| TSH | tubesheet hot |
| TSP | tube support plate |
| TSTF | Technical Specification Task Force |
| TT | thermally treated |
| UBIB | upper bundle in bundle |
| UEC | ultrasonic energy cleaning |
| UT | ultrasonic testing |
| UTEC | ultrasonic test eddy current |
| VOL | volumetric |

# 1 INTRODUCTION

## 1.1 Safety Significance

In pressurized-water reactors (PWRs), the primary coolant removes the heat generated from the reactor core. Each primary coolant loop in U.S. PWR designs has one reactor coolant pump and one vertically mounted steam generator. Each unit contains two to four reactor coolant loops. The hot primary coolant enters and leaves the steam generator through nozzles in the hemispherical head(s) of the steam generator. The steam generator tubes supply the primary means for the transfer of heat from the primary system water to the water on the secondary side of the steam generator. This heat transfer boils the water on the secondary side of the steam generator. The primary coolant then returns to the reactor core through the reactor coolant pump, where it is reheated and the cycle is repeated.

Feedwater (secondary coolant) is pumped into the secondary or shell side of the steam generator, where it boils into steam. The steam exits the steam generator through an outlet nozzle and flows to the turbine generator, where it spins the turbine, generating electricity. After exiting the turbine, the steam is condensed into water and pumped back to the steam generator, where the cycle repeats. Figure 1-1 depicts the basic design of a PWR power plant with recirculating steam generators.

Steam generator tubes constitute well over 50 percent of the surface area of the primary pressure boundary in a PWR. This portion of the pressure boundary is an important element in the defense in depth against release of radioactive material from the reactor into the environment. Unlike other parts of the reactor coolant pressure boundary, the barrier to fission product release supplied by the steam generator tubes is not reinforced by the reactor containment. That is, fission products released through leaking or ruptured steam generator tubes can escape directly into the environment through the secondary side of the steam generator. Consequently, the integrity of the steam generator tubes must be ensured with high confidence.

In the event of primary-to-secondary leakage during normal operation or postulated accidents—such as the rupture of the main steam line or feed line—leakage of reactor coolant through the tubes could contaminate the flow in these lines. In addition, leakage of primary coolant through openings in the steam generator tubes could deplete the inventory of water available for the long-term cooling of the core in the event of an accident.

Because of the potential consequences of primary-to-secondary leakage, regulatory limits exist on the amount of primary-to-secondary leakage permitted during normal operation. In addition, PWRs are designed such that operators can rapidly and effectively respond to primary-to-secondary leakage during power operation. For postulated accidents, primary-to-secondary leakage is assumed to exist and is assessed in evaluating the radiological consequences of postulated accidents such as a feedwater or steam line breaks.

Although limits exist for the amount of primary-to-secondary leakage during normal operation, it is possible for a tube to rupture during normal operation. Leakage from a ruptured tube can result in primary-to-secondary leak rates in the range of 378.5 to 2,650 liters per minute (lpm) (100 to 700 gallons per minute (gpm)) depending on the severity of the tube rupture and the capacity of the safety injection/charging system pumps. The design of PWRs allows operators to respond rapidly and effectively to the accidental rupture of one steam generator tube during

power operation. Although PWR designs consider the rupture of a tube during normal power operation, they do not account for a tube rupture concurrent with a postulated accident.

## 1.2 General Steam Generator Design

As of December 2014, the United States had 65 operating PWR units. The three major designers were Westinghouse, Combustion Engineering, and Babcock and Wilcox. The number of steam generators at each unit ranges between two and four. These steam generators are of two basic designs: recirculating or once-through. Westinghouse and Combustion Engineering used recirculating steam generators in their PWR designs while Babcock and Wilcox used once-through steam generators. Figure 1-2 depicts a typical recirculating steam generator and Figure 1-3 depicts a typical once-through steam generator. Recirculating steam generators have tubes that are in the shape of a "U" and are used at 59 PWRs. Once-through steam generators have straight tubes and are used at six PWRs. A listing of units by PWR vendor type is included in Table 1-1.

Recirculating steam generators are designed with an evaporator section and a steam drum section. The steam drum section is the upper part of the steam generator containing the moisture separators. The evaporator section, sometimes called the "tube bundle," is an inverted U-tube heat exchanger containing the tubes. Figure 1-4 shows typical nomenclature used for the U-bend region of a tube. The evaporator section may have a preheater region depending on the model. The preheater, which is a series of baffle plates around a portion of the cold-leg side of the steam generator, enhances heat transfer to the incoming feedwater. Figure 1-2 depicts a typical recirculating steam generator without a preheater, and Figure 1-5 depicts one with a preheater. No moisture separating equipment exists in a once-through steam generator because the steam becomes superheated as it rises on the secondary side of the once-through steam generator.

Because all steam generators in units with thermally treated Alloy 600 tubes are recirculating steam generators, the following discussion focuses on the design and operation of recirculating steam generators.

The recirculating steam generators in the United States are vertical shell and U-tube heat exchangers with integral moisture-separating equipment (Figures 1-2 and 1-5). Heat is transferred from the hot primary coolant to the water on the secondary side of the steam generator as the primary coolant flows through the inverted U-tubes. The primary coolant enters and leaves the steam generators through nozzles in the hemispherical bottom head of the steam generator. Heat transfer from the primary system to the water on the secondary side of the steam generator is accomplished primarily through the steam generator U-tubes.

The main components of the primary side of a recirculating steam generator are the channel head, the divider plate, the tubesheet, and the tubes. The channel head is the region where the primary coolant enters and exits the steam generator (Figure 1-6). The primary coolant exits the steam generator after it flows through the tubes. A plate in the channel head below the tubesheet, called a "divider plate," separates the inlet and outlet primary coolant and directs the flow through the tubes. The tubesheet is a thick low alloy steel (typically SA-508, Class 2a) plate, typically 53 to 61 cm (21 to 24 in.) thick, which serves as the attachment point for the tubes. About 6.35 mm (0.25 in.) of corrosion resistant cladding is typically deposited on the primary face of the tubesheet.

The tubes in operating steam generators in the United States are one of three types: mill-annealed Alloy 600, thermally treated Alloy 600, or thermally treated Alloy 690. Early steam generator designs used tubes fabricated from Alloy 600, which was typically mill annealed by passing the tubes through a furnace to enhance the material's resistance to corrosion. The next generation of steam generators used thermally treated Alloy 600 tubing. The thermal treatment process further improved the tubes' resistance to corrosion. The third generation uses thermally treated Alloy 690 tubing. This tubing is regarded as more resistant to corrosion than the other tubing material and is the material of choice for steam generators in the United States. A listing of operating units by tube material is included in Table 1-2.

The number of tubes in each steam generator varies from unit to unit. The number of tubes can vary from about 3,200 tubes to 15,700 tubes. For units with thermally treated Alloy 600 tubes, the number of tubes in a steam generator varies from approximately 3,200 to nearly 5,700 per steam generator.

The tubes are expanded into the tubesheet for either a portion of the tubesheet (partial depth expansion) or for the entire thickness of the tubesheet (full-depth expansion). Figure 1-7 depicts partial and full depth tube expansions in the tubesheet region. The preference is to use full-depth tube expansions such that no crevice exists between the tube and the tubesheet. A crevice in this region can result in the concentration of chemical impurities between the tube and the tubesheet and can lead to corrosion of the tubes. As of December 2014, all recirculating steam generators have tubes that were expanded for the full depth of the tubesheet (i.e., full-depth tube expansions). Some once-through steam generators have tubes that were only partially expanded into the tubesheets.

Several methods have been used to expand the tube into the tubesheet. Early steam generators had tubes that were expanded by mechanical rolling. Subsequent steam generators had tubes expanded into the tubesheet by explosive means using either the Westinghouse explosive tube expansion method (commonly referred to as WEXTEX expansions) or the Combustion Engineering explansion process. The preferred method for expanding the tubes into the steam generators is by hydraulic means. Using a hydraulic technique to expand the tubes in the tubesheet is expected to result in less stress at the expansion transition and therefore limit the susceptibility of this location to stress-corrosion cracking when compared to tubes that were expanded with other methods (e.g., mechanical rolling). The tubes in all units with thermally treated Alloy 600 tubes were expanded into the tubesheet by hydraulic means. A listing of the units by tube material and method of expansion (including whether it is a full or partial depth expansion) is included in Table 1-3.

The tube-to-tubesheet joint consists of the tube, which is expanded against the wall in one of the holes in the tubesheet; the tube-to-tubesheet weld at the tube end; and the tubesheet. The joint in steam generators with thermally treated Alloy 600 tubing was designed as a welded joint and not as a friction or expansion joint. That is, the weld forms the boundary between the primary and secondary sides of the plant. It was designed to transmit the entire end-cap pressure load (i.e., axial force because of the difference in primary and secondary side pressure) during normal operating and design basis accident conditions from the tube to the tubesheet with no credit taken for the friction developed between the hydraulically expanded tube and the tubesheet.

In steam generators with thermally treated Alloy 600 tubing, the tubes are installed into the tubesheet, tack expanded into the bottom of the tubesheet for about 2.54 centimeters (cm) (1 inch (1-in.)) above the bottom of the tubesheet, welded to the bottom or primary face of the

tubesheet, and then hydraulically expanded for the full depth of the tubesheet. The tack expansion facilitates the welding of the tube to the tubesheet. The transition from the expanded portion of tube within the tubesheet to the unexpanded portion of the tube at the top of the tubesheet is referred to as the expansion transition region of the tube. Figure 1-8 depicts a typical tube-to-tubesheet joint.

All of the tubes in steam generators in Westinghouse-designed PWRs are U-shaped, while the larger radius tubes in some Combustion Engineering designed PWRs have two 90-degree bends (sometimes referred to as square bends). Figure 1-9 depicts a recirculating steam generator with both U-shaped and square bend tubes. Although the steam generators at some Combustion Engineering designed PWRs have square bends, all tubes are typically referred to as “U-tubes.” For the steam generators with tubes that have two 90-degree bends, most of the tubes are square bends rather than U-shaped. The U-shaped tubes in these steam generators are in the lower row tubes (i.e., tubes with smaller bend radii). All of the units with thermally treated Alloy 600 tubes are Westinghouse designed PWRs with Westinghouse designed steam generators and have U-shaped tubes.

The tubes are supported above the tubesheet both in the straight (vertical) portion of the tube and in the U-bend (including square bend) region of the tube. Plates support the tubes in the straight span (or the vertical section) of the tubes in some recirculating and in all once-through steam generators. In the straight span of the other recirculating steam generators, a lattice grid (sometimes referred to as “egg crate”) supports the tubes. The tube supports in the straight span are at a number of fixed axial locations along the length of the tube. In the bent region of the tube, various shaped bars and plates support the tubes. All of the units with thermally treated Alloy 600 tubes have tubes supported by tube support plates along the straight portion of the tube and with V-shaped bars in the U-bend region of the tube. These V-shaped bars are called “anti-vibration bars.”

In the horizontal tube support plates, which support the straight (or vertical) section of the tube, there are openings through which the tubes pass. Figure 1-10 depicts the various types of openings used for most tube supports. In early steam generator designs, these openings in the horizontal tube supports tended to be circular holes (and they were typically referred to as “drilled-hole tube support plates”). Because the crevice between the tube and the drilled hole in the tube support plate can result in concentration of chemical impurities that can lead to corrosion, more advanced designs changed these openings to various shaped holes to limit the crevice and improve the flow through the opening so as to reduce the potential for concentrating chemical impurities. These openings are created by a broaching process and typically are trefoil or quatrefoil holes. A trefoil hole has three lands that are in close proximity to the tube and a quatrefoil hole has four lands.

Early tube support plates and lattice grid supports were fabricated from carbon steel. Because of corrosion of the carbon steel and the resultant denting of the tubes, the tube support material in most subsequent steam generator designs was changed to stainless steel. Denting is the plastic deformation (constriction or mechanical deformation) of the steam generator tubes and can be caused by the buildup of corrosion product between the tube and the tube support plate in the crevice between the hole in the support plate and the tube. Denting can result in increased susceptibility of the tube to cracking because of increased stresses at the dented location. The corrosion resistance of the stainless steel tube supports is expected to eliminate the potential for tube denting. With the exception of Beaver Valley Power Station, Unit 2 (with mill-annealed Alloy 600 tubes), and Davis-Besse Nuclear Power Station (once-through steam generators), all other operating steam generators have stainless steel tube supports. All steam

generators with thermally treated Alloy 600 tubes have tube support plates that were constructed from stainless steel. Table 1-4 lists the units by tube support material and the shape of most of the tube support openings (since some units have a mixture of the type of openings used in the plates).

## 1.3 Steam Generator Program

### 1.3.1 Regulatory Requirements

Steam generator tubes constitute a substantial portion of the reactor coolant pressure boundary and also play a role in fission product containment. As a result, their integrity is important to the safe operation of a PWR. For ensuring steam generator tube integrity, the U.S. Nuclear Regulatory Commission (NRC) uses a regulatory framework that is largely performance based.

In the 1990s, NRC staff, with external stakeholder involvement, began efforts to improve the steam generator regulatory framework. Because of these efforts, the NRC and industry developed modified generic technical specifications for addressing steam generator tube integrity. The generic changes to the standard technical specifications (STS) were submitted by the Technical Specification Task Force (TSTF) and are designated TSTF-449, “Steam Generator Tube Integrity.” The NRC reviewed and approved Revision 4 to TSTF-449. As of September 2007, all PWR units in the United States had adopted technical specification requirements modeled after TSTF-449. However, licensees of all PWR units had been voluntarily putting similar “requirements” into place since the 2000 timeframe. Section 1.7 reflects most of the steam generator inspection, repair, and reporting requirements included in TSTF-449. Because all the units have technical specifications modeled after TSTF-449, the steam generator tube inspection, repair, and reporting requirements are similar at all PWR units.

The technical specifications require developing a steam generator program to ensure that units maintain steam generator tube integrity for the operating interval between tube inspections. The technical specifications define what constitutes tube integrity through the establishment of performance criteria, and the specifications require monitoring primary-to-secondary leakage, inspecting tubes periodically, assessing the condition of the tubes relative to the performance criteria, and defining criteria for plugging tubes.

The requirements in TSTF-449 are largely performance based; however, they are supplemented with some prescriptive requirements. The framework recognizes that there are three combinations of tube materials and heat treatments used in the United States and that the operating experience depends, in part, on the type of material used. Because the approach is performance-based, it can readily accommodate new or unexpected degradation mechanisms and advances in nondestructive examination technology. The program, however, is not intended to address certain forms of degradation that must be prevented by design such as rapidly propagating degradation (e.g., high cycle fatigue). This approach includes programmatic elements to ensure that tubes are adequately monitored and maintained relative to the structural and leakage performance criteria.

The technical specifications are performance-based because they do not specify the details of how to achieve the performance criteria. There are three steam generator performance criteria: structural integrity, accident-induced leakage, and operational leakage. Steam generator tube integrity is maintained when all three of these criteria are met, and steam generators can be operated only when tube integrity is maintained. The structural and accident-induced leakage

performance criteria were based on the design and licensing basis of the plants. The NRC based its operational leakage performance criterion on engineering judgment that considered the need to avoid unnecessary unit shutdowns while limiting the frequency of exceeding the structural integrity performance criterion.

The structural integrity performance criterion requires that margins against tube burst and collapse be maintained during normal operations, transients, and design-basis accidents, including a combination of accidents. The NRC developed these criteria considering design codes such as that of the American Society of Mechanical Engineers Boiler and Pressure Vessel Code.

The NRC has approved some exceptions to the standard structural integrity performance criteria (Section 1.7) on a unit-specific basis. These exceptions relate to tube repair criteria carried out in units with mill-annealed Alloy 600 tubes. These exceptions generally have involved adopting a probabilistic criterion for demonstrating tube integrity during accident conditions (e.g., the probability of tube burst, given a steam line break, shall not exceed $1\times10^{-2}$).

The accident-induced leakage performance criterion requires limiting the amount of primary-to-secondary leakage that would occur during a design-basis accident, other than a tube rupture, to that which was evaluated as part of the unit's licensing basis. Demonstrating compliance with the accident-induced leakage performance criterion, therefore, requires a calculation of the amount of leakage expected during various design-basis accidents. The calculated amount of leakage must be less than that assumed in the accident analyses. Typically, units were designed assuming that primary-to-secondary leakage during postulated accidents would be less than 3.79 lpm (1 gpm). These particular licensing basis analyses were performed to demonstrate that the radiological consequences associated with these design-basis accidents meet the limits in (1) Title 10 of the *Code of Federal Regulations* (10 CFR) Part 100, "Reactor Site Criteria," for offsite doses, and (2) General Design Criterion 19, "Control Room," in Appendix A, "General Design Criteria for Nuclear Power Plants," to 10 CFR Part 50, "Domestic Licensing of Production and Utilization Facilities," for control room operator doses; or (3) some fraction thereof, as appropriate to the accident; or (4) the NRC-approved licensing bases. The accident-induced leakage performance criterion is also intended to ensure that the amount of leakage caused by specific severe accident scenarios will remain at a level that will not increase risk.

The NRC has also approved exceptions to the accident-induced leakage performance criteria on a unit-specific basis. These exceptions are associated with tube repair criteria put into place in units with mill-annealed Alloy 600 tubes. These exceptions generally have allowed more accident-induced leakage during steam-line break accidents, provided the risk associated with such leakage during specific severe accident scenarios remains acceptable.

The operational leakage performance criterion requires limiting primary-to-secondary leakage to a specific value. The limit is unit-specific, but it is no greater than 568 liters per day (lpd) (150 gallons per day (gpd)) through any one steam generator. Although this criterion does not ensure tube integrity, it has been effective in limiting the frequency of tube ruptures and providing an indirect indicator of tube structural and accident-induced leakage integrity. This criterion is important, because it can be monitored while the unit is operating.

The technical specifications require that licensees monitor primary-to-secondary leakage during operation. This specification is performance based, because it does not prescribe how to monitor for this leakage. A related requirement is that licensees must monitor leakage at least

every 72 hours. From a practical standpoint, licensees generally monitor for primary-to-secondary leakage continuously by monitoring various streams (the steam generator blowdown, each main steam line, and the condenser air ejector exhaust) and supplement this continuous sampling through periodically sampling and analyzing the steam generator secondary water for the presence of, or increases in, radioactivity. Most, if not all, units have leakage monitoring programs that are modeled after the Electric Power Research Institute's "PWR [Pressurized-Water Reactor] Primary-to-Secondary Leak Guidelines." In addition, the technical specifications limit the specific activity of the secondary coolant (typically to 0.1 microcurie per gram of dose equivalent iodine-131). The specific activity is used in determining the radiological consequences of primary-to-secondary leakage.

The steam generator inspection requirements in the technical specifications contain both performance-based and prescriptive elements. From a performance-based perspective, licensees are required to assess the types and locations of flaws to which their tubes may be susceptible, and the inspection method, scope, and the interval between inspections must be sufficient to maintain tube integrity until the next inspection. The tubes are inspected with the intent of detecting mechanical or corrosive damage to the tubes from manufacturing or in-service conditions. The inspections also offer a means of characterizing the nature and cause of any steam generator tube degradation so that corrective measures can be taken.

In addition to this performance-based aspect of the inspection requirements, prescriptive inspection requirements also exist. The NRC established these prescriptive requirements to ensure sufficient monitoring of the condition of the tubes. These requirements reflect the improvement in steam generator performance for the various combinations of tube material and heat treatment. In addition, the NRC based these prescriptive inspection requirements on qualitative engineering considerations and experience.

There have been some modifications to the standard inspection requirements at some units. These modifications generally involve specifying inspection requirements associated with tube repair criteria and tube repair methods. For example, many of the units with mill-annealed and thermally treated Alloy 600 tubes have adopted requirements that limit the extent of inspection in the tubesheet region (e.g., in these recirculating steam generators, only the uppermost portion of the tube in the tubesheet is examined, rather than the whole length of the tube in the tubesheet).

For a performance-based approach to be effective, licensees must periodically verify that they are satisfying the performance criteria. As a result, the technical specifications require an assessment to confirm that the tubes have adequate structural and leakage integrity. The licensee must perform this assessment during each outage in which the steam generator tubes are inspected, plugged, or repaired.

The periodic assessment of the inspection results is a critical element of the performance-based strategy. It requires an assessment of whether the tubes exhibited adequate structural and leakage (accident-induced) integrity during the prior operating interval. This type of assessment is referred to as condition monitoring. In addition to the condition monitoring assessment, the condition of the tubes is projected from the current inspection to the next inspection to ensure that the tubes will retain adequate integrity for the next operating interval. This type of assessment is referred to as an operational assessment. It takes place because of the performance-based framework of the technical specifications and because the technical specifications specify the maximum amount of time that is permitted between inspections. In the event that the condition monitoring assessment indicates that tube integrity was not

maintained, it would indicate the need for corrective action. Corrective actions could include more frequent steam generator tube inspections. Exceeding a performance criterion would require reporting to the NRC, under 10 CFR 50.72, “Immediate Notification Requirements for Operating Nuclear Power Reactors,” or 10 CFR 50.73, “Licensee Event Report System.”

The repair criterion (also referred to as the plugging limit or repair limit) in the technical specifications is prescriptive. At a minimum, all units have a depth-based tube repair criterion that requires tubes with flaws that exceed a specific depth to be removed from service. This criterion is consistent with the performance criteria; however, it may be necessary to remove flawed tubes from service even before they exceed the plugging/repair limit. This may be necessary because the criterion was developed with specific assumptions on flaw orientation, the potential for flaw growth during the next operating interval, and uncertainties in measuring the size of the flaw. Plugging tubes before they exceed the plugging/repair limit may be necessary in instances where longer cycle lengths (than those assumed in the development of the depth-based plugging limit) are anticipated, where the growth rate of the flaws is higher than assumed, or the uncertainties in measuring the size of the flaw are greater.

Several units have alternatives to the depth-based repair criterion. These alternatives are only in place in units with mill-annealed and thermally treated Alloy 600 tubes. These include alternatives that allow tubes to remain in service if all flaws are in the lower portion of the tube within the tubesheet (at units with mill annealed Alloy 600 tubes and thermally treated Alloy 600 tubes) and voltage-based repair criteria for flaws at tube support plates (at Beaver Valley 2, which has mill annealed Alloy 600 tubes).

While adopting and carrying out the TSTF-449 requirements, a number of issues related to the implementation of the accident-induced leakage performance criterion and the tube inspection requirements were identified. As a result, NRC staff clarified its position on these issues in Regulatory Issue Summaries 2007-20, “Implementation of Primary-to-Secondary Leakage Performance Criteria,” dated August 23, 2007; and 2009-04, “Steam Generator Tube Inspection Requirements,” dated April 3, 2009.

Regulatory Issue Summary 2007-20 clarified the following issues:

- Potential primary-to-secondary leakage for all design-basis accidents should not exceed the value assumed in the accident analyses.
- Accident-induced leakage includes leakage existing before the accident occurred.
- The temperature at which the volumetric primary-to-secondary flow rate (i.e., leak rate) is evaluated should be consistent with the temperature assumed in the accident analyses.
- The assumptions about the pre- and post-accident leakage rate must be satisfied.
- The normal operating primary-to-secondary leak rate may need to be kept well below the normal operating primary-to-secondary leak rate limit to ensure the unit does not exceed the accident-induced leakage performance criterion.
- The term “most limiting accident” should be clearly defined (e.g., most limiting, since it produces the largest leak rate, or most limiting, since it is the closest to the regulatory limit on radiological doses).

- In the event that a primary-to-secondary leak rate is not assumed for each steam generator, licensees should institute appropriate controls to ensure the unit does not exceed the accident-induced primary-to-secondary leak rate for all steam generators.

- Exceptions (increases) to the risk-informed 3.79 lpm (1 gpm) limit on accident-induced leakage are evaluated on a case-by-case basis.

Regulatory Issue Summary 2009-04 clarified the following issues:

- In the event that a new potential degradation mechanism is identified after the first inspection in the sequential period, a prorated sample for the remaining portion of the sequential period is appropriate for this potentially new degradation mechanism, rather than inspecting all the tubes; however, the scope of inspections should be sufficient to ensure tube integrity.

- The starting point for the second and subsequent sequential periods shall be after the accumulation of the effective full-power months listed in the technical specifications (e.g., the starting point for the 90 effective full-power month period is 120 effective full-power months after the completion of the first in-service inspection).

- The inspection nearest the midpoint of the period can either be before or after the midpoint; however, the inspection at the end of the period must take place during an outage before the end of the period.

Because of some of these issues, the industry proposed modifications to the generic steam generator technical specifications requirements contained in TSTF-449. These new requirements were contained in TSTF-510, Revision 2, "Revision to Steam Generator Program Inspection Frequencies and Tube Sample Selection," which the NRC reviewed and approved. The modifications contained in TSTF-510 included editorial corrections as well as changes and clarifications intended to improve internal consistency, consistency with carrying out industry documents, and usability without changing the intent of the TSTF-449 requirements. One of the more significant changes was the revision to the inspection frequencies for when 100 percent of the tubes must be inspected. Section 1.8 reflects the main steam generator inspection, repair, and reporting requirements included in TSTF-510.

Of the units with thermally treated Alloy 600 steam generator tubes, only Catawba Nuclear Station, Unit 2, and Point Beach Nuclear Plant, Unit 1, have not applied to modify their technical specifications based on TSTF-510 as of December 2014. The reviews for Indian Point Nuclear Generating Unit 2 and Salem Nuclear Generating Station, Unit 1, were on-going as of December 2014, and all other units with thermally treated Alloy 600 had adopted technical specifications based on TSTF-510.

### 1.3.2 Steam Generator Tube Inspections

Eddy current testing (ECT) is the primary means for inspecting steam generator tubes. This method involves inserting a test coil inside the tube (i.e., the primary side of the tube) and pushing and pulling the coil so that it traverses the tube length. The test coil is then "excited" by alternating current, thereby creating a magnetic field that induces eddy currents in the tube wall. Disturbances of the eddy currents caused by flaws in the tube wall (such as cracks, holes, thinned regions, and other defects) produce corresponding changes in the electrical impedance as seen at the test coil terminals. Instruments translate these changes in test coil impedance

into an output that the data analyst can monitor. The observed phase angle response of this output signal can determine the depth of certain types of flaws. Tube specimens with artificially induced flaws of known depth calibrate the test equipment. Geometric discontinuities (such as the expansion transition and dents) and support structures (such as the tubesheet and tube support plates) also produce eddy current signals, making it very difficult to discriminate flaw signals at these locations. NUREG/CR-6365, "Steam Generator Tube Failures" contains a discussion of some of the basic principles of ECT.

Bobbin coil eddy current probes are routinely used to inspect steam generator tubes. The bobbin coil probe permits a rapid screening of the tube for axially oriented and volumetric forms of degradation; however, it has several limitations:

- a general inability to permit characterization of identified degradation (e.g., axial, circumferential, or volumetric; single or multiple axial indications)
- relative insensitivity to detecting circumferentially oriented tube degradation
- limited capability to detect degradation in regions with geometric discontinuities (e.g., expansion transitions, U-bends, and dents) and deposits

Because of the bobbin coil's limitations, inspectors use additional probes. Inspections of steam generator tubes generally employ both a bobbin coil probe and an extra probe, such as a rotating probe, or an array probe (array probes also have bobbin coils associated with the probe). Other types of probes are occasionally used for further characterizing eddy current signals (e.g., a Ghent probe which uses transmit-receive technology). The bobbin coil probe can be pulled through a tube at speeds exceeding 1.02 m (40 in.) per second. Typical rotating probes are pulled through the tubes at much lower speeds (e.g., 2.54 cm (1 in. per second) and the speed of an array probe is between that of a rotating probe and a bobbin probe.

Rotating probes generally contain one to three specialized test coils. The coils used in the rotating probe head during an inspection will depend on many factors including optimizing the coils for detecting the forms of degradation to which a tube may potentially be susceptible. The coils used on a rotating probe may include (1) a pancake coil that is sensitive to both axially and circumferentially oriented degradation, (2) an axially wound coil that is sensitive to circumferentially oriented degradation, (3) a circumferentially wound coil that is sensitive to axially oriented degradation, and (4) a plus-point coil that reduces the effects of geometry variations in the tube and is sensitive to both axially and circumferentially oriented degradation.

Each of the above-mentioned test coils can be designed and driven at specific frequencies to ensure an optimal inspection of the tubing. In general, lower frequencies are better for detecting degradation initiating from the outside diameter of the tube, while higher frequencies are better for detecting degradation initiating from the inside diameter of the tube. The advantages of the rotating probes are that they are sensitive to circumferentially oriented degradation (which the bobbin coil probe is not), can better characterize the defect, and are less sensitive to geometric discontinuities. The major disadvantage of the rotating probes is their slow inspection speed (2.54 cm, or 1 in. per second). Because of this slow inspection speed, rotating probes are only used at specific locations (e.g., U-bends, sleeves, expansion transitions, dents, locations where there is a bobbin coil probe indication, locations where a more sensitive inspection is needed, and locations susceptible to circumferential cracking).

In addition to bobbin and rotating probes, an array probe is also used at some units. The array probe has many of the advantages of the rotating probes, but operates at much higher speeds than a rotating probe.

### 1.3.3 Tube Plugging/Repair Limits

A limit on the size of a flaw in a tube is specified in the unit's technical specification. This limit is typically referred to as the plugging/repair limit. The typical steam generator tube plugging/repair limit is based on the minimum tube wall thickness needed to ensure structural margins are maintained consistent with Regulatory Guide 1.121, "Bases for Plugging Degraded PWR Steam Generator Tubes." Margins must be maintained during both normal operating and postulated accident conditions. The plugging/repair limit allows for eddy current measurement error and incremental degradation that may occur before the next in-service inspection of the tube. The plugging/repair limit is conservatively established according to an assumed mode of degradation in which the walls are uniformly thinned over a significant axial length of tubing. These limits do not consider other structural margins associated with flaws, such as small-volume thinning and pitting, and they do not consider the external structural constraints against gross tube failure that may be supplied by support structures, such as the tubesheet and tube support plates.

Because of its conservative basis, the depth-based plugging/repair limit tends to be overly restrictive for highly localized flaws (such as stress corrosion cracks) and flaws within the tubesheet. As a result, the industry has developed, and the NRC has approved, various alternative plugging/repair limits for specific forms of steam generator tube degradation.

All units have a depth-based plugging/repair limit that is applicable to all forms of steam generator tube degradation. The depth-based plugging/repair limit varies from unit to unit, but is typically 40 percent of the tube wall thickness. That is, tubes with flaws with depths greater than or equal to 40 percent of the tube wall thickness must be plugged (or repaired, if the NRC has approved a repair method for that unit). For operating units with thermally treated Alloy 600 steam generator tubes, only Robinson 2 does not have the standard 40-percent depth-based plugging/repair limit in their technical specifications. Robinson 2 has a depth-based plugging/repair limit of 47-percent throughwall.

Alternatives to the depth-based plugging/repair limit have been approved for some units. These alternatives have usually been developed in response to finding steam generator tube degradation attributed to corrosion processes. Several different alternate repair criteria (or plugging/repair limits) have been approved for units with mill-annealed Alloy 600 steam generator tubes; however, industry did not pursue alternates for units with thermally treated Alloy 600 steam generator tubes until the early 2000s.

Until the fall of 2004, no instances of stress corrosion cracking affecting the region of the tube contained within the tubesheet had been reported in the United States at units with thermally treated Alloy 600 tubing. As a result, most units were not inspecting the entire portion of the tube within the tubesheet region with eddy current test probes capable of reliably detecting stress corrosion cracking. Rather, probes capable of detecting stress corrosion cracking were only being used in a region extending from 7.6 cm (3 in.) above to 7.6 cm (3 in.) below the top of the tubesheet. This region includes the tube-expansion transition, which contains significant residual stress, and which is considered a likely location to develop stress corrosion cracking. In addition, it is difficult to detect wear in this region with a bobbin coil.

In the fall of 2004, crack-like indications were found in tubes in the tubesheet region at one unit with thermally treated alloy 600 tubing. The crack-like indications were found in bulges (or over-expansions) in the tubesheet region and also near the tube end.

Given the detection of these cracks and subsequent cracks detected at other units with thermally treated Alloy 600 tubes, the U.S. industry extended the eddy current inspection region to the bottom of the tubesheet. The industry also sought an approach to relax the tube inspection requirements and plugging/repair limits for a portion of the tube within the tubesheet. The basis for this relaxation was that the interference friction fit between the tube and the tubesheet would ensure tube integrity provided that there was at least a minimum engagement distance of sound (unflawed) material between the tube and the tubesheet. That is, the friction between the tube and the tubesheet would hold the tube in place and limit leakage to acceptable levels. As a result, reliance on the tube-to-tubesheet weld to supply this function would no longer be needed. The minimum engagement distance is referred to as the H* (pronounced H-star) distance. The "H" reflects that the tube was hydraulically expanded into the tubesheet. Figure 1-11 graphically depicts the H* distance in the tube-to-tubesheet joint.

From about 2004 through 2012, the industry submitted various requests to limit the extent of tube inspections in the tubesheet region thereby allowing flaws that may be in the region not required to be inspected to remain in service. Because of technical issues identified during the review of these submittals, NRC staff did not give permanent approval initially for an H* amendment. Rather, NRC staff permitted implementation for a short period of time (typically one fuel cycle), which considered, in part, the state of degradation in the steam generator and the technical merits of the proposal. In the 2008-2009 timeframe, NRC staff questioned the overall validity of H*. As a result, amendments approved at that time relied on the orientation of the flaws (axial or circumferential), the size (e.g., circumferential extent) of the flaws, and the location of the flaws within the tubesheet. These criteria were referred to as the "interim alternate repair criteria" (iARC). After the industry addressed NRC staff technical concerns, NRC staff approved its first permanent H* amendment in 2012. A summary of the H* amendments approved at all units with thermally treated Alloy 600 tubing is supplied in Table 1-5. All units with thermally treated Alloy 600 tubes except for Point Beach 1 currently have H* approved on a permanent basis.

With the adoption of H*, the plant's technical specifications were modified. Specifically, for the permanent H* amendments, the tube plugging/repair limits were modified to require that the following alternate tube repair criteria shall be applied as an alternate to the depth-based plugging/repair limit:

> Tubes with service-induced flaws located greater than x inches below the top of the tubesheet do not require plugging. Tubes with service-induced flaws located in the portion of the tube from the top of the tubesheet to x inches below the top of the tubesheet shall be plugged on detection.

The "x" is the H* distance in Table 1-5, and is unit-specific.

In addition, the tube inspection requirements in the technical specifications were modified to indicate:

> Portions of the tube below x inches below the top of the tubesheet are excluded from this requirement.

Lastly, the reporting requirements in the technical specifications were modified as part of the permanent H* amendments to include the following reporting requirements:

- The primary-to-secondary leakage rate observed in each steam generator (if it is not practical to assign the leakage to an individual steam generator, the entire primary-to-secondary leakage should be conservatively assumed to be from one steam generator) during the cycle preceding the inspection that is the subject of the report.

- The calculated accident-induced leakage rate from the portion of the tubes below x inches from the top of the tubesheet for the most limiting accident in the most limiting steam generator. In addition, if the calculated accident-induced leakage rate from the most limiting accident is less than y times the maximum operational primary-to-secondary leakage rate, the report should describe how it was determined.

- The results of monitoring for tube axial displacement (slippage). If slippage is discovered, the implications of the discovery and corrective action shall be provided.

The “y” is the leakage factor in Table 1-5 and is unit-specific.

For implementation of H*, the tubes are monitored to make sure they are not moving within the tubesheet (since a tube may be severed beneath the H* distance because of a 360-degree, 100-percent throughwall circumferential flaw). Tubes are monitored for slippage through review of the bobbin coil data. Several units will consider a tube potentially severed if the bobbin signal is greater than 50 volts and has a phase angle between 25 and 50 degrees.

### 1.3.4 Tube Plugging and Repair

The technical specifications set plugging/repair limits for the maximum allowable wall degradation beyond which the tubes must be removed from service by plugging or repaired by methods such as sleeving. The plugging technique involves installing plugs at the tube inlet and outlet. After plugging, the tube no longer functions as the boundary between the primary and secondary coolant systems. All units are permitted to take tubes out of service by tube plugging.

To prolong the life of severely degraded steam generator tubes, some units, with prior NRC approval, have repaired tubes with flaws by sleeving. A sleeve is a pipe of shorter length (typically a few feet) and smaller diameter than the tube into which it is inserted. The sleeve is positioned to span the flawed portion of the original (parent) tube and the ends of the sleeve are secured to the parent tube forming a new pressure boundary. The sleeve and its attachment joints form a new pressure boundary; thereby, removing the flawed region from the pressure boundary. There are at least two joints in a sleeve: one at the top of the sleeve and the other at the bottom of the sleeve. Sleeves vary in length and are typically attached to the parent tube either by welding or expansion (e.g., hydraulic expansion). A variety of sleeve designs have been used, but the only sleeves currently in service (December 2014) are leak limiting Alloy 800 sleeves with hydraulic expansions. Alloy 800 is a nickel-iron-chromium alloy with a relatively low nickel content when compared to Alloy 600 and Alloy 690.

After sleeving, the repaired tube may remain in service. Although a number of units have repaired steam generator tubes by sleeving in the past, only Callaway had installed sleeves in thermally treated Alloy 600 steam generator tubes. This sleeving was in their original steam generators. Of the units with thermally treated Alloy 600 tubes, none are authorized to repair

their tubes by sleeving. In fact, only Beaver Valley 2, with mill-annealed Alloy 600 steam generator tubes, is authorized to repair tubes by sleeving. Figure 1-12 depicts a leak limiting Alloy 800 sleeve used to repair tubes with flaws in the tubesheet region or with flaws at/near the top of the tubesheet. Figure 1-13 depicts a leak limiting Alloy 800 sleeve used to repair tubes with flaws near a horizontal tube support.

## 1.4 Mill-Annealed Alloy 600 Steam Generator Operating Experience

A variety of steam generator designs exist in the United States. A number of factors can affect the susceptibility of steam generator tubes to degradation, including the operating environment (temperature and water chemistry), the tube material and its heat treatment, and operating and residual stresses. One of the most important factors is the tube material and its heat treatment. Early steam generator designs used tubes fabricated from Alloy 600, which were typically mill-annealed by passing the tubes through a furnace at a temperature high enough to recrystallize the material and dissolve the carbon. The carbon content and the mill annealing temperature are important parameters for controlling the mechanical and corrosion properties of Alloy 600. As discussed in NUREG/CR-6365, the purpose of the mill annealing is to dissolve all the carbides, enlarge the grain size, and then cover the grain boundaries with carbides during slow cooling in air. Alloy 600 with insufficient carbides at the grain boundaries is more susceptible to primary water stress corrosion cracking. Undissolved intragranular carbides are undesirable because they supply nucleation sites for the dissolved carbon and prevent precipitation of the carbides on the grain boundaries. Undissolved carbides also prevent the grains from growing. The smaller grains have a much larger grain boundary area per unit of volume, and the carbides do not properly cover the boundaries.

Tubes installed in U.S. nuclear steam generators placed in service in the 1960s and 1970s were usually only mill-annealed. The annealing temperature depended on the manufacturer's practice at the time. Over 30 years of operating experience has shown mill-annealed Alloy 600 is susceptible to various forms of degradation in the steam generator operating environment. The types of degradation affecting mill-annealed Alloy 600 steam generator tubes include pitting, wear, thinning, wastage, and stress corrosion cracking. The orientation of the stress corrosion cracking can be axial, circumferential, or volumetric. Degradation, of one form or another, has been observed on virtually every portion of the tube. Figure 1-14 illustrates most of the forms of degradation experienced. Although this figure represents a steam generator with U-shaped tubes, once-through steam generators (with straight tubes) have also experienced many of the same types of degradation.

The extensive tube degradation at PWRs with mill-annealed Alloy 600 steam-generator tubes resulted in numerous primary-to-secondary leaks, about nine domestic tube ruptures, many midcycle steam generator tube inspections, and the replacement of steam generators at many units. In addition, extensive tube degradation has contributed to the shutdown of other units. Haddam Neck, Maine Yankee, Trojan, Zion 1, Zion 2, and San Onofre 1 permanently ceased operation with significant amounts of tube degradation. As of December 2014, 59 units in the United States had replaced their original mill-annealed Alloy 600 steam generators. With one exception (Palisades Nuclear Plant), the replacement steam generators typically had more advanced tube materials. A listing of the units that replaced their steam generators is provided in Table 1-6. This table also supplies the model and tube material of the replacement steam generator. Of the 59 units that have replaced steam generators, four have subsequently permanently ceased operation: Crystal River Nuclear Generating Plant, Unit 3; Kewaunee

Power Station, and San Onofre, Units 2 and 3. Operating experience for units with mill-annealed Alloy 600 steam generator tubes is well documented.

## 1.5 Thermally Treated Alloy 600 Tubes

As mill-annealed Alloy 600 steam generator tubes began exhibiting degradation in the early 1970s, improvements in the design of future steam generators were pursued to limit the likelihood of corrosion. Mill-annealed Alloy 600 tubes are generally resistant to chloride stress corrosion cracking, but are susceptible to caustic stress corrosion cracking. The tube material and its heat treatment were of particular importance in these improved designs. The first major advance in limiting the corrosion susceptibility of the steam generator tubes was using a thermal-treatment process to improve the tube's microstructure and thereby its corrosion resistance.

In the late 1970s, some mill-annealed Alloy 600 tubes were subjected to this thermal-treatment process to relieve fabrication stresses and to further improve the tube's microstructure. In this process, the tubes were subjected to high temperatures (about 705 degrees Celsius, or 1,301 degrees Fahrenheit) for 10 to 15 hours. This process promotes carbide precipitation at the grain boundaries and diffusion of chromium to the regions adjacent to the grain boundaries. Alloy 600 with insufficient carbides at the grain boundaries is more susceptible to primary water stress corrosion cracking, and chromium depletion at the grain boundaries makes the material more susceptible to outside-diameter stress corrosion cracking.

This thermal treatment process was first used on tubes installed in replacement steam generators placed into service in the early 1980s. Thermally treated Alloy 600 is used in 17 units. Another unit, Callaway, had steam generators in which only the first 10 rows had thermally treated Alloy 600 tubes and the remaining rows had mill-annealed Alloy 600 tubes; however, these steam generators were replaced in 2005 with steam generators containing thermally treated Alloy 690 tubes. Steam generators at other units (e.g., in the original steam generators at South Texas Project, Unit 2) had some thermally treated tubes; however, the number of these tubes at these units is insignificant and are not discussed in this report. Thermally treated Alloy 600 is considered to be highly resistant but not immune to primary water stress corrosion cracking compared to mill-annealed Alloy 600 tubes.

Steam generators with thermally treated Alloy 600 tubes were first placed in service in 1980. Figure 1-15 is a graph of the deployment of steam generators with thermally treated Alloy 600 tubes. All units with thermally treated Alloy 600 steam generator tubes are Westinghouse-designed PWR units with Westinghouse-designed steam generators.

Table 1-7 lists all the units with thermally treated Alloy 600 tubes as of December 2014. The table reveals two populations of units with thermally treated Alloy 600 tubes: (1) units that replaced their original steam generators (containing mill-annealed tubes) with ones containing thermally treated Alloy 600 tubes, and (2) units whose original steam generators were initially fabricated with thermally treated Alloy 600 tubes. All of the latter units have Westinghouse model D5 and F steam generators.

In addition to the advanced tubing material, steam generators with thermally treated Alloy 600 tubes have other features to increase the tubes' resistance to degradation. One design improvement was to expand the tubes into the tubesheet by hydraulic means rather than by roll expansion or explosive expansion methods. Hydraulic expansion reduces the residual stresses

at the expansion transition region, reducing the potential for stress corrosion cracking. In addition, the expansion process (as with all full-depth expansion processes) closes the crevice between the tube and the tubesheet hole, which is a region where dryout can concentrate chemicals if the crevice remains open. Another design improvement in these newer steam generators is using stainless steel tube supports rather than carbon steel tube supports. Stainless steel is less susceptible to corrosion than the carbon steel used for the tube support plates in earlier designs. The carbon steel plates corroded and formed magnetite, which filled the crevice between the tubes and the tube support plates, denting the tubes. Denting is the constricting or mechanical deformation of a tube. Another design improvement was the use of quatrefoil holes rather than round holes. The quatrefoil holes promote high-velocity flow along the tube, sweeping impurities away from the support plate locations. The quatrefoil hole design also limits the contact between the tube and the support plate to four narrow lands, minimizing local dryout and chemical concentration.

Table 1-8 indicates the number of calendar years that steam generators with thermally treated Alloy 600 tubes have been in service. This table also includes the number of years the original steam generators with mill-annealed Alloy 600 tubes were in service for units that replaced their steam generators with ones containing thermally treated Alloy 600 tubes. Several units that replaced their steam generators in the early 1980s have operated over three times as long with their replacement steam generators. This table clearly illustrates the improvements made in the design and operation of early replacement steam generators. The average age of steam generators with thermally treated Alloy 600 tubes is about 26 years as of December 2013.

Although thermally treated Alloy 600 is no longer the material of choice for new or replacement steam generators, it is used in a number of units and has been in service for over 30 years. The operating experience with thermally treated Alloy 600 could offer insights into the behavior of newer steam generator materials such as thermally treated Alloy 690, which is the preferred material for tubes in new and replacement steam generators. NUREG-1771, “U.S. Operating Experience with Thermally Treated Alloy 600 Steam Generator Tubes,” documents the operating experience associated with thermally treated Alloy 600 as of December 2001. Sections 3 and 4, below, summarizes the operating experience with thermally treated Alloy 600 tubes through December 2013, with some information from 2014 included.

## 1.6 Thermally Treated Alloy 690 Tubes

The operating experience with thermally treated Alloy 690 tubes through December 2004 was summarized in NUREG-1841, “U.S. Operating Experience with Thermally Treated Alloy 690 Steam Generator Tubes.” As of December 2014, no corrosion related degradation has been detected in thermally treated Alloy 690 tubes.

Of the 65 operating PWRs in December 2014, about 3 percent have mill-annealed Alloy 600 steam generator tubes (Beaver Valley 2 and Palisades), about 26 percent have thermally treated Alloy 600 steam generator tubes, and about 71 percent have thermally treated Alloy 690 steam generator tubes.

## 1.7 TSTF-449

The following represents most of the technical and reporting requirements that a unit would incorporate into its technical specifications when it adopts TSTF-449.

Steam Generator Program

A Steam Generator (SG) Program shall be established and implemented to ensure that SG tube integrity is maintained. In addition, the Steam Generator Program shall include the following provisions:

a. Provisions for condition monitoring assessments. Condition monitoring assessment means an evaluation of the "as found" condition of the tubing with respect to the performance criteria for structural integrity and accident-induced leakage. The "as found" condition refers to the condition of the tubing during an SG inspection outage, as determined from the inservice inspection results or by other means, prior to the plugging [or repair] of tubes. Condition monitoring assessments shall be conducted during each outage during which the SG tubes are inspected, plugged, [or repaired] to confirm that the performance criteria are being met.

b. Performance criteria for SG tube integrity. SG tube integrity shall be maintained by meeting the performance criteria for tube structural integrity, accident-induced leakage, and operational LEAKAGE.

    1. Structural integrity performance criterion: All in-service steam generator tubes shall retain structural integrity over the full range of normal operating conditions (including startup, operation in the power range, hot standby, and cool down and all anticipated transients included in the design specification) and design basis accidents. This includes retaining a safety factor of 3.0 against burst under normal steady state full power operation primary-to-secondary pressure differential and a safety factor of 1.4 against burst applied to the design-basis accident primary-to-secondary pressure differentials. Apart from the above requirements, additional loading conditions associated with the design-basis accidents, or combination of accidents in accordance with the design and licensing basis, shall also be evaluated to determine if the associated loads contribute significantly to burst or collapse. In the assessment of tube integrity, those loads that do significantly affect burst or collapse shall be determined and assessed in combination with the loads due to pressure with a safety factor of 1.2 on the combined primary loads and 1.0 on axial secondary loads.

    2. Accident induced leakage performance criterion: The primary to secondary accident induced leakage rate for any design basis accident, other than a SG tube rupture, shall not exceed the leakage rate assumed in the accident analysis in terms of total leakage rate for all SGs and leakage rate for an individual SG. Leakage is not to exceed [1 gpm] per SG [,except for specific types of degradation at specific locations as described in paragraph c of the Steam Generator Program].

    3. The operational LEAKAGE performance criterion is specified in LCO a.b.cd, "RCS Operational LEAKAGE."

c. Provisions for SG tube repair criteria. Tubes found by inservice inspection to contain flaws with a depth equal to or exceeding [40%] of the nominal tube wall thickness shall be plugged [or repaired].

    [The following alternate tube repair criteria may be applied as an alternative to the 40-percent depth-based criteria:]

d. Provisions for SG tube inspections. Periodic SG tube inspections shall be performed. The number and portions of the tubes inspected and methods of inspection shall be performed with the objective of detecting flaws of any type (e.g., volumetric flaws, axial and circumferential cracks) that may be present along the length of the tube, from the tube-to-tubesheet weld at the tube inlet to the tube-to-tubesheet weld at the tube outlet, and that may satisfy the applicable tube repair criteria. The tube-to-tubesheet weld is not part of the tube. In addition to meeting the requirements of d.1, d.2, and d.3 below, the inspection scope, inspection methods, and inspection intervals shall be such as to ensure that SG tube integrity is maintained until the next SG inspection. An assessment of degradation shall be performed to determine the type and location of flaws to which the tubes may be susceptible and, based on this assessment, to determine which inspection methods need to be used and at what locations.

1. Inspect 100% of the tubes in each SG during the first refueling outage following SG replacement.

2. *For units with mill-annealed Alloy 600 tubes:* Inspect 100% of the tubes at sequential periods of 60 effective full power months. The first sequential period shall be considered to begin after the first inservice inspection of the SGs. No SG shall operate for more than 24 effective full-power months or one refueling outage (whichever is less) without being inspected.

   *For units with thermally treated Alloy 600 tubes:* Inspect 100% of the tubes at sequential periods of 120, 90, and, thereafter, 60 effective full-power months. The first sequential period shall be considered to begin after the first in-service inspection of the SGs. In addition, inspect 50% of the tubes by the refueling outage nearest the midpoint of the period and the remaining 50% by the refueling outage nearest the end of the period. No SG shall operate for more than 48 effective full power months or two refueling outages (whichever is less) without being inspected.

   *For units with thermally treated Alloy 690 tubes:* Inspect 100% of the tubes at sequential periods of 144, 108, 72, and, thereafter, 60 effective full power months. The first sequential period shall be considered to begin after the first inservice inspection of the SGs. In addition, inspect 50% of the tubes by the refueling outage nearest the midpoint of the period and the remaining 50% by the refueling outage nearest the end of the period. No SG shall operate for more than 72 effective full power months or three refueling outages (whichever is less) without being inspected.

3. If crack indications are found in any SG tube, then the next inspection for each SG for the degradation mechanism that caused the crack indication shall not exceed 24 effective full power months or one refueling outage (whichever is less). If definitive information, such as from examination of a pulled tube, diagnostic non-destructive testing, or engineering evaluation indicates that a crack-like indication is not associated with a crack(s), then the indication need not be treated as a crack.

e. Provisions for monitoring operational primary-to-secondary LEAKAGE.

f. [Provisions for SG tube repair methods. Steam generator tube repair methods shall provide the means to reestablish the RCS pressure boundary integrity of SG tubes without removing

the tube from service. For the purposes of these Specifications, tube plugging is not a repair. All acceptable tube repair methods are listed below.]

Steam Generator Tube Inspection Report

A report shall be submitted within 180 days after the initial entry into MODE 4 following completion of an inspection performed in accordance with the Specification x.y.z, Steam Generator (SG) Program. The report shall include:

a. the scope of inspections performed on each SG,

b. active degradation mechanisms found,

c. nondestructive examination techniques utilized for each degradation mechanism,

d. location, orientation (if linear), and measured sizes (if available) of service-induced indications,

e. number of tubes plugged [or repaired] during the inspection outage for each active degradation mechanism,

f. total number and percentage of tubes plugged [or repaired] to date,

g. the results of condition monitoring, including the results of tube pulls and in-situ testing,

[h. the effective plugging percentage for all plugging [and tube repairs] in each SG, and]

[i. repair method utilized and the number of tubes repaired by each repair method.]

## 1.8 TSTF-510

The following represents most of the technical and reporting requirements that a unit would incorporate into its technical specifications when it adopts TSTF-510.

Steam Generator (SG) Program

A Steam Generator Program shall be established and implemented to ensure that SG tube integrity is maintained. In addition, the Steam Generator Program shall include the following:

a. Provisions for condition monitoring assessments. Condition monitoring assessment means an evaluation of the “as found” condition of the tubing with respect to the performance criteria for structural integrity and accident induced leakage. The “as found” condition refers to the condition of the tubing during an SG inspection outage, as determined from the inservice inspection results or by other means, prior to the plugging [or repair] of tubes. Condition monitoring assessments shall be conducted during each outage during which the SG tubes are inspected, plugged, [or repaired] to confirm that the performance criteria are being met.

b. Performance criteria for SG tube integrity. SG tube integrity shall be maintained by meeting the performance criteria for tube structural integrity, accident induced leakage, and operational LEAKAGE.

1. Structural integrity performance criterion: All in-service steam generator tubes shall retain structural integrity over the full range of normal operating conditions (including startup, operation in the power range, hot standby, and cool down), all anticipated transients included in the design specification, and design basis accidents. This includes retaining a safety factor of 3.0 against burst under normal steady state full power operation primary-to-secondary pressure differential and a safety factor of 1.4 against burst applied to the design basis accident primary-to-secondary pressure differentials. Apart from the above requirements, additional loading conditions associated with the design basis accidents, or combination of accidents in accordance with the design and licensing basis, shall also be evaluated to determine if the associated loads contribute significantly to burst or collapse. In the assessment of tube integrity, those loads that do significantly affect burst or collapse shall be determined and assessed in combination with the loads due to pressure with a safety factor of 1.2 on the combined primary loads and 1.0 on axial secondary loads.

2. Accident-induced leakage performance criterion: The primary to secondary accident induced leakage rate for any design basis accident, other than a SG tube rupture, shall not exceed the leakage rate assumed in the accident analysis in terms of total leakage rate for all SGs and leakage rate for an individual SG. Leakage is not to exceed [1 gpm] per SG [, except for specific types of degradation at specific locations as described in paragraph c of the Steam Generator Program].

3. The operational LEAKAGE performance criterion is specified in LCO a.b.cd, "RCS Operational LEAKAGE."

c. Provisions for SG tube plugging [or repair] criteria. Tubes found by inservice inspection to contain flaws with a depth equal to or exceeding [40%] of the nominal tube wall thickness shall be plugged [or repaired].

[The following alternate tube plugging [or repair] criteria may be applied as an alternative to the 40% depth based criteria:]

d. Provisions for SG tube inspections. Periodic SG tube inspections shall be performed. The number and portions of the tubes inspected and methods of inspection shall be performed with the objective of detecting flaws of any type (e.g., volumetric flaws, axial and circumferential cracks) that may be present along the length of the tube, from the tube-to-tubesheet weld at the tube inlet to the tube-to-tubesheet weld at the tube outlet, and that may satisfy the applicable tube plugging [or repair] criteria. The tube-to-tubesheet weld is not part of the tube. In addition to meeting the requirements of d.1, d.2, and d.3 below, the inspection scope, inspection methods, and inspection intervals shall be such as to ensure that SG tube integrity is maintained until the next SG inspection. A degradation assessment shall be performed to determine the type and location of flaws to which the tubes may be susceptible and, based on this assessment, to determine which inspection methods need to be employed and at what locations.

1. Inspect 100% of the tubes in each SG during the first refueling outage following SG installation.

2. *For units with mill annealed Alloy 600 tubes:* After the first refueling outage following SG installation, inspect each steam generator at least every 24 effective full power months or at least every refueling outage (whichever results in more frequent inspections). In addition, inspect 100% of the tubes at sequential periods of 60 effective full-power months beginning after the first refueling outage inspection following SG installation. Each 60 effective full power month inspection period may be extended up to 3 effective full power months to include a SG inspection outage in an inspection period and the subsequent inspection period begins at the conclusion of the included SG inspection outage. If a degradation assessment indicates the potential for a type of degradation to occur at a location not previously inspected with a technique capable of detecting this type of degradation at this location and that may satisfy the applicable tube plugging criteria, the minimum number of locations inspected with such a capable inspection technique during the remainder of the inspection period may be prorated. The fraction of locations to be inspected for this potential type of degradation at this location at the end of the inspection period shall be no less than the ratio of the number of times the SG is scheduled to be inspected in the inspection period after the determination that a new form of degradation could potentially be occurring at this location divided by the total number of times the SG is scheduled to be inspected in the inspection period.

   *For units with thermally treated Alloy 600 tubes:* After the first refueling outage following SG installation, inspect each SG at least every 48 effective full power months or at least every other refueling outage (whichever results in more frequent inspections). In addition, the minimum number of tubes inspected at each scheduled inspection shall be the number of tubes in all SGs divided by the number of SG inspection outages scheduled in each inspection period as defined in a, b, and c below. If a degradation assessment indicates the potential for a type of degradation to occur at a location not previously inspected with a technique capable of detecting this type of degradation at this location and that may satisfy the applicable tube-plugging criteria, the minimum number of locations inspected with such a capable inspection technique during the remainder of the inspection period may be prorated. The fraction of locations to be inspected for this potential type of degradation at this location at the end of the inspection period shall be no less than the ratio of the number of times the SG is scheduled to be inspected in the inspection period after the determination that a new form of degradation could potentially be occurring at this location divided by the total number of times the SG is scheduled to be inspected in the inspection period. Each inspection period defined below may be extended up to 3 effective full power months to include a SG inspection outage in an inspection period and the subsequent inspection period begins at the conclusion of the included SG inspection outage.

   a) After the first refueling outage following SG installation, inspect 100% of the tubes during the next 120 effective full power months. This constitutes the first inspection period;

b) During the next 96 effective full power months, inspect 100% of the tubes. This constitutes the second inspection period; and

c) During the remaining life of the SGs, inspect 100% of the tubes every 72 effective full power months. This constitutes the third and subsequent inspection periods.

*For units with thermally treated Alloy 690 tubes:* After the first refueling outage following SG installation, inspect each SG at least every 72 effective full power months or at least every third refueling outage (whichever results in more frequent inspections). In addition, the minimum number of tubes inspected at each scheduled inspection shall be the number of tubes in all SGs divided by the number of SG inspection outages scheduled in each inspection period as defined in a, b, c and d below. If a degradation assessment indicates the potential for a type of degradation to occur at a location not previously inspected with a technique capable of detecting this type of degradation at this location and that may satisfy the applicable tube plugging criteria, the minimum number of locations inspected with such a capable inspection technique during the remainder of the inspection period may be prorated. The fraction of locations to be inspected for this potential type of degradation at this location at the end of the inspection period shall be no less than the ratio of the number of times the SG is scheduled to be inspected in the inspection period after the determination that a new form of degradation could potentially be occurring at this location divided by the total number of times the SG is scheduled to be inspected in the inspection period. Each inspection period defined below may be extended up to 3 effective full power months to include a SG inspection outage in an inspection period and the subsequent inspection period begins at the conclusion of the included SG inspection outage.

a) After the first refueling outage following SG installation, inspect 100% of the tubes during the next 144 effective full power months. This constitutes the first inspection period;

b) During the next 120 effective full power months, inspect 100% of the tubes. This constitutes the second inspection period;

c) During the next 96 effective full power months, inspect 100% of the tubes. This constitutes the third inspection period; and

d) During the remaining life of the SGs, inspect 100% of the tubes every 72 effective full power months. This constitutes the fourth and subsequent inspection periods.

3. If crack indications are found in any SG tube, then the next inspection for each affected and potentially affected SG for the degradation mechanism that caused the crack indication shall not exceed 24 effective full power months or one refueling outage (whichever results in more frequent inspections). If definitive information, such as from examination of a pulled tube, diagnostic non-

destructive testing, or engineering evaluation indicates that a crack-like indication is not associated with a crack(s), then the indication need not be treated as a crack.

e. Provisions for monitoring operational primary-to-secondary LEAKAGE.

f. [Provisions for SG tube repair methods. Steam generator tube repair methods shall provide the means to reestablish the RCS pressure boundary integrity of SG tubes without removing the tube from service. For the purposes of these Specifications, tube plugging is not a repair. All acceptable tube repair methods are listed below.]

Steam Generator Tube Inspection Report

A report shall be submitted within 180 days after the initial entry into MODE 4 following completion of an inspection performed in accordance with the Specification x.y.z, "Steam Generator (SG) Program." The report shall include:

a. The scope of inspections performed on each SG,

b. Degradation mechanisms found,

c. Nondestructive examination techniques utilized for each degradation mechanism,

d. Location, orientation (if linear), and measured sizes (if available) of service induced indications,

e. Number of tubes plugged [or repaired] during the inspection outage for each degradation mechanism,

f. The number and percentage of tubes plugged [or repaired] to date, and the effective plugging percentage in each steam generator,

g. The results of condition monitoring, including the results of tube pulls and in-situ testing,

[h. Repair method utilized and the number of tubes repaired by each repair method.]

## Table 1-1: Unit Listing by PWR Vendor (12/2014)

| **Babcock and Wilcox** – 6 units | |
|---|---|
| Arkansas Nuclear One - 1 | Oconee 2 |
| Davis-Besse | Oconee 3 |
| Oconee 1 | Three Mile Island 1 |
| **Combustion Engineering** – 12 units | |
| Arkansas Nuclear One - 2 | Palo Verde 1 |
| Calvert Cliffs 1 | Palo Verde 2 |
| Calvert Cliffs 2 | Palo Verde 3 |
| Fort Calhoun | St. Lucie 1 |
| Millstone 2 | St. Lucie 2 |
| Palisades | Waterford 3 |
| **Westinghouse** – 47 units | |
| Beaver Valley 1 | North Anna 1 |
| Beaver Valley 2 | North Anna 2 |
| Braidwood 1 | Point Beach 1 |
| Braidwood 2 | Point Beach 2 |
| Byron 1 | Prairie Island 1 |
| Byron 2 | Prairie Island 2 |
| Callaway | Robinson 2 |
| Catawba 1 | Salem 1 |
| Catawba 2 | Salem 2 |
| Comanche Peak 1 | Seabrook |
| Comanche Peak 2 | Sequoyah 1 |
| Cook 1 | Sequoyah 2 |
| Cook 2 | South Texas Project 1 |
| Diablo Canyon 1 | South Texas Project 2 |
| Diablo Canyon 2 | Summer |
| Farley 1 | Surry 1 |
| Farley 2 | Surry 2 |
| Ginna | Turkey Point 3 |
| Harris | Turkey Point 4 |
| Indian Point 2 | Vogtle 1 |
| Indian Point 3 | Vogtle 2 |
| McGuire 1 | Watts Bar 1 |
| McGuire 2 | Wolf Creek |
| Millstone 3 | |

## Table 1-2: Unit Listing by Tube Material (12/2014)

| **Mill-Annealed Alloy 600** – 2 units | |
|---|---|
| Beaver Valley 2 | Palisades |
| **Thermally Treated Alloy 600** – 17 units | |
| Braidwood 2 | Seabrook |
| Byron 2 | Surry 1 |
| Catawba 2 | Surry 2 |
| Comanche Peak 2 | Turkey Point 3 |
| Indian Point 2 | Turkey Point 4 |
| Millstone 3 | Vogtle 1 |
| Point Beach 1 | Vogtle 2 |
| Robinson 2 | Wolf Creek |
| Salem 1 | |
| **Thermally Treated Alloy 690** – 46 units | |
| Arkansas Nuclear One - 1 | Millstone 2 |
| Arkansas Nuclear One - 2 | North Anna 1 |
| Beaver Valley 1 | North Anna 2 |
| Braidwood 1 | Oconee 1 |
| Byron 1 | Oconee 2 |
| Callaway | Oconee 3 |
| Calvert Cliffs 1 | Palo Verde 1 |
| Calvert Cliffs 2 | Palo Verde 2 |
| Catawba 1 | Palo Verde 3 |
| Comanche Peak 1 | Point Beach 2 |
| Cook 1 | Prairie Island 1 |
| Cook 2 | Prairie Island 2 |
| Davis-Besse | Salem 2 |
| Diablo Canyon 1 | Sequoyah 1 |
| Diablo Canyon 2 | Sequoyah 2 |
| Farley 1 | South Texas Project 1 |
| Farley 2 | South Texas Project 2 |
| Fort Calhoun | St. Lucie 1 |
| Ginna | St. Lucie 2 |
| Harris | Summer |
| Indian Point 3 | Three Mile Island 1 |
| McGuire 1 | Waterford 3 |
| McGuire 2 | Watts Bar 1 |

**Table 1-3: Unit Listing by Tube Expansion Type and Material (12/2014)**

| EXPANSION TYPE - TUBE MATERIAL | UNIT NAME | |
|---|---|---|
| Full-Depth Hardroll - Mill Annealed Alloy 600 | Beaver Valley 2 | |
| Full Depth Explosive - Mill Annealed Alloy 600 | Palisades | |
| Full-Depth Hydraulic - Thermally Treated Alloy 600 | Braidwood 2<br>Byron 2<br>Catawba 2<br>Comanche Peak 2<br>Indian Point 2<br>Millstone 3<br>Point Beach 1<br>Robinson 2<br>Salem 1 | Seabrook<br>Surry 1<br>Surry 2<br>Turkey Point 3<br>Turkey Point 4<br>Vogtle 1<br>Vogtle 2<br>Wolf Creek |
| Partial-Depth Hydraulic - Thermally Treated Alloy 690 | Davis-Besse<br>Oconee 1 | Oconee 2<br>Oconee 3 |
| Full-Depth Hydraulic - Thermally Treated Alloy 690 | Arkansas Nuclear One - 1<br>Arkansas Nuclear One - 2<br>Beaver Valley 1<br>Braidwood 1<br>Byron 1<br>Callaway<br>Calvert Cliffs 1<br>Calvert Cliffs 2<br>Catawba 1<br>Comanche Peak 1<br>Cook 1<br>Cook 2<br>Diablo Canyon 1<br>Diablo Canyon 2<br>Farley 1<br>Farley 2<br>Fort Calhoun<br>Ginna<br>Harris<br>Indian Point 3<br>McGuire 1 | McGuire 2<br>Millstone 2<br>North Anna 1<br>North Anna 2<br>Palo Verde 1<br>Palo Verde 2<br>Palo Verde 3<br>Point Beach 2<br>Prairie Island 1<br>Prairie Island 2<br>Salem 2<br>Sequoyah 1<br>Sequoyah 2<br>South Texas Project 1<br>South Texas Project 2<br>St. Lucie 1<br>St. Lucie 2<br>Summer<br>Three Mile Island 1<br>Waterford 3<br>Watts Bar 1 |

## Table 1-4: Unit Listing by Tube Support Plate Material (12/2014)

| Carbon Steel | |
|---|---|
| Beaver Valley 2 (D) | Davis-Besse (?) |
| **Stainless Steel** | |
| Arkansas Nuclear One – 1 (T) | Oconee 2 (T) |
| Arkansas Nuclear One - 2 (T) | Oconee 3 (T) |
| Beaver Valley 1 (Q) | Palisades (L) |
| Braidwood 1 (L) | Palo Verde 1 (L) |
| Braidwood 2 (Q) | Palo Verde 2 (L) |
| Byron 1 (L) | Palo Verde 3 (L) |
| Byron 2 (Q) | Point Beach 1 (Q) |
| Callaway (T) | Point Beach 2 (T) |
| Calvert Cliffs 1 (L) | Prairie Island 1 (Q) |
| Calvert Cliffs 2 (L) | Prairie Island 2 (Q) |
| Catawba 1 (L) | Robinson 2 (Q) |
| Catawba 2 (Q) | Salem 1 (Q) |
| Comanche Peak 1 (T) | Salem 2 (T) |
| Comanche Peak 2 (Q) | Seabrook (Q) |
| Cook 1 (L) | Sequoyah 1 (L) |
| Cook 2 (Q) | Sequoyah 2 (L) |
| Diablo Canyon 1 (T) | South Texas Project 1 (T) |
| Diablo Canyon 2 (T) | South Texas Project 2 (T) |
| Farley 1 (Q) | St. Lucie 1 (L) |
| Farley 2 (Q) | St. Lucie 2 (T) |
| Fort Calhoun (T) | Summer (T) |
| Ginna (L) | Surry 1 (Q) |
| Harris (T) | Surry 2 (Q) |
| Indian Point 2 (Q) | Three Mile Island 1 (T) |
| Indian Point 3 (Q) | Turkey Point 3 (Q) |
| McGuire 1 (L) | Turkey Point 4 (Q) |
| McGuire 2 (L) | Vogtle 1 (Q) |
| Millstone 2 (L) | Vogtle 2 (Q) |
| Millstone 3 (Q) | Waterford 3 (T) |
| North Anna 1 (Q) | Watts Bar 1 (L) |
| North Anna 2 (Q) | Wolf Creek (Q) |
| Oconee 1 (T) | |

**NOTES:**

D=Drilled Hole L=Lattice T=Trifoil
Q=Quatrefoil ?=design not readily available

In some units, there is a combination of tube support “opening” configurations. For example, Babcock and Wilcox International and AREVA once-through steam generators primarily have broached tube support plate openings; however, the uppermost tube support plate has some drilled holes primarily in the periphery of the tube bundle.

## Table 1-5: History of H* Amendments (Part 1)

| Unit | Refueling Outage | Applies to Hot-Leg (HL) or Cold-Leg (CL) | Reporting Require-ments | H* Distance | Leakage Factor | Amendment Date | Amendment Accession Number | Notes |
|---|---|---|---|---|---|---|---|---|
| Braidwood 2 | 11 | HL | N | 17 in. | 2 | 04/25/05 | ML051170149 | |
| Braidwood 2 | 12 | HL | N | 17 in. | 2 | 10/24/06 | ML062780507 | |
| Braidwood 2 | 13 | HL/CL | Y | iARC[1] | 2.5 | 04/18/08 | ML080920889 | |
| Braidwood 2 | 14 | HL/CL | Y | 16.95 in. | 3.11 | 10/16/09 | ML092520512 | |
| Braidwood 2 | 15 | HL/CL | Y | 16.95 in. | 3.11 | 04/13/11 | ML110840580 | |
| Braidwood 2 | ≥16 | HL/CL | Y | 14.01 in. | 3.11 | 10/05/12 | ML12262A360 | |
| Byron 2 | 12 | HL | N | 17 in. | 2 | 09/19/05 | ML052230019 | |
| Byron 2 | 13 | HL | Y | 17 in. | 2 | 03/30/07<br>05/09/07 | ML070810354<br>ML071210555 | |
| Byron 2 | 14 | HL/CL | Y | iARC[1] | 2.5 | 10/01/08 | ML082340862 | |
| Byron 2 | 15 | HL/CL | Y | 16.95 in. | 3.11 | 10/16/09 | ML092520512 | |
| Byron 2 | 16 | HL/CL | Y | 16.95 in. | 3.11 | 04/13/11 | ML110840580 | |
| Byron 2 | ≥17 | HL/CL | Y | 14.01 in. | 3.11 | 10/05/12 | ML12262A360 | |
| Callaway | | | | | | | | Replaced steam generators |
| Catawba 2 | 14 | HL/CL | N | 17 in. | 2 | 03/31/06 | ML060760011<br>ML060760111 | |
| Catawba 2 | 15 | HL/CL | N | 17 in. | 2 | 10/31/07 | ML072820013 | |
| Catawba 2 | 16 | HL/CL | Y | iARC[1] | 2.5 | 04/13/09 | ML091030088 | |
| Catawba 2 | 17 | HL/CL | Y | 20 in. | 3.27 | 09/27/10 | ML102640537 | |
| Catawba 2 | ≥18 | HL/CL | Y | 14.01 in. | 3.27 | 03/12/12 | ML12054A692 | |
| Comanche Peak 2 | 11 | HL/CL | Y | 16.95 in. | 3.16 | 10/09/09 | ML092740076 | |
| Comanche Peak 2 | 12 | HL/CL | Y | 16.95 in. | 3.16 | 04/16/11 | ML110770322 | |
| Comanche Peak 2 | ≥13 | HL/CL | Y | 14.01 in. | 3.16 | 10/18/12 | ML12263A036 | |
| Indian Point 2 | ≥22 | HL/CL | Y | 18.9 in. | 1.75 | 09/05/14<br>09/30/14 | ML141981161<br>ML142524679 | |
| Millstone 3 | 12 | HL/CL | Y | iARC[1] | 2.5 | 09/30/08<br>11/21/08 | ML082321292<br>ML082810147 | |
| Millstone 3 | 13 | HL/CL | Y | 13.1 in. | 2.49 | 05/03/10 | ML100770358 | |
| Millstone 3 | 14 | HL/CL | Y | 15.2 in. | 2.49 | 10/07/11 | ML112580517 | |
| Millstone 3 | ≥15 | HL/CL | Y | 15.2 in. | 2.49 | 12/06/12 | ML12299A498 | |
| Point Beach 1 | 30 | HL | N | 17 in. | 2 | 04/04/07 | ML070800705 | |
| Point Beach 1 | 31 | HL/CL | Y | iARC[1] | 2.5 | 10/07/08 | ML082540883 | |
| Robinson 2 | 24, 25 | HL/CL | Y | 17 in. | 2 | 04/09/07 | ML071060259 | No inspections in refueling outage (RFO) 25 |
| Robinson 2 | 26, 27 | HL/CL | Y | 17.28 in. | 1.82 | 05/07/10 | ML100990405 | No inspections in RFO 27 |
| Robinson 2 | ≥28 | HL/CL | Y | 18.11 in. | 1.87 | 08/29/13 | ML13198A367 | |
| Salem 1 | 18, 19 | HL/CL | Y | 17 in. | 2 | 03/27/07 | ML070790081 | No inspections in RFO 19 |
| Salem 1 | 20, 21 | HL/CL | Y | 13.1 in. | 2.16 | 03/29/10 | ML100570452 | No inspections in RFO 21 |
| Salem 1 | ≥22 | HL/CL | Y | 15.21 in. | 2.16 | 03/27/13 | ML13072A105 | |

[1] iARC refers to interim alternate repair criteria (iARC) which had acceptance limits based on the size, orientation, and spacing of indications located greater than 17 in. from the top of the tubesheet.

[2] The numbering for the refueling outages in this document differs than the numbering in the plant technical specifications.

## Table 1-5: History of H* Amendments (Part 2)

| Unit | Refueling Outage | Applies to HL or CL | Reporting Requirements | H* Distance | Leakage Factor | Amendment Date | Amendment Accession Number | Notes |
|---|---|---|---|---|---|---|---|---|
| Seabrook | 11, 12 | HL | N | 17 in. | 2 | 09/29/2006 | ML062630457 | No inspections in RFO 12 |
| Seabrook | 13, 14 | HL/CL | Y | 13.1 in. | 2.5 | 10/13/2009 | ML092460184 | Limited inspections in RFO 14 |
| Seabrook | ≥15 | HL/CL | Y | 15.21 in. | 2.49 | 09/10/2012 | ML12178A537 | |
| Surry 1 | 22 | HL/CL | Y | iARC[1] | 2.5 | 04/08/09<br>04/16/09 | ML090860735<br>ML091040065 | |
| Surry 1 | 22 | | Y | | 4.7 | 05/07/2009 | ML091260386 | Addressed permeability variations in bottom 1 in. of tube in steam generator B only, 20 gallon per day leakage limit |
| Surry 1 | 23 | HL/CL | Y | 16.7 in. | 2.03 | 11/05/2009 | ML092960484 | |
| Surry 1 | ≥24 | HL/CL | Y | 17.89 in. | 1.8 | 04/17/2012 | ML120730304<br>ML12109A270 | |
| Surry 2 | 21 | HL/CL | Y | iARC[1] | 2.5 | 05/16/2008 | ML081340106 | |
| Surry 2 | 22 | HL/CL | Y | 16.7 in. | 2.03 | 11/05/2009 | ML092960484 | |
| Surry 2 | 23 | HL/CL | Y | 17.74 in. | 2.03 | 05/20/11<br>06/29/11 | ML11090A000<br>ML111810163 | |
| Surry 2 | ≥24 | HL/CL | Y | 17.89 in. | 1.8 | 04/17/2012 | ML120730304<br>ML12109A270 | |
| Turkey Point 3 | 22, 23[2] | HL | N | 17 in. | 2 | 11/01/2006 | ML062990193 | No inspections in RFO 23 |
| Turkey Point 3 | 24, 25[2] | HL/CL | Y | 17.28 in. | 1.82 | 10/30/2009 | ML092990489 | No inspections in RFO 25 |
| Turkey Point 3 | ≥26[2] | HL/CL | Y | 18.11 in. | 1.82 | 11/05/2012 | ML12292A342 | |
| Turkey Point 4 | 22, 23[2] | HL | N | 17 in. | 2 | 11/01/2006 | ML062990193 | No inspections in RFO 23 |
| Turkey Point 4 | 24, 25[2] | HL/CL | Y | 17.28 in. | 1.82 | 10/30/2009 | ML092990489 | No inspections in RFO 25 |
| Turkey Point 4 | ≥26[2] | HL/CL | Y | 18.11 in. | 1.82 | 11/05/2012 | ML12292A342 | |
| Vogtle 1 | 13 | HL | N | 17 in. | 2 | 09/12/2006 | ML062260302 | |
| Vogtle 1 | 14 | HL/CL | Y | iARC[1] | 2.5 | 04/09/2008 | ML080950232 | |
| Vogtle 1 | 15 | HL/CL | Y | 13.1 in. | 2.48 | 09/24/2009 | ML092170782 | |
| Vogtle 1 | 16 | HL/CL | Y | 15.2 in. | 2.48 | 03/14/2011 | ML110660264 | |
| Vogtle 1 | ≥17 | HL/CL | Y | 15.2 in. | 2.48 | 09/10/2012 | ML12216A056 | |
| Vogtle 2 | 11 | HL | N | 17 in. | 2 | 09/21/2005 | ML052630014 | |
| Vogtle 2 | 12 | HL | N | 17 in. | 2 | 09/12/2006 | ML062260302 | |
| Vogtle 2 | 13 | HL/CL | Y | iARC[1] | 2.5 | 09/16/2008 | ML082530038 | |
| Vogtle 2 | 14 | HL/CL | Y | 13.1 in. | 2.48 | 09/24/2009 | ML092170782 | |
| Vogtle 2 | 15 | HL/CL | Y | 15.2 in. | 2.48 | 03/14/2011 | ML110660264 | |
| Vogtle 2 | ≥16 | HL/CL | Y | 15.2 in. | 2.48 | 09/10/2012 | ML12216A056 | |
| Wolf Creek | 14 | HL | N | 17 in. | 2 | 04/28/2005 | ML051230044 | |
| Wolf Creek | 15 | HL | N | 17 in. | 2 | 10/10/2006 | ML062580016 | |
| Wolf Creek | 16 | HL/CL | Y | iARC[1] | 2.5 | 04/04/2008 | ML080840003 | |
| Wolf Creek | 17 | HL/CL | Y | 13.1 in. | 2.5 | 10/19/2009 | ML092750606 | |
| Wolf Creek | 18 | HL/CL | Y | 15.2 in. | 2.5 | 04/06/2011 | ML110840590 | |
| Wolf Creek | ≥19 | HL/CL | Y | 15.21 in. | 2.5 | 12/11/2012 | ML12300A309 | |

[1] iARC refers to interim alternate repair criteria (iARC) which had acceptance limits based on the size, orientation, and spacing of indications located greater than 17 in. from the top of the tubesheet.

[2] The numbering for the refueling outages in this document differs than the numbering in the plant technical specifications.

**Table 1-6: Units with Replacement Steam Generators Part 1 (12/2014)**

| Unit Name | No. of Loops | SG Manufacturer/Model[1] | | Completion Date | Tube Material[2] |
|---|---|---|---|---|---|
| | | Original | Replacement | | |
| Surry 2 | 3 | W/51 | W/51F | 9/80 | 600 TT |
| Surry 1 | 3 | W/51 | W/51F | 7/81 | 600 TT |
| Turkey Point 3 | 3 | W/44 | W/44F | 4/82 | 600 TT |
| Turkey Point 4 | 3 | W/44 | W/44F | 5/83 | 600 TT |
| Point Beach 1 | 2 | W/44 | W/44F | 3/84 | 600 TT |
| Robinson 2 | 3 | W/44 | W/44F | 10/84 | 600 TT |
| Cook 2 | 4 | W/51 | W/54F | 3/89 | 690 TT |
| Indian Point 3 | 4 | W/44 | W/44F | 6/89 | 690 TT |
| Palisades | 2 | CE | CE | 3/91 | 600 MA |
| Millstone 2 | 2 | CE-67 | BWI | 1/93 | 690 TT |
| North Anna 1 | 3 | W/51 | W/54F | 4/93 | 690 TT |
| Summer | 3 | W/D3 | W/D75 | 12/94 | 690 TT |
| North Anna 2 | 3 | W/51 | W/54F | 5/95 | 690 TT |
| Ginna | 2 | W/44 | BWI | 6/96 | 690 TT |
| Catawba 1 | 4 | W/D3 | BWI | 9/96 | 690 TT |
| Point Beach 2 | 2 | W/44 | W/D47 | 12/96 | 690 TT |
| McGuire 1 | 4 | W/D2 | BWI | 5/97 | 690 TT |
| Salem 1 | 4 | W/51 | W/F | 7/97 | 600 TT |
| McGuire 2 | 4 | W/D3 | BWI | 12/97 | 690 TT |
| St. Lucie 1 | 2 | CE-67 | BWI | 1/98 | 690 TT |
| Byron 1 | 4 | W/D4 | BWI | 1/98 | 690 TT |
| Braidwood 1 | 4 | W/D4 | BWI | 11/98 | 690 TT |
| South Texas Project 1 | 4 | W/E | W/D94 | 5/00 | 690 TT |
| Farley 1 | 3 | W/51 | W/54F | 5/00 | 690 TT |
| Cook 1 | 4 | W/51 | BWI | 12/00 | 690 TT |
| Arkansas Nuclear One 2 | 2 | CE/2815 | W/D109 | 12/00 | 690 TT |

**Table 1-6: Units with Replacement Steam Generators Part 2 (12/2014)**

| Unit Name | No. of Loops | SG Manufacturer/Model[1] | | Completion Date | Tube Material[2] |
|---|---|---|---|---|---|
| | | Original | Replacement | | |
| Indian Point 2 | 4 | W/44 | W/44F | 12/00 | 600 TT |
| Farley 2 | 3 | W/51 | W/54F | 5/01 | 690 TT |
| Kewaunee[3] | 2 | W/51 | W/54F | 12/01 | 690 TT |
| Harris | 3 | W/D4 | W/D75 | 12/01 | 690 TT |
| Calvert Cliffs 1 | 2 | CE | BWI | 6/02 | 690TT |
| South Texas 2 | 4 | W/E | W/Delta 94 | 12/02 | 690TT |
| Calvert Cliffs 2 | 2 | CE | BWI | 5/03 | 690TT |
| Sequoyah 1 | 4 | W/51 | ABB/Doosan | 6/03 | 690TT |
| Palo Verde 2 | 2 | CE 80 | ABB/Ansaldo | 12/03 | 690TT |
| Oconee 1 | 2 | B&W | BWI | 1/04 | 690TT |
| Oconee 2 | 2 | B&W | BWI | 6/04 | 690TT |
| Prairie Island 1 | 2 | W/51 | Areva | 11/04 | 690TT |
| Oconee 3 | 2 | B&W | BWI | 12/04 | 690TT |
| Callaway | 4 | W/F | Areva | 11/05 | 690TT |
| Arkansas Nuclear One 1 | 2 | B&W | Areva | 12/05 | 690TT |
| Palo Verde 1 | 2 | CE 80 | ABB/Ansaldo | 12/05 | 690TT |
| Beaver Valley 1 | 3 | W/51 | W/54F | 4/06 | 690TT |
| Watts Bar 1 | 4 | W/D3 | ABB/Doosan | 11/06 | 690TT |
| Fort Calhoun | 2 | CE | Mitsubishi | 12/06 | 690TT |
| Comanche Peak 1 | 4 | W/D4 | W/D76 | 4/07 | 690TT |
| St. Lucie 2 | 2 | CE | Areva | 1/08 | 690TT |
| Palo Verde 3 | 2 | CE | ABB/Ansaldo | 1/08 | 690TT |
| Diablo Canyon 2 | 4 | W/51 | W/D54 | 4/08 | 690TT |
| Salem 2 | 4 | W/51 | Areva | 5/08 | 690TT |

**Table 1-6: Units with Replacement Steam Generators Part 3 (12/2014)**

| Unit Name | No. of Loops | SG Manufacturer/Model[1] | | Completion Date | Tube Material[2] |
|---|---|---|---|---|---|
| | | Original | Replacement | | |
| Diablo Canyon 1 | 4 | W/51 | W/D54 | 3/09 | 690TT |
| TMI-1 | 2 | B&W | Areva | 1/10 | 690TT |
| San Onofre 2[3] | 2 | CE | Mitsubishi | 4/10 | 690TT |
| San Onofre 3[3] | 2 | CE | Mitsubishi | 2/11 | 690TT |
| Sequoyah 2 | 4 | W/51 | W/Doosan | 1/13 | 690TT |
| Waterford | 2 | CE | W/Delta 110 | 1/13 | 690TT |
| Crystal River 3[3, 4] | 2 | B&W | BWI | 2009-13 | 690TT |
| Prairie Island 2 | 2 | W/51 | Areva | 1/14 | 690TT |
| Davis Besse | 2 | B&W | BWI | 5/14 | 690TT |
| | | | | | |
| | | | | | |
| | | | | | |

1 W=Westinghouse, CE=Combustion Engineering, BWI=Babcock and Wilcox International (also referred to as Babcock and Wilcox Canada), B&W=Babcock and Wilcox, ABB=Asea Brown Boveri (also referred to as Combustion Engineering), Areva (also referred to as Framatome)

2 TT= thermally treated, MA = mill-annealed

3 Permanently shutdown

4 Never operated with replacement steam generators

**Table 1-7: Units with Thermally Treated Alloy 600 Tubes (12/2014)**

| Unit | Date[1] | Model | Number of SGs | Replacement[2] |
|---|---|---|---|---|
| Braidwood 2 | 1988 | D5 | 4 | N |
| Byron 2 | 1987 | D5 | 4 | N |
| Catawba 2 | 1986 | D5 | 4 | N |
| Comanche Peak 2 | 1993 | D5 | 4 | N |
| Indian Point 2 | 2000 | 44F | 4 | Y |
| Millstone 3 | 1986 | F | 4 | N |
| Point Beach 1 | 1984 | 44F | 2 | Y |
| Robinson 2 | 1984 | 44F | 3 | Y |
| Salem 1 | 1997 | F | 4 | Y |
| Seabrook 1 | 1990 | F | 4 | N |
| Surry 1 | 1981 | 51F | 3 | Y |
| Surry 2 | 1980 | 51F | 3 | Y |
| Turkey Point 3 | 1982 | 44F | 3 | Y |
| Turkey Point 4 | 1983 | 44F | 3 | Y |
| Vogtle 1 | 1987 | F | 4 | N |
| Vogtle 2 | 1989 | F | 4 | N |
| Wolf Creek 1 | 1985 | F | 4 | N |
| Callaway[3] | 1984 | F | 4 | N |

1 Date of commercial operation or date of steam generator replacement, whichever is later.
2 "N" means the unit has its original steam generators; "Y" means the steam generators are replacements.
3 Only the first 10 rows of the original Callaway steam generators had thermally treated tubes; the remaining tubes were mill-annealed Alloy 600. Callaway replaced their original steam generators in 2005 with steam generators with thermally treated Alloy 690 tubes.

**Table 1-8: Age of Steam Generators at Units with Thermally Treated Alloy 600 Tubes (12/2013)**

| Unit | Operating Time[1] Original SG | Operating Time[1] Replacement SG | Approximate EFPY[2] For Current SG |
|---|---|---|---|
| Braidwood 2 | 25 | N/A | 22.2 |
| Byron 2 | 26 | N/A | 23.3 |
| Catawba 2 | 27 | N/A | 23.0 |
| Comanche Peak 2 | 20 | N/A | 18.3 |
| Indian Point 2 | 26 | 13 | 11.9 |
| Millstone 3 | 28 | N/A | 21.2 |
| Point Beach 1 | 13 | 30 | 25.0 |
| Robinson 2 | 14 | 29 | 23.4 |
| Salem 1 | 20 | 17 | 14.0 |
| Seabrook 1 | 23 | N/A | 20.0 |
| Surry 1 | 8 | 33 | 26.5 |
| Surry 2 | 7 | 33 | 27.0 |
| Turkey Point 3 | 9 | 32 | 24.3 |
| Turkey Point 4 | 10 | 31 | 23.8 |
| Vogtle 1 | 27 | N/A | 23.6 |
| Vogtle 2 | 25 | N/A | 22.0 |
| Wolf Creek 1 | 28 | N/A | 23.9 |
| | | | |
| Callaway[3] | 21 | N/A | |

1 Operating Time = calendar years of operation as of 12/31/2013

2 Approximate EFPY = approximate effective full power years as of 12/31/2013

3 Only the first 10 rows of the original Callaway steam generators had thermally treated tubes; the remaining tubes were mill-annealed Alloy 600. Callaway replaced their original steam generators in 2005 with steam generators with thermally treated Alloy 690 tubes.

**Figure 1-1: Typical Pressurized Water Reactor Power Plant**

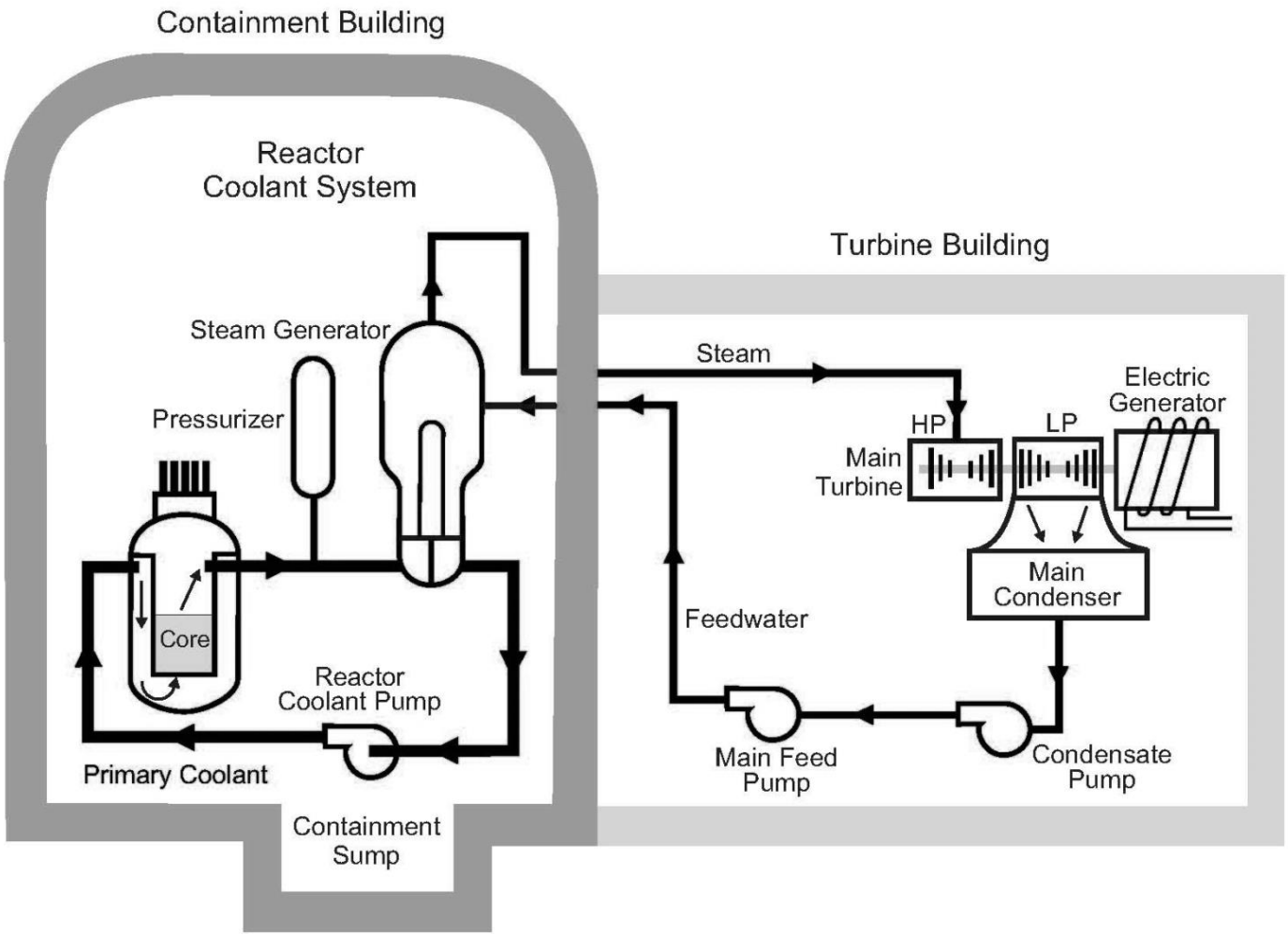

**Figure 1-2: Typical PWR Recirculating Steam Generator without a Preheater**

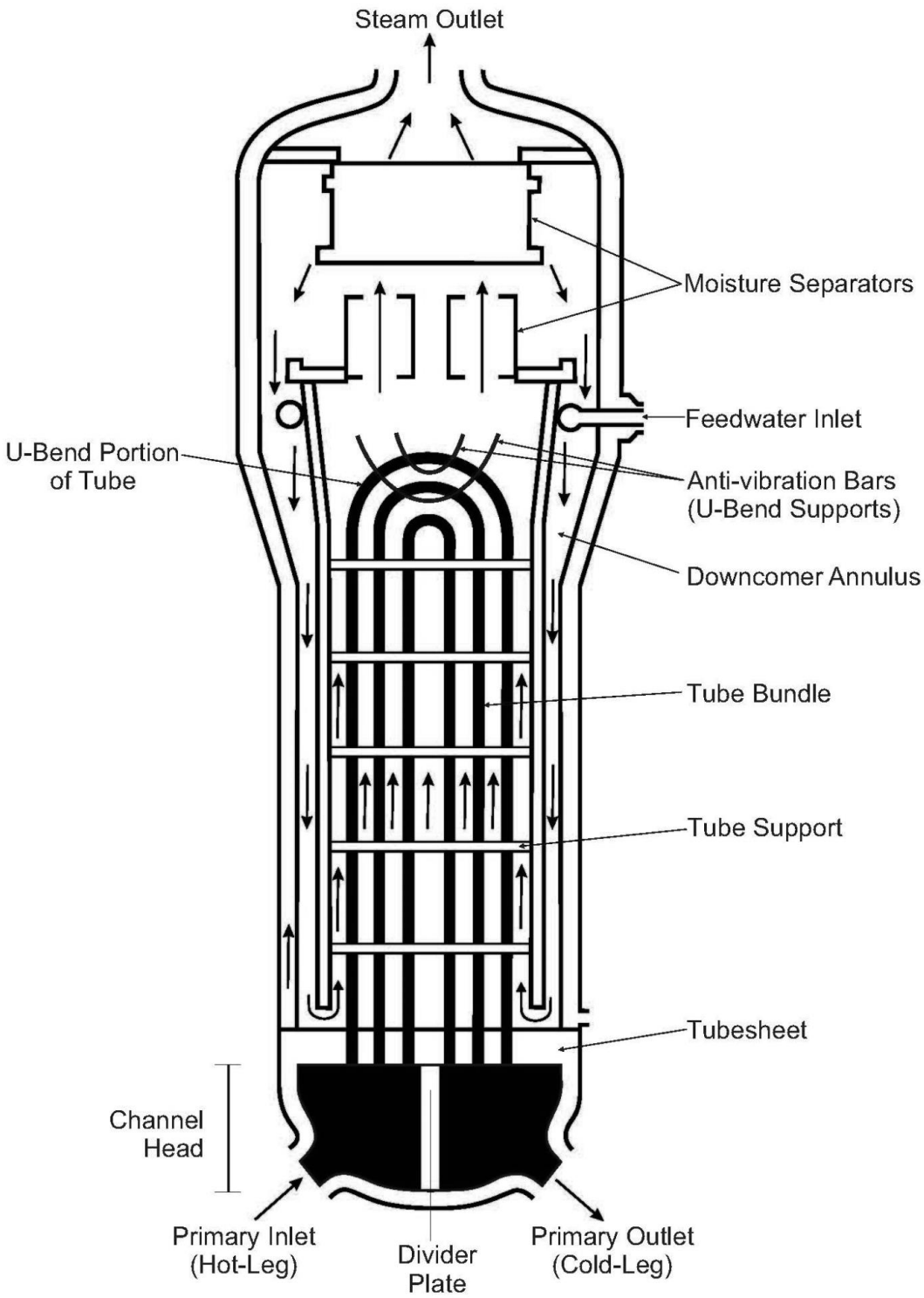

**Figure 1-3: Typical PWR Once-Through Steam Generator**

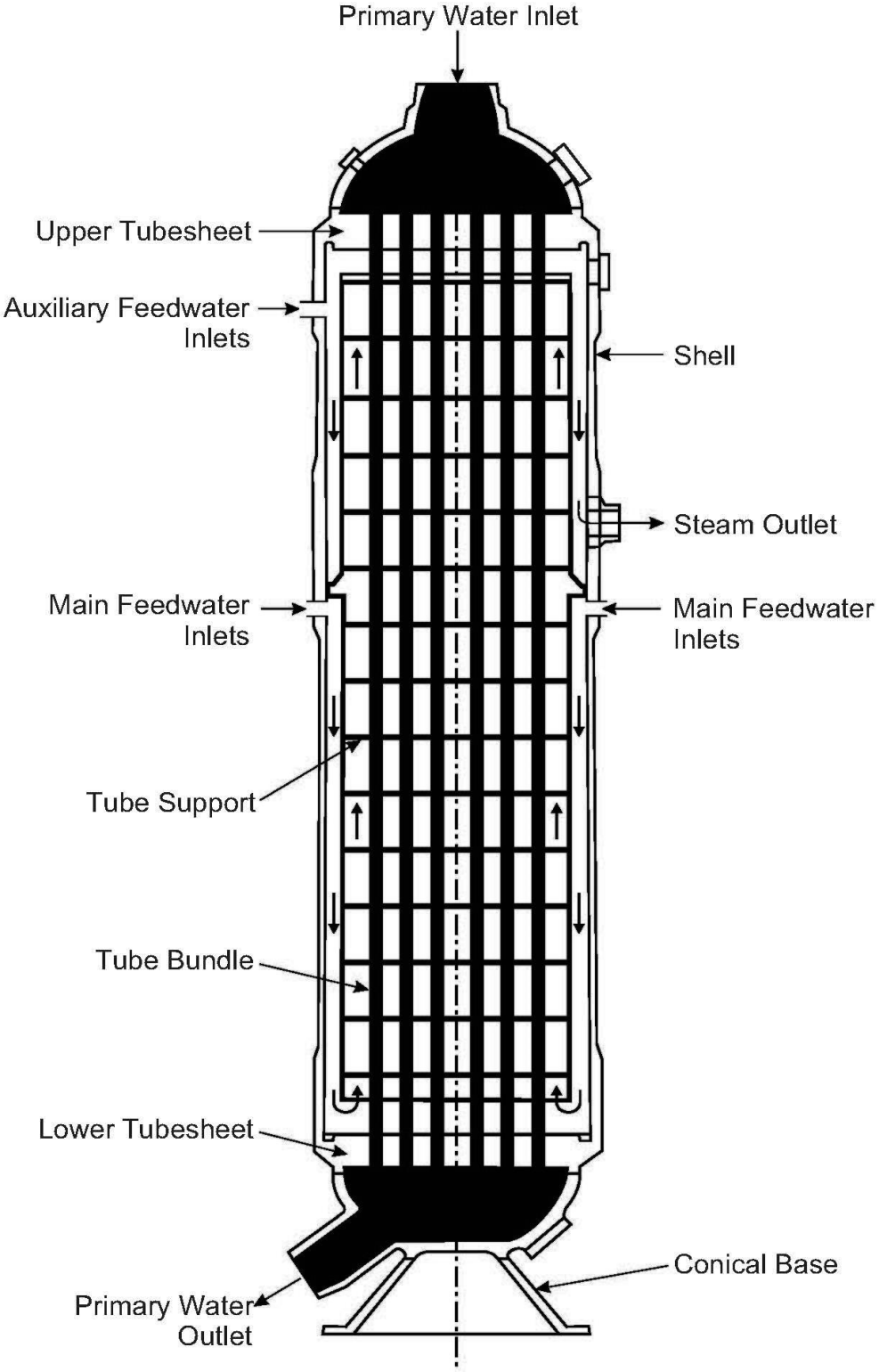

**Figure 1-4: U-Bend Features**

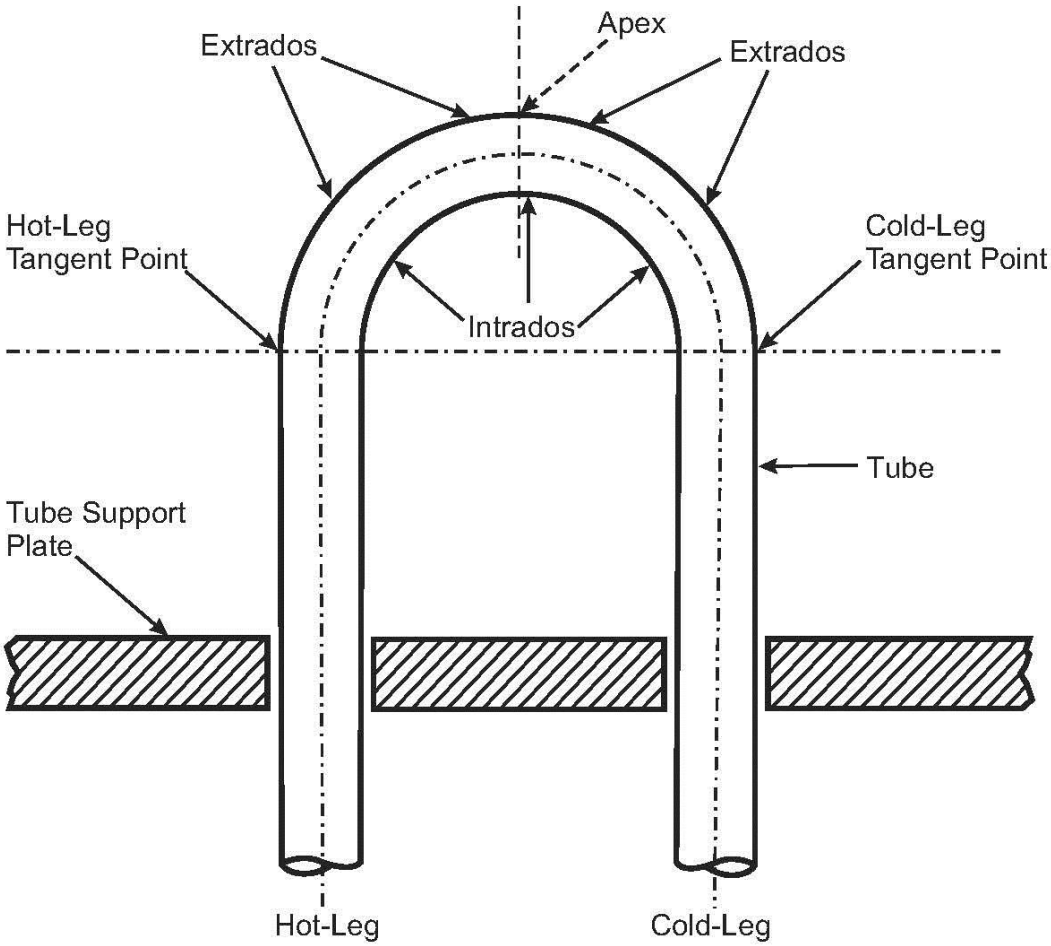

**Figure 1-5: Typical PWR Recirculating Steam Generator with a Preheater**

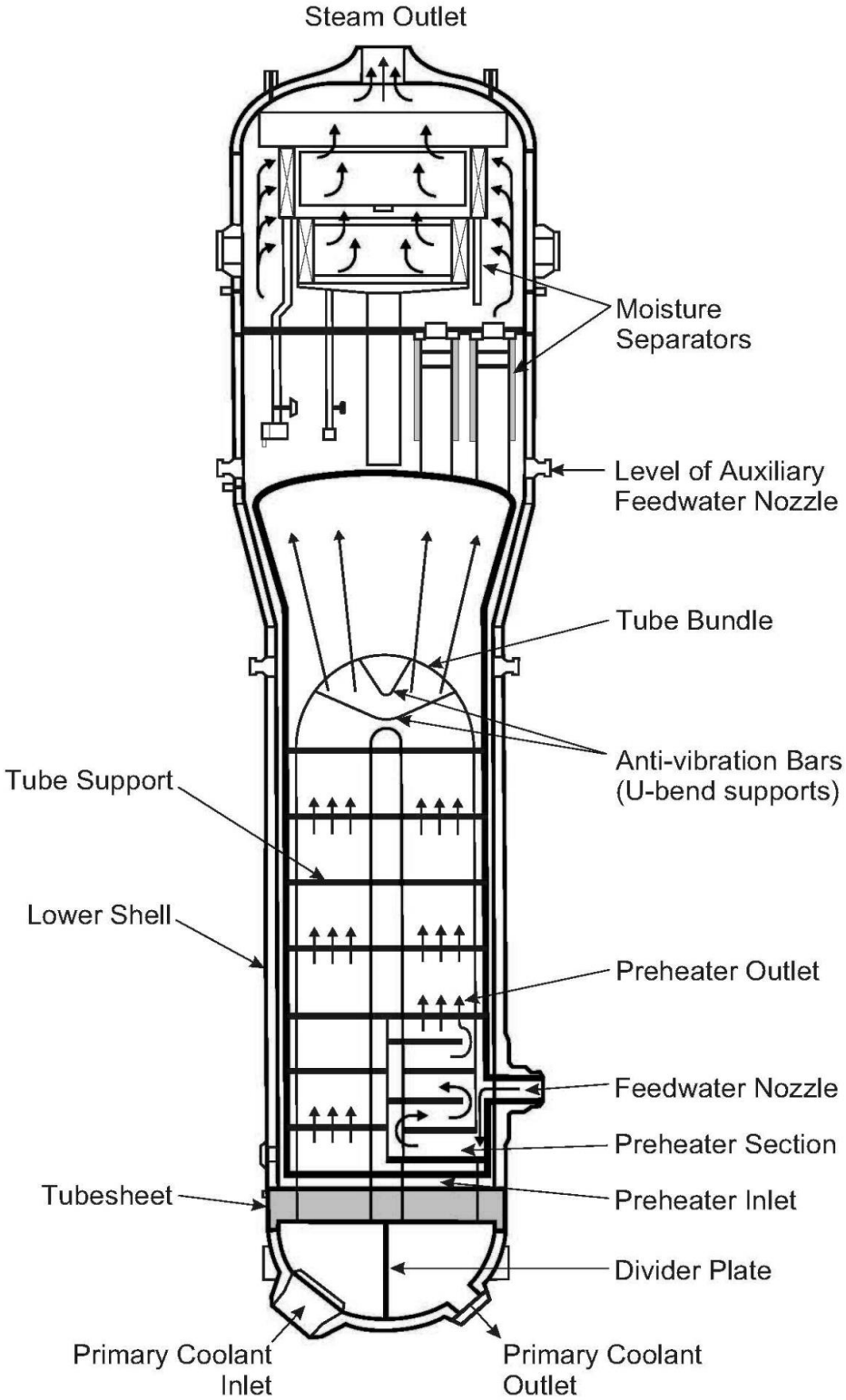

**Figure 1-6: Typical Steam Generator Channel Head in a Recirculating Steam Generator**

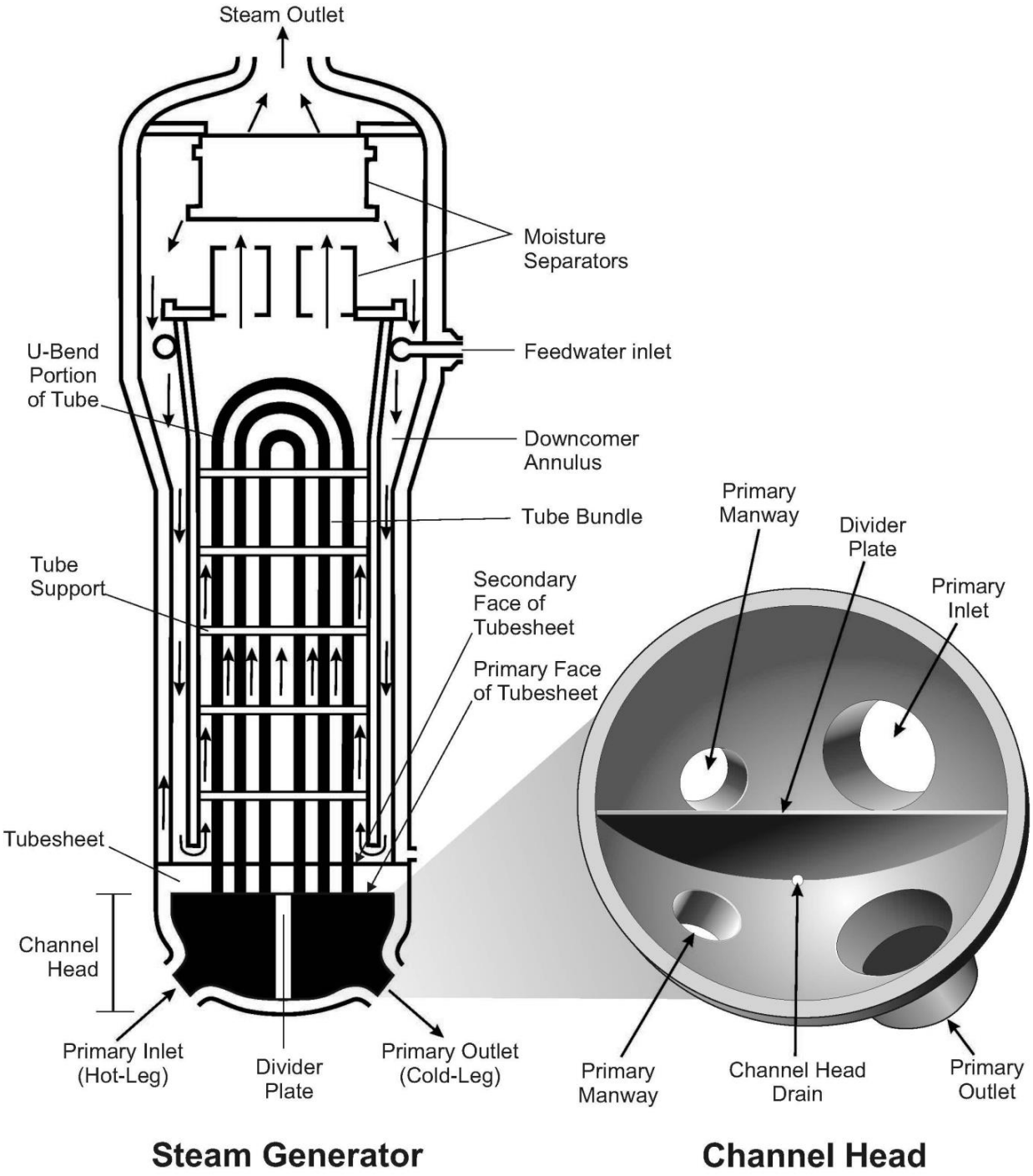

**Figure 1-7: Partial and Full Depth Expansions**

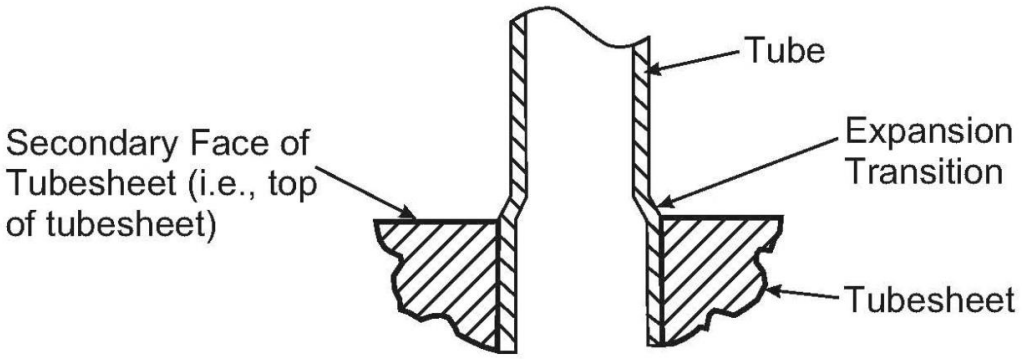


**Full Depth Expansion Transition**

(Preferred Design)

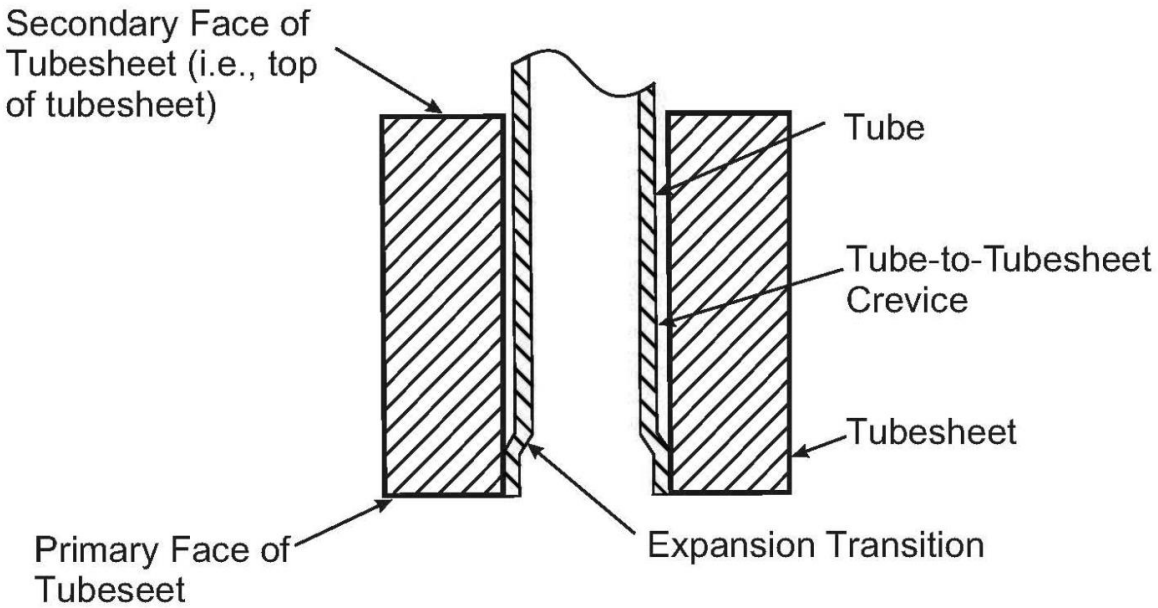


**Partial Depth Expansion Transition**

(Early Design)

**Figure 1-8: Typical Tubesheet Joint – Full Depth Expansion**

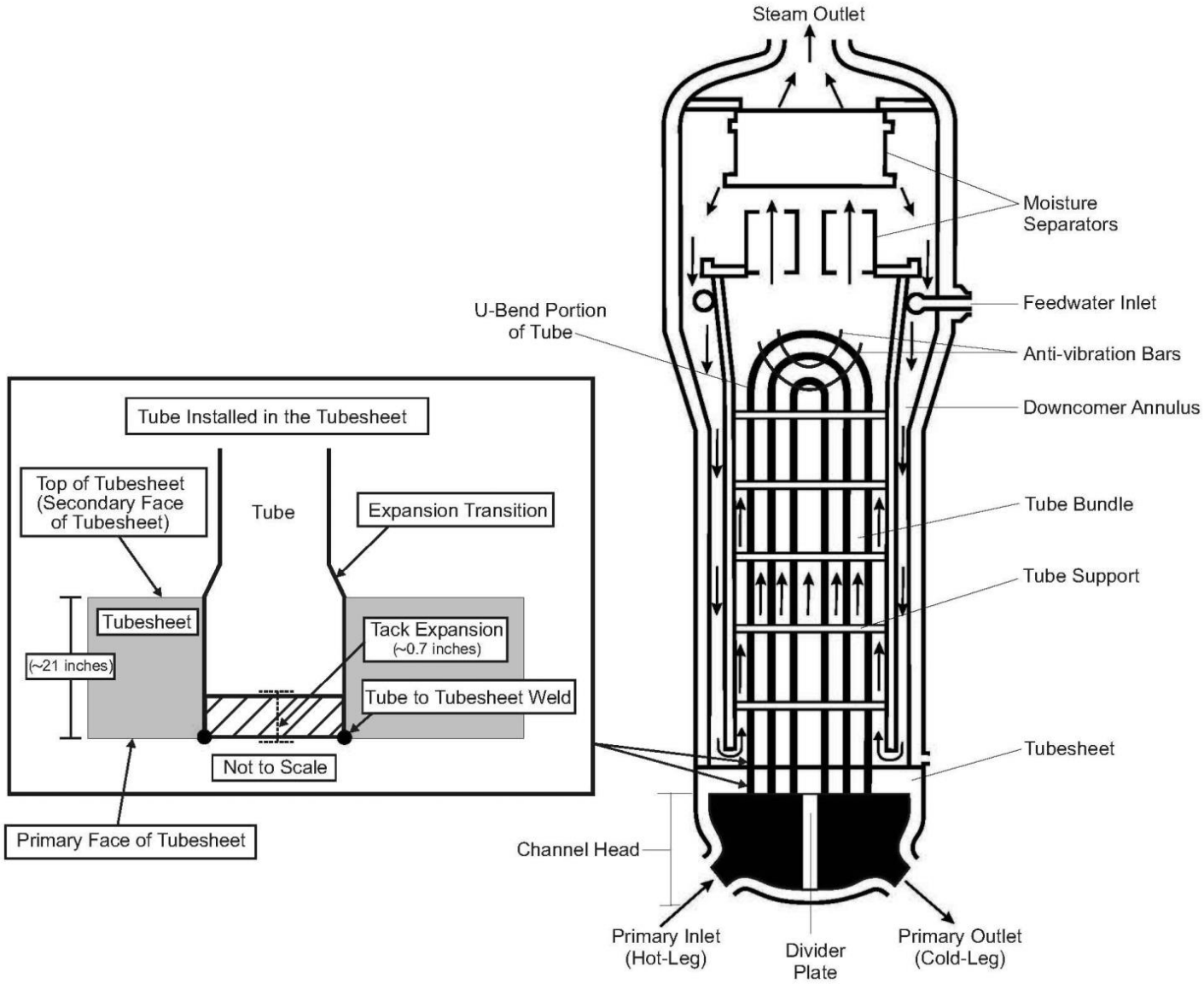

**Figure 1-9: Combustion Engineering Steam Generator**

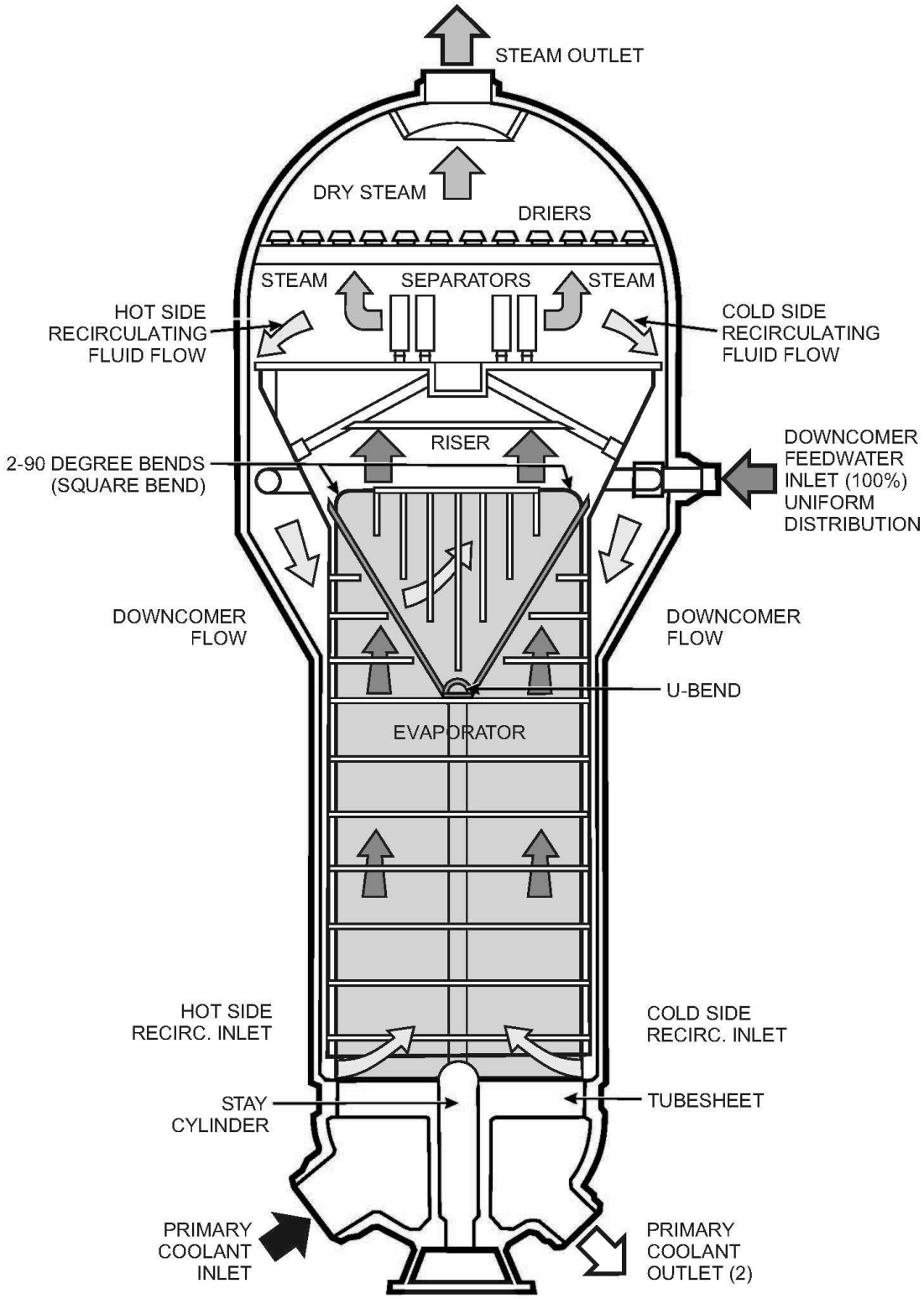

**Figure 1-10: Typical Tube Support Configurations**

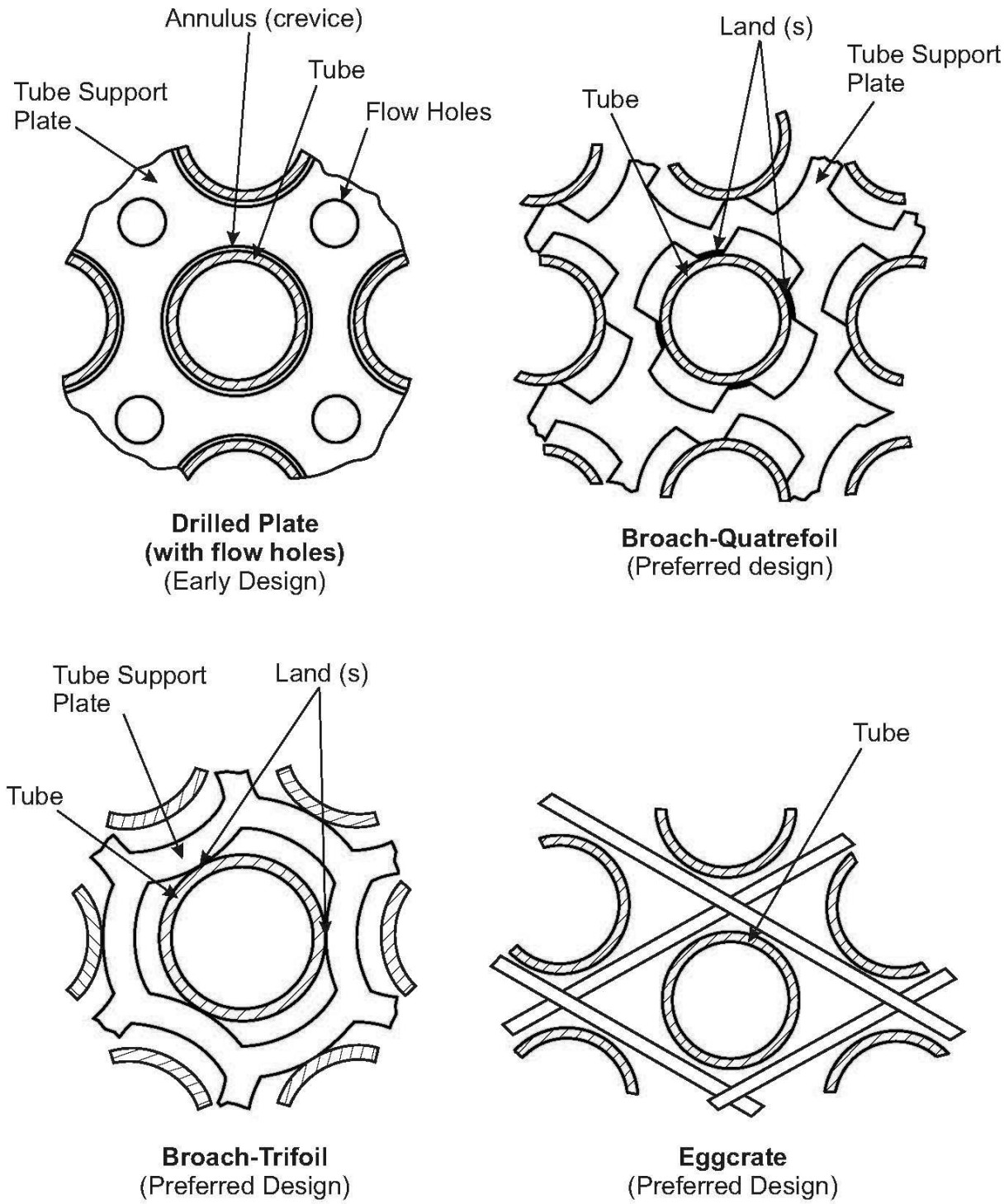

**Figure 1-11: Illustration of H* Distance**

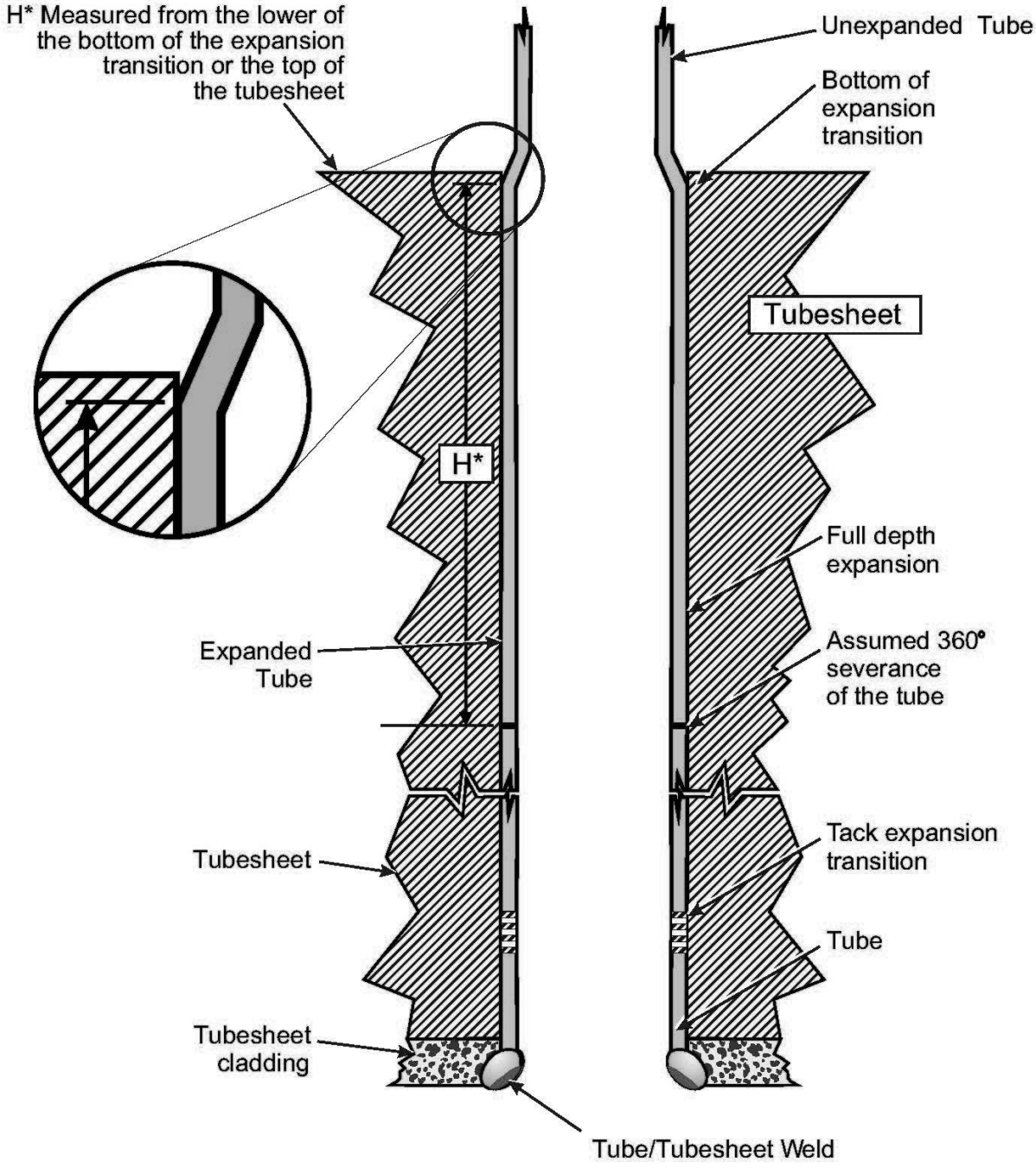

**Figure 1-12: Alloy 800 Tubesheet Sleeve**

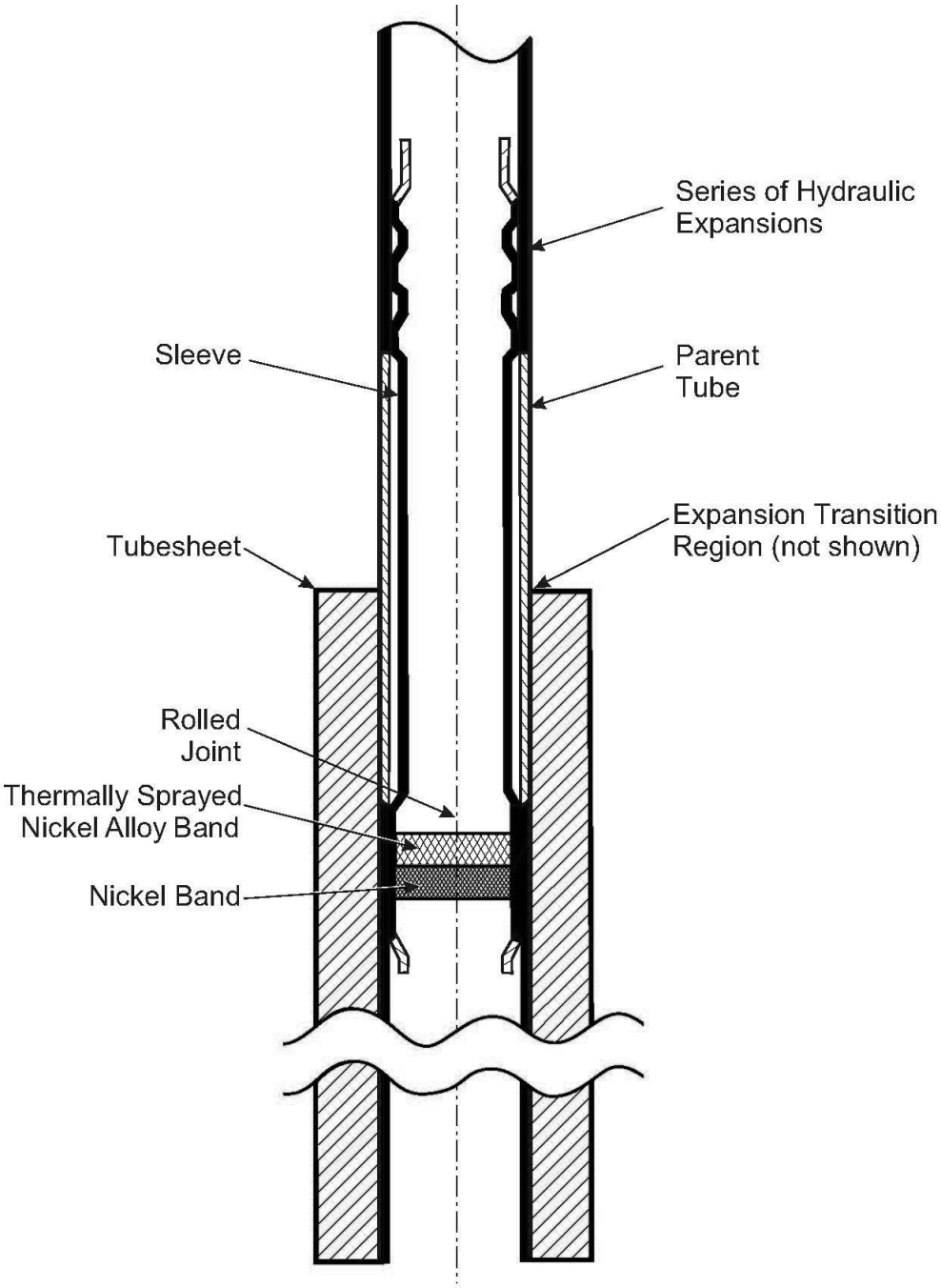


Note: Solid region depicts the pressure boundary of the tube/sleeve

**Figure 1-13: Alloy 800 Tube Support Sleeve**

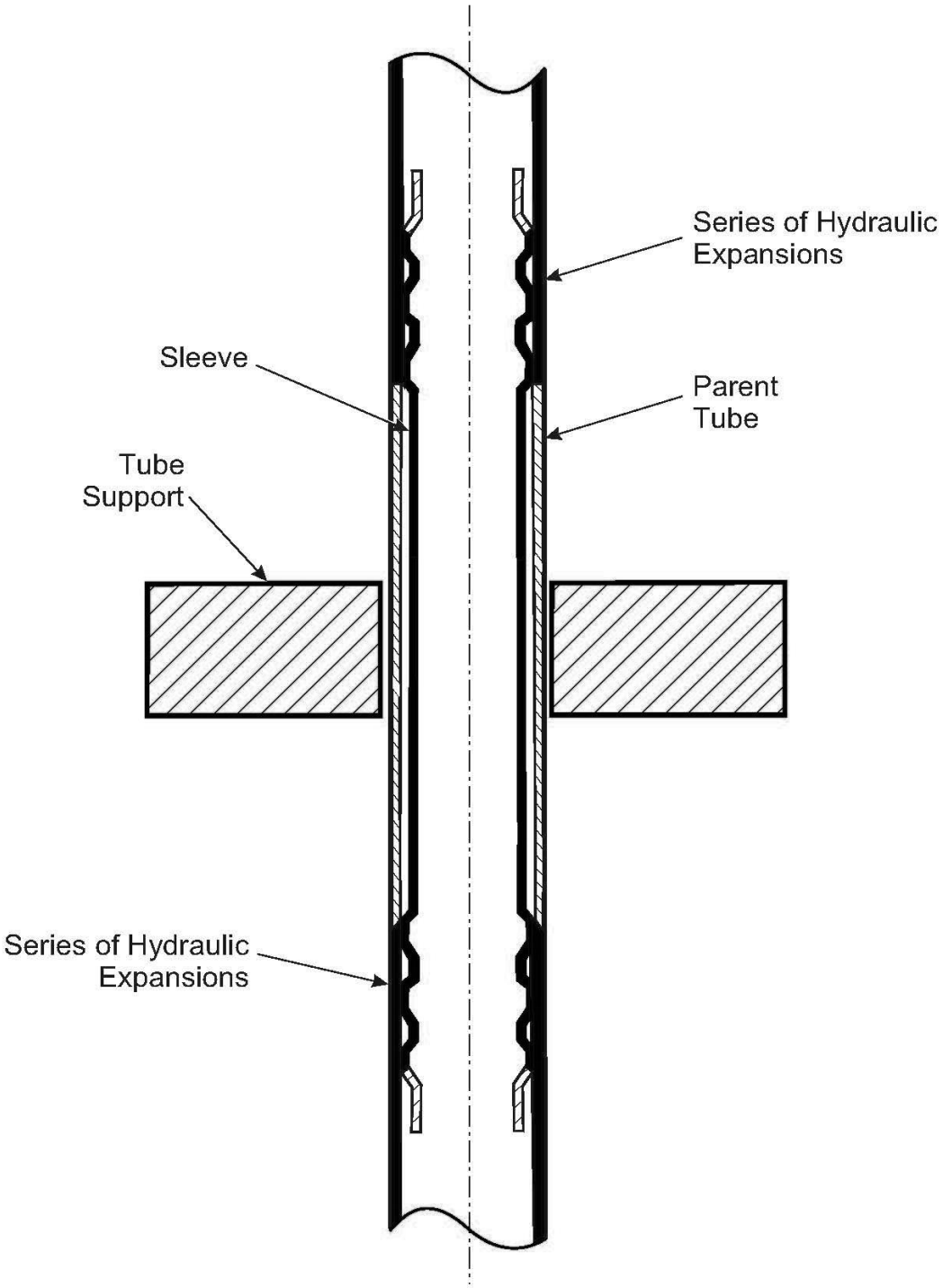


Note: Solid region depicts the pressure boundary of the tube/sleeve

**Figure 1-14: Steam Generator Tube Degradation Mechanisms**

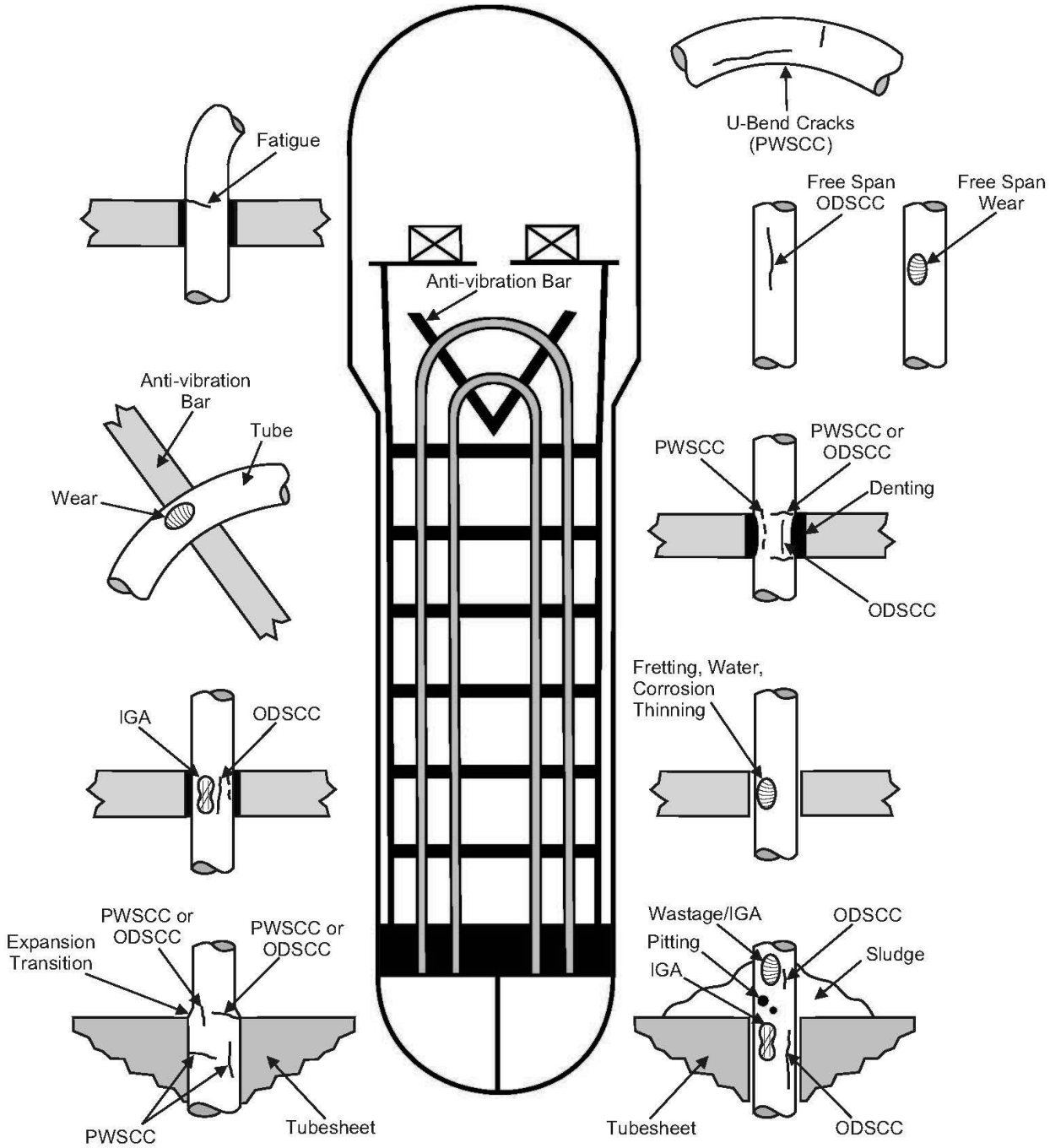

**Figure 1-15: Number of Units with Thermally Treated Alloy 600 Steam Generator Tubes as a Function of Year**

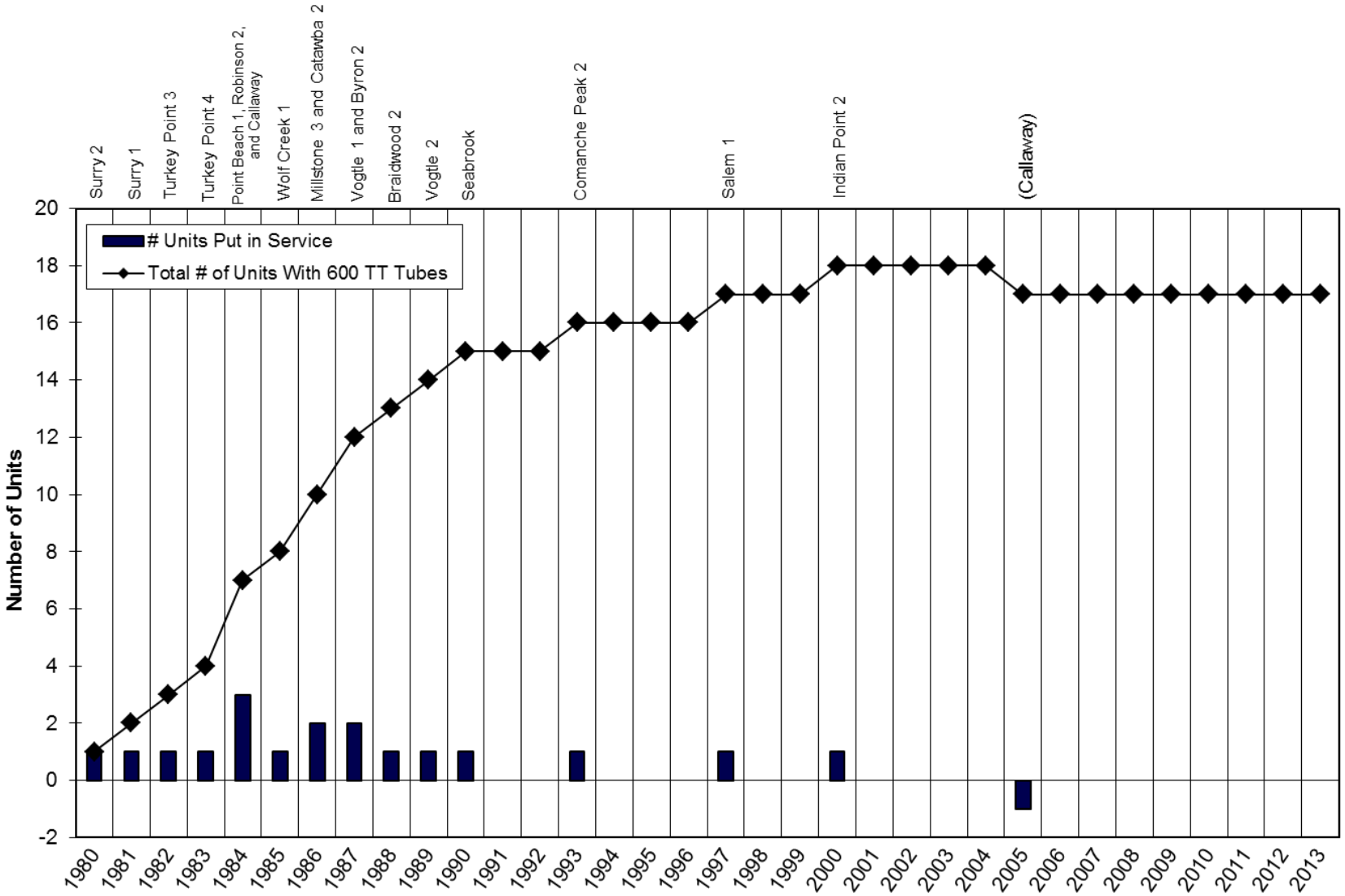

# 2 STEAM GENERATOR DESIGNS IN UNITS WITH THERMALLY TREATED ALLOY 600 TUBES

## 2.1 Introduction

Steam generators with thermally treated Alloy 600 tubes can be divided into three categories: model D5, model F, and replacement steam generators. The latter category includes all units that replaced original steam generators (which had mill-annealed Alloy 600 tubes) with steam generators containing thermally treated Alloy 600 tubes. The design of the steam generators in these three categories are discussed further below. A summary of the design features of steam generators with thermally treated Alloy 600 tubing is provided in Table 2-1.

## 2.2 Model D5 Steam Generators

Westinghouse model D5 steam generators have 4,570 thermally treated Alloy 600 tubes with an outside diameter of 1.9 cm (0.750 in.) and a 1.09 mm (0.043 in.) nominal wall thickness. The tubes are hydraulically expanded for the full depth of the tubesheet at each end. The tubes are supported by stainless steel support plates with quatrefoil holes and V-shaped chrome plated Alloy 600 anti-vibration bars (AVBs). Figure 2-1 depicts the model D5 steam generator tube support configuration. As shown in this figure, several naming conventions are used for the tube support plates. Model D5 steam generator tubes have a square tube pitch as depicted in Figure 2-2 with a tube spacing of 2.7 cm (1.063 in.).

The model D5 steam generators have several design features that set them apart from other steam generators with thermally treated Alloy 600 tubes. These features include a preheater and a T-slot. The preheater is a region in the tube bundle which preheats the incoming feedwater (secondary coolant) before entering the main region of the tube bundle. The design and operation of the preheater are discussed further below. The T-slot is an untubed portion of the tube bundle. It has a T shape and is used in steam generator blowdown for sludge removal. The T-slot is depicted in Figure 2-2.

The preheater region (near the feedwater inlet) and its relation to the tube bundle are shown in Figure 1-5. The preheater region is on the cold-leg side of the tube bundle and faces the feedwater inlet. A more detailed view of the preheater region is given in Figure 2-3. As can be inferred from Figure 2-3, the first several rows of tubes in the periphery of the tube bundle are not supported at baffle plates E and H (actually 5 rows of tubes are not supported). These tubes are sometimes called “window tubes.”

Feedwater flowing into the steam generator first passes through a venturi insert in the main feed nozzle. The insert serves as a backflow restrictor to limit the rate of blowdown from the steam generator in the event of a main feedwater line break. In the preheater section, as illustrated in Figure 2-3, the incoming feedwater enters the inlet waterbox and encounters the impingement plate, which directs the water outward to fill the waterbox volume and downward to the preheater inlet between baffle plates B and D. In the lower section of the preheater, or first pass, the feedwater enters the tube bundle. The water then flows around the tubes and baffles until it enters the main region of the tube bundle. Because the water changes direction between the baffle plates of the preheater (i.e., right-to-left between B and D and then left-to-right between D and E), this type of preheater design is called a “counterflow preheater.”

In the early 1980s, when Westinghouse steam generators with preheaters were first deployed, tube wear attributed to tube vibration in the preheat section of the steam generator was discovered at several foreign units. The wear was occurring primarily in the outer three rows of tubes in the preheater section (rows 47, 48, and 49). The tube wear was because of large tube-to-baffle-plate clearances and relatively high velocities of the nonuniform, turbulent inlet flow, which allowed the tubes to vibrate within the clearance.

The root cause of the tube wear and design modifications to mitigate its occurrence are discussed in NUREG-0966, "Safety Evaluation Report Related to the D2/D3 Steam Generator Design Modification," and NUREG-1014, "Safety Evaluation Report Related to the D4/D5/E Steam Generator Design Modification." The design modifications for units with D5 steam generators involved expanding selected tubes (approximately 124 tubes) at baffle plates B and D to make the tubes stiffer. The expansion of tubes at baffle plate locations was intended to limit the tube movement at the baffle plate intersections to a few hundredths of a millimeter (a few thousandths of an inch). Westinghouse developed a proprietary process for hydraulically expanding the steam generator tubes at the baffle plates. The hydraulic expansion was intended to limit the residual stresses from the expansion such that combined with the relatively low temperature in the preheater region there would be no significant increase in the potential for stress corrosion cracking at the expanded locations. The expansions were designed to be entirely within the baffle plate to prevent bulging of the tube outside of the baffle plates.

In addition to the expansion of the tubes at the baffle plate locations, the feedwater flow was split by diverting a fraction of the main feedwater flow through an auxiliary feedwater nozzle to reduce the flow velocities and the potential for tube vibration. For the four units with model D5 steam generators, approximately 10 percent of the main feedwater flow was diverted. The auxiliary nozzle is in the upper portion of the steam generator as illustrated in Figure 1-5.

The model D5 steam generator design incorporated many enhancements compared to earlier models including (1) utilizing stainless steel, a more corrosion-resistant material, as the material for the tube support plates and baffles, (2) changing the shape of the holes in the tube support plates from circular to a quatrefoil shape to improve flow, (3) expanding the tubes within the tubesheet by hydraulic means in lieu of mechanical rollers to reduce stresses, (4) thermally treating the Alloy 600 tubes to enhance their resistance to corrosion, and (5) changing the holes in the flow distribution baffles from slotted to circular shape to improve flow.

Model D5 steam generators are used at Braidwood Station, Unit 2; Byron Station, Unit 2; Catawba Nuclear Station, Unit 2; and Comanche Peak Nuclear Power Plant, Unit 2.

## 2.3 Model F Steam Generators

The model F steam generators were designed in the mid-1970s. Except for the model F steam generators at Callaway Plant (which were replaced in 2005), all model F steam generators have 5,626 thermally treated Alloy 600 tubes. At Callaway, only the first 10 rows of tubes in each steam generator had thermally treated tubes (i.e., only 1,214 tubes per steam generator were thermally treated). The tubes have an outside diameter of 1.75 cm (0.688 in.) and a nominal wall thickness of 1.01 mm (0.040 in.). The tubes are hydraulically expanded for the full depth of the tubesheet at each end. The tubes are supported by stainless steel support plates with quatrefoil holes and V-shaped chrome plated Alloy 600 AVBs. The first 10 rows of tubes were stress-relieved to improve corrosion resistance. Figure 2-4 depicts the model F steam

generator tube support configuration. As shown in this figure, several naming conventions are used for the tube support plates. Model F steam generator tubes have a square tube pitch as depicted in Figure 2-5 with a tube spacing of 2.5 cm (0.980 in.).

Unlike the model D5 steam generator, the model F steam generator does not have a preheater region. In the model F steam generator, the secondary-system water (feedwater) is fed through a feedwater nozzle to a feedring into the downcomer where it mixes with recirculating water draining from the moisture separators. This downcomer water flows to the bottom of the steam generator, across the top of the tubesheet, and then up through the tube bundle, where steam is generated (Figure 1-2).

Model F steam generators are used at Millstone Power Station, Unit 3; Salem Nuclear Generating Station, Unit 1; Seabrook Station; Vogtle Electric Generating Plant, Units 1 and 2; and Wolf Creek Generating Station. As discussed above, the model F steam generators at Callaway only had thermally treated Alloy 600 tubes in the first 10 rows of tubes and were replaced in 2005. The model F steam generators at Salem 1 are replacement steam generators that were originally intended to be installed in the canceled Seabrook 2 unit. As a result, the Salem 1 steam generators are discussed as replacement steam generators.

## 2.4 Replacement Steam Generators

Three steam generator models are used at units that replaced their original steam generators with steam generators with thermally treated Alloy 600 tubes, namely the Westinghouse models 44F, 51F, and F. These models do not have a preheater region.

Westinghouse model 44F steam generators have 3,214 thermally treated Alloy 600 tubes with an outside diameter of 2.22 cm (0.875 in.) and a 1.27-mm (0.050-in.) nominal wall thickness. The tubes are hydraulically expanded for the full depth of the tubesheet at each end. The tubes are supported by stainless steel support plates with quatrefoil holes and V-shaped AVBs. Figure 2-6 depicts the model 44F steam generator tube support configuration, using the typical naming convention. Model 44F steam generator tubes have a square tube pitch as depicted in Figure 2-7 with a tube spacing of approximately 3 cm (1.2 in.).

Model 44F steam generators are used at Indian Point Nuclear Generating, Unit 2; Point Beach Nuclear Plant, Unit 1; H.B. Robinson Steam Electric Plant, Unit 2; and Turkey Point Nuclear Generating, Units 3 and 4.

Westinghouse model 51F steam generators have 3,342 thermally treated Alloy 600 tubes with an outside diameter of 2.22 cm (0.875 in.) and a 1.27-mm (0.050-in.) nominal wall thickness. The tubes are hydraulically expanded for the full depth of the tubesheet at each end. The tubes are supported by stainless steel support plates with quatrefoil holes and V-shaped AVBs. The tubes in rows 1 through 8 received a supplemental thermal treatment (stress relieving) after bending, while still in the manufacturing facility. Also, starting with the model F steam generators (including the model 44F and 51F steam generators), a set of geometric controls were implemented for bending the tubes (i.e., manufacturing the U-bends). The controls included strict requirements for ovality, the U-bend-to-leg flatness, and leg spacing. These improved manufacturing requirements resulted in consistent U-bends, which in turn translated into uniform stresses. The geometric controls helped to eliminate localized stress discontinuities present in earlier steam generators. Figure 2-8 depicts the model 51F steam generator tube support configuration, using the typical naming convention. Model 51F steam

generator tubes have a square tube pitch as depicted in Figure 2-9 with a tube spacing of about 3.25 cm (1.281 in.). Model 51F steam generators are used at Surry 1 and 2.

Although the steam generators at Salem 1 are replacement steam generators, the steam generators are true model F steam generators. They were initially scheduled to be installed in Seabrook 2, which was never completed. The design of the model F steam generators is discussed in Section 2.3.

# Table 2-1: Steam Generator Design Information for Units with Thermally Treated Alloy 600 Tubes

| Unit | Commercial Operation Date | SG Replacement Date | PWR Type | SG Designer | SG Fabricator | SG Model | Tube Manufacturer | Tube OD | Tube Wall | Number of Tubes | Tube Pitch | Tubesheet Thickness | Expansion Method | Expansion Extent | Support Material | U-Bend Stress Relief After Bending | Notes |
|---|---|---|---|---|---|---|---|---|---|---|---|---|---|---|---|---|---|
| Braidwood 2 | 10/17/1988 | | Westinghouse | Westinghouse | Westinghouse | D5 | Westinghouse | 0.750 | 0.043 | 4570 | 1.063[1] | 21.20 | Hydraulic | Full | 405 | R1-9 | 1.125-inch TSP thickness. Chrome plated Alloy 600 AVB. Blairsville tubing. |
| Byron 2 | 08/21/1987 | | Westinghouse | Westinghouse | Westinghouse | D5 | Westinghouse | 0.750 | 0.043 | 4570 | 1.063[1] | 21.20 | Hydraulic | Full | SS | R1-9[1] | 144 tubes hydraulically expanded into 2nd and 3rd cold-leg baffle plates. Chrome plated Alloy 600 AVBs |
| Callaway[2] | 12/19/1984 | 11/17/2005 | Westinghouse | Westinghouse | Westinghouse | F | Westinghouse | 0.688 | 0.040 | 1214 | 0.98 | | Hydraulic | Full | | R1-10 | Steam generators are no longer in operation. |
| Catawba 2 | 08/19/1986 | | Westinghouse | Westinghouse | Westinghouse | D5 | Westinghouse | 0.750 | 0.043 | 4578 | 1.0625 | 21.20 | Hydraulic | Full | 405SS | R1-9 | Chrome plated Inconel AVB, 0.296-inch thick. 0.75 and 1.12-inch TSP thickness. Autogenous welds, Row 1 radius is 2.250-inches. |
| Comanche Peak 2 | 08/03/1993 | | Westinghouse | Westinghouse | Westinghouse | D5 | Westinghouse | 0.750 | 0.043 | 4570 | 1.063 | 21.23 | Hydraulic | Full | 405SS | R1-9 | FDB and all preheater baffles except top one are 0.75-inch thick. TSPs and top preheater baffle are 1.12-inches thick. FDB and preheater baffles have |
| Indian Point 2 | 08/01/1974 | 12/01/2000 | Westinghouse | Westinghouse | Westinghouse | 44F | Sandvik | 0.875 | 0.050 | 3214 | ~1.2[1] Sq | 22.01 | Hydraulic | Full | 405SS | R1-8 | square cross section, chrome plated Alloy 600 AVBs. FDB has circular holes. TSPs have quatrefoil openings. |
| Millstone 3 | 04/23/1986 | | Westinghouse | Westinghouse | Westinghouse | F | Westinghouse | 0.688 | 0.040 | 5626 | 0.98 Sq | 21.23 | Hydraulic | Full | | R1-10 | R1 radius is 2.20 inches. 0.75-inch tack expansion. |
| Point Beach 1 | 12/21/1970 | 03/01/1984 | Westinghouse | Westinghouse | Westinghouse | 44F | Westinghouse | 0.875 | 0.050 | 3214 | 1.234 Sq | | Hydraulic | Full | SS | R1-8 | R1 bend radius is 2.19-inches. Chrome plated inconel AVBs. FBD has circular holes. TSPs have quatrefoil openings. |
| Robinson 2 | 03/07/1971 | 10/01/1984 | Westinghouse | Westinghouse | Westinghouse | 44F | Westinghouse | 0.875[1] | 0.050[1] | 3214[1] | ~1.2[1] | | Hydraulic | Full | | R1-8 | |
| Salem 1 | 06/30/1977 | 07/01/1997 | Westinghouse | Westinghouse | Westinghouse | F | Westinghouse | 0.688 | 0.040 | 5626 | 0.98[1] | | Hydraulic | Full | 405SS | R1-10 | FDB and TSP 1, 2, and 3 are 0.75" thick. TSP 4-7 are 1.12" thick. TSPs have quatrefoil openings. |
| Seabrook | 08/19/1990 | | Westinghouse | Westinghouse | Westinghouse | F | Westinghouse | 0.688 | 0.040 | 5626 | 0.98[1] | | Hydraulic | Full | | R1-10 | TSPs 1-4 are 0.75-inches thick. TSPs 5-8 are 1.12-inches thick. Only the U-bend region was stress relieved (and the same process was used for all Model F steam generators). |
| Surry 1 | 12/22/1972 | 07/01/1981 | Westinghouse | Westinghouse | Westinghouse | 51F | Westinghouse | 0.875 | 0.050 | 3342 | 1.281 | | Hydraulic | Full | 405SS | R1-8 | Only lower assembly and primary moisture separators replaced originally. Moisture separators upgraded in 1995 to support a power uprate. TSPs |
| Surry 2 | 05/01/1973 | 09/01/1980 | Westinghouse | Westinghouse | Westinghouse | 51F | Westinghouse | 0.875 | 0.050 | 3342 | 1.281 | 21.00 | Hydraulic | Full | 405SS | R1-8 | Only lower assembly and primary moisture separators replaced originally. Moisture separators upgraded in 1995 to support a power uprate. TSPs |
| Turkey Point 3 | 12/14/1972 | 04/01/1982 | Westinghouse | Westinghouse | Westinghouse | 44F | Westinghouse | 0.875 | 0.050 | 3214 | 1.234 Sq | 22.08 | Hydraulic | Full | 405SS | R1-8 | FDB has circular holes. TSPs have quatrefoil openings. |
| Turkey Point 4 | 09/07/1973 | 05/01/1983 | Westinghouse | Westinghouse | Westinghouse | 44F | Westinghouse | 0.875 | 0.050 | 3214 | 1.234 Sq | 22.08 | Hydraulic | Full | 405SS | R1-8 | FDB has circular holes. TSPs have quatrefoil openings. |
| Vogtle 1 | 06/01/1987 | | Westinghouse | Westinghouse | Westinghouse | F | Westinghouse | 0.688 | 0.040 | 5626 | 0.98 Sq | | Hydraulic | Full | 405 | R1-10 | R1 radius is 2.2-inches. Urethane plug expansion. 0.292-inches between tubes. Chrome plated Alloy 600 AVBs. FDB and lower 3 TSPs are 0.75-inch thick. Highest 4 TSPs are 1.125-inches thick. FDB has circular holes. |
| Vogtle 2 | 05/20/1989 | | Westinghouse | Westinghouse | Westinghouse | F | Westinghouse | 0.688 | 0.040 | 5626 | 0.98[1] | | Hydraulic | Full | 405 | R1-10 | R1 radius is 2.2-inches. Urethane plug expansion. |
| Wolf Creek | 09/03/1985 | | Westinghouse | Westinghouse | Westinghouse | F | Westinghouse | 0.688[1] | 0.040[1] | 5626 | 0.98[1] | | Hydraulic | Full | SS | R1-10 | Hard roll tack expansion. |

Notes:
AVB = anti-vibration bar
FDB = flow distribution baffle
OD = outside diameter
SG = steam generator
Sq = square
SS = stainless steel
TSP = tube support plate
[1]Assumed based on model type
[2]Steam generators with thermally treated Alloy 600 tubes are no longer in operation. Replacement date is the data on which the thermally treated Alloy 600 steam generator tubes were removed from service.
Based on H*, tubesheet thickness is 21.03-inches for model D5, F, and 51F steam generators and 21.810-inches for model 44F steam generators. Presumably these thicknesses are without cladding.

**Figure 2-1: Westinghouse Model D5 Steam Generator Tube Support Locations**

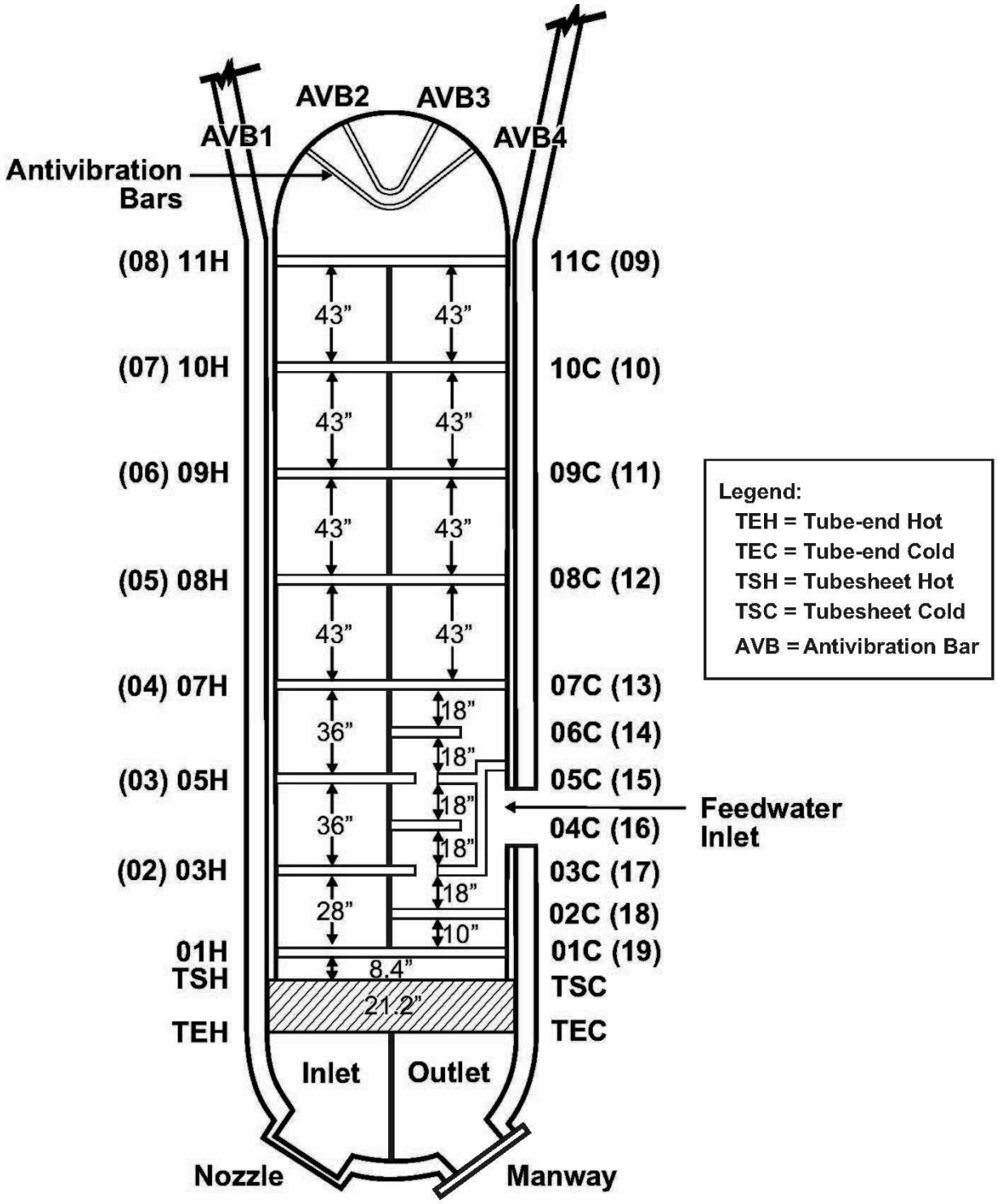


*Note: Alternate Naming Convention in Parentheses*

**Figure 2-2: Westinghouse Model D5 Steam Generator Tubesheet Map**

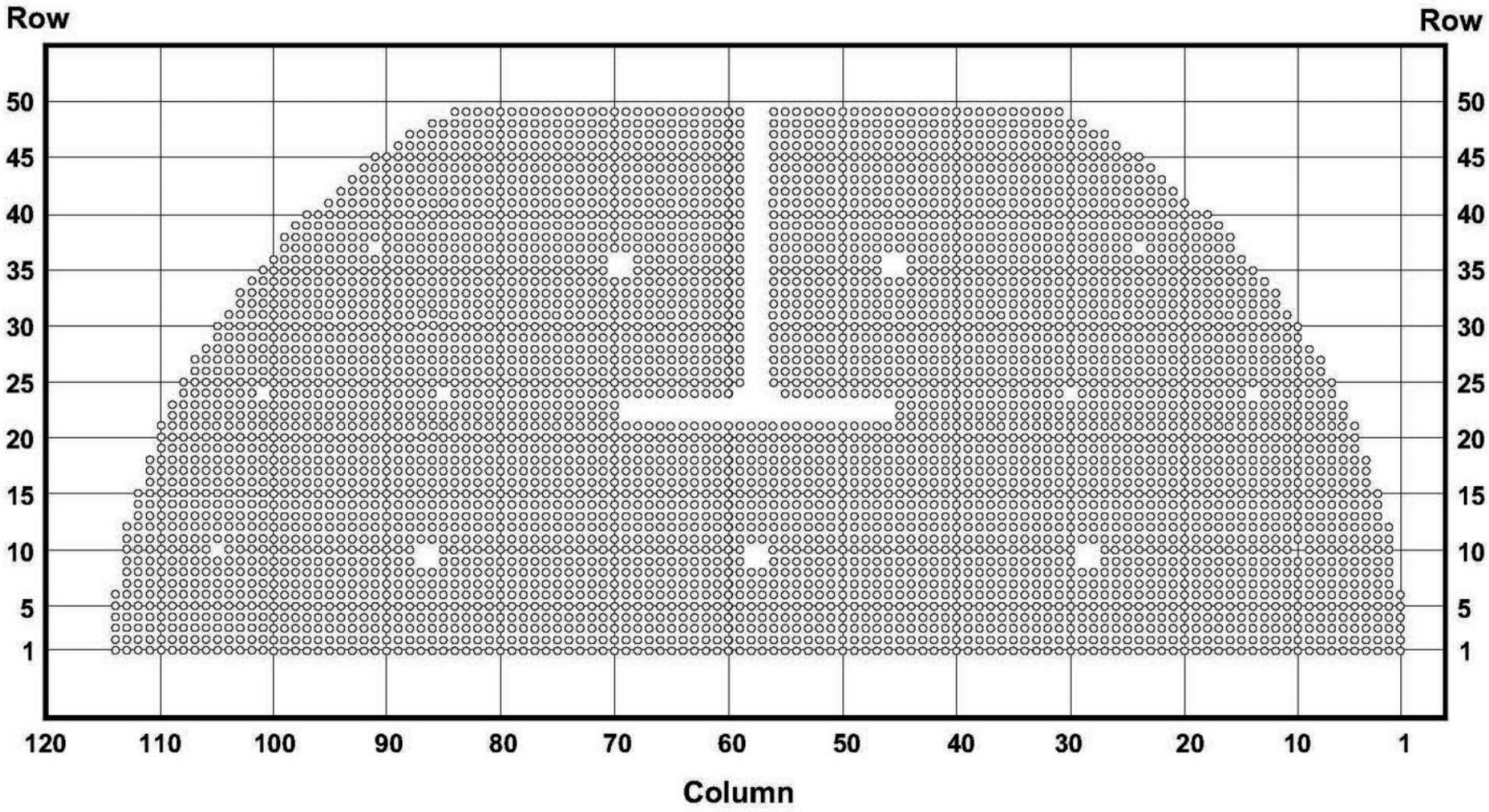

**Figure 2-3: Preheater Region of Westinghouse Model D5 Steam Generator**

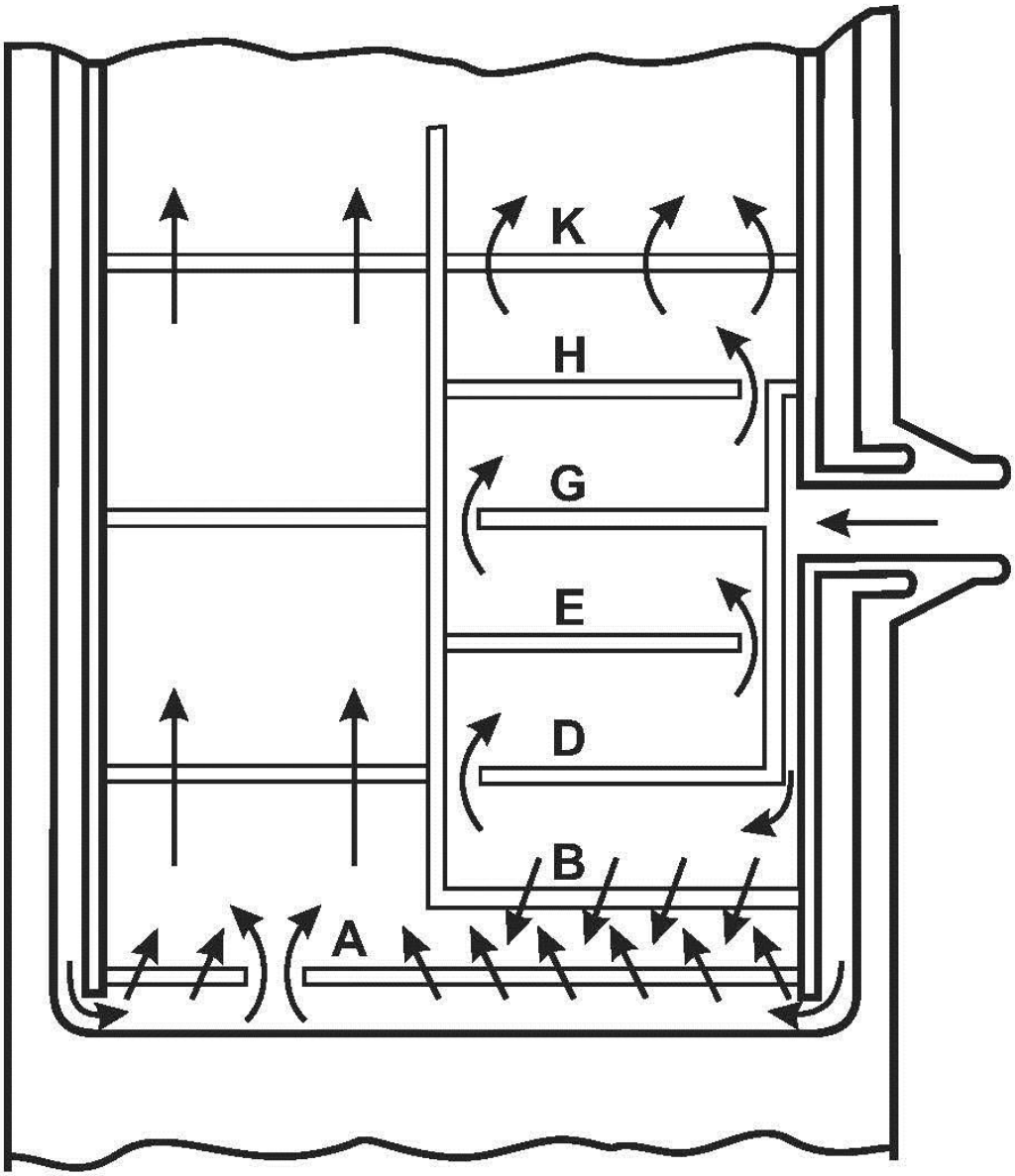

**Figure 2-4: Westinghouse Model F Steam Generator Tube Support Locations**

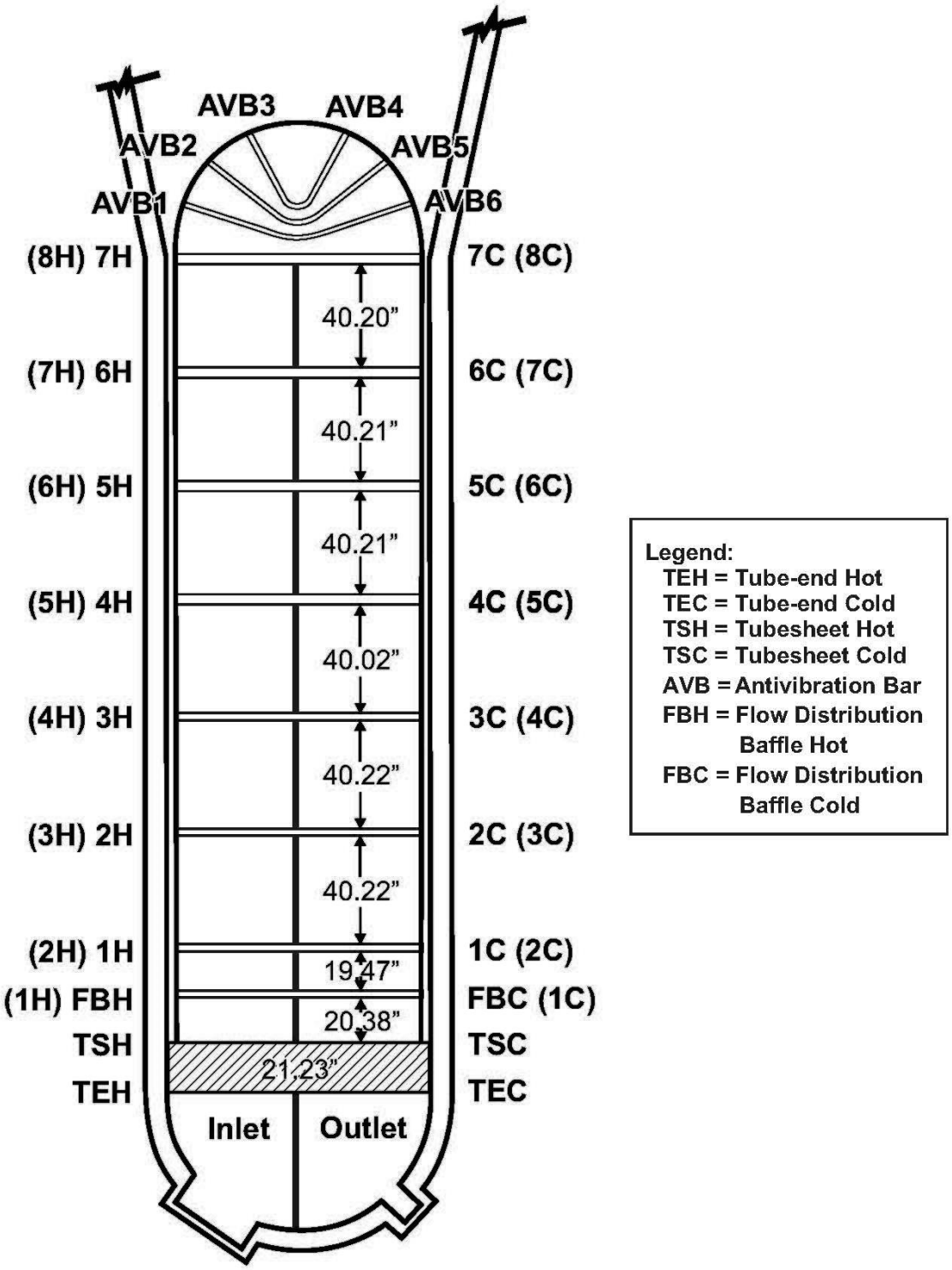


*Note: Alternate Naming Convention in Parentheses*

**Figure 2-5: Westinghouse Model F Steam Generator Tubesheet Map**

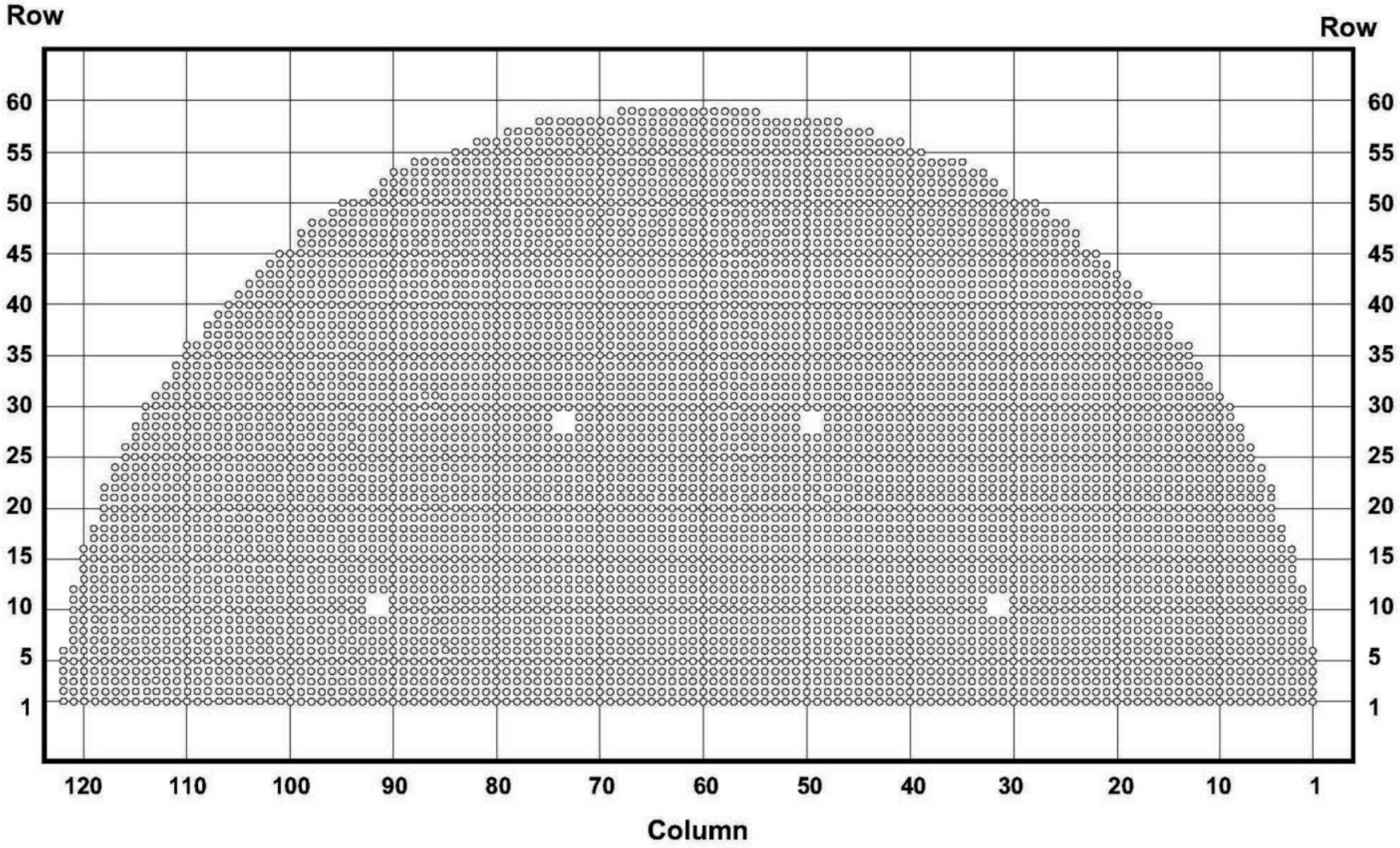

**Figure 2-6: Westinghouse Model 44F Steam Generator Tube Support Locations**

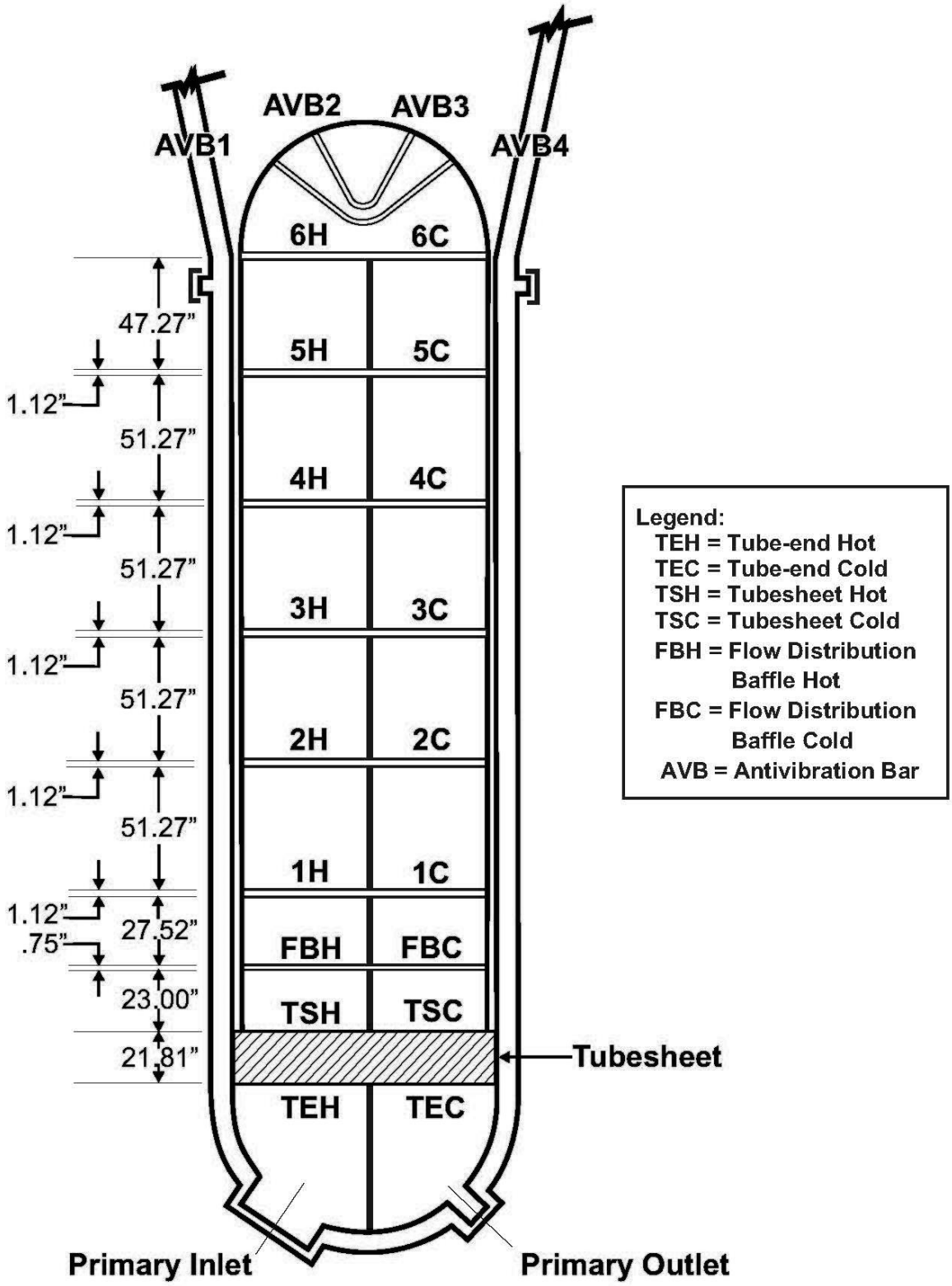

**Figure 2-7: Westinghouse Model 44F Steam Generator Tubesheet Map**

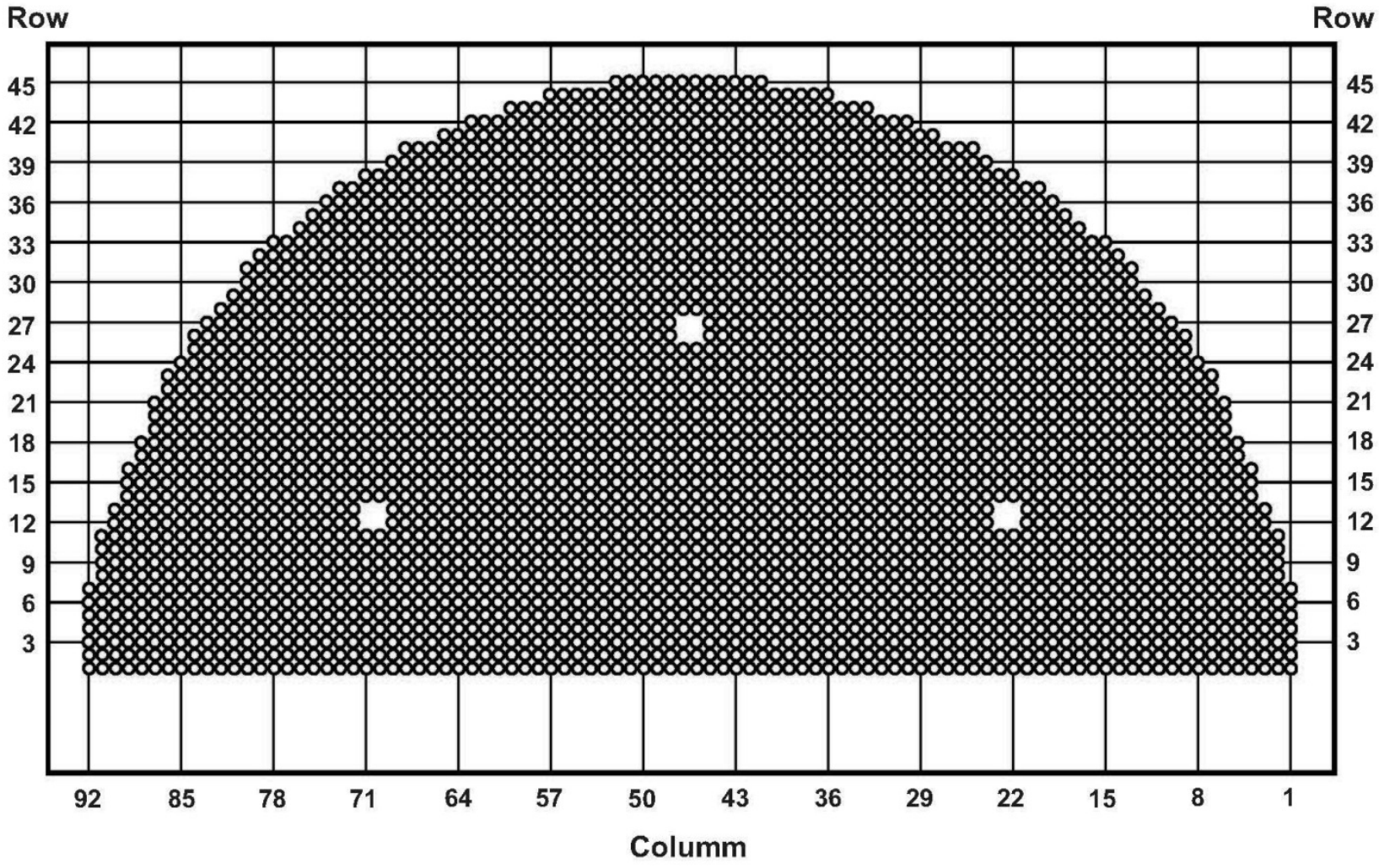

**Figure 2-8: Westinghouse Model 51F Steam Generator Tube Support Locations**

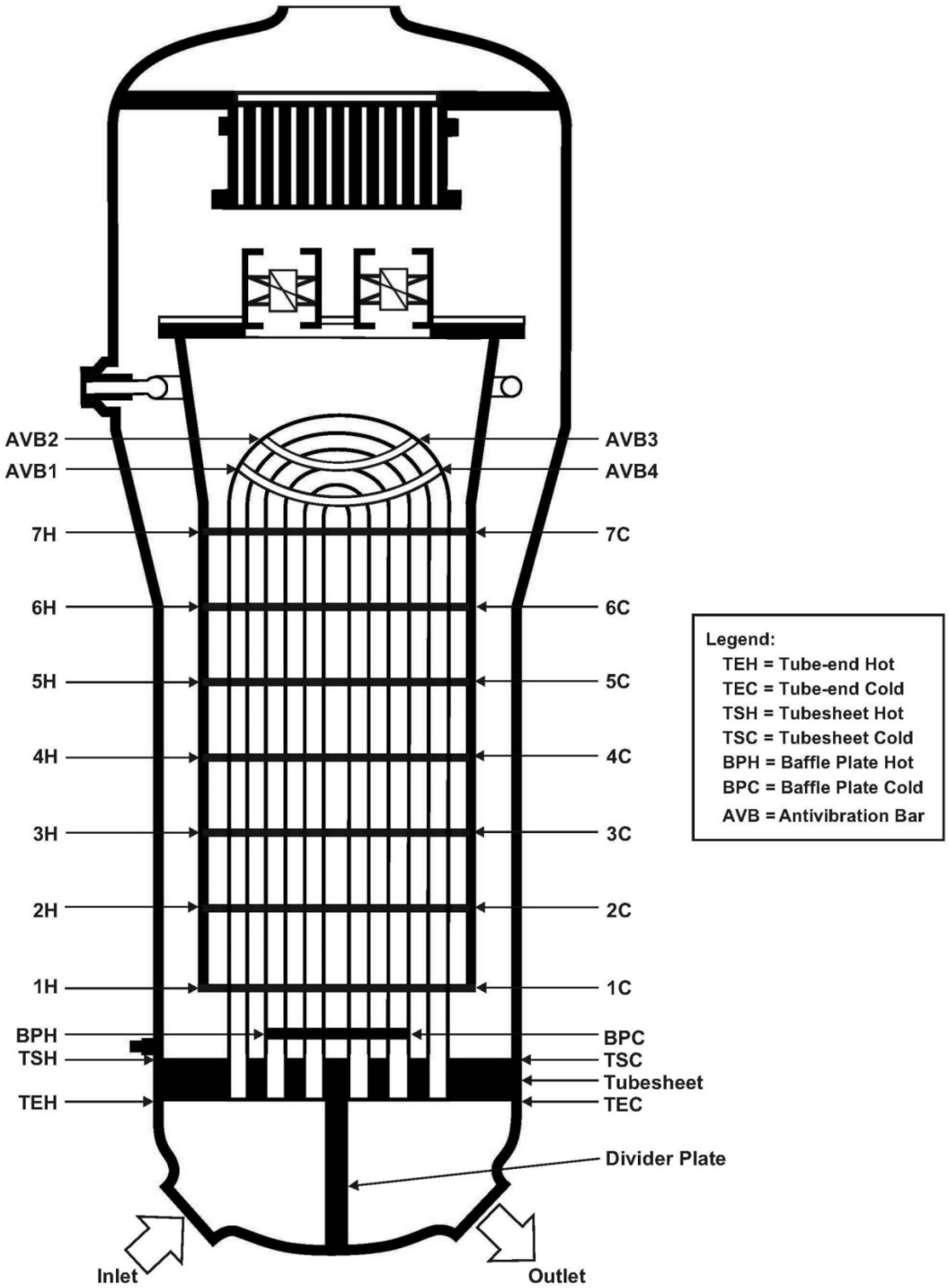

**Figure 2-9: Westinghouse Model 51F Steam Generator Tubesheet Map**

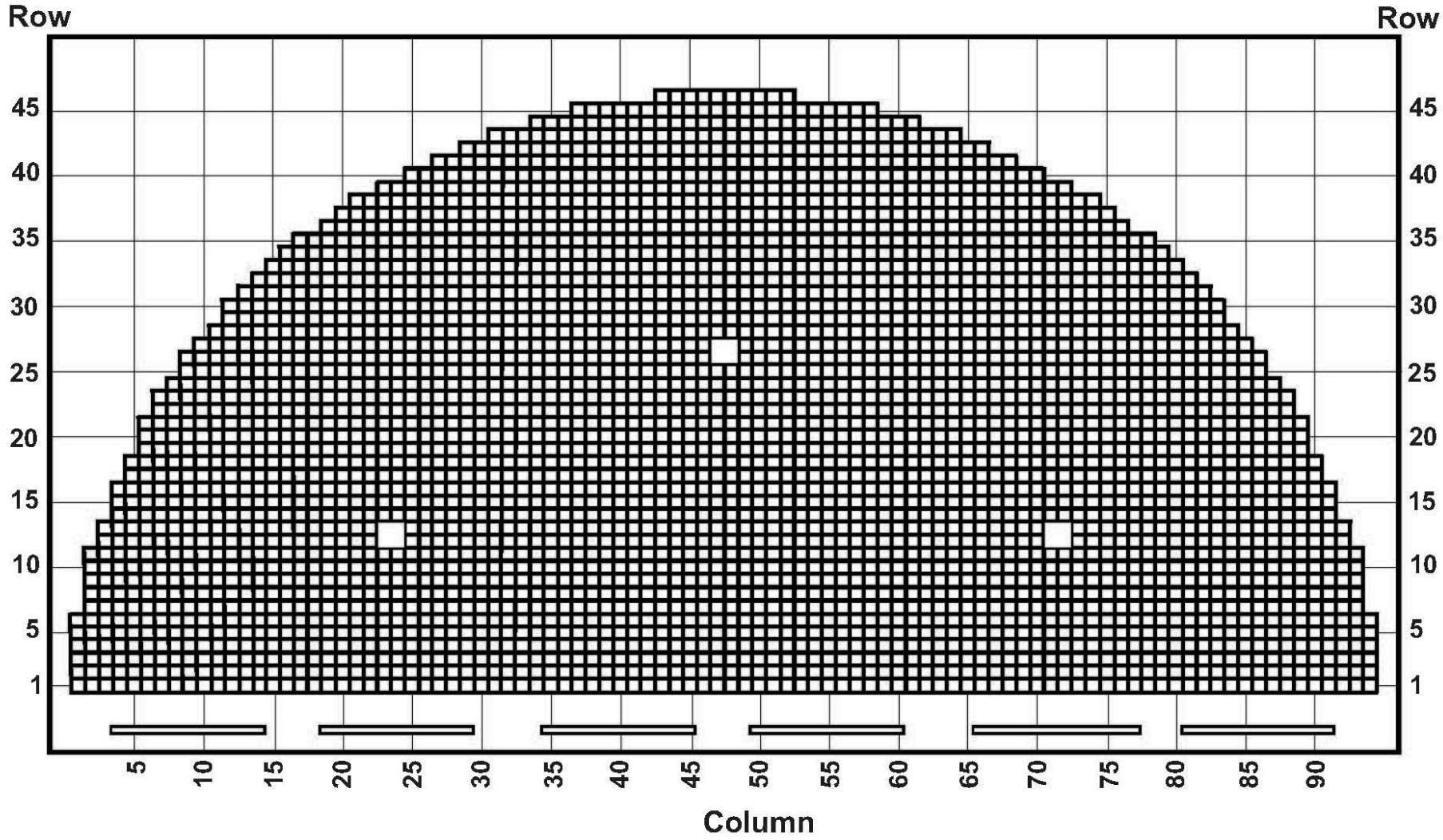

# 3 THERMALLY TREATED ALLOY 600 STEAM GENERATOR TUBE OPERATING EXPERIENCE

## 3.1 Data Gathering Methods and Introduction

This section summarizes inspection results for units with thermally treated Alloy 600 steam generator tubes from December 2001 through December 2013. Prior operating experience is summarized in NUREG-1771. Some added information from primarily the first half of 2014 is also included in this section. The information was gathered primarily from reports submitted to the NRC in accordance with a unit's technical specifications. These reports discuss the scope of the inspections, the indications detected, the number of tubes plugged, and the results of condition monitoring. The level of detail provided in these reports varies from unit to unit and frequently from tube inspection outage to outage. In addition, the results and interpretation of the results represent the licensee's analysis and evaluation at the time the report was submitted. This may have changed over time. Some inspection results were also obtained through regional inspection reports, summaries of conference calls with licensees, and meeting summaries. A detailed review of regional inspection reports was not conducted, and that data were not compiled. In spite of these limitations, this report provides useful insights into the operating experience with thermally treated Alloy 600 steam generator tubes.

In this section, the units with thermally treated Alloy 600 steam generator tubes are divided into one of three categories: plants with model D5 steam generators, plants with model F steam generators, and plants with replacement model steam generators. For each unit, there is (1) a summary of the inspections, (2) a table summarizing the full-length bobbin coil examinations and number of tubes plugged during each outage, (3) a table summarizing the reasons for plugging each tube, and (4) a table listing the tubes plugged for reasons other than wear at the AVBs. In the tables that summarize the reasons for tube plugging, a category referred to as "other" was used to capture tubes that were plugged and for which the specific reason for plugging was not provided or was not clear. Tubes in this category were subdivided based on the location where the degradation was reported (e.g., at the top of the tubesheet). None of these indications were considered to have resulted from stress corrosion cracking.

## 3.2 Model D5 Steam Generator Operating Experience

Inspection results for Braidwood 2, Byron 2, Catawba 2, and Comanche Peak 2 are provided in this section of the report.

### 3.2.1 Braidwood 2

Tables 3-1, 3-2, and 3-3 summarize the information discussed below for Braidwood 2. Table 3-1 provides the number of full-length bobbin inspections and the number of tubes plugged and deplugged during each outage for each of the four steam generators. Table 3-2 lists the reasons why the tubes were plugged. Table 3-3 lists tubes plugged for reasons other than wear at the AVBs.

Braidwood 2 has four Westinghouse model D5 steam generators. The licensee numbers its tube supports from 1H to 11H on the hot-leg side of the steam generator and from 1C to 11C on the cold-leg side (Figure 2-1). Based on accident analysis considerations, a maximum of

30 percent of the tubes can be plugged in any one steam generator and a maximum of 24 percent of the tubes in the four steam generators can be plugged.

During refueling outage (RFO) 9 in 2002, 100 percent of the tubes in steam generator A were inspected full length with a bobbin coil. As a result of these inspections, two tubes were plugged. These two tubes were plugged for wear at the AVBs. In addition to the bobbin coil inspections, all plugs in steam generator A were inspected visually. No degradation or abnormal leakage was identified during the inspection of the plugs.

The only steam generator tube degradation mechanism observed during RFO 9 was wear at the AVBs.

A total of 343 indications of AVB wear were detected in steam generator A. The maximum depth reported for the AVB wear indications was 40 percent throughwall.

Inspection and maintenance on the secondary side of the steam generator were also performed during RFO 9. To reduce the amount of sludge on the top of the tubesheet, sludge lancing was performed in all four steam generators. After the sludge lancing, foreign object search and retrieval (FOSAR) was performed. FOSAR was performed on the top of the tubesheet in all four steam generators and at the 8th and 11th tube support plate in steam generators A and C. The visual inspections performed during FOSAR on the top of tubesheet focused on the periphery of the tube bundle, the open tube lane (i.e., the region between the hot- and cold-leg of the row 1 tubes), and the T-slot region. In addition, limited visual inspections within the tube bundle on the top of the tubesheet were performed down two hot-leg and cold-leg tube columns in all four steam generators. The upper tube support plate visual inspection also included the open tube lane and limited in-bundle inspections to assess deposit loading. The FOSAR inspections revealed a total of six loose parts in steam generators B (2 objects), C (1 object), and D (3 objects), four of which were removed. These loose parts included weld slag (3), a wire bristle (1), duct tape (1), and a metal object (1). None of these parts resulted in tube wear. Of the two objects that could not be removed, one was in steam generator B (row 22, columns 79 and 80) and was characterized as weld slag measuring approximately 2.86 cm (1.125 in.) in height, 2.54 cm (1 in.) in length, and 8.89 mm (0.35 in.) in width on the tubesheet in the cold-leg; and the other object was in steam generator D (rows 6 and 7, column 2) and was characterized as a metal object measuring approximately 9.5 mm (0.375 in.) in height, 6.35 mm (0.25 in.) in length, and 6.35 mm (0.25 in.) in width on the tubesheet in the hot-leg. This latter object could be traced back to RFO 3 in 1993.

There was no evidence of primary-to-secondary leakage during Cycle 10 (spring 2002 to fall 2003).

During RFO 10 in 2003, 100 percent of the tubes in each of the four steam generators were inspected full length with a bobbin coil. In addition to the bobbin coil inspections, a rotating probe equipped with a plus-point coil was used to inspect:

- the expansion transition region on the hot-leg side of the steam generator from 7.6 cm (3 in.) above to 7.6 cm (3 in.) below the top of the tubesheet in 50 percent of the tubes
- the U-bend region of 50 percent of the tubes in rows 1 and 2
- 50 percent of hot-leg dents and dings with bobbin voltage amplitudes greater than 5 volts.

A rotating probe equipped with a plus-point coil was also used to inspect 20 percent of the tube expansions at the preheater baffles B and D (i.e., cold-leg tube support plate 2C and 3C, respectively) in steam generators B and C. In addition, all tube plugs in each of the four steam generators were inspected visually. No degradation or abnormal leakage was identified during the inspection of the plugs.

As a result of these inspections, 58 tubes were plugged—10 were plugged for wear at the AVBs, 3 tubes were plugged because of outside-diameter-initiated crack-like indications at the hot-leg tube support plates, 3 low-row (i.e., stress-relieved) tubes were plugged preventatively because they had an eddy current offset indicative of higher residual stress, and 42 tubes were plugged for foreign objects. These 42 tubes included tubes plugged because of wear attributed to the foreign object, and it included tubes preventatively plugged because of the potential that they may be affected by nearby foreign objects. The cold legs of all 42 of these tubes were stabilized.

The only steam generator tube degradation mechanisms observed during RFO 10 were (1) wear at the AVBs, (2) wear at the preheater tube supports, (3) wear attributed to loose parts, and (4) axially oriented outside-diameter stress corrosion cracking at the tube support plate elevations.

RFO 10 inspections identified a total of 748 indications of AVB wear: 315 indications in steam generator A, 83 indications in steam generator B, 225 indications in steam generator C, and 125 indications in steam generator D. The maximum depth reported for the AVB wear indications was 49 percent throughwall.

Wear was also detected at the tube support plates in the preheater region. Six tubes had indications of wear. The depth of these indications ranged from 4 percent to 18 percent throughwall.

Before the commencement of RFO 10, tubes with an eddy current offset that could indicate higher residual stresses (and therefore higher susceptibility to cracking) were identified. Cracking associated with tubes with an eddy current offset was observed at Seabrook (Information Notice (IN) 2002-21, “Axial Outside-Diameter Cracking Affecting Thermally Treated Alloy 600 Steam Generator Tubing,” dated June 25, 2002, and its supplement, dated April 1, 2003, for more details).

The technique for detecting the eddy current offset was a quantitative technique for the tubes in rows 1 through 9 and a semi-qualitative technique for the tubes in rows 10 and above (the steam generator has 49 rows of tubes). For the low-row tubes (i.e., rows 1 through 9), the thermal stress relief of the U-bend region of the tube should result in consistently low stresses throughout the tube (i.e., no eddy current offset should exist). Any significant eddy current offset would indicate higher stresses in the straight span section of the tube. In the higher row tubes (i.e., greater than row 9), an eddy current offset is expected because the U-bend region of the tube is not stress relieved after bending. As a result, the method for determining the presence of an abnormal offset for the higher row tubes involved calculating the average eddy current offset associated with each row of tubes and the standard deviation associated with this average. Tubes with an offset whose magnitude was less than the mean minus two standard deviations were considered to have potentially higher residual stresses. That is, for the higher row tubes, the absence of an offset may indicate higher stresses in the straight span portion of the tube.

As a result of applying this low frequency bobbin coil screening technique to previous bobbin coil inspections results (i.e., before 2003), 77 tubes with possibly high residual stresses in the straight span portion of the tube were identified (these higher stresses may result in a higher likelihood for cracking). Three of these 77 tubes were in low-row tubes (i.e., rows 1 through 9) and 74 were in higher row tubes. Before the outage, the licensee planned on plugging all three tubes in the low-row tubes with the offset and any of the tubes in the higher row tubes with the offset that had a distorted bobbin coil indication regardless of whether an inspection with a rotating probe indicated a flaw was present at the location of the distortion.

No crack-like indications were found at any location except for at the tube support plates. At the tube support plates, four axially oriented indications indicative of outside-diameter stress corrosion cracking were observed. These four crack-like indications were observed in three of the higher row tubes (i.e., one tube had two indications) with an offset in the eddy current data (the indications were in 3 of the 77 tubes identified with an offset before the outage). In addition, the expansion transitions of the three tubes with crack-like indications and 31 of the remaining 74 tubes with the eddy current offset were inspected with a rotating probe and no degradation was detected during these inspections.

Of the three tubes plugged because of crack-like indications indicative of outside-diameter stress corrosion cracking, two were in steam generator C, and one was in steam generator A. In steam generator C, two axial indications were observed in the tube at row 21, column 50, and one axial indication was observed in the tube at row 38, column 20. In the tube at row 21 column 50, one indication was at the third tube support plate on the hot-leg side and had a bobbin voltage of 0.34 volt while the other indication was at the fifth tube support plate on the hot-leg side and had a bobbin voltage of 0.17 volt. The maximum voltage from the plus-point coil for the indication at the third tube support plate was 0.41 volt, the length was 1.85 cm (0.73 in.), and the maximum depth was estimated from the voltage to be 47 percent throughwall. The percent degraded area was calculated to be 33.5 percent. The indication at the fifth tube support plate has a plus-point voltage of 0.23 volt. In the tube at row 38 column 20, the axial indication was at the seventh tube support plate on the hot-leg side tube and had a bobbin voltage of 0.13 volt and a plus-point voltage of 0.12 volt. None of these three indications were present during the prior inspection of these tubes in 2000 (based on a hindsight review). In steam generator A, one axial indication was observed in the tube at row 25, column 42. This indication was at the third tube support plate on the hot-leg side and had a bobbin voltage of 0.08 volt and a plus-point voltage of 0.25 volt. With hindsight, a bobbin signal (about 0.07 volt) could be identified at this location in the 2002 tube inspection data. In the 2000 bobbin coil data, a questionable indication of 0.06 volts can be identified, but it is questionable in relation to the background noise. Each of these four bobbin indications was confirmed to be present with a rotating probe equipped with a plus-point coil and all of them were associated with a tube support plate land and were confined to within the tube support plate thickness. The eddy current offset in these three high row tubes was the least of any of tubes in the respective rows, indicating that the residual stresses in the straight spans of these tubes could be higher than the rest of the tubes, making these tubes more susceptible to cracking. The safety significance of these indications was analyzed, and it was concluded that all tubes had adequate integrity. These tubes were not in-situ pressure tested. All three of these tubes were plugged as were all three of the low-row tubes that had an eddy current offset (even though no flaws were detected in these tubes).

FOSAR was performed in all four steam generators on the top of the tubesheet and in the preheater region during RFO 10. This was the first time that FOSAR was performed in the preheater region. The FOSAR revealed numerous loose parts primarily in the preheater region.

Most of these parts were retrieved and did not result in any tube wear; however, a few loose parts could not be removed or resulted in tube wear. Six tubes had indications of wear attributed to loose parts. These indications ranged in size from 5 percent to 38 percent throughwall. For those tubes with wear adjacent to loose parts that could not be retrieved, the tubes were stabilized and plugged.

Of the loose parts that were detected, only nine could not be removed from the steam generators. For five of these parts, a licensee analysis showed that it was acceptable to leave these parts and the nearby tubes in service. Four of these parts were small wires between the tube and the tube support plate that could be grabbed, but could not be removed. The fifth part was a small metal object on the top of the tubesheet in steam generator D. This part has been present since RFO 6 (1997) and appears to be in the same location and has not changed in size. None of these five parts has caused any tube wear.

For the remaining four loose parts, the tubes surrounding these parts were plugged and stabilized. Forty-two tubes were plugged and stabilized because of finding these parts. Most of these tubes (35) were plugged because of finding two manufacturing fit-up bars (also referred to as backing bars) on top of preheater baffle B (i.e., the second cold-leg tube support) in steam generator B. These bars measure 2.54 cm (1 in.) by 2.54 cm (1 in.) by 7.6 cm (3 in.) and assist in the assembly of the steam generator. They were installed (i.e., welded) on the bottom of preheater baffle D (i.e., the third cold-leg tube support). These fit-up bars serve no structural or operational function. After visually identifying the presence of these fit-up bars, it was determined from previous eddy current data that one of these bars was present on the top of preheater baffle B (i.e., the second cold-leg tube support) since the spring of 1990, while the other has been present since the fall of 1994. These bars resulted in tube wear with one bar resulting in two wear scars (maximum depths of 28 percent and 21 percent throughwall) in one tube and the other bar resulting in one wear scar (maximum depth of 5 percent throughwall). One of these bars also was attributed to a volumetric indication that was detected in a neighboring tube in 1994 (and measured 39 percent throughwall) and was subsequently plugged (but not stabilized) in 1997. With the visual identification of this part, this volumetric indication is now attributed to wear from the fit-up bar.

Each steam generator has 22 fit-up bars. Fourteen of these bars are on the bottom of the first hot- and cold-leg tube support, four are on the bottom of baffle plate D (i.e., the third cold-leg tube support), and four are on a portion of the preheater near the center of the tube bundle and above the first tube support plate (i.e., 1H and 1C). If these latter bars were to fall, they would most likely end up on the first tube support plate. During the outage, the backing bars were determined to be present either directly or indirectly in all four steam generators. All of the backing bars were in place (with the exception of the two mentioned above). The failure of these two backing bars was attributed to fabrication loads/weld shrinkage. The backing bars were most likely misaligned such that when the permanent wedges and stay rods were installed, they resulted in high loads on the backing bar welds, resulting in their failure. The wedges and stay rods support and position the support plate. Visual inspection of the two backing bars showed that the welds had sheared and there was no evidence that the failure was a result of fatigue.

As discussed above, the two backing bars found on top of preheater baffle B could not be removed from the steam generator. As a result, all tubes surrounding the backing bars were stabilized and plugged. In addition, the licensee stabilized and plugged all tubes surrounding the tube that was plugged in 1997 for the volumetric indication near one of these backing bars.

As a precautionary measure, the tubes surrounding the remaining two intact backing bars on the bottom of preheater baffle plate D in steam generator B were also stabilized and plugged.

On April 25, 2005, the steam generator portion of the Braidwood 2 technical specifications was revised to limit the extent of inspection in the hot-leg tubesheet region. Specifically, the technical specifications excluded the portion of tube that is more than 43.2 cm (17 in.) below the top of the tubesheet from inspection (i.e., approximately the lowermost 10.2 cm (4 in.) of tube in the tubesheet on the hot-leg side was excluded from inspection, and hence any flaws that may exist in this region are permitted to remain in service). This revision was applicable only to RFO 11 and the subsequent operating cycle (Agencywide Documents Access and Management System (ADAMS) Accession No. ML051170149)

During RFO 11 in 2005, 100 percent of the tubes in each of the four steam generators were inspected full length with a bobbin coil. In addition, a rotating probe equipped with a plus-point coil was used to inspect:

- 20 percent of the tubes from 7.6 cm (3 in.) above to 7.6 cm (3 in.) below the top of the tubesheet on the hot-leg side

- 20 percent of the tubes from the top of the tubesheet to 43.2 cm (17 in.) below the top of the tubesheet on the hot-leg side of the steam generator (this included 20 percent of the bulges—with bobbin voltage amplitudes greater than or equal to 18 volts—and overexpansions—with expansions greater than or equal to 0.038 mm (1.5 mils or 0.0015 in.)—between the top of the tubesheet and 43.2 cm (17 in.) below the top of the tubesheet on the hot-leg side of the steam generator)

- the expansion transition region on the hot-leg side (from 7.6 cm (3 in.) above to 7.6 cm (3 in.) below the top of the tubesheet) in 50 percent of the tubes identified as having increased residual stress.

In addition, a rotating probe equipped with a plus-point coil was also used to inspect 20 percent of the tube expansions in the preheater in steam generator C, and the plug expansion zone region in the one tube that had previously been deplugged. In addition, all tube plugs in each of the four steam generators were inspected visually. No degradation or abnormal leakage was identified during the inspection of the plugs.

As a result of these inspections, six tubes were plugged—five for wear at the AVBs, and one for wear from a loose part. This latter tube also was stabilized on the hot-leg side of the steam generator.

The only steam generator tube degradation mechanisms observed during RFO 11 were wear at the AVBs, wear at the preheater tube supports, and wear attributed to loose parts.

A total of 775 indications of AVB wear were detected during RFO 11: 334 indications in steam generator A, 82 indications in steam generator B, 226 indications in steam generator C, and 133 indications in steam generator D. The maximum depth reported for the AVB wear indications was 44 percent throughwall.

Wear was also observed at the tube support plates in the preheater region. Eight tubes had indications of wear. The depth of these indications ranged from 4 percent to 21 percent throughwall.

Wear attributed to loose parts was detected in four tubes, including the tube that was plugged. The maximum depth reported for the wear indication attributed to a foreign object in the tube that was plugged during RFO 11 was 24 percent throughwall. This indication was below the eighth tube support plate on the hot-leg side of the steam generator.

FOSAR was conducted in the preheater region of steam generator B during RFO 11. No foreign objects that had the potential of causing significant tube wear were identified. Most objects identified were retrieved, and for the objects remaining in the steam generator (small objects), the licensee performed an analysis confirming that they were acceptable to leave in the steam generator. Because secondary-side visual inspections were not performed in the other three steam generators, a rotating probe was used to inspect the preheater tube expansion transitions in the corner tube region. No wear attributed to loose parts and no possible loose parts were identified during these inspections. The corner tube region is an area in the preheater region on the second baffle plate that is adjacent to the flow blocking device. Industry operating experience indicates that foreign objects (loose parts) migrate to this area and may cause tube wear.

Visual inspections of the waterbox cap plate and waterbox rib region was conducted in all four steam generators during RFO 11. This was in response to industry operating experience indicating that extensive erosion could occur in these regions (Byron 2). Only trace amounts of erosion were observed in the waterbox cap plate flow holes. No erosion was observed in the waterbox rib holes.

The secondary-side moisture separator region of steam generator D was inspected during RFO 11. This was the first in-service inspection of this region. Erosion of the primary moisture separator tangential nozzles, downcomer barrels, and swirl vanes was identified. This condition existed in varying degrees on 12 of the 16 primary separator assemblies. The components identified with the missing magnetite layer are fabricated from carbon steel. Several ultrasonic thickness measurements were taken in areas with the most apparent erosion (in areas where the magnetite layer was missing). The normal thickness of the various components is 6.35 mm (0.250 in.) and the minimum measured thickness of any of the ultrasonically inspected components was 4.5 mm (0.177 in.) An analysis was performed by the licensee that determined that the erosion in the affected areas would not penetrate through wall over the next operating cycle; and therefore, would not affect steam generator performance or generate loose parts.

No crack-like indications were detected during RFO 11.

On October 24, 2006, the steam generator portion of the Braidwood 2 technical specifications was revised to limit the extent of inspection in the hot-leg tubesheet region. Specifically, the technical specifications were revised to exclude the portion of tube that is more than 43.2 cm (17 in.) below the top of the tubesheet from inspection (i.e., approximately the lowermost 10.2 cm (4 in.) of tube in the tubesheet on the hot-leg side was excluded from inspection, and hence any flaws that may exist in this region are permitted to remain in service). This revision was applicable only to RFO 12 and the subsequent operating cycle (ADAMS Accession No. ML062780507).

During RFO 12 in 2006, 100 percent of the tubes in each of the four steam generators were inspected full length with a bobbin coil. In addition to the bobbin coil inspections, a rotating probe equipped with a plus-point coil was used to inspect:

- 20 percent of the tubes within the tubesheet on the hot-leg side from 7.6 cm (3 in.) above to 7.6 cm (3 in.) below the top of the tubesheet

- 20 percent of the tubes within the tubesheet from the top of the tubesheet to 43.2 cm (17 in.) below the top of the tubesheet on the hot-leg side of the steam generator (this included 20 percent of the hot-leg bulges with bobbin voltage amplitudes greater than or equal to 18 volts and overexpansions greater than or equal to 0.038 mm (1.5 mils) within the hot-leg tubesheet to 43.2 cm (17 in.) below the top of the tubesheet)

- 100 percent of the 71 tubes within the tubesheet on the hot-leg side from 7.62 cm (3 in.) above to 43.2 cm (17 in.) below the top of the tubesheet in tubes identified as having increased residual stress

A rotating probe equipped with a plus-point coil also was used to inspect:

- 20 percent of the preheater baffle plate expansions in steam generator D

- 25 percent of the hot-leg dents and dings with bobbin voltage amplitudes greater than 3 volts in each of the four steam generators

- the U-bend region of 25 percent of the tubes in rows 1 and 2 in each of the four steam generators

In addition, a rotating probe equipped with a plus-point coil was also used to inspect the plug expansion zone region in the one tube that had been deplugged. All of the bobbin coil data from the hot-leg and cold-leg region of the tubesheet were analyzed to identify any unexpanded tubes in each of the four steam generators. In addition, all tube plugs in each of the four steam generators were inspected visually. No degradation or abnormal leakage was identified during the inspection of the plugs.

As a result of these inspections, 14 tubes were plugged—10 for wear at the AVBs, 2 for wear attributed to loose parts, and 2 for indications of wear at the tube support plates in the preheater region.

The only steam generator tube degradation mechanisms observed during RFO 12 were wear at the AVBs, wear at the preheater tube supports, and wear attributed to loose parts.

A total of 847 indications of AVB wear were detected during RFO 12: 374 indications in steam generator A, 92 indications in steam generator B, 242 indications in steam generator C, and 139 indications in steam generator D. The maximum depth reported for the AVB wear indications was 46 percent throughwall.

Eight tubes were identified with wear indications at the tube support plates in the preheater region. The depth of these indications ranged from 3 percent to 46 percent throughwall.

Two tubes were identified with new indications of wear attributed to loose parts. One of the wear indications was 16 percent throughwall, and it was identified in steam generator A, in row 12, column 70, slightly below the fifth tube support plate on the hot-leg side. The second wear indication was 22 percent throughwall, and it was identified in steam generator C in row 8, column 18 slightly below the seventh tube support plate on the hot-leg side. Both tubes affected

by secondary-side foreign objects were stabilized and plugged. Neither of these two tube locations was accessible for secondary-side visual inspections. Review of eddy current plus-point data for the affected tubes and the surrounding tubes showed no evidence of a foreign object remaining in the area. No anomalies were identified in the support plate or surrounding structures. Review of historical eddy current data showed no signs of wear or a foreign object at these locations in previous outages. In addition to these two tubes, four other tubes had indications of foreign object wear. The indications in these four tubes have not changed since RFO 11.

All of the tubes were confirmed to be expanded within the tubesheet region.

FOSAR was performed in each of the four steam generators during RFO 12. Inspections were performed at the top of the tubesheet, periphery of the tube bundle, limited in-bundle, and tube free lane. FOSAR was also performed in the preheater high flow regions in steam generator C. No foreign objects that had the potential to cause significant tube wear were identified in the preheater region in steam generator C. Most objects identified were retrieved, and the licensee analyzed the objects remaining in the steam generator (small objects), confirming that they were acceptable to leave in the steam generator. Because secondary-side visual inspections were not performed in the preheater region of the other three steam generators, a rotating probe was used to inspect the preheater tube expansion transitions in the corner tube region. No wear attributed to loose parts and no possible loose parts were identified during these inspections. The corner tube region is an area in the preheater region on the second baffle plate that is adjacent to the flow blocking device. Industry operating experience indicates that foreign objects (loose parts) migrate to this area and may cause tube wear. FOSAR inspections revealed 22 loose parts in steam generators A (1 object), B (1 object), C (18 objects) and D (2 objects), 17 of which were removed. None of these objects caused wear to the surrounding tubes.

The waterbox cap plate and waterbox rib region in steam generator C were inspected visually during RFO 12. These inspections indicated only trace amounts of erosion in the waterbox cap plate flow holes (similar to that observed in RFO 11), and no erosion was observed in the waterbox rib holes.

Of the five foreign objects that could not be retrieved, four were characterized as wires 0.4 mm (0.016 in.) in diameter and of various lengths (with a maximum length of 1.9 cm (0.75 in.)). These four objects were in the preheater region of steam generator C (i.e., at the second cold-leg tube support). The fifth foreign object that could not be removed was characterized as a 2.54-cm long by 3.175-mm tall by .254-mm thick (1-in. long by 0.125-in. tall by 0.010-in. thick) metal strip, and was in steam generator D (at row 3, column 3 at the top of the tubesheet on the hot-leg side). The licensee performed an analysis and determined that operation until the next scheduled steam generator inspection (i.e., RFO 13) was acceptable with these foreign objects remaining in the steam generators.

Visual inspection of the waterbox rib and cap plate regions and the 8th and 11th tube support plate regions in steam generator C were also performed during RFO 12. The inspections at the tube support plates were primarily performed to assess deposit loading.

Follow-up visual inspections and ultrasonic thickness measurements were taken in eroded areas of the secondary-side moisture separator region of steam generator D. These areas were initially identified during RFO 11. Continued erosion of the components was identified, although none of the areas was throughwall. An analysis was performed by the licensee that determined

that the erosion in the affected areas would not penetrate through wall over the next operating cycle; and therefore, would not affect steam generator performance or generate loose parts.

On March 30, 2007, the steam generator portion of the Braidwood 2 technical specifications was revised to make them performance-based consistent with TSTF Improved Standard Technical Specifications Change Traveler TSTF-449 and to delete Westinghouse laser welded sleeving as an authorized repair method (ADAMS Accession Nos. ML070810354 and ML071210555).

On April 18, 2008, the steam generator portion of the Braidwood 2 technical specifications was revised to permit certain sized flaws near the tube end in both the hot- and cold-leg sides of the steam generator to remain in service. Specifically, the technical specifications were revised to (1) permit flaws having a circumferential component less than or equal to 203 degrees found in the portion of the tube below 43.2 cm (17 in.) from the top of the tubesheet and above 2.54 cm (1 in.) from the bottom of the tubesheet to remain in service, (2) require the removal from service all flaws having a circumferential component greater than 203 degrees found in the portion of the tube below 43.2 cm (17 in.) from the top of the tubesheet and above 2.54 cm (1 in.) from the bottom of the tubesheet, (3) require the removal from service all tubes with service-induced flaws between the top of the tubesheet and 43.2 cm (17 in.) below the top of the tubesheet, and (4) permit all axial indications found in the portion of the tube below 43.2 cm (17 in.) from the top of the tubesheet to remain in service. In addition, the technical specifications were modified to indicate that when more than one flaw with circumferential components is found in the portion of the tube below 43.2 cm (17 in.) from the top of the tubesheet and above 2.54 cm (1 in.) from the bottom of the tubesheet with the total of the circumferential components being greater than 203 degrees and the axial separation distance of less than 2.54 cm (1 in.), then the tube must be removed from service (overlapping portions of the flaws only need to be counted once in determining the total circumferential involvement of the flaws). For flaws within 2.54 cm (1 in.) of the bottom of the tubesheet, the technical specifications were modified to indicate (1) when one or more flaws with circumferential components are found and the total of the circumferential components exceeds 94 degrees, then the tube shall be removed from service and (2) when one or more flaws with circumferential components are found in the portion of the tube within 2.54 cm (1 in.) from the bottom of the tubesheet and within 2.54 cm (1 in.) axial separation distance of a flaw above 2.54 cm (1 in.) from the bottom of the tubesheet, and the total of the circumferential components found in the tube exceeds 94-degrees then the tube shall be removed from service (overlapping portions of the flaws only need to be counted once in determining the total circumferential involvement of the flaws). This revision to the technical specifications was applicable only to RFO 13 and the subsequent operating cycle (ADAMS Accession No. ML080920889).

There was no evidence of primary-to-secondary leakage during Cycle 13 (fall 2006 to spring 2008).

During RFO 13 in 2008, 100 percent of the tubes in each of the four steam generators were inspected full length with a bobbin coil excluding the U-bend region of the tubes in rows 1 and 2 (and the cold-leg straight sections of 15 tubes since these tubes were plugged before the completion of the cold-leg inspections). In addition to the bobbin coil inspections, a rotating probe equipped with a plus-point coil was used to inspect:

- 20 percent of the tubes on the hot-leg side from 7.6 cm (3 in.) above to 7.6 cm (3 in.) below the top of the tubesheet

- 20 percent of the tubes from the top of the tubesheet on the hot-leg side of the steam generator to the hot-leg tube end (this included 20 percent of the hot-leg bulges with bobbin voltage amplitudes greater than or equal to 18 volts and overexpansions greater than or equal to 0.038 mm (1.5 mils) above 2.54 cm (1 in.) from the tube end)

- 100 percent of the tubes from the tube end to 2.54 cm (1 in.) above the tube-end on the hot-leg side

- 100 percent of the tubes from 7.62 cm (3 in.) above the tubesheet on the hot-leg side to the hot-leg tube end in tubes identified as having increased residual stress

A rotating probe equipped with a plus-point coil was also used to inspect:

- 20 percent of the preheater baffle plate expansions in steam generator A (and several peripheral tubes in the other steam generators at tube support 2C near the flow blocking region of the preheater because this location has been known as an area where secondary-side foreign objects may collect because of the flow conditions in this region)

- 100 percent of the hot-leg dents and dings with bobbin voltage amplitudes greater than 3 volts in tubes with increased residual stress in each of the four steam generators

- 25 percent of the hot-leg dents and dings with bobbin voltage amplitudes greater than 3 volts in tubes in each of the four steam generators

- the U-bend region of 25 percent of the tubes in rows 1 and 2 in each of the four steam generators

- 100 percent of the wear indications contained in in-service tubes with increased residual stress (none were identified in RFO 13)

In addition, a rotating probe equipped with a plus-point coil was also used to inspect the plug expansion zone region in the one tube that had previously been deplugged. In addition, all tube plugs in each of the four steam generators were inspected visually. No degradation or abnormal leakage was identified during the inspection of the plugs.

As a result of these inspections, 23 tubes were plugged—6 for wear at the AVBs, 1 for wear attributed to loose parts, and 16 for primary water stress corrosion cracking indications near the tube ends.

The only steam generator tube degradation mechanisms observed during RFO 13 were (1) wear at the AVBs, (2) wear at the preheater tube supports, (3) wear attributed to loose parts, and (4) primary water stress corrosion cracking at the tube ends.

A total of 868 indications of AVB wear were detected during RFO 13: 360 indications in steam generator A, 97 indications in steam generator B, 249 indications in steam generator C, and 162 indications in steam generator D. The maximum depth reported for the AVB wear indications was 43 percent throughwall.

Six tubes were identified with wear indications at the tube support plates in the preheater region. The depth of these indications ranged from 3 percent to 30 percent throughwall.

One tube in row 3, column 85 in steam generator C had an 11 percent throughwall indication slightly above the fifth tube support plate on the cold-leg side. This tube was stabilized and plugged. Review of previous data indicates that the indication had been present since the first in-service inspection in 1990 and had not changed. Additionally four tubes distributed in steam generators A, B, and D had five indications of foreign object wear that had not changed since RFO 12. These tubes were left in service since the depth of the degradation is below the Technical Specification limits and visual verification that the object that had caused the wear was no longer present.

A total of 285 axial and 46 circumferential indications were detected in the bottom 2.54 cm (1 in.) of tubing on the hot-leg side of the steam generator during RFO 13. These indications were attributed to primary water stress corrosion cracking and are in 288 tubes. Of the 288 tubes affected by these indications, 16 were plugged because the flaw size exceeded the acceptance criteria discussed above. All 16 of these tubes were in steam generator A, and all but 1 of these tubes were in row 1. Two of the tubes with axial indications near the tube end have potentially higher residual stress as determined by eddy current inspection. Both tubes were left in service. Given that there are 71 tubes with potentially higher residual stress, the percentage of tubes with high residual stress that have cracks is approximately 2.8 percent. Cracking was observed in 1.6 percent of the tubes without potentially higher residual stresses.

Sludge lancing and FOSAR was performed in all four steam generators during RFO 13. The FOSAR was performed after the sludge lancing, and the following areas on the top of the tubesheet were inspected: tubesheet annulus, peripheral tubes (three to five tubes deep), tube lane, and T-slot. In addition, FOSAR was performed in the tube lane and in the peripheral tubes in the tube lane (three to five tubes deep) on the first baffle plate.

A visual inspection of the secondary-side moisture separator regions was performed in all four steam generators during RFO 13. These inspections were performed in response to previous erosion observed in the moisture separator tangential nozzles, downcomer barrels, and swirl vanes in steam generator D during RFO 11. This was the first inspection of all accessible areas in steam generators A, B, and C. Continued erosion of the components in steam generator D was identified, although none of the areas was throughwall. Erosion was also found in the other three steam generators with the most significant eroded area being identified in steam generator C, which exhibited a maximum wall loss of 48 percent based on the original manufacturing nominal wall thickness. The licensee performed an analysis, which determined that the erosion in the affected areas would not penetrate through wall over the next operating cycle; and therefore, would not affect steam generator performance or generate loose parts.

Limited secondary-side visual inspections of the upper bundle region in steam generator C have been performed since RFO 9 to evaluate and trend upper bundle deposits in order to schedule future cleaning operations. Access to the upper bundle region is available through 5.08-cm (2.0-in.) diameter access openings at the 8th and 11th tube supports. The visual inspections were performed primarily on tubes adjacent to the tube lane with some limited in-bundle inspections. During RFO 13, portions of tube support plates 8, 9, 10, and 11 in steam generator C were inspected visually. Most plates had accumulated a layer of soft sludge or soft scale deposits that ranged from 3- to 7.62-mm (0.120- to 0.300-in.) thick. Flow holes and quatrefoils were clear and open, but trace amounts of deposits were forming around the edges. The hot-leg tube bundle deposits were noticeably more developed than the cold-leg.

On October 16, 2009, the steam generator portion of the Braidwood 2 technical specifications was revised to limit the extent of inspection in the tubesheet region. Specifically, the technical

specifications were revised to exclude the portion of tube that is more than 43 cm (16.95 in.) below the top of the tubesheet from inspection (i.e., approximately the lowermost 10.2 cm (4 in.) of tube in the tubesheet was excluded from inspection, and hence any flaws that may exist in this region are permitted to remain in service). This revision was only applicable for RFO 14 and the subsequent operating cycle (ADAMS Accession No. ML092520512).

There was no evidence of primary-to-secondary leakage during Cycle 14 (spring 2008 to fall 2009).

During RFO 14 in 2009, 100 percent of the tubes in each of the four steam generators were inspected full length with a bobbin coil, excluding the U-bend region of the tubes in rows 1 and 2. In addition to the bobbin coil inspections, a rotating probe equipped with a plus-point coil was used to inspect the following in each of the four steam generators:

- the U-bend region of 25 percent of the tubes in rows 1 and 2
- 30 percent of the tubes from 10.2 cm (4 in.) above the top of the tubesheet to 45.7 cm (18 in.) below the top of the tubesheet on the hot-leg side (which included 30 percent of bulges within the top 43 cm (16.95 in.) of the tubesheet on the hot-leg side with bobbin voltage amplitudes greater than or equal to 18 volts and overexpansions greater than or equal to 0.038 mm (1.5 mils))
- all 71 tubes identified as having increased residual stress from 10.2 cm (4 in.) above the top of the tubesheet to 45.7 cm (18 in.) below the top of the tubesheet on the hot-leg side

A rotating probe equipped with a plus-point coil was also used to inspect:

- 25 percent of hot-leg dents and dings with bobbin voltage amplitudes greater than 3 volts in each of the four steam generators
- 100 percent of the hot-leg dents and dings with bobbin voltage amplitudes greater than 2 volts (total of 4 dents and dings) in the 71 tubes with potentially high residual stress
- all wear indications in the 71 tubes with potentially high residual stress (no indications)
- 20 percent of the preheater baffle plate expansions in steam generator B (i.e., 20 percent of the tube expansions at tube supports 2C and 3C)
- the preheater expansions near the “corner” of the preheater (i.e., the outer peripheral tubes near the flow blocking region on tube support 2C) in steam generators B, C, and D

In addition to these eddy current inspections, all tube plugs in each of the four steam generators were inspected visually. No anomalies were identified during the inspection of the plugs.

As a result of these inspections, six tubes were plugged—one for AVB wear and five for wear attributed to loose parts.

The only steam generator tube degradation mechanisms observed during RFO 14 were wear at the AVBs, wear at the preheater tube supports, and wear attributed to loose parts.

A total of 896 indications of AVB wear were detected during RFO 14: 374 indications in steam generator A, 108 indications in steam generator B, 241 indications in steam generator C, and 173 indications in steam generator D. The maximum depth reported for the AVB wear indications was 41 percent throughwall.

In addition to the wear indications at the AVBs, six indications of wear at the tube support plates in the preheater region were identified in six tubes. The depth of these indications ranged from 5 percent to 36 percent throughwall.

Fourteen indications of wear attributed to loose parts were found in 13 tubes during RFO 14. These indications ranged from 9 percent to 37 percent throughwall. Five of the wear indications (in four tubes) did not change in size from the previous inspection and a visual inspection did not identify any loose parts near the tube. These tubes remain in-service. Three tubes had wear indications attributed to a piece of slag that measured 5.1 mm (0.2 in.) by 3.8 mm (0.15 in.) by 5.1 mm (0.2 in.) The slag was removed from the steam generator and the tubes were left in service. Five of the tubes with a wear indication were stabilized and plugged since the location could not be inspected visually. One tube was allowed to remain in-service since a visual inspection did not identify any loose parts in the vicinity of the wear indication.

During RFO 14, the bottom of the expansions transitions of all tubes were verified to be within 2.54 cm (1 in.) of the top of the tubesheet.

During RFO 14, inspection/maintenance was performed on the secondary side of the steam generators. During RFO 14, a visual inspection of the waterbox cap plate in steam generator D was performed. No components were missing; however, there were trace levels of erosion at the cap plate flow hole openings. The amount of erosion has had no appreciable change since RFO 11 in 2005.

Visual inspections of the secondary-side moisture separator region was performed in steam generators B and C during RFO 14 because of detecting erosion of the moisture separator tangential nozzles, downcomer barrels, and swirl vanes during RFO 13. Ultrasonic thickness measurements were taken of the eroded areas with an emphasis on re-inspecting the areas identified as eroded during RFO 13. These inspections showed that the erosion was continuing, but no indications of throughwall erosion were found. The extent of erosion was similar in the two steam generators with a maximum wall loss of 47 percent in steam generator B and 38 percent in steam generator C as compared to the original manufacturing nominal value. During RFO 13, the wall loss in steam generator C measured 48 percent throughwall. This discrepancy was attributed, in part, to the magnetite layer that covers the internal surfaces. The magnetite layer is not uniform and significantly changes from cycle-to-cycle. Although some magnetite is removed to couple the ultrasonic transducer to the component, the inaccessible surface of the component is not cleaned before the inspection, and the ultrasonic thickness reading varies depending on the thickness and density of the magnetite layer. In addition, because the surfaces being monitored are internal to the steam generator, they cannot be physically marked. As a result, the exact same location may not be measured each inspection. A licensee analysis indicated that the erosion in the affected areas is not projected to penetrate throughwall, create loose parts, or affect steam generator performance before the next inspection.

On April 13, 2011, the steam generator portion of the Braidwood 2 technical specifications was revised to limit the extent of inspection in the tubesheet region, excluding the portion of tube that is more than 43 cm (16.95 in.) below the top of the tubesheet from inspection (i.e.,

approximately the lowermost 10.2 cm (4 in.) of tube in the tubesheet was excluded from inspection, and hence any flaws that may exist in this region are permitted to remain in service). This revision was only applicable for RFO 15 and the subsequent operating cycle (ADAMS Accession No. ML110840580).

There was no evidence of primary-to-secondary leakage during Cycle 15 (fall 2009 to spring 2011).

During RFO 15 in 2011, 100 percent of the tubes in each of the four steam generators were inspected full length with a bobbin coil, excluding the U-bend region of the tubes in rows 1 and 2. In addition to the bobbin coil inspections, a rotating probe equipped with a plus-point coil was used to inspect the following in each of the four steam generators:

- the U-bend region of 25 percent of the tubes in rows 1 and 2 (and 39 other tubes with manufacturing artifacts)
- 25 percent of the tubes from 10.2 cm (4 in.) above the top of the tubesheet to 45.7 cm (18 in.) below the top of the tubesheet on the hot-leg side (which included 25 percent of bulges within the top 43 cm (16.95 in.) of the tubesheet on the hot-leg side with bobbin voltage amplitudes greater than or equal to 18 volts and overexpansions greater than or equal to 0.038 mm (1.5 mils))
- all tubes (71 tubes) identified as having increased residual stress from 10.2 cm (4 in.) above the top of the tubesheet to 45.7 cm (18 in.) below the top of the tubesheet on the hot-leg side

A rotating probe equipped with a plus-point coil was also used to inspect:

- 25 percent of the historic hot-leg dents and dings with bobbin voltage amplitudes greater than 3 volts in each of the four steam generators
- 100 percent of the hot-leg dents and dings identified during RFO 15 with bobbin voltage amplitudes greater than 3 volts in each of the four steam generators
- 100 percent of the hot-leg dents and dings with bobbin voltage amplitudes greater than 3 volts (2 dents and dings) in the 71 tubes with potentially high residual stress
- all wear indications in the 71 tubes with potentially high residual stress (1 indication)
- 25 percent of the preheater baffle plate expansions in all four steam generators (i.e., 25 percent of the tube expansions at tube supports 2C and 3C)
- 100 percent of the preheater expansions near the “corner” of the preheater (i.e., the outer peripheral tubes near the flow blocking region on tube support 2C) in the three steam generators in which a visual inspection of the preheater region was not scheduled to be performed (i.e., steam generators B, C, and D)

In addition to these eddy current inspections, all tube plugs in each of the four steam generators were inspected visually. No anomalies were identified during the inspection of the plugs.

As a result of these inspections, 30 tubes were plugged—5 for AVB wear, 2 for preheater tube support wear, 18 for wear attributed to loose parts, 4 for potential loose parts, and 1 for axially oriented outside-diameter stress corrosion cracking.

The only steam generator tube degradation mechanisms observed during RFO 15 were (1) wear at the AVBs, (2) wear at the preheater tube supports, (3) wear attributed to loose parts, and (4) axially oriented outside-diameter stress corrosion cracking at the tube support plate elevations (in a tube with potentially elevated residual stresses as evidenced by an offset in the eddy current data).

A total of 927 indications of AVB wear were detected during RFO 15: 385 indications in steam generator A, 106 indications in steam generator B, 257 indications in steam generator C, and 179 indications in steam generator D. The maximum depth reported for the AVB wear indications was 45 percent throughwall.

In addition to the wear indications at the AVBs, six indications of wear at the tube support plates in the preheater region were identified in six tubes. The depth of these indications ranged from 4 percent to 41 percent throughwall.

Twenty-eight indications of wear attributed to loose parts were found in 27 tubes during RFO 15. These indications ranged from 4 percent to 40 percent throughwall. Nine of the wear indications (in eight tubes) did not change in size from the previous inspection and a visual inspection did not identify any loose parts near the tube. These tubes remain in-service. Eighteen tubes with a wear indication were stabilized and plugged since the location could not be inspected visually. One tube was allowed to remain in-service since a visual inspection did not identify any loose parts in the vicinity of the wear indication.

Three indications of axially oriented outside-diameter stress corrosion cracking were identified in one tube (row 2, column 35) during RFO 15. All of the indications were on the hot-leg at an elevation where the tube passes through the tube support plate. Indications were detected at tube supports 3H (maximum voltage of 0.22 volts, length of 2.13 cm (0.84 in.), and maximum depth of 36.3 percent throughwall), 7H (maximum voltage of 0.25 volts, length of 0.66 cm (0.26 in.), and maximum depth of 30.8 percent throughwall), and 9H (maximum voltage of 0.3 volts, length of 2.2 cm (0.87 in.), and maximum depth of 48.3 percent throughwall). The indications at all three tube supports were associated with a single quatrefoil land. All of the indications were confirmed with a Ghent probe. This tube had an eddy current signature indicative of high residual stresses (i.e., a low-row tube with an eddy current offset).

Thirty-nine tubes were identified with manufacturing indications in the U-bend region. The manufacturing artifacts in the U-bend represent a dimensional change in the tube diameter at the tangent point (i.e., where the tube transitions from the straight portion to the U bend) that was created during tube bending. These artifacts are similar to the artifact that was present in a tube that experienced cracking at this location at Vogtle 1 in 2009.

During RFO 15, inspection/maintenance was performed on the secondary side of the steam generators. Sludge lancing was scheduled to be performed in all four steam generators. Fifty-four pounds of sludge was removed from steam generator A, 39.5 pounds of sludge was removed in steam generator C, and 46.5 pounds of sludge was removed from steam generator D. Following sludge lancing, FOSAR was scheduled for all four steam generators. These inspections revealed no foreign objects in steam generator A and five objects were observed in

steam generator D. Of the five objects in steam generator D, four were removed (wire bristles) and the other object, which has been present since RFO 6, remains adhered to the tubesheet.

During RFO 15, steam generator A was inspected visually. These inspections included the waterbox cap plate and the “corner” preheater expansion region on tube support 2C. The inspections revealed five wire bristles, which were removed; a deposit that looked like a machine turning that broke up when retrieval was attempted; and a bushing that had been in the steam generator since a prior inspection.

Visual inspections of the secondary-side moisture separator region was performed in steam generator B during RFO 15 because of detecting erosion of the moisture separator tangential nozzles, downcomer barrels, and swirl vanes during RFO 13 and RFO 14. Ultrasonic thickness measurements were taken of the eroded areas with an emphasis on re-inspecting the areas identified as eroded during RFO 13 and RFO 14. These inspections indicated that the erosion was continuing, but no indications of throughwall erosion were identified. The maximum wall loss measured 51 percent as compared to the original manufacturing nominal value. An analysis (performed by the licensee) indicated that the erosion in the affected areas is not projected to penetrate throughwall, create loose parts, or affect steam generator performance before the next inspection.

On October 5, 2012, the steam generator portion of the Braidwood 2 technical specifications was revised to limit the extent of inspection in the tubesheet region and to remove Combustion Engineering tungsten inert gas welded sleeving as an authorized repair method. Specifically, the technical specifications were revised to exclude the portion of tube that is more than 35.59 cm (14.01 in.) below the top of the tubesheet from inspection (i.e., approximately the lowermost 17.8 cm (7 in.) of tube in the tubesheet was excluded from inspection, and hence any flaws that may exist in this region are permitted to remain in service (ADAMS Accession No. ML12262A360). With approval of this amendment, there were no authorized repair methods (other than tube plugging) at Braidwood 2.

There was no evidence of primary-to-secondary leakage during Cycle 16 (spring 2011 to fall 2012).

During RFO 16 in 2012, 100 percent of the tubes in each of the four steam generators were inspected full length with a bobbin coil, excluding the U-bend region of the tubes in rows 1 and 2. In addition to the bobbin coil inspections, a rotating probe equipped with a plus-point coil was used to inspect the following in each of the four steam generators:

- the U-bend region of 25 percent of the tubes in rows 1 and 2 (and 39 other tubes with manufacturing artifacts)

- 25 percent of the tubes from 10.2 cm (4 in.) above the top of the tubesheet to 38 cm (15 in.) below the top of the tubesheet on the hot-leg side (which included 25 percent of bulges within the top 35.59 cm (14.01 in.) of the tubesheet on the hot-leg side with bobbin voltage amplitudes greater than or equal to 18 volts and overexpansions greater than or equal to 0.038 mm (1.5 mils))

- all 71 tubes found to have increased residual stress from 10.2 cm (4 in.) above the top of the tubesheet to 38 cm (15 in.) below the top of the tubesheet on the hot-leg side

A rotating probe equipped with a plus point coil was also used to inspect:

- 25 percent of the hot-leg dents and dings with bobbin voltage amplitudes greater than 3 volts in each of the four steam generators
- 100 percent of the hot-leg dents and dings identified during RFO 16 with bobbin voltage amplitudes greater than 3 volts in each of the four steam generators
- 100 percent of the hot-leg dents and dings with bobbin voltage amplitudes greater than 3 volts (3 dents and dings) in the 71 tubes with potentially high residual stress,
- all wear indications in the 71 tubes with potentially high residual stress (no indications)
- 25 percent of the preheater baffle plate expansions in all four steam generators (i.e., 25 percent of the tube expansions at tube supports 2C and 3C)
- 100 percent of the preheater expansions near the "corner" of the preheater (i.e., the outer peripheral tubes near the flow blocking region on tube support 2C) in the two steam generators in which a visual inspection of the preheater region was not scheduled to be performed (i.e., steam generators A and D)

In addition to these eddy current inspections, all tube plugs in each of the four steam generators were inspected visually. No anomalies were identified during the inspection of the plugs.

As a result of these inspections, 11 tubes were plugged—2 for AVB wear, 6 for wear attributed to loose parts, 2 for potentially having increased residual stresses, and 1 for axially oriented outside-diameter stress corrosion cracking.

The only steam generator tube degradation mechanisms observed during RFO 16 were (1) wear at the AVBs, (2) wear at the preheater tube supports, (3) wear attributed to loose parts, (4) axially oriented outside-diameter stress corrosion cracking at tube support plate elevations, and (5) axially oriented outside-diameter stress corrosion cracking in the freespan.

A total of 969 indications of AVB wear in 530 tubes were detected during RFO 16: 408 indications (in 219 tubes) in steam generator A, 107 indications (in 61 tubes) in steam generator B, 273 indications (in 139 tubes) in steam generator C, and 181 indications (in 111 tubes) in steam generator D. The maximum depth reported for the AVB wear indications was 40 percent throughwall.

In addition to the wear indications at the AVBs, four indications of wear at the tube support plates in the preheater region were identified in four tubes. The depth of these indications ranged from 2 percent to 15 percent throughwall.

Sixteen indications of wear attributed to loose parts were found in 15 tubes during RFO 16. These indications ranged from 10 percent to 39 percent throughwall. Ten of the wear indications (in nine tubes) did not change in size from the previous inspection and a visual inspection did not identify any loose parts near the tube. These tubes remain in-service. Six tubes with a wear indication were stabilized and plugged since the location could not be inspected visually.

Three indications of axially oriented outside-diameter stress corrosion cracking were identified in one tube (row 44, column 47) during RFO 16. All three indications were on the hot-leg side of the steam generator. Two of the indications were at an elevation where the tube passes through the tube support plate. Indications were detected at tube supports 3H (maximum plus-point voltage of 0.64 volts, length of 1.42 cm (0.56 in.), and maximum depth of 69.6 percent throughwall) and 5H (maximum plus-point voltage of 0.25 volts, length of 0.122 cm (0.48 in.), and maximum depth of 50.0 percent throughwall). These two indications were associated with a single quatrefoil land and did not extend outside the tube support plate. One of the indications (maximum plus-point voltage of 0.34 volts, length of 0.48 cm (0.19 in.), and maximum depth of 56.4 percent throughwall) was in the freespan between tube supports 3H and 5H and originated from a low level ding indication (with a bobbin amplitude of approximately 1 volt). There was no evidence of a scratch along the length of the tube. The indications at the tube supports and in the freespan were not aligned axially along the length of the tube as evidenced from the plus-point data that was acquired from 7.62 cm (3 in.) above tube support 5H to 7.62 cm (3 in.) below tube support 3H. The affected tube was identified as potentially having elevated residual stresses caused by nonoptimal tube processing because the eddy current data for this tube (a high row tube) had no U-bend offset signal (typically referred to as a “2-sigma tube”).

This tube had not been identified as a tube potentially having elevated residual stress when the screening was done in 2000. It was not identified because the analyst mistakenly used the peak-to-peak voltage on one leg of the eddy current data instead of the maximum voltage rate. As a result, a re-evaluation of the high row tubes was performed during RFO 16. This review identified no other tubes with potentially elevated residual stress. All the tubes with potentially elevated residual stress were reviewed to determine if any had no voltage offset (similar to the tube that had the axial indications this outage). Two tubes were identified with this condition and were preventatively plugged.

The indication at the 3H tube support plate was in-situ pressure tested, with no leakage observed at any test pressure, including the test pressure associated with three times the normal operating differential pressure. Only the indication at 3H was tested because it exceeded the threshold for performing in-situ pressure testing.

During the original production analysis of the bobbin coil eddy current data, only the indication at the 3H tube support plate was identified. The primary or secondary analysis of the data did not find the other two indications in this tube (at 5H and in the freespan), but rather the independent qualified data analyst found the indications. The primary analysis (of the bobbin coil data) was performed using an automated data analysis system operated in the interactive mode, and the secondary analysis was performed using human analysts. An investigation into why the freespan indication was not identified by the automated analysis system revealed that the freespan indication had a phase angle of 151 degrees, whereas the flaw identification algorithm was set to only identify indications that were less than 150 degrees. Because of these findings, the licensee increased its criterion to 151 degrees. The criterion was not increased above 151 degrees because of concerns that many nonflaw-like signals would be identified.

The automated data analysis system missed the indication at the 5H tube support plate because the flaw identification algorithm was not applied at this location. For the automated flaw identification algorithm to apply at a tube support plate, the entire tube support plate must be contained within a data evaluation window size of 27. Because the entire 5H tube support plate was not within this window size, the automated system did not apply the flaw identification algorithm at this location. The licensee increased the window size to 31 to ensure the flaw

identification algorithm would be applied to all tube support plates. The licensee also reduced the voltage threshold for identifying the tube support plate region from 1 volt to 0.8 volts.

Because of these findings, all bobbin coil data were re-analyzed with the automated data analysis system operated in the interactive mode with the revised criteria. The re-analysis identified no additional crack-like indications.

The licensee reviewed the prior inspection data for the three indications attributed to outside-diameter stress corrosion cracking. This review revealed a 20-degree change in the phase angle of the freespan indication (which appeared ding-like) from 1990 to the present. For the indications at the tube supports, no indications were present in the 2009 data at either support and no indication was present in the 2011 data for the 5H tube support plate. However, with hindsight, some evidence of a signal could be seen in the 2011 data for the signal at the 3H tube support plate (but the signal would not have been reportable).

During RFO 16, inspection/maintenance was performed on the secondary side of the steam generators. Sludge lancing was performed in all four steam generators. After sludge lancing, the top of the tubesheet was inspected visually, including the annulus, tube lane, T-slot, and the peripheral tubes (three to five tubes into the tube bundle). The tube surfaces at the top of the tubesheet were mostly clean with minor soft sludge deposition on all tube surfaces except at the in-bundle columns within the kidney region on the hot-leg side of the steam generator, which had scale deposition on the tubes to a maximum height of 12.7 mm (0.5 in.) above the tubesheet. These results were consistent with past inspections.

These inspections found 75 loose parts. Of these loose parts, 23 (including 2 loose parts that were present in prior outages) were removed from the steam generators, 20 involved an unknown red substance (which could not be retrieved or sampled), 12 were loose parts that were present in prior outages but could not be removed from the steam generators, and 20 were new loose parts (mainly wire and one machine turning) that could not be retrieved. Most of the loose parts were small wires (that are similar to bristles from wire brushes), small machine turnings, and weld slag). No tube wear was associated with these loose parts. The licensee performed an analysis, which showed it was acceptable to leave the loose parts in the steam generator until the next inspection. This analysis was based on foreign object size, mass, materials and flow conditions. The red substance was evaluated based on various expected sources and materials and was also determined to be acceptable.

During RFO 16, a visual inspection of the high flow regions on preheater tube support 2C (which is the first support that experiences incoming main feedwater flow) and the waterbox rib and cap plate region were performed in steam generators B and C. Soft loose sludge was found in some in-bundle tube column locations. The height of the sludge was less than 3.175 mm (0.125 in.). No hard sludge deposits were identified.

The upper tube bundle region in steam generator C was also inspected visually during RFO 16. This inspection was performed at tube supports 8 and 11 and included the tube lanes and four in-bundle columns at each tube support plate. The purpose of these inspections was to assess the general condition of the upper tube bundle. Trace amounts of loose scale deposits on the support plates and a layer of scale deposits on the tubes at both the hot-leg and cold-leg in-bundle tube column region were observed. The quatrefoil flow holes on the cold-leg were free of blockage and only contained trace amounts of scale. Several quatrefoils on the hot-leg sided exhibited the initiation of minor scale forming at the bottom edge of several quatrefoil flow holes. The amount of blockage in the affected quatrefoil flow holes was visually estimated to be

approximately 10 percent or less. Most of the quatrefoil flow holes inspected did not exhibit scale formation or blockage. There were no notable changes in the deposit characteristics or blockage since the last inspection in RFO 14. It was observed, however, that deposit blockage appears to have affected more quatrefoil flow holes during RFO 16 than in RFO 14.

No anomalous structural conditions were found during the secondary-side visual inspections.

No visual or ultrasonic thickness measurements of the secondary-side moisture separator region were performed during RFO 16.

Visual inspections of the channel head cladding were performed during RFO 16. The inspections were limited to the lower portion of the channel head, within a radial distance of about 91.4 cm (36 in.) from the channel head drain tube. This location was considered as having the highest potential for accumulating concentrated borated water during refueling outages. The visual inspection included the divider plate-to-channel head weld, the top of the channel head bowl drain tube, and the channel head cladding in the general area. Gross defects such as through-cladding holes or breaches that could expose the carbon steel base material were not identified. Wastage of the carbon steel base material was not identified (as evidenced through a lack of rust-colored stains.

On March 21, 2013, the steam generator portion of the Braidwood 2 technical specifications was revised to make them consistent with TSTF Improved Standard Technical Specifications Change Traveler TSTF-510 (ADAMS Accession No. ML13009A172).

### 3.2.2 Byron 2

Tables 3-4, 3-5, and 3-6 summarize the information discussed below for Byron 2. Table 3-4 summarizes the full-length bobbin inspections and the number of tubes plugged and deplugged during each outage for each of the four steam generators. Table 3-5 lists the reasons why the tubes were plugged. Table 3-6 lists tubes plugged for reasons other than wear at the AVBs.

Byron 2 has four Westinghouse model D5 steam generators. The licensee numbers its tube supports from 1H to 11H on the hot-leg side of the steam generator and from 1C to 11C on the cold-leg side (Figure 2-1).

In July 2001, a small primary-to-secondary leak was identified in steam generator C. From July 2001 through December 2001, the leak rate was primarily less than 7.57 lpd (2 gpd). The leak rate increased in January 2002 to about 37.9 lpd (10 gpd). In February 2002, the leak rate started to oscillate between 37.9 and 94.6 lpd (10 and 25 gpd) for several weeks and then returned to less than 19 lpd (5 gpd). The leak rate began increasing again in late April/early May. On June 22, 2002, Byron 2 was shut down when the leak rate was slightly above 284 lpd (75 gpd) (i.e., 284 to 303 lpd, or 75 to 80 gpd).

To identify the source of the leak, a pressure test (standing water and 344.7 kilopascals (kPa) (50 pounds per square inch (psi)) overpressure) was performed on the secondary side of the steam generator. With no applied pressure on the secondary side of the steam generator (i.e., only the static head of the water covering the tube bundle), a steady stream of water was observed coming from the cold-leg side of the tube in Row 43, Column 23. To ensure all leaking tubes were identified, a 344.7 kPa (50 psi) nitrogen overpressure was applied to the secondary side of the steam generator, and no other leaking tubes were identified.

A bobbin coil and rotating probe equipped with a plus-point coil were used to inspect the leaking tube, identifying a flaw 1.35 cm (0.53 in.) above cold-leg tube support 2C, which is in the preheater region of the steam generator. The bobbin coil inspection was performed on the full length of the tube. The flaw was characterized as an outside-diameter-initiated volumetric flaw measuring 7.62 mm (0.3 in.) in length and affecting 103 degrees of the tube circumference. The flaw had a voltage of 2.02 volts. Although the flaw is known to be 100 percent throughwall (because it was leaking), two eddy current techniques estimated the depth to be 71 percent throughwall (amplitude technique) or 97 percent throughwall (phase analysis).

The leaking tube was in-situ pressure tested to confirm its structural and leakage integrity. At a pressure corresponding to normal operating pressure, the leakage from the tube measured 136 lpd (36 gpd). The licensee attributed the difference between this value and the value observed during operation (i.e., about 284 lpd (75 gpd)) to the sensitivities/accuracies of the techniques. At a pressure corresponding to a steam line break (target pressure of 20,120 kPa (2,918 psi) given that the tests were performed at ambient temperature), the leakage from the tube measured 223 lpd (59 gpd). The actual test pressure was 20,680 kPa (3,000 psi). After inserting a bladder in the tube to avoid excessive leakage, the tube was pressurized to 32.410 kPa (4,700 psi) (slightly above the target pressure of 31,830 kPa (4,617 psi)) and the tube did not burst. All pressures were held for 5 minutes. These results confirmed the tube had adequate structural and leakage integrity.

In addition to the leaking tube, 10 surrounding tubes were also inspected. Of these 10 tubes, 7 tubes were inspected with a bobbin coil probe from the cold-leg tube end to tube support 3C. In addition to these bobbin coil examinations, a rotating probe equipped with a plus-point coil was used to inspect seven tubes (not including the tube that leaked), at tube support 2C and 3C from 5.1 cm (2 in.) above to 5.1 cm (2 in.) below the tube support and 3 tubes at tube support 2C from 5.1 cm (2 in.) above to 5.1 cm (2 in.) below the tube support. These inspections resulted in the identification of three other flaws in two tubes. As with the leaking tube these flaws were outside-diameter-initiated volumetric flaws. In tube row 43, column 22, a 7.62-mm (0.3-in.) long flaw affecting 106 degrees of the tube circumference and estimated at 37 percent throughwall was observed 12.4 mm (0.49 in.) above the second tube support plate on the cold-leg side (i.e., 2C). The voltage associated with this flaw was 0.42 volts. In tube row 43 column 24, there were two indications. One indication was 6.02 mm (0.237 in.) in length, affected 67 degrees of the tube circumference, and was estimated at 11 percent throughwall. This indication was 11.7 mm (0.46 in.) above the top of the second tube support plate on the cold-leg side, and it had a voltage of 0.07 volts. The second indication on this tube was 2.16 cm (0.85 in.) above the top of the second tube support plate on the cold-leg side (i.e., 2C) and was 6.78 mm (0.267 in.) in length, affected 51 degrees of the tube circumference, and was estimated at 13 percent throughwall. The voltage associated with this flaw was 0.08 volts. These tubes were last examined in 1,999 and there was no indication of degradation at that time. All three affected tubes were stabilized and plugged.

No visual inspections on the secondary side of the steam generator were performed during the June 2002 mid-cycle outage; however, the eddy current data were reviewed for evidence of a loose part signal. There was no evidence of a loose part evident in the eddy current data. More detailed inspections of this region were planned for the next refueling outage, which was scheduled for September 2002. As discussed below, these inspections resulted in attributing the wear in these three tubes to two pieces of spiral wound sheathing.

No primary-to-secondary leakage was observed between June 2002 (following plugging the 3 tubes discussed above) and RFO 10.

During RFO 10 in 2002, 100 percent of the tubes in each of the four steam generators were inspected full length with a bobbin coil. In addition to the bobbin coil inspections, a rotating probe equipped with a plus-point coil was used to inspect 75 percent of the tubes from 7.6 cm (3 in.) above to 7.6 cm (3 in.) below the top of the tubesheet on the hot-leg side of the steam generator, and the U-bend region of 75 percent of the tubes in rows 1 and 2. A rotating probe equipped with a plus-point coil was also used to inspect the following in each of the four steam generators:

- 25 percent of the hot-leg dings and dents with bobbin voltage amplitudes greater than 5 volts in steam generators A and B
- 100 percent of the hot-leg dings and dents with bobbin voltage amplitudes greater than 5 volts in steam generators C and D
- 25 percent of the preheater baffle plate expansions in steam generators B, C, and D

In addition to these eddy current inspections, visual inspections were performed on all tube plugs in each of the four steam generators. No degradation or abnormal leakage was identified during the inspection of the plugs.

As a result of these inspections, 14 tubes were plugged—2 for indications of wear at the AVBs, 11 for foreign object wear, and 1 for an indication of wear at the tube support plates in the preheater region.

The only steam generator tube degradation mechanisms observed during RFO 10 were wear at the AVBs, wear at the preheater tube supports, and wear attributed to loose parts.

A total of 757 indications of AVB wear in 453 tubes were detected during RFO 10: 195 indications (in 111 tubes) in steam generator A, 291 indications (in 165 tubes) in steam generator B, 162 indications (in 102 tubes) in steam generator C, and 109 indications (in 75 tubes) in steam generator D. The maximum depth reported for the AVB wear indications was 40 percent throughwall.

In addition to the wear indications at the AVBs, 15 tubes were found that contained indications of wear in the preheater region at the tube support plates. The depths of these indications ranged from 6 percent to 19 percent throughwall. The tube plugged because of preheater wear, at row 48, column 36, was preventatively plugged.

Tube degradation attributed to foreign objects was found in 11 tubes. The indications ranged from 3 percent to 32 percent throughwall. All 11 tubes that contained these indications of wear attributed to foreign objects were plugged. No indications of wear attributed to foreign objects were left in service. All foreign objects that caused wear in the tubes were removed from the steam generators although there was no foreign object near one of the tubes with wear. This latter tube is in a region where the object may have been removed by sludge lancing.

During this outage, the licensee knew of the cracking indications identified at Seabrook (NRC IN 2002-21) and included the eddy current data from the Seabrook indications in their site specific performance demonstration.

To reduce the amount of sludge on the top of the tubesheet, sludge lancing was performed in each of the four steam generators. After the sludge lancing, FOSAR was performed at the top of the tubesheet in each of the four steam generators. Because of the degradation observed during the mid-cycle outage in June 2002, FOSAR also was performed in the preheater/waterbox region of steam generator C. In steam generator B, an upper bundle inspection also was planned to evaluate thermal performance.

The FOSAR near the tubes that were plugged in June 2002 identified two pieces of spiral wound sheathing. These two pieces were similar in appearance and structure, and measured 3.175 mm (an eighth inch) in diameter and approximately 7.62 and 8.89 cm (3 and 3.5 in.) in length. Laboratory analysis revealed these two pieces were originally one piece. Fatigue-induced failure of this object was most likely caused during the fretting of the tube that resulted in the mid-cycle outage in June 2002. After this failure, the two pieces migrated downstream of the damaged tubes. No maintenance activities that would have resulted in leaving this sheathing in the secondary system were identified. The licensee postulated that the increased feedwater flow from their recent power uprate may have caused dormant objects to migrate through systems and into the steam generator. These objects were believed to be the cause of the wear on the leaking tube, because they had wear marks and geometry that matched the degradation on the affected tubes. The licensee postulated that the object might have been in the steam generator since fabrication because no maintenance activities could have resulted in leaving the sheathing in the secondary system.

There was no evidence of primary-to-secondary leakage during Cycle 11 (fall 2002 to spring 2004).

During RFO 11 in 2004, 100 percent of the tubes in each of the four steam generators were inspected full length with a bobbin coil. In addition to the bobbin coil inspections, a rotating probe equipped with a plus-point coil was used to inspect the following in each of the four steam generators:

- 25 percent of the tubes from 7.6 cm (3 in.) above to 7.6 cm (3 in.) below the top of the tubesheet on the hot-leg side of the steam generator
- 100 percent of the tubes (40) from 7.6 cm (3 in.) above to 7.6 cm (3 in.) below the top of the tubesheet on the hot-leg side of the steam generator in tubes with the potential of having increased residual stress
- the U-bend region of 25 percent of the tubes in rows 1 and 2
- 25 percent of the hot-leg dents and dings with bobbin voltage amplitudes greater than 5 volts

A rotating probe equipped with a plus-point coil also was used to inspect 25 percent of the preheater baffle plate expansions in steam generators A and D (i.e., 25 percent of the tube expansions of preheater baffle B (cold-leg tube support 2C) and D (cold-leg tube support 3C)). In addition to these eddy current inspections, visual inspections were performed on all tube plugs in each of the four steam generators. No degradation or abnormal leakage was identified during the inspection of the plugs.

As a result of these inspections, 92 tubes were plugged—1 for indications of wear at the AVBs and 91 for foreign objects. These 91 tubes included 1 tube that was plugged because of wear

attributed to the foreign object and 90 tubes preventatively plugged to prevent potential loose parts from affecting active tubes. The cold legs of all 91 tubes were stabilized.

The only steam generator tube degradation mechanisms observed during RFO 11 were wear at the AVBs, wear at the preheater tube supports, and wear attributed to loose parts.

A total of 702 indications of AVB wear in 430 tubes were detected during RFO 11: 173 indications (in 102 tubes) in steam generator A, 273 indications (in 158 tubes) in steam generator B, 158 indications (in 106 tubes) in steam generator C, and 98 indications (in 64 tubes) in steam generator D. The maximum depth reported for the AVB wear indication was 40 percent throughwall.

In addition to the wear indications at the AVBs, 21 tubes were found that contained indications of wear in the preheater region at the tube support plates. The depth of these indications ranged from 5 percent to 22 percent throughwall.

Before the commencement of the steam generator tube inspections, a low frequency bobbin coil eddy current screening technique was used to identify tubes that may have an eddy current offset similar to that observed at Seabrook. At Seabrook, several tubes were identified to have crack-like indications associated with this offset (NRC IN 2002-21, "Axial Outside-Diameter Cracking Affecting Thermally Treated Alloy 600 Steam Generator Tubing" dated June 25, 2002, and its supplement dated April 1, 2003, for more details).

The technique for detecting the eddy current offset was similar to that used at Braidwood 2 in the fall of 2003 (ML033580377). The technique for detecting the offset was a quantitative technique for the tubes in rows 1 through 9 and a semi-qualitative technique for the tubes in rows 10 and above (there are 49 rows of tubes in the steam generator). For the low-row tubes (i.e., rows 1 through 9, inclusive), the thermal stress relief of the U-bend region of the tube should result in consistently low stresses throughout the tube (i.e., no eddy current offset should exist). Any significant eddy current offset would be indicative of higher stresses in the straight span section of the tube. In the higher row tubes (i.e., greater than row 9), an eddy current offset is expected because the U-bend region of the tube is not stress relieved after bending. As a result, the methodology for the higher-row tubes involved calculating the average eddy current offset along with the standard deviation associated with the higher-row tubes. To identify tubes with an offset that may be a precursor for cracking, tubes were "flagged" that had an offset whose magnitude was less than the mean minus two standard deviations. That is, for the higher-row tubes, the absence of an offset may indicate higher stresses in the straight span portion of the tube.

As a result of applying this low-frequency bobbin coil screening technique to its previous bobbin coil inspection results (i.e., RFO 10 results) from each steam generator, the licensee identified 40 tubes with possibly high residual stresses in the straight span portion of the tube (these higher stresses could result in a higher likelihood for cracking). All 40 tubes were higher-row tubes (i.e., greater than row 9). These tubes were inspected full length with a bobbin coil probe, and were inspected with a rotating probe in the hot-leg expansion transition region.

Inspection and maintenance on the secondary side of the steam generator also were performed during RFO 11. To reduce the amount of sludge on the top of the tubesheet, sludge lancing was performed in all four steam generators. After the sludge lancing, FOSAR was performed on the top of the tubesheet and in the preheater region of each of the four steam generators. This was the first time that FOSAR was performed in the preheater region in steam generators

A, B, and D. Visual inspections were also performed at the 8th and 11th tube support plates in steam generator B to assess the deposit loading conditions in the steam generators.

Numerous objects (e.g., hard scale/sludge rocks, washers, pieces of Flexitallic gaskets) were found during these inspections. Most of these parts were retrieved and did not result in any appreciable tube wear. However, tube degradation was found in five tubes that was attributed to wear from a loose part. The depths of these indications ranged from 6 percent to 57 percent throughwall. The wear indications in two of these tubes were a result of interaction with a "backing" bar and are discussed further below. All loose parts that caused tube damage were removed from the steam generators. There were a few parts that could not be removed from the steam generators, but these parts did not result in any indicated tube wear. These latter parts are also discussed further below.

Nine small wires and one hard sludge rock could not be removed from the steam generators. In addition, four loose parts that have been present in the steam generator for many years could not be removed. The licensee evaluated the potential for these parts to cause tube damage, concluding no tube integrity concerns exist for at least two cycles. For most parts, the licensee concluded there was no tube integrity concern associated with these parts for six years or more.

In steam generator A, two carbon steel "backing" bars measuring 26.67 cm (10.5 in.) long by 1.9 cm (0.75 in.) wide by 0.635 cm (0.25 in.) thick were found in the preheater region (i.e., the cold-leg of the steam generator). One of these bars was in the periphery and resulted in tube wear while the other was deeper in the tube bundle and did not result in any tube damage. The backing bar in the periphery damaged two tubes: row 49, column 50 had a 57 percent throughwall indication; row 49 column 51 had a 17 percent throughwall indication. The indications were slightly above preheater baffle plate "B" (i.e., tube support 2C). These two tubes were stabilized and plugged. Backing bar 1, the one that caused the tube damage was identified by eddy current examination and subsequently removed from the steam generator. Backing bar 2 was removed before performing the eddy current examination. The tube with the 57 percent throughwall indication was in-situ pressure tested (a local test that only spanned the flawed region), and it was determined that the tube met all performance criteria. There was no leakage at any of the test pressures up to three times the normal operating differential pressure. The tube was stabilized and plugged.

The two backing bars found in steam generator A came from the waterbox cap plate region. The waterbox cap plate region is near the lower feedwater inlet and is associated with the preheater region of the steam generator. The cap plate (i.e., the top portion of the waterbox) was modified during initial steam generator fabrication to allow access to the waterbox. The modification involved cutting out two rectangular sections measuring 25.4 cm (10 in.) long and 5.1 cm (2 in.) wide and then welding these cutout regions back into the cap plate once access to the waterbox was no longer needed. To facilitate the welding of the cutout region into the cap plate, backing bars were used on the underside of each of the cutout regions of the cap plate. Two long backing bars (26.7 cm (10.5 in.) by 1.9 cm (0.75 in.) by 6.35 mm (0.25 in.)) and two small backing bars (or tabs) were used for each cutout region. These backing bars were secured to the underside of the cutout with tack welds. The cutout region was then welded to the cap plate from the top.

As a result of visual inspections performed in 2004, it was discovered that for one of the two cutout regions in steam generator A, all four backing bars were present, although for the other cutout region, both long backing bars and one of the short (3.175 cm or 1.25 in.) backing bars was missing. The two long backing bars were found and retrieved while the short backing bar

was not found despite the 100 percent bobbin coil inspection and a visual inspection of all high-flow regions. In addition to the degradation of the tack welds securing these three backing bars, erosion of the weld associated with the cutout region was discovered.

Because of these findings, previous eddy current data were reviewed to ascertain when the backing bars detached from the cap plate. Because no wear was detected during the last outage in fall 2002 when a 100 percent bobbin coil inspection was performed, the licensee concluded that the backing bars detached during the cycle just before RFO 11 (i.e., cycle 11, between fall 2002 and spring 2004).

To determine the extent of condition, the fabrication records were reviewed and visual inspections were performed of the cap plate region in all four steam generators. These efforts resulted in the conclusion that the waterbox cap plate was not modified in steam generators B and C, but that the cap plate in steam generators A and D were modified. However, the inspections and record review indicated that the modifications in steam generator D were different than that in steam generator A. Namely, in steam generator D, a full penetration weld with no “permanent” backing bars was used to reinstall the cut-out region into the cap plate (a removable backing bar may have been used). In addition, the cutout region for steam generator D was not rectangular shaped, but rather was three-sided and involved the edge of the cap plate. Based on the visual inspections, the licensee concluded there is no integrity concern with the weld of the cut-out region in steam generator D (i.e., no evidence of erosion of the cap plate/cutout region weld and no evidence that backing bars was used). The weld was inspected from the underside of the cap plate (i.e., no visual inspections were performed from the top of the cap plate).

Given that three backing bars detached during the cycle and the condition of the weld of the cutout region in steam generator A, the licensee evaluated the consequences of a failure of the cutout region and the consequences associated with failure of the remaining backing bars (i.e., the two long and three short backing bars remaining). The two main concerns associated with failure of these regions are that feedwater flow can bypass the preheater and loose parts can damage the tubes.

The licensee determined that if the cutout region or the backing bars detached from the cap plate, loose parts could result in unacceptable tube damage. As a result, 91 tubes were stabilized and plugged in steam generator A. These 91 tubes included all peripheral tubes in rows 40 and higher (including all tubes in row 49) and several tubes in the T-slot region of the steam generator. Row 40 was selected because there is a physical barrier in this region that would restrict the passage of these parts. The licensee’s evaluation concluded that wear with the edge of the backing bars was more limiting than wear with the side of the backing bar. This was supported not only by analysis but also on the lack of degradation associated with the second backing bar. The first backing bar damaged two tubes because of edge wear on one tube and flat wear on an adjacent tube (as discussed above).

If the cutout region were to come free from the cap plate, there would be less flow through the preheater region (i.e., the feedwater would bypass the preheater). This condition would result in a decrease in thermal efficiency and would alter the nominal ratio of flow coming into the steam generator through the upper and lower feedwater nozzles. As a result, the licensee evaluated: (1) the potential for flow-induced vibration to affect the tubes, (2) waterbox structural integrity, (3) the effect on normal operating parameters, and (4) the effect on safety analysis for design-basis transients and accidents. The licensee concluded that failure of the cutout regions of the cap plate would not result in flow-induced vibration of the tubes, would not affect the

structural integrity of the waterbox, and did not affect the safety analyses for design basis transients and accidents. Upon failure of the cutout region, the licensee indicated that a small feedwater transient could occur possibly resulting in a feedwater flow (high/low) alarm. Failure of the cutout regions would also result in changes to steam generator secondary pressure (82.7 kPa (12 psi) pressure drop). The primary water temperature across the steam generator also would change (i.e., nominal loop differential temperature would change). The net result of a failure could result in a loss of 3 percent thermal power. The licensee concluded that any changes to operating parameters would be acceptable from a safety standpoint (including changes to the core power distribution).

On September 19, 2005, the steam generator portion of the Byron 2 technical specifications was revised to limit the extent of inspection in the hot-leg tubesheet region. Specifically, the technical specifications were revised to exclude the portion of tube that is more than 43.2 cm (17 in.) below the top of the tubesheet from inspection (i.e., approximately the lowermost 10.2 cm (4 in.) of tube in the tubesheet on the hot-leg side was excluded from inspection, and hence any flaws that may exist in this region are permitted to remain in service). This revision was applicable only to RFO 12 and the subsequent operating cycle (ADAMS Accession No. ML052230019).

There was no evidence of primary-to-secondary leakage during Cycle 12 (spring 2004 to fall 2005).

During RFO 12 in 2005, 100 percent of the tubes in each of the four steam generators were inspected full length with a bobbin coil. In addition to the bobbin coil inspections, a rotating probe equipped with a plus-point coil was used to inspect 20 percent of the tubes from 7.62 cm (3 in.) above to 43.2 cm (17 in.) below the top of the tubesheet on the hot-leg side of the steam generator. The latter sample included at least 20 percent of bulges with bobbin voltage amplitudes greater than or equal to 18 volts and overexpansions greater than or equal to 0.038 mm (1.5 mils) within the top 43.2 cm (17 in.) of the hot-leg tubesheet. In addition, a rotating probe equipped with a plus-point coil was used to inspect all 40 tubes identified as having increased residual stress from 7.62 cm (3 in.) above to 43.2 cm (17 in.) below the top of the tubesheet on the hot-leg side of the steam generator. The above inspections were performed in each of the four steam generators. A rotating probe equipped with a plus-point coil was also used to inspect 20 percent of the total number of preheater baffle expansions that would be contained in a single steam generator, with the inspections being equally distributed between steam generators B, C, and D. In addition to these eddy current inspections, all tube plugs in each of the four steam generators were inspected visually. No degradation or abnormal leakage was identified during the inspection of the plugs.

As a result of these inspections, 17 tubes were plugged—1 for wear at the AVBs, 6 for indications of wear at the tube support plates in the preheater region, 7 for indications of foreign object wear, 2 for bulges at the cold-leg tubesheet, and 1 for not being hydraulically expanded in the hot-leg tubesheet.

The only steam generator tube degradation mechanisms observed during RFO 12 were wear at the AVBs, wear at the preheater tube supports, and wear attributed to loose parts.

A total of 775 indications of AVB wear in 466 tubes were detected during RFO 12: 167 indications (in 96 tubes) in steam generator A, 282 indications (in 163 tubes) in steam generator B, 195 indications (in 126 tubes) in steam generator C, and 131 indications (in 81 tubes) in

steam generator D. The maximum depth reported for the AVB wear indications was 40 percent throughwall.

In addition to the wear indications at the AVBs, 22 tubes were found that contained indications of wear in the preheater region at the tube support plates. The depths of these indications ranged from 6 percent to 49 percent throughwall. Although several tubes exceeded the 40 percent throughwall repair criteria, the licensee indicated that the increase in depth estimates from prior outages was mainly a result of using a new technique from the Electric Power Research Institute to size wear associated with quatrefoil tube support plate openings. Using the previous technique for sizing the wear indications resulted in growth rates comparable to those observed in prior cycles. Six tubes were stabilized and plugged because of wear at the preheater tube support plates.

Ten tubes had wear indications attributed to loose parts. The depths of these indications ranged from 7 percent to 33 percent throughwall. Three of the indications did not change from the previous inspection since the foreign object was removed in the prior outage. These tubes were returned to service (i.e., they were not plugged). However, seven tubes were stabilized and plugged because the loose parts could not be retrieved because of the lack of access to the affected location. Of the seven tubes plugged for wear from loose parts, six were in steam generator B, and 1 was in steam generator D. Four of the six tubes plugged in steam generator B had indications at the fifth tube support plate on the hot-leg side. The eddy current data indicated the presence of a loose part; however, this location was not accessible for visual inspection to confirm or remove the part. The depth of penetration for these four tubes was 33 percent, 13 percent, and 10 percent (two tubes). The eddy current data contained evidence of wear, but not of a loose part during RFO 5. The first indication of the loose part was observed during RFO 8. During RFO 9 the eddy current data indicated the part had moved and affected two other tubes. There were no indications of the loose part or additional wear in this region during RFO 11. In 2005, indications of wear were also found in two other tubes in steam generator B at the seventh tube support plate on the hot-leg side. These locations were not accessible for visual confirmation or removal of a loose part. The depth of penetration for these indications was 22 percent and 12 percent. There were no previous indications of objects or wear at these locations. These six tubes met the structural integrity performance criteria, and all were stabilized and plugged. The tube plugged in steam generator D for wear attributed to loose parts was also stabilized and plugged. The indication in this tube was at the sixth tube support plate on the cold-leg side.

Two tubes were preventatively plugged because the tubes had bulges with large voltage magnitudes (greater than 150 volts). One of these bulges was within the tubesheet, and one was slightly above the top of the tubesheet. The tube with the large voltage bulge above the top of the tubesheet was stabilized. Both of the bulges were present since the preservice inspection.

One tube in steam generator D was preventatively plugged because it had not been hydraulically expanded into the tubesheet on the hot-leg side of the steam generator. This condition was present in previous inspections. The hydraulic expansion was verified to be present in all the other tubes in each of the four steam generators.

To reduce the amount of sludge on the top of the tubesheet, sludge lancing was performed in each of the four steam generators. After the sludge lancing, FOSAR was performed on the top of the tubesheet to identify and remove foreign objects that may be found. The FOSAR inspection consisted of inspecting the tube lane, peripheral annulus, T-slot, and all tubes along

the periphery of the tube bundle in each of the four steam generators. The objective of the peripheral tube inspection was to inspect as far into the tube bundle as the inspection technology would allow, typically three or four tubes into the bundle.

Additionally, FOSAR was performed on one of the preheater tube support plates (i.e., the second tube support plate) on the cold-leg side in steam generator A to identify and remove any foreign objects that may be found. The current preheater FOSAR strategy at Byron 2 is to inspect one preheater each refueling outage on a rotating basis. The visual inspection consisted of a row-by-row in-bundle inspection of all accessible tubes from the end of the T-slot (row 21) through the last tube row (row 49) and tube columns 52 through 63 from the end of the T-slot to the divider plate (row 1). These areas consist of the high flow regions that are considered to be most susceptible to foreign material tube damage.

As a result of post sludge lance visual inspections in steam generator A at the top of the tubesheet, seven foreign objects were found. The objects were identified as: four pieces of slag metal, one piece of slag metal or hard scale, one piece of gasket material, and one metallic object. All objects were retrieved with the exception of the one piece of slag metal/hard scale. This object was firmly wedged between two peripheral tubes and could not be removed. Because the piece was not removed, conclusive characterization could not be achieved. The piece appears to be either hard scale in the form of a sludge rock or a piece of slag. Eddy current inspection did not detect the presence of a foreign object on the affected tubes, hence it is likely that the object is not metallic but is composed of a tenacious sludge rock-type material. The affected and surrounding tubes were not damaged as determined by eddy current and visual inspection. This object was first identified during RFO 11 and remained unchanged in RFO 12. Evaluations performed for the object in both RFO 11 and RFO 12 determined that it would take 7.5 years for the object to wear a tube to its structural limit, although, no wear degradation was found during RFO 11 or RFO 12 that was associated with this object. The affected tubes remain in service.

As a result of the visual inspections of the preheater tube support plate of steam generator A, 13 foreign objects were identified. Nine of the objects were characterized as small wires, similar to brush wires. The remaining four objects were characterized as small pieces of gasket material. There was no tube damage associated with these objects as determined by eddy current and visual inspection. All of the objects were removed from the steam generator, with the exception of 1 small gasket piece and 2 small brush-like wires. An evaluation was performed that confirmed the acceptability of operation with these objects remaining in the steam generator for at least two fuel cycles between inspections, which bounds the current one-cycle inspection frequency at Byron 2.

In steam generator B, four loose parts were found and retrieved. One foreign object was found and retrieved in steam generators C and D. These parts included small wires, gasket material, and other small, unidentified metal objects. There was no tube damage associated with any of the confirmed loose parts.

All foreign material remaining in the steam generators were analyzed to validate that tube structural and leakage performance criteria would be met until the next steam generator tube inspections. This analysis was performed for all foreign material remaining in each of the four steam generators after the RFO 12 inspection, including new and historical foreign objects. Based on this analysis it was concluded that the tube structural and leakage integrity is projected to be maintained throughout the next operating cycle (i.e., until RFO 13).

A repair to the waterbox cap plate in steam generator A was performed by attaching a clamping device made from stainless steel plates above and below the original cap plate. The new plates were held in place with stainless steel studs inserted through the existing 12.7 mm (0.5 in.) flow holes. This repair required a new 6.35-cm (2.5-in.) diameter access penetration through the steam generator shell and wrapper. The newly installed plates are slightly larger than the original plate (trapezoid, 25.4 cm (10 in.) long, and 5 to 10.2 cm (2 to 4 in.) wide). The visual inspection detected no change in the appearance of the cut-out region or the backing bars. The piece of backing bar discovered missing in the spring 2004 RFO was not found in the 2005 inspection (despite looking for the part in all high-flow areas), but the licensee analyzed the condition and determined it would not affect tube integrity for at least another cycle of operation.

The steam drum and moisture separator region of steam generator B was inspected during RFO 12. These visual inspections included inspection of the secondary moisture separator banks, mid-deck plate, primary moisture separators, downcomer barrels and tangential nozzle assemblies, intermediate deck plate, auxiliary feedwater piping and supports, and primary separator slip-fit joint in the lower deck region. No degradation, erosion, deformation, or weld cracking was observed in the components other than the erosion (missing magnetite layer) of the moisture separator tangential nozzles, downcomer barrels, swirl vanes, spacer tabs, and orifice rings. This condition existed in varying degrees on 12 of the 16 primary separator assemblies. All components with the missing magnetite layer are fabricated from carbon steel. Several ultrasonic thickness measurements were taken in areas with the most apparent erosion (in areas where the magnetite layer was missing). The nominal thickness of the various components is 6.35 mm (0.250 in.), and the minimum measured thickness of any of the ultrasonically inspected components was 4.65 mm (0.183 in.) (on one swirl vane blade). The licensee performed an analysis that determined that the erosion in the affected areas would not penetrate through wall over the next operating cycle; and therefore, would not affect steam generator performance or generate loose parts.

In a few instances, some of the welds that join the primary separator assembly sub-parts contained very localized material loss of not more than an estimated 25 percent. Additionally on several primary separator barrels inside wall surfaces where magnetite was missing, a narrow localized depression (scallop) was observed to exist at the junction with the trailing edge of the swirl vane blades. The depression was too narrow to obtain an ultrasonic thickness measurement, but the worst-case location was estimated to have a 40-percent wall loss in a very localized area. There were no areas of through wall erosion observed in any of the components inspected.

On March 30, 2007, the steam generator portion of the Byron 2 technical specifications was revised to limit the extent of inspection in the hot-leg tubesheet region, to revise the steam generator portion of their technical specifications making them performance-based consistent with TSTF-449, and to delete Westinghouse laser-welded sleeving as an authorized repair method. Regarding the extent of inspections in the tubesheet region, the technical specifications were revised to exclude the portion of tube on the hot-leg side of the steam generator that is more than 43.2 cm (17 in.) below the top of the tubesheet from inspection (i.e., approximately the lowermost 10.2 cm (4 in.) of tube in the tubesheet on the hot-leg side was excluded from inspection, and hence any flaws that may exist in this region are permitted to remain in service). This revision was applicable only to RFO 13 and the subsequent operating cycle (ADAMS Accession Nos. ML070810354 and ML071210555).

There was no evidence of primary-to-secondary leakage during Cycle 13 (fall 2005 to spring 2007).

During RFO 13 in 2007, 100 percent of the tubes in each of the four steam generators were inspected full length with a bobbin coil, excluding the U-bend region of the tubes in rows 1 and 2. In addition to the bobbin coil inspections, a rotating probe equipped with a plus-point coil was used to inspect the following in each of the four steam generators:

- the U-bend region of 25 percent of the tubes in rows 1 and 2
- 30 percent of the tubes from 7.62 cm (3 in.) above to 43.2 cm (17 in.) below the top of the tubesheet on the hot-leg side
- 30 percent of bulges with bobbin voltage amplitudes greater than or equal to 18 volts and overexpansions greater than or equal to 0.038 mm (1.5 mils) within 43.2 cm (17 in.) of the top of the tubesheet on the hot-leg side
- all tubes (40) identified as having increase residual stress from 7.62 cm (3 in.) above to 43.2 cm (17 in.) below the top of the tubesheet on the hot-leg side

A rotating probe equipped with a plus-point coil also was used to inspect:

- 25 percent of hot-leg dents and dings with bobbin voltage amplitudes greater than 5 volts in each of the four steam generators
- 50 percent of the hot-leg dents and dings with bobbin voltage amplitudes between 3 and 5 volts in each of the four steam generators (including all such hot-leg dents in the 40 tubes with potentially high residual stress)
- 25 percent of the preheater baffle plate expansions in steam generators B and C (i.e., 25 percent of the tube expansions at tube supports 2C and 3C)

Rotating probes equipped with a plus-point coil also were used to inspect expansion transitions and bulges that are significantly above the top of the tubesheet and areas of wear in the tubes with potentially high residual stress. In addition to these eddy current inspections, all tube plugs in each of the four steam generators were inspected visually. No degradation or abnormal leakage was identified during the inspection of the plugs.

As a result of these inspections, 17 tubes were plugged—3 for indications of wear at the AVBs, 3 for wear attributed to loose parts, 10 for possible loose parts, and 1 for a large voltage bulge near the top of the tubesheet.

The only steam generator tube degradation mechanisms observed during RFO 13 were wear at the AVBs, wear at the preheater tube supports, and wear attributed to loose parts.

A total of 838 indications of AVB wear in 487 tubes were detected during RFO 13: 181 indications (in 102 tubes) in steam generator A, 310 indications (in 170 tubes) in steam generator B, 204 indications (in 129 tubes) in steam generator C, and 143 indications (in 86 tubes) in steam generator D. The maximum depth reported for the AVB wear indications was 42 percent throughwall.

In addition to the wear indications at the AVBs, 16 tubes were identified with wear indications at the tube support plates in the preheater region. The depth of these indications ranged from 5 percent to 39 percent throughwall. None of these tubes were plugged.

Six indications of wear attributed to loose parts were found in five tubes during RFO 13. These indications ranged from 12 percent to 31 percent throughwall. Three of the wear indications were in two of the tubes. The size of these indications did not change from the previous inspection because the loose parts were removed during RFO 11. These two tubes (three indications) were left in service. Two other wear indications (in two tubes) were stabilized and plugged because the loose parts could not be retrieved because of the lack of access to the affected location. Although the other wear indication (in one tube) was accessible, this tube was stabilized and plugged because access to the nearest inspection port would have required scaffolding to be built because the indication was at the eighth hot-leg support. Two neighboring tubes to this latter wear indication had indications of possible loose parts. As a result, these two tubes and eight additional tubes were stabilized and plugged. The eight extra tubes were stabilized and plugged since the possible loose part is near two tubes that were plugged, but not stabilized, in prior outages (one in RFO 2 and one in RFO 7). These latter two tubes were not stabilized because the indications in these tubes were attributed, at the time, to pitting (a volumetric form of degradation).

In 23 locations, the expansion transition or a bulge is significantly outside the hot-leg and cold-leg tubesheet. All locations were inspected with the plus-point probe and no degradation was found in any of the locations. One of the tubes with a bulge was preventatively stabilized and plugged since the bobbin voltage amplitude of the bulge was large (139.4 volts). This bulge indication was present during preservice and subsequent in-service inspections. This indication had not changed over time. The tube that contained the bulge was stabilized and plugged because of the increased sensitivity of bulges to stress corrosion cracking.

Inspection and maintenance on the secondary side of the steam generator also were performed during RFO 13. To reduce the amount of sludge on the top of the tubesheet, sludge lancing was performed in each of the four steam generators. After the sludge lancing, FOSAR was performed. The top of the tubesheet was visually inspected in the tubesheet annulus, peripheral tubes (3-5 tubes deep), tube lane, and T-slots. Also, the tube lane and tube lane peripheral tubes were inspected at the first baffle support plate in each of the four steam generators. Four foreign objects were identified at the tubesheet. The objects were characterized as two pieces of weld slag, a wire brush bristle and a small metallic object. One piece of weld slag and the metallic object were removed. The other piece of weld slag was an object that has been in the steam generator for several cycles that was firmly wedged between two tubes. The condition of this object was unchanged from previous outages, and it was left in the steam generator. The wire brush bristle could not be retrieved because it was firmly contained within a hard scale pile adhered to the tubesheet. No tube damage was attributed to these loose parts as determined by eddy current and visual inspection. No loose parts were found on the first baffle support plate in any steam generator.

The preheater region of the tube bundle is an area where loose parts can accumulate particularly at tube support 2C because this is where the feedwater enters the steam generator. In addition, the 144 tubes that were expanded into tube supports 2C and 3C (because of concerns about tube vibration) in this region could be more susceptible to cracking. These tube expansions could also interfere with the detection of possible loose parts during the eddy current examinations. As a result, Byron 2 has a program to inspect cold-leg tube support 2C for loose parts using visual and eddy current techniques. The current preheater FOSAR

strategy at Byron 2 is to inspect visually one preheater each refueling outage on a rotating basis. The visual inspection of cold-leg tube support 2C consists of a visual inspection of the tube annulus from Row 49 to the flow block and each tube row from the end of the T-slot (row 21) through the last tube row (row 49). The purpose of the flow block is to block the flow along the tube annulus and to distribute the flow into the tube bundle. This configuration can trap loose parts between the wrapper, flow block, and the tubes above the cold-leg tube support 2C. For steam generators that are not visually inspected at tube support 2C, a plus-point probe inspection of the tubes that are hydraulically expanded from the flow block to row 49 is performed (in addition to the bobbin coil inspection) to see if possible loose parts or tube damage is present. These areas consist of the high flow regions that are considered to be most susceptible to foreign material tube damage. In addition to these inspections, rotating probe inspections of the preheater baffle plate expansions are performed in one steam generator on at least 20 percent of the 2C and 3C baffle plate expansion transitions to inspect for cracking.

During RFO 13, 25 percent of the preheater baffle plate expansions in steam generators B and C were inspected with a plus-point coil to detect cracking. Furthermore, several baffle plate expansions at tube support 2C near the flow block were inspected with a plus-point coil in steam generators A, B, and C to detect possible loose parts and wear. No degradation or possible loose parts were detected in these inspections.

FOSAR was performed at tube support 2C in steam generator D during RFO 13. Each tube was inspected visually from row 21 (end of the T-slot) through row 49 (the row closest to the feedwater inlet). Tube columns 52 through 63 were inspected from the end of the T-slot to the divider plate (row 1), and the tube wrapper annulus was inspected from row 49 to the flow block. These inspections resulted in identifying eight loose parts. These objects were characterized as small bristle brush wires (five), a small spring measuring 2.59 mm (0.102 in.) long by 2.29 mm (0.09 in.) in diameter, weld slag, and a small machine turning. Five of the objects were removed. Three of the wires could not be retrieved because they were firmly wedged between the baffle plate crevice and the tube. One of the stuck wires was an object that was present in prior outages and had not changed since the previous inspection. None of the objects caused any tube damage as determined by eddy current and visual inspections.

The licensee performed an engineering evaluation for all loose parts that remained in the steam generators. The evaluation considered the object characteristics, flow conditions, tube vibration amplitudes and the assumption of any pre-existing tube flaws. The evaluation concluded that the objects remaining in the steam generators would not cause significant tube wear over the next operating cycle.

Follow-up visual inspections and ultrasonic thickness measurements were taken in eroded areas of the secondary-side moisture separator region of steam generator B, and inspections and measurement of the secondary-side moisture separator region in steam generators A, C, and D were performed for the first time. Continued erosion of the components (moisture separator tangential nozzles, downcomer barrels, and swirl vanes) in steam generator B was identified, although none of the areas was throughwall. Similar extent of erosion was found in the other three steam generators. Through an analysis, the licensee determined that significant margin remained in the eroded areas before the erosion would penetrate throughwall and affect steam generator performance or possibly generating loose parts. The erosion in the affected areas was not projected to penetrate throughwall or produce loose parts over the next two operating cycles when the next inspection is planned.

On October 1, 2008, the steam generator portion of the Byron 2 technical specifications was revised to permit certain sized flaws near the tube end in both the hot- and cold-leg sides of the steam generator to remain in service. Specifically, the technical specifications were revised to (1) permit flaws having a circumferential component less than or equal to 203 degrees found in the portion of the tube below 43.2 cm (17 in.) from the top of the tubesheet and above 2.54 cm (1 in.) from the bottom of the tubesheet to remain in service, (2) require the removal from service all flaws having a circumferential component greater than 203 degrees found in the portion of the tube below 43.2 cm (17 in.) from the top of the tubesheet and above 2.54 cm (1 in.) from the bottom of the tubesheet, (3) require the removal from service all tubes with service-induced flaws between the top of the tubesheet and 43.2 cm (17 in.) below the top of the tubesheet, and (4) permit all axial indications found in the portion of the tube below 43.2 cm (17 in.) from the top of the tubesheet to remain in service. In addition, the technical specifications were modified to indicate that when more than one flaw with circumferential components are found in the portion of the tube below 43.2 cm (17 in.) from the top of the tubesheet and above 2.54 cm (1 in.) from the bottom of the tubesheet with the total of the circumferential components being greater than 203 degrees and the axial separation distance of less than 2.54 cm (1 in.), then the tube must be removed from service (overlapping portions of the flaws only need to be counted once in determining the total circumferential involvement of the flaws). For flaws within 2.54 cm (1 in.) of the bottom of the tubesheet, the technical specifications were modified to indicate (1) when one or more flaws with circumferential components are found and the total of the circumferential components exceeds 94 degrees, then the tube shall be removed from service and (2) when one or more flaws with circumferential components are found in the portion of the tube within 2.54 cm (1 in.) from the bottom of the tubesheet and within 2.54 cm (1 in.) axial separation distance of a flaw above 2.54 cm (1 in.) from the bottom of the tubesheet, and the total of the circumferential components found in the tube exceeds 94 degrees then the tube shall be removed from service (overlapping portions of the flaws only need to be counted once in determining the total circumferential involvement of the flaws). This revision to the technical specifications was applicable only to RFO 14 and the subsequent operating cycle (ADAMS Accession No. ML082340799).

There was no evidence of primary-to-secondary leakage during Cycle 14 (spring 2007 to fall 2008).

During RFO 14 in 2008, 100 percent of the tubes in each of the four steam generators were inspected full length with a bobbin coil, excluding the U-bend region of the tubes in rows 1 and 2. In addition to the bobbin coil inspections, a rotating probe equipped with a plus-point coil was used to inspect the following in each of the four steam generators:

- the U-bend region of 25 percent of the tubes in rows 1 and 2
- 20 percent of the tubes from 7.62 cm (3 in.) above the top of the tubesheet to the tube end on the hot-leg side (which included 20 percent of bulges with bobbin voltage amplitudes greater than or equal to 18 volts and overexpansions greater than or equal to 0.038 mm (1.5 mils) within the tubesheet on the hot-leg side)
- 100 percent of the tubes from the tube end to 5.1 cm (2 in.) above the tube-end on the hot-leg side, 20 percent of the tubes from the tube-end to 5.1 cm (2 in.) above the tube-end on the cold-leg side
- all tubes (40) identified as having increased residual stress from 7.62 cm (3 in.) above the top of the tubesheet to the tube end on the hot-leg side

A rotating probe equipped with a plus-point coil was also used to inspect:

- 25 percent of hot-leg dents and dings greater than 3 volts in each of the four steam generators
- 100 percent of the hot-leg dents and dings greater than 2 volts (total of 4 indications) in the 40 tubes with potentially high residual stress
- 20 percent of the preheater baffle plate expansions in all four steam generators (i.e., 20 percent of the tube expansions at tube supports 2C and 3C)
- 100 percent of the preheater expansions near the "corner" of the preheater (i.e., the outer peripheral tubes near the flow blocking region on tube support 2C) in the three steam generators in which a visual inspection of the preheater region was not performed (i.e., steam generators A, C, and D)

Rotating probes equipped with a plus-point coil also were used to inspect 21 expansion transitions and bulges that are significantly above the top of the tubesheet on both the hot-leg and cold-leg side of the steam generator in each steam generator, and areas of wear in the tubes with potentially high residual stress (a total of 18 indications). In addition to these eddy current inspections, all tube plugs in each of the four steam generators were inspected visually. No degradation or abnormal leakage was identified during the inspection of the plugs.

As a result of these inspections, 13 tubes were plugged—1 for an indication of wear at the AVBs, 3 for wear at tube supports in the preheater, 3 for wear attributed to loose parts, 5 for possible loose parts, and 1 preventatively because the tubesheet bore hole was larger than that assumed in the development of the alternate repair criteria for indications in the tubesheet region.

The only steam generator tube degradation mechanisms observed during RFO 14 were (1) wear at the AVBs, (2) wear at the preheater tube supports, (3) wear attributed to loose parts, and (4) axially oriented primary water stress corrosion cracking at the tube end.

A total of 891 indications of AVB wear in 662 tubes were detected during RFO 14: 192 indications (in 146 tubes) in steam generator A, 314 indications (in 220 tubes) in steam generator B, 233 indications (in 178 tubes) in steam generator C, and 152 indications (in 118 tubes) in steam generator D. The maximum depth reported for the AVB wear indications was 40 percent throughwall.

In addition to the wear indications at the AVBs, 19 tubes were identified with wear indications at the tube support plates in the preheater region. The depth of these indications ranged from 5 percent to 45 percent throughwall. Three tubes were plugged because of wear in the preheater region.

Six indications of wear attributed to loose parts were found in five tubes during RFO 14. These indications ranged from 15 percent to 38 percent throughwall. Three of the wear indications were in two of the tubes. The size of these indications did not change from the previous inspection because the loose parts were removed during RFO 11. These two tubes (three indications) were left in service. Three other wear indications (in three tubes) were stabilized and plugged because the loose parts could not be retrieved because of the lack of access to the affected location. Two neighboring tubes to one of the tubes with a wear indication were

stabilized and plugged to bound the area affected by the loose part because the loose part appeared to have moved since RFO 13. One of these three wear indications had a loose part lodged in the bottom edge of one of the quatrefoil flow holes, and another of the wear indications was attributed to a similarly located loose part although no evidence existed of a possible loose part from the eddy current inspection. This latter tube was plugged because it was assumed the loose part was still at this location although it was not detectable by eddy current inspection.

Three other tubes were stabilized and plugged because of a loose part. These tubes did not exhibit any wear, but eddy current and visual inspection showed that the loose part had moved slightly since RFO 13. These tubes were plugged to ensure the loose part does not adversely affect them.

Inspections in the tubesheet resulted in the identification of 65 axial indications in 64 tubes. All axial indications were on the hot-leg side of the steam generator and were within the bottom 12.7 mm (0.5 in.) of the tube and originated from the inside surface of the tube. There were no cracking indications found in the cold-leg region of the tubesheet and no circumferential indications were identified.

No crack-like indications were found in the 40 tubes with potentially higher residual stress.

Inspection and maintenance on the secondary side of the steam generator also were performed during RFO 14. To reduce the amount of sludge on the top of the tubesheet, sludge lancing was performed in each of the four steam generators. After the sludge lancing, FOSAR was performed at the top of the tubesheet and on top of the flow distribution baffle. In steam generator B, FOSAR also was conducted on the preheater baffle plate and visual inspections were performed of the waterbox region including the target plate, distribution ribs, and cap plate. In steam generator C, in-bundle visual inspections were performed on tube supports 8 and 11.

Eleven foreign objects were found on the top of the tubesheet (2 in steam generator A, 1 in B and 8 in C). Visual inspections of the waterbox region in steam generator B revealed no erosion on the target plate and distribution ribs; however, a trace amount of erosion was noted on the cap plate flow holes. In steam generator C, deposit loading was assessed at the 11th tube support plate. There was a light to moderate loading of deposits, which was consistent with prior outages.

During RFO 14, no visual inspections of the primary moisture separator components were performed.

On October 16, 2009, the steam generator portion of the Byron 2 technical specifications was revised to limit the extent of inspection in the tubesheet region. Specifically, the technical specifications were revised to exclude the portion of tube that is more than 43 cm (16.95 in.) below the top of the tubesheet from inspection (i.e., approximately the lowermost 10.2 cm (4 in.) of tube in the tubesheet was excluded from inspection, and hence any flaws that may exist in this region are permitted to remain in service). This revision was only applicable for RFO 15 and the subsequent operating cycle (ADAMS Accession No. ML092520512).

There was no evidence of primary-to-secondary leakage during Cycle 15 (fall 2008 to spring 2010).

During RFO 15 in 2010, 100 percent of the tubes in each of the four steam generators were inspected full length with a bobbin coil, excluding the U-bend region of the tubes in rows 1 and 2. In addition to the bobbin coil inspections, a rotating probe equipped with a plus-point coil was used to inspect the following in each of the four steam generators:

- the U-bend region of 25 percent of the tubes in rows 1 and 2
- 25 percent of the tubes from 7.62 cm (3 in.) above the top of the tubesheet to 45.7 cm (18 in.) below the top of the tubesheet on the hot-leg side (which included 25 percent of bulges within the top 43 cm (16.95 in.) of the tubesheet on the hot-leg side with bobbin voltage amplitudes greater than or equal to 18 volts and overexpansions greater than or equal to 0.038 mm (1.5 mils))
- all tubes (40) identified as having increased residual stress from 7.62 cm (3 in.) above the top of the tubesheet to 45.7 cm (18 in.) below the top of the tubesheet on the hot-leg side

A rotating probe equipped with a plus-point coil was also used to inspect:

- 25 percent of hot-leg dents and dings with bobbin voltage amplitudes greater than 3 volts in each of the four steam generators
- 100 percent of the hot-leg dents and dings with bobbin voltage amplitudes greater than 3 volts (four tubes) in the 40 tubes with potentially high residual stress
- all wear indications in the 40 tubes with potentially high residual stress
- 25 percent of the preheater baffle plate expansions in all four steam generators (i.e., 25 percent of the tube expansions at tube supports 2C and 3C)
- 100 percent of the preheater expansions near the “corner” of the preheater (i.e., the outer peripheral tubes near the flow blocking region on tube support 2C) in the three steam generators in which a visual inspection of the preheater region was not scheduled to be performed (i.e., steam generators A, B, and D)

In addition to these eddy current inspections, all tube plugs in each of the four steam generators were inspected visually. No anomalies were identified during the inspection of the plugs.

As a result of these inspections, one tube was plugged for wear attributed to a loose part.

The only steam generator tube degradation mechanisms observed during RFO 15 were wear at the AVBs, wear at the preheater tube supports, and wear attributed to loose parts.

A total of 925 indications of AVB wear were detected in 531 tubes during RFO 15: 192 indications (in 109 tubes) in steam generator A, 324 indications (in 177 tubes) in steam generator B, 243 indications (in 144 tubes) in steam generator C, and 166 indications (in 101 tubes) in steam generator D. The maximum depth reported for the AVB wear indications was 39 percent throughwall.

In addition to the wear indications at the AVBs, 15 indications of wear at the tube support plates in the preheater region were identified in 15 tubes. The depth of these indications ranged from 5 percent to 39 percent throughwall.

Five indications of wear attributed to loose parts were found in four tubes during RFO 15. These indications ranged from 17 percent to 31 percent throughwall. Three of the wear indications did not change in size from the previous inspection because the loose parts were removed during RFO 11. One of the tubes with a loose part wear indication was stabilized and plugged since the location could not be inspected visually. This loose part appears to have moved since RFO 14. One tube had a wear indication and there was no loose part present based on visual inspections; however, the neighboring tubes had previously been plugged for wear attributed to a loose part that had been removed from the steam generator.

During RFO 15, inspection/maintenance was performed on the secondary side of the steam generators. FOSAR was performed in the high-flow region of the preheater baffle plate 2C in all four steam generators. Feedwater enters the steam generator in the preheater waterbox between tube support plates 2C and 3C. The feed flow impinges on a target plate that disperses the feedwater to tube support plate 2C where the flow begins to travel through the baffle plate region. The area of highest flow is on tube support 2C underneath the feedwater nozzle.

During visual inspections of the preheater in steam generator C, four gasket material pieces were found. In addition, Flexitallic gasket material from the startup feedwater strainer was found in a downstream pipe. At the time of discovery, it was believed that some of the gasket material was missing. As a result, visual inspections of the preheater region in steam generators A, B, and D were performed. Two small pieces of gasket material were found in the steam generator A preheater, but no gasket material was found in steam generators B and D.

Visual inspections were performed on the primary moisture separator components in all four steam generators because of the erosion detected during RFO 13. Continued erosion was identified in steam generator B; however, there were no indications of throughwall erosion. A similar extent of erosion was identified in the other three steam generators. A licensee analysis showed that the erosion in the affected areas was not projected to penetrate through wall or produce loose parts over the next two operating cycles. All of the moisture separator inspections that were planned were not conducted during RFO 15 because of expanding the scope of the preheater visual inspections to include all the steam generators (instead of one steam generator). As a result, additional inspections of the steam generator A and B moisture separators were scheduled for RFO 16.

On April 13, 2011, the steam generator portion of the Byron 2 technical specifications was revised to limit the extent of inspection in the tubesheet region. Specifically, the technical specifications were revised to exclude the portion of tube that is more than 43 cm (16.95 in.) below the top of the tubesheet from inspection (i.e., approximately the lowermost 10.2 cm (4 in.) of tube in the tubesheet was excluded from inspection, and hence any flaws that may exist in this region are permitted to remain in service). This revision was only applicable for RFO 16 and the subsequent operating cycle (ADAMS Accession No. ML110840580).

There was no evidence of primary-to-secondary leakage during Cycle 16 (spring 2010 to fall 2011).

During RFO 16 in 2011, 100 percent of the tubes in each of the four steam generators were inspected full length with a bobbin coil, excluding the U-bend region of the tubes in rows 1 and 2. In addition to the bobbin coil inspections, a rotating probe equipped with a plus-point coil was used to inspect the following in each of the four steam generators:

- the U-bend region of 25 percent of the tubes in rows 1 and 2
- 25 percent of the tubes from 7.62 cm (3 in.) above the top of the tubesheet to 45.7 cm (18 in.) below the top of the tubesheet on the hot-leg side (which included 25 percent of bulges within the top 43 cm (16.95 in.) of the tubesheet on the hot-leg side with bobbin voltage amplitudes greater than or equal to 18 volts and overexpansions greater than or equal to 0.038 mm (1.5 mils))
- all 40 tubes identified as having increased residual stress from 7.62 cm (3 in.) above the top of the tubesheet to 45.7 cm (18 in.) below the top of the tubesheet on the hot-leg side

A rotating probe equipped with a plus-point coil was also used to inspect:

- 25 percent of hot-leg dents and dings with bobbin voltage amplitudes greater than 3 volts in each of the four steam generators
- 100 percent of the hot-leg dents and dings with bobbin voltage amplitudes greater than 3 volts (23 dents and dings) in the 40 tubes with potentially high residual stress
- all wear indications in the 40 tubes with potentially high residual stress (5 indications)
- 25 percent of the preheater baffle plate expansions in all four steam generators (i.e., 25 percent of the tube expansions at tube supports 2C and 3C)
- 100 percent of the preheater expansions near the “corner” of the preheater (i.e., the outer peripheral tubes near the flow blocking region on tube support 2C) in the three steam generators in which a visual inspection of the preheater region was not scheduled to be performed (i.e., steam generators A, B, and D)

In addition to these eddy current inspections, all tube plugs in each of the four steam generators were inspected visually. No anomalies were identified during the inspection of the plugs.

As a result of these inspections, 28 tubes were plugged—1 for AVB wear, 7 for preheater tube support wear, 4 for wear attributed to loose parts, 14 to surround possible loose parts that could not be retrieved, 1 to surround a known loose part that could not be retrieved, and 1 for a manufacturing geometric indication.

The only steam generator tube degradation mechanisms observed during RFO 16 were wear at the AVBs, wear at the preheater tube supports, and wear attributed to loose parts.

A total of 1,023 indications of AVB wear were detected in 751 tubes during RFO 16. This included 233 indications (in 173 tubes) in steam generator A, 348 indications (in 243 tubes) in steam generator B, 271 indications (in 203 tubes) in steam generator C, and 171 indications (in 132 tubes) in steam generator D. The maximum depth reported for the AVB wear indications was 40 percent throughwall.

In addition to the wear indications at the AVBs, 16 indications of wear at the tube support plates in the preheater region were identified in 16 tubes. The depth of these indications ranged from 5 percent to 40 percent throughwall.

Nine indications of wear attributed to loose parts were found in eight tubes during RFO 16. These indications ranged from 17 percent to 38 percent throughwall. Four of the wear indications (in three tubes) did not change in size from the previous inspection because the loose parts were removed during a prior outage. These tubes remain in service. Four of the tubes with a wear indication were stabilized and plugged since the location could not be inspected visually. One tube was allowed to remain in service since a visual inspection did not identify any loose parts in the vicinity of the wear indication.

During RFO 16, 54 new dents were identified in steam generator B. All of the dents have small bobbin voltage amplitudes (2 to 5 volts) and are at the bottom edge of the tube support 3C. When viewed from above the 54 new dents have a symmetrical pattern across tube support 3C that is somewhat crescent shaped. A similar pattern of denting occurred between the RFO 9 (2001) and RFO 10 (2002) inspections when about 100 dents were found at the same baffle plate. These dents were also at tube support 3C, in a crescent shape, and had bobbin voltage amplitudes ranging from 2 to 15 volts. Only nine of these historical dents changed in size between 2010 and 2011 (i.e., greater than what would be attributed to eddy current measurement uncertainty).

A rotating probe was used to inspect 25 percent of these new and historical dents at tube support 3C. The 80 millimeter coil on this probe was modified to be a non-surface riding coil to determine the length and width of the dents. When measuring the size of the dents, an attempt was made to determining the shape and orientation of the dent by inserting a bobbin coil and a strong rare earth magnet in the adjacent guide tube. This effort was unsuccessful.

The circumferential extent of most of the dents was 80 degrees, and most tubes were dented on just one side. A few tubes had two dents, with the dents separated circumferentially by approximately 160 degrees. The tubes with two dents had larger bobbin voltage amplitudes. There was no evidence of deposits, anomalies (burrs or high spots on the tube support holes), or damage to tube support 3C.

A review revealed no similar operating experience at other units. An operating review at Byron 2 for water hammer and other flow or pressure transients revealed no events that could be correlated to the denting. There were no loose-part alarms during the cycle, and there was no evidence of reduced tube-to-tube spacing.

During RFO 16, inspection/maintenance was performed on the secondary side of the steam generators. FOSAR was performed at the top of the tubesheet in all four steam generators. A visual inspection of the upper tube bundle was performed in steam generator B and the steam drum region of steam generators A and B were visually inspected.

The upper bundle of steam generator B was inspected visually to assess the general condition at tube supports 8 and 11. The inspections indicated a thin layer of soft sludge is forming on the support plate. The quatrefoil openings had a thin layer of deposits at the lands, lobes, and edges, but they were still open. No loose parts or anomalous conditions were observed.

Visual inspections of the secondary-side moisture separator region was performed in steam generators A and B because of detecting erosion of the moisture separator tangential nozzles, downcomer barrels, and swirl vanes during RFO 13. Ultrasonic thickness measurements were taken of the eroded areas with an emphasis on re-inspecting the areas identified as eroded during RFO 13. These inspections indicated there was no significant increase in degradation since RFO 13. A licensee analysis showed that it was acceptable to operate two fuel cycles until the next inspection. The erosion in the affected areas is not projected to penetrate throughwall, create loose parts, or affect steam generator performance before the next inspection. The analysis also indicated that if a change in the currently understood erosion/corrosion profile does not occur, that inspection after three fuel cycles may be possible.

On October 5, 2012, the steam generator portion of the Byron 2 technical specifications was revised to limit the extent of inspection in the tubesheet region and to remove Combustion Engineering tungsten inert gas welded sleeving as an authorized repair method. Specifically, the technical specifications were revised to exclude the portion of tube that is more than 35.59 cm (14.01 in.) below the top of the tubesheet from inspection (i.e., approximately the lowermost 17.8 cm (7 in.) of tube in the tubesheet was excluded from inspection, and hence any flaws that may exist in this region are permitted to remain in service (ADAMS Accession No. ML12262A360)). With approval of this amendment, there were no authorized repair methods (other than tube plugging) at Byron 2.

On March 21, 2013, the steam generator portion of the Byron 2 technical specifications was revised to make them consistent with TSTF-510 (ADAMS Accession No. ML13009A172).

During RFO 17 in 2013, no steam generator tubes were inspected.

### 3.2.3 Catawba 2

Tables 3-7, 3-8, and 3-9 summarize the information discussed below for Catawba 2. Table 3-7 provides the number of full-length bobbin inspections and the number of tubes plugged and deplugged during each outage for each of the four steam generators. Table 3-8 lists the reasons why the tubes were plugged. Table 3-9 lists of tubes plugged for reasons other than wear at the AVBs.

Catawba 2 has four Westinghouse model D5 steam generators. The licensee numbers its tube supports using the alternate naming convention in Figure 2-1. There are 141 tubes expanded at two tube support plate locations to prevent vibration in the preheater section of these steam generators. These tubes are in the cold leg of the steam generators. The lowermost tube support (i.e., 1H) is a flow distribution baffle. It is 1.9 cm (0.75 in.) thick.

Based on accident analysis considerations, a maximum of 10 percent of the tubes can be plugged in the steam generators.

During RFO 12 in 2003, approximately 55 percent of the tubes in each of the four steam generators were inspected full length with a bobbin coil. In addition to the bobbin coil inspections, a rotating probe equipped with a plus-point coil was used to inspect approximately 25 percent of the tubes at the top of the tubesheet and the U-bend region of approximately 25 percent of the row 1 and row 2 tubes. The above inspections were performed in each of the four steam generators. In addition, all tube plugs were visually inspected in each of the four

steam generators, and an eddy current inspection was performed on approximately 20 percent of the tube plugs in each of the four steam generators (13 plugs in steam generator A, 8 in B, 9 in C, and 10 in D).

As a result of these inspections, 33 tubes were plugged—1 for wear at the AVBs, 6 for possible loose parts (including 2 tubes that had exhibited wear indications), 6 for wear in the preheater region (tube support plate 13), 2 for permeability variations, 1 for an eddy current signal offset, 2 preventatively for anomalous indications in the U-bend region, and 15 for overlapping dent and volumetric indications that could potentially mask a crack indication in the eddy current data.

No crack-like degradation was found at any location during this inspection.

The anomalous indications in the U-bend region that caused two tubes (row 1, column 100, and row 1, column 106) in steam generator A to be plugged preventatively are believed to be a result of probe liftoff associated with the tangent point of the tube (i.e., the point where the tube starts to bend in the U-bend region). There was no change in these signals since RFO 9 (1998).

As discussed above, one tube was preventatively plugged in steam generator C because of an offset in the eddy current signal. This offset was similar to what was observed at Seabrook. Seabrook identified a group of low-row tubes with offsets in the eddy current signals that had cracks in the tubes at the tube support plate elevations. The offset was attributed to the tubes being straightened and not thermally treated. These tubes are generally considered to be more susceptible to cracking. Only one low-row tube at Catawba 2 was identified with this eddy current offset (this tube was plugged, as discussed above).

During RFO 13 in 2004, about 56 percent of the tubes in each of the four steam generators were inspected full length with a bobbin coil. In addition to the bobbin coil inspections, a rotating probe was used to inspect the following in each of the four steam generators:

- the U-bend region of about 25 percent of the tubes in rows 1 and row 2
- about 25 percent of the dents and dings
- from 5.1 cm (2 in.) above to 22.9 cm (9 in.) below the top of the tubesheet on the hot-leg side in about 26 percent of the tubes

In addition, a rotating probe was used to inspect all tubes with overexpansions in the hot-leg tubesheet region (about 1,300 tubes) from 5.1 cm (2 in.) above the hot-leg tubesheet to the hot-leg tube end in all four steam generators and 100 percent of the hot-leg tube ends in steam generator B, and 20 percent of the hot-leg tube ends in steam generators A, C, and D. These latter exams were from the hot-leg tube end to 5.1 cm (2 in.) above the hot-leg tube end. In addition, visual inspections were performed on all the tube plugs, and an eddy current inspection was performed on about 15 percent of tube plugs in each of the four steam generators (11 plugs in steam generator A, 7 in B, 7 in C, and 7 in D). No degradation or abnormal leakage was identified during the inspection of the plugs.

As a result of these inspections, 48 tubes were plugged—18 for loose parts, 12 for possible loose parts, 9 for crack-like indications in the tack roll region, 6 for indications near the tube-to-tubesheet weld that extended slightly into the tube material, 1 for a circumferential

crack-like indication in an overexpanded region within the tubesheet, 1 for a permeability variation, and 1 for potential damage from a stabilizer installation error.

During rotating probe examinations at the top of the tubesheet region in steam generator B in RFO 13, several discrete circumferential indications were found in an overexpanded region of one tube. The location of the indications was about 17.8 cm (7 in.) below the top of the hot-leg tubesheet. The indications initiated from the inside diameter of the tubes, and are about 30 degrees in circumferential extent. The overexpanded region extended for about 15 cm (6 in.) and the diameter of the tube was estimated to be approximately 0.76 mm (0.003 in.) greater than that observed in the remainder of the expanded region in the tubesheet. Overexpansions in the tubesheet region are a result of expanding the tube into a region of the tubesheet that is not perfectly round. This out-of-round condition is a result of anomalies in the tubesheet drilling process (e.g., drill-bit wandering). Because of identifying these indications in the overexpansion, the scope of the rotating probe examinations in the tubesheet region were expanded to include all tubes with overexpanded regions in the hot-leg. These tubes were inspected from 5.1 cm (2 in.) above the top of the tubesheet to the tube end. There are about 1,300 tubes in the hot-leg tubesheet that have overexpanded regions. No other indications were found in the overexpanded regions.

Although no other indications were found in the overexpanded regions, several indications were found near the tube ends leading to an expansion of the original sample to include 100 percent of the tube ends in steam generator B and 20 percent of the tube ends in steam generators A, C, and D (as discussed above). The tube end is a region that includes the tack expansion and the tube-to-tubesheet weld. The tack expansion region is where the tube was initially expanded into the tubesheet during steam generator fabrication to facilitate welding of the tube to the primary face of the tubesheet. In the case of Catawba 2, this region is frequently referred to as the tack roll region because the tack expansion was accomplished by mechanically rolling the tube into the tubesheet. The tack expansion forms a temporary expansion transition that is “removed” after welding when the tube is hydraulically expanded for the full depth of the tubesheet. The transition from the expanded portion of the tube within the tubesheet to the unexpanded portion of the tube at the top of the tubesheet is referred to as the expansion transition region of the tube.

At the time of the RFO 13 inspection, the licensee classified the indications into those that were in the weld and those that were in the tack expansion region. Because of this classification, there was 1 tube in steam generator A with indications in the tube-to-tubesheet weld, 9 tubes in steam generator B with indications in the tack roll region and 188 tubes with indications in the tube-to-tubesheet weld, and 7 tubes in steam generator D with indications in the tube-to-tubesheet weld. No indications were found in the tack roll region in steam generators A, C, and D. No indications were found in the tube-to-tubesheet weld region in steam generator C. Analyses performed subsequent to RFO 13 indicated that the indications classified as being in the tube-to-tubesheet weld were most likely in the tube (although it could not be ruled out that the indications extended into the weld).

In summary, 16 tubes were removed from service because of indications in the tubesheet region during RFO 13. These indications were treated as crack-like indications. These indications were axially and circumferentially oriented, consisted of either single or multiple cracks, and initiated from the inside diameter of the tube. All of the tubes with indications in the tack expansion region (nine tubes) and in overexpansions (one tube) were plugged. In addition, six tubes with indications near the tube-to-tubesheet weld were plugged since they appeared to extend slightly into the tube material. Indications classified as being in the tube-to-tubesheet

weld were allowed to remain in service since the inspection of the tube-to-tubesheet weld and the repair of any indications detected in the weld are not governed by the surveillance requirements in the technical specifications.

During RFO 13, the preheater waterboxes in each of the four steam generators were inspected with special emphasis on the waterbox cap plate. The focus of the waterbox inspection was to evaluate modifications made to the cap plate during manufacturing since operating experience at another plant (Byron 2) indicated potential degradation of welds associated with regions of the cap plate that may have been cutout and welded back in place during manufacturing. During the RFO 13 inspections, cutout regions were identified in the cap plates in steam generators B, C, and D; however, there is no cutout region in steam generator A. These inspections found the welds to be structurally sound. Other than a cap plate backing bar being found loose, no anomalies were reported during these inspections. The backing bar was retrieved.

On January 13, 2005, Catawba 2 revised the steam generator portion of their technical specifications making them performance-based consistent with TSTF-449 (ADAMS Accession No. ML050110258).

On March 31, 2006, the steam generator portion of the Catawba 2 technical specifications was revised to limit the extent of inspection in the hot-leg and cold-leg tubesheet regions. Specifically, the technical specifications were revised to exclude the portion of tube that is more than 43.2 cm (17 in.) below the top of the tubesheet from inspection (i.e., approximately the lowermost 10.2 cm (4 in.) of tube in the tubesheet on the hot- and cold-leg side was excluded from inspection, and hence any flaws that may exist in this region are permitted to remain in service). This revision was applicable only to RFO 14 and the subsequent operating cycle (ADAMS Accession No. ML060760011 and ML060760111).

There was no evidence of primary-to-secondary leakage during Cycle 14 (fall 2004 to spring 2006).

During RFO 14 in 2006, about 55 percent of the tubes in each of the four steam generators were inspected full length with a bobbin coil. These inspections included tubes with previous indications, tubes on the periphery of the tube bundle two rows deep, tubes surrounding plugged tubes, and a minimum sample of 20 percent of the remaining tubes including all tubes not inspected with a bobbin coil since RFO 10. During the outage, more tubes were added to the inspection plan to bound possible loose parts identified by eddy current and visual inspections. In addition to the bobbin coil inspections, an array probe was used to inspect the following in each of the four steam generators:

- about 27 percent of the tubes from 5.1 cm (2 in.) above the top of the tubesheet on the hot-leg side to the hot-leg tube end, which included:
  - a 20 percent random sample
  - all periphery tubes (although only the bobbin data were analyzed unless a condition was identified in the bobbin data that warranted a review of the array probe data)
  - all previous overexpansions

- 20 percent of the newly identified overexpansions

- the U-bend region of about 20 percent of the row 1, row 2, and row 10 tubes
- all of row 3 and row 4 tubes that were inspected with a bobbin coil
- 50 percent of previously identified dents with bobbin voltage amplitudes greater than 2 volts
- all new dents
- all new wear indications
- 20 percent of the tubes expanded into tube support 17 and 18
- about 140 tubes per steam generator at tube support 18 because this location is at the bottom of the preheater region and loose parts tend to accumulate at this location

In addition, all tube plugs were inspected visually, and a rotating probe was used to inspect about 20 percent of the rolled plugs on the hot-leg side of the steam generator. No degradation or abnormal leakage was identified during the inspection of the plugs.

As a result of these inspections, 14 tubes were plugged—9 for loose parts, 3 preventatively for being expanded above the top of the tubesheet (over-roll condition), 1 preventatively for a geometry-related signal at the top of the tubesheet, and 1 because it was not expanded into the tubesheet on the cold-leg side.

The only steam generator tube degradation mechanisms observed during RFO 14 were (1) wear at the AVBs, (2) wear at the tube support plates, (3) wear attributed to loose parts, and (4) primary water stress corrosion cracking at the tube end.

There was only one tube found not to be expanded for the full depth of the tubesheet. This tube was not expanded on the cold-leg side of the steam generator. Before plugging this tube, the tube was hard rolled into the tubesheet. The hot- or cold-leg side of the steam generator have no other known non-expanded or partially expanded tubes.

Thirteen tubes were discovered with an over-roll condition during RFO 14. The 3 tubes plugged because of an over-roll condition in RFO 14 were expanded significantly outside the tubesheet (greater than 4.45 cm (1.75 in.) above the top of the tubesheet), while the other 10 tubes were over-rolled less than 2.54 cm (1 in.) above the top of the tubesheet.

Although no tubes were plugged because of crack-like indications, stress corrosion cracking indications were identified in several tubes. All of these indications were in the lowermost 10.2 cm (4 in.) of the tubesheet, and were allowed to remain in service per an approved repair criteria.

Secondary-side visual inspections were performed in each of the four steam generators at tube support plate 18. A total of 202 loose parts were identified, and 133 were removed. Of the 202 loose parts, 22 were in steam generator A (11 removed), 76 were in steam generator B (57 removed), 76 were in steam generator C (50 removed), and 28 were in steam generator D (15

removed). All of the objects that were not removed were evaluated to ensure it was acceptable to leave them in the steam generator for one cycle of operation.

During RFO 14, follow-up inspections of the preheater waterboxes were performed with special emphasis on the waterbox cap plate. These inspections were only performed in steam generators B, C, and D since steam generator A does not have a cutout region (as confirmed during the RFO 13 inspections). Inspections of the rib assemblies, impingement plate, and cap plate, found no change in the condition since the prior inspections in RFO 13.

On October 31, 2007, the steam generator portion of the Catawba 2 technical specifications was revised to limit the extent of inspection in the hot-leg and cold-leg tubesheet regions. Specifically, the technical specifications were revised to exclude the portion of tube that is more than 43.2 cm (17 in.) below the top of the tubesheet from inspection (i.e., approximately the lowermost 10.2 cm (4 in.) of tube in the tubesheet on the hot- and cold-leg side was excluded from inspection, and hence any flaws that may exist in this region are permitted to remain in service). This revision was applicable only to RFO 15 and the subsequent operating cycle (ADAMS Accession No. ML072820013).

There was no evidence of primary-to-secondary leakage during Cycle 15 (spring 2006 to fall 2007).

During RFO 15 in 2007, about 58 percent of the tubes in each of the four steam generators were inspected full length with a bobbin coil. The bobbin coil was used to inspect:

- all tubes with previous indications
- all tubes surrounding plugged tubes (one tube deep)
- all periphery tubes (outer perimeter, tube lane and T-slot) two rows deep
- a 20 percent sample of row 1 through row 10 tubes
- all tubes with an eddy current offset indicating potentially high residual stresses (about 27 tubes)
- a 25 percent random sample of the remaining tubes that were not inspected during RFO 14

In addition to the bobbin coil inspections, an array probe was used to inspect the following in each of the four steam generators:

- 20 percent of the tubes from 7.62 cm (3 in.) above the hot-leg tubesheet to the hot-leg tube end (100 percent of the tubes were inspected in steam generator B)
- the U-bend region of 20 percent of the tubes in rows 1, 2, and 10
- 20 percent of tubes in rows 1 through 10 at tube supports 8 and 9 (i.e., the uppermost hot- and cold-leg tube support) for evidence of complete blockage of the tube support plate hole openings
- 20 percent of the expansions in the preheater region

An array probe also was used to inspect peripheral tubes two rows deep on the hot- and cold-leg sides from the top of the tubesheet to the first tube support plate, and peripheral tubes two rows deep at tube support 18 in each of the four steam generators. The array probe was also used to inspect:

- 20 percent of the overexpansions and bulges in the upper 43.2 cm (17 in.) of the tubesheet region in the hot- and cold-leg of steam generators A, C, and D
- 100 percent of the overexpansions and bulges in the upper 43.2 cm (17 in.) of the tubesheet region in the hot-leg of steam generator B
- 20 percent of these locations in the cold-leg of steam generator B

In addition, all new dent indications and existing dent indications not analyzed during RFO 14 were inspected with an array probe. In addition to the eddy current inspections, visual inspections were performed on all tube plugs in each of the four steam generators.

As a result of these inspections, eight tubes were plugged. All 8 tubese were plugged for axially oriented outside-diameter crack-like indications (presumed to be outside-diameter stress corrosion cracking).

The only steam generator tube degradation mechanisms observed during RFO 15 were (1) wear at the AVBs, (2) wear at the tube support plates, (3) axially and circumferentially oriented primary water stress corrosion cracking at the hot-leg tube ends, (4) circumferentially oriented primary water stress corrosion cracking at the cold-leg tube ends, and (5) axially oriented outside-diameter stress corrosion cracking at the expansion transition/sludge pile.

The maximum depth reported for any AVB wear indications was 35 percent throughwall.

With respect to the cracking at the tube ends, inside diameter initiated indications were found in the hot-leg tack expansions in steam generator B, inside diameter initiated indications were found at the tube end in the hot-legs of steam generators A, C, and D, and circumferentially oriented, inside diameter initiated indications were found at the tube end in the cold-leg of steam generators A and D. The inside diameter initiated indications at the tube end in the cold-leg of steam generators A and D were all circumferentially oriented. A total of 15 indications were identified in 10 tubes. These tubes were left in service since these flaws are at least 43.2 cm (17 in.) below the top of the tubesheet. The cold-leg temperature is approximately 556 degrees Fahrenheit.

The outside-diameter initiated (non-wear) indications were all axially oriented and slightly above the top of the tubesheet in the sludge pile (a region in the steam generator where deposits tend to accumulate). The indications were in eight tubes; however, one tube had multiple indications. Several (if not all) of the indications were not associated with the expansion transition. The sludge pile height is 5.1 cm (2 in.) above the top of the tubesheet. Although the inspection scope at the top of the tubesheet only requires inspecting to 7.62 cm (3 in.) above the top of the tubesheet, data is typically acquired up to 10.2 cm (4 in.) above the top of the tubesheet. The maximum observed depth of any of these indications was 69 percent throughwall, and the maximum observed length was about 12.7 mm (0.5 in.). The indication with the maximum depth was not the longest indication.

Several secondary-side maintenance activities were performed during RFO 15. Sludge lancing was performed in each of the four steam generators. After sludge lancing, secondary-side visual inspections were performed on the top of the tubesheet including the tube free lane, the annulus, and selected in-bundle columns to verify the effectiveness of the sludge lancing. In addition, the 14 support blocks that are welded to the wrapper and underneath tube supports 1 and 19 were inspected. No anomalies were identified.

In addition to the above secondary-side inspections, the top of tube support 18 in each steam generator were inspected visually. Similar inspections were performed during RFOs 13 and 14. The loose parts identified were consistent with those discovered in the previous outages, and loose parts that had a high likelihood to result in tube damage were removed. All loose parts that could not be retrieved were evaluated and determined to be acceptable for one cycle of operation.

The top tube support plate (08H and 09C) in steam generator A also was inspected visually to characterize the deposit loading and the extent to which the broached holes in the support plate were blocked. In addition array probe examinations were performed at 08H and 09C to assess tube hole blockage. Although these examinations were inconclusive because the inspection could not see the bottom of the support plate broached holes, severe blocking of the broached holes was not observed, and there were no observations that required immediate attention. Subsequent examinations in RFO 16 indicated that the broached openings at 08H and 09C were generally open with some evidence of deposits forming at the bottom of the broached openings. In addition, observations showed spalled deposits partially blocking a small number of openings. Evaluation of the array probe data from RFO 15 was indeterminate with regard to the extent of tube support hole blockage.

The steam drums in steam generators B and C were inspected visually. Also inspected were the secondary moisture separator banks (perforated plates, chevron vanes, and drain lines), primary moisture separator banks (swirl vane assemblies, downcomer barrel, tangential nozzles, riser barrel, and riser barrel slip fit joint), decks (upper, middle, intermediary, and lower), decking support structures, ladders, and auxiliary feedwater piping. No anomalies or degradation were identified.

On April 13, 2009, the steam generator portion of the Catawba 2 technical specifications was revised to permit certain sized flaws near the tube end in both the hot- and cold-leg sides of the steam generator to remain in service. Specifically, the technical specifications were revised to (1) permit flaws having a circumferential component less than or equal to 203 degrees found in the portion of the tube below 43.2 cm (17 in.) from the top of the tubesheet and above 2.54 cm (1 in.) from the bottom of the tubesheet to remain in service, (2) require the removal from service all flaws having a circumferential component greater than 203 degrees found in the portion of the tube below 43.2 cm (17 in.) from the top of the tubesheet and above 2.54 cm (1 in.) from the bottom of the tubesheet, (3) require the removal from service all tubes with service-induced flaws between the top of the tubesheet and 43.2 cm (17 in.) below the top of the tubesheet, and (4) permit all axial indications found in the portion of the tube below 43.2 cm (17 in.) from the top of the tubesheet to remain in service. In addition, the technical specifications were modified to indicate that when more than one flaw with circumferential components is found in the portion of the tube below 43.2 cm (17 in.) from the top of the tubesheet and above 2.54 cm (1 in.) from the bottom of the tubesheet with the total of the circumferential components being greater than 203 degrees and the axial separation distance of less than 2.54 cm (1 in.), then the tube must be removed from service (overlapping portions of the flaws only need to be counted once in determining the total circumferential involvement of

the flaws). For flaws within 2.54 cm (1 in.) of the bottom of the tubesheet, the technical specifications were modified to indicate (1) when one or more flaws with circumferential components are found and the total of the circumferential components exceeds 94 degrees, then the tube shall be removed from service and (2) when one or more flaws with circumferential components are found in the portion of the tube within 2.54 cm (1 in.) from the bottom of the tubesheet and within 2.54 cm (1 in.) axial separation distance of a flaw above 2.54 cm (1 in.) from the bottom of the tubesheet, and the total of the circumferential components found in the tube exceeds 94 degrees, then the tube shall be removed from service (overlapping portions of the flaws only need to be counted once in determining the total circumferential involvement of the flaws). This revision to the technical specifications was applicable only to RFO 16 and the subsequent operating cycle (ADAMS Accession No. ML091030088).

There was no evidence of primary-to-secondary leakage during Cycle 16 (fall 2007 to spring 2009).

During RFO 16 in 2009, 100 percent of the tubes in each of the four steam generators were inspected full length with a bobbin coil, except for the U-bend region of the tubes in rows 1 through 5. In addition to the bobbin coil inspections, an array probe was used to inspect the following in each of the four steam generators:

- 100 percent of the tubes from 7.62 cm (3 in.) above the hot-leg tubesheet to the hot-leg tube end
- 100 percent of the tubes from 7.62 cm (3 in.) above the cold-leg tubesheet to the cold-leg tube end in steam generators A and D
- 20 percent of the tubes from 7.62 cm (3 in.) above the cold-leg tubesheet to the cold-leg tube end in steam generators B and C
- the U-bend region of 35 percent of the tubes in rows 1 through 5
- the U-bend region of 20 percent of the tubes in row 10
- 20 percent of the preheater baffle plate expansions
- all peripheral tubes two rows deep on the hot- and cold-leg sides from the top of the tubesheet to the first tube support plate, and peripheral tubes two rows deep at tube support 18
- all new dent indications and all dents not inspected during RFO 15
- all hot-leg tube support plate locations in tubes with potentially elevated residual stresses.

In addition to the eddy current inspections, visual inspections were performed on all tube plugs in each of the four steam generators. All of the plugs were present and no degradation was observed.

As a result of these inspections, 10 tubes were plugged—6 for circumferentially oriented indications near the hot-leg tube end with circumferential extents greater than 94 degrees, 3 for axially oriented outside-diameter initiated indications at hot-leg tube supports, and 1 for a bulge

at the top of the tubesheet on the hot-leg side of the steam generator. The bulge was attributed to fabrication of the steam generator.

The only steam generator tube degradation mechanism observed during RFO 16 were (1) wear at the AVBs, (2) wear at the tube support plates, (3) wear attributed to loose parts, (4) axially and circumferentially oriented primary water stress corrosion cracking at the hot-leg tube ends, and (5) axially oriented outside-diameter cracking indications at hot-leg tube supports.

The maximum depth reported for any AVB wear indications was 35 percent throughwall.

Axially and circumferentially oriented indications were observed near the hot-leg tube ends. Most of these indications were in steam generator B. For the circumferentially oriented indications near the tube ends, the largest measured about 4 cm (1.59 in.). The number of tube end indications has not significantly changed in the last four cycles. There were no indications detected at the cold-leg tube ends. All of the cold-leg tube end indications detected during RFO 15 were classified as permeability variations in RFO 16.

Eight indications of axially oriented outside-diameter stress corrosion cracking were observed at the hot-leg tube supports in three tubes. Some of the tube support plate elevations had two indications. The two indications at the same tube support were at different lands. The largest amplitude observed for these eight indications was 0.35 volts as measured with a plus-point coil. All three of these tubes had elevated residual stresses as determined from the eddy current inspection. Sixty-five tubes are designated minus 2 sigma tubes, four of which have been plugged.

Secondary-side maintenance and inspection activities were also performed during RFO 16. A FOSAR was performed in the preheater region of all four steam generators. Some loose parts were detected and left in service. A licensee engineering analysis showed that tube integrity would be maintained for two inspection cycles for those parts left in the steam generator. Secondary-side visual inspections were performed at the upper tube support plate in steam generator A to evaluate the extent of blockage of the broached holes. Some lips of deposits have formed at the lower edges of the broached openings, but no evidence of significant blockage was seen. No sludge lancing was performed during RFO 16. Sludge lancing is typically performed every other outage at Catawba 2.

On September 27, 2010, the steam generator portion of the Catawba 2 technical specifications was revised to limit the extent of inspection in the hot-leg and cold-leg tubesheet regions. Specifically, the technical specifications were revised to exclude the portion of tube that is more than 50.8 cm (20 in.) below the top of the tubesheet from inspection (i.e., approximately the lowermost 2.54 cm (1 in.) of tube in the tubesheet on the hot- and cold-leg side was excluded from inspection, and hence any flaws that may exist in this region are permitted to remain in service). This revision was applicable only to RFO 17 and the subsequent operating cycle (ADAMS Accession No. ML102640537).

There was no evidence of primary-to-secondary leakage during Cycle 17 (spring 2009 to fall 2010).

During RFO 17 in 2010, 100 percent of the tubes in each of the four steam generators were inspected full length with a bobbin coil, except for the U-bend region of the tubes in rows 1 through 5. In addition to the bobbin coil inspections, an array or rotating probe was used to inspect the following in each of the four steam generators:

- 100 percent of the tubes from 7.62 cm (3 in.) above the hot-leg tubesheet to the hot-leg tube end
- the U-bend region of 100 percent of the row 1 tubes
- the U-bend region of 35 percent of the tubes in rows 2 through 5
- the U-bend region of 20 percent of the tubes in row 10
- 20 percent of the preheater baffle plate expansions
- all peripheral tubes two rows deep on the hot- and cold-leg sides from the top of the tubesheet to the first tube support plate
- all peripheral tubes two rows deep at tube support 18 on the cold leg
- all new dent indications
- all dents not inspected during RFO 16
- all hot-leg tube support plate locations in tubes with potentially elevated residual stresses

In addition to the eddy current inspections, all tube plugs in each of the four steam generators were inspected visually. All of the plugs were present and no degradation was observed.

As a result of these inspections, one tube was plugged for wear at a tube support plate.

The only steam generator tube degradation mechanisms observed during RFO 17 were (1) wear at the AVBs, (2) wear at the tube support plates, (3) wear attributed to loose parts, and (4) axially and circumferentially oriented primary water stress corrosion cracking at the hot-leg tube ends (all of which were greater than 50.8 cm (20 in.) from the top of the tubesheet so they were left in service).

The maximum depth reported for any AVB wear indications was 35 percent throughwall. The maximum depth reported for wear at the tube support plates was 39 percent throughwall. There were 14 tubes that had wear attributed to interaction between the tube and the tube support plate. Ten tubes had wear attributed to loose parts.

The only secondary-side inspections performed during RFO 17 was FOSAR. There were 16 objects identified on the tubesheet in the 4 steam generators. Four of these objects were removed, seven were objects that were present in past inspections and remain unchanged, and five parts were evaluated. Evaluation (by the licensee) of the objects remaining in the steam generators showed that they were acceptable for at least two cycles of operation. No tube degradation was associated with any of these foreign objects.

On March 12, 2012, the steam generator portion of the Catawba 2 technical specifications was revised to limit the extent of inspection in the tubesheet region. Specifically, the technical specifications were revised to exclude the portion of tube that is more than 35.59 cm (14.01 in.) below the top of the tubesheet from inspection (i.e., approximately the lowermost 17.8 cm (7 in.)

of tube in the tubesheet was excluded from inspection, and hence any flaws that may exist in this region are permitted to remain in service (ADAMS Accession No. ML12054A692)).

There was no evidence of primary-to-secondary leakage during Cycle 18 (fall 2010 to spring 2012).

During RFO 18 in 2012, 100 percent of the tubes in each of the four steam generators were inspected full length with a bobbin coil, except for the U-bend region of the tubes in rows 1 through 5. In addition to the bobbin coil inspections, an array probe was used to inspect the following in each of the four steam generators:

- 100 percent of the tubes from 7.62 cm (3 in.) above the hot-leg tubesheet to the hot-leg tube end
- the U-bend region of 100 percent of the row 1 tubes
- the U-bend region of 35 percent of the tubes in rows 2 through 5
- the U-bend region of 20 percent of the tubes in row 10
- 20 percent of the preheater baffle plate expansions
- all peripheral tubes (outer perimeter, open lane, and T-slot) two rows deep on the hot- and cold-leg sides from the top of the tubesheet to the first tube support plate
- all peripheral tubes two rows deep at tube support 18 on the cold leg
- all new dent indications
- all dents not inspected during RFO 17

In addition to the eddy current inspections, all tube plugs in each of the four steam generators were inspected visually. All of the plugs were present and no abnormal conditions were observed.

As a result of these inspections, five tubes were plugged—two tubes for wear associated with a possible foreign object and three for the presence of a possible foreign object.

The only steam generator tube degradation mechanisms observed during RFO 18 were (1) wear at the AVBs, (2) wear at the tube support plates, (3) wear attributed to loose parts, and (4) axially and circumferentially oriented primary water stress corrosion cracking at the hot-leg tube ends (all of which were greater than 50.8 cm (20 in.) from the top of the tubesheet so they were left in service).

The maximum depth reported for any AVB wear indications was 36 percent throughwall. There were 178 crack-like indications detected near the tube ends. Of these 178 indications, five were newly reported. Some of the indications have increased in voltage while other indications have decreased or stayed the same.

The only secondary-side inspections performed during RFO 18 was FOSAR in the preheater region. Inspection of the lower preheater baffle plate region identified foreign objects.

Evaluation (by the licensee) of the objects remaining in the steam generators showed that they were acceptable for at least two cycles of operation (the next scheduled inspection of this region).

There was no evidence of primary-to-secondary leakage during Cycle 19 (spring 2012 to fall 2013).

During RFO 19 in 2013, 100 percent of the tubes in each of the four steam generators were inspected full length with a bobbin coil, except for the U-bend region of the tubes in rows 1 through 5. In addition to the bobbin coil inspections, an array probe was used to inspect the following in each of the four steam generators:

- 100 percent of the tubes from 7.62 cm (3 in.) above the hot-leg tubesheet to the hot-leg tube end
- the U-bend region of 100 percent of the row 1 tubes
- the U-bend region of 35 percent of the tubes in rows 2 through 5
- the U-bend region of 20 percent of the tubes in row 10
- 20 percent of the preheater baffle plate expansions not inspected during RFO 17 or RFO 18 from 7.6 cm (3 in.) above to 7.6 cm (3 in.) below the tube support plate
- all peripheral tubes (outer perimeter, open lane, and T-slot) two rows deep on the hot- and cold-leg sides from the top of the tubesheet to the first tube support plate
- all peripheral tubes two rows deep at tube support 18 on the cold leg
- all new dent indications
- all dents not inspected during RFO 18

In addition to the eddy current inspections, visual inspections were performed on all tube plugs in each of the four steam generators. All of the plugs were present and no degradation was observed.

As a result of these inspections, seven tubes were plugged—two for wear attributed to a foreign object, three for wear associated with a possible foreign object that was still present, and two for the presence of a possible foreign object.

The only steam generator tube degradation mechanisms observed during RFO 18 were (1) wear at the AVBs, (2) wear at the tube support plates, (3) wear attributed to loose parts, and (4) axially and circumferentially oriented primary water stress corrosion cracking at the hot-leg tube ends (all of which were greater than 50.8 cm (20 in.) from the top of the tubesheet so they were left in service).

Indications of AVB wear totaled 338 in 214 tubes during RFO 19: 134 indications (in 75 tubes) in steam generator A, 33 indications (in 22 tubes) in steam generator B, 69 indications (in 48 tubes) in steam generator C, and 102 indications (in 69 tubes) in steam generator D. The maximum depth reported for the AVB wear indications was 35 percent throughwall.

In addition to the wear indications at the AVBs, 33 indications of wear at the tube support plates were identified in 30 tubes including 10 indications (in 8 tubes) in steam generator A, 15 indications (in 14 tubes) in steam generator B, 5 indications (in 5 tubes) in steam generator C, and 3 indications (in 3 tubes) in steam generator D. The depth of these indications ranged from approximately 4 percent to 22 percent throughwall.

A total of 171 crack-like indications near the tube ends were identified during RFO 19 including 1 indication (in 1 tube) in steam generator A, 154 indications (in 154 tubes) in steam generator B, 11 indications (in 11 tubes) in steam generator C, and 5 indications (in 5 tubes) in steam generator D. The number of tube end indications during the last few inspection outages has remained essentially the same.

The steam generator channel head cladding was inspected visually, and no degradation was found.

Secondary-side inspections performed during RFO 19 included FOSAR at the top of the tubesheet. These inspections identified foreign objects. The licensee evaluated the objects remaining in the steam generators and they were acceptable for at least two cycles of operation (the next scheduled inspection of this region). In addition to the top of tubesheet inspections, the top of the uppermost tube support plate in steam generator A was inspected visually. Minor amounts of scale and sludge were observed, but the quatrefoil holes were generally free of blockage from sludge and scale.

### 3.2.4 Comanche Peak 2

Tables 3-10, 3-11, and 3-12 summarize the information discussed below for Comanche Peak 2. Table 3-10 provides the number of full-length bobbin inspections and the number of tubes plugged and deplugged during each outage for each of the four steam generators. Table 3-11 lists the reasons why the tubes were plugged. Table 3-12 lists tubes plugged for reasons other than wear at the AVBs.

Comanche Peak 2 has four Westinghouse model D5 steam generators. The licensee numbers its tube supports from 1H to 11H on the hot-leg side of the steam generator and from 1C to 11C on the cold-leg side (Figure 2-1).

During RFO 6 in 2002, 100 percent of the tubes in steam generators B and C were inspected full length with a bobbin coil, except for the U-bend region of the tubes in rows 1 and 2. In addition to the bobbin coil inspections, a rotating probe equipped with a plus-point coil was used to inspect:

- the hot-leg expansion transition region in 60 percent of the tubes
- the U-bend region of 100 percent of the tubes in rows 1 and 2
- the expansions at the preheater baffle plates in 50 percent of the tubes
- 100 percent of the dents at hot-leg tube support plate 3H with bobbin voltage amplitudes greater than or equal to 5 volts

No eddy current inspections were performed in steam generators A and D during RFO 6. In addition, all tube plugs were inspected visually.

As a result of these inspections, 11 tubes were plugged—3 for wear at the tube supports in the preheater (two of these were reclassified as wear from a loose part in RFO 8) and 8 for loose parts.

The only steam generator tube degradation mechanisms observed during RFO 6 were wear at the AVBs, wear at the preheater tube support, and wear attributed to loose parts.

Eighty-seven indications of AVB wear were detected in 56 tubes during RFO 6. This included 41 indications (in 23 tubes) in steam generator B and 46 indications (in 33 tubes) in steam generator C. The maximum depth reported for the AVB wear indications was 34 percent throughwall.

In addition to the wear indications at the AVBs, three indications of wear at the preheater tube supports were detected in three tubes. The maximum depth reported for the preheater wear indications was 11 percent throughwall (even after the RFO 8 reclassification of two of these indications).

Eight tubes were identified with wear attributed to loose parts. Of these, three were plugged since the wear exceeded 40 percent throughwall. The maximum depth reported for these indications was 46 percent throughwall.

The only indications left in service in these two steam generators were those attributed to wear at the AVBs.

During RFO 6, FOSAR was performed on the secondary side of each of the four steam generators. These inspections along with the eddy current inspections identified about 96 loose parts/potential loose parts in steam generators A (4 objects), B (12 objects), and C (about 80 objects). Only three loose parts/potential loose parts were not removed. Of the three locations where the loose parts/potential loose parts could not be removed, one location had a sludge rock, one had tube scale, and the third location was not accessible for visual inspection. The tubes near the loose parts/potential loose parts that could not be removed and the eight tubes with wear attributed to loose parts were plugged. One of the loose parts that was removed from steam generator B was a wedge measuring 10.2 cm (4 in.) by 5 cm (2 in.) by 2.54 cm (1 in.).

Before RFO 7, previous bobbin coil eddy current data were reviewed to identify tubes that could have high residual stress and therefore might be more susceptible to stress corrosion cracking. Because of this review, 73 tubes were identified as potentially having high residual stress. Of these tubes, eight were in low-row tubes (i.e., tubes that were stress relieved after bending). Inspection of these potentially affected tubes was made a permanent part of the Comanche Peak 2 Degradation Assessment.

During RFO 7 in 2003, 75 percent of the tubes in steam generator A and 55 percent of the tubes in steam generator D were inspected full length with a bobbin coil, except for the U-bend region of the tubes in rows 1 and 2. In addition to the bobbin coil inspections, a rotating probe equipped with a plus-point coil was used to inspect:

- 44 percent of the tubes from 7.62 cm (3 in.) above to 22.9 cm (9 in.) below the top of the tubesheet on the hot-leg side

- 6 percent of the tubes from 7.62 cm (3 in.) above the top of the tubesheet to the tube end on the hot-leg side, the U-bend region of 50 percent of the tubes in rows 1 and 2
- the expansions at the preheater baffle plates in 50 percent of the tubes
- 100 percent of the dents at hot-leg tube support plate 3H with bobbin voltage amplitudes greater than or equal to 5 volts
- 50 percent of the dings in the hot-legs with bobbin voltage amplitudes greater than 5 volts

No eddy current inspections were performed in steam generators B and C during RFO 7. All tubes with high residual stress were inspected with a bobbin coil and with a rotating probe at the hot-leg expansion transition. In addition, all tube plugs in steam generators A and D were inspected visually.

As a result of these inspections, four tubes were plugged. All four tubes were plugged for wear at the AVBs.

The only steam generator tube degradation mechanisms observed during RFO 7 were wear at the AVBs and wear at the preheater tube supports.

A total of 153 indications of AVB wear were detected in 91 tubes during RFO 7: 139 indications (in 82 tubes) in steam generator A and 14 indications (in 9 tubes) in steam generator D. Because the bobbin coil inspections during RFO 7 did not include 100 percent of the tubes, the actual number of AVB wear indications in these steam generators could be higher. The maximum depth reported for the AVB wear indications was 47 percent throughwall.

In addition to the wear indications at the AVBs, two indications of wear at the preheater tube supports were detected in two tubes. The maximum depth reported for the preheater wear indications was 4 percent throughwall.

During RFO 7, the secondary side of the steam generator was inspected visually. This included FOSAR at the top of the tubesheet, a limited scope in-bundle inspection at the top of the tubesheet, and an inspection of tube support 2C in all four steam generators.

Twenty-seven loose parts were found in steam generators A (12 objects), B (5 objects), and D (10 objects). Nineteen of these objects were removed. The loose parts that could not be removed were a metal strip, two sludge rocks, weld slag, a 5.1-cm (2-in.) long nail, a piece of scale (deposit), a metal thread, and a crescent-shaped object. The licensee performed an evaluation and determined that it was acceptable to operate for up to two cycles with these loose parts in the steam generators.

In outages before RFO 8, the waterbox region was inspected visually in each of the four steam generators. Before RFO 8, the video tapes associated with these inspections were reviewed to assess if portions of the waterbox cap plate had been cut out during fabrication because operating experience at Byron 2 showed that this location may be susceptible to degradation. This review indicated that a cut-out region does not exist in steam generators A, B, and D. The review of the video tape for steam generator C was not conclusive on whether a cut-out region existed in the cap plate. Subsequent inspections during RFO 8 indicated that a cut-out region in the cap plate does not exist in steam generator C.

During RFO 8 in 2005, 57 percent of the tubes in steam generator A, 59 percent of the tubes in steam generator B, 60 percent of the tubes in steam generator C, and 74 percent of the tubes in steam generator D were inspected full length with a bobbin coil, except for the U-bend region of the tubes in rows 1 and 2. In addition to the bobbin coil inspections, a rotating probe equipped with a plus-point coil was used to inspect:

- 47 percent of the tubes from 7.62 cm (3 in.) above to 22.9 cm (9 in.) below the top of the tubesheet on the hot-leg side
- 3 percent of the tubes from 7.62 cm (3 in.) above the top of the tubesheet to the tube end on the hot-leg side
- the U-bend region of 50 percent of the tubes in rows 1 and 2
- the expansions at the preheater baffle plates in 50 percent of the tubes
- 100 percent of the dents at hot-leg tube support plate 3H with bobbin voltage amplitudes greater than or equal to 2 volts
- 50 percent of the dings in the hot-legs with bobbin voltage amplitudes greater than 5 volts
- 100 percent of the dings in the U-bend region with bobbin voltage amplitudes greater than 5 volts

All tubes with high residual stress were inspected with a bobbin coil and with a rotating probe at the hot-leg expansion transition. In addition, the 100 largest over-expanded tubes as determined from the tube's diameter and the largest 100 over-expanded tubes as determined by the bobbin voltage were included in the top of tubesheet rotating probe inspections. In addition, all tube plugs were inspected visually.

As a result of these inspections, 13 tubes were plugged—4 for wear at the AVBs, 4 for loose parts, 3 for single volumetric indications in the freespan region, 1 for a single volumetric indication at the tube support plate, and 1 for a restriction attributed to steam generator fabrication.

The only steam generator tube degradation mechanisms observed during RFO 8 were wear at the AVBs, wear at the preheater tube supports, and wear attributed to loose parts.

A total of 271 indications of AVB wear were detected in 164 tubes during RFO 8: 160 indications (in 93 tubes) in steam generator A, 43 indications (in 24 tubes) in steam generator B, 50 indications (in 35 tubes) in steam generator C, and 18 indications (in 12 tubes) in steam generator D. Because the bobbin coil inspections during RFO 8 did not include 100 percent of the tubes, the actual number of AVB wear indications in these steam generators could be higher. The maximum depth reported for the AVB wear indications was 37 percent throughwall.

In addition to the wear indications at the AVBs, two indications of wear at the preheater tube supports were detected in two tubes. The maximum depth reported for the preheater wear indications was 7 percent throughwall.

Four tubes were identified with wear attributed to loose parts. These four tubes were plugged and were in steam generator C at row 6, column 33; row 7, column 33; row 48, column 40; and row 48, column 41. No visual inspections could be performed at the location of the wear for the tubes in row 6,column 33,and row 7,column 33,because the wear occurred at tube support 6C. Two adjacent tubes in this column—row 8,column 33,and row 9,column 33—were plugged during RFO 6 (2002) because of wear at the same tube support plate. As a result, the licensee hypothesized that the loose part is gradually migrating toward the middle of the bundle along this column. The licensee indicated that this is consistent with the direction of water flow that is from the outer rows toward the inner rows because tube support 6C has a cutout at the outer rows of tubes. Because the loose part was not retrieved, these tubes (row 6, column 33, and row 7, column 33) were stabilized and then plugged. Visual inspections around the tubes in row 48, column 40, and row 48, column 41, did not reveal any loose parts at or near this location. The licensee concluded that the loose part has migrated away from this location, but no objects were found for several rows inward along the flow direction. As a result, the licensee hypothesized that the object could have broken up, allowing it to migrate far from this location. These tubes were plugged, but not stabilized because the part is no longer present at this location.

The three tubes plugged because of single volumetric indications in the freespan had indications that suggested lap signals similar to those observed in other steam generators. The bobbin signals have not changed from prior inspections at these locations. The tube that was plugged because of a single volumetric indication at the tube support plate was attributed to a manufacturing anomaly and has remained unchanged since 1994. The indication is pit-like; therefore, the licensee ruled out wear because of tube support interaction or interaction with a loose part.

Sludge lancing was performed in each of the four steam generators during RFO 8. In addition, FOSAR was performed in accessible areas of the top of the tubesheet and tube support 2C in each steam generator. These inspections were more extensive than those performed in past outages especially on tube support 2C. These inspections found about 100 foreign objects in each of the four steam generators. These objects had accumulated over the previous eight cycles of plant operation. The licensee evaluated the parts to assess their potential effect on tube degradation and to prioritize the loose parts for retrieval. This evaluation took into consideration the shape, size, and estimated material composition of the parts, as well as the local flow conditions where the parts were found. The parts were classified as high, medium, or low priority for retrieval. High priority implied uncertainty as to what the result would be from an evaluation of acceptability for leaving the part in service for two cycles of operation if it could not be retrieved. The medium classification implied reasonable success in justifying leaving the part in the steam generator for two cycles. The low priority classification consisted of parts that had a high confidence of acceptability for leaving in service. Most of the high and medium priority parts were retrieved, as well as some that were classified as low priority. A final engineering evaluation of the parts remaining in the steam generators led the licensee to conclude that there was no threat to tube integrity from these parts for at least two full cycles of operation.

Some possible loose part indications were reported in all steam generators at the top of the tubesheet on the hot-leg side of the steam generator and at tube supports 2C, 3C, and 6C. All possible loose part locations accessible for visual inspection were inspected and any objects found were either retrieved or it was concluded that they were acceptable to leave in service based on an engineering evaluation.

On September 12, 2006, Comanche Peak 2 revised the steam generator portion of its technical specifications making it performance-based consistent with TSTF-449 (ADAMS Accession No. ML062340117).

During RFO 9 in 2006, no steam generator tubes were inspected. In addition, no sludge lancing was performed.

There was no evidence of primary-to-secondary leakage during Cycle 10 (fall 2006 to spring 2008).

During RFO 10 in 2008, about 60 percent of the tubes in each of the four steam generators were inspected full length with a bobbin coil, except for the U-bend region of the tubes in rows 1 and 2. In addition to the bobbin coil inspections, a rotating probe equipped with a plus-point coil was used to inspect:

- 50 percent of the tubes from 7.6 cm (3 in.) above to 7.6 cm (3 in.) below the top of the tubesheet on the hot-leg side
- 50 percent of the hot-leg bulges and overexpansions within the tubesheet
- 100 percent of the tubes from the tube-end to 5.1 cm (2 in.) above the tube end on the hot-leg side of the steam generator
- the U-bend region of 50 percent of the row 1 and row 2 tubes
- 50 percent of the preheater baffle plate expansions, 100 percent of the dents at hot-leg tube support plate 3H with bobbin voltage amplitudes greater than or equal to 2 volts
- 50 percent of the dings in the hot-leg and U-bend with bobbin voltage amplitudes greater than or equal to 5 volts

All tubes with high residual stress were inspected with a bobbin coil (full length) and with a rotating probe at the hot-leg expansion transition. In addition, all tube plugs were inspected visually. No anomalies were identified during the inspection of the plugs.

As a result of these inspections, 13 tubes were plugged, either for axial or circumferential indications near the hot-leg tube end.

The only steam generator tube degradation mechanisms observed during RFO 10 were (1) wear at the AVBs, (2) wear at the preheater tube supports, (3) wear attributed to loose parts, and (4) axially and circumferentially oriented primary water stress corrosion cracking at the hot-leg tube end.

A total of 275 indications of AVB wear were detected in 167 tubes during RFO 10: 156 indications (in 95 tubes) in steam generator A, 47 indications (in 25 tubes) in steam generator B, 54 indications (in 35 tubes) in steam generator C, and 18 indications (in 12 tubes) in steam generator D. Although the bobbin coil inspections during RFO 10 did not include 100 percent of the tubes, all tubes with previously identified indications were inspected. The maximum depth reported for the AVB wear indications was 34 percent throughwall. The average growth rate of the AVB wear indications was 0.06 percent throughwall per effective full power year. The growth rate evaluated at a 95 percent probability and 50 percent confidence was 1.41 percent

throughwall per effective full power year. Both the average and the 95 percent probability growth rate have declined since RFO 4.

In addition to the wear indications at the AVBs, two indications of wear at the preheater tube supports were detected in two tubes. The maximum depth reported for the preheater wear indications was 7 percent throughwall.

Two indications of wear attributed to loose parts were identified in two tubes during RFO 10. The loose part at the location of the wear was removed from the steam generator. The maximum depth reported for these indications was 23 percent throughwall.

The axially and circumferentially oriented indications near the tube ends initiated from the inside diameter of the tube; therefore, the licensee attributed the indications to primary water stress corrosion cracking (however, no tube pulls were performed to confirm they resulted from corrosion). Of the 13 tubes with indications near the tube ends, 1 tube is from the population of tubes identified as possibly having elevated residual stress. Of these 13 tubes, 9 had axial indications and 4 had circumferential indications at the hot-leg tube end.

Several secondary-side maintenance activities were performed during RFO 10. Sludge lancing and FOSAR were performed in each of the four steam generators. In addition, upper bundle video inspections were performed in steam generator C. Thirty-two pounds of sludge were removed from the four steam generators, which is consistent with the prior history of sludge removal. All possible loose part indications reported from the eddy current data were reviewed for possible visual inspection. FOSAR was performed on all possible loose parts in accessible areas (i.e., top of tubesheet and a large portion of cold-leg tube support 2C). The visual inspection resulted in the identification of parts on the tubesheet and on cold-leg tube support 2C. Those parts identified through visual inspection were reviewed; and, if they could have caused tube wear, the neighboring tubes were visually inspected. Loose parts were found in each of the four steam generators. Some of these parts were retrieved. For those parts not retrieved, they were evaluated to ensure that they would not compromise tube integrity until the next inspection. The upper bundle visual inspection in steam generator C indicated a very light dusting of magnetite on the tubes mainly in the hot-leg region. The tube support openings were open and free of any significant deposits. No degradation was detected during these visual inspections.

On October 9, 2009, the steam generator portion of the Comanche Peak 2 technical specifications was revised to limit the extent of inspection in the hot-leg and cold-leg tubesheet regions. Specifically, the technical specifications were revised to exclude the portion of tube that is more than 43 cm (16.95 in.) below the top of the tubesheet from inspection (i.e., approximately the lowermost 10.2 cm (4 in.) of tube in the tubesheet on the hot-and cold-leg side was excluded from inspection, and hence any flaws that may exist in this region are permitted to remain in service). This revision was applicable only to RFO 11 and the subsequent operating cycle (ADAMS Accession No. ML092740076).

During RFO 11 in 2009, no steam generator tube or steam generator secondary-side inspections were performed. No sludge lancing was performed during RFO 11.

After RFO 11 in 2009, Comanche Peak 2 implemented a 4.5-percent power uprate.

On April 6, 2011, the steam generator portion of the Comanche Peak 2 technical specifications was revised to limit the extent of inspection in the hot-leg and cold-leg tubesheet regions.

Specifically, the technical specifications were revised to exclude the portion of tube that is more than 43 cm (16.95 in.) below the top of the tubesheet from inspection (i.e., approximately the lowermost 10.2 cm (4 in.) of tube in the tubesheet on the hot- and cold-leg side was excluded from inspection, and hence any flaws that may exist in this region are permitted to remain in service). This revision was applicable only to RFO 12 and the subsequent operating cycle (ADAMS Accession No. ML110770322).

There was no evidence of primary-to-secondary leakage during Cycle 12 (fall 2009 to spring 2011).

During RFO 12 in 2011, about 70 percent of the tubes in each of the four steam generators were inspected full length with a bobbin coil, which included all tubes with prior indications and all tubes not inspected during RFO 10. In addition to the bobbin coil inspections, a rotating probe equipped with a plus-point coil was used to inspect:

- 50 percent of the tubes from 7.62 cm (3 in.) above to 43.2 cm (17 in.) below the top of the tubesheet on the hot-leg side (including all tubes not inspected during RFO 10)
- the U-bend region of 50 percent of the row 1 and row 2 tubes (including all tubes not inspected during RFO 10)
- 50 percent of the preheater baffle plate expansions (including all tubes not inspected during RFO 10)
- 100 percent of the dents at hot-leg tube support plate 3H with bobbin voltage amplitudes greater than or equal to 2 volts
- 50 percent of the dents and dings in the hot-leg with bobbin voltage amplitudes greater than or equal to 5 volts (including all such dents and dings not inspected during RFO 10)

All tubes with potentially high residual stress were inspected with a bobbin coil (full length) and with a rotating probe at the hot-leg expansion transition. In addition, all tube plugs were inspected visually. All plugs were in place and no issues were identified during the inspections.

As a result of these inspections, three tubes were plugged. All of these tubes were plugged for wear at the AVBs.

The only steam generator tube degradation mechanisms observed during RFO 12 were wear at the AVBs, wear at the preheater tube supports, and wear attributed to loose parts.

A total of 286 indications of AVB wear were detected in 177 tubes during RFO 12: 160 indications (in 97 tubes) in steam generator A, 48 indications (in 27 tubes) in steam generator B, 56 indications (in 38 tubes) in steam generator C, and 22 indications (in 15 tubes) in steam generator D. Of these 286 indications, 15 were new indications. The depth of the new indications was less than 20 percent throughwall. The maximum depth reported for the AVB wear indications was 44 percent throughwall. The average growth rate of the wear indications is 0.15 percent throughwall per two cycles of operation (2.862 effective full power years). For the last operating period, the growth rate at a 95 percent probability and 95 percent confidence is 1.48 percent per effective full-power year (and at a 95 percent probability and 50 percent confidence the growth rate is 1.05 percent per effective full-power year). In general, the growth

rate has decreased with time. Although the bobbin coil inspections during RFO 12 did not include 100 percent of the tubes, all tubes with previously identified indications were inspected.

In addition to the wear indications at the AVBs, two indications of wear at the preheater tube supports were detected in two tubes. The maximum depth reported for the preheater wear indications was 7 percent throughwall. The depth of these indications is not changing.

Three indications of wear attributed to loose parts were identified in two tubes during RFO 12. The two tubes were adjacent to each other and the loose part that caused the wear was removed from the steam generator. The maximum depth reported for these indications was 30 percent throughwall.

Inspection and maintenance on the secondary side of the steam generators were performed during RFO 12. Sludge lancing and FOSAR was performed in all four steam generators. A total of 29 pounds of sludge was removed from the four steam generators. The FOSAR was performed at the top of the tubesheet and baffle plate B. In addition, the FOSAR was performed on flow distribution baffle plate A in the cold-leg side of the steam generator.

In addition to these secondary-side activities, the upper bundle region of steam generator D was inspected visually during RFO 12. Specifically, tube supports 8 and 11 were inspected in columns 71, 72, 97, and 98. The tube outside surface and the tube support plate crevices were clean with very little deposit accumulation. For tube support plate 8, a thin film of magnetite exists on the tubes in the hot-leg, but not on the cold-leg. The quatrefoil flow holes remain open and free of significant deposit, with slightly more deposit formation on the hot-leg side of the steam generator. The center stay rod in the tube lane and the wrapper block welds on the nozzle side were inspected from the tube lane and found to be intact with no visible structural degradation. The wrapper block welds at the end of each column gap were intact with no visible structural degradation. The stay rod in columns 70 and 71 was inspected and no structural issues were identified. For tube support plate 11, the center stay nut was in good condition with no noticeable degradation and the welds were intact. There was a light layer of magnetite on the U-bend region of the tubes. The wrapper block weld at the nozzle side was viewed from the tube lane and was found to be intact with no visible degradation. The hot-leg columns inspected were clean with some speckled deposits on the tubes. The quatrefoil holes were open and free of significant deposits. The wrapper block welds at the ends of the column gap 97–98 were intact with no visible structural degradation. The stay rod cap and weld in column gap 70–71 had no structural issues. The cold-leg column gaps 71–72 and 97–98 were clean and free of deposit. The quatrefoil flow holes were also free of deposits. The wrapper block welds at the end of each column gap were intact with no visible structural degradation. During these inspections, the top of tube support plate 10 was viewed. The flow holes in support plate 10 were also free of deposits. The tubes on the hot-leg side of the steam generator contained a light dusting of magnetite.

After startup from RFO 12 in May 2011, Comanche Peak 2 was shut down (from 100 percent power) because of high sodium concentration in all four steam generators because of leakage from two main condenser tubes. The condenser tubes were damaged by a falling object. The sodium concentration rose to approximately 3,000 parts per billion. High concentrations of sodium are a potential long term steam generator tube corrosion concern.

On October 18, 2012, the steam generator portion of the Comanche Peak 2 technical specifications was revised to limit the extent of inspection in the tubesheet region. Specifically, the technical specifications were revised to exclude the portion of tube that is more than 35.59

cm (14.01 in.) below the top of the tubesheet from inspection (i.e., approximately the lowermost 17.8 cm (7 in.) of tube in the tubesheet was excluded from inspection, and hence any flaws that may exist in this region are permitted to remain in service (ADAMS Accession No. ML12263A036)).

During RFO 13 in 2012, no steam generator tube or steam generator secondary-side inspections were performed.

On February 27, 2014, the steam generator portion of the Comanche Peak 2 technical specifications was revised to make them consistent with TSTF-510 (ADAMS Accession No. ML14042A223).

There was no evidence of primary-to-secondary leakage during Cycles 13 and 14 (spring 2011 to spring 2014).

## 3.3 Model F Steam Generator Operating Experience

Inspection results for Millstone 3, Seabrook, Vogtle 1, Vogtle 2, and Wolf Creek are provided in this section of the report. In addition, the results from inspections of the first 10 rows of tubes at Callaway (i.e., the thermally treated Alloy 600 steam generator tubes) are discussed up until the replacement of the steam generators in 2005. Although Salem 1 has model F steam generators and were the original steam generators to be used at the canceled Seabrook 2 facility, the summary of operating experience for Salem 1 is included in Section 3.4 on replacement steam generators because the flow conditions in the Salem 1 steam generators could be significantly different than in other model F steam generators potentially resulting in differences in operating experience.

### 3.3.1 Callaway

Tables 3-13, 3-14, and 3-15 summarize the information discussed below for Callaway. Table 3-13 provides the number of full-length bobbin inspections and the number of tubes plugged and deplugged during each outage for each of the four steam generators. Table 3-14 lists the reasons why the tubes were plugged. Table 3-15 lists tubes plugged for reasons other than wear at the AVBs.

Callaway has four Westinghouse model F steam generators. The licensee numbers its tube supports from the hot-leg flow distribution baffle (FBH) to 7H on the hot-leg side of the steam generator and from cold-leg flow distribution baffle (FBC) to 7C on the cold-leg side (Figure 2-4). Although Callaway has both thermally treated and mill-annealed Alloy 600 tubes, the following summarizes the inspections and repairs to the thermally treated tubes. Callaway was authorized in the plant technical specifications to use laser-welded sleeves and electrosleeves to repair defective tubes.

There was no evidence of primary-to-secondary leakage during Cycle 12 (spring 2001 to fall 2002).

During RFO 12 in 2002, 100 percent of the tubes in steam generators A and D were inspected full length with a bobbin coil. In addition to the bobbin coil inspections, a rotating probe equipped with a plus-point coil was used to inspect:

- 100 percent of the tubes from 5.1 cm (2 in.) above to x inches below the top of the tubesheet on the hot-leg side in all four steam generators (with “x” ranging from approximately 3.2 to 8.0 depending on the location of the tube within the tube bundle)

- the U bend region of 100 percent of the tubes in rows 1 and 2 in steam generator C

- 20 percent of the dents and dings with bobbin voltage amplitudes greater than 2 volts in all four steam generators

- 100 percent of the laser welded sleeves in steam generator C (which includes the two thermally treated tubes that were sleeved during RFO 8)

Additional inspections were performed in the non-thermally treated tubes.

As a result of these inspections, two thermally treated tubes were plugged. These tubes were plugged for wear at the tube support plate elevations. The indications were associated with the tube support plate lands and were at the ends of the tube support plate. The maximum depth reported for these indications was 16 percent throughwall. No crack-like indications were detected in the thermally treated tubes during RFO 12.

During RFO 12, sludge lancing was performed in all four steam generators.

During RFO 13 in 2004, 100 percent of the tubes in each of the four steam generators were inspected full length with a bobbin coil. In addition to the bobbin coil inspections, a rotating probe equipped with a plus-point coil was used to inspect:

- 100 percent of the tubes from 5.1 cm (2 in.) above to x inches below the top of the tubesheet on the hot-leg side in all four steam generators (with “x” ranging from about 5 to 9 depending on the location of the tube within the tube bundle)

- the U-bend region of 100 percent of the tubes in rows 1 and 2 in steam generator A

- 100 percent of the dents and dings with bobbin voltage amplitudes greater than 5 volts in all four steam generators

- 20 percent of the dents and dings with bobbin voltage amplitudes greater than 2 volts in all four steam generators

- 100 percent of the laser welded sleeves in steam generator A (which includes the one thermally treated tube that was sleeved during RFO 8)

In addition, ultrasonic examination was performed on all electrosleeves in steam generator C (which includes the three thermally treated tubes that were electrosleeved during RFO 10). Additional inspections were performed in the non-thermally treated tubes.

As a result of these inspections, two thermally treated tubes were plugged. These tubes were plugged for single volumetric indications at or near a tube support plate. No crack-like indications were detected in the thermally treated tubes during RFO 13.

During RFO 14 in 2005, Callaway replaced their original Westinghouse model F steam generators (with primarily mill-annealed Alloy 600 tubes) with Framatome model 73/19T

recirculating steam generators (with thermally treated Alloy 690 tubes). At the time of replacement, Callaway revised the steam generator portion of their technical specifications making them performance-based consistent with TSTF-449 (ADAMS Accession No. ML052570086).

### 3.3.2 Millstone 3

Tables 3-16, 3-17, and 3-18 summarize the information discussed below for Millstone 3. Table 3-16 provides the number of full-length bobbin inspections and the number of tubes plugged and deplugged during each outage for each of the four steam generators. Table 3-17 lists the reasons why the tubes were plugged. Table 3-18 lists tubes plugged for reasons other than wear at the AVBs.

Millstone 3 has four Westinghouse model F steam generators. The licensee numbers its tube supports using the alternate naming convention in Figure 2-4.

During RFO 7, visual inspections of the feedrings and upper internal components in all four steam generators were performed. In addition, ultrasonic examination of the feedrings in steam generators B and D was performed. Erosion of the feedring/J-tubes was identified with steam generator D having the most limiting erosion rate. The licensee evaluated this degradation and determined it to be acceptable for at least two more cycles of operation. The visual inspections of the upper internal components did not reveal any degradation that could threaten tube integrity.

During cycle 8 (spring 2001 to fall 2002), there was minimal primary-to-secondary leakage (less than 3.79 lpd (1 gpd)).

During RFO 8 in 2002, 100 percent of the tubes in steam generators A and C were inspected full length with a bobbin coil, except for the U-bend region of the row 1 tubes. In addition to the bobbin coil inspections, a rotating probe equipped with a plus-point coil was used to inspect:

- 73 percent of the tubes from 7.6 cm (3 in.) above to 7.6 cm (3 in.) below the top of the tubesheet on the hot-leg side in steam generator A
- 50 percent of the tubes from 7.6 cm (3 in.) above to 7.6 cm (3 in.) below the top of the tubesheet on the hot-leg side in steam generator C
- 20 percent of the tubes from 7.6 cm (3 in.) above to 7.6 cm (3 in.) below the top of the tubesheet on the cold-leg side in steam generator A
- less than 1 percent of the tubes from 7.6 cm (3 in.) above to 7.6 cm (3 in.) below the top of the tubesheet on the cold-leg side in steam generator C
- the U-bend region of 50 percent of the tubes in rows 1 and 2 in steam generators A and C
- 100 percent of the hot-leg dents and dings with bobbin voltage amplitudes greater than 3 volts in steam generators A and C

No eddy current inspections were performed in steam generators B and D during RFO 8. All tube plugs in steam generators A and C were inspected visually. No degradation or abnormal leakage was identified during the inspection of the plugs.

Because these inspections, 11 tubes were plugged—7 for wear at the AVBs, 2 for wear attributed to loose parts, 1 for wear in a tube near a loose part that could not be retrieved, and 1 for an obstruction.

The only steam generator tube degradation mechanisms observed during RFO 8 were wear at the AVBs and wear attributed to loose parts.

In steam generator A, 222 indications of AVB wear were detected in 112 tubes during RFO 8. In steam generator C, 54 indications of AVB wear were detected in 20 tubes during RFO 8. The maximum depth reported for the AVB wear indications was 45 percent throughwall. The average growth rate for these indications over two cycles of operation is less than 1.3 percent throughwall.

The plus-point inspections resulted in the identification of 59 volumetric indications affecting 50 tubes. Thirty-six of these indications (in 32 tubes) were determined to be manufacturing burnish marks and not service-induced. The remaining 23 indications (in 18 tubes) were attributed to loose parts or manufacturing burnish marks that could not be confirmed with the bobbin coil. One of these tubes had an associated loose part indication and was removed from service (as discussed above). This loose part was on the secondary side of steam generator C and was a small section of flat stock that had become wedged between tubes. Review of the historical eddy current data identified that this small part had been at this location since 1989 (RFO 2). Although only minor damage was identified, this tube was stabilized and plugged. The stabilizer increases the damping of the tube, reducing flow-induced vibration, and prohibits interaction with adjacent tubes in the unlikely event of a complete severance. Many of the volumetric indications were small and only detectable with a rotating probe.

The tube that was plugged because of an obstruction was obstructed 18.5 cm (7.29 in.) above the end of the tube on the cold-leg side (i.e., about 33 cm (13 in.) below the top of the tubesheet). The obstruction blocked the insertion of a 1.37-cm (0.540-in.) diameter probe. An inspection of this tube with smaller diameter probes, such as the 1.32-cm (0.520-in.) probe, was not attempted because smaller probes would not have supplied adequate fill factors. This tube had been inspected with a 1.42-cm (0.560-in.) diameter probe during the preservice, RFO 1, RFO 2, RFO 4, mid-cycle (RFO 6), and RFO 6 inspections. Consequently, it was concluded that the obstruction was service induced.

Inspection and maintenance on the secondary side of the steam generator also were performed during RFO 8. To reduce the amount of sludge on the top of the tubesheet, sludge lancing was performed in each of the four steam generators. In addition, FOSAR was performed in each of the four steam generators. Twelve loose parts remained in the four steam generators following RFO 8 (five in steam generator A, two in B, four in C, and one in D). These parts included small diameter wires, machine curls, sludge rocks, metal shavings, plate, and slag. The licensee has evaluated these loose parts and determined they are acceptable to leave in service. The tubes near these parts are inspected periodically to ensure tube integrity is maintained. A visual inspection of upper internal components was performed in limited locations in steam generator A. No degradation that could threaten tube integrity was identified.

During cycle 9 (fall 2002 to spring 2004), there was minimal primary-to-secondary leakage (less than 1 gpd).

During RFO 9 in 2004, 100 percent of the tubes in steam generators B and D were inspected full length with a bobbin coil, except for the U-bend region of the row 1 tubes. In addition to the bobbin coil inspections, a rotating probe equipped with a plus-point coil was used to inspect:

- 50 percent of the tubes from 7.6 cm (3 in.) above to 7.6 cm (3 in.) below the top of the tubesheet on the hot-leg side in steam generators B and D
- 37 percent of the tubes from 7.6 cm (3 in.) above to 7.6 cm (3 in.) below the top of the tubesheet on the cold-leg side in steam generator D
- the U-bend region of 50 percent of the tubes in rows 1 and 2 in steam generators B and D
- 100 percent of the hot-leg dents and dings with bobbin voltage amplitudes greater than or equal to 3 volts in steam generators B and D
- all potential loose part locations (11 tubes) including 1 tube surrounding the tubes with potential loose part indications in steam generators B and D (38 tubes)

No eddy current inspections were performed in steam generators A and C during RFO 9. No degradation or abnormal leakage was identified during the inspection of the plugs.

As a result of these inspections, 10 tubes were plugged—1 for wear at the AVBs, 2 for wear attributed to loose parts, 2 for damage during installation of a hand-hole during fabrication (one of which had degradation estimated to be greater than 40% throughwall), and 5 for a possible loose part (three of these tubes had measurable wear).

The only steam generator tube degradation mechanisms observed during RFO 9 were wear at the AVBs, wear attributed to loose parts, and wear attributed to maintenance.

In steam generator B, 90 indications of AVB wear were detected in 39 tubes during RFO 9. In steam generator D, 119 indications of AVB wear were detected in 61 tubes during RFO 9. The maximum depth reported for the AVB wear indications was 37 percent throughwall.

The plus-point inspections resulted in the identification of 30 volumetric indications affecting 25 tubes. Fifteen of these volumetric indications (in 14 tubes) were determined to be manufacturing burnish marks and not service-induced. These indications were reported with the bobbin coil probe and were present in the preservice (1985) bobbin coil data. The indications were present in the 1985 data; however, they did exhibit some change. This change was attributed (by the licensee) to differences in the examination techniques and equipment.

Of the remaining 15 volumetric indications (in 11 tubes), 13 were attributed to loose parts damage, and 2 (above tube support 8H) were attributed to secondary-side damage incurred because of the installation of hand-holes during steam generator fabrication. All 15 of these indications were in steam generator D. The indication in one of the two tubes attributed to damage during hand-hole installation was present during RFO 1, while the indication in the other tube was small and was not detectable with the bobbin coil (it was detected with the rotating probe, and RFO 9 was the first time this tube was inspected with a rotating probe).

Of the 11 tubes with these 15 indications, 7 tubes were plugged. Two of the tubes plugged were the ones with indications attributed to hand-hole installation, and the remaining 5 tubes were plugged because of wear attributed to loose parts. Of these latter 5 tubes, 2 tubes were affected by a loose part that was removed from the steam generator whereas for the other 3 tubes, the presence of a loose part could not be visually confirmed since the indications were above the flow distribution baffle. Because the existence of the loose part could not be confirmed visually, these three tubes (along with two other nearby tubes with potential loose part indications) were plugged. Loose parts identified on top of the flow distribution baffle in the past have been small items such as machining curls. None of these latter five tubes was stabilized.

Of the four tubes with volumetric indications that were not plugged, all were first reported in RFO 9; however, one was not present in prior bobbin examinations (row 9 column 42), one was present since RFO 7 (row 27 column 39), one was present since the preservice inspection and has a small ding associated with the volumetric indication (row 38 column 20), and one was present since RFO 3 (row 52 column 91). The licensee plans to reexamine the first and last two of these indications during the next outage.

During RFO 9, there were 345 dents in 197 tubes and 202 dings in 154 tubes in steam generator B with bobbin voltage amplitudes greater than or equal to 2 volts. Similarly, in steam generator D, there were 315 dents in 188 tubes and 261 dings in 211 tubes with bobbin voltage amplitudes greater than or equal to 2 volts. Of these, 89 dents in 73 tubes and 89 dings in 65 tubes in steam generator B had bobbin voltage amplitudes greater than or equal to 3 volts. Similarly, 161 dents in 104 tubes and 82 dings in 70 tubes in steam generator D had bobbin voltage amplitudes greater than or equal to 3 volts.

Visual and ultrasonic phased-array examinations on the nozzles of the feedring of steam generator D were performed during RFO 9. This data were used to re-verify and establish a maximum erosion rate for determining an appropriate repair date for the other three steam generators. The areas of erosion on the feedring in steam generator D were repaired by welding. The planned repair dates for the feedrings are RFO 10 for steam generator B, RFO 11 for steam generator C, and RFO 12 for steam generator A.

During RFO 9, a visual inspection of upper internal components was performed in steam generator D at, and above, the seventh tube support plate. No degradation that could threaten tube integrity was identified. Additionally, a general examination of the steam drum area was performed in all steam generators during the installation and removal of equipment used to perform an upper bundle flush. No degradation that could threaten tube integrity was identified.

During RFO 10 in 2005, 100 percent of the tubes in steam generators A and C were inspected full length with a bobbin coil, except for the U-bend region of many of the tubes in rows 1 and 2. In addition to the bobbin coil inspections, a rotating probe equipped with a plus-point coil was used to inspect:

- 50 percent of the tubes from 7.6 cm (3 in.) above to 7.6 cm (3 in.) below the top of the tubesheet on the hot-leg side in steam generators A and C

- 1,054 overexpansions from 7.62 cm (3 in.) above to 40.6 cm (16 in.) below the top of the tubesheet on the hot-leg side in steam generators A and C

- the U-bend region of about 80 percent of the tubes in rows 1 and 2 in steam generators A and C (including the U-bend region of all tubes in rows 1 and 2 not inspected with a rotating probe during RFO 8 and all U-bend regions not inspected with a bobbin probe in RFO 10)

- all newly reported dents and dings with bobbin voltage amplitudes greater than or equal to 3 volts on the hot-leg side of steam generators A and C

- all previously reported dents and dings that exhibited a change in bobbin voltage amplitude greater than or equal to 0.5 volts or a change in phase angle greater than or equal to 10 degrees from the data obtained during the previous two inspections on the hot-leg side of steam generators A and C

No eddy current inspections were performed in steam generators B and D during RFO 10.

As a result of these inspections, two tubes were plugged. These tubes were plugged for wear at the AVBs.

The only steam generator tube degradation mechanisms observed during RFO 10 were wear at the AVBs, wear attributed to loose parts, and wear attributed to maintenance equipment (sludge lance sled).

In steam generator A, 259 indications of AVB wear were detected in 135 tubes during RFO 10. In steam generator C, 59 indications of AVB wear were detected in 25 tubes during RFO 10. The maximum depth reported for the AVB wear indications was 42 percent throughwall. In steam generator A, 62 of the 259 AVB wear indications were new, and in steam generator C, 10 of the 59 AVB wear indications were new. The maximum depth reported for the new AVB wear indications was 25 percent throughwall. The average wear rate over the past two operating cycles for steam generator A was 0.94 percent with a standard deviation of 3.24 percent. The average wear rate over the past two operating cycles for steam generator C was 1.61 percent with a standard deviation of 3.00 percent.

There were 32 volumetric indications (other than wear at the AVBs) left in service during RFO 10. These indications were attributed to wear from a loose part or wear because of mechanical interaction with sludge lancing equipment employed in previous outages. There are no known loose parts or potential loose parts remaining at any of the locations with these volumetric indications. Of these 32 indications, 21 were present during RFO 8, and there was no significant change in the depth of the indications (i.e., the change was attributed to factors such as probe wear and diametric offset of the probe rather than growth of the indications).

There are 8,783 overexpansions in the tubesheet region of the four steam generators. Of these, 3,260 are on the hot-leg side of the steam generator. The 1,054 overexpansions examined during RFO 10 represent 32 percent of the total population of overexpansions on the hot-leg side of the steam generators. The overexpansions that were inspected included all overexpansions with bobbin coil voltage amplitudes exceeding 28 volts and some of the overexpansions with bobbin coil voltage amplitudes between 18 and 28 volts. This latter sample (with voltage amplitudes between 18 and 28 volts) were in either the approximately 200 tubes with overexpansions with amplitudes greater than 28 volts or the 50 percent of the tubes that were inspected from 7.6 cm (3 in.) above to 7.6 cm (3 in.) below the top of the tubesheet. The inspections were focused on the upper region of the tubesheet because these were considered by the licensee to be the greatest risk to tube integrity.

Secondary-side visual inspections were performed in the no-tube lane (i.e., the region between the row 1 of the hot and cold legs) and the annulus at the top of the tubesheet in steam generators A and C during RFO 10. In addition, all locations of possible loose parts (five to six locations) were inspected visually. The only loose parts that were detected were near the locations where possible loose part indications were identified from the eddy current data. As a result of these inspections, one piece of weld wire was located and removed. The other locations with possible loose part indications either had sludge deposits or no discernible cause for the possible loose part indication. There was no tube wear associated with any of the possible loose part indications.

An inspection of the internal areas of the steam generator C steam drum down to the seventh tube support plate was also conducted during RFO 10. All steam drum components viewed appeared structurally sound and in good condition, with the exception of J-tubes numbers 1, 15, 16, and 30. These J-tubes showed signs of erosion at the nozzle weld to header interface on the inside diameter of the header. Ultrasonic testing and weld repair (overlay) were performed on these nozzles during RFO 10. Repairs to the same J-tubes were also completed in steam generator B during RFO 10. Mid-deck and intermediate deck components viewed appeared to be in good condition and functioning as designed. On the lower deck, some leakage was observed at the riser barrel/downcomer slip joint, as well as some minor roughness or pitting on the primary separators in the location of feedwater overspray. No significant loss of material to the primary separators was observed and conditions were similar to those observed during the previous inspection. The AVBs appeared in good condition.

During RFO 9 and RFO 10, a review of the bobbin coil eddy current data from the tubes in rows 1 through 10 was performed to identify tubes that have high residual stress (i.e., an eddy current offset) and therefore might be more susceptible to stress corrosion cracking. Because of this review, no tubes were identified as potentially having high residual stress.

During RFO 11 in 2007, 100 percent of the tubes in steam generators B and D were inspected full length with a bobbin coil, except for the U-bend region of tubes in rows 1 and 2. In addition to the bobbin coil inspections, a rotating probe equipped with a plus-point coil was used to inspect:

- 50 percent of the tubes from 7.6 cm (3 in.) above to 7.6 cm (3 in.) below the top of the tubesheet on the hot-leg side in steam generators B and D

- about 44 percent of the overexpansions in the tubesheet from nominally 7.62 cm (3 in.) above to 43.2 cm (17 in.) below the top of the tubesheet on the hot-leg side in steam generator B and 74 percent of the overexpansions in this region in steam generator D

- the U-bend region of 100 percent of the tubes in rows 1 and 2 in steam generators B and D

- 100 percent of the dents and dings with bobbin voltage amplitudes greater than or equal to 3 volts on the hot-leg side of steam generators B and D

- all previously reported dents and dings (of any size) that exhibit a change in bobbin voltage amplitude greater than or equal to 0.5 volts or a change in phase angle greater than or equal to 10 degrees from the data obtained during the previous two inspections on the hot-leg side of steam generators B and D.

No eddy current inspections were performed in steam generators A and C during RFO 11.

As a result of these inspections, four tubes were plugged—two for wear at the AVBs and two for wear attributed to loose parts.

The only steam generator tube degradation mechanisms observed during RFO 11 were wear at the AVBs and wear attributed to loose parts.

In steam generator B, 94 indications of AVB wear were detected in 43 tubes during RFO 11. In steam generator D, 131 indications of AVB wear were detected in 70 tubes during RFO 11. The maximum depth reported for the AVB wear indications was 38 percent throughwall.

Seven volumetric indications were detected in five tubes during RFO 11. These indications are primarily wear attributed to foreign objects. The largest of these indications had a depth of 47 percent throughwall.

During RFO 11, there were 622 dents and dings in steam generator B with bobbin voltage amplitudes greater than or equal to 2 volts. Similarly, in steam generator D, there were 540 dents and dings with bobbin voltage amplitudes greater than or equal to 2 volts. Of these, 360 dents and dings in steam generator B had bobbin voltage amplitudes greater than or equal to 3 volts. Similarly, 336 dents and dings in steam generator D had bobbin voltage amplitudes greater than or equal to 3 volts.

Inspection and maintenance on the secondary side of the steam generators also were performed during RFO 11. Sludge lancing and FOSAR was performed in each of the four steam generators. There were no known loose parts remaining in either steam generators B or D (although 5 loose parts (e.g., metal shaving, metal turnings, and broken drill bit) were detected).

In steam generator A, the top of tubesheet visual inspection revealed no loose sludge in the annulus, about 0.03 mm (one-thirty-second inch) of light sludge under the blowdown pipe, no erosion was evident in the blowdown pipe flow holes, and no loose parts were identified. In steam generator C, the top of tubesheet visual inspection revealed a few flakes of deposits around the annulus, no loose sludge on the top of tubesheet or in the no-tube lane, no erosion was evident in the blowdown pipe flow holes, and one previously identified loose part near the cold-leg portion of the tube in row 1, column 4, was still present with no indicated movement since the previous inspection.

An upper bundle flush was performed in steam generators A and C during RFO 11. To assess the condition of the U-bend region and the upper internal region of the steam generators, visual and ultrasonic inspections were performed. The results of the inspections in steam generator A were:

- The top of the seventh support plate exhibited a light deposit, which appeared to have settled out from the water.
- The broached holes were very clear compared to RFO 10.
- All AVBs, wedges, and support blocks appeared satisfactory.

- A light, easily disturbed, uniform coating of deposits on the steam drum was evident.
- No major blockage in the perforated holes of the secondary separators was evident and the chevrons appeared straight with a light deposit.
- The primary separator swirl vanes exhibited no sign of erosion on the leading edge of the vanes during visual inspection.
- All deck welds and supports were satisfactory.
- All feedring supports and associated welds were satisfactory.
- No degradation was observed in any of the 30 J-tubes except for the previously observed flow accelerated corrosion on J-tubes 1, 15, 16, and 30 (which were repaired during RFO 11).
- Ultrasonic thickness readings on the feedring 35.6-cm (14-in.) tee and 35.6-cm (14-in.) to 25.4-cm (10-in.) reducers revealed below nominal wall thickness at the toe of the 25.4-cm (10-in.) reducer to feedring piping weld (however, the components were all found to be structurally acceptable).

The results of the upper bundle inspections in steam generator C were:

- The broached holes of the seventh tube support plate that face the annulus were mostly clear with little or no evidence of fouling or blockage.
- Most of the broached holes facing away from the annulus (i.e., in-bundle) exhibited some form of fouling (an estimated 80 percent to 90 percent of the broached hole openings on the seventh tube support plate exhibited partial fouling during RFO 10).
- All AVBs, wedges, and support blocks inspected at the seventh tube support plate elevation appeared satisfactory.
- There was no erosion evident on the primary separator swirl vane edges.

Inspections were performed both pre- and post-sludge lancing and upper bundle flush activities during RFO 11 to evaluate the effect of not cleaning during RFO 10. These inspections indicated less blocking of the quatrefoil holes after the RFO 11 upper bundle flush.

On May 31, 2007, Millstone 3 revised the steam generator portion of their technical specifications making them performance-based consistent with TSTF-449 (ADAMS Accession No. ML071380257).

On September 30, 2008, the steam generator portion of the Millstone 3 technical specifications was revised to permit certain-sized flaws near the tube end in both the hot- and cold-leg sides of the steam generator to remain in service. Specifically, the technical specifications were revised to (1) permit flaws having a circumferential component less than or equal to 203 degrees found in the portion of the tube below 43.2 cm (17 in.) from the top of the tubesheet and above 2.54 cm (1 in.) from the bottom of the tubesheet to remain in service, (2) require the removal from service all flaws having a circumferential component greater than 203 degrees found in the

portion of the tube below 43.2 cm (17 in.) from the top of the tubesheet and above 2.54 (1 in.) from the bottom of the tubesheet, (3) require the removal from service all tubes with service-induced flaws between the top of the tubesheet and 43.2 cm (17 in.) below the top of the tubesheet, and (4) permit all axial indications found in the portion of the tube below 43.2 cm (17 in.) from the top of the tubesheet to remain in service. In addition, the technical specifications were modified to indicate that when more than one flaw with circumferential components is found in the portion of the tube below 43.2 cm (17 in.) from the top of the tubesheet and above 2.54 cm (1 in.) from the bottom of the tubesheet with the total of the circumferential components being greater than 203 degrees and the axial separation distance of less than 2.54 cm (1 in.), then the tube must be removed from service (overlapping portions of the flaws only need to be counted once in determining the total circumferential involvement of the flaws). For flaws within 2.54 cm (1 in.) of the bottom of the tubesheet, the technical specifications were modified to indicate (1) when one or more flaws with circumferential components are found and the total of the circumferential components exceeds 94 degrees, then the tube shall be removed from service and (2) when one or more flaws with circumferential components are found in the portion of the tube within 2.54 cm (1 in.) from the bottom of the tubesheet and within 2.54 cm (1 in.) axial separation distance of a flaw above 2.54 cm (1 in.) from the bottom of the tubesheet, and the total of the circumferential components found in the tube exceeds 94 degrees, then the tube shall be removed from service (overlapping portions of the flaws only need to be counted once in determining the total circumferential involvement of the flaws). This revision to the technical specifications was applicable only to RFO 12 and the subsequent operating cycle (ADAMS Accession Nos. ML082321292 and ML082810147).

During cycle 12 (spring 2007 to fall 2008), there was minimal primary-to-secondary leakage (less than 0.1 gpd).

During RFO 12 in 2008, 100 percent of the tubes in steam generators A and C were inspected full length with a bobbin coil, except for the U-bend region of tubes in rows 1 and 2. In addition to the bobbin coil inspections, a rotating probe equipped with a plus-point coil was used to inspect:

- 40 percent of the tubes from 7.62 cm (3 in.) above the tubesheet to the tube end on the hot-leg side in steam generators A and C (an additional 10 percent of the tubes were inspected from 7.6 cm (3 in.) above to 7.6 cm (3 in.) below the top of the tubesheet on the hot-leg side)

- 12.5 percent of the tubes (peripheral tubes) from 7.6 cm (3 in.) above to 7.6 cm (3 in.) below the top of the tubesheet on the cold-leg side in steam generators A and C, all overexpansions and bulges not inspected during the last inspection of these steam generators

- the U bend region of 100 percent of the tubes of rows 1 and 2 in steam generators A and C

- 100 percent of the dents and dings with bobbin voltage amplitudes greater than or equal to 2 volts on the hot-leg side of steam generators A and C

No eddy current inspections were planned for steam generators B and D during RFO 12; however, because of finding crack-like indications near the tube ends, 100 percent of the hot-leg tube ends were inspected in all four steam generators, 20 percent of the cold-leg tube ends

were inspected in steam generators A, B, and C, and 100 percent of the cold-leg tube ends were inspected in steam generator D. In addition, all tube plugs were inspected visually. No degradation of the tube plugs was identified.

As a result of these inspections, 26 tubes were plugged—1 for wear at the AVBs, 2 for wear attributed to loose parts, and 23 for tube end indications.

The only steam generator tube degradation mechanisms observed during RFO 12 were (1) wear at the AVBs, (2) wear attributed to loose parts, (3) wear attributed to fabrication, (4) wear attributed to maintenance (sludge lance sled), and (5) axially and circumferentially oriented primary water stress corrosion cracking at the tube ends.

A total of 262 AVB wear indications were identified in steam generator A during RFO 12. Of these, 14 indications were new (i.e., not previously reported). The average growth rate of the previously identified AVB wear indications is approximately 0.18 percent throughwall per effective full power year. Sixty-four 64 AVB wear indications were identified in steam generator C during RFO 12. Of these, five indications were new. The average growth rate of the previously identified AVB wear indications is low (actually it was negative because of non-destructive examination uncertainty associated with the depth measurements). The maximum depth reported for the AVB wear indications was 38 percent throughwall.

Twenty-four indications of wear attributed to loose parts were identified during RFO 12. These 24 indications were in 22 tubes. All but two of these indications were present in prior inspections and have not changed in size. The two tubes plugged for wear attributed to loose parts had maximum depths of 41 percent and 42 percent throughwall. The indications had not changed in size since the prior inspection; however, the application of a new sizing technique resulted in the indications being sized with depths greater than the tube repair (plugging) criteria.

Two indications of wear attributed to fabrication were detected. These two indications were in two tubes.

Eighteen indications of wear attributed to maintenance equipment (sludge lance sled) were identified. These 18 indications were in 14 tubes. The maximum depth reported for these indications was 21 percent throughwall.

Indications were found near the tube ends on the hot-leg in all four steam generators and on the cold-leg in steam generator D. Axial, circumferential, and mixed-mode indications were detected. At the hot-leg tube ends, 101 axial indications were detected in 94 tubes and 54 circumferential indications were detected in 48 tubes. In addition, 4 tubes were identified as having mixed mode degradation (i.e., both axial and circumferential indications in the same tube end) at the hot-leg tube ends. At the cold-leg tube ends, one circumferential indication was detected in one tube. After applying the repair criteria discussed above, 23 tubes were removed from service for tube-end indications (this included all four tubes with mixed mode indications even though they did not exceed the repair criteria).

FOSAR was performed in the annulus, no-tube lane and the periphery of steam generators A and C. In addition, deposit mapping was performed in steam generators A and C during RFO 12.

Secondary-side visual inspections were performed in the upper bundle region of steam generator B during RFO 12. These inspections focused on the seventh tube support plate, AVBs, the U-bend region, primary separators, decks, feedring, J-tubes (including the welds), secondary separators (including the perforations), piping, supports, ladders, and wedges. Flow accelerated corrosion was observed during prior inspections on J-tubes 1, 15, 16, and 30 in all four steam generators. The flow accelerated corrosion was observed on welds of reducers (or T's). Welds are known to have lower chromium content. The affected J-tubes in all four steam generators were previously repaired with a weld overlay. The inspections in steam generator B during RFO 12 indicated no new signs of flow accelerated corrosion and the overlays were intact with no degradation. Some minor surface rust was observed on the upper internals that are fabricated from carbon steel.

A 7-percent power uprate was implemented at Millstone 3 after RFO 12. Before the power uprate, the hot-leg operating temperature was 617 degrees Fahrenheit. After the power uprate, the hot-leg temperature was 620 to 622 degrees Fahrenheit.

On May 3, 2010, the steam generator portion of the Millstone 3 technical specifications was revised to limit the extent of inspection in the tubesheet region. Specifically, the technical specifications were revised to exclude the portion of tube that is more than 33.27 cm (13.1 in.) below the top of the tubesheet from inspection (i.e., approximately the lowermost 20.32 cm (8 in.) of tube in the tubesheet was excluded from inspection, and hence any flaws that may exist in this region are permitted to remain in service). This revision was applicable only to RFO 13 and the subsequent operating cycle (ADAMS Accession No. ML100770358).

The maximum primary-to-secondary leakage during the cycle before RFO 13 (fall 2008 to spring 2010) was 0.83 lpd (0.22 gpd).

During RFO 13 in 2010, 100 percent of the tubes in steam generators B and D were inspected full length with a bobbin coil, except for the U-bend region of the tubes in rows 1 and 2. In addition to the bobbin coil inspections, a rotating probe equipped with a plus-point coil was used to inspect the following in steam generators B and D:

- 50 percent of the tubes from 7.6 cm (3 in.) above to 7.6 cm (3 in.) below the top of the tubesheet on the hot-leg side
- 13 percent of the tubes (peripheral tubes) from 7.6 cm (3 in.) above to 7.6 cm (3 in.) below the top of the tubesheet on the cold-leg side
- 40 tubes with overexpansions from 7.62 cm (3 in.) above to 38.1 cm (15 in.) below the top of the tubesheet on the hot-leg side in steam generator B
- 70 tubes with overexpansions from 7.62 cm (3 in.) above to 38.1 cm (15 in.) below the top of the tubesheet on the hot-leg side in steam generator D
- the U-bend region of 100 percent of the row 1 and row 2 tubes
- various other locations including dents and dings

No eddy current inspections of the tubes were performed in steam generators A and C. In addition, all tube plugs in steam generators B and D were inspected visually. No degradation of

the tube plugs was identified (although there was a light boric acid coating on some of the plugs) and all plugs were in their proper location.

As a result of these inspections, seven tubes were plugged one for wear at the AVBs, one for inside diameter chatter (eddy current noise), and five for wear attributed to a loose part.

The only steam generator tube degradation mechanisms observed during RFO 13 were (1) wear at the AVBs, (2) wear at the tube support plates, (3) wear attributed to loose parts, and (4) wear attributed to fabrication.

A total of 102 AVB wear indications were identified in 49 tubes in steam generator B during RFO 13. Of these, eight indications were new (i.e., not previously reported). Approximately 133 AVB wear indications were identified in 72 tubes in steam generator D during RFO 13. Of these, 14 indications were new. The maximum depth reported for the AVB wear indications was 37 percent throughwall.

Two indications of wear at the tube support plates were identified during RFO 13. Although this is the first reported instance of wear at the tube support plates at Millstone 3, one of the two indications was determined to exist since at least the RFO 7 (2001) inspection. The maximum depth reported for the tube support plate wear indications was 22 percent throughwall.

Of the five tubes plugged for wear attributed to loose parts, three were plugged because the location was not accessible for visual inspection to confirm a part was no longer present (there was no evidence of a loose part from the eddy current inspection of the tubes), one was plugged because the depth exceeded the plugging limit (52 percent throughwall), and one was plugged because the depth exceeded the plugging limit when sized using a new technique (it had previously been sized as having a depth less than the plugging limit). In addition to these tubes, six other tubes (in three locations) had wear attributed to loose parts. In these instances, either a visual inspection confirmed the absence of a loose part or the part was removed.

One tube was identified as having wear attributed to fabrication.

Several foreign objects were identified during FOSAR activities. Two machine curls and a piece of Flexitallic gasket were left in the steam generators along with a historic loose part that is fixed in the steam generators.

Secondary-side visual inspections were performed in all four steam generators during RFO 13. Visual inspections of the top of tubesheet area and an upper bundle flush were performed in each steam generator. These inspections indicated that the top of tubesheet annulus and divider lane were clean and the blowdown pipe and center tie rod were in good condition. In addition to these inspections, the upper bundle region of steam generator C was inspected visually during RFO 13 to offer a more detailed assessment of support fouling and flow accelerated corrosion. These inspections focused on the area above the seventh tube support plate. The secondary moisture separator chevrons were in good condition. The perforated holes of the outer plate showed minor buildup of sludge in the bore of the holes. The chevrons were straight and had a light coating of sludge deposits. The primary moisture separator swirl vanes were in good condition. The vanes had a slight deposit on them but the edges were sharp showing no indication of erosion. There was a heavy deposit of sludge on the steam drum shell wall of the upper deck. This deposit became thicker higher up on the shell. Ladders, drains, wedges, supports, and associated welds were considered acceptable. The 30 J-nozzles on the main feedwater pipe were internally and externally inspected. They were in good

condition. J-nozzles 1, 15, 16, and 30 had a weld overlay applied during a previous outage and internal inspections indicated that the erosion/corrosion damage of these four nozzles had not advanced since the last inspection. Some of the primary separator riser barrels showed some minor erosion from overspray of the J-nozzles. The erosion/roughness is very minor and will be monitored during future outages. Video inspection of the upper tube bundle seventh tube support plate indicated that there bridging of sludge deposits between the tubes and AVBs. The broached holes in the seventh tube support plate showed a slight ridge of sludge at the bottom of the tube support plate. None of the broached holes viewed were found to be fully blocked. The AVB deposits appeared to be similar to the deposits on the top of the tubesheet: thick, but not easily disturbed.

On October 7, 2011, the steam generator portion of the Millstone 3 technical specifications was revised to limit the extent of inspection in the tubesheet region. Specifically, the technical specifications were revised to exclude the portion of tube that is more than 38.6 cm (15.2 in.) below the top of the tubesheet from inspection (i.e., approximately the lowermost 15.24 cm (6 in.) of tube in the tubesheet was excluded from inspection, and hence any flaws that may exist in this region are permitted to remain in service). This revision was applicable only to RFO 14 and the subsequent operating cycle (ADAMS Accession No. ML112580517).

There was no evidence of primary-to-secondary leakage during Cycle 14 (spring 2010 to fall 2011).

During RFO 14 in 2011, 100 percent of the tubes in steam generators A and C were inspected full length with a bobbin coil, except for the U-bend region of the tubes in rows 1 and 2. In addition to the bobbin coil inspections, an array probe was used to inspect:

- about 50 percent of the tubes at the top of the tubesheet on the hot-leg side, which included:
  - about 40 percent of the tubes from 7.62 cm (3 in.) below the top of the tubesheet to the first hot-leg tube support
  - about 10 percent of the tubes from 38.6 cm (15.2 in.) below the top of the tubesheet to the first hot-leg tube support
- about 13 percent of the tubes at the top of the tubesheet on the cold-leg side, which included:
  - about 10 percent of the tubes from 7.62 cm (3 in.) below the top of the tubesheet to the first cold-leg tube support
  - about 3 percent of the tubes from 38.6 cm (15.2 in.) below the top of the tubesheet to the first hot-leg tube support

In addition to the bobbin coil and array probe exams, a rotating probe equipped with a plus-point coil was used to inspect the U-bend region of 100 percent of the tubes of rows 1 and 2, and various other locations including dents and dings. No eddy current inspections of the tubes were performed in steam generators B and D. In addition, all tube plugs in steam generators A and C were inspected visually. No degradation of the tube plugs was identified (although a light boric acid coating was noted on some of the plugs) and all plugs were in their proper location.

Steam generator A has 67 tubes that have been identified as high stress tubes from the eddy current data. Steam generator C has 39 such tubes. All of these tubes were inspected full length with a bobbin coil. All of these tubes were inspected with an array probe from the hot-leg tube end to the first tube support on the hot-leg side of the steam generator. In addition, a rotating probe was used to inspect 28 locations (dents, dings, manufacturing burnish marks, volumetric wear, or ambiguous signals from other probes) in 21 of these tubes.

As a result of these inspections, 11 tubes were plugged—3 tubes for wear at the AVBs, 7 because the bottom of their expansion transitions was greater than 2.54 cm (1 in.) below the top of the tubesheet, and 1 for wear attributed to a loose part.

The only steam generator tube degradation mechanisms observed during RFO 14 were (1) wear at the AVBs, (2) wear at the tube support plates, (3) wear attributed to loose parts, and (4) wear attributed to fabrication.

About 300 AVB wear indications were identified in 153 tubes in steam generator A during RFO 14. Of these, 50 indications were new (i.e., not previously reported). Sixty-eight AVB wear indications were identified in 32 tubes in steam generator C during RFO 14. Of these, four indications were new. The maximum depth reported for the AVB wear indications was 38 percent throughwall. Two of the indications of AVB wear (in one tube) in steam generator A were at the apex of the tube. This row of tubes (row 5) is not supported by an AVB. The indications were attributed to wear caused by the bottom of the AVB supporting the tubes in the row above it. This latter tube was plugged.

Two indications of tube support plate wear (in two tubes) were identified during RFO 14. The maximum depth reported for the tube support plate wear indications was 11 percent throughwall.

Several volumetric indications attributed to wear from foreign objects and fabrication were identified during RFO 14. Most of the other volumetric indications have been present since previous inspections.

Secondary-side maintenance and visual inspections were performed in all four steam generators during RFO 14. High-pressure sludge lancing and an upper bundle flush were performed in each steam generator. After sludge lancing, visual inspections of the top of tubesheet annulus and no-tube lane were performed to assess the as-left condition, cleanliness, and to identify and remove any retrievable foreign objects. Locations where the eddy current inspections showed the presence of a possible loose part also were inspected visually if the location was accessible. The upper bundle flush and sludge lancing removed loose deposits throughout the tube bundle and at the top of the tubesheet. The top of tubesheet in all four steam generators was mostly clean with minor flake piles remaining in the peripheral regions. The remaining sludge flakes were mainly at the 90-degree handholes in the stay rod lance shadow zones near the suction feet and totaled less than a cup each. In-bundle views from the periphery showed the tubesheet was very clean in all four steam generators. The no-tube lane was clean and the center stay rod and blowdown piping were in good condition.

In addition, in steam generator D, the steam drum was inspected visually to evaluate the material condition and cleanliness of key components such as moisture separators, drain systems, and interior surfaces. In addition, visual inspections also took place of the upper tube bundle and AVB supports, feedring internal interface (for evidence of flow accelerated corrosion), and the upper tube support plate (to assesses material condition and cleanliness) in

steam generator D. These inspections indicated that the secondary moisture separator chevrons were in good condition, the perforated holes of the outer plate had minor buildup of sludge in the bore of the hole, and no holes were plugged. The chevrons were straight and had a light coating of sludge deposits. The primary moisture separator swirl vanes were in good condition. The vanes had a slight deposit on them but the edges were sharp showing no indication of erosion. There was a heavy deposit of sludge on the steam drum shell wall of the upper deck. This deposit became thicker higher up on the shell. Ladders, drains, wedges, supports, and associated welds were considered acceptable. The 30 J-nozzles on the main feedwater pipe were inspected internally and externally. They were in good condition. J-nozzles 1, 15, 16, and 30 had a weld overlay applied during a previous outage and internal inspections showed that the erosion/corrosion damage of these four nozzles had not advanced since the last inspection in RFO 9 (2004). Evidence of overspray from some of the J-nozzles was present on the primary separator riser barrels. The upper bundle inspections were performed after the upper bundle flush. Visual inspections of the steam drum and upper tube bundle above the seventh tube support plate showed the steam generator was structurally in good condition. Most of the loose deposits in the upper tube bundle region had been removed by the upper bundle flush operation. The broached holes at the periphery revealed only a slight ridge of sludge buildup at the bottom side of the seventh tube support plate.

On December 6, 2012, the steam generator portion of the Millstone 3 technical specifications was revised to limit the extent of inspection in the tubesheet region. Specifically, the technical specifications were revised to exclude the portion of tube that is more than 38.6 cm (15.2 in.) below the top of the tubesheet from inspection (i.e., approximately the lowermost 15.24 cm (6 in.) of tube in the tubesheet was excluded from inspection, and hence any flaws that may exist in this region are permitted to remain in service (ADAMS Accession No. ML12299A498)).

On January 11, 2013, the steam generator portion of the Millstone 3 technical specifications was revised making them consistent with TSTF-510 (ADAMS Accession No. ML12333A255).

There was no evidence of primary-to-secondary leakage during Cycle 15 (fall 2011 to spring 2013).

During RFO 15 in 2013, 100 percent of the tubes in steam generators B and D were inspected full length with a bobbin coil, except for the U-bend region of the tubes in rows 1 and 2. In addition to the bobbin coil inspections, an array probe was used to inspect 100 percent of the tubes from 38.6 cm (15.2 in.) below the top of the tubesheet on the hot-leg side to the first hot-leg tube support, and about 13 percent of the tubes from 38.6 cm (15.2 in.) below the top of the tubesheet on the cold-leg side to the first cold-leg tube support. In addition to the bobbin coil and array probe exams, a rotating probe equipped with a plus-point coil was used to inspect the U-bend region of 100 percent of the tubes in rows 1 and 2, and various other locations including dents and dings. In addition, all tube plugs in steam generators B and D were inspected visually. No degradation of the tube plugs was identified and all plugs were in their proper location. No eddy current inspections of the tubes were performed in steam generators A and C.

As a result of these inspections, 10 tubes were plugged—9 for wear at the tube support plates and 1 for a restriction that has typically required multiple attempts to obtain acceptable eddy current data.

The only steam generator tube degradation mechanisms observed during RFO 15 were (1) wear at the AVBs, (2) wear at the tube support plates, (3) wear attributed to loose parts, and (4) wear attributed to fabrication.

A total of 106 AVB wear indications were identified in 50 tubes in steam generator B during RFO 15. Of these, nine indications were new (i.e., not previously reported). A total of 165 AVB wear indications were identified in 88 tubes in steam generator D during RFO 15. Of these, 34 indications were new. The maximum depth reported for the AVB wear indications was 35 percent throughwall.

Twelve indications of tube support plate wear were detected in 11 tubes in steam generator B during RFO 15. Of these indications, nine were new. Seven indications of tube support plate wear were detected in seven tubes in steam generator D during RFO 15. Of these indications, five indications were new. The maximum depth reported for the tube support plate wear indications was 47 percent throughwall.

Two of the new wear indications at the tube support plates exceeded 40 percent of the tube wall thickness. These two tubes were plugged as were seven other tubes with new wear indications at the tube support plates. These seven other tubes had wear indications with depths greater than or equal to 15 percent of the wall thickness. These latter tubes were plugged to address uncertainty in the growth rate of these newly developed flaws. Two explanations for the increased number of indications were considered: (1) increase in feedwater flow resulting from the stretch power uprate that was implemented around RFO 12 and (2) heavy deposit inventory on the secondary side of the steam generators. The increase in wear at the tube support plates from increased flow was discounted because similar increases in the number of wear indications had not been observed in the other steam generators (A and C) when they were inspected during RFO 14 and because an increase in the wear rate at the AVBs has not been observed since implementing the stretch power uprate. As a result, the RFO 15 inspection results could be indicative of changing local flow conditions in the tube bundle. With the changing flow conditions, areas of the tube bundle more susceptible to flow-induced vibration would be expected to respond in a manner similar to a new steam generator in which depth growth tends to be more rapid in locations particularly susceptible to wear such as at broached openings with sharp edges or burrs followed by volumetric growth that tends to remain constant with time (and consequently the depth growth tends to slow with time).

Several volumetric indications attributed to wear from foreign objects or fabrication were identified during RFO 15. All of these volumetric indications have been present since previous inspections.

All tubes in steam generators B and D have expansion transitions that are within 2.54 cm (1 in.) of the top of the secondary face of the tubesheet.

To identify tubes that have potentially high residual stress and therefore might be more susceptible to stress corrosion cracking, bobbin coil eddy current data were reviewed. Two methods were used to find tubes with potentially elevated residual stresses. These methods looked at the offset in the eddy current data between the straight span and the U-bend region of the tubing. Both methods rely on whether the offset voltage is more than two standard deviations below the regression line/average (in the higher rows, the absence of an offset indicates potentially elevated residual stresses in the straight span portion of the tubing). The first method assumes a linear relationship between the offset voltage and the row number. This method indicates there is a relatively steady decrease in the average offset voltage from row 11

through about row 45. After row 45, there appears to be no obvious relationship between voltage and row number, (i.e., the average for the offsets in rows 45 and greater is fairly constant with no decreasing trend in the higher rows). Because this first method could result in biasing the potentially elevated residual stress tubes to those in rows 11 through 45, a second method was used that relies on the average and a standard deviation for each row in each steam generator. In addition, tubes were characterized based on whether one (tier 2) or both (tier 1) legs of the eddy current data exhibited the eddy current offset attributed to potentially elevated residual stresses. Applying these criteria to all four steam generators, 159 tubes were identified as tier 1 tubes and 1,243 tubes were identified as Tier 2 tubes (i.e., these tubes failed one or both of the screening methods).

The hot- and cold-leg steam generator channel head regions in steam generators B and D were inspected visually during RFO 15. These inspections included the tubesheet cladding, the tube-to-tubesheet welds, the partition divider plate, stub runner, divider plate-to-tubesheet cladding weld, divider plate-to-channel head weld, stub runner-to-divider plate weld, and the stub runner-to-tubesheet weld. The weld examinations are performed to identify gross degradation. No degradation was identified. In addition, no discoloration or rust stains were found that would indicate a breach of the cladding.

Secondary-side maintenance and visual inspections were performed in steam generators B, C, and D during RFO 15. High-pressure sludge lancing and an upper bundle flush were performed in these three steam generators. After sludge lancing, the top of tubesheet annulus and no-tube lane were inspected visually to assess the as-left condition, cleanliness, and to identify and remove any retrievable foreign objects. Visual inspection of locations where the eddy current inspections indicated the presence of a possible loose part was also performed if the location was accessible. These inspections indicated that the top of tubesheet was mostly clean with minor flake piles remaining.

In addition, in steam generator C, the steam drum was inspected visually to evaluate the material condition and cleanliness of key components such as moisture separators, drain systems, and interior surfaces. In addition, the upper tube bundle and AVB supports, feedring internal interface (for evidence of flow accelerated corrosion), and the upper tube support plate (to assesses material condition and cleanliness) was inspected visually in steam generator C during RFO 15 after upper bundle flush operations. These inspections showed that the steam drum and upper bundle region were in good structural condition with no evidence or erosion or corrosion. A light, tightly adhering layer of deposit material was noted on the surfaces inside the steam space. Deposit bridging was seen between the tubes and the AVBs, but much of the loose deposit material was removed during the upper bundle flush process. Spalled deposits on the tubes were seen in the mid-span of the U-bend region (i.e., between the top of the U-bend and the top tube support plate). Some blockage of the tube support openings was observed during both visual examination and with a low frequency eddy current technique referred to as “deposit mapping.”

To address the deposit buildup on the secondary side of the steam generators, two corrective actions are being put into place: (1) deposit minimization treatment will be applied in 2014 and 2016 to reduce the deposit loading and clear the tube support plate blockage; and (2) injection of polyacrylic acid to reduce corrosion product accumulation in the steam generators. Polyacrylic acid is a high molecular weight polymer designed to “wrap up” incoming iron from the feed train and allow that iron to be passed through to the steam generator blowdown line before depositing in the steam generators.

The deposit minimization treatment is a “soft” cleaning process, developed by AREVA, designed to reduce the amount of deposit material on the secondary side of the steam generator. It uses a low concentration of oxalic acid that acts as a complexing agent in the dissolution of iron oxide deposits. A final passivation step employs lower concentrations of oxalic acid and hydrogen peroxide. The process results in very low corrosion rates for internal steam generator subcomponents.

### 3.3.3 Seabrook

Tables 3-19, 3-20, and 3-21 summarize the information discussed below for Seabrook. Table 3-19 provides the number of full-length bobbin inspections and the number of tubes plugged and deplugged during each outage for each of the four steam generators. Table 3-20 lists the reasons why the tubes were plugged. Table 3-21 lists tubes plugged for reasons other than wear at the AVBs.

Seabrook has four Westinghouse model F steam generators. The licensee numbers its tube supports using the alternate naming convention in Figure 2-4.

The quatrefoil openings in the tube support plate were inspected in RFO 7 using the upper bundle in bundle (UBIB) tool. Those inspections showed insignificant blockage in the tube support plate quatrefoil area.

During RFO 8 in 2002, 100 percent of the tubes in each of the four steam generators were inspected full length with a bobbin coil, except for the U-bend region of the tubes in rows 1 and 2. In addition to the bobbin coil inspections, a rotating probe equipped with a plus-point coil was used to inspect:

- 50 percent of the tubes from 7.6 cm (3 in.) above to 7.6 cm (3 in.) below the top of the tubesheet on the hot-leg side in steam generators A and D (the actual extent above the top of the tubesheet may have been greater than 7.6 cm (3 in.) to ensure the entire portion of the tube within the sludge pile was inspected)

- the U-bend region of 50 percent of the row 1 and row 2 tubes in steam generators A and D

- 40 percent of the hot-leg dents and dings with bobbin voltage amplitudes greater than 5 volts that were in the straight section of the tubing in steam generators A and D

In addition to the eddy current inspections, all tube plugs in each of the four steam generators were inspected visually.

As a result of these inspections, 35 tubes were plugged—11 for wear at the AVBs, 9 for loose parts, and 15 for axially oriented outside-diameter stress corrosion cracking. Of the nine tubes plugged because of loose parts, two tubes exhibited wear, one tube exhibited a possible loose part signal with no associated wear, and six tubes were plugged because the possible loose part indication in a nearby tube could not be removed from the steam generator.

The only steam generator tube degradation mechanisms observed during RFO 8 were (1) wear at the AVBs, (2) wear attributed to loose parts, (3) wear attributed to maintenance equipment, and (4) axially oriented outside-diameter stress corrosion cracking at the tube support plates.

About 1,200 AVB wear indications were detected in the four steam generators: 303 indications in steam generator A, 175 in steam generator B, 223 in steam generator C, and 530 in steam generator D. Of these indications, 57 in steam generator A were new, 40 in steam generator B were new, 36 in steam generator C were new, and 117 in steam generator D were new. The maximum depth reported for the new indications was 23 percent throughwall.

Eight of the nine tubes plugged because of loose parts were in the same general area in steam generator A. One of these eight tubes had exhibited wear slightly above 05H (and the plus-point coil also indicated the presence of a possible loose part at this location), one had a possible loose part indication and no wear, and the remaining six had no possible loose part or wear indications at this location. This area (05H) was not accessible for visual examination so these latter six tubes were plugged (but not stabilized) to provide a buffer area between the tubes affected by the possible loose part and other active tubes. The licensee indicated that the size of this foreign object is small because no possible loose part indications were reported in any of the surrounding tubes except for one. The licensee concluded that small foreign objects do not have significant potential to cause tube severance because they do not have sufficient mass or size to affect the entire cross section of any given tube.

Five indications of wear were identified in five tubes. This wear was attributed to interaction between the tube and the sludge lance equipment. The maximum depth reported for these indications was 37 percent throughwall. Two indications of wear near the flow distribution baffle were detected in the four steam generators (one in A and one in D). These indications are attributed to equipment used for pressure pulse cleaning (PPC) the steam generators.

During RFO 8, 42 indications of potential axially oriented outside-diameter stress corrosion cracks were detected in 15 low-row tubes (i.e., tubes in rows 1 through 10 that are the tubes that had the U-bend stress relieved after the bending of the tube). All indications were in steam generator D and all indications were in the region where the tube passes through a tube support plate (i.e., tube-to-tube support plate intersection). No cracking was observed at the top of the tubesheet expansion transition region. Indications were reported on both the hot- and cold-leg side of the steam generator. In all cases where a cold-leg indication was reported, a hot-leg indication was also reported on the same tube. All indications were confined to tubes in rows 4 through 9. Multiple tube support plate intersections on the same tube were affected in most cases. The indications on only 3 of the 15 tubes were confined to a single tube support plate intersection. Several intersections were reported to contain multiple indications (i.e., an indication at more than one land at the same tube support plate elevation). The indications were reported from tube support 02H through 06H on the hot-leg and from 03C and 05C on the cold-leg. All of the 42 cracked tube support plate intersections detected during RFO 8 were inspected during RFO 6. A re-review of the RFO 6 eddy current data showed that there was a detectable (but non-callable) signal in 25 of the 42 locations. The remaining 17 intersections exhibited no signal indicative of cracking in RFO 6.

Ultrasonic testing was performed using the ultrasonic test eddy current (UTEC) system to offer greater insight into the axial outside-diameter cracking indications confirmed by the plus-point probe. Of the 42 indications confirmed by the plus-point probe as outside-diameter cracking, 19 were tested with UTEC. In addition, one indication (at row 2, column 48 at the top of the tubesheet on the hot-leg side) initially recorded as a single volumetric indication after plus-point testing, was examined with the UTEC probe. This indication was determined to be a geometric indication with no evidence of degradation. Selection of the indications to be tested by UTEC was based on the relative ranking of the plus-point voltages, the number of locations that could be practically tested, and the objective to obtain a significant sample of the single and multiple

axial indications based on the plus-point tests. The UTEC system confirmed the presence of axial indications at the tube support plate elevations initiating from the outside surface of the tube.

Because outside-diameter cracking was a potentially new degradation mechanism in steam generators with thermally treated Alloy 600 tubing, two tubes were removed from steam generator D for destructive examination. The tubes removed included the hot-leg side of row 5, column 62; and the cold-leg side of row 9, column 63. In general, the tubes selected included some of the largest indications based on both bobbin and plus-point voltages, offered a significant number of potentially degraded intersections, and supplied broad coverage across the region of occurrence (i.e., hot-leg and cold-leg sections). The pulled tubes included the indication with the largest measured depth and the indication with the largest voltage amplitude.

After removal of the tube-to-tubesheet weld and relaxation of the hydraulic expansion region, the tubes were pulled through the tubesheet. The tube in row 5, column 62, was cut below the sixth tube support plate. The pull force was 3,536 lbs. and dropped to essentially zero after initial breakaway. The tube in row 9, column 63, was cut below the fifth tube support plate. The pull force was 3,373 lbs. and dropped to essentially zero after initial breakaway.

The licensee completed its root cause evaluation, including destructive examination of two pulled tubes, confirming that the indications were axially oriented stress corrosion cracks that initiated from the tube's outside diameter. No transgranular cracks were observed. Additional details concerning the destructive evaluation of the pulled tubes are provided below.

Several portions of both of the pulled tubes were pressure tested. The largest indication (row 5 column 62, at 04H) was tested to 48,260 kPa (7,000 psi) without signs of leakage. This tube was not pressurized to burst to save the indication for fractographic examination. A minor indication at 02H in row 5 column 62 exhibited a burst pressure of 79,290 kPa (11,500 psi). Several other flawed and non-flawed sections were burst tested. These specimens had burst pressures of about 89,630 kPa (13,000 psi) and there was no leakage observed during these tests. No foil or bladder were used in these burst tests.

Post burst testing visual inspections indicated that row 5, column 62, had cracks at 02H, 03H, and 04H. Indications were called in the field at 03H, 04H, and 05H. The indication missed in the field at 02H was approximately 3.5 mm (0.14 in.) long and had a maximum depth of 36 percent throughwall and a percent degraded area of 20 percent. The false call at 05H was about 0.2 volts as determined from the bobbin coil (and 0.3 volts from the plus-point coil). The largest crack in tube row 5, column 62, was about 1.9 cm (0.75 in.) long and had a maximum depth of 99.5 percent throughwall and a percent degraded area of 63 percent. This indication did not leak at 48,260 kPa (7,000 psi).

Similarly post burst testing visual inspections indicated that row 9, column 63, had cracks at 03C and 04C. Indications were called in the field at 04C. The indication missed in the field was about 6.6 mm (0.26 in.) long and had a maximum depth of 52 percent throughwall and a percent degraded area of 34 percent.

The burst openings of the specimens comprised numerous axially oriented intergranular cracks that were confined to the width of the quatrefoil land and had a maximum length of about 1.9 cm (0.75 in.). The maximum depths of the specimens ranged from 34 percent to 99 percent, the average depths ranged from 20 percent to 50 percent, and the lengths ranged from 5 mm (0.2 in.) to 19 mm (0.75 in.). Shallow intergranular attack approximately 1 to 2 grains deep was

observed all around the circumference of the tube in the quatrefoil land areas. The flaws initiated from the tube's outside surface. No transgranular cracks were observed.

Thin deposits were noticed on the tube samples in the crevice that exists between the tube and the tube support plate land. No heavy crust was observed in any of the samples examined. Chemical analysis of the deposits indicated that there were no detrimental species such as chlorides or sulfates in the specimens or in the crack tips. An independent laboratory detected a trace amount of copper and lead; however, the amount detected was within the margin of error and was so minute that it was not detectable in the tests performed by the original laboratory. The levels of copper and lead observed were not unusually high and are consistent with that found in other tubes removed for in-service steam generators.

Chemical analysis of the pulled tube specimens showed that the material contains a carbon content of 0.047 percent C, which the licensee believes is higher than the average carbon content typically found in thermally treated Alloy 600 tubes currently in service at Seabrook (~0.03 percent carbon).

The metallurgical analysis showed that the overall microstructure in the pulled tube specimens was not "ideal" when compared to typical thermally treated Alloy 600 material. Specific findings from the metallurgical analysis were as follows:

- Mechanical tests showed the pulled tube material has a yield strength of 70 kilopounds per square inch (ksi), as compared to 60 ksi reported for this material in the certified material test report.

- Metallography showed that the pulled tube material contains average grain sizes of ASTM Size 10 to 11, which is smaller than typical thermally treated Alloy 600 material. It also contains duplex grains—two different sizes of grains instead of a uniform size. A significant amount of banding (a segregated structure consisting of alternating nearly parallel bands of different composition) was observed in the pulled tube material, which is unusual for thermally treated Alloy 600 material.

- The microstructure in the pulled tube material contains a significant amount of intragranular carbides and very few intergranular carbides. Thermally treated Alloy 600 material typically contains more intergranular carbides and very few intragranular carbides.

  This structure (fine equiaxed grains with significant variation in grain size and non-uniform "banded" grain distribution and extensive intragranular carbides) is considered not to be optimum but within the bounds of "normal" for thermally treated tubing.

- The licensee modified a standard ASTM test, ASTM A262 Practice C, "Nitric Acid Test for Detecting Susceptibility to Intergranular Attack in Austenitic Stainless Steels," to determine the pulled tube susceptibility to stress corrosion cracking. The test results suggested that the pulled tube material was not sensitized.

The tensile strength of the pulled tube specimens was also determined. The tensile strength of the tubes was higher than the certified material test report values and also was higher than the typical values for similar tubing. The yield strength for the pulled tube specimens was about 70 ksi and the ultimate strength was about 120 ksi.

Although the microstructure of the pulled tubes was not ideal, it is consistent with the expected range of microstructures for this material.

Residual stress measurements of the pulled tubes indicated that the average tensile hoop residual stresses in regions close to the cracks were about 22 ksi. This is larger than expected for any final tubing condition especially thermally treated tubing. The licensee indicated that because of the typically nonlinear through wall stress distribution, actual surface residual stresses near the material yield strength (65 ksi) were probably present during operation. Typical thermally treated Alloy 600 tubing has hoop residual stresses of about 3 ksi. Testing of archival thermally treated tube material obtained from the same heats as those affected by the cracking had more prototypical residual stresses of 1 to 2 ksi. For mill annealed Alloy 600 tubing, typical residual stress levels are 10 ksi.

The licensee indicated that the threshold of stress required to initiate cracks in thermally treated tubing is at least 40 ksi. The threshold for crack propagation is not well defined because of limited industry experience. The licensee postulated that the source of the high residual stress is either an abnormal thermal treatment that was not effective in removing the residual stresses or a process such as tube straightening that occurred after the thermal treatment. The precise processing steps responsible for the adverse stress state could not be conclusively determined from a review of the tube processing records.

Evidence of abnormal secondary water chemistry was not found and chemistry is not believed to have been a significant factor in the early onset of stress corrosion cracking at Seabrook. Seabrook has maintained secondary chemistry in accordance with industry (Electric Power Research Institute (EPRI)) guidelines throughout plant life and has not experienced any major chemical excursions.

In summary, the root cause of the cracking is high residual stress caused by non-optimum tube processing. A contributing factor is the concentration of secondary water chemistry contaminants in the crevice between the tube and the quatrefoil lands. The chemistry of this crevice at Seabrook is not unusually aggressive as is supported by the chemical analysis of the deposits on the tube surface and on the crack faces.

During the investigation of the root cause of the indications, a clear shift in the eddy current signal (150 kHz absolute channel) became evident in the tubes at Seabrook with axial cracks. This offset or shift in the low-frequency (150 KHz) absolute channel between the straight leg portion of the tube and the U-bend region was attributed to changes in the residual stresses in the tube (actually the conductivity of the tube as discussed below). No offset in the eddy current data were expected in the low-row tubes (i.e., rows 1 through 10) because the U-bend region is stress-relieved after bending, resulting in consistently low levels of residual stress throughout the tube. Because testing of the archived material for the heats of material affected by this cracking found the expected low levels of stress, the licensee attributed the changes in residual stress levels and the resultant eddy current offset in these tubes to nonoptimal tube processing.

A similar shift in the eddy current data also was observed during tests at San Onofre Nuclear Generating Station in 1986 in which mill-annealed tubes were thermally treated over part of their length and tested with a bobbin probe. A clear shift in the signal was observed at the transition from the mill-annealed to thermally treated material. It is believed that the specific property of the material being measured by the eddy current probe is conductivity, which is known to vary with the degree of strain of the material (cold work increases a material's hardness, which leads

to an increase in resistivity). Stress is not being directly measured, but is inferred from the knowledge that the pulled tubes have high residual stress in the straight legs (because the cracks were there) and that the low-row U-bends have low residual stress (because they were stress relieved after bending).

For the low-row tubes (i.e., those that had been stress relieved after bending), the residual stresses are expected to be consistent throughout the tube. As a result, no offset is expected in the eddy current data. However, for the higher-row tubes (i.e., those not receiving the local U-bend stress relief), the residual stresses are expected to be higher in the U-bend region when compared to the straight portion of the tube. As a result, there should be an offset in the eddy current data when transitioning from the straight portion of the tube into the U-bend region. The lack of an offset in the high-row tubes could indicate higher stresses in the straight portion of the tubing (i.e., nonoptimal tube processing). For the higher-row tubes, the licensee determined that the tubes in any given row had a somewhat repeatable offset with some scatter around the mean. As the row number increased (and the bend radius increased and the strain decreased), the average offset in a row decreased (as would be expected since the stresses in the U-bend region of the higher-row tubes should decrease as the row number increases). This trend was observed through row 50. After row 50, this decrease in the offset was not observed. The licensee postulated that deposits may have contributed to the lack of the trend beyond row 50.

Based on the above findings, the eddy current data from the prior outage was reviewed to determine the number of tubes that may have potentially high residual stresses (i.e., exhibit the offset). This review included not only low-row tubes, where the residual stresses are expected to be consistent throughout the tube, but also the higher-row tubes (i.e., those not receiving the local U-bend stress relief), where the residual stresses are expected to be higher in the U-bend region (when compared to the straight portion of the tube). Review of the eddy current data from the tubes in all four steam generators identified 21 tubes, including the 15 tubes with cracks, which exhibited the eddy current offset. The 15 tubes with cracks (including the two tubes pulled for destructive examination) were plugged during RFO 8. The six additional tubes identified as having the offset showed no signs of degradation during RFO 8 and were all low-row tubes (rows 1 through 10). These six tubes were plugged during RFO 9 as discussed below. The 21 low-row tubes identified with the offset were all in steam generator D.

More information from the licensee on the root cause of the cracking at the tube support plate intersections may be found under ADAMS Accession Nos. ML023240524 and ML023300457. This issue was also summarized in NRC IN 2002-21, “Axial Outside-Diameter Cracking Affecting Thermally Treated Alloy 600 Steam Generator Tubing” and NRC IN 2002-21, Supplement 1 (ADAMS Accession Nos. ML021770094 and ML030900517, respectively).

Inspection of the tube support plate quatrefoil openings was performed in RFO 8 using the UBIB tool. Those inspections showed insignificant blockage in the tube support plate quatrefoil area.

During cycle 9 (spring 2002 to fall 2003), the primary-to-secondary leak rate was less than 3.79 lpd (1 gpd). The only measurable leak rate was in steam generator B where the leak rate typically fluctuated between 0.75 and 1.89 lpd (0.2 and 0.5 gpd) with spikes up to 2.65 lpd (0.7 gpd). This leak rate is consistent with that observed in previous cycles. The leakage is postulated to be coming from leak limiting plugs used in the steam generators.

During RFO 9 in 2003, 100 percent of the tubes in each of the four steam generators were inspected full length with a bobbin coil, except for the U-bend region of the tubes in rows 1 and 2. In addition to the bobbin coil inspections, a rotating probe equipped with a plus-point coil was used to inspect:

- 20 percent of the tubes from 7.6 cm (3 in.) above to 7.6 cm (3 in.) below the top of the tubesheet on the hot-leg side in all four steam generators (the actual extent above the top of the tubesheet may have been greater than 7.62 cm (3 in.) to ensure the entire portion of the tube within the sludge pile was inspected)

- the U-bend region of 20 percent of the row 1 and row 2 tubes in all four steam generators

- 20 percent of the hot-leg dents and dings with bobbin voltage amplitudes greater than 5 volts that were in the straight section of the tubing in all four steam generators

In addition to these eddy current inspections, all tube plugs in each of the four steam generators were inspected visually.

As a result of these inspections, 15 tubes were plugged—9 for wear at the AVBs, 3 for axially oriented outside diameter stress corrosion cracking, and 3 were preventatively plugged with absolute drift signals (eddy current offset) characteristic of high residual stress.

The only steam generator tube degradation mechanisms observed during RFO 9 were (1) wear at the AVBs, (2) wear attributed to loose parts, (3) wear attributed to maintenance equipment, and (4) axially oriented outside-diameter stress corrosion cracking at the tube support plates. As of RFO 9, no tube wear associated with the tube support plates has been observed at Seabrook.

About 1,300 indications of wear at the AVBs were detected in the four steam generators during RFO 9. This includes 320 indications in steam generator A, 195 in steam generator B, 221 in steam generator C, and 567 in steam generator D. The maximum depth reported for the AVB wear indications was 43 percent throughwall.

Six volumetric indications have been reported at various locations throughout the tube bundle. These indications have been attributed to loose parts that are no longer present. Those indications that were detected in prior outages have not changed in size.

Two indications of wear near the flow distribution baffle were detected in the four steam generators (one in A and one in D) during RFO 9. Both indications are at the flow distribution baffle and are in a region where a pulser from the PPC had been positioned during RFO 4 and 5. PPC is a high pressure gas cleaning and filtration process. The sudden release of gas through the PPC nozzles causes a mass of water in the steam generator to move upward and act as a washing action to dislodge sludge deposits from the steam generator tubes and support surfaces. The pressure pulses are performed at 10-second intervals by means of pressure pulsers externally mounted to the hand holes. Because the pulsers are near the flow distribution baffle, the pulsations cause a small relative displacement of structural components including the tubes that can result in minor wear on the tubes.

Similar indications have been observed in other Model F steam generators at other plants that have applied PPC. These indications are consistently in row 1 at columns 31 through 33 and

columns 91 through 93 at the flow distribution baffle, and with a depth typically from 5 percent to 25 percent throughwall. A review of the data from RFO 8 showed that the same signals were present at that time.

Several tubes in row 1 have indications about 48.26 cm (19 in.) above the top of the tubesheet. These indications have not changed since the prior inspection and have been attributed to interaction with the rail of the sludge lance equipment. The indications are consistent with indications reported at other plants.

There were three tubes with nine indications of axially oriented, outside-diameter-initiated stress corrosion cracking at seven support plate intersections in RFO 9 (two tubes had two indications at the same tube support plate elevation). These three tubes, along with three other tubes were identified after RFO 8 as having an absolute drift signal (eddy current offset) that could indicate greater susceptibility to stress corrosion cracking. The other three tubes with the absolute drift signal (eddy current offset) did not have any indications of stress corrosion cracking. All six of these tubes were plugged. As a result, all tubes in the low rows with an eddy current offset were removed from service in RFO 9. The stress corrosion cracking indications in these three tubes had bobbin voltages ranging from 0.04 volts to 0.81 volts and plus-point voltages ranging from 0.26 to 0.75 volts. All of the indications that were detected with a bobbin coil on the hot-leg were confirmed as flaws with a plus-point coil; however, there were two bobbin indications on the cold-leg that were not confirmed as flaws with a plus-point coil.

Two bulge indications are in the tube at row 22, column 75, in steam generator D. These bulges are 8.9 cm (3.51 in.) and 5.4 cm (2.11 in.) above the top of the tubesheet on the cold-leg side of the steam generator. Further examination with the plus-point probe showed no degradation at these bulges. These indications were present in prior inspections and have not changed.

An overexpansion is in the tube in row 34, column 42, in steam generator D. The overexpansion is about 2.54 cm (1 in.) above the top of the tubesheet and is not associated with the tubesheet expansion (i.e., the expansion does not extend above the top of the tubesheet). This indication has not changed since the last inspection.

Inspection and maintenance on the secondary side of the steam generator also were performed during RFO 9. To reduce the amount of sludge on the top of the tubesheet, sludge lancing was performed in each of the four steam generators. In addition, FOSAR was performed in each of the four steam generators, in the tubesheet annulus and the blowdown lane. As a result of these inspections, six foreign objects were found; one in steam generators A; three in steam generator B; and two in steam generator C. Five were removed. At row 31, column 11, in steam generator C, a dumbbell-shaped loose part that was found in RFO 1 was visually verified as remaining stuck between two tubes in its original location. No loose parts were observed in steam generator D during RFO 9. As a result, only one known loose part remains in any of the four steam generators.

After RFO 9, one tube in steam generator B at row 29, column 97, was found as having an eddy current offset. This tube is a high-row tube and had no distorted support plate indications during RFO 8. A licensee analysis showed that it was acceptable (from a structural and leakage integrity standpoint) to leave this tube in service until the next planned inspection in RFO 11.

During RFO 10 in 2005, no steam generator tubes were inspected.

On September 29, 2006, the steam generator portion of the Seabrook technical specifications was revised to limit the extent of inspection in the hot-leg tubesheet region. Specifically, the technical specifications were revised to exclude the portion of tube that is more than 43.2 cm (17 in.) below the top of the tubesheet from inspection (i.e., approximately the lowermost 10.2 cm (4 in.) of tube in the tubesheet on the hot-leg side was excluded from inspection, and hence any flaws that may exist in this region are permitted to remain in service). This revision was applicable only to RFO 11 and the subsequent operating cycles (ADAMS Accession No. ML062630457).

Cycle 11 (spring 2005 to fall 2006) presented no evidence of primary-to-secondary leakage.

During RFO 11 in 2006, 100 percent of the tubes in each of the four steam generators were inspected full length with a bobbin coil, except for the U-bend region of the tubes in rows 1 and 2. In addition to the bobbin coil inspections, a rotating probe equipped with a plus-point coil was used to inspect:

- 30 percent of the tubes from 7.6 cm (3 in.) above to 7.6 cm (3 in.) below the top of the tubesheet on the hot-leg side in all four steam generators
- 50 percent of the bulges and overexpansions in the top 43.2 cm (17 in.) of the tubesheet on the hot-leg side in all four steam generators
- the U-bend region of 30 percent of the tubes in row 1 and row 2 in all four steam generators
- 30 percent of the hot-leg dents and dings with bobbin voltage amplitudes greater than or equal to 5 volts

In addition to these eddy current inspections, all tube plugs in each of the four steam generators were inspected visually. No degradation or abnormal leakage was identified during the inspection of the plugs.

As a result of these inspections, 21 tubes were plugged—3 for wear at the AVBs, 1 for a wear indication (volumetric indication) below the sixth tube support plate, 1 for a potentially elevated residual stress with no indications of cracking, and 16 for possible loose parts. The maximum depth reported for the AVB wear indications was 44 percent.

The only steam generator tube degradation mechanisms observed during RFO 11 were wear at the AVBs, wear attributed to loose parts, and wear attributed to maintenance equipment.

Of the 16 tubes plugged because of possible loose parts, all were in the same general area in steam generator C. Two of the plugged tubes had indications of possible loose parts and wear measuring 39 percent (row 58, column 54) and 48 percent (row 59, column 57) throughwall. These indications were in the cold-leg slightly above the flow distribution baffle. Additional rotating probe inspections in tubes surrounding this area resulted in finding six more possible loose part indications. This location could not be accessed for removal of the possible loose parts. As a result, the two tubes with possible loose part indications and wear, the six tubes with possible loose part indications and no associated wear, and eight more tubes were plugged to bound the location of the eight possible loose parts. The observed degradation suggested to the licensee that the loose part is linear and lying on the flow distribution baffle. A visual inspection of this region in RFO 13 (2009) indicated that the loose part was a nail and was fixed

in place. No attempts were made to remove the nail during RFO 13 since the risk involved was too great and because the nail is fixed in place and surrounded by plugged tubes. This nail was removed from the steam generator in RFO 14.

No possible loose part indication was detected in association with the tube plugged because of a volumetric wear indication below the sixth tube support plate on the cold-leg side of steam generator D.

The previously reported wear indications at the flow distribution baffle were reported during RFO 11. These indications were attributed to PPC, and the indications have not changed since the previous inspection.

The one tube identified after RFO 9 with an eddy current offset (absolute drift signal) indicative of potentially high residual stress was plugged. This tube was a high-row tube (at row 29, column 97, in steam generator B) and did not exhibit any crack-like indications.

FOSAR was performed in each of the four steam generators during RFO 11. The search consisted of visual inspection in the tube annulus area and the tube lane. As a result of these inspections, eight foreign objects were identified in steam generators A (three objects), B (two objects), and C (three objects), seven of which were removed. At row 31, column 11, in steam generator C, a dumbbell-shaped loose part that was identified in RFO 1 was verified as remaining stuck between two tubes in its original location. No foreign objects were observed in steam generator D during RFO 11. No other secondary-side inspections were performed during RFO 11.

On March 28, 2007, the steam generator portion of the Seabrook technical specifications was revised making them performance-based consistent with TSTF-449 (ADAMS Accession Nos. ML070510645 and ML071420135).

During RFO 12 in 2008, no steam generator tubes were inspected. Advanced scale conditioning agent (ASCA) treatment was started to reduce the total scale loading in the steam generators. A full bundle copper ASCA was performed in RFO 12.

On October 13, 2009, the steam generator portion of the Seabrook technical specifications was revised to limit the extent of inspection in the tubesheet region. Specifically, the technical specifications were modified to exclude the portion of tube that is more than 33.27 cm (13.1 in.) below the top of the tubesheet from inspection (i.e., approximately the lowermost 20.3 cm (8 in.) of tube in the tubesheet was excluded from inspection, and hence any flaws that may exist in this region are permitted to remain in service). This revision was applicable only to RFO 13 and the subsequent operating cycle (ADAMS Accession No. ML092460184).

During cycle 13 (spring 2008 to fall 2009), steam generator B was found to have primary-to-secondary leakage, fluctuating between 0.75 and 2.65 lpd (0.2 and 0.7 gpd). There was no evidence of primary-to-secondary leakage in steam generators A, C, and D during cycle 13.

During RFO 13 in 2009, 100 percent of the tubes in each of the four steam generators were inspected full length with a bobbin coil, except for the U-bend region of the tubes in rows 1 and 2. In addition to the bobbin coil inspections, a rotating probe equipped with a plus-point coil was used to inspect:

- 50 percent of the tubes from 7.6 cm (3 in.) above to 7.6 cm (3 in.) below the top of the tubesheet on the hot-leg side in steam generators A, B, and D
- 100 percent of the tubes from 7.6 cm (3 in.) above to 7.6 cm (3 in.) below the top of the tubesheet on the hot-leg side in steam generator C
- 50 percent of the bulges and overexpansions in the top 33.27 cm (13.1 in.) of the tubesheet on the hot-leg side in each of the four steam generators
- the U-bend region of 50 percent of the tubes in rows 1 and 2 (which included all U-bends that had not been inspected previously during this inspection period) in each of the four steam generators
- 50 percent of the dents and dings with bobbin voltage amplitudes greater than or equal to 5 volts in the freespan region of the hot-leg and in the U-bend in each of the four steam generators
- 50 percent of the dents and dings with bobbin voltage amplitudes greater than or equal to 2 volts at structures in the hot-leg and in the U-bend in each of the four steam generators.

In addition to these eddy current inspections, all tube plugs in each of the four steam generators were inspected visually. All plugs were in their correct positions and there was no evidence of leakage past the plugs.

As a result of these inspections, 12 tubes were plugged—11 for wear at the AVBs and 1 for a single axial indication of outside-diameter stress corrosion cracking at the hot-leg expansion transition.

The only steam generator tube degradation mechanisms observed during RFO 13 were (1) wear at the AVBs, (2) wear at the flow distribution baffle attributed to application of PPC in a prior RFO, (3) wear attributed to foreign objects, wear attributed to maintenance equipment (sludge lance rail), and (4) axially oriented outside-diameter stress corrosion cracking at the hot-leg expansion transition.

About 1,350 indications of wear at the AVBs were detected in the four steam generators during RFO 13. This includes about 400 indications in steam generator A, 250 in steam generator B, 240 in steam generator C, and 460 in steam generator D. The maximum depth reported for the AVB wear indications was 45 percent throughwall.

Two wear indications (in 2 tubes) have historically been detected at the flow distribution baffle and were attributed to prior application of PPC. Similar indications have been observed in other model F steam generators that have applied PPC. The indications are typically observed in row 1 at columns 31–33 and columns 91–93 at the flow distribution baffle. During RFO 13, one of these indications was not detected and the size of the other indication was consistent with prior inspection results.

About 10 wear indications (in 10 tubes) were detected and attributed to loose parts that were no longer present. Most of these indications were present in prior inspections and have not changed in size.

Eight wear indications (in six tubes) were attributed to interaction between the tubes and the sludge lance rail in a prior outage. The indications are in row 1, columns 36, 87, and 112, and are about 45.7 cm (18 in.) above the top of the tubesheet. The depths of the indications have not changed since at least RFO 9. The sludge lance rail was redesigned to prevent future tube interaction or aggravation of the existing wear condition.

Only one axially oriented outside-diameter stress corrosion cracking indication was detected during RFO 13. It was detected with a plus-point coil, pancake coil, and Ghent probe, and is a single axial indication at the hot-leg expansion transition with a length of approximately 3 mm (0.12 in.) and a peak-to-peak voltage of 0.44 volts. The crack started at the bottom of the expansion transition and extends down into the expanded region of tubing.

As of RFO 13, there were 15 high-row tubes in steam generator A, 26 high-row tubes in steam generator B, 18 high-row tubes in steam generator C, and 8 high-row tubes in steam generator D with potentially elevated residual stresses as determined from the eddy current data.

Two loose parts (other than sludge rocks) were reported during RFO 13. Both are in steam generator C. One loose part is near the top of the tubesheet and is dumbbell-shaped. It has been reported in prior outages. The other loose part is a nail at a flow distribution baffle. This loose part resulted in plugging 14 tubes during RFO 11. Both loose parts remain in the steam generator.

Inspection and maintenance on the secondary side of the steam generators were performed during RFO 13. A full bundle iron ASCA treatment was performed in all four steam generators. About 550 pounds of iron were removed from each steam generator. In addition, sludge lancing and FOSAR was performed in all four steam generators. FOSAR was performed in the tube lane and in the annulus area. About 164 pounds of sludge was removed from the top of the tubesheet area. A UBIB visual inspection of tube support plates was performed in steam generator C. The inspection included tube support plates 4 through 7 at columns 70 and 96 on both the hot- and cold-leg side of the steam generator. The inspection was performed after the full bundle ASCA was applied. The results were as expected with heavier scale buildup decreasing from the center line toward the outer columns as well as decreasing from upper tube support plate elevations to lower tube support plate elevations. Also, as expected, scale is more prevalent on the hot-leg side than on the cold-leg side of the steam generator. Most of the quatrefoil holes remain open and there were no completely blocked quatrefoils at any support plate elevations. Future UBIB inspections and ASCA treatments are planned.

During cycle 14 (fall 2009 to spring 2011), primary-to-secondary leakage was detected fluctuating between 0.75 and 2.65 lpd (0.2 and 0.7 gpd), in steam generator B. There was no evidence of primary-to-secondary leakage during cycle 14 in steam generators A, C, and D.

During RFO 14 in 2011, only rotating probe inspections of the portion of the tube near the top of the tubesheet on the hot-leg side were performed. Specifically, a rotating probe equipped with a plus-point coil was used to inspect 20 percent of the tubes from 7.6 cm (3 in.) above to 7.6 cm (3 in.) below the top of the tubesheet on the hot-leg side in steam generators A, B, and D, and 100 percent of the tubes from 7.6 cm (3 in.) above to 7.6 cm (3 in.) below the top of the

tubesheet on the hot-leg side in steam generator C. In addition to these eddy current inspections, all tube plugs in each of the four steam generators were inspected visually.

As a result of these inspections, no tubes were plugged.

The only steam generator tube degradation mechanism observed during RFO 14 was wear attributed to foreign objects. Six indications were detected during RFO 14. One of the indications was new, while the other five indications were present in prior inspections and have not changed in size.

Inspection and maintenance on the secondary side of the steam generators were performed during RFO 14. A top of tubesheet ASCA treatment was performed in all four steam generators. About 98 pounds of iron were removed from all four steam generators. In addition, FOSAR (in the tube lane and in the annulus area) and sludge lancing was performed in all four steam generators. About 323 pounds of sludge were removed from the top of tubesheet area from all four steam generators. In addition, the nail that resulted in 14 tubes being plugged during RFO 11 was removed from the steam generator. Only two objects are known or presumed to remain in the steam generators: a dumbbell-shaped object captured between two plugged tubes above the top of the tubesheet in steam generator C, which has been present since RFO 1, and an object just above the fifth hot-leg tube support plate in steam generator A, which was identified during RFO 8. For this latter object, seven tubes surrounding the object were plugged in RFO 8.

On September 10, 2012, the steam generator portion of the Seabrook technical specifications was revised to limit the extent of inspection in the tubesheet region. Specifically, the technical specifications were revised to exclude the portion of tube that is more than 38.63 cm (15.21 in.) below the top of the tubesheet from inspection (i.e., approximately the lowermost 15.24 cm (6 in.) of tube in the tubesheet was excluded from inspection, and hence any flaws that may exist in this region are permitted to remain in service (ADAMS Accession No. ML12178A537)).

During cycle 15 (spring 2011 to fall 2012), primary-to-secondary leakage was detected in steam generator B, fluctuating between 0.75 and 3.4 lpd (0.2 and 0.9 gpd). There was no evidence of primary-to-secondary leakage during cycle 15 in steam generators A, C, and D.

During RFO 15 in 2012, 100 percent of the tubes in each of the four steam generators were inspected full length with a bobbin coil, except for the U-bend region of the tubes in rows 1 and 2. In addition to the bobbin coil inspections, a rotating probe equipped with a plus-point coil was used to inspect:

- 50 percent of the tubes from 7.62 cm (3 in.) above to 38.63 cm (15.21 in.) below the top of the tubesheet on the hot-leg side (which included 50 percent of the bulges and overexpansions in the top 38.63 cm (15.21 in.) of the tubesheet on the hot-leg side)
- the U-bend region of 50 percent of the tubes in rows 1 and 2
- 50 percent of the dents and dings with bobbin voltage amplitudes greater than 5 volts in the hot-leg and in the U-bend

As a result of finding a crack-like indication at a dent in steam generator C (described below), a rotating probe equipped with a plus-point coil was used to inspect:

- 100 percent of the dents and dings with bobbin voltage amplitudes greater than 5 volts in the hot-leg and in the U-bend in steam generator C

- 20 percent of the dents and dings with bobbin voltage amplitudes greater than 2 volts and less than or equal to 5 volts in the hot-leg in steam generator C

- 100 percent of the dents and dings with bobbin voltage amplitudes greater than or equal to 5 volts at the eighth (uppermost) tube support on the cold-leg in steam generator C

- 20 percent of the dents and dings with bobbin voltage amplitudes greater than 2 volts and less than or equal to 5 volts at the eighth (uppermost) tube support on the cold-leg in steam generator C

In addition to these eddy current inspections, all tube plugs and in the channel heads in each of the four steam generators were inspected visually. There was no evidence of leakage past the plugs. There was no evidence of degradation found during the channel head inspections.

As a result of these inspections, nine tubes were plugged—six for wear at the AVBs, two for axially oriented outside-diameter stress corrosion cracking indications, and one for a probe head that became stuck near the tube tangent point.

The only steam generator tube degradation mechanisms observed during RFO 15 were (1) wear at the AVBs, (2) wear at the tube support plates, (3) wear at the flow distribution baffle attributed to application of PPC in a prior RFO, (4) wear attributed to foreign objects, (5) wear attributed to maintenance equipment (sludge lance rail), (6) axially oriented outside-diameter stress corrosion cracking at a hot-leg dented tube support plate elevation, and (7) axially oriented outside-diameter stress corrosion cracking in the freespan region on the hot-leg side of the steam generator.

A total of 1,279 indications of wear at the AVBs were detected in 592 tubes in the four steam generators during RFO 15. Of these 1,279 indications, 154 were new indications. There were 358 indications detected in 173 tubes in steam generator A, 233 indications in 125 tubes in steam generator B, 236 indications in 100 tubes in steam generator C, and 452 indications in 194 tubes in steam generator D. The maximum depth reported for the AVB wear indications was 55 percent throughwall.

Eleven indications of wear attributed to interaction between the tube and the tube support plates were reported in RFO 15. Of these indications, six were new and the other five were reported in prior outages as wear attributed to foreign objects. However, they were reclassified during RFO 15 as tube support plate wear indications. The indications that were reclassified as tube support plate wear indications have not changed in size since the previous inspection.

Two wear indications (in two tubes) have historically been detected at the flow distribution baffle and were attributed to prior application of PPC. Similar indications have been observed in other model F steam generators that have applied PPC. The indications are typically observed in row 1 at columns 31–33 and columns 91–93 at the flow distribution baffle. During RFO 15, the inspections showed that these indications are not changing.

Six wear indications (in six tubes) were detected and attributed to loose parts that were no longer present. Most of these indications were present in prior inspections and have not changed in size.

Eleven wear indications (in eight tubes) were attributed to interaction between the tubes and the sludge lance rail in a prior outage. Of these 11 indications, 3 indications (in 2 tubes) were not previously reported. These 11 indications are in row 1, columns 11, 36, 87, and 112 and are about 45.7 cm (18 in.) above the top of the tubesheet. The depths of the indications that were previously reported have not changed since at least RFO 9. The sludge lance rail was redesigned to prevent future tube interaction or aggravation of the existing wear condition.

Four crack-like indications were detected during RFO 15. These four indications were in two tubes. Three axially oriented outside-diameter stress corrosion cracking indications were detected in the freespan region of a tube above the flow distribution baffle and below the first tube support plate on the hot-leg side of the steam generator. All three indications were in one tube. In addition, one axially oriented outside-diameter stress corrosion cracking indication was detected at a dent at the uppermost tube support plate on the hot-leg side of the steam generator.

For the indications in the freespan region of the tube, the bobbin coil inspections resulted in identifying one of these three indications. The indication was in the freespan region of a tube on the hot-leg side of the steam generator between the flow distribution baffle and the first tube support plate. To further inspect the region where the bobbin coil indication was detected, a rotating probe equipped with a plus-point coil was used. This inspection confirmed that the indication was axially oriented, crack-like, and had initiated from the outside diameter of the tube (typically referred to as outside-diameter stress corrosion cracking). The indication had a plus-point voltage amplitude of about 0.96 volts, a length of 1.32 cm (0.52 in.), and a maximum depth of 77 percent of the tube wall thickness. A Ghent 3-4 probe also was used to inspect this location. All three probes identified the flaw signal. During the rotating probe inspections, two other outside-diameter stress corrosion cracking indications were identified in the same tube. These two indications were not detected during the bobbin coil inspections. These other indications were about 15.24 cm (6 in.) above the initially detected indication and were smaller in size. One indication had a plus-point voltage of 0.24 volts, a length of 3.8 mm (0.15 in.), and a maximum depth of 45 percent of the tube wall thickness. The other indication had a plus-point voltage amplitude of 0.38 volts, a length of 4.57 mm (0.18 in.), and a maximum depth of 56 percent of the tube wall thickness.

Although there was no reportable bobbin signal at these two locations, there were benign signals at these locations since the preservice inspection. These benign signals were characterized as small dents/dings from the preservice inspection data and had exhibited local conductivity changes after the first cycle of operation at temperature. The three indications were not considered components of a single indication since the indications were separated by ligaments of sound material and were not in the same axial plane.

In addition to these three indications of axially oriented outside-diameter stress corrosion cracking in one tube, another axially oriented outside-diameter stress corrosion cracking indication was detected in another tube. This latter indication was associated with a dented/dinged region of the tube at the top tube support plate on the hot-leg side of the steam generator. This tube had two dents/dings at the uppermost tube support plate: one at the bottom edge of the tube support plate had a bobbin voltage amplitude of 11.35 volts, and one at the upper edge of the tube support plate had a bobbin voltage amplitude of 8.96 volts. The crack-like indication was associated with the dent/ding at the lower edge of the tube support plate and was detected during the rotating probe inspections of dents/dings. A rotating probe is typically used to inspect dents/dings that have bobbin voltage amplitudes greater than 5 volts

since the bobbin coil is not qualified to detect crack-like indications in such dents/dings. The crack-like indication had a plus-point coil voltage amplitude of 0.89 volts, a length of 5.59 mm (0.22 in.), and a maximum depth of 76 percent of the tube wall thickness.

Neither of the tubes with cracking indications had any evidence of high residual stress because of nonoptimal tube processing as discussed in NRC IN 2002-21, Supplement 1, "Axial Outside-Diameter Cracking Affecting Thermally Treated Alloy 600 Steam Generator Tubing." These four indications are further discussed in NRC IN 2013-11, July 3, 2013, "Crack-Like Indications at Dents/Dings and in the Freespan Region of Thermally Treated Alloy 600 Steam Generator Tubes."

Eight bulges were reported in seven tubes during RFO 15. All bulges are slightly above the top of tubesheet and have been reported in prior inspections. No degradation was associated with any of the bulge signals.

Inspection and maintenance on the secondary side of the steam generators were performed during RFO 15. FOSAR (in the tube lane and in the annulus area) and sludge lancing was performed in all four steam generators. In addition, in-bundle inspections were performed in several columns in each steam generator to assess the effectiveness of the top of tubesheet ASCA treatment that was performed in RFO 14. These in-bundle inspections revealed that scale collars still remain on some tubes in the kidney region of the steam generator (a region of low water cross flow across the tubesheet and is typically near the center of the tube bundle). The ASCA treatment reduced the number and size of the scale collars. Only three foreign objects are known to remain in the steam generators: a dumbbell-shaped object captured between two plugged tubes above the top of the tubesheet in steam generator C that has been present since RFO 1; and a glass lens and Delrin sliver from the UBIB inspection tool.

In addition, a UBIB visual inspection was performed in steam generator C to assess the effectiveness of the full bundle ASCA treatment performed in RFO 13. The inspection was mainly focused on the sixth and seventh tube support plates. The seventh support plate is the uppermost tube support plate with quatrefoil shaped holes. Inspections were performed in columns 76, 78, 92, 93, 95, 96, and 97. These columns were chosen since there are equipment and flow slot alignment conditions that only allow inspection of specific columns. The inspections showed that the quatrefoil lobes are not occluded and are open to flow. There were no signs of bridging of the lobes.

A visual inspection of the upper steam drum was performed in steam generator A. The components inspected were the feedring, J-tubes, J-tube to feedring welds (a sampling), primary moisture separators, secondary separators, welds, structural components, thermal sleeve, and backing rings. In addition some depth measurements of the feedring thickness were made at several locations using ultrasonic inspection techniques. The results of these inspections showed that all components are covered with a protective layer of magnetite. No bare metal (rust areas) were noted. The ultrasonic thickness readings indicated that no thinning of the feedring was occurring. There were no anomalies noted at the J-tube to feed ring welds.

On October 25, 2013, the steam generator portion of the Seabrook technical specifications was revised making them consistent with TSTF-510 (ADAMS Accession No. ML13107A016).

### 3.3.4 Vogtle 1

Tables 3-22, 3-23, and 3-24 summarize the information discussed below for Vogtle 1. Table 3-22 provides the number of full-length bobbin inspections and the number of tubes plugged and deplugged during each outage for each of the four steam generators. Table 3-23 lists the reasons why the tubes were plugged. Table 3-24 lists tubes plugged for reasons other than wear at the AVBs.

Vogtle 1 has four Westinghouse model F steam generators. The licensee numbers its tube supports from the hot-leg flow distribution baffle (FBH or BPH) to 7H on the hot-leg side of the steam generator and from the cold-leg flow distribution baffle (FBC or BPC) to 7C on the cold-leg side (Figure 2-4).

In 2000, the feedwater ring weld backing rings were inspected, and the results were acceptable. Future inspections of these backing rings are planned to be performed at least once every six refueling outages.

During RFO 10 in 2002, 100 percent of the tubes in steam generators A and D were inspected full length with a bobbin coil, except for the U-bend region of the tubes in rows 1 and 2. In addition to the bobbin coil inspections, a rotating probe equipped with a plus-point coil was used to inspect 50 percent of tubes from 7.6 cm (3 in.) above to 7.6 cm (3 in.) below the top of the tubesheet on the hot-leg side of steam generators A and D, and the U-bend region of 60 percent of the row 1 and row 2 tubes in steam generators A and D. Additionally, a bobbin coil and a rotating probe equipped with a plus-point coil were used to inspect tubes in rows 1 and 2 from the top of the tubesheet to the flow distribution baffle in steam generator A before and after ultrasonic energy cleaning (UEC). No steam generator tubes were inspected in steam generators B and C.

As a result of these inspections, two tubes were plugged for difficulty passing the plus-point probe through the U-bends of the tubes.

The only steam generator tube degradation mechanisms observed during RFO 10 were wear at the AVBs and wear attributed to a loose part.

About 140 indications of AVB wear were detected in 58 tubes in steam generator A. In steam generator D, 179 indications were detected in 96 tubes. The 95 percent cumulative probability growth values are less than 10 percent for the prior 2-cycle interval. The rate of progression of the wear at the AVBs has not changed significantly and there were no tubes found to have experienced excessive wear at the AVBs. The maximum depth reported for the AVB wear indications was 34 percent throughwall.

One indication of wear attributed to a loose part was reported during RFO 10. This indication was at a hot-leg baffle plate in steam generator A. The maximum depth reported for this indication was 19 percent throughwall. The indication has not changed in size since originally detected during RFO 8.

The two tubes that were plugged were low-row tubes. In these two tubes, the plus-point probe bound and stopped rotating during the examinations. Attempts were made to inspect the U-bends from both the hot-leg and cold-leg side of the steam generator with a 12.7-mm (0.500-in.) diameter rotating probe. Although both tubes had passed a 1.32-mm (0.520-in.) bobbin coil during previous inspections, the 12.7-mm (0.500-in.) diameter rotating probe inspection was not successful. The binding of the rotating probe in the tube was attributed by

the licensee to differences in the design dimensions of the rotating coil and bobbin probes and their ability to traverse the low-row U-bends.

During RFO 10, in steam generator A, the top of the tubesheet received UEC, where ultrasonic energy disrupts scale and secondary-side deposits that have accumulated on the outside surface of steam generator tubes.

The process was applied in steam generator A for the purpose of field demonstration of the process, which had not previously been used in a commercial nuclear power plant steam generator. In this process, ultrasonic energy was initiated into the tube bundle through operation of ultrasonic transducers that were placed in the tube lane and covered with water. The water level was maintained at 48.3 cm (19 in.) above the top of the tubesheet (which is below the flow distribution baffle) during transducer operation. Inspections were performed before and after the UEC to validate laboratory test results that indicated no adverse effects to tube integrity during application of the process. The pre- and post-UEC eddy current inspections revealed no detectable detrimental effects because of the high frequency sound waves.

On November 24, 2002, both Vogtle units were shut down because of high sodium concentrations in the feedwater system. The sodium was introduced into the feedwater system when sodium phosphate rather than methoxypropylamine was added to the feedwater system in both units. Methoxypropylamine is normally added to the feedwater system for corrosion control.

During RFO 11 in 2003, 100 percent of the tubes in steam generators B and C were inspected full length with a bobbin coil, except for the U-bend region of tubes in rows 1 and 2. In addition to the bobbin coil inspections, a rotating probe equipped with a plus-point coil was used to inspect:

- 50 percent of the tubes from 7.6 cm (3 in.) above to 7.6 cm (3 in.) below the top of the tubesheet on the hot-leg side (including any tubes not examined during RFO 9) in steam generators B and C

- the U-bend region of 50 percent of the row 1 and row 2 tubes (including any tubes not examined during RFO 9) in steam generators B and C

- 100 percent of the dents with bobbin voltage amplitudes greater than or equal to 5 volts in the straight leg areas in steam generators B and C.

In addition to these eddy current inspections, the tube plugs were inspected visually, the extent of blockage of the quatrefoil openings was assessed using a rotating probe equipped with a plus-point coil, and the phosphate chemistry excursion that occurred during cycle 11 was evaluated with a rotating probe equipped with a plus-point coil. No steam generator tubes were inspected in steam generators A and D.

As a result of these inspections, three tubes were plugged—one for wear at the AVBs, one for a volumetric indication, and one for difficulty passing the plus-point probe through the U-bend of the tube.

The only steam generator tube degradation mechanisms observed during RFO 11 were wear at the AVBs and wear attributed to an impact from a loose part or a mechanical change in the tube (e.g., cold lap breaking off).

The maximum depth reported for the AVB wear indications was 43 percent.

The tube that was plugged with a volumetric indication had an indication that was consistent with an impact from a loose part or a mechanical change in the tube (e.g., cold lap breaking off).

The tube that was plugged because of difficulty passing the rotating probe though the tube was a row 1 tube. The 1.32-mm (0.520-in.) plus-point rotating probe would pass through the tube; however, because of a tight fit in the U bend, proper rotation of the probe was prevented at the apex of the U-bend region of the tube. The U bend region of the tube was inspected using a plus-point rotating probe during RFO 7 in 1997, though special effort was required to complete the inspection.

All RFO 9 bobbin data for steam generators B and C was reviewed to determine if any tubes exhibited an eddy current offset that could indicate higher residual stresses in the tubes (and therefore higher susceptibility to cracking). Cracking associated with tubes with an eddy current offset was observed at Seabrook in 2002 (NRC IN 2002-21, "Axial Outside Diameter Cracking Affecting Thermally Treated Alloy 600 Steam Generator Tubing" dated June 25, 2002, and its supplement dated April 1, 2003, for additional details). No indications of any eddy current offset were identified in the RFO 9 bobbin data for steam generators B or C.

The degree of blockage of the quatrefoil openings was assessed at 360 locations at tube support plates 6 and 7 on the hot-leg side of the steam generators and many other locations at other tube support plates. The eddy current signature was expected to reflect variation from a clean intersection. The results, however, did not quantify the extent of blockage of the quatrefoil openings because of the weak correlation between the rotating probe signatures and the results of the visual inspection. Because of these assessments, (1) no clean tube-to-tube support plate intersections were observed, (2) the scale was significantly thicker at the bottom of the tube support plate than at the top along the length of the tube going through the tube support plate, and (3) more deposits were seen in tube support plate intersections at tube support plate 7 than at other tube support plates.

In the evaluation of the phosphate chemistry excursion, 100 percent of the tubes were inspected with the bobbin probe and 50 percent of the tubes were inspected with a plus-point probe at the top of the tubesheet on the hot-leg side. The licensee analyzed in detail a limited number of tubes, as well as compared the RFO 11 data to prior data to find any excursion signals that indicated the onset of corrosion. None was found.

UEC was performed in each of the four steam generators during RFO 11. The tubes near the ultrasonic transducers were inspected with a bobbin probe after the UEC. No indications were detected because of the UEC. The UEC was intended to remove scale deposit on the top of the tubesheet and scale collars.

During RFO 12 in 2005, 100 percent of the tubes in steam generators A and D were inspected full length with a bobbin coil, except for the U-bend region of the tubes in rows 1 and 2. In addition to the bobbin coil inspections, a rotating probe equipped with a plus-point coil was used to inspect:

- 50 percent of the tubes from 7.6 cm (3 in.) above to 7.6 cm (3 in.) below the top of the tubesheet on the hot-leg side in steam generators A and D

- 100 percent of the bulges and overexpansions in the hot-leg side of the tubesheet in steam generator D

- 20 percent of the bulges and overexpansions in the hot-leg side of the tubesheet with the sample selected in the region from 7.62 cm (3 in.) above to 25.4 cm (10 in.) below the top of the tubesheet in steam generators A, B, and C (with the largest bulges selected first and the remaining inspections performed at bulges that were greater than 18 volts and overexpansions with greater than 0.038 mm (1.5 mils) increase in the nominal expanded tube diameter)

- the U bend region of 50 percent of row 1 and row 2 tubes in steam generators A and D

- 100 percent of dents and dings with bobbin voltage amplitudes greater than or equal to 5 volts that have not been previously inspected and are in the U-bend region or hot-leg in steam generators A and D

In addition to these eddy current inspections, tube plugs were inspected visually.

As a result of these inspections, two tubes were plugged. These tubes were plugged for circumferentially oriented stress corrosion cracking indications that initiated from the inside surface of the tube.

The only steam generator tube degradation mechanisms observed during RFO 12 were wear at the AVBs and circumferentially oriented primary water stress corrosion cracking associated with bulges in the tubesheet. Wear attributed to loose parts may also be present in the Vogtle steam generators; however, no report of any indications was provided for RFO 12.

About 110 indications of AVB wear were detected in 66 tubes in steam generator A. In steam generator D, 176 indications were detected in 98 tubes. The maximum depth reported for the AVB wear indications was 38 percent throughwall.

The circumferentially oriented stress corrosion cracking indications were associated with tube bulges in tubesheet on the hot-leg side of the steam generator. At Vogtle, a bulge is recorded at a certain location if the voltage of the bulge (as measured with a bobbin coil) exceeds a threshold value (e.g., 18 volts). Similarly, a location is classified as overexpanded if the diameter of the bulged area exceeds the average diameter of the tube by a specified amount 0.038 mm (0.0015 inch (1.5 mils) or greater).

One of the tubes affected by circumferentially oriented stress corrosion cracking was at row 11, column 88. In this tube, two inside diameter initiated circumferential indications were identified in a 170-volt bulge. About 170 degrees separated the two indications. The indications were confirmed to be present with a plus-point coil, a Ghent probe (a transmit-receive probe), and a delta probe (a rotating probe with 3 coils). The indications were about 4.3 cm (1.7 in.) below the secondary face of the tubesheet, and the voltage associated with these indications was 0.72 volts. During the last inspection of this tube in 2002, there were no indications at this location.

The other affected tube was at row 6, column 101. In this tube, one inside diameter initiated circumferential indication was identified in a 109-volt bulge. The indication was confirmed to be present with a plus-point coil, a Ghent probe, and a delta probe. The indication was about 10 mm (0.4 in.) below the top of the tubesheet, and the voltage associated with this indication was 0.7 volts. During the last inspection of this tube in 1999, there were no indications at this location.

The number of tubes with bulges and overexpansions in each of the steam generators was estimated to be 201 in steam generator A, 446 in steam generator B, 123 in steam generator C, and 177 in steam generator D.

All RFO 10 bobbin data were reviewed for steam generators A and D to determine if any tubes exhibited an eddy current offset that could indicate higher residual stresses in the tubes (and therefore higher susceptibility to cracking). Steam generators B and C were reviewed similarly for RFO 11. Cracking associated with tubes with an eddy current offset was observed at Seabrook in 2002 and Braidwood 2 in 2003. Because of the reviews in the four steam generators, no tubes in the low rows (rows 1 through 10) exhibited an eddy current offset. In the high rows, the review found 118 tubes with an eddy current offset of less than the mean eddy current signal minus two standard deviations (mean minus 2 sigma). Fifty-four tubes in steam generator A, 17 tubes in steam generator B, 23 tubes in steam generator C, and 24 tubes in steam generator D had an offset less than the mean minus 2 sigma.

A small foreign object was found on the secondary side of steam generator A near the tubes in row 4, column 97, and row 5, column 96. This object is fixed in place.

UEC was performed in each of the four steam generators during RFO 12.

On August 28, 2006, Vogtle 1 revised the steam generator portion of their technical specifications making them performance-based consistent with TSTF-449 (ADAMS Accession No. ML062360577).

On September 12, 2006, the steam generator portion of the Vogtle 1 technical specifications was revised to limit the extent of inspection in the hot-leg tubesheet region. Specifically, the technical specifications were revised to exclude the portion of tube that is more than 43.2 cm (17 in.) below the top of the tubesheet from inspection (i.e., approximately the lowermost 10.2 cm (4 in.) of tube in the tubesheet on the hot-leg side was excluded from inspection, and hence any flaws that may exist in this region are permitted to remain in service). This revision was applicable only to RFO 13 and the subsequent operating cycle (ADAMS Accession No. ML062260302).

There was no evidence of primary-to-secondary leakage during Cycle 13 (spring 2005 to fall 2006).

During RFO 13 in 2006, all four steam generators were chemically cleaned. Full-bundle chemical cleaning was performed to reduce the deposit loading so as to limit the potential for tube corrosion and to eliminate the potential that severe secondary fouling would cause significant power reductions. The compositions of the iron removal solutions were based on the anticipated sludge and tube deposit inventories. This chemical cleaning operation incorporated elements of a process developed by EPRI and the Steam Generators Owners Group (SGOG) and employed several phases where temperature adjustments were made to facilitate dissolution in specific regions of the tube bundle such as the tube support plate openings and

the top of tubesheet sludge region. Multiple rinse operations washed away the chemicals used to remove the residual iron before the copper-removal phase of the cleaning process. The process was completed after similar rinse steps following the copper-removal step. The chemical cleaning along with the follow-up mechanical cleaning techniques (e.g., the Consolidated Edison Combined Inspection and Lance (CECIL) system) removed 6,819 pounds of deposits. Based on the sludge removed and secondary visual inspection results, the licensee concluded the chemical cleaning was successful.

After the chemical cleaning, 100 percent of the tubes in steam generators B and C were inspected full length with a bobbin coil, except for the U-bend region of tubes in rows 1 and 2. In addition to the bobbin coil inspections, a rotating probe equipped with a plus-point coil was used to inspect:

- 100 percent of the tubes from 7.6 cm (3 in.) above to 7.6 cm (3 in.) below the top of the tubesheet on the hot-leg side in all four steam generators
- the U-bend region of 50 percent of row 1 and row 2 tubes in steam generators B and C
- 100 percent of the outermost two tubes around the entire periphery of the tube bundle from 7.6 cm (3 in.) above to 7.6 cm (3 in.) below the top of the tubesheet on the hot- and cold-leg sides including both sides of the tube lane in steam generators B and C
- 100 percent of dents and dings in the U-bend region with bobbin voltage amplitudes greater than or equal to 5 volts in steam generators B and C
- about 25 percent of the bulges and overexpansions on the hot-leg side of the tubesheet from 7.62 cm (3 in.) above to 43.2 cm (17 in.) below the top of the tubesheet in steam generators A (resulted in inspecting 27 tubes), B (resulted in inspecting 80 tubes), and C (resulted in inspecting 21 tubes)
- 100 percent of the bulges and overexpansions on the hot-leg side of the tubesheet from 7.62 cm (3 in.) above to 43.2 cm (17 in.) below the top of the tubesheet in steam generator D (78 tubes)

In addition to these eddy current inspections, all tube plugs in each of the four steam generators were inspected visually.

As a result of these inspections, 19 tubes were plugged—1 for wear attributed to a loose part, 1 for axially oriented outside-diameter stress corrosion cracking, and 17 for circumferentially oriented outside-diameter stress corrosion cracking.

The only steam generator tube degradation mechanisms observed during RFO 13 were (1) wear at the AVBs, (2) wear attributed to loose parts, (3) wear attributed to maintenance (UEC), and (4) axially and circumferentially oriented outside-diameter stress corrosion cracking at the expansion transition.

Sixty-four indications of AVB wear were detected in 35 tubes in steam generator B during RFO 13. In steam generator C, 57 indications were detected in 33 tubes. The maximum depth reported for the AVB wear indications was 34 percent throughwall.

Eleven indications of wear attributed to loose parts were identified in 10 tubes during RFO 13. These indications ranged in size from 8 percent to 42 percent throughwall. The tube plugged because of wear attributed to loose parts had a volumetric flaw above the cold-leg flow distribution baffle measuring 42 percent throughwall. Plus-point inspections were performed at this elevation for a two-tube buffer surrounding this volumetric flaw. No possible loose part indications were found during this inspection. Given the location of the indication, visual inspections could not be performed. The other wear indications attributed to loose parts had depths that ranged from 8 percent to 30 percent throughwall, and the indications were either at the top of the tubesheet, the flow distribution baffle, or the first tube support plate.

Shallow wall loss indications were identified in several tubes (six indications in three tubes) during the RFO 13 inspections. These indications were attributed to UEC that was performed in all four steam generators during both RFO 11 and 12. The prior inspection of these locations during RFO 11, after UEC was performed, found no indications of shallow wall loss. Visual inspection in steam generator B identified oxide removal patterns on several tubes that were hypothesized to be a result of cavitation during UEC. The inspection results in RFO 13 were classified as differential freespan signals, which resulted in further inspection with the rotating probe. The chemical cleaning during RFO 13 could have improved the detectability of the indications of shallow wall loss (all measured at 10 percent throughwall or less). The chemical cleaning preceded the eddy current inspection. The indications were attributed to UEC because they are adjacent to the location where the UEC cleaning system ultrasonic transducers were deployed. The RFO 13 bobbin examination was performed in the entire length of all tubes in steam generators B and C and no additional volumetric indications potentially attributable to UEC were detected. The purpose of the UEC deployment was to remove scale deposit and scale collars at the top of the tubesheet.

During RFO 13, 18 tubes were identified with indications of stress corrosion cracking in the four steam generators: 3 in steam generator A, 2 in steam generator B, 3 in steam generator C, and 10 in steam generator D. Of these 18 tubes, 17 tubes had circumferentially oriented outside-diameter initiated indications and 1 tube had an axially oriented outside-diameter initiated indication. The tubes with circumferentially oriented indications either had single circumferential indications or multiple circumferential indications. The tube with the axial indication had a single axial indication. All circumferential indications were at the bottom of the hydraulic expansion transition at the top of the tubesheet on the hot-leg side of the steam generator. The axial flaw started at the bottom of the expansion transition and extended into the expanded portion of the tube within the hot-leg portion of the tubesheet. As a result, the indication is almost entirely below the bottom of the expansion transition.

For steam generators A, B and C, the crack-like indications were predominantly in low-row, high-column tubes along the periphery (between rows 1 through 6 and between columns 103 through 119). All of the indications in steam generators A, B, and C were single circumferential indications.

To confirm the indications, five different inspection methods were used on some of the indications: plus-point, Ghent, 3 Coil Delta, and the 0.080 and 0.115 pancake coils. All of the inspection methods confirmed the indications with the exception that the 0.080 pancake coil did not find some of the small amplitude signals. Given these results, the licensee concluded that these indications were cracks. Some indications near the top of the tubesheet were identified with the plus-point probe but not confirmed with the Ghent, 3 Coil Delta probe or the 0.080 coil. These indications had voltages of about 0.06 volts to 0.08 volts, and were not treated as crack-like indications.

The largest circumferential crack-like indication was measured to have a circumferential extent of 216 degrees. The maximum depth reported for the circumferential indications was 74 percent throughwall. The largest percent degraded area for the circumferential indications was about 18 percent. The indication with the largest circumferential extent was not the same indication that had the maximum depth or the largest percent degraded area. The voltages associated with the circumferential indications were about 0.2 volts, although there was one indication that had a voltage of 0.55 volts. The plus-point data were reviewed for the tubes indicating outside-diameter stress corrosion cracking during this outage. No precursor signals in these tubes were found.

The single axial indication was 11.7 mm (0.46 in.) long and had a maximum depth of 92 percent throughwall. The voltage was 1.77 volts.

Inspection and maintenance on the secondary side of the steam generators were performed during RFO 13. FOSAR was performed in each of the four steam generators. The scope for the FOSAR inspections included the periphery of the tube bundle and the no-tube-lane at the top of the tubesheet. In addition, FOSAR inspections were performed to confirm that loose parts that could not be retrieved from the steam generators in prior outages were still at their previously identified locations. In addition, volumetric indications potentially attributable to wear from loose parts discovered during RFO 13 were visually inspected on the secondary side (if possible). These latter inspections were performed in steam generators A, B, and C. No loose parts or anomalous conditions were found during the FOSAR inspections.

In addition, inspections using the CECIL system were performed during RFO 13. The CECIL system was deployed in each of the four steam generators for the purpose of cleaning and inspecting the top of the tubesheet after the chemical cleaning had been completed. The system was deployed down several hot-leg side columns in the manway and nozzle sides in steam generators A and D, and in the nozzle side only in steam generator B. The initial inspections performed with CECIL revealed that minimal deposit remained in steam generator B after the chemical cleaning. In steam generators A and D, foreign objects and scale were observed in the regions traversed by the CECIL wand. The inspections performed after CECIL cleaning revealed no foreign objects and minimal scale.

In-bundle inspections were performed in steam generator A above the seventh tube support plate in a few columns of tubes on the hot- and cold-leg sides of the steam generator. The columns were found to be free of foreign objects and sludge. The quatrefoil holes and lands were clean and open. No anomalous conditions were observed in the seventh tube support plate inspection.

On April 9, 2008, the steam generator portion of the Vogtle 1 technical specifications was revised to permit certain-sized flaws near the tube end in both the hot- and cold-leg sides of the steam generator to remain in service. Specifically, the technical specifications were revised to (1) permit flaws having a circumferential component less than or equal to 203 degrees found in the portion of the tube below 43.2 cm (17 in.) from the top of the tubesheet and above 2.54 cm (1 in.) from the bottom of the tubesheet to remain in service, (2) require the removal from service all flaws having a circumferential component greater than 203 degrees found in the portion of the tube below 43.2 cm (17 in.) from the top of the tubesheet and above 2.54 cm (1 in.) from the bottom of the tubesheet, (3) require the removal from service all tubes with service-induced flaws between the top of the tubesheet and 43.2 cm (17 in.) below the top of

the tubesheet, and (4) permit all axial indications found in the portion of the tube below 43.2 cm (17 in.) from the top of the tubesheet to remain in service.

In addition, the technical specifications were modified to indicate that when more than one flaw with circumferential components is found in the portion of the tube below 43.2 cm (17 in.) from the top of the tubesheet and above 2.54 cm (1 in.) from the bottom of the tubesheet with the total of the circumferential components being greater than 203 degrees and the axial separation distance of less than 2.54 cm (1 in.), then the tube must be removed from service (overlapping portions of the flaws only need to be counted once in determining the total circumferential involvement of the flaws). For flaws within 2.54 cm (1 in.) of the bottom of the tubesheet, the technical specifications were modified to indicate (1) when one or more flaws with circumferential components are found and the total of the circumferential components exceeds 94 degrees, then the tube shall be removed from service and (2) when one or more flaws with circumferential components are found in the portion of the tube within 2.54 cm (1 in.) from the bottom of the tubesheet and within 2.54 cm (1 in.) axial separation distance of a flaw above 2.54 cm (1 in.) from the bottom of the tubesheet, and the total of the circumferential components found in the tube exceeds 94 degrees, then the tube shall be removed from service (overlapping portions of the flaws only need to be counted once in determining the total circumferential involvement of the flaws). This revision to the technical specifications was applicable only to RFO 14 and the subsequent operating cycle (ADAMS Accession No. ML080950232).

There was no evidence of primary-to-secondary leakage during Cycle 14 (fall 2006 to spring 2008).

During RFO 14 in 2008, 100 percent of the tubes in steam generators A and D were inspected full length with a bobbin coil, except for the U-bend region of tubes in rows 1 and 2. In addition to the bobbin coil inspections, a rotating probe equipped with a plus-point coil was used to inspect:

- 100 percent of the tubes from 7.6 cm (3 in.) above to 7.6 cm (3 in.) below the top of the tubesheet on the hot-leg side in all four steam generators

- the U-bend region of 50 percent of row 1 and row 2 tubes in steam generators A and D (including all row 1 and row 2 tubes not inspected during RFO 12)

- 100 percent of the tubes from the hot-leg tube end to 43.2 cm (17 in.) below the top of the tubesheet on the hot-leg side of the steam generator (i.e., the lowermost 10.2 cm (4 in.) of tube) in steam generators B and C

- 25 percent of the tubes from the hot-leg tube end to 43.2 cm (17 in.) below the top of the tubesheet on the hot-leg side of the steam generator (i.e., approximately the lowermost 10.2 cm (4 in.) of tube) in steam generators A and D

- 25 percent of the bulges and overexpansions in the hot-leg side of the tubesheet from 7.62 cm (3 in.) above to 43.2 cm (17 in.) below the top of the tubesheet in steam generator A

- 100 percent of the bulges and overexpansions in the hot-leg side of the tubesheet from 7.62 cm (3 in.) above to 43.2 cm (17 in.) below the top of the tubesheet in steam generators B, C, and D

- 100 percent of dents and dings in the U-bend region with bobbin voltage amplitudes greater than or equal to 5 volts in steam generators A and D

In addition to these eddy current inspections, all tube plugs in all four steam generators were inspected visually. These latter inspections did not reveal any evidence that the plugs were leaking.

As a result of these inspections, 47 tubes were plugged—2 for wear at the AVBs, 10 for circumferentially oriented outside-diameter stress corrosion cracking at the top of the tubesheet, 1 for axially oriented outside-diameter stress corrosion cracking at the top of the tubesheet, 1 for a geometric discontinuity near the tube end, and 33 for damage resulting from pulling a tube.

The only steam generator tube degradation mechanisms observed during RFO 14 were (1) wear at the AVBs, (2) wear attributed to loose parts, (3) axially and circumferentially oriented outside-diameter stress corrosion cracking at the expansion transition, and (4) axially and circumferentially oriented primary water stress corrosion cracking at the tube ends.

A total of 117 indications of AVB wear were detected in 68 tubes in steam generator A during RFO 14. In steam generator D, 172 indications in 94 tubes were detected. The maximum depth reported for the AVB wear indications was 43 percent throughwall.

Nine indications of wear attributed to loose parts were identified in eight tubes during RFO 14. Only one of these indications was new (i.e., eight of the indications had been detected in prior outages). Two of the indications were attributed to wear with the monorail system associated with sludge lance equipment. All of the indications except for the new indication were inspected visually in prior outages to confirm no loose parts were at the affected location. All of these historic indications are on the top of the tubesheet on the hot-leg side of the steam generator. The new indication was not inspected visually because no eddy current indication of a possible loose part existed at this location. This indication is on the hot-leg near the flow distribution baffle.

Crack-like indications were found at the top of the tubesheet in all four steam generators and near the tube-end in steam generators B and C. All crack-like indications were on the hot-leg side of the steam generator. The crack-like indications near the top of the tubesheet were attributed to outside-diameter initiated stress corrosion cracking. Of the 11 tubes with crack-like indications, 10 contained circumferentially oriented indications and 1 contained an axially oriented indication. The circumferential indications were at the bottom of the hydraulic expansion transition. The largest circumferential indications measured 215 degrees and had a percent degraded area of 40 percent. The axial indication began at the bottom of the hydraulic expansion transition and extended into the expanded section of the tube inside the tube sheet. Portions of two of the tubes with outside-diameter initiated indications at the top of the tubesheet were removed for destructive examination including the axial indication and one circumferential indication. The crack-like indications near the hot-leg tube ends were attributed to primary water stress corrosion cracking. Twenty-seven tubes contained crack-like indications. Of these, 21 had axially oriented indications and 6 had circumferentially oriented indications. Many of the tube end crack-like indications were in row 1 tubes. All of the tubes with tube end crack-like indications were left in service because they did not exceed the repair criteria for tube end indications (as discussed above).

One tube was identified with a 159 degree geometric discontinuity near the tube end. As discussed above this tube was plugged. Given the location of the signal and its circumferential character this tube was plugged even though it was not considered flawed.

Portions of two tubes were removed from steam generator D for destructive examination to characterize the morphology of the outside-diameter initiated indications detected near the top of the tubesheet on the hot-leg side of the steam generator during RFOs 13 and 14. This included the axial indication (in row 11, column 62) and the circumferential indication with the largest amplitude (in row 12, column 98). The circumferential indication with the largest amplitude did not have the largest measured size in terms of circumferential extent, maximum depth, or percent degraded area.

For the tubes being pulled, the expansion joint in the tubesheet was relaxed using a tungsten inert gas relaxation process. The tubes were then to be cut below the second tube support plate on the hot-leg side of the steam generator. This portion of the tubes would then be pulled through the tubesheet and cut into segments of various lengths.

The first four segments of the tube with the axial indication (i.e., row 11, column 62) were removed from the steam generator as expected (which included about 86 cm (34 in.) of the tube); however, after the fourth segment of the tube was cut, the remaining portion of the tube sprang back into the tubesheet since the tube had not been completely cut.

An eddy current probe was inserted into the cold-leg of the tube in row 11, column 62; however the probe could not be inserted past the seventh support plate on the cold-leg side of the SG (i.e., it could not be inserted into the U-bend region of the tube). Eighteen tubes were identified as being affected because of the tube pull operation. Of these 18 tubes, three tubes could not pass an eddy current probe. This included the pulled tube and two tubes below the pulled tube (i.e., row 9, column 62, and row 10, column 62). The other 15 tubes were in close proximity to other tubes. All of these tubes had a different eddy current signature than was present during the examinations performed on these tubes earlier in RFO 14. A visual inspection of this region showed that the tubes were in close proximity in the U-bend region and between the sixth and seventh tube support plates. The scope of the eddy current examinations discussed above included a one-to-two tube border around those tubes that were in close proximity (a two-tube border was maintained in the direction where the damage was occurring).

A video probe inspection was performed on the inside of the tube in row 11, column 62. This inspection revealed minor scarring on the inside surface of the tube, but there was no location where the tube was cut. Because the tube in row 11, column 62 was not cut below the second tube support plate, the whole tube was being pulled through the tubesheet (rather than just the portion of the tube below the second tube support plate). This had an effect on the neighboring tubes because row 11, column 62, was being pulled toward other tubes.

The tubes that could not pass an eddy current probe would not permit the installation of a stabilizer through the U-bend region (A stabilizer is a wire cable installed inside a tube that prevents a tube that may sever from affecting a neighboring tube. The U-bend stabilizers are 12.8 m (505 in.) long and run from the hot-leg tube end through the seventh tube support on the cold-leg. The stabilizer ends between supports on the cold-leg.) Since these tubes would not permit the installation of a stabilizer, the tubes surrounding these tubes were plugged and stabilized. Thirty-three tubes were plugged because of the removal of portion of the tube in row 11, column 62. This included all tubes that were in close proximity to a neighboring tube.

Before plugging the tube in row 11, column 62, the tube was hardrolled into the tubesheet to prevent the tube from rotating and pulling out of the tubesheet. In addition, a 12-foot stabilizer was installed in the tube in row 11, column 62. The stabilizer has a sleeve-like device to further stiffen the tube. The stabilizer will extend about 1 foot above the second tube support plate.

There was no indication that damage occurred at the AVBs or at the seventh tube support plate. The axial indication in row 11, column 62, was removed for destructive examination.

The forces used to pull the tube in row 11, column 62, were about 11,000 pounds. The tube with the circumferential indication was pulled (after verifying through visual examination that the tube was fully cut). It took 9,000 pounds of force to break the tube free from the tubesheet. After the expanded part of the tube was removed from the steam generator (about 53 cm or 21 in.), the remaining portion of the tube essentially fell out of the steam generator.

The destructive examination of the pulled tubes confirmed the presence of outside-diameter initiated intergranular stress corrosion cracking within the expansion transition at the top of the tubesheet. Three axial cracks were found in the tube at row 11, column 62. The cracks were circumferentially separated by about 55-degrees and were 100 percent throughwall. The maximum depth of these indications was estimated by eddy current to be about 77 percent throughwall. Circumferential cracking was found around the entire circumference of the tube in row 12, column 98. The maximum depth from the destructive examination was 80 percent throughwall whereas the eddy current examination estimated the flaws to be 54 percent throughwall. The percent degraded area was 21 percent from the destructive examination and was estimated to be 7.3 percent from the eddy current inspection. Both tubes were burst tested and both had burst pressures in excess of three times the normal operating differential pressure. The microstructure indicated relatively low amounts of intergranular carbides and high amounts of intragranular carbides indicating that the mill-annealing temperature may have been too low to put carbon/carbides into solution. Carbon in solution is necessary for the thermal treatment process to precipitate the carbides at the grain boundaries (and thereby improve corrosion resistance). More information concerning the results of destructive and non-destructive examination of these pulled tubes can be found in the pulled tube report (ADAMS Accession No. ML100560265).

On September 24, 2009, the steam generator portion of the Vogtle 1 technical specifications was revised to limit the extent of inspection in the tubesheet region. Specifically, the technical specifications were revised to exclude the portion of tube that is more than 33.27 cm (13.1 in.) below the top of the tubesheet from inspection (i.e., approximately the lowermost 20.3 cm (8 in.) of tube in the tubesheet was excluded from inspection, and hence any flaws that may exist in this region are permitted to remain in service). This revision was only applicable for RFO 15 and the subsequent operating cycle (ADAMS Accession No. ML092170782).

There was no evidence of primary-to-secondary leakage during Cycle 15 (spring 2008 to fall 2009); however, during plant shutdown, a few radiation monitor alarms indicated the presence of activity on the secondary side of the plant. Based on water chemistry samples, the primary-to-secondary leakage was from steam generator C. The leak rate was too small to measure. With static pressure from the water on the secondary side of steam generator C, there was no leakage observed on the primary side of the steam generator.

During RFO 15 in 2009, 100 percent of the tubes in steam generators B and C were inspected full length with a bobbin coil, except for the U-bend region of tubes in rows 1 and 2. In addition, the following tubes in steam generator D were inspected full length with a bobbin coil: a

two-tube box of tubes around the stabilized tubes surrounding the 2008 tube pull location at row 11, column 62, and the tubes in columns 61, 62, and 63 in rows 14 through 25 (the tubes above the pulled tube). In addition to the bobbin coil inspections, a rotating probe equipped with a plus-point coil was used to inspect:

- 100 percent of the tubes from 7.6 cm (3 in.) above to 7.6 cm (3 in.) below the top of the tubesheet on the hot-leg side in all four steam generators
- the U-bend region of 100 percent of row 1 and row 2 tubes in all four steam generators, the U-bend region of 20 percent of row 3 tubes in steam generator C
- 35 percent of the tubes from 7.62 cm (3 in.) above to 35.6 cm (14 in.) below the top of the tubesheet on the hot-leg side in all four steam generators (which resulted in almost 100 percent of the bulges and overexpansions in the steam generators being inspected)
- 25 percent of the tubes from 7.6 cm (3 in.) above to 7.6 cm (3 in.) below the top of the tubesheet on the cold-leg side of steam generators B and C
- 100 percent of dents and dings with bobbin voltage amplitudes greater than or equal to 2 volts in the hot-leg straight length in steam generators B and C

In addition to these eddy current inspections, all tube plugs in all four steam generators were inspected visually. These latter inspections did not reveal any evidence that the plugs were leaking.

As a result of these inspections, 25 tubes were plugged—2 for wear at the AVBs, 20 for circumferentially oriented outside-diameter stress corrosion cracking at the top of the tubesheet, 1 for axially oriented primary water stress corrosion cracking at the hot-leg tangent point, 1 for a permeability variation, and 1 for a restriction.

The only steam generator tube degradation mechanisms observed during RFO 15 were (1) wear at the AVBs, (2) wear attributed to loose parts, (3) wear attributed to maintenance activities, (4) circumferentially oriented outside-diameter stress corrosion cracking at the top of the tubesheet on the hot-leg side of the steam generator, and (5) axially oriented primary water stress corrosion cracking at the hot-leg tangent point in a row 1 tube.

A total of 152 indications of wear at the AVBs were detected in 73 tubes in steam generator B and 154 indications of wear at the AVBs were detected in 85 tubes in steam generator C. The maximum depth reported for the AVB wear indications was 46 percent throughwall.

Ten indications of wear attributed to loose parts were detected during RFO 15. Six indications of wear in three tubes were attributed to past application of UEC to the steam generators. These indications have not changed since discovery in RFO 13. One indication of wear attributed to PPC was detected in RFO 15. This indication has not changed in the last three inspections of the tube.

Twenty tubes were identified with either single or multiple circumferentially oriented indications of outside-diameter stress corrosion cracking at the bottom of the hydraulic expansion transition at the top of the tubesheet on the hot-leg side of the steam generators. The percent degraded area for these indications ranged up to 19.3 percent, and the largest amplitude was 0.31 volts. Many of these circumferential indications were in tubes in low rows and high columns.

One tube was identified with an axially oriented primary water stress corrosion crack at the hot-leg tangent point in a row 1 tube. The crack indication was approximately 7.9 cm (3.1 in.) above the seventh hot-leg tube support. The indication was close to the apex of the tube on the extrados of the tube. The crack indication is next to a manufacturing indication. There was no change in the eddy current signal for this manufacturing indication from the preservice inspection in 1986 through approximately 2003. The axial length of the crack indication was about 1.4 cm (0.54 in.), the maximum depth was 100 percent throughwall, and the voltage amplitude, as measured from the plus-point coil, was 3.09 volts. This tube was in-situ pressure tested and there was no leakage observed at normal operating differential pressures. At the differential pressure associated with main steam line break conditions, the leak rate through the flaw was about 0.008 lpm (0.002 gpm). The tube did not burst at three times the normal operating differential pressure, and the leakage under this condition was about 0.34 lpm (0.09 gpm). The flaw in this tube was suspected to be the cause of the primary-to-secondary leakage observed during shutdown for RFO 15.

The U-bend region of this tube was inspected in prior outages. The U-bend region was inspected with a bobbin coil in 1986 (preservice inspection), 1991, 1993, 1997, and 2000. A rotating probe examination of the U-bend region of this tube was also performed in 1997, 2003, and 2009. The prior inspections of this tube indicated the presence of a manufacturing indication, referred to as a Blairsville bump (because the bump was most likely introduced during bending of the tube at a facility in Blairsville, PA). This bump is at the start of the bent region of the tube (i.e., the start of the U-bend region). During the review of the bobbin coil data obtained in 2000, one of the analysts reviewing the data (typically two analysts review all eddy current data) identified a nonquantifiable indication at the location where the crack-like indication was eventually discovered. This indication was eventually dismissed by the resolution analyst (an analyst who oversees the review of the primary and secondary data analysts) because the 1997 rotating probe examination indicated that no flaws were present at this location, the bobbin coil data indicated that the signal had not changed since the 1986 inspection, and there was a general absence of any cracking in tubes fabricated from thermally treated Alloy 600 tubing at the time of the inspection. During the review of the 2003 rotating probe data, an axial indication was reported by one of the analysts at the location where the crack-like indication was eventually discovered. This indication was also dismissed by the resolution analyst because the indication from the rotating probe did not change appreciably from 1997 (1.75 volts as measured from the 300-kHz channel) to 2003 (1.83 volts as measured from the 300-kHz channel).

As discussed in NRC IN 2010-21, “Crack-Like Indication in the U-Bend Region of a Thermally Treated Alloy 600 Steam Generator Tube,” dated October 6, 2010, NRC staff reviewed the 2003 and 2009 rotating probe eddy current data for the tube in row 1, column 20. Although NRC staff did not have all of the information available to the licensee, NRC staff’s review of the 2003 rotating probe data indicated the presence of a flaw-like signal. These results highlight the limitation of confirming flaw signals based on signals exhibiting change from one inspection to the next and the difficulties in detecting new or unexpected forms of degradation.

One tube was plugged because of a restriction. The restriction was about 6.76 cm (2.66 in.) above the top of the tubesheet on the hot-leg side of the steam generator. Although a probe could be pushed past the location of the restriction when the probe was not rotating, once the probe was rotating, it would stop rotating at the point of the restriction. This tube was last inspected during RFO 14. Visual inspections indicated no abnormal indications or damage on

the secondary side of the tube. It is suspected that mechanical damage on the inside diameter of the tube from the rotating probe motor most likely caused the probe to stop rotating.

Inspection and maintenance on the secondary side of the steam generators were performed during RFO 15. Top of tubesheet sludge lancing, FOSAR, and upper internal steam drum visual inspections were performed in all four steam generators. In addition, a UBIB inspection and an inspection of the seventh tube support plate was performed in steam generator A. Sludge lancing removed 25 pounds of material from all four steam generators. The upper internals inspection in all four steam generator indicated mild erosion/corrosion on the swirl vanes and mild flow accelerated corrosion on the feedring. No anomalous conditions were identified during the UBIB inspection and the inspection of the seventh tube support plate in steam generator A. Visual inspection of the area where a tube removal (tube pull) in steam generator D resulted in damaging several tubes revealed no indication of movement of the tubes.

On March 14, 2011, the steam generator portion of the Vogtle 1 technical specifications was revised to limit the extent of inspection in the tubesheet region. Specifically, the technical specifications were revised to exclude the portion of tube that is more than 38.6 cm (15.2 in.) below the top of the tubesheet from inspection (i.e., approximately the lowermost 15.24 cm (6 in.) of tube in the tubesheet was excluded from inspection, and hence any flaws that may exist in this region are permitted to remain in service). This revision was only applicable for RFO 16 and the subsequent operating cycle (ADAMS Accession No. ML110660264).

There was no evidence of primary-to-secondary leakage during Cycle 16 (fall 2009 to spring 2011).

During RFO 16 in 2011, 100 percent of the tubes in steam generators A and D were inspected full length with a bobbin coil, except for the U-bend region of tubes in rows 1 and 2. In addition to the bobbin coil inspections, a rotating probe equipped with a plus-point coil was used to inspect:

- 100 percent of the tubes from 7.62 cm (3 in.) above to 38.6 cm (15.2 in.) below the top of the tubesheet on the hot-leg side in all four steam generators
- the U-bend region of 100 percent of row 1 and row 2 tubes in all four steam generators
- 25 percent of the tubes from 7.6 cm (3 in.) above to 7.6 cm (3 in.) below the top of the tubesheet on the cold-leg side of steam generators A and D
- 25 percent of dents and dings with bobbin voltage amplitudes greater than or equal to 2 volts in the hot-leg straight length in all four steam generators

In addition to these eddy current inspections, all tube plugs in all four steam generators were inspected visually. These latter inspections did not reveal any evidence that the plugs were leaking.

As a result of these inspections, two tubes were plugged—one for wear attributed to a loose part and one for an axially oriented outside-diameter stress corrosion crack indication below the bottom of the hot-leg expansion transition.

The only steam generator tube degradation mechanisms observed during RFO 16 were wear at the AVBs, wear attributed to loose parts, and axially oriented outside-diameter stress corrosion cracking below the bottom of the expansion transition.

A total of 124 indications of wear at the AVBs were detected in 72 tubes in steam generator A and 188 indications of wear at the AVBs were detected in 104 tubes in steam generator D. The maximum depth reported for the AVB wear indications was 35 percent throughwall.

Ten indications of wear attributed to loose parts were detected during RFO 16.

One tube was identified with an axially oriented indication of outside-diameter stress corrosion cracking, which was below the bottom of the hydraulic expansion transition at the top of the tubesheet on the hot-leg side of the steam generator. The indication had a length of 3.3 mm (0.13 in.) and a depth of 54.2 percent throughwall.

Inspection and maintenance on the secondary side of the steam generators were performed during RFO 16. Top of tubesheet sludge lancing and FOSAR were performed in all four steam generators. FOSAR included the annulus and tube lane region including peripheral tubes, historical foreign objects, and possible loose part indications from the eddy current examination. Sludge lancing removed 23.5 pounds of material from all four steam generators. Based on eddy current data, there was no evidence of change in the area where a tube removal (tube pull) in steam generator D resulted in damaging several tubes.

On September 10, 2012, the steam generator portion of the Vogtle 1 technical specifications was revised to limit the extent of inspection in the tubesheet region. Specifically, the technical specifications were revised to exclude the portion of tube that is more than 38.6 cm (15.2 in.) below the top of the tubesheet from inspection (i.e., approximately the lowermost 15.24 cm (6 in.) of tube in the tubesheet was excluded from inspection, and hence any flaws that may exist in this region are permitted to remain in service (ADAMS Accession No. ML12216A056)).

There was no evidence of primary-to-secondary leakage during Cycle 17 (spring 2011 to fall 2012).

During RFO 17 in 2012, 100 percent of the tubes in steam generators B and C were inspected full length with a bobbin coil, except for the U-bend region of tubes in rows 1 and 2. In addition to the bobbin coil inspections, a rotating probe equipped with a plus-point coil was used to inspect:

- 100 percent of the tubes from 7.62 cm (3 in.) above to 38.6 cm (15.2 in.) below the top of the tubesheet on the hot-leg side in all four steam generators
- the U-bend region of 100 percent of row 1 and row 2 tubes in all four steam generators
- 25 percent of dents and dings with bobbin voltage amplitudes greater than or equal to 2 volts in the hot-leg straight length in all four steam generators

In addition to these eddy current inspections, visual inspections were performed on all tube plugs and the low lying areas of the channel heads in all four steam generators. The inspection of the plugs did not reveal any evidence of boron deposits around the plugs nor was there any evidence of degradation of the plugs. There was no evidence of degradation in the channel head.

As a result of these inspections, three tubes were plugged. All of these tubes were plugged for wear at the AVBs.

The only steam generator tube degradation mechanisms observed during RFO 17 were wear at the AVBs, wear attributed to maintenance activities, and wear attributed to loose parts.

A total of 181 indications of wear at the AVBs were detected in 91 tubes in steam generator B and 210 indications of wear at the AVBs were detected in 104 tubes in steam generator C. The maximum depth reported for the AVB wear indications was 44 percent throughwall.

Ten indications of wear attributed to loose parts were detected during RFO 17. Most of these indications have not changed in size since prior inspections.

Seven indications of wear in four tubes were attributed to past application of UEC to the steam generators. These indications have not changed since discovery in RFO 13. Four indications of wear attributed to PPC were detected in RFO 17. These indications have not changed in size since the prior inspection. Two indications in two tubes were attributed to wear associated with the sludge lance monorail.

Inspection and maintenance on the secondary side of the steam generators were performed during RFO 17. Top of tubesheet sludge lancing and FOSAR were performed in all four steam generators. The FOSAR included the annulus and tubelane region including peripheral tubes, historical foreign objects, and possible loose part indications from the eddy current examination.

On September 26, 2013, the steam generator portion of the Vogtle 1 technical specifications was revised making them consistent with TSTF-510 (ADAMS Accession No. ML13218B274).

### 3.3.5 Vogtle 2

Tables 3-25, 3-26, and 3-27 summarize the information discussed below for Vogtle 2. Table 3-25 provides the number of full-length bobbin inspections and the number of tubes plugged and deplugged during each outage for each of the four steam generators. Table 3-26 lists the reasons why the tubes were plugged. Table 3-27 lists tubes plugged for reasons other than wear at the AVBs.

Vogtle 2 has four Westinghouse model F steam generators. The licensee numbers its tube supports from the hot-leg flow distribution baffle (FBH or BPH) to 7H on the hot-leg side of the steam generator and from FBC/BPC to 7C on the cold-leg side (Figure 2-4).

During RFO 9 in 2002, 100 percent of the tubes in steam generators A and D were inspected full length with a bobbin coil, with the exception of the U-bend region of tubes in rows 1 and 2. In addition to the bobbin coil inspections, a rotating probe equipped with a plus-point coil was used to inspect:

- 50 percent of the tubes (including any tubes not examined in RFO 7) from 7.6 cm (3 in.) above to 7.6 cm (3 in.) below the top of the tubesheet on the hot-leg side in steam generators A and D

- the U-bend region of 60 percent of row 1 and row 2 tubes (including any tubes not examined in RFO 7) in steam generators A and D

- 100 percent of the dents in the U-bend region with bobbin voltage amplitudes greater than or equal to 5 volts in steam generators A and D

In addition, visual inspections were performed on tube plugs.

As a result of these inspections, two tubes were plugged. All tubes were plugged for wear at the AVBs.

The only steam generator tube degradation mechanisms observed during RFO 9 were wear at the AVBs and wear attributed to loose parts.

Sixty-nine indications of wear at the AVBs were detected in 45 tubes in steam generator A and 136 indications of wear at the AVBs were detected in 79 tubes in steam generator D. The maximum depth reported for the AVB wear indications was 45 percent throughwall.

Two indications of wear attributed to loose parts were detected during RFO 9.

The feedwater ring weld backing rings were inspected during RFO 9, and the results were acceptable. Future inspections of these backing rings are planned to be performed at least once every six refueling outages.

All RFO 7 bobbin data for steam generators A and D was reviewed to determine if any tubes exhibited an eddy current offset that could indicate higher residual stresses in the tubes (and therefore higher susceptibility to cracking). Cracking associated with tubes with an eddy current offset was observed at Seabrook in 2002. No indications of an eddy current offset were identified in the RFO 7 bobbin data for steam generators A or D.

On November 24, 2002, both Vogtle units were shut down because of high sodium concentrations in the feedwater system. The sodium was introduced into the feedwater system when sodium phosphate rather than methoxypropylamine was added to the feedwater system in both units. Methoxypropylamine is normally added to the feedwater system for corrosion control.

There was no evidence of primary-to-secondary leakage during Cycle 10 (fall 2002 to spring 2004).

During RFO 10 in 2004, 100 percent of the tubes in steam generators B and C were inspected full length with a bobbin coil, with the exception of the U-bend region of tubes in rows 1 and 2. In addition to the bobbin coil inspections, a rotating probe equipped with a plus-point coil was used to inspect:

- 100 percent of the tubes from 7.6 cm (3 in.) above to 7.6 cm (3 in.) below the top of the tubesheet on the hot-leg side in all four steam generators

- the U-bend region of 50 percent of row 1 and row 2 tubes in steam generators B and C

- 100 percent of the dents and dings in the straight length portion of the tubes on the hot-leg side of steam generators B and C with bobbin voltage amplitudes greater than or equal to 5 volts

In addition, a rotating probe equipped with a plus-point coil was used to inspect a sample of tubes that were possibly damaged because of the phosphate chemistry excursion discussed above. In addition, visual inspections were performed on tube plugs.

As a result of these inspections, 11 tubes were plugged—1 for wear at the AVBs, 1 for a permeability variation, and 9 for indications originally attributed to circumferentially oriented outside diameter stress corrosion cracking at the expansion transition.

The only steam generator tube degradation mechanisms observed during RFO 10 were wear at the AVBs and circumferentially oriented outside-diameter stress corrosion cracking at the expansion transition.

A total of 102 indications of wear at the AVBs were detected in 50 tubes in steam generator B and 28 indications of wear at the AVBs were detected in 18 tubes in steam generator C. The maximum depth reported for the AVB wear indications was 43 percent throughwall.

Nine indications that were originally attributed to circumferentially oriented outside-diameter stress corrosion cracking were identified at the top of the hot-leg tubesheet during RFO 10. The indications were within or at the hydraulic expansion transition. Of these nine indications, one was in steam generator A, three were in steam generator B, three were in steam generator C, and two were in steam generator D.

To further characterize the nature of the six indications in steam generators B and C, additional inspections were performed including slow speed rotating probe inspections, magnetically biased rotating probe inspections, and ultrasonic testing (UT). Of the six indications, UT confirmed four were present. For the other two, the licensee could not rule out that the indications were below the threshold of detection for the UT equipment. The indications were sized with the plus-point coil. Most of the indications did not extend more than 60 degrees around the tube circumference; however, one did extend to 101 degrees. The deepest flaw was estimated to be 38 percent throughwall.

Eight of the nine circumferentially oriented indications were contained within a 20-tube by 20-tube box near the center of the tube bundle. The UT examination did not confirm the ninth indication as being present. The sludge at the top of the tubesheet is characterized as collars of deposits surrounding the tubes rather than a consistent height of material between the tubes. The average sludge height for steam generators B and C was estimated to be about 2.54 cm (1 in.), with a maximum sludge height of about 6.35 cm (2.5 in.). The maximum sludge height is only observed on a small number of tubes. The licensee considers the top of the tubesheet region as being relatively clean.

Because of the discovery of these indications, portions of two tubes with circumferential indications were pulled from steam generator B (row 11, column 60, and row 12, column 59) for destructive examination. These tubes are in the central region of the tube bundle and therefore are not supported by the flow distribution baffle. These tubes were cut below the second tube support plate on the hot-leg side. The force needed to break the tube in row 12, column 59, free from the tubesheet and the tube support plate was about 3,600 pounds while the force needed to break the tube free in row 11, column 60, was about 3,300 pounds. The licensee indicated that based on the tube pull force measurements and the visual observation of a limited amount of deposits on the tube in the tube support plate region, no evidence existed to suggest that the two pulled tubes were locked-in at the tube support plate. Welded plugs were installed on the

hot-leg side and mechanical plugs were installed on the cold-leg side in the tube holes of these two tubes.

The laboratory examination indicated that both pulled tubes exhibited a ring of gray/brownish deposit at, and slightly above, the expansion transition region. The height of this deposit was about 12.7 mm (0.5 in.) and it was about 0.1 to 0.2 mm (4 to 8 mils) in thickness. A dark grayish deposit was observed extending about 2.54 to 3.8 cm (1 to 1.5 in.) above the collar deposit on both tubes. A relatively thin and uniform gray oxide was noted on all remaining tube surfaces above the top of the tubesheet region. Although laboratory eddy current and ultrasonic testing detected signals that indicate deposits, none of the field signals indicative of crack-like indications were present in the laboratory-obtained data. Destructive (metallographic) examination of the top of the tubesheet region of row 12, column 59, showed no evidence of degradation. Although there was indication of copper and lead in the oxide deposit on the tube, no indication of corrosion initiation existed. Metallographic examination was not performed on the portion of the tube in row 11, column 60. The root cause of the field flaw-like signals was not identified; however, the licensee concluded that the false positive indications could be the result of the non-homogeneous scale or deposits on the tubes at the top of the tubesheet on the hot-leg side of the steam generators.

The laboratory evaluation of the field eddy current data indicated that the flaw-like signals from the eddy current data were not at the same azimuthal location as the ultrasonic indications. The flaw-like signals from the eddy current data were separated from the ultrasonic indications by about 90 to 150 degrees. Because of the findings from the laboratory evaluation, the licensee investigated techniques for differentiating flaw-like signals from deposits using eddy current techniques.

For RFO 10, all RFO 8 bobbin data from steam generators B and C were reviewed to determine if any tubes exhibited an eddy current offset that could indicate higher residual stresses was present. Because of this review, one high row tube was identified as having an eddy current offset. This tube (in row 40, column 48, in steam generator B) had two indications of wear at the AVBs, but did not contain any precursor signals indicative of stress corrosion cracking. This tube was left in service.

No evidence of tube damage from the phosphate chemical excursion was found during the rotating probe examinations.

On September 21, 2005, the steam generator portion of the Vogtle 2 technical specifications was revised to limit the extent of inspection in the hot-leg tubesheet region. Specifically, the technical specifications were revised to exclude the portion of tube that is more than 43.2 cm (17 in.) below the top of the tubesheet from inspection (i.e., approximately the lowermost 10.2 cm (4 in.) of tube in the tubesheet on the hot-leg side was excluded from inspection, and hence any flaws that may exist in this region are permitted to remain in service). This revision was applicable only to RFO 11 and the subsequent operating cycle (ADAMS Accession No. ML052630014).

During RFO 11 in 2005, 100 percent of the tubes in steam generators A and D were inspected full length with a bobbin coil, with the exception of the U-bend region of tubes in rows 1 and 2. In addition to the bobbin coil inspections, a rotating probe equipped with a plus-point coil was used to inspect:

- 50 percent of the tubes from 7.6 cm (3 in.) above to 7.6 cm (3 in.) below the top of the tubesheet on the hot-leg side in steam generators A and D

- 100 percent of the overexpansions (greater than or equal to 0.038 mm (1.5 mils)) and bulges (with bobbin voltage amplitudes greater than or equal to 18 volts) within the upper 43.2 cm (17 in.) of the tubesheet on the hot-leg side in steam generators A and D

- the U-bend region of 50 percent of row 1 and row 2 tubes in steam generators A and D

- 100 percent of the dents and dings in the straight length portion of the tubes on the hot-leg side of the steam generator with bobbin voltage amplitudes greater than or equal to 5 volts in steam generators A and D

- about 60 to 80 tubes at the sixth and seventh tube support plates on the hot-leg side to ascertain the degree of blockage of the quatrefoil openings by deposits in steam generators A and D

In addition, tube plugs were inspected visually.

As a result of these inspections, no tubes were plugged.

The only steam generator tube degradation mechanisms observed during RFO 11 were wear at the AVBs and wear attributed to loose parts.

Sixty-six indications of wear at the AVBs were detected in 44 tubes in steam generator A, and 151 indications of wear at the AVBs were detected in 84 tubes in steam generator D. The maximum depth reported for the AVB wear indications was 34 percent throughwall.

Two indications of wear attributed to loose parts were detected in two tubes during RFO 11.

An assessment of blockage of the tube support plate openings was performed during RFO 11. This assessment indicated that deposits were largely concentrated in the upper portion of the bundle on the hot-leg side. On the hot-leg side of the seventh tube support plate, the lobes that permit the passage of the water-steam mixture were not blocked; however, there were some quatrefoil lobes that were partially blocked by rings of deposits on the tubes on the bottom side of the tube support plate, with one location estimated to be 20-30 percent blocked. There were no observable gaps between the tubes and the tube support plate quatrefoil lands on the hot-leg side for tube support plate 7 (i.e., the deposit on the tube and the tube support plate merge to form a continuous field). The gaps between the tubes and the tube support plates on the cold-leg side were visible, and only partially filled in a fraction of the tubes. On the hot-leg side of the sixth tube support plate, the lobes that permit the passage of the water-steam mixture were not blocked; however, most of the gaps between the tubes and the tube support plate quatrefoil lands were not visible. On the cold-leg side of the sixth tube support plate, these gaps are largely unfilled. The blockage observed has not resulted in any discernible effect on steam generator water level control.

For RFO 11, all RFO 9 bobbin data from steam generators A and D were reviewed to determine if an eddy current offset that could indicate higher residual stresses was present. No indications of an eddy current offset were identified in the low-row tubes in the RFO 9 bobbin data for steam generators A or D.

During RFO 11, FOSAR was performed in each of the four steam generators. FOSAR included visual inspection of the annulus area at the top of the tubesheet and inspection of the tube-lane, which runs through the center of the bundle at the top of the tubesheet. The FOSAR also included visual inspection of possible loose part indications identified during the eddy current inspection. Possible loose part indications only were identified in the steam generator A eddy current data. Eleven foreign objects were detected in steam generators A (three objects), B (two objects), and D (six objects). Of these 11 objects, 10 were removed. The foreign object that could not be retrieved was in the tube lane of steam generator A and was characterized as scale or a metal turning measuring 6.35 mm (0.250 in.) by 7.938 mm (0.03125 in.) by 3.177 mm (0.125 in.). A licensee analysis showed that leaving this object in the steam generator would not compromise tube integrity before the next inspection.

On August 28, 2006, Vogtle 2 revised the steam generator portion of their technical specifications making them performance-based consistent with TSTF-449 (ADAMS Accession No. ML062360577).

On September 12, 2006, the steam generator portion of the Vogtle 2 technical specifications was revised to limit the extent of inspection in the hot-leg tubesheet region. Specifically, the technical specifications were revised to exclude the portion of tube that is more than 43.2 cm (17 in.) below the top of the tubesheet from inspection (i.e., approximately the lowermost 10.2 cm (4 in.) of tube in the tubesheet on the hot-leg side was excluded from inspection, and hence any flaws that may exist in this region are permitted to remain in service). This revision was applicable only to RFO 12 and the subsequent operating cycle (ADAMS Accession No. ML062260302).

During RFO 12 in 2006, 100 percent of the tubes in steam generators B and C were inspected full length with a bobbin coil, with the exception of the U-bend region of tubes in rows 1 and 2. In addition to the bobbin coil inspections, a rotating probe equipped with a plus-point coil was used to inspect:

- greater than 50 percent of the tubes from 7.6 cm (3 in.) above to 7.6 cm (3 in.) below the top of the tubesheet on the hot-leg side (including areas of special interest identified at Vogtle 1 during RFO 13 such as the 216 low-row, high-column tubes) in steam generators B and C

- 100 percent of the overexpansions and bulges from 7.62 cm (3 in.) above to 43.2 cm (17 in.) below the top of the tubesheet on the hot-leg side (which equates to 31 tubes in steam generator B and 25 tubes in steam generator C) in steam generators B and C

- the U-bend region of 50 percent of row 1 and row 2 tubes in steam generators B and C

- 100 percent of the dents and dings in the U-bends and the straight length portion of t he tubes on the hot-leg side of the steam generator with bobbin voltage amplitudes greater than or equal to 5 volts in steam generators B and C

In addition, tube plugs were inspected visually.

As a result of these inspections, no tubes were plugged.

The only steam generator tube degradation mechanisms observed during RFO 12 were wear at the AVBs and wear attributed to maintenance equipment.

A total of 116 indications of wear at the AVBs were detected in 56 tubes in steam generator B, and 26 indications of wear at the AVBs were detected in 16 tubes in steam generator C. The maximum depth reported for the AVB wear indications was 39 percent throughwall.

The indication attributed to secondary-side maintenance tooling was visually inspected and there was no indication of a loose part at the location of the wear scar. The damage was suspected to have occurred during RFO 11.

During RFO 12, all four steam generators were chemically cleaned. Full-bundle chemical cleaning was performed to reduce the deposit loading so as to limit the potential for tube corrosion and to eliminate the potential that severe secondary fouling would cause significant power reductions. The compositions of the iron removal solutions were based on the anticipated sludge and tube deposit inventories. This chemical cleaning operation incorporated elements of the EPRI/SGOG process and employed several phases where temperature adjustments were made to facilitate dissolution in specific regions of the tube bundle such as the tube support plate openings and the top of tubesheet sludge region. Multiple rinse operations washed away the chemicals used to remove the residual iron before the copper-removal phase of the cleaning process. The process was completed after similar rinse steps following the copper-removal step. The chemical cleaning along with the follow-up mechanical cleaning techniques (e.g., CECIL) removed 4,957 pounds of deposits.

During RFO 12, FOSAR was performed in each of the four steam generators. The FOSAR included visual inspection of the annulus area at the top of the tubesheet (i.e., periphery of the tube bundle) and inspection of the tube-lane, which runs through the center of the bundle at the top of the tubesheet. FOSAR also included visual inspection of locations with wear attributed to possible loose parts (PLPs). Two small diameter wires and a screw were detected and removed during FOSAR. There was a limited amount of scale observed on the top of the tubesheet and no anomalous conditions were observed.

The CECIL system was deployed in each of the four steam generators after the chemical cleanings were completed to clean and inspect the top of the tubesheet. Inspections performed after the CECIL cleaning revealed only residual amounts of hard deposit on the top of the tubesheet.

During RFO 12, seventh tube support plate was inspected visually in select columns in the steam generators. The columns were free of foreign objects and sludge, and the quatrefoil holes were clean and open. No anomalous conditions were observed during the inspection of the seventh tube support plate.

On September 16, 2008, the steam generator portion of the Vogtle 2 technical specifications was revised to permit certain sized flaws near the tube end in both the hot- and cold-leg sides of the steam generator to remain in service. Specifically, the technical specifications were revised to (1) permit flaws having a circumferential component less than or equal to 203 degrees found in the portion of the tube below 43.2 cm (17 in.) from the top of the tubesheet and above 2.54 cm (1 in.) from the bottom of the tubesheet to remain in service, (2) require the removal from service all flaws having a circumferential component greater than 203 degrees found in the portion of the tube below 43.2 cm (17 in.) from the top of the tubesheet and above 2.54 cm (1 in.) from the bottom of the tubesheet, (3) require the removal from service all tubes with service-induced flaws between the top of the tubesheet and 43.2 cm (17 in.) below the top of

the tubesheet, and (4) permit all axial indications found in the portion of the tube below 43.2 cm (17 in.) from the top of the tubesheet to remain in service.

In addition, the technical specifications were modified to indicate that when more than one flaw with circumferential components is found in the portion of the tube below 43.2 cm (17 in.) from the top of the tubesheet and above 2.54 cm (1 in.) from the bottom of the tubesheet with the total of the circumferential components being greater than 203 degrees and the axial separation distance of less than 2.54 cm (1 in.), then the tube must be removed from service (overlapping portions of the flaws only need to be counted once in determining the total circumferential involvement of the flaws). For flaws within 2.54 cm (1 in.) of the bottom of the tubesheet, the technical specifications were modified to indicate (1) when one or more flaws with circumferential components are found and the total of the circumferential components exceeds 94 degrees, then the tube shall be removed from service and (2) when one or more flaws with circumferential components are found in the portion of the tube within 2.54 cm (1 in.) from the bottom of the tubesheet and within 2.54-cm (1-in.) axial separation distance of a flaw above 2.54 cm (1 in.) from the bottom of the tubesheet, and the total of the circumferential components found in the tube exceeds 94 degrees, then the tube shall be removed from service (overlapping portions of the flaws only need to be counted once in determining the total circumferential involvement of the flaws). This revision to the technical specifications was applicable only to RFO 13 and the subsequent operating cycle (ADAMS Accession No. ML082530038).

There was no evidence of primary-to-secondary leakage during Cycle 13 (i.e., spring 2007 to fall 2008).

During RFO 13 in 2008, 100 percent of the tubes in steam generators A and D were inspected full length with a bobbin coil, with the exception of the U-bend region of tubes in rows 1 and 2. In addition to the bobbin coil inspections, a rotating probe equipped with a plus-point coil was used to inspect:

- greater than 50 percent of the tubes from 7.6 cm (3 in.) above to 7.6 cm (3 in.) below the top of the tubesheet on the hot-leg side in steam generators A and D

- 40 percent of the tubes from the hot-leg tube end to 10.24 cm (4.03 in.) above the hot-leg tube end in steam generators A and D

- 34 tubes in steam generator A and 63 tubes in steam generator D from the hot-leg tube end to 7.62 cm (3 in.) above the top of the tubesheet (this resulted in inspecting 74 percent of the overexpansions (greater than 0.038 mm (1.5 mils) deviation in tube diameter) and bulges (signal greater than or equal to 18 volts as measured with a bobbin coil) that exist from 7.62 cm (3 in.) above to 43.2 cm (17 in.) below the top of the tubesheet on the hot-leg side in steam generator A and 88 percent of the bulges and overexpansions in the same region in steam generator D)

- 15 tubes in steam generator A and 61 tubes in steam generator D from the hot-leg tube end to 10.2 cm (4 in.) above the hot-leg tube end (this resulted in inspecting 71 percent of the bulges and overexpansions in this region in steam generator A and 54 percent of the bulges and overexpansions in this region in steam generator D)

- the U-bend region of 50 percent of row 1 and row 2 tubes (including all U-bends in these rows not inspected during RFO 11) in steam generators A and D

- 100 percent of the dents and dings in the U-bends with bobbin voltage amplitudes greater than or equal to 2 volts (with the total number of inspected dents and dings to constitute no less than 25 percent of the total dents and dings with bobbin voltage amplitudes greater than or equal to 2 volts and with any additional inspections being selected from the straight leg portion of the tubes on the hot-leg)

In addition, tube plugs were inspected visually, which revealed no evidence of plug leakage.

As a result of these inspections, one tube was plugged. This tube was plugged for wear at the AVBs.

The only steam generator tube degradation mechanisms observed during RFO 13 were wear at the AVBs, wear attributed to foreign objects, and wear from secondary-side cleaning activities.

About 70 indications of wear at the AVBs were detected in 45 tubes in steam generator A, and 178 indications of wear at the AVBs were detected in steam generator D. The maximum depth reported for the AVB wear indications was 44 percent throughwall.

Five volumetric indications were detected in four tubes during RFO 13. The maximum depth reported for these indications was 24 percent throughwall. At the time of the RFO 13 inspection, all of these indications were attributed to wear from secondary-side cleaning activities. However, in RFO 16, one of these five volumetric indications was reclassified as wear attributed to a foreign object. All five volumetric indications were observed in prior inspections and remain unchanged.

FOSAR was performed in steam generators A and D. In steam generator A, five possible loose part indications were visually inspected during the FOSAR. These inspections indicated that no foreign objects were present. There was, however, sludge agglomerations. In steam generator D, 12 foreign objects were identified during the FOSAR. Of these, only one was removed from the steam generator. An analysis by the licensee indicated it was acceptable to leave the 11 objects in place until the next inspection (i.e., for at least two cycles).

On September 24, 2009, the steam generator portion of the Vogtle 2 technical specifications was revised to limit the extent of inspection in the tubesheet region. Specifically, the technical specifications were revised to exclude the portion of tube that is more than 33.27 cm (13.1 in.) below the top of the tubesheet from inspection (i.e., approximately the lowermost 20.3 cm (8 in.) of tube in the tubesheet was excluded from inspection, and hence any flaws that may exist in this region are permitted to remain in service). This revision was only applicable for RFO 14 and the subsequent operating cycle (ADAMS Accession No. ML092170782).

There was no evidence of primary-to-secondary leakage during Cycle 14 (i.e., fall 2008 to spring 2010).

During RFO 14 in 2010, 100 percent of the tubes in steam generators B and C were inspected full length with a bobbin coil, with the exception of the U-bend region of tubes in rows 1 and 2. In addition to the bobbin coil inspections, a rotating probe equipped with a plus-point coil was used to inspect:

- 50 percent of the tubes in steam generators B and C from 7.62 cm (3 in.) above to 33.27 cm (13.1 in.) below the top of the tubesheet on the hot-leg side, which included the bulges (a signal greater than or equal to 18 volts as measured with a bobbin coil) and

overexpansions (greater than or equal to 1.5 mil deviation in tube diameter) that were not tested in RFO 12

- the U-bend region of 50 percent of row 1 and row 2 tubes (including all U-bends in these rows not inspected during RFO 12) in steam generators B and C

- 100 percent of the dents and dings in the straight leg portion of tubing in the hot-leg with bobbin voltage amplitudes greater than or equal to 2 volts in steam generators B and C (with the total number of inspected dents and dings to constitute no less than 25 percent of the total dents and dings with bobbin voltage amplitudes greater than or equal to 2 volts and with any other inspections being selected from the U-bend portion of the tubes)

In addition, tube plugs were inspected visually. These latter inspections revealed no degradation and there was no evidence of plug leakage.

As a result of these inspections, two tubes were plugged. These tubes were plugged for wear at the AVBs.

The only steam generator tube degradation mechanisms observed during RFO 14 were wear at the AVBs and wear attributed to secondary-side cleaning activities (interaction between the tube and sludge lance equipment).

A total of 132 indications of wear at the AVBs were detected in 65 tubes in steam generator B, and 50 indications of wear at the AVBs were detected in 30 tubes in steam generator C. The maximum depth reported for the AVB wear indications was 46 percent throughwall.

One indication of wear attributed to secondary-side cleaning activities was detected in steam generator C. The wear occurred before RFO 10. The maximum depth reported for this indication was 21 percent throughwall.

There are no low-row tubes (i.e., rows 1 through 10) in any of the four steam generators that have an eddy current offset that would indicate the tubes had elevated residual stresses. However, there are 108 high-row tubes (i.e., tubes in rows 11 and higher) that do not have the expected eddy current signal offset (23 tubes in rows 12 through 40 in steam generator A, 32 tubes in rows 13 through 49 in steam generator B, 31 tubes in rows 11 through 35 in steam generator C, and 22 tubes in rows 12 through 49 in steam generator D).

Inspection and maintenance on the secondary side of the steam generators were performed during RFO 14. Sludge lancing and FOSAR were performed in all four steam generators. Thirty-five pounds of sludge were removed from the steam generators. The FOSAR was performed in the tube lane. A UBIB visual inspection was performed in steam generator B. This inspection was from the top of tube support plate 3 to the bottom of tube support plate 7. There was no evidence of erosion, flow-accelerated corrosion, or cracking of the tube support plate ligaments. There was no flow hole blockage and there were no significant deposits in the quatrefoil shaped holes noted. The freespan region of the tubes was free of denting. There were no dense deposits identified in the tube bundle; however, light scale was observed on the tubes.

On March 14, 2011, the steam generator portion of the Vogtle 2 technical specifications was revised to limit the extent of inspection in the tubesheet region. Specifically, the technical specifications were revised to exclude the portion of tube that is more than 38.6 cm (15.2 in.)

below the top of the tubesheet from inspection (i.e., approximately the lowermost 15.2 cm (6 in.) of tube in the tubesheet was excluded from inspection, and hence any flaws that may exist in this region are permitted to remain in service). This revision was only applicable for RFO 15 and the subsequent operating cycle (ADAMS Accession No. ML110660264).

There was no evidence of primary-to-secondary leakage during Cycle 15 (i.e., spring 2010 to fall 2011).

During RFO 15 in 2011, 100 percent of the tubes in steam generators A and D were inspected full length with a bobbin coil, with the exception of the U-bend region of tubes in rows 1 and 2. In addition to the bobbin coil inspections, a rotating probe equipped with a plus-point coil was used to inspect:

- 50 percent of the tubes in steam generators A and D from 7.62 cm (3 in.) above to 38.6 cm (15.2 in.) below the top of the tubesheet on the hot-leg side, which included bulges (a signal greater than or equal to 18 volts as measured with a bobbin coil) and overexpansions (greater than or equal to 1.5 mil deviation in tube diameter) within this region

- the U-bend region of 50 percent of row 1 and row 2 tubes in steam generators A and D

- 50 percent of the dents and dings in the straight leg portion of tubing in the hot-leg and in the U-bend with bobbin voltage amplitudes greater than or equal to 2 volts in steam generators A and D

In addition, all tube plugs were inspected visually in steam generators A and D. These latter inspections revealed no evidence of plug leakage.

As a result of these inspections, one tube was plugged. This tube was plugged for wear at the AVBs.

The only steam generator tube degradation mechanisms observed during RFO 15 were wear at the AVBs, wear attributed to foreign objects, and wear from secondary-side cleaning activities.

A total of 76 indications of wear at the AVBs were detected in 48 tubes in steam generator A, and 184 indications of wear at the AVBs were detected in 109 tubes in steam generator D. The maximum depth reported for the AVB wear indications was 44 percent throughwall.

Two sets of potential loose-part indications were detected in steam generator A. Visual inspection of the regions did not identify any foreign objects. One tube near one of the locations with possible loose part indications had a wear indication measuring 8 percent throughwall.

Six indications of wear attributed to secondary-side cleaning were identified in five tubes during RFO 15. The maximum depth reported for these indications was 24 percent throughwall. There has been no change in these indications since the prior inspection in RFO 13.

Inspection and maintenance on the secondary side of the steam generators were performed during RFO 15. Top of tubesheet sludge lancing, FOSAR and upper internal steam drum inspections were performed in all four steam generators. FOSAR inspections included the annulus and the no-tube lane, including the peripheral tubes and possible loose part indications

identified during the eddy current inspections. Sludge lancing removed 17.5 pounds of material from the steam generators.

The upper internal steam drum inspections included the secondary moisture separators, primary moisture separators, downcomer barrel and tangential nozzle assemblies, all deck plates, and the feedwater distribution rings. Wall thickness measurements of all four feedwater rings were made using ultrasonic testing. Additional visual inspections were performed within the feedwater rings and their J-nozzles as well as visual inspection of the weld backing rings. All components were found to have a uniform coating of tightly adhering magnetite. None of the weld backing rings revealed changes from the inspections performed during RFO 9. Visual inspections within all four steam generator feedwater rings revealed signs of base material loss on a limited number of feedwater ring to J-nozzle joints. Ultrasonic thickness testing of the feedwater rings identified areas of local thinning. An evaluation indicated that the conditions are not expected to impair the thermal performance function or structural integrity of the feedwater rings or other upper steam drum components nor are they expected to develop loose fragments that could affect the steam generator tubes.

On September 10, 2012, the steam generator portion of the Vogtle 2 technical specifications was revised to limit the extent of inspection in the tubesheet region. Specifically, the technical specifications were revised to exclude the portion of tube that is more than 38.6 cm (15.2 in.) below the top of the tubesheet from inspection (i.e., approximately the lowermost 15.2 cm (6 in.) of tube in the tubesheet was excluded from inspection, and hence any flaws that may exist in this region are permitted to remain in service (ADAMS Accession No. ML12216A056)).

There was no evidence of primary-to-secondary leakage during Cycle 16 (i.e., fall 2011 to spring 2013).

During RFO 16 in 2013, 100 percent of the tubes in steam generators B and C were inspected full length with a bobbin coil, with the exception of the U-bend region of tubes in rows 1 and 2. In addition to the bobbin coil inspections, a rotating probe equipped with a plus-point coil was used to inspect:

- 100 percent of the tubes in steam generators B and C from 7.62 cm (3 in.) above to 38.6 cm (15.2 in.) below the top of the tubesheet on the hot-leg side, which included bulges (a signal greater than or equal to 18 volts as measured with a bobbin coil) and overexpansions (greater than or equal to 1.5 mil deviation in tube diameter) within this region

- 20 percent of the tubes in steam generators A and D from 7.62 cm (3 in.) above to 38.6 cm (15.2 in.) below the top of the tubesheet on the hot-leg side

- the U-bend region of 100 percent of row 1 and row 2 tubes in steam generators B and C

- 100 percent of the dents and dings in the straight leg portion of tubing in the hot-leg and in the U-bend with bobbin voltage amplitudes greater than or equal to 2 volts in steam generators B and C

In addition, all tube plugs were inspected visually in all four steam generators. All plugs were confirmed to be present and there was no indication of degradation in any of the tube plugs. Visual inspections of the channel heads in all four steam generators were also performed, and no degradation was observed.

As a result of these inspections, two tubes were plugged—one for wear at the AVBs, and one for circumferentially oriented outside-diameter stress corrosion cracking at the expansion transition.

The only steam generator tube degradation mechanisms observed during RFO 16 were (1) wear at the AVBs, (2) wear attributed to foreign objects, (3) wear from secondary-side cleaning activities, and (4) circumferentially oriented outside-diameter stress corrosion cracking at the expansion transition.

A total of 139 indications of wear at the AVBs were detected in 70 tubes in steam generator B and 66 indications of wear at the AVBs were detected in 35 tubes in steam generator C. The maximum depth reported for the AVB wear indications was 41 percent throughwall.

Wear attributed to loose parts was observed in two tubes in steam generator A and in one tube in steam generator D. All of the indications were at the top of the tubesheet on the hot-leg side and none exhibited any change since the prior inspection in RFO 15. The maximum depth reported for the wear attributed to loose parts was 20 percent throughwall. Visual inspections at locations with either possible loose part indications or wear attributed to possible loose parts resulted in either no loose part being identified or the presence of a sludge rock at the location.

One indication of wear attributed to secondary-side cleaning was identified during RFO 16. The maximum depth reported for this indication was 24 percent throughwall. There has been no change in this indication since the prior inspection in RFO 14.

One indication of outside-diameter stress corrosion cracking was detected in steam generator B in the tube in row 15, column 60 and was circumferentially oriented (a single circumferential indication), about 5 mm (0.2 in.) below the top of the tubesheet at the bottom of the expansion transition on the hot-leg side of the steam generator. The indication was detected with a rotating probe equipped with a plus-point coil and confirmed to be a flaw with a Ghent probe. The indication had a circumferential extent of 46.6 degrees, a maximum depth of 33 percent, and a calculated percent degraded area of 4.5 percent.

Inspection and maintenance on the secondary side of the steam generators were performed during RFO 16. Top of tubesheet sludge lancing and FOSAR were performed in all four steam generators. FOSAR inspections included the annulus and no-tube lane, including the peripheral tubes, possible loose part indications identified during the eddy current inspections, and locations where loose parts were known to exist.

On September 26, 2013, the steam generator portion of the Vogtle 2 technical specifications was revised making them consistent with TSTF-510 (ADAMS Accession No. ML13218B274).

### 3.3.6 Wolf Creek

Tables 3-28, 3-29, and 3-30 summarize the information discussed below for Wolf Creek. Table 3-28 provides the number of full-length bobbin inspections and the number of tubes plugged and deplugged during each outage for each of the four steam generators. Table 3-29 lists the reasons why the tubes were plugged. Table 3-30 lists tubes plugged for reasons other than wear at the AVBs.

Wolf Creek has four Westinghouse model F steam generators. The licensee numbers its tube supports from the hot-leg flow distribution baffle (FBH or BPH) to 7H on the hot-leg side of the steam generator and from FBC/BPC to 7C on the cold-leg side (Figure 2-4).

During RFO 12 in 2002, 100 percent of the tubes in steam generators B and C were inspected full length with a bobbin coil, with the exception of the U-bend region of tubes in rows 1 and 2. In addition to the bobbin coil inspections, a rotating probe equipped with a plus-point coil was used to inspect:

- 55 percent of the tubes (including all tubes in the periphery of the hot-leg) from 7.6 cm (3 in.) above to 7.6 cm (3 in.) below the top of the tubesheet on the hot-leg side in steam generators B and C
- the U-bend region of 50 percent of the row 1 and row 2 tubes in steam generators B and C
- all dents on the hot-leg side of the steam generator with bobbin voltage amplitudes greater than or equal to 5 volts in steam generators B and C

No tubes were inspected in steam generators A and D during RFO 12.

As a result of these inspections, nine tubes were plugged—8 for wear at the AVBs, and 1 for a circumferential anomaly (non-flaw like) just below the top of the tubesheet.

The only steam generator tube degradation mechanisms observed during RFO 12 were wear at the AVBs, wear attributed to loose parts, and wear attributed to maintenance activities.

During RFO 12, 711 indications of wear at the AVBs were detected in steam generator B, and 480 indications of wear at the AVBs were detected in steam generator C. The maximum depth reported for the AVB wear indications was 52 percent throughwall.

Thirteen tubes were identified with indications of wear attributed to loose parts. Most of these indications were near the top of the tubesheet. Ultrasonic examination of one of these indications confirmed that the indication was volumetric and did not indicate cracking.

Nine tubes had indications of wear attributed to maintenance activities (i.e., prior application of PPC) during RFO 12. Most of these indications were at the flow distribution baffle.

The tube with the circumferential anomaly was identified during the rotating probe examination. This was the first time the top of tubesheet region of this tube had been inspected with a plus-point coil. The circumferentially oriented indication was reported just below the top of the tubesheet. Ultrasonic inspection confirmed that there was a geometric indication at this location because of a small dimple on the tube.

During RFO 12, sludge lancing also was performed. After sludge lancing, FOSAR was performed. All tubes with possible loose part indications, as well as adjacent tubes, were inspected with a rotating probe equipped with a plus-point coil and visually inspected.

On May 10, 2002, there were indications of an unusual noise followed by an alarm in the loose part monitoring system. The noise was coming from steam generator D. On May 13, 2002, a plant shutdown was commenced. After the plant was shut down, visual inspections in the

channel head of steam generator D identified two loose parts. These parts were retrieved and characterized as a support pin nut and locking device (disc) from a guide tube support pin. There were no indications within the steam generator of serious damage to the tubes, tubesheet, welds, or the divider plate because of these loose parts. The skirts of the tube plugs were peened to various degrees. In addition, most of the entire inner surface of the channel head bowl was peened to various degrees. There was no indication of a foreign object present in any of the tubes; however, there were indications of scratching and displaced metal inside various tubes. These indications may have been the result of inspection equipment rather than a result of the loose parts. The objects removed were larger than the inside diameter of the tubing. No tubes were plugged because of damage from these loose parts.

In 2002, the bobbin coil data were reviewed to identify low-row (rows 1 through 10) tubes that potentially had high residual stress. None of the tubes exhibited an eddy current offset that would indicate the tubes had elevated residual stresses.

During RFO 13 in 2003, 100 percent of the tubes in steam generators A and D were inspected full length with a bobbin coil, with the exception of the U-bend region of tubes in rows 1 and 2. In addition to the bobbin coil inspections, a rotating probe equipped with a plus-point coil was used to inspect:

- 55 percent of the tubes from 7.6 cm (3 in.) above to 7.6 cm (3 in.) below the top of the tubesheet on the hot-leg side in steam generators A and D
- the U-bend region of 50 percent of the row 1 and row 2 tubes in steam generators A and D
- 100 percent of the dents and dings in the straight length portion of the tubes on the hot-leg side of the steam generator with bobbin voltage amplitudes greater than 5 volts in steam generators A and D

No tube inspections were performed in steam generators B and C during RFO 13.

As a result of these inspections, 20 tubes were plugged—19 for wear at the AVBs, and 1 for an obstruction.

The only steam generator tube degradation mechanisms observed during RFO 13 were wear at the AVBs, wear attributed to loose parts, and wear attributed to fabrication/maintenance activities.

During RFO 13, 430 indications of wear at the AVBs were detected in steam generator A, and 723 indications of wear at the AVBs were detected in steam generator D. The maximum depth reported for the AVB wear indications was 66 percent throughwall.

Eighteen indications of wear at the flow distribution baffle were detected during RFO 13. These indications are attributed to prior maintenance activities (i.e., PPC). These indications have not appreciably changed in size since RFO 11.

Several volumetric indications were detected near the top of the tubesheet (four indications) and at a tube support plate (two indications). All but one of these volumetric indications were attributed to wear associated with loose parts that are no longer present. The other volumetric indication was attributed to a geometric anomaly such as expansion into a burr or undercut

remaining from the tubesheet drilling process. The indication was slightly below the top of the tubesheet.

The tube that was plugged with an obstruction had a remnant (bolt shank) of the split pin that failed following RFO 12 stuck inside the tube. Because the obstruction could not be removed, the tube was plugged.

During RFO 13, four previously installed mechanical tube plugs were replaced with welded plugs. Loose parts damaged one of these four plugs that resulted in the May 2002 shutdown. Although the inspection revealed that the plug was intact and in acceptable condition for safe operation, the plug was replaced to limit the potential for any future primary-to-secondary leakage. The other three plugs that were replaced were plugs that were installed during fabrication of the steam generator.

FOSAR also was performed during RFO 13. FOSAR included all of the areas where possible loose parts signals were reported in steam generators A and D. Visual inspection of the 10 possible loose part locations indicated that six were a result of sludge rocks or collars of deposits and four were a result of small metallic pieces (metal chips or curls). These metallic pieces were removed from the steam generators. There were other small metallic objects identified during FOSAR that could not be removed from the steam generators. The metallic pieces remaining in the steam generators were evaluated and the licensee concluded it was acceptable to leave them in the steam generators. No tube degradation was associated with any of these foreign objects.

On April 28, 2005, the steam generator portion of the Wolf Creek technical specifications was revised to limit the extent of inspection in the hot-leg tubesheet region. Specificially, the technical specifications were revised to exclude the portion of tube that is more than 43.2 cm (17 in.) below the top of the tubesheet from inspection (i.e., approximately the lowermost 10.2 cm (4 in.) of tube in the tubesheet on the hot-leg side was excluded from inspection, and hence any flaws that may exist in this region are permitted to remain in service). This revision was applicable only to RFO 14 and the subsequent operating cycle (ADAMS Accession No. ML051230044)

During RFO 14 in 2005, 100 percent of the tubes in steam generators B and C were inspected full length with a bobbin coil, with the exception of the U-bend region of tubes in rows 1 and 2. In addition to the bobbin coil inspections, a rotating probe equipped with a plus-point coil was used to inspect:

- 55 percent of the tubes (including all peripheral tubes, two tubes deep) at the top of the tubesheet on the hot-leg side
- the U-bend region of 25 percent of the tubes in rows 16 through 19
- 100 percent of the peripheral tubes, (i.e., 2 tubes deep) on the cold-leg side of the steam generator
- 20 percent of the bulges and overexpansions from the top of the tubesheet to 48.3 cm (19 in.) below the top of the tubesheet on the hot-leg side (but concentrated in the top 25.4 cm (10 in.) of the tubesheet)

As a result of these inspections, eight tubes were plugged—four for wear at the AVBs, and four for interaction between the tubes and a PPC nozzle used to clean the top of the tubesheet during RFO 7 in 1994.

The only steam generator tube degradation mechanisms observed during RFO 14 were wear at the AVBs, wear attributed to loose parts, and wear attributed to maintenance equipment.

A total of 770 indications of wear at the AVBs were detected in steam generator B, and approximately 510 indications of wear at the AVBs were detected in steam generator C during RFO 14. The maximum depth reported for the AVB wear indications was 44 percent throughwall.

Wear attributed to loose parts was also detected during RFO 14. Two indications of wear were observed near tube support plates. These indications were attributed to loose parts that were no longer present. Twelve volumetric indications were reported near the top of the tubesheet. All of these indications were attributed to loose parts that were no longer present.

Wear attributed to maintenance equipment also was detected during RFO 14. This wear was observed about 38 to 41 cm (15 to 16 in.) above the top of the tubesheet. These indications were attributed to PPC conducted in 1994. These indications have not changed in size; however, a new sizing technique was applied in RFO 14, which resulted in several indications requiring repair since they exceeded the plugging limit. No indications of wear attributed to PPC exist in steam generators A and D. Wear indications were also observed at the flow distribution baffle. Most of these indications were attributed to PPC conducted in 1994. These indications have not changed in size. However, during RFO 14, three new indications of wear at the flow distribution baffle were reported that may have been the result of PPC performed during the RFO.

Maintenance and visual inspections were performed on the secondary side of steam generators B and C during RFO 14. An ASCA was applied to steam generators B and C followed by PPC. In addition, visual inspections were performed at the top of the tubesheet, UBIB, and the upper steam drum. The steam drum inspection included assessing the general condition of the components (J-nozzles, moisture separators, etc.) and visual inspection of the top of the tube bundle, some AVBs, and a limited view of the uppermost tube support plate. These inspections did not identify anything significant. FOSAR was also performed during RFO 14. FOSAR included areas where possible loose parts signals were reported during the eddy current inspection of the tubes. FOSAR identified several small loose parts. These parts were not removed because of their insignificant potential for damage to the steam generator tubes. In addition, a small foreign object that was determined to be “fixed in place” in RFO 12, was dislodged during the ASCA/PPC process performed during RFO 14, and could not be during the FOSAR activities.

On May 8, 2006, Wolf Creek revised the steam generator portion of the technical specifications making them performance-based consistent with TSTF-449 (ADAMS Accession No. ML061280189).

On October 10, 2006, the steam generator portion of the Wolf Creek technical specifications was revised to limit the extent of inspection in the hot-leg tubesheet region. Specifically, the technical specifications were revised to exclude the portion of tube that is more than 43.2 cm (17 in.) below the top of the tubesheet from inspection (i.e., approximately the lowermost 10.2 cm (4 in.) of tube in the tubesheet on the hot-leg side was excluded from inspection, and hence

any flaws that may exist in this region are permitted to remain in service). This revision was applicable only to RFO 15 and the subsequent operating cycle (ADAMS Accession No. ML062580016).

During RFO 15 in 2006, 100 percent of the tubes in steam generators A and D were inspected full length with a bobbin coil, with the exception of the U-bend region of row 1 through row 4 tubes. In addition to the bobbin coil inspections, a rotating probe equipped with a plus-point coil was used to inspect:

- 55 percent of the tubes (including all peripheral tube, two tubes deep) from 7.6 cm (3 in.) above to 7.6 cm (3 in.) below the top of the tubesheet on the hot-leg side in steam generators A and D

- 100 percent of the peripheral tubes (i.e., two tubes deep) from 7.6 cm (3 in.) above to 7.6 cm (3 in.) below the top of the tubesheet on the cold-leg side in steam generators A and D

- 50 percent of the bulges and overexpansions from the top of the tubesheet to 43.2 cm (17 in.) below the top of the tubesheet on the hot-leg side (but concentrated in the top 25.4 cm (10 in.) of the tubesheet) in steam generators A and D

- all previously uninspected and new hot-leg dents and dings with bobbin voltage amplitudes greater than 5 volts in steam generators A and D

Low-frequency bobbin data and a sample of plus-point data also were acquired to support a scale-profiling analysis to supply information on the secondary-side deposit accumulation. In addition, all tube plugs were inspected visually and were in an acceptable condition.

As a result of these inspections, 23 tubes were plugged: 21 for wear at the AVBs, and 2 for geometric anomaly signals.

The only steam generator tube degradation mechanisms observed during RFO 15 were wear at the AVBs, wear attributed to loose parts, and wear attributed to maintenance equipment.

The maximum depth reported for the AVB wear indications was 52 percent throughwall.

Wear indications were reported near the top of the tubesheet. All but one of these indications were attributed to loose parts that were no longer present. These indications have not changed in size. The other wear indication was attributed to a geometric anomaly such as expansion into a burr or undercut remaining from the tubesheet drilling process. The indication was slightly below the top of the tubesheet and has not changed in size. Wear indications also were detected at two tube support plate intersections. These indications were attributed to loose parts that were no longer present. These indications have not changed in size. Wear indications were also observed at the flow distribution baffle. These indications were attributed to PPC. These indications have not changed in size.

The source of the geometric signals was determined to be an inner diameter ridge or scratch extending from within the tubesheet to a few inches above the tubesheet, and could be observed as far back as RFO 7 in 1994 (the first plus-point inspection of these tubes). Neither of the signals was determined to be an indication of degradation.

An ASCA maintenance cleaning was performed in steam generators A and D during RFO 15. In addition, a scale-profiling eddy current analysis was performed to evaluate the deposit levels in the steam generators and to compare these results with previous estimates from RFO 13 (the previous outage in which steam generators A and D were cleaned and inspected). The analysis consisted of a review of the low-frequency eddy current bobbin data, the rotating pancake coil inspection of selected tube-tube support plate intersections to evaluate potential quatrefoil blockage, and UBIB visual inspections. As a result, the licensee noted that the heaviest deposit levels were below the seventh tube support plate and up to the U-bend on the hot-leg side of the steam generator, there was a concentration of scale buildup between the top of the tubesheet and the flow distribution baffle in the cutout region, the morphology of the steam generator deposit patterns were remarkably consistent between steam generators A and D as well as that observed for steam generator B in RFO 14, and the ASCA visibly lowered the deposit levels (but the general pattern of the deposits before and after the ASCA were the same). In addition, the licensee noted that the deposit buildup was very low, posing no flow path blockage (even in areas where the freespan deposit levels were relatively high). Although some surface deposits were observed and some spalling was detected, the quatrefoil openings were essentially clean. The deposit inventories were estimated to be 1,363 pounds in steam generator A and 1,225 pounds in steam generator D.

The secondary side of steam generators A and D were inspected visually during RFO 15. Inspections were performed at the top of the tubesheet and in-bundle in the upper portion of the tube bundle. These inspections did not identify anything significant. The upper bundle inspections involved the inspection of selected columns of tubes from the top of tube support plate 3 to the bottom of tube support plate 7. FOSAR was also performed in steam generators A and D during RFO 15. FOSAR identified several foreign objects, most of which were benign items such as sludge rocks and scale. These objects were not retrieved. No objects that could damage the tubes were observed. Possible loose part signals from the eddy current inspection were visually inspected during FOSAR. No wear was associated with any of the possible loose part signals.

On April 4, 2008, the steam generator portion of the Wolf Creek technical specifications was revised to permit certain sized flaws near the tube end in both the hot- and cold-leg sides of the steam generator to remain in service. Specifically, the technical specifications were revised to (1) permit flaws having a circumferential component less than or equal to 203 degrees found in the portion of the tube below 43.2 cm (17 in.) from the top of the tubesheet and above 2.54 cm (1 in.) from the bottom of the tubesheet to remain in service, (2) require the removal from service all flaws having a circumferential component greater than 203 degrees found in the portion of the tube below 43.2 cm (17 in.) from the top of the tubesheet and above 2.54 cm (1 in.) from the bottom of the tubesheet, (3) require the removal from service all tubes with service-induced flaws between the top of the tubesheet and 43.2 cm (17 in.) below the top of the tubesheet, and (4) permit all axial indications found in the portion of the tube below 43.2 cm (17 in.) from the top of the tubesheet to remain in service. In addition, the technical specifications were modified to indicate that when more than one flaw with circumferential components is found in the portion of the tube below 43.2 cm (17 in.) from the top of the tubesheet and above 2.54 cm (1 in.) from the bottom of the tubesheet with the total of the circumferential components being greater than 203 degrees and the axial separation distance of less than 2.54 cm (1 in.), then the tube must be removed from service (overlapping portions of the flaws only need to be counted once in determining the total circumferential involvement of the flaws). For flaws within 2.54 cm (1 in.) of the bottom of the tubesheet, the technical specifications were modified to indicate (1) when one or more flaws with circumferential components are found and the total of the circumferential components exceeds 94 degrees,

then the tube shall be removed from service and (2) when one or more flaws with circumferential components are found in the portion of the tube within 2.54 cm (1 in.) from the bottom of the tubesheet and within 2.54 cm (1 in.) axial separation distance of a flaw above 2.54 cm (1 in.) from the bottom of the tubesheet, and the total of the circumferential components found in the tube exceeds 94 degrees, then the tube shall be removed from service (overlapping portions of the flaws only need to be counted once in determining the total circumferential involvement of the flaws). This revision to the technical specifications was applicable only to RFO 16 and the subsequent operating cycle (ADAMS Accession No. ML080840003).

There was no evidence of primary-to-secondary leakage during Cycle 16 (fall 2006 to spring 2008).

During RFO 16 in 2008, 100 percent of the tubes in steam generators B and C were inspected full length with a bobbin coil, with the exception of the U-bend region of row 1 and row 2 tubes. In addition to the bobbin coil inspections, a rotating probe equipped with a plus-point coil was used to inspect:

- 55 percent of the tubes (including all peripheral tube, two tubes deep) from 7.62 cm (3 in.) above to 43.2 cm (17 in.) below the top of the tubesheet on the hot-leg side in steam generators B and C

- 100 percent of the peripheral tubes (i.e., two tubes deep) from 7.6 cm (3 in.) above to 7.6 cm (3 in.) below the top of the tubesheet on the cold-leg side in steam generators B and C

- 20 percent of the tubes from the top of the tubesheet to the tube end on the hot-leg side in steam generators B and C

- 100 percent of the tubes from the tube end to 2.54 cm (1 in.) above the tube end on the hot-leg side in steam generators B and C

- the U-bend region of 50 percent of the tubes in rows 1 and 2 in steam generators B and C

- all new hot-leg (including U-bend) dents and dings and 50 percent of existing dents with bobbin voltage amplitudes greater than or equal to 5 volts in steam generators B and C

Low-frequency bobbin data and a sample of plus-point data also were acquired to support a scale-profiling analysis to offer information on the secondary-side deposit accumulation. In addition to the inspections in steam generators B and C, 100 percent of the tubes in steam generator D and 30 percent of the tubes in steam generator A were inspected with a rotating probe equipped with a plus-point coil from the tube end to 2.54 cm (1 in.) above the tube end on the hot-leg side of the steam generator. In addition, all tube plugs were inspected visually, and they were present, and in an acceptable condition (no evidence of leakage).

As a result of these inspections, 29 tubes were plugged—20 for wear at the AVBs, 8 for indications of primary water stress corrosion cracking near the hot-leg tube ends, and 1 because it was not expanded into the tubesheet on the hot-leg side of the steam generator.

The only steam generator tube degradation mechanisms observed during RFO 16 were (1) wear at the AVBs, (2) wear attributed to loose parts, (3) wear attributed to maintenance

activities, and (4) primary water stress corrosion cracking near the tube ends on the hot-leg side of the steam generator.

The maximum depth reported for the AVB wear indications was 54 percent throughwall.

Wear indications were reported near the top of the tubesheet. These indications were attributed to loose parts that were no longer present. One of these indications was new. All of the wear indications near the top of the tubesheet that were present in prior inspections have not changed in size. Wear indications were also detected at two tube support plate intersections. These indications were attributed to loose parts that were no longer present. These indications have not changed in size. Wear indications were also observed at the flow distribution baffle. These indications were attributed to PPC. These indications have not changed in size.

Crack-like indications attributed to primary water stress corrosion cracking were observed near the tube ends in steam generators B, C, and D. All indications were within about 5 mm (0.2 in.) of the tube end on the hot-leg side of the steam generator. Sixty-nine tubes had crack-like indications near the tube-end (25 in steam generator B, 27 in steam generator C, and 17 tubes in steam generator D). Eight of these tubes were plugged since the flaw size was larger than the acceptance limit. All of the crack-like indications in steam generator B were circumferentially oriented whereas the crack-like indications in the other two steam generators included both axially and circumferentially oriented flaws.

The non-expanded tube that was plugged during RFO 16 was expanded into the bottom 5.1 cm (2 in.) of the tubesheet by mechanical rolling and then the plug was installed. This tube had no history of degradation.

An analysis of eddy current data were performed to evaluate the deposit levels in the steam generators and to compare these results with previous evaluations from RFO 14 (the previous outage in which steam generators B and C were cleaned and inspected). The analysis consisted of a review of the low-frequency bobbin coil data, rotating pancake coil data of tube-to-tube support plate intersections, and review of the available rotating probe data collected at the top of the tubesheet. Based on this analysis, the licensee noted that the scale distribution patterns in steam generators B and C were similar, the heaviest deposit levels were from the seventh tube support plate and extending upwards through the U-bend region on the hot-leg side of the steam generator, a concentration of scale buildup was observed between the top of the tubesheet and the flow distribution baffle in the cutout region of the flow distribution baffle, the lower tube support plate regions have tube scale occurring mainly in the periphery of the hot-leg side, the cold-leg side is relatively clean with the largest region of deposits occurring at the top tube support plate (i.e., number 7) near the tube lane region. In addition, the licensee noted that the review of the rotating probe data in steam generators B and C indicates that the tube-to-tube support plate intersections and the top of tubesheet region are relatively clean. The deposit inventories were estimated to be 1,746 pounds in steam generator B and 1,661 pounds in steam generator C. Most of these deposits are in the U-bend region and at the upper tube support plates on the hot-leg side of the steam generator. The pattern of deposits in steam generator B remained consistent between RFO 14 and RFO 16; however, a decrease in the amount of deposits was observed primarily in the upper bundle and U-bend region on the hot-leg side. This decrease was attributed to the ASCA and PPC that was performed during RFO 14. Comparison data from RFO 14 for steam generator C was not available.

Visual inspections were performed on the secondary side of steam generators B and C during RFO 16. Inspections at the top of the tubesheet indicated a small area of deposits in the center

of the tubesheet on the hot-leg side. Inspections also were planned for the upper interior portion of the tube bundle in steam generators B and C. These upper bundle inspections were intended to determine the general condition of the support plates, the quatrefoil openings in the support plate, the flow holes in the seventh tube support plate, the patch plate plug weld regions, and the tubes. The inspections were to be focused between the fourth and seventh tube support plates; however, the inspections were canceled when the inspection tooling failed in steam generator C (i.e., the probe's lens, lens head, and two small screws fell into the steam generator). Visual inspections also were performed throughout the mid deck, intermediate deck and lower deck of the steam drum in steam generator B. The locations inspected included the demister banks, swirl vanes, tangential nozzles, the central drain, elongated steam vents, drain lines, feedring, and associated components. Other than erosion in two J-nozzles, there were no other visible anomalies and a mild coating of magnetite was observed on all surfaces. Top down visual inspections were performed in the top portion of the tube bundle by inserting a video probe down through the swirl vanes. These inspections included the AVBs, AVB to tube interface, tube and support plate integrity, and general scale buildup. All visual inspections were considered acceptable by the licensee.

Sludge lancing and FOSAR also were performed in steam generators B and C during RFO 16. FOSAR identified several foreign objects. Most of the foreign objects identified were benign items such as sludge rocks and scale. The licensee performed an analysis of the foreign objects that could not be retrieved from the steam generators, concluding that these objects could remain in the steam generators at least until the next inspection. Possible loose part signals from the eddy current inspection were visually inspected during the FOSAR. No wear was associated with any of the possible loose part signals.

On October 19, 2009, the steam generator portion of the Wolf Creek technical specifications was revised to limit the extent of inspection in the tubesheet region. Specifically, the technical specifications were revised to exclude the portion of tube that is more than 33.27 cm (13.1 in.) below the top of the tubesheet from inspection (i.e., approximately the lowermost 20.3 cm (8 in.) of tube in the tubesheet was excluded from inspection, and hence any flaws that may exist in this region are permitted to remain in service). This revision was applicable only to RFO 17 and the subsequent operating cycle (ADAMS Accession No. ML092750606).

There was no evidence of primary-to-secondary leakage during Cycle 17 (spring 2008 to fall 2009).

During RFO 17 in 2009, 100 percent of the tubes in steam generators A and D were inspected full length with a bobbin coil, with the exception of the U-bend region of row 1 and row 2 tubes. In addition to the bobbin coil inspections, a rotating probe equipped with a plus-point coil was used to inspect:

- 55 percent of the tubes (including all peripheral tube, two tubes deep) from 7.62 cm (3 in.) above to 33.27 cm (13.1 in.) below the top of the tubesheet on the hot-leg side in steam generators A and D

- 100 percent of the peripheral tubes (i.e., two tubes deep) from 7.6 cm (3 in.) above to 7.6 cm (3 in.) below the top of the tubesheet on the cold-leg side in steam generators A and D

- the U-bend region of 50 percent of the tubes in rows 1 and 2 in steam generators A and D

- all new hot-leg (including U-bend) dents and 50 percent of existing dents with bobbin voltage amplitudes greater than 2 volts in steam generators A and D

- all new hot-leg (including U-bend) dings and 50 percent of existing dings with bobbin voltage amplitudes greater than 5 volts in steam generators A and D

In addition, all tube plugs were inspected visually and were in an acceptable condition.

As a result of these inspections, 18 tubes were plugged—16 for wear at the AVBs, and 2 for geometric anomalies.

The only steam generator tube degradation mechanisms observed during RFO 17 were wear at the AVBs, wear attributed to loose parts, and wear attributed to maintenance activities.

A total of 606 indications of wear at the AVBs were detected in 271 tubes in steam generator A and 980 indications of wear at the AVBs were detected in 401 tubes in steam generator D. The maximum depth reported for the AVB wear indications was 51 percent throughwall.

Wear indications were reported near the top of the tubesheet. These indications were attributed to loose parts that were no longer present. No new wear indications at the top of the tubesheet were detected, and one previously reported wear indication was no longer present. All of the wear indications near the top of the tubesheet that were present in prior inspections have not changed in size. Wear indications were also detected at three tube support plate intersections. These indications were attributed to loose parts that were no longer present. These indications have not changed in size. Wear indications were also observed at the flow distribution baffle. These indications were attributed to PPC. These indications have not changed in size.

Two tubes were plugged because of geometric anomalies. The two geometric anomalies were axially oriented, linear geometric signals running through the expansion transition region. Inspections of these locations with a Ghent probe did not confirm the presence of a flaw. One of the responses could be observed in historical data, while the other signal was not; however, the previous data quality for this latter location was limited, and the size of the signal was very small. The consensus of the data analysts was that both of these signals were geometric variations and not indications of degradation.

The secondary side of steam generators A and D were inspected visually during RFO 17. Sludge lancing, FOSAR, and an in-bundle visual inspection were performed in steam generators A and D. The upper steam drum in steam generator A was inspected visually to evaluate the condition of its components. Sludge lancing resulted in the removal of 21.5 pounds in steam generator A and 22 pounds in steam generator D. FOSAR in steam generators A and D resulted in identifying some minor foreign objects some of which were removed. Foreign objects left in the steam generators were evaluated to ensure they could remain. Minor degradation was observed during the upper steam drum inspections at a few of the J-nozzle to feedring interface locations. Visual inspections and ultrasonic measurements are performed at these locations to ensure they satisfy the acceptance criteria.

To identify tubes that have potentially high residual stress and therefore might be more susceptible to stress corrosion cracking, bobbin coil eddy current data were reviewed. As discussed above, no low-row tubes (i.e., tubes in rows 1 through 8) were identified as potentially being more susceptible to stress corrosion cracking based on a review of eddy current data for an offset between the data in the U-bend and in the straight span. In the higher-row tubes

(i.e., tubes in rows 11 and higher), 59 tubes (31 in steam generator A, 11 in steam generator B, 10 in steam generator C and 7 in steam generator D) were identified with an offset in the eddy current data between the U-bend and the straight region less than two standard deviations of the mean (i.e., minus 2 sigma). This lack of an offset in the eddy current data is indicative of potentially higher residual stresses in the straight span portion of the tube.

On April 6, 2011, the steam generator portion of the Wolf Creek technical specifications was revised to limit the extent of inspection in the tubesheet region. Specifically, the technical specifications were revised to exclude the portion of tube that is more than 38.6 cm (15.2 in.) below the top of the tubesheet from inspection (i.e., approximately the lowermost 15.2 cm (6 in.) of tube in the tubesheet was excluded from inspection, and hence any flaws that may exist in this region are permitted to remain in service). This revision was applicable only to RFO 18 and the subsequent operating cycle (ADAMS Accession No. ML110840590).

There was no evidence of primary-to-secondary leakage during Cycle 18 (fall 2009 to spring 2011).

During RFO 18 in 2011, 25 percent of the tubes in each of the four steam generators were inspected full length with a bobbin coil, with the exception of the U-bend region of row 1 and row 2 tubes. The bobbin coil was also used to inspect all prior indications except dents and dings, all tubes surrounding previously plugged tubes that are being monitored for potential long term damage propagation, and all tubes with potentially elevated residual stress. In addition to the bobbin coil inspections, a rotating probe equipped with a plus-point coil was used to inspect:

- 25 percent of the tubes from 7.62 cm (3 in.) above to 38.6 cm (15.2 in.) below the top of the tubesheet on the hot-leg side in each of the four steam generators

- 100 percent of the peripheral tubes (i.e., 2 tubes deep) from 7.62 cm (3 in.) above to 38.6 cm (15.2 in.) below the top of the tubesheet on the hot-leg side in each of the four steam generators

- 100 percent of the peripheral tubes (i.e., 2 tubes deep) from 7.6 cm (3 in.) above to 7.6 cm (3 in.) below the top of the tubesheet on the cold-leg side in each of the four steam generators

- the U-bend region of 25 percent of the tubes in rows 1 and 2 in each of the four steam generators

- all new hot-leg (including U-bend) dents and 25 percent of existing dents in steam generators A and D and 50 percent of existing dents in steam generators B and C with bobbin voltage amplitudes greater than 2 volts

- all new hot-leg (including U-bend) dings and 25 percent of existing dings with bobbin voltage amplitudes greater than 5 volts in each of the four steam generators

An additional 20 percent of the tubes in rows 15 and higher were inspected with a bobbin coil in steam generator B because of finding one tube that exceeded the plugging limit and had a growth rate of 25 percent throughwall over two cycles. In addition, all tube plugs were inspected visually. All plugs were in an acceptable condition.

As a result of these inspections, 15 tubes were plugged. All tubes were plugged for wear at the AVBs.

The only steam generator tube degradation mechanisms observed during RFO 18 were wear at the AVBs, wear attributed to loose parts, and wear attributed to maintenance activities.

A total of 599 indications of wear at the AVBs were detected in 273 tubes in steam generator A, 951 indications of wear at the AVBs were detected in 421 tubes in steam generator B, 610 indications of wear at the AVBs were detected in 270 tubes in steam generator C, and 990 indications of wear at the AVBs were detected in 404 tubes in steam generator D. The maximum depth reported for the AVB wear indications was 45 percent throughwall.

Wear indications were reported near the top of the tubesheet. These indications were attributed to loose parts that were no longer present. No new wear indications at the top of the tubesheet were detected. All of the wear indications near the top of the tubesheet that were present in prior inspections have not changed in size. Wear indications were also detected at three tube support plate intersections (in steam generator D only). These indications were attributed to loose parts that were no longer present. These indications have not changed in size. Wear indications were also observed at the flow distribution baffle. These indications were attributed to PPC. These indications have not changed in size.

Tubes with AVB wear are not necessarily stabilized before tube plugging. If a plugged tube continues to wear, the licensee has indicated that tube-to-tube contact is generally predicted in an adjacent tube before the plugged tube severing. The licensee has developed a model that is used to predict the operating time at which a tube plugged for AVB wear becomes at risk of severing, so that corrective action can be taken before that time. The model considers two possibilities: 1) determining if tube separation by fatigue occurs before a wearing tube (AVB wear) makes contact with its adjacent neighbor tubes, and 2) determining if (and when) the adjacent tube, if still in service, can attain a structurally limiting condition because of tube-to-tube contact before the next inspection. In effect, if a fatigue separation condition is not achieved before tube-to-tube contact, the adjacent tube (if active) serves as a means to monitor the progression of the wear in the initially plugged and wearing tube. Monitoring the adjacent tubes confirms the analysis and allows time for proper planning to de-plug and stabilize before severance of the plugged tube. Thus, if the model predicts tube-to-tube contact with an active tube to occur at a particular time and physical observation by eddy current testing at that time confirms that no tube-to-tube contact wear is present, this leads to the conclusion that wear on the originally plugged tube is progressing slower than predicted and that the analysis is conservative. If the adjacent tube(s) are plugged, the licensee has indicated that the plugged tubes offer an effective permanent safety barrier because tube-to-tube contact wear results in an axial flaw on the tube if the adjacent tube is not severed. Axial flaws have been shown not to represent a risk for tube separation; thus, the adjacent tube itself does not represent a damage propagation mechanism. Furthermore, the depth wear rate on both the original and adjacent tubes becomes very small because of the increasing wear area and the limited energy input to the contact wear. During RFO 18, no wear indications were found on any tube adjacent to a tube that had previously been identified as potentially requiring stabilization because of continuing wear after plugging for AVB wear.

During RFO 18, the secondary side of all four steam generators (except as noted) was inspected visually. Sludge lancing, FOSAR, and an in-bundle visual inspection (in steam generators B and C only) were performed. To evaluate its components, the upper steam drums in steam generators B and C were visually inspected, including visual inspection of the J-

nozzles and ultrasonic inspection of selected feedring locations and J-nozzles. Sludge lancing resulted in the removal of 26 pounds in steam generator A, 34 pounds in steam generator B, 30 pounds in steam generator C, and 27.5 pounds in steam generator D. FOSAR resulted in identifying some minor foreign objects some of which were removed. Foreign objects left in the steam generators were evaluated to ensure they could remain. Minor degradation was observed during the upper steam drum inspections in steam generators B and C at a few of the J-nozzle to feedring interface locations. All results were within acceptance criteria and no other degradation was observed during these secondary-side inspections.

On November 19, 2012, Wolf Creek revised the steam generator portion of their technical specifications making them consistent with TSTF-510 (ADAMS Accession No. ML12289A896).

On December 11, 2012, the steam generator portion of the Wolf Creek technical specifications was revised to limit the extent of inspection in the tubesheet region. Specifically, the technical specifications were revised to exclude the portion of tube that is more than 38.63 cm (15.21 in.) below the top of the tubesheet from inspection (i.e., approximately the lowermost 15.2 cm (6 in.) of tube in the tubesheet was excluded from inspection, and hence any flaws that may exist in this region are permitted to remain in service (ADAMS Accession No. ML12300A309)).

There was no evidence of primary-to-secondary leakage during Cycle 18 (spring 2011 to spring 2013).

During RFO 19 in 2013, 25 percent of the tubes in each of the four steam generators were inspected full length with a bobbin coil, with the exception of the U-bend region of row 1 and row 2 tubes. The bobbin coil was also used to inspect all prior indications except dents and dings, all tubes surrounding previously plugged tubes that are being monitored for potential long term damage propagation, and all tubes with potentially elevated residual stress. In addition to the bobbin coil inspections, a rotating probe equipped with a plus-point coil was used to inspect:

- 25 percent of the tubes from 7.62 cm (3 in.) above to 38.63 cm (15.21 in.) below the top of the tubesheet on the hot-leg side in each of the four steam generators

- 100 percent of the peripheral tubes (i.e., two tubes deep) from 7.62 cm (3 in.) above to 38.63 cm (15.21 in.) below the top of the tubesheet on the hot-leg side in each of the four steam generators

- 100 percent of the peripheral tubes (i.e., two tubes deep) from 7.6 cm (3 in.) above to 7.6 cm (3 in.) below the top of the tubesheet on the cold-leg side in each of the four steam generators

- the U-bend region of 25 percent of the tubes in rows 1 and 2 in each of the four steam generators

- all new hot-leg (including U-bend) dents and 25 percent of existing dents in steam generators A and D and 50 percent of existing dents in steam generators B and C with bobbin voltage amplitudes greater than 5 volts

- all new hot-leg (including U-bend) dings and 25 percent of existing dings with bobbin voltage amplitudes greater than 5 volts in each of the four steam generators

All bulges and overexpansions in steam generator B were inspected with a rotating probe equipped with a plus-point coil and at least 20 percent of the bulges and overexpansions were inspected in the other three steam generators. In addition, all tube plugs were inspected visually. All plugs were in an acceptable condition.

As a result of these inspections, 16 tubes were plugged—9 for wear at the AVBs, 1 for an obstruction (data quality), 5 for an eddy current signal that indicates high residual stress, and 1 for a circumferential primary water stress corrosion cracking indication.

The only steam generator tube degradation mechanisms observed during RFO 19 were (1) wear at the AVBs, (2) wear at the tube support plates, (3) wear attributed to loose parts, (4) wear attributed to maintenance activities, and (5) circumferentially oriented primary water stress corrosion cracking at a bulge within the tubesheet.

A total of 633 indications of wear at the AVBs were detected in 282 tubes in steam generator A, 953 indications of wear at the AVBs were detected in 420 tubes in steam generator B, 618 indications of wear at the AVBs were detected in 274 tubes in steam generator C, and 1,037 indications of wear at the AVBs were detected in 412 tubes in steam generator D. The maximum depth reported for the AVB wear indications was 44 percent throughwall.

Wear indications were reported near the top of the tubesheet. These indications were attributed to loose parts that were no longer present. No new wear indications at the top of the tubesheet were detected. All of the wear indications near the top of the tubesheet that were present in prior inspections and have not changed in size. Wear indications were also detected at seven tube support plate intersections. The maximum depth reported for the tube support plate wear indications was 21 percent throughwall. Some of these indications were attributed to loose parts that were no longer present. Wear indications were also observed at the flow distribution baffle. These indications were attributed to PPC. These indications have not changed in size.

A circumferentially oriented primary water stress corrosion cracking indication was detected in a bulge in steam generator B about 15.9 cm (6.26 in.) below the top of the tubesheet on the hot-leg side of the steam generator. The percent degraded area, with consideration of measurement uncertainty, was estimated at 11 percent.

One tube was plugged for an obstruction in the tube. A restriction/obstruction at the third AVB in this tube resulted in inspections with a smaller diameter probe. The restriction/obstruction was attributed to a large dent that has been present since the preservice inspection and that has not changed. Because the quality of the data was unsatisfactory for confident analysis, the tube was plugged.

As discussed above, a review of bobbin coil data was performed in 2002 to identify low-row (rows 1 through 10) tubes that potentially had high residual stress (as evidenced by an eddy current offset). Although no tubes with an eddy current offset were identified at that time, more recent operating experience at another plant resulted in a re-review of the data before and during the RFO 19 outage. This review resulted in identifying five low-row tubes with an eddy current signal suggestive of high residual stresses. These five tubes were plugged.

During RFO 19, no wear indications were found on any tube adjacent to a tube that had previously been identified as potentially requiring stabilization because of continuing wear after plugging for AVB wear.

No significant deposit accumulation or other anomalies were detected in the eddy current inspections at the top tube support plate.

Inspections and assessments were performed during RFO 19 to ascertain the as-built condition of the U-bends with regard to AVB insertion depths to address the potential for fatigue of the U-bend region of the tube. Information from the EPRI provides generic information required to complete a plant specific U-bend analysis to determine susceptibility to fatigue failure not only for un-occluded quatrefoil support openings, but also for an assumed level of quatrefoil opening occlusion. During RFO 19, rotating probe inspections of some tube support plate locations were performed to obtain information for tubes that were shown to have unusual as-built AVB insertion patterns. The information obtained included deposit accumulation at the top tube support plate and identification of any precursors to fatigue. The results showed no significant deposit accumulation or any other anomalies at the top tube support plate.

During visual inspections of the steam generator A hot-leg channel head, a rust colored stain was identified at the divider plate to channel head weld. The stain was mainly toward the channel head side of the weld. The rust spot was 14.5 cm (5.7 in.) below the tubesheet, and an indication was sized with a depth of 2.54 mm (0.1 in.) and a depth of 5.1 cm (2.0 in.). An evaluation by the licensee indicated it was acceptable to leave the indication in service until at least RFO 20. Additional information is contained in NRC IN 2013-20, “Steam Generator Channel Head and Tubesheet Degradation.”

Visual inspections were performed on the secondary side of all four steam generators (except as noted) during RFO 19. Sludge lancing, FOSAR, and an in-bundle visual inspection (in steam generators A and D only) were performed. To evaluate its components, the upper steam drums in steam generators A and D were inspected, which included visual inspection of the J-nozzles and ultrasonic inspection of various steam drum components. Sludge lancing resulted in the removal of 44.75 pounds in steam generator A, 48.25 pounds in steam generator B, 45.25 pounds in steam generator C, and 92.25 pounds in steam generator D. FOSAR activities resulted in identifying some minor foreign objects some of which were removed. Foreign objects left in the steam generators were evaluated to ensure they could remain. Minor degradation was observed during the upper steam drum inspections in steam generators A and D at a few of the J-nozzle to feedring interface locations. All results were within acceptance criteria and no other degradation was observed during these secondary-side inspections.

## 3.4 Replacement Model Steam Generator Operating Experience

This section of the report provides inspection results for Indian Point 2, Point Beach 1, Robinson 2, Salem 1, Surry 1 and 2, and Turkey Point 3 and 4. Salem 1 has model F steam generators but is included here because the flow conditions in the Salem steam generators could be different than in the other model F steam generators.

### 3.4.1 Indian Point 2

Tables 3-31, 3-32, and 3-33 summarize the information discussed below for Indian Point 2. Table 3-31 provides the number of full-length bobbin inspections and the number of tubes plugged and deplugged during each outage for each of the four steam generators. Table 3-32 lists the reasons why the tubes were plugged. Table 3-33 lists tubes plugged for reasons other than wear at the AVBs.

Indian Point 2 has four Westinghouse model 44F steam generators. These steam generators were installed at the plant in December 2000. The tube supports are numbered as shown in Figure 2-6.

In 2001, low levels of secondary system activity were detected. Based on a review of fabrication records, the licensee considered tube end weld imperfections in steam generator B as the likely source of this activity because about 200 tube ends in this steam generator had weld repairs during fabrication. Although these welds were successfully tested for leak tightness before operation, the possibility exists that a minor flaw was missed or that the thermal stress of operation could have opened a subsurface flaw. The leak rate is estimated to be approximately 0.038 to 0.114 lpd (0.01 to 0.03 gpd) and did not change over the course of the cycle.

During RFO 15 in 2002, the first in-service inspection of the steam generators was performed. During RFO 15, 100 percent of the tubes in each of the four steam generators were inspected full length with a bobbin coil, with the exception of the U-bend region of the row 1 and row 2 tubes. In addition to the bobbin coil inspections, a rotating probe equipped with a plus-point coil was used to inspect:

- about 26 percent of the tubes on the hot-leg side from 7.6 cm (3 in.) above to 7.6 cm (3 in.) below the top of the tubesheet (which included all tubes on the periphery of the annulus and no-tube lane) in each of the four steam generators

- all tubes on the periphery of the annulus and no-tube lane (about 270 tubes per steam generator) on the cold-leg side from 7.6 cm (3 in.) above to 7.6 cm (3 in.) below the top of the tubesheet in each of the four steam generators

- the U-bend region of 100 percent of the row 1 and row 2 tubes in each of the four steam generators

- 100 percent of the dings and dents with bobbin voltage amplitudes greater than or equal to 5 volts (23 tests) in each of the four steam generators

As a result of these inspections, 16 tubes were plugged, 13 tubes for wear at the AVBs, and 3 tubes for volumetric indications.

The only steam generator tube degradation mechanism observed during RFO 15 was wear at the AVBs.

Only 13 tubes exhibited wear at the AVBs and all these tubes were plugged. The maximum depth reported for the AVB wear indications was 20 percent throughwall.

The three tubes that were plugged because of volumetric indications had indications that were attributed to deep buff marks that became indications after the sustained heating during the first cycle of operation (although damage because of a transient loose part could not be ruled out). Two of these three indications were above the fifth hot-leg tube support (in different steam generators), and one was above the top of the tubesheet on the hot-leg side of the steam generator.

To reduce the amount of sludge on the top of the tubesheet, sludge lancing was performed in each of the four steam generators. Forty-two pounds of sludge were removed from the steam generators.

After the sludge lancing, FOSAR was performed on the top of the tubesheet to identify and to remove foreign objects that may be found. FOSAR consisted of an in-bundle inspection in approximately every fifth column. Secondary-side visual inspections were performed at all locations where possible loose part indications were reported during the eddy current examination. As a result of these inspections, several loose objects were observed, some of which were removed. Some of the objects were not removed because of their small size and the time and personnel exposure required removing the objects. A licensee evaluation concluded that leaving the objects in the steam generators during operating cycles 16 and 17 was acceptable.

In addition to FOSAR, an upper bundle inspection was performed in each of the four steam generators by looking up from the bottom of the steam generators. In addition, for one steam generator, the inspection port above the top support plate was removed, and an inspection looking downward was performed. Secondary-side visual inspections of the steam drum area in one steam generator were planned. These inspections were to include, but not be limited to, the J nozzles, feedring, and risers.

The RFO 15 bobbin coil eddy current data were reviewed to identify tubes that have potentially high residual stress and therefore might be more susceptible to stress corrosion cracking. Because of this review, no low-row (i.e., rows 1 through 8) tubes were identified as having potentially higher residual stresses as evidenced by the presence of an offset in the eddy current data as was observed at Seabrook.

On June 23, 2004, the steam generator portion of the Indian Point 2 technical specifications was revised to allow a one-time change to the maximum time interval between steam generator inspections. The change allowed the next steam generator inspection, which was to be performed no later than November 17, 2004, to be deferred until June 17, 2006 (ADAMS Accession No. ML041750603).

During RFO 16 in 2004, no steam generator tubes were inspected.

During cycles 16 and 17, very low levels of primary-to-secondary leakage were observed. The leakage was estimated to be about 0.114 lpd (0.03 gpd) and was not routinely detected because this rate of leakage is near the threshold of detection. The leakage is still attributed to leakage past one or more tube-to-tubesheet welds in steam generator B.

During RFO 17 in 2006, 50 percent of the tubes in each of the four steam generators were inspected full length with a bobbin coil, with the exception of the U-bend region of the row 1 and row 2 tubes. In addition to the bobbin coil inspections, a rotating probe equipped with a plus-point coil was used to inspect:

- 20 percent of the tubes from 7.6 cm (3 in.) above to 7.6 cm (3 in.) below the top of the tubesheet on the hot-leg side

- three tubes in from the annulus from 7.6 cm (3 in.) above to 7.6 cm (3 in.) below the top of the tubesheet on both the hot- and cold-leg side

- all tubes in rows 1 and 2 from 7.6 cm (3 in.) above to 7.6 cm (3 in.) below the top of the tubesheet on both the hot- and cold-leg side

- a 20 percent sample of the overexpansions, bulges, and dents in the portion of tube within the tubesheet on the hot-leg side

- the U-bend region of 50 percent of the row 1 and row 2 tubes

- 100 percent of the hot-leg dings and dents with bobbin voltage amplitudes greater than or equal to 5 volts that were identified in RFO 15

- 20 percent of the hot-leg dings and dents with bobbin voltage amplitudes greater than or equal to 2 volts but less than 5 volts that were identified in RFO 17

- all new hot-leg dings and dents with bobbin voltage amplitudes greater than or equal to 2 volts that were identified in RFO 17

In addition to these eddy current inspections, all tube plugs and the channel heads were inspected visually in each of the four steam generators. All tube plugs were intact with no evidence of leakage. No abnormal conditions were noted during these visual inspections.

As a result of these inspections, seven tubes were plugged. All of these tubes were plugged for wear at the AVBs.

The only steam generator tube degradation mechanism observed during RFO 17 was wear at the AVBs.

Fifty-five indications of wear at the AVBs were detected in 23 tubes. Of these 23 tubes, all 7 tubes with wear indications that penetrated more than 20 percent of the tube wall were plugged. The maximum depth reported for the AVB wear indications was 28 percent throughwall.

Thirteen tubes were identified with permeability variations during RFO 17. The tube locations with permeability variations were compared to historical inspections for any change in signal. The size of the permeability variation could limit the ability to detect degradation reliably if present; however, given the limited service time on the replacement steam generators and the inspection results from neighboring tubes without permeability variations, the licensee concluded no reason existed to suspect that degradation was occurring at these locations. The licensee's long-term strategy is to keep tubes with permeability variations in service until degradation is anticipated at these locations at which time these tubes will be plugged unless new inspection techniques are developed that can reliably detect degradation at these locations.

To reduce the amount of sludge in the steam generators, sludge lancing was performed at the top of the tubesheet in each of the four steam generators and at the flow distribution baffle in steam generators C and D. About 23 pounds of sludge per steam generator were removed.

After the sludge lancing, FOSAR was performed at the annulus, no-tube lane, and approximately every fifth column in-bundle in each of the four steam generators. Secondary-side visual inspections were performed at all locations where possible loose part indications were reported during the eddy current examination. No indications of tube damage were observed during these visual inspections and no indications of tube damage were

attributed to loose parts during the eddy current inspection; however, many foreign objects were observed. Some of the objects were a result of degradation of the moisture separator re-heater demister pads. These pads contain stainless steel wire components that migrated to the secondary side of the steam generator. Many of the foreign objects were removed from the steam generators. For the objects that were left in the steam generators, a licensee evaluation concluded that leaving the objects in the steam generators until RFO 19 was acceptable.

Visual inspections were also performed in steam generators C and D of the underside of the U-bend region of the tubes, the top of the sixth tube support plate for the full length of the tube lane, and along the length of 11 columns at the sixth tube support plate from the tube lane to the wrapper on both the hot- and cold-leg sides. No degradation was observed during these visual inspections. A very thin layer of deposits on the upper surface of the sixth tube support plate and between the tube hole land and the tubes was observed. The broached holes were free of deposits.

On February 13, 2007, Indian Point 2 revised the steam generator portion of their technical specifications making them performance-based consistent with TSTF-449 (ADAMS Accession No. ML063450333).

During RFO 18 in 2008, no steam generator tubes were inspected.

During the two cycles preceding RFO 19 (spring 2006 to spring 2010), no primary-to-secondary leakage was observed.

During RFO 19 in 2010, 50 percent of the tubes in each of the four steam generators were inspected full length with a bobbin coil, with the exception of the U-bend region of the row 1 and row 2 tubes. These inspections included all tubes not inspected during RFO 17. In addition, 100 percent of the tubes in rows 22 and higher (approximately 675 additional tubes per steam generator) were inspected full length with a bobbin coil. In addition to the bobbin coil inspections, a rotating probe equipped with a plus-point coil was used to inspect:

- 20 percent of the tubes from 7.6 cm (3 in.) above to 7.6 cm (3 in.) below the top of the tubesheet on the hot-leg side
- three tubes in from the annulus (in the horizontal, vertical, and diagonal directions) from 7.6 cm (3 in.) above to 7.6 cm (3 in.) below the top of the tubesheet on both the hot- and cold-leg side
- all tubes in rows 1 and 2 from 7.6 cm (3 in.) above to 7.6 cm (3 in.) below the top of the tubesheet on both the hot- and cold-leg side
- the U-bend region of 50 percent of the row 1 and row 2 tubes
- 100 percent of the hot-leg, U-bend, and cold-leg dings and dents with bobbin voltage amplitudes greater than or equal to 5 volts that were identified in RFO 15 and RFO 17
- 20 percent of the hot-leg, U-bend, and cold-leg dings and dents with bobbin voltage amplitudes greater than or equal to 2 volts but less than 5 volts that were identified in RFO 15 and RFO 17

- all new hot-leg dings and dents with bobbin voltage amplitudes greater than or equal to 2 volts

In addition to these eddy current inspections, all tube plugs in each of the four steam generators were inspected visually. All plugs were dry with no indications of leakage, unusual deposits, or weld cracks.

As a result of these inspections, nine tubes were plugged. All of these tubes were plugged for wear at the AVBs.

The only steam generator tube degradation mechanism observed during RFO 19 was wear at the AVBs.

A total of 207 indications of wear at the AVBs were detected in 103 tubes. The maximum depth reported for the AVB wear indications was 45 percent throughwall.

Secondary-side visual inspections were performed in all four steam generators during RFO 19. These visual inspections included FOSAR and in-bundle inspections. FOSAR was performed in the annulus and no-tube lane after sludge lancing. The in-bundle inspections were performed after sludge lancing at the top of the tubesheet approximately every 10th column on both the hot- and cold-leg side of the steam generator. Because of FOSAR, many small foreign objects were detected and a number of them were removed from the steam generators. All objects left in the steam generators were small in size, evaluated (by the licensee), and determined to be too small to challenge tube integrity. No wear attributed to loose parts was observed during either the visual or eddy current inspections.

A review of the bobbin coil eddy current data of the high row tubes (i.e., rows 9 and above) to identify tubes that have potentially high residual stress and therefore might potentially be more susceptible to stress corrosion cracking was not performed. Such a review was not performed because the tubes susceptible to this phenomenon are primarily those from the Westinghouse Blairsville facility, and Sandvik fabricated the tubes at Indian Point 2.

During RFO 20 in 2012, no steam generator tubes were inspected.

During the two cycles preceding RFO 21 (spring 2010 to spring 2014), no primary-to-secondary leakage was observed.

On September 5, 2014, the steam generator portion of the Indian Point 2 technical specifications was revised to limit the extent of inspection in the tubesheet region. Specifically, the technical specifications were revised to exclude the portion of tube that is more than 48 cm (18.9 in.) below the top of the tubesheet from inspection (i.e., approximately the lowermost 7.62 cm (3 in.) of tube in the tubesheet was excluded from inspection, and hence any flaws that may exist in this region are permitted to remain in service (ADAMS Accession No. ML14198A161 and ML14252A679).

### 3.4.2 Point Beach 1

Tables 3-34, 3-35, and 3-36 summarize the information discussed below for Point Beach 1. Table 3-34 provides the number of full-length bobbin inspections and the number of tubes plugged and deplugged during each outage for each of the two steam generators. Table 3-35

lists the reasons why the tubes were plugged. Table 3-36 lists tubes plugged for reasons other than wear at the AVBs.

Point Beach 1 has two Westinghouse model 44F steam generators. These steam generators were installed at the plant during RFO 11 in 1984. The tube supports are numbered as shown in Figure 2-6.

The RFO 26 bobbin coil eddy current data were reviewed to identify tubes that might have high residual stress and therefore might be more susceptible to stress corrosion cracking. Because of this review, no low-row (i.e., rows 1 through 8) tubes were identified as having potentially higher residual stresses as evidenced by the presence of an offset; however, 98 high-row tubes were identified as having potentially higher residual stresses in the straight span portion of the tube. Of these 98 tubes, 45 were in steam generator A.

During RFO 27 in 2003, no steam generator tubes were inspected.

During RFO 28 in 2004, 100 percent of the tubes in each of the two steam generators were inspected full length with a bobbin coil, with the exception of the U-bend region of all row 1 tubes and seven row 2 tubes. In addition to the bobbin coil inspections, a rotating probe equipped with a plus-point coil was used to inspect:

- the hot-leg expansion transition region at the top of the tubesheet in 77 percent of the tubes (including all periphery tubes, two tubes deep) in each of the two steam generators
- the U-bend region of all row 1 tubes and the seven row 2 tubes that were not inspected with the bobbin coil in each of the two steam generators
- 100 percent of the dings, dents, and bulges with bobbin voltage amplitudes greater than or equal to 5 volts in each of the two steam generators

As a result of these inspections, no tubes were plugged.

The only steam generator tube degradation mechanisms observed during RFO 28 were (1) wear at the AVBs, (2) wear at the tube support plates, (3) wear attributed to loose parts, and (4) wear attributed to maintenance activities.

A total of 45 indications of wear at the AVBs were detected in steam generator A, and 21 indications of wear at the AVBs were detected in steam generator B. The maximum depth reported for the AVB wear indications was 27 percent throughwall.

Three indications of wear were detected at the tube support plate elevations. All of the indications were in steam generator A, and the maximum depth reported was 18 percent throughwall.

Wear attributed to either transient loose parts that are no longer present or damage from sludge-lancing equipment was detected in 14 tubes in steam generator A and 1 tube in steam generator B. Based on visual examination, no objects were present at these locations. All of these indications were near the top of the tubesheet on the hot-leg side of the steam generator. The maximum depth reported for these indications was 11 percent throughwall.

Possible loose parts were identified on six tubes in steam generator B. No wear was detected on these tubes. After secondary-side cleaning, a secondary-side visual examination verified that no loose parts remained in the region of concern.

During RFO 29 in 2005, approximately 50 percent of the tubes in steam generator A were inspected full length with a bobbin coil including all tubes with previous AVB wear indications and the 45 tubes (all in high rows) with potentially higher residual stresses. In addition to the bobbin coil inspections, a rotating probe equipped with a plus-point coil was used to inspect:

- 20 percent of the tubes from 7.62 cm (3 in.) above the top of the tubesheet to the tube end on the hot-leg side in steam generator A
- the U-bend region of 20 percent of the row 1 tubes in steam generator A
- 100 percent of freespan dings and dents with bobbin voltage amplitudes greater than 5 volts in steam generator A
- 100 percent of dents and dings at supports with bobbin voltage amplitudes greater than 2 volts in steam generator A

As a result of these inspections, no tubes were plugged.

The only steam generator tube degradation mechanisms observed during RFO 29 were (1) wear at the AVBs, (2) wear at the tube support plates, (3) wear attributed to loose parts, and (4) wear attributed to maintenance activities.

Fifty-two indications of wear at the AVBs were detected in 31 tubes in steam generator A. The maximum depth reported for the AVB wear indications was 27 percent throughwall.

Four indications of wear in four tubes were detected at the tube support plate elevations. All of the indications were in steam generator A, and the maximum depth reported was 16 percent throughwall.

Wear attributed to either transient loose parts that are no longer present or damage from sludge lancing equipment was detected in 16 tubes in steam generator A. All of these indications (19 indications in 16 tubes) were present in prior inspection data (although two were not initially reported). Based on visual examination, no objects were present at these locations. All of these indications were near the top of the tubesheet on the hot-leg side of the steam generator. The maximum depth reported for these indications was 11 percent throughwall.

One tube in steam generator A (in row 38, column 69) was not expanded to the full length of the tubesheet. This tube is routinely inspected with a rotating probe equipped with a plus-point coil from the top of the tubesheet to the tube end. No degradation has been found in this tube.

Three dents were identified in steam generator A during RFO 29. These dents had voltages between 2.0 and 4.99 volts as measured with a bobbin coil. One hundred eighty-four dings were also identified in steam generator A during RFO 29. Of these dings, 131 had voltages between 2.0 and 4.99 volts, and 53 had voltages of 5 volts or greater as measured with a bobbin coil. Dents and dings are local reductions in the tube's diameter. A dent is an indication with no history while a ding is an indication with history. For the three signals classified as dents, the previous data (i.e., first outage in which eddy current data were recorded on an

optical disk) could not be retrieved so the indications were classified as dents. Both dings and dents can occur at structures.

Inspection and maintenance on the secondary side of steam generator A were also performed during RFO 29. To reduce the amount of sludge on the top of the tubesheet, sludge lancing was performed in steam generator A. About 31 pounds of sludge was removed from steam generator A. The post sludge lancing visual inspections confirmed that some hard adhering scale was not being washed off the tubesheet. Inspection of the upper support plate revealed no degradation; however, the inspection confirmed the presence of heavy scale on the outside of the tubes.

Sludge scale samples from steam generators A and B taken during RFO 28 had a copper content of about 16 percent (weight-percent). The copper content in the sludge collars at the top of the tubesheet is higher (about 22 percent). Because copper in steam generators can affect the eddy current data quality, the licensee records all bobbin coil signals attributed to copper deposits when the voltage is equal to or greater than 1 volt. No copper deposit signals were reported during recent inspections. The licensee planned to perform chemical cleaning in 2008.

Visual inspections of the steam generator A steam drum revealed no significant degradation of the swirl vanes, moisture separators or feedring J nozzles. Although no significant degradation was found, two small areas of magnetite buildup were noted on the outside of two swirl vanes (about 5 cm (2 in.) high by 10.2 cm (4 in.) wide) between the vanes and the lower deck supporting plate. In addition, one of the perforated side plates of the secondary moisture separator in steam generator A had a slight bow. The offset is about 12.7 mm (0.5 in.). The bow is visible in earlier inspection video and the offset appears unchanged. The plate and welds were not cracked. The plate guides flow though the moisture separator by limiting cross flows. The steam pressure is balanced across the plate, and the slight offset should not affect performance of the plate or challenge its integrity. Minor weld burn through from construction was noted in two closely spaced J-nozzles. The licensee evaluated the condition and determined it would not affect nozzle function. No flow-induced corrosion was found.

One possible loose part indication was identified in steam generator A. No wear was associated with this possible loose part. A secondary-side visual examination verified that no loose part was present.

A small foreign object was found and retrieved during the secondary-side visual inspection near rows 1 and 2, column 78. The object was a small steel pin about 3.175 cm (1.25 in.) long, about 6.35 mm (0.25 in.) in diameter. No degradation was observed in conjunction with this loose part. The licensee concluded that the part was from steam generator maintenance equipment. Several fine wires (about 0.4 mm (one sixty-fourth inch) in diameter by 12.7 mm (0.5 in.) long) were left in steam generator A. The fine wires are believed to be residue from the secondary-side moisture separator reheater demisting pads. The pads have been removed from the moisture separators. For the objects left in the steam generator, the licensee performed an evaluation and concluded that leaving the objects in the steam generators was acceptable for at least two operating cycles.

Steam generator B was not cleaned or inspected during RFO 29.

On August 22, 2006, Point Beach 1 revised the steam generator portion of their technical specifications making them performance-based consistent with TSTF-449 (ADAMS Accession No. ML062050312 and ML062440008).

On April 4, 2007, the steam generator portion of the Point Beach 1 technical specifications was revised to limit the extent of inspection in the hot-leg tubesheet region. Specifically, the technical specifications were revised to exclude the portion of tube that is more than 43.2 cm (17 in.) below the top of the tubesheet from inspection (i.e., approximately the lowermost 10.2 cm (4 in.) of tube in the tubesheet on the hot-leg side was excluded from inspection, and hence any flaws that may exist in this region are permitted to remain in service). This alternate tube repair criteria is not applicable to the tube at row 38, column 69, in steam generator A, which is not expanded the full length of the tubesheet. This revision was applicable only to RFO 30 and the subsequent operating cycle (ADAMS Accession No. ML070800705).

There was minimal primary-to-secondary leakage (less than 3.79 lpd (1 gpd)) during Cycle 30 (fall 2005 to spring 2007).

During RFO 30 in 2007, about 54 percent of the tubes in steam generator B were inspected full length with a bobbin coil. Additionally, a bobbin coil was used to inspect the straight sections of 181 tubes on the hot-leg side, the straight section of 51 tubes on the cold-leg side, and 81 tubes from the tube end on the cold-leg side to the top tube support plate on the hot-leg side. In addition to the bobbin coil inspections, a rotating probe equipped with a plus-point coil was used to inspect:

- 50 percent of the tubes from 43.2 cm (17 in.) below to 7.6, 15.2 and 20.3 cm (3, 6, and 8 in.) above the top of the tubesheet (1,398, 205, and 7 tubes, respectively) on the hot-leg side in steam generator B
- the U-bend region of 50 percent of the row 1 and row 2 tubes in steam generator B
- all dents and dings in the freespan regions with bobbin voltage amplitudes greater than or equal to 5 volts in steam generator B
- all dents and dings at tube support plate intersections and in the U-bend region with bobbin voltage amplitudes greater than or equal to 2 volts in steam generator B

No primary side tube inspections were performed in steam generator A during RFO 30.

As a result of these inspections, no tubes were plugged.

The only steam generator tube degradation mechanisms observed during RFO 30 were wear at the AVBs, wear attributed to loose parts, and wear attributed to maintenance activities.

Twenty-three indications of wear at the AVBs were detected in 13 tubes in steam generator B. The maximum depth reported for the AVB wear indications was 26 percent throughwall.

Wear attributed to either transient loose parts that are no longer present or damage from sludge lancing equipment was detected in one tube in steam generator B. This indication was present in the prior inspection data. Based on visual examination, no object was present at this location. This indication is near the top of the tubesheet on the hot-leg side of the steam generator. The maximum depth reported for this indication was 7 percent throughwall.

The extent of the rotating probe exams above the top of the tubesheet were based on the height of the sludge. The highest estimated sludge level based on a review of RFO 28 (2004) eddy current data was 11.5 cm (4.55 in.). The inspection extent was increased above 11.5 cm (4.55 in.) to supply some margin.

One possible loose part indication was identified in steam generator B, but no wear was associated with it. A secondary-side visual examination identified several pieces of scale in this region and some of the pieces were retrieved.

Inspection and maintenance on the secondary side of steam generator B were also performed during RFO 30. To reduce the amount of sludge on the top of the tubesheet, sludge lancing was performed in steam generator B. Post sludge lancing visual inspections revealed adherent scale similar to that observed in steam generator A during RFO 29.

FOSAR was performed in steam generator B during RFO 30. FOSAR included the annulus, the no-tube lane, and select in-bundle columns. As a result of these inspections, a very small fine wire was detected. The wire was not removed from the steam generator, as the licensee determined that the wire would not adversely affect the steam generator for at least two operating cycles.

The uppermost (sixth) tube support plate in steam generator B was inspected visually. No anomalies were observed on the lower U-bends and no foreign objects were detected on the sixth tube support plate. Blockage of the quatrefoil shaped holes was observed. The degree of blockage within individual quatrefoils ranged from zero to 100 percent. Overall, the aggregate blockage of the quatrefoil openings is slightly less than that observed in steam generator A. During RFO 30, in steam generator A, visual inspections to assess the degree of quatrefoil blockage showed that the conditions did not appear to have changed since RFO 29. The degree of blockage within individual quatrefoils ranged from zero to 100 percent, and the overall aggregate is estimated at 40 percent blockage. Chemical cleaning was scheduled for the fall of 2008 for both steam generators A and B. This cleaning was intended to eliminate or minimize this blockage.

Visual inspections of the steam drum (upper shell and upper internals including primary and secondary moisture separator assemblies), feedring, and J-nozzles were also performed in steam generator B during RFO 30. Flow impingement patterns were observed on the feedring and on the outside of some primary moisture separator riser barrels as well as under and around several J-nozzles. Erosion of the feedwater ring and riser barrel areas was not discernible by touch. Bowing was observed in one of the perforated plates of the secondary moisture separator. The bowing is similar to what was observed in steam generator A during RFO 29. Re-inspection of the bowed perforated plate in steam generator A during RFO 30 revealed no change supporting a conclusion that these areas are from initial construction and are not service related. Melt-through was observed on the interior of some J-nozzles (where the J-nozzle is welded to the feedring) in steam generator B. This was also similar to what was observed in steam generator A during RFO 29. Re-inspection of these regions in steam generator A during RFO 30 indicated no change supporting a conclusion that these areas are from initial construction and are not service related.

On October 7, 2008, the steam generator portion of the Point Beach 1 technical specifications was revised to permit certain sized flaws near the tube end in both the hot- and cold-leg sides of the steam generator to remain in service. Specifically, the technical specifications were revised

to (1) permit flaws having a circumferential component less than or equal to 203 degrees found in the portion of the tube below 43.2 cm (17 in.) from the top of the tubesheet and above 2.54 cm (1 in.) from the bottom of the tubesheet to remain in service, (2) require the removal from service all flaws having a circumferential component greater than 203 degrees found in the portion of the tube below 43.2 cm (17 in.) from the top of the tubesheet and above 2.54 cm (1 in.) from the bottom of the tubesheet, (3) require the removal from service all tubes with service-induced flaws between the top of the tubesheet and 43.2 cm (17 in.) below the top of the tubesheet, and (4) permit all axial indications found in the portion of the tube below 43.2 cm (17 in.) from the top of the tubesheet to remain in service. In addition, the technical specifications were modified to indicate that when more than one flaw with circumferential components is found in the portion of the tube below 43.2 cm (17 in.) from the top of the tubesheet and above 2.54 cm (1 in.) from the bottom of the tubesheet with the total of the circumferential components being greater than 203 degrees and the axial separation distance of less than 2.54 cm (1 in.), then the tube must be removed from service (overlapping portions of the flaws only need to be counted once in determining the total circumferential involvement of the flaws). For flaws within 2.54 cm (1 in.) of the bottom of the tubesheet, the technical specifications were modified to indicate (1) when one or more flaws with circumferential components are found and the total of the circumferential components exceeds 94 degrees, then the tube shall be removed from service and (2) when one or more flaws with circumferential components are found in the portion of the tube within 2.54 cm (1 in.) from the bottom of the tubesheet and within 2.54 cm (1 in.) axial separation distance of a flaw above 2.54 cm (1 in.) from the bottom of the tubesheet, and the total of the circumferential components found in the tube exceeds 94 degrees, then the tube shall be removed from service (overlapping portions of the flaws only need to be counted once in determining the total circumferential involvement of the flaws). This revision to the technical specifications was applicable only to RFO 31 and the subsequent operating cycle (ADAMS Accession No. ML082540883).

There was minimal primary-to-secondary leakage (less than 3.79 lpd (1 gpd)) during Cycle 31 (spring 2007 to fall 2008). The leak rate has not changed over several operating cycles.

During RFO 31 in 2008, 100 percent of the tubes in each of the two steam generators were inspected full length with a bobbin coil, with the exception of the U-bend region of the row 1 and row 2 tubes. In addition to the bobbin coil inspections, a rotating probe equipped with a plus-point coil was used to inspect:

- 100 percent of the tubes from 7.6 cm (3 in.) above to 7.6 cm (3 in.) below the top of the tubesheet on the hot-leg side in steam generators A and B
- 50 percent of the tubes from the hot-leg tube end to 7.62 cm (3 in.) above the top of the tubesheet on the hot-leg side in steam generator A
- 22 percent of the tubes from the hot-leg tube end to 7.62 cm (3 in.) above the top of the tubesheet on the hot-leg side in steam generator B
- 30 percent of the tubes from the hot-leg tube end to 12.7 cm (5 in.) above the hot-leg tube end in steam generator B (for these tubes, the uppermost 43.2 cm (17 in.) of the tube within the tubesheet was inspected during RFO 30)
- all peripheral tubes (approximately 530 tubes) from 7.6 cm (3 in.) above to 7.6 cm (3 in.) below the top of the tubesheet on the cold-leg side of steam generators A and B

- the U-bend region of 50 percent of the row 1 and row 2 tubes in steam generator A and 20 percent of the tubes in steam generator B

- all dents and dings in the freespan regions with bobbin voltage amplitudes greater than or equal to 5 volts

- all dents and dings at structures (with bobbin voltage amplitudes greater than or equal to 2 volts)

- all dents and dings in the U-bend region (with bobbin voltage amplitudes greater than or equal to 2 volts)

As a result of these inspections, one tube was plugged. This tube was plugged because it was not expanded for the full depth of the tubesheet (row 38, column 69 in steam generator A).

The only steam generator tube degradation mechanisms observed during RFO 31 were (1) wear at the AVBs, (2) wear at the tube support plate elevations, (3) wear attributed to loose parts, and (4) wear attributed to maintenance activities.

Eighty-nine indications of wear at the AVBs were detected in 48 tubes in steam generator A and 64 indications of wear at the AVBs were detected in 43 tubes in steam generator B. The maximum depth reported for the AVB wear indications was 33 percent throughwall.

Five indications of wear were detected in five tubes at the tube support plate elevations. Four of these indications were in steam generator A, and one was in steam generator B. The maximum depth reported was 14 percent throughwall.

Wear attributed to either transient loose parts that are no longer present or damage from sludge lancing equipment was detected in 27 tubes in steam generator A (34 indications) and 1 tube in steam generator B (1 indication). All of these indications were slightly above the top of the tubesheet on the hot-leg side of the steam generator. The maximum depth reported for these indications was 19 percent throughwall. One indication of wear attributed to a loose part was detected in steam generator B. Visual inspections of the area around this tube did not identify any loose parts. The maximum depth of this indication was 17 percent throughwall.

Four possible loose part indications were identified in RFO 31 before chemical cleaning. After chemical cleaning, only two of these indications remained. No wear was associated with these possible loose parts. Secondary-side visual examinations in the vicinity of these possible loose parts did not identify any loose parts.

During RFO 31, 546 dings and dents with bobbin voltage amplitudes greater than or equal to 2 volts were identified in 393 tubes. A comparison of these signals with data from 1995 revealed all but one of the signals was present in the 1995 data. This signal was classified as a dent (i.e., service induced). The dent was in a peripheral tube about 2.54 cm (1 in.) above the top of the tubesheet on the hot-leg side of steam generator A.

A full bundle chemical cleaning was performed in both steam generators during RFO 31. After the chemical cleaning, sludge lancing was performed at the flow distribution baffle and the tubesheet. The total amount of material removed through chemical cleaning and sludge lancing was about 7,500 pounds and 225 pounds, respectively.

Visual inspections were performed of the steam drum (upper shell and upper internals including primary and secondary moisture separator assemblies), feedring, J-nozzles, top (sixth) tube support plate, flow distribution baffle, and top of tubesheet in both steam generators during RFO 31.

The visual inspections of the steam drum and upper internals revealed residual dry chemical residue and rust coloring on many areas of the components. Flow impingement patterns were observed on the feedring and on the outside of some primary moisture separator riser barrels as well as under and around several J-nozzles. Erosion of the feedwater ring and riser barrel areas was not discernible by touch. Inside the feedring, possible wear marks were noted in steam generator B near the tee at the bottom concaved portion of the distribution ring. There was no discernible pattern associated with these wear marks. Thin wafers of rust colored debris were noted in-bundle of the primary separate riser barrels. These wafers were brittle and were considered by the licensee to be magnetite or scale pieces that had fallen from the riser tubes.

At the top tube support plate, no anomalies were observed on the lower U-bends and no foreign objects were detected on the sixth tube support plate. No blockage of the quatrefoil shaped holes was observed; however, some scale was visible in crevices, but no pattern was discernible for this scale. The flow distribution baffle was clean with no discernible scale on the tubes or in the crevice regions.

FOSAR visual inspections included the annulus, the no-tube lane, and select in-bundle columns. These inspections were performed after chemical cleaning and sludge lancing. The annulus was free of debris and sludge. The no-tube lane contained some remnants of sludge ranging from 6.35 mm (0.25 in.) to 12.7 mm (0.5 in.) high and confined to the center stay rod area. In-bundle visual examination revealed some bridging deposits and collars in a few columns near the center of the previous sludge pile area. The highest estimated collar height is approximately 2.54 cm (1 in.).

During RFO 32 in 2010, no steam generator tubes were inspected.

There was minimal primary-to-secondary leakage (leak rate varied between 0.75 and 1.5 lpd (0.2 and 0.4 gpd)) during Cycle 33 (spring 2010 to fall 2011). Primary-to-secondary leakage has been evident since before the spring 1991 outage and has remained relatively constant.

During RFO 33 in 2011, 100 percent of the tubes in each of the two steam generators were inspected full length with a bobbin coil, with the exception of the U-bend region of the row 1 and row 2 tubes. In addition to the bobbin coil inspections, a rotating probe equipped with a plus-point coil was used to inspect:

- 50 percent of the peripheral tubes from 7.6 cm (3 in.) above to 7.6 cm (3 in.) below the top of the tubesheet on the hot-leg side in steam generator A
- 50 percent of the tubes from the hot-leg tube end to 7.62 cm (3 in.) above the top of the tubesheet on the hot-leg side in steam generator A
- 100 percent of the tubes from the hot-leg tube end to 7.62 cm (3 in.) above the top of the tubesheet on the hot-leg side in steam generator B

- 100 percent of the peripheral tubes (about 530 tubes per steam generator) from 7.6 cm (3 in.) above to 7.6 cm (3 in.) below the top of the tubesheet on the cold-leg side in steam generators A and B

- the U-bend region of 50 percent of the row 1 and row 2 tubes in steam generators A and B

In addition to these eddy current inspections, all tube plugs in each of the two steam generators were inspected visually. All plugs were dry.

As a result of these inspections, two tubes were plugged. These tubes were plugged for circumferentially oriented primary water stress corrosion cracking indications near the tube ends.

The only steam generator tube degradation mechanisms observed during RFO 33 were (1) wear at the AVBs, (2) wear at the tube support plate elevations, (3) wear attributed to loose parts, (4) wear attributed to maintenance activities, and (5) circumferentially oriented primary water stress corrosion cracking near the hot-leg tube ends.

Ninety-four indications of wear at the AVBs were detected in 50 tubes in steam generator A, and 73 indications of wear at the AVBs were detected in 51 tubes in steam generator B. The maximum depth reported for the AVB wear indications was 37 percent throughwall.

Eight indications of wear in eight tubes were detected at the tube support plate elevations. Five of these indications were in steam generator A and three were in steam generator B. The maximum depth reported was 16 percent throughwall. The depths of the historic indications remain essentially unchanged.

Wear attributed to either transient loose parts that are no longer present or damage from sludge lancing equipment was detected in 10 tubes in steam generator A (10 indications). The number of tubes with this type of indication has decreased from prior inspections because the licensee is no longer including geometric anomalies in this category and because some of the indications were no longer detectable/reportable. All of these indications were slightly above the top of the tubesheet on the hot-leg side of the steam generator. The maximum depth reported for these indications was 11 percent throughwall. One indication of wear attributed to a loose part was detected in steam generator B. The size of the indication remained essentially unchanged since the prior inspection in RFO 31. The maximum depth of this indication was 16 percent throughwall.

The two tubes that were plugged for circumferentially oriented primary water stress corrosion cracking indications near the hot-leg tube ends were rolled before plugging to provide added assurance against leakage and pull-out if the cracking were to become more severe in the future. The indications had a circumferential extent of approximately 40-degrees and were about 2.54 mm (0.1 in.) above the tube end. These were the only two indications of cracking identified during RFO 33.

Inspection and maintenance on the secondary side of each of the steam generators also were performed during RFO 33. To reduce the amount of sludge on the top of the tubesheet, sludge lancing was performed. After the sludge lancing, FOSAR was performed in the annulus region and tube lane in each of the steam generators. During FOSAR, 11 objects (e.g., sludge rocks, slag, wire, and bristles) were identified. Five of these objects (slag, wire) were removed. A

licensee assessment concluded that it was acceptable to allow the objects that could not be removed from the steam generator to remain until the next inspection. All of the foreign objects identified were in steam generator A.

Visual inspections also were performed on several secondary-side components following modifications made in preparation for an extended power uprate. Before implementing the power uprate, these components were inspected visually to establish a baseline: feedring, J-nozzles, thermal sleeve, secondary moisture separator, primary moisture separator, mid-deck extension, hatch, hinges, riser barrel, top hats, and externals of the feedring and J-nozzles. Ultrasonic measurements also were performed on the feedring, primary moisture separators, and swirl vanes. All 35 J-nozzles were inspected. The interior of the feedring was clear of any foreign material. There was burn-through at the interface of the J-nozzle and feedring at four J-nozzles (J-nozzle 28 in steam generator A, and J-nozzles 7, 11, and 14 in steam generator B). These indications are a result of steam generator fabrication. All 112 primary moisture separators were inspected visually. There was a light coating of magnetite on all of the primary moisture separators. In addition, ultrasonic thickness measurements were made on the primary moisture separator swirl vanes and riser barrels and the feedring for trending. Ultrasonic measurements were taken at 56 locations on the steam generator A primary moisture separators, 64 locations on the steam generator A feedring, 55 locations on the steam generator B primary moisture separators, and 64 locations on the steam generator B feedring. No abnormal measurements were identified.

During RFO 33 in 2011, modifications were made to the steam generator to ensure moisture carryover remains less than or equal to 0.25 percent. These modifications were made as part of an extended power uprate, which was implemented during cycle 34. To confirm that the steam drum components are performing adequately under the extended power uprate conditions, a monitoring program was implemented that involves inspecting the steam generator steam drum components during RFO 34 and RFO 35.

Cycle 34 (fall 2011 to spring 2013) presented minimal primary-to-secondary leakage (leak rate varied between 0.0 and 0.75 lpd (0.0 and 0.2 gpd)). Primary-to-secondary leakage has been evident since before the spring 1991 outage and has remained relatively constant.

During RFO 34 in 2013, 100 percent of the tubes in each of the two steam generators were inspected full length with a bobbin coil, with the exception of the U-bend region of the row 1 and row 2 tubes. In addition to the bobbin coil inspections, a rotating probe equipped with a plus-point coil was used to inspect:

- 100 percent of the peripheral tubes from 7.6 cm (3 in.) above to 7.6 cm (3 in.) below the top of the tubesheet on both the hot- and cold-leg side in steam generators A and B

- 50 percent of the tubes from the hot-leg tube end to 7.62 cm (3 in.) above the top of the tubesheet on the hot-leg side in steam generator A (i.e., the 50 percent not inspected during RFO 33)

- 100 percent of the tubes from the hot-leg tube end to 7.62 cm (3 in.) above the top of the tubesheet on the hot-leg side in steam generator B

- the U-bend region of 50 percent of the row 1 and row 2 tubes in steam generators A and B (for steam generator A, the 50 percent sample did not include tubes inspected during

RFO 33; for steam generator B, the 50 percent sample were the same tubes inspected in RFO 33)

- 50 percent of the dents and dings with bobbin voltage amplitudes greater than 5 volts

In addition to these eddy current inspections, all tube plugs in each of the two steam generators were inspected visually. All plugs were dry, in their proper location, and there was no evidence of degradation.

Visual Inspections of the hot- and cold-leg steam generator channel head regions were performed during RFO 34. No indication of cladding degradation was identified in the steam generator A channel head; however, discoloration was observed around the hot-leg manway in steam generator B. This discoloration was initially observed in RFO 30 and showed no indication of further degradation during the RFO 34 inspections.

As a result of these inspections, no tubes were plugged.

The only steam generator tube degradation mechanisms observed during RFO 34 were wear at the AVBs and wear at the tube support plate elevations.

A total of 102 indications of wear at the AVBs were detected in 57 tubes in steam generator A, and 74 indications of wear at the AVBs were detected in 51 tubes in steam generator B. The maximum depth reported for the AVB wear indications was 34 percent throughwall. The 95th percentile growth rate for the AVB wear indications is less than 3 percent throughwall per effective full power year.

Eleven indications of wear in 10 tubes were detected at the tube support plate elevations. Six of these indications (in six tubes) were in steam generator A and five indications (in four tubes) were in steam generator B. The one tube with multiple indications had two indications at one tube support plate elevation (wear was associated with two different tube support plate lands). The maximum depth reported was 15 percent throughwall. The depths of the historic indications remain essentially unchanged.

The wear reported in prior outages attributed to either transient loose parts or sludge lancing equipment was not detected during RFO 34.

Inspection and maintenance on the secondary side of each of the steam generators also were performed during RFO 34. To reduce the amount of sludge on the top of the tubesheet, sludge lancing was performed. After the sludge lancing, FOSAR was performed in the annulus region and tube lane in each of the steam generators. Two objects, a piece of gasket and a sludge rock, were detected and removed from steam generator A. No objects were found in steam generator B.

Visual inspections also were performed on the feedring (from the inside and outside), J-nozzles (from the inside and outside), thermal sleeve, primary moisture separator, mid-deck extension, hatch, hinges, riser barrel, and top hats. All accessible areas of the moisture carryover modifications were inspected. No anomalies or degradation were detected. Ultrasonic measurements were also performed on the feedring, primary moisture separators, and swirl vanes. All 35 J-nozzles were inspected visually. No anomalous conditions were reported; however, there is weld “burn through” associated with J-nozzles 2, 3, and 28 in steam generator A and J-nozzles 7, 11, and 14 in steam generator B. All 112 primary moisture separators were

visually inspected. There was a light coating of magnetite on all of the primary moisture separators. No anomalous conditions or degradation were reported. In addition, ultrasonic thickness measurements were made on eight primary moisture separators and the feedring in both steam generators. There were no abnormal thickness measurements and there were no negative trends from the baseline measurements taken during RFO 33.

### 3.4.3 Robinson 2

Tables 3-37, 3-38, and 3-39 summarize the information discussed below for Robinson 2. Table 3-37 provides the number of full-length bobbin inspections and the number of tubes plugged and deplugged during each outage for each of the three steam generators. Table 3-38 lists the reasons why the tubes were plugged. Table 3-39 lists tubes plugged for reasons other than wear at the AVBs.

Robinson 2 has three Westinghouse model 44F steam generators. These steam generators were installed at the plant in 1984. At the time of the replacement, the water chemistry program was changed from phosphate to all-volatile treatment. The tube supports are numbered as shown in Figure 2-6 (although the AVBs are numbered 01A, 02A, 03A, and 04A rather than AVB1, AVB2, AVB3, and AVB4, respectively).

Before entering RFO 21, no primary-to-secondary leakage existed.

During RFO 21 in 2002, about 50 percent of the tubes in each of the three steam generators were inspected full length with a bobbin coil, including all peripheral tubes (two tubes deep). In addition to the bobbin coil inspections, a rotating probe equipped with a plus-point coil was used to inspect:

- the hot-leg expansion transition region of 50 percent of the tubes in each of the three steam generators
- the U-bend region of 50 percent of the row 1 and row 2 tubes in each of the three steam generators
- approximately 20 percent of the hot-leg manufacturing buff marks and dents in each of the three steam generators

As a result of these inspections, eight tubes were plugged—four for wear attributed to loose parts, one for a mechanical wear from interaction with maintenance equipment, and three for manufacturing anomalies.

The only steam generator tube degradation mechanisms observed during RFO 21 were wear at the AVBs, wear attributed to loose parts, and wear attributed to maintenance activities (e.g., modifications to the wrapper to permit sludge lancing equipment installation).

Six indications of wear at the AVBs were detected in three tubes. All of these indications were in steam generator C. The maximum depth reported for the AVB wear indications was 13 percent throughwall.

Wear attributed to either transient loose parts that are no longer present or damage from sludge lancing equipment was detected in several tubes in each of the steam generators. In addition, one tube was identified with a wear indication associated with a possible loose part indication.

Visual inspections at the location of the wear scar/possible loose part indication were not performed. This tube was stabilized on the hot-leg side.

Inspection and maintenance on the secondary side of each of the three steam generators were also performed during RFO 21. To reduce the amount of sludge on the top of the tubesheet, chemical cleaning and sludge lancing were performed in each of the steam generators. The chemical cleaning and sludge lancing were done before the eddy current inspection of the tubes. After the sludge lancing, secondary-side visual inspections were performed in each of the three steam generators. The scope of the visual inspections included the annulus and blowdown lane. In addition, visual inspections were performed in eight selected columns within the tube bundle of steam generator C before and after the chemical cleaning/sludge lancing.

Before the shutdown for RFO 22, low levels of primary-to-secondary leakage were observed from steam generator B. Leakage was first detected on January 17, 2004. The leak rate peaked at about 13.2 lpd (3.5 gpd) and subsequently reduced to less than detectable. Immediately before shutdown, the leak rate was detectable but less than approximately 2.65 lpd (0.7 gpd). A secondary-side pressure test performed on steam generator B after plant shutdown identified one tube, at row 23, column 72, to be leaking from the hot-leg. At a secondary-side pressure of 2,758 kPa (400 psi), one drop was observed every 6 seconds. Further investigation identified the leak location as the fourth tube support on the hot-leg side, and eddy current inspection techniques identified a potential loose part at this location. Visual confirmation and removal of the loose part was not performed because the affected tube is in the interior of the tube bundle. The leaking tube and an adjacent tube, which was also affected by the loose part (the adjacent tube did not have a throughwall flaw), were plugged and stabilized.

During RFO 22 in 2004, about 50 percent of the tubes (including all of the peripheral tubes) in steam generators A and C, and 100 percent of the tubes in steam generator B were inspected full length with a bobbin coil. In addition to the bobbin coil inspections, a rotating probe equipped with a plus-point coil was used to inspect:

- 50 percent of the tubes from 10.2 cm (4 in.) above to 5 cm (2 in.) below the top of the tubesheet on the hot-leg side in each of the three steam generators
- the U-bend region of 50 percent of the row 1 and row 2 tubes in each of the three steam generators
- 10 percent of the dings with bobbin voltage amplitudes greater than 2 volts in each of the three steam generators
- a sample of benign indications, such as manufacturing buff marks in each of the three steam generators

In addition, a rotating probe equipped with a plus-point coil was used to inspect all peripheral tubes (one tube deep) from 10.2 cm (4 in.) above to 5 cm (2 in.) below the top of the tubesheet on the cold-leg side of steam generator B.

As a result of these inspections, seven tubes were plugged. All of these tubes were plugged for wear attributed to loose parts. One of these tubes had an indication that was only detected visually. This indication was slightly above the top of the tubesheet on the hot-leg side of the steam generator. This wear scar was not detected with a bobbin coil or rotating probe.

Wear from loose parts, maintenance equipment, and tube supports (including AVBs) are the only degradation mechanisms that have been identified in the steam generators since their installation, and no new forms of degradation were identified during RFO 22.

Steam generator A had 38 tubes with wear indications near the top of the tubesheet; none of these indications were new. Steam generator A also had two tubes with wear indications at tube support plates and neither showed any change since the last outage. Steam generator B had 31 tubes with wear indications near the top of the tubesheet, and all were at peripheral tubes. Steam generator B also had seven tubes with wear indications at tube supports (i.e., tube support plates or flow distribution baffle). Steam generator C had nine tubes with wear indications near the top of the tubesheet, two tubes with wear indications at tube support plates, and three tubes with wear indications at AVBs (AVB wear was first detected in 1995); all of these indications exhibited no change from previous inspections.

The cause of the primary-to-secondary leak was reported to be wear attributed to a loose part. This loose part also resulted in wear on an adjacent tube. The wear on the leaking tube was at the fourth tube support plate on the hot-leg side, and the loose part was observed on the low-frequency eddy current examination data. The wear on the leaking tube was quantified as 76 percent throughwall (although it is known to actually be 100 percent throughwall) with roughly equivalent axial and circumferential extents. The wear on the adjacent tube, which was also affected by this loose part, was quantified as 55 percent throughwall with approximately 6.35 mm (0.25 in.) axial extent and minimal circumferential extent. Sizing of these wear indications was performed using a rotating probe equipped with a plus-point coil.

In-situ pressure testing of the leaking tube (row 23, column 72 in steam generator B on the hot-leg side) was performed during RFO 22. At the normal operating differential pressure of 11,720 kPa (1,700 psi) (corrected to account for the temperature difference between room temperature testing and operating conditions), no leakage was identified. In the process of increasing pressure to verify accident leakage integrity, an intermediate pressure (15,860 kPa or 2,300 psi) holdpoint was attained, and no leakage was identified. At the corrected accident leakage integrity differential pressure of 20,680 kPa (3,000 psi) (equivalent to the steam line break differential pressure adjusted to account for the difference between the test temperature and the temperature associated with postulated accident conditions), the leak rate was 0.0620 lpm (0.0164 gpm) (0.029 lpm (0.0078 gpm) corrected for temperature). Pressure was then reduced and testing was again performed at normal operating differential pressure (11,721 kPa, or 1,700 pounds per square inch gauge (psig)) to determine if the flaw deformed at the steam line break differential pressure. At this test pressure, leakage of 0.0473 lpm (0.0125 gpm) (0.0223 lpm (0.0059 gpm) corrected for temperature) was observed. Finally, the tube was tested at three times normal operating differential pressure (34,474 kPa or 5,000 psig) to determine tube structural integrity. The tube met the structural integrity criteria and did not burst. Post in-situ eddy current testing of the degraded tube showed no evidence of change at the leak location.

To identify tubes that have potentially high residual stress and therefore might be more susceptible to stress corrosion cracking, bobbin coil eddy current data were reviewed. Because of this review, no low-row (i.e., rows 1 through 8) tubes were identified as having potentially higher residual stresses as evidenced by the presence of an offset and 42 high row tubes were identified as having potentially higher residual stresses in the straight span portion of the tube. Of these 42 tubes, 5 are in steam generator A, 10 are in steam generator B, and 27 are in steam generator C. In steam generators A and C all of the tubes received a bobbin probe

inspection and a rotating probe inspection of the expansion transition region. In steam generator B, 4 of the 10 tubes received a rotating probe of the expansion transition region.

Inspection and maintenance on the secondary side of each of the three steam generators also were performed during RFO 22. To reduce the amount of sludge on the top of the tubesheet, sludge lancing was performed. After the sludge lancing, FOSAR was performed in the blowdown lane and annulus region in each of the three steam generators. In addition, a visual inspection was performed of the entire top of the tubesheet region in steam generator B (the previous 100 percent top of the tubesheet visual examination of steam generator B was conducted in 1995).

During RFO 22, a number of small pieces of what appeared to be Flexitallic gaskets and small metal parts (wire & weld slag) were identified and removed from steam generator B. A piece of weld rod that had been observed during the previous outage (RFO 21) also was removed from steam generator B. The weld rod caused two small indications measuring 10 percent and 18 percent throughwall. No change was observed in the amount of throughwall penetration in these two indications from what was identified in the previous outage. Four or five small metallic foreign objects were identified and removed from steam generators A and C during RFO 22. The number and extent of the foreign objects removed from the steam generators is consistent with the plant's past experience.

During RFO 23 in 2005, no steam generator tubes were inspected.

On March 12, 2007, Robinson 2 revised the steam generator portion of the technical specifications making them performance-based consistent with TSTF-449 (ADAMS Accession No. ML070510368).

On April 9, 2007, the steam generator portion of the Robinson 2 technical specifications was revised to limit the extent of inspection in the tubesheet region. Specifically, the technical specifications were revised to exclude the portion of tube that is more than 43.2 cm (17 in.) below the top of the tubesheet from inspection (i.e., approximately the lowermost 10.2 cm (4 in.) of tube in the tubesheet was excluded from inspection, and hence any flaws that may exist in this region are permitted to remain in service). This revision was applicable until the end of cycle 25 (ADAMS Accession No. ML071060259).

There no evidence of primary-to-secondary leakage during Cycle 24 (fall 2005 to spring 2007).

During RFO 24 in 2007, about 60 percent of the tubes in each of the three steam generators were inspected full length with a bobbin coil (including all tubes not inspected in RFO 22), with the exception of the U-bend region of the tubes in rows 1 and 2. In addition to the bobbin coil inspections, a rotating probe equipped with a plus-point coil was used to inspect:

- approximately 50 percent of the tubes from 10.2 cm (4 in.) above to 5 cm (2 in.) below the top of the tubesheet on the hot-leg side in each of the three steam generators

- all peripheral (outer perimeter and tube lane) tubes (two rows deep) from 10.2 cm (4 in.) above to 5 cm (2 in.) below the top of the tubesheet on the hot- and cold-leg sides in each of the three steam generators

- the U-bend region of approximately 50 percent of the row 1 and row 2 tubes in each of the three steam generators

For the tubes scheduled to be inspected with a rotating probe at the expansion transition on the hot-leg side of the steam generators, the extent of inspection was increased to include from 10.2 cm (4 in.) above to 43.2 cm (17 in.) below the top of the tubesheet if the tubes contained overexpansions greater than 0.038 mm (1.5 mils) or bulges or dents with bobbin voltage amplitudes greater than 18 volts. The overexpansions, bulges, and dents were identified through a review of the bobbin coil data from RFO 19, RFO 20, RFO 21, and RFO 22. In addition, a rotating probe equipped with a plus-point coil was used to inspect the portion of the tube in row 1, column 47, in the tubesheet on the cold-leg side of steam generator A because the tube was not expanded into the tubesheet, and the portion of the tube in row 25, column 10, in the tubesheet on the cold-leg side of steam generator B because the tube was partially expanded into the tubesheet.

In addition to these eddy current inspections, all tube plugs in each of the three steam generators were inspected visually. No degradation or abnormal leakage was identified during the inspection of the plugs.

Each of the 42 tubes that have potentially high residual stress and therefore might be more susceptible to stress corrosion cracking was inspected full length with a bobbin coil. In addition to the bobbin coil inspections, a rotating probe equipped with a plus-point coil was used to inspect 38 of the 42 tubes from 10.2 cm (4 in.) above to 5 cm (2 in.) below the top of the tubesheet and the remaining 4 tubes were inspected from 10.2 cm (4 in.) above to 43.2 cm (17 in.) below the top of the tubesheet. No degradation was observed in any of these tubes.

As a result of these inspections, six tubes were plugged. All of these tubes were plugged for wear attributed to loose parts.

The only steam generator tube degradation mechanisms observed during RFO 24 were (1) wear at the AVBs, (2) wear at tube support plates, (3) wear attributed to loose parts, and (4) wear attributed to maintenance activities (e.g., modifications to the wrapper to permit sludge lancing equipment installation).

Steam generator A had 38 tubes with wear indications near the top of the tubesheet; none of these indications were new. Steam generator A also had two tubes with wear indications at tube support plates, one of which was new. Steam generator B had about 35 tubes with wear indications near the top of the tubesheet, and seven tubes with wear indications at tube supports (i.e., tube support plates or flow distribution baffle). Steam generator C had 10 tubes with wear indications near the top of the tubesheet, 1 tube with a wear indication at a tube support plate, and 3 tubes with wear indications at AVBs (AVB wear was first detected in 1995). Some of these tubes were plugged. The maximum depth reported for the wear attributed to loose parts was 38 percent throughwall.

Inspection and maintenance on the secondary side of each of the three steam generators were performed during RFO 24. FOSAR was performed on the top of the tubesheet in each of the three steam generators. All foreign objects that were left in the steam generators were determined to be acceptable to remain in the steam generators for the next two operating cycles. Visual inspections of the steam drum in steam generator B revealed no loose parts, foreign objects, or significant degradation; however, a pinhole was discovered in one of the structures that holds the moisture separators in place (the “pagoda”). The hole was attributed to a preexisting hole drilled through the pipe wall during original installation. Visual inspections and ultrasonic thickness measurements were performed in specific locations of the feedwater ring. Thickness measurements were obtained at 16 accessible locations around the feedring

and all were within acceptable limits. Six J-tubes in steam generator B also were visually inspected. No anomalous conditions were found.

Primary-to-secondary leakage was observed in steam generator A in February 2008. The leak rate varied during the cycle averaging less than 0.08 lpd (0.020 gpd), and it never exceeded 0.15 lpd (0.040 gpd) over a 5-month period. This leakage was detectable because of a leaking fuel assembly that increased the primary side source term. The leaking fuel assembly was removed during RFO 25.

During RFO 25 in 2008, no steam generator tubes were inspected.

On May 7, 2010, the steam generator portion of the Robinson technical specifications was revised to limit the extent of inspection in the tubesheet region. Specifically, the technical specifications were revised to exclude the portion of tube that is more than 43.9 cm (17.28 in.) below the top of the tubesheet from inspection (i.e., approximately the lowermost 10.2 cm (4 in.) of tube in the tubesheet was excluded from inspection, and hence any flaws that may exist in this region are permitted to remain in service). This revision was only applicable for RFO 26 and the subsequent operating cycle (i.e., until the end of cycle 27) (ADAMS Accession No. ML100990405).

No evidence existed of primary-to-secondary leakage during cycle 26 (fall 2008 to summer 2010); however, leakage is postulated to exist in steam generator A below the minimum detectable level because of the primary-to-secondary leakage observed between February 2008 and RFO 25.

During RFO 26 in 2010, 100 percent of the tubes in each of the three steam generators were inspected full length with a bobbin coil, with the exception of the U-bend region of the tubes in rows 1 and 2. In addition to the bobbin coil inspections, a rotating probe equipped with a plus-point coil was used to inspect:

- about 50 percent of the tubes from 10.2 cm (4 in.) above to 5 cm (2 in.) below the top of the tubesheet on the hot-leg side in each of the three steam generators

- all peripheral (outer perimeter and tube lane) tubes (two rows deep) from 10.2 cm (4 in.) above to 5 cm (2 in.) below the top of the tubesheet on the hot- and cold-leg sides in each of the three steam generators

- the U-bend region of 100 percent of the tubes in rows 1 and 2 in steam generator A and approximately 50 percent of the row 1 and row 2 tubes in steam generators B and C in each of the three steam generators

For the tubes scheduled to be inspected with a rotating probe at the expansion transition on the hot-leg side of the steam generators, the extent of inspection was increased to include from 10.2 cm (4 in.) above to 43.9 cm (17.28 in.) below the top of the tubesheet if the tubes contained overexpansions, bulges, or dents (which resulted in inspecting 311 tubes in steam generator A, 271 tubes in steam generator B, and 179 tubes in steam generator C. In addition, a rotating probe equipped with a plus-point coil was used to inspect all 16 tubes whose bottom of expansion transition is greater than 12.7 mm (0.5 in.) below the top of the tubesheet.

As a result of these inspections, 12 tubes were plugged—1 for AVB wear, 10 for wear attributed to loose parts/maintenance activities, and 1 for presence of a foreign object. The maximum depth reported for these indications was 64 percent throughwall.

The only steam generator tube degradation mechanisms observed during RFO 26 were (1) wear at the AVBs, (2) wear at tube support plates, (3) wear attributed to loose parts, and (4) wear attributed to maintenance activities (e.g., modifications to the wrapper to permit sludge lancing equipment installation). No corrosion related degradation has ever been observed in the replacement steam generators.

Steam generator A had 62 indications (in 39 tubes) of wear near the top of the tubesheet; three of these indications were new. Steam generator A also had two indications of wear (in 2 tubes) at the tube support plates. Steam generator B had 57 indications (in 39 tubes) of wear indications near the top of the tubesheet, 11 wear indications (in 11 tubes) at tube supports (i.e., tube support plates or flow distribution baffle), and 4 indications (in 3 tubes) with wear indications at AVBs. Steam generator C had 11 indications (in 9 tubes) of wear near the top of the tubesheet, 14 wear indications (in 14 tubes) at a tube support plate, and 13 indications (in 7 tubes) with wear indications at AVBs. Most of the indications near the top of the tubesheet were detected in prior outages. For the wear indications at tube support plates, none of the indications in steam generator A were new, nine of the indications in steam generator B were new, and 13 indications in steam generator C were new. For the AVB indications, all the indications in steam generator B were new and six indications in steam generator C were new. The previously reported indications had no significant growth. The maximum depth reported for the AVB wear indications was 39 percent throughwall.

No indications were detected that could be attributed to the source of the primary-to-secondary leakage in steam generator A.

Inspection and maintenance on the secondary side of each of the three steam generators were performed during RFO 26. FOSAR was performed on the top of the tubesheet in each of the three steam generators. All foreign objects that were left in the steam generators were determined to be acceptable to remain in the steam generators for the next two operating cycles. Sludge lancing was performed at the top of the tubesheet in all three steam generators. About 100 pounds of sludge was removed from each steam generator. A high volume bundle flush was performed in all three steam generators. This activity involved delivering about 3,785 lpm (1,000 gpm) of water to the upper steam drum swirl vanes, which then cascades over the tube bundle for the removal of loose deposits. Visual inspections in steam generator B in the region above the upper tube support plate before and after the flush indicated that the amount of loose sludge was reduced. This inspection revealed soft sludge on the top of the uppermost tube support plate and some loose scale.

Visual inspections of all accessible areas of the primary and secondary separators, mid-deck, feedring, feedring support structures, and J-nozzles were performed in steam generators A and B. In addition, an ultrasonic inspection was performed on all accessible areas of the feedwater ring in steam generator B. No anomalous conditions were identified during the visual inspections and the all ultrasonic dimensions were within acceptable limits.

During RFO 26, pinholes were identified in the pagoda supports for steam generators A and C, which were similar to the hole identified in the same structure in steam generator B during RFO 24. These holes were attributed to pre-existing holes drilled through the pipe wall during original installation. The holes in the pagoda support pipes were evaluated and determined to not

adversely affect its integrity. The pin-hole in the steam generator B pagoda was ultrasonically inspected in RFO 26 and found to be unchanged since RFO 24.

During RFO 27 in 2012, no steam generator tubes were inspected.

On August 29, 2013, the steam generator portion of the Robinson technical specifications was revised to limit the extent of inspection in the tubesheet region. Specifically, the technical specifications were revised to exclude the portion of tube that is more than 46 cm (18.11 in.) below the top of the tubesheet from inspection (i.e., approximately the lowermost 7.62 cm (3 in.) of tube in the tubesheet was excluded from inspection, and hence any flaws that may exist in this region are permitted to remain in service (ADAMS Accession No. ML13198A367)).

On August 29, 2013, the steam generator portion of the Robinson technical specifications was revised making them consistent with TSTF-510 (ADAMS Accession No. ML13198A367).

No evidence existed of primary-to-secondary leakage during cycle 28 (spring 2012 to fall 2013).

As of RFO 28, the steam generators had been analyzed with up to 6 percent of the tubes being plugged.

During RFO 28 in 2013, about 50 percent of the tubes in each of the three steam generators were inspected full length with a bobbin coil, with the exception of the U-bend region of the tubes in rows 1 and 2. These bobbin coil inspections included all tubes adjacent to plugged tubes, tubes with prior possible loose part and bobbin indications, all tubes having potentially higher residual stresses in the straight span portion of the tube, tubes in rows 1, 2, and 9 that were scheduled for inspection in the U-bend region with an array probe, and tubes planned to be preventatively plugged. In addition to the bobbin coil inspections, an array probe was used to inspect:

- 100 percent of the tubes from the hot-leg tube end to the first tube support plate on the hot-leg side, peripheral (outer perimeter and tube lane) tubes (two rows deep) from the cold-leg tube end to the first support on the cold-leg side in each of the three steam generators

- the U-bend region of 20 percent of the tubes in row 9 in each of the three steam generators

- all dents (identified during RFO 26 or RFO 28) with bobbin voltage amplitudes greater than 4.0 volts in each of the three steam generators

In addition, either a rotating probe equipped with a plus-point coil or an array probe was used to inspect the U-bend region of 50 percent of the row 1 and row 2 tubes in each of the three steam generators.

In addition to these eddy current inspections, all tube plugs in each of the three steam generators were inspected visually. All plugs were in their proper location and there was no evidence of leakage past the plugs.

Visual inspections of the hot- and cold-leg steam generator channel head regions were performed in all three steam generators during RFO 28. This included all clad surfaces. No degradation was detected during the primary channel head cladding inspections.

As a result of these inspections, four tubes were plugged because the bottom of the expansion transition was more than 2.54 cm (1 in.) from the top of the tubesheet.

The only steam generator tube degradation mechanisms observed during RFO 28 were (1) wear at the AVBs, (2) wear at tube support plates (all of which are a result of wear attributed to loose parts), (3) wear attributed to loose parts, (4) wear attributed to maintenance activities (e.g., modifications to the wrapper to permit sludge lancing equipment installation), and (5) circumferentially oriented primary water stress corrosion cracking near the tube ends.

Steam generator A had 10 indications (in 10 tubes) of wear near the top of the tubesheet, and 5 indications of wear (in 5 tubes) at the tube support plates (and all are a result of wear attributed to loose parts). Steam generator B had 13 indications (in 13 tubes) of wear indications near the top of the tubesheet, 9 wear indications (in 9 tubes) at tube supports (i.e., tube support plates or flow distribution baffle and all are a result of wear attributed to loose parts), and 4 indications (in 4 tubes) with wear indications at AVBs. Steam generator C had 2 indications (in 2 tubes) of wear near the top of the tubesheet, 17 wear indications (in 17 tubes) at a tube support plate (and all are a result of wear attributed to loose parts), and 11 indications (in 7 tubes) with wear indications at AVBs. Of these wear indications, 8 of the indications in steam generator A were new, 10 of the indications in steam generator B were new, and 8 of the indications in steam generator C were new. The maximum depth reported for wear indications attributed to loose parts and maintenance activities was 34 percent throughwall. The maximum depth reported for the AVB wear indications was 28 percent throughwall.

Two indications of circumferentially oriented primary water stress corrosion cracking were detected in two tubes during RFO 28. The circumferential primary water stress corrosion cracking indications were at the hot-leg tube end. This region of the tube had not been examined before with a probe capable of detecting cracking. These tubes were left in service since the indications were below the region of the tube required to be inspected as discussed above.

Eddy current data were taken to evaluate AVB insertion depth. A review of this data confirmed that a support structure was present at all tubes that should be supported by a particular AVB.

Inspection and maintenance on the secondary side of each of the three steam generators were performed during RFO 28. Chemical cleaning and sludge lancing were performed during RFO 28 before the eddy current inspections discussed above. The steam generators were chemically cleaned using the AREVA deposit minimization treatment. The chemical cleaning resulted in approximately 3600 to 3800 pounds of material being removed from the steam generators. Most of the material removed was iron, but some copper also was removed. Sludge lancing was performed at the top of the tubesheet and at the flow distribution baffle following the chemical cleaning in all three steam generators. The sludge lancing removed an additional 500 pounds of material. FOSAR was performed on the top of the tubesheet in each of the three steam generators, which included an in-bundle visual inspection near the top of the tubesheet using an AREVA system. The results were good. The visual inspection included the high flow velocity region, the peripheral tubes, open tube lane, and approximately five tubes into the tube bundle from the periphery. The inspections revealed six metallic objects (five Flexitallic gaskets and one small wire). All of these objects were removed.

After chemical cleaning, a visual inspection of the upper tube bundle region in steam generator A was performed. The inspections indicated the steam generator was very clean. Some tubes

were very clean and some still had some deposits. No blockage of the tube support plate openings was identified. There was a noticeable improvement in the condition (deposit loading) of this steam generator since RFO 26.

A visual inspection of the steam drum in steam generator C revealed no evidence of erosion or corrosion.

As this report was being prepared, a primary-to-secondary leak occurred at Robinson 2. After RFO 28, operation at Robinson 2 was commenced on November 4, 2013. On February 27, 2014, a primary-to-secondary leak was initially detected. The unit was shut down on March 7, 2014, because of this leakage. The primary-to-secondary leak rate was about 144 lpd (38 gpd) at the time of the shutdown. The leak was attributed to a loose part that was introduced into the feedwater system during maintenance performed in RFO 28. The affected tube had adequate structural integrity, and the steam generator had adequate leakage integrity (although an administrative issue with the plant technical specifications was identified with respect to the accident-induced leakage performance criterion).

### 3.4.4 Salem 1

Tables 3-40, 3-41, and 3-42 summarize the information discussed below for Salem 1. Table 3-40 provides the number of full-length bobbin inspections and the number of tubes plugged and deplugged during each outage for each of the four steam generators. Table 3-41 lists the reasons why the tubes were plugged. Table 3-42 lists tubes plugged for reasons other than wear at the AVBs.

Salem 1 has four Westinghouse model F steam generators. These steam generators were installed at the plant in 1997. The steam generators at Salem 1 were replaced with the steam generators from the canceled Seabrook 2 plant. The licensee numbers its tube supports from the hot-leg flow distribution baffle (FBH or BPH) to 7H on the hot-leg side of the steam generator and from FBC/BPC to 7C on the cold-leg side (Figure 2-4).

During RFO 15 in 2002, 100 percent of the tubes in each of the four steam generators were inspected full length with a bobbin coil, except for the U-bend region of those tubes in rows 1 and 2 that were inspected with a rotating probe. In addition to the bobbin coil inspections, a rotating probe equipped with a plus-point coil was used to inspect:

- the U-bend region of 20 percent of the row 1 and row 2 tubes in each of the four steam generators
- 100 percent of hot-leg dents and dings with bobbin voltage amplitudes greater than 5 volts (as determined from the RFO 14 data) in each of the four steam generators (dents are a reduction in tube diameter at a support (e.g., tube support plate, AVB), and a ding is a reduction in tube diameter in the freespan)
- all previously identified tubesheet expansion anomalies (over expansions and under expansions) in each of the four steam generators
- 30 percent of the tubes from 5.1 cm (2 in.) above to 7.62 cm (3 in.) below the top of the tubesheet on the hot-leg side in steam generators A and C.

In addition to these eddy current inspections, all tube plugs in each of the four steam generators were inspected visually. This inspection resulted in identifying one tube plug in steam generator D at row 4, column 69, on the hot-leg side with slightly more boron accumulation than the other tube plugs. The light coating of boron was removed from the plug and the plug location was monitored for a period of time. No leakage or other boric acid was observed during the review period; therefore, the licensee concluded that the minor boron observed on the plug was because of plug surface conditions rather than service-induced degradation of the plug.

As a result of these inspections, 33 tubes were plugged. All of these tubes were plugged for wear at the AVBs.

The only steam generator tube degradation mechanisms observed during RFO 15 were wear at the AVBs and wear at tube support plates.

During RFO 15, 1,387 indications of wear at the AVBs were identified. The maximum depth reported for the AVB wear indications was 54 percent throughwall. Wear at the AVBs was reported if the indication's depth exceeded 10 percent throughwall.

Wear at the tube support plates was observed in one tube during RFO 15. This was the first instance of wear at a tube support plate at Salem 1. This tube was plugged because of a wear indication at an AVB that exceeded the plugging limit.

To identify tubes that could have high residual stress and therefore might be more susceptible to stress corrosion cracking, a review was performed of all low-row (i.e., rows 1 through 10) RFO 14 bobbin coil eddy current data. As a result of this review, no low-row tubes were identified as having potentially higher residual stresses as evidenced by the presence of an offset in the eddy current data in the U-bend. Although no tubes were identified with an offset in the U-bend region, three tubes were identified in steam generator D with an eddy current signature that was different than the bulk of the population reviewed (i.e., there was an offset in the eddy current data above the second tube support plate). The tubes are in row 2, column 85; row 4, column 75; and row 10, column 83. A review of the preservice data (1996) showed that the eddy current signal from these tubes has been the same since manufacture. In addition, one higher-row tube in steam generator D was identified with a similar type of signal as those discussed above, although the offset was between the fifth AVB and the cold-leg tangent point. This tube was at row 49, column 54. These four tubes in steam generator D are being tracked for future observation.

During the preservice inspection, 37,855 manufacturing burnish mark indications were identified using reporting criteria more conservative than the standard criteria. The standard guideline for reporting manufacturing burnish marks during an in-service inspection examination would require the indication to be greater than 12.7 mm (0.5 in.) in length, greater than 2 volts, and less than 90 degrees in the 150 kilohertz absolute channel. During RFO 13 and 14, these indications were reviewed to determine whether the phase angle changed by more than 15 degrees or the voltage amplitude changed by more than 0.5 volts. If the indications changed (per this criteria), they were inspected with a rotating probe. No degradation was detected at locations where change was observed. During RFO 15, the signals were not monitored for change; rather the data were screened for "degradation" in the primary screening channel.

During RFO 15, one permeability variation indication was identified. The location was inspected with a magnetically biased rotating probe equipped with a plus-point coil and no degradation was detected.

Several possible loose part indications were identified during RFO 15. All of the indications were slightly above the top of the tubesheet on the hot-leg side. There were five possible loose-part indications in steam generator A and five indications in steam generator C. Because the secondary sides of the steam generators were not opened during RFO 15, no visual examinations were performed to determine if these possible loose part indications were actual loose parts or if they were sludge related. Neither the tubes containing the possible loose part signals nor the adjacent tubes had indications of wear. Because there were no wear indications and because the secondary-side flow conditions at the locations of these signals would result only in small vibration amplitudes at the secondary face of the tubesheet, the licensee concluded it was acceptable to leave these tubes in service. These locations were scheduled to be visually inspected during RFO 16 in 2004. There were also two tubes in steam generator D (row 42, column 62, and row 42, column 63) with possible loose part indications in RFO 15. These tubes had similar indications during the prior outage (RFO 14). Visual inspections during RFO 14 attributed the possible loose part indications to a small machine curl that could not be removed. There was no wear at the location of the possible loose part indications.

Sludge lancing was not performed during RFO 15; however, sludge mapping of each steam generator was performed by means of an automated data analysis program utilizing the low frequency bobbin coil data. A total of 197 tubes were identified with sludge, of which 28 were in steam generator A, 43 were in steam generator B, 61 were in steam generator C, and 65 were in steam generator D. The maximum height of sludge deposits was 4.85 cm (1.91 in.).

During RFO 16 in 2004, 100 percent of the tubes in each of the four steam generators were inspected full length with a bobbin coil, except for the U-bend region of those tubes in rows 1 and 2 that were inspected with a rotating probe. In addition to the bobbin coil inspections, a rotating probe equipped with a plus-point coil was used to inspect:

- about 50 percent of the tubes from 7.6 cm (3 in.) above to 7.6 cm (3 in.) below the top of the tubesheet on the hot-leg side in each of the four steam generators
- the U-bend region of 20 percent of the row 1 and row 2 tubes in each of the four steam generators
- 20 percent of hot-leg dents and dings with bobbin voltage amplitudes greater than 5 volts in each of the four steam generators
- 100 percent of the dents and dings in the U-bend region with bobbin voltage amplitudes greater than or equal to 2 volts in each of the four steam generators
- all previously identified tubesheet anomalies in each of the four steam generators

As a result of these inspections, 37 tubes were plugged—28 for wear at the AVBs, 3 for wear from a loose part, 3 for permeability variations, 1 for a data quality issue in the U-bend region, and 2 for eddy current offsets that could indicate high residual stress (and therefore more susceptible to stress corrosion cracking).

The only steam generator tube degradation mechanisms observed during RFO 16 were wear at the AVBs and wear attributed to loose parts.

The maximum depth reported for the AVB wear indications was 49 percent.

Three tubes were identified with wear attributed to loose parts during RFO 16. These three tubes were plugged. The indications were above the tubesheet on the cold-leg side of steam generator A, and the maximum depth of these indications was 8 percent throughwall. The loose part was removed from the steam generator.

To identify tubes that might have high residual stress and therefore might be more susceptible to stress corrosion cracking, all high-row (row 11 and higher) RFO 15 bobbin coil eddy current data were reviewed. As a result of this review, about 185 high-row tubes were identified as having potentially higher residual stresses. Two of these tubes were noted as having noticeably smaller voltage offsets than the other tubes. Although no degradation was detected, these tubes were plugged.

On October 14, 2005, Salem 1 revised the steam generator portion of the technical specifications making them performance-based consistent with TSTF-449 (ADAMS Accession No. ML052900201).

During RFO 17 in 2005, no steam generator tubes were inspected.

On March 27, 2007, the steam generator portion of the Salem 1 technical specifications was revised to limit the extent of inspection in the tubesheet region. Specifically, the technical specifications were revised to exclude the portion of tube that is more than 43.2 cm (17 in.) below the top of the tubesheet from inspection (i.e., approximately the lowermost 10.2 cm (4 in.) of tube in the tubesheet was excluded from inspection, and hence any flaws that may exist in this region are permitted to remain in service). This revision was only applicable for RFO 18 and the subsequent operating cycle (ADAMS Accession No. ML070790081).

There was no evidence of primary-to-secondary leakage during Cycle 18 (fall 2005 to spring 2007).

During RFO 18 in 2007, 100 percent of the tubes in each of the four steam generators were inspected full length with a bobbin coil. In addition to these bobbin coil inspections, a rotating probe equipped with a plus-point coil was used to inspect:

- 20 percent of bulges with bobbin voltage amplitudes greater than or equal to 18 volts (about 236 bulges) and overexpansions greater than or equal to 0.038 mm (1.5 mils) (about 489 overexpansions) within the top 43.2 cm (17 in.) of the tubesheet on the hot-leg side

- all hydraulic overexpansions at the top of the tubesheet on both the hot- and cold-leg side of the steam generators

- all dents and dings with bobbin voltage amplitudes greater than 5 volts on the hot- and cold-leg sides in 62 tubes with potentially elevated residual stresses

- all dents and dings in the U-bend region with bobbin voltage amplitudes greater than or equal to 2 volts in 62 tubes with potentially elevated residual stresses

- all indications of AVB wear that were reported during the bobbin coil inspection in 62 tubes with potentially elevated residual stresses

In addition to these eddy current inspections, all tube plugs in each of the four steam generators, including plugs installed during RFO 18, were inspected visually.

As a result of these inspections, 96 tubes were plugged—95 for wear at the AVBs, and 1 for a permeability variation.

The only steam generator tube degradation mechanism observed during RFO 18 was wear at the AVBs.

Of the 1,649 indications of wear at the AVBs detected during RFO 18, 356 were in steam generator A, 319 were in steam generator B, 630 were in steam generator C, and 344 were in steam generator D. Of the 1,649 indications, 447 were removed from service. The maximum depth reported for the AVB wear indications was 71 percent throughwall. This indication exceeded the condition monitoring limit. As a result, a full tube in-situ pressure test was performed. No leakage occurred at any of the in-situ test pressures including the three time normal operating differential pressure. This tube was stabilized and plugged. Because of this indication, wear indications attributed to AVB wear were removed from service if the depth was greater than or equal to 33 percent throughwall.

During RFO 18, one permeability variation indication was identified. The location was inspected with a magnetically biased rotating probe equipped with a plus-point coil and no degradation was detected. This tube was plugged.

Secondary-side maintenance and inspections were also performed during RFO 18. A high-volume upper bundle flush and sludge lancing at the top of the tubesheet were performed in each of the four steam generators. Visual inspections were performed after these activities to assess the amount of remaining sludge and fouling in the U-bend region, tube support plates and at the top of the tubesheet. These inspections indicated that there was no significant fouling or blockage in the U-bends or at the broached tube support plates. These inspections were performed from the seventh tube support plate down to approximately the third tube support plate. The inspections also indicated that the sludge lancing was effective at removing most of the sludge at the top of the tubesheet. After sludge lancing, FOSAR was performed at the top of the tubesheet. These inspections included the no-tube lane, the annulus, and inner bundle inspections on the hot- and cold-leg sides of the steam generators. These inspections also included a visual examination of the tube locations where possible loose part indications were identified during the review of the eddy current data. No tube wear from foreign objects was observed during the review of the eddy current data or during the visual inspections. All foreign objects left in the steam generator were assessed, and the licensee concluded that they were not likely to cause tube wear on any tube for the remaining life of the plant.

During RFO 19 in 2008, no steam generator tubes were inspected.

On March 29, 2010, the steam generator portion of the Salem 1 technical specifications was revised to limit the extent of inspection in the tubesheet region. Specifically, the technical specifications were revised to exclude the portion of tube that is more than 33.27 cm (13.1 in.) below the top of the tubesheet from inspection (i.e., approximately the lowermost 20.3 cm (8 in.) of tube in the tubesheet was excluded from inspection, and hence any flaws that may exist in this region are permitted to remain in service). This revision was only applicable for RFO 20 and the subsequent operating cycles (ADAMS Accession No. ML100570452).

There was no evidence of primary-to-secondary leakage during Cycle 20 (fall 2008 to spring 2010).

During RFO 20 in 2010, 100 percent of the tubes in each of the four steam generators were inspected full length with a bobbin coil. In addition to these bobbin coil inspections, a rotating probe equipped with a plus-point coil was used to inspect:

- 100 percent of the tubes containing bulges with bobbin voltage amplitudes greater than or equal to 18 volts and overexpansions greater than or equal to 6.35 mm (0.25 in.) from 7.62 cm (3 in.) above to 33.27 cm (13.1 in.) below the top of the tubesheet on the hot-leg side

- all hydraulic overexpansions (bottom of the expansion transition is above the top of the tubesheet) on both the hot- and cold-leg side of the steam generators (the inspections axially bounded the anomaly and were no less than 7.62 cm (3 in.) above to 5.1 cm (2 in.) below the top of the tubesheet)

- all hydraulic underexpansions (bottom of the expansion transition is greater than or equal to 10.16 mm (0.4 in.) below the top of the tubesheet) on both the hot- and cold-leg side of the steam generators (the inspections axially bounded the anomaly and were no less than 7.62 cm (3 in.) above to 5.1 cm (2 in.) below the top of the tubesheet)

- the first three outer periphery tubes including the no-tube lane tubes from 7.62 cm (3 in.) above to 5.1 cm (2 in.) below the top of the tubesheet on both the hot- and cold-leg side of the steam generators

- 20 percent of the tubes from 7.62 cm (3 in.) above to 5.1 cm (2 in.) below the top of the tubesheet on the hot-leg side of the steam generator (some of these exams were accomplished because of the previously mentioned exams in the tubesheet region)

- 20 percent of the dents and dings with bobbin voltage amplitudes greater than or equal to 2 volts in the hot-leg and U-bend region

- the U-bend region of 20 percent of the tubes in rows 1 and 2 (performed only in tubes not inspected during RFO 15 and RFO 16)

In addition to these eddy current inspections, all tube plugs in each of the four steam generators were inspected visually. No degradation of the plugs was observed.

As a result of these inspections, 14 tubes were plugged—7 for wear at the AVBs, 6 for loose parts (either an irretrievable loose part or wear attributed to a loose part), and 1 for a permeability variation.

The only steam generator tube degradation mechanisms observed during RFO 20 were wear at the AVBs, wear at the tube support plates, and wear attributed to loose parts.

Of the 1,396 indications (in 712 tubes) of wear at the AVBs detected during RFO 20, 365 were in steam generator A (in 179 tubes), 287 were in steam generator B (in 148 tubes), 438 were in steam generator C (in 218 tubes), and 306 were in steam generator D (in 167 tubes). Of the 1,396 indications, 27 were removed from service. The maximum depth reported for the AVB wear indications was 44 percent throughwall. Tubes with AVB wear indications were removed

from service if the depth was greater than 35 percent throughwall or the wear indications exhibited a greater than 19 percent increase in depth. In addition, one AVB wear indication was plugged since it was associated with a dent.

Of the 11 indications of wear at the tube support plates (in 10 tubes) detected during RFO 20, 1 was in steam generator A (in 1 tube), 3 were in steam generator C (in 4 tubes), and 7 were in steam generator D (in 6 tubes). The maximum depth reported for the tube support wear indications was 11 percent throughwall.

Four indications of wear attributed to loose parts were detected during RFO 20 including 1 indication (in 1 tube) in steam generator B, 1 indication (in 1 tube) in steam generator C, and 2 indications (in 2 tubes) in steam generator D.

No crack-like indications were detected during RFO 20.

Secondary-side maintenance and inspections were also performed during RFO 20. Sludge lancing at the top of the tubesheet was performed in each of the four steam generators. The sludge lancing was effective at removing deposits on the top of the tubesheet. In steam generator A, about 31.5 pounds of sludge were removed. In steam generator B, about 26 pounds of sludge were removed, and in steam generator D, about 40.5 pounds of sludge were removed. Visual inspections including FOSAR were performed after sludge lancing at the top of the tubesheet in each of the steam generators. These inspections were performed to identify and remove any loose parts and to assess the effectiveness of the sludge lancing. These inspections included the no-tube lane, the annulus, and inner bundle inspections on the hot- and cold-leg sides of the steam generators. Several long (from a couple of inches to several inches), but narrow (approximately 0.4 mm (one sixteenth inch) to 0.8 mm (one thirty-second inch)) strips of a brittle material were found resting on the third and fourth tube support plate in steam generator D. The strips broke apart when contacted by the video camera.

Visual inspections were also performed from the seventh (uppermost) tube support plate to the third tube support plate. These inspections showed that there were negligible deposits on the tubes and tube support plate surfaces and that the broached flow openings are not significantly fouled. Deposit mapping of the entire tube surface was performed during RFO 20 with the bobbin coil data.

During RFO 21 in 2011, no steam generator tubes were inspected.

On March 28, 2013, the steam generator portion of the Salem 1 technical specifications was revised to limit the extent of inspection in the tubesheet region. Specifically, the technical specifications were revised to exclude the portion of tube that is more than 38.63 cm (15.21 in.) below the top of the tubesheet from inspection (i.e., approximately the lowermost 15.2 cm (6 in.) of tube in the tubesheet was excluded from inspection, and hence any flaws that may exist in this region are permitted to remain in service (ADAMS Accession No. ML13072A105)).

There was no evidence of primary-to-secondary leakage during Cycle 22 (fall 2011 to spring 2013).

During RFO 22 in 2013, 100 percent of the tubes in each of the four steam generators were inspected full length with a bobbin coil. In addition to these bobbin coil inspections, an array probe (X-probe) was used to inspect:

- the first three outer periphery tubes including the tubes surrounding the no-tube lane from the first hot-leg tube support to 38.63 cm (15.21 in.) below the top of the tubesheet on the hot-leg side of the steam generators

- the first three outer periphery tubes including the no-tube lane tubes from the first cold-leg tube support to 5.1 cm (2 in.) below the top of the tubesheet on the cold-leg side of the steam generators

- all hydraulic overexpansions (bottom of the expansion transition is above the top of the tubesheet) on the hot-leg side of the steam generators from 7.62 cm (3 in.) above to 38.63 cm (15.21 in.) below the top of the tubesheet

- all hydraulic overexpansions (bottom of the expansion transition is above the top of the tubesheet) on the cold-leg side of the steam generators from 7.62 cm (3 in.) above to 5.1 cm (2 in.) below the top of the tubesheet

- all hydraulic underexpansions (bottom of the expansion transition greater than 10 mm (0.4 in.) below the top of the tubesheet) on the hot-leg side from 7.62 cm (3 in.) above to 38.63 cm (15.21 in.) below the top of the tubesheet

- all hydraulic underexpansions (bottom of the expansion transition greater than 10 mm (0.4 in.) below the top of the tubesheet) on the cold-leg side from 7.62 cm (3 in.) above to 5.1 cm (2 in.) below the top of the tubesheet

- 50 percent of the hot-leg bulges with bobbin voltage amplitudes greater than or equal to 18 volts and overexpansions with an axial length greater than or equal to 6.35 mm (0.25 in.) and a profile deviation equal to 0.038 mm (0.0015 in.) or greater from the average of the expanded tubesheet region profile from 7.62 cm (3 in.) above to 38.63 cm (15.21 in.) below the top of the tubesheet on the hot-leg side of the steam generator

- and 50 percent of the tubes from 7.62 cm (3 in.) above to 38.63 cm (15.21 in.) below the top of the tubesheet on the hot-leg side of the steam generator

In addition to the bobbin and array probe inspections, a rotating probe equipped with a plus-point coil was used to inspect 50 percent of the dents and dings reported in RFO 20 with bobbin voltage amplitudes greater than or equal to 2 volts in the hot-leg and U-bend region, 100 percent of the dents and dings reported in RFO 22 with bobbin voltage amplitudes greater than or equal to 2 volts, and the U-bend region of 20 percent of the tubes in rows 1 and 2.

In addition to these eddy current inspections, all tube plugs in each of the four steam generators were inspected visually. No degradation of the plugs was observed and all plugs were in their proper location.

During RFO 22, the hot- and cold-leg steam generator channel head regions were inspected visually in all four steam generators. As part of the inspections, the entire channel head internal surfaces including the channel head cladding, tubesheet cladding, divider plate, and associated welds. No degradation was identified.

As a result of these inspections, 13 tubes were plugged—8 for wear at the AVBs, and 5 for wear attributed to loose parts.

The only steam generator tube degradation mechanisms observed during RFO 22 were wear at the AVBs, wear at the tube support plates, and wear attributed to loose parts.

Of the 1,472 indications (in 737 tubes) of wear at the AVBs detected during RFO 22, 389 were in steam generator A (in 186 tubes), 303 were in steam generator B (in 151 tubes), 455 were in steam generator C (in 229 tubes), and 325 were in steam generator D (in 171 tubes). The maximum depth reported for the AVB wear indications was 37 percent throughwall.

Of the 20 indications of wear at the tube support plates and flow distribution baffle detected (in 19 tubes) during RFO 22, 3 were in steam generator A (in 3 tubes), 2 were in steam generator B (in 2 tubes), 5 were in steam generator C (in 5 tubes), and 10 were in steam generator D (in 9 tubes). The maximum depth reported for the tube support/flow distribution baffle wear indications was 12 percent throughwall.

Six indications of wear attributed to loose parts were detected during RFO 22 including 1 indication (in 1 tube) in steam generator B, 4 indications (in 3 tubes) in steam generator C, and 1 indication (in 1 tube) in steam generator D. All of these tubes were plugged.

No crack-like indications were detected during RFO 22.

Secondary-side maintenance and inspections were also performed during RFO 22. These inspections consisted of both visual inspections and ultrasonic testing. The visual inspections were performed to identify the general condition of the components including the feedwater ring components and supports, drain pipes, and primary and secondary separators. The internal feedwater ring visual inspection was performed to check for erosion of the carbon steel in the area near the J-nozzle connection to the feedwater ring (which is made from carbon steel). All the J-nozzles were replaced with an improved design before operating Salem 1 with the replacement steam generators. The new design includes Alloy 600 J-nozzles with carbon steel sleeve buttered with Alloy 82/182 cladding and weld. This improved design eliminated the potential for flow accelerated corrosion with the J-nozzles. The visual inspections of the J-nozzles are performed to validate their resistance to flow accelerated corrosion. Ultrasonic testing was performed on the feedrings in all four steam generators including tees, elbows, and reducers. Ultrasonic testing was also performed on several of the primary moisture separator riser barrels for impingement erosion from J-nozzle overspray on those locations identified from the visual inspections.

The visual inspections identified several primary moisture separator riser barrels with signs of impingement erosion from J-nozzle overspray. The ultrasonic inspections of the feedwater rings identified minor (or no) signs of flow accelerated corrosion. No flow accelerated corrosion was observed on the J-nozzles.

Visual inspections of the upper tube support plates were performed in all four steam generators. The inspections did not identify any conditions adverse to quality and the broached holes had relatively minor deposits.

### 3.4.5 Surry 1

Tables 3-43, 3-44, and 3-45 summarize the information discussed below for Surry 1. Table 3-43 provides the number of full-length bobbin inspections and the number of tubes plugged and deplugged during each outage for each of the three steam generators. Table 3-44 lists the

reasons why the tubes were plugged. Table 3-45 lists tubes plugged for reasons other than wear at the AVBs.

Surry 1 has three Westinghouse model 51F steam generators. These steam generators were installed at the plant in 1981. The tube supports are numbered as shown in Figure 2-8.

There was less than 3.79 lpd (1 gpd) primary-to-secondary leakage during the cycle preceding RFO 13 (i.e., fall 2001 to spring 2003).

During the cycle preceding RFO 13, a chemistry excursion occurred because of an issue with the condenser. Because of this excursion, a much greater amount of sludge was expected in the steam generator compared to past inspections.

During RFO 13 in 2003, 100 percent of the tubes in steam generator B were inspected full length with a bobbin coil, except for the U-bend region of the row 1 tubes. In addition, about 20 tubes in steam generator C were partially inspected with a bobbin coil from the tube end to either the flow distribution baffle or the first tube support plate on both the hot- and cold-leg side of the steam generators. These latter inspections were performed in tubes that were potentially affected by sludge lancing equipment used during RFO 11 in 2000. In addition to the bobbin coil inspections, a rotating probe equipped with a plus-point coil was used to inspect:

- 20 percent of the tubes (including the tubes in the sludge zone, periphery and other random locations) from 7.6 cm (3 in.) above to 7.6 cm (3 in.) below the top of the tubesheet on the hot-leg side
- the U-bend region of 100 percent of the row 1 tubes
- approximately 20 percent of the dents with bobbin voltage amplitudes greater than 2 volts (including all dents with amplitudes greater than 5 volts)

The above rotating probe inspections were performed in steam generator B. In addition to these eddy current inspections, all tube plugs were inspected visually.

As a result of these inspections, 11 tubes were plugged—8 for mechanical wear from sludge lancing equipment, 2 for dents, and 1 for a permeability variation that could mask an indication.

The only steam generator tube degradation mechanisms observed during RFO 13 were wear at the AVBs and wear attributed to maintenance activities (sludge lance monorail system).

In steam generator B, there were 16 indications of wear detected at the AVBs. These 16 indications were in 11 tubes. The maximum depth reported for the AVB wear indications was 22 percent throughwall. The average growth rate of the wear indications at the AVBs in steam generator B is approximately 1.7 percent throughwall per cycle.

Eight tubes were plugged for wear that occurred because of the latches on the monorail sections of the sludge lancing equipment contacting the tubes. This wear occurred during RFO 11 in 2000. The most significant indication was 41 percent throughwall and 3.8 cm (1.5 in.) long. The degradation was in the same area as that observed on steam generator A during RFO 12 in 2001.

In steam generator B, 416 dents (in 340 tubes) with bobbin voltage amplitudes greater than 2 volts were detected. Of the 416 dents, 356 dents (in 304 tubes) had bobbin voltage amplitudes between 2.0 and 4.99 volts, 54 dents (in 46 tubes) had bobbin voltage amplitudes between 5.0 and 19.99 volts, and 6 dents (in 6 tubes) had bobbin voltage amplitudes greater than 20 volts. Three dents were new (i.e., not present in prior inspections). About 29 of the 416 dents were concentrated in the periphery of the tube bundle near wedge regions and were at (or near) the edges of the support plates. The voltage amplitude of these dents is considered low.

One tube was plugged because of a freespan dent between the first and second tube support plates. The bobbin voltage amplitude associated with this dent was 55 volts. This dent was previously reported in 1994 and in 1998 and exhibited essentially no change in voltage. The dent could not be inspected with the normal sized rotating probe (most likely because of the geometry of the rotating probe motor unit) so a smaller diameter probe (a 1.73 cm (0.680 in.) diameter rotating probe) was used to inspect this location. No degradation was identified during this inspection. The tube was plugged because the 1.73-cm (0.680-in.) rotating probe is not a qualified probe size for inspecting outside the U-bend region.

One tube was plugged because of a dent near the expansion transition whose bobbin voltage amplitude was 108 volts. This dent was present in 1998, but it was not identified because of its close proximity to the expansion transition. The dent was not present in the 1994 data. Because of the magnitude of the dent voltage and the lack of history confirmation, this location was inspected with a rotating probe equipped with a plus-point coil. A 1.78-cm (0.700-in.) plus-point probe was able to pass the dent location, and no degradation was detected. Even though the 1.78-cm (0.700-in.) probe is a “qualified” technique and no degradation was noted, this tube was preventatively plugged since the location was considered to have increased susceptibility to corrosion-induced degradation because of the location of the dent, the potential for secondary-side sludge buildup, and an increase in stress near the expansion transition because of the dent.

To identify areas that may have unusual stress conditions, manufacturing records were reviewed before the outage. This review identified 49 locations with manufacturing anomalies (i.e., drilling or machining imperfections and related tube bulges) within the tubesheet in steam generator B. The screening criterion applied during fabrication was whether the bulge resulted in an increase in the diameter of the tube of 0.28 mm (11 mils). These 49 locations were spread between the hot-leg and cold-leg. Although these locations were shot peened, follow-up inspections were deemed appropriate. During RFO 13, 20 of these locations were inspected with a rotating probe equipped with a plus-point coil. No degradation was detected. Similar indications/locations were not reported in the manufacturing records in steam generators A and C.

Inspection and maintenance on the secondary side of each of the three steam generators were also performed during RFO 13. Sludge lancing and FOSAR were performed in each of the three steam generators. Visual inspections of the steam drum and feedring were also performed in each of the three steam generators. Ultrasonic inspection of the feedrings was performed to determine if degradation from flow-accelerated corrosion was present. The licensee found no evidence of loose parts.

To identify tubes that might have high residual stress and therefore might be more susceptible to stress corrosion cracking, the bobbin coil eddy current data were reviewed. As a result of this review, no evidence of an eddy current offset was identified in any tubes in steam generator B.

During RFO 14 in 2004, no steam generator tubes were inspected.

There was less than 3.79 lpd (1 gpd) primary-to-secondary leakage during the cycle preceding RFO 15 (fall 2004 to spring 2006).

During RFO 15 in 2006, 100 percent of the tubes in steam generators A and C were inspected full length with a bobbin coil, except for the U-bend region of the row 1 tubes. In addition to these bobbin coil inspections, a rotating probe equipped with a plus-point coil was used to inspect:

- 20 percent of the tubes from 7.6 cm (3 in.) above to 7.6 cm (3 in.) below the top of the tubesheet on the hot-leg side in steam generators A and C
- the nine tubes that were either partially expanded or not expanded into the tubesheet on the hot-leg side from the tube end to 7.62 cm (3 in.) above the tubesheet in steam generators A and C
- the U-bend region of 100 percent of the row 1 tubes, and 20 percent of the dents with bobbin voltage amplitudes greater than 2 volts in steam generators A and C

In steam generator A, an additional 20 percent of the tubes were inspected with a rotating probe equipped with a plus-point coil from 7.6 cm (3 in.) above to 7.6 cm (3 in.) below the top of the tubesheet on both the hot- and cold-leg side of the steam generator. This expansion was performed because of finding two indications (attributed to loose parts) with depths exceeding the 40 percent throughwall plugging limit which were only detected with a rotating probe (and not the bobbin probe).

During RFO 15, no rotating probe examinations were performed in the lower 5.1 cm (2 in.) of the tubes. The licensee did not consider an inspection in the bottom 5.1 cm (2 in.) necessary because the expected time to develop cracking in that region has not yet been reached given the low operating temperature compared to other plants that have observed cracking in this region. The licensee also indicated that cracking was not observed in other locations within the tubesheet (e.g., overexpansions) as had been detected at another plant (i.e., Catawba 2).

As a result of these inspections, 16 tubes were plugged: 1 for wear at the AVBs, 8 for wear attributed to loose parts, and 7 for permeability variations.

The only steam generator tube degradation mechanisms observed during RFO 15 were (1) wear at the AVBs, (2) wear at the tube support plates, (3) wear attributed to loose parts, and (4) historic pit-like indications.

Forty-six indications of wear were detected at the AVBs in steam generators A and C (34 in steam generator A and 12 in steam generator C). These indications were in 34 tubes (27 tubes in steam generator A and 7 tubes in steam generator C). The average growth rate of the AVB wear indications since the last inspection (RFO 12 in 2001 for steam generator A, and RFO 11 in 2000 for steam generator C) was 2.4 percent throughwall per cycle in steam generator A and 0.8 percent throughwall per cycle in steam generator C. The growth rate of these indications is decreasing with time. The average growth rate considering all AVB previous data from all three steam generators is 2.3 percent throughwall per cycle. The maximum depth reported for the AVB wear indications was 27 percent throughwall. The tube with this 27 percent throughwall

indication was plugged. Indications of wear at the AVBs are reported when the depth of the indication exceeds 10 percent throughwall.

One indication of tube support plate wear was detected during RFO 15. This indication was in steam generator A at the sixth cold-leg tube support plate. The maximum depth reported for this indication was 14 percent throughwall.

Eleven wear indications were attributed to loose parts. Of these 11 indications, 8 had foreign objects adjacent to the affected location as confirmed through secondary-side visual inspections. These objects were removed from the steam generator. The other three wear indications attributed to loose parts were within the flow openings of the quatrefoil tube support plates (steam generator C row 38 column 62 and row 15 column 62) or at the top of the flow distribution baffle plate (steam generator A row 27, column 84). No eddy current indications of loose parts were observed in the three tubes; therefore, no secondary-side visual examinations were attempted. The indications were not attributed to intergranular attack or pitting (which provide similar eddy current signals) because the locations of the flaws suggested to the licensee that these mechanisms were not the cause of the flaws. Intergranular attack and pitting normally occur in crevice and sludge pile locations where more aggressive chemistry environments can develop. These three indications occurred in the open tube support plate flow openings and at the top of the flow distribution baffle (a non-supporting structure with large tube holes to allow water flow), both of which are regions where deposit accumulation has not been identified.

Two of the tubes with indications attributed to loose parts were in-situ pressure tested. The indications in these tubes were attributed to a nut. The nut was removed during the outage. Two methods were used to size these indications. One of these tubes exceeded the in-situ pressure test screening criteria regardless of which sizing method was used (i.e., row 35, column 68, in steam generator A) while the other tube (row 35, column 69, in steam generator A) exceeded the in-situ pressure test screening criteria based on the size estimate from only one of the sizing methods. The tube in row 35, column 68, was last inspected during the 2001 refueling outage. Based on a review of the 2001 data during RFO 15, it was concluded that there was a wear indication in this tube that should have been called using the bobbin probe data analysis guidelines existing at that time. Both tubes were subjected to a full tube length in-situ pressure test. Neither tube leaked at the main steam line break differential pressure hold point. The tube in row 35, column 69, did not leak or burst at the three times normal operating differential pressure hold point (i.e., a pressure of 35,850 kPa (5,200 psi) at room temperature, which accounts for the difference in material strength at normal operating temperature); however, the tube in row 35, column 68, began to leak at a pressure of 32,060 kPa (4,650 psi). The leakage rate reached 0.30 lpm (0.08 gpm) when applied pressure reached the maximum test pressure of 35,850 kPa (5,200 psi). This pressure was held for 5 minutes before terminating the test. During the 5-minute hold, the leakage continued to increase, reaching a maximum measured leakage rate of 3.7 lpm (0.98 gpm). Although the licensee concluded that the tube satisfied the structural integrity performance criteria, NRC staff expressed concerns during a conference call on May 10, 2006, on whether the licensee adequately demonstrated that the tube had adequate integrity since the leak rate was not stable at the time the test was concluded. Additional information is included in a letter to the licensee dated December 4, 2006 (ADAMS Accession No. ML063380371).

A couple of pit-like indications were detected during RFO 15. No tubes were pulled to confirm the nature of these indications; instead, the licensee relied on knowledge gained from prior tube pulls (presumably from other facilities), ultrasonic testing, and rotating probe data from similar

indications to characterize these indications as pit-like. The indications do not appear to be growing and are stable during normal operation.

In steam generator A, 756 dents (in 573 tubes) with bobbin voltage amplitudes greater than or equal to 2 volts were detected. Of the 756 dents, 677 (in 501 tubes) had bobbin voltage amplitudes between 2 and 4.99 volts, 69 (in 55 tubes) had bobbin voltage amplitudes between 5.0 and 9.99 volts, and 10 (in 9 tubes) had bobbin voltage amplitudes greater than or equal to 10 volts.

In steam generator C, 502 dents (in 339 tubes) with bobbin voltage amplitudes greater than or equal to 2 volts were detected during RFO 15. Of the 502 dents, 400 (in 298 tubes) had bobbin voltage amplitudes between 2 and 4.99 volts, 79 (in 62 tubes) had bobbin voltage amplitudes between 5.0 and 9.99 volts, and 23 (in 20 tubes) had bobbin voltage amplitudes greater than or equal to 10 volts.

Some of the dents in steam generators A (80 dents) and C (176 dents) are at the sixth and seventh tube support plate. Many of the dents at these two support plates are predominantly in peripheral tubes and are near tube support wedge locations. Historical data reviews of the dents reported at these locations in 2006 confirmed that none of the reported indications were new (i.e., all were present previously); however, two of the dents in steam generator A demonstrated change. These two dents were inspected with a rotating probe equipped with a plus-point coil and no degradation was detected.

Three bulges were identified in steam generator A during RFO 15. Two were slightly above the seventh tube support plate on the hot-leg side and the third was at an AVB. All of the bulges were examined with plus-point probes. No degradation was reported. A review of historical eddy current data indicates that these bulges have not increased in size (suggesting that the bulges occurred during fabrication of the steam generators).

Local anomalies were detected during RFO 15 and are distributed throughout the steam generator tube bundle. These anomalies were caused by original manufacturing and insertion of tubes in the support plates. They indicate scrapes and indentations on the tubes. These indications are tracked from outage to outage. These indications were resolved through reviewing historical data or plus-point examination. No cracking or other types of degradation were observed to be associated with these indications.

To identify tubes that might have high residual stress and therefore might be more susceptible to stress corrosion cracking, bobbin coil eddy current data were reviewed. As a result of this review, no low-row tubes (i.e., tubes in rows 1 through 8) were identified as potentially being more susceptible to stress corrosion cracking. A previous evaluation (i.e., before RFO 15) of high-row U-bend offset signals identified 19 tubes in steam generator A and 3 tubes in steam generator C that could have high residual stress.

In steam generator A, 282 overexpansions (in 200 tubes) were identified on the hot-leg side of the steam generator during RFO 15. An overexpansion is a local tube diameter increase (i.e., a bulge) within the tubesheet. An overexpansion is reported if the voltage exceeds 18 volts peak-to-peak. In steam generator A, one tube was identified where the tube was hydraulically expanded more than 7.6 mm (0.3 in.) above the top of the tubesheet on the hot-leg side of the steam generator. In steam generator C, 421 overexpansions (in 330 tubes) were identified on the hot-leg side of the steam generator. No tubes were identified in steam generator C that

were hydraulically expanded above the top of the tubesheet on the hot-leg side; however, two tubes were identified with this condition on the cold-leg side of the steam generator.

Two tubes in steam generator A were not expanded for the full length of the tubesheet. In addition, seven tubes in steam generator C were either not expanded for the full length of the tubesheet or were only partially expanded for the full length of the tubesheet.

Inspection and maintenance on the secondary side of the steam generators were performed during RFO 15. Secondary-side visual inspections were performed in all three steam generators including in-bundle column inspections. Sludge lancing was performed in steam generators A and C, which involved a trial application of a new secondary-side cleaning technique (i.e., inner bundle lance (IBL)) that is reported to be more effective than regular sludge lancing along the open tube lane. Inspections were performed that confirmed that the IBL process did not result in any tube damage.

On March 29, 2007, Surry 1 revised the steam generator portion of their technical specifications making them performance-based consistent with TSTF-449 (ADAMS Accession No. ML070880618).

As of 2007, the licensee's loss-of-coolant-accident analysis assumed that the average equivalent level of tube plugging was 15 percent in any one steam generator with no greater than a 5 percent differential between any two steam generators expressed in terms of the number of tubes per steam generator.

Primary-to-secondary leakage was less than 3.79 lpd (1 gpd) during the cycle preceding RFO 16 (spring 2006 to fall 2007).

During RFO 16 in 2007, 100 percent of the tubes in steam generator B were inspected full length with a bobbin coil, except for the U-bend region of the row 1 tubes. In addition to these bobbin coil inspections, a rotating probe equipped with a plus-point coil was used to inspect:

- 20 percent of the tubes from 7.6 cm (3 in.) above to 7.6 cm (3 in.) below the top of the tubesheet on the hot-leg side in steam generator B
- 50 percent of the overexpansions on the hot-leg side in steam generator B
- 20 percent of the tubes from 7.6 cm (3 in.) above to 7.6 cm (3 in.) below the top of the tubesheet on the cold-leg side (focusing on tube in the periphery) in steam generator B
- the largest overexpansions on the cold-leg side in steam generator B
- the U-bend region of 100 percent of the row 1 tubes in steam generator B
- 20 percent of the dents with bobbin voltage amplitudes greater than 2 volts (including all dents with amplitudes greater than or equal to 5 volts) in steam generator B

The tubes inspected because of overexpansions were inspected from the overexpansion to the tube end (i.e., 199 tube end inspections on the hot-leg and 11 on the cold-leg).

In addition to these eddy current inspections, all tube plugs were inspected visually. These inspections revealed no evidence of leakage, cladding damage, tube end damage, or foreign objects. In addition, all plugs were verified to be in their correct position.

As a result of these inspections, one tube was plugged. This tube was plugged for a permeability variation.

The only steam generator tube degradation mechanisms observed during RFO 16 were wear at the AVBs, wear attributed to loose parts, and wear attributed to maintenance activities (e.g., sludge lancing).

Thirteen indications of wear were detected at the AVBs in 10 tubes in steam generator B. The average growth rate of the AVB wear indications in steam generator B was 1.7 percent throughwall per cycle before RFO 16 and 1.4 percent throughwall per cycle after considering the RFO 16 data. The growth rate at 95 percent probability and 50 percent confidence for Surry 1 is 5.8 percent throughwall per cycle. The growth rate associated with the wear indications at the AVBs is declining and no new indications were detected during RFO 16. The maximum depth reported for the AVB wear indications was 22 percent throughwall.

Four tubes with wear attributed to loose parts or maintenance activities were identified in steam generator B. Three of these tubes were in close proximity to each other, and the wear was attributed to foreign objects that were near the affected tubes (one foreign object was approximately one tube away from this three-tube cluster, and two other objects were approximately 3 and 6 tubes away from the cluster). Two of these three indications were traceable to inspections performed in 1998 and have not changed in size since that time. The other indication was not detectable with the technique used in 1998, but the licensee concluded it was most likely caused by the same foreign object. Because of the clustered relationship of the affected tubes, their location near the periphery where sludge does not tend to accumulate, and the identification of the foreign objects, the licensee concluded a foreign object caused the indications. The fourth indication of wear is in the tube in row 1, column 7, and was attributed to secondary-side maintenance (e.g., sludge lancing or secondary-side inspections).

During RFO 16, 501 dents with bobbin voltage amplitudes greater than or equal to 2 volts were detected in steam generator B. These dents were in 389 tubes. The dents appear to be randomly distributed throughout the tube bundle and have a strong bias toward tube supports 6 or 7 or the wedge regions. None of the dents detected in RFO 16 were new and none revealed evidence of increasing magnitude.

About 800 overexpansions are present within the tubesheet (i.e., hot- and cold-leg side of the steam generator).

In steam generator B, no low-row tubes (i.e., tubes in rows 1 through 8) were identified as potentially being more susceptible to stress corrosion cracking based on a review of eddy current data for an offset between the data in the U-bend and in the straight span. However, 22 tubes were identified in steam generator B, which could have high residual stress based on a review of the eddy current data. The dents and the expansion transitions on the hot-leg in these 22 tubes were inspected with a rotating probe.

Twelve tubes in steam generator B were identified with permeability variation signals. These locations were inspected with rotating probes equipped with a plus-point coil and in some cases with magnetically biased plus-point coils. No degradation was identified during these

inspections. In one tube, the permeability signal could not be adequately suppressed so the tube was plugged.

All tubes in steam generator B are expanded for the full length of the tubesheet.

Inspection and maintenance on the secondary side of the steam generators were performed during RFO 16. An upper bundle flush was performed in all three steam generators. After the upper bundle flush, the top surface of the flow distribution baffle was cleaned using a 20,680-kPa (3,000-psi), high-flow rate static lance. This lancing was followed by a similar lancing process at the top of the tubesheet. About 200 pounds of sludge were removed from the three steam generators (56 in steam generator A, 54 in steam generator B, and 102 in steam generator C). After sludge lancing, FOSAR was performed in all three steam generators in the annulus and no-tube lane at the top of the tubesheet. In addition, in-bundle visual examinations were performed in all three steam generators to evaluate the effectiveness of the high pressure, high flow lancing process and to determine if the dimethylamine soak during shut down helped to reduce deposits on the tubesheet. These inspections showed that although some hard deposits remain in all three steam generators, a significant reduction of the tube collars and the bridging deposits was observed, particularly in steam generators A and C.

The upper bundle region in steam generator B was inspected visually before the upper bundle flush. These inspections included portions of the upper tube bundle and the uppermost (seventh) tube support plate. These inspections indicated that deposit accumulation and bridging at the AVB-to-tube intersections continues to increase as has the amount of deposits on the tubes in the AVB region and at the seventh tube support plate. Some deposits were also observed within the broached hole openings of the seventh tube support plate and light-to-moderate deposits were observed on the surface of the seventh tube support plate in the inner-bundle regions.

After the upper bundle flush, visual inspections were performed in steam generator A. These examinations revealed that the amount of deposits was somewhat reduced when compared with the initial conditions observed in steam generator B. Accumulation and bridging of deposits at the AVB-to-tube intersections were still present. No deposits were observed on the tube surface just above the seventh tube support plate in tubes in the periphery (unlike the pre upper bundle flush inspections in steam generator B). No deposit build up was seen on the lower edge of the broached openings in the periphery of the tube bundle as was observed in steam generator B before the upper bundle flush.

Portions of the feedring in all three steam generators also were inspected during RFO 16. In steam generator B, the internal J-nozzle feedring weld interfaces was inspected visually to monitor for flow assisted corrosion. These inspections revealed minor evidence of flow assisted corrosion with minimal evidence of change from the previous visual examination performed in this steam generator in April 2003. To monitor for the progression of flow assisted corrosion in the feedrings, ultrasonic thickness measurements were performed in all three steam generators. The inspections indicated that the wall thicknesses were acceptable. The largest rate of thickness reduction since the last inspection was at the inlet reducer of steam generator A (3.66 mm (144 mils) per cycle); however, there is some uncertainty on whether the exact same location was inspected during RFO 15 and 16. The next largest rate of thickness reduction was observed in the right side elbow of steam generator A (0.99 mm (39 mils) per cycle). The most limiting component based on current rate of progression and allowable minimum thickness is the downstream portion of the inlet reducer in steam generator A, which will require remediation

or reinspection in RFO 17. The next most limiting component is the crossover pipe in steam generator B, which will require remediation or reinspection in RFO 20.

On April 8, 2009, the steam generator portion of the Surry 1 technical specifications was revised to permit certain sized flaws near the tube end in both the hot- and cold-leg sides of the steam generator to remain in service. Specifically, the technical specifications were revised to (1) permit flaws having a circumferential component less than or equal to 203 degrees found in the portion of the tube below 43.2 cm (17 in.) from the top of the tubesheet and above 2.54 cm (1 in.) from the bottom of the tubesheet to remain in service, (2) require the removal from service all flaws having a circumferential component greater than 203 degrees found in the portion of the tube below 43.2 cm (17 in.) from the top of the tubesheet and above 2.54 cm (1 in.) from the bottom of the tubesheet, (3) require the removal from service all tubes with service-induced flaws between the top of the tubesheet and 43.2 cm (17 in.) below the top of the tubesheet, and (4) permit all axial indications found in the portion of the tube below 43.2 cm (17 in.) from the top of the tubesheet to remain in service. In addition, the technical specifications were modified to indicate that when more than one flaw with circumferential components is found in the portion of the tube below 43.2 cm (17 in.) from the top of the tubesheet and above 2.54 cm (1 in.) from the bottom of the tubesheet with the total of the circumferential components being greater than 203 degrees and the axial separation distance of less than 2.54 cm (1 in.), then the tube must be removed from service (overlapping portions of the flaws only need to be counted once in determining the total circumferential involvement of the flaws). For flaws within 2.54 cm (1 in.) of the bottom of the tubesheet, the technical specifications were modified to indicate (1) when one or more flaws with circumferential components are found and the total of the circumferential components exceeds 94 degrees, then the tube shall be removed from service and (2) when one or more flaws with circumferential components are found in the portion of the tube within 2.54 cm (1 in.) from the bottom of the tubesheet and within 2.54 cm (1 in.) axial separation distance of a flaw above 2.54 cm (1 in.) from the bottom of the tubesheet, and the total of the circumferential components found in the tube exceeds 94 degrees, then the tube shall be removed from service (overlapping portions of the flaws only need to be counted once in determining the total circumferential involvement of the flaws). This revision to the technical specifications was applicable only to RFO 22 and the subsequent operating cycle (ADAMS Accession No. ML090860735 and ML091040065).

On May 7, 2009, the steam generator portion of the Surry 1 technical specifications was revised to allow tubes in steam generator B with permeability variation indications that may mask flaws in the bottom 2.54 cm (1 in.) of the tubesheet to remain in service. In addition, the technical specifications were revised to limit the primary-to-secondary leakage in steam generator B to 75.7 lpd (20 gpd). These changes were applicable only to RFO 22 and the subsequent operating cycle (ADAMS Accession No. ML091260386).

There was no evidence of primary-to-secondary leakage (i.e., leakage is less than 3.79 lpd (1 gpd)) during the cycle prior to RFO 17 (fall 2007 to spring 2009).

During RFO 17 in 2009, 100 percent of the tubes in steam generators A and C were inspected full length with a bobbin coil, except for the U-bend region of the tubes in rows 1 and 2. In addition to these bobbin coil inspections, a rotating probe equipped with a plus-point coil was used to inspect:

- 58 percent of the tubes from 7.6 cm (3 in.) above to 7.6 cm (3 in.) below the top of the tubesheet on the hot-leg side in steam generators A and C

- 50 percent of the overexpansions on the hot-leg side (between the tube end and 7.62 cm (3 in.) above the top of the tubesheet on the hot-leg side) including the five largest indications (by voltage amplitude) in steam generators A and C

- 50 percent of the tubes from the hot-leg tube end to 10.2 cm (4 in.) above the hot-leg tube end in steam generators A and C

- all tier 1 high-stress tubes (described below) from the hot-leg tube end to 7.62 cm (3 in.) above the top of the tubesheet on the hot-leg side in steam generators A and C

- the 20 largest overexpansions (by voltage amplitude) on the cold-leg side in steam generators A and C

- the U-bend region of 100 percent of the row 1 and row 2 tubes in steam generators A and C

- 50 percent of the dents in the straight section of the hot-leg including the five largest dents based on bobbin voltage amplitude in steam generators A and C

Because of the initial inspection results, the scope of the tube end inspections (from the tube end to 10.2 cm (4 in.) above the tube end) was expanded to include 100 percent of the hot-leg tube ends in all three steam generators, 20 percent of the cold-leg tube ends in steam generators A and C, and 100 percent of the cold-leg tube ends in steam generator B.

To identify tubes that could have high residual stress and therefore might be more susceptible to stress corrosion cracking, pre-2009 bobbin coil eddy current data were reviewed to identify offsets in the eddy current data between the straight span and the U-bend region of the tubing. The tubes were characterized based on whether one (tier 2) or both (tier 1) legs of the eddy current data exhibited the eddy current offset attributed to potentially elevated residual stresses. After applying these criteria to all three steam generators, 19 tubes, 22 tubes, and 3 tubes were identified as tier 1 tubes in steam generators A, B, and C, respectively. In addition, about 160 tubes, 110 tubes, and 117 tubes were identified as tier 2 tubes in steam generators A, B, and C, respectively. Because of finding a crack at the expansion transition in a tier 1 tube (see below), all tier 1 and 2 tubes in all three steam generators were inspected with a bobbin coil. In addition, a rotating probe was used to inspect 100 percent of the tier 1 tubes and 20 percent of the tier 2 tubes from the hot-leg tube end to 7.62 cm (3 in.) above the top of the tubesheet on the hot-leg side and from the cold-leg tube end to 7.62 cm (3 in.) above the top of the tubesheet on the cold-leg side in all three steam generators. In addition, a rotating probe was used to inspect 80 percent of the tier 2 tubes in steam generator B from 7.6 cm (3 in.) above to 7.6 cm (3 in.) below the top of the tubesheet on the hot-leg side, and all locations where there were non-quantifiable signals (including those with previous history), dents, bulges overexpansions, tube support plate elevations, and manufacturing burnishing marks in tier 1 tubes in all three steam generators.

As a result of these inspections, 15 tubes were plugged: 2 for wear attributed to a loose part, 1 for an axially oriented primary water stress corrosion crack at the expansion transition, and 12 for circumferentially oriented primary water stress corrosion cracking near the tube ends.

The only steam generator tube degradation mechanisms observed during RFO 17 were (1) wear at the AVBs, (2) wear at the tube support plates, (3) wear attributed to loose parts,

(4) wear attributed to maintenance activities (e.g., sludge lancing), pitting, and (5) primary water stress corrosion cracking at the tube-end and at the expansion transition (top-of-tubesheet).

Thirty indications of wear were detected at the AVBs in 24 tubes in steam generator A, and 19 indications of wear were detected at the AVBs in 13 tubes in steam generator C. The maximum depth reported for the AVB wear indications was 22 percent throughwall.

One indication of tube wear at a tube support plate was detected in steam generator A. The maximum depth reported was 14 percent throughwall.

Ten tubes with indications of wear attributed to loose parts were observed in the three steam generators. Of the indications in these 10 tubes, most were present in prior inspections and had not changed.

One indication of wear was attributed to secondary-side maintenance activities. This indication had not changed since the prior inspection.

Two indications of pitting were identified in steam generator A. These indications were detected in prior inspections and there was no change in the signal.

Primary water stress corrosion cracking was detected near the hot-leg tube ends in all three steam generators. Axially and circumferentially oriented primary water stress corrosion cracking was observed in steam generators A and C. Only circumferentially oriented primary water stress corrosion cracking was observed in steam generator B. Several of the circumferential indications were plugged whereas others were allowed to remain in service per the inspection and repair criteria discussed above. The inspections in these two SGs resulted in identifying five tubes in SG C and approximately seven tubes in SG A that would require plugging since the circumferential indications in these tubes are near the tube-end and exceed the 94-degree circumferential extent criterion.

One indication of axially oriented primary water stress corrosion cracking was observed in steam generator A during RFO 17. The indication is partially above and partially below the top of the tubesheet. The indication was about 1.6 cm (0.64 in.) long and .81 cm (0.32 in.) above the top of the tubesheet on the hot-leg side of the steam generator. Portions of the indication were estimated to be 100 percent throughwall. This tube was classified as a tier 1 tube. The tube was in-situ pressure tested to verify its integrity. No leakage was observed under accident conditions, and the tube did not burst at loading conditions associated with the structural integrity performance criteria. A bladder was used for the structural integrity in-situ pressure test.

During the tube-end inspections in steam generator B, a large number of tubes (2,343 indications in 1,473 tubes) were identified with permeability variations in the eddy current data near the tube end. These indications were on the hot- (1,083 indications in 1,056 tubes) and cold-leg side (1,243 indications in 1,260 tubes), were dispersed throughout the tube bundle, and were within 5 mm (0.2 in.) of the tube end. These permeability variations were large enough to affect the ability to inspect the tubes. This was the first outage in which the tube ends were inspected with a probe sensitive to tube degradation. Because of this finding, magnetically biased probes were used to reduce the size of the permeability variations. The magnetically biased probes reduced the magnitude of the permeability variations in half, but the size of these signals was still too large that it could compromise the inspection of these locations. As a result, an amendment to the license was pursued that allowed tubes with permeability variations within

2.54 cm (1 in.) of the tube end to remain in service for one operating cycle. This amendment relied, in part, on the tube being held in place by the interference fit between the tube and the tubesheet (see above). Similar permeability variations were not observed in the other two SGs in which 100 percent of the hot-leg tube ends and 20 percent of the cold-leg tube ends were inspected with a rotating probe.

Inspection and maintenance on the secondary side of the steam generators were performed during RFO 17. A deposit minimization treatment was performed in all three steam generators. The process was intended to reduce the potential for tube corrosion, tube support broached hole blockage, and steam pressure loss because of heat transfer surface fouling. In addition, sludge lancing was performed on the baffle plate and the top of the tubesheet in all three steam generators. The deposit minimization treatment and sludge lancing removed 2,217 pounds of iron oxide from the steam generators. After sludge lancing, FOSAR was performed in all three steam generators at the top of the tubesheet. The effectiveness of the sludge lancing was assessed in all three steam generators through visual inspections of the top of the tubesheet and the baffle plate. In-bundle visual examinations were performed in all three steam generators to evaluate the effectiveness of the deposit minimization treatment and the 3,000 pounds per square inch water lancing on legacy hard deposits.

The steam drum decks, primary and secondary separators, swirl vanes, drain pipes, deck attachment welds, ladders, and other components in steam generator A were visually inspected and found to be acceptable. A portion of the upper tube bundle containing the AVBs, the periphery of the seventh tube support plate, and the periphery of the sixth tube support plate in steam generator A also were visually inspected. These inspections were performed after the deposit minimization treatment. The quantity of tube deposits, loose deposit material on the AVB surfaces within the bundle, and bridging of deposits at the AVB/tube inspections was reduced. There was a decrease in the amount of deposits on the sixth and seventh tube support plates and in the broached openings. No degradation was observed As a result of these inspections. Visual inspections of the internal feed-ring J-nozzle interfaces were also performed in steam generator A. Only minor material reduction because of flow assisted corrosion was observed.

The flow distribution baffle was visually inspected following the deposit minimization treatment and before the water/sludge lancing.

On November 5, 2009, the steam generator portion of the Surry 1 technical specifications was revised to limit the extent of inspection in the tubesheet region. Specifically, the technical specifications were revised to exclude the portion of tube that is more than 42.4 cm (16.7 in.) below the top of the tubesheet from inspection (i.e., approximately the lowermost 10.2 cm (4 in.) of tube in the tubesheet was excluded from inspection, and hence any flaws that may exist in this region are permitted to remain in service). This revision was only applicable for RFO 23 and the subsequent operating cycle (ADAMS Accession No. ML092960484).

There was no evidence of primary-to-secondary leakage (i.e., leakage is less than 3.79 lpd (1 gpd)) during the cycle prior to RFO 18 (spring 2009 to fall 2010).

During RFO 18 in 2010, 100 percent of the tubes in steam generator B were inspected full length with a bobbin coil, except for the U-bend region of the tubes in rows 1 and 2. About 150 tubes in steam generators A and C were also inspected with a bobbin coil. In addition to these bobbin coil inspections, a rotating probe equipped with a plus-point coil was used to inspect:

- 100 percent of the tubes from 7.6 cm (3 in.) above to 7.6 cm (3 in.) below the top of the tubesheet on the hot-leg side in steam generators A and C

- 75 percent of the tubes from 7.6 cm (3 in.) above to 7.6 cm (3 in.) below the top of the tubesheet on the hot-leg side in steam generator B

- 20 percent of the tubes from 7.6 cm (3 in.) above to 7.6 cm (3 in.) below the top of the tubesheet on the cold-leg side in steam generators A and C

- 50 percent of the overexpansions on the hot-leg side (between 44.95 cm (17.7 in.) below the top of the tubesheet and 7.62 cm (3 in.) above the top of the tubesheet on the hot-leg side) in steam generator B

- 100 percent of the tier 1 high stress tubes in all three steam generators from 44.95 cm (17.7 in.) below the top of the tubesheet to 7.62 cm (3 in.) above the top of the tubesheet on the hot-leg side

- 100 percent of the tier 2 high stress tubes in all three steam generators from 7.62 cm (3 in.) below the top of the tubesheet to 7.62 cm (3 in.) above the top of the tubesheet on the hot-leg side

- 50 percent of the peripheral tubes (5 tubes deep) in steam generator B from 7.62 cm (3 in.) below the top of the tubesheet to 7.62 cm (3 in.) above the top of the tubesheet on the cold-leg side

- the 20 largest overexpansions in steam generator B from 44.95 cm (17.7 in.) below the top of the tubesheet to 7.62 cm (3 in.) above the top of the tubesheet on the cold-leg side

- the U-bend region of 100 percent of the row 1 and row 2 tubes, 57 percent of the hot-leg dents with bobbin voltage amplitudes greater than 2 volts (161 dents were examined)

- a small number of cold leg and U-bend dents with bobbin voltage amplitudes greater than 2 volts

In addition to these eddy current inspections, visual inspections were performed on all tube plugs and the divider plate weld region in all three steam generators. These inspections revealed no anomalous conditions associated with the plugs or the divider plate.

As a result of these inspections, 20 tubes were plugged—2 for wear attributed to a loose part, 17 because the bottom of the expansion transition was more than 2.54 cm (1 in.) below the top of the tubesheet, and 1 for a circumferentially oriented outside-diameter stress corrosion crack at the expansion transition.

The only steam generator tube degradation mechanisms observed during RFO 18 were (1) wear at the AVBs, (2) wear at the tube support plates, (3) wear attributed to loose parts, (4) wear attributed to prior maintenance activities (e.g., sludge lancing), (5) pitting, and (6) circumferentially oriented outside-diameter stress corrosion cracking at the expansion transition (top-of-tubesheet).

Twenty indications of wear were detected at the AVBs in 15 tubes in steam generator B. The maximum depth reported for the AVB wear indications was 20 percent throughwall.

One indication of tube wear at a tube support plate was detected in steam generator A. The maximum depth reported was 22 percent throughwall. This indication has not changed in size since originally reported.

Seventeen indications of wear attributed to loose parts were observed in the three steam generators. Of these indications, all but two were evident in prior inspection data (although some were not identified until RFO 18). Most of these 17 indications have not changed since the prior inspection.

One indication of wear was attributed to secondary-side maintenance activities (sludge lancing). This indication had not changed since the prior inspection.

One indication of pitting was identified in steam generator A. This indication was detected in prior inspections and there has been no change in the signal since it was originally reported. There was another pitting indication reported in RFO 17; however, this indication was reclassified as a wear indication attributed to a foreign object during RFO 18 because of its proximity to a piece of wire that is lodged in place.

One indication of circumferentially oriented outside-diameter stress corrosion cracking was observed in steam generator C during RFO 18. The indication was detected in the expansion transition portion of a tube near the top of the tubesheet on the hot-leg side of the steam generator. The indication was estimated to have a circumferential extent of 73 degrees, amplitude of 0.62 volt, a percent degraded area of 3.5 percent, and was 0.76 mm (0.03 in.) below the top of the tubesheet.

Prior cycle bobbin coil eddy current data were reviewed to determine the location of the bottom of the expansion transition relative to the top of the tubesheet because the tubesheet repair criterion (referred to as H*) assumes the bottom of the expansion transition is within 7.6 mm (0.3 in.) of the top of the tubesheet. This evaluation identified 869 hot-leg and 61 cold-leg expansion transitions where the bottom of the expansion transition was greater than 7.6 mm (0.3 in.) below the top of the tubesheet in steam generator A. In steam generator B there were 33 hot-leg and 256 cold-leg expansion transitions that were greater than 7.6 mm (0.3 in.) below the top of the tubesheet, and in steam generator C there were 198 hot-leg and 10 cold-leg expansion transitions that were greater than 7.6 mm (0.3 in.) below the top of the tubesheet. Of these, there were eight tubes where the bottom of the expansion transition was greater than 2.54 cm (1 in.) below the top of the tubesheet (six in the hot-leg of steam generator A and two in the cold-leg of steam generator B). In addition, there were nine tubes identified that had no tube expansions, all in steam generator C. All tubes where the bottom of the expansion transition was greater than 2.54 cm (1 in.) from the top of the tubesheet, including the tubes with no tube expansions, were plugged. The maximum measured bottom of expansion transition was 3.9 cm (1.55 in.) below the top of the tubesheet in the hot-leg of steam generator A, 8.89 mm (0.35 in.) below the top of the tubesheet in the cold-leg of steam generator A, 10.4 mm (0.41 in.) below the top of the tubesheet in the hot-leg of steam generator B, 3.4 cm (1.34 in.) below the top of the tubesheet in the cold-leg of steam generator B, 1.68 cm (0.66 in.) below the top of the tubesheet in the hot-leg of steam generator C, and 11.68 mm (0.46 in.) below the top of the tubesheet in the cold-leg of steam generator C.

Inspection and maintenance on the secondary side of the steam generators were performed during RFO 18. To address flow assisted corrosion in the feedrings, the feedrings were replaced in all three steam generators. General visual inspection of the feedring region after replacement of the feedrings did not identify any degradation. The top of the tubesheet was inspected visually in all three steam generators, and at select flow distribution baffle plate locations in steam generators B and C. No adverse conditions were noted. FOSAR was performed in all three steam generators at the top of the tubesheet, in the annulus, and in the no-tube lane after the replacement of the feedrings. The inspections of localized areas of the upper surface of the flow distribution baffle during the investigation of possible loose part indications identified during the eddy current inspections in steam generators B and C revealed an accumulation of exfoliated scale. In-bundle visual examinations were performed in steam generator A to evaluate the general location of the hard-collar region. FOSAR identified several areas of interest in each steam generator during RFO 18. Some areas had foreign objects that could not be removed. In some cases eddy current possible loose part indications were attributed to tube scale or sludge rocks.

On April 17, 2012, the steam generator portion of the Surry 1 technical specifications was revised to limit the extent of inspection in the tubesheet region. Specifically, the technical specifications were revised to exclude the portion of tube that is more than 45.44 cm (17.89 in.) below the top of the tubesheet from inspection (i.e., approximately the lowermost 7.62 cm (3 in.) of tube in the tubesheet was excluded from inspection, and hence any flaws that may exist in this region are permitted to remain in service (ADAMS Accession No. ML120730304 and ML12109A270).

There was no evidence of primary-to-secondary leakage (i.e., leakage is less than 3.79 lpd (1 gpd)) during the cycle prior to RFO 19 (fall 2010 to spring 2012).

During RFO 19 in 2012, 100 percent of the tubes in steam generators A and C were inspected full length with a bobbin coil, except for the U-bend region of the tubes in rows 1 and 2. In addition to these bobbin coil inspections, a rotating probe equipped with a plus-point coil was used to inspect the U-bend region of 100 percent of the row 1 and row 2 tubes in steam generators A and C. In addition to these inspections, an array probe was used to inspect:

- 100 percent of the tubes in steam generators A and C from the hot-leg tubesheet to the first tube support on the hot-leg side of the steam generator
- 36 percent of the tubes in steam generator B from the hot-leg tubesheet to the first tube support on the hot-leg side of the steam generator
- approximately 36 percent of the tubes in steam generators A and C from the cold-leg tubesheet to the first tube support on the cold-leg side of the steam generator

In addition to these eddy current inspections, visual inspections were performed on all tube plugs, the divider plate weld region, and the bottom of the steam generator channel head (under dry conditions) in all three steam generators. These visual inspections revealed no anomalous conditions.

As a result of these inspections, no tubes were plugged.

Tube degradation mechanisms observed during RFO 19 were tube wear at the AVBs and the tube support plates, mechanical wear attributed to loose parts, mechanical wear attributed to

prior maintenance activities (e.g., sludge lancing), and pitting. No stress corrosion cracking was detected.

Thirty-two indications of wear were detected at the AVBs in 27 tubes in steam generator A, and 20 indications of were at the AVBs were detected in 13 tubes in steam generator C. The maximum depth reported for the AVB wear indications was 26 percent throughwall. Two indications of tube wear at a tube support plate were detected in two tubes (1 in steam generator A and 1 in steam generator C). The maximum depth reported was 19 percent throughwall. Sixteen indications of wear attributed to loose parts were observed in the three steam generators. Of these indications, all but one were evident in prior inspection data. Most of these 16 indications have not changed since the prior inspection. One indication of wear was attributed to secondary-side maintenance activities (sludge lancing). This indication had not changed since the prior inspection. One indication of pitting was identified in steam generator A. This indication was detected in prior inspections and there has been no change in the signal since it was originally reported.

Two tubes were identified as having restrictions, one in steam generator A and one in steam generator C. The restriction in the tube in steam generator A is caused by a dent between the fourth and fifth tube support plates on the cold-leg side of the steam generator. The dent prevents the passage of the 1.83-cm (0.720-in.) diameter bobbin probe; however this region can be examined with a 1.78-cm (0.700-in.) diameter bobbin probe. The dent was first reported in 1997 and has been examined with the bobbin probe during each inspection since RFO 9 in 1997. The bobbin probe signal has exhibited no change during the subsequent inspections. In addition, this region of the tube has been examined with a rotating probe equipped with a plus-point coil during four outages since 1997 and no degradation has been identified at this location. The restriction in the tube in steam generator C is at the U-bend tangent point on the hot-leg. This location was examined with a 1.78-cm (0.700-in.) bobbin probe and was confirmed to be free of degradation.

Inspection and maintenance on the secondary side of the steam generators were performed during RFO 19. Sludge lancing was performed in all three steam generators. After sludge lancing, visual examination of the top of the tubesheet and the no-tube lane was performed in all three steam generators. In addition, regions with known foreign objects from prior inspections and accessible locations having eddy current indications attributed to foreign objects were inspected visually. In steam generator A, visual inspections were performed on all accessible steam drum components and structures including the feedring exterior, the upper tube bundle and the seventh tube support plate. No adverse conditions or degradation were noted during the inspections.

On January 28, 2013, the steam generator portion of the Surry 1 technical specifications was revised making them consistent with TSTF-510 (ADAMS Accession No. ML13018A086, ML13032A206, and ML13099A106).

There was no evidence of primary-to-secondary leakage (i.e., leakage is less than 3.79 lpd (1 gpd)) during the cycle prior to RFO 20 (spring 2012 to fall 2013).

During RFO 20 in 2013, 100 percent of the tubes in steam generator B were inspected full length with a bobbin coil, except for the U-bend region of the tubes in rows 1 and 2. In addition to these bobbin coil inspections, a rotating probe equipped with a plus-point coil was used to inspect the U-bend region of 100 percent of the row 1 and row 2 tubes in steam generator B. In addition to these inspections, an array probe was used to inspect:

- 100 percent of the tubes in steam generator B from the tube end on the hot-leg to the first tube support on the hot-leg side of the steam generator

- 100 percent of the tubes in steam generator B from the cold-leg tube end to the first tube support on the cold-leg side of the steam generator

- 50 percent of all dents in steam generator B with bobbin voltage amplitudes greater than 2 volts (including the five largest voltage dents)

In addition to these eddy current inspections, visual inspections were performed on all tube plugs, the divider plate weld region, and the bottom of the steam generator channel head (under dry conditions) in steam generator B. These visual inspections revealed no anomalous conditions. No degradation was observed at the bottom of the steam generator channel head.

As a result of these inspections, no tubes were plugged.

The only steam generator tube degradation mechanisms observed during RFO 20 were wear at the AVBs, wear attributed to loose parts, and wear attributed to prior maintenance activities (e.g., sludge lancing).

Twenty-seven indications of wear were detected at the AVBs in 22 tubes in steam generator B. The maximum depth reported for the AVB wear indications was 24 percent throughwall. Of these 27 indications, 9 were not reported in the prior inspection. The quantity and the depth of the newly reported indications are within industry experience. The identification of these new indications is attributed to the threshold of detection for this degradation mechanism (i.e., they may have been present, but undetectable, during prior inspections).

Nine indications of wear attributed to loose parts were observed in steam generator B. All of these indications were detected in prior inspections and none have changed since the prior inspection.

Two volumetric indications were observed during RFO 20. There has been no change in these signals since 1994. These two indications have been attributed to manufacturing anomalies.

One additional indication of wear was observed and attributed to secondary-side maintenance activities (sludge lancing). This indication had not changed since the prior inspection.

Inspection and maintenance on the secondary side of the steam generators were performed during RFO 20. Visual inspections of all accessible steam drum components and structures including the feedring exterior, the upper tube bundle, and the seventh tube support plate were performed in steam generators B and C. No adverse/abnormal conditions were noted during the inspections. FOSAR was not performed during RFO 20 since no possible loose part indications were identified during the eddy current examination.

### 3.4.6 Surry 2

Tables 3-46, 3-47, and 3-48 summarize the information discussed below for Surry 2. Table 3-46 provides the number of full-length bobbin inspections and the number of tubes plugged and deplugged during each outage for each of the three steam generators. Table 3-47 lists the

reasons why the tubes were plugged. Table 3-48 lists tubes plugged for reasons other than wear at the AVBs.

Surry 2 has three Westinghouse model 51F steam generators. These steam generators were installed at the plant in 1980. The tube supports are numbered as shown in Figure 2-8.

There was no evidence of primary-to-secondary leakage during the cycle preceding RFO 13 (fall 2000 to spring 2002).

During RFO 13 in 2002, 100 percent of the tubes in steam generator A were inspected full length with a bobbin coil, except for the U-bend region of the row 1 tubes. In addition to these bobbin coil inspections, a rotating probe equipped with a plus-point coil was used to inspect:

- 20 percent of the tubes (667 tubes) from 7.6 cm (3 in.) above to 7.6 cm (3 in.) below the top of the tubesheet on the hot-leg side in steam generator A
- the U-bend region of 100 percent of the row 1 tubes in steam generator A
- 200 tubes from 2.54 cm (1 in.) above to 2.54 cm (1 in.) below the top of the tubesheet on the cold-leg side (concentrated in the low-flow area and sludge pile periphery) in steam generator A

In addition to these eddy current inspections, all tube plugs in steam generator A were inspected visually. No degradation or abnormal leakage was identified during the inspection of the plugs.

As a result of these inspections, one tube was plugged. This tube was plugged for wear at the AVBs.

The only steam generator tube degradation mechanisms observed during RFO 13 were wear at the AVBs and wear attributed to loose parts.

Fourteen indications of wear were detected at the AVBs in 11 tubes in steam generator A. The maximum depth reported for the AVB wear indications was 24 percent throughwall. The average growth rate of the AVB wear indications in steam generator A was 1.35 percent throughwall per cycle. The growth rate at 95 percent probability and 50 percent confidence for steam generator A is 3.47 percent throughwall per cycle. Although one tube was plugged because of wear at the AVBs, the indication in this tube did not exceed the plugging limit. The tube was plugged because of the projected growth rate of the indication and since the wear indication was at a non-typical location (i.e., it was associated with the tip of the AVB).

Two indications of wear attributed to a foreign object were detected in two tubes. The two tubes were next to each other. Visual inspection of the area did not identify any loose parts near the affected tubes.

In previous outages, pit-like indications were identified in steam generators A and C on the cold-leg, above the tubesheet secondary face. During RFO 13, 200 tubes were inspected from 2.54 cm (1 in.) above to 2.54 cm (1 in.) below the top of tubesheet on the cold-leg side. No pit-like indications were identified in steam generator A during RFO 13.

During RFO 13, 412 dents were detected in steam generator A with approximately 80 percent of the total having voltages between 2 and 4 volts as measured by the bobbin probe. With the exception of a limited number of dents at the upper supports in steam generator C (see below), nearly all of the dents were induced during manufacture. The dents resulted from handling of the tubes before and during installation into the generators. All of these dent indications were previously identified.

Minor denting was previously identified in steam generator C at tube support plates 6 and 7. These dents are in the peripheral tubes and resulted from the interaction of the tube with the lands of the quatrefoil hole. These dents had bobbin voltage amplitudes ranging from 2 to 8 volts. The dents at the seventh tube support plate in steam generator C are predominantly at rows 10 through 30 and columns 80 through 94. These dents were characterized as minor because a nominal-sized probe passed through the dented tubes without difficulty. The licensee considered a dent free of degradation if two consecutive inspections (with a bobbin probe) show that the dent has not changed or if a rotating probe inspection does not identify any degradation. If the voltage of a dent indication changes by 0.25 volt as measured with a bobbin probe, then the dent is examined with an alternate probe such as a rotating probe.

Inspection and maintenance on the secondary side of the steam generators were performed during RFO 13. To reduce the amount of sludge on the top of the tubesheet, sludge lancing was performed in each of the three steam generators. After the sludge lancing, FOSAR was performed in each of the three steam generators. In steam generator A, visual inspections were performed in the steam drum, inside the feedring at the J-nozzle interfaces, and at the seventh tube support plate (access was gained through the swirl vanes). Ultrasonic thickness measurements were performed at the feedring tee and in adjacent components susceptible to degradation. In addition, in-bundle, secondary-side visual inspections were performed before and after sludge lancing at the top of the tubesheet on the hot- and cold-leg sides in steam generator A.

During RFO 14 in 2003, 100 percent of the tubes in steam generator B were inspected full length with a bobbin coil, except for the U-bend region of the row 1 tubes. In addition to these bobbin coil inspections, a rotating probe equipped with a plus-point coil was used to inspect:

- 71 percent of the tubes from 7.6 cm (3 in.) above to 7.6 cm (3 in.) below the top of the tubesheet on the hot-leg side (including the sludge zone, periphery, and all tubes not previously inspected with a rotating probe) in steam generator B

- the U-bend region of 100 percent of the row 1 tubes in steam generator B

- approximately 25 percent of the dents with bobbin voltage amplitudes greater than 2 volts (these inspections included dents that had changed and also included all row 2 tubes with bulges near the tangent point) in steam generator B

- the entire portion of the tube within the tubesheet for the four tubes that were not completely expanded for the full length of the tubesheet in steam generator B

As a result of these inspections, three tubes were stabilized and plugged. All of these tubes were plugged for wear attributed to a foreign object.

The only steam generator tube degradation mechanisms observed during RFO 14 were wear at the AVBs and wear attributed to loose parts.

Six indications of wear in six tubes were detected at the AVBs in steam generator B. The maximum depth reported for the AVB wear indications was 19 percent throughwall. The average growth rate of the AVB wear indications in steam generator B since the last inspection in RFO 10 (1997) was 0.8 percent throughwall per cycle. The growth rate at 95 percent probability and 50 percent confidence for steam generator B is 6.46 percent throughwall per cycle. The average growth rate of the AVB wear indications in all steam generators is 2.51 percent throughwall per cycle, with a 95/50 growth rate of 5.26 percent throughwall per cycle.

Five indications of wear attributed to a foreign object were detected in five tubes. Two of these indications were near the top of the tubesheet. These indications were attributed to a foreign object that most likely was removed during sludge lancing operations. The indications were detected only with a rotating probe because of their close proximity to the expansion transition and top of the tubesheet. This was the first inspection of these tubes with a rotating probe. This location was not inspected visually. The other three indications were at the second cold-leg support and resulted in the tubes being stabilized and plugged as discussed above. A visual inspection of this region confirmed the presence of a loose part, which was not removed. The part apparently has been in this position since at least 1993 because a volumetric indication was reported in one of the tubes during the 1993 inspections.

During RFO 14, 479 dents (in 335 tubes) with bobbin voltage amplitudes between 2 and 4.99 volts, 208 dents (in 108 tubes) with bobbin voltage amplitudes between 5 and 19.99 volts, and 2 dents (in 2 tubes) with bobbin voltage amplitudes greater than 20 volts were detected in steam generator B. Of the 689 dents, 124 were at the sixth and seventh tube support plates. These dents are predominantly in the periphery and near the wedge locations. The bobbin coil voltage associated with these dents is small, and all dents permit the passage of the standard size bobbin and rotating probes. This is consistent with the findings in steam generator C.

As a result of the bobbin coil inspections, 37 bulges were identified near the U-bend tangent point of the tubes in rows 1 and 2. The bulge indications were attributed to the manufacturing or fabrication practices used to produce the U-bend. The eddy current signals associated with these bulges have not changed.

The noise levels in the eddy current data were measured for a sample of tubes. These measurements were made at the tubesheet expansion, freespan above the top of the tubesheet, tube support plate elevations, AVBs, U-bend, and the freespan.

The rotating probe inspections near the top of the tubesheet are focused typically in the center of the bundle coincident with the low-velocity region below the baffle plate. This is the area of the bundle where the largest accumulation of sludge and particulate fallout occurs as the bundle flow is directed upward through the baffle hole opening. This condition could result in sludge and scale pockets that could increase the potential for secondary-side tube corrosion. This area is typically bounded by row 1, columns 27 to 67, and row 30, columns 37 to 57. This is somewhat larger than the baffle hole opening to account for the extent of the actual sludge pile.

During RFO 15 in 2005, 100 percent of the tubes in steam generator C were inspected full length with a bobbin coil, except for the U-bend region of the row 1 tubes. In addition to these bobbin coil inspections, a rotating probe equipped with a plus-point coil was used to inspect:

- 60 percent of the tubes from 7.6 cm (3 in.) above to 7.6 cm (3 in.) below the top of the tubesheet on the hot-leg side in steam generator C

- the 20 largest hot-leg overexpansions within the tubesheet in steam generator C
- the nine largest over-rolls above the top of the tubesheet on the hot-leg side in steam generator C
- the 10 largest over-rolls above the top of the tubesheet on the cold-leg side in steam generator C
- the U-bend region of 100 percent of the row 1 tubes in steam generator C
- 20 percent of the dents with bobbin voltage amplitudes greater than 2 volts (these inspections included dents that had changed) in steam generator C
- the entire portion of the tube within the tubesheet for the two tubes that were not completely expanded for the full length of the tubesheet in steam generator C

In steam generator B, a rotating probe equipped with a plus-point coil was used to inspect six tubes from 7.6 cm (3 in.) above to 7.6 cm (3 in.) below the top of the tubesheet on the hot-leg side. These latter inspections were performed as a result of visually identifying potential damage to one tube during secondary-side inspection activities in steam generator B. No other eddy current inspections were performed in steam generator B during RFO 15.

As a result of these inspections, eight tubes were plugged. All of these tubes were plugged for wear attributed to loose parts. Two of these eight tubes were also stabilized.

The only steam generator tube degradation mechanisms observed during RFO 15 were wear at the AVBs, wear at the tube support plates, and wear attributed to loose parts.

Thirty-seven indications of wear in 24 tubes were detected at the AVBs in steam generator C. The maximum depth reported for the AVB wear indications was 27 percent throughwall. The average growth rate of the AVB wear indications in steam generator C since the last inspection in the fall of 2000 was 0.85 percent throughwall per cycle. The historical average growth rate considering all of the data from steam generator C is 2.29 percent throughwall per cycle. The corresponding growth rate at 95 percent probability and 50 percent confidence for steam generator C is 5.08 percent throughwall per cycle. The growth rate has been decreasing with time. The average growth rate of the AVB wear indications in all steam generators is 2.20 percent throughwall per cycle, with a 95/50 growth rate of 5.03 percent throughwall per cycle.

One tube had a wear indication attributed to interaction with the tube support plate.

Twenty-eight tubes had wear attributed to loose parts. These indications were attributed to loose parts because the indications were clustered and in the periphery and because, in some cases, some possible loose part indications were identified near the affected tubes during the eddy current inspections. Of these 28 tubes, 27 had indications near to top of the tubesheet on the hot-leg side and the remaining tube had an indication at the baffle plate on the hot-leg side of the steam generator. All of these locations were inspected visually with the exception of the location of the baffle plate indication. The eddy current inspection of the tube with the indication at the baffle plate did not exhibit a possible loose part indication. Visual inspection identified several foreign objects including the object next to the two tubes that were stabilized. No foreign objects remain near the tubes that were left in service with wear attributed to foreign objects. Eight tubes were plugged for wear attributed to loose parts. The wear indications were

attributed to interaction with loose parts that were likely present during past operating cycles with most of the postulated loose parts being removed during sludge lancing operations. One of the loose parts causing the damage was lodged in place and was left in the steam generator. This loose part was adjacent to the two tubes that were stabilized. The wear and loose part were near the top of the tubesheet on the hot-leg side of the steam generator.

In steam generator B, a volumetric indication, which was initially identified visually, was detected. This indication (a scratch mark) could be the result of a foreign object, initial fabrication, or damage during removal of the wrapper plate cruciform in the late 1990s.

During RFO 15, 620 dents (in 458 tubes) with bobbin voltage amplitudes between 2 and 4.99 volts, 171 dents (in 126 tubes) with bobbin voltage amplitudes between 5 and 9.99 volts, and 55 dents (in 41 tubes) with bobbin voltage amplitudes greater than 10 volts were detected in steam generator C. The size of the dents has not changed significantly since the 2000 outage (RFO 12). A dent signal is one that does not rotate to the flaw plane. A ding signal rotates and is influenced by changes in resistivity because of localized impact deformation.

As a result of the bobbin coil inspections, 19 bulges were identified with 13 near the U-bend tangent point of the row 1 tubes. The bulge indications were attributed to the manufacturing or fabrication practices used to produce the U-bend. The eddy current signals associated with these bulges have not changed.

In steam generator C, no low-row tubes (i.e., tubes in rows 1 through 8) were identified as potentially being more susceptible to stress corrosion cracking based on a review of eddy current data for an offset between the data in the U-bend and in the straight span. Some high-row tubes in steam generator C were identified (based on a review of eddy current data) as potentially having high residual stress. A rotating probe was used to inspect a sample of these tubes at dents and the expansion transitions.

During RFO 15, secondary-side visual inspections were performed. This included inner bundle inspections on both the hot- and cold-leg side of the steam generator (i.e., camera passes down the tube columns out to the bundle periphery). Twenty-three columns on the hot-leg and seven columns on the cold-leg were inspected.

There was no evidence of primary-to-secondary leakage during the cycle preceding RFO 16 (spring 2005 to fall 2006).

During RFO 16 in 2006, 100 percent of the tubes in steam generator A were inspected full length with a bobbin coil, except for the U-bend region of the row 1 tubes. In addition to these bobbin coil inspections, a rotating probe equipped with a plus-point coil was used to inspect:

- about 62 percent of the tubes from 7.6 cm (3 in.) above to 7.6 cm (3 in.) below the top of the tubesheet on the hot-leg side in steam generator A
- 21 percent of the hot-leg overexpansions within the tubesheet (i.e., the 28 largest) in steam generator A
- the U-bend region of 100 percent of the row 1 tubes (including 28 bulges in these tubes) in steam generator A

- bulges with bobbin voltage amplitudes greater than 11 volts (a total of 11 bulges) in steam generator A
- at least 20 percent of the dents with bobbin voltage amplitudes greater than 2 volts in steam generator A
- the entire portion of the tube within the tubesheet for the two tubes that were not completely expanded for the full length of the tubesheet in steam generator A

As a result of these inspections, four tubes were plugged—three for wear attributed to loose parts, and one tube for damage near the tube end as a result of removing a plug from this tube in a previous outage.

The only steam generator tube degradation mechanisms observed during RFO 16 were wear at the AVBs and wear attributed to loose parts.

Thirteen indications of wear in 10 tubes were detected at the AVBs in steam generator A. The maximum depth reported for the AVB wear indications was 29 percent throughwall. Since the last inspection in RFO 13 (2002), the average growth rate of the AVB wear indications in steam generator A was 0.64 percent throughwall per cycle. The growth rate at 95 percent probability and 50 percent confidence for steam generator A is 3.25 percent throughwall per cycle. The average growth rate of the AVB wear indications in all steam generators is 2.11 percent throughwall per cycle, with a 95/50 growth rate of 4.94 percent throughwall per cycle. The growth rates continue their decreasing trend when compared to prior inspections.

Volumetric indications (other than wear at the AVBs and the tube with tube-end damage) were detected in 10 tubes. Two of the indications were near the top of the tubesheet on the hot-leg side and were attributed to loose parts or a manufacturing operation. The indications in these tubes have not changed since the last inspection. Wear indications were identified in a cluster of tubes near the top of the tubesheet on the cold-leg side. No loose parts were identified in this region during visual or eddy current inspections. These indications were attributed to a loose part that is no longer present. Another cluster of damage was also observed near the top of the tubesheet on the cold-leg side. The affected tubes were damaged by a loose part that had resulted in a primary-to-secondary leak from an adjacent tube in 1986, when the loose part was removed. The damage to these tubes was judged at the time to be insignificant, and the tubes were left in service. In 2006, based on the depth estimate using current sizing techniques, one of the tubes in this cluster was plugged. Eddy current testing of the tubes with volumetric indications (10 tubes total) did not indicate the presence of any loose parts at the locations where these indications were found. In addition, visual inspections were performed at all locations except for the two tubes with shallow indications and these inspections also confirmed the absence of any loose parts (therefore, no known loose parts remain adjacent to any of the volumetric flaws left in service). Of the 10 volumetric indications, only 4 were detected with a bobbin coil probe.

During RFO 16, 614 dents (in 403 tubes) with bobbin voltage amplitudes greater than 2 volts were detected in steam generator A. There has been no significant change in the size of the dents since the 2002 outage (RFO 13). There is a pattern of dents calls at the sixth and seventh tube support plates. These dents are predominantly in peripheral tubes and tend to be near tube support plate wedge locations.

As a result of the bobbin coil inspections, 60 bulges (in 42 tubes) were identified. The number of bulges and the size of the bulges have not changed with time indicating that the bulges occurred during fabrication of the steam generators. Most of these bulges were at the sixth and seventh support plate in rows 1 and 2.

In steam generator A, no low-row tubes (i.e., tubes in rows 1 through 8) were identified as potentially being more susceptible to stress corrosion cracking based on a review of eddy current data for an offset between the data in the U-bend and in the straight span.

A rust stain was noted in the tube end of one tube in steam generator A. The hot-leg portion of this tube was inadvertently plugged in 1986. This tube was subsequently deplugged in 1991 by drilling. Visual and rotating probe inspections revealed that the tube appeared to have been drilled off-center, longitudinally from the tube end for a distance of about 4.45 cm (1.75 in.) The tube wall was perforated over a circumferential distance of about 2.3 cm (0.9 in.) The hydraulic expansion throughout the tubesheet above the tube damage was normal based on bobbin coil profiling and the expansion transition was properly positioned near the top of the tubesheet. No other tubes have been deplugged and left in service. The affected tube was plugged with a deep roll plug. This plug had three individual roll expansions: the deep roll, the normal roll, and the shallow roll. The deep roll was installed above the damaged area in a location where the tube was fully intact. This roll was the structural joint between the outside surface of the plug and the inside surface of the tube. The other two rolls in the deep roll plug were not credited as structural joints and were installed to isolate the exposed carbon steel of the tubesheet. The shallow roll, which was near the short section of tubing at the tube end, would present a tortuous leakage path allowing little or no primary coolant to contact the tubesheet material. Nonetheless, it was assumed that leakage would occur resulting in corrosion of the exposed tubesheet material. This assessment led the licensee to conclude that the amount of corrosion would be limited and would not affect the tubesheet ligament between the tubes since the exposed area is oriented toward the channel head periphery and away from the neighboring tubes. This plug will be visually inspected during future steam generator tube inspection outages.

Degradation of the channel head was also observed. Ultrasonic examination of the tubesheet-to-channel-head transition region confirmed that no degradation extended into the base material. The licensee concluded that the condition is acceptable for continued service without repair for the licensed life of the unit. This location will be monitored during future steam generator tube inspection outages.

On March 29, 2007, Surry 2 revised the steam generator portion of their technical specifications making them performance-based consistent with TSTF-449 (ADAMS Accession No. ML070880618).

As of 2007, the licensee's loss-of-coolant-accident analysis assumed that the average equivalent level of tube plugging was 15 percent in any one steam generator with no greater than a 5 percent differential between any two steam generators expressed in terms of the number of tubes per steam generator.

On May 16, 2008, the steam generator portion of the Surry 2 technical specifications was revised to permit certain sized flaws near the tube end in both the hot- and cold-leg sides of the steam generator to remain in service. Specifically, the technical specifications were revised to (1) permit flaws having a circumferential component less than or equal to 203 degrees found in the portion of the tube below 43.2 cm (17 in.) from the top of the tubesheet and above 2.54 cm

(1 in.) from the bottom of the tubesheet to remain in service, (2) require the removal from service all flaws having a circumferential component greater than 203 degrees found in the portion of the tube below 43.2 cm (17 in.) from the top of the tubesheet and above 2.54 cm (1 in.) from the bottom of the tubesheet, (3) require the removal from service all tubes with service-induced flaws between the top of the tubesheet and 43.2 cm (17 in.) below the top of the tubesheet, and (4) permit all axial indications found in the portion of the tube below 43.2 cm (17 in.) from the top of the tubesheet to remain in service. In addition, the technical specifications were modified to indicate that when more than one flaw with circumferential components is found in the portion of the tube below 43.2 cm (17 in.) from the top of the tubesheet and above 2.54 cm (1 in.) from the bottom of the tubesheet with the total of the circumferential components being greater than 203 degrees and the axial separation distance of less than 2.54 cm (1 in.), then the tube must be removed from service (overlapping portions of the flaws only need to be counted once in determining the total circumferential involvement of the flaws). For flaws within 2.54 cm (1 in.) of the bottom of the tubesheet, the technical specifications were modified to indicate (1) when one or more flaws with circumferential components are found and the total of the circumferential components exceeds 94 degrees, then the tube shall be removed from service and (2) when one or more flaws with circumferential components are found in the portion of the tube within 2.54 cm (1 in.) from the bottom of the tubesheet and within 2.54 cm (1 in.) axial separation distance of a flaw above 2.54 cm (1 in.) from the bottom of the tubesheet, and the total of the circumferential components found in the tube exceeds 94 degrees, then the tube shall be removed from service (overlapping portions of the flaws only need to be counted once in determining the total circumferential involvement of the flaws). This revision to the technical specifications was applicable only to RFO 21 (which corresponds to RFO 17 since steam generator replacement) and the subsequent operating cycle (ADAMS Accession No. ML081340106).

There was no evidence of primary-to-secondary leakage during the cycle preceding RFO 17 (fall 2006 to spring 2008).

During RFO 17 in 2008, 100 percent of the tubes in steam generators B and C were inspected full length with a bobbin coil, except for the U-bend region of the row 1 tubes. In addition to these bobbin coil inspections, a rotating probe equipped with a plus-point coil was used to inspect:

- 20 percent of the tubes from 7.62 cm (3 in.) above the top of the tubesheet on the hot-leg side to the hot-leg tube end (this sample included a minimum of 50 percent of the tubes in the sludge pile region) in steam generators B and C
- 100 percent of the tubes from the hot-leg tube end to 10.2 cm (4 in.) above the hot-leg tube end in steam generators B and C
- 100 percent of the overrolls in the hot-leg in steam generators B and C
- 50 percent of the hot-leg overexpansions within the tubesheet in steam generators B and C
- the 10 largest cold-leg overexpansions within the tubesheet in steam generators B and C
- the U-bend region of 100 percent of the row 1 tubes in steam generators B and C

- 100 percent of the dents and dings in the hot-leg with bobbin voltage amplitudes greater than 5 volts in steam generators B and C

- 20 percent of the dents and dings with bobbin voltage amplitudes greater than 2 volts but less than 5 volts in steam generators B and C

- the entire portion of the tube within the tubesheet for any tubes that were not completely expanded for the full length of the tubesheet in steam generators B and C (4 tubes were not expanded in the hot-leg in steam generator B, 3 tubes were not expanded in the hot-leg in steam generator C, and 4 tubes were not expanded in the cold-leg of steam generator C).

Because of finding crack-like indications near the hot-leg tube ends in steam generators B and C, 100 percent of the tubes in steam generator A were inspected with a rotating probe equipped with a plus-point from the hot-leg tube end to 10.2 cm (4 in.) above the hot-leg tube end. In addition to these eddy current inspections, all tube plugs in steam generators B and C were inspected visually.

As a result of these inspections, nine tubes were plugged—six for circumferentially oriented primary water stress corrosion cracking indications at the hot-leg tube end. Three others were stabilized and plugged for wear attributed to a loose part (which was unable to be removed from the steam generator).

The only steam generator tube degradation mechanisms observed during RFO 17 were wear at the AVBs, wear attributed to loose parts, and axially and circumferentially oriented primary water stress corrosion cracking at the tube ends.

Nine indications of wear in eight tubes were detected at the AVBs in steam generator B. Forty-three indications of wear in 30 tubes were detected at the AVBs in steam generator C. The maximum depth reported for the AVB wear indications was 29 percent throughwall. Minimal growth of existing AVB wear indications was observed in steam generators B and C. No new wear indications at the AVBs were detected.

Fifteen tubes have wear attributed to loose parts. Seven of these fifteen tubes had indications that were reported in previous inspections.

Inside diameter initiated axial and circumferential indications were detected near the hot-leg tube end in all three steam generators. All indications were within 5 mm (0.2 in.) from the tube end. In steam generator A, 60 indications (3 axial and 57 circumferential) were detected in 60 tubes. In steam generator B, 39 indications (9 axial and 30 circumferential) were detected in 37 tubes. In steam generator C, 21 indications (6 axial and 15 circumferential) were detected in 20 tubes.

Seventeen loose parts were detected in steam generators B and C. Seven of these loose parts were associated with potential loose part indications from the eddy current inspection. In steam generator C, all loose parts (other than sludge rocks and scale) were removed from the steam generator. In steam generator B, a metal remnant and a short piece of wire were not retrieved. Both of these loose parts were fixed in place. The metal remnant is wedged between the tubelane blocking device and the tubes in row 1, column 12, and row 1, column 23. This loose part has been present since 2005 and has not resulted in any tube wear. The wire is embedded in the sludge pile. All possible loose part indications from the eddy current inspection were

inspected visually for the presence of a loose part with the exception of the three tubes with possible loose part indications at the baffle plate. These latter tubes were stabilized and plugged.

In steam generators B and C, no low-row tubes (i.e., tubes in rows 1 through 8) were identified as potentially being more susceptible to stress corrosion cracking based on a review of eddy current data for an offset between the data in the U-bend and in the straight span. In steam generator B, two high row tubes were identified (based on a review of eddy current data) as potentially having high residual stress. In steam generator C, 14 tubes were identified (based on a review of eddy current data) as potentially having high residual stress.

Inspection and maintenance on the secondary side of the steam generators were performed during RFO 17. To reduce the amount of sludge on the top of the tubesheet, sludge lancing was performed in each of the three steam generators. Sludge lancing was also performed on the baffle plate in each of the three steam generators. FOSAR was performed in each of the three steam generator, and sludge samples were retrieved for chemical analysis. In steam generators A and B, an upper bundle flush was performed along with a visual inspection of the upper bundle and the seventh tube support plate. In steam generator B, visual inspections were performed of the steam drum and in the interior of the bundle at the top of the tubesheet. The visual inspections in steam generator B at the seventh tube support plate revealed a uniform layer of scale. Inspections of the periphery of the tube bundle showed minimal evidence of powdery sludge and no evidence of loose scale on the support plate or in the broached tube support plate holes. Inspection of the J-tubes indicated some flow accelerated corrosion. The J-tubes are inspected every third outage.

On November 5, 2009, the steam generator portion of the Surry 2 technical specifications was revised to limit the extent of inspection in the tubesheet region. Specifically, the technical specifications were revised to exclude the portion of tube that is more than 42.42 cm (16.7 in.) below the top of the tubesheet from inspection (i.e., approximately the lowermost 10.2 cm (4 in.) of tube in the tubesheet was excluded from inspection, and hence any flaws that may exist in this region are permitted to remain in service). This revision was only applicable for RFO 22 and the subsequent operating cycle (ADAMS Accession No. ML092960484).

There was no evidence of primary-to-secondary leakage (i.e., leakage is less than 3.79 lpd (1 gpd)) during the cycle preceding RFO 18 (spring 2008 to fall 2009).

During RFO 18 in 2009, 100 percent of the tubes in steam generator A were inspected full length with a bobbin coil, except for the U-bend region of the tubes in rows 1 and 2. In addition to these bobbin coil inspections, a rotating probe equipped with a plus-point coil was used to inspect:

- the U-bend region of 100 percent of the row 1 and row 2 tubes in steam generator A
- 50 percent of the outermost five peripheral tubes from 7.6 cm (3 in.) above to 7.6 cm (3 in.) below the top of the tubesheet on the cold-leg side of steam generator A
- 60 percent of the overexpansions from 7.62 cm (3 in.) above to 42.42 cm (16.7 in.) below the top of the tubesheet on the hot-leg side of steam generator A
- 30 percent of the overexpansions from 7.62 cm (3 in.) above to 42.42 cm (16.7 in.) below the top of the tubesheet on the cold-leg side of steam generator A

In addition to the specific inspections performed in steam generator A, a rotating probe equipped with a plus-point coil was used to inspect the following in all three steam generators:

- approximately 61 percent of the tubes from 7.6 cm (3 in.) above to 7.6 cm (3 in.) below the top of the tubesheet on the hot-leg side of the steam generator

- all Tier 1 high-stress tubes (Tier 1 tubes have an eddy current offset in both the hot- and cold-leg data and Tier 2 tubes have an offset in either the hot- or cold-leg data, but not both) from the hot-leg tube end to 7.62 cm (3 in.) above the top of the tubesheet on the hot-leg side of the steam generator (there are no tier 1 tubes in steam generator A)

- approximately 75 percent of the Tier 1 high stress tubes at the hot-leg tube support plate elevations (100 percent in steam generator B and 50 percent in steam generator C)

- 50 percent of all dents with bobbin voltage amplitudes greater than or equal to 2 volts

In addition to these eddy current inspections, all tube plugs and the divider plate weld region were inspected visually. These visual inspections revealed no anomalous conditions with the plugs and there was no change in the corrosion degradation observed in the channel head area and in an unplugged tube. This latter degradation was initially identified during RFO 16 in 2006 in the hot-leg of steam generator A.

As a result of these inspections, 30 tubes were plugged—19 for wear attributed to loose parts (or the presence of a loose part with no wear present) and 11 because the tube had not been expanded into the tubesheet.

The only steam generator tube degradation mechanisms observed during RFO 18 were wear at the AVBs, wear at the tube support plates, and wear attributed to loose parts.

Twenty-three indications of wear were detected at the AVBs in 17 tubes in steam generator A. The maximum depth reported for the AVB wear indications was 28 percent throughwall. Of these 23 indications, 11 were not reported in the prior inspection. All of these indications are near the reporting threshold for this mechanism (10 percent throughwall). The growth rate associated with AVB wear has decreased since its initial detection in the 1980s. As of RFO 18, 55 tubes were in service with wear at the AVBs in the three steam generators (17 in steam generator A, 8 in steam generator B, and 30 in steam generator C). The wear rate at 95 percent probability and 50 percent confidence is approximately 1.5 percent throughwall per cycle.

Two indications of wear were detected in two tubes at the tube support plate elevations during RFO 18. One of the indications was in steam generator A; the other was in steam generator C. The maximum depth reported for the tube support plate wear indications was 14 percent throughwall.

Forty-five tubes had indications of wear attributed to loose parts in the three steam generators. Most of these indications were present in prior outages.

Overexpansions and overrolls exist in all three steam generators. An overexpansion is an area of the tube that is hydraulically expanded more than 0.5 mm (0.02 in.) greater than the diameter of the unexpanded portion of the tube. An overroll is an area of the tube that is hydraulically expanded more than 6.35 mm (0.25 in.) above the top of the tubesheet. There are 650

overexpansions (in 505 tubes) within the top 42.42 cm (16.7 in.) of the tube within the tubesheet on the hot-leg side of the steam generators (126 in steam generator A, 466 in steam generator B, and 58 in steam generator C). There are 506 overexpansions (in 388 tubes) within the top 42.42 cm (16.7 in.) of the tube within the tubesheet on the cold-leg side of the steam generators (79 in steam generator A, 340 in steam generator B, and 87 in steam generator C). There are nine overrolls (in nine tubes) on the hot-leg side of the steam generators (three in steam generator A, one in steam generator B, and five in steam generator C). There are four overrolls (in 4 tubes) on the cold-leg side of the steam generators (all in steam generator C).

The positions of the bottoms of both the hot- and cold-leg expansion transitions were determined during RFO 18. Other than 11 tubes that were not expanded within the tubesheet, no other tubes had significant deviation of the location of the bottom of the expansion transition with respect to the top of the tubesheet.

Two Tier 1 tubes are in steam generator B and 14 Tier 1 tubes are in steam generator C. There are 173 Tier 2 tubes in steam generator A, 189 in steam generator B, and 134 in steam generator C.

Inspection and maintenance on the secondary side of the steam generators were performed during RFO 18. Sludge lancing and FOSAR were performed in all three steam generators. After sludge lancing, the top of the tubesheet and baffle plates received quick visual inspections to determine the effectiveness of the lancing. In addition, the steam drum, select J-nozzle interfaces (performed from the inside of the feedring), and the top of the tube bundle (through the primary moisture separator risers) were inspected visually in steam generator C. All components examined in the steam drum (upper two decks, primary and secondary separators, swirl vanes, drain pipes, deck attachment welds, ladders, etc.) and upper tube bundle regions were sound with no evidence of erosion or corrosion. No structural anomalies were noted. Minor flow accelerated corrosion was observed at some J-nozzle/feedring interfaces. During the prior inspection of the steam generator C upper internals in 2005, localized throughwall flow accelerated corrosion degradation was observed on a capped-off, unused J-nozzle stub. This degradation was repaired by welding in 2005. During RFO 18 (2009), this location was found to be in good condition.

On May 20, 2011, the steam generator portion of the Surry 2 technical specifications was revised to limit the extent of inspection in the tubesheet region. Specifically, the technical specifications were revised to exclude the portion of tube that is more than 45.06 cm (17.74 in.) below the top of the tubesheet from inspection (i.e., approximately the lowermost 7.62 cm (3 in.) of tube in the tubesheet was excluded from inspection, and hence any flaws that may exist in this region are permitted to remain in service). This revision was only applicable for RFO 23 and the subsequent operating cycle (ADAMS Accession No. ML11090A000 and ML111810163).

There was no evidence of primary-to-secondary leakage (i.e., leakage is less than 3.79 lpd (1 gpd)) during the cycle preceding RFO 19 (fall 2009 to spring 2011).

During RFO 19 in 2011, 100 percent of the tubes in steam generators B and C were inspected full length with a bobbin coil, except for the U-bend region of the tubes in rows 1 and 2. In addition to these bobbin coil inspections, a rotating probe equipped with a plus-point coil was used to inspect the following in steam generators B and C:

- the U-bend region of 100 percent of the tubes in rows 1 and 2

- 58 percent of the tubes from 7.6 cm (3 in.) above to 7.6 cm (3 in.) below the top of the tubesheet on the hot-leg side

- all Tier 1 high stress tubes from 7.62 cm (3 in.) above to 45.7 cm (18 in.) below the top of the tubesheet on the hot-leg side

- 50 percent of the outermost five peripheral tubes from 7.6 cm (3 in.) above to 7.6 cm (3 in.) below the top of the tubesheet on the cold-leg side

- 50 percent of the overexpansions from 7.62 cm (3 in.) above to 45.7 cm (18 in.) below the top of the tubesheet on the hot-leg side

- the 20 largest overexpansions from 7.62 cm (3 in.) above to 45.7 cm (18 in.) below the top of the tubesheet on the cold-leg side

- 50 percent of all dents with bobbin voltage amplitudes greater than or equal to 2 volts

In addition to these eddy current inspections, all tube plugs and the divider plate weld region were inspected visually, revealing no anomalous conditions.

As a result of these inspections, no tubes were plugged.

The only steam generator tube degradation mechanisms observed during RFO 19 were wear at the AVBs, wear at the tube support plates, and wear attributed to loose parts.

Sixty-four indications of wear were detected at the AVBs in steam generators B and C (10 indications in 9 tubes in steam generator B and 54 indications in 36 tubes in steam generator C). The maximum depth reported for the AVB wear indications was 33 percent throughwall. Of these 64 indications, 11 were not reported in the prior inspection (1 in steam generator B and 10 in steam generator C).

Four indications of wear were detected in two tubes in steam generator C at the tube support plate elevations during RFO 19. The maximum depth reported for the tube support plate wear indications was 20 percent throughwall. Three of these indications were new.

Thirty-two indications of wear attributed to loose parts were detected in steam generators B and C (3 indications in 3 tubes in steam generator B and 29 indications in 26 tubes in steam generator C). Most of these indications were present in prior outages.

Inspection and maintenance on the secondary side of the steam generators were performed during RFO 19. FOSAR was performed in each steam generator at the top of the tubesheet, the annulus, and no-tube lane. Visual inspections were performed at the top of the tubesheet in steam generators B and C and at select flow distribution baffle plate locations in steam generator C. No adverse conditions were noted. The feedrings in all three steam generators were replaced with feedrings fabricated from flow accelerated corrosion resistant stainless steel. During the feedring replacement work in steam generator A, a hole in one of the primary moisture separator riser barrels was identified coincident with a J-nozzle overspray location. The riser barrel region is configured into two concentric circles. The outer circle consists of 12 evenly spaced riser barrels on the outside of the feedring (between the feedring and inside diameter of the steam drum). The remaining four riser barrels, forming the inner circle, are on the inside of the feedring. Ultrasonic wall thickness measurements were performed on 6 of the

16 riser barrels in steam generator A, which showed evidence of overspray. The regions, which had reduced wall thickness, were addressed by welding an Inconel patch plate over the affected areas. Inconel patch plates were previously installed on the susceptible riser barrels in steam generators B and C. The J-nozzles on the replacement feedrings in all three steam generators are oriented such that the spray does not impinge on the riser barrels.

On April 17, 2012, the steam generator portion of the Surry 2 technical specifications was revised to limit the extent of inspection in the tubesheet region. Specifically, the technical specifications were revised to exclude the portion of tube that is more than 45.44 cm (17.89 in.) below the top of the tubesheet from inspection (i.e., approximately the lowermost 7.62 cm (3 in.) of tube in the tubesheet was excluded from inspection, and hence any flaws that may exist in this region are permitted to remain in service - refer to ADAMS Accession No. ML120730304 and ML12109A270).

There was no evidence of primary-to-secondary leakage (i.e., leakage is less than 3.79 lpd (1 gpd)) during the cycle preceding RFO 20 (spring 2011 to fall 2012).

During RFO 20 in 2012, 100 percent of the tubes in steam generator A were inspected full length with a bobbin coil, except for the U-bend region of the tubes in rows 1 and 2. In addition to these bobbin coil inspections, a rotating probe equipped with a plus-point coil was used to inspect the U-bend region of 100 percent of the row 1 and row 2 tubes in steam generator A. In addition, an array probe was used to inspect (1) 100 percent of the tubes from the hot-leg tube end to the first tube support on hot-leg side in steam generator A, and (2) 100 percent of the tubes from the cold-leg tube end to the first tube support on cold-leg side in steam generator A. In the tubesheet region, the array probe data were evaluated only for the top 45.44 cm (17.89 in.) of the tube. No inspections of the steam generator tubes were performed in steam generators B and C.

In addition to these eddy current inspections, visual inspections were performed on all tube plugs, the divider plate weld region, and the channel head in steam generator A. These visual inspections revealed no anomalous conditions with the plugs or the divider plate weld region. During the visual inspections of the channel head, it was verified that no change had occurred in the localized cladding degradation that was observed in 2006 in the hot-leg channel head of steam generator A. During RFO 16 in 2006, the licensee characterized and evaluated the channel head degradation. Ultrasonic examination of the tubesheet-to-channel head transition region indicated that no degradation extended into the base material and that the condition is acceptable for continued service without repair for the remaining licensed life of the unit. Similarly, during RFO 20 in 2012, the hot-leg primary manway flange face was re-examined and there was no advancement of the localized region of corrosion between the gasket seating surface and the bolt circle that was observed during RFO 16 in 2006. The degradation was attributed to gasket leakage at some point before 2006.

As a result of these inspections, no tubes were plugged.

The only steam generator tube degradation mechanisms observed during RFO 20 were wear at the AVBs, wear at the tube support plates, and wear attributed to loose parts.

Thirty-one indications of wear in 23 tubes were detected at the AVBs in steam generator A. The maximum depth reported for the AVB wear indications was 27 percent throughwall. Of these 31 indications, 10 were not reported in the prior inspection.

One indication of wear was detected at the tube support plate elevations during RFO 20. The maximum depth reported for the tube support plate wear indications was 7 percent throughwall.

Ten indications of wear attributed to loose parts were detected in steam generator A. Most of these indications were present in prior outages and have not changed in size.

Inspection and maintenance on the secondary side of the steam generators were performed during RFO 20. Sludge lancing and FOSAR was performed in all three steam generators. The visual inspection included the annulus and divider lane (no-tube lane) region on the top of the tubesheet. In addition, an inner bundle hot- and cold-leg inspection was performed in steam generator A. A visual inspection was also performed of the upper steam drum moisture separator components, feedring components, and the top of the U-bend region components in steam generator A. No degradation of these components was detected; however, two large foreign objects on the upper deck of the steam drum were identified. The objects were later determined to be foreign material exclusion barriers that were used during the feedring replacement project in 2011 (RFO 19). The objects were removed and rub marks were observed at points that were in contact with the barriers. No reduction of material thickness was observed. Because of these findings, the steam drums in steam generators B and C were inspected to determine if similar objects were present. No foreign objects were identified in steam generators B and C.

On January 28, 2013, the steam generator portion of the Surry 2 technical specifications was revised making them consistent with TSTF-510 (ADAMS Accession No. ML13018A086, ML13032A206, and ML13099A106).

### 3.4.7 Turkey Point 3

Tables 3-49, 3-50, and 3-51 summarize the information discussed below for Turkey Point 3. Table 3-49 provides the number of full-length bobbin inspections and the number of tubes plugged and deplugged during each outage for each of the three steam generators. Table 3-50 lists the reasons why the tubes were plugged. Table 3-51 lists tubes plugged for reasons other than wear at the AVBs.

Turkey Point 3 has three Westinghouse model 44F steam generators. They were installed at the plant in 1982. The tube supports are numbered as shown in Figure 2-6. Minor denting occurred at the upper tube support plates during manufacturing of these steam generators. The denting affects no more than 341 intersections in each steam generator hot leg. In addition, overexpansion of the tubesheet joint occurred on a maximum of 300 tubes in each hot leg when the hydraulic expansion tool was set at a depth exceeding the thickness of the tubesheet. The tool made a slight bulge in the tube at the top of the tubesheet. This anomalous condition produces residual stresses in the affected locations, making them more susceptible to cracking than non-overexpanded areas. Based on accident analysis considerations, a maximum of 20 percent of the tubes in the three steam generators can be plugged.

During RFO 19 in 2003, it was determined that one tube in steam generator C had not been inspected during RFO 18. The tube was not inspected because of an encoding error attributed to human error. The manipulator was not verified to be at the correct tube location at the time the eddy current data were acquired (resulting in the wrong tube being inspected).

During RFO 19 in 2003, 100 percent of the tubes in each of the three steam generators were inspected full length with a bobbin coil, except for the U-bend region of the tubes in rows 1 and

2. In addition to these bobbin coil inspections, a rotating probe equipped with a plus-point coil was used to inspect:

- 100 percent of the tubes at the hot-leg expansion transition region
- the U-bend region of 50 percent of the row 1 and row 2 tubes (which included all those not inspected during RFO 18)
- about 50 percent of the dents in the hot-leg with bobbin voltage amplitudes greater than or equal to 5 volts

As a result of these inspections, three tubes were plugged—one for wear at the AVBs, one for a manufacturing indication, and one because a plus-point coil inspection could not be performed in the U-bend region.

The only steam generator tube degradation mechanisms observed during RFO 19 were wear at the AVBs and wear attributed to loose parts.

Six indications of wear were detected at the AVBs in six tubes in steam generator A. Thirteen indications of wear were detected at the AVBs in 6 tubes in steam generator B, and 40 indications of wear were detected at the AVBs in 26 tubes in steam generator C. The maximum depth reported for the AVB wear indications was 35 percent throughwall.

One indication of wear attributed to a loose part was detected during RFO 19. The maximum depth reported for this indication was 29 percent throughwall.

The manufacturing indication in the tube that was plugged was volumetric in nature and in the U-bend region of a row 21 tube. The indication has been present since the preservice inspection and has not changed.

The restriction that led to a tube being plugged because it prevented a plus-point coil inspection was in a row 1 tube. The RFO 19 inspection was the first time the U-bend region of this tube was scheduled to be inspected with a plus-point probe. This region of the tube had been inspected with a bobbin probe in prior outages. The restriction was attributed to tube ovalization because of the bending process during manufacturing of the tubes. During the RFO 18 inspections in 2001, another row 1 tube could not be inspected in the U-bend region with a plus-point coil. Similar to the tube plugged during RFO 19, the RFO 18 inspections were the first scheduled inspections with a plus-point coil. Although the tube in RFO 18 allowed passage of the plus-point coil (unlike the tube in RFO 19, which did not permit passage), the probe did not rotate properly through the entire U-bend region. The U-bend region of this tube had also been inspected with a bobbin probe in prior outages.

Three new dents were identified during RFO 19—two in steam generator B and one in steam generator C. One of the dents was in the freespan between the fifth and sixth supports of a peripheral tube on the cold-leg side of the steam generator. The other two dents were slightly above the secondary face of the tubesheet.

To identify tubes that have potentially high residual stress and therefore might be more susceptible to stress corrosion cracking, bobbin coil eddy current data were reviewed. As a result of this review, no low-row tubes (i.e., tubes in rows 1 through 8) were identified as being more susceptible to stress corrosion cracking. In the higher row tubes (i.e., tubes in rows 9 and

higher), 18 tubes were identified with a voltage offset of less than 2 volts between the eddy current data in the U-bend and the straight region. This lack of an offset in the eddy current data is indicative of potentially higher residual stresses in the straight span portion of the tube. This 2-volt criterion was revised in 2004 to a voltage offset less than two standard deviations of the mean (i.e., minus 2 sigma). There are 59 tubes that satisfy the minus 2 sigma criterion.

During RFO 20 in 2004, 100 percent of the tubes in each of the three steam generators were inspected full length with a bobbin coil, except for the U-bend region of the tubes in rows 1 and 2. In addition to these bobbin coil inspections, a rotating probe equipped with a plus-point coil was used to inspect the following in each of the three steam generators:

- 100 percent of the tubes from 7.62 cm (3 in.) above to 5.1 cm (2 in.) below the top of the tubesheet on the hot-leg side
- the U-bend region of 50 percent of the row 1 and row 2 tubes
- 50 percent of the dents in the hot-leg with bobbin voltage amplitudes greater than or equal to 5 volts
- 50 percent of the dents in the U-bend region with bobbin voltage amplitudes greater than or equal to 3 volts

In addition to these eddy current inspections, all tube plugs in each of the three steam generators were inspected visually.

As a result of these inspections, no tubes were plugged.

The only steam generator tube degradation mechanisms observed during RFO 20 were wear at the AVBs, wear at the tube supports, and wear attributed to loose parts.

Seventeen indications of wear were detected at the AVBs in 14 tubes in steam generator A. Thirty indications of wear were detected at the AVBs in 18 tubes in steam generator B, and eighty nine indications of wear were detected at the AVBs in 59 tubes in steam generator C. The maximum depth reported for the AVB wear indications was 33 percent throughwall.

Seven additional indications attributed to wear were also detected during RFO 20. Of these, three were attributed to wear against a tube support plate and four were attributed to wear from loose parts. Of the three tube support plate wear indications, two were newly detected during RFO 20 and one was detected in the prior inspection and allowed to remain in service. Three of the four indications attributed to wear from a loose part were near the top of the tubesheet. There were no possible loose part indications detected at these locations during the eddy current inspection and a FOSAR near these tubes did not find any loose parts. The fourth indication attributed to wear from a loose part was at the second tube support plate on the cold-leg side of the steam generator. This indication was attributed to a loose part because there was a possible loose part indication identified at this location during the eddy current inspection. This indication has remained in service for 14 years.

A FOSAR inspection was performed in all three steam generators. Small objects were identified in all three steam generators.

During RFO 21 in 2006, no steam generator tubes were inspected.

On November 1, 2006, the steam generator portion of the Turkey Point 3 technical specifications was revised to limit the extent of inspection in the tubesheet region. Specifically, the technical specifications were revised to exclude the portion of tube that is more than 43.2 cm (17 in.) below the top of the tubesheet on the hot-leg side from inspection (i.e., approximately the lowermost 10.2 cm (4 in.) of tube in the tubesheet on the hot-leg side was excluded from inspection, and hence any flaws that may exist in this region are permitted to remain in service). This revision was only applicable for RFO 22 and the subsequent operating cycles (ADAMS Accession No. ML062990193).

On April 27, 2007, Turkey Point 3 revised the steam generator portion of their technical specifications making them performance-based consistent with TSTF-449 (ADAMS Accession No. ML071080444).

During RFO 22 in 2007, 100 percent of the tubes in each of the three steam generators were inspected full length with a bobbin coil, except for the U-bend region of the tubes in rows 1 and 2. In addition to these bobbin coil inspections, a rotating probe equipped with a plus-point coil was used to inspect the following in each of the three steam generators:

- 100 percent of the tubes from 7.62 cm (3 in.) above to 43.2 cm (17 in.) below the top of the tubesheet on the hot-leg side
- all tubes that were not expanded into the tubesheet on the hot-leg side (one tube in steam generator A, two tubes in steam generator B, and five tubes in steam generator C) for the full length of the tubesheet
- 100 percent of the tubes in the peripheral high-flow regions (two outermost tubes exposed to the annulus, and the row 1 and row 2 tubes in columns 1 through 10 and columns 83 through 92) and the remaining row 1 and row 2 tubes (not in the high-flow region) from 7.62 cm (3 in.) above to 5.1 cm (2 in.) below the top of the tubesheet on the cold-leg side
- all tubes that were not expanded into the tubesheet on the cold-leg side (one tube in steam generator B – this tube is also one of the tubes that was not expanded on the hot-leg side) for the full length of the tubesheet
- the U-bend region of 50 percent of the row 1 and 2 tubes (which included all tubes not inspected during RFO 20)
- 50 percent of the freespan dents/dings in the hot-leg with bobbin voltage amplitudes greater than 5 volts (which included all such dents/dings not inspected during RFO 20)
- 50 percent of the dents/dings in the U-bend region (which included all dents/dings not inspected during RFO 20)
- 50 percent of the dents/dings at structures on the hot-leg (which included all such dents/dings not inspected during RFO 21)

In addition to these eddy current inspections, all tube plugs in each of the three steam generators were inspected visually. No degradation was identified during the inspection of the plugs, and all plugs were verified to be present and in the correct locations.

As a result of these inspections, one tube was plugged for an outside-diameter initiated volumetric indication about 15 cm (6 in.) below the top of the tubesheet on the hot-leg side of the steam generator. Because this indication is within the tubesheet and the tube-to-tubesheet crevice is closed, the licensee concluded this indication was not service-induced and most likely a result of steam generator manufacturing/installation.

The only steam generator tube degradation mechanisms observed during RFO 22 were (1) wear at the AVBs, (2) wear at the tube support plates, (3) wear at the flow distribution baffle, and (4) wear attributed to loose parts.

Twenty-one indications of wear were detected at the AVBs in 17 tubes in steam generator A. Thirty-one indications of wear were detected at the AVBs in 19 tubes in steam generator B, and 99 indications of wear were detected at the AVBs in 66 tubes in steam generator C. The maximum depth reported for the AVB wear indications was 35 percent throughwall.

In addition to the volumetric indications attributed to wear at the AVBs, 11 additional volumetric indications were also detected during RFO 22. Of these 11 indications, 5 were attributed to wear against a tube support plate (1 in steam generator A, 1 in steam generator B, and 3 in steam generator C), 3 were attributed to wear against the baffle plate (all in steam generator B), 2 were attributed to wear from a loose part (1 in steam generator A and 1 in steam generator B), and 1 was in the tubesheet region (this tube was plugged and in steam generator C). Both of the wear indications attributed to loose parts had been detected in previous outages.

Inspection and maintenance on the secondary side of the steam generators were performed during RFO 22. An upper bundle flush and sludge lancing was performed in each of the three steam generators. FOSAR was also performed in each of the three steam generators. In addition, visual inspections of the upper tube bundle region was performed in steam generator A before the upper bundle flushing, and visual inspections of the upper internals were also performed in steam generator B.

Sludge lancing removed about 35 pounds of sludge from each steam generator. FOSAR was performed after the sludge lancing and upper bundle flush. No tube degradation was observed during the visual inspections. In addition to known foreign objects that were left in the steam generators, seven new objects were identified during RFO 22. Four of these objects were removed. The remaining objects were evaluated for their effect on steam generator operation and will be tracked during future inspections.

The visual inspection of the upper tube bundle in steam generator A revealed a thin layer of deposits and all tube support flow holes were fully open. No abnormal conditions or degradation was observed. In steam generator B, the steam separation equipment, feedring, J-tubes, and J-tube bore holes were inspected visually. Ultrasonic inspections were also performed of the feedring and feedring distribution box. No abnormal conditions or degradation were observed.

During RFO 23 in 2009, no steam generator tubes were inspected.

On October 30, 2009, the steam generator portion of the Turkey Point 3 technical specifications was revised to limit the extent of inspection in the tubesheet region. Specifically, the technical specifications were revised to exclude the portion of tube that is more than 43.89 cm (17.28 in.) below the top of the tubesheet from inspection (i.e., approximately the lowermost 10.2 cm (4 in.)

of tube in the tubesheet was excluded from inspection, and hence any flaws that may exist in this region are permitted to remain in service). This revision was only applicable for RFO 24 and the next operating cycle (ADAMS Accession No. ML092990489).

There was no evidence of primary-to-secondary leakage during the cycle preceding RFO 24 (spring 2009 to fall 2010).

During RFO 24 in 2010 (referred to as TP3-25 RFO by the licensee), 100 percent of the tubes in each of the three steam generators were inspected full length with a bobbin coil, except for the U-bend region of the tubes in rows 1 and 2. In addition to these bobbin coil inspections, a rotating probe equipped with a plus-point coil was used to inspect the following in each of the three steam generators:

- 50 percent of the tubes from 7.62 cm (3 in.) above to 43.89 cm (17.28 in.) below the top of the tubesheet on the hot-leg side (includes 50 percent of the bulges and overexpansions in the tubesheet)
- the two outermost peripheral tubes (annulus and tube-lane) from 7.62 cm (3 in.) above to 5.1 cm (2 in.) below the top of the tubesheet on the cold-leg side
- the U-bend region of 50 percent of the tubes in rows 1 and 2
- 50 percent of the freespan dings in the hot-leg with bobbin voltage amplitudes greater than 5 volts
- 50 percent of the dings in the U-bend region
- 50 percent of the dents/dings at hot-leg structures.

As a result of these inspections, 14 tubes were plugged—1 for wear at an AVB, 2 for wear at a tube support, 2 for wear attributed to a loose part, and 9 because the tubes were not expanded into the tubesheet.

The only steam generator tube degradation mechanisms observed during RFO 24 were (1) wear at the AVBs, (2) wear at the tube support plates, (3) wear at the flow distribution baffle, and (4) wear attributed to loose parts.

Wear at the AVBs was identified at 22 locations in 17 tubes in steam generator A, at 24 locations in 19 tubes in steam generator B, and at 119 locations in 80 tubes in steam generator C (not including the 2 indications in 1 tube that was plugged). The maximum depth reported for the AVB wear indications was 37 percent throughwall.

For wear at the tube support plates (including the flow distribution baffle), two indications were detected in two tubes in steam generator A, six indications were detected in six tubes in steam generator B, and nine indications were detected in nine tubes in steam generator C (not including the two indications in two tubes that were plugged. The maximum depth reported for the tube support plate wear indications was 37 percent throughwall.

Three indications of wear in three tubes were attributed to loose parts. One of these indications (with an estimated depth of 8 percent) is in the freespan about 7.62 cm (3 in.) above the top of the tubesheet in steam generator A. No loose part or possible loose part indication has ever

been identified at this location, but the wear is attributed to a loose part. The other two indications of wear attributed to a loose part were identified in steam generator B on the top of the second cold-leg tube support. The location of the possible loose part was not accessible for visual inspection to confirm/retrieve the part. The possible loose part has been at this location since at least 1990, and the projected wear rate for these two wear indications is less than or equal to 1 percent throughwall per effective full power year. These latter two tubes were plugged.

Inspections and maintenance activities were performed on the secondary side of the steam generators during RFO 24. An upper bundle flush and sludge lancing were performed in each of the three steam generators resulting in 49, 70, and 66 pounds of sludge being removed from steam generators A, B, and C, respectively. Steam generator B was inspected visually before the upper bundle flush. These inspections included the U-bend region and the center flow slot regions of the tube supports. The inspections revealed very light deposit accumulation so no post-bundle flush inspections were performed.

After sludge lancing at the top of the tubesheet in each of the three steam generators, FOSAR was performed. During these inspections, three objects (e.g., weld slag) could not be removed and six objects were removed (e.g., wire, metallic pin). There was no tube wear associated with the loose part/possible loose part indications except for the two wear indications associated with the two tubes that were plugged (this loose part is not included in the three objects left in the steam generator since the tubes were plugged). Evaluations by the licensee indicated that the parts that could not be removed were acceptable to leave in the steam generators until the next scheduled inspection.

During RFO 24, one tube was deplugged, inspected, stabilized, and re-plugged. This tube was stabilized to mitigate the possibility of tube-to-tube contact for extended (60 years) operation.

On March 6, 2011, Turkey Point 3 was shut down in response to high-sodium concentrations (greater than 250 parts per billion) in the steam generators. The sodium intrusion was caused a leak in the main condenser.

During RFO 25 in 2012, no steam generator tubes were inspected.

On November 5, 2012, the steam generator portion of the Turkey Point 3 technical specifications was revised to limit the extent of inspection in the tubesheet region. Specifically, the technical specifications were revised to exclude the portion of tube that is more than 46 cm (18.11 in.) below the top of the tubesheet from inspection (i.e., approximately the lowermost 10.2 cm (4 in.) of tube in the tubesheet was excluded from inspection, and hence any flaws that may exist in this region are permitted to remain in service (ADAMS Accession No. ML12292A342)).

On November 6, 2012, Turkey Point 3 revised the steam generator portion of their technical specifications making them consistent with TSTF-510 (ADAMS Accession No. ML12297A240).

### 3.4.8 Turkey Point 4

Tables 3-52, 3-53, and 3-54 summarize the information discussed below for Turkey Point 4. Table 3-52 provides the number of full-length bobbin inspections and the number of tubes plugged and deplugged during each outage for each of the three steam generators. Table 3-53

lists the reasons why the tubes were plugged. Table 3-54 lists tubes plugged for reasons other than wear at the AVBs.

Turkey Point 4 has three Westinghouse model 44F steam generators. These steam generators were installed at the plant in 1983. The tube supports are numbered as shown in Figure 2-6. Minor denting occurred at the upper tube support plates during manufacturing of these steam generators. The denting affects no more than 341 intersections in each steam generator hot leg. In addition, overexpansion of the tubesheet joint occurred on a maximum of 300 tubes in each hot leg when the hydraulic expansion tool was set at a depth exceeding the thickness of the tubesheet. The tool made a slight bulge in the tube at the top of the tubesheet. This anomalous condition produces residual stresses in the affected locations, making them more susceptible to cracking than non-overexpanded areas. Based on accident analysis considerations, a maximum of 20 percent of the tubes in the three steam generators can be plugged.

During RFO 19 in 2002, no steam generator tubes were inspected; however, secondary-side inspections were performed in steam generator A to identify debris and damage. No reportable indications were identified.

During RFO 20 in 2003, 100 percent of the tubes in each of the three steam generators were inspected full length with a bobbin coil, except for the U-bend region of the tubes in rows 1 and 2. In addition to these bobbin coil inspections, a rotating probe equipped with a plus-point coil was used to inspect the following in each of the three steam generators:

- 100 percent of the tubes from 7.62 cm (3 in.) above to 5.1 cm (2 in.) below the top of the tubesheet on the hot-leg side
- the U-bend region of 30 percent of the row 1 and row 2 tubes
- a minimum of 30 percent of the dings in the hot-leg with bobbin voltage amplitudes greater than or equal to 5 volts
- a minimum of 30 percent of the dings in the hot-leg U-bend region with bobbin voltage amplitudes greater than or equal to 3 volts

As a result of these inspections, four tubes were plugged—one for wear attributed to a loose part, one for mechanical damage caused during loose part retrieval activities during the outage, and two tubes for pit-shaped wear indications.

The only steam generator tube degradation mechanisms observed during RFO 20 were (1) wear at the AVBs, (2) wear at the tube support plates, (3) wear at the flow distribution baffle, (4) wear attributed to loose parts, and (5) wear attributed to maintenance activities.

Wear at the AVBs was identified at 7 locations in 5 tubes in steam generator A, at 12 locations in 10 tubes in steam generator B, and at 11 locations in 10 tubes in steam generator C. The maximum depth reported for the AVB wear indications was 28 percent throughwall.

Two indications of wear at the tube support plates were detected in two tubes. The maximum depth reported for the tube support plate wear indications was 9 percent throughwall.

The wear indications were detected at the flow distribution baffle during RFO 20. These two indications were pit-shaped and were both at the lower edge of the baffle plate (which has circular holes). Similar pit-like wear indications have been reported in other steam generators, primarily Westinghouse steam generators with preheaters.

There was one indication of wear attributed to a loose part. This indication was at the flow distribution baffle.

The damage caused to the one tube during loose part retrieval activities was about 2 cm (0.8 in.) long (axially), 0.6 cm (0.24 in.) wide (circumferentially), and had a maximum depth of 27 percent throughwall.

Eleven new dents were identified during RFO 20: three in steam generator A, five in steam generator B, and three in steam generator C. Most of these dents are within 12.7 cm (5 in.) of the top (secondary face) of the tubesheet. Two of these dents were in the freespan region: one between the third and fourth hot-leg tube supports and one in the U-bend region.

Inspections on the secondary side of steam generator A were performed during RFO 20. A sample of the J-tubes and the feedring piping were inspected visually and ultrasonically, with no reportable indications identified. In addition, FOSAR was performed on the top of the tubesheet in the annulus and blowdown lane in all three steam generators.

During RFO 21 in 2005, no steam generator tubes were inspected; however, secondary-side inspections were performed in steam generator C to identify debris and damage. Visual inspections of the feedring J-nozzles were performed and ultrasonic thickness measurements of the tee were performed.

On November 1, 2006, the steam generator portion of the Turkey Point 4 technical specifications was revised to limit the extent of inspection in the tubesheet region. Specifically, the technical specifications were revised to exclude the portion of tube that is more than 43.2 cm (17 in.) below the top of the tubesheet on the hot-leg side from inspection (i.e., approximately the lowermost 10.2 cm (4 in.) of tube in the tubesheet on the hot-leg side was excluded from inspection, and hence any flaws that may exist in this region are permitted to remain in service). This revision was only applicable for RFO 22 and the subsequent operating cycles (ADAMS Accession No. ML062990193).

During RFO 22 in 2006, 100 percent of the tubes in each of the three steam generators were inspected full length with a bobbin coil, except for the U-bend region of the tubes in rows 1 and 2. In addition to these bobbin coil inspections, a rotating probe equipped with a plus-point coil was used to inspect the following in each of the three steam generators:

- 100 percent of the tubes from 7.62 cm (3 in.) above to 43.2 cm (17 in.) below the top of the tubesheet on the hot-leg side
- the U-bend region of 50 percent of the tubes in rows 1 and 2
- 50 percent of the dings in the hot-leg and U-bend region with bobbin voltage amplitudes greater than or equal to 5 volts
- 50 percent of the dents/dings at hot-leg structures with bobbin voltage amplitudes greater than or equal to 5 volts

As a result of these inspections, six tubes were plugged. All of these tubes were plugged for wear attributed to a loose part.

The only steam generator tube degradation mechanisms observed during RFO 22 were (1) wear at the AVBs, (2) wear at the tube support plates, (3) wear at the flow distribution baffle, and (4) wear attributed to loose parts.

Wear at the AVBs was identified at 7 locations in 5 tubes in steam generator A, at 13 locations in 10 tubes in steam generator B, and at 19 locations in 18 tubes in steam generator C. The maximum depth reported for the AVB wear indications was 27 percent throughwall.

One indication of wear at the tube support plates was detected in one tube in steam generator A, two indications were detected in two tubes in steam generator B, and one indication was detected in one tube in steam generator C. The maximum depth reported for the tube support plate wear indications was 16 percent throughwall.

One indication of wear at the flow distribution baffle was detected in one tube in steam generator B.

There were six tubes with wear attributed to a loose part. All of these tubes were in the same general region of the tube bundle, and the loose part was no longer present at the location. The indications in these tubes were in close proximity to the expansion transition region on the cold-leg side of the steam generator. The maximum depth reported was 51 percent throughwall. A historical review of prior outage eddy current data for the two largest indications indicated they were present in the prior inspection outage (2003) but were not identified. Of the six indications detected in the plugged tubes, only the largest indication (i.e., the 51 percent throughwall indication) was identified with the bobbin probe. Specifically, a multi-frequency mix (referred to as a turbomix) permitted identification of the indication. The remaining five indications were detected when a rotating probe was used to inspect the tubes surrounding the tube with the 51 percent throughwall indication.

Inspections and maintenance were performed on the secondary side of the steam generators during RFO 22. A high-volume bundle flush was performed in each of the three steam generators to rinse deposits from the upper bundle regions before lancing the sludge from the top of the tubesheet. After sludge lancing at the top of the tubesheet in each of the three steam generators, FOSAR was performed on the top of the tubesheet in the annulus and blowdown lane. During these inspections, three objects (two wires and one weld rod) were identified that could not be removed, and six objects were removed (Flexitallic gaskets and wire). Evaluations by the licensee indicated that the parts that could not be removed were acceptable to leave in the steam generators until the next scheduled inspection. After the high-volume bundle flush, a visual inspection of the upper tube bundle region including the tube supports, feedring, and moisture separation equipment was performed in steam generator B. Such inspections are performed in at least one steam generator on a rotating basis and have shown very low deposit accumulation and un-blocked tube support flow holes.

On April 27, 2007, Turkey Point 4 revised the steam generator portion of their technical specifications making them performance-based consistent with TSTF-449 (ADAMS Accession No. ML071080444).

During RFO 23 in 2008, no steam generator tubes were inspected.

On October 30, 2009, the steam generator portion of the Turkey Point 4 technical specifications was revised to limit the extent of inspection in the tubesheet region. Specifically, the technical specifications were revised to exclude the portion of tube that is more than 43.89 cm (17.28 in.) below the top of the tubesheet from inspection (i.e., approximately the lowermost 10.2 cm (4 in.) of tube in the tubesheet was excluded from inspection, and hence any flaws that may exist in this region are permitted to remain in service). This revision was only applicable for RFO 24 and the subsequent operating cycles (ADAMS Accession No. ML092990489).

There was no evidence of primary-to-secondary leakage during the cycle preceding RFO 24 (spring 2008 to fall 2009).

During RFO 24 in 2009, 100 percent of the tubes in each of the three steam generators were inspected full length with a bobbin coil, except for the U-bend region of the tubes in rows 1 and 2. In addition to these bobbin coil inspections, a rotating probe equipped with a plus-point coil was used to inspect the following in each of the three steam generators:

- 100 percent of the tubes from 7.62 cm (3 in.) above to 43.89 cm (17.28 in.) below the top of the tubesheet on the hot-leg side
- the two outermost peripheral tubes (annulus and tube-lane) from 7.62 cm (3 in.) above to 5.1 cm (2 in.) below the top of the tubesheet on the cold-leg side
- the U-bend region of 100 percent of the tubes in rows 1 and 2
- 100 percent of the dings in the hot-leg with bobbin voltage amplitudes greater than or equal to 5 volts
- 100 percent of the dings in the U-bend region
- 100 percent of the dents/dings at hot-leg structures

As a result of these inspections, 11 tubes were plugged—9 because they were not expanded in the tubesheet region, 1 because the bottom of the expansion transition on the hot-leg side of the steam generator was 2.72 cm (1.07 in.) below the top of the tubesheet, and 1 for wear at an AVB that was associated with a dent signal.

The only steam generator tube degradation mechanisms observed during RFO 24 were wear at the AVBs, wear at the tube support plates, and wear at the flow distribution baffle.

Wear at the AVBs was identified at 9 locations in 6 tubes in steam generator A, at 16 locations in 12 tubes in steam generator B, and at 26 locations in 24 tubes in steam generator C. The maximum depth reported for the AVB wear indications was 34 percent throughwall. Although no qualified sizing technique exists for wear at an AVB associated with a dent, the maximum depth of the indication was estimated as 34 percent throughwall.

One indication of wear at the tube support plates was detected in one tube in steam generator A, three indications were detected in three tubes in steam generator B, and one indication was detected in one tube in steam generator C. The maximum depth reported for the tube support plate wear indications was 18 percent throughwall.

Two indications of wear at the flow distribution baffle were detected in two tubes in steam generator A, and 3 indications were detected at the flow distribution baffle in 2 tubes in steam generator B.

The lowest bottom of expansion transition remaining in the steam generators is about 12.7 mm (0.5 in.) below the top of the tubesheet.

Inspections and maintenance were performed on the secondary side of the steam generators during RFO 24. A high-volume bundle flush and sludge lancing were performed in each of the three steam generators resulting in 26.5, 24.5, and 17.0 pounds of sludge being removed from steam generators A, B, and C, respectively. Visual inspections before and after the upper bundle flush (of the center flow slot regions of tube supports 3 through 6) in steam generator C indicated that the steam generators are relatively clean with no significant buildup of deposits, and that the tube support flow holes remain open.

After sludge lancing at the top of the tubesheet in each of the three steam generators, FOSAR was performed on the top of the tubesheet in the annulus and blowdown lane. During these inspections, seven objects (e.g., wires, weld rod) were identified that could not be removed and five objects were removed (Flexitallic gaskets, wire, and rod shaped objects). No tube wear was associated with the loose parts/possible loose part indications. Evaluations by the licensee indicated that the parts that could not be removed were acceptable to leave in the steam generators until the next scheduled inspection.

During RFO 25 in 2011, no steam generator tubes were inspected.

On November 5, 2012, the steam generator portion of the Turkey Point 4 technical specifications was revised to limit the extent of inspection in the tubesheet region. Specifically, the technical specifications were revised to exclude the portion of tube that is more than 46 cm (18.11 in.) below the top of the tubesheet from inspection (i.e., approximately the lowermost 10.2 cm (4 in.) of tube in the tubesheet was excluded from inspection, and hence any flaws that may exist in this region are permitted to remain in service (ADAMS Accession No. ML12292A342)).

On November 6, 2012, Turkey Point 4 revised the steam generator portion of their technical specifications making them consistent with TSTF-510 (ADAMS Accession No. ML12297A240).

There was no evidence of primary-to-secondary leakage during the cycle preceding RFO 26 (spring 2011 to fall 2012).

During RFO 26 (referred to as TP4-27 RFO by the licensee) in 2013, 100 percent of the tubes in each of the three steam generators were inspected full length with a bobbin coil, except for the U-bend region of the tubes in rows 1 and 2. In addition to these bobbin coil inspections, a rotating probe equipped with a plus-point coil was used to inspect the following in each of the three steam generators:

- 50 percent of the tubes from 7.62 cm (3 in.) above to 46 cm (18.11 in.) below the top of the tubesheet on the hot-leg side (includes 50 percent of the bulges and overexpansions in the tubesheet)

- the two outermost peripheral tubes (annulus and tube-lane) from 7.62 cm (3 in.) above to 5.1 cm (2 in.) below the top of the tubesheet on the cold-leg side

- the U-bend region of 50 percent of the tubes in rows 1 and 2
- 50 percent of the freespan dings in the hot-leg with bobbin voltage amplitudes greater than 5 volts, 50 percent of the dings in the U-bend region (regardless of their bobbin voltage amplitude)
- 50 percent of the dents/dings at hot-leg structures (regardless of their bobbin voltage amplitude)

As a result of these inspections, one tube was stabilized and plugged. This tube was plugged for wear attributed to a loose part at a tube support plate elevation.

The only steam generator tube degradation mechanisms observed during RFO 26 were (1) wear at the AVBs, (2) wear at the tube support plates, (3) wear at the flow distribution baffle, (4) wear attributed to loose parts, and (5) axially oriented primary water stress corrosion cracking near the tube ends.

Wear at the AVBs was identified at 16 locations in 11 tubes in steam generator A, at 20 locations in 15 tubes in steam generator B, and at 26 locations in 24 tubes in steam generator C. The maximum depth reported for the AVB wear indications was 28 percent throughwall.

One indication of wear at the tube support plates was detected in one tube in steam generator A, eight indications were detected in eight tubes in steam generator B, and one indication was detected in one tube in steam generator C. The maximum depth reported for the tube support plate wear indications was 16 percent throughwall.

Two indications of wear at the flow distribution baffle were detected in two tubes in steam generator A, five indications were detected in three tubes in steam generator B, and one indication was detected in one tube in steam generator C. The maximum depth reported for the flow distribution baffle wear indications was 11 percent throughwall.

One indication of wear attributed to a loose part was detected. This tube was plugged as discussed above.

Eleven indications indicative of primary water stress corrosion cracking were identified near the hot-leg tube end during RFO 26. All of 11 indications (in 11 tubes) were axially oriented and greater than 46 cm (18.11 in.) below the top of the tubesheet; therefore, the tubes were not required to be plugged. This was the first inspection of the lower portion of the tubesheet.

To identify tubes that have potentially high residual stress and therefore might be more susceptible to stress corrosion cracking, bobbin coil eddy current data were reviewed. As of RFO 26, 58 tubes in service had an offset that could indicate a tube that is more susceptible to stress corrosion cracking. Fifty-seven of the tubes are in the high rows (rows 9 and higher) and one tube is in the low rows (i.e., rows 1 through 8). The high-row tubes have an offset less than two standard deviations from the mean offset of all the data (i.e., minus 2 sigma). There are 14 “minus 2 sigma” tubes in steam generator A, 18 in steam generator B, and 25 in steam generator C. The tube with the offset in the low rows is in steam generator C. This tube has an eddy current offset that does not match that of other low-row tubes nor does it match the typical offset that was observed at Seabrook. This tube was classified as potentially having high residual stresses for tracking purposes. No low-row tubes have a voltage-offset condition similar to what was observed at Seabrook.

Inspections and maintenance were performed on the secondary side of the steam generators during RFO 26. An upper bundle flush and sludge lancing were performed in each of the three steam generators resulting in 27, 27, and 24 pounds of sludge being removed from steam generators A, B, and C, respectively. After sludge lancing at the top of the tubesheet in each of the three steam generators, FOSAR was performed. During these inspections, five objects (e.g., wires, weld rod) were identified that could not be removed and eight objects were removed (e.g., wire, weld slag, and rod shaped objects). No tube wear was associated with the loose parts/possible loose part indications except for the one wear indication associated with the tube that was plugged. Evaluations by the licensee indicated that the parts that could not be removed were acceptable to leave in the steam generators until the next scheduled inspection.

## Table 3-1: Braidwood 2: Summary of Bobbin Inspections and Tube Plugging

| Outage | Completion Date | Cumul. EFPY | SG A | | | SG B | | | SG C | | | SG D | | | Total Plug | Total DePl | Cumul. Plugged | Percent Plugged | Notes |
|---|---|---|---|---|---|---|---|---|---|---|---|---|---|---|---|---|---|---|---|
| | | | Insp. | Plug | DePl | Insp. | Plug | DePl | Insp. | Plug | DePl | Insp. | Plug | DePl | | | | | |
| Pre-op | | | | 1 | | | 2 | | | 0 | | | 3 | | 6 | 0 | 6 | 0.03 | |
| RFO 1 | 04/26/1990 | 1.18 | 4569 | 0 | | 4568 | 0 | | 4570 | 2 | | 4567 | 0 | | 2 | 0 | 8 | 0.04 | |
| RFO 2 | 11/11/1991 | 2.3 | 2285 | 4 | | 2284 | 0 | 1 | 2284 | 7 | | 2284 | 0 | | 11 | 1 | 18 | 0.10 | 1 |
| RFO 3 | 04/13/1993 | 3.42 | 2440 | 6 | | 2374 | 1 | | 2370 | 8 | | 2430 | 1 | | 16 | 0 | 34 | 0.19 | 1 |
| RFO 4 | 10/25/1994 | 4.58 | | | | 4568 | 0 | | 4553 | 6 | | | | | 6 | 0 | 40 | 0.22 | |
| RFO 5 | 04/12/1996 | 5.85 | 4559 | 17 | | 4568 | 2 | | 4547 | 4 | | 4566 | 12 | | 35 | 0 | 75 | 0.41 | |
| RFO 6 | 10/20/1997 | 7.19 | 4542 | 7 | | 4566 | 3 | | 4543 | 12 | | 4554 | 6 | | 28 | 0 | 103 | 0.56 | |
| RFO 7 | 05/05/1999 | 8.57 | 4535 | 0 | | 4563 | 1 | | 4531 | 4 | | 4548 | 1 | | 6 | 0 | 109 | 0.60 | |
| RFO 8 | 10/28/2000 | 9.97 | 4535 | 8 | | 4562 | 1 | | 4527 | 1 | | 4547 | 1 | | 11 | 0 | 120 | 0.66 | |
| RFO 9 | 04/25/2002 | 11.33 | 4527 | 2 | | | | | | | | | | | 2 | 0 | 122 | 0.67 | |
| RFO 10 | 11/12/2003 | 12.78 | 4525 | 8 | | 4561 | 39 | | 4526 | 10 | | 4546 | 1 | | 58 | 0 | 180 | 0.98 | |
| RFO 11 | 04/26/2005 | 14.16 | 4517 | 4 | | 4522 | 0 | | 4516 | 2 | | 4545 | 0 | | 6 | 0 | 186 | 1.02 | |
| RFO 12 | 10/25/2006 | 15.6 | 4513 | 9 | | 4522 | 1 | | 4514 | 4 | | 4545 | 0 | | 14 | 0 | 200 | 1.09 | |
| RFO 13 | 05/05/2008 | 17.05 | 4504 | 17 | | 4521 | 0 | | 4510 | 5 | | 4545 | 1 | | 23 | 0 | 223 | 1.22 | 2 |
| RFO 14 | 10/31/2009 | 18.42 | 4487 | 0 | | 4521 | 5 | | 4505 | 1 | | 4544 | 0 | | 6 | 0 | 229 | 1.25 | 2 |
| RFO 15 | 05/11/2011 | 19.856 | 4487 | 12 | | 4516 | 7 | | 4504 | 2 | | 4544 | 9 | | 30 | 0 | 259 | 1.42 | 2 |
| RFO 16 | 11/08/2012 | 21.268 | 4475 | 5 | | 4509 | 2 | | 4502 | 2 | | 4535 | 2 | | 11 | 0 | 270 | 1.48 | 2 |
| RFO 17 | 05/22/2014 | 22.72 | 4470 | 0 | | 4507 | 3 | | 4500 | 2 | | 4533 | 3 | | 8 | 0 | 278 | 1.52 | 3 |
| | | | | | | | | | | | | | | | | | | | |
| | | | | | | | | | | | | | | | | | | | |
| | | **Totals:** | | 100 | 0 | | 67 | 1 | | 72 | 0 | | 40 | 0 | 279 | 1 | | | |

**Plant Data**
Model: D5
T-hot (approximate): 611 °F
Tubes per steam generator: 4570
Number of steam generators: 4

**Acronyms**
Pre-op = prior to operation
Cumul. = cumulative
Insp. = number of tubes inspected
Plug = number of tubes plugged
DePl = number of tubes deplugged
RFO = refueling outage

**Notes**
1. All tubes in each steam generator were examined through the U-bend.
2. The U-bend region of the row 1 and 2 tubes was not inspected with a bobbin coil. The U-bend region of 25% of the row 1 and 2 tubes was inspected with a rotating probe.
3. The U-bend region of the row 1 and 2 tubes was not inspected with a bobbin coil. The U-bend region of 50% of the row 1 and 2 tubes was inspected with a rotating probe.

# Table 3-2: Braidwood 2: Causes of Tube Plugging

| Cause of Tube Plugging/Outage | Year | Pre-Op | 1990 RFO 1 | 1991 RFO 2 | 1993 RFO 3 | 1994 RFO 4 | 1996 RFO 5 | 1997 RFO 6 | 1999 RFO 7 | 2000 RFO 8 | 2002 RFO 9 | 2003 RFO 10 | 2005 RFO 11 | 2006 RFO 12 | 2008 RFO 13 | 2009 RFO 14 | 2011 RFO 15 | 2012 RFO 16 | 2014 RFO 17 | | Totals | Totals |
|---|---|---|---|---|---|---|---|---|---|---|---|---|---|---|---|---|---|---|---|---|---|---|
| Wear | AVB | | 2 | 11 | 16 | 6 | 29 | 12 | 6 | 10 | 2 | 10 | 5 | 10 | 6 | 1 | 5 | 2 | 3 | | 136 | 140 |
| | Preheater TSP (D5) | | | | | | | | | | | | | 2 | | | 2 | | | | 4 | |
| | TSP | | | | | | | | | | | | | | | | | | | | 0 | |
| Loose Parts | Confirmed | | | | | | 2 | 1 | | | | 42 | | | | | | | | | 45 | 85 |
| | Not confirmed, periphery | | | | | | | | | | | | | | 1 | 4 | 6 | 2 | | | 13 | |
| | Not confirmed, not periphery | | | | | | | | | | | | 1 | 2 | | 1 | 16 | 4 | 3 | | 27 | |
| Obstruction Restriction | From PSI, no progression | | | | | | | | | | | | | | | | | | | | 0 | 0 |
| | Service-induced | | | | | | | | | | | | | | | | | | | | 0 | |
| Manufacturing Flaws | Preservice | 6 | | -1 | | | | | | | | | | | | | | | | | 5 | 25 |
| | Other | | | | | | | 15 | | | | 3 | | | | | | 2 | | | 20 | |
| Inspection Issues | Probe lodged | | | | | | | | | | | | | | | | | | | | 0 | 3 |
| | Data quality | | | | | | | | | | | | | | | | | | | | 0 | |
| | Dent/geometry | | | | | | | | | | | | | | | | | | | | 0 | |
| | Permeability | | | | | | | | | 1 | | | | | | | | | 2 | | 3 | |
| | Not inspected | | | | | | | | | | | | | | | | | | | | 0 | |
| Other | Top of tubesheet | | | | | | 1 | | | | | | | | | | | | | | 1 | 4 |
| | Freespan | | | | | | 1 | | | | | | | | | | | | | | 1 | |
| | TSP | | | | | | 2 | | | | | | | | | | | | | | 2 | |
| | Other/not reported | | | | | | | | | | | | | | | | | | | | 0 | |
| SCC | ID | | | | | | | | | | | | | | 16 | | | | | | 16 | 21 |
| | OD | | | | | | | | | | | 3 | | | | | 1 | 1 | | | 5 | |
| | TOTALS | 6 | 2 | 10 | 16 | 6 | 35 | 28 | 6 | 11 | 2 | 58 | 6 | 14 | 23 | 6 | 30 | 11 | 8 | 0 | 278 | 278 |
| Notes: | | | | 1 | | | | 2 | | | | 3 | | | 4 | | 5 | 6 | | | | |

**Notes**

1. One tube deplugged during RFO 2.
2. Fifteen tubes plugged with circumferential indications at hot-leg top of tubesheet reclassified as manufacturing anomalies based on tube pulls from Byron 2. All were stabilized.
3. 3 low row tubes were preventatively plugged due to potentially high residual stress. The 3 outside diameter stress corrosion cracking indications were axially oriented and located at tube support plate elevations in high row tubes.
4. The primary water stress corrosion cracking indications were near the tube end (bottom 1-inch of tubing) and exceeded the iARC acceptance criteria.
5. One tube was plugged for 3 indications of axial outside diameter stress corrosion cracking at the hot-leg tube support plate elevations (nonoptimal tube processing).
6. Two tubes were plugged due to non-optimal tube processing. One tube was plugged for 3 indications of axial ODSCC (2 at hot-leg tube support plates, and 1 in the freespan).

## Table 3-3: Braidwood 2: Tubes Plugged for Indications Other Than AVB Wear

| STEAM GENERATOR A | | | | |
|---|---|---|---|---|
| Tube | Location | RFO # | Characterization | Stabilized |
| 1-22 | TEH+0.06 | 13 | Primary water stress corrosion cracking (PWSCC) (SCI) – near tube end | N |
| 1-23 | TEH+0.11 | 13 | PWSCC (single circumferential indication (SCI)) – near tube end | N |
| 1-26 | TEH+0.09 | 13 | PWSCC (multiple circumferential indication (MCI)) – near tube end | N |
| 1-28 | TEH+0.00 | 13 | PWSCC (SCI) – near tube end | N |
| 1-44 | TEH+0.00 | 13 | PWSCC (SCI) – near tube end | N |
| 1-45 | TEH+0.00 | 13 | PWSCC (MCI) – near tube end | N |
| 1-46 | TEH+0.00 | 13 | PWSCC (MCI) – near tube end | N |
| 1-47 | TEH+0.15 | 13 | PWSCC (SCI) – near tube end | N |
| 1-74 | TEH+0.07 | 13 | PWSCC (MCI) – near tube end | N |
| 1-75 | TEH+0.03 | 13 | PWSCC (SCI) – near tube end | N |
| 1-79 | TEH+0.06 | 13 | PWSCC (SCI) – near tube end | N |
| 1-84 | TEH+0.10 | 13 | PWSCC (MCI) – near tube end | N |
| 1-87 | TEH+0.09 | 13 | PWSCC (MCI) – near tube end | N |
| 1-88 | TEH+0.11 | 13 | PWSCC (SCI) – near tube end | N |
| 1-89 | TEH+0.16 | 13 | PWSCC (MCI) – near tube end | N |
| 2-23 | | 10 | Preventative – nonoptimal tube processing | N |
| 2-96 | | 10 | Preventative – nonoptimal tube processing | N |
| 5-67 | 7H-0.03 | 16 | PLP – 18% wall thinning (not periphery) | Y |
| 8-86 | 7H-0.74 | 15 | PLP – 10% wall thinning (not periphery) | Y |
| 10-50 | 7H | 15 | PLP – no wear (not periphery) | Y |
| 10-51 | 7H-0.96 | 15 | PLP – 11% wall thinning (not periphery) | Y |
| 10-79 | TEH+0.02 | 13 | PWSCC (SCI) – near tube end | N |
| 11-50 | 7H-0.67 | 15 | PLP – 16% wall thinning (not periphery) | Y |
| 11-51 | 7H-1.01 | 15 | PLP – 31% wall thinning (not periphery) | Y |
| 12-70 | 5H-0.77 | 12 | PLP - 16% wall thinning (not periphery) | Y |
| 13-18 | | 16 | Nonoptimal tube processing | |
| 13-108 | 5H-0.72 | 16 | PLP – 16% wall thinning (not periphery) | Y |
| 25-42 | 3H+0.13 | 10 | Outside diameter stress corrosion cracking (ODSCC) (Axial) – nonoptimal tube processing | N |
| 30-84 | 9H+0.82 | 15 | PLP – 39% wall thinning (not periphery) | Y |
| 30-85 | 9H | 15 | PLP – no wear (not periphery) | Y |
| 31-53 | 1H | 5 | Volumetric | |
| 31-84 | 9H | 15 | PLP – no wear (not periphery) | Y |
| 31-85 | 9H | 15 | PLP – no wear (not periphery) | Y |
| 43-22 | 2C+1.01 | 10 | Confirmed loose part (CLP) - 38% wall thinning | Y |
| 43-23 | 2C+1.05 | 10 | PLP | Y |
| 44-23 | 2C+0.87 | 10 | PLP | Y |

## Table 3-3: Braidwood 2: Tubes Plugged for Indications Other Than AVB Wear (cont'd)

| STEAM GENERATOR B | | | | |
|---|---|---|---|---|
| Tube | Location | RFO # | Characterization | Stabilized |
| 1-45 | U-bend | 8 | Permeability | |
| 3-30 | 7H-0.75 | 16 | PLP – 17% wall thinning (periphery) | Y |
| 6-8 | 5H-0.8 | 15 | PLP – 21% wall thinning (not periphery) | Y |
| 7-22 | 7H-0.64 | 15 | PLP – 20% wall thinning (not periphery) | Y |
| 8-39 | 7H-0.72 | 16 | PLP – 39% wall thinning (not periphery) | Y |
| 13-38 | 7H-0.7 | 14 | PLP – 18% wall thinning (not periphery) | Y |
| 15-7 | 7H-0.7 | 15 | PLP – 16% wall thinning (periphery) | Y |
| 19-67 | 5H-0.78 | 14 | PLP – 19% wall thinning (periphery) | Y |
| 21-65 | 5H-0.63 | 14 | PLP – 34% wall thinning (periphery) | Y |
| 21-79 | 2C | 10 | CLP - Weld slag (not periphery) | Y |
| 21-80 | 2C | 10 | CLP - Weld slag (not periphery) | Y |
| 22-79 | 2C | 10 | CLP - Weld slag (not periphery) | Y |
| 22-80 | 2C | 10 | CLP - Weld slag (not periphery) | Y |
| 24-68 | 5H-0.79 | 15 | PLP – 24% wall thinning (periphery) | Y |
| 29-95 | 5H-0.74 | 15 | PLP – 22% wall thinning (not periphery) | Y |
| 30-56 | 7H-0.74 | 14 | PLP – 15% wall thinning (periphery) | Y |
| 32-56 | 5H-0.7 | 15 | PLP – 15% wall thinning (periphery) | Y |
| 43-22 | 2C | 10 | CLP (backing bar) or Preventative (tube near backing bar) | Y |
| 43-23 | 2C | 10 | CLP (backing bar) or Preventative (tube near backing bar) | Y |
| 43-92 | 2C | 10 | CLP (backing bar) or Preventative (tube near backing bar) | Y |
| 43-93 | 2C | 10 | CLP (backing bar) or Preventative (tube near backing bar) | Y |
| 44-23 | 2C | 10 | CLP (backing bar) or Preventative (tube near backing bar) | Y |
| 44-24 | 2C | 10 | CLP (backing bar) or Preventative (tube near backing bar) | Y |
| 44-88 | 2C | 10 | CLP (backing bar) or Preventative (tube near backing bar) | Y |
| 44-89 | 2C | 10 | CLP (backing bar) or Preventative (tube near backing bar) | Y |
| 44-90 | 2C | 10 | CLP (backing bar) or Preventative (tube near backing bar) | Y |
| 44-91 | 2C | 10 | CLP (backing bar) or Preventative (tube near backing bar) | Y |
| 44-92 | 2C | 10 | CLP (backing bar) or Preventative (tube near backing bar) | Y |
| 45-24 | 2C | 10 | CLP (backing bar) or Preventative (tube near backing bar) | Y |
| 45-25 | 2C | 10 | CLP (backing bar) or Preventative (tube near backing bar) | Y |
| 45-26 | 2C | 10 | CLP (backing bar) or Preventative (tube near backing bar) | Y |
| 45-88 | 2C | 10 | CLP (backing bar) or Preventative (tube near backing bar) | Y |
| 45-90 | 2C | 10 | CLP (backing bar) or Preventative (tube near backing bar) | Y |
| 45-91 | 2C+1.59 | 10 | CLP - 5% wall thinning (backing bar) | Y |
| 46-26 | 2C | 10 | CLP (backing bar) or Preventative (tube near backing bar) | Y |
| 46-27 | 2C | 10 | CLP (backing bar) or Preventative (tube near backing bar) | Y |
| 46-88 | 2C | 10 | CLP (backing bar) or Preventative (tube near backing bar) | Y |

## Table 3-3: Braidwood 2: Tubes Plugged for Indications Other Than AVB Wear (cont'd)

| STEAM GENERATOR B | | | | |
|---|---|---|---|---|
| Tube | Location | RFO # | Characterization | Stabilized |
| 46-89 | 2C | 10 | CLP (backing bar) or Preventative (tube near backing bar) | Y |
| 47-27 | 2C+0.98<br>2C+1.25 | 10 | CLP - 28% and 21% wall thinning (backing bar) | Y |
| 47-28 | 2C | 10 | CLP (backing bar) or Preventative (tube near backing bar) | Y |
| 47-29 | 2C | 10 | CLP (backing bar) or Preventative (tube near backing bar) | Y |
| 47-30 | 2C | 10 | CLP (backing bar) or Preventative (tube near backing bar) | Y |
| 47-86 | 2C | 10 | CLP (backing bar) or Preventative (tube near backing bar) | Y |
| 47-87 | 2C | 10 | CLP (backing bar) or Preventative (tube near backing bar) | Y |
| 47-88 | 2C | 10 | CLP (backing bar) or Preventative (tube near backing bar) | Y |
| 48-29 | 2C | 6 | Volumetric (reclassified as CLP - 39% wall thinning (backing bar) in RFO 10) | |
| 48-30 | 2C | 10 | CLP (backing bar) or Preventative (tube near backing bar) | Y |
| 48-31 | 2C | 10 | CLP (backing bar) or Preventative (tube near backing bar) | Y |
| 48-84 | 2C | 10 | CLP (backing bar) or Preventative (tube near backing bar) | Y |
| 48-85 | 2C | 10 | CLP (backing bar) or Preventative (tube near backing bar) | Y |
| 48-86 | 2C | 10 | CLP (backing bar) or Preventative (tube near backing bar) | Y |
| 49-31 | 2C | 10 | CLP (backing bar) or Preventative (tube near backing bar) | Y |
| 49-61 | 7C-0.19 | 12 | Preheater wear - 44% wall thinning | Y |
| 49-84 | 2C | 10 | CLP (backing bar) or Preventative (tube near backing bar) | Y |

## Table 3-3: Braidwood 2: Tubes Plugged for Indications Other Than AVB Wear (cont'd)

| STEAM GENERATOR C | | | | |
|---|---|---|---|---|
| Tube | Location | RFO # | Characterization | Stabilized |
| 3-85 | 5C+2.98 | 13 | PLP – 11% wall thinning (periphery) | Y |
| 6-68 | | 10 | Preventative – nonoptimal tube processing | N |
| 8-18 | 7H-0.81 | 12 | PLP - 22% wall thinning (not periphery) | Y |
| 10-3 | 8H-0.98 | 14 | PLP – 20% wall thinning (periphery) | Y |
| 21-50 | 3H+0.21<br>5H +0.36 | 10 | ODSCC (Axial) – nonoptimal tube processing | N |
| 30-28 | | 16 | Nonoptimal tube processing | |
| 35-44 | 8H-0.76 | 11 | PLP - 24% wall thinning (not periphery) | Y |
| 38-20 | 7H+0.02 | 10 | ODSCC (Axial) – nonoptimal tube processing | N |
| 44-47 | 3H+0.3<br>5H-0.09<br>5H-1.88 | 16 | ODSCC (Axial) - at tube support plate (TSP) and in freespan (FS) (nonoptimal tube processing) | |
| 49-63 | 7C-0.22 | 12 | Preheater wear - 46% wall thinning | Y |
| 49-65 | 7C-0.03 | 15 | Preheater wear – 41% wall thinning | Y |

| STEAM GENERATOR D | | | | |
|---|---|---|---|---|
| Tube | Location | RFO # | Characterization | Stabilized |
| 1-11 | U-bend | 5 | Single axial indication | |
| 2-35 | 3H-0.05<br>7H+0.33<br>9H+0.17 | 15 | ODSCC (Axial) - at TSPs (nonoptimal tube processing) | |
| 7-61 | 8H-0.83 | 15 | PLP - 40% wall thinning (not periphery) | Y |
| 13-20 | 7H-0.65 | 16 | PLP - 22% wall thinning (not periphery) | Y |
| 13-76 | 5H-0.64 | 15 | PLP - 38% wall thinning (not periphery) | Y |
| 17-72 | 9H-0.02 | 15 | PLP - 20% wall thinning (not periphery) | Y |
| 21-110 | 4C+6.57 | 16 | PLP - 22% wall thinning (periphery) | Y |
| 30-48 | 1H | 5 | Volumetric | |
| 36-60 | TSH | 5 | Volumetric | |
| 43-72 | 8H | 5 | CLP (part could not be retrieved) | |
| 43-73 | 8H | 5 | CLP (part could not be retrieved) | |
| 43-86 | 7H-0.7 | 15 | PLP - 21% wall thinning (periphery) | Y |
| 44-73 | 8H+0.57 | 15 | PLP - 23% wall thinning (not periphery) | Y |
| 47-74 | 7H-0.61 | 15 | PLP - 16% wall thinning (periphery) | Y |
| 47-75 | 7H-0.51 | 15 | PLP - 28% wall thinning (periphery) | Y |
| 49-63 | 7C+0.14 | 15 | Preheater wear – 38% wall thinning | N |

## Table 3-4: Byron 2: Summary of Bobbin Inspections and Tube Plugging

| Outage | Completion Date | Cumul. EFPY | SG A | | | SG B | | | SG C | | | SG D | | | Total Plug | Total DePl | Cumul. Plugged | Percent Plugged | Notes |
|---|---|---|---|---|---|---|---|---|---|---|---|---|---|---|---|---|---|---|---|
| | | | Insp. | Plug | DePl | Insp. | Plug | DePl | Insp. | Plug | DePl | Insp. | Plug | DePl | | | | | |
| Pre-op | | | | 4 | | | 2 | | | 4 | | | 1 | | 11 | 0 | 11 | 0.06 | |
| RFO 1 | 01/01/1989 | 1.192 | 2278 | 2 | | 2277 | 6 | | 2279 | 3 | | 2284 | 0 | | 11 | 0 | 22 | 0.12 | 1 |
| RFO 2 | 09/01/1990 | 2.354 | 2270 | 1 | | 2268 | 17 | | 2272 | 1 | | 2273 | 2 | | 21 | 0 | 43 | 0.24 | 1 |
| RFO 3 | 03/01/1992 | 3.484 | 2252 | 9 | | 2215 | 9 | | 2235 | 5 | | 2223 | 6 | | 29 | 0 | 72 | 0.39 | 1 |
| RFO 4 | 10/02/1993 | 4.674 | 2259 | 6 | | 2239 | 23 | | 2260 | 7 | | 2264 | 0 | | 36 | 0 | 108 | 0.59 | 1 |
| RFO 5 | 03/01/1995 | 5.902 | 2398 | 9 | | 2386 | 8 | | 2456 | 7 | | 2448 | 5 | | 29 | 0 | 137 | 0.75 | 1 |
| RFO 6 | 09/01/1996 | 7.217 | 4539 | 11 | | 4505 | 10 | | 4543 | 6 | | 4556 | 3 | | 30 | 0 | 167 | 0.91 | 2 |
| RFO 7 | 05/05/1998 | 8.629 | 4528 | 7 | | 4495 | 26 | | 4537 | 5 | | 4553 | 0 | | 38 | 0 | 205 | 1.12 | |
| RFO 8 | 11/04/1999 | 10.038 | 4521 | 1 | | 4469 | 8 | | 4532 | 3 | | 4553 | 2 | | 14 | 0 | 219 | 1.20 | |
| RFO 9 | 04/13/2001 | 11.426 | | | | 4461 | 4 | | | | | | | | 4 | 0 | 223 | 1.22 | |
| Mid-cycle | 06/25/2002 | 12.583 | | | | | | | 11 | 3 | | | | | 3 | 0 | 226 | 1.24 | 3 |
| RFO 10 | 09/25/2002 | 12.823 | 4520 | 2 | | 4457 | 0 | | 4526 | 9 | | 4551 | 3 | | 14 | 0 | 240 | 1.31 | |
| RFO 11 | 04/02/2004 | 14.285 | 4518 | 92 | | 4457 | 0 | | 4517 | 0 | | 4548 | 0 | | 92 | 0 | 332 | 1.82 | |
| RFO 12 | 10/05/2005 | 15.738 | 4426 | 0 | | 4457 | 10 | | 4517 | 4 | | 4548 | 3 | | 17 | 0 | 349 | 1.91 | |
| RFO 13 | 04/13/2007 | 17.191 | 4426 | 2 | | 4447 | 4 | | 4513 | 11 | | 4545 | 0 | | 17 | 0 | 366 | 2.00 | 4 |
| RFO 14 | 10/16/2008 | 18.578 | 4424 | 2 | | 4443 | 5 | | 4502 | 3 | | 4545 | 3 | | 13 | 0 | 379 | 2.07 | 4 |
| RFO 15 | 05/07/2010 | 20.052 | 4422 | 0 | | 4438 | 1 | | 4499 | 0 | | 4542 | 0 | | 1 | 0 | 380 | 2.08 | 4 |
| RFO 16 | 10/09/2011 | 21.397 | 4422 | 8 | | 4437 | 6 | | 4499 | 3 | | 4542 | 11 | | 28 | 0 | 408 | 2.23 | 4 |
| RFO 17 | 04/29/2013 | | | | | | | | | | | | | | 0 | 0 | 408 | 2.23 | 5 |
| | | | | | | | | | | | | | | | | | | | |
| | | | | | | | | | | | | | | | | | | | |
| | | **Totals:** | | 156 | 0 | | 139 | 0 | | 74 | 0 | | 39 | 0 | 408 | 0 | | | |

**Plant Data**
Model: D5
T-hot (approximate): 611 °F
Tubes per steam generator: 4570
Number of steam generators: 4

**Acronyms**
Pre-op = prior to operation
Cumul. = cumulative
Insp. = number of tubes inspected
Plug = number of tubes plugged
DePl = number of tubes deplugged
RFO = refueling outage

**Notes**
1. All tubes in each steam generator were examined through the U-bend.
2. Forced outage due to leakage.
3. Only 1 tube was inspected full length. The other 10 tubes were only partially inspected (mainly in the preheater region) with either a bobbin and/or a rotating probe.
4. The U-bend region of the row 1 and 2 tubes were not inspected with a bobbin probe. The U-bend region of 25% of the row 1 and 2 tubes were inspected with a rotating probe.
5. No steam generator tube inspections were performed.

# Table 3-5: Byron 2: Causes of Tube Plugging

| | Year | | 1989 | 1990 | 1992 | 1993 | 1995 | 1996 | 1998 | 1999 | 2001 | 2002 | 2002 | 2004 | 2005 | 2007 | 2008 | 2010 | 2011 | 2013 | | | |
|---|---|---|---|---|---|---|---|---|---|---|---|---|---|---|---|---|---|---|---|---|---|---|---|
| Cause of Tube Plugging/Outage | | Pre-Op | RFO 1 | RFO 2 | RFO 3 | RFO 4 | RFO 5 | RFO 6 | RFO 7 | RFO 8 | RFO 9 | Mid-cycle | RFO 10 | RFO 11 | RFO 12 | RFO 13 | RFO 14 | RFO 15 | RFO 16 | RFO 17 | | Totals | Totals |
| Wear | AVB | | 2 | 19 | 25 | 33 | 21 | 19 | 1 | 9 | | | 2 | 1 | 1 | 3 | 1 | | 1 | | | 138 | 156 |
| | Preheater TSP (D5) | | | | | | | | | 1 | | | 1 | | 6 | | 3 | | 7 | | | 18 | |
| | TSP | | | | | | | | | | | | | | | | | | | | | 0 | |
| Loose Parts | Confirmed | | 4 | | | | 1 | 4 | 3 | | 1 | 3 | 11 | 91 | | | 3 | | 1 | | | 122 | 182 |
| | Not confirmed, periphery | | 1 | 1 | | 1 | 7 | | 1 | 3 | 2 | | | | 7 | 13 | 4 | | 9 | | | 49 | |
| | Not confirmed, not periphery | | | | | | | | | | | | | | | | 1 | 1 | 9 | | | 11 | |
| Obstruction Restriction | From PSI, no progression | | | | | | | | | | | | | | | | | | | | | 0 | 0 |
| | Service-induced | | | | | | | | | | | | | | | | | | | | | 0 | |
| Manufacturing Flaws | Preservice | 11 | | | | | | | | | | | | | | | | | | | | 11 | 46 |
| | Other | | | | | | | | 29 | | | | | | 3 | 1 | 1 | | 1 | | | 35 | |
| Inspection Issues | Probe lodged | | | | | | | | | | | | | | | | | | | | | 0 | 4 |
| | Data quality | | 1 | | | | | | | | | | | | | | | | | | | 1 | |
| | Dent/geometry | | 1 | | | | | 1 | 1 | | | | | | | | | | | | | 3 | |
| | Permeability | | | | | | | | | | | | | | | | | | | | | 0 | |
| | Not inspected | | | | | | | | | | | | | | | | | | | | | 0 | |
| Other | Top of tubesheet | | 2 | | | | | | | | | | | | | | | | | | | 2 | 20 |
| | Freespan | | | 1 | 3 | | | 4 | | | 1 | | | | | | | | | | | 9 | |
| | TSP | | | | 1 | 2 | | 2 | 3 | 1 | | | | | | | | | | | | 9 | |
| | Other/not reported | | | | | | | | | | | | | | | | | | | | | 0 | |
| SCC | ID | | | | | | | | | | | | | | | | | | | | | 0 | 0 |
| | OD | | | | | | | | | | | | | | | | | | | | | 0 | |
| | TOTALS | 11 | 11 | 21 | 29 | 36 | 29 | 30 | 38 | 14 | 4 | 3 | 14 | 92 | 17 | 17 | 13 | 1 | 28 | 0 | 0 | 408 | 408 |
| Notes: | | | 1,2,3 | | | 4 | 5 | 6 | 7 | 8 | 9 | | | 10 | 11 | 12 | 13 | | 14 | | | | |

**Notes**

1. Data quality: Signal-to-noise indication indicative of SCC in U-bend of row 1 tube.
2. Dent/Geometry: Large dent in U-bend of row 1 tube from PSI.
3. Loose Parts: Loose part in B at TSH in R49C55 and R49C56 was confirmed (see RFO 5 report), Part in C at 8H in R49C54 and R49C55 confirmed during RFO 5. Suspect part in C at 5H in R38C56 (see RFO 5 report).
4. Loose Part: Loose part in C at 5H R39C56, stabilized in RFO 5.
5. Loose Parts: Confirmed presence with magnet in B at R12C4, R12C5, R13C4, R13C5, R14C5. Suspect part in C at 5H in R40C56 and R41C56. All 7 plugged.
6. Leaker outage. Stabilized A-R16C110 in CL.
7. Three tubes pulled with circumferential indications at top of tubesheet indicated 29 circumferential indications were manufacturing related indications rather than service-induced degradation.. All 29 were stabilized.
8. Three tubes with PLPs were stabilized: B-R15C5, R15C6, R14C6. Stabilized tube with pre-heater wear B-R49C51.
9. Stabilized tubes with PLPs in B-R14C7 and B-R15C7. Plugged tube with confirmed loose part since part was removed in B-R20C56.
10. Ninety one tubes were stabilized and plugged as a result of wear (1 tube) or the potential for continued degradation of the waterbox cap plate region (90 tubes).
11. 2 tubes were preventatively plugged due to large bulges. 1 tube was preventatively plugged since the tube was not hydraulically expanded in the tubesheet.
12. One tube was preventatively plugged due to a large bulge.
13. One tube was preventatively plugged since it had an oversized tubesheet bore hole larger than analyzed in the tubesheet repair criteria analysis.
14. One tube was preventatively plugged since it had a manufacturing geometric indication

## Table 3-6: Byron 2: Tubes Plugged for Indications Other Than AVB Wear

| STEAM GENERATOR A | | | | |
|---|---|---|---|---|
| Tube | Location | RFO # | Characterization | Stabilized |
| | | 11 | PLP[1] | Y |
| 1-87 | U-bend | 1 | Large dent | |
| 1-110 | U-bend | 1 | Signal to noise indication indicative of PWSCC | |
| 15-109 | TSC | 6 | CLP (part removed) | |
| 15-110 | TSC | 6 | CLP (part removed) | |
| 15-111 | TSC | 6 | CLP (part removed) | |
| 16-110 | TSC | 6 | CLP (part removed) - leaker | Y (cold) |
| 30-11 | 5C | 16 | PLP – surround a PLP | |
| 30-12 | 5C | 16 | PLP – surround a PLP | |
| 30-13 | 5C | 16 | PLP – surround a PLP | |
| 31-11 | 5C | 16 | PLP – surround a PLP | |
| 31-12 | 5C+0.53 | 16 | PLP – 38% wall thinning (periphery) | Y |
| 32-12 | 5C | 16 | PLP – surround a PLP | |
| 32-13 | 5C | 16 | PLP – surround a PLP | |
| 34-47 | | 14 | Preventative – oversized tubesheet bore hole | N |
| 36-43 | | 16 | PLP – loose part present, but no wear | |
| 44-67 | 2C | 7 | Outside diameter (OD) initiated volumetric | |
| 46-67 | Freespan (FS) (2C) | 6 | Scale/deposits | |
| 47-66 | FS (2C) | 6 | Scale/deposits | |
| 48-74 | FS (2C) | 6 | Scale/deposits | |
| 49-50 | 2C+0.76 | 11 | CLP (part retrieved) - 57% wall thinning (waterbox cap plate, backing bar) | Y |
| 49-74 | FS (2C) | 6 | Scale/deposits | |

1. Ninety tubes were preventatively stabilized and plugged during RFO 11 because of the possibility of backing bars becoming loose in the steam generator waterbox.

## Table 3-6: Byron 2: Tubes Plugged for Indications Other Than AVB Wear (cont'd)

| STEAM GENERATOR B | | | | |
|---|---|---|---|---|
| Tube | Location | RFO # | Characterization | Stabilized |
| 1-2 | U-bend | 6 | Geometry change | |
| 2-57 | U-bend | 7 | Geometry change | |
| 6-7 | 5H+0.68 | 14 | PLP – preventative | Y |
| 6-8 | 5H+0.61 | 14 | PLP – preventative | Y |
| 7-7 | 5H+0.67 | 15 | PLP – 28% wall thinning | Y |
| 7-8 | 5H+0.78 | 14 | PLP – 15% wall thinning (location could not be accessed) | Y |
| 9-5 | 5H+0.75 | 12 | PLP - 10% wall thinning (location could not be accessed) | Y |
| 9-6 | 5H+0.76 | 12 | PLP - 13% wall thinning (location could not be accessed) | Y |
| 10-5 | 5H+0.70 | 12 | PLP - 10% wall thinning (location could not be accessed) | Y |
| 10-6 | 5H+0.69 | 12 | PLP - 33% wall thinning (location could not be accessed) | Y |
| 12-4 | 5H | 5 | Possible loose part (PLP) (orientation by magnet) | Y |
| 12-5 | 5H | 5 | PLP (orientation by magnet) | Y |
| 13-4 | 5H | 5 | PLP (orientation by magnet) | Y |
| 13-5 | 5H | 5 | PLP (orientation by magnet) | Y |
| 14-5 | 5H | 5 | PLP (orientation by magnet) | Y |
| 14-6 | 5H | 8 | PLP | Y |
| 14-7 | 5H | 9 | PLP | Y |
| 15-5 | 5H | 8 | PLP | Y |
| 15-6 | 5H | 8 | PLP | Y |
| 15-7 | 5H | 9 | PLP | Y |
| 20-56 | 2C | 9 | CLP (removed in RFO 5) | N |
| 20-57 | 2C | 6 | OD volumetric (CLP removed in RFO 5) | |
| 20-90 | TSC+3.00 | 12 | Bulge | Y |
| 21-55 | 2C | 7 | CLP removed in RFO 5 | |
| 25-7 | TSH | 1 | Mechanism not reported | |
| 25-11 | 7H+0.68 | 13 | PLP – 19% wall thinning (location could not be accessed) | Y |
| 25-20 | 7H-0.63 | 14 | PLP – 38% wall thinning (location could not be accessed) | Y |
| 26-10 | 7H+0.58 | 12 | PLP - 22% wall thinning (location could not be accessed) | Y |
| 26-11 | 7H+0.62 | 12 | PLP - 12% wall thinning (location could not be accessed) | Y |
| 27-8 | TSH | 1 | Mechanism not reported | |
| 27-11 | 7H+0.76 | 13 | PLP – 12% wall thinning (location could not be accessed) | Y |
| 28-25 | 1H | 7 | CLP (removed - outage not specified) | |
| 28-26 | 1H | 4 | Volumetric | |
| 37-67 | FS (2C) | 9 | OD volumetric | |
| 37-95 | TSH+0.08 | 13 | Bulge | Y |

## Table 3-6: Byron 2: Tubes Plugged for Indications Other Than AVB Wear (cont'd)

| STEAM GENERATOR B | | | | |
|---|---|---|---|---|
| Tube | Location | RFO # | Characterization | Stabilized |
| 47-76 | 2C | 8 | OD volumetric | |
| 48-50 | 7C+0.08 | 16 | Preheater wear – 40% wall thinning | Y |
| 48-53 | 7C+0.36 | 16 | Preheater wear – 29% wall thinning | Y |
| 48-54 | 7C+0.58 | 16 | Preheater wear – 32% wall thinning | Y |
| 48-55 | 7C-0.03 | 14 | Preheater wear – 45% wall thinning | Y |
| 48-59 | 7C-0.03 | 16 | Preheater wear – 33% wall thinning | Y |
| 49-50 | 7C-0.08 | 12 | Preheater wear – 43% wall thinning | Y |
| 49-51 | 7C | 8 | Preheater wear | Y |
| 49-52 | 7C+0.47 | 16 | Preheater wear – 33% wall thinning | Y |
| 49-53 | 7C+0.11 | 12 | Preheater wear – 44% wall thinning | Y |
| 49-54 | TSH | 5 | CLP (removed in RFO 1) | |
| 49-55 | TSH | 1 | Not reported (CLP in RFO 5, part removed in RFO 1) | |
| 49-56 | TSH | 1 | PLP (CLP in RFO 5, part removed in RFO 1) | |
| 49-63 | 7C+0.14 | 16 | Preheater wear – 36% wall thinning | Y |

## Table 3-6: Byron 2: Tubes Plugged for Indications Other Than AVB Wear (cont'd)

| STEAM GENERATOR C | | | | |
|---|---|---|---|---|
| Tube | Location | RFO # | Characterization | Stabilized |
| 2-19 | | 16 | Preventative – manufacturing geometric indication | |
| 3-47 | 8H-0.83 | 16 | PLP – 30% wall thinning (periphery) | Y |
| 9-39 | FS (10C)<br>FS (10H) | 3 | ODI | |
| 17-25 | 1H+0.42 | 10 | CLP (part removed) - 22% wall thinning | N |
| 18-25 | 1H | 7 | OD volumetric | |
| 19-27 | 1H | 7 | OD volumetric | |
| 21-29 | 1H | 4 | Volumetric | |
| 22-29 | 1H | 6 | OD volumetric | |
| 22-30 | 1H+0.42 | 10 | CLP (part removed) - 4% wall thinning | N |
| 23-30 | 1H+0.46 | 10 | CLP (part removed) - 30% wall thinning | N |
| 23-31 | 1H+0.41 | 10 | CLP (part removed) - 11% wall thinning | N |
| 24-33 | 1H+0.41 | 10 | CLP (part removed) - 3% wall thinning | N |
| 25-15 | TEC+11.66 | 12 | Bulge | N |
| 25-33 | 1H+0.47 | 10 | CLP (part removed) - 15% wall thinning | N |
| 32-65 | | 13 | Preventative – surround non-stabilized tubes near a PLP | Y |
| 32-66 | 8H | 13 | Preventative – surround non-stabilized tubes near a PLP | Y |
| 32-67 | 8H | 13 | Preventative – surround non-stabilized tubes near a PLP | Y |
| 33-63 | 8H | 14 | Preventative – CLP in vicinity | Y |
| 33-64 | 8H+0.77 | 13 | PLP | Y |
| 33-65 | 8H+0.69 | 13 | PLP – 27% TW indication | Y |
| 33-66 | 8H | 2 | Pit (Reclassified as wear because of a loose part in RFO 13) | N |
| 33-67 | 8H | 13 | Preventative – surround non-stabilized tubes near a PLP | Y |
| 34-59 | TSH+0.12 | 10 | CLP (part removed) - 8% wall thinning | N |
| 34-63 | 8H | 14 | Preventative – CLP in vicinity | Y |
| 34-64 | 8H | 14 | Preventative – CLP in vicinity | Y |
| 34-65 | 8H+0.72 | 13 | PLP | Y |
| 34-66 | 8H | 7 | OD volumetric (Reclassified as wear because of a loose part in RFO 13) | N |
| 34-67 | 8H | 13 | Preventative – surround non-stabilized tubes near a PLP | Y |
| 35-65 | 8H | 13 | Preventative – surround non-stabilized tubes near a PLP | Y |
| 35-66 | 8H | 13 | Preventative – surround non-stabilized tubes near a PLP | Y |
| 35-67 | 8H | 13 | Preventative – surround non-stabilized tubes near a PLP | Y |
| 38-56 | 5H | 1 | Narrow circumferential indication (PLP in RFO 5) | Y RFO 5 |
| 39-56 | 5H | 4 | PLP | Y RFO 5 |
| 40-56 | 5H | 5 | PLP | Y |

## Table 3-6: Byron 2: Tubes Plugged for Indications Other Than AVB Wear (cont'd)

| STEAM GENERATOR C | | | | |
|---|---|---|---|---|
| Tube | Location | RFO # | Characterization | Stabilized |
| 41-56 | 5H | 5 | PLP | Y |
| 43-22 | 2C+0.49 | Midcycle (2002) | CLP (part removed in RFO 10) - 37% wall thinning | Y |
| 43-23 | 2C+0.53 | Midcycle (2002) | CLP (part removed in RFO 10) - leaking tube | Y |
| 43-24 | 2C+0.46<br>2C+0.85 | Midcycle (2002) | CLP (part removed in RFO 10) - 11% and 13% wall thinning | Y |
| 48-36 | 2C+0.5 | 10 | Preheater wear- 17% wall thinning | N |
| 49-34 | 2C+0.41 | 10 | CLP (part removed) - 24% wall thinning | N |
| 49-48 | 7C-0.52 | 12 | Preheater wear - 39% wall thinning | Y |
| 49-53 | 8H | 7 | CLP (part removed in RFO 5) | |
| 49-54 | 8H | 1 | Narrow circ (CLP removed in RFO 5) | |
| 49-55 | 8H | 1 | Narrow circ (CLP removed in RFO 5) | |
| 49-62 | 7C-0.08 | 12 | Preheater wear - 49% wall thinning | Y |
| 49-63 | 7C-0.22 | 12 | Preheater wear - 49% wall thinning | Y |
| 49-70 | 7C+0.0 | 16 | Preheater wear – 36% wall thinning | Y |

## Table 3-6: Byron 2: Tubes Plugged for Indications Other Than AVB Wear (cont'd)

| STEAM GENERATOR D | | | | |
|---|---|---|---|---|
| Tube | Location | RFO # | Characterization | Stabilized |
| 1-55 | 6C+0.26 | 12 | PLP - 26% wall thinning (location could not be accessed) | Y |
| 13-84 | 7H | 16 | PLP – surround a PLP | |
| 13-85 | 7H | 16 | PLP – surround a PLP | |
| 13-86 | 7H | 16 | PLP – surround a PLP | |
| 14-84 | 7H | 16 | PLP – surround a PLP | |
| 14-85 | 7H-0.68 | 16 | PLP – 11% wall thinning (not periphery) | Y |
| 14-86 | 7H | 16 | PLP – surround a PLP | |
| 15-48 | | 12 | Tube not hydraulically expanded in tubesheet on hot-leg side | N |
| 15-84 | 7H | 16 | PLP – surround a PLP | |
| 15-85 | 7H | 16 | PLP – surround a PLP | |
| 15-86 | 7H | 16 | PLP – surround a PLP | |
| 20-34 | FS (6C)<br>FS (9C) | 3 | Outside diameter indication (ODI) -manufacturing burnishing mark (MBM) | |
| 22-37 | 10H | 3 | ODI – MBM | |
| 24-69 | 5H-0.67 | 14 | 27% wall thinning (attributed to loose part, but no loose part present, location could not be accessed) | Y |
| 35-99 | 2C+0.48 | 10 | CLP (part removed) - 32% wall thinning | N |
| 36-59 | 10H-1.17 | 16 | PLP – 20% wall thinning (periphery) | Y |
| 36-99 | 2C+0.41 | 10 | CLP (part removed) - 14% wall thinning | N |
| 37-17 | FS (9H)<br>FS (11H) | 3 | ODI | |
| 37-99 | 2C+1.09 | 10 | CLP (part removed) - 19% wall thinning | N |
| 44-74 | FS (5H)<br>FS (9H) | 2 | ODI | |
| 49-52 | 7C+0.43 | 12 | Preheater wear - 39% wall thinning | Y |
| 49-67 | 7C+0.05<br>8C+0.05 | 14 | Preheater wear – 41% and 26% wall thinning | Y |
| 49-69 | 7C+0.41 | 14 | Preheater wear – 41% wall thinning | Y |

## Table 3-7: Catawba 2: Summary of Bobbin Inspections and Tube Plugging

| Outage | Completion Date | Cumul. EFPY | SG A | | | SG B | | | SG C | | | SG D | | | Total Plug | Total DePl | Cumul. Plugged | Percent Plugged | Notes |
|---|---|---|---|---|---|---|---|---|---|---|---|---|---|---|---|---|---|---|---|
| | | | Insp. | Plug | DePl | Insp. | Plug | DePl | Insp. | Plug | DePl | Insp. | Plug | DePl | | | | | |
| Pre-op | | | | 1 | | | 7 | | | 1 | | | 5 | | 14 | 0 | 14 | 0.08 | 1 |
| Mid-Cycle | 08/26/1987 | | | 0 | | | | | | | | | 0 | | 0 | 0 | 14 | 0.08 | 2 |
| RFO 1 | 02/12/1988 | 0.92 | 1133 | 4 | | 546 | 1 | | 515 | 0 | | 1215 | 2 | | 7 | 0 | 21 | 0.11 | |
| RFO 2 | 04/01/1989 | 1.7 | 1456 | 2 | | 1519 | 5 | | 1443 | 1 | | 1542 | 0 | | 8 | 0 | 29 | 0.16 | |
| RFO 3 | 07/01/1990 | 2.6 | 3274 | 9 | | 3230 | 1 | | 3243 | 2 | | 3265 | 7 | | 19 | 0 | 48 | 0.26 | |
| RFO 4 | 11/20/1991 | 3.55 | 4554 | 7 | | 4556 | 0 | | 4566 | 4 | | 4556 | 1 | | 12 | 0 | 60 | 0.33 | |
| RFO 5 | 03/01/1993 | 4.57 | 4547 | 14 | | 4556 | 6 | | 4562 | 13 | | 4555 | 10 | | 43 | 0 | 103 | 0.56 | |
| RFO 6 | 06/01/1994 | 5.61 | 4533 | 6 | | 4550 | 11 | | 4549 | 5 | | 4545 | 9 | | 31 | 0 | 134 | 0.73 | |
| RFO 7 | 11/01/1995 | 6.78 | 2569 | 10 | | 2476 | 2 | | 2419 | 5 | | 2596 | 6 | | 23 | 0 | 157 | 0.86 | |
| RFO 8 | 04/01/1997 | 7.98 | 2624 | 1 | | 2520 | 5 | | 2447 | 0 | | 2628 | 4 | | 10 | 0 | 167 | 0.91 | |
| RFO 9 | 09/01/1998 | 9.29 | 2501 | 1 | | 2317 | 5 | | 2273 | 1 | | 2485 | 2 | | 9 | 0 | 176 | 0.96 | |
| RFO 10 | 03/01/2000 | 10.52 | 4303 | 0 | | 4401 | 4 | | 4313 | 2 | | 4309 | 1 | | 7 | 0 | 183 | 1.00 | |
| RFO 11 | 10/15/2001 | 11.92 | 2210 | 0 | | 1890 | 0 | | 1807 | 0 | | 2071 | 0 | | 0 | 0 | 183 | 1.00 | |
| RFO 12 | 03/26/2003 | 13.23 | 2518 | 3 | | 2356 | 3 | | 2283 | 6 | | 2730 | 21 | | 33 | 0 | 216 | 1.18 | |
| RFO 13 | 10/24/2004 | 14.68 | 2614 | 2 | | 2594 | 32 | | 2492 | 5 | | 2606 | 9 | | 48 | 0 | 264 | 1.44 | |
| RFO 14 | 04/23/2006 | 16.06 | 2508 | 1 | | 2499 | 9 | | 2376 | 2 | | 2601 | 2 | | 14 | 0 | 278 | 1.52 | |
| RFO 15 | 11/14/2007 | 17.43 | 2706 | 0 | | 2618 | 8 | | 2569 | 0 | | 2767 | 0 | | 8 | 0 | 286 | 1.56 | |
| RFO 16 | 04/18/2009 | 18.73 | 4509 | 0 | | 4471 | 7 | | 4523 | 1 | | 4491 | 2 | | 10 | 0 | 296 | 1.62 | 3 |
| RFO 17 | 10/20/2010 | 20.13 | 4509 | 0 | | 4464 | 0 | | 4522 | 1 | | 4489 | 0 | | 1 | 0 | 297 | 1.62 | 4 |
| RFO 18 | 04/17/2012 | 21.5 | 4509 | 0 | | 4464 | 0 | | 4521 | 4 | | 4489 | 1 | | 5 | 0 | 302 | 1.65 | 4 |
| RFO 19 | 10/17/2013 | 22.89 | 4509 | 0 | | 4464 | 3 | | 4517 | 4 | | 4488 | 0 | | 7 | 0 | 309 | 1.69 | 4 |
| | | | | | | | | | | | | | | | | | | | |
| | | | | | | | | | | | | | | | | | | | |
| | | **Totals:** | | 61 | 0 | | 109 | 0 | | 57 | 0 | | 82 | 0 | 309 | | | | |

**Plant Data**
Model: D5
T-hot (approximate): 615 °F
Tubes per steam generator: 4570
Number of steam generators: 4

**Acronyms**
Pre-op = prior to operation
Cumul. = cumulative
Insp. = number of tubes inspected
Plug = number of tubes plugged
DePl = number of tubes deplugged
RFO = refueling outage

**Notes**
1. Assumed based on other information.
2. Licensee elected to inspect 2 of the steam generators during an unplanned maintenance outage to limit the inspections during the subsequent refueling outage.
3. The U-bend region of the row 1 through 5 tubes was not inspected with a bobbin probe. The U-bend region of 35% of the row 1 through 5 tubes was inspected with a rotating probe.
4. The U-bend region of the row 1 through 5 tubes was not inspected with a bobbin probe. The U-bend region of 100% of the row 1 tubes, 35% of the row 2 through 5 tubes, and 20% of the row 10 tubes was inspected with a rotating probe.

# Table 3-8: Catawba 2: Causes of Tube Plugging

| | Year | | 1988 | 1989 | 1990 | 1991 | 1993 | 1994 | 1995 | 1997 | 1998 | 2000 | 2001 | 2003 | 2004 | 2006 | 2007 | 2009 | 2010 | 2012 | 2013 | | | |
|---|---|---|---|---|---|---|---|---|---|---|---|---|---|---|---|---|---|---|---|---|---|---|---|---|
| **Cause of Tube Plugging/Outage** | | **Pre-Op** | **RFO 1** | **RFO 2** | **RFO 3** | **RFO 4** | **RFO 5** | **RFO 6** | **RFO 7** | **RFO 8** | **RFO 9** | **RFO 10** | **RFO 11** | **RFO 12** | **RFO 13** | **RFO 14** | **RFO 15** | **RFO 16** | **RFO 17** | **RFO 18** | **RFO 19** | | **Totals** | **Totals** |
| **Wear** | AVB | | | | 14 | 6 | 2 | 1 | 1 | 2 | 1 | 1 | | 1 | | | | | | | | | 29 | **39** |
| | Preheater TSP (D5) | | | | | | | | | | 1 | | | 6 | | | | | | | | | 7 | |
| | TSP | | | | | | | | | | 2 | | | | | | | | 1 | | | | 3 | |
| **Loose Parts** | Confirmed | | 2 | | | | | | | | | | | | 18 | 9 | | | | | | | 29 | **61** |
| | Not confirmed, periphery | | | | | | | | | | | | | 6 | 5 | | | | | 4 | 4 | | 19 | |
| | Not confirmed, not periphery | | | | | | | | | | | 2 | | | 7 | | | | | 1 | 3 | | 13 | |
| **Obstruction Restriction** | From PSI, no progression | | | | | | | | | | | | | | | | | | | | | | 0 | **0** |
| | Service-induced | | | | | | | | | | | | | | | | | | | | | | 0 | |
| **Manufacturing Flaws** | Preservice | 14 | | | | | | | | | | | | | | | | | | | | | 14 | **20** |
| | Other | | | | | | | | | | | | | 1 | | 4 | | 1 | | | | | 6 | |
| **Inspection Issues** | Probe lodged | | | | | | | | | | | 2 | | | | | | | | | | | 2 | **31** |
| | Data quality | | | | | | | | | 1 | | | | 17 | | | | | | | | | 18 | |
| | Dent/geometry | | | | | | | | | | 1 | | | | | 1 | | | | | | | 2 | |
| | Permeability | | | | | | | | | 2 | 1 | | | 2 | 1 | | | | | | | | 6 | |
| | Not inspected | | | | | | | | | 1 | | 2 | | | | | | | | | | | 3 | |
| **Other** | Top of tubesheet | | | | | | 3 | 4 | 2 | 3 | 2 | | | | | | | | | | | | 14 | **125** |
| | Freespan | | 3 | 4 | | 1 | 30 | 20 | 10 | 1 | | | | | | | | | | | | | 69 | |
| | TSP | | 2 | 3 | 3 | 5 | 6 | 6 | 5 | | 1 | | | | | | | | | | | | 31 | |
| | Other/not reported | | | 1 | 2 | | 2 | | 5 | | | | | | 1 | | | | | | | | 11 | |
| **SCC** | ID | | | | | | | | | | | | | | 16 | | | 6 | | | | | 22 | **33** |
| | OD | | | | | | | | | | | | | | | | 8 | 3 | | | | | 11 | |
| | **TOTALS** | 14 | 7 | 8 | 19 | 12 | 43 | 31 | 23 | 10 | 9 | 7 | 0 | 33 | 48 | 14 | 8 | 10 | 1 | 5 | 7 | 0 | 309 | 309 |
| **Notes:** | | | 1 | | | | | | | | | | | 2 | 3 | 4 | 5 | 6 | | | | | | |

**Notes**

1. Since no tubes were plugged during the 1987 mid-cycle outage, reference is just made to RFO 1 in this table.
2. Fifteen tubes were preventatively plugged due to a dent and manufacturing burnishing mark at the same location (data quality). Two tubes were plugged for lift off at the U-bend tangent. One low row tube was plugged for an eddy current offset. No information was provided on whether loose parts were visually identified.
3. One tube was plugged due to potential damage from a stabilizer installation error.
4. Three tubes were plugged since they were expanded significantly above the top of the tubesheet. One tube was plugged for not being expanded into the tubesheet. One tube was plugged for a geometry indication.
5. Axial indications in hot leg at top of tubesheet in sludge pile.
6. Six tubes plugged for ID indications near the tube end, three tubes were plugged for OD indications at the HL TSPs, and one tube was plugged for a bulge at the top of the tubesheet.

## Table 3-9: Catawba 2: Tubes Plugged for Indications Other Than AVB Wear

| STEAM GENERATOR A | | | | |
|---|---|---|---|---|
| Tube | Location | RFO # | Characterization | Stabilized |
| 1-5 | FS(12)<br>4+.9 | 7 | ODI, Volumetric | |
| 1-6 | 4+.8 | 7 | ODI, Volumetric | |
| 1-7 | 4+.6 | 7 | ODI, Volumetric | |
| 1-100 | 8H+9.41 | 12 | Data Quality—Probe liftoff in U-bend region | |
| 1-106 | 8H+9.07 | 12 | Data Quality—Probe liftoff in U-bend region | |
| 3-9 | FS(12,13,15-19)<br>15+1.5<br>16-1.0<br>TSC<br>19+1.5 | 7 | Absolute drift indication (ADI), non-quantifiable indication (NQI), Volumetric, ODI | |
| 7-12 | ? | 5 | ? | |
| 8-107 | FS(7,8,10) | 6 | NQI, ODI, Volumetric | |
| 15-50 | FS(10) | 8 | Bobbin indication greater than 40 percent throughwall, no degradation found (NDF) with rotating probe | |
| 15-77 | FS(2,5) | 1 | ODI, location not indicative of PLP | |
| 16-72 | TSH | 6 | Inside diameter indication | |
| 17-82 | TSC | 14 | Preventative—over-rolled tube at top of tubesheet | Y |
| 19-102 | ? | 7 | ? | |
| 21-105 | FS(10) | 5 | ODI, Volumetric | |
| 24-67 | 3 | 1 | ODI, location not indicative of PLP | |
| 24-68 | 3 | 2 | OD | |
| 24-69 | 3 | 2 | OD | |
| 24-104 | FS(10) | 5 | ODI, NQI | |
| 24-108 | FS(7,8)<br>8-1.4 | 6 | NQI, ODI, Volumetric | |
| 25-19 | FS(3,5,6,7,9,10) | 7 | NQI, Volumetric, ODI | |
| 25-86 | ? | 7 | ? | |
| 25-100 | FS(4,11,17) | 5 | ODI, Volumetric, NQI | |
| 28-102 | FS (3, 7) | 5 | ODI, Volumetric, NQI | |
| 29-24 | FS(7) | 6 | NQI, ODI | |
| 29-70 | FS (2) | 5 | ODI, Volumetric | |
| 29-96 | FS (10) | 5 | ODI, Volumetric | |
| 34-18 | 2H+34.35 (DNT)<br>2H+33.92 (VOL) | 12 | Data Quality—Overlapping dent and manufacturing burnish mark | |
| 34-91 | ? | 7 | ? | |
| 39-41 | TSH+0.10 | 13 | PLP | Y |
| 40-41 | TSH+0.09 | 13 | PLP | Y |

## Table 3-9: Catawba 2: Tubes Plugged for Indications Other Than AVB Wear (cont'd)

| STEAM GENERATOR A | | | | |
|---|---|---|---|---|
| Tube | Location | RFO # | Characterization | Stabilized |
| 40-72 | TSH | 6 | NQI | |
| 43-68 | FS(10) | 9 | Permeability | |
| 44-49 | FS (5,6,7,10) | 7 | NQI, ODI, Volumetric | |
| 48-43 | 18+.4 | 5 | ODI, preheater | |
| 48-44 | 18+.5 | 5 | ODI, preheater | |
| 49-38 | 7+/-.1 | 3 | OD | |
| 49-39 | 7 | 1 | ODI, Location not indicative of PLP | |
| 49-40 | 7+.1 | 3 | OD | |
| 49-41 | 7+.65 | 5 | ODI, NQI | |
| 49-42 | 7+.6 | 4 | OD | |
| 49-44 | 18+.8 | 5 | ODI, preheater | |
| 49-54 | FS (12) | 1 | ODI, Location not indicative of PLP | |
| 49-64 | 7+.6 | 4 | OD | |
| 49-65 | 7+.7 | 4 | OD | |
| 49-66 | 7+.1 | 3 | OD | |
| 49-68 | 18-.02 | 5 | Multiple axial indication (MAI), Single axial indication (SAI), preheater | |
| 49-77 | 18+.03 | 5 | MAI, preheater | |

## Table 3-9: Catawba 2: Tubes Plugged for Indications Other Than AVB Wear (cont'd)

| STEAM GENERATOR B | | | | |
|---|---|---|---|---|
| Tube | Location | RFO # | Characterization | Stabilized |
| 1-22 | TEH+0.11<br>TEH+0.24 | 13 | SCC (SAI and SCI)—Tube End (originally classified as indication in weld extending into tube) | N |
| 1-25 | TEH | 16 | SCC (circumferential) | |
| 1-37 | TEH | 16 | SCC (circumferential) | |
| 1-47 | TEH+0.17 | 13 | SCC (SAI)—Tube End (originally classified as indication in weld extending into tube) | N |
| 1-55 | TEH+0.12<br>TEH+0.22 | 13 | SCC (MAI and MCI)—Tube End (originally classified as indication in weld extending into tube) | N |
| 1-56 | TEH | 16 | SCC (circumferential) | |
| 1-57 | TEH | 16 | SCC (circumferential) | |
| 1-61 | FS(9) | 9 | Dent signal change | |
| 1-63 | TEH | 16 | SCC (circumferential) | |
| 2-52 | TEH+0.80 | 13 | SCC (SCI)—Tube End | N |
| 2-57 | TEH +0.69 | 13 | SCC (SCI)—Tube End | N |
| 2-63 | TEH+0.18 | 13 | SCC (SAI)—Tube End (originally classified as indication in weld extending into tube) | |
| 2-71 | 5H-0.83 | 13 | PLP | Y |
| 2-99 | U-bend | 10 | Plus-point lodged in U-bend | |
| 3-45 | TEH+0.62 | 13 | SCC (SCI)—Tube End | N |
| 3-52 | TEH+0.64 | 13 | SCC (SCI)—Tube End | N |
| 3-58 | TEH+0.62 | 13 | SCC (MCI)—Tube End | N |
| 4-52 | TEH+0.70 | 13 | SCC (MCI)—Tube End | N |
| 4-61 | TSH-6.79<br>TSH-7.30<br>TSH-7.34 | 13 | SCC (MCI)—Overexpansion in tubesheet | N |
| 5-12 | TSH+0.02 | 13 | PLP | Y |
| 6-12 | TSH+0.01 | 13 | PLP | Y |
| 7-71 | TEH+0.44 | 13 | SCC (SCI)—Tube End | N |
| 8-27 | TEH+0.21 | 13 | SCC (SAI)—Tube End (originally classified as indication in weld extending into tube) | N |
| 8-31 | FS (1, 16) | 5 | ODI, Volumetric | |
| 10-17 | 6H+15.19 (DNT)<br>6H+14.93 (VOL) | 12 | Data Quality—Overlapping dent and manufacturing burnish mark | |
| 13-64 | TEH+0.16 | 13 | SCC (SAI)—Tube End (originally classified as indication in weld extending into tube) | N |
| 15-27 | 1H+0.64 | 14 | CLP | Y |
| 15-29 | 1H+0.51 | 14 | CLP | Y |

## Table 3-9: Catawba 2: Tubes Plugged for Indications Other Than AVB Wear (cont'd)

| STEAM GENERATOR B | | | | |
|---|---|---|---|---|
| Tube | Location | RFO # | Characterization | Stabilized |
| 15-45 | TEH+0.14<br>TEH+0.72 | 13 | SCC (SAI and MCI)—Tube End | N |
| 15-79 | TSH+0.41 | 15 | SCC (SAI)—OD initiated, top of tubesheet | Y |
| 16-27 | 1H+0.47<br>1H+0.59 | 14 | CLP | Y |
| 16-28 | 1H+0.52 | 14 | CLP | Y |
| 16-29 | 1H+.5 | 10 | Wear, no size available—PLP | |
| 16-30 | 1H+0.54 | 14 | CLP | Y |
| 16-31 | 1H+0.64 | 14 | CLP | Y |
| 17-27 | 1H | 14 | CLP | Y |
| 17-28 | TSH+0.32 | 15 | SCC (SAI)—OD initiated, top of tubesheet | Y |
| 17-41 | 10C-0.67 | 13 | PLP—41 percent wall thinning | Y |
| 17-90 | 14+1.4 | 2 | OD | |
| 18-28 | 1H | 14 | CLP | Y |
| 18-41 | 10C-0.59 | 13 | PLP—27 percent wall thinning | Y |
| 18-71 | TSH+0.49 | 15 | SCC (SAI)—OD initiated, top of tubesheet | Y |
| 19-29 | TSH+0.07 | 15 | SCC (SAI)—OD initiated, top of tubesheet | Y |
| 20-104 | TSH | 9 | MBM/PLP wear | |
| 21-62 | 8-.3 | 2 | OD | |
| 24-31 | 10C+10.40<br>12C+10.77 | 12 | Permeability variation | |
| 24-44 | TSH+0.12 | 15 | SCC (SAI)—OD initiated, top of tubesheet | Y |
| 24-62 | 2H+0.39 | 16 | SCC (SAI)—ODSCC at TSP (nonoptimal tube processing) | |
| 24-72 | TSH+0.33 | 15 | SCC (SAI)—OD initiated, top of tubesheet | Y |
| 25-38 | TSH+0.24 | 15 | SCC (SAI)—OD initiated, top of tubesheet | Y |
| 25-40 | FS(18) | 5 | ODI | |
| 26-26 | FS(3) | 5 | ODI, Volumetric | |
| 26-64 | TSH+0.57 | 15 | SCC (MAI)—OD initiated, top of tubesheet | Y |
| 26-81 | TEH | 16 | SCC (circumferential) | |
| 27-23 | 4H+0.69 | 19 | PLP—14 percent wall thinning (not periphery) | |
| 28-23 | | 19 | PLP | |
| 28-24 | 4H+1.27<br>4H+1.78 | 19 | PLP—27 percent and 6 percent wall thinning (not periphery) | |
| 28-106 | TSH | 5 | ODI, Volumetric | |
| 29-23 | FS(9,11) | 5 | ODI, Volumetric | |
| 29-87 | FS(7) | 6 | ODI, Volumetric | |

## Table 3-9: Catawba 2: Tubes Plugged for Indications Other Than AVB Wear (cont'd)

| STEAM GENERATOR B | | | | |
|---|---|---|---|---|
| Tube | Location | RFO # | Characterization | Stabilized |
| 29-105 | TSH | 8 | MBM/PLP wear | |
| 30-12 | TSC | 14 | Tube not hydraulically expanded in tubesheet on cold-leg side | N |
| 30-90 | FS(4) | 6 | ODI, Volumetric | |
| 31-89 | 17-.1<br>17+2.2 | 2 | OD | |
| 32-44 | 1H+0.33 | 13 | CLP—42 percent wall thinning | Y |
| 33-42 | 1H+0.26 | 13 | CLP—10 percent wall thinning | Y |
| 33-43 | 1H+0.30 | 13 | CLP—54 percent wall thinning | Y |
| 33-44 | 1H+0.30 | 13 | CLP—47 percent wall thinning | Y |
| 33-68 | 8+1.63 | 6 | ODI | |
| 33-74 | 8+1.52 | 6 | ODI | |
| 33-78 | 8+1.41 | 6 | ODI | |
| 34-42 | 1H+.5 | 10 | Wear, no size available—PLP | |
| 34-43 | 1H+0.31 | 13 | CLP—30 percent wall thinning | Y |
| 34-44 | 1H+0.28 | 13 | CLP—12 percent wall thinning | Y |
| 35-38 | FS(11) | 7 | ODI, Volumetric | |
| 35-41 | 1H+.5 | 9 | MBM/PLP wear | |
| 35-42 | 1H+0.38 | 13 | CLP—1 percent wall thinning | Y |
| 36-36 | FS(10) | 5 | ODI | |
| 36-53 | TEH+0.63 | 13 | SCC (SCI)—Tube End | N |
| 36-56 | TSH | 7 | NQI, Volumetric, Pit | |
| 37-35 | FS(10) | 6 | ODI, NQI | |
| 38-69 | 11C+10.63<br>(DNT)<br>11C+29.01<br>(VOL) | 12 | Data Quality—Overlapping dent and manufacturing burnish mark | |
| 38-82 | FS(2,3)<br>AVB | 6 | NQI, ODI, Volumetric, Wear | |
| 39-85 | FS(10,11,17) | 8 | Lack of rotating probe data | |
| 39-97 | U-bend | 8 | Permeability | |
| 40-19 | TSH | 8 | MBM/PLP wear | |
| 40-64 | 1+0.56 | 6 | ODI, Volumetric | |
| 41-20 | TSH | 1 | CLP (removed) | |
| 41-64 | 1+0.57 | 6 | ODI, Volumetric | |
| 42-45 | 18C+0.49 | 13 | CLP—31 percent wall thinning | Y |
| 42-46 | 18C+0.53 | 13 | CLP—17 percent wall thinning | Y |
| 43-22 | TSH | 8 | MBM/PLP wear | |

## Table 3-9: Catawba 2: Tubes Plugged for Indications Other Than AVB Wear (cont'd)

| STEAM GENERATOR B | | | | |
|---|---|---|---|---|
| Tube | Location | RFO # | Characterization | Stabilized |
| 43-91 | 18C+0.57 | 13 | CLP—20 percent wall thinning | N |
| 43-92 | 18C+0.45 | 13 | CLP—34 percent wall thinning | N |
| 45-37 | 19+0.43 | 6 | ODI, Volumetric | |
| 46-54 | 1H+.5 | 9 | Wear, no size available | |
| 47-80 | FS(8) | 6 | ODI | |
| 48-39 | 17C+.15 | 9 | Wear, no size available | |
| 48-67 | 18+1.7 | 2 | OD | |
| 49-67 | 18+1.3<br>18+2.5 | 2 | OD | |

## Table 3-9: Catawba 2: Tubes Plugged for Indications Other Than AVB Wear (cont'd)

| STEAM GENERATOR C | | | | |
|---|---|---|---|---|
| Tube | Location | RFO # | Characterization | Stabilized |
| 1-5 | ? | 2 | ? | |
| 1-22 | U-bend | 10 | No plus-point exam in U-bend | |
| 2-30 | U-bend | 10 | Probe lodged in U-bend | |
| 4-77 | | 12 | Preventative—High residual stress | |
| 7-109 | 4H-0.75 | 14 | CLP | Y |
| 9-35 | TSH | 6 | SAI | |
| 11-93 | TSC | 14 | Preventative—over-rolled tube at top of tubesheet | Y |
| 13-15 | 10-1.7 | 7 | ODI, Volumetric | |
| 15-90 | TSH+0.13 | 13 | PLP | Y |
| 16-90 | TSH+0.14 | 13 | PLP | Y |
| 18-45 | TSH | 7 | ODI, Volumetric | |
| 18-85 | TSH+3.39 (DNT)<br>TSH+3.37 (VOL) | 12 | Data Quality—Overlapping dent and manufacturing burnish mark | |
| 19-85 | ? | 7 | ? | |
| 20-109 | ? | 7 | ? | |
| 22-74 | 4H+3.71 (DNT)<br>4H+3.71 (VOL) | 12 | Data Quality—Overlapping dent and manufacturing burnish mark | |
| 23-37 | 18C+9.26 (DNT)<br>18C+9.23 (VOL) | 12 | Data Quality—Overlapping dent and manufacturing burnish mark | |
| 24-12 | | 13 | Potential damage from stabilizer installation error in nearby tube | N |
| 24-53 | 18C+9.61 (DNT)<br>18C+9.66 (VOL) | 12 | Data Quality—Overlapping dent and manufacturing burnish mark | |
| 25-11 | 18C+0.45 | 13 | CLP—16 percent wall thinning | Y |
| 26-11 | 18C+0.60 | 13 | CLP—10 percent wall thinning | Y |
| 27-16 | FS(1) | 5 | ODI, Volumetric | |
| 28-72 | 10C+37.24 (DNT)<br>10C+37.51 (VOL) | 12 | Data Quality—Overlapping dent and manufacturing burnish mark | |
| 31-77 | TSH | 5 | SAI | |
| 32-79 | 9-1.34 | 7 | ODI, Volumetric | |
| 33-24 | FS(4,10,12)<br>9-0.86<br>9-2.96 | 6 | ODI, Volumetric | |
| 39-20 | FS(9,12,13,15) | 6 | NQI, ODI, Volumetric | |
| 39-41 | TSH+0.78 | 16 | Bulge | |
| 39-47 | FS(11,13) | 6 | NQI, Volumetric | |
| 39-67 | FS(9,10,11,13)<br>9+1.47 | 5 | NQI, ODI, Volumetric | |

## Table 3-9: Catawba 2: Tubes Plugged for Indications Other Than AVB Wear (cont'd)

| STEAM GENERATOR C | | | | |
|---|---|---|---|---|
| Tube | Location | RFO # | Characterization | Stabilized |
| 39-71 | 8+1.4<br>FS(12) | 5 | ODI, Volumetric, Absolute drift signal (ADS) | |
| 39-75 | U-bend<br>FS(12) | 5 | ODI, NQI | |
| 39-87 | FS(1)<br>18+.4 | 4 | OD | |
| 41-65 | 16+.9<br>16+1.4<br>FS(8,10,18) | 5 | NQI, ODI, Volumetric | |
| 42-61 | FS(6)<br>9+1.6 | 5 | ODI | |
| 42-92 | 18+.8<br>18+2.4 | 5 | ODI, Volumetric | |
| 42-93 | ? | 5 | ? | |
| 43-34 | U-bend<br>FS(2,5,13) | 5 | ODI, ADS | |
| 43-91 | FS(10) | 5 | ODI | |
| 45-78 | | 19 | PLP (periphery) | |
| 45-79 | 15C+0.46 | 19 | PLP—42 percent wall thinning (periphery) | |
| 46-59 | FS(1,13) | 5 | ODI, Volumetric | |
| 46-78 | 15C+0.71 | 19 | PLP—4 percent wall thinning (periphery) | |
| 46-79 | 15C+0.79 | 18 | PLP—31 percent wall thinning | |
| 46-80 | | 18 | PLP | |
| 46-87 | FS(10) | 6 | ODI | |
| 47-78 | 15C+0.65 | 19 | PLP—10 percent wall thinning (periphery) | |
| 47-79 | | 18 | PLP—downstream of PLP | |
| 47-80 | | 18 | PLP—downstream of PLP | |
| 49-59 | 13C+0.76 | 17 | TSP wear—39 percent wall thinning | |
| 49-61 | 5+.7 | 4 | OD | |
| 49-62 | 5+.7 | 4 | OD | |

## Table 3-9: Catawba 2: Tubes Plugged for Indications Other Than AVB Wear (cont'd)

| STEAM GENERATOR D | | | | |
|---|---|---|---|---|
| Tube | Location | RFO # | Characterization | Stabilized |
| 1-5 | 16C+0.28 | 12 | PLP—53 percent wall thinning | |
| 1-6 | 16C+0.62 | 12 | PLP | |
| 1-57 | TSH | 14 | Preventative—tube expansion geometry indication at top of tubesheet | Y |
| 2-1 | FS(14) | 7 | ODI, Volumetric | |
| 2-46 | FS(16) | 5 | NQI, Volumetric | |
| 4-13 | 8H+1.81 (DNT)<br>8H+1.87 (VOL) | 12 | Data Quality—Overlapping dent and manufacturing burnish mark | |
| 4-43 | FS(3,15) | 6 | Absolute drift indication (ADI), ODI, Volumetric | |
| 4-94 | 1H+1.70 (DNT)<br>1H+2.23 (VOL) | 12 | Data Quality—Overlapping dent and manufacturing burnish mark | |
| 4-113 | 14C+2.4 (DNT)<br>14C+2.4 (VOL) | 12 | Data Quality—Overlapping dent and manufacturing burnish mark | |
| 6-19 | FS(8,10) | 7 | NQI, Volumetric | |
| 6-81 | FS(12) | 8 | Data Quality | |
| 7-26 | FS(7,10,12,13,14) | 7 | NQI, ODI, Volumetric | |
| 9-2 | 9+1.1<br>FS(7,10) | 5 | NQI, ODI | |
| 13-35 | TSH+0.02 | 13 | PLP | Y |
| 14-4 | FS(7,10) | 5 | ADS, ODI | |
| 15-29 | FS(12) | 7 | ADI, Volumetric | |
| 15-108 | TSH | 6 | NQI | |
| 16-54 | 1H+0.52 | 12 | PLP | |
| 16-62 | 8-1.1<br>FS(7,10) | 6 | ADI, ODI, Volumetric | |
| 17-53 | 1H+0.41 | 12 | PLP | |
| 17-54 | 1H+0.49 | 12 | PLP—35 percent wall thinning | |
| 17-103 | FS(1,4,13) | 5 | NQI, ODI, Volumetric | |
| 18-52 | 1H+0.34 | 12 | PLP | |
| 19-65 | TSH | 10 | No rotating probe exam at TTS | |
| 20-40 | FS(12) | 7 | ODI, Volumetric | |
| 20-46 | FS(12) | 7 | ODI, Volumetric | |
| 20-89 | FS(18) | 5 | ODI | |
| 21-107 | FS(18) | 5 | ODI, Volumetric | |
| 21-110 | FS(18) | 6 | ODI, Volumetric | |
| 23-71 | 12C+25.90<br>12C+26.06 | 12 | Permeability Variation | |

## Table 3-9: Catawba 2: Tubes Plugged for Indications Other Than AVB Wear (cont'd)

| STEAM GENERATOR D | | | | |
|---|---|---|---|---|
| Tube | Location | RFO # | Characterization | Stabilized |
| 24-104 | 11C+2.00 (DNT)<br>11C+2.00 (VOL) | 12 | Data Quality—Overlapping dent and manufacturing burnish mark | |
| 25-43 | FS(11,12,13,16) | 5 | ADS, NQI, Volumetric | |
| 25-44 | FS(7,10) | 5 | ODI | |
| 27-55 | 13C+7.36 | 13 | Permeability Variation | N |
| 28-81 | 9-1.2<br>9-2.4<br>FS(10) | 6 | ODI, Volumetric | |
| 29-64 | 4H+1.24 | 18 | PLP—21 percent wall thinning | |
| 29-96 | ? | 3 | ? | |
| 30-59 | 9-0.6<br>FS(7) | 6 | ODI | |
| 33-16 | 7H+.3 | 9 | Wear, no sizing | |
| 33-48 | 10+/-1.1<br>10+0.7<br>FS(10) | 6 | ODI, Volumetric | |
| 35-93 | U-bend | 8 | Permeability in U-bend | |
| 38-72 | 16C+11.85 (DNT)<br>16C+11.85 (VOL) | 12 | Data Quality—Overlapping dent and manufacturing burnish mark | |
| 38-77 | 1H+16.30 (NQI)<br>1H+16.30 (VOL) | 12 | Data Quality—Overlapping dent and manufacturing burnish mark | |
| 40-67 | FS(8,10) | 6 | ODI, Volumetric | |
| 41-43 | U-bend<br>FS(9,11) | 6 | NQI, ODI, Volumetric | |
| 41-55 | 3H, 4H, 5H | 16 | SCC—axial ODSCC at TSP (nonoptimal tube processing) | |
| 41-59 | 3H, 5H | 16 | SCC—axial ODSCC at TSP (nonoptimal tube processing) | |
| 41-60 | TSC | 14 | Preventative—over-rolled tube at top of tubesheet | Y |
| 41-69 | 2H+16.91 (DNT)<br>2H+16.91 (VOL) | 12 | Data Quality—Overlapping dent and manufacturing burnish mark | |
| 42-24 | FS(10) | 5 | ODI, Volumetric | |
| 43-50 | 18C+0.50 | 13 | CLP—18 percent wall thinning | N |
| 43-62 | FS(3) | 1 | ODI, Location not indicative of PLP | |
| 47-30 | TSH+0.11 | 13 | PLP | Y |
| 48-47 | | 13 | CLP | Y |
| 48-48 | | 13 | CLP | Y |
| 48-51 | 13C+0.46 | 12 | Preheater wear—no depth provided | |
| 48-55 | 13C+0.00 | 12 | Preheater wear—42 percent wall thinning | |
| 48-60 | 13C+0.35 | 12 | Preheater wear—33 percent wall thinning | |

## Table 3-9: Catawba 2: Tubes Plugged for Indications Other Than AVB Wear (cont'd)

| STEAM GENERATOR D | | | | |
|---|---|---|---|---|
| Tube | Location | RFO # | Characterization | Stabilized |
| 48-75 | TSH | 9 | MBM, PLP wear | |
| 48-86 | TSH+0.29<br>TSH+0.39 | 13 | PLP | Y |
| 49-34 | ? | 3 | ? | |
| 49-47 | | 13 | CLP | Y |
| 49-48 | | 13 | CLP | Y |
| 49-52 | 13C+0.00 | 12 | Preheater wear—50 percent wall thinning | |
| 49-53 | 13C+0.00<br>13C+0.31 | 12 | Preheater wear—51 percent wall thinning | |
| 49-56 | 13C+0.34 | 12 | Preheater wear—43 percent wall thinning | |
| 49-63 | TSH | 5 | SAI | |
| 49-64 | TSH | 1 | CLP (Loose part washed away) | |

## Table 3-10: Comanche Peak 2: Summary of Bobbin Inspections and Tube Plugging

| Outage | Completion Date | Cumul. EFPY | SG A | | | SG B | | | SG C | | | SG D | | | Total Plug | Total DePl | Cumul. Plugged | Percent Plugged | Notes |
|---|---|---|---|---|---|---|---|---|---|---|---|---|---|---|---|---|---|---|---|
| | | | Insp. | Plug | DePl | Insp. | Plug | DePl | Insp. | Plug | DePl | Insp. | Plug | DePl | | | | | |
| Pre-op | | 0 | | 5 | | | 3 | | | 3 | | | 9 | | 20 | 0 | 20 | 0.11 | |
| RFO 1 | 11/01/1994 | 0.9096 | 1104 | 0 | | 1078 | 0 | | 1062 | 0 | | 1125 | 0 | | 0 | 0 | 20 | 0.11 | |
| RFO 2 | 03/15/1996 | 2.0901 | 2149 | 0 | | | | | | | | 2161 | 0 | | 0 | 0 | 20 | 0.11 | |
| RFO 3 | 11/14/1997 | 3.4894 | 3867 | 3 | | 4567 | 5 | | 4567 | 0 | | 2389 | 0 | | 8 | 0 | 28 | 0.15 | |
| RFO 4 | 04/09/1999 | 4.706 | 914 | 1 | | 914 | 0 | | 914 | 0 | | 914 | 4 | | 5 | 0 | 33 | 0.18 | |
| RFO 5 | 10/09/2000 | 6.1375 | 1927 | 3 | | | | | | | | 3609 | 1 | | 4 | 0 | 37 | 0.20 | |
| RFO 6 | 04/14/2002 | 7.5195 | | | | 4562 | 4 | | 4567 | 7 | | | | | 11 | 0 | 48 | 0.26 | 1 |
| RFO 7 | 10/24/2003 | 8.8247 | 3427 | 3 | | | | | | | | 2513 | 1 | | 4 | 0 | 52 | 0.28 | 2 |
| RFO 8 | 04/13/2005 | 10.2034 | 2605 | 5 | | 2696 | 2 | | 2742 | 4 | | 3382 | 2 | | 13 | 0 | 65 | 0.36 | 2 |
| RFO 9 | 10/25/2006 | 11.639 | | | | | | | | | | | | | 0 | 0 | 65 | 0.36 | 3 |
| RFO 10 | 04/18/2008 | 13.044 | 2795 | 1 | | 2708 | 7 | | 2845 | 3 | | 2842 | 2 | | 13 | 0 | 78 | 0.43 | 2 |
| RFO 11 | 11/01/2009 | 14.502 | | | | | | | | | | | | | 0 | 0 | 78 | 0.43 | 3 |
| RFO 12 | 04/25/2011 | 15.906 | 3253 | 0 | | 3108 | 2 | | 3185 | 1 | | 3297 | 0 | | 3 | 0 | 81 | 0.44 | 2 |
| RFO 13 | 11/01/2012 | 17.33 | | | | | | | | | | | | | 0 | 0 | 81 | 0.44 | 3 |
| RFO 14 | 04/26/2014 | 18.709 | 1554 | 2 | | 1554 | 10 | | 1554 | 0 | | 1554 | 0 | | 12 | 0 | 93 | 0.51 | 2 |
| | | | | | | | | | | | | | | | | | | | |
| | | | | | | | | | | | | | | | | | | | |
| | | **Totals:** | | 23 | 0 | | 33 | 0 | | 18 | 0 | | 19 | 0 | 93 | 0 | | | |

**Plant Data**
Model: D5
T-hot (approximate): 618 °F
Tubes per steam generator: 4570
Number of steam generators: 4

**Acronyms**
Pre-op = prior to operation
Cumul. = cumulative
Insp. = number of tubes inspected
Plug = number of tubes plugged
DePl = number of tubes deplugged
RFO = refueling outage

**Notes**
1. The U-bend region of the row 1 and row 2 tubes was not inspected with a bobbin probe. The U-bend region of 100% of the row 1 and 2 tubes was inspected with a rotating probe.
2. The U-bend region of the row 1 and row 2 tubes was not inspected with a bobbin probe. The U-bend region of 50% of the row 1 and 2 tubes was inspected with a rotating probe.
3. No steam generator tube inspections were performed.

# Table 3-11: Comanche Peak 2: Causes of Tube Plugging

| Year | | | 1994 | 1996 | 1997 | 1999 | 2000 | 2002 | 2003 | 2005 | 2006 | 2008 | 2009 | 2011 | 2012 | 2014 | | | |
|---|---|---|---|---|---|---|---|---|---|---|---|---|---|---|---|---|---|---|---|
| **Cause of Tube Plugging/Outage** | | **Pre-Op** | **RFO 1** | **RFO 2** | **RFO 3** | **RFO 4** | **RFO 5** | **RFO 6** | **RFO 7** | **RFO 8** | **RFO 9** | **RFO 10** | **RFO 11** | **RFO 12** | **RFO 13** | **RFO 14** | | **Totals** | **Totals** |
| **Wear** | AVB | | | | 5 | | 4 | | 4 | 4 | | | | 3 | | 2 | | 22 | **23** |
| | Preheater TSP (D5) | | | | | | | 1 | | | | | | | | | | 1 | |
| | TSP | | | | | | | | | | | | | | | | | 0 | |
| **Loose Parts** | Confirmed | | | | 2 | | | 2 | | | | | | | | | | 4 | **22** |
| | Not confirmed, periphery | | | | | 2 | | 3 | | 2 | | | | | | | | 7 | |
| | Not confirmed, not periphery | | | | | 1 | | 5 | | 2 | | | | | | 3 | | 11 | |
| **Obstruction Restriction** | From PSI, no progression | | | | | | | | | 1 | | | | | | | | 1 | **3** |
| | Service-induced | | | | 1 | 1 | | | | | | | | | | | | 2 | |
| **Manufacturing Flaws** | Preservice | 20 | | | | | | | | | | | | | | | | 20 | **31** |
| | Other | | | | | | | | | 4 | | | | | | 7 | | 11 | |
| **Inspection Issues** | Probe lodged | | | | | | | | | | | | | | | | | 0 | **0** |
| | Data quality | | | | | | | | | | | | | | | | | 0 | |
| | Dent/geometry | | | | | | | | | | | | | | | | | 0 | |
| | Permeability | | | | | | | | | | | | | | | | | 0 | |
| | Not inspected | | | | | | | | | | | | | | | | | 0 | |
| **Other** | Top of tubesheet | | | | | 1 | | | | | | | | | | | | 1 | **1** |
| | Freespan | | | | | | | | | | | | | | | | | 0 | |
| | TSP | | | | | | | | | | | | | | | | | 0 | |
| | Other/not reported | | | | | | | | | | | | | | | | | 0 | |
| **SCC** | ID | | | | | | | | | | | 13 | | | | | | 13 | **13** |
| | OD | | | | | | | | | | | | | | | | | 0 | |
| | **TOTALS** | 20 | 0 | 0 | 8 | 5 | 4 | 11 | 4 | 13 | 0 | 13 | 0 | 3 | 0 | 12 | 0 | 93 | 93 |
| **Notes:** | | | | | | | | | | 1 | | 2 | | | | 3 | | | |

**Notes**

1. Three tubes had indications in the freespan attributed to laps and one tube had an indication attributed to a manufacturing anomaly.
2. Hot-leg tube end indications.
3. Seven tubes were plugged due to non-optimal tube processing.

## Table 3-12: Comanche Peak 2: Tubes Plugged for Indications Other Than AVB Wear

| STEAM GENERATOR A | | | | |
|---|---|---|---|---|
| Tube | Location | RFO # | Characterization | Stabilized |
| 4-109 | | 8 | Restriction | |
| 5-111 | 1C+0.14 | 8 | Manufacturing anomaly | |
| 33-54 | TEH+0.08 | 10 | SCC (SAI)—tube end (nonoptimal tube processing) | |
| 34-96 | TSH | 4 | Pit, manufacturing artifact, PLP | |
| 49-53 | 8H | 3 | CLP | |
| 49-54 | 8H | 3 | CLP | |

| STEAM GENERATOR B | | | | |
|---|---|---|---|---|
| Tube | Location | RFO # | Characterization | Stabilized |
| 1-21 | TEH+0.1 | 10 | SCC (SAI)—tube end | |
| 1-32 | TEH+0.35 | 10 | SCC (SAI)—tube end | |
| 1-44 | TEH+0.05 | 10 | SCC (SAI)—tube end | |
| 1-45 | TEH+0.08 | 10 | SCC (SAI)—tube end | |
| 1-74 | TEH+0.15 | 10 | SCC (SAI)—tube end | |
| 5-93 | TEH+0.14 | 10 | SCC (SAI)—tube end | |
| 7-15 | 10H+0.09 | 6 | PLP—14 percent wall thinning | N |
| 10-31 | TEH+0.03 | 10 | SCC (SAI)—tube end | |
| 12-23 | 6C+0.35 | 14 | PLP—10 percent wall thinning | Y |
| 12-24 | 6C+0.55 | 14 | PLP—19 percent wall thinning | Y |
| 13-23 | 6C+0.39 | 14 | PLP—6 percent wall thinning | Y |
| 14-67 | TSC | 3 | Restricted Tube | |
| 16-79 | 7C+8.84 | 8 | Freespan (manufacturing lap) | |
| 24-37 | 1H+0.43 | 6 | CLP—28 percent wall thinning | N |
| 36-59 | TSH+0.55 | 6 | CLP—9 percent wall thinning (part not removed) | Y |
| 43-32 | TSH+0.01 | 6 | PLP—28 percent wall thinning | N |

## Table 3-12: Comanche Peak 2: Tubes Plugged for Indications Other Than AVB Wear (cont'd)

| STEAM GENERATOR C | | | | |
|---|---|---|---|---|
| Tube | Location | RFO # | Characterization | Stabilized |
| 1-47 | TEH+0.11 | 10 | SCC (MCI)—tube end | |
| 1-48 | TEH+0.07 | 10 | SCC (MCI)—tube end | |
| 6-33 | 6C+0.41 | 8 | PLP—SVI (18% wall thinning) | Y |
| 6-80 | 11H+12.3 | 6 | PLP—46% wall thinning (at U-bend apex) | N |
| 7-33 | 6C+0.37 | 8 | PLP—SVI (22% wall thinning) | Y |
| 8-33 | 6C+0.49 | 6 | Preheater baffle wear (5% throughwall) – reclassified as loose part wear in RFO 8 | N |
| 9-33 | 6C+0.46 | 6 | Preheater baffle wear (6% throughwall) – reclassified as loose part wear in RFO 8 | N |
| 12-30 | 6C+0.49 | 6 | Preheater baffle wear (11% throughwall) | |
| 36-60 | TEH+0.08 | 10 | SCC (SAI)—tube end | |
| 37-55 | TSH+0.18 | 6 | PLP—44% wall thinning | N |
| 38-55 | TSH+0.43 | 6 | PLP—43% wall thinning | N |
| 38-56 | TSH+0.34 | 6 | PLP—26% wall thinning | N |
| 48-40 | 2C+0.57 | 8 | PLP—SVI (19% wall thinning) | N |
| 48-41 | 2C+0.39 | 8 | PLP—SVI (34% wall thinning) | N |

| STEAM GENERATOR D | | | | |
|---|---|---|---|---|
| Tube | Location | RFO # | Characterization | Stabilized |
| 1-30 | TEH+0.09 | 10 | SCC (SCI)—tube end | |
| 12-92 | 6C | 4 | PLP | |
| 20-106 | 10H | 4 | Restricted tube/dent | |
| 21-69 | TEH+0.11 | 10 | SCC (SCI)—tube end | |
| 24-89 | 8H+0.73 | 8 | Freespan (manufacturing lap) | |
| 27-74 | 1H+16.67 | 8 | Freespan (manufacturing lap) | |
| 36-59 | TTS | 4 | PLP | |
| 37-59 | TTS | 4 | PLP | |

## Table 3-13: Callaway: Summary of Bobbin Inspections and Tube Plugging (Thermally Treated Tubes Only)

| Outage | Completion Date | Cumul. EFPY | SG A | | | SG B | | | SG C | | | SG D | | | Total Plug | Total DePl | Cumul. Plugged | Percent Plugged | Notes |
|---|---|---|---|---|---|---|---|---|---|---|---|---|---|---|---|---|---|---|---|
| | | | Insp. | Plug | DePl | Insp. | Plug | DePl | Insp. | Plug | DePl | Insp. | Plug | DePl | | | | | |
| Pre-op | | | | 2 | | | 0 | | | 0 | | | 2 | | 4 | 0 | 4 | 0.08 | |
| RFO 1 | | | | | | | | | | | | | | | 0 | 0 | 4 | 0.08 | 1 |
| Mid-Cycle | 04/07/1987 | | | | | 243 | 0 | | 243 | 0 | | | | | 0 | 0 | 4 | 0.08 | 2 |
| RFO 2 | 10/02/1987 | | 728 | 1 | | | | | | | | 728 | 0 | | 1 | 0 | 5 | 0.10 | 3 |
| RFO 3 | 04/24/1989 | | | | | 1214 | 0 | | 1214 | 1 | | | | | 1 | 0 | 6 | 0.12 | |
| RFO 4 | 10/23/1990 | | 1211 | 0 | | | | | | | | 1212 | 0 | | 0 | 0 | 6 | 0.12 | |
| RFO 5 | 04/28/1992 | | | | | 1214 | 0 | | 1213 | 1 | | | | | 1 | 0 | 7 | 0.14 | |
| RFO 6 | 10/28/1993 | | 1211 | 0 | | | | | | | | 1212 | 0 | | 0 | 0 | 7 | 0.14 | |
| RFO 7 | 05/01/1995 | | | 0 | | 1214 | 2 | | 1212 | 1 | | | 1 | | 4 | 0 | 11 | 0.23 | 4 |
| RFO 8 | 11/11/1996 | | 1211 | 1 | | | 2 | | | 1 | | 1211 | 1 | | 5 | 0 | 16 | 0.33 | 4, 5 |
| RFO 9 | 04/01/1998 | | | 0 | | 1210 | 0 | | 1210 | 0 | | | 0 | | 0 | 0 | 16 | 0.33 | 4 |
| RFO 10 | 11/05/1999 | | 1210 | 0 | | | 0 | | | 0 | | 1210 | 0 | | 0 | 0 | 16 | 0.33 | 4, 6 |
| RFO 11 | 05/21/2001 | | | 0 | | 1210 | 0 | | 1210 | 1 | | | 0 | | 1 | 0 | 17 | 0.35 | 4 |
| RFO 12 | 11/21/2002 | | 1210 | 1 | | | 0 | | | 0 | | 1210 | 1 | | 2 | 0 | 19 | 0.39 | |
| RFO 13 | 06/09/2004 | | 1209 | 0 | | 1210 | 1 | | 1209 | 1 | | 1209 | 0 | | 2 | 0 | 21 | 0.43 | 7 |
| RFO 14 | 11/18/2005 | | | | | | | | | | | | | | 0 | 0 | 21 | 0.43 | 8 |
| | | | | | | | | | | | | | | | | | | | |
| | | Totals: | | 5 | 0 | | 5 | 0 | | 6 | 0 | | 5 | 0 | 21 | 0 | | | |

**Plant Data**
Model: F
T-hot (approximate): 618 °F
Tubes per steam generator: 5626 (1214 are TT)
Number of steam generators: 4

**Acronyms**
Pre-op = prior to operation
Cumul. = cumulative
Insp. = number of tubes inspected
Plug = number of tubes plugged
DePl = number of tubes deplugged
RFO = refueling outage
TT = thermally treated

**Notes**
1. Inspection reports for RFO 1 could not be readily located. Based on information contained in other reports, no TT tubes were plugged.
2. Assumed 20% of TT tubes were inspected since 20% of steam generator (SG) was inspected.
   Licensee elected to perform SG inspections during a planned maintenance outage.
3. Assumed 60% of TT tubes were inspected since 60% of steam generator was inspected.
4. Various portions of tubes in all steam generators were inspected with a rotating probe.
5. Three tubes were repaired with laser welded sleeves: 1 in steam generator A, 2 in steam generator C.
6. Three tubes in steam generator C were repaired by electrosleeving.
7. Some tubes were not inspected in the U-bend area with a bobbin coil. Some of these tubes were inspected in the U-bend area with a rotating probe.
8. During RFO 14, Callaway replaced their steam generators with Framatome steam generators containing thermally treated Alloy 690 tubes.

# Table 3-14: Callaway: Causes of Tube Plugging (Thermally Treated Tubes Only)

| Year | | | | 1987 | 1987 | 1989 | 1990 | 1992 | 1993 | 1995 | 1996 | 1998 | 1999 | 2001 | 2002 | 2004 | 2005 | | | |
|---|---|---|---|---|---|---|---|---|---|---|---|---|---|---|---|---|---|---|---|---|
| **Cause of Tube Plugging/Outage** | | **Pre-Op** | **RFO 1** | **Mid-Cycle** | **RFO 2** | **RFO 3** | **RFO 4** | **RFO 5** | **RFO 6** | **RFO 7** | **RFO 8** | **RFO 9** | **RFO 10** | **RFO 11** | **RFO 12** | **RFO 13** | **RFO 14** | | **Totals** | **Totals** |
| **Wear** | AVB | | | | | | | | | | | | | | | | | | 0 | **2** |
| | Preheater TSP (D5) | | | | | | | | | | | | | | | | | | 0 | |
| | TSP | | | | | | | | | | | | | | 2 | | | | 2 | |
| **Loose Parts** | Confirmed | | | | | | | | | | | | | | | | | | 0 | **2** |
| | Not confirmed, periphery | | | | | | | | | 2 | | | | | | | | | 2 | |
| | Not confirmed, not periphery | | | | | | | | | | | | | | | | | | 0 | |
| **Obstruction Restriction** | From PSI, no progression | | | | | | | | | | | | | | | | | | 0 | **0** |
| | Service-induced | | | | | | | | | | | | | | | | | | 0 | |
| **Manufacturing Flaws** | Preservice | 4 | | | | | | | | | | | | | | | | | 4 | **4** |
| | Other | | | | | | | | | | | | | | | | | | 0 | |
| **Inspection Issues** | Probe lodged | | | | | | | | | | | | | | | | | | 0 | **0** |
| | Data quality | | | | | | | | | | | | | | | | | | 0 | |
| | Dent/geometry | | | | | | | | | | | | | | | | | | 0 | |
| | Permeability | | | | | | | | | | | | | | | | | | 0 | |
| | Not inspected | | | | | | | | | | | | | | | | | | 0 | |
| **Other** | Top of tubesheet | | | | | | | | | | 3 | | | 1 | | | | | 4 | **13** |
| | Freespan | | | | | | | 1 | | 2 | 2 | | | | | | | | 5 | |
| | TSP | | | | 1 | 1 | | | | | | | | | | 2 | | | 4 | |
| | Other/not reported | | | | | | | | | | | | | | | | | | 0 | |
| **SCC** | ID | | | | | | | | | | | | | | | | | | 0 | **0** |
| | OD | | | | | | | | | | | | | | | | | | 0 | |
| | TOTALS | 4 | 0 | 0 | 1 | 1 | 0 | 1 | 0 | 4 | 5 | 0 | 0 | 1 | 2 | 2 | | | 21 | 21 |
| **Notes:** | | | | | | | | | | | 1 | | 2 | | | | 3 | | | |

**Notes**

1. Three thermally treated tubes were repaired by inserting laser welded sleeves. These tubes are not reflected in the totals.
2. Three thermally treated tubes were repaired by electrosleeving. These tubes are not reflected in the totals.
3. During RFO 14, Callaway replaced the steam generators with Framatome steam generators containing thermally treated Alloy 690 tubes.

## Table 3-15: Callaway: Tubes Plugged for Indications Other Than AVB Wear (Thermally Treated Tubes Only)

| STEAM GENERATOR A | | | | |
|---|---|---|---|---|
| Tube | Location | RFO # | Characterization | Stabilized |
| 1-34 | 1C-0.45<br>1C-0.47 | 12 | TSP wear (6% and 7% wall thinning) | N |
| 2-87 | TSH+3.47 | 8 | Single volumetric indication | N |
| 3-44 | 7H | 2 | 45% throughwall indication | |
| 8-115 | TSH-0.06 | 8 | Laser welded sleeve, single circumferential indication | |

| STEAM GENERATOR B | | | | |
|---|---|---|---|---|
| Tube | Location | RFO # | Characterization | Stabilized |
| 1-100 | TSH-0.11 | 8 | Single circumferential indication | Y |
| 1-119 | TSH+3.89 | 8 | Single volumetric indication | N |
| 1-120 | TSC+4.02 | 7 | 38% wall thinning, PLP | N |
| 1-121 | TSC+3.66 | 7 | 45% wall thinning, PLP | N |
| 4-1 | 6C-0.52 | 13 | Single volumetric indication | N |

## Table 3-15 Callaway: Tubes Plugged for Indications Other Than AVB Wear (cont'd) (Thermally Treated Tubes only)

| STEAM GENERATOR C | | | | |
|---|---|---|---|---|
| Tube | Location | RFO # | Characterization | Stabilized |
| 1-1 | 1C | 7 | Obstruction, damage because of chemical cleaning equipment | N |
| 1-5 | TSH+0.12 | 10 | 8″ Electrosleeve, single volumetric indication | |
| 1-35 | 1H-0.19 | 13 | Single volumetric indication | N |
| 2-6 | TSH+0.07 | 8 | Single axial indication | N |
| 2-10 | TSH-0.01 | 11 | Single axial indication | N |
| 2-98 | 7C+1.5 | 5 | Undefined indication 1.5 inches above 7th cold-leg tube support | |
| 4-11 | FBC | 3 | Single axial indication | |
| 9-64 | TSH+0.24 | 10 | 8″ Electrosleeve, single volumetric indication | |
| 10-48 | TSH+0.17 | 8 | Laser welded sleeve, single volumetric indication | |
| 10-70 | TSH-0.08 | 8 | Laser welded sleeve, single circumferential indication | |
| 10-93 | TSH+0.23 to 0.91 | 10 | 8″ Electrosleeve, single volumetric indication | |

| STEAM GENERATOR D | | | | |
|---|---|---|---|---|
| Tube | Location | RFO # | Characterization | Stabilized |
| 1-1 | TSC+17.25 | 7 | Dent, damage because of chemical cleaning equipment | N |
| 5-70 | 3C+0.50 | 12 | TSP wear (16% wall thinning) | N |
| 7-102 | TSH+0.18 | 8 | Single volumetric indication | N |

## Table 3-16: Millstone 3: Summary of Bobbin Inspections and Tube Plugging

| Outage | Completion Date | Cumul. EFPY | SG A | | | SG B | | | SG C | | | SG D | | | Total Plug | Total DePl | Cumul. Plugged | Percent Plugged | Notes |
|---|---|---|---|---|---|---|---|---|---|---|---|---|---|---|---|---|---|---|---|
| | | | Insp. | Plug | DePl | Insp. | Plug | DePl | Insp. | Plug | DePl | Insp. | Plug | DePl | | | | | |
| Pre-op | | | | 3 | | | 3 | | | 3 | | | 1 | | 10 | 0 | 10 | 0.04 | |
| RFO 1 | 11/24/1987 | 1.341 | 543 | 1 | | 501 | 0 | | 506 | 0 | | 504 | 1 | | 2 | 0 | 12 | 0.05 | |
| RFO 2 | 05/29/1989 | 2.420 | 2431 | 4 | | | | | 2358 | 0 | | | | | 4 | 0 | 16 | 0.07 | |
| RFO 3 | 02/21/1991 | 3.725 | | | | 3555 | 0 | | | | | 3546 | 5 | | 5 | 0 | 21 | 0.09 | |
| RFO 4 | 08/21/1993 | 5.188 | 4350 | 6 | | | | | 3660 | 1 | | | | | 7 | 0 | 28 | 0.12 | |
| RFO 5 | 05/09/1995 | 6.544 | | | | 4237 | 1 | | | | | 4236 | 10 | | 11 | 0 | 39 | 0.17 | |
| Mid-Cycle | 10/01/1996 | 7.309 | | | | | | | 5622 | 2 | | | | | 2 | 0 | 41 | 0.18 | 1 |
| RFO 6 | 05/17/1999 | 7.981 | 5612 | 12 | | | | | 5620 | 2 | | 42 | 0 | | 14 | 0 | 55 | 0.24 | |
| RFO 7 | 02/18/2001 | 9.561 | | | | 5622 | 0 | | | | | 5609 | 51 | | 51 | 0 | 106 | 0.47 | |
| RFO 8 | 09/22/2002 | 10.982 | 5600 | 8 | | | | | 5618 | 3 | | | | | 11 | 0 | 117 | 0.52 | 2 |
| RFO 9 | 04/17/2004 | 12.430 | | | | 5622 | 0 | | | | | 5558 | 10 | | 10 | 0 | 127 | 0.56 | 2 |
| RFO 10 | 10/12/2005 | 13.777 | 5592 | 2 | | | | | 5615 | 0 | | | | | 2 | 0 | 129 | 0.57 | 3 |
| RFO 11 | 04/24/2007 | 15.191 | | | | 5622 | 0 | | | | | 5548 | 4 | | 4 | 0 | 133 | 0.59 | 4 |
| RFO 12 | 10/31/2008 | 16.600 | 5590 | 2 | | | 12 | | 5615 | 11 | | | 1 | | 26 | 0 | 159 | 0.71 | 4, 5 |
| RFO 13 | 05/18/2010 | 17.900 | | | | 5610 | 4 | | | | | 5543 | 3 | | 7 | 0 | 166 | 0.74 | 4 |
| RFO 14 | 11/22/2011 | 19.300 | 5588 | 11 | | | | | 5604 | 0 | | | | | 11 | 0 | 177 | 0.79 | 4 |
| RFO 15 | 05/17/2013 | 20.700 | | | | 5606 | 5 | | | | | 5540 | 5 | | 10 | 0 | 187 | 0.83 | 4 |
| | | | | | | | | | | | | | | | | | | | |
| | | | | | | | | | | | | | | | | | | | |
| | | **Totals:** | | 49 | 0 | | 25 | 0 | | 22 | 0 | | 91 | 0 | 187 | 0 | | | |

**Plant Data**
Model: F
T-hot (approximate): 622 °F
Tubes per steam generator: 5626
Number of steam generators: 4

**Acronyms**
Pre-op = prior to operation
Cumul. = cumulative
Insp. = number of tubes inspected
Plug = number of tubes plugged
DePl = number of tubes deplugged
RFO = refueling outage

**Notes**
1. Licensee elected to perform steam generator tube inspections during an extended shutdown period.
2. The U-bend region of some row 1 tubes was not inspected with a bobbin probe. The U-bend region of 50% of the row 1 and row 2 tubes were inspected with a rotating probe.
3. The U-bend region of the row 1 and row 2 tubes was not inspected with a bobbin probe. The U-bend region of 80% of the row 1 and row 2 tubes were inspected with a rotating probe.
4. The U-bend region of the row 1 and row 2 tubes was not inspected with a bobbin probe. The U-bend region of 100% of the row 1 and row 2 tubes were inspected with a rotating probe.
5. The tube-ends in steam generators B and D were examined with a rotating probe.

# Table 3-17: Millstone 3: Causes of Tube Plugging

| Cause of Tube Plugging/Outage | Year | Pre-Op | 1987 RFO 1 | 1989 RFO 2 | 1991 RFO 3 | 1993 RFO 4 | 1995 RFO 5 | 1996 Mid-Cyc. | 1999 RFO 6 | 2001 RFO 7 | 2002 RFO 8 | 2004 RFO 9 | 2005 RFO 10 | 2007 RFO 11 | 2008 RFO 12 | 2010 RFO 13 | 2011 RFO 14 | 2013 RFO 15 | | Totals | Totals |
|---|---|---|---|---|---|---|---|---|---|---|---|---|---|---|---|---|---|---|---|---|---|
| Wear | AVB | | 2 | 3 | 5 | 7 | 11 | 2 | 13 | 15 | 7 | 1 | 2 | 2 | 1 | 1 | 3 | | | 75 | 84 |
| | Preheater TSP (D5) | | | | | | | | | | | | | | | | | | | 0 | |
| | TSP | | | | | | | | | | | | | | | | | 9 | | 9 | |
| Loose Parts | Confirmed | | | | | | | | | | 1 | 2 | | 2 | 2 | 2 | | | | 9 | 28 |
| | Not confirmed, periphery | | | | | | | | 1 | 6 | 2 | 5 | | | | 2 | | | | 16 | |
| | Not confirmed, not periphery | | | | | | | | | 1 | | | | | | 1 | 1 | | | 3 | |
| Obstruction Restriction | From PSI, no progression | | | | | | | | | | | | | | | | | 1 | | 1 | 2 |
| | Service Induced | | | | | | | | | | 1 | | | | | | | | | 1 | |
| Manufacturing Flaws | Preservice | 10 | | | | | | | | | | | | | | | | | | 10 | 19 |
| | Other | | | | | | | | | | | 2 | | | | | 7 | | | 9 | |
| Inspection Issues | Probe lodged | | | | | | | | | | | | | | | | | | | 0 | 1 |
| | Data quality | | | | | | | | | | | | | | | 1 | | | | 1 | |
| | Dent/geometry | | | | | | | | | | | | | | | | | | | 0 | |
| | Permeability | | | | | | | | | | | | | | | | | | | 0 | |
| | Not inspected | | | | | | | | | | | | | | | | | | | 0 | |
| Other | Top of tubesheet | | | | | | | | | 13 | | | | | | | | | | 13 | 30 |
| | Freespan | | | 1 | | | | | | 3 | | | | | | | | | | 4 | |
| | TSP | | | | | | | | | 13 | | | | | | | | | | 13 | |
| | Other/not reported | | | | | | | | | | | | | | | | | | | 0 | |
| SCC | ID | | | | | | | | | | | | | | 23 | | | | | 23 | 23 |
| | OD | | | | | | | | | | | | | | | | | | | 0 | |
| | TOTALS | 10 | 2 | 4 | 5 | 7 | 11 | 2 | 14 | 51 | 11 | 10 | 2 | 4 | 26 | 7 | 11 | 10 | 0 | 187 | 187 |
| Notes: | | | | | | | | | | 1 | | 2 | | | 3 | | 4 | | | | |

**Notes**

1. One tube had both a volumetric indication at the top of the tubesheet and an AVB wear indication. The tube was included under "Other, Top of Tubesheet."
2. Two tubes plugged due to degradation attributed to hand-hole installation during fabrication.
3. All SCC indications are near the tube-end.
4. Seven tubes were plugged since the bottom of the expansion transition is greater than 1-inch below the top of the tubesheet.

## Table 3-18: Millstone 3: Tubes Plugged for Indications Other Than AVB Wear

| STEAM GENERATOR A | | | | |
|---|---|---|---|---|
| Tube | Location | RFO # | Characterization | Stabilized |
| | | 14 | 7 tubes plugged since bottom of expansion transition greater than 2.54 cm (1 in.) below top of tubesheet | |
| 1-122 | 8H+10.56 | 2 | 36% throughwall, distorted eddy current signal | |
| 4-122 | TSH+0.65 | 8 | Loose part wear—47% wall thinning | N |
| 5-122 | TSH+0.54<br>TSH+1.01<br>TSH+1.66 | 12 | CLP—42% wall thinning | |
| 10-116 | TSH+0.26 | 8 | Loose part wear—64% wall thinning | N |
| 20-6 | TSH+0.07 | 6 | Volumetric—possible loose part | |
| 46-83 | 6C-0.59 | 14 | PLP—22% wall thinning (not periphery) | Y |

| STEAM GENERATOR B | | | | |
|---|---|---|---|---|
| Tube | Location | RFO # | Characterization | Stabilized |
| 2-93 | 5C-0.64 | 15 | TSP wear—33% wall thinning | |
| 3-113 | 5C-1.17 | 13 | PLP—13% wall thinning (periphery) | |
| 3-114 | 5C-0.56<br>5C-0.80 | 13 | PLP—18% and 33% wall thinning (periphery) | |
| 5-53 | TEH+0.02 | 12 | PWSCC (SCI)—near tube end | |
| 6-61 | TEH+0.10 | 12 | PWSCC (MCI)—near tube end | |
| 6-63 | TEH+0.06 | 12 | PWSCC (MCI)—near tube end | |
| 7-48 | TEH+0.08 | 12 | PWSCC (MCI)—near tube end | |
| 7-78 | TEH+0.07 | 12 | PWSCC (SCI)—near tube end | |
| 9-77 | TEH+0.06 | 12 | PWSCC (SCI)—near tube end | |
| 10-81 | TEH+0.06 | 12 | PWSCC (MCI)—near tube end | |
| 11-73 | TEH+0.08 | 12 | PWSCC (MCI)—near tube end | |
| 16-71 | TEH+0.06 | 12 | PWSCC (SCI)—near tube end | |
| 22-80 | 8C-0.99 | 15 | TSP wear—47% wall thinning | |
| 27-70 | TEH+0.04 | 12 | PWSCC (MCI)—near tube end | |
| 27-92 | 5H-0.71 | 15 | TSP wear—18% wall thinning | |
| 27-93 | 5H-0.63<br>5H-0.64 | 15 | TSP wear—30% and 11% wall thinning | |
| 31-67 | 8C-0.98 | 15 | TSP wear—24% wall thinning | |
| 37-68 | 3H-0.54 | 13 | PLP—31% wall thinning (not periphery) | |
| 38-47 | TEH+0.09 | 12 | PWSCC (SCI)—near tube end | |
| 40-69 | TEH+0.06 | 12 | PWSCC (SCI)—near tube end | |

## Table 3-18: Millstone 3: Tubes Plugged for Indications Other Than AVB Wear (cont'd)

| STEAM GENERATOR C | | | | |
|---|---|---|---|---|
| Tube | Location | RFO # | Characterization | Stabilized |
| 1-4 | TSC+2.86 | 8 | CLP—16% wall thinning (part could not be retrieved) | Y |
| 1-56 | TEH+0.06<br>TEH+0.13 | 12 | PWSCC (SCI + SAI)—near tube end | |
| 1-68 | TEH+0.07<br>TEH+0.08 | 12 | PWSCC (MCI)—near tube end | |
| 1-78 | TEH+0.05<br>TEH+0.07 | 12 | PWSCC (MCI)—near tube end | |
| 1-79 | TEH+0.09<br>TEH+0.15<br>TEH+0.19 | 12 | PWSCC (SCI + MAI)—near tube end | |
| 1-87 | TEH+0.09<br>TEH+0.09 | 12 | PWSCC (SCI + SAI)—near tube end | |
| 1-92 | TEH+0.05<br>TEH+0.07 | 12 | PWSCC (SCI + SAI)—near tube end | |
| 1-93 | TEH+0.08 | 12 | PWSCC (MCI)—near tube end | |
| 1-95 | TEH+0.07 | 12 | PWSCC (SCI)—near tube end | |
| 1-96 | TEH+0.06 | 12 | PWSCC (SCI)—near tube end | |
| 1-115 | TEC+7.29 | 8 | Obstruction | N |
| 16-90 | TEH+0.54 | 12 | PWSCC (MCI)—near tube end | |
| 54-65 | TSH+0.13 | 12 | CLP—41% wall thinning | |

## Table 3-18: Millstone 3: Tubes Plugged for Indications Other Than AVB Wear (cont'd)

| STEAM GENERATOR D | | | | |
|---|---|---|---|---|
| Tube | Location | RFO # | Characterization | Stabilized |
| | | 13 | Inside diameter (ID) chatter (noise) | |
| 1-1 | 8H+1.63 | 9 | Attributed to handhole installation during fabrication – 29% wall thinning | |
| 1-50 | U-bend | 15 | Restriction | |
| 1-119 | TSH+13.94 | 7 | Volumetric | N |
| 1-120 | TSH+14.11 | 7 | Volumetric | N |
| 1-121 | TSH+14.09 | 7 | Volumetric | N |
| 5-1 | 8H+4.13 | 9 | Attributed to handhole installation during fabrication – 54% wall thinning | |
| 6-47 | TEH+0.43 | 12 | PWSCC (MCI)—near tube end | |
| 9-42 | 6C-0.74 | 13 | CLP—41% wall thinning | |
| 15-18 | TSH+0.27 | 7 | Possible loose part (not in periphery of bundle) | N |
| 26-98 | 8C-0.94 | 15 | TSP wear—27% wall thinning | |
| 35-23 | TSH+0.09 | 7 | Volumetric—possibly manufacturing related | N |
| 37-23 | TSH+0.15 | 7 | Volumetric—possibly manufacturing related | N |
| 37-24 | TSH+0.15 | 7 | Volumetric—possibly manufacturing related | N |
| 38-107 | 1C+1.45 | 7 | Volumetric—possible loose part | N |
| 39-107 | 1C+1.52 | 7 | Volumetric—possible loose part | N |
| 41-56 | 6H-0.83 | 15 | TSP wear—24% wall thinning | |
| 42-23 | TSH+0.16 | 7 | Volumetric—possibly manufacturing related | N |
| 43-23 | TSH+0.11 | 7 | Volumetric—possible manufacturing related and AVB Wear | N |
| 43-24 | TSH+0.14 | 7 | Volumetric—possibly manufacturing related | N |
| 44-23 | TSH+0.13 | 7 | Volumetric—possibly manufacturing related | N |
| 44-24 | TSH+0.14 | 7 | Volumetric—possibly manufacturing related | N |
| 44-85 | 8C-0.90 | 15 | TSP wear—23% wall thinning | |
| 44-89 | 8C-0.62 | 15 | TSP wear—45% wall thinning | |
| 45-23 | TSH+0.15 | 7 | Volumetric—possibly manufacturing related | N |
| 45-24 | TSH+0.13 | 7 | Volumetric—possibly manufacturing related | N |
| 50-33 | 1H+0.53 | 9 | Loose part wear—26% wall thinning | N |
| 50-34 | 1H+0.45 | 9 | PLP | N |
| 51-32 | 1H+0.48 | 9 | PLP | N |
| 51-33 | 1H+0.48 | 9 | PLP—25% wall thinning | N |
| 51-34 | 1H+0.49 | 9 | Loose part wear—16% wall thinning | N |
| 52-43 | 1H+0.53 | 13 | CLP—52% wall thinning | |
| 52-53 | TSC+0.81 | 7 | Volumetric (not in periphery of bundle) | N |
| 52-54 | TSC+0.25 | 7 | Volumetric (not in periphery of bundle) | N |

## Table 3-18: Millstone 3: Tubes Plugged for Indications Other Than AVB Wear (cont'd)

| STEAM GENERATOR D | | | | |
|---|---|---|---|---|
| Tube | Location | RFO # | Characterization | Stabilized |
| 52-61 | TSH-0.05<br>TSH-0.04 | 9 | CLP—48% wall thinning (part removed) | |
| 52-79 | 1C+0.79<br>1C+0.85 | 11 | CLP—25% wall thinning (part removed) | |
| 53-54 | TSC+0.01 | 7 | Volumetric (not in periphery of bundle) | N |
| 53-61 | TSH-0.01 | 9 | CLP—86% wall thinning (part removed) | |
| 53-79 | 1C+0.9 | 7 | Volumetric—possible loose part | N |
| 53-80 | 1C+0.34<br>1C+0.38 | 11 | CLP—47% wall thinning (part removed) | |
| 54-45 | 1C+0.5 | 7 | Volumetric | N |
| 54-79 | 1C+0.51 | 7 | Possible loose part | N |
| 54-80 | 1C+0.43 | 7 | Volumetric—possible loose part | N |
| 54-81 | 1C+0.48 | 7 | Possible loose part | N |
| 55-45 | 1C+0.58 | 7 | Volumetric | N |
| 55-46 | 1C+0.77 | 7 | Volumetric | N |
| 57-74 | 1C+1.01 | 7 | Volumetric—possible loose part | N |
| 57-75 | 1C+0.58 | 7 | Possible loose part | N |
| 57-79 | 1H+0.91 | 7 | Volumetric—possible loose part | N |
| 58-54 | 1C+0.56 | 7 | Volumetric | N |
| 58-55 | 1C+0.70 | 7 | Volumetric—possible loose part | N |
| 58-56 | 1C+0.69 | 7 | Volumetric | N |
| 58-74 | | 7 | Possible loose part | N |
| 58-75 | 1C+0.64 | 7 | Volumetric—possible loose part | N |
| 59-55 | 1C+0.68 | 7 | Possible loose part | N |
| 59-56 | 1C+0.61 | 7 | Possible loose part | N |

## Table 3-19: Seabrook: Summary of Bobbin Inspections and Tube Plugging

| Outage | Completion Date | Cumul. EFPY | SG A | | | SG B | | | SG C | | | SG D | | | Total Plug | Total DePl | Cumul. Plugged | Percent Plugged | Notes |
|---|---|---|---|---|---|---|---|---|---|---|---|---|---|---|---|---|---|---|---|
| | | | Insp. | Plug | DePl | Insp. | Plug | DePl | Insp. | Plug | DePl | Insp. | Plug | DePl | | | | | |
| Pre-op | | | | 4 | | | 4 | | | 5 | | | 0 | | 13 | 0 | 13 | 0.06 | 1 |
| RFO 1 | 08/28/1991 | 0.91 | 1797 | 0 | | 1761 | 1 | | 1747 | 8 | | 1884 | 1 | | 10 | 0 | 23 | 0.10 | |
| RFO 2 | 10/01/1992 | 1.79 | 2409 | 0 | | | | | | | | 2400 | 0 | | 0 | 0 | 23 | 0.10 | |
| RFO 3 | 05/12/1994 | 2.99 | | | | 2327 | 1 | | 2337 | 0 | | | | | 1 | 0 | 24 | 0.11 | |
| RFO 4 | 11/27/1995 | 4.20 | 2424 | 8 | | | | | | | | 2443 | 4 | | 12 | 0 | 36 | 0.16 | |
| RFO 5 | 06/10/1997 | 5.58 | | | | 5620 | 9 | | 5613 | 4 | | | | | 13 | 0 | 49 | 0.22 | |
| RFO 6 | 04/20/1999 | 7.07 | 5614 | 5 | | | | | | | | 5621 | 20 | | 25 | 0 | 74 | 0.33 | |
| RFO 7 | 11/09/2000 | 8.47 | | | | 5611 | 7 | | 5609 | 9 | | | | | 16 | 0 | 90 | 0.40 | |
| RFO 8 | 05/24/2002 | 9.71 | 5609 | 13 | | 5604 | 0 | | 5600 | 0 | | 5601 | 22 | | 35 | 0 | 125 | 0.56 | 2 |
| RFO 9 | 10/29/2003 | 11.00 | 5596 | 1 | | 5604 | 1 | | 5600 | 2 | | 5579 | 11 | | 15 | 0 | 140 | 0.62 | 3 |
| RFO 10 | 04/30/2005 | 12.40 | | | | | | | | | | | | | 0 | 0 | 140 | 0.62 | |
| RFO 11 | 10/18/2006 | 13.80 | 5595 | 0 | | 5603 | 1 | | 5598 | 18 | | 5568 | 2 | | 21 | 0 | 161 | 0.72 | 4 |
| RFO 12 | 05/07/2008 | 15.20 | | | | | | | | | | | | | 0 | 0 | 161 | 0.72 | |
| RFO 13 | 11/09/2009 | 16.53 | 5595 | 3 | | 5602 | 1 | | 5580 | 4 | | 5566 | 4 | | 12 | 0 | 173 | 0.77 | 2 |
| RFO 14 | 05/22/2011 | 17.84 | | | | | | | | | | | | | 0 | 0 | 173 | 0.77 | 5 |
| RFO 15 | 10/29/2012 | 18.95 | 5592 | 3 | | 5601 | 2 | | 5576 | 3 | | 5562 | 1 | | 9 | 0 | 182 | 0.81 | 2 |
| RFO 16 | 04/23/2014 | 20.36 | 1125 | 0 | | 5599 | 0 | | 1125 | 3 | | 1125 | 0 | | 3 | 0 | 185 | 0.82 | 6 |
| | | | | | | | | | | | | | | | | | | | |
| | | | | | | | | | | | | | | | | | | | |
| | | **Totals:** | | 37 | 0 | | 27 | 0 | | 56 | 0 | | 65 | 0 | 185 | 0 | | | |

**Plant Data**

Model: F
T-hot (approximate): 621 °F since 2005 (618 °F prior to 2005)
Tubes per steam generator: 5626
Number of steam generators: 4

**Acronyms**

Pre-op = prior to operation
Cumul. = cumulative
Insp. = number of tubes inspected
Plug = number of tubes plugged
DePl = number of tubes deplugged
RFO = refueling outage

**Notes**

1. Based on data contained in RFO 4 reports.
2. The U-bend region of the row 1 and row 2 tubes was not inspected with a bobbin probe. The U-bend region of 50% of the row 1 and 2 tubes was inspected with a rotating probe.
3. The U-bend region of the row 1 and row 2 tubes was not inspected with a bobbin probe. The U-bend region of 20% of the row 1 and 2 tubes was inspected with a rotating probe.
4. The U-bend region of the row 1 and row 2 tubes was not inspected with a bobbin probe. The U-bend region of 30% of the row 1 and 2 tubes was inspected with a rotating probe.
5. Only rotating probe inspections were performed at the top of the tubesheet on the hot-leg side of the steam generator.
6. The U-bend region of the row 1 and row 2 tubes was not inspected with a bobbin probe.

# Table 3-20: Seabrook: Causes of Tube Plugging

| Year | | | 1991 | 1992 | 1994 | 1995 | 1997 | 1999 | 2000 | 2002 | 2003 | 2005 | 2006 | 2008 | 2009 | 2011 | 2012 | 2014 | | | |
|---|---|---|---|---|---|---|---|---|---|---|---|---|---|---|---|---|---|---|---|---|---|
| **Cause of Tube Plugging/Outage** | | **Pre-Op** | **RFO 1** | **RFO 2** | **RFO 3** | **RFO 4** | **RFO 5** | **RFO 6** | **RFO 7** | **RFO 8** | **RFO 9** | **RFO 10** | **RFO 11** | **RFO 12** | **RFO 13** | **RFO 14** | **RFO 15** | **RFO 16** | | **Totals** | **Totals** |
| **Wear** | AVB | | 4 | | 1 | 12 | 7 | 25 | 13 | 11 | 9 | | 3 | | 11 | | 6 | 3 | | 105 | **105** |
| | Preheater TSP (D5) | | | | | | | | | | | | | | | | | | | 0 | |
| | TSP | | | | | | | | | | | | | | | | | | | 0 | |
| **Loose Parts** | Confirmed | | 4 | | | | 4 | | | | | | | | | | | | | 8 | **39** |
| | Not confirmed, periphery | | | | | | | | 1 | 9 | | | 16 | | | | | | | 26 | |
| | Not confirmed, not periphery | | | | | | 2 | | 2 | | | | 1 | | | | | | | 5 | |
| **Obstruction Restriction** | From PSI, no progression | | | | | | | | | | | | | | | | | | | 0 | **0** |
| | Service-induced | | | | | | | | | | | | | | | | | | | 0 | |
| **Manufacturing Flaws** | Preservice | 13 | | | | | | | | | | | | | | | | | | 13 | **17** |
| | Other | | | | | | | | | | 3 | | 1 | | | | | | | 4 | |
| **Inspection Issues** | Probe lodged | | | | | | | | | | | | | | | | 1 | | | 1 | **1** |
| | Data quality | | | | | | | | | | | | | | | | | | | 0 | |
| | Dent/geometry | | | | | | | | | | | | | | | | | | | 0 | |
| | Permeability | | | | | | | | | | | | | | | | | | | 0 | |
| | Not inspected | | | | | | | | | | | | | | | | | | | 0 | |
| **Other** | Top of tubesheet | | | | | | | | | | | | | | | | | | | 0 | **2** |
| | Freespan | | 2 | | | | | | | | | | | | | | | | | 2 | |
| | TSP | | | | | | | | | | | | | | | | | | | 0 | |
| | Other/not reported | | | | | | | | | | | | | | | | | | | 0 | |
| **SCC** | ID | | | | | | | | | | | | | | | | | | | 0 | **21** |
| | OD | | | | | | | | | 15 | 3 | | | | 1 | | 2 | | | 21 | |
| | **TOTALS** | 13 | 10 | 0 | 1 | 12 | 13 | 25 | 16 | 35 | 15 | 0 | 21 | 0 | 12 | 0 | 9 | 3 | 0 | 185 | 185 |
| **Notes:** | | | | | | | | | | 1 | 2 | | 3 | | 4 | | 5 | | | | |

**Notes**

1. Fifteen low row tubes with crack-like indications at tube support plates (non-optimal tube processing).
2. Three low row (stress relieved in the U-bend) tubes were preventatively plugged and three low row tubes with crack-like indications at tube support plates (all tubes have non-optimal tube processing).
3. One high row (non-stress relieved in the U-bend) tube was plugged due to non-optimal tube processing.
4. One tube was plugged for axially oriented ODSCC at the expansion transtion.
5. Two tubes were plugged for axially oriented ODSCC (one at dented HL TSP elevation, one in freespan on hot-leg side of steam generator). One tube was plugged for a lodged probe head in a row 1 tube.

## Table 3-21: Seabrook: Tubes Plugged for Indications Other Than AVB Wear

| STEAM GENERATOR A | | | | |
|---|---|---|---|---|
| Tube | Location | RFO # | Characterization | Stabilized |
| 5-1 | | 8 | Preventative—surround a tube/tubes affected by a PLP | N |
| 5-2 | | 8 | Preventative—surround a tube/tubes affected by a PLP | N |
| 5-3 | | 8 | Preventative—surround a tube/tubes affected by a PLP | N |
| 6-1 | | 8 | Preventative—surround a tube/tubes affected by a PLP | N |
| 6-2 | 5H+1.39 | 8 | PLP with associated tube wear | N |
| 6-3 | | 8 | Preventative—surround a tube/tubes affected by a PLP | N |
| 7-2 | 5H+1.39 | 8 | PLP | N |
| 7-3 | | 8 | Preventative—surround a tube/tubes affected by a PLP | N |

| STEAM GENERATOR B | | | | |
|---|---|---|---|---|
| Tube | Location | RFO # | Characterization | Stabilized |
| 1-116 | U-bend tangent | 15 | Probe head lodged in tube | |
| 4-122 | 1H+5.83<br>1H+10.42<br>1H+11.53 | 15 | SCC—Axial ODSCC in freespan | |
| 27-24 | FS (6H) | 1 | 37% throughwall, high wall loss indication—MBM | |
| 29-97 | | 11 | Preventative—high residual stress | |
| 43-97 | TSH | 5 | Confirmed loose part—part not removed | |
| 43-98 | TSH | 5 | Confirmed loose part—part not removed | |
| 43-99 | TSH | 5 | Confirmed loose part—part not removed | |
| 43-100 | TSH | 5 | Confirmed loose part—part not removed | |

## Table 3-21: Seabrook: Tubes Plugged for Indications Other Than AVB Wear (cont'd)

| STEAM GENERATOR C | | | | |
|---|---|---|---|---|
| Tube | Location | RFO # | Characterization | Stabilized |
| 1-11 | TSH + 19.06 | 7 | Volumetric—possible loose part | |
| 11-120 | FS (7C) | 1 | High wall loss | |
| 18-116 | 8H-0.24 | 15 | SCC (SAI)—ODSCC at dent | |
| 22-12 | 5C | 5 | Volumetric—possible loose part (not in periphery of bundle) | |
| 22-13 | 5C | 5 | Volumetric—possible loose part (not in periphery of bundle) | |
| 27-61 | TSH-0.26 | 13 | SCC (SAI)—ODSCC at expansion transition | |
| 31-12 | | 1 | Confirmed loose part—part not removed | |
| 31-13 | | 1 | Confirmed loose part—part not removed | |
| 32-12 | | 1 | Confirmed loose part—part not removed | |
| 32-13 | | 1 | Confirmed loose part—part not removed | |
| 43-28 | TSH + 0.04 | 7 | Volumetric—possible loose part (not in periphery of bundle) | |
| 44-28 | TSH + 0.06 | 7 | Possible loose part (not in periphery of bundle) | |
| 57-53 | | 11 | Preventative—surround a tube/tubes affected by a PLP | N |
| 57-54 | | 11 | Preventative—surround a tube/tubes affected by a PLP | N |
| 57-55 | | 11 | PLP | N |
| 57-56 | | 11 | Preventative—surround a tube/tubes affected by a PLP | N |
| 57-57 | | 11 | Preventative—surround a tube/tubes affected by a PLP | N |
| 57-58 | | 11 | Preventative—surround a tube/tubes affected by a PLP | N |
| 58-53 | | 11 | Preventative—surround a tube/tubes affected by a PLP | N |
| 58-54 | 1C+0.51 | 11 | PLP—39% wall thinning (location could not be accessed) | N |
| 58-55 | | 11 | PLP | N |
| 58-56 | | 11 | PLP | N |
| 58-57 | | 11 | PLP | N |
| 58-58 | | 11 | Preventative—surround a tube/tubes affected by a PLP | N |
| 59-55 | | 11 | PLP | N |
| 59-56 | | 11 | PLP | N |
| 59-57 | 1C | 11 | PLP—48% wall thinning (location could not be accessed) | N |
| 59-58 | | 11 | Preventative—surround a tube/tubes affected by a PLP | N |

## Table 3-21: Seabrook: Tubes Plugged for Indications Other Than AVB Wear (cont'd)

| STEAM GENERATOR D | | | | |
|---|---|---|---|---|
| Tube | Location | RFO # | Characterization | Stabilized |
| 4-63 | 2H, 3H, 4H | 8 | ODSCC (Axial)—nonoptimal tube processing | |
| 4-64 | 2H+0.10<br>3H-0.08<br>5H-0.31 | 9 | ODSCC (Axial)—nonoptimal tube processing | |
| 4-65 | 2H, 3H, 4H, 6H | 8 | ODSCC (Axial)—nonoptimal tube processing | |
| 5-62 | 3H, 4H, 5H, 3C | 8 | ODSCC (Axial)—nonoptimal tube processing – pulled tube (hot leg) | |
| 5-80 | 3H, 4H, 3C | 8 | ODSCC (Axial)—nonoptimal tube processing | |
| 5-81 | 3H, 4H, 6H | 8 | ODSCC (Axial)—nonoptimal tube processing | |
| 5-82 | 3H, 4H, 5C | 8 | ODSCC (Axial)—nonoptimal tube processing | |
| 5-83 | 2H, 4H, 3C, 5C | 8 | ODSCC (Axial)—nonoptimal tube processing | |
| 5-86 | 2H, 3H | 8 | ODSCC (Axial)—nonoptimal tube processing | |
| 5-87 | 4H+0.14 | 9 | ODSCC (Axial)—nonoptimal tube processing | |
| 5-88 | 3H | 8 | ODSCC (Axial)—nonoptimal tube processing | |
| 6-81 | 3H | 8 | ODSCC (Axial)—nonoptimal tube processing | |
| 6-85 | 3H | 8 | ODSCC (Axial)—nonoptimal tube processing | |
| 7-91 | | 9 | Preventative—High residual stress | |
| 9-24 | 3H, 4H | 8 | ODSCC (Axial)—nonoptimal tube processing | |
| 9-25 | 2H-0.18<br>3H+0.03<br>4H+0.25 | 9 | ODSCC (Axial)—nonoptimal tube processing | |
| 9-26 | 3H, 4H | 8 | ODSCC (Axial)—nonoptimal tube processing | |
| 9-28 | | 9 | Preventative—High residual stress | |
| 9-62 | 2H, 3H, 4H, 5H, 6H | 8 | ODSCC (Axial)—nonoptimal tube processing | |
| 9-63 | 3H, 4H, 5H, 4C | 8 | ODSCC (Axial)—nonoptimal tube processing – pulled tube (cold leg) | |
| 10-22 | | 9 | Preventative—High residual stress | |
| 11-102 | 6C-0.74 | 11 | 40% wall thinning attributed to a "transient" loose part | |
| 13-3 | 1C+0.19 | 8 | PLP—46% wall thinning (part may have been removed during sludge lancing) | |

## Table 3-22: Vogtle 1: Summary of Bobbin Inspections and Tube Plugging

| Outage | Completion Date | Cumul. EFPY | SG A | | | SG B | | | SG C | | | SG D | | | Total Plug | Total DePl | Cumul. Plugged | Percent Plugged | Notes |
|---|---|---|---|---|---|---|---|---|---|---|---|---|---|---|---|---|---|---|---|
| | | | Insp. | Plug | DePl | Insp. | Plug | DePl | Insp. | Plug | DePl | Insp. | Plug | DePl | | | | | |
| Pre-op | | | | 0 | | | 0 | | | 2 | | | 4 | | 6 | 0 | 6 | 0.03 | |
| RFO 1 | 10/22/1988 | 1.14 | 754 | 1 | | | | | | | | 821 | 0 | | 1 | 0 | 7 | 0.03 | |
| RFO 2 | 03/11/1990 | 2.28 | 1514 | 0 | | 2357 | 4 | | 2403 | 0 | | 1471 | 0 | | 4 | 0 | 11 | 0.05 | |
| RFO 3 | 10/08/1991 | 3.61 | 1067 | 0 | | 1050 | 0 | | 1078 | 0 | | 1011 | 0 | | 0 | 0 | 11 | 0.05 | |
| RFO 4 | 04/03/1993 | 4.85 | | | | 2951 | 0 | | 2934 | 4 | | | | | 4 | 0 | 15 | 0.07 | |
| RFO 5 | 10/01/1994 | 6.17 | 4224 | 0 | | 4213 | 4 | | 4231 | 5 | | 4220 | 3 | | 12 | 0 | 27 | 0.12 | |
| RFO 6 | 03/22/1996 | 7.52 | 3387 | 4 | | | | | | | | 3395 | 0 | | 4 | 0 | 31 | 0.14 | |
| RFO 7 | 10/05/1997 | 8.78 | | | | 5618 | 3 | | 5615 | 6 | | 5619 | 6 | | 15 | 0 | 46 | 0.20 | |
| RFO 8 | 03/15/1999 | 10.11 | 5621 | 0 | | | | | | | | 5613 | 0 | | 0 | 0 | 46 | 0.20 | |
| RFO 9 | 10/11/2000 | 11.57 | | | | 5615 | 0 | | 5609 | 2 | | | | | 2 | 0 | 48 | 0.21 | |
| RFO 10 | 03/27/2002 | 12.93 | 5621 | 1 | | | | | | | | 5613 | 1 | | 2 | 0 | 50 | 0.22 | 1 |
| RFO 11 | 10/14/2003 | 14.33 | | | | 5615 | 0 | | 5607 | 3 | | | | | 3 | 0 | 53 | 0.24 | 2 |
| RFO 12 | 04/02/2005 | 15.68 | 5620 | 0 | | | | | | | | 5612 | 2 | | 2 | 0 | 55 | 0.24 | 2 |
| RFO 13 | 10/25/2006 | 17.08 | | 3 | | 5615 | 3 | | 5604 | 3 | | | 10 | | 19 | 0 | 74 | 0.33 | 2, 3 |
| RFO 14 | 04/20/2008 | 18.4 | 5617 | 6 | | | 1 | | | 3 | | 5600 | 37 | | 47 | 0 | 121 | 0.54 | 2, 4 |
| RFO 15 | 10/17/2009 | 19.8 | | 12 | | 5611 | 4 | | 5598 | 5 | | 50 | 4 | | 25 | 0 | 146 | 0.65 | 5,6,7 |
| RFO 16 | 03/31/2011 | 21.2 | 5599 | 1 | | | | | | | | 5559 | 1 | | 2 | 0 | 148 | 0.66 | 5,6 |
| RFO 17 | 10/17/2012 | 22.6 | | | | 5607 | 2 | | 5593 | 1 | | | | | 3 | 0 | 151 | 0.67 | 5,6 |
| RFO 18 | 04/11/2014 | 24 | 5598 | 0 | | | 0 | | | 0 | | 5558 | 10 | | 10 | 0 | 161 | 0.72 | 5,6 |
| | | | | | | | | | | | | | | | | | | | |
| | | | | | | | | | | | | | | | | | | | |
| | | **Totals:** | | 28 | 0 | | 21 | 0 | | 34 | 0 | | 78 | 0 | 161 | 0 | | | |

**Plant Data**
Model: F
T-hot (approximate): 618 °F
Tubes per steam generator: 5626
Number of steam generators: 4

**Acronyms**
Pre-op = prior to operation
Cumul. = cumulative
Insp. = number of tubes inspected
Plug = number of tubes plugged
DePl = number of tubes deplugged
RFO = refueling outage

**Notes**
1. The U-bend region of the row 1 and row 2 tubes was not inspected with a bobbin probe. The U-bend region of 60% of the row 1 and 2 tubes was inspected with a rotating probe.
2. The U-bend region of the row 1 and row 2 tubes was not inspected with a bobbin probe. The U-bend region of 50% of the row 1 and 2 tubes was inspected with a rotating probe.
3. Only the tubesheet region on the hot-leg was examined in steam generators A and D.
4. Only the tubesheet region on the hot-leg was examined in steam generators B and C.
5. Rotating probe inspections were performed at the top of the tubesheet on the hot-leg side of the steam generator and in the U-bend region.
6. The U-bend region of the row 1 and row 2 tubes was not inspected with a bobbin probe. The U-bend region of 100% of the row 1 and 2 tubes was inspected with a rotating probe.
7. Approximately 50 tubes in steam generator D were inspected with a bobbin probe. The tubes selected surrounded the tubes plugged as a result of the 2008 tube pull operation at Row 11, Column 62.

# Table 3-23: Vogtle 1: Causes of Tube Plugging

| Year | | | 1988 | 1990 | 1991 | 1993 | 1994 | 1996 | 1997 | 1999 | 2000 | 2002 | 2003 | 2005 | 2006 | 2008 | 2009 | 2011 | 2012 | 2014 | | | |
|---|---|---|---|---|---|---|---|---|---|---|---|---|---|---|---|---|---|---|---|---|---|---|---|
| **Cause of Tube Plugging/Outage** | | **Pre-Op** | **RFO 1** | **RFO 2** | **RFO 3** | **RFO 4** | **RFO 5** | **RFO 6** | **RFO 7** | **RFO 8** | **RFO 9** | **RFO 10** | **RFO 11** | **RFO 12** | **RFO 13** | **RFO 14** | **RFO 15** | **RFO 16** | **RFO 17** | **RFO 18** | | **Totals** | **Totals** |
| **Wear** | AVB | | | 4 | | 4 | 12 | 4 | 12 | | 1 | | 1 | | | 2 | 2 | | 3 | 1 | | 46 | **46** |
| | Preheater TSP (D5) | | | | | | | | | | | | | | | | | | | | | 0 | |
| | TSP | | | | | | | | | | | | | | | | | | | | | 0 | |
| **Loose Parts** | Confirmed | | | | | | | | 1 | | | | | | | | | | | | | 1 | **4** |
| | Not confirmed, periphery | | | | | | | | | | | | 1 | | | | | 1 | | | | 2 | |
| | Not confirmed, not periphery | | | | | | | | | | | | | | 1 | | | | | | | 1 | |
| **Obstruction Restriction** | From PSI, no progression | | | | | | | | | | | | | | | | | | | | | 0 | **3** |
| | Service-induced | | | | | | | | 2 | | | | | | | | 1 | | | | | 3 | |
| **Manufacturing Flaws** | Preservice | 6 | | | | | | | | | | | | | | | | | | | | 6 | **6** |
| | Other | | | | | | | | | | | | | | | | | | | | | 0 | |
| **Inspection Issues** | Probe lodged | | | | | | | | | | | | | | | | | | | | | 0 | **38** |
| | Data quality | | | | | | | | | | | | | | | | | | | | | 0 | |
| | Dent/geometry | | | | | | | | | | | 2 | 1 | | | 34 | | | | | | 37 | |
| | Permeability | | | | | | | | | | | | | | | | 1 | | | | | 1 | |
| | Not inspected | | | | | | | | | | | | | | | | | | | | | 0 | |
| **Other** | Top of tubesheet | | | | | | | | | | 1 | | | | | | | | | | | 1 | **2** |
| | Freespan | | 1 | | | | | | | | | | | | | | | | | | | 1 | |
| | TSP | | | | | | | | | | | | | | | | | | | | | 0 | |
| | Other/not reported | | | | | | | | | | | | | | | | | | | | | 0 | |
| **SCC** | ID | | | | | | | | | | | | | 2 | | | 1 | | | 1 | | 4 | **62** |
| | OD | | | | | | | | | | | | | | 18 | 11 | 20 | 1 | | 8 | | 58 | |
| | **TOTALS** | 6 | 1 | 4 | 0 | 4 | 12 | 4 | 15 | 0 | 2 | 2 | 3 | 2 | 19 | 47 | 25 | 2 | 3 | 10 | 0 | 161 | 161 |
| **Notes:** | | | | | | | | | | | | 1 | 2 | 3 | 4 | 5, 6 | 7 | 8 | | 9 | | | |

**Notes**

1. Two tubes were plugged due to difficulty in passing a rotating coil through the U-bend.
2. One tube was plugged due to difficulty in passing a rotating coil through the U-bend.
3. Two inside diameter initiated circumferential cracks in bulges within the tubesheet.
4. Seventeen tubes were plugged for circumferential ODSCC at expansion transition and one tube was plugged for an axial ODSCC at/below expansion transition.
5. Ten tubes were plugged for circumferential ODSCC at expansion transition and one tube was plugged for axial ODSCC at/below expansion transition.
6. Thirty three tubes were plugged as a result of damage during a tube removal effort.
7. Twenty tubes were plugged for circumferential ODSCC at the hot-leg expansion transition. One tube was plugged for axial PWSCC at the hot-leg expansion transition.
8. One tube was plugged for axial ODSCC below the bottom of the expansion transition.
9. One tube was plugged for circumferential PWSCC in a bulge in hot-leg tubesheet region. Eight tubes were plugged for circumferential ODSCC at the hot-leg expansion transition.

## Table 3-24: Vogtle 1: Tubes Plugged for Indications Other Than AVB Wear

| STEAM GENERATOR A | | | | |
|---|---|---|---|---|
| Tube | Location | RFO # | Characterization | Stabilized |
| 1-103 | TSH | 13 | ODSCC (SCI) | Y |
| 1-122 | U-bend | 10 | Data Quality- difficulty in passing rotating probe through U-bend (0.500-inch rotating probe did not adequately rotate through U-bend) | |
| 2-113 | TSH | 15 | SCC—circumferential ODSCC at hot-leg expansion transition | |
| 3-103 | TSH | 13 | ODSCC (SCI) | Y |
| 3-108 | TSH | 15 | SCC—circumferential ODSCC at hot-leg expansion transition | |
| 3-119 | TSH | 13 | ODSCC (SCI) | Y |
| 5-110 | TSH | 15 | SCC—circumferential ODSCC at hot-leg expansion transition | |
| 6-110 | TSH | 14 | ODSCC (SCI/MCI) | |
| 7-35 | | 15 | Permeability variation | |
| 7-106 | TSH | 15 | SCC—circumferential ODSCC at hot-leg expansion transition | |
| 7-117 | TSH | 15 | SCC—circumferential ODSCC at hot-leg expansion transition | |
| 8-112 | TSH | 14 | ODSCC (SCI) | |
| 8-115 | TSH | 15 | SCC—circumferential ODSCC at hot-leg expansion transition | |
| 10-104 | TSH | 15 | SCC—circumferential ODSCC at hot-leg expansion transition | |
| 10-112 | TSH | 15 | SCC—circumferential ODSCC at hot-leg expansion transition | |
| 10-114 | TSH | 14 | ODSCC (SCI) | |
| 11-118 | TSH | 14 | ODSCC (SCI) | |
| 12-120 | TSH | 15 | SCC—circumferential ODSCC at hot-leg expansion transition | |
| 13-96 | TSH | 14 | ODSCC (SCI) | |
| 15-115 | TSH | 15 | SCC—circumferential ODSCC at hot-leg expansion transition | |
| 26-110 | 2H-0.23 | 16 | PLP (periphery) | N |
| 28-37 | 5H+7.0<br>4C+38.0 | 1 | 39% throughwall indication | |
| 44-60 | TSH+2.66 | 15 | Restriction | |

| STEAM GENERATOR B | | | | |
|---|---|---|---|---|
| Tube | Location | RFO # | Characterization | Stabilized |
| 2-109 | TSH | 13 | ODSCC (SCI) | Y |
| 2-113 | TSH | 13 | ODSCC (SCI) | Y |
| 34-104 | TSH | 14 | ODSCC (SCI) | |
| 39-46 | Flow Distribution Baffle (FDB) – cold leg | 13 | Loose part wear—42% wall thinning (transient loose part) | |

## Table 3-24: Vogtle 1: Tubes Plugged for Indications Other Than AVB Wear (cont'd)

| STEAM GENERATOR C | | | | |
|---|---|---|---|---|
| Tube | Location | RFO # | Characterization | Stabilized |
| 1-20 | 7H+3.1 | 15 | SCC—axial PWSCC at hot-leg tangent | |
| 1-36 | U-bend | 11 | Data Quality- 0.520-inch rotating probe did not adequately rotate through U-bend | |
| 2-106 | TSH | 13 | ODSCC (SCI) | Y |
| 2-109 | TSH | 15 | SCC—circumferential ODSCC at expansion transition | |
| 3-106 | TSH | 15 | SCC—circumferential ODSCC at expansion transition | |
| 4-81 | TSC+9.82 | 11 | Volumetric indication (loose part impact or mechanical change in tube (cold lap breaking off)) | |
| 5-118 | TSH | 13 | ODSCC (SCI) | Y |
| 6-112 | TSH | 13 | ODSCC (SCI) | Y |
| 6-114 | TSH | 15 | SCC—circumferential ODSCC at expansion transition | |
| 6-119 | TSH | 14 | ODSCC (SCI) | |
| 7-113 | TSH | 15 | SCC—circumferential ODSCC at expansion transition | |
| 13-107 | TSH | 14 | ODSCC (SCI) | |
| 21-13 | TSH+0.21 | 9 | Volumetric | |
| 42-52 | TEH | 14 | Preventative—geometric discontinuity | |

## Table 3-24: Vogtle 1: Tubes Plugged for Indications Other Than AVB Wear (cont'd)

| STEAM GENERATOR D | | | | |
|---|---|---|---|---|
| Tube | Location | RFO # | Characterization | Stabilized |
| | | 14 | 33 tubes near 11-62 were plugged (and some stabilized) because of incomplete tube cut during tube pull operation. | |
| 1-31 | U-bend | 7 | Obstruction to a 0.520-inch probe (foreign object potentially lodged in tube near U-bend) | |
| 2-1 | U-bend | 10 | Data Quality—0.500-inch rotating probe did not adequately rotate through U-bend | |
| 3-105 | TSH | 15 | SCC—circumferential ODSCC at hot-leg expansion transition | |
| 4-3 | TSH | 7 | Confirmed Loose Part inside tube - part not removed | |
| 4-4 | U-bend | 7 | Obstruction to a 0.520-inch probe (foreign object potentially lodged in tube near U-bend) | |
| 4-107 | TSH | 13 | ODSCC (SCI) | Y |
| 4-113 | TSH | 15 | SCC—circumferential ODSCC at hot-leg expansion transition | |
| 4-117 | TSH | 15 | SCC—circumferential ODSCC at hot-leg expansion transition | |
| 4-122 | TSH | 15 | SCC—circumferential ODSCC at hot-leg expansion transition | |
| 5-68 | TSH | 13 | ODSCC (SAI) | Y |
| 6-101 | TSH-0.4 | 12 | PWSCC (SCI) - in 109 volt bulge | Y |
| 6-105 | TSH | 13 | ODSCC (MCI) | Y |
| 8-57 | TSH-0.19 | 16 | SCC—axial ODSCC at/below the bottom of the expansion transition | N |
| 8-106 | TSH | 13 | ODSCC (SCI) | Y |
| 8-108 | TSH | 13 | ODSCC (MCI) | Y |
| 8-113 | TSH | 13 | ODSCC (SCI) | Y |
| 9-107 | TSH | 13 | ODSCC (SCI) | Y |
| 11-62 | TSH | 14 | ODSCC (SAI)—pulled tube | |
| 11-88 | TSH-1.7 | 12 | PWSCC (MCI)—in 170 volt bulge | Y |
| 11-115 | TSH | 13 | ODSCC (MCI) | Y |
| 12-98 | TSH | 14 | ODSCC (SCI)—pulled tube | |
| 22-51 | TSH | 14 | ODSCC (SCI/MCI) | |
| 22-84 | TSH | 13 | ODSCC (SCI) | Y |
| 25-51 | TSH | 13 | ODSCC (MCI) | Y |

## Table 3-25: Vogtle 2: Summary of Bobbin Inspections and Tube Plugging

| Outage | Completion Date | Cumul. EFPY | SG A | | | SG B | | | SG C | | | SG D | | | Total Plug | Total DePl | Cumul. Plugged | Percent Plugged | Notes |
|---|---|---|---|---|---|---|---|---|---|---|---|---|---|---|---|---|---|---|---|
| | | | Insp. | Plug | DePl | Insp. | Plug | DePl | Insp. | Plug | DePl | Insp. | Plug | DePl | | | | | |
| Pre-op | | | | 2 | | | 4 | | | 1 | | | 8 | | 15 | 0 | 15 | 0.07 | |
| RFO 1 | 10/03/1990 | 1.25 | 1143 | 0 | | 1130 | 0 | | 1139 | 0 | | 1135 | 0 | | 0 | 0 | 15 | 0.07 | |
| RFO 2 | 03/30/1992 | 2.48 | 1056 | 0 | | 1570 | 0 | | 1066 | 0 | | 1061 | 0 | | 0 | 0 | 15 | 0.07 | |
| RFO 3 | 10/02/1993 | 3.79 | 2984 | 0 | | | | | | | | 3008 | 0 | | 0 | 0 | 15 | 0.07 | |
| RFO 4 | 03/16/1995 | 5.08 | | | | 4382 | 3 | | 4576 | 0 | | | | | 3 | 0 | 18 | 0.08 | |
| RFO 5 | 09/30/1996 | 6.52 | 5624 | 1 | | | | | | | | 5618 | 5 | | 6 | 0 | 24 | 0.11 | |
| RFO 6 | 04/02/1998 | 7.92 | | | | 5619 | 0 | | 5625 | 0 | | | | | 0 | 0 | 24 | 0.11 | |
| RFO 7 | 10/22/1999 | 9.32 | 5623 | 1 | | | | | | | | 5613 | 4 | | 5 | 0 | 29 | 0.13 | |
| RFO 8 | 04/24/2001 | 10.74 | | | | 5619 | 0 | | 5625 | 0 | | | | | 0 | 0 | 29 | 0.13 | |
| RFO 9 | 10/20/2002 | 12.18 | 5622 | 0 | | | | | | | | 5609 | 2 | | 2 | 0 | 31 | 0.14 | 1 |
| RFO 10 | 05/10/2004 | 13.49 | | 1 | | 5619 | 5 | | 5625 | 3 | | | 2 | | 11 | 0 | 42 | 0.19 | 2, 3 |
| RFO 11 | 10/05/2005 | 14.78 | 5621 | 0 | | | | | | | | 5605 | 0 | | 0 | 0 | 42 | 0.19 | 3 |
| RFO 12 | 04/18/2007 | 16.06 | | | | 5614 | 0 | | 5622 | 0 | | | | | 0 | 0 | 42 | 0.19 | 3 |
| RFO 13 | 10/15/2008 | 17.2 | 5621 | 1 | | | | | | | | 5605 | 0 | | 1 | 0 | 43 | 0.19 | 3 |
| RFO 14 | 04/06/2010 | 18.5 | | | | 5614 | 2 | | 5622 | 0 | | | | | 2 | 0 | 45 | 0.20 | 3 |
| RFO 15 | 10/11/2011 | 20 | 5620 | 0 | | | | | | | | 5605 | 1 | | 1 | 0 | 46 | 0.20 | 3 |
| RFO 16 | 04/02/2013 | 21.3 | | | | 5612 | 1 | | 5622 | 1 | | | | | 2 | 0 | 48 | 0.21 | 4 |
| | | | | | | | | | | | | | | | | | | | |
| | | | | | | | | | | | | | | | | | | | |
| | | Totals: | | 6 | 0 | | 15 | 0 | | 5 | 0 | | 22 | 0 | 48 | 0 | | | |

**Plant Data**
Model: F
T-hot (approximate): 618 °F
Tubes per steam generator: 5626
Number of steam generators: 4

**Acronyms**
Pre-op = prior to operation
Cumul. = cumulative
Insp. = number of tubes inspected
Plug = number of tubes plugged
DePl = number of tubes deplugged
RFO = refueling outage

**Notes**
1. The U-bend region of the row 1 and row 2 tubes was not inspected with a bobbin probe. The U-bend region of 60% of the row 1 and 2 tubes was inspected with a rotating probe.
2. Only the hot-leg expansion transition region of the tubes in steam generators A and D were inspected (i.e., from 3 inches above to 3 inches below the TTS on the hot-leg side).
3. The U-bend region of the row 1 and row 2 tubes was not inspected with a bobbin probe. The U-bend region of 50% of the row 1 and 2 tubes was inspected with a rotating probe.
4. The U-bend region of the row 1 and row 2 tubes was not inspected with a bobbin probe. The U-bend region of 100% of the row 1 and 2 tubes was inspected with a rotating probe.

# Table 3-26: Vogtle 2: Causes of Tube Plugging

| Cause of Tube Plugging/Outage | Year | Pre-Op | 1990 RFO 1 | 1992 RFO 2 | 1993 RFO 3 | 1995 RFO 4 | 1996 RFO 5 | 1998 RFO 6 | 1999 RFO 7 | 2001 RFO 8 | 2002 RFO 9 | 2004 RFO 10 | 2005 RFO 11 | 2007 RFO 12 | 2008 RFO 13 | 2010 RFO 14 | 2011 RFO 15 | 2013 RFO 16 | | Totals | Totals |
|---|---|---|---|---|---|---|---|---|---|---|---|---|---|---|---|---|---|---|---|---|---|
| Wear | AVB | | | | | 3 | 6 | | 5 | | 2 | 1 | | | 1 | 2 | 1 | 1 | | 22 | 22 |
| | Preheater TSP (D5) | | | | | | | | | | | | | | | | | | | 0 | |
| | TSP | | | | | | | | | | | | | | | | | | | 0 | |
| Loose Parts | Confirmed | | | | | | | | | | | | | | | | | | | 0 | 0 |
| | Not confirmed, periphery | | | | | | | | | | | | | | | | | | | 0 | |
| | Not confirmed, not periphery | | | | | | | | | | | | | | | | | | | 0 | |
| Obstruction Restriction | From PSI, no progression | | | | | | | | | | | | | | | | | | | 0 | 0 |
| | Service-induced | | | | | | | | | | | | | | | | | | | 0 | |
| Manufacturing Flaws | Preservice | 15 | | | | | | | | | | | | | | | | | | 15 | 15 |
| | Other | | | | | | | | | | | | | | | | | | | 0 | |
| Inspection Issues | Probe lodged | | | | | | | | | | | | | | | | | | | 0 | 1 |
| | Data quality | | | | | | | | | | | | | | | | | | | 0 | |
| | Dent/geometry | | | | | | | | | | | | | | | | | | | 0 | |
| | Permeability | | | | | | | | | | | 1 | | | | | | | | 1 | |
| | Not inspected | | | | | | | | | | | | | | | | | | | 0 | |
| Other | Top of tubesheet | | | | | | | | | | | 9 | | | | | | | | 9 | 9 |
| | Freespan | | | | | | | | | | | | | | | | | | | 0 | |
| | TSP | | | | | | | | | | | | | | | | | | | 0 | |
| | Other/not reported | | | | | | | | | | | | | | | | | | | 0 | |
| SCC | ID | | | | | | | | | | | | | | | | | | | 0 | 1 |
| | OD | | | | | | | | | | | | | | | | | 1 | | 1 | |
| | TOTALS | 15 | 0 | 0 | 0 | 3 | 6 | 0 | 5 | 0 | 2 | 11 | 0 | 0 | 1 | 2 | 1 | 2 | 0 | 48 | 48 |
| Notes: | | | | | | | | | | | | 1 | | | | | | 2 | | | |

**Notes**

1. Nine tubes were plugged for indications originally attributed to ODSCC. Analysis of pulled tubes revealed that the eddy current signals were a result of scale or deposits on the tubes at the top of the tubesheet.
2. One tube was plugged for circumferential ODSCC at the expansion transition.

## Table 3-27: Vogtle 2: Tubes Plugged for Indications Other Than AVB Wear

| STEAM GENERATOR A | | | | |
|---|---|---|---|---|
| Tube | Location | RFO # | Characterization | Stabilized |
| 11-64 | TSH | 10 | Scale or Deposits[1] | Y |

| STEAM GENERATOR B | | | | |
|---|---|---|---|---|
| Tube | Location | RFO # | Characterization | Stabilized |
| 3-7 | TSH | 10 | Permeability Variation | Y |
| 11-60 | TSH | 10 | Scale or Deposits (Tube Pulled)[1] | N |
| 12-59 | TSH | 10 | Scale or Deposits (Tube Pulled)[1] | N |
| 15-60 | TSH-0.2 | 16 | SCC—circumferential ODSCC | Y |
| 17-68 | TSH | 10 | Scale or Deposits[1] | Y |

| STEAM GENERATOR C | | | | |
|---|---|---|---|---|
| Tube | Location | RFO # | Characterization | Stabilized |
| 11-65 | TSH | 10 | Scale or Deposits[1] | Y |
| 14-56 | TSH | 10 | Scale or Deposits[1] | Y |
| 46-89 | TSH | 10 | Scale or Deposits[1] | Y |

| STEAM GENERATOR D | | | | |
|---|---|---|---|---|
| Tube | Location | RFO # | Characterization | Stabilized |
| 11-50 | TSH | 10 | Scale or Deposits[1] | Y |
| 14-67 | TSH | 10 | Scale or Deposits[1] | Y |

1. Initial characterization of these indications was ODSCC in the expansion transition region. Analysis of pulled tubes revealed that the signals were a result of scale or deposits on the tubes at the top of the tubesheet.

## Table 3-28: Wolf Creek: Summary of Bobbin Inspections and Tube Pugging

| Outage | Completion Date | Cumul. EFPY | SG A | | | SG B | | | SG C | | | SG D | | | Total Plug | Total DePl | Cumul. Plugged | Percent Plugged | Notes |
|---|---|---|---|---|---|---|---|---|---|---|---|---|---|---|---|---|---|---|---|
| | | | Insp. | Plug | DePl | Insp. | Plug | DePl | Insp. | Plug | DePl | Insp. | Plug | DePl | | | | | |
| Pre-op | | | | 8 | | | 3 | | | 4 | | | | | 15 | 0 | 15 | 0.07 | |
| RFO 1 | 10/27/1986 | 1.07 | | | | 393 | 0 | | 384 | 0 | | | | | 0 | 0 | 15 | 0.07 | |
| RFO 2 | | | | | | | | | | | | | | | 0 | 0 | 15 | 0.07 | 1 |
| RFO 3 | 11/18/1988 | 2.43 | 2969 | 1 | | 2972 | 1 | | 2973 | 3 | | 2975 | 17 | | 22 | 0 | 37 | 0.16 | |
| RFO 4 | 04/04/1990 | 3.56 | | | | 3205 | 0 | | | | | 3169 | 2 | | 2 | 0 | 39 | 0.17 | |
| RFO 5 | 10/24/1991 | 4.78 | 1565 | 0 | | | | | 1227 | 2 | 2 | | | | 2 | 2 | 39 | 0.17 | |
| RFO 6 | 03/31/1993 | 5.81 | | | | 5623 | 5 | | | | | | | | 5 | 0 | 44 | 0.20 | |
| RFO 7 | 10/11/1994 | 7.07 | 5617 | 9 | | | | | | | | 5607 | 24 | 6 | 33 | 6 | 71 | 0.32 | |
| RFO 8 | 03/05/1996 | 8.28 | | | | 5617 | 12 | | 5619 | 4 | | | | | 16 | 0 | 87 | 0.39 | |
| RFO 9 | 11/06/1997 | 9.73 | 5608 | 5 | | | | | | | | 5589 | 14 | | 19 | 0 | 106 | 0.47 | |
| RFO 10 | 04/24/1999 | 11.06 | | | | 5605 | 1 | | 5615 | 5 | | | | | 6 | 0 | 112 | 0.50 | |
| RFO 11 | 10/20/2000 | 12.42 | 5603 | 3 | | | | | | | | 5575 | 29 | | 32 | 0 | 144 | 0.64 | |
| RFO 12 | 04/08/2002 | 13.78 | | | | 5604 | 6 | | 5610 | 3 | | | | | 9 | 0 | 153 | 0.68 | 2 |
| RFO 13 | 10/31/2003 | 15.22 | 5600 | 3 | | | | | | | | 5546 | 17 | | 20 | 0 | 173 | 0.77 | 2 |
| RFO 14 | 04/22/2005 | 16.51 | | | | 5598 | 7 | | 5607 | 1 | | | | | 8 | 0 | 181 | 0.80 | 3 |
| RFO 15 | 10/22/2006 | 17.89 | 5597 | 6 | | | | | | | | 5529 | 17 | | 23 | 0 | 204 | 0.91 | 4 |
| RFO 16 | 05/07/2008 | 19.23 | | 0 | | 5591 | 18 | | 5606 | 8 | | | 3 | | 29 | 0 | 233 | 1.04 | 2, 5 |
| RFO 17 | 11/20/2009 | 20.6 | 5591 | 7 | | | | | | | | 5509 | 11 | | 18 | 0 | 251 | 1.12 | 2 |
| RFO 18 | 06/22/2011 | 21.84 | 1406 | 0 | | 2290 | 9 | | 1406 | 3 | | 1406 | 3 | | 15 | 0 | 266 | 1.18 | 6 |
| RFO 19 | 04/13/2013 | 23.22 | 1406 | 5 | | 1406 | 4 | | 1406 | 2 | | 1406 | 5 | | 16 | 0 | 282 | 1.25 | 6 |
| | | | | | | | | | | | | | | | | | | | |
| | | | | | | | | | | | | | | | | | | | |
| | | **Totals:** | | 47 | 0 | | 66 | 0 | | 35 | 2 | | 142 | 6 | 290 | 8 | | | |

**Plant Data**
Model: F
T-hot (approximate): 618 °F
Tubes per steam generator: 5626
Number of steam generators: 4

**Acronyms**
Pre-op = prior to operation
Cumul. = cumulative
Insp. = number of tubes inspected
Plug = number of tubes plugged
DePl = number of tubes deplugged
RFO = refueling outage

**Notes**
1. No tube inspections were performed during RFO 2.
2. The U-bend region of the row 1 and row 2 tubes was not inspected with a bobbin probe. The U-bend region of 50% of the row 1 and 2 tubes was inspected with a rotating probe.
3. The U-bend region of the row 1 and row 2 tubes was not inspected with a bobbin probe.
4. The U-bend region of the tubes in rows 1 through 4 was not inspected with a bobbin probe.
5. Only the hot-leg tube ends were inspected in steam generators A and D.
6. The U-bend region of the row 1 and row 2 tubes was not inspected with a bobbin probe. The U-bend region of 25% of the row 1 and 2 tubes was inspected with a rotating probe.

# Table 3-29: Wolf Creek: Causes of Tube Plugging

| Year | | | 1986 | | 1988 | 1990 | 1991 | 1993 | 1994 | 1996 | 1997 | 1999 | 2000 | 2002 | 2003 | 2005 | 2006 | 2008 | 2009 | 2011 | 2013 | | | |
|---|---|---|---|---|---|---|---|---|---|---|---|---|---|---|---|---|---|---|---|---|---|---|---|---|
| **Cause of Tube Plugging/Outage** | | **Pre-Op** | **RFO 1** | **RFO 2** | **RFO 3** | **RFO 4** | **RFO 5** | **RFO 6** | **RFO 7** | **RFO 8** | **RFO 9** | **RFO 10** | **RFO 11** | **RFO 12** | **RFO 13** | **RFO 14** | **RFO 15** | **RFO 16** | **RFO 17** | **RFO 18** | **RFO 19** | | **Totals** | **Totals** |
| **Wear** | AVB | | | | 19 | 2 | 2 | 5 | 25 | 16 | 19 | 6 | 30 | 8 | 19 | 4 | 21 | 20 | 16 | 15 | 9 | | 236 | **236** |
| | Preheater TSP (D5) | | | | | | | | | | | | | | | | | | | | | | 0 | |
| | TSP | | | | | | | | | | | | | | | | | | | | | | 0 | |
| **Loose Parts** | Confirmed | | | | | | | | | | | | | | | | | | | | | | 0 | **0** |
| | Not confirmed, periphery | | | | | | | | | | | | | | | | | | | | | | 0 | |
| | Not confirmed, not periphery | | | | | | | | | | | | | | | | | | | | | | 0 | |
| **Obstruction Restriction** | From PSI, no progression | | | | | | | | | | | | | | | | | | | | 1 | | 1 | **2** |
| | Service-induced | | | | | | | | | | | | | | 1 | | | | | | | | 1 | |
| **Manufacturing Flaws** | Preservice | 15 | | | | | | | | | | | | | | | | | | | | | 15 | **23** |
| | Other | | | | | | | | | | | | | | | | | 1 | 2 | | 5 | | 8 | |
| **Inspection Issues** | Probe lodged | | | | | | | | | | | | | | | | | | | | | | 0 | **2** |
| | Data quality | | | | | | | | | | | | | | | | | | | | | | 0 | |
| | Dent/geometry | | | | | | | | | | | | | | | | 2 | | | | | | 2 | |
| | Permeability | | | | | | | | | | | | | | | | | | | | | | 0 | |
| | Not inspected | | | | | | | | | | | | | | | | | | | | | | 0 | |
| **Other** | Top of tubesheet | | | | | | | | | | | | 1 | 1 | | | | | | | | | 2 | **10** |
| | Freespan | | | | 3 | | -2 | | | | | | | | | 4 | | | | | | | 5 | |
| | TSP | | | | | | | | 2 | | | | 1 | | | | | | | | | | 3 | |
| | Other/not reported | | | | | | | | | | | | | | | | | | | | | | 0 | |
| **SCC** | ID | | | | | | | | | | | | | | | | | 8 | | | 1 | | 9 | **9** |
| | OD | | | | | | | | | | | | | | | | | | | | | | 0 | |
| | **TOTALS** | 15 | 0 | 0 | 22 | 2 | 0 | 5 | 27 | 16 | 19 | 6 | 32 | 9 | 20 | 8 | 23 | 29 | 18 | 15 | 16 | 0 | 282 | 282 |
| **Notes:** | | | | | | | 1 | | 2 | | | | | 3 | | | 4 | 5 | 6 | | 7 | | | |

**Notes**

1. Deplugged two freespan indications originally plugged during RFO 3 (R28C56, R28C76)
2. Deplugged 6 previously plugged AVB wear indications. Plugged 31 other AVB wear indications for a net total of 25 tubes plugged for AVB wear.
3. One tube was plugged due to a circumferential anomaly (small dimple). This indication was not flaw-like.
4. Two tubes were plugged due to geometric anomalies (inner diameter ridge or scratch extending from within the tubesheet to a few inches above the tubesheet). Present since at least 1994 (1st rotating probe inspection).
5. Eight tubes were plugged due to PWSCC near the tube end. One tube was plugged since it was not expanded into the tubesheet on the hot-leg.
6. Two tubes were plugged due to a geometric anomaly at the top of the tubesheet.
7. Five tubes were plugged due to non-optimal tube processing. One tube was plugged due to circumferential ODSCC in a bulge on the hot-leg side of the steam generator.

## Table 3-30: Wolf Creek: Tubes Plugged for Indications Other Than AVB Wear

| STEAM GENERATOR A | | | | |
|---|---|---|---|---|
| Tube | Location | RFO # | Characterization | Stabilized |
| 9-19 | | 19 | Nonoptimal tube processing | |
| 9-32 | | 19 | Nonoptimal tube processing | |
| 10-5 | | 19 | Nonoptimal tube processing | |
| 13-68 | Tubesheet | 15 | Geometric Anomaly (scratch or ridge) | |
| 15-60 | Tubesheet | 15 | Geometric Anomaly (scratch or ridge) | |
| 15-68 | 1H-0.81 | 7 | 55% throughwall indication | |
| 18-81 | TTS | 17 | Geometric Anomaly | |
| 45-91 | TSH-0.07 | 11 | Volumetric | |
| 58-72 | | 19 | Obstruction (data quality) | |

| STEAM GENERATOR B | | | | |
|---|---|---|---|---|
| Tube | Location | RFO # | Characterization | Stabilized |
| 1-105 | TSC+15.87<br>TSC+16.00 | 14 | Wear from pressure pulse cleaning nozzle (28% and 49% throughwall) | |
| 1-106 | TSC+15.95<br>TSC+15.72 | 14 | Wear from pressure pulse cleaning nozzle (71% and 62% throughwall) | |
| 1-107 | TSC+15.86<br>TSC+16.14 | 14 | Wear from pressure pulse cleaning nozzle (40% and 57% throughwall) | |
| 1-108 | TSC+15.63<br>TSC+16.01 | 14 | Wear from pressure pulse cleaning nozzle (26% and 48% throughwall) | |
| 2-68 | TEH+0.04 | 16 | PWSCC (SCI)—near tube end | |
| 6-106 | TEH+0.07 | 16 | PWSCC (SCI)—near tube end | |
| 8-81 | | 19 | Nonoptimal tube processing | |
| 11-107 | TEH+0.02<br>TEH+0.05<br>TEH+0.08 | 16 | PWSCC (MCI)—near tube end | |
| 11-121 | | 16 | Tube not expanded in tubesheet on hot-leg side | |
| 17-89 | | 19 | SCC—circumferential PWSCC | |
| 49-68 | TEH+0.08 | 16 | PWSCC (SCI)—near tube end | |
| 55-71 | TTS | 12 | Small “dimple” (no degradation) | |

## Table 3-30: Wolf Creek: Tubes Plugged for Indications Other Than AVB Wear (cont'd)

| STEAM GENERATOR C | | | | |
|---|---|---|---|---|
| Tube | Location | RFO # | Characterization | Stabilized |
| 3-74 | | 19 | Nonoptimal tube processing | |
| 14-17 | 6H+9.26 | 3 | 36% throughwall | |
| 14-95 | TEH+0.07<br>TEH+0.12 | 16 | PWSCC (MCI)—near tube end | |
| 28-56 | FBH+16.75 | 3 | 37% throughwall indication, deplugged in RFO 5 | |
| 28-76 | FBC+14.28 | 3 | 45% throughwall indication, deplugged in RFO 5 | |

| STEAM GENERATOR D | | | | |
|---|---|---|---|---|
| Tube | Location | RFO # | Characterization | Stabilized |
| 1-75 | TEH+0.08 | 16 | PWSCC (SCI)—near tube end | |
| 1-80 | TEH+0.01 | 16 | PWSCC (SCI)—near tube end | |
| 7-88 | 4H+0.54 | 11 | Volumetric | |
| 9-72 | TEH+0.05 | 16 | PWSCC (SCI)—near tube end | |
| 16-61 | TTS | 17 | Geometric Anomaly | |
| 19-93 | 2C+0.08 | 7 | Volumetric | |
| 40-41 | | 13 | Obstruction (Bolt shank) | |

## Table 3-31: Indian Point 2: Summary of Bobbin Inspections and Tube Plugging

| Outage | Completion Date | Cumul. EFPY | SG A | | | SG B | | | SG C | | | SG D | | | Total Plug | Total DePl | Cumul. Plugged | Percent Plugged | Notes |
|---|---|---|---|---|---|---|---|---|---|---|---|---|---|---|---|---|---|---|---|
| | | | Insp. | Plug | DePl | Insp. | Plug | DePl | Insp. | Plug | DePl | Insp. | Plug | DePl | | | | | |
| Pre-op | | | | 0 | | | 0 | | | 0 | | | 2 | | 2 | 0 | 2 | 0.02 | |
| RFO 15 | 11/17/2002 | 1.72 | 3214 | 8 | | 3214 | 1 | | 3214 | 3 | | 3212 | 4 | | 16 | 0 | 18 | 0.14 | 1 |
| RFO 16 | 11/21/2004 | 3.56 | | | | | | | | | | | | | 0 | 0 | 18 | 0.14 | 2 |
| RFO 17 | 05/19/2006 | 4.94 | 1607 | 2 | | 1607 | 2 | | 1607 | 0 | | 1607 | 3 | | 7 | 0 | 25 | 0.19 | 3 |
| RFO 18 | 04/19/2008 | 6.76 | | | | | | | | | | | | | 0 | 0 | 25 | 0.19 | 2 |
| RFO 19 | 04/10/2010 | 8.62 | 2471 | 4 | | 2473 | 2 | | 2473 | 2 | | 2467 | 1 | | 9 | 0 | 34 | 0.26 | 3 |
| RFO 20 | 03/30/2012 | 10.38 | | | | | | | | | | | | | 0 | 0 | 34 | 0.26 | 2 |
| RFO 21 | 03/18/2014 | 12.24 | 1607 | 6 | | 1607 | 0 | | 1607 | 8 | | 1607 | 0 | | 14 | 0 | 48 | 0.37 | 3 |
| | | | | | | | | | | | | | | | | | | | |
| | | | | | | | | | | | | | | | | | | | |
| | | **Totals:** | | 20 | 0 | | 5 | 0 | | 13 | 0 | | 10 | 0 | 48 | 0 | | | |

**Plant Data**
Model: 44F
T-hot (approximate): 599 °F
Tubes per steam generator: 3214
Number of steam generators: 4

**Acronyms**
Pre-op = prior to operation
Cumul. = cumulative
Insp. = number of tubes inspected
Plug = number of tubes plugged
DePl = number of tubes deplugged
RFO = refueling outage

**Notes**
1. The U-bend region of the row 1 and row 2 tubes was not inspected with a bobbin probe. The U-bend region of 100% of the row 1 and 2 tubes was inspected with a rotating probe.
2. No steam generator tube inspections were performed.
3. The U-bend region of the row 1 and row 2 tubes was not inspected with a bobbin probe. The U-bend region of 50% of the row 1 and 2 tubes was inspected with a rotating probe.

## Table 3-32: Indian Point 2 Causes of Tube Plugging

| | Year | | 2002 | 2004 | 2006 | 2008 | 2010 | 2012 | 2014 | | | |
|---|---|---|---|---|---|---|---|---|---|---|---|---|
| **Cause of Tube Plugging/Outage** | | **Pre-Op** | **RFO 15** | **RFO 16** | **RFO 17** | **RFO 18** | **RFO 19** | **RFO 20** | **RFO 21** | | **Totals** | **Totals** |
| **Wear** | AVB | | 13 | | 7 | | 9 | | 5 | | 34 | **34** |
| | Preheater TSP (D5) | | | | | | | | | | 0 | |
| | TSP | | | | | | | | | | 0 | |
| **Loose Parts** | Confirmed | | | | | | | | | | 0 | **9** |
| | Not confirmed, periphery | | | | | | | | 5 | | 5 | |
| | Not confirmed, not periphery | | | | | | | | 4 | | 4 | |
| **Obstruction Restriction** | From PSI, no progression | | | | | | | | | | 0 | **0** |
| | Service-induced | | | | | | | | | | 0 | |
| **Manufacturing Flaws** | Preservice | 2 | | | | | | | | | 2 | **5** |
| | Other | | 3 | | | | | | | | 3 | |
| **Inspection Issues** | Probe lodged | | | | | | | | | | 0 | **0** |
| | Data quality | | | | | | | | | | 0 | |
| | Dent/geometry | | | | | | | | | | 0 | |
| | Permeability | | | | | | | | | | 0 | |
| | Not inspected | | | | | | | | | | 0 | |
| **Other** | Top of tubesheet | | | | | | | | | | 0 | **0** |
| | Freespan | | | | | | | | | | 0 | |
| | TSP | | | | | | | | | | 0 | |
| | Other/not reported | | | | | | | | | | 0 | |
| **SCC** | ID | | | | | | | | | | 0 | **0** |
| | OD | | | | | | | | | | 0 | |
| | **TOTALS** | 2 | 16 | 0 | 7 | 0 | 9 | 0 | 14 | 0 | 48 | 48 |
| **Notes:** | | | 1 | | | | | | | | | |

**Notes**

1. Three deep buff marks that became volumetric indications as a result of heating during first cycle of operation.

## Table 3-33: Indian Point 2: Tubes Plugged for Indications Other Than AVB Wear

| STEAM GENERATOR A | | | | |
|---|---|---|---|---|
| Tube | Location | RFO # | Characterization | Stabilized |
| 14-71 | | 21 | PLP | Y |
| 14-72 | | 21 | PLP | Y |
| 15-72 | | 21 | PLP | Y |
| 15-73 | | 21 | PLP | Y |
| 16-28 | 5H+5.63 | 15 | Volumetric (18% throughwall)—deep buff mark | |
| 21-56 | TSH+18.39 | 15 | Volumetric (18% throughwall)—deep buff mark | |

| STEAM GENERATOR B | | | | |
|---|---|---|---|---|
| Tube | Location | RFO # | Characterization | Stabilized |
| NONE | | | | |
| | | | | |

| STEAM GENERATOR C | | | | |
|---|---|---|---|---|
| Tube | Location | RFO # | Characterization | Stabilized |
| 27-33 | 5H+37.98 | 15 | Volumetric (19% throughwall) – deep buff mark | |
| 32-24 | | 21 | PLP | Y |
| 33-24 | | 21 | PLP | Y |
| 33-25 | | 21 | PLP | Y |
| 34-25 | | 21 | PLP | Y |
| 34-26 | | 21 | PLP | Y |

| STEAM GENERATOR D | | | | |
|---|---|---|---|---|
| Tube | Location | RFO # | Characterization | Stabilized |
| NONE | | | | |
| | | | | |
| | | | | |
| | | | | |

## Table 3-34: Point Beach 1: Summary of Bobbin Inspections and Tube Plugging

| Outage | Completion Date | Cumul. EFPY | SG A | | | SG B | | | Total Plug | Total DePl | Cumul. Plugged | Percent Plugged | Notes |
|---|---|---|---|---|---|---|---|---|---|---|---|---|---|
| | | | Insp. | Plug | DePl | Insp. | Plug | DePl | | | | | |
| Pre-op | 04/09/1984 | | 3211 | 3 | | 3214 | 1 | | 4 | 0 | 4 | 0.06 | |
| RFO 12 | 04/13/1985 | 0.96 | 101 | 0 | | 101 | 0 | | 0 | 0 | 4 | 0.06 | |
| RFO 13 | 04/19/1986 | | 122 | 0 | | 146 | 0 | | 0 | 0 | 4 | 0.06 | |
| RFO 14 | 1987 | | | | | | | | 0 | 0 | 4 | 0.06 | |
| RFO 15 | 05/06/1988 | | 129 | 0 | | 112 | 2 | | 2 | 0 | 6 | 0.09 | |
| RFO 16 | 04/11/1989 | | 592 | 0 | | 610 | 0 | | 0 | 0 | 6 | 0.09 | |
| RFO 17 | 04/09/1990 | | | | | | | | 0 | 0 | 6 | 0.09 | |
| RFO 18 | 04/18/1991 | | 576 | 1 | | 584 | 1 | | 2 | 0 | 8 | 0.12 | |
| RFO 19 | 04/18/1992 | | 591 | 0 | | 592 | 0 | | 0 | 0 | 8 | 0.12 | |
| RFO 20 | 04/17/1993 | | 588 | 0 | | 591 | 0 | | 0 | 0 | 8 | 0.12 | |
| RFO 21 | 1994 | | | | | | | | 0 | 0 | 8 | 0.12 | |
| RFO 22 | 03/25/1995 | | 3210 | 0 | | 3210 | 1 | | 1 | 0 | 9 | 0.14 | |
| RFO 23 | 1996 | | | | | | | | 0 | 0 | 9 | 0.14 | |
| RFO 24 | 03/31/1998 | | 3210 | 0 | | 3209 | 0 | | 0 | 0 | 9 | 0.14 | |
| RFO 25 | 12/09/1999 | | | | | | | | 0 | 0 | 9 | 0.14 | |
| Mid-Cycle | 03/05/2000 | | | | | | | | 0 | 0 | 9 | 0.14 | 1 |
| RFO 26 | 04/24/2001 | 13.7 | 3210 | 0 | | 3209 | 1 | | 1 | 0 | 10 | 0.16 | |
| RFO 27 | 10/23/2003 | | | | | | | | 0 | 0 | 10 | 0.16 | 2 |
| RFO 28 | 04/30/2004 | 16.43 | 3210 | 0 | | 3208 | 0 | | 0 | 0 | 10 | 0.16 | 3 |
| RFO 29 | 11/24/2005 | 17.7 | 1607 | 0 | | | | | 0 | 0 | 10 | 0.16 | |
| RFO 30 | 04/30/2007 | 19.05 | | | | 1743 | 0 | | 0 | 0 | 10 | 0.16 | |
| RFO 31 | 11/09/2008 | 20.4 | 3210 | 1 | | 3208 | 0 | | 1 | 0 | 11 | 0.17 | 4 |
| RFO 32 | 04/04/2010 | | | | | | | | 0 | 0 | 11 | 0.17 | 2 |
| RFO 33 | 12/12/2011 | 23.2 | 3209 | 0 | | 3208 | 2 | | 2 | 0 | 13 | 0.20 | 5 |
| RFO 34 | 04/16/2013 | | 3209 | 0 | | 3206 | 0 | | 0 | 0 | 13 | 0.20 | 5 |
| | | | | | | | | | | | | | |
| | | | | | | | | | | | | | |
| | | Totals: | | 5 | 0 | | 8 | 0 | 13 | 0 | | | |

**Plant Data**
Model: 44F
T-hot (approximate):
Tubes per steam generator: 3214
Number of steam generators: 2

**Acronyms**
Pre-op = prior to operation
Cumul. = cumulative
Insp. = number of tubes inspected
Plug = number of tubes plugged
DePl = number of tubes deplugged
RFO = refueling outage

**Notes**
1. Plant was shut down to investigate an indication of a possible loose part.
2. No steam generator tube inspections were performed.
3. The U-bend region of all row 1 and 7 row 2 tubes was not inspected with a bobbin probe; however, they were inspected with a rotating prob
4. The U-bend region of the row 1 and row 2 tubes was not inspected with a bobbin probe. The U-bend region of 50% of the row 1 and 2 tubes in SG A and 20% of the row 1 and row 2 tubes in SG B were inspected with a rotating probe.
5. The U-bend region of the row 1 and row 2 tubes was not inspected with a bobbin probe. The U-bend region of 50% of the row 1 and 2 tubes was inspected with a rotating probe.

# Table 3-35: Point Beach 1: Causes of Tube Plugging

| Cause of Tube Plugging/Outage | Year | Pre-Op | 1985 RFO 12 | 1986 RFO 13 | 1987 RFO 14 | 1988 RFO 15 | 1989 RFO 16 | 1990 RFO 17 | 1991 RFO 18 | 1992 RFO 19 | 1993 RFO 20 | 1994 RFO 21 | 1995 RFO 22 | 1996 RFO 23 | 1998 RFO 24 | 1999 RFO 25 | 2000 Mid-Cycle | 2001 RFO 26 | 2003 RFO 27 | 2004 RFO 28 | 2005 RFO 29 | 2007 RFO 30 | 2008 RFO 31 | 2010 RFO 32 | 2011 RFO 33 | 2013 RFO 34 | | Totals | Totals |
|---|---|---|---|---|---|---|---|---|---|---|---|---|---|---|---|---|---|---|---|---|---|---|---|---|---|---|---|---|---|
| Wear | AVB | | | | | | | | 1 | | | | 1 | | | | | 1 | | | | | | | | | | 3 | 4 |
| | Preheater TSP (D5) | | | | | | | | | | | | | | | | | | | | | | | | | | | 0 | |
| | TSP | | | | | | | | 1 | | | | | | | | | | | | | | | | | | | 1 | |
| Loose Parts | Confirmed | | | | | | | | | | | | | | | | | | | | | | | | | | | 0 | 0 |
| | Not confirmed, periphery | | | | | | | | | | | | | | | | | | | | | | | | | | | 0 | |
| | Not confirmed, not periphery | | | | | | | | | | | | | | | | | | | | | | | | | | | 0 | |
| Obstruction Restriction | From PSI, no progression | | | | | | | | | | | | | | | | | | | | | | | | | | | 0 | 0 |
| | Service-induced | | | | | | | | | | | | | | | | | | | | | | | | | | | 0 | |
| Manufacturing Flaws | Preservice | 4 | | | | | | | | | | | | | | | | | | | | | | | | | | 4 | 7 |
| | Other | | | | | 2 | | | | | | | | | | | | | | | | | 1 | | | | | 3 | |
| Inspection Issues | Probe lodged | | | | | | | | | | | | | | | | | | | | | | | | | | | 0 | 0 |
| | Data quality | | | | | | | | | | | | | | | | | | | | | | | | | | | 0 | |
| | Dent/geometry | | | | | | | | | | | | | | | | | | | | | | | | | | | 0 | |
| | Permeability | | | | | | | | | | | | | | | | | | | | | | | | | | | 0 | |
| | Not inspected | | | | | | | | | | | | | | | | | | | | | | | | | | | 0 | |
| Other | Top of tubesheet | | | | | | | | | | | | | | | | | | | | | | | | | | | 0 | 0 |
| | Freespan | | | | | | | | | | | | | | | | | | | | | | | | | | | 0 | |
| | TSP | | | | | | | | | | | | | | | | | | | | | | | | | | | 0 | |
| | Other/not reported | | | | | | | | | | | | | | | | | | | | | | | | | | | 0 | |
| SCC | ID | | | | | | | | | | | | | | | | | | | | | | | | 2 | | | 2 | 2 |
| | OD | | | | | | | | | | | | | | | | | | | | | | | | | | | 0 | |
| | TOTALS | 4 | 0 | 0 | 0 | 2 | 0 | 0 | 2 | 0 | 0 | 0 | 1 | 0 | 0 | 0 | 0 | 1 | 0 | 0 | 0 | 0 | 1 | 0 | 2 | 0 | 0 | 13 | 13 |
| Notes: | | | | | | 1 | | | | | | | | | | | 2 | | | | | | 3 | | 4 | | | | |

**Notes**

1. Two tubes damaged during modification to the wrapper.
2. Mid-cycle outage due to an indication of a possible loose part.
3. One tube was plugged since it was not expanded for the full depth of the tubesheet.
4. Two tubes were plugged due to circumferential PWSCC near the tube end.

## Table 3-36: Point Beach 1: Tubes Plugged for Indications Other Than AVB Wear

| STEAM GENERATOR A | | | | |
|---|---|---|---|---|
| Tube | Location | RFO # | Characterization | Stabilized |
| 21-63 | 5H-0.65 | 18 | 68% throughwall wear indication | |
| 38-69 | Tubesheet | 31 | Tube not expanded for the full depth of the tubesheet | |

| STEAM GENERATOR B | | | | |
|---|---|---|---|---|
| Tube | Location | RFO # | Characterization | Stabilized |
| 1-1 | TSC+18" | 15 | Damaged during tube lane blocking device removal | |
| 1-48 | TEH+0.1 | 33 | SCC—circumferential PWSCC | |
| 2-1 | TSC+18" | 15 | Damaged during tube lane blocking device removal | |
| 4-41 | TEH+0.1 | 33 | SCC—circumferential PWSCC | |

# Table 3-37: Robinson 2: Summary of Bobbin Inspections and Tube Plugging

| Outage | Completion Date | Cumul. EFPY | SG A | | | SG B | | | SG C | | | Total Plug | Total DePl | Cumul. Plugged | Percent Plugged | Notes |
|---|---|---|---|---|---|---|---|---|---|---|---|---|---|---|---|---|
| | | | Insp. | Plug | DePl | Insp. | Plug | DePl | Insp. | Plug | DePl | | | | | |
| Pre-op | | | | 0 | | | 0 | | | 0 | | 0 | 0 | 0 | 0.00 | |
| RFO 10 | 02/01/1986 | 0.9 | 306 | 0 | | 305 | 0 | | 287 | 0 | | 0 | 0 | 0 | 0.00 | |
| RFO 11 | 05/01/1987 | 1.8 | 301 | 0 | | 301 | 0 | | 296 | 0 | | 0 | 0 | 0 | 0.00 | |
| RFO 12 | 12/05/1988 | 2.8 | 630 | 0 | | 631 | 0 | | 633 | 1 | | 1 | 0 | 1 | 0.01 | |
| Mid-Cycle | 04/15/1989 | | | | | | | | | | | 0 | 0 | 1 | 0.01 | 1 |
| RFO 13 | 11/01/1990 | 3.8 | 654 | 0 | | 655 | 0 | | 653 | 1 | | 1 | 0 | 2 | 0.02 | |
| RFO 14 | 04/28/1992 | 4.8 | 661 | 1 | | 659 | 0 | | 667 | 0 | | 1 | 0 | 3 | 0.03 | |
| RFO 15 | 10/05/1993 | 5.9 | 1084 | 1 | | 1187 | 0 | | 1083 | 0 | | 1 | 0 | 4 | 0.04 | |
| Mid-Cycle | 03/20/1994 | 6.1 | | | | | | | 484 | 2 | | 2 | 0 | 6 | 0.06 | 2 |
| RFO 16 | 06/21/1995 | 7.0 | | | | | | | 3210 | 0 | | 0 | 0 | 6 | 0.06 | |
| RFO 17 | 09/27/1996 | 8.2 | 3212 | 1 | | | | | | | | 1 | 0 | 7 | 0.07 | |
| RFO 18 | 04/14/1998 | 9.5 | | | | 2025 | 0 | | 1607 | 0 | | 0 | 0 | 7 | 0.07 | |
| RFO 19 | 10/24/1999 | 10.9 | 1610 | 0 | | | | | | | | 0 | 0 | 7 | 0.07 | |
| RFO 20 | 04/27/2001 | 12.3 | | | | 1619 | 1 | | 1697 | 3 | | 4 | 0 | 11 | 0.11 | |
| RFO 21 | 10/29/2002 | 13.7 | 1871 | 4 | | 1806 | 3 | | 1709 | 1 | | 8 | 0 | 19 | 0.20 | |
| RFO 22 | 05/28/2004 | 15.1 | 1751 | 0 | | 3210 | 5 | | 1765 | 2 | | 7 | 0 | 26 | 0.27 | |
| RFO 23 | 10/25/2005 | 16.5 | | | | | | | | | | 0 | 0 | 26 | 0.27 | 3 |
| RFO 24 | 05/13/2007 | 18.0 | 1911 | 0 | | 1957 | 5 | | 1917 | 1 | | 6 | 0 | 32 | 0.33 | 4 |
| RFO 25 | 10/05/2008 | 19.2 | | | | | | | | | | 0 | 0 | 32 | 0.33 | 3 |
| RFO 26 | 07/18/2010 | 20.5 | 3207 | 0 | | 3200 | 7 | | 3203 | 5 | | 12 | 0 | 44 | 0.46 | 5 |
| RFO 27 | 03/20/2012 | 21.8 | | | | | | | | | | 0 | 0 | 44 | 0.46 | 3 |
| RFO 28 | 11/07/2013 | 23.2 | 1607 | 2 | | 1607 | 2 | | 1607 | 0 | | 4 | 0 | 48 | 0.50 | 6 |
| Mid-Cycle | 04/07/2014 | | 1607 | 0 | | 1607 | 0 | | 3198 | 1 | | 1 | 0 | 49 | 0.51 | 7 |
| | | | | | | | | | | | | | | | | |
| | | | | | | | | | | | | | | | | |
| | | **Totals:** | | 9 | 0 | | 23 | 0 | | 17 | 0 | 49 | | 0 | | |

**Plant Data**
Model: 44F
T-hot (approximate): 604 °F
Tubes per steam generator: 3214
Number of steam generators: 3

**Acronyms**
Pre-op = prior to operation
Cumul. = cumulative
Insp. = number of tubes inspected
Plug = number of tubes plugged
DePl = number of tubes deplugged
RFO = refueling outage

**Notes**
1. Mid-cycle outage to investigate an indication of a possible loose part on the primary side of the steam generator. No tube inspections performed.
2. Mid-cycle outage to investigate an indication of a possible loose part on the secondary side of the steam generator.
3. No steam generator tube inspections were performed.
4. The U-bend region of the row 1 and 2 tubes was not inspected with a bobbin probe. The U-bend region of 50% of the row 1 and 2 tubes was inspected with a rotating probe.
5. The U-bend region of the row 1 and 2 tubes was not inspected with a bobbin probe. The U-bend region of 50% of the row 1 and 2 tubes in SG B and C was inspected with a rotating probe. The U-bend region of 100% of the row 1 and 2 tubes in SG A was inspected with a rotating probe.
6. The U-bend region of the row 1 and 2 tubes was not inspected with a bobbin probe.
The U-bend region of 50% of the row 1 and 2 tubes was inspected with either a rotating probe or an array probe.
7. Mid-cycle outage due to primary-to-secondary leakage caused by a loose part in a SG.

# Table 3-38: Robinson 2: Causes of Tube Plugging

| Year | | | 1986 | 1987 | 1988 | 1989 | 1990 | 1992 | 1993 | 1994 | 1995 | 1996 | 1998 | 1999 | 2001 | 2002 | 2004 | 2005 | 2007 | 2008 | 2010 | 2012 | 2013 | 2014 | | | |
|---|---|---|---|---|---|---|---|---|---|---|---|---|---|---|---|---|---|---|---|---|---|---|---|---|---|---|---|
| **Cause of Tube Plugging/Outage** | | **Pre-Op** | **RFO 10** | **RFO 11** | **RFO 12** | **Mid-Cycle** | **RFO 13** | **RFO 14** | **RFO 15** | **Mid-Cycle** | **RFO 16** | **RFO 17** | **RFO 18** | **RFO 19** | **RFO 20** | **RFO 21** | **RFO 22** | **RFO 23** | **RFO 24** | **RFO 25** | **RFO 26** | **RFO 27** | **RFO 28** | **Mid-Cycle** | | **Totals** | **Totals** |
| **Wear** | AVB | | | | | | | | | | | | | | | | | | | | 1 | | | | | 1 | **1** |
| | Preheater TSP (D5) | | | | | | | | | | | | | | | | | | | | | | | | | 0 | |
| | TSP | | | | | | | | | | | | | | | | | | | | | | | | | 0 | |
| **Loose Parts** | Confirmed | | | | | | | | | 2 | | | | | | | 2 | | | | 6 | | | 1 | | 11 | **36** |
| | Not confirmed, periphery | | | | 1 | | 1 | | | | | 1 | | | 1 | 2 | 2 | | 6 | | | | | | | 14 | |
| | Not confirmed, not periphery | | | | | | | | | | | | | | 1 | 2 | 3 | | | | 5 | | | | | 11 | |
| **Obstruction Restriction** | From PSI, no progression | | | | | | | 1 | 1 | | | | | | | | | | | | | | | | | 2 | **3** |
| | Service-induced | | | | | | | | | | | | | | 1 | | | | | | | | | | | 1 | |
| **Manufacturing Flaws** | Preservice | | | | | | | | | | | | | | | | | | | | | | | | | 0 | **8** |
| | Other | | | | | | | | | | | | | | | 4 | | | | | | | 4 | | | 8 | |
| **Inspection Issues** | Probe lodged | | | | | | | | | | | | | | | | | | | | | | | | | 0 | **1** |
| | Data quality | | | | | | | | | | | | | | 1 | | | | | | | | | | | 1 | |
| | Dent/geometry | | | | | | | | | | | | | | | | | | | | | | | | | 0 | |
| | Permeability | | | | | | | | | | | | | | | | | | | | | | | | | 0 | |
| | Not inspected | | | | | | | | | | | | | | | | | | | | | | | | | 0 | |
| **Other** | Top of tubesheet | | | | | | | | | | | | | | | | | | | | | | | | | 0 | **0** |
| | Freespan | | | | | | | | | | | | | | | | | | | | | | | | | 0 | |
| | TSP | | | | | | | | | | | | | | | | | | | | | | | | | 0 | |
| | Other/not reported | | | | | | | | | | | | | | | | | | | | | | | | | 0 | |
| **SCC** | ID | | | | | | | | | | | | | | | | | | | | | | | | | 0 | **0** |
| | OD | | | | | | | | | | | | | | | | | | | | | | | | | 0 | |
| | **TOTALS** | 0 | 0 | 0 | 1 | 0 | 1 | 1 | 1 | 2 | 0 | 1 | 0 | 0 | 4 | 8 | 7 | 0 | 6 | 0 | 12 | 0 | 4 | 1 | 0 | 49 | 49 |
| **Notes:** | | | | | | 1 | | | | 1 | | | | | | 2 | | | | | | | 3 | 4 | | | |

**Notes**

1. Mid-cycle outage due to an indication of a possible loose part.
2. One tube plugged due to mechanical damage from the sludge lancing equipment. 3 tubes plugged due to anomalies attributed to manufacturing.
3. Four tubes were plugged since the bottom of the expansion transition was greater than 1-inch below the top of the tubesheet.
4. Mid-cycle outage due to primary-to-secondary leakage caused by a loose part in a SG.

## Table 3-39: Robinson 2: Tubes Plugged for Indications Other Than AVB Wear

| STEAM GENERATOR A | | | | |
|---|---|---|---|---|
| Tube | Location | RFO # | Characterization | Stabilized |
| 1-29 | 6H | 14 | Restriction at 6H (since preservice inspection) | |
| 1-47 | | 28 | Bottom of expansion transition greater than 2.54 cm (1 in.) below top of tubesheet | |
| 2-6 | 6H | 15 | Restriction at 6H (since preservice inspection) | |
| 4-39 | 3C-0.88” | 21 | PLP—37% wall thinning | |
| 20-35 | | 28 | Bottom of expansion transition greater than 2.54 cm (1 in.) below top of tubesheet | |
| 37-50 | TSH+0.04” | 21 | Manufacturing anomaly—41% wall thinning | |
| 37-51 | TSH+0.04” | 21 | Manufacturing anomaly—37% wall thinning | |
| 37-73 | Cold-leg | 17 | Possible loose part in periphery (38% throughwall indication) | |
| 38-50 | TSH+0.07” | 21 | Manufacturing anomaly—41% wall thinning | |

## Table 3-39: Robinson 2: Tubes Plugged for Indications Other Than AVB Wear (cont'd)

| STEAM GENERATOR B | | | | |
|---|---|---|---|---|
| Tube | Location | RFO # | Characterization | Stabilized |
| 1-27 | TSC+16.33" | 21 | Wear from maintenance equipment—41% wall thinning | |
| 3-44 | TSH+0.41 | 24 | PLP—32% wall thinning | Y |
| 11-70 | | 28 | Bottom of expansion transition greater than 2.54 cm (1 in.) below top of tubesheet | |
| 23-71 | 4H-0.03" | 22 | Adjacent to leaking tube (loose part not identified or removed)—55% wall thinning | Y |
| 23-72 | 4H-0.34" | 22 | Leaking tube (loose part not identified nor removed) | Y |
| 24-33 | TSH+0.19" | 22 | PLP—20% wall thinning | Y |
| 24-65 | 2H+0.36" | 21 | PLP—30% wall thinning | |
| 25-10 | | 28 | Bottom of expansion transition greater than 2.54 cm (1 in.) below top of tubesheet | |
| 28-63 | 2H-0.58 | 26 | CLP—64% wall thinning | N |
| 29-14 | FBH+0.46" | 24 | PLP—31% wall thinning | Y |
| 29-15 | FBH+0.43 | 24 | PLP—36% wall thinning | Y |
| 30-14 | FBH+0.44" | 24 | PLP—22% wall thinning | Y |
| 33-17 | FBH+0.72 | 24 | PLP—20% wall thinning | Y |
| 34-18 | FBH+0.60" | 22 | PLP—22% wall thinning | Y |
| 34-43 | TSH+0.01" | 21 | PLP—20% wall thinning | Y |
| 35-30 | FBC+0.47 | 26 | CLP—40% wall thinning | Y |
| 36-30 | FBC+0.45 | 26 | CLP—40% wall thinning | Y |
| 37-30 | | 26 | CLP | N |
| 38-30 | FBC+0.42 | 26 | CLP—27% wall thinning | Y |
| 38-69 | TSH | 22 | PLP—wear scar detected through visual exam only - <20% wall thinning | N |
| 39-30 | FBC+0.43 | 26 | CLP—27% wall thinning | Y |
| 40-30 | FBC+0.52 | 26 | CLP—60% wall thinning | Y |
| 43-55 | | 20 | Dent (since manufacture) resulting in poor data quality | |

## Table 3-39: Robinson 2: Tubes Plugged for Indications Other Than AVB Wear (cont'd)

| STEAM GENERATOR C | | | | |
|---|---|---|---|---|
| Tube | Location | RFO # | Characterization | Stabilized |
| 1-90 | TSH, TSC | 1994 | 57% throughwall confirmed loose part indication | |
| 2-90 | TSC+0.6" | 13 | 44% throughwall possible loose part indication | |
| 2-91 | TSC+0.05 | 24 | PLP—38% wall thinning | N |
| 3-90 | TSC | 1994 | 33% throughwall confirmed loose part indication | |
| 7-92 | TSH | 12 | 76% throughwall gouge-like indication indicative of a debris related defect | |
| 8-15 | 4C-0.58 | 26 | PLP—37% wall thinning (not periphery) | Y |
| 23-70 | 5C-0.86 | 26 | PLP—33% wall thinning (not periphery) | Y |
| 27-71 | 4C-0.57 | 26 | PLP—41% wall thinning (not periphery) | N |
| 31-15 | TSH+0.66 | 2014 Mid | CLP—100% wall thinning (primary-to-secondary leak) | |
| 32-26 | TSH+0.28" | 20 | 32% throughwall wear indication attributed to transient loose part | |
| 32-46 | 3H-0.56 | 26 | PLP—51% wall thinning (not periphery) | N |
| 33-34 | 6H | 20 | Obstruction above 6H | |
| 39-34 | 2H-0.82" | 22 | PLP—17% wall thinning | Y |
| 39-35 | 2H-0.74" | 22 | PLP—30% wall thinning | Y |
| 44-56 | FBH+0.45" | 20 | Flow distribution baffle wear indication attributed to transient loose part | |
| 45-41 | 6H-0.98" | 21 | PLP—50% wall thinning | |

## Table 3-40: Salem 1: Summary of Bobbin Inspections and Tube Plugging

| Outage | Completion Date | Cumul. EFPY | SG A | | | SG B | | | SG C | | | SG D | | | Total Plug | Total DePl | Cumul. Plugged | Percent Plugged | Notes |
|---|---|---|---|---|---|---|---|---|---|---|---|---|---|---|---|---|---|---|---|
| | | | Insp. | Plug | DePl | Insp. | Plug | DePl | Insp. | Plug | DePl | Insp. | Plug | DePl | | | | | |
| Pre-op | | | | 0 | | | 3 | | | 9 | | | 1 | | 13 | 0 | 13 | 0.06 | |
| RFO 13 | 10/15/1999 | 1.348 | 5626 | 3 | | 5623 | 0 | | 5617 | 4 | | 5625 | 3 | | 10 | 0 | 23 | 0.10 | |
| RFO 14 | 05/03/2001 | 2.715 | 5623 | 6 | | 5623 | 12 | | 5613 | 11 | | 5622 | 6 | | 35 | 0 | 58 | 0.26 | |
| RFO 15 | 10/27/2002 | 3.989 | 5617 | 8 | | 5611 | 11 | | 5602 | 12 | | 5616 | 2 | | 33 | 0 | 91 | 0.40 | 1 |
| RFO 16 | 04/19/2004 | 5.304 | 5609 | 16 | | 5600 | 3 | | 5590 | 13 | | 5614 | 5 | | 37 | 0 | 128 | 0.57 | 1 |
| RFO 17 | 11/04/2005 | 6.567 | | | | | | | | | | | | | 0 | 0 | 128 | 0.57 | 2 |
| RFO 18 | 04/16/2007 | 7.937 | 5593 | 11 | | 5597 | 16 | | 5577 | 54 | | 5609 | 15 | | 96 | 0 | 224 | 1.00 | |
| RFO 19 | 11/12/2008 | | | | | | | | | | | | | | 0 | 0 | 224 | 1.00 | 2 |
| RFO 20 | 04/27/2010 | | 5582 | 2 | | 5581 | 6 | | 5523 | 5 | | 5594 | 1 | | 14 | 0 | 238 | 1.06 | |
| RFO 21 | 11/18/2011 | | | | | | | | | | | | | | 0 | 0 | 238 | 1.06 | 2 |
| RFO 22 | 05/22/2013 | | 5580 | 4 | | 5575 | 3 | | 5518 | 3 | | 5593 | 3 | | 13 | 0 | 251 | 1.12 | |
| | | | | | | | | | | | | | | | | | | | |
| | | | | | | | | | | | | | | | | | | | |
| | | **Totals:** | | 50 | 0 | | 54 | 0 | | 111 | 0 | | 36 | 0 | 251 | 0 | | | |

**Plant Data**
Model: F
T-hot (approximate):
Tubes per steam generator: 5626
Number of steam generators: 4

**Acronyms**
Pre-op = prior to operation
Cumul. = cumulative
Insp. = number of tubes inspected
Plug = number of tubes plugged
DePl = number of tubes deplugged
RFO = refueling outage

**Notes**
1. Bobbin probe inspections were not performed in the U-bend region for those row 1 and row 2 tubes that had their U-bend region inspected with a rotating probe.
2. No steam generator tube inspections were performed.

# Table 3-41: Salem 1: Causes of Tube Plugging

| | Year | | 1999 | 2001 | 2002 | 2004 | 2005 | 2007 | 2008 | 2010 | 2011 | 2013 | | | |
|---|---|---|---|---|---|---|---|---|---|---|---|---|---|---|---|
| Cause of Tube Plugging/Outage | | Pre-Op | RFO 13 | RFO 14 | RFO 15 | RFO 16 | RFO 17 | RFO 18 | RFO 19 | RFO 20 | RFO 21 | RFO 22 | | Totals | Totals |
| Wear | AVB | | 8 | 29 | 33 | 28 | | 95 | | 7 | | 8 | | 208 | 208 |
| | Preheater TSP (D5) | | | | | | | | | | | | | 0 | |
| | TSP | | | | | | | | | | | | | 0 | |
| Loose Parts | Confirmed | | | | | 3 | | | | 5 | | 3 | | 11 | 16 |
| | Not confirmed, periphery | | | 2 | | | | | | 1 | | 2 | | 5 | |
| | Not confirmed, not periphery | | | | | | | | | | | | | 0 | |
| Obstruction Restriction | From PSI, no progression | | | | | | | | | | | | | 0 | 0 |
| | Service-induced | | | | | | | | | | | | | 0 | |
| Manufacturing Flaws | Preservice | 13 | | | | | | | | | | | | 13 | 17 |
| | Other | | 2 | | | 2 | | | | | | | | 4 | |
| Inspection Issues | Probe lodged | | | | | | | | | | | | | 0 | 10 |
| | Data quality | | | 3 | | 1 | | | | 1 | | | | 5 | |
| | Dent/geometry | | | | | | | | | | | | | 0 | |
| | Permeability | | | 1 | | 3 | | 1 | | | | | | 5 | |
| | Not inspected | | | | | | | | | | | | | 0 | |
| Other | Top of tubesheet | | | | | | | | | | | | | 0 | 0 |
| | Freespan | | | | | | | | | | | | | 0 | |
| | TSP | | | | | | | | | | | | | 0 | |
| | Other/not reported | | | | | | | | | | | | | 0 | |
| SCC | ID | | | | | | | | | | | | | 0 | 0 |
| | OD | | | | | | | | | | | | | 0 | |
| | TOTALS | 13 | 10 | 35 | 33 | 37 | 0 | 96 | 0 | 14 | 0 | 13 | 0 | 251 | 251 |
| Notes: | | | 1 | 2 | 3 | 4 | | | | | | | | | |

**Notes**

1. Two tubes were not fully expanded into the tubesheet.
2. The 2 possible loose parts indications were in the U-bend region of the tube bundle.
3. One tube that was plugged as a result of AVB wear also contained wear at the 7th tube support plate on the cold-leg side.
4. Two high row tubes were plugged due to non-optimal tube processing.

## Table 3-42: Salem 1: Tubes Plugged for Indications Other Than AVB Wear

| STEAM GENERATOR A | | | | |
|---|---|---|---|---|
| Tube | Location | RFO # | Characterization | Stabilized |
| 1-3 | Above 7C | 14 | Possible loose part indication aligned with one of tube support lands | |
| 8-115 | TSC | 16 | CLP—<=8% wall thinning (part removed) | |
| 9-115 | TSC | 16 | CLP—<=8% wall thinning (part removed) | |
| 9-116 | TSC | 16 | CLP—<=8% wall thinning (part removed) | |
| 36-54 | | 16 | Permeability Variation | |
| 58-48 | 5H+6.69 to 5H+32.09" | 14 | Permeability | |
| 58-72 | U-bend | 16 | Data Quality in U-bend | |

| STEAM GENERATOR B | | | | |
|---|---|---|---|---|
| Tube | Location | RFO # | Characterization | Stabilized |
| 1-43 | 7H+2.17" | 14 | Data Quality/Obstruction | |
| 3-3 | TSC-0.03 | 22 | PLP—31% wall thinning | Y |
| 5-31 | | 18 | Permeability Variation | |

## Table 3-42: Salem 1: Tubes Plugged for Indications Other Than AVB Wear (cont'd)

| STEAM GENERATOR C | | | | |
|---|---|---|---|---|
| Tube | Location | RFO # | Characterization | Stabilized |
| 1-4 | 7H+5.81 | 14 | Data quality—probe skipping/stalling | |
| 2-6 | | 16 | Permeability Variation | |
| 33-98 | | 16 | Preventative—Potential high residual stress | |
| 36-15 | FBC-0.2 | 20 | PLP | Y |
| 36-108 | FBH+0.82<br>FBH+0.38 | 22 | CLP—40% and 32% wall thinning | N |
| 36-109 | FBH+0.59 | 22 | CLP—50% wall thinning | N |
| 37-108 | FBH+0.62 | 22 | CLP—13% wall thinning | N |
| 38-96 | | 16 | Preventative—Potential high residual stress | |
| 46-64 | Tubesheet | 13 | Tube not fully expanded into tubesheet | |
| 54-60 | Tubesheet | 13 | Tube not fully expanded into tubesheet | |
| 55-39 | | 16 | Permeability Variation | |
| 55-82 | 7H | 20 | Data quality (permeability) | |

| STEAM GENERATOR D | | | | |
|---|---|---|---|---|
| Tube | Location | RFO # | Characterization | Stabilized |
| 1-79 | 7H+5.74" | 14 | Data Quality/Obstruction | |
| 2-23 | Below 7C | 14 | Possible loose part indication aligned between 2 tube support lands | |
| 20-42 | TSH | 20 | PLP | Y |
| 20-43 | TSH | 20 | PLP | Y |
| 21-41 | TSH | 20 | PLP | Y |
| 21-42 | TSH | 20 | PLP | Y |
| 33-109 | FBH+0.48 | 22 | PLP—32% wall thinning | |
| 34-109 | FBH+0.45 | 20 | CLP—40% wall thinning | |

## Table 3-43: Surry 1: Summary of Bobbin Inspections and Tube Plugging

| Outage | Completion Date | Cumul. EFPY | SG A | | | SG B | | | SG C | | | Total Plug | Total DePl | Cumul. Plugged | Percent Plugged | Notes |
|---|---|---|---|---|---|---|---|---|---|---|---|---|---|---|---|---|
| | | | Insp. | Plug | DePl | Insp. | Plug | DePl | Insp. | Plug | DePl | | | | | |
| Pre-op | | | | 1 | | | 1 | | | 0 | | 2 | 0 | 2 | 0.02 | |
| RFO 1 | 03/01/1983 | 1.3 | | | | 316 | 0 | | 378 | 0 | | 0 | 0 | 2 | 0.02 | 1 |
| RFO 2 | 11/01/1984 | 2.3 | 858 | 3 | | 562 | 1 | | | | | 4 | 0 | 6 | 0.06 | |
| RFO 3 | 06/01/1986 | 3.4 | 2869 | 0 | | 1553 | 2 | | 2874 | 2 | | 4 | 0 | 10 | 0.10 | |
| RFO 4 | 04/01/1988 | 4.7 | | | | 788 | 0 | | 788 | 0 | | 0 | 0 | 10 | 0.10 | |
| RFO 5 | 10/01/1990 | 6 | 152 | 0 | | 881 | 0 | | 1246 | 2 | | 2 | 0 | 12 | 0.12 | |
| RFO 6 | 03/01/1992 | 7.1 | 1170 | 2 | | 1170 | 0 | | | | | 2 | 0 | 14 | 0.14 | |
| RFO 7 | 02/01/1994 | 8.7 | | | | 3339 | 4 | | | | | 4 | 0 | 18 | 0.18 | |
| RFO 8 | 10/01/1995 | 10.1 | | | | | | | 3338 | 1 | | 1 | 0 | 19 | 0.19 | |
| RFO 9 | 03/01/1997 | 11.4 | 3336 | 5 | | | | | | | | 5 | 0 | 24 | 0.24 | |
| RFO 10 | 10/01/1998 | 12.7 | | | | 3334 | 6 | | | | | 6 | 0 | 30 | 0.30 | |
| RFO 11 | 04/01/2000 | 14.1 | | | | | | | 3337 | 8 | | 8 | 0 | 38 | 0.38 | |
| RFO 12 | 10/01/2001 | 15.5 | 3331 | 5 | | | | | | | | 5 | 0 | 43 | 0.43 | |
| RFO 13 | 04/01/2003 | 16.8 | | | | 3328 | 7 | | 20 | 4 | | 11 | 0 | 54 | 0.54 | 2, 3 |
| RFO 14 | 10/01/2004 | 18.2 | | | | | | | | | | 0 | 0 | 54 | 0.54 | |
| RFO 15 | 04/01/2006 | 19.5 | 3326 | 13 | | | | | 3325 | 3 | | 16 | 0 | 70 | 0.70 | 2 |
| RFO 16 | 11/28/2007 | 20.9 | | | | 3321 | 1 | | | | | 1 | 0 | 71 | 0.71 | 2 |
| RFO 17 | 05/10/2009 | 22.2 | 3313 | 9 | | 132 | 0 | | 3322 | 6 | | 15 | 0 | 86 | 0.86 | 4 |
| RFO 18 | 12/01/2010 | 23.6 | 184 | 6 | | 3320 | 4 | | 138 | 10 | | 20 | 0 | 106 | 1.06 | 5 |
| RFO 19 | 06/05/2012 | 25 | 3298 | 0 | | | | | 3306 | 0 | | 0 | 0 | 106 | 1.06 | 4 |
| RFO 20 | 11/20/2013 | 26.4 | | | | 3316 | 0 | | | | | 0 | 0 | 106 | 1.06 | 5 |
| | | | | | | | | | | | | | | | | |
| | | | | | | | | | | | | | | | | |
| | | **Totals:** | | 44 | 0 | | 26 | 0 | | 36 | 0 | 106 | 0 | | | |

**Plant Data**
Model: 51F
T-hot (approximate): 605 °F
Tubes per steam generator: 3342
Number of steam generators: 3

**Acronyms**
Pre-op = prior to operation
Cumul. = cumulative
Insp. = number of tubes inspected
Plug = number of tubes plugged
DePl = number of tubes deplugged
RFO = refueling outage

**Notes**
1. Inspections were from hot-leg tube end through uppermost tube support on cold-leg (i.e., no full length inspections).
2. The U-bend region of the row 1 tubes was not inspected with a bobbin probe. The U-bend region of 100% of the row 1 tubes was inspected with a rotating probe.
3. Inspections in SG C were partial tube inspections and limited to tubes potentially damaged by sludge lancing equipment.
4. The U-bend region of the row 1 and 2 tubes was not inspected with a bobbin probe. The U-bend region of 100% of the row 1 and 2 tubes in SGs A and C was inspected with a rotating probe.
5. The U-bend region of the row 1 and 2 tubes was not inspected with a bobbin probe. The U-bend region of 100% of the row 1 and 2 tubes in SG B was inspected with a rotating probe.

# Table 3-44: Surry 1: Causes of Tube Plugging

| Year | | | 1983 | 1984 | 1986 | 1988 | 1990 | 1992 | 1994 | 1995 | 1997 | 1998 | 2000 | 2001 | 2003 | 2004 | 2006 | 2007 | 2009 | 2010 | 2012 | 2013 | | | |
|---|---|---|---|---|---|---|---|---|---|---|---|---|---|---|---|---|---|---|---|---|---|---|---|---|---|
| Cause of Tube Plugging/Outage | | Pre-Op | RFO 1 | RFO 2 | RFO 3 | RFO 4 | RFO 5 | RFO 6 | RFO 7 | RFO 8 | RFO 9 | RFO 10 | RFO 11 | RFO 12 | RFO 13 | RFO 14 | RFO 15 | RFO 16 | RFO 17 | RFO 18 | RFO 19 | RFO 20 | | Totals | Totals |
| Wear | AVB | | | | | | | 1 | 4 | 1 | 1 | | 7 | 1 | | | 1 | | | | | | | 16 | **16** |
| | Preheater TSP (D5) | | | | | | | | | | | | | | | | | | | | | | | 0 | |
| | TSP | | | | | | | | | | | | | | | | | | | | | | | 0 | |
| Loose Parts | Confirmed | | | | | | | | | | | | | | | | 5 | | | | | | | 5 | **15** |
| | Not confirmed, periphery | | | | | | | | | | | 3 | | | | | 2 | | 1 | 2 | | | | 8 | |
| | Not confirmed, not periphery | | | | | | | | | | | | | | | | 1 | | 1 | | | | | 2 | |
| Obstruction Restriction | From PSI, no progression | | | | | | | | | | | | | | | | | | | | | | | 0 | **7** |
| | Service-induced | | | | 1 | | | | | | 3 | 3 | | | | | | | | | | | | 7 | |
| Manufacturing Flaws | Preservice | 2 | | | | | | | | | | | | | | | | | | | | | | 2 | **33** |
| | Other | | | | 1 | | 2 | | | | | | | 3 | 8 | | | | | 17 | | | | 31 | |
| Inspection Issues | Probe lodged | | | | | | | | | | | | | | | | | | | | | | | 0 | **12** |
| | Data quality | | | | | | | | | | | | | | | | | | | | | | | 0 | |
| | Dent/geometry | | | | | | | | | | | | | | 2 | | | | | | | | | 2 | |
| | Permeability | | | | | | | | | | 1 | | | | 1 | | 7 | 1 | | | | | | 10 | |
| | Not inspected | | | | | | | | | | | | | | | | | | | | | | | 0 | |
| Other | Top of tubesheet | | | 1 | | | | | | | | | | | | | | | | | | | | 1 | **9** |
| | Freespan | | | | 1 | | | 1 | | | | | 1 | 1 | | | | | | | | | | 4 | |
| | TSP | | | 3 | 1 | | | | | | | | | | | | | | | | | | | 4 | |
| | Other/not reported | | | | | | | | | | | | | | | | | | | | | | | 0 | |
| SCC | ID | | | | | | | | | | | | | | | | | | 13 | | | | | 13 | **14** |
| | OD | | | | | | | | | | | | | | | | | | | 1 | | | | 1 | |
| | TOTALS | 2 | 0 | 4 | 4 | 0 | 2 | 2 | 4 | 1 | 5 | 6 | 8 | 5 | 11 | 0 | 16 | 1 | 15 | 20 | 0 | 0 | 0 | 106 | 106 |
| Notes: | | | | | 1, 2 | | 3 | | | | | | 4 | 4,5 | 6 | | | | 7 | 8 | | | | | |

**Notes**

1. Assumed tube plugged for a restriction was service-induced.
2. A tube pulled for destructive examination was classified as a manufacturing flaw.
3. Two tubes pulled for destructive examination revealed manufacturing flaws.
4. One tube was plugged for a wear indication in U-bend attributed to interaction with the tip of the AVB - classified as a free span indication.
5. Three tubes were plugged as a result of mechanical damage from the sludge lancing equipment - classified as manufacturing flaws.
6. Eight tubes were plugged as a result of mechanical damage from the sludge lancing equipment - classified as manufacturing flaws.
7. Twelve tubes were plugged due to circumferential PWSCC at the tube ends. One tube was plugged for axial PWSCC at expansion transition.
8. One tube was plugged due to circumferential ODSCC at the expansion transition. Seventeen tubes were plugged since the bottom of the expansion transition was greater than 1-inch from the top of the tubesheet.

## Table 3-45: Surry 1: Tubes Plugged for Indications Other Than AVB Wear

| STEAM GENERATOR A | | | | |
|---|---|---|---|---|
| Tube | Location | RFO # | Characterization | Stabilized |
| 1-9 | TSC+16" | 12 | Mechanical damage because of sludge lancing equipment | |
| 1-28 | TSC, TSH+16" | 12 | Mechanical damage because of sludge lancing equipment | |
| 1-35 | TSC | 9 | Restriction | |
| 1-36 | TSC | 9 | Restriction | |
| 1-37 | TSC | 9 | Restriction | |
| 1-49 | TEH+0.02<br>TEH+0.03 | 17 | SCC—circumferential | N |
| 1-67 | TSH+16" | 12 | Mechanical damage because of sludge lancing equipment | |
| 3-27 | 6H-25.99” to 35.48” | 15 | Permeability Variation | |
| 4-82 | 3C+12.58” | 15 | Permeability Variation | |
| 5-88 | TSH+0.16” | 15 | PLP—40% wall thinning (no part present) | |
| 6-61 | TEH+0.04<br>TEH+0.05 | 17 | SCC—circumferential | N |
| 6-71 | 2H+22.43” | 15 | Permeability Variation | |
| 9-69 | TSH+0.02 | 17 | SCC—axial PWSCC | Y |
| 10-24 | 2C-20.57” to 23.15” | 15 | Permeability Variation | |
| 10-44 | U-bend Freespan | 12 | Wear caused by tip of AVB | |
| 12-55 | TEH+0.02 | 17 | SCC—circumferential | N |
| 13-20 | 4H | 6 | 31% throughwall indication associated with a dent | |
| 13-55 | TEH+0.01 | 17 | SCC—circumferential | N |
| 14-55 | TEH+0.06<br>TEH+0.07<br>TEH+0.08 | 17 | SCC—circumferential | N |
| 14-73 | 3C+15.49” to 25.67” | 15 | Permeability Variation | |
| 14-85 | | 9 | Permeability | |
| 19-55 | 3C-1.34” to 20.86” | 15 | Permeability Variation | |
| 19-62 | TEH+0.34 | 17 | SCC—circumferential | N |
| 23-49 | TEH+0.02<br>TEH+0.03 | 17 | SCC—circumferential | N |
| 27-84 | BPH+0.51<br>BPH+0.71 | 17 | PLP—40% wall thinning (periphery) | N |
| 32-51 | 4H-22.43”0 to -26.08” | 15 | Permeability Variation | |
| 34-40 | | 18 | Bottom of expansion transition greater than 2.54 cm (1 in.) below top of tubesheet | N |

## Table 3-45: Surry 1: Tubes Plugged for Indications Other Than AVB Wear (cont'd)

| STEAM GENERATOR A | | | | |
|---|---|---|---|---|
| Tube | Location | RFO # | Characterization | Stabilized |
| 35-40 | | 18 | Bottom of expansion transition greater than 2.54 cm (1 in.) below top of tubesheet | N |
| 35-68 | TSH+0.16" | 15 | CLP—65% wall thinning (part removed) | Y |
| 35-69 | TSH+0.17" | 15 | CLP—49% wall thinning (part removed) | Y |
| 36-40 | | 18 | Bottom of expansion transition greater than 2.54 cm (1 in.) below top of tubesheet | N |
| 36-49 | TSH-0.01" | 15 | CLP—41% wall thinning (part removed) | |
| 36-50 | TSH+0.0" | 15 | CLP—43% wall thinning (part removed) | |
| 36-58 | TSH | 2 | 60% throughwall indication | |
| 36-68 | TSH+0.13" | 15 | CLP—54% wall thinning (part removed) | |
| 37-20 | 7H | 2 | 89% throughwall indication | |
| 37-40 | | 18 | Bottom of expansion transition greater than 2.54 cm (1 in.) below top of tubesheet | N |
| 39-37 | | 18 | Bottom of expansion transition greater than 2.54 cm (1 in.) below top of tubesheet | N |
| 39-60 | 5H | 2 | 96% throughwall indication | |
| 43-40 | | 18 | Bottom of expansion transition greater than 2.54 cm (1 in.) below top of tubesheet | N |

## Table 3-45: Surry 1: Tubes Plugged for Indications Other Than AVB Wear (cont'd)

| STEAM GENERATOR B | | | | |
|---|---|---|---|---|
| Tube | Location | RFO # | Characterization | Stabilized |
| 1-9 | TSH+15.56<br>TSC+15.49 | 13 | Mechanical damage because of sludge lancing equipment—39% and 28% wall thinning | |
| 1-28 | TSH+15.51<br>TSC+16.18 | 13 | Mechanical damage because of sludge lancing equipment—31% and 41% wall thinning | |
| 1-34 | TSH | 13 | 108 volt dent near expansion transition | |
| 1-58 | TSH | 10 | Restriction | |
| 1-59 | TSH | 10 | Restriction | |
| 1-60 | TSH | 10 | Restriction | |
| 1-67 | TSH+15.63<br>TSC+16.16 | 13 | Mechanical damage because of sludge lancing equipment—20% and 18% wall thinning | |
| 1-86 | TSC+15.27 | 13 | Mechanical damage because of sludge lancing equipment—36% wall thinning | |
| 4-41 | | 18 | Bottom of expansion transition greater than 2.54 cm (1 in.) below top of tubesheet | N |
| 4-51 | | 18 | Bottom of expansion transition greater than 2.54 cm (1 in.) below top of tubesheet | N |
| 11-14 | 2H to 4H | 3 | Multiple indications between 2H and 4H ranging from 33% to 53% throughwall | |
| 11-88 | 2C+42.64 | 16 | Permeability variation | N |
| 16-50 | 3H+0.64 to 3H+17.69 | 13 | Permeability variation | |
| 21-76 | 1C+22.2 | 13 | 55 volt dent | |
| 32-14 | FBH | 10 | 22% throughwall possible loose part wear indication | |
| 32-16 | FBH | 10 | 21% throughwall possible loose part wear indication | |
| 33-16 | FBH | 10 | 26% throughwall possible loose part wear indication | |
| 33-43 | 2C | 3 | 59% throughwall indication | |
| 37-22 | 2H-0.74 | 18 | PLP—24% wall thinning (periphery) | Y |
| 38-21 | 2H-0.59 | 18 | PLP—28% wall thinning (periphery) | Y |
| 46-46 | 3H | 2 | 44% throughwall indication | |

## Table 3-45: Surry 1: Tubes Plugged for Indications Other Than AVB Wear (cont'd)

| STEAM GENERATOR C | | | | |
|---|---|---|---|---|
| Tube | Location | RFO # | Characterization | Stabilized |
| 1-9 | TSH+16.07<br>TSC+15.81 | 13 | Mechanical damage because of sludge lancing equipment—16% and 15% wall thinning | |
| 1-28 | TSH+15.92<br>TSC+16.44 | 13 | Mechanical damage because of sludge lancing equipment—30% and 21% wall thinning | |
| 1-37 | TEH+0.06 | 17 | SCC—circumferential PWSCC | N |
| 1-44 | TEH+0.01 | 17 | SCC—circumferential PWSCC | N |
| 1-67 | TSH+16.72<br>TSC+15.96 | 13 | Mechanical damage because of sludge lancing equipment—26% and 35% wall thinning | |
| 1-86 | TSH+16.91 | 13 | Mechanical damage because of sludge lancing equipment—34% wall thinning | |
| 2-7 | | 3 | Restriction | |
| 4-33 | TEH+0.05<br>TEH+0.07 | 17 | SCC—circumferential PWSCC | N |
| 10-26 | 1H-0.69 | | PLP—59% wall thinning (not periphery) | N |
| 10-53 | Tubesheet | 5 | Tube pulled—no service-induced degradation | |
| 11-38 | U-bend Freespan | 11 | Wear caused by tip of AVB | |
| 11-39 | TEH+0.04 | 17 | SCC—circumferential PWSCC | N |
| 12-35 | | 18 | Bottom of expansion transition greater than 2.54 cm (1 in.) below top of tubesheet | N |
| 15-62 | 3H-0.59" | 15 | PLP—27% wall thinning | |
| 18-42 | TEH+0.03 | 17 | SCC—circumferential PWSCC | N |
| 19-25 | | 18 | Bottom of expansion transition greater than 2.54 cm (1 in.) below top of tubesheet | N |
| 25-57 | Tubesheet | 5 | Tube pulled—no service-induced degradation | |
| 26-10 | | 18 | Bottom of expansion transition greater than 2.54 cm (1 in.) below top of tubesheet | N |
| 30-21 | TSH-0.03 | 18 | SCC—circumferential ODSCC at expansion transition | Y |
| 35-42 | | 18 | Bottom of expansion transition greater than 2.54 cm (1 in.) below top of tubesheet | N |
| 38-62 | 1H-0.35" | 15 | PLP—32% wall thinning | |
| 39-42 | | 18 | Bottom of expansion transition greater than 2.54 cm (1 in.) below top of tubesheet | N |
| 39-43 | | 18 | Bottom of expansion transition greater than 2.54 cm (1 in.) below top of tubesheet | N |
| 40-70 | 7H | 3 | Tube pulled—no service-induced degradation | |
| 41-53 | | 18 | Bottom of expansion transition greater than 2.54 cm (1 in.) below top of tubesheet | N |
| 42-45 | | 18 | Bottom of expansion transition greater than 2.54 cm (1 in.) below top of tubesheet | N |
| 46-49 | | 18 | Bottom of expansion transition greater than 2.54 cm (1 in.) below top of tubesheet | N |

# Table 3-46: Surry 2: Summary of Bobbin Inspections and Tube Plugging

| Outage | Completion Date | Cumul. EFPY | SG A | | | SG B | | | SG C | | | Total Plug | Total DePl | Cumul. Plugged | Percent Plugged | Notes |
|---|---|---|---|---|---|---|---|---|---|---|---|---|---|---|---|---|
| | | | Insp. | Plug | DePl | Insp. | Plug | DePl | Insp. | Plug | DePl | | | | | |
| Pre-op | | 0 | | 1 | | | | | | 1 | | 2 | 0 | 2 | 0.02 | |
| RFO 1 | 12/01/1981 | 1.1 | | 0 | | | 0 | | | | | 0 | 0 | 2 | 0.02 | 1 |
| RFO 2 | 06/01/1983 | 2.4 | 701 | 0 | | | | | 572 | 0 | | 0 | 0 | 2 | 0.02 | 2 |
| RFO 3 | 04/01/1985 | 3.6 | 535 | 0 | | 534 | 0 | | | | | 0 | 0 | 2 | 0.02 | |
| Mid-Cycle | 06/01/1986 | 4.5 | 23 | 1 | | | | | | | | 1 | 0 | 3 | 0.03 | 3 |
| RFO 4 | 10/01/1986 | 4.7 | | | | 586 | 0 | | 580 | 0 | | 0 | 0 | 3 | 0.03 | |
| RFO 5 | 10/01/1988 | 5.9 | 786 | 0 | | | | | 781 | 0 | | 0 | 0 | 3 | 0.03 | |
| RFO 6 | 03/01/1991 | 7.2 | 1180 | 0 | | | | | 1175 | 0 | | 0 | 0 | 3 | 0.03 | |
| RFO 7 | 03/01/1993 | 8.7 | | | | 3342 | 2 | | | | | 2 | 0 | 5 | 0.05 | |
| RFO 8 | 02/01/1995 | 10.2 | 3340 | 5 | | | | | | | | 5 | 0 | 10 | 0.10 | |
| RFO 9 | 04/01/1996 | 11.2 | | | | | | | 3341 | 8 | | 8 | 0 | 18 | 0.18 | |
| RFO 10 | 10/01/1997 | 12.5 | | | | 3340 | 5 | | | | | 5 | 0 | 23 | 0.23 | |
| RFO 11 | 04/01/1999 | 13.9 | 3335 | 8 | | | | | 0 | 1 | | 9 | 0 | 32 | 0.32 | |
| RFO 12 | 10/01/2000 | 15.2 | | | | | | | 3332 | 7 | | 7 | 0 | 39 | 0.39 | |
| RFO 13 | 04/20/2002 | 16.5 | 3327 | 1 | | | | | | | | 1 | 0 | 40 | 0.40 | 4 |
| RFO 14 | 10/23/2003 | 17.9 | | | | 3335 | 3 | | | | | 3 | 0 | 43 | 0.43 | 4 |
| RFO 15 | 05/22/2005 | 19.3 | | | | | | | 3325 | 8 | | 8 | 0 | 51 | 0.51 | 4, 5 |
| RFO 16 | 11/20/2006 | 20.7 | 3326 | 4 | | | | | | | | 4 | 0 | 55 | 0.55 | 4 |
| RFO 17 | 05/18/2008 | 22.1 | | 3 | | 3332 | 1 | | 3317 | 5 | | 9 | 0 | 64 | 0.64 | 4, 6 |
| RFO 18 | 11/30/2009 | 23.5 | 3319 | 7 | | | 7 | | | 16 | | 30 | 0 | 94 | 0.94 | 7,8 |
| RFO 19 | 06/15/2011 | 24.8 | | | | 3324 | 0 | | 3296 | 0 | | 0 | 0 | 94 | 0.94 | 7 |
| RFO 20 | 12/02/2012 | 26.2 | 3312 | 0 | | | | | | | | 0 | 0 | 94 | 0.94 | 7 |
| RFO 21 | 05/20/2014 | 27.5 | | | | 3324 | 1 | | 3296 | 0 | | 1 | 0 | 95 | 0.95 | 7 |
| | | | | | | | | | | | | | | | | |
| | | | | | | | | | | | | | | | | |
| | | **Totals:** | | 30 | 0 | | 19 | 0 | | 46 | 0 | 95 | 0 | | | |

**Plant Data**
Model: 51F
T-hot (approximate): 605 °F
Tubes per steam generator: 3342
Number of steam generators: 3

**Acronyms**
Pre-op = prior to operation
Cumul. = cumulative
Insp. = number of tubes inspected
Plug = number of tubes plugged
DePl = number of tubes deplugged
RFO = refueling outage

**Notes**
1. Number of tubes inspected was not readily available. Inspections only performed in steam generators A and B.
2. Most inspections are from the hot-leg tube end through uppermost tube support on cold-leg (i.e., limited full-length inspections).
3. During a plant shutdown, a 21 gpd primary-to-secondary leak was investigated and 23 tubes were inspected.
4. The U-bend region of the row 1 tubes was not inspected with a bobbin probe. The U-bend region of 100% of the row 1 tubes was inspected with a rotating probe.
5. The expansion transition region of six tubes in steam generator B was inspected with a rotating probe as a result of visually identifying potential tube damage.
6. The hot-leg tube end region in steam generator A was inspected with a rotating probe.
7. The U-bend region of the row 1 and 2 tubes was not inspected with a bobbin probe. The U-bend region of 100% of the row 1 and 2 tubes was inspected with a rotating probe.
8. Select rotating probe inspections were performed in steam generators B and C. The inspections focused within the tubesheet and at the top of the tubesheet.

# Table 3-47: Surry 2: Causes of Tube Plugging

| Year | | | 1981 | 1983 | 1985 | 1986 | 1986 | 1988 | 1991 | 1993 | 1995 | 1996 | 1997 | 1999 | 2000 | 2002 | 2003 | 2005 | 2006 | 2008 | 2009 | 2011 | 2012 | 2014 | | | |
|---|---|---|---|---|---|---|---|---|---|---|---|---|---|---|---|---|---|---|---|---|---|---|---|---|---|---|---|
| **Cause of Tube Plugging/Outage** | | **Pre-Op** | **RFO 1** | **RFO 2** | **RFO 3** | **Mid-Cycle** | **RFO 4** | **RFO 5** | **RFO 6** | **RFO 7** | **RFO 8** | **RFO 9** | **RFO 10** | **RFO 11** | **RFO 12** | **RFO 13** | **RFO 14** | **RFO 15** | **RFO 16** | **RFO 17** | **RFO 18** | **RFO 19** | **RFO 20** | **RFO 21** | | **Totals** | **Totals** |
| **Wear** | AVB | | | | | | | | | 2 | | 3 | 3 | | 7 | 1 | | | | | | | | | | 16 | **16** |
| | Preheater TSP (D5) | | | | | | | | | | | | | | | | | | | | | | | | | 0 | |
| | TSP | | | | | | | | | | | | | | | | | | | | | | | | | 0 | |
| **Loose Parts** | Confirmed | | | | | 1 | | | | | | | | | | | 3 | 3 | 1 | | | | | | | 8 | **38** |
| | Not confirmed, periphery | | | | | | | | | | | | | | | | | 5 | 2 | | 7 | | | 1 | | 15 | |
| | Not confirmed, not periphery | | | | | | | | | | | | | | | | | | | 3 | 12 | | | | | 15 | |
| **Obstruction Restriction** | From PSI, no progression | | | | | | | | | | | | | | | | | | | | | | | | | 0 | **6** |
| | Service-induced | | | | | | | | | | 1 | 2 | 2 | 1 | | | | | | | | | | | | 6 | |
| **Manufacturing Flaws** | Preservice | 2 | | | | | | | | | | | | | | | | | | | | | | | | 2 | **13** |
| | Other | | | | | | | | | | | | | | | | | | | | 11 | | | | | 11 | |
| **Inspection Issues** | Probe lodged | | | | | | | | | | | | | | | | | | | | | | | | | 0 | **0** |
| | Data quality | | | | | | | | | | | | | | | | | | | | | | | | | 0 | |
| | Dent/geometry | | | | | | | | | | | | | | | | | | | | | | | | | 0 | |
| | Permeability | | | | | | | | | | | | | | | | | | | | | | | | | 0 | |
| | Not inspected | | | | | | | | | | | | | | | | | | | | | | | | | 0 | |
| **Other** | Top of tubesheet | | | | | | | | | | 4 | 3 | | 8 | | | | | | | | | | | | 15 | **16** |
| | Freespan | | | | | | | | | | | | | | | | | | | | | | | | | 0 | |
| | TSP | | | | | | | | | | | | | | | | | | | | | | | | | 0 | |
| | Other/not reported | | | | | | | | | | | | | | | | | | 1 | | | | | | | 1 | |
| **SCC** | ID | | | | | | | | | | | | | | | | | | | 6 | | | | | | 6 | **6** |
| | OD | | | | | | | | | | | | | | | | | | | | | | | | | 0 | |
| | **TOTALS** | 2 | 0 | 0 | 0 | 1 | 0 | 0 | 0 | 2 | 5 | 8 | 5 | 9 | 7 | 1 | 3 | 8 | 4 | 9 | 30 | 0 | 0 | 1 | 0 | 95 | 95 |
| **Notes:** | | | | | | 1 | | | | | 2 | | | 2 | | | | | 3 | 4 | 5 | | | | | | |

**Notes**

1. During a plant shutdown, a 21 gpd primary-to-secondary leak was investigated.
2. Top of tubesheet indications attributed to "pitlike" indications.
3. One tube was plugged due to damage to the hot-leg tube end during prior removal of a tube plug.
4. Six tubes plugged due to hot-leg tube end indications.
5. Eleven tubes were plugged since they were not expanded within the tubesheet region.

## Table 3-48: Surry 2: Tubes Plugged for Indications Other Than AVB Wear

| STEAM GENERATOR A | | | | |
|---|---|---|---|---|
| Tube | Location | RFO # | Characterization | Stabilized |
| 1-36 | | 8 | Restriction | |
| 1-46 | TEH | 17 | Tube end crack | N |
| 1-59 | TSH | 8 | Restriction | |
| 2-31 | TEH | 17 | Tube end crack | N |
| 4-36 | TSC | 8 | Axially oriented anomaly—pitlike indication | |
| 4-43 | TSC+2.44 | 11 | Pitlike indication | |
| 4-45 | TSC+2.3<br>TSC+3.2 | 11 | Pitlike indication | |
| 6-38 | TSC+3.8<br>TSC+4.2 | 11 | Pitlike indication | |
| 6-39 | TSC | 8 | Axially oriented anomaly—pitlike indication | |
| 7-36 | TSC+4.7 | 11 | Pitlike indication | |
| 7-39 | TSC | 8 | Axially oriented anomaly—pitlike indication | |
| 7-49 | TSC+4.27<br>TSC+5.47 | 11 | Pitlike indication | |
| 7-50 | TSC | 8 | Axially oriented anomaly—pitlike indication | |
| 7-57 | TSC+3.06 | 11 | Pitlike indication | |
| 9-51 | TSC+3.19 | 11 | Pitlike indication | |
| 12-29 | TEH | 17 | Tube end crack | N |
| 34-26 | TSC+0.13 | 18 | PLP—40% wall thinning (not periphery) | N |
| 34-27 | TSC+0.18 | 16 | Possible loose part—72% wall thinning (peripheral tube) | |
| 35-27 | TSC+0.18 | 16 | Possible loose part—49% wall thinning (peripheral tube) | |
| 40-28 | TSC+0.1 | 18 | PLP—41% wall thinning (periphery) | N |
| 40-29 | TSC+0.13 | 18 | PLP—42% wall thinning (periphery) | N |
| 41-27 | TEH+1.75 | 16 | Hot-leg tube end damage because of plug removal in a prior outage | |
| 41-28 | TSC | 1986 | Confirmed loose part—part removed | |
| 41-29 | TSC+0.18 | 16 | Confirmed loose part—70% wall thinning—part removed in 1986 | |
| 45-47 | BPH | 18 | PLP | Y |
| 45-48 | BPH | 18 | PLP | Y |
| 46-47 | BPH+0.67 | 18 | PLP—50% wall thinning | Y |
| 46-48 | BPH+0.66 | 18 | PLP—33% wall thinning | Y |

## Table 3-48: Surry 2: Tubes Plugged for Indications Other than AVB Wear (cont'd)

| STEAM GENERATOR B | | | | |
|---|---|---|---|---|
| Tube | Location | RFO # | Characterization | Stabilized |
| 1-34 | | 10 | Restriction | |
| 1-35 | | 10 | Restriction | |
| 9-89 | | 18 | Bottom of expansion transition greater than 2.54 cm (1 in.) below top of tubesheet | |
| 11-88 | 3C+0.64 | 21 | PLP—26% wall thinning | |
| 15-76 | TEH | 17 | Tube end crack | N |
| 16-89 | | 18 | Bottom of expansion transition greater than 2.54 cm (1 in.) below top of tubesheet | |
| 21-10 | 2C+0.55 | 14 | Confirmed loose part - 28% wall thinning - part not removed | Y |
| 21-11 | 2C+0.76 | 18 | PLP – 29% wall thinning (periphery) | Y |
| 22-10 | 2C+0.88 | 14 | Confirmed loose part – 18% wall thinning - part not removed | Y |
| 22-11 | 2C+0.67 | 14 | Confirmed loose part – 16% wall thinning - part not removed | Y |
| 22-82 | TSH+0.14 | 18 | PLP – 55% wall thinning (not periphery) | N |
| 32-65 | | 18 | Bottom of expansion transition greater than 2.54 cm (1 in.) below top of tubesheet | |
| 35-41 | | 18 | Bottom of expansion transition greater than 2.54 cm (1 in.) below top of tubesheet | |
| 36-27 | TSC+0.17 | 18 | PLP – 45% wall thinning (not periphery) | N |

## Table 3-48: Surry 2: Tubes Plugged for Indications Other Than AVB Wear (cont'd)

| STEAM GENERATOR C | | | | |
|---|---|---|---|---|
| Tube | Location | RFO # | Characterization | Stabilized |
| 1-36 | TEH | 9 | Restriction | |
| 1-51 | TEH | 17 | Tube end crack | N |
| 1-59 | TEC | 9 | Restriction | |
| 1-63 | TEH | 17 | Tube end crack | N |
| 2-28 | | 18 | Bottom of expansion transition greater than 2.54 cm (1 in.) below top of tubesheet | |
| 2-30 | | 18 | Bottom of expansion transition greater than 2.54 cm (1 in.) below top of tubesheet | |
| 20-57 | | 18 | Bottom of expansion transition greater than 2.54 cm (1 in.) below top of tubesheet | |
| 21-22 | | 18 | Bottom of expansion transition greater than 2.54 cm (1 in.) below top of tubesheet | |
| 23-40 | | 18 | Bottom of expansion transition greater than 2.54 cm (1 in.) below top of tubesheet | |
| 25-13 | TSC+2.2 | 11 | Pitlike indication | |
| 31-27 | TSH | 9 | Single axial anomaly | |
| 31-28 | TSH-0.1 | 15 | CLP—98% wall thinning – part not removed | Y |
| 32-28 | TSH-0.06 | 15 | CLP—90% wall thinning – part not removed | Y |
| 33-37 | BPH+0.24 | 17 | PLP—16% wall thinning – part not removed | Y |
| 33-39 | BPH | 18 | PLP | Y |
| 34-35 | BPH+0.51 | 17 | PLP—12% wall thinning – part not removed | Y |
| 34-36 | BPH+0.56 | 17 | PLP—18% wall thinning – part not removed | Y |
| 34-39 | BPH+0.55 | 18 | PLP—31% wall thinning (not periphery) | Y |
| 34-73 | TSH | 9 | Single axial anomaly | |
| 35-17 | TSH+1.35 | 15 | CLP—42% wall thinning – part removed | N |
| 35-37 | BPH+0.56 | 18 | PLP—25% wall thinning (not periphery) | Y |
| 35-38 | BPH | 18 | PLP | Y |
| 35-39 | BPH+0.53 | 18 | PLP—26% wall thinning (not periphery) | Y |
| 35-43 | | 18 | Bottom of expansion transition greater than 2.54 cm (1 in.) below top of tubesheet | |
| 35-68 | TSH | 9 | Multiple axial anomaly | |
| 35-69 | TSH+0.09<br>TSH+0.13 | 18 | PLP—26% and 44% wall thinning (not periphery) | N |
| 35-70 | TSH+0.19 | 15 | PLP—42% wall thinning | N |
| 35-71 | TSH+0.26 | 18 | PLP—41% wall thinning (not periphery) | N |
| 35-73 | TSH+0.16 | 15 | PLP—63% wall thinning | N |
| 35-75 | | 18 | Bottom of expansion transition greater than 2.54 cm (1 in.) below top of tubesheet | |
| 36-37 | BPH+0.55 | 18 | PLP—22% wall thinning (not periphery) | Y |
| 36-70 | TSH-0.03 | 15 | PLP—59% wall thinning | N |
| 37-36 | TSH+0.54 | 15 | PLP—49% wall thinning | N |
| 38-54 | TSH+0.18 | 18 | PLP—40% wall thinning (not periphery) | N |
| 41-61 | TSH+0.33 | 15 | PLP—41% wall thinning | N |

## Table 3-49: Turkey Point 3: Summary of Bobbin Inspections and Tube Plugging

| Outage | Completion Date | Cumul. EFPY | SG A | | | SG B | | | SG C | | | Total Plug | Total DePl | Cumul. Plugged | Percent Plugged | Notes |
|---|---|---|---|---|---|---|---|---|---|---|---|---|---|---|---|---|
| | | | Insp. | Plug | DePl | Insp. | Plug | DePl | Insp. | Plug | DePl | | | | | |
| Pre-op | | | | 13 | | | 7 | | | 19 | | 39 | 0 | 39 | 0.40 | 1 |
| RFO 8 | 10/01/1983 | 1.4 | | 0 | | | 0 | | | 0 | | 0 | 0 | 39 | 0.40 | 2 |
| RFO 9 | 06/01/1985 | 2.4 | 276 | 0 | | 420 | 4 | | 199 | 0 | | 4 | 0 | 43 | 0.45 | |
| RFO 10 | 06/13/1987 | 3.6 | 324 | 0 | | 332 | 0 | | 373 | 1 | | 1 | 0 | 44 | 0.46 | |
| RFO 11 | 03/13/1990 | 5.0 | 3203 | 2 | | 3205 | 3 | | 3194 | 6 | | 11 | 0 | 55 | 0.57 | |
| RFO 12 | 10/18/1992 | 6.2 | 3199 | 1 | | 3200 | 1 | | 3188 | 5 | | 7 | 0 | 62 | 0.64 | |
| RFO 13 | 04/25/1994 | 7.4 | 3198 | 1 | | 3199 | 1 | | 3183 | 2 | | 4 | 0 | 66 | 0.68 | |
| RFO 14 | 09/19/1995 | 8.7 | 3197 | 0 | | 3198 | 2 | | 3181 | 0 | | 2 | 0 | 68 | 0.71 | |
| RFO 15 | 03/19/1997 | 10.0 | 3197 | 3 | | 3196 | 9 | | 3181 | 2 | | 14 | 0 | 82 | 0.85 | |
| RFO 16 | 10/08/1998 | 11.4 | 3194 | 0 | | 3187 | 1 | | 3179 | 0 | | 1 | 0 | 83 | 0.86 | |
| RFO 17 | 03/15/2000 | 12.7 | 1609 | 25 | | 1601 | 28 | | 1627 | 16 | | 69 | 0 | 152 | 1.58 | |
| RFO 18 | 10/13/2001 | 14.2 | 3169 | 1 | | 3158 | 11 | | 3163 | 2 | | 14 | 0 | 166 | 1.72 | |
| RFO 19 | 03/13/2003 | 15.5 | 3168 | 1 | | 3147 | 2 | | 3161 | 0 | | 3 | 0 | 169 | 1.75 | 3 |
| RFO 20 | 10/14/2004 | 17.0 | 3167 | 0 | | 3145 | 0 | | 3161 | 0 | | 0 | 0 | 169 | 1.75 | 3 |
| RFO 21 | 04/09/2006 | 18.1 | | | | | | | | | | 0 | 0 | 169 | 1.75 | 4 |
| RFO 22 | 10/09/2007 | 19.4 | 3167 | 0 | | 3145 | 0 | | 3161 | 1 | | 1 | 0 | 170 | 1.76 | 3 |
| RFO 23 | 05/08/2009 | | | | | | | | | | | 0 | 0 | 170 | 1.76 | 4 |
| RFO 24 | 11/07/2010 | 22.2 | 3167 | 1 | | 3145 | 5 | | 3160 | 8 | | 14 | 0 | 184 | 1.91 | 3 |
| RFO 25 | 08/20/2012 | | | | | | | | | | | 0 | 0 | 184 | 1.91 | 4 |
| RFO 26 | 04/24/2014 | 24.7 | 3166 | 0 | | 3140 | 6 | | 3152 | 0 | | 6 | 0 | 190 | 1.97 | 3 |
| | | | | | | | | | | | | | | | | |
| | | | | | | | | | | | | | | | | |
| | | **Totals:** | | 48 | 0 | | 80 | 0 | | 62 | 0 | 190 | 0 | | | |

**Plant Data**
Model: 44F
T-hot (approximate):
Tubes per steam generator: 3214
Number of steam generators: 3

**Acronyms**
Pre-op = prior to operation
Cumul. = cumulative
Insp. = number of tubes inspected
Plug = number of tubes plugged
DePl = number of tubes deplugged
RFO = refueling outage

**Notes**
1. Number of tubes plugged inferred from other inspection results.
2. Extent of inspections not readily available. No tubes were plugged during this outage.
3. The U-bend region of the row 1 and 2 tubes was not inspected with a bobbin probe. The U-bend region of 50% of the row 1 and 2 tubes was inspected with a rotating probe.
4. No steam generator tube inspections were performed.

# Table 3-50: Turkey Point 3: Causes of Tube Plugging

| | Year | | 1983 | 1985 | 1987 | 1990 | 1992 | 1994 | 1995 | 1997 | 1998 | 2000 | 2001 | 2003 | 2004 | 2006 | 2007 | 2009 | 2010 | 2012 | 2014 | | | |
|---|---|---|---|---|---|---|---|---|---|---|---|---|---|---|---|---|---|---|---|---|---|---|---|---|
| | Cause of Tube Plugging/Outage | Pre-Op | RFO 8 | RFO 9 | RFO 10 | RFO 11 | RFO 12 | RFO 13 | RFO 14 | RFO 15 | RFO 16 | RFO 17 | RFO 18 | RFO 19 | RFO 20 | RFO 21 | RFO 22 | RFO 23 | RFO 24 | RFO 25 | RFO 26 | | Totals | Totals |
| Wear | AVB | | | | | 7 | 3 | 3 | 1 | 1 | 1 | 5 | 1 | 1 | | | | | 1 | | | | 24 | 42 |
| | Preheater TSP (D5) | | | | | | | | | | | | | | | | | | | | | | 0 | |
| | TSP | | | | | | | | | | | | 12 | | | | | | 2 | | 4 | | 18 | |
| Loose Parts | Confirmed | | | | | | | | | | | | | | | | | | | | | | 0 | 5 |
| | Not confirmed, periphery | | | | | | | | | 2 | | | | | | | | | | | 1 | | 3 | |
| | Not confirmed, not periphery | | | | | | | | | | | | | | | | | | 2 | | | | 2 | |
| Obstruction Restriction | From PSI, no progression | | | | | | | | | | | | 1 | 1 | | | | | | | | | 2 | 2 |
| | Service-induced | | | | | | | | | | | | | | | | | | | | | | 0 | |
| Manufacturing Flaws | Preservice | 39 | | | | | | | | | | | | 1 | | | | | | | | | 40 | 50 |
| | Other | | | | | | | | | | | | | | | | 1 | | 9 | | | | 10 | |
| Inspection Issues | Probe lodged | | | | | | | | | | | | | | | | | | | | | | 0 | 1 |
| | Data quality | | | | | | | | | | | | | | | | | | | | | | 0 | |
| | Dent/geometry | | | | | | | | | | | | | | | | | | | | | | 0 | |
| | Permeability | | | | | | | | | | | | | | | | | | | | 1 | | 1 | |
| | Not inspected | | | | | | | | | | | | | | | | | | | | | | 0 | |
| Other | Top of tubesheet | | | 3 | 1 | 2 | | | 1 | 8 | | 64 | | | | | | | | | | | 79 | 90 |
| | Freespan | | | | | | 4 | 1 | | 3 | | | | | | | | | | | | | 8 | |
| | TSP | | | 1 | | 2 | | | | | | | | | | | | | | | | | 3 | |
| | Other/not reported | | | | | | | | | | | | | | | | | | | | | | 0 | |
| SCC | ID | | | | | | | | | | | | | | | | | | | | | | 0 | 0 |
| | OD | | | | | | | | | | | | | | | | | | | | | | 0 | |
| | TOTALS | 39 | 0 | 4 | 1 | 11 | 7 | 4 | 2 | 14 | 1 | 69 | 14 | 3 | 0 | 0 | 1 | 0 | 14 | 0 | 6 | 0 | 190 | 190 |
| Notes: | | | | | | | | | | | | 1 | 2 | 2, 3 | | | 4 | | 5 | | | | | |

**Notes**

1. Volumetric and circumferential indications were detected in 64 tubes. Many of these indications were reclassified after the outage as not service induced degradation.
2. One row 1 tube was plugged since a plus-point probe inspection could not be performed in the U-bend area (restriction attributed to ovalization as a result of bending during fabrication).
3. One row 21 tube was plugged as a result of a manufacturing indication in the U-bend region. The indication is volumetric in nature and has not exhibited any evidence of change since the preservice inspection.
4. Tube plugged as a result of an outside diameter initiated volumetric indication located approximately 6 inches below the top of the tubesheet on the hot-leg side, which was attributed to manufacturing/fabrication.
5. Nine tubes were plugged since the tubes were not expanded into the tubesheet region.

## Table 3-51: Turkey Point 3: Tubes Plugged for Indications Other Than AVB Wear

| STEAM GENERATOR A | | | | |
|---|---|---|---|---|
| Tube | Location | RFO # | Characterization | Stabilized |
| 3-80 | TSH-0.08 | 17 | Circumferential indication (reclassified as no service-related degradation) | Y |
| 9-32 | 4H | 11 | ≥40% throughwall indication | |
| 10-31 | TSH-0.15 | 17 | Circumferential indication (reclassified as no service-related degradation) | Y |
| 13-5 | TSH+3.8 | 15 | No characterization provided | |
| 16-64 | TSH-0.09 | 17 | Circumferential indication (reclassified as no service-related degradation) | Y |
| 17-15 | TSH+0.05 | 17 | Circumferential indication (reclassified as no service-related degradation) | Y |
| 17-33 | TSH+0.15 | 17 | Circumferential indication (reclassified as no service-related degradation) | Y |
| 18-83 | TSH+0.11 | 17 | Volumetric indication (reclassified as a pit) | |
| 18-84 | TSH+0.16 | 17 | Volumetric indication (reclassified as a pit) | |
| 19-84 | TSH+0.91<br>TSH+0.46 | 17 | Volumetric indication (reclassified as a pit) | |
| 21-32 | 6H+2.3 | 12 | 44% throughwall indication | |
| 21-38 | AV2+11.25 | 19 | Volumetric manufacturing indication - present during preservice inspection | |
| 21-87 | TSH+0.68 | 17 | Volumetric indication (reclassified as no service-related degradation) | |
| 28-75 | TSH+0.15 | 17 | Volumetric indication (reclassified as a pit) | |
| 29-75 | TSH+0.14 | 17 | Volumetric | |
| 30-65 | TSH+0.24 | 17 | Volumetric indication (reclassified as no service-related degradation) | |
| 31-18 | 6H+1.1 | 15 | Volumetric | |
| 31-77 | TSH+0.1 | 17 | Volumetric indication (reclassified as a pit) | |
| 32-15 | 1H-0.45 | 18 | Wear | |
| 32-23 | TSH-0.05 | 17 | Circumferential indication (reclassified as no service-related degradation) | Y |
| 32-47 | TSH | 24 | Bottom of expansion transition greater than 2.54 cm (1 in.) below top of tubesheet | |
| 32-63 | TSH+0.05 | 17 | Circumferential indication (reclassified as a volumetric indication) | Y |
| 32-64 | TSH-0.01 | 17 | Circumferential indication (reclassified as no service-related degradation) | Y |
| 33-35 | TSH-0.02 | 17 | Circumferential indication (reclassified as a pit) | Y |
| 33-78 | TSH+0.65 | 17 | Volumetric indication (reclassified as no service-related degradation) | |
| 34-25 | TSH-0.08 | 17 | Circumferential indication (reclassified as no service-related degradation) | Y |
| 35-65 | TSH+0.98 | 17 | Volumetric indication (reclassified as no service-related degradation) | |
| 36-69 | TSH+0.21 | 17 | Volumetric | |
| 38-66 | TSH+0.23 | 17 | Volumetric indication (reclassified as no service-related degradation) | |
| 39-67 | TSH-0.05 | 17 | Volumetric indication (reclassified as no service-related degradation) | |
| 44-36 | TSH+0.7 | 15 | Volumetric | |

## Table 3-51: Turkey Point 3: Tubes Plugged for Indications Other Than AVB Wear (cont'd)

| STEAM GENERATOR B | | | | |
|---|---|---|---|---|
| Tube | Location | RFO # | Characterization | Stabilized |
| 1-3 | | 18 | Restriction in U-bend | |
| 1-14 | TSH-0.28 | 17 | Circumferential indication (reclassified as no service-related degradation) | Y |
| 1-86 | | 19 | Restriction in U-bend | |
| 1-87 | TSC | 24 | Bottom of expansion transition greater than 2.54 cm (1 in.) below top of tubesheet | |
| 3-43 | TSH+0.99 | 26 | PLP – 31% wall thinning (periphery) | |
| 5-65 | 2H-0.84 | 26 | TSP wear—25% wall thinning | |
| 6-45 | 2C | 24 | PLP—8% wall thinning | N |
| 7-45 | 2C | 24 | PLP—14% wall thinning | N |
| 7-92 | TSH+0.57 | 17 | Volumetric indication (reclassified as no service-related degradation) | |
| 8-8 | 1H+0.7 | 13 | 44% throughwall indication | |
| 15-17 | TSH-0.06 | 17 | Circumferential indication (reclassified as no service-related degradation) | Y |
| 15-76 | 3H-0.7 | 18 | Wear | |
| 18-80 | 2H-0.90 | 26 | TSP wear—35% wall thinning | |
| 19-6 | TSH | 24 | Bottom of expansion transition greater than 2.54 cm (1 in.) below top of tubesheet | |
| 19-10 | TSH+0.24 | 17 | Volumetric indication (reclassified as a pit) | |
| 19-12 | TSH+0.54 | 17 | Volumetric indication (reclassified as a pit) | |
| 19-13 | TSH+0.25 | 17 | Volumetric indication (reclassified as a pit) | |
| 19-14 | TSH+0.29 | 17 | Volumetric indication (reclassified as a pit) | |
| 20-10 | TSH+0.03 | 17 | Volumetric indication (reclassified as a pit) | |
| 20-12 | TSH+0.21 | 17 | Volumetric indication (reclassified as a pit) | |
| 20-13 | TSH+0.03 | 17 | Volumetric indication (reclassified as a pit) | |
| 21-56 | TSH+0.43 | 17 | Volumetric indication (reclassified as no service-related degradation) | |
| 22-53 | TSH+0.58 | 17 | Volumetric indication (reclassified as no service-related degradation) | |
| 23-7 | TSH+0.58 | 17 | Volumetric indication (reclassified as no service-related degradation) | |
| 23-41 | 3C+0.5 | 15 | Volumetric | |
| 23-71 | 2C-20.90 | 26 | Permeability variation | |
| 24-8 | TSH | 24 | Bottom of expansion transition greater than 2.54 cm (1 in.) below top of tubesheet | |
| 25-32 | 4H+0.0 | 9 | 31% throughwall indication | |
| 25-34 | TSH+0.2 | 17 | Volumetric indication (reclassified as no service-related degradation) | |
| 26-71 | TSH+0.12 | 17 | Volumetric indication (reclassified as no service-related degradation) | |
| 26-77 | 2H-0.48 | 18 | Wear | |
| 27-41 | 3C+0.59 | 18 | Wear | |
| 27-42 | 3C+0.59 | 18 | Wear | |

## Table 3-51: Turkey Point 3: Tubes Plugged for Ind. Other Than AVB Wear (cont'd)

| STEAM GENERATOR B | | | | |
|---|---|---|---|---|
| Tube | Location | RFO # | Characterization | Stabilized |
| 28-41 | 3C+0.69<br>3C+0.61 | 18 | Wear | |
| 30-17 | 2C+0.56 | 18 | Wear | |
| 32-19 | 2H-0.61 | 18 | Wear | |
| 32-66 | 2H-084 | 18 | Wear | |
| 33-70 | TSH-0.06 | 17 | Circumferential indication (reclassified as no service-related degradation) | Y |
| 34-57 | TSH+0.1 | 17 | Volumetric indication (reclassified as a pit) | |
| 37-20 | TSH+0.4 | 15 | Volumetric | |
| 37-46 | TSH+0.04 | 17 | Volumetric indication (reclassified as a pit) | |
| 38-39 | TSH+0 | 17 | Circumferential indication (reclassified as a volumetric) | Y |
| 38-45 | TSH+0.16 | 17 | Circumferential indication (reclassified as a pit) | Y |
| 38-46 | TSH+0.59 | 17 | Volumetric indication (reclassified as a pit) | |
| 38-69 | 2H+0.99 | 18 | Wear | |
| 39-39 | 5H+0.8 | 15 | Volumetric | |
| 39-59 | TSH+0.19 | 17 | Volumetric indication (reclassified as no service-related degradation) | |
| 39-64 | FBH-0.33 | 26 | TSP wear—26% wall thinning | |
| 40-39 | 5H | 11 | ≥40% throughwall indication | |
| 41-43 | TSH+0.04 | 17 | Volumetric indication (reclassified as no service-related degradation) | |
| 41-44 | TSH+0.6 | 15 | Volumetric | |
| 41-65 | TSH+0.63 | 17 | Volumetric indication (reclassified as no service-related degradation) | |
| 42-30 | TSH+0.4 | 9 | 36% throughwall indication | |
| 42-37 | TSH+0.7 | 14 | 44% throughwall indication | |
| 42-38 | TSH+1.5 | 15 | Volumetric | |
| 43-33 | TSH+0.14 | 17 | Volumetric indication (reclassified as a pit) | |
| 43-45 | FBH-0.27 | 26 | TSP wear—26% wall thinning | |
| 44-40 | TSH+0.3<br>TSH+1.8 | 15 | 82% throughwall volumetric indication, pit | |
| 44-41 | TSH+0.2<br>TSH+0.4<br>TSH+0.5 | 15 | Volumetric | |
| 44-42 | TSH+0.4 | 17 | Volumetric indication (reclassified as a pit) | |
| 45-41 | TSH+0.6 | 15 | Adjacent to a loose part so tube was plugged. | |
| 45-42 | TSH+1.3 | 15 | Adjacent to a loose part so tube was plugged. | |
| 45-43 | TSH+0.6<br>TSH+0.8 | 9 | 56% throughwall indication | |
| 45-44 | TSH+3.6<br>TSH+3.8 | 9 | 39% throughwall indication. Tube was replugged in RFO13 since plug was leaking | |
| 45-47 | TSH+0.64 | 17 | Volumetric indication (reclassified as no service-related degradation) | |

## Table 3-51: Turkey Point 3: Tubes Plugged for Indications Other Than AVB Wear (cont'd)

| STEAM GENERATOR C | | | | |
|---|---|---|---|---|
| Tube | Location | RFO # | Characterization | Stabilized |
| 1-20 | TSH-0.12 | 17 | Circumferential indication (reclassified as no service-related degradation) | Y |
| 2-55 | TSC+24.1 | 12 | 60% throughwall indication | |
| 2-70 | 2C+0.7 | 12 | 45% throughwall indication | |
| 3-46 | TSH-0.08 | 17 | Circumferential indication (reclassified as no service-related degradation) | Y |
| 3-82 | TSH | 24 | Bottom of expansion transition greater than 2.54 cm (1 in.) below top of tubesheet | |
| 3-83 | TSH | 24 | Bottom of expansion transition greater than 2.54 cm (1 in.) below top of tubesheet | |
| 3-85 | TSH | 24 | Bottom of expansion transition greater than 2.54 cm (1 in.) below top of tubesheet | |
| 5-23 | TSH | 24 | Bottom of expansion transition greater than 2.54 cm (1 in.) below top of tubesheet | |
| 7-3 | TSH+0.09 | 17 | Volumetric indication (reclassified as no service-related degradation) | |
| 13-89 | TSC | 11 | ≥40% throughwall indication | |
| 14-6 | TSH | 11 | ≥40% throughwall indication | |
| 14-89 | CL | 10 | 48% throughwall indication in sludge pile | |
| 15-44 | TSH+0.03 | 17 | Circumferential indication (reclassified as no service-related degradation) | Y |
| 19-85 | 2H-0.78 | 18 | Wear | |
| 20-66 | 6C+2.4 | 12 | 41% throughwall indication | |
| 20-67 | TSH-6.01 | 22 | Volumetric indication (OD initiated) within tubesheet – attributed to manufacturing/fabrication | |
| 21-61 | 4H-0.76 | 24 | TSP wear—37% wall thinning | |
| 22-7 | TSH+0.55 | 17 | Volumetric indication (reclassified as no service-related degradation) | |
| 23-7 | TSH+0.59 | 17 | Volumetric indication (reclassified as no service-related degradation) | |
| 29-77 | 3H-0.81 | 24 | TSP wear—31% wall thinning | |
| 30-69 | TSH-0.03 | 17 | Circumferential indication (reclassified as no service-related degradation) | Y |
| 31-24 | TSH+0.16 | 17 | Circumferential indication (reclassified as a volumetric indication) | Y |
| 32-64 | 2H-0.59 | 18 | Wear | |
| 33-66 | TSH+0.6 | 15 | 58% throughwall indication | |
| 34-40 | TSH-0.08 | 17 | Circumferential indication (reclassified as no service-related degradation) | Y |
| 34-66 | TSH+0.23 | 17 | Volumetric indication (reclassified as no service-related degradation) | |
| 36-74 | TSH-0.07 | 17 | Circumferential indication (reclassified as no service-related degradation) | Y |
| 39-49 | TSH-0.01 | 17 | Volumetric | |
| 40-49 | TSH+0.06 | 17 | Circumferential indication (reclassified as a volumetric indication) | Y |
| 41-43 | TSH | 24 | Bottom of expansion transition greater than 2.54 cm (1 in.) below top of tubesheet | |
| 45-49 | TSH+2.89 | 17 | Volumetric indication (reclassified as no service-related degradation) | |

## Table 3-52: Turkey Point 4: Summary of Bobbin Inspections and Tube Plugging

| Outage | Completion Date | Cumul. EFPY | SG A | | | SG B | | | SG C | | | Total Plug | Total DePl | Cumul. Plugged | Percent Plugged | Notes |
|---|---|---|---|---|---|---|---|---|---|---|---|---|---|---|---|---|
| | | | Insp. | Plug | DePl | Insp. | Plug | DePl | Insp. | Plug | DePl | | | | | |
| Pre-op | | | | 15 | | | 7 | | | 9 | | 31 | 0 | 31 | 0.32 | 1 |
| RFO 9 | 05/15/1984 | 0.65 | 211 | 0 | | 162 | 0 | | 502 | 0 | | 0 | 0 | 31 | 0.32 | |
| RFO 10 | 03/16/1986 | | 328 | 0 | | 318 | 0 | | 345 | 0 | | 0 | 0 | 31 | 0.32 | |
| RFO 11 | 11/15/1988 | | 3199 | 1 | | 3207 | 0 | | 3205 | 0 | | 1 | 0 | 32 | 0.33 | |
| RFO 12 | 05/13/1991 | | 3198 | 0 | | 3207 | 1 | | 3205 | 0 | | 1 | 0 | 33 | 0.34 | |
| RFO 13 | 04/28/1993 | | 3198 | 0 | | 3206 | 0 | | 3205 | 0 | | 0 | 0 | 33 | 0.34 | |
| RFO 14 | 10/17/1994 | | 3198 | 0 | | 3206 | 0 | | 3205 | 0 | | 0 | 0 | 33 | 0.34 | |
| RFO 15 | 03/01/1996 | | | | | | | | | | | 0 | 0 | 33 | 0.34 | |
| RFO 16 | 09/22/1997 | | 3198 | 0 | | 3206 | 0 | | 3205 | 0 | | 0 | 0 | 33 | 0.34 | |
| RFO 17 | 03/01/1999 | | | | | | | | | | | 0 | 0 | 33 | 0.34 | |
| RFO 18 | 10/09/2000 | | 1602 | 3 | | 1604 | 5 | | 1607 | 2 | | 10 | 0 | 43 | 0.45 | |
| RFO 19 | 04/07/2002 | | | | | | | | | | | 0 | 0 | 43 | 0.45 | 2 |
| RFO 20 | 10/20/2003 | | 3195 | 4 | | 3201 | 0 | | 3203 | 0 | | 4 | 0 | 47 | 0.49 | 3 |
| RFO 21 | 06/12/2005 | 16.46 | | | | | | | | | | 0 | 0 | 47 | 0.49 | 2 |
| RFO 22 | 11/16/2006 | 17.7 | 3191 | 6 | | 3201 | 0 | | 3203 | 0 | | 6 | 0 | 53 | 0.55 | 4 |
| RFO 23 | 05/09/2008 | 18.96 | | | | | | | | | | 0 | 0 | 53 | 0.55 | 2 |
| RFO 24 | 11/13/2009 | 20.37 | 3185 | 4 | | 3201 | 7 | | 3203 | 0 | | 11 | 0 | 64 | 0.66 | 5 |
| RFO 25 | 04/30/2011 | 21.61 | | | | | | | | | | 0 | 0 | 64 | 0.66 | 2 |
| RFO 26 | 04/06/2013 | 23.05 | 3181 | 0 | | 3194 | 1 | | 3203 | 0 | | 1 | 0 | 65 | 0.67 | 4 |
| | | | | | | | | | | | | | | | | |
| | | | | | | | | | | | | | | | | |
| | | **Totals:** | | 33 | 0 | | 21 | 0 | | 11 | 0 | 65 | 0 | | | |

**Plant Data**
Model: 44F
T-hot (approximate): 610 °F
Tubes per steam generator: 3214
Number of steam generators: 3

**Acronyms**
Pre-op = prior to operation
Cumul. = cumulative
Insp. = number of tubes inspected
Plug = number of tubes plugged
DePl = number of tubes deplugged
RFO = refueling outage

**Notes**
1. Number of tubes plugged was deduced based on information provided in various reports.
2. No steam generator tube inspections were performed.
3. The U-bend region of the row 1 and 2 tubes was not inspected with a bobbin probe. The U-bend region of 30% of the row 1 and 2 tubes was inspected with a rotating probe.
4. The U-bend region of the row 1 and 2 tubes was not inspected with a bobbin probe. The U-bend region of 50% of the row 1 and 2 tubes was inspected with a rotating probe.
5. The U-bend region of the row 1 and 2 tubes was not inspected with a bobbin probe. The U-bend region of 100% of the row 1 and 2 tubes was inspected with a rotating probe.

# Table 3-53: Turkey Point 4: Causes of Tube Plugging

| Year | | | 1984 | 1986 | 1988 | 1991 | 1993 | 1994 | 1996 | 1997 | 1999 | 2000 | 2002 | 2003 | 2005 | 2006 | 2008 | 2009 | 2011 | 2013 | | | |
|---|---|---|---|---|---|---|---|---|---|---|---|---|---|---|---|---|---|---|---|---|---|---|---|
| **Cause of Tube Plugging/Outage** | | **Pre-Op** | **RFO 9** | **RFO 10** | **RFO 11** | **RFO 12** | **RFO 13** | **RFO 14** | **RFO 15** | **RFO 16** | **RFO 17** | **RFO 18** | **RFO 19** | **RFO 20** | **RFO 21** | **RFO 22** | **RFO 23** | **RFO 24** | **RFO 25** | **RFO 26** | | **Totals** | **Totals** |
| **Wear** | AVB | | | | | | | | | | | 1 | | | | | | 1 | | | | 2 | |
| | Preheater TSP (D5) | | | | | | | | | | | | | | | | | | | | | 0 | **5** |
| | TSP | | | | | | | | | | | 1 | | 2 | | | | | | | | 3 | |
| **Loose Parts** | Confirmed | | | | | | | | | | | | | | | | | | | | | 0 | |
| | Not confirmed, periphery | | | | | | | | | | | | | 1 | | 6 | | | | | | 7 | **8** |
| | Not confirmed, not periphery | | | | | | | | | | | | | | | | | | | 1 | | 1 | |
| **Obstruction Restriction** | From PSI, no progression | | | | | | | | | | | | | | | | | | | | | 0 | **2** |
| | Service-induced | | | | 1 | 1 | | | | | | | | | | | | | | | | 2 | |
| **Manufacturing Flaws** | Preservice | 31 | | | | | | | | | | | | | | | | | | | | 31 | **41** |
| | Other | | | | | | | | | | | | | | | | | 10 | | | | 10 | |
| **Inspection Issues** | Probe lodged | | | | | | | | | | | | | | | | | | | | | 0 | |
| | Data quality | | | | | | | | | | | | | | | | | | | | | 0 | |
| | Dent/geometry | | | | | | | | | | | | | | | | | | | | | 0 | **1** |
| | Permeability | | | | | | | | | | | 1 | | | | | | | | | | 1 | |
| | Not inspected | | | | | | | | | | | | | | | | | | | | | 0 | |
| **Other** | Top of tubesheet | | | | | | | | | | | 7 | | | | | | | | | | 7 | |
| | Freespan | | | | | | | | | | | | | 1 | | | | | | | | 1 | **8** |
| | TSP | | | | | | | | | | | | | | | | | | | | | 0 | |
| | Other/not reported | | | | | | | | | | | | | | | | | | | | | 0 | |
| **SCC** | ID | | | | | | | | | | | | | | | | | | | | | 0 | **0** |
| | OD | | | | | | | | | | | | | | | | | | | | | 0 | |
| | **TOTALS** | 31 | 0 | 0 | 1 | 1 | 0 | 0 | 0 | 0 | 0 | 10 | 0 | 4 | 0 | 6 | 0 | 11 | 0 | 1 | 0 | 65 | 65 |
| **Notes:** | | | | | | | | | | | | | | 1 | | | | 2 | | 3 | | | |

**Notes**

1. One tube was plugged since it was damaged during loose part retrieval activities.
2. Nine tubes were plugged because they were not expanded into the tubesheet region. One tube was plugged since the bottom of the expansion transition was greater than 1-inch below the top of the tubesheet.
3. Wear at tube support plate associated with a possible loose part.

## Table 3-54: Turkey Point 4: Tubes Plugged for Indications Other Than AVB Wear

| STEAM GENERATOR A | | | | |
|---|---|---|---|---|
| Tube | Location | RFO # | Characterization | Stabilized |
| 2-5 | HL Tubesheet | 11 | Clamp stuck inside tube. Attempts to retrieve were unsuccessful. | |
| 3-1 | FBH-0.38 | 20 | Pit-shaped wear | |
| 5-4 | TSC | 24 | Bottom of expansion transition greater than 2.54 cm (1 in.) below top of tubesheet | |
| 12-25 | | 18 | Permeability signal in Expansion Transition Area | |
| 18-44 | TSH | 24 | Bottom of expansion transition greater than 2.54 cm (1 in.) below top of tubesheet | |
| 23-10 | FBH+0.34 | 20 | PLP wear | |
| 23-62 | TSH | 24 | Bottom of expansion transition greater than 2.54 cm (1 in.) below top of tubesheet | |
| 26-80 | TSH+2.27 | 18 | Pit | |
| 33-73 | TSH+0.17 | 18 | Volumetric indication | |
| 33-78 | | 24 | Wear and dent at AVB | |
| 35-68 | TSC-0.05 | 22 | PLP wear | |
| 35-69 | TSC-0.01 | 22 | PLP wear | |
| 35-70 | TSC+0.01 | 22 | PLP wear | |
| 35-71 | TSC+0.00 | 22 | PLP wear | |
| 35-72 | TSC+0.03 | 22 | PLP wear | |
| 36-74 | TSC+0.04 | 22 | PLP wear | |
| 40-28 | FBH-0.22 | 20 | Pit-shaped wear | |
| 45-45 | TSC+12.15 | 20 | Wear because of maintenance | |

## Table 3-54: Turkey Point 4: Tubes Plugged for Indications Other Than AVB Wear (cont'd)

| STEAM GENERATOR B | | | | |
|---|---|---|---|---|
| Tube | Location | RFO # | Characterization | Stabilized |
| 2-90 | FBH-0.46 | 18 | Wear | |
| 5-66 | TSH | 24 | Bottom of expansion transition greater than 2.54 cm (1 in.) below top of tubesheet | |
| 8-81 | TSH-2.0 | 12 | Restriction | |
| 9-12 | TSH | 24 | Bottom of expansion transition greater than 2.54 cm (1 in.) below top of tubesheet | |
| 10-67 | TSH | 24 | Bottom of expansion transition greater than 2.54 cm (1 in.) below top of tubesheet | |
| 12-39 | TSH | 24 | Bottom of expansion transition greater than 2.54 cm (1 in.) below top of tubesheet | |
| 17-74 | 1H+0.70 | 26 | PLP wear | Y |
| 20-80 | TSH | 18 | Pit | |
| 21-80 | TSH+0.05 | 18 | Pit | |
| 23-12 | TSC | 24 | Bottom of expansion transition greater than 2.54 cm (1 in.) below top of tubesheet | |
| 24-19 | TSH | 24 | Bottom of expansion transition greater than 2.54 cm (1 in.) below top of tubesheet | |
| 29-62 | TSH+0.12 | 18 | Pit | |
| 31-37 | TSH | 24 | Bottom of expansion transition greater than 2.54 cm (1 in.) below top of tubesheet | |
| 43-51 | TSH-0.04 | 18 | Pit | |

| STEAM GENERATOR C | | | | |
|---|---|---|---|---|
| Tube | Location | RFO # | Characterization | Stabilized |
| 3-91 | TSH+0 | 18 | Pit | |

# 4 SUMMARY

The following section summarizes the operating experience presented in Section 3. Summaries are provided for each of the three groupings of units (i.e., model D5, model F, and replacement models) and an overall summary. The overall summary includes discussions on forced outages and unplanned inspections, tubes removed for laboratory examination, corrosion of tubes, degradation in the steam generator channel head and of steam generator secondary-side internals, tube wear, and observations about the results from the inspections. Although Section 3 only summarizes the operating experience from January 2002 through December 2013, this section summarizes the operating experience since the steam generators were placed in service.

## 4.1 Model D5 Summary

There are a total of 73,120 thermally treated tubes in the four units with model D5 steam generators. Cumulatively, these four units have operated for 99 calendar years as of December 2013, and have commercially operated for an average of 25 calendar years as of December 2013. These four units have operated for an average of 21.7 effective full power years as of December 2013. Of the 73,120 tubes in these steam generators, only 1,068 tubes (1.5 percent) have been plugged. This information is summarized in Table 4-1.

Table 4-2 summarizes the number of tubes plugged in the model D5 steam generators as a function of the degradation mechanism. The information in this table is graphically depicted in Figure 4-1. As can be seen from the figure, approximately 33 percent of the tubes were plugged because of wear at tube supports. This wear occurred predominantly at the anti-vibration bars (AVBs), although some occurred at tube support plates. With only 30 tubes being plugged for wear in the preheater region, it appears that the tube expansion at the preheater baffle plates (as discussed in Section 2.2) was successful in mitigating this phenomenon. In addition to tube wear, many (32 percent) of the tubes were plugged because of loose parts. This includes tubes that had wear attributed to loose parts and also includes tubes that had no wear, but were plugged since they were near a loose part that was not removed.

Figures 4-2a and 4-2b depict the number of tubes plugged at each unit as a function of year. Figure 4-3 depicts the number of tubes plugged at each unit as a function of refueling outage. These figures indicate, for the most part, that the four units are operating similarly. The data supporting Figures 4-2a and 4-2b are contained in Tables 4-3 and 4-4. The data supporting Figure 4-3 are contained in Table 4-5.

Figure 4-4 depicts the percentage of tubes plugged for a specific mechanism as a function of year. This figure was developed from the data provided in Tables 4-6, 4-7, and 4-8. In this figure, tubes plugged before commercial operation were treated as being plugged during the year the unit began commercial operation (in previous tables and figures in this report, tubes plugged before operation were treated as a distinct group independent of the actual year/outage in which they were plugged).

Tables 3-1, 3-4, 3-7, and 3-10 indicate that all units with D5 steam generators except for Comanche Peak 2 inspect 100 percent of the tubes with a bobbin coil probe in all four steam generators during each refueling outage. At Comanche Peak 2, a sampling approach is used and inspections are performed every other refueling outage.

## 4.2 Model F Summary

There are a total of 117,376 thermally treated tubes in the six units that originally installed model F steam generators in their units. However, with the replacement of the model F steam generators at Callaway in 2005, there are only 112,520 thermally treated tubes in the five units currently operating with originally installed model F steam generators. Cumulatively, the six units have operated for about 152 calendar years as of December 2013, and have commercially operated for an average of 25 calendar years as of December 2013. These numbers reflect the amount of time Callaway operated with their original model F steam generators. The five currently operating units with model F steam generators have commercially operated for an average of 26 calendar years as of December 2013 and have operated for an average of 22.1 effective full power years as of December 2013. Of the 117,376 tubes in these steam generators, only 871 tubes (0.7 percent) have been plugged. This information is summarized in Table 4-9.

Table 4-10 summarizes the number of tubes plugged in the model F steam generators as a function of degradation mechanism. The information in this table is graphically depicted in Figure 4-5. As can be seen from the figure, about 56 percent of the tubes were plugged because of wear at tube supports. This wear occurred predominantly at the AVBs. Only 11 tubes have been plugged for wear at the tube support plates. After wear at tube supports, cracking is the next dominant degradation mechanism in model F steam generators. Twelve percent of the tubes were plugged because of cracking.

The wear at the AVBs in model F steam generators is primarily observed in the tubes in row 20 and higher on the periphery and row 30 and higher in the middle of the tube bundle. At least one licensee has reported that the AVB wear flaws in the middle of the tube bundle tend to be shallower than those on the periphery. In addition, several licensees reported that the average AVB wear rate generally decreases with time.

Figures 4-6a and 4-6b depict the number of tubes plugged at each unit as a function of year. Figure 4-7 depicts the number of tubes plugged at each unit as a function of refueling outage. These figures indicate, for the most part, that the six units are operating similarly. The data supporting Figures 4-6a and 4-6b are contained in Tables 4-11 and 4-12. The data supporting Figure 4-7 are contained in Table 4-13.

Figure 4-8 depicts the percentage of tubes plugged for a specific mechanism as a function of year. This figure was developed from the data provided in Tables 4-14, 4-15, and 4-16. In this figure, tubes plugged before commercial operation were treated as being plugged during the year the unit began commercial operation (in previous tables and figures in this report, tubes plugged before operation were treated as a distinct group independent of the actual year/outage in which they were plugged).

Tables 3-13, 3-16, 3-19, 3-22, 3-25, and 3-28 indicate that most units with model F steam generators typically inspect 100 percent of the tubes with a bobbin coil probe in two of the four steam generators each refueling outage. Recently, however, Wolf Creek has started to sample a subset of the tubes in each of the four steam generators every refueling outage.

## 4.3 Replacement Model Summary

There are a total of 90,766 tubes in the eight units with replacement steam generators that contain thermally treated Alloy 600 tubes. Cumulatively, these eight units have operated for approximately 217 calendar years as of December 2013, and have commercially operated for an average of 27 calendar years as of December 2013. These eight units have operated for an average of 22.0 effective full power years as of December 2013. Of the 90,766 tubes in these steam generators, only 795 tubes (0.9 percent) have been plugged. This information is summarized in Table 4-17.

Table 4-18 summarizes the number of tubes plugged in the replacement model steam generators as a function of degradation mechanism. The information in this table is graphically depicted in Figure 4-9. As can be seen from the figure, approximately 40 percent of the tubes were plugged because of wear at tube supports. This wear occurred predominantly at the AVBs. Only 18 tubes have been plugged for wear at the tube support plates. After wear at tube supports, the category with the next highest number of tubes being plugged is manufacturing.

Figures 4-10a and 4-10b depict the number of tubes plugged at each unit as a function of year. Figure 4-11 depicts the number of tubes plugged at each unit as a function of refueling outage. These figures indicate, for the most part, that the eight units are operating similarly with the possible exception of Salem 1, which has Model F steam generators, and Turkey Point 3. Both of these units have plugged significantly more tubes than the other units. The data supporting Figures 4-10a and 4-10b are contained in Tables 4-19 and 4-20. The data supporting Figure 4-11 are contained in Table 4-21.

Figure 4-12 depicts the percentage of tubes plugged for a specific mechanism as a function of year. This figure was developed from the data provided in Tables 4-22, 4-23, and 4-24. In this figure, tubes plugged before commercial operation were treated as being plugged during the year the unit began commercial operation (in previous tables and figures in this report, tubes plugged before operation were treated as a distinct group independent of the actual year/outage in which they were plugged).

Tables 3-31, 3-34, 3-37, 3-40, 3-43, 3-46, 3-49, and 3-52 indicate that units with replacement steam generators with thermally treated Alloy 600 tubes have a variety of strategies for inspecting their steam generators. Several units inspect a subset of steam generators each refueling outage (e.g., one of three steam generators is inspected one outage and the remaining two steam generators are inspected the next outage). This is referred to as “skip steam generator.” Others inspect all steam generators every other outage (i.e., no tube inspections are performed during one refueling outage, but all steam generators are inspected the next refueling outage). This schedule is referred to as “skip cycle.” Units that skip cycles or skip steam generators typically inspect 100 percent of the tubes in the steam generators inspected.

## 4.4 Overall Summary

### 4.4.1 Forced outages and unplanned inspections

As of December 2013, the steam generator operating experience of units with thermally treated Alloy 600 has been favorable. These units account for approximately 26 percent of the operating pressurized water reactors. A review of the operating experience from units with thermally treated Alloy 600 steam generator tubes identified only three unplanned outages

because of primary-to-secondary leakage and five unplanned outages because of indications of loose parts (e.g., loose parts monitor alarms) as of December 2013. These eight outages are discussed below. (During the preparation of this report in the first half of 2014, one other unplanned outage occurred because of primary-to-secondary leakage. This is briefly discussed below.) In addition to these outages, there have been instances where units have shut down because of water chemistry issues and there have been instances where inspections had to be performed during an outage when no inspections had been planned (e.g., in response to finding loose parts on the secondary side of a steam generator).

In three instances, units with thermally treated Alloy 600 tubes have been shut down because of primary-to-secondary leakage as of December 2013. Byron 2 shut down in June 2002 because of a 284- to 303-liter-per-day (lpd) (75- to 80-gallon-per-day (gpd)) primary-to-secondary leak. The cause of the leak was wear attributed to two pieces of spiral wound sheathing. The wear occurred at tube support 2C in the preheater region of the steam generator. These objects damaged three tubes and the tubes were plugged. One tube had a 100 percent throughwall flaw (the leaking tube), another tube had a 37 percent throughwall indication, and the last tube had two indications measuring 11 percent and 13 percent throughwall.

Byron 2 also shut down in 1996 and entered a refueling outage early because of a 120-gpd primary-to-secondary leak. The cause of the leak was a foreign object attributed to thermal-cutting debris from a pipe whose diameter was somewhere between 30.5 and 45.7 cm (12 and 18 in.). The foreign object was on the secondary side of the steam generator. This object damaged four tubes and the tubes were plugged. One tube had a 100 percent throughwall indication, one had a 56 percent throughwall indication, and the remaining two tubes were plugged because of nonquantifiable volumetric indications found by a rotating pancake coil probe.

Surry 2 shut down in June 1986 because of a leak in an expansion joint on the service water return line from a recirculation spray heat exchanger and to identify the source of a primary-to-secondary leak. Similar to Byron 2, the source of the Surry 2 leak was a tube affected by a foreign object. One steam generator tube was plugged because of this outage.

As this report was being prepared, Robinson 2 shut down in March 2014 because of a 144-lpd (38-gpd) primary-to-secondary leak. The cause of the leak was wear attributed to a foreign object that was introduced into the feedwater system during maintenance performed in the previous refueling outage (about four months earlier). Only the tube that leaked was plugged during this outage.

Other units (e.g., Seabrook, Indian Point 2, Point Beach 1, Robinson 2) have experienced leakage (less than 19 lpd (5 gpd)), but the leak rate has been too small to necessitate a unit shutdown. The sources of such small amounts of leakage are usually never conclusively identified (although in the case of Robinson 2 during refueling outage (RFO) 22 in 2002, the source of the leak was identified as wear attributed to a loose part). In addition, this leakage may be observed for several cycles. Sometimes leakage is observed when there is a leaking fuel assembly (e.g., Robinson 2 before RFO 25 in 2008). Most units with thermally treated Alloy 600 steam generator tubes operate with no detectable amounts of primary-to-secondary leakage.

In five instances, units with thermally treated Alloy 600 tubes have been shut down because of indications of a loose part in the steam generators. Wolf Creek shut down in May 2002 because

of a loose part on the primary side of the steam generator. The part was a control rod guide tube support pin nut and locking device.

In February 2000, Point Beach 1 was shut down to investigate indications of loose parts in the steam generator. A thorough inspection found no loose parts and the unit was restarted.

In May 1996, Vogtle 1 shut down in response to a possible loose part on the primary side of steam generator 4. Upon entering the hot-leg channel head, a support pin nut from a control rod guide tube assembly was found. The nut's locking device was found wedged into the bottom of a tube and was subsequently removed. Another object, believed to be a fragment of the support pin nut, was found on the cold-leg side of the steam generator. The loose object impacted the lower tubesheet on the hot-leg side and numerous indications were noted. The hot legs of the other three steam generators did not exhibit any signs of damage. During a subsequent steam generator tube inspection, the shank of the broken support pin was found lodged in a tube. The shank was left in place and the tube was plugged. Damaged tube ends on the tubesheet were rerolled during this outage.

In February 1994, Robinson 2 was shut down for repairs to an emergency diesel generator. During this shutdown, the source of a loose parts monitor alarm was investigated. The investigation revealed two strips of metal resting on the tubesheet. Their composition was similar to that of welding electrodes believed to have been used to fabricate the replacement steam generator shell welds. The pieces of metal were removed and two tubes were plugged because of localized wear where the metal objects contacted the tubes. Two nearby tubes had been plugged in prior outages because of either outside-diameter wear or manufacturing marks. These indications may have been related to the loose part.

In April 1989, Robinson 2 was shut down because of audio signals indicating a loose part in the hot-leg channel head of steam generator C. When the steam generator manway was opened, a loose part fell out. The part was a split pin nut from a control rod guide tube support. Examination of the tubesheet, tube ends, tube-to-tubesheet welds, and divider plate welds did not reveal conditions that required immediate repair. However, this examination did reveal damage to the tubesheet and tube ends on the hot-leg side of steam generator C. This damage obliterated some of the tubesheet face markings used to identify tubes on the hot leg, complicating the insertion of inspection probes through the hot-leg tube end.

In addition to these forced outages, there have been other instances where tube inspections were performed when none had been planned during a scheduled outage (e.g., Robinson 2 in 2004), and there have been instances where units were shut down because of secondary-side water chemistry issues (e.g., Vogtle 1 and 2 in 2002, Comanche Peak 2 in 2011).

### 4.4.2 Tubes removed for laboratory examination

To characterize eddy current indications found during steam generator tube in-service inspections, portions of a few tubes have been removed from steam generators with thermally treated Alloy 600 tubes. Based on information supplied to the NRC, tubes have been removed six times from units with thermally treated Alloy 600 steam generator tubes as of December 2013: Vogtle 1, Vogtle 2, Seabrook, Byron 2, and Surry 1 (twice). The results of these examinations are discussed below.

In 2008, Vogtle 1 removed portions of two tubes to characterize outside-diameter initiated indications at the top of the tubesheet on the hot-leg side of the steam generator. One of the

tubes had an axial indication and the other tube had a circumferential indication. The destructive examination of the pulled tubes confirmed the presence of outside-diameter initiated intergranular stress corrosion cracking within the expansion transition at the top of the tubesheet. Three axial cracks were found in one of the tubes. The cracks were circumferentially separated by about 55 degrees and were 100 percent throughwall. The maximum depth of these indications was estimated by eddy current to be approximately 77 percent throughwall. Circumferential cracking was found around the entire circumference of the other tube. The maximum depth from the destructive examination was 80 percent throughwall whereas the eddy current examination estimated the flaws to be 54 percent throughwall. The percent degraded area was 21 percent from the destructive examination and was estimated to be 7.3 percent from the eddy current inspection. Both tubes were burst tested and both had burst pressures in excess of three times the normal operating differential pressure. The microstructure indicated relatively low amounts of intergranular carbides and high amounts of intragranular carbides indicating that the mill annealing temperature may have been too low to put carbon/carbides into solution. Carbon in solution is necessary for the thermal treatment process to precipitate the carbides at the grain boundaries (and thereby improve corrosion resistance). More information concerning the results of destructive and nondestructive examination of these pulled tubes can be found in the pulled tube report (ADAMS Accession No. ML100560265).

In 2004, Vogtle 2 removed portions of two tubes to characterize circumferential indications at the expansion transition, which were thought to be circumferentially oriented outside-diameter stress corrosion cracks. The laboratory examination indicated that both pulled tubes exhibited a ring of gray/brownish deposit at, and slightly above, the expansion transition region. The height of this deposit was about 12.7 mm (0.5 in.), and it was about 0.1 to 0.2 mm (4 to 8 mils) in thickness. A dark grayish deposit was observed extending about 2.54 cm (1 in.) to 3.8 cm (1.5 in.) above the collar deposit on both tubes. A relatively thin and uniform gray oxide was noted on all remaining tube surfaces above the top of the tubesheet region. Although laboratory eddy current and ultrasonic testing were able to detect signals that indicate deposits, none of the field signals indicative of crack-like indications were present in the laboratory obtained data. Destructive (metallographic) examination of the top of the tubesheet region of one tube showed no evidence of degradation. Although the tube had copper and lead in the oxide deposit, corrosion had not started. Metallographic examination was not performed on the portion of the second tube. The root cause of the field flaw-like signals was not identified; however, the licensee concluded that the false positive indications could be the result of the non-homogeneous scale or deposits on the tubes at the top of the tubesheet on the hot-leg side of the steam generators.

In 2002, Seabrook removed portions of two tubes to investigate the nature of axial-crack-like indications, which were observed at the hot- and cold-leg tube support plates. All of the indications were on the portion of the tube within the thickness of the tube support plate and opposite the broached tube hole lands. The destructive examination confirmed the presence of cracks in these tubes, representing the first confirmed instance of cracking in thermally treated Alloy 600 tubes. The root cause evaluation, including the destructive examination of these two pulled tubes, confirmed that the indications were axially oriented outside-diameter stress corrosion cracking, and also identified unusually high levels of residual stress in the straight leg sections of both the hot and cold legs. Nonoptimal tube processing during steam generator manufacturing was strongly suspected to be the primary cause of the high residual stresses and the principal factor increasing the susceptibility of the affected tubes to stress corrosion cracking. The precise processing steps responsible for the adverse stress state could not be conclusively determined from a review of the tube processing records. More information

concerning the results of destructive and non-destructive examination of these pulled tubes can be found in the pulled tube report (ADAMS Accession No. ML023240524).

In 1998, Byron 2 removed portions of three tubes with circumferential indications at the hot-leg expansion transition region for destructive examination. Twenty-nine tubes with circumferential indications were identified, stabilized, and plugged during this outage. According to the preliminary tube pull results, the circumferential indications were not service-induced cracking or corrosion but shallow grooves that may have been introduced during initial steam generator fabrication or the first few cycles of operation. Burst testing of the indications showed that the indications did not affect the structural integrity of the tubes. Final results from these examinations were not readily available.

In 1990, portions of two tubes were removed from Surry 1 to examine axial and circumferential anomalies at the top of the tubesheet and were subsequently plugged. The examination found no operationally induced degradation of the tube wall on either of these tubes. Field nondestructive examination results suggested the presence of circumferentially oriented degradation. Upon further review of the nondestructive examination results for one of the pulled tubes, the licensee concluded that the poorly defined rotating pancake coil signal was similar to that of a ding or mechanical deformation. For the other pulled tube, a 70-degree groove, mechanical in nature, was found on the outside diameter of the tube and attributed to the interaction of the tube with the edge of the tubesheet during the expansion process. Although the hydraulic expansion process used was designed to position the transition slightly below the top of the tubesheet, the licensee concluded that this tube was overexpanded above the top of the tubesheet. In summary, destructive examination of the pulled tube segments detected no corrosion. The nondestructive examination indications were attributed to probe liftoff in the expansion transition and to the tube installation process.

Portions of one tube were removed from steam generator C at Surry 1 in 1986 to examine an eddy current indication near the uppermost (seventh) tube support plate. The indication was thought to be caused by conductive deposits on the outside surface of the tubes. The tube pull confirmed the absence of degradation where eddy current testing had suggested degradation.

Although tube wear (from support structures and loose parts) is the dominant degradation mechanism, no tubes have been pulled from units with thermally treated Alloy 600 to characterize these indications.

### 4.4.3 Corrosion of tubes

Steam generator tubes have experienced degradation because of corrosion mechanisms. This degradation was widespread in steam generators with mill-annealed Alloy 600 tubes. In units with thermally treated Alloy 600 tubes, the number of instances of tube degradation because of corrosion has been limited. Two types of corrosion mechanisms have been observed: pitting and cracking.

Only four units with thermally treated Alloy 600 steam generator tubes have potentially experienced tube degradation because of pitting: Surry 1 and 2, and Turkey Point 3 and 4. These units were the first to use thermally treated Alloy 600 tubes in their steam generators. At Surry 2 in the mid-1990s, a limited number of pitlike indications were detected above the tubesheet on the cold-leg side of the steam generator. A rotating pancake coil terrain plot display was used as the primary basis for classifying the signals as pitlike indications. The indications were nearly round and were in the cold leg above the tubesheet expansion

transition, where pitting might be expected given the chemistry conditions. Some of these tubes with pitlike indications were initially left in service. The pitting is believed to have initiated before the chemical cleaning that was performed in 1994. New pits are unlikely to initiate in future cycles because the copper-rich sludge, the major contributor to pitting, is being removed, and improvements were made to the chemistry control program. All 12 tubes with pitlike indications at Surry 2 were plugged because of the uncertainty in nondestructive sizing estimates.

The number of tubes in which pits have been observed is small (fewer than 30 tubes), and all but one of the tubes with pits have been removed from service. The one pit indication currently being reported in an active tube is at Surry 1. No tubes, or portions thereof, have been removed to characterize this degradation mechanism. This degradation mechanism appears to have been arrested because of improvements in water chemistry because no units are reporting the initiation of new pitting indications and the existing pit indication is not progressing.

Cracking has been observed in units with thermally treated Alloy 600 tubes. Cracking has resulted in plugging approximately 7 percent of the tubes in steam generators with thermally treated Alloy 600 as of December 2013. In 2002, the first confirmed instance of cracking in thermally treated Alloy 600 tubes was reported. There was at least one report of cracking before 2002, but it was subsequently concluded that this indication was not a crack. This indication was reported at Braidwood 2 in 1996 when one axial indication was detected in a tube with a small-bend-radius (a row 1 tube). At the time, this indication was attributed to primary water stress corrosion cracking. In addition, axial and circumferential indications were reported at Callaway at the expansion transition in 1996, and an undefined indication was reported in the U-bend of a row 2 tube in 1992; however, these indications have typically not been considered cracks.

Cracking has primarily occurred on the hot-leg side of the steam generator. The only cracks detected on the cold-leg side of the steam generator were at the tube ends or were at the tube support elevations in tubes with nonoptimal tube processing as determined from the eddy current data (i.e., stress relieved tubes with an offset in the eddy current data or non-stress relieved tubes without an offset in the eddy current data (or more precisely where the offset is two standard deviations below the mean of the response for that row of tubes)).

Cracking has occurred at various locations along the tube length including near the tube end, within the tubesheet (but only at bulges and overexpansions), at the expansion transition, slightly above the expansion transition in the sludge pile, in the freespan, at tube support elevations in tubes with nonoptimal tube processing, at a dented tube support plate elevation, and in the U-bend.

Cracking that initiates from the inside surface of the tube has been observed as has cracking that initiates from the outside surface of the tube. Cracking that initiates from the inside-surface of the tube, typically referred to as primary water stress corrosion cracking, has been observed near the tube end and possibly extending into the tube-to-tubesheet weld, within bulges/overexpansions inside the tubesheet region, at the expansion transition, and in the U-bend region of a row 1 tube. A bulge or overexpansion is created when the tube is expanded into a tubesheet bore hole that is not perfectly round. Cracking that initiates from the outside-surface of the tube, typically referred to as outside-diameter stress corrosion cracking has been observed at the expansion transition, in the sludge pile, in the freespan, at non-dented tube support plate elevations, and at dented tube support plate elevations.

A summary of all cracks reported is provided in Table 4-25. As can be seen from Table 4-25, most of the crack-like indications are in the portion of the tube confined within the tubesheet. Of the crack-like indications in the tubesheet region, most are near the tube-end and are a mixture of axial and circumferentially oriented cracking. Indications reported near the tube end may be in the tube-to-tubesheet weld or in the tack roll expansion area. Currently used eddy current inspection techniques cannot reliably differentiate whether these indications are in the weld or in the tack roll region.

Given that cracks in the portion of the tube within the tubesheet cannot burst and are generally regarded as having low safety significance, the NRC has received proposals to limit the extent of inspection in the tubesheet region to the uppermost portion of the tube within the tubesheet. These proposals for units with thermally treated Alloy 600 steam generator tubes are referred to as H* (H-star) amendments. The H* distance is that distance below the top of the tubesheet over which sufficient frictional force, with acceptable safety margins, can be developed between each tube and the tubesheet to overcome the tube "end cap" pressure loads associated with normal operating and design-basis-accident conditions. This frictional force prevents significant slippage or pullout of the tube from the tubesheet (i.e., tube axial displacement), assuming the tube is fully severed at the H* distance below the top of the tubesheet. The H* distance varies from unit-to-unit. H* permits tubes with flaws that occur beneath the inspected region of the tube to remain in service.

As discussed in Section 1.3.3, the NRC has permanently approved the H* alternate repair criterion for all units with thermally treated Alloy 600 steam generator tubes except for Point Beach 1. In addition, before the permanent approval, the NRC had approved similar amendments that were applicable for a limited amount of time for most of the units with thermally treated Alloy 600 steam generator tubes. Because this repair criterion no longer requires the tube ends to be inspected, any cracks that may occur near the tube end would not be detected (including cracks in the tube-to-tubesheet weld, the tack expansion region, and the region where a plug had been installed and then subsequently removed (i.e., a deplugged tube)). However, licensees still could inspect this region and could report these indications (and if they are reported they were included in Table 4-25). Because of these H* amendments, the extent to which this region has been inspected varies from unit-to-unit and has changed with time; therefore, the true extent of cracking near the tube end and when it initiated is difficult to determine. Table 4-26 provides a summary of only the crack indications detected near the tube end. Most of these tubes have been allowed to remain in service with the H* amendments.

Tables 4-27 and 4-28 provide a summary of all the cracks detected except for those cracks detected at the tube end sorted by plant name and by location, respectively. As can be seen from these tables, the number of tubes affected by cracking at these locations is small. All of these tubes have been plugged. All of the cracks reported at the tube support plate elevations have been in tubes with nonoptimal tube processing except for one tube in which the crack was associated with a dent at the tube support plate elevation.

One crack has been detected in the U-bend region. This crack was near a manufacturing indication referred to as a Blairsville bump (because the bump was most likely introduced when the tube was bent into its final "U-shape" at a facility in Blairsville, PA). This bump is at the start of the bent region of the tube (i.e., the start of the U-bend region or the tangent point – refer to Figure 1-4). Although the crack was near the manufacturing indication, it is not known whether this condition is necessary to lead to the initiation of a crack in this region of the tubing. Nonetheless, some units have identified tubes with this manufacturing artifact (Blairsville bump) and have highlighted these tubes as a different population for inspections.

The number of tubes with corrosion-related cracking is small in comparison to the approximately 275,000 thermally treated Alloy 600 tubes in service. Although only a small number of tubes have been identified with crack-like indications, these findings indicate that the tubes are potentially susceptible to cracking at a variety of locations.

No corrosion has been reported in any Alloy 690 tubes as of December 2014.

### 4.4.4 Degradation in steam generator channel head

Because of operating experience, increased emphasis has been placed on inspecting the interior portion of the steam generator channel head. As a result of these inspections some degradation has been observed at units with thermally treated Alloy 600 steam generator tubes. Specifically, degradation was observed at Surry 2 in 2006 and at Wolf Creek in 2013. NRC Information Notice (IN) 2013-20, "Steam Generator Channel Head and Tubesheet Degradation," summarizes this operating experience.

As discussed in this IN, Surry 2 identified a yellow stain at one tube end and on a portion of the channel head near this tube location. This tube was inadvertently plugged in 1986 and when the plug was removed by drilling in 1991, the tube appeared to have been drilled off-center longitudinally from the tube end for a distance of approximately 44 mm (1.75 in.). This resulted in perforating the tube wall over a circumferential distance of about 23 mm (0.9 in.). As a result, this damaged tube end was in service from 1991 until 2006 when the yellow stain was noticed. The yellow stain was attributed to the corrosion of the tubesheet material. Although the damage to the tube end was substantial, the as-found condition did not compromise tube integrity given that the tube damage was near the primary face of the tubesheet.

Given the damage to the tube near the tube-end, a special plug was used on the hot-leg side of the tube. The plug's structural joint was above the damaged region. Two other joints, including one below the damaged region, were made. The lowest joint was expected to form a tortuous leakage path and allow little or no primary coolant to contact the tubesheet material. However, to the extent that the lower joint does not isolate the carbon steel, it was assumed that corrosion of the tubesheet material could occur. The rate of carbon steel corrosion during operation with very low oxygen in the primary coolant is much lower than that during shutdown when the material could be exposed to air. The licensee performed an assessment assuming corrosion would occur and concluded that the corrosion would not affect the structural integrity of the tubesheet. This tube was plugged at both ends during the 2006 outage. The licensee plans to visually inspect this region during future inspections of the tubes in the affected steam generator.

The Surry 2 licensee also characterized and evaluated the channel head degradation. Ultrasonic examination of the tubesheet-to-channel-head transition region confirmed that no degradation extended into the base material. The licensee performed an evaluation of potential carbon steel corrosion rates and concluded that the condition was acceptable for continued service without repair for the remaining licensed life of the unit. During RFO 20 in 2012, visual inspections of this region indicated there was no change in the indication/degradation.

During RFO 16 in 2006 at Surry 2, the hot-leg primary manway flange face also was examined visually. This inspection revealed a localized region of corrosion between the gasket seating

surface and the bolt circle. During RFO 20 in 2012, this area was re-examined and there was no advancement of the degradation. The degradation was attributed to gasket leakage at some point before 2006.

As discussed in the IN, Wolf Creek also identified degradation in the channel head region. Specifically, Wolf Creek identified a rust-colored spot about 152 mm (6 in.) below the primary face of the tubesheet along the weld connecting the divider plate to the channel head during RFO 19 in 2013. The divider-plate-to-channel-head weld is made with weld material of the Alloy 600 type. The cladding on the channel head is primarily stainless steel; however, the cladding near the rust-colored spot may be either stainless steel or Alloy 182 (an Alloy 600 type material) depending on the actual fabrication process. Visual inspections revealed a flaw in the divider-plate-to-channel-head fillet weld, which was attributed to a fabrication defect. An ultrasonic test indicated the flaw in the channel head's base material was about 2.5 mm (0.1 in.) deep and about 51 mm (2 in.) long. The width of the flaw could not be determined because the ultrasonic testing equipment could not be placed at the appropriate location on the outside surface of the channel head because of access limitations.

The flaw at the edge of the divider-plate-to-channel-head weld was evaluated in accordance with Subparagraph IWB-3510.1 and Table IWB-3510-1 of Section XI of the American Society of Mechanical Engineers *Boiler and Pressure Vessel Code*. The flaw in the base material was treated as a planar flaw. The evaluation considered flaw growth in the future. The licensee concluded that it was acceptable to operate the steam generator through the operating cycle. During the cycle, a detailed fracture mechanics analysis of the flaw to determine the long-term corrective action required was planned.

Based on the corrosion properties of the stainless steel cladding and Alloy 600 weld material, and because the primary chemistry is usually maintained in a condition that scavenges oxygen, the licensee concluded that the flaw in the divider-plate-to-channel-head weld was only able to grow when there were oxidizing conditions in the primary coolant (i.e., for a short period before each shutdown because of peroxide addition during the shutdown process) and when the steam generator was open for inspection. Based on this estimated exposure period and boric acid corrosion rates in literature, the licensee predicted that the flaw in the base material would be about 2.5 mm (0.1 in.) deep, assuming that the base material corrosion started at the beginning of plant operation. This matches the actual extent of degradation observed in the channel head base material, as determined from the ultrasonic examination. Using a flaw growth rate of about 0.1 mm (0.005 in.) per operating cycle, the licensee concluded the flaw in the channel head base material would be about 2.7 mm (0.105 in.) deep at the next refueling outage.

Visual inspections of steam generator channel heads were reviewed and the rust spot was not visible during the 2011 inspections, but was visible during all prior outages in which visual inspections of this region were performed (i.e., in 2009, 2006, 2000, and 1994). The 1994 video is the earliest video recording of this area and is a black-and-white recording.

Because structural interferences prevent a zero-degree ultrasonic examination of the divider-plate-to-channel-head weld flaw, it could not be confirmed that there is no delamination between the stainless steel cladding and the channel head's base material in the area directly under the flaw. It was confirmed, however, that there are no delaminations between the cladding and the channel head in those areas around the divider-plate-to-channel-head weld flaw, where there is access for a zero-degree ultrasonic examination.

The licensee has no direct evidence that the flaw at the rust spot's location was not caused by stress corrosion cracking or fatigue. However, the licensee has indirect evidence to support the conclusion that the flaw was not caused by stress corrosion cracking or fatigue. The licensee's evidence includes the fact that stress corrosion cracking is highly unlikely in stainless steel or carbon steel on the primary side of a steam generator, and the existence of the rust stain is evidence that the carbon steel channel head is corroding. The rust spot is around a black spot that the licensee has stated appears to be either a weld crater pit or weld porosity. The rust spot appears to be about 21.8 mm (0.86 in.) long and 6.4 mm (0.25 in.) wide. Also, an industry fatigue stress analysis, which the licensee has cited, showed fatigue stresses in this location of the steam generator are very low. The licensee said other paths of stress corrosion cracking in the weld could exist, but that there was no evidence of these other paths. The licensee concluded that the black spot is a fabrication defect in the weld material and that a breach through the cladding was probably created because of the high tensile stresses from the weld geometry.

The licensee plans to re-inspect this area during the next refueling outage to monitor/confirm the flaw's growth rate.

### 4.4.5 Degradation of steam generator secondary-side internals

Degradation has been observed on internal components on the secondary side of steam generators with thermally treated Alloy 600 tubes. The term "secondary-side internals" does not include the steam generator tubes nor does it include the shell. It does include, in part, the wrapper (shroud), the feedring, the tube supports, and the moisture separation equipment.

The degradation observed in the secondary-side internals is grouped by model. Although grouped by model, it may be possible for degradation observed in one model to also be observed in the other models. More detailed information concerning the nature of the degradation detected can be found in Section 3.

Model D5 steam generators include a preheater region, which is sometimes referred to as a waterbox. In some of the steam generators at Braidwood 2, Byron 2, and Catawba 2, there was a cutout made in the waterbox cap plate during fabrication. No such cutout regions exist in the Comanche Peak 2 steam generators. Minor erosion of the waterbox cap plate holes was reported at Braidwood 2 during RFO 11 in 2005, RFO 12 in 2006, and RFO 13 in 2008. Similar erosion of the cap plate holes was observed at Byron 2 during RFO 14 in 2008. In addition, erosion of the weld associated with the cutout region was observed at Byron 2 during RFO 11 in 2004. In addition to this degradation, some of the fit-up bars (also called backing bars) used during steam generator fabrication had become loose parts (i.e., they were no longer at the locations where they had been installed). This was observed at Braidwood 2 during RFO 10 in 2003, at Byron 2 during RFO 11 in 2004, and at Catawba 2 during RFO 13 in 2004.

Erosion has also been observed in the moisture separation equipment in model D5 steam generators. Erosion of the primary moisture separator tangential nozzles, downcomer barrels, and swirl vanes has been reported at Braidwood 2 from RFO 11 (2005) through RFO 15 (2011). Similarly Byron 2 has reported erosion of the moisture separator tangential nozzles, downcomer barrels, swirl vanes, spacer tabs, and orifice rings during RFO 12 in 2005, RFO 13 in 2007, and RFO 15 in 2010.

Degradation of secondary-side internals has also been reported in model F steam generators. Erosion of the feedring and J-tubes was reported at Millstone 3 during RFO 7 in 2001. This

degradation was repaired in various steam generators during RFO 9 in 2004, RFO 10 in 2005, and RFO 11 in 2007. Flow-accelerated corrosion of the reducers and “T’s” in the feedring was reported at Millstone 3 during RFO 12 in 2008. Mild flow-assisted corrosion of the feedring was observed at Vogtle 1 during RFO 15 in 2009. Base material loss in the feedwater ring-to-nozzle joints was observed at Vogtle 2 during RFO 15 in 2011. Erosion of two J-tubes was observed at Wolf Creek during RFO 16 in 2008 and RFO 17 in 2009. Minor degradation of the J-nozzle to feedring interface was observed at Wolf Creek during RFO 18 in 2011. Minor degradation of the J-tubes was observed at Wolf Creek during RFO 19 in 2013.

Minor roughness, pitting, or erosion of the primary moisture separators in the area where overspray from the J-nozzles occurs was reported at Millstone 3 during RFO 10 in 2005 and RFO 13 in 2010. Mild erosion or corrosion of the swirl vanes was observed at Vogtle 1 during RFO 15 in 2009.

Secondary-side internals degradation has also been reported in the units with replacement steam generators with thermally treated Alloy 600 tubing. Flow impingement patterns were observed on the feedring, some primary moisture separator riser barrels, and under and around some J-tubes at Point Beach 1 during RFO 30 in 2007 and RFO 31 in 2008. Melt through at the J-tube to feedring weld, a fabrication related issue, was reported at Point Beach 1 during RFO 30 in 2007. Impingement erosion of several primary moisture separator riser barrels because of overspray from the J-tubes was reported at Salem 1 during RFO 22 in 2013. Flow-assisted corrosion of the feedring was reported at Surry 1 during RFO 16 in 2007. The feedrings at Surry 1 were replaced during RFO 18 in 2010. The feedrings at Surry 2 were replaced during RFO 19 in 2011. A hole, which was at the location where overspray from the J-tube occurs, was reported in one of the primary separator riser barrels at Surry 2 during RFO 19 in 2011. This location was repaired by welding an Inconel patch plate over the hole.

Bowing of one of the perforated plates of the secondary moisture separator was observed at Point Beach 1 during RFO 29 in 2005 and RFO 30 in 2007. A pin-hole was observed in the Pagoda (a structure that holds the moisture separators in place) at Robinson 2 during RFO 24 in 2007 and RFO 26 in 2010.

### 4.4.6 Tube wear

The dominant degradation mechanism in units with thermally treated Alloy 600 steam generator tubes is wear. Wear has occurred as a result of interaction between the tubes and the support plates, AVBs, loose parts, and maintenance equipment. Wear at the AVBs is the most prevalent.

Table 4-29 summarizes the number of indications and number of tubes with wear indications at the AVBs as of the last inspection outage reported in Section 3. In some cases, data from the last two outages was used to obtain an estimate of the number of tubes and indications of wear at the AVBs given that some units do not inspect all steam generators during an outage and some units may not inspect all tubes in any given outage. In Table 4-29, the number of tubes plugged attributed to wear at the AVBs is also reported. Other tubes could have been plugged that contained wear indications at the AVBs, but they would not be included in this table unless the main reason for plugging the tube was an indication of wear at the AVBs (e.g., a tube plugged for a wear indication attributed to a loose part or cracking that also had an AVB wear indication would not be included in this table). This is also the case for other tables showing the cause of tube plugging (i.e., a singular cause is identified for plugging a tube). In addition, in interpreting Table 4-29, it should be recognized that units may have different reporting/recording

criteria for wear indications and units may have different practices when determining when to plug a tube (other than those explicitly required by the unit's technical specification plugging/repair criteria).

### 4.4.7 Selected findings

In addition to the information discussed in Sections 4.4.1 through 4.4.6, some observations from the review of the inspections performed at units with thermally treated Alloy 600 steam generator tubes are highlighted below.

At least one unit monitors tubes surrounding plugged tubes that were not stabilized. These inspections are intended to provide an early indication of whether the plugged, non-stabilized tube has severed.

The size of the cracks at the expansion transition, which were removed from the Vogtle 1 steam generators, was significantly underestimated during the in-service inspection.

At least one unit has identified tubes with manufacturing indications in the U-bend (e.g., Blairsville bump) and treats these tubes as a separate inspection population.

Most, if not all, units have identified low-row (stress-relieved) tubes that may have potentially elevated residual stresses as determined by the presence of an eddy current offset. In addition, most, if not all, units have identified high row (non-stress relieved) tubes whose offsets are significantly less than what would be expected for that row of tubes based on a statistical analysis of the offset (commonly referred to as "minus 2 sigma" tubes).

H* may only be applied to tubes whose bottom of the expansion transition is no more than 2.54 cm (1 in.) below the top of the tubesheet. As a result, units implementing H* plugged all tubes where the bottom of the expansion transition was greater than 2.54 cm (1 in.) from the top of the tubesheet.

At Millstone 3 in 2013, an increase was seen in the amount of wear at the tube support plate elevations. The licensee suspected that changing local flow conditions could be causing this increase.

At Byron 2 in 2011, denting was observed at the bottom edge of tube support plate 3C.

At Vogtle 1 in 2008, several tubes were damaged in the process of removing portions of a tube for laboratory examination.

At Surry 1 in 2006, a tube was in-situ pressure tested. During the test, the pressure was held for 5 minutes before terminating the test. During the 5-minute hold, the leakage continued to increase. Although the licensee concluded that the tube satisfied the structural integrity performance criteria, NRC staff questioned whether the test adequately demonstrated that the tube had adequate integrity because the leak rate was not stable at the time the test was concluded.

At Millstone 3 in February 2001, 29 single volumetric indications at the top of the tubesheet and flow distribution baffle were identified. These indications were attributed to wear because of loose parts and to fabrication-related defects.

At Turkey Point 3 in 2001, 12 tubes were plugged because of indications of mechanical wear at the broached tube support plates. Plugging of tubes for wear at tube support plates is fairly rare in units with thermally treated Alloy 600 tubes.

In the spring of 2000, Turkey Point 3 staff identified 41 volumetric pitlike indications, 15 inside-diameter initiated circumferential indications, and 8 outside-diameter initiated circumferential indications. Most of these indications were in the hot-leg hydraulic-expansion transition region at the top of the tubesheet. The volumetric and circumferential indications were detected with rotating probes. This was the first time rotating probes were used extensively at Turkey Point 3. As a result of these findings, the licensee began, during the outage, a review of historical data and industry experience to assess the root causes of the tube degradation. Because of the lack of prior rotating probe inspection data for Turkey Point 3 and the limited number of defects identified by the industry in thermally treated Alloy 600 tubes, the results, at the time of the inspection, were inconclusive for the circumferential and volumetric indications. Based on subsequent investigation, the licensee concluded that of the 64 volumetric and circumferential indications originally identified, only 26 tubes contain volumetric or pitlike indications (possibly because of manufacturing and installation artifacts), while the remaining 38 tubes contain no degradation (13 had circumferential geometric anomalies, 23 had dings or dents, and 2 had manufacturing buff marks).

In an outage at Turkey Point 4 in the fall of 2000, the licensee detected seven tubes with possible corrosion degradation and plugged these tubes because a qualified depth-sizing technique was not available. Based on the eddy current and ultrasonic examination results of this inspection, the licensee reanalyzed the spring 2000 Unit 3 data (discussed above). The licensee's judgment is that the indications at Unit 3 were false positives and caused by manufacturing anomalies or deposits at the top of tubesheet or by the inspection techniques associated with the rotating probe. These results are discussed in NRC IN 2001-016, "Recent Foreign and Domestic Experience with Degradation of Steam Generator Tubes and Internals."

At Surry 1, starting in 2000 denting of tubes at the sixth and seventh tube supports was detected. These dents corresponded to the quatrefoil lands. The dents are concentrated in the periphery of the tube bundle near the wedge regions and are at (or near) the edges of the support plate. Denting at the sixth and seventh tube supports was also reported at Surry 2 in 2002.

At Callaway in 1996, axial, circumferential, and volumetric indications were detected at the hot-leg expansion transition. Additional indications were detected near the top of the tubesheet (i.e., the expansion transition region) in subsequent outages.

At Millstone 3 in August 1993, a tube was deplugged to replace the plug with a more corrosion-resistant material. This tube had been plugged in 1989 because of a 43 percent throughwall wear indication at the fifth anti-vibration bar. During the 4 years the tube was plugged, the defect had apparently grown from 43 percent to 100 percent throughwall. To prevent the tube from severing at the defect and contacting adjacent tubes, a stabilizer was inserted before the tube was replugged.

At Callaway in 1992, one undefined indication was detected in a row 2 tube. The indication, just above the seventh cold-leg support plate, was not identified with the bobbin coil. The licensee concluded that this indication was an anomaly since no degradation mechanism had been identified in this region. In addition, a senior eddy current analyst judged this indication to be a distorted signal caused by its location in the U-bend transition.

### 4.4.8 Summary and observations

As depicted in Figure 4-13, there were 281,262 thermally treated Alloy 600 tubes placed in service at 18 units between 1980 and 2013. Cumulatively, these 18 units have operated for approximately 468 calendar years as of December 2013 and have commercially operated for an average of 26 calendar years as of December 2013. Of these 281,262 tubes, only 2,734 tubes (1.0 percent) have been plugged. The number and percentage of tubes plugged at the 18 units with thermally treated tubes are summarized in Table 4-30. Figure 4-14 depicts the total number and percentage of tubes plugged in units with thermally treated Alloy 600 tubes as a function of model/grouping (i.e., model D5, model F, replacement models).

Only 17 units currently have thermally treated Alloy 690 steam generator tubes. This reflects the replacement of the Callaway steam generators in 2005. The Callaway steam generators had both mill annealed and thermally treated Alloy 600 tubes. Most of the tubes were mill annealed and degradation observed in these tubes resulted in their replacement. For the currently operating units with thermally treated Alloy 600 steam generator tubes, they have operated for approximately 374 effective full power years as of December 2013 and have operated for an average of 22.0 effective full power years as of December 2013.

Tables 4-31 and 4-32 summarize the causes of tube plugging for Model D5, Model F, and replacement steam generators. In addition, these tables summarize the causes of tube plugging for all steam generators with thermally treated Alloy 600 tubes. The information in these tables is graphically depicted in Figure 4-15. As can be seen from the tables and figure, the dominant degradation mode of thermally treated Alloy 600 tubes is wear at tube supports. Of the approximately 2,700 tubes plugged, about 42 percent of the tubes were plugged because of wear at the tube supports. Tube wear occurs because of contact between the tube and a support structure (e.g., an anti-vibration bar). The rate of tube wear from support structures is generally predictable and is readily managed. The wear in thermally treated tubes has occurred predominantly at the AVBs although some has occurred at tube support plates. The percentage of tubes plugged for wear at tube supports is greater for the Model F steam generators than for the Model D5 or replacement model steam generators.

Wear can also occur because of loose parts; however, this type of wear is tracked under the “loose parts” category. This category includes not only tubes plugged for wear attributed to loose parts, but also for tubes that had no wear associated with a loose part but because the tube was near a loose part that was not removed from the steam generator. Loose parts can be introduced during steam generator fabrication, during maintenance activities, or because of corrosion degradation of other components in the primary or secondary side of the steam generator (e.g., a split pin nut). Wear from loose parts is usually unexpected and can only be detected by inspection, loose parts monitoring systems, or primary-to-secondary leakage. Loose parts accounted for a significant percentage of tube plugging, accounting for approximately 20 percent of the tubes plugged.

Several tubes have been plugged because of restrictions. The nature and causes of many of these restrictions have not been provided.

Units with steam generators with thermally treated Alloy 600 tubes have a variety of strategies for inspecting their steam generators. Several units inspect a subset of steam generators each

refueling outage. Others inspect all steam generators every other outage (i.e., no tube inspections are performed during one refueling outage but all steam generators are inspected the next refueling outage). Yet others inspect all steam generators every outage.

Based on a review of inspection summary reports, tube inspections in units with thermally treated Alloy 600 have become more comprehensive since the early 1980s. The inspections today focus on ensuring tube integrity for the interval between inspections. There have been no reported instances in which a thermally treated Alloy 600 tube did not have adequate integrity.

Figure 4-16 depicts the number of tubes plugged for each type of thermally treated Alloy 600 steam generator (e.g., Model D5) as a function of year. Similarly, Figure 4-17 provides the percentage of tubes plugged for each type of thermally treated Alloy 600 steam generator (e.g., Model D5) as a function of year. The percentage of tubes plugged each year has no discernible trend. The data used to compile these figures is summarized in Table 4-33.

Figure 4-18 depicts the fraction of tubes plugged for a specific mechanism as a function of year. This figure was developed from the data provided in Tables 4-34, 4-35, and 4-36. In this figure, tubes plugged before commercial operation were treated as being plugged during the year the unit began commercial operation (in previous tables and figures in this report, tubes plugged before operation were treated as a distinct group independent of the actual year/outage in which they were plugged).

Far fewer tubes have been plugged in the steam generators with second-generation tube materials (i.e., thermally treated alloy 600) than in earlier steam generators with comparable operating times. Improvements in the design and operation of the second-generation steam generators appear to have increased the corrosion resistance of the tubes, as evidenced by the general lack of any significant amounts of corrosion degradation. The enhanced corrosion resistance is largely because of the thermal treatment process that has superseded the mill annealing process used in earlier steam generator designs.

The relatively good operating experience for units with thermally treated Alloy 600 steam generator tubes can be attributed to several factors in addition to the heat treatment the tubes received: hydraulic expansion of the tubes into the tubesheet, the quatrefoil design of the tube support plates, and the stainless steel material used to fabricate the plates. The residual stress levels at the expansion transition in tubes hydraulically expanded into the tubesheet are lower than observed in units whose tubes were expanded mechanically or explosively. Because crack growth rate and time to crack initiation depend, in part, on the stress level, lower stresses may result in lower crack growth rates and/or longer times before crack initiation.

Although the operating experience with thermally treated Alloy 600 tubes has been favorable to date, there is a continued need to monitor the tubes to detect the onset of tube degradation and to assure the structural and leakage integrity of the tubes during the intervals between inspections.

**Table 4-1: Model D5: Total Number and Percentage of Tubes Plugged (12/2013)**

| Unit | Number of Tubes Plugged[1] | Percent Plugged | Operating Time[2] |
|---|---|---|---|
| Braidwood 2 | 270 | 1.48 | 25 |
| Byron 2 | 408 | 2.23 | 26 |
| Catawba 2 | 309 | 1.69 | 27 |
| Comanche Peak 2 | 81 | 0.44 | 20 |
| **TOTALS:** | 1068 | 1.46 | |

[1]As of 12/31/2013

[2]Operating Time = calendar years of operation as of 12/31/2013

**Table 4-2: Model D5: Number of Tubes Plugged as a Function of Mechanism (Detailed) (12/2013)**

| Cause of Tube Plugging | | Tubes Plugged | Percentage of Plugs | Tubes Plugged | Percentage of Plugs |
|---|---|---|---|---|---|
| **Wear** | AVB | 320 | 30.0% | **353** | **33.1%** |
| | Preheater TSP (D5) | 30 | 2.8% | | |
| | TSP | 3 | 0.3% | | |
| **Loose Parts** | Confirmed | 200 | 18.7% | **344** | **32.2%** |
| | Not Confirmed, Periphery | 88 | 8.2% | | |
| | Not Confirmed, Not Periphery | 56 | 5.2% | | |
| **Obstruction Restriction** | From PSI - no progression | 1 | 0.1% | **3** | **0.3%** |
| | Service Induced | 2 | 0.2% | | |
| **Manufacturing Flaws** | Preservice | 50 | 4.7% | **115** | **10.8%** |
| | Other | 65 | 6.1% | | |
| **Inspection Issues** | Probe Lodged | 2 | 0.2% | **36** | **3.4%** |
| | Data Quality | 19 | 1.8% | | |
| | Dent/Geometry | 5 | 0.5% | | |
| | Permeability | 7 | 0.7% | | |
| | Not Inspected | 3 | 0.3% | | |
| **Other** | Top of Tubesheet | 18 | 1.7% | **150** | **14.0%** |
| | Freespan | 79 | 7.4% | | |
| | TSP | 42 | 3.9% | | |
| | Other/Not Reported | 11 | 1.0% | | |
| **SCC** | ID | 51 | 4.8% | **67** | **6.3%** |
| | OD | 16 | 1.5% | | |
| | **TOTALS** | 1068 | 100.0% | 1068 | 100.0% |

Total Tubes: 73120
Fraction Plugged 1.46%

**Table 4-3: Model D5: Cumulative Plugging per Year**

| Year | Braidwood 2 | Byron 2 | Catawba 2 | Comanche Peak 2 |
|---|---|---|---|---|
| Pre-Op | 6 | 11 | 14 | 20 |
| 1986 | | | | |
| 1987 | | | 14 | |
| 1988 | | | 21 | |
| 1989 | | 22 | 29 | |
| 1990 | 8 | 43 | 48 | |
| 1991 | 18 | | 60 | |
| 1992 | | 72 | | |
| 1993 | 34 | 108 | 103 | |
| 1994 | 40 | | 134 | 20 |
| 1995 | | 137 | 157 | |
| 1996 | 75 | 167 | | 20 |
| 1997 | 103 | | 167 | 28 |
| 1998 | | 205 | 176 | |
| 1999 | 109 | 219 | | 33 |
| 2000 | 120 | | 183 | 37 |
| 2001 | | 223 | 183 | |
| 2002 | 122 | 240 | | 48 |
| 2003 | 180 | | 216 | 52 |
| 2004 | | 332 | 264 | |
| 2005 | 186 | 349 | | 65 |
| 2006 | 200 | | 278 | 65 |
| 2007 | | 366 | 286 | |
| 2008 | 223 | 379 | | 78 |
| 2009 | 229 | | 296 | 78 |
| 2010 | | 380 | 297 | |
| 2011 | 259 | 408 | | 81 |
| 2012 | 270 | | 302 | 81 |
| 2013 | | 408 | 309 | |

## Table 4-4: Model D5: Plugging per Year

| Year | Braidwood 2 | Byron 2 | Catawba 2 | Comanche Peak 2 | Model D5 Totals |
|---|---|---|---|---|---|
| Pre-Op | 6 | 11 | 14 | 20 | 51 |
| 1986 | | | | | 0 |
| 1987 | | | 0 | | 0 |
| 1988 | | | 7 | | 7 |
| 1989 | | 11 | 8 | | 19 |
| 1990 | 2 | 21 | 19 | | 42 |
| 1991 | 10 | | 12 | | 22 |
| 1992 | | 29 | | | 29 |
| 1993 | 16 | 36 | 43 | | 95 |
| 1994 | 6 | | 31 | 0 | 37 |
| 1995 | | 29 | 23 | | 52 |
| 1996 | 35 | 30 | | 0 | 65 |
| 1997 | 28 | | 10 | 8 | 46 |
| 1998 | | 38 | 9 | | 47 |
| 1999 | 6 | 14 | | 5 | 25 |
| 2000 | 11 | | 7 | 4 | 22 |
| 2001 | | 4 | 0 | | 4 |
| 2002 | 2 | 17 | | 11 | 30 |
| 2003 | 58 | | 33 | 4 | 95 |
| 2004 | | 92 | 48 | | 140 |
| 2005 | 6 | 17 | | 13 | 36 |
| 2006 | 14 | | 14 | 0 | 28 |
| 2007 | | 17 | 8 | | 25 |
| 2008 | 23 | 13 | | 13 | 49 |
| 2009 | 6 | | 10 | 0 | 16 |
| 2010 | | 1 | 1 | | 2 |
| 2011 | 30 | 28 | | 3 | 61 |
| 2012 | 11 | | 5 | 0 | 16 |
| 2013 | | 0 | 7 | | 7 |
| **Totals:** | 270 | 408 | 309 | 81 | 1068 |

Note: Values adjusted to account for deplugging of tubes.

**Table 4-5: Model D5: Cumulative Plugging per RFO (12/2013)**

| Outage | Braidwood 2 | Byron 2 | Catawba 2 | Comanche Peak 2 |
|---|---|---|---|---|
| Pre-Op | 6 | 11 | 14 | 20 |
| RFO 1 | 8 | 22 | 21 | 20 |
| RFO 2 | 19 | 43 | 29 | 20 |
| RFO 3 | 34 | 72 | 48 | 28 |
| RFO 4 | 40 | 108 | 60 | 33 |
| RFO 5 | 75 | 137 | 103 | 37 |
| RFO 6 | 103 | 167 | 134 | 48 |
| RFO 7 | 109 | 205 | 157 | 52 |
| RFO 8 | 120 | 219 | 167 | 65 |
| RFO 9 | 122 | 223 | 176 | 65 |
| RFO 10 | 180 | 240 | 183 | 78 |
| RFO 11 | 186 | 332 | 183 | 78 |
| RFO 12 | 200 | 349 | 216 | 81 |
| RFO 13 | 223 | 366 | 264 | 81 |
| RFO 14 | 229 | 379 | 278 | |
| RFO 15 | 259 | 380 | 286 | |
| RFO 16 | 270 | 408 | 296 | |
| RFO 17 | | 408 | 297 | |
| RFO 18 | | | 302 | |
| RFO 19 | | | 309 | |
| | | | | |
| | | | | |

# Table 4-6: Model D5: Number of Tubes Plugged as a Function of Mechanism per Year (Detailed)

| | Year | 1980-1985 | 1986 | 1987 | 1988 | 1989 | 1990 | 1991 | 1992 | 1993 | 1994 | 1995 | 1996 | 1997 | 1998 | 1999 | 2000 | 2001 | 2002 | 2003 | 2004 | 2005 | 2006 | 2007 | 2008 | 2009 | 2010 | 2011 | 2012 | 2013 | Totals | Totals |
|---|---|---|---|---|---|---|---|---|---|---|---|---|---|---|---|---|---|---|---|---|---|---|---|---|---|---|---|---|---|---|---|---|
| Cause of Tube Plugging/Outage | | | | | | | | | | | | | | | | | | | | | | | | | | | | | | | | |
| Wear | AVB | | | | | 2 | 35 | 17 | 25 | 51 | 7 | 22 | 48 | 19 | 2 | 15 | 15 | | 4 | 15 | 1 | 10 | 10 | 3 | 7 | 1 | | 9 | 2 | | 320 | 353 |
| | Preheater TSP (D5) | | | | | | | | | | | | | | 1 | 1 | | | 2 | 6 | | 6 | 2 | | 3 | | | 9 | | | 30 | |
| | TSP | | | | | | | | | | | | | | 2 | | | | | | | | | | | | 1 | | | | 3 | |
| Loose Parts | Confirmed | | | | 2 | 4 | | | | | | 1 | 6 | 3 | 3 | | | 1 | 16 | 42 | 109 | | 9 | | 3 | | | 1 | | | 200 | 344 |
| | Not Confirmed, Periphery | | | | | 1 | 1 | | | 1 | | 7 | | | 1 | 5 | | 2 | 3 | 6 | 5 | 9 | | 13 | 5 | 4 | | 15 | 6 | 4 | 88 | |
| | Not Confirmed, Not Periphery | | | | | | | | | | | | | | | 1 | 2 | | 5 | | 7 | 3 | 2 | | 1 | 1 | 1 | 25 | 5 | 3 | 56 | |
| Obstruction Restriction | From PSI - no progression | | | | | | | | | | | | | | | | | | | | | 1 | | | | | | | | | 1 | 3 |
| | Service Induced | | | | | | | | | | | | | 1 | | 1 | | | | | | | | | | | | | | | 2 | |
| Manufacturing Flaws | Preservice | | 14 | 11 | 6 | | | -1 | | 20 | | | | | | | | | | | | | | | | | | | | | 50 | 115 |
| | Other | | | | | | | | | | | | | 15 | 29 | | | | | 4 | | 7 | 4 | 1 | 1 | 1 | | 1 | 2 | | 65 | |
| Inspection Issues | Probe Lodged | | | | | | | | | | | | | | | | 2 | | | | | | | | | | | | | | 2 | 36 |
| | Data Quality | | | | | 1 | | | | | | | | 1 | | | | | | 17 | | | | | | | | | | | 19 | |
| | Dent/Geometry | | | | | 1 | | | | | | | 1 | | 2 | | | | | | | | 1 | | | | | | | | 5 | |
| | Permeability | | | | | | | | | | | | | 2 | 1 | | 1 | | | 2 | 1 | | | | | | | | | | 7 | |
| | Not Inspected | | | | | | | | | | | | | 1 | | | 2 | | | | | | | | | | | | | | 3 | |
| Other | Top of Tubesheet | | | | | 2 | | | | 3 | 4 | 2 | 1 | 3 | 2 | 1 | | | | | | | | | | | | | | | 18 | 150 |
| | Freespan | | | | 3 | 4 | 1 | 1 | 3 | 30 | 20 | 10 | 5 | 1 | | | | 1 | | | | | | | | | | | | | 79 | |
| | TSP | | | | 2 | 3 | 3 | 5 | 1 | 8 | 6 | 5 | 4 | | 4 | 1 | | | | | | | | | | | | | | | 42 | |
| | Not Reported | | | | | 1 | 2 | | | 2 | | 5 | | | | | | | | | 1 | | | | | | | | | | 11 | |
| Stress Corrosion Cracking (SCC) | ID | | | | | | | | | | | | | | | | | | | | 16 | | | | 29 | 6 | | | | | 51 | 67 |
| | OD | | | | | | | | | | | | | | | | | | | 3 | | | | 8 | | 3 | | 1 | 1 | | 16 | |
| | TOTALS | 0 | 14 | 11 | 13 | 19 | 42 | 22 | 29 | 115 | 37 | 52 | 65 | 46 | 47 | 25 | 22 | 4 | 30 | 95 | 140 | 36 | 28 | 25 | 49 | 16 | 2 | 61 | 16 | 7 | 1068 | 1068 |

# Table 4-7: Model D5: Number of Tubes Plugged as a Function of Mechanism per Year (Summary)

| Year | 1980-1985 | 1986 | 1987 | 1988 | 1989 | 1990 | 1991 | 1992 | 1993 | 1994 | 1995 | 1996 | 1997 | 1998 | 1999 | 2000 | 2001 | 2002 | 2003 | 2004 | 2005 | 2006 | 2007 | 2008 | 2009 | 2010 | 2011 | 2012 | 2013 | Totals |
|---|---|---|---|---|---|---|---|---|---|---|---|---|---|---|---|---|---|---|---|---|---|---|---|---|---|---|---|---|---|---|
| Cause | | | | | | | | | | | | | | | | | | | | | | | | | | | | | | |
| Wear | | | | | 2 | 35 | 17 | 25 | 51 | 7 | 22 | 48 | 19 | 5 | 16 | 15 | | 6 | 21 | 1 | 16 | 12 | 3 | 10 | 1 | 1 | 18 | 2 | | 353 |
| Loose Parts | | | | 2 | 5 | 1 | | | 1 | | 8 | 6 | 3 | 4 | 6 | 2 | 3 | 24 | 48 | 121 | 12 | 11 | 13 | 9 | 5 | 1 | 41 | 11 | 7 | 344 |
| Restrictions | | | | | | | | | | | | | 1 | | 1 | | | | | | 1 | | | | | | | | | 3 |
| Manufacturing | | 14 | 11 | 6 | | | -1 | | 20 | | | | 15 | 29 | | | | | 4 | | 7 | 4 | 1 | 1 | 1 | | 1 | 2 | | 115 |
| Inspection Issues | | | | | 2 | | | | | | | 1 | 4 | 3 | | 5 | | | 19 | 1 | | 1 | | | | | | | | 36 |
| Other | | | | 5 | 10 | 6 | 6 | 4 | 43 | 30 | 22 | 10 | 4 | 6 | 2 | | 1 | | | 1 | | | | | | | | | | 150 |
| SCC | | | | | | | | | | | | | | | | | | | 3 | 16 | | | 8 | 29 | 9 | | 1 | 1 | | 67 |
| | | | | | | | | | | | | | | | | | | | | | | | | | | | | | | |
| | 0 | 14 | 11 | 13 | 19 | 42 | 22 | 29 | 115 | 37 | 52 | 65 | 46 | 47 | 25 | 22 | 4 | 30 | 95 | 140 | 36 | 28 | 25 | 49 | 16 | 2 | 61 | 16 | 7 | 1068 |

# Table 4-8: Model D5: Percentage of Tubes Plugged as a Function of Mechanism per Year

| Year | 1980-1985 | 1986 | 1987 | 1988 | 1989 | 1990 | 1991 | 1992 | 1993 | 1994 | 1995 | 1996 | 1997 | 1998 | 1999 | 2000 | 2001 | 2002 | 2003 | 2004 | 2005 | 2006 | 2007 | 2008 | 2009 | 2010 | 2011 | 2012 | 2013 | Totals |
|---|---|---|---|---|---|---|---|---|---|---|---|---|---|---|---|---|---|---|---|---|---|---|---|---|---|---|---|---|---|---|
| **Cause** | | | | | | | | | | | | | | | | | | | | | | | | | | | | | | |
| **Wear** | | | | | 10.5% | 83.3% | 77.3% | 86.2% | 44.3% | 18.9% | 42.3% | 73.8% | 41.3% | 10.6% | 64.0% | 68.2% | | 20.0% | 22.1% | 0.7% | 44.4% | 42.9% | 12.0% | 20.4% | 6.3% | 50.0% | 29.5% | 12.5% | | 33.1% |
| **Loose Parts** | | | | 15.4% | 26.3% | 2.4% | | | 0.9% | | 15.4% | 9.2% | 6.5% | 8.5% | 24.0% | 9.1% | 75.0% | 80.0% | 50.5% | 86.4% | 33.3% | 39.3% | 52.0% | 18.4% | 31.3% | 50.0% | 67.2% | 68.8% | 100.0% | 32.2% |
| **Restrictions** | | | | | | | | | | | | | 2.2% | | 4.0% | | | | | | 2.8% | | | | | | | | | 0.3% |
| **Manufacturing** | | 100.0% | 100.0% | 46.2% | | | -4.5% | | 17.4% | | | | 32.6% | 61.7% | | | | | 4.2% | | 19.4% | 14.3% | 4.0% | 2.0% | 6.3% | | 1.6% | 12.5% | | 10.8% |
| **Inspection Issues** | | | | | 10.5% | | | | | | | 1.5% | 8.7% | 6.4% | | 22.7% | | | 20.0% | 0.7% | | 3.6% | | | | | | | | 3.4% |
| **Other** | | | | 38.5% | 52.6% | 14.3% | 27.3% | 13.8% | 37.4% | 81.1% | 42.3% | 15.4% | 8.7% | 12.8% | 8.0% | | 25.0% | | | 0.7% | | | | | | | | | | 14.0% |
| **SCC** | | | | | | | | | | | | | | | | | | | 3.2% | 11.4% | | | 32.0% | 59.2% | 56.3% | | 1.6% | 6.3% | | 6.3% |
| | 0.00 | 100.0% | 100.0% | 100.0% | 100.0% | 100.0% | 100.0% | 100.0% | 100.0% | 100.0% | 100.0% | 100.0% | 100.0% | 100.0% | 100.0% | 100.0% | 100.0% | 100.0% | 100.0% | 100.0% | 100.0% | 100.0% | 100.0% | 100.0% | 100.0% | 100.0% | 100.0% | 100.0% | 100.0% | 100.0% |

**Table 4-9: Model F: Total Number and Percentage of Tubes Plugged (12/2013)**

| Unit | Number of Tubes Plugged[1] | Percent Plugged | Operating Time[2] |
|---|---|---|---|
| Callaway[3] | 21 | 0.43 | 21 |
| Millstone 3 | 187 | 0.83 | 28 |
| Seabrook 1 | 182 | 0.81 | 23 |
| Vogtle 1 | 151 | 0.67 | 27 |
| Vogtle 2 | 48 | 0.21 | 25 |
| Wolf Creek 1 | 282 | 1.25 | 28 |
| **TOTALS:** | 871 | 0.74 | |

[1]As of 12/31/2013

[2]Operating Time = calendar years of operation as of 12/31/2013

[3]Thermally Treated Tubes Only

**Table 4-10: Model F: Number of Tubes Plugged as a Function of Mechanism (Detailed) (12/2013)**

| Cause of Tube Plugging | | Tubes Plugged | Percentage of Plugs | Tubes Plugged | Percentage of Plugs |
|---|---|---|---|---|---|
| **Wear** | AVB | 480 | 55.1% | **491** | **56.4%** |
| | Preheater TSP (D5) | 0 | 0.0% | | |
| | TSP | 11 | 1.3% | | |
| **Loose Parts** | Confirmed | 18 | 2.1% | **73** | **8.4%** |
| | Not Confirmed, Periphery | 46 | 5.3% | | |
| | Not Confirmed, Not Periphery | 9 | 1.0% | | |
| **Obstruction Restriction** | From PSI - no progression | 2 | 0.2% | **7** | **0.8%** |
| | Service Induced | 5 | 0.6% | | |
| **Manufacturing Flaws** | Preservice | 63 | 7.2% | **84** | **9.6%** |
| | Other | 21 | 2.4% | | |
| **Inspection Issues** | Probe Lodged | 1 | 0.1% | **43** | **4.9%** |
| | Data Quality | 1 | 0.1% | | |
| | Dent/Geometry | 39 | 4.5% | | |
| | Permeability | 2 | 0.2% | | |
| | Not Inspected | 0 | 0.0% | | |
| **Other** | Top of Tubesheet | 29 | 3.3% | **66** | **7.6%** |
| | Freespan | 17 | 2.0% | | |
| | TSP | 20 | 2.3% | | |
| | Other/Not Reported | 0 | 0.0% | | |
| **SCC** | ID | 35 | 4.0% | **107** | **12.3%** |
| | OD | 72 | 8.3% | | |
| | **TOTALS** | 871 | 100.0% | 871 | 100.0% |

Total Tubes: 117376
Fraction Plugged 0.74%

## Table 4-11: Model F: Cumulative Plugging per Year

| Year | Callaway | Millstone 3 | Seabrook | Vogtle 1 | Vogtle 2 | Wolf Creek |
|---|---|---|---|---|---|---|
| Pre-Op | 4 | 10 | 13 | 6 | 15 | 15 |
| 1986 | 4 | | | | | 15 |
| 1987 | 5 | 12 | | | | |
| 1988 | | | | 7 | | 37 |
| 1989 | 6 | 16 | | | | |
| 1990 | 6 | | | 11 | 15 | 39 |
| 1991 | | 21 | 23 | 11 | | 39 |
| 1992 | 7 | | 23 | | 15 | |
| 1993 | 7 | 28 | | 15 | 15 | 44 |
| 1994 | | | 24 | 27 | | 71 |
| 1995 | 11 | 39 | 36 | | 18 | |
| 1996 | 16 | 41 | | 31 | 24 | 87 |
| 1997 | | | 49 | 46 | | 106 |
| 1998 | 16 | | | | 24 | |
| 1999 | 16 | 55 | 74 | 46 | 29 | 112 |
| 2000 | | | 90 | 48 | | 144 |
| 2001 | 17 | 106 | | | 29 | |
| 2002 | 19 | 117 | 125 | 50 | 31 | 153 |
| 2003 | | | 140 | 53 | | 173 |
| 2004 | 21 | 127 | | | 42 | |
| 2005 | 21 | 129 | 140 | 55 | 42 | 181 |
| 2006 | | | 161 | 74 | | 204 |
| 2007 | | 133 | | | 42 | |
| 2008 | | 159 | 161 | 121 | 43 | 233 |
| 2009 | | | 173 | 146 | | 251 |
| 2010 | | 166 | | | 45 | |
| 2011 | | 177 | 173 | 148 | 46 | 266 |
| 2012 | | | 182 | 151 | | |
| 2013 | | 187 | | | 48 | 282 |

## Table 4-12: Model F: Plugging per Year

| Year | Callaway | Millstone 3 | Seabrook | Vogtle 1 | Vogtle 2 | Wolf Creek | Model F Totals |
|---|---|---|---|---|---|---|---|
| Pre-Op | 4 | 10 | 13 | 6 | 15 | 15 | 63 |
| 1986 | 0 | | | | | 0 | 0 |
| 1987 | 1 | 2 | | | | | 3 |
| 1988 | | | | 1 | | 22 | 23 |
| 1989 | 1 | 4 | | | | | 5 |
| 1990 | 0 | | | 4 | 0 | 2 | 6 |
| 1991 | | 5 | 10 | 0 | | 0 | 15 |
| 1992 | 1 | | 0 | | 0 | | 1 |
| 1993 | 0 | 7 | | 4 | 0 | 5 | 16 |
| 1994 | | | 1 | 12 | | 27 | 40 |
| 1995 | 4 | 11 | 12 | | 3 | | 30 |
| 1996 | 5 | 2 | | 4 | 6 | 16 | 33 |
| 1997 | | | 13 | 15 | | 19 | 47 |
| 1998 | 0 | | | | 0 | | 0 |
| 1999 | 0 | 14 | 25 | 0 | 5 | 6 | 50 |
| 2000 | | | 16 | 2 | | 32 | 50 |
| 2001 | 1 | 51 | | | 0 | | 52 |
| 2002 | 2 | 11 | 35 | 2 | 2 | 9 | 61 |
| 2003 | | | 15 | 3 | | 20 | 38 |
| 2004 | 2 | 10 | | | 11 | | 23 |
| 2005 | 0 | 2 | 0 | 2 | 0 | 8 | 12 |
| 2006 | | | 21 | 19 | | 23 | 63 |
| 2007 | | 4 | | | 0 | | 4 |
| 2008 | | 26 | 0 | 47 | 1 | 29 | 103 |
| 2009 | | | 12 | 25 | | 18 | 55 |
| 2010 | | 7 | | | 2 | | 9 |
| 2011 | | 11 | 0 | 2 | 1 | 15 | 29 |
| 2012 | | | 9 | 3 | | | 12 |
| 2013 | | 10 | | | 2 | 16 | 28 |
| Totals: | 21 | 187 | 182 | 151 | 48 | 282 | 871 |

## Table 4-13: Model F: Cumulative Plugging per RFO (12/2013)

| Outage | Callaway | Millstone 3 | Seabrook | Vogtle 1 | Vogtle 2 | Wolf Creek |
|---|---|---|---|---|---|---|
| Pre-Op | 4 | 10 | 13 | 6 | 15 | 15 |
| RFO 1 | 4 | 12 | 23 | 7 | 15 | 15 |
| RFO 2 | 5 | 16 | 23 | 11 | 15 | 15 |
| RFO 3 | 6 | 21 | 24 | 11 | 15 | 37 |
| RFO 4 | 6 | 28 | 36 | 15 | 18 | 39 |
| RFO 5 | 7 | 39 | 49 | 27 | 24 | 39 |
| RFO 6 | 7 | 55 | 74 | 31 | 24 | 44 |
| RFO 7 | 11 | 106 | 90 | 46 | 29 | 71 |
| RFO 8 | 16 | 117 | 125 | 46 | 29 | 87 |
| RFO 9 | 16 | 127 | 140 | 48 | 31 | 106 |
| RFO 10 | 16 | 129 | 140 | 50 | 42 | 112 |
| RFO 11 | 17 | 133 | 161 | 53 | 42 | 144 |
| RFO 12 | 19 | 159 | 161 | 55 | 42 | 153 |
| RFO 13 | 21 | 166 | 173 | 74 | 43 | 173 |
| RFO 14 | 21 | 177 | 173 | 121 | 45 | 181 |
| RFO 15 | | 187 | 182 | 146 | 46 | 204 |
| RFO 16 | | | | 148 | 48 | 233 |
| RFO 17 | | | | 151 | | 251 |
| RFO 18 | | | | | | 266 |
| RFO 19 | | | | | | 282 |

# Table 4-14: Model F: Number of Tubes Plugged as a Function of Mechanism per Year (Detailed)

| Cause of Tube Plugging/Outage | Year | 1980-1983 | 1984 | 1985 | 1986 | 1987 | 1988 | 1989 | 1990 | 1991 | 1992 | 1993 | 1994 | 1995 | 1996 | 1997 | 1998 | 1999 | 2000 | 2001 | 2002 | 2003 | 2004 | 2005 | 2006 | 2007 | 2008 | 2009 | 2010 | 2011 | 2012 | 2013 | Totals | Totals |
|---|---|---|---|---|---|---|---|---|---|---|---|---|---|---|---|---|---|---|---|---|---|---|---|---|---|---|---|---|---|---|---|---|---|---|
| Wear | AVB | | | | | 2 | 19 | 3 | 6 | 11 | | 16 | 38 | 26 | 28 | 38 | | 49 | 44 | 15 | 28 | 29 | 2 | 6 | 24 | 2 | 24 | 29 | 3 | 19 | 9 | 10 | 480 | 491 |
| | Preheater TSP (D5) | | | | | | | | | | | | | | | | | | | | | | | | | | | | | | | | 0 | |
| | TSP | | | | | | | | | | | | | | | | | | | | 2 | | | | | | | | | | | 9 | 11 | |
| Loose Parts | Confirmed | | | | | | | | | 4 | | | | | | 5 | | | | | 1 | | 2 | | | 2 | 2 | | 2 | | | | 18 | 73 |
| | Not Confirmed, Periphery | | | | | | | | | | | | | 2 | | | | 1 | 1 | 6 | 11 | 1 | 5 | | 16 | | | | 2 | 1 | | | 46 | |
| | Not Confirmed, Not Periphery | | | | | | | | | | | | | | | 2 | | | 2 | 1 | | | | | 2 | | | | 1 | 1 | | | 9 | |
| Obstruction Restriction | From PSI - no progression | | | | | | | | | | | | | | | | | | | | | | | | | | | | | | | 2 | 2 | 7 |
| | Service Induced | | | | | | | | | | | | | | | 2 | | | | | 1 | 1 | | | | | | 1 | | | | | 5 | |
| Manufacturing Flaws | Preservice | | 4 | 15 | 10 | 6 | | 15 | 13 | | | | | | | | | | | | | | | | | | | | | | | | 63 | 84 |
| | Other | | | | | | | | | | | | | | | | | | | | | 3 | 2 | | 1 | | 1 | 2 | | 7 | | 5 | 21 | |
| Inspection Issues | Probe Lodged | | | | | | | | | | | | | | | | | | | | | | | | | | | | | | 1 | | 1 | 43 |
| | Data Quality | | | | | | | | | | | | | | | | | | | | | | | | | | | | 1 | | | | 1 | |
| | Dent/Geometry | | | | | | | | | | | | | | | | | | | | 2 | 1 | | | 2 | | 34 | | | | | | 39 | |
| | Permeability | | | | | | | | | | | | | | | | | | | | | | 1 | | | | | 1 | | | | | 2 | |
| | Not Inspected | | | | | | | | | | | | | | | | | | | | | | | | | | | | | | | | 0 | |
| Other | Top of Tubesheet | | | | | | | | | | | | | | 3 | | | | 2 | 14 | 1 | | 9 | | | | | | | | | | 29 | 66 |
| | Freespan | | | | | | 4 | 1 | | 0 | 1 | | | 2 | 2 | | | | | 3 | | | | 4 | | | | | | | | | 17 | |
| | TSP | | | | | 1 | | 1 | | | | | 2 | | | | | | 1 | 13 | | | 2 | | | | | | | | | | 20 | |
| | Not Reported | | | | | | | | | | | | | | | | | | | | | | | | | | | | | | | | 0 | |
| SCC | ID | | | | | | | | | | | | | | | | | | | | | | | 2 | | | 31 | 1 | | | | 1 | 35 | 107 |
| | OD | | | | | | | | | | | | | | | | | | | | 15 | 3 | | | 18 | | 11 | 21 | | 1 | 2 | 1 | 72 | |
| | TOTALS | 0 | 4 | 15 | 10 | 9 | 23 | 20 | 19 | 15 | 1 | 16 | 40 | 30 | 33 | 47 | 0 | 50 | 50 | 52 | 61 | 38 | 23 | 12 | 63 | 4 | 103 | 55 | 9 | 29 | 12 | 28 | 871 | 871 |

# Table 4-15: Model F: Number of Tubes Plugged as a Function of Mechanism per Year

| Year | 1980-1983 | 1984 | 1985 | 1986 | 1987 | 1988 | 1989 | 1990 | 1991 | 1992 | 1993 | 1994 | 1995 | 1996 | 1997 | 1998 | 1999 | 2000 | 2001 | 2002 | 2003 | 2004 | 2005 | 2006 | 2007 | 2008 | 2009 | 2010 | 2011 | 2012 | 2013 | Totals |
|---|---|---|---|---|---|---|---|---|---|---|---|---|---|---|---|---|---|---|---|---|---|---|---|---|---|---|---|---|---|---|---|---|
| Cause | | | | | | | | | | | | | | | | | | | | | | | | | | | | | | | | |
| Wear | | | | | 2 | 19 | 3 | 6 | 11 | | 16 | 38 | 26 | 28 | 38 | | 49 | 44 | 15 | 30 | 29 | 2 | 6 | 24 | 2 | 24 | 29 | 3 | 19 | 9 | 19 | 491 |
| Loose Parts | | | | | | | | | 4 | | | | 2 | | 7 | | 1 | 3 | 7 | 12 | 1 | 7 | | 18 | 2 | 2 | | 5 | 2 | | | 73 |
| Restrictions | | | | | | | | | | | | | | | 2 | | | | | 1 | 1 | | | | | | 1 | | | | 2 | 7 |
| Manufacturing | | 4 | 15 | 10 | 6 | | 15 | 13 | | | | | | | | | | | | | 3 | 2 | | 1 | | 1 | 2 | | 7 | | 5 | 84 |
| Inspection Issues | | | | | | | | | | | | | | | | | | | | 2 | 1 | 1 | | 2 | | 34 | 1 | 1 | | 1 | | 43 |
| Other | | | | | 1 | 4 | 2 | | | 1 | | 2 | 2 | 5 | | | | 3 | 30 | 1 | | 11 | 4 | | | | | | | | | 66 |
| SCC | | | | | | | | | | | | | | | | | | | | 15 | 3 | | 2 | 18 | | 42 | 22 | | 1 | 2 | 2 | 107 |
| | 0 | 4 | 15 | 10 | 9 | 23 | 20 | 19 | 15 | 1 | 16 | 40 | 30 | 33 | 47 | 0 | 50 | 50 | 52 | 61 | 38 | 23 | 12 | 63 | 4 | 103 | 55 | 9 | 29 | 12 | 28 | 871 |

# Table 4-16: Model F: Percentage of Tubes Plugged as a Function of Mechanism per Year

| Year | 1980-1983 | 1984 | 1985 | 1986 | 1987 | 1988 | 1989 | 1990 | 1991 | 1992 | 1993 | 1994 | 1995 | 1996 | 1997 | 1998 | 1999 | 2000 | 2001 | 2002 | 2003 | 2004 | 2005 | 2006 | 2007 | 2008 | 2009 | 2010 | 2011 | 2012 | 2013 | Totals |
|---|---|---|---|---|---|---|---|---|---|---|---|---|---|---|---|---|---|---|---|---|---|---|---|---|---|---|---|---|---|---|---|---|
| **Cause** | | | | | | | | | | | | | | | | | | | | | | | | | | | | | | | | |
| **Wear** | | | | | 22.2% | 82.6% | 15.0% | 31.6% | 73.3% | | 100.0% | 95.0% | 86.7% | 84.8% | 80.9% | | 98.0% | 88.0% | 28.8% | 49.2% | 76.3% | 8.7% | 50.0% | 38.1% | 50.0% | 23.3% | 52.7% | 33.3% | 65.5% | 75.0% | 67.9% | 56.4% |
| **Loose Parts** | | | | | | | | | 26.7% | | | | 6.7% | | 14.9% | | 2.0% | 6.0% | 13.5% | 19.7% | 2.6% | 30.4% | | 28.6% | 50.0% | 1.9% | | 55.6% | 6.9% | | | 8.4% |
| **Restrictions** | | | | | | | | | | | | | | | 4.3% | | | | | 1.6% | 2.6% | | | | | | 1.8% | | | | 7.1% | 0.8% |
| **Manufacturing** | | 100.0% | 100.0% | 100.0% | 66.7% | | 75.0% | 68.4% | | | | | | | | | | | | | 7.9% | 8.7% | | 1.6% | | 1.0% | 3.6% | | 24.1% | | 17.9% | 9.6% |
| **Inspection Issues** | | | | | | | | | | | | | | | | | | | | 3.3% | 2.6% | 4.3% | | 3.2% | | 33.0% | 1.8% | 11.1% | | 8.3% | | 4.9% |
| **Other** | | | | | 11.1% | 17.4% | 10.0% | | | 100.0% | | 5.0% | 6.7% | 15.2% | | | | 6.0% | 57.7% | 1.6% | | 47.8% | 33.3% | | | | | | | | | 7.6% |
| **SCC** | | | | | | | | | | | | | | | | | | | | 24.6% | 7.9% | | 16.7% | 28.6% | | 40.8% | 40.0% | | 3.4% | 16.7% | 7.1% | 12.3% |
| | | 100.0% | 100.0% | 100.0% | 100.0% | 100.0% | 100.0% | 100.0% | 100.0% | 100.0% | 100.0% | 100.0% | 100.0% | 100.0% | 100.0% | | 100.0% | 100.0% | 100.0% | 100.0% | 100.0% | 100.0% | 100.0% | 100.0% | 100.0% | 100.0% | 100.0% | 100.0% | 100.0% | 100.0% | 100.0% | 100.0% |

**Table 4-17: Replacement Models: Total Number and Percentage of Tubes Plugged (12/2013)**

| Unit | Number of Tubes Plugged[1] | Percent Plugged | Operating Time[2] |
|---|---|---|---|
| Indian Point 2 | 34 | 0.26 | 13 |
| Point Beach 1 | 13 | 0.20 | 30 |
| Robinson 2 | 48 | 0.50 | 29 |
| Salem 1 | 251 | 1.12 | 17 |
| Surry 1 | 106 | 1.06 | 33 |
| Surry 2 | 94 | 0.94 | 33 |
| Turkey Point 3 | 184 | 1.91 | 32 |
| Turkey Point 4 | 65 | 0.67 | 31 |
| **TOTALS:** | 795 | 0.88 | |

[1]As of 12/31/2013

[2]Operating Time = calendar years of operation as of 12/31/2013

**Table 4-18: Replacement Models: Number of Tubes Plugged as a Function of Mechanism (Detailed) (12/2013)**

| Cause of Tube Plugging | | Tubes Plugged | Percentage of Plugs | Tubes Plugged | Percentage of Plugs |
|---|---|---|---|---|---|
| **Wear** | AVB | 299 | 37.6% | **317** | **39.9%** |
| | Preheater TSP (D5) | 0 | 0.0% | | |
| | TSP | 18 | 2.3% | | |
| **Loose Parts** | Confirmed | 34 | 4.3% | **115** | **14.5%** |
| | Not Confirmed, Periphery | 50 | 6.3% | | |
| | Not Confirmed, Not Periphery | 31 | 3.9% | | |
| **Obstruction Restriction** | From PSI - no progression | 4 | 0.5% | **20** | **2.5%** |
| | Service Induced | 16 | 2.0% | | |
| **Manufacturing Flaws** | Preservice | 94 | 11.8% | **174** | **21.9%** |
| | Other | 80 | 10.1% | | |
| **Inspection Issues** | Probe Lodged | 0 | 0.0% | **24** | **3.0%** |
| | Data Quality | 6 | 0.8% | | |
| | Dent/Geometry | 2 | 0.3% | | |
| | Permeability | 16 | 2.0% | | |
| | Not Inspected | 0 | 0.0% | | |
| **Other** | Top of Tubesheet | 102 | 12.8% | **123** | **15.5%** |
| | Freespan | 13 | 1.6% | | |
| | TSP | 7 | 0.9% | | |
| | Other/Not Reported | 1 | 0.1% | | |
| **SCC** | ID | 21 | 2.6% | **22** | **2.8%** |
| | OD | 1 | 0.1% | | |
| | **TOTALS** | 795 | 100.0% | 795 | 100.0% |

Total Tubes: 90766
Fraction Plugged 0.88%

## Table 4-19: Replacement Models: Cumulative Plugging per Year

| Outage | Indian Point 2 | Point Beach 1 | Robinson 2 | Salem 1 | Surry 1 | Surry 2 | Turkey Point 3 | Turkey Point 4 |
|---|---|---|---|---|---|---|---|---|
| Pre-Op | 2 | 4 | 0 | 13 | 2 | 2 | 39 | 31 |
| 1980 | | | | | | | | |
| 1981 | | | | | | 2 | | |
| 1982 | | | | | | | | |
| 1983 | | | | | 2 | 2 | 39 | |
| 1984 | | 4 | | | 6 | | | 31 |
| 1985 | | 4 | | | | 2 | 43 | |
| 1986 | | 4 | 0 | | 10 | 6 | | 31 |
| 1987 | | 4 | 0 | | | | 44 | |
| 1988 | | 6 | 1 | | 10 | 3 | | 32 |
| 1989 | | 6 | 1 | | | | | |
| 1990 | | 6 | 2 | | 12 | | 55 | |
| 1991 | | 8 | | | | 3 | | 33 |
| 1992 | | 8 | 3 | | 14 | | 62 | |
| 1993 | | 8 | 4 | | | 5 | | 33 |
| 1994 | | 8 | 6 | | 18 | | 66 | 33 |
| 1995 | | 9 | 6 | | 19 | 10 | 68 | |
| 1996 | | 9 | 7 | | | 18 | | 33 |
| 1997 | | | | | 24 | 23 | 82 | 33 |
| 1998 | | 9 | 7 | | 30 | | 83 | |
| 1999 | | 9 | 7 | 23 | | 32 | | 33 |
| 2000 | | 9 | | | 38 | 39 | 152 | 43 |
| 2001 | | 10 | 11 | 58 | 43 | | 166 | |
| 2002 | 18 | | 19 | 91 | | 40 | | 43 |
| 2003 | | 10 | | | 54 | 43 | 169 | 47 |
| 2004 | 18 | 10 | 26 | 128 | 54 | | 169 | |
| 2005 | | 10 | 26 | 128 | | 51 | | 47 |
| 2006 | 25 | | | | 70 | 55 | 169 | 53 |
| 2007 | | 10 | 32 | 224 | 71 | | 170 | |
| 2008 | 25 | 11 | 32 | 224 | | 64 | | 53 |
| 2009 | | | | | 86 | 94 | 170 | 64 |
| 2010 | 34 | 11 | 44 | 238 | 106 | | 184 | |
| 2011 | | 13 | | 238 | | 94 | | 64 |
| 2012 | 34 | | 44 | | 106 | 94 | 184 | |
| 2013 | | 13 | 48 | 251 | 106 | | | 65 |

## Table 4-20: Replacement Models: Plugging per Year

| Year | Indian Point 2 | Point Beach 1 | Robinson 2 | Salem 1 | Surry 1 | Surry 2 | Turkey Point 3 | Turkey Point 4 | Replacement Totals |
|---|---|---|---|---|---|---|---|---|---|
| Pre-Op | 2 | 4 | 0 | 13 | 2 | 2 | 39 | 31 | 93 |
| 1980 | | | | | | | | | 0 |
| 1981 | | | | | | 0 | | | 0 |
| 1982 | | | | | | | | | 0 |
| 1983 | | | | | 0 | 0 | 0 | | 0 |
| 1984 | | 0 | | | 4 | | | 0 | 4 |
| 1985 | | 0 | | | | 0 | 4 | | 4 |
| 1986 | | 0 | 0 | | 4 | 1 | | 0 | 5 |
| 1987 | | 0 | 0 | | | | 1 | | 1 |
| 1988 | | 2 | 1 | | 0 | 0 | | 1 | 4 |
| 1989 | | 0 | 0 | | | | | | 0 |
| 1990 | | 0 | 1 | | 2 | | 11 | | 14 |
| 1991 | | 2 | | | | 0 | | 1 | 3 |
| 1992 | | 0 | 1 | | 2 | | 7 | | 10 |
| 1993 | | 0 | 1 | | | 2 | | 0 | 3 |
| 1994 | | 0 | 2 | | 4 | | 4 | 0 | 10 |
| 1995 | | 1 | 0 | | 1 | 5 | 2 | | 9 |
| 1996 | | 0 | 1 | | | 8 | | 0 | 9 |
| 1997 | | | | | 5 | 5 | 14 | 0 | 24 |
| 1998 | | 0 | 0 | | 6 | | 1 | | 7 |
| 1999 | | 0 | 0 | 10 | | 9 | | 0 | 19 |
| 2000 | | 0 | | | 8 | 7 | 69 | 10 | 94 |
| 2001 | | 1 | 4 | 35 | 5 | | 14 | | 59 |
| 2002 | 16 | | 8 | 33 | | 1 | | 0 | 58 |
| 2003 | | 0 | | | 11 | 3 | 3 | 4 | 21 |
| 2004 | 0 | 0 | 7 | 37 | 0 | | 0 | | 44 |
| 2005 | | 0 | 0 | 0 | | 8 | | 0 | 8 |
| 2006 | 7 | | | | 16 | 4 | 0 | 6 | 33 |
| 2007 | | 0 | 6 | 96 | 1 | | 1 | | 104 |
| 2008 | 0 | 1 | 0 | 0 | | 9 | | 0 | 10 |
| 2009 | | | | | 15 | 30 | 0 | 11 | 56 |
| 2010 | 9 | 0 | 12 | 14 | 20 | | 14 | | 69 |
| 2011 | | 2 | | 0 | | 0 | | 0 | 2 |
| 2012 | 0 | | 0 | | 0 | 0 | 0 | | 0 |
| 2013 | | 0 | 4 | 13 | 0 | | | 1 | 18 |
| **Totals:** | 34 | 13 | 48 | 251 | 106 | 94 | 184 | 65 | 795 |

## Table 4-21: Replacement Models: Cumulative Plugging Per RFO (12/2013)

| Outage | Indian Point 2 | Point Beach 1 | Robinson 2 | Salem 1 | Surry 1 | Surry 2 | Turkey Point 3 | Turkey Point 4 |
|---|---|---|---|---|---|---|---|---|
| Pre-Op | 2 | 4 | 0 | 13 | 2 | 2 | 39 | 31 |
| RFO 1 | 18 | 4 | 0 | 23 | 2 | 2 | 39 | 31 |
| RFO 2 | 18 | 4 | 0 | 58 | 6 | 2 | 43 | 31 |
| RFO 3 | 25 | 4 | 1 | 91 | 10 | 2 | 44 | 32 |
| RFO 4 | 25 | 6 | 2 | 128 | 10 | 3 | 55 | 33 |
| RFO 5 | 34 | 6 | 3 | 128 | 12 | 3 | 62 | 33 |
| RFO 6 | 34 | 6 | 4 | 224 | 14 | 3 | 66 | 33 |
| RFO 7 | | 8 | 6 | 224 | 18 | 5 | 68 | 33 |
| RFO 8 | | 8 | 7 | 238 | 19 | 10 | 82 | 33 |
| RFO 9 | | 8 | 7 | 238 | 24 | 18 | 83 | 33 |
| RFO 10 | | 8 | 7 | 251 | 30 | 23 | 152 | 43 |
| RFO 11 | | 9 | 11 | | 38 | 32 | 166 | 43 |
| RFO 12 | | 9 | 19 | | 43 | 39 | 169 | 47 |
| RFO 13 | | 9 | 26 | | 54 | 40 | 169 | 47 |
| RFO 14 | | 9 | 26 | | 54 | 43 | 169 | 53 |
| RFO 15 | | 10 | 32 | | 70 | 51 | 170 | 53 |
| RFO 16 | | 10 | 32 | | 71 | 55 | 170 | 64 |
| RFO 17 | | 10 | 44 | | 86 | 64 | 184 | 64 |
| RFO 18 | | 10 | 44 | | 106 | 94 | 184 | 65 |
| RFO 19 | | 10 | 48 | | 106 | 94 | | |
| RFO 20 | | 11 | | | 106 | 94 | | |
| RFO 21 | | 11 | | | | | | |
| RFO 22 | | 13 | | | | | | |
| RFO 23 | | 13 | | | | | | |

# Table 4-22: Replacement Models: Number of Tubes Plugged as a Function of Mechanism per Year (Detailed)

| Cause of Tube Plugging/Outage | Year | 1980 | 1981 | 1982 | 1983 | 1984 | 1985 | 1986 | 1987 | 1988 | 1989 | 1990 | 1991 | 1992 | 1993 | 1994 | 1995 | 1996 | 1997 | 1998 | 1999 | 2000 | 2001 | 2002 | 2003 | 2004 | 2005 | 2006 | 2007 | 2008 | 2009 | 2010 | 2011 | 2012 | 2013 | Totals | Totals |
|---|---|---|---|---|---|---|---|---|---|---|---|---|---|---|---|---|---|---|---|---|---|---|---|---|---|---|---|---|---|---|---|---|---|---|---|---|---|
| Wear | AVB | | | | | | | | | | | 7 | 1 | 4 | 2 | 7 | 3 | 3 | 5 | 1 | 8 | 20 | 32 | 47 | 1 | 28 | | 8 | 95 | | 1 | 18 | | | 8 | 299 | 317 |
| | Preheater TSP (D5) | | | | | | | | | | | | | | | | | | | | | | | | | | | | | | | | | | | 0 | |
| | TSP | | | | | | | | | | | | 1 | | | | | | | | | 1 | 12 | | 2 | | | | | | | 2 | | | | 18 | |
| Loose Parts | Confirmed | | | | | | | 1 | | | | | | | | 2 | | | | | | | | | 3 | 5 | 3 | 6 | | | | 11 | | | 3 | 34 | 115 |
| | Not Confirmed, Periphery | | | | | | | | | 1 | | 1 | | | | | | 1 | 2 | 3 | | | 3 | 2 | 1 | 2 | 5 | 10 | 6 | | 8 | 3 | | | 2 | 50 | |
| | Not Confirmed, Not Periphery | | | | | | | | | | | | | | | | | | | | | | 1 | 2 | | 3 | | 1 | | 3 | 13 | 7 | | | 1 | 31 | |
| Obstruction Restriction | From PSI - no progression | | | | | | | | | | | | | 1 | 1 | | | | | | | | 1 | | 1 | | | | | | | | | | | 4 | 20 |
| | Service Induced | | | | | | | 1 | | 1 | | | 1 | | | | 1 | 2 | 5 | 3 | 1 | | 1 | | | | | | | | | | | | | 16 | |
| Manufacturing Flaws | Preservice | 2 | 2 | 39 | 31 | 4 | | | | | | | | | | | | | 13 | | | 2 | | | 1 | | | | | | | | | | | 94 | 174 |
| | Other | | | | | | | 1 | | 2 | | 2 | | | | | | | | | 2 | | 3 | 7 | 8 | 2 | | | 1 | 1 | 21 | 26 | | | 4 | 80 | |
| Inspection Issues | Probe Lodged | | | | | | | | | | | | | | | | | | | | | | | | | | | | | | | | | | | 0 | 24 |
| | Data Quality | | | | | | | | | | | | | | | | | | | | | | 4 | | | 1 | | | | | | 1 | | | | 6 | |
| | Dent/Geometry | | | | | | | | | | | | | | | | | | | | | | | | 2 | | | | | | | | | | | 2 | |
| | Permeability | | | | | | | | | | | | | | | | | | 1 | | | 1 | 1 | | 1 | 3 | | 7 | 2 | | | | | | | 16 | |
| | Not Inspected | | | | | | | | | | | | | | | | | | | | | | | | | | | | | | | | | | | 0 | |
| Other | Top of Tubesheet | | | | | 1 | 3 | | 1 | | | 2 | | | | | 5 | 3 | 8 | | 8 | 71 | | | | | | | | | | | | | | 102 | 123 |
| | Freespan | | | | | | | 1 | | | | | | 5 | | 1 | | | 3 | | | 1 | 1 | | 1 | | | | | | | | | | | 13 | |
| | TSP | | | | | 3 | 1 | 1 | | | | 2 | | | | | | | | | | | | | | | | | | | | | | | | 7 | |
| | Not Reported | | | | | | | | | | | | | | | | | | | | | | | | | | | 1 | | | | | | | | 1 | |
| SCC | ID | | | | | | | | | | | | | | | | | | | | | | | | | | | | | 6 | 13 | | 2 | | | 21 | 22 |
| | OD | | | | | | | | | | | | | | | | | | | | | | | | | | | | | | | 1 | | | | 1 | |
| | TOTALS | 2 | 2 | 39 | 31 | 8 | 4 | 5 | 1 | 4 | 0 | 14 | 3 | 10 | 3 | 10 | 9 | 9 | 37 | 7 | 19 | 96 | 59 | 58 | 21 | 44 | 8 | 33 | 104 | 10 | 56 | 69 | 2 | 0 | 18 | 795 | 795 |

## Table 4-23: Replacement Models: Number of Tubes Plugged as a Function of Mechanism per Year (Summary)

| Year | 1980 | 1981 | 1982 | 1983 | 1984 | 1985 | 1986 | 1987 | 1988 | 1989 | 1990 | 1991 | 1992 | 1993 | 1994 | 1995 | 1996 | 1997 | 1998 | 1999 | 2000 | 2001 | 2002 | 2003 | 2004 | 2005 | 2006 | 2007 | 2008 | 2009 | 2010 | 2011 | 2012 | 2013 | Totals |
|---|---|---|---|---|---|---|---|---|---|---|---|---|---|---|---|---|---|---|---|---|---|---|---|---|---|---|---|---|---|---|---|---|---|---|---|
| Cause | | | | | | | | | | | | | | | | | | | | | | | | | | | | | | | | | | | |
| Wear | | | | | | | | | | | 7 | 2 | 4 | 2 | 7 | 3 | 3 | 5 | 1 | 8 | 21 | 44 | 47 | 3 | 28 | | 8 | 95 | | 1 | 20 | | | 8 | 317 |
| Loose Parts | | | | | | | 1 | | 1 | | 1 | | | | 2 | | 1 | 2 | 3 | | | 4 | 4 | 4 | 10 | 8 | 17 | 6 | 3 | 21 | 21 | | | 6 | 115 |
| Restrictions | | | | | | | 1 | | 1 | | | 1 | 1 | 1 | | 1 | 2 | 5 | 3 | 1 | | 2 | | 1 | | | | | | | | | | | 20 |
| Manufacturing | 2 | 2 | 39 | 31 | 4 | | 1 | | 2 | | 2 | | | | | | | 13 | | 2 | 2 | 3 | 7 | 9 | 2 | | | 1 | 1 | 21 | 26 | | | 4 | 174 |
| Inspection Issues | | | | | | | | | | | | | | | | | | 1 | | | 1 | 5 | | 3 | 4 | | 7 | 2 | | | 1 | | | | 24 |
| Other | | | | | 4 | 4 | 2 | 1 | | | 4 | | 5 | | 1 | 5 | 3 | 11 | | 8 | 72 | 1 | | 1 | | | 1 | | | | | | | | 123 |
| SCC | | | | | | | | | | | | | | | | | | | | | | | | | | | | | 6 | 13 | 1 | 2 | | | 22 |
| | 2 | 2 | 39 | 31 | 8 | 4 | 5 | 1 | 4 | 0 | 14 | 3 | 10 | 3 | 10 | 9 | 9 | 37 | 7 | 19 | 96 | 59 | 58 | 21 | 44 | 8 | 33 | 104 | 10 | 56 | 69 | 2 | 0 | 18 | 795 |

# Table 4-24: Replacement Models: Percentage of Tubes Plugged as a Function of Mechanism per Year (Summary)

| Year | 1980 | 1981 | 1982 | 1983 | 1984 | 1985 | 1986 | 1987 | 1988 | 1989 | 1990 | 1991 | 1992 | 1993 | 1994 | 1995 | 1996 | 1997 | 1998 | 1999 | 2000 | 2001 | 2002 | 2003 | 2004 | 2005 | 2006 | 2007 | 2008 | 2009 | 2010 | 2011 | 2012 | 2013 | Totals |
|---|---|---|---|---|---|---|---|---|---|---|---|---|---|---|---|---|---|---|---|---|---|---|---|---|---|---|---|---|---|---|---|---|---|---|---|
| Cause | | | | | | | | | | | | | | | | | | | | | | | | | | | | | | | | | | | |
| Wear | | | | | | | | | | | 50.0% | 66.7% | 40.0% | 66.7% | 70.0% | 33.3% | 33.3% | 13.5% | 14.3% | 42.1% | 21.9% | 74.6% | 81.0% | 14.3% | 63.6% | | 24.2% | 91.3% | | 1.8% | 29.0% | | | 44.4% | 39.9% |
| Loose Parts | | | | | | | 20.0% | | 25.0% | | 7.1% | | | | 20.0% | | 11.1% | 5.4% | 42.9% | | | 6.8% | 6.9% | 19.0% | 22.7% | 100.0% | 51.5% | 5.8% | 30.0% | 37.5% | 30.4% | | | 33.3% | 14.5% |
| Restrictions | | | | | | | 20.0% | | 25.0% | | | 33.3% | 10.0% | 33.3% | | 11.1% | 22.2% | 13.5% | 42.9% | 5.3% | | 3.4% | | 4.8% | | | | | | | | | | | 2.5% |
| Manufacturing | 100.0% | 100.0% | 100.0% | 100.0% | 50.0% | | 20.0% | | 50.0% | | 14.3% | | | | | | | 35.1% | | 10.5% | 2.1% | 5.1% | 12.1% | 42.9% | 4.5% | | | 1.0% | 10.0% | 37.5% | 37.7% | | | 22.2% | 21.9% |
| Inspection Issues | | | | | | | | | | | | | | | | | | 2.7% | | | 1.0% | 8.5% | | 14.3% | 9.1% | | 21.2% | 1.9% | | | 1.4% | | | | 3.0% |
| Other | | | | | 50.0% | 100.0% | 40.0% | 100.0% | | | 28.6% | | 50.0% | | 10.0% | 55.6% | 33.3% | 29.7% | | 42.1% | 75.0% | 1.7% | | 4.8% | | | 3.0% | | | | | | | | 15.5% |
| SCC | | | | | | | | | | | | | | | | | | | | | | | | | | | | | 60.0% | 23.2% | 1.4% | 100.0% | | | 2.8% |
| | 100.0% | 100.0% | 100.0% | 100.0% | 100.0% | 100.0% | 100.0% | 100.0% | 100.0% | | 100.0% | 100.0% | 100.0% | 100.0% | 100.0% | 100.0% | 100.0% | 100.0% | 100.0% | 100.0% | 100.0% | 100.0% | 100.0% | 100.0% | 100.0% | 100.0% | 100.0% | 100.0% | 100.0% | 100.0% | 100.0% | 100.0% | 0.0% | 100.0% | 100.0% |

# Table 4-25: Cracking in Thermally Treated Alloy 600 Tubes (12/2013)

| Unit | RFO | Year | EFPY | T-Hot (degrees F) | ID or OD | Axial or Circumferential | HL/CL | Number of Tubes | Location | Notes |
|---|---|---|---|---|---|---|---|---|---|---|
| Braidwood 2 | 10 | 2003 | 12.78 | 611 | OD | Axial | HL | 3 | TSP | Nonoptimal tube processing, high row |
| Braidwood 2 | 13 | 2008 | 17.05 | 611 | ID | Axial | HL | 288 | Tube End | 285 axial indications, 46 circumferential indications |
| Braidwood 2 | 13 | 2008 | 17.05 | 611 | ID | Circumferential | HL | | Tube End | |
| Braidwood 2 | 13 | 2008 | 17.05 | 611 | ID | Mixed Mode | HL | | Tube End | |
| Braidwood 2 | 15 | 2011 | 19.86 | 611 | OD | Axial | HL | 1 | TSP | Nonoptimal tube processing, low row, 3 indications |
| Braidwood 2 | 16 | 2012 | 21.27 | 611 | OD | Axial | HL | 1 | TSP | Nonoptimal tube processing, high row |
| Braidwood 2 | 16 | 2012 | 21.27 | 611 | OD | Axial | HL | | Freespan | |
| Byron 2 | 14 | 2008 | 18.58 | 611 | ID | Axial | HL | 65 | Tube End | |
| Catawba 2 | 13 | 2004 | 14.68 | 615 | ID | Axial | HL | | Tube End | |
| Catawba 2 | 13 | 2004 | 14.68 | 615 | ID | Circumferential | HL | | Tube End | |
| Catawba 2 | 13 | 2004 | 14.68 | 615 | ID | Circumferential | HL | 1 | Tubesheet | Overexpansion, 3 indications |
| Catawba 2 | 14 | 2006 | 16.06 | 615 | ID | Axial | HL | | Tube End | |
| Catawba 2 | 14 | 2006 | 16.06 | 615 | ID | Circumferential | HL | | Tube End | |
| Catawba 2 | 15 | 2007 | 17.43 | 615 | ID | Axial | HL | | Tube End | |
| Catawba 2 | 15 | 2007 | 17.43 | 615 | ID | Circumferential | HL | | Tube End | |
| Catawba 2 | 15 | 2007 | 17.43 | 615 | ID | Mixed Mode | HL | | Tube End | |
| Catawba 2 | 15 | 2007 | 17.43 | 615 | ID | Circumferential | CL | 10 | Tube End | Subsequently reclassifed as permeability variations |
| Catawba 2 | 15 | 2007 | 17.43 | 615 | OD | Axial | HL | 8 | Expansion Transition | Sludge Pile |
| Catawba 2 | 16 | 2009 | 18.73 | 615 | ID | Axial | HL | | Tube End | |
| Catawba 2 | 16 | 2009 | 18.73 | 615 | ID | Circumferential | HL | | Tube End | |
| Catawba 2 | 16 | 2009 | 18.73 | 615 | OD | Axial | HL | 3 | TSP | Nonoptimal tube processing, 8 indications |
| Catawba 2 | 17 | 2010 | 20.13 | 615 | ID | Axial | HL | | Tube End | |
| Catawba 2 | 17 | 2010 | 20.13 | 615 | ID | Circumferential | HL | | Tube End | |
| Catawba 2 | 18 | 2012 | 21.50 | 615 | ID | Axial | HL | | Tube End | |
| Catawba 2 | 18 | 2012 | 21.50 | 615 | ID | Circumferential | HL | | Tube End | |
| Catawba 2 | 19 | 2013 | 22.89 | 615 | ID | Axial | HL | | Tube End | |
| Catawba 2 | 19 | 2013 | 22.89 | 615 | ID | Circumferential | HL | | Tube End | |
| Comanche Peak 2 | 10 | 2008 | 13.04 | 618 | ID | Axial | HL | 9 | Tube End | |
| Comanche Peak 2 | 10 | 2008 | 13.04 | 618 | ID | Circumferential | HL | 4 | Tube End | |
| Millstone 3 | 12 | 2008 | 16.60 | 622 | ID | Axial | HL | 94 | Tube End | |
| Millstone 3 | 12 | 2008 | 16.60 | 622 | ID | Circumferential | HL | 48 | Tube End | |
| Millstone 3 | 12 | 2008 | 16.60 | 622 | ID | Mixed Mode | HL | 4 | Tube End | |
| Millstone 3 | 12 | 2008 | 16.60 | 622 | ID | Circumferential | CL | 1 | Tube End | |
| Point Beach 1 | 33 | 2011 | 23.20 | | ID | Circumferential | HL | 2 | Tube End | |
| Robinson | 28 | 2013 | 23.20 | 604 | ID | Circumferential | HL | 2 | Tube End | |
| Seabrook | 8 | 2002 | 9.71 | 618 | OD | Axial | HL | 15 | TSP | Nonoptimal tube processing, 42 indications, 36 HL, 6CL |
| Seabrook | 8 | 2002 | 9.71 | 618 | OD | Axial | CL | | | |
| Seabrook | 9 | 2003 | 11.00 | 618 | OD | Axial | HL | 3 | TSP | Nonoptimal tube processing |
| Seabrook | 13 | 2009 | 16.53 | 621 | OD | Axial | HL | 1 | Expansion Transition | Starts at bottom of expansion transition and goes into tubesheet |
| Seabrook | 15 | 2012 | 18.95 | 621 | OD | Axial | HL | 1 | Dented TSP | Dented TSP, 11.4 volt dent |
| Seabrook | 15 | 2012 | 18.95 | 621 | OD | Axial | HL | 1 | Freespan | 3 indications |
| Surry 1 | 17 | 2009 | 22.20 | 605 | ID | Axial | HL | 1 | Expansion Transition | Extends above and below top of tubesheet |
| Surry 1 | 17 | 2009 | 22.20 | 605 | ID | Axial | HL | 19 | Tube End | |
| Surry 1 | 17 | 2009 | 22.20 | 605 | ID | Circumferential | HL | 66 | Tube End | |
| Surry 1 | 18 | 2010 | 23.60 | 605 | OD | Circumferential | HL | 1 | Expansion Transition | |
| Surry 2 | 17 | 2008 | 22.10 | 605 | ID | Axial | HL | 16 | Tube End | 18 indications |
| Surry 2 | 17 | 2008 | 22.10 | 605 | ID | Circumferential | HL | 101 | Tube End | 102 indications |
| Turkey Point 3 | 26 | 2014 | 24.70 | | ID | Axial | HL | 1 | Tube End | |
| Turkey Point 4 | 26 | 2013 | 23.05 | 610 | ID | Axial | HL | 11 | Tube End | |
| Vogtle 1 | 12 | 2005 | 15.68 | 618 | ID | Circumferential | HL | 2 | Tubesheet | Bulge |
| Vogtle 1 | 13 | 2006 | 17.08 | 618 | OD | Axial | HL | 1 | Expansion Transition | |
| Vogtle 1 | 13 | 2006 | 17.08 | 618 | OD | Circumferential | HL | 17 | Expansion Transition | |
| Vogtle 1 | 14 | 2008 | 18.40 | 618 | OD | Axial | HL | 1 | Expansion Transition | |
| Vogtle 1 | 14 | 2008 | 18.40 | 618 | OD | Circumferential | HL | 10 | Expansion Transition | |
| Vogtle 1 | 14 | 2008 | 18.40 | 618 | ID | Axial | HL | 21 | Tube End | |
| Vogtle 1 | 14 | 2008 | 18.40 | 618 | ID | Circumferential | HL | 6 | Tube End | |
| Vogtle 1 | 15 | 2009 | 19.80 | 618 | ID | Axial | HL | 1 | U-bend | Row 1 |
| Vogtle 1 | 15 | 2009 | 19.80 | 618 | OD | Circumferential | HL | 20 | Expansion Transition | |
| Vogtle 1 | 16 | 2011 | 21.20 | 618 | OD | Axial | HL | 1 | Expansion Transition | |
| Vogtle 1 | 18 | 2014 | 24.00 | 618 | OD | Circumferential | HL | 8 | Expansion Transition | |
| Vogtle 1 | 18 | 2014 | 24.00 | 618 | ID | Circumferential | HL | 1 | Tubesheet | Bulge |
| Vogtle 2 | 10 | 2004 | 13.49 | 618 | OD | Circumferential | HL | 9 | Expansion Transition | False indications based on tube pulls |
| Vogtle 2 | 16 | 2013 | 21.30 | 618 | OD | Circumferential | HL | 1 | Expansion Transition | |
| Wolf Creek | 16 | 2008 | 19.23 | 618 | ID | Axial | HL | 33 | Tube End | |
| Wolf Creek | 16 | 2008 | 19.23 | 618 | ID | Circumferential | HL | 36 | Tube End | |
| Wolf Creek | 19 | 2013 | 23.22 | 618 | ID | Circumferential | HL | 1 | Tubesheet | Bulge |

Acronyms:
CL = cold-leg
EFPY = effective full power years
HL = hot-leg
ID = inside diameter
OD = outside diameter
TSP = tube support plate

## Table 4-26: Tube End Cracking in Thermally Treated Alloy 600 Tubes (12/2013)

| Unit | RFO | Year | EFPY | T- Hot (degrees F) | ID or OD | Axial or Circumferential | HL/CL | Number of Tubes | Location | Notes |
|---|---|---|---|---|---|---|---|---|---|---|
| Braidwood 2 | 13 | 2008 | 17.05 | 611 | ID | Axial | HL | 288 | Tube End | 285 axial indications, 46 circumferential indications |
| Braidwood 2 | 13 | 2008 | 17.05 | 611 | ID | Circumferential | HL | | Tube End | |
| Braidwood 2 | 13 | 2008 | 17.05 | 611 | ID | Mixed Mode | HL | | Tube End | |
| Byron 2 | 14 | 2008 | 18.58 | 611 | ID | Axial | HL | 65 | Tube End | |
| Catawba 2 | 13 | 2004 | 14.68 | 615 | ID | Axial | HL | | Tube End | |
| Catawba 2 | 13 | 2004 | 14.68 | 615 | ID | Circumferential | HL | | Tube End | |
| Catawba 2 | 14 | 2006 | 16.06 | 615 | ID | Axial | HL | | Tube End | |
| Catawba 2 | 14 | 2006 | 16.06 | 615 | ID | Circumferential | HL | | Tube End | |
| Catawba 2 | 15 | 2007 | 17.43 | 615 | ID | Axial | HL | | Tube End | |
| Catawba 2 | 15 | 2007 | 17.43 | 615 | ID | Circumferential | HL | | Tube End | |
| Catawba 2 | 15 | 2007 | 17.43 | 615 | ID | Mixed Mode | HL | | Tube End | |
| Catawba 2 | 15 | 2007 | 17.43 | 615 | ID | Circumferential | CL | 10 | Tube End | Subsequently reclassifed as permeability variations |
| Catawba 2 | 16 | 2009 | 18.73 | 615 | ID | Axial | HL | | Tube End | |
| Catawba 2 | 16 | 2009 | 18.73 | 615 | ID | Circumferential | HL | | Tube End | |
| Catawba 2 | 17 | 2010 | 20.13 | 615 | ID | Axial | HL | | Tube End | |
| Catawba 2 | 17 | 2010 | 20.13 | 615 | ID | Circumferential | HL | | Tube End | |
| Catawba 2 | 18 | 2012 | 21.50 | 615 | ID | Axial | HL | | Tube End | |
| Catawba 2 | 18 | 2012 | 21.50 | 615 | ID | Circumferential | HL | | Tube End | |
| Catawba 2 | 19 | 2013 | 22.89 | 615 | ID | Axial | HL | | Tube End | |
| Catawba 2 | 19 | 2013 | 22.89 | 615 | ID | Circumferential | HL | | Tube End | |
| Comanche Peak 2 | 10 | 2008 | 13.04 | 618 | ID | Axial | HL | 9 | Tube End | |
| Comanche Peak 2 | 10 | 2008 | 13.04 | 618 | ID | Circumferential | HL | 4 | Tube End | |
| Millstone 3 | 12 | 2008 | 16.60 | 622 | ID | Axial | HL | 94 | Tube End | |
| Millstone 3 | 12 | 2008 | 16.60 | 622 | ID | Circumferential | HL | 48 | Tube End | |
| Millstone 3 | 12 | 2008 | 16.60 | 622 | ID | Mixed Mode | HL | 4 | Tube End | |
| Millstone 3 | 12 | 2008 | 16.60 | 622 | ID | Circumferential | CL | 1 | Tube End | |
| Point Beach 1 | 33 | 2011 | 23.20 | | ID | Circumferential | HL | 2 | Tube End | |
| Robinson | 28 | 2013 | 23.20 | 604 | ID | Circumferential | HL | 2 | Tube End | |
| Surry 1 | 17 | 2009 | 22.20 | 605 | ID | Axial | HL | 19 | Tube End | |
| Surry 1 | 17 | 2009 | 22.20 | 605 | ID | Circumferential | HL | 66 | Tube End | |
| Surry 2 | 17 | 2008 | 22.10 | 605 | ID | Axial | HL | 16 | Tube End | 18 indications |
| Surry 2 | 17 | 2008 | 22.10 | 605 | ID | Circumferential | HL | 101 | Tube End | 102 indications |
| Turkey Point 3 | 26 | 2014 | 24.70 | | ID | Axial | HL | 1 | Tube End | |
| Turkey Point 4 | 26 | 2013 | 23.05 | 610 | ID | Axial | HL | 11 | Tube End | |
| Vogtle 1 | 14 | 2008 | 18.40 | 618 | ID | Axial | HL | 21 | Tube End | |
| Vogtle 1 | 14 | 2008 | 18.40 | 618 | ID | Circumferential | HL | 6 | Tube End | |
| Wolf Creek | 16 | 2008 | 19.23 | 618 | ID | Axial | HL | 33 | Tube End | |
| Wolf Creek | 16 | 2008 | 19.23 | 618 | ID | Circumferential | HL | 36 | Tube End | |
| | | | | | | | | | | |

Acronyms:
CL = cold-leg
EFPY = effective full power years
HL = hot-leg
ID = inside diameter
OD = outside diameter
TSP = tube support plate

## Table 4-27: Non Tube-End Cracking in Thermally Treated Alloy 600 Tubes (Sorted by Plant) (12/2013)

| Unit | RFO | Year | EFPY | T-Hot (degrees F) | ID or OD | Axial or Circumferential | HL/CL | Number of Tubes | Location | Notes |
|---|---|---|---|---|---|---|---|---|---|---|
| Braidwood 2 | 10 | 2003 | 12.78 | 611 | OD | Axial | HL | 3 | TSP | Nonoptimal tube processing, high row |
| Braidwood 2 | 15 | 2011 | 19.86 | 611 | OD | Axial | HL | 1 | TSP | Nonoptimal tube processing, low row, 3 indications |
| Braidwood 2 | 16 | 2012 | 21.27 | 611 | OD | Axial | HL | 1 | TSP | Nonoptimal tube processing, high row |
| Braidwood 2 | 16 | 2012 | 21.27 | 611 | OD | Axial | HL | | Freespan | |
| Catawba 2 | 13 | 2004 | 14.68 | 615 | ID | Circumferential | HL | 1 | Tubesheet | Overexpansion, 3 indications |
| Catawba 2 | 15 | 2007 | 17.43 | 615 | OD | Axial | HL | 8 | Expansion Transition | Sludge Pile |
| Catawba 2 | 16 | 2009 | 18.73 | 615 | OD | Axial | HL | 3 | TSP | Nonoptimal tube processing, 8 indications |
| Seabrook | 8 | 2002 | 9.71 | 618 | OD | Axial | HL | 15 | TSP | Nonoptimal tube processing, 42 indications, 36 HL, 6CL |
| Seabrook | 8 | 2002 | 9.71 | 618 | OD | Axial | CL | | | |
| Seabrook | 9 | 2003 | 11.00 | 618 | OD | Axial | HL | 3 | TSP | Nonoptimal tube processing |
| Seabrook | 13 | 2009 | 16.53 | 621 | OD | Axial | HL | 1 | Expansion Transition | Starts at bottom of expansion transition and goes into tubesheet |
| Seabrook | 15 | 2012 | 18.95 | 621 | OD | Axial | HL | 1 | Dented TSP | Dented TSP, 11.4 volt dent |
| Seabrook | 15 | 2012 | 18.95 | 621 | OD | Axial | HL | 1 | Freespan | 3 indications |
| Surry 1 | 17 | 2009 | 22.20 | 605 | ID | Axial | HL | 1 | Expansion Transition | Extends above and below top of tubesheet |
| Surry 1 | 18 | 2010 | 23.60 | 605 | OD | Circumferential | HL | 1 | Expansion Transition | |
| Vogtle 1 | 12 | 2005 | 15.68 | 618 | ID | Circumferential | HL | 2 | Tubesheet | Bulge |
| Vogtle 1 | 13 | 2006 | 17.08 | 618 | OD | Axial | HL | 1 | Expansion Transition | |
| Vogtle 1 | 13 | 2006 | 17.08 | 618 | OD | Circumferential | HL | 17 | Expansion Transition | |
| Vogtle 1 | 14 | 2008 | 18.40 | 618 | OD | Axial | HL | 1 | Expansion Transition | |
| Vogtle 1 | 14 | 2008 | 18.40 | 618 | OD | Circumferential | HL | 10 | Expansion Transition | |
| Vogtle 1 | 15 | 2009 | 19.80 | 618 | ID | Axial | HL | 1 | U-bend | Row 1 |
| Vogtle 1 | 15 | 2009 | 19.80 | 618 | OD | Circumferential | HL | 20 | Expansion Transition | |
| Vogtle 1 | 16 | 2011 | 21.20 | 618 | OD | Axial | HL | 1 | Expansion Transition | |
| Vogtle 1 | 18 | 2014 | 24.00 | 618 | OD | Circumferential | HL | 8 | Expansion Transition | |
| Vogtle 1 | 18 | 2014 | 24.00 | 618 | ID | Circumferential | HL | 1 | Tubesheet | Bulge |
| Vogtle 2 | 10 | 2004 | 13.49 | 618 | OD | Circumferential | HL | 9 | Expansion Transition | False indications based on tube pulls |
| Vogtle 2 | 16 | 2013 | 21.30 | 618 | OD | Circumferential | HL | 1 | Expansion Transition | |
| Wolf Creek | 19 | 2013 | 23.22 | 618 | ID | Circumferential | HL | 1 | Tubesheet | Bulge |
| | | | | | | | | | | |
| | | | | | | | | | | |

Acronyms:
CL = cold-leg
EFPY = effective full power years
HL = hot-leg
ID = inside diameter
OD = outside diameter
TSP = tube support plate

## Table 4-28: Non Tube-End Cracking in Thermally Treated Alloy 600 Tubes (Sorted by Location) (12/2013)

| Unit | RFO | Year | EFPY | T-Hot (degrees F) | ID or OD | Axial or Circumferential | HL/CL | Number of Tubes | Location | Notes |
|---|---|---|---|---|---|---|---|---|---|---|
| Seabrook | 15 | 2012 | 18.95 | 621 | OD | Axial | HL | 1 | Dented TSP | Dented TSP, 11.4 volt dent |
| Catawba 2 | 15 | 2007 | 17.43 | 615 | OD | Axial | HL | 8 | Expansion Transition | Sludge Pile |
| Seabrook | 13 | 2009 | 16.53 | 621 | OD | Axial | HL | 1 | Expansion Transition | Starts at bottom of expansion transition and goes into tubesheet |
| Surry 1 | 17 | 2009 | 22.20 | 605 | ID | Axial | HL | 1 | Expansion Transition | Extends above and below top of tubesheet |
| Surry 1 | 18 | 2010 | 23.60 | 605 | OD | Circumferential | HL | 1 | Expansion Transition | |
| Vogtle 1 | 13 | 2006 | 17.08 | 618 | OD | Axial | HL | 1 | Expansion Transition | |
| Vogtle 1 | 13 | 2006 | 17.08 | 618 | OD | Circumferential | HL | 17 | Expansion Transition | |
| Vogtle 1 | 14 | 2008 | 18.40 | 618 | OD | Axial | HL | 1 | Expansion Transition | |
| Vogtle 1 | 14 | 2008 | 18.40 | 618 | OD | Circumferential | HL | 10 | Expansion Transition | |
| Vogtle 1 | 15 | 2009 | 19.80 | 618 | OD | Circumferential | HL | 20 | Expansion Transition | |
| Vogtle 1 | 16 | 2011 | 21.20 | 618 | OD | Axial | HL | 1 | Expansion Transition | |
| Vogtle 1 | 18 | 2014 | 24.00 | 618 | OD | Circumferential | HL | 8 | Expansion Transition | |
| Vogtle 2 | 10 | 2004 | 13.49 | 618 | OD | Circumferential | HL | 9 | Expansion Transition | False indications based on tube pulls |
| Vogtle 2 | 16 | 2013 | 21.30 | 618 | OD | Circumferential | HL | 1 | Expansion Transition | |
| Seabrook | 15 | 2012 | 18.95 | 621 | OD | Axial | HL | 1 | Freespan | 3 indications |
| Braidwood 2 | 10 | 2003 | 12.78 | 611 | OD | Axial | HL | 3 | TSP | Nonoptimal tube processing, high row |
| Braidwood 2 | 15 | 2011 | 19.86 | 611 | OD | Axial | HL | 1 | TSP | Nonoptimal tube processing, low row, 3 indications |
| Braidwood 2 | 16 | 2012 | 21.27 | 611 | OD | Axial | HL | 1 | TSP | Nonoptimal tube processing, high row |
| Braidwood 2 | 16 | 2012 | 21.27 | 611 | OD | Axial | HL | | Freespan | |
| Catawba 2 | 16 | 2009 | 18.73 | 615 | OD | Axial | HL | 3 | TSP | Nonoptimal tube processing, 8 indications |
| Seabrook | 8 | 2002 | 9.71 | 618 | OD | Axial | HL | 15 | TSP | Nonoptimal tube processing, 42 indications, 36 HL, 6CL |
| Seabrook | 8 | 2002 | 9.71 | 618 | OD | Axial | CL | | | |
| Seabrook | 9 | 2003 | 11.00 | 618 | OD | Axial | HL | 3 | TSP | Nonoptimal tube processing |
| Catawba 2 | 13 | 2004 | 14.68 | 615 | ID | Circumferential | HL | 1 | Tubesheet | Overexpansion, 3 indications |
| Vogtle 1 | 12 | 2005 | 15.68 | 618 | ID | Circumferential | HL | 2 | Tubesheet | Bulge |
| Vogtle 1 | 18 | 2014 | 24.00 | 618 | ID | Circumferential | HL | 1 | Tubesheet | Bulge |
| Wolf Creek | 19 | 2013 | 23.22 | 618 | ID | Circumferential | HL | 1 | Tubesheet | Bulge |
| Vogtle 1 | 15 | 2009 | 19.80 | 618 | ID | Axial | HL | 1 | U-bend | Row 1 |
| | | | | | | | | | | |
| | | | | | | | | | | |

Acronyms:
CL = cold-leg
EFPY = effective full power years
HL = hot-leg
ID = inside diameter
OD = outside diameter
TSP = tube support plate

**Table 4-29: Wear at the AVBs (12/2013)**

| Unit | SG Operation Date | Model | "Last" RFO | Plugged for AVB Wear (Total) | Number of Tubes with AVB Wear | Number of AVB Wear Indications |
|---|---|---|---|---|---|---|
| Braidwood 2 | 10/17/1988 | D5 | 16 | 133 | 530 | 969 |
| Byron 2 | 08/21/1987 | D5 | 16 | 138 | 751 | 1023 |
| Callaway | 12/19/1984 | F | | | | |
| Catawba 2 | 08/19/1986 | D5 | 19 | 29 | 214 | 338 |
| Comanche Peak 2[1] | 08/03/1993 | D5 | 12 | 20 | 177 | 286 |
| Indian Point 2[1] | 12/01/2000 | 44F | 19 | 29 | 103 | 207 |
| Millstone 3 | 04/23/1986 | F | 14/15 | 75 | 323 | 639 |
| Point Beach 1 | 03/01/1984 | 44F | 34 | 3 | 108 | 176 |
| Robinson 2[1] | 10/01/1984 | 44F | 28 | 1 | 11 | 15 |
| Salem 1 | 07/01/1997 | F | 22 | 208 | 737 | 1472 |
| Seabrook | 08/19/1990 | F | 15 | 102 | 592 | 1279 |
| Surry 1 | 07/01/1981 | 51F | 19/20 | 16 | 62 | 79 |
| Surry 2 | 09/01/1980 | 51F | 19/20 | 16 | 68 | 95 |
| Turkey Point 3 | 04/01/1982 | 44F | 24 | 24 | 116 | 165 |
| Turkey Point 4 | 05/01/1983 | 44F | 26 | 2 | 50 | 62 |
| Vogtle 1 | 06/01/1987 | F | 16/17 | 45 | 371 | 703 |
| Vogtle 2 | 05/20/1989 | F | 15/16 | 22 | 262 | 465 |
| Wolf Creek[1] | 09/03/1985 | F | 19 | 236 | 1388 | 3241 |

Notes/Acronyms:
[1]100% of the tubes were not inspected, but all prior indications were inspected during the outage.
AVB = anti-vibration bar
RFO = refueling outage
SG = steam generator

**Table 4-30: All Models: Total Number and Percentage of Tubes Plugged (12/2013)**

| Unit | Number of Tubes Plugged[1] | Percent Plugged | Operating Time[2] |
|---|---|---|---|
| Braidwood 2 | 270 | 1.48 | 25.2 |
| Byron 2 | 408 | 2.23 | 26.4 |
| Catawba 2 | 309 | 1.69 | 27.4 |
| Comanche Peak 2 | 81 | 0.44 | 20.4 |
| Indian Point 2 | 34 | 0.26 | 13.1 |
| Millstone 3 | 187 | 0.83 | 27.7 |
| Point Beach 1 | 13 | 0.20 | 29.9 |
| Robinson 2 | 48 | 0.50 | 29.3 |
| Salem 1 | 251 | 1.12 | 16.5 |
| Seabrook 1 | 182 | 0.81 | 23.4 |
| Surry 1 | 106 | 1.06 | 32.5 |
| Surry 2 | 94 | 0.94 | 33.4 |
| Turkey Point 3 | 184 | 1.91 | 31.8 |
| Turkey Point 4 | 65 | 0.67 | 30.7 |
| Vogtle 1 | 151 | 0.67 | 26.6 |
| Vogtle 2 | 48 | 0.21 | 24.6 |
| Wolf Creek 1 | 282 | 1.25 | 28.3 |
| | | | |
| Callaway[3] | 21 | 0.43 | 20.9 |
| **TOTALS:** | 2734 | 0.97 | |

[1]As of 12/31/2013

[2]Operating Time = calendar years of operation as of 12/31/2013

[3]Only the first 10 rows of the Callaway steam generators have thermally treated tubes; the remaining are mill-annealed Alloy 600. Steam generators were replaced in 2005. New steam generators have Alloy 690 tubes.

## Table 4-31: All Models: Number of Tubes Plugged as a Function of Mechanism (Detailed) (12/2013)

| Cause of Tube Plugging | | Model D5 | | Model F | | Replacement Models | | All Models | |
|---|---|---|---|---|---|---|---|---|---|
| | | Tubes Plugged | Percentage of Plugs | Tubes Plugged | Percentage of Plugs | Tubes Plugged | Percentage of Plugs | Tubes Plugged | Percentage of Plugs |
| Wear | AVB | 320 | 30.0% | 480 | 55.1% | 299 | 37.6% | 1099 | 40.2% |
| | Preheater TSP (D5) | 30 | 2.8% | 0 | 0.0% | 0 | 0.0% | 30 | 1.1% |
| | TSP | 3 | 0.3% | 11 | 1.3% | 18 | 2.3% | 32 | 1.2% |
| Loose Parts | Confirmed | 200 | 18.7% | 18 | 2.1% | 34 | 4.3% | 252 | 9.2% |
| | Not Confirmed, Periphery | 88 | 8.2% | 46 | 5.3% | 50 | 6.3% | 184 | 6.7% |
| | Not Confirmed, Not Periphery | 56 | 5.2% | 9 | 1.0% | 31 | 3.9% | 96 | 3.5% |
| Obstruction Restriction | From PSI - no progression | 1 | 0.1% | 2 | 0.2% | 4 | 0.5% | 7 | 0.3% |
| | Service Induced | 2 | 0.2% | 5 | 0.6% | 16 | 2.0% | 23 | 0.8% |
| Manufacturing Flaws | Preservice | 50 | 4.7% | 63 | 7.2% | 94 | 11.8% | 207 | 7.6% |
| | Other | 65 | 6.1% | 21 | 2.4% | 80 | 10.1% | 166 | 6.1% |
| Inspection Issues | Probe Lodged | 2 | 0.2% | 1 | 0.1% | 0 | 0.0% | 3 | 0.1% |
| | Data Quality | 19 | 1.8% | 1 | 0.1% | 6 | 0.8% | 26 | 1.0% |
| | Dent/Geometry | 5 | 0.5% | 39 | 4.5% | 2 | 0.3% | 46 | 1.7% |
| | Permeability | 7 | 0.7% | 2 | 0.2% | 16 | 2.0% | 25 | 0.9% |
| | Not Inspected | 3 | 0.3% | 0 | 0.0% | 0 | 0.0% | 3 | 0.1% |
| Other | Top of Tubesheet | 18 | 1.7% | 29 | 3.3% | 102 | 12.8% | 149 | 5.4% |
| | Freespan | 79 | 7.4% | 17 | 2.0% | 13 | 1.6% | 109 | 4.0% |
| | TSP | 42 | 3.9% | 20 | 2.3% | 7 | 0.9% | 69 | 2.5% |
| | Other/Not Reported | 11 | 1.0% | 0 | 0.0% | 1 | 0.1% | 12 | 0.4% |
| SCC | ID | 51 | 4.8% | 35 | 4.0% | 21 | 2.6% | 107 | 3.9% |
| | OD | 16 | 1.5% | 72 | 8.3% | 1 | 0.1% | 89 | 3.3% |
| | **TOTALS** | 1068 | 100.0% | 871 | 100.0% | 795 | 100.0% | 2734 | 100.0% |

| | | | | |
|---|---|---|---|---|
| Total Tubes: | 73120 | 117376 | 90766 | 281262 |
| Percentage Plugged: | 1.46% | 0.74% | 0.88% | 0.97% |
| Average Age (years): | 24.9 | 26.1 | 27.1 | 26.3 |

Age does not include Callaway

## Table 4-32: All Models: Number of Tubes Plugged as a Function of Mechanism (Summary) (12/2013)

| Cause of Tube Plugging | | Model D5 | | Model F | | Replacement Models | | All Models | |
|---|---|---|---|---|---|---|---|---|---|
| | | Tubes Plugged | Percentage of Plugs | Tubes Plugged | Percentage of Plugs | Tubes Plugged | Percentage of Plugs | Tubes Plugged | Percentage of Plugs |
| **Wear** | AVB | 353 | 33.1% | 491 | 56.4% | 317 | 39.9% | 1161 | 42.5% |
| | Preheater TSP (D5) | | | | | | | | |
| | TSP | | | | | | | | |
| **Loose Parts** | Confirmed | 344 | 32.2% | 73 | 8.4% | 115 | 14.5% | 532 | 19.5% |
| | Not Confirmed, Periphery | | | | | | | | |
| | Not Confirmed, Not Periphery | | | | | | | | |
| **Obstruction Restriction** | From PSI - no progression | 3 | 0.3% | 7 | 0.8% | 20 | 2.5% | 30 | 1.1% |
| | Service Induced | | | | | | | | |
| **Manufacturing Flaws** | Preservice | 115 | 10.8% | 84 | 9.6% | 174 | 21.9% | 373 | 13.6% |
| | Other | | | | | | | | |
| **Inspection Issues** | Probe Lodged | 36 | 3.4% | 43 | 4.9% | 24 | 3.0% | 103 | 3.8% |
| | Data Quality | | | | | | | | |
| | Dent/Geometry | | | | | | | | |
| | Permeability | | | | | | | | |
| | Not Inspected | | | | | | | | |
| **Other** | Top of Tubesheet | 150 | 14.0% | 66 | 7.6% | 123 | 15.5% | 339 | 12.4% |
| | Freespan | | | | | | | | |
| | TSP | | | | | | | | |
| | Other/Not Reported | | | | | | | | |
| **SCC** | ID | 67 | 6.3% | 107 | 12.3% | 22 | 2.8% | 196 | 7.2% |
| | OD | | | | | | | | |
| | TOTALS | 1068 | 100.0% | 871 | 100.0% | 795 | 100.0% | 2734 | 100.0% |

| | | | | |
|---|---|---|---|---|
| Total Tubes: | 73120 | 117376 | 90766 | 281262 |
| Percentage Plugged: | 1.46% | 0.74% | 0.88% | 0.97% |
| Average Age (years): | 24.9 | 26.1 | 27.1 | 26.3 |

Age does not include Callaway

## Table 4-33: All Models: Plugging per Year

| Year | Model D5 | Model F | Replacement Models | All Models | Tubes in TT SGs |
|---|---|---|---|---|---|
| Pre-Op | 51 | 63 | 93 | 207 | 281262 |
| 1980 | | | 0 | 0 | 10026 |
| 1981 | | | 0 | 0 | 20052 |
| 1982 | | | 0 | 0 | 29694 |
| 1983 | | | 0 | 0 | 39336 |
| 1984 | | | 4 | 4 | 60262 |
| 1985 | | | 4 | 4 | 82766 |
| 1986 | 0 | 0 | 5 | 5 | 123550 |
| 1987 | 0 | 3 | 1 | 4 | 164334 |
| 1988 | 7 | 23 | 4 | 34 | 182614 |
| 1989 | 19 | 5 | 0 | 24 | 205118 |
| 1990 | 42 | 6 | 14 | 62 | 227622 |
| 1991 | 22 | 15 | 3 | 40 | 227622 |
| 1992 | 29 | 1 | 10 | 40 | 227622 |
| 1993 | 95 | 16 | 3 | 114 | 245902 |
| 1994 | 37 | 40 | 10 | 87 | 245902 |
| 1995 | 52 | 30 | 9 | 91 | 245902 |
| 1996 | 65 | 33 | 9 | 107 | 245902 |
| 1997 | 46 | 47 | 24 | 117 | 268406 |
| 1998 | 47 | 0 | 7 | 54 | 268406 |
| 1999 | 25 | 50 | 19 | 94 | 268406 |
| 2000 | 22 | 50 | 94 | 166 | 281262 |
| 2001 | 4 | 52 | 59 | 115 | 281262 |
| 2002 | 30 | 61 | 58 | 149 | 281262 |
| 2003 | 95 | 38 | 21 | 154 | 281262 |
| 2004 | 140 | 23 | 44 | 207 | 281262 |
| 2005 | 36 | 12 | 8 | 56 | 276406 |
| 2006 | 28 | 63 | 33 | 124 | 276406 |
| 2007 | 25 | 4 | 104 | 133 | 276406 |
| 2008 | 49 | 103 | 10 | 162 | 276406 |
| 2009 | 16 | 55 | 56 | 127 | 276406 |
| 2010 | 2 | 9 | 69 | 80 | 276406 |
| 2011 | 61 | 29 | 2 | 92 | 276406 |
| 2012 | 16 | 12 | 0 | 28 | 276406 |
| 2013 | 7 | 28 | 18 | 53 | 276406 |
| **Totals:** | 1068 | 871 | 795 | 2734 | |

# Table 4-33b: Plugging per Year

| Year | Model D5 | Tubes in TT SGs | Model F | Tubes in TT SGs | Replacement Models | Tubes in TT SGs | All Models | Tubes in TT SGs | Model D5 | Model F | Replacement Models | All Models |
|---|---|---|---|---|---|---|---|---|---|---|---|---|
| Pre-Op | 51 | 73120 | 63 | 117376 | 93 | 90766 | 207 | 281262 | 0.07% | 0.05% | 0.10% | 0.07% |
| 1980 | | | | | 0 | 10026 | 0 | 10026 | 0.00% | 0.00% | 0.00% | 0.00% |
| 1981 | | | | | 0 | 20052 | 0 | 20052 | 0.00% | 0.00% | 0.00% | 0.00% |
| 1982 | | | | | 0 | 29694 | 0 | 29694 | 0.00% | 0.00% | 0.00% | 0.00% |
| 1983 | | | | | 0 | 39336 | 0 | 39336 | 0.00% | 0.00% | 0.00% | 0.00% |
| 1984 | | | | 4856 | 4 | 55406 | 4 | 60262 | 0.00% | 0.00% | 0.01% | 0.01% |
| 1985 | | | | 27360 | 4 | 55406 | 4 | 82766 | 0.00% | 0.00% | 0.01% | 0.00% |
| 1986 | 0 | 18280 | 0 | 49864 | 5 | 55406 | 5 | 123550 | 0.00% | 0.00% | 0.01% | 0.00% |
| 1987 | 0 | 36560 | 3 | 72368 | 1 | 55406 | 4 | 164334 | 0.00% | 0.00% | 0.00% | 0.00% |
| 1988 | 7 | 54840 | 23 | 72368 | 4 | 55406 | 34 | 182614 | 0.01% | 0.03% | 0.01% | 0.02% |
| 1989 | 19 | 54840 | 5 | 94872 | 0 | 55406 | 24 | 205118 | 0.03% | 0.01% | 0.00% | 0.01% |
| 1990 | 42 | 54840 | 6 | 117376 | 14 | 55406 | 62 | 227622 | 0.08% | 0.01% | 0.03% | 0.03% |
| 1991 | 22 | 54840 | 15 | 117376 | 3 | 55406 | 40 | 227622 | 0.04% | 0.01% | 0.01% | 0.02% |
| 1992 | 29 | 54840 | 1 | 117376 | 10 | 55406 | 40 | 227622 | 0.05% | 0.00% | 0.02% | 0.02% |
| 1993 | 95 | 73120 | 16 | 117376 | 3 | 55406 | 114 | 245902 | 0.13% | 0.01% | 0.01% | 0.05% |
| 1994 | 37 | 73120 | 40 | 117376 | 10 | 55406 | 87 | 245902 | 0.05% | 0.03% | 0.02% | 0.04% |
| 1995 | 52 | 73120 | 30 | 117376 | 9 | 55406 | 91 | 245902 | 0.07% | 0.03% | 0.02% | 0.04% |
| 1996 | 65 | 73120 | 33 | 117376 | 9 | 55406 | 107 | 245902 | 0.09% | 0.03% | 0.02% | 0.04% |
| 1997 | 46 | 73120 | 47 | 117376 | 24 | 77910 | 117 | 268406 | 0.06% | 0.04% | 0.03% | 0.04% |
| 1998 | 47 | 73120 | 0 | 117376 | 7 | 77910 | 54 | 268406 | 0.06% | 0.00% | 0.01% | 0.02% |
| 1999 | 25 | 73120 | 50 | 117376 | 19 | 77910 | 94 | 268406 | 0.03% | 0.04% | 0.02% | 0.04% |
| 2000 | 22 | 73120 | 50 | 117376 | 94 | 90766 | 166 | 281262 | 0.03% | 0.04% | 0.10% | 0.06% |
| 2001 | 4 | 73120 | 52 | 117376 | 59 | 90766 | 115 | 281262 | 0.01% | 0.04% | 0.07% | 0.04% |
| 2002 | 30 | 73120 | 61 | 117376 | 58 | 90766 | 149 | 281262 | 0.04% | 0.05% | 0.06% | 0.05% |
| 2003 | 95 | 73120 | 38 | 117376 | 21 | 90766 | 154 | 281262 | 0.13% | 0.03% | 0.02% | 0.05% |
| 2004 | 140 | 73120 | 23 | 117376 | 44 | 90766 | 207 | 281262 | 0.19% | 0.02% | 0.05% | 0.07% |
| 2005 | 36 | 73120 | 12 | 112520 | 8 | 90766 | 56 | 276406 | 0.05% | 0.01% | 0.01% | 0.02% |
| 2006 | 28 | 73120 | 63 | 112520 | 33 | 90766 | 124 | 276406 | 0.04% | 0.06% | 0.04% | 0.04% |
| 2007 | 25 | 73120 | 4 | 112520 | 104 | 90766 | 133 | 276406 | 0.03% | 0.00% | 0.11% | 0.05% |
| 2008 | 49 | 73120 | 103 | 112520 | 10 | 90766 | 162 | 276406 | 0.07% | 0.09% | 0.01% | 0.06% |
| 2009 | 16 | 73120 | 55 | 112520 | 56 | 90766 | 127 | 276406 | 0.02% | 0.05% | 0.06% | 0.05% |
| 2010 | 2 | 73120 | 9 | 112520 | 69 | 90766 | 80 | 276406 | 0.00% | 0.01% | 0.08% | 0.03% |
| 2011 | 61 | 73120 | 29 | 112520 | 2 | 90766 | 92 | 276406 | 0.08% | 0.03% | 0.00% | 0.03% |
| 2012 | 16 | 73120 | 12 | 112520 | 0 | 90766 | 28 | 276406 | 0.02% | 0.01% | 0.00% | 0.01% |
| 2013 | 7 | 73120 | 28 | 112520 | 18 | 90766 | 53 | 276406 | 0.01% | 0.02% | 0.02% | 0.02% |
| **Totals:** | 1068 | | 871 | | 795 | | 2734 | | | | | |

Note: Table 4-33b tracks the number and percentage of tubes removed from service each year, after steam generator operation commenced. The percent plugging per year does not include tubes removed from service prior to operation.

# Table 4-34: All Models: Number of Tubes Plugged as a Function of Mechanism per Year (Detailed)

| Cause of Tube Plugging/Outage | Year | 1980 | 1981 | 1982 | 1983 | 1984 | 1985 | 1986 | 1987 | 1988 | 1989 | 1990 | 1991 | 1992 | 1993 | 1994 | 1995 | 1996 | 1997 | 1998 | 1999 | 2000 | 2001 | 2002 | 2003 | 2004 | 2005 | 2006 | 2007 | 2008 | 2009 | 2010 | 2011 | 2012 | 2013 | Totals | Totals |
|---|---|---|---|---|---|---|---|---|---|---|---|---|---|---|---|---|---|---|---|---|---|---|---|---|---|---|---|---|---|---|---|---|---|---|---|---|---|
| Wear | AVB | | | | | | | | 2 | 19 | 5 | 48 | 29 | 29 | 69 | 52 | 51 | 79 | 62 | 3 | 72 | 79 | 47 | 79 | 45 | 31 | 16 | 42 | 100 | 31 | 31 | 21 | 28 | 11 | 18 | 1099 | 1161 |
| | Preheater TSP (D5) | | | | | | | | | | | | | | | | | | | 1 | 1 | | | 2 | 6 | | 6 | 2 | | 3 | | | 9 | | | 30 | |
| | TSP | | | | | | | | | | | | 1 | | | | | | | 2 | | 1 | 12 | 2 | 2 | | | | | | | 3 | | | 9 | 32 | |
| Loose Parts | Confirmed | | | | | | | 1 | | 2 | 4 | | 4 | | | 2 | 1 | 6 | 8 | 3 | | | 1 | 17 | 45 | 116 | 3 | 15 | 2 | 5 | | 13 | 1 | | 3 | 252 | 532 |
| | Not Confirmed, Periphery | | | | | | | | | 1 | 1 | 2 | | | 1 | | 9 | 1 | 2 | 4 | 6 | 1 | 11 | 16 | 8 | 12 | 14 | 26 | 19 | 5 | 12 | 5 | 16 | 6 | 6 | 184 | |
| | Not Confirmed, Not Periphery | | | | | | | | | | | | | | | | | | 2 | | 1 | 4 | 2 | 7 | | 10 | 3 | 5 | | 4 | 14 | 9 | 26 | 5 | 4 | 96 | |
| Obstruction Restriction | From PSI - no progression | | | | | | | | | | | | | 1 | 1 | | | | | | | | 1 | | 1 | | 1 | | | | | | | | 2 | 7 | 30 |
| | Service Induced | | | | | | | 1 | | 1 | | | 1 | | | | 1 | 2 | 8 | 3 | 2 | | 1 | 1 | 1 | | | | | | 1 | | | | | 23 | |
| Manufacturing Flaws | Preservice | 2 | 2 | 39 | 31 | 8 | 15 | 24 | 17 | 6 | 15 | 13 | -1 | | 20 | | | | 13 | | | 2 | | | 1 | | | | | | | | | | | 207 | 373 |
| | Other | | | | | | | 1 | | 2 | | 2 | | | | | | | 15 | 29 | 2 | | 3 | 7 | 15 | 4 | 7 | 5 | 2 | 3 | 24 | 26 | 8 | 2 | 9 | 166 | |
| Inspection Issues | Probe Lodged | | | | | | | | | | | | | | | | | | | | | 2 | | | | | | | | | | | | 1 | | 3 | 103 |
| | Data Quality | | | | | | | | | | 1 | | | | | | | | 1 | | | | 4 | | 17 | 1 | | | | | | 2 | | | | 26 | |
| | Dent/Geometry | | | | | | | | | | 1 | | | | | | | 1 | | 2 | | | | 2 | 3 | | | 3 | | 34 | | | | | | 46 | |
| | Permeability | | | | | | | | | | | | | | | | | | 3 | 1 | | 2 | 1 | | 3 | 5 | | 7 | 2 | | 1 | | | | | 25 | |
| | Not Inspected | | | | | | | | | | | | | | | | | | 1 | | | 2 | | | | | | | | | | | | | | 3 | |
| Other | Top of Tubesheet | | | | | 1 | 3 | | 1 | | 2 | 2 | | | 3 | 4 | 7 | 7 | 11 | 2 | 9 | 73 | 14 | 1 | | 9 | | | | | | | | | | 149 | 339 |
| | Freespan | | | | | | | 1 | | 7 | 5 | 1 | 1 | 9 | 30 | 21 | 12 | 7 | 4 | | | 1 | 5 | | 1 | | 4 | | | | | | | | | 109 | |
| | TSP | | | | | 3 | 1 | 1 | 1 | 2 | 4 | 5 | 5 | 1 | 8 | 8 | 5 | 4 | | 4 | 1 | 1 | 13 | | | 2 | | | | | | | | | | 89 | |
| | Not Reported | | | | | | | | | | 1 | 2 | | | 2 | | 5 | | | | | | | | | 1 | | 1 | | | | | | | | 12 | |
| SCC | ID | | | | | | | | | | | | | | | | | | | | | | | | | 16 | 2 | | | 66 | 20 | | 2 | | 1 | 107 | 196 |
| | OD | | | | | | | | | | | | | | | | | | | | | | | 15 | 6 | | | 18 | 8 | 11 | 24 | 1 | 2 | 3 | 1 | 89 | |
| | TOTALS | 2 | 2 | 39 | 31 | 12 | 19 | 29 | 21 | 40 | 39 | 75 | 40 | 40 | 134 | 87 | 91 | 107 | 130 | 54 | 94 | 168 | 115 | 146 | 154 | 207 | 56 | 124 | 133 | 162 | 127 | 80 | 92 | 28 | 53 | 2734 | 2734 |

# Table 4-35: All Models: Number of Tubes Plugged as a Function of Mechanism per Year (Summary)

| Year | 1980 | 1981 | 1982 | 1983 | 1984 | 1985 | 1986 | 1987 | 1988 | 1989 | 1990 | 1991 | 1992 | 1993 | 1994 | 1995 | 1996 | 1997 | 1998 | 1999 | 2000 | 2001 | 2002 | 2003 | 2004 | 2005 | 2006 | 2007 | 2008 | 2009 | 2010 | 2011 | 2012 | 2013 | Totals |
|---|---|---|---|---|---|---|---|---|---|---|---|---|---|---|---|---|---|---|---|---|---|---|---|---|---|---|---|---|---|---|---|---|---|---|---|
| Cause | | | | | | | | | | | | | | | | | | | | | | | | | | | | | | | | | | | |
| Wear | | | | | | | | 2 | 19 | 5 | 48 | 30 | 29 | 69 | 52 | 51 | 79 | 62 | 6 | 73 | 80 | 59 | 83 | 53 | 31 | 22 | 44 | 100 | 34 | 31 | 24 | 37 | 11 | 27 | 1161 |
| Loose Parts | | | | | | | 1 | | 3 | 5 | 2 | 4 | | 1 | 2 | 10 | 7 | 12 | 7 | 7 | 5 | 14 | 40 | 53 | 138 | 20 | 46 | 21 | 14 | 26 | 27 | 43 | 11 | 13 | 532 |
| Restrictions | | | | | | | 1 | | 1 | | | 1 | 1 | 1 | | 1 | 2 | 8 | 3 | 2 | | 2 | 1 | 2 | | 1 | | | | 1 | | | | 2 | 30 |
| Manufacturing | 2 | 2 | 39 | 31 | 8 | 15 | 25 | 17 | 8 | 15 | 15 | -1 | | 20 | | | | 28 | 29 | 2 | 2 | 3 | 7 | 16 | 4 | 7 | 5 | 2 | 3 | 24 | 26 | 8 | 2 | 9 | 373 |
| Inspection Issues | | | | | | | | | | 2 | | | | | | | 1 | 5 | 3 | | 6 | 5 | 2 | 23 | 6 | | 10 | 2 | 34 | 1 | 2 | | 1 | | 103 |
| Other | | | | | 4 | 4 | 2 | 2 | 9 | 12 | 10 | 6 | 10 | 43 | 33 | 29 | 18 | 15 | 6 | 10 | 75 | 32 | 1 | 1 | 12 | 4 | 1 | | | | | | | | 339 |
| SCC | | | | | | | | | | | | | | | | | | | | | | | 15 | 6 | 16 | 2 | 18 | 8 | 77 | 44 | 1 | 4 | 3 | 2 | 196 |
| | 2 | 2 | 39 | 31 | 12 | 19 | 29 | 21 | 40 | 39 | 75 | 40 | 40 | 134 | 87 | 91 | 107 | 130 | 54 | 94 | 168 | 115 | 149 | 154 | 207 | 56 | 124 | 133 | 162 | 127 | 80 | 92 | 28 | 53 | 2734 |

# Table 4-36: All Models: Percentage of Tubes Plugged as a Function of Mechanism per Year (Summary)

| Year | 1980 | 1981 | 1982 | 1983 | 1984 | 1985 | 1986 | 1987 | 1988 | 1989 | 1990 | 1991 | 1992 | 1993 | 1994 | 1995 | 1996 | 1997 | 1998 | 1999 | 2000 | 2001 | 2002 | 2003 | 2004 | 2005 | 2006 | 2007 | 2008 | 2009 | 2010 | 2011 | 2012 | 2013 | Totals |
|---|---|---|---|---|---|---|---|---|---|---|---|---|---|---|---|---|---|---|---|---|---|---|---|---|---|---|---|---|---|---|---|---|---|---|---|
| Cause | | | | | | | | | | | | | | | | | | | | | | | | | | | | | | | | | | | |
| Wear | | | | | | | | 9.5% | 47.5% | 12.8% | 64.0% | 75.0% | 72.5% | 51.5% | 59.8% | 56.0% | 73.8% | 47.7% | 11.1% | 77.7% | 47.6% | 51.3% | 55.7% | 34.4% | 15.0% | 39.3% | 35.5% | 75.2% | 21.0% | 24.4% | 30.0% | 40.2% | 39.3% | 50.9% | 42.5% |
| Loose Parts | | | | | | | 3.4% | | 7.5% | 12.8% | 2.7% | 10.0% | | 0.7% | 2.3% | 11.0% | 6.5% | 9.2% | 13.0% | 7.4% | 3.0% | 12.2% | 26.8% | 34.4% | 66.7% | 35.7% | 37.1% | 15.8% | 8.6% | 20.5% | 33.8% | 46.7% | 39.3% | 24.5% | 19.5% |
| Restrictions | | | | | | | 3.4% | | 2.5% | | | 2.5% | 2.5% | 0.7% | | 1.1% | 1.9% | 6.2% | 5.6% | 2.1% | | 1.7% | 0.7% | 1.3% | | 1.8% | | | | 0.8% | | | | 3.8% | 1.1% |
| Manufacturing | 100.0% | 100.0% | 100.0% | 100.0% | 66.7% | 78.9% | 86.2% | 81.0% | 20.0% | 38.5% | 20.0% | -2.5% | | 14.9% | | | | 21.5% | 53.7% | 2.1% | 1.2% | 2.6% | 4.7% | 10.4% | 1.9% | 12.5% | 4.0% | 1.5% | 1.9% | 18.9% | 32.5% | 8.7% | 7.1% | 17.0% | 13.6% |
| Inspection Issues | | | | | | | | | | 5.1% | | | | | | | 0.9% | 3.8% | 5.6% | | 3.6% | 4.3% | 1.3% | 14.9% | 2.9% | | 8.1% | 1.5% | 21.0% | 0.8% | 2.5% | | 3.6% | | 3.8% |
| Other | | | | | 33.3% | 21.1% | 6.9% | 9.5% | 22.5% | 30.8% | 13.3% | 15.0% | 25.0% | 32.1% | 37.9% | 31.9% | 16.8% | 11.5% | 11.1% | 10.6% | 44.6% | 27.8% | 0.7% | 0.6% | 5.8% | 7.1% | 0.8% | | | | | | | | 12.4% |
| SCC | | | | | | | | | | | | | | | | | | | | | | | 10.1% | 3.9% | 7.7% | 3.6% | 14.5% | 6.0% | 47.5% | 34.6% | 1.3% | 4.3% | 10.7% | 3.8% | 7.2% |
| | 100.0% | 100.0% | 100.0% | 100.0% | 100.0% | 100.0% | 100.0% | 100.0% | 100.0% | 100.0% | 100.0% | 100.0% | 100.0% | 100.0% | 100.0% | 100.0% | 100.0% | 100.0% | 100.0% | 100.0% | 100.0% | 100.0% | 100.0% | 100.0% | 100.0% | 100.0% | 100.0% | 100.0% | 100.0% | 100.0% | 100.0% | 100.0% | 100.0% | 100.0% | 100.0% |

**Figure 4-1: Model D5: Causes of Tube Plugging (12/2013)**

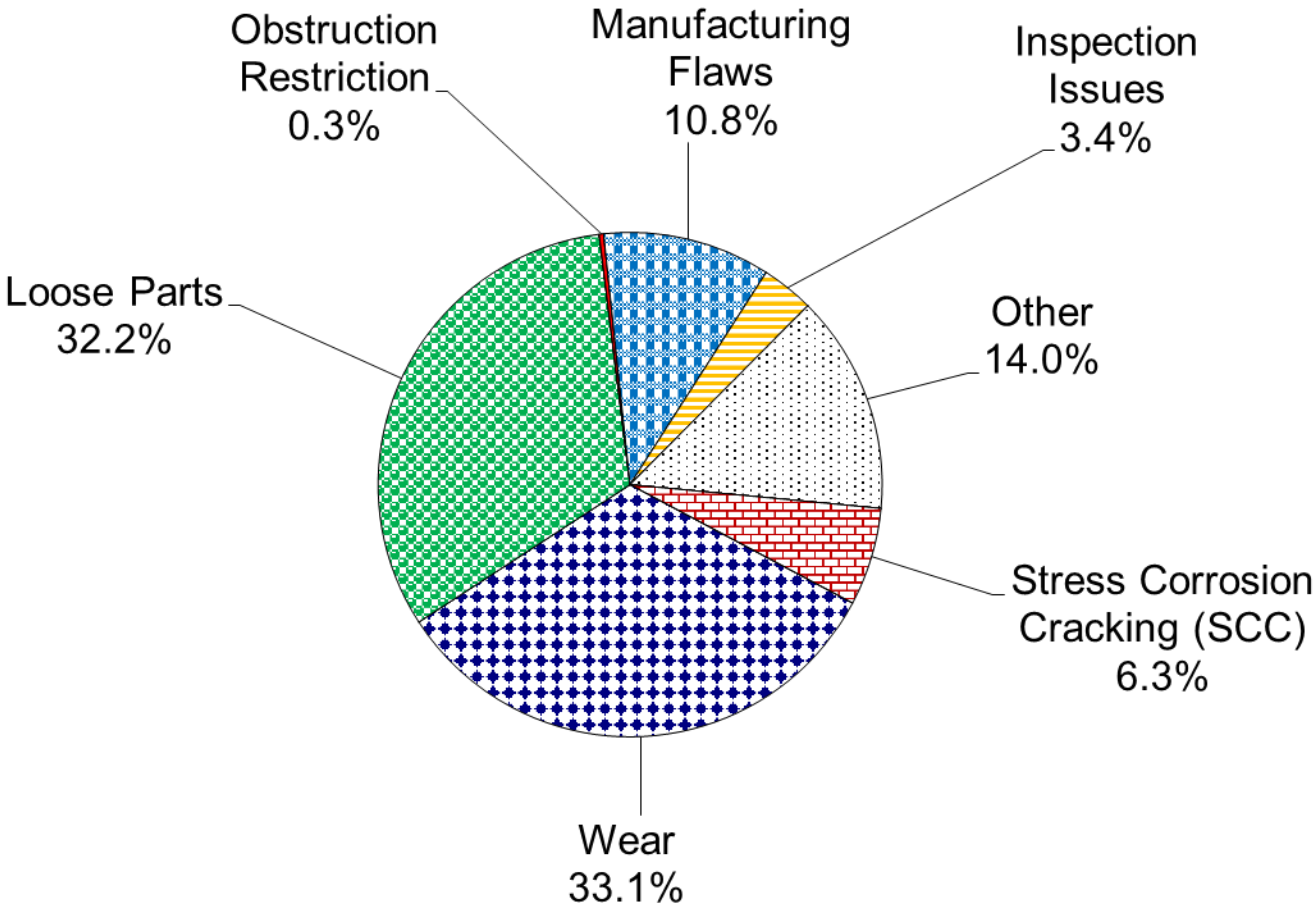

**Figure 4-2a: Model D5: Cumulative Plugging per Year (12/2013)**

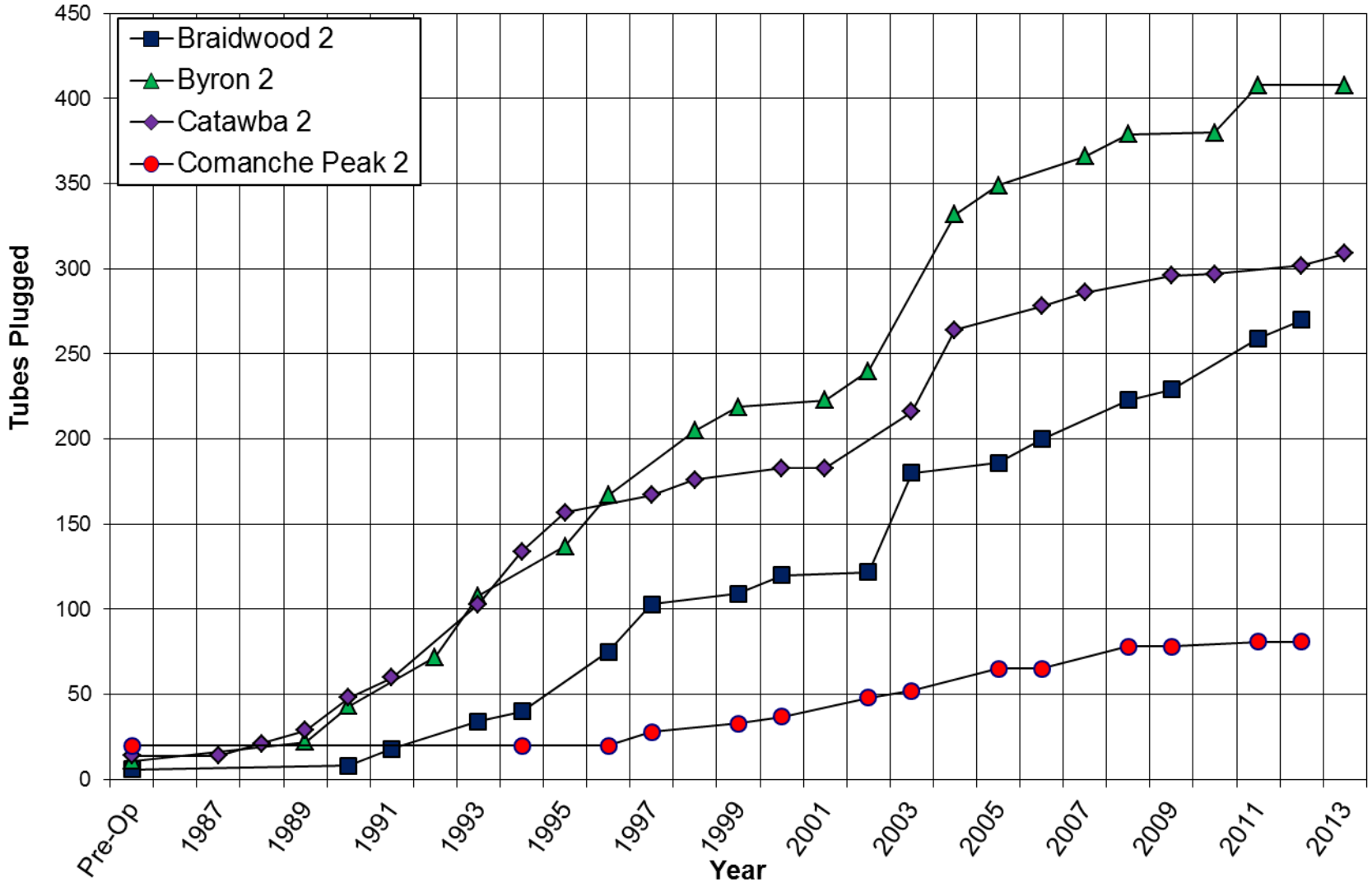

**Figure 4-2b: Model D5: Plugging per Year (12/2013)**

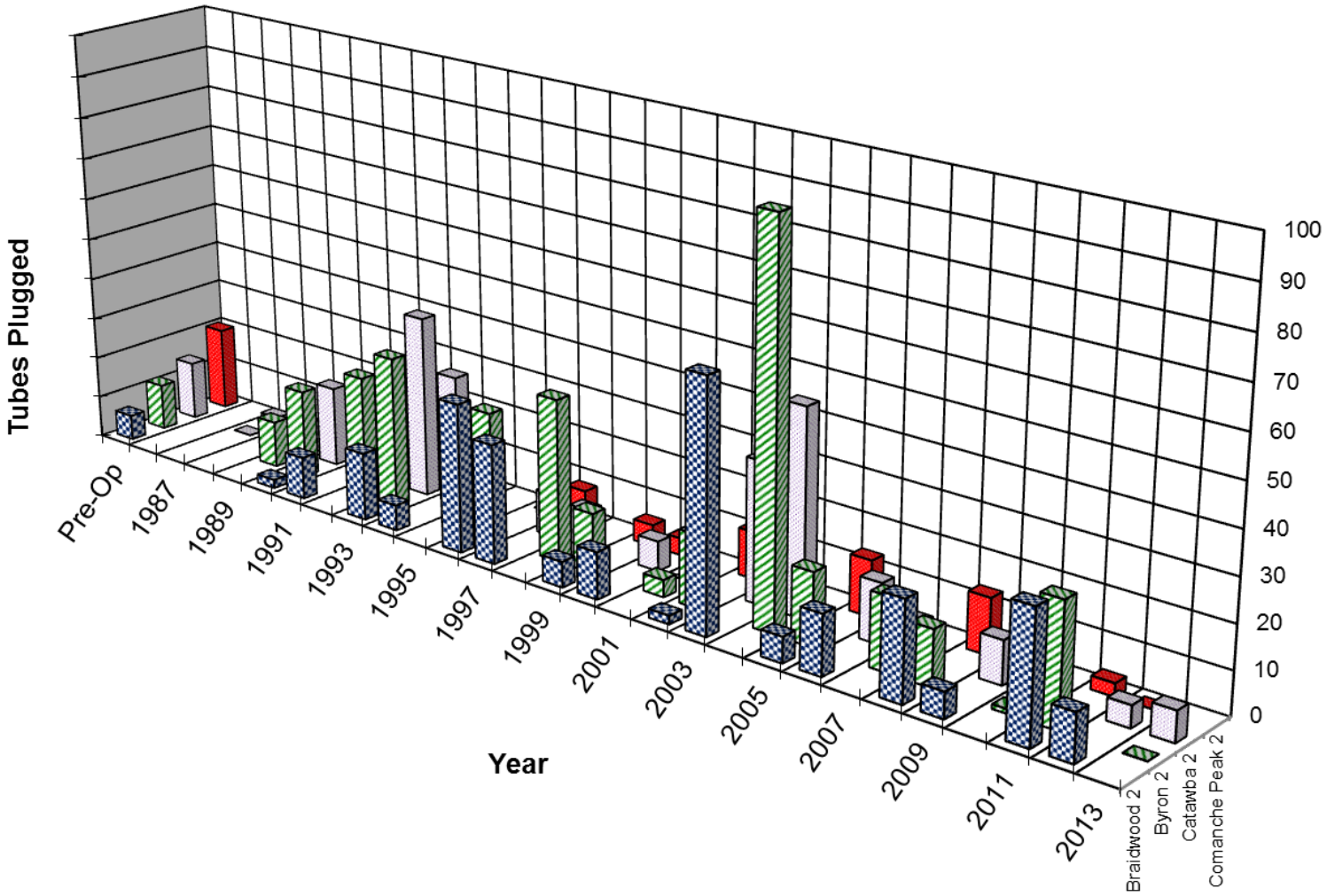

**Figure 4-3: Model D5: Cumulative Plugging per Refueling Outage (12/2013)**

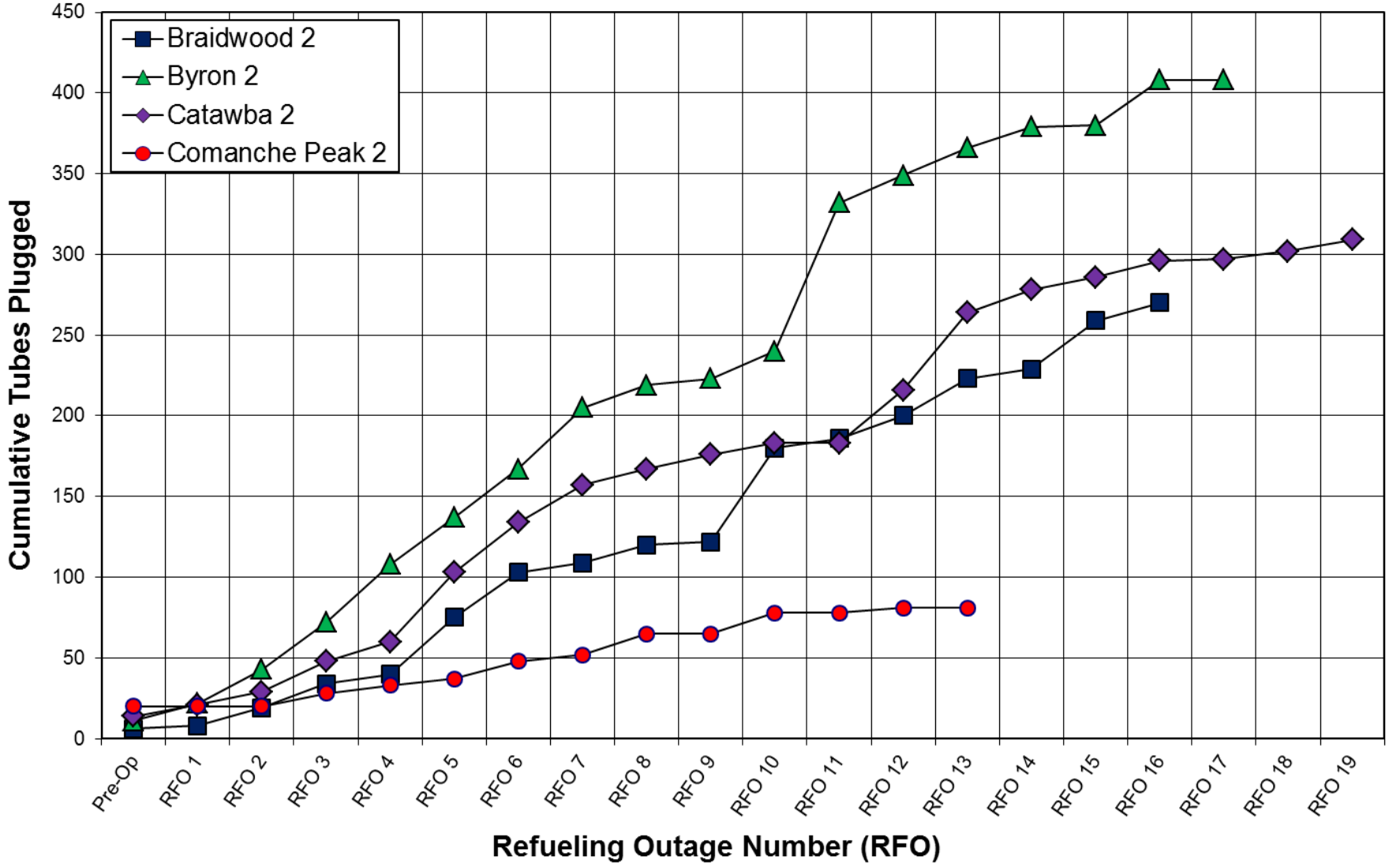

**Figure 4-4: Model D5: Causes of Tube Plugging per Year (12/2013)**

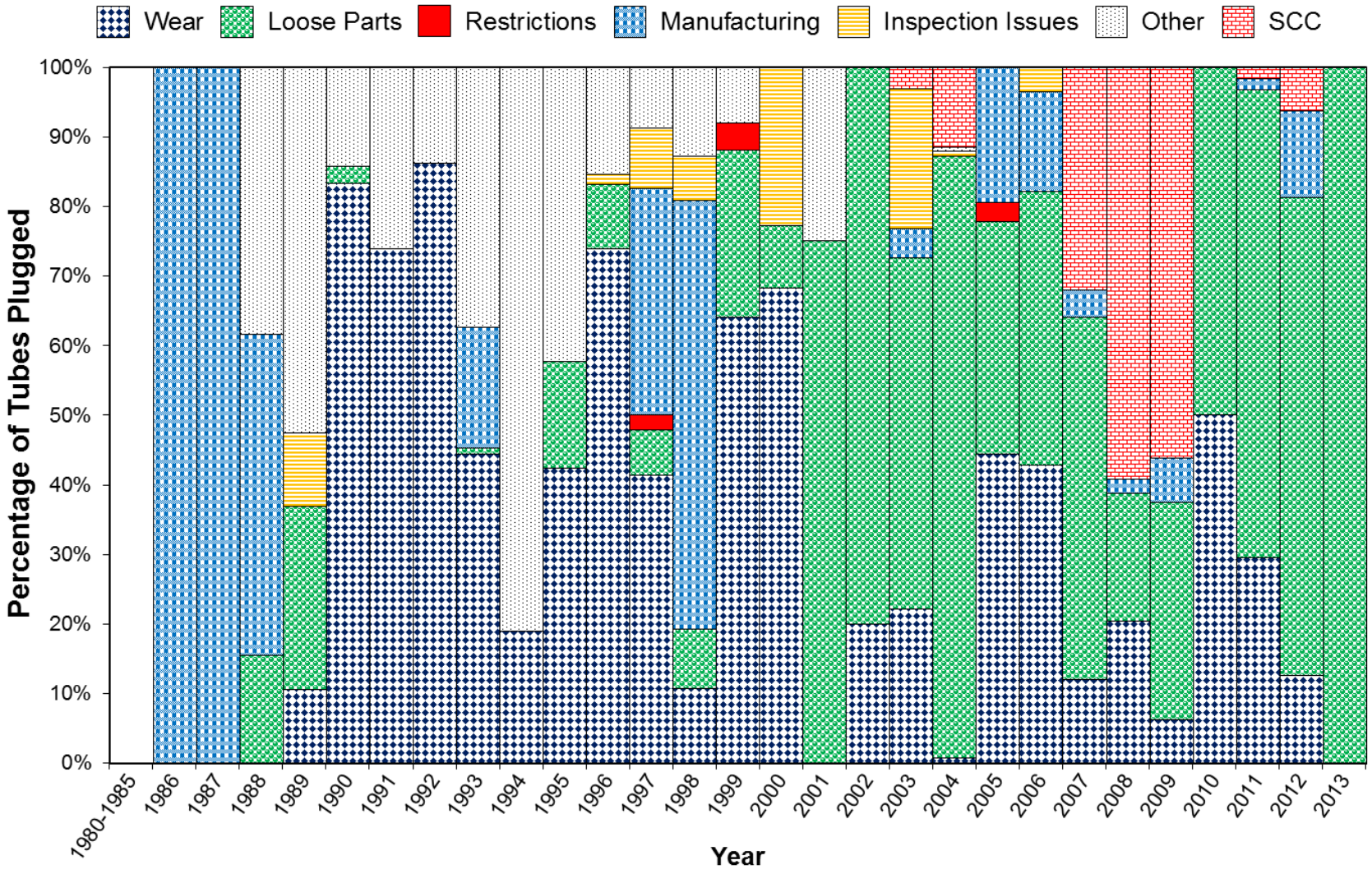

**Figure 4-5: Model F: Causes of Tube Plugging (12/2013)**

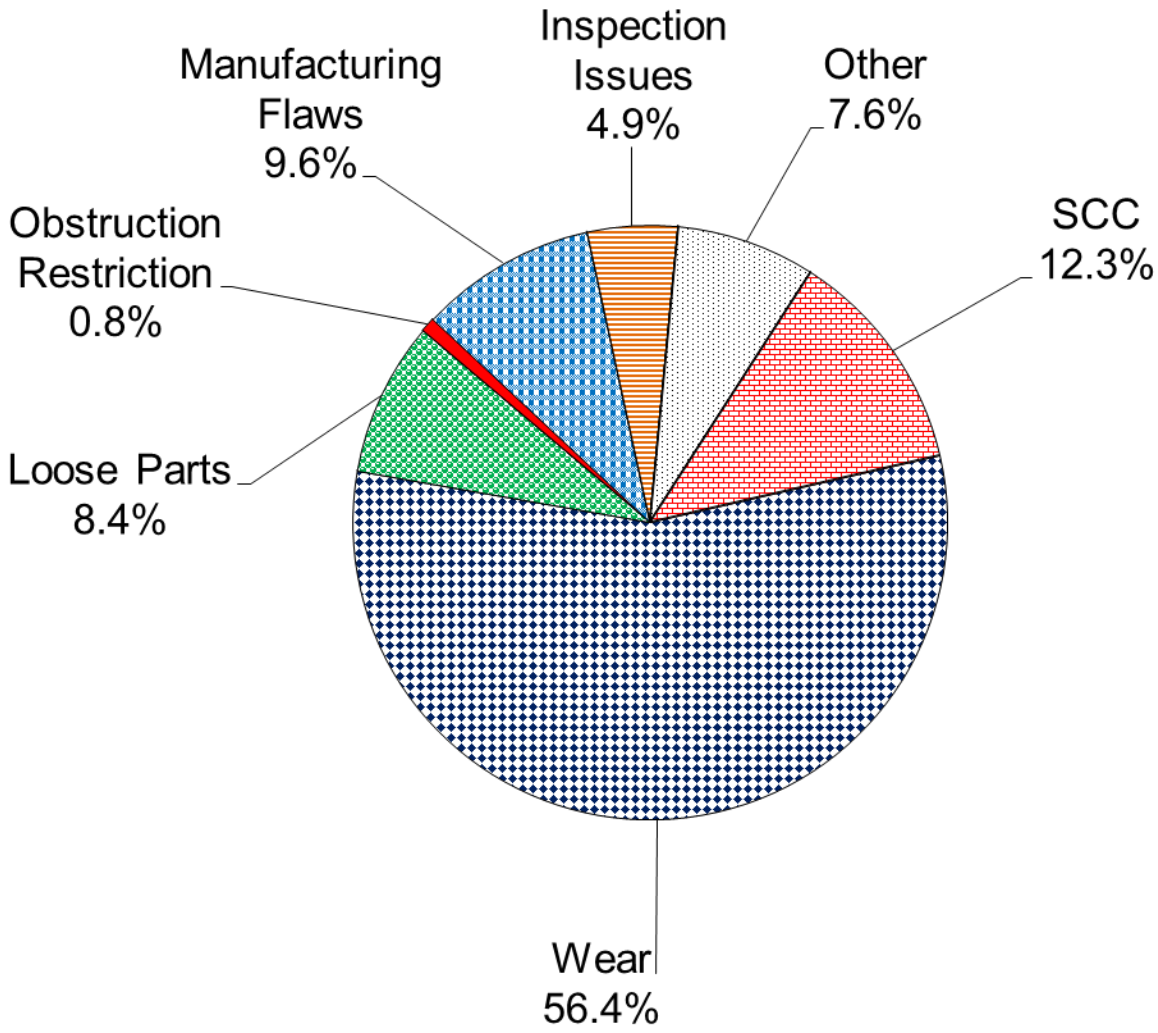

**Figure 4-6a: Model F: Cumulative Plugging per Year (12/2013)**

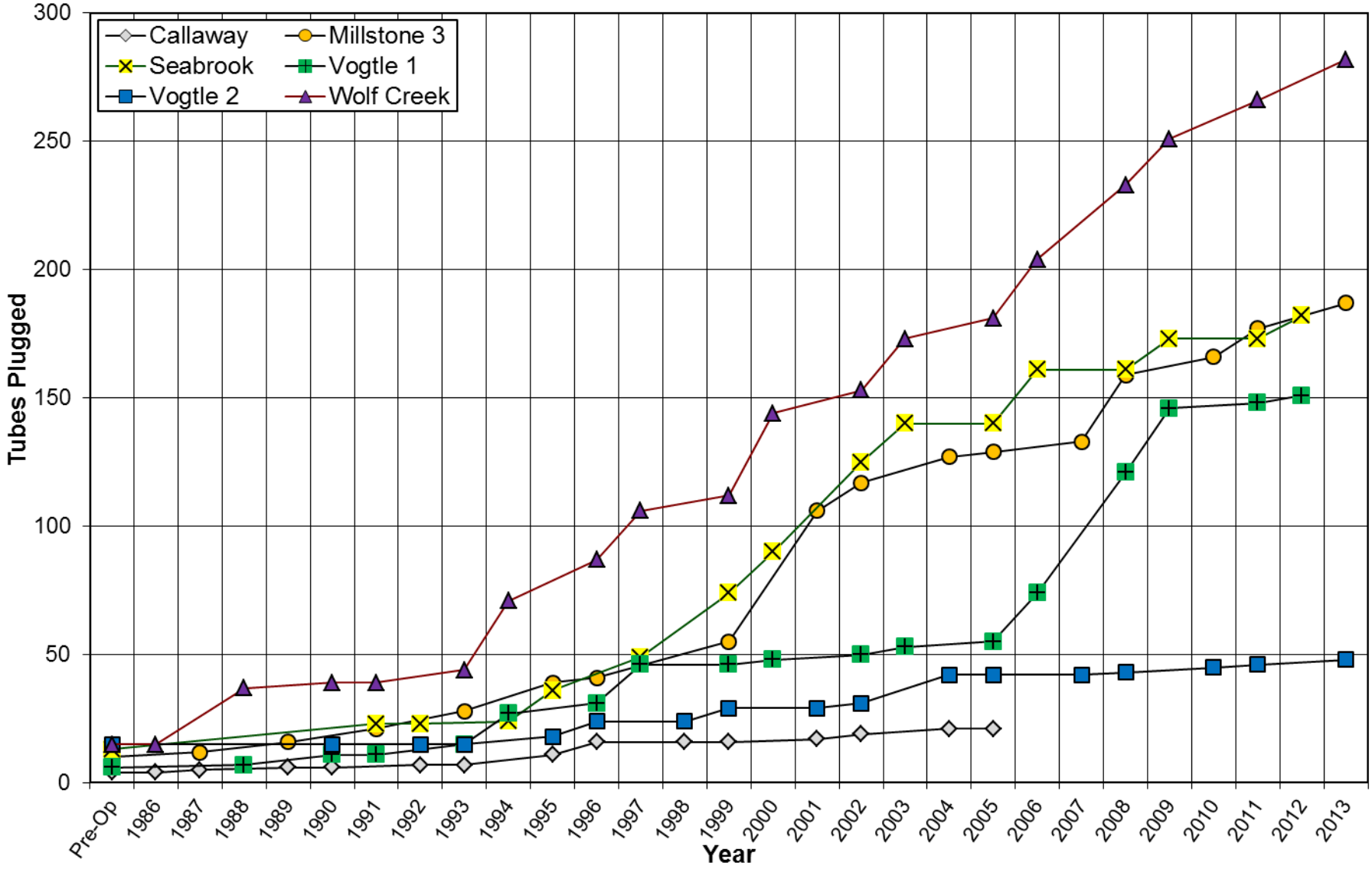

**Figure 4-6b: Model F: Plugging per Year (12/2013)**

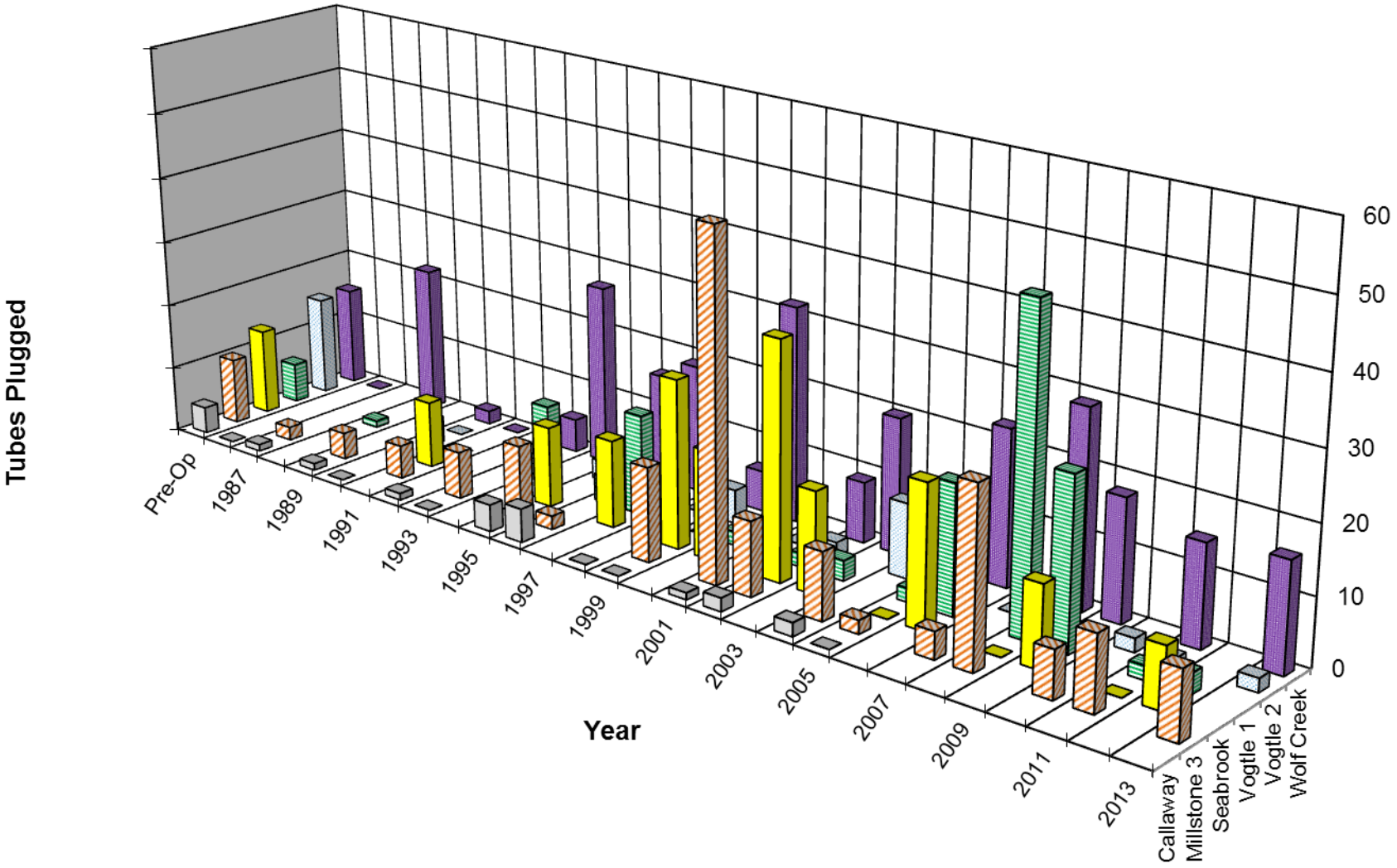

**Figure 4-7: Model F: Cumulative Plugging per Refueling Outage (12/2013)**

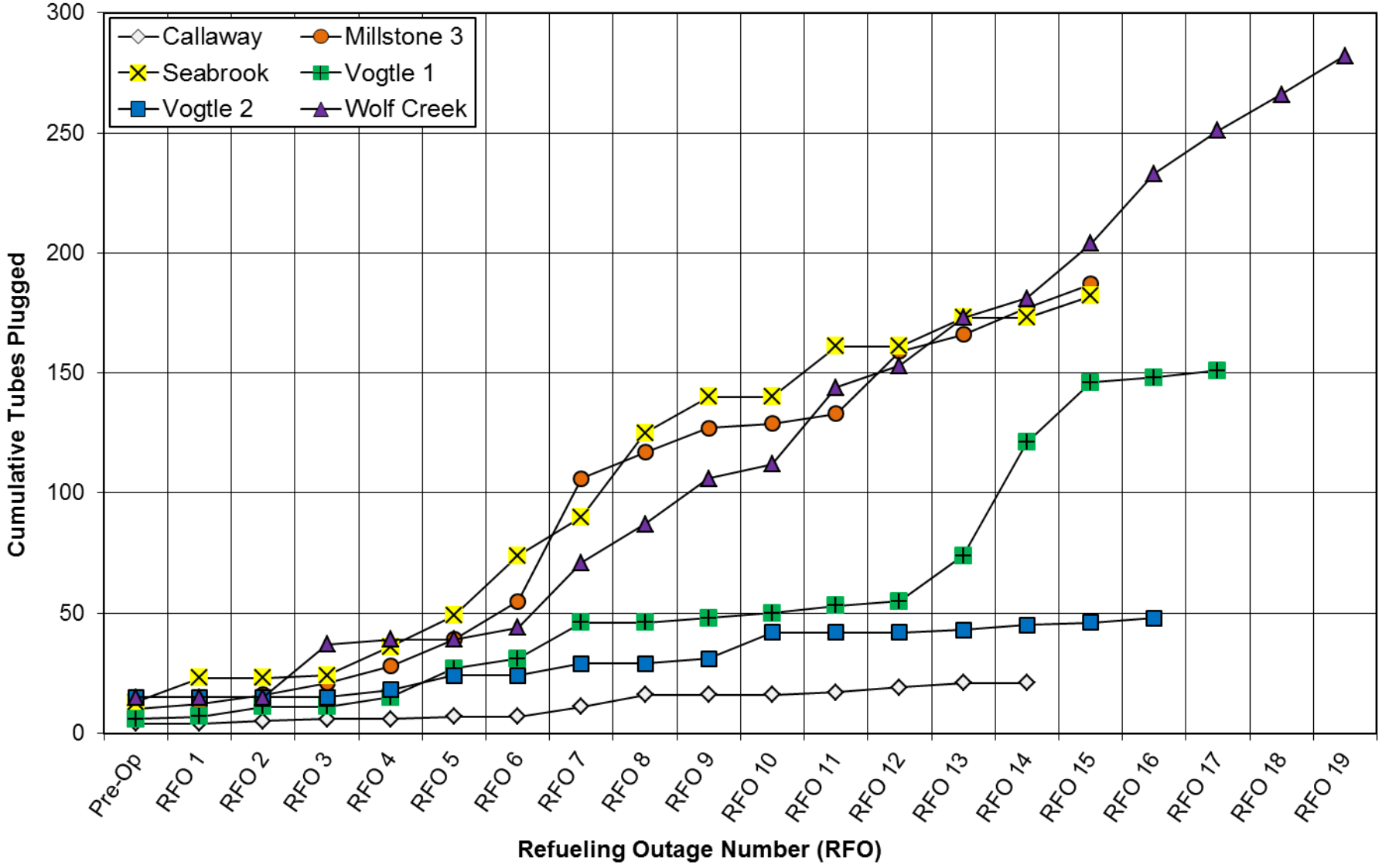

**Figure 4-8: Model F: Causes of Tube Plugging per Year (12/2013)**

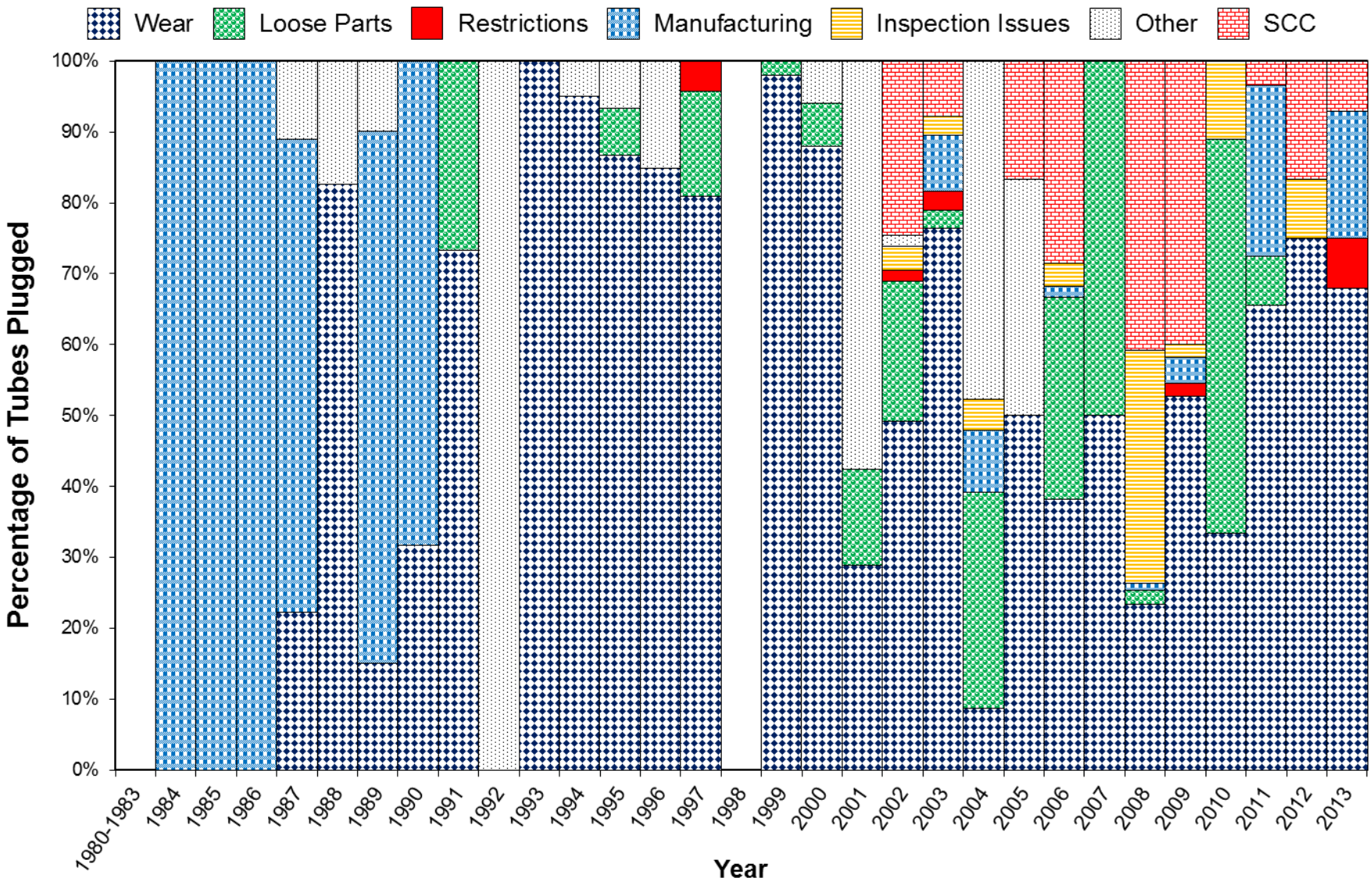

**Figure 4-9: Replacement Models: Causes of Tube Plugging (12/2013)**

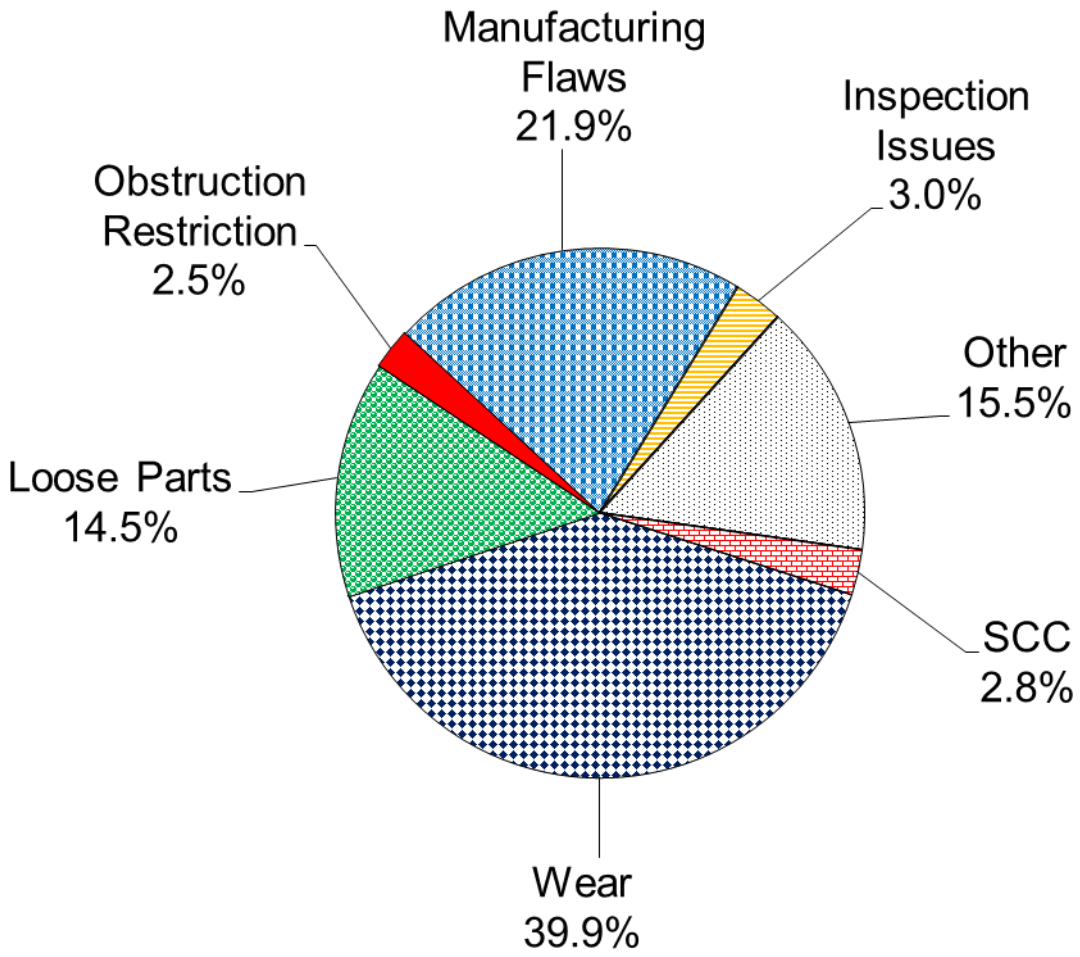

**Figure 4-10a: Replacement Models: Cumulative Plugging per Year (12/2013)**

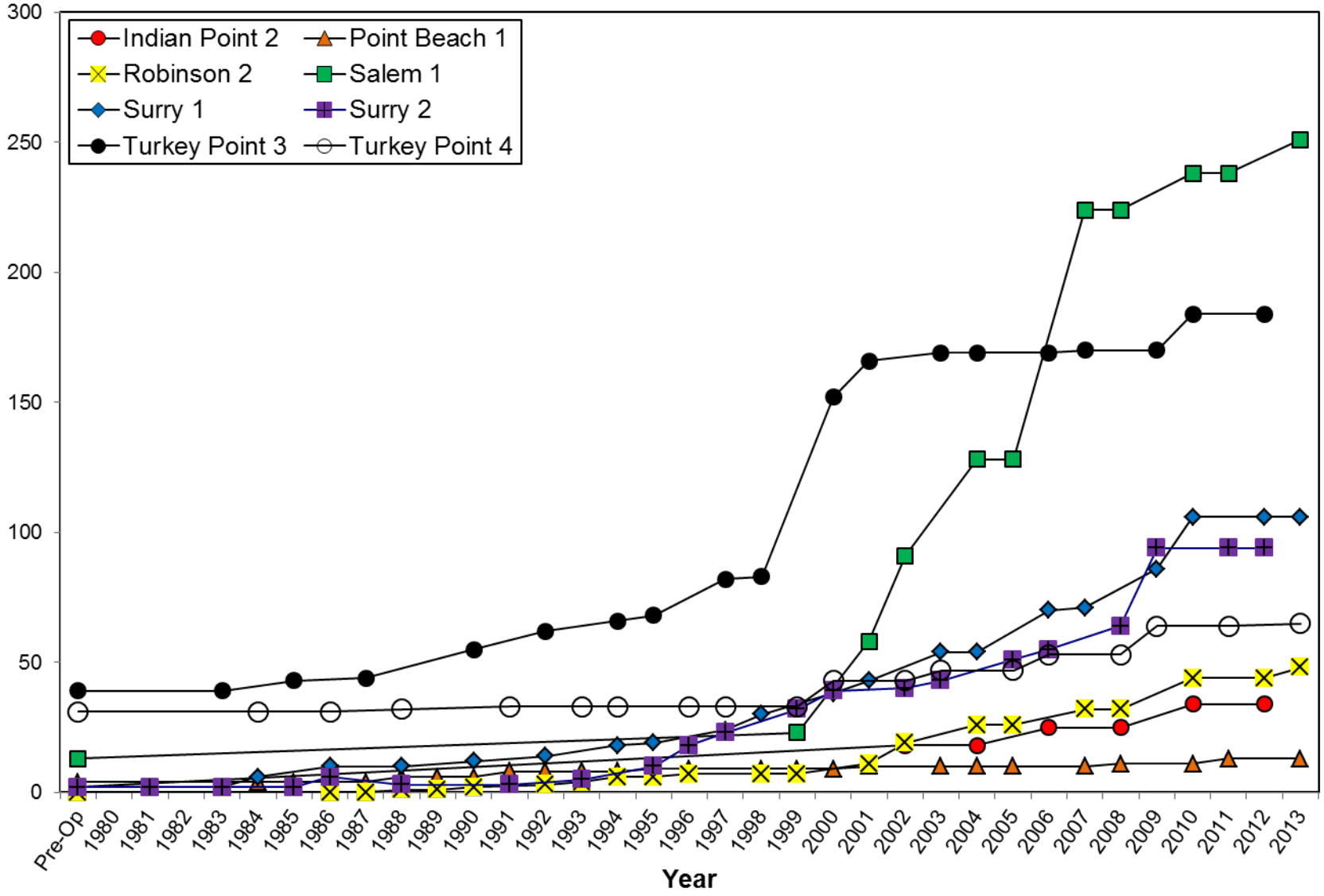

**Figure 4-10b: Replacement Models: Plugging per Year (12/2013)**

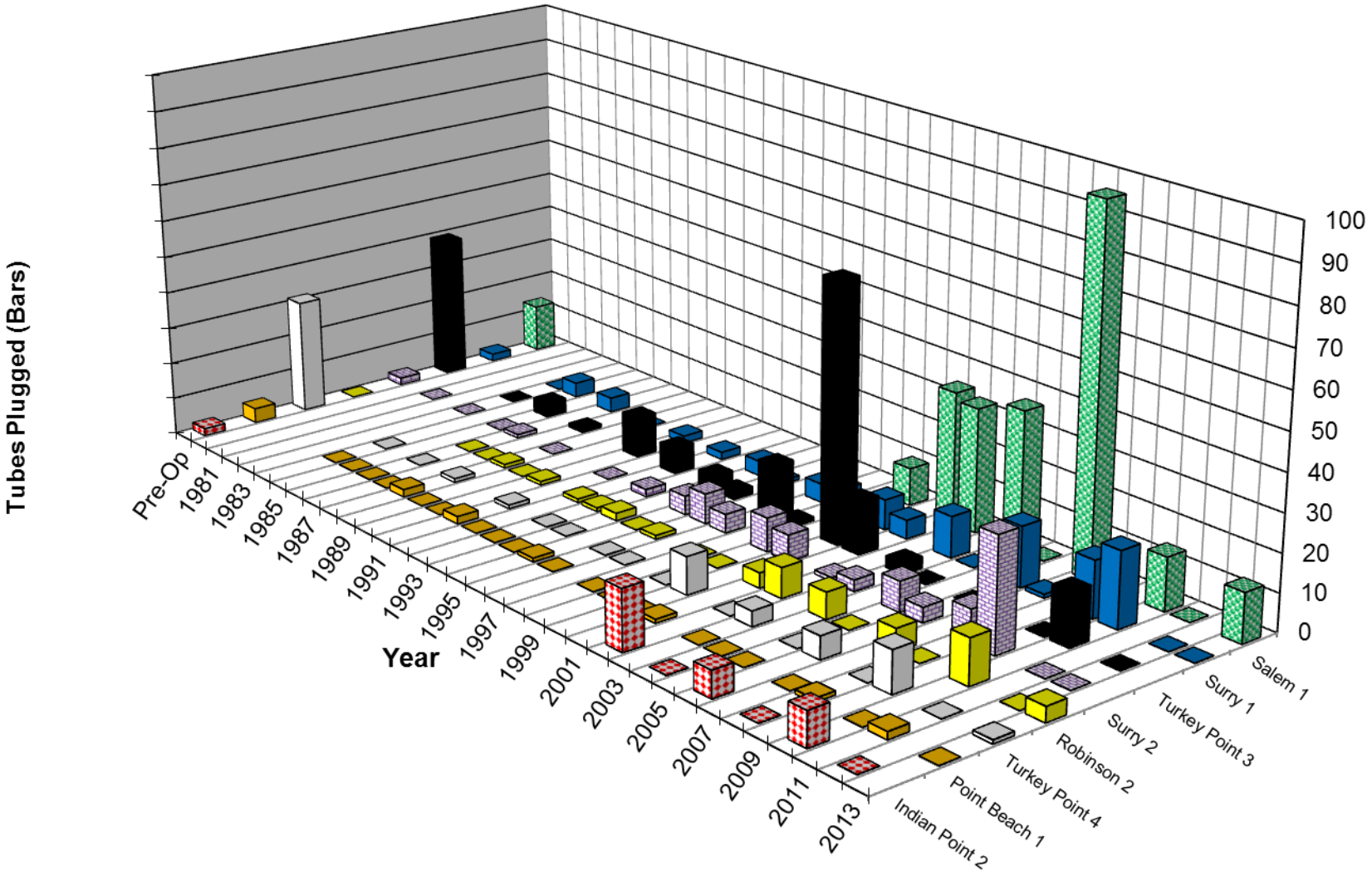

**Figure 4-11: Replacement Models: Cumulative Plugging per Refueling Outage (12/2013)**

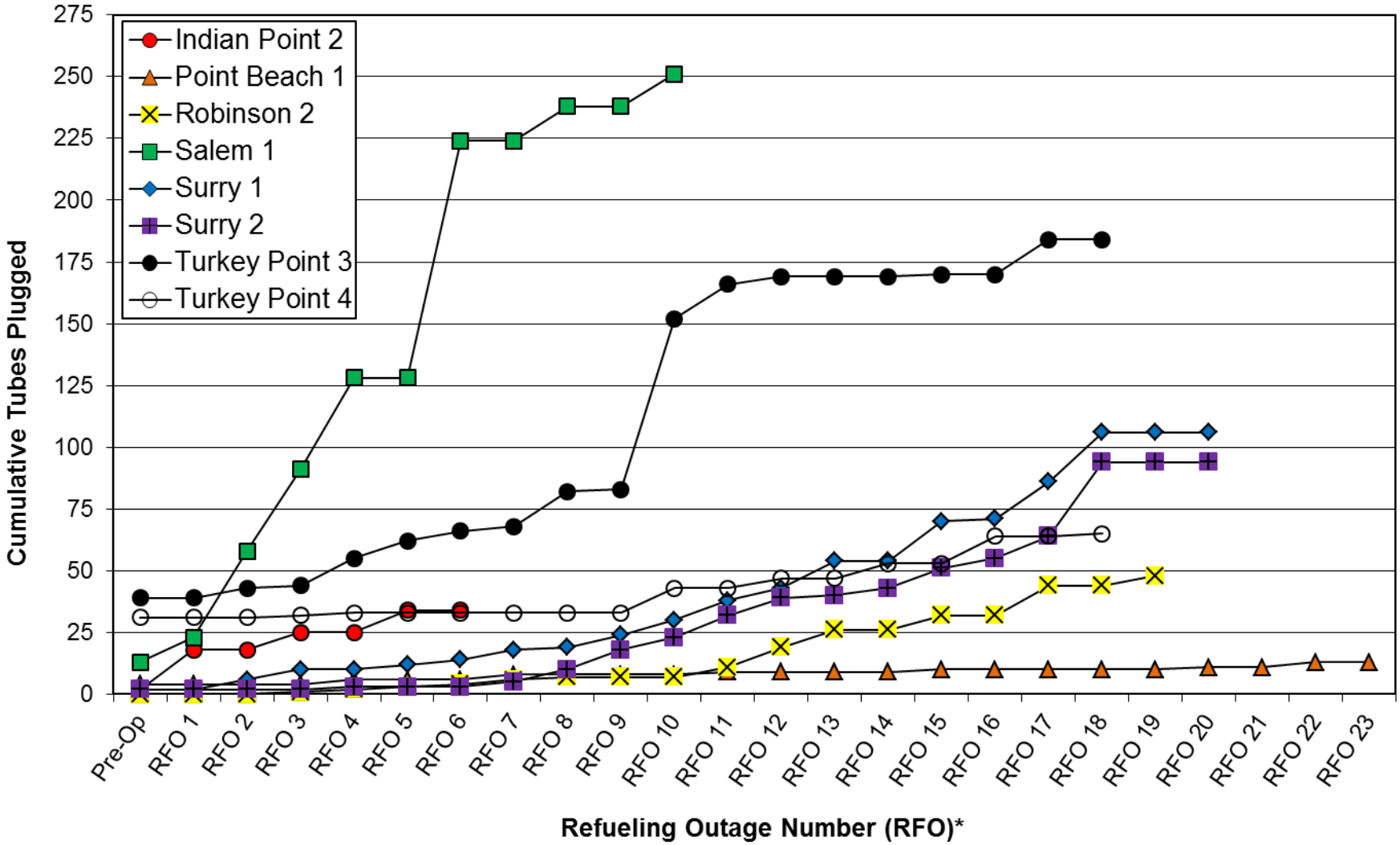


*Note: RFO numbers in this graph represent refueling outages after SG replacement.

**Figure 4-12: Replacement Models: Causes of Tube Plugging per Year (12/2013)**

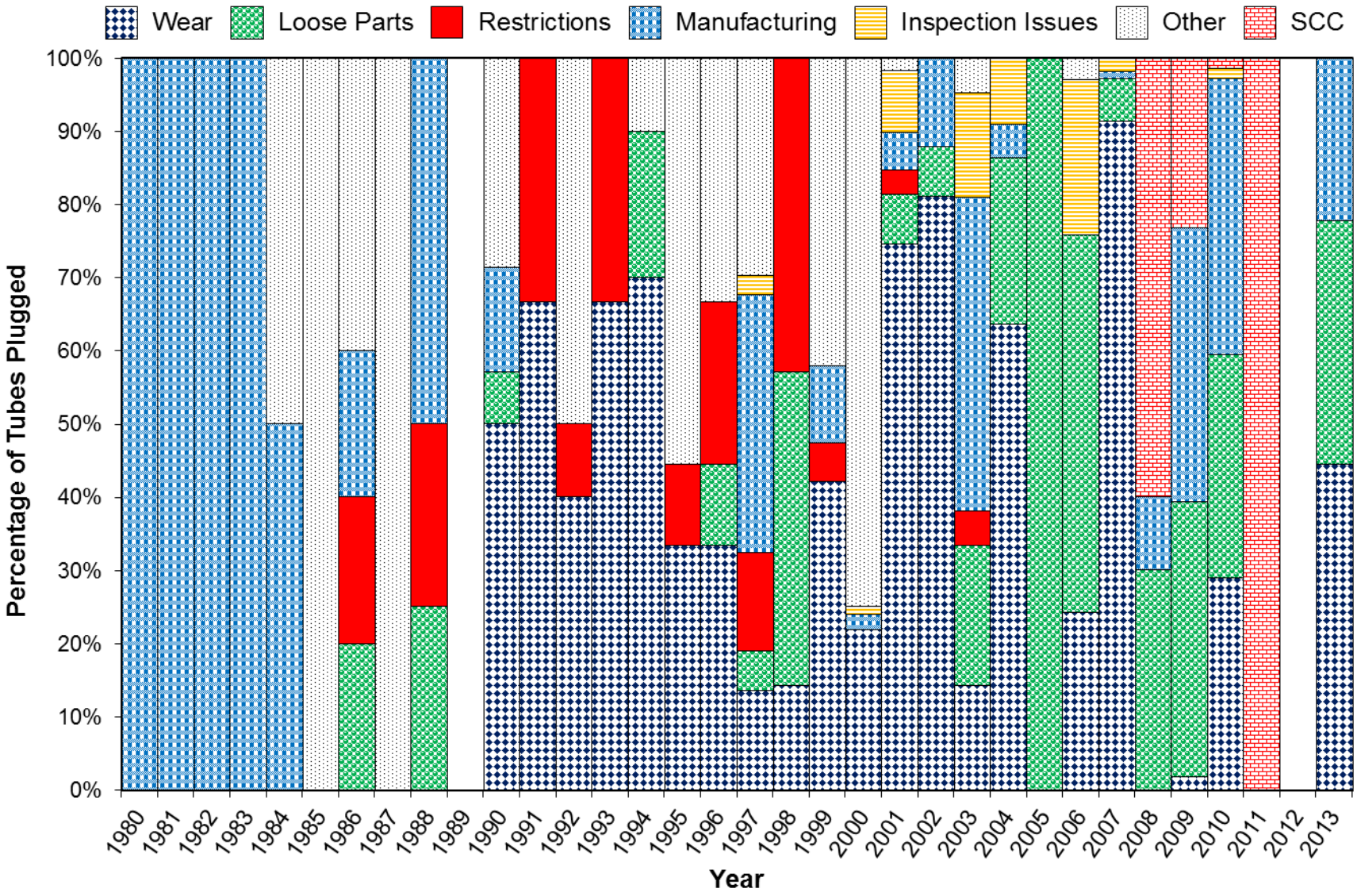

**Figure 4-13: Number of Thermally Treated Alloy 600 Tubes in Service per Year (12/2013)**

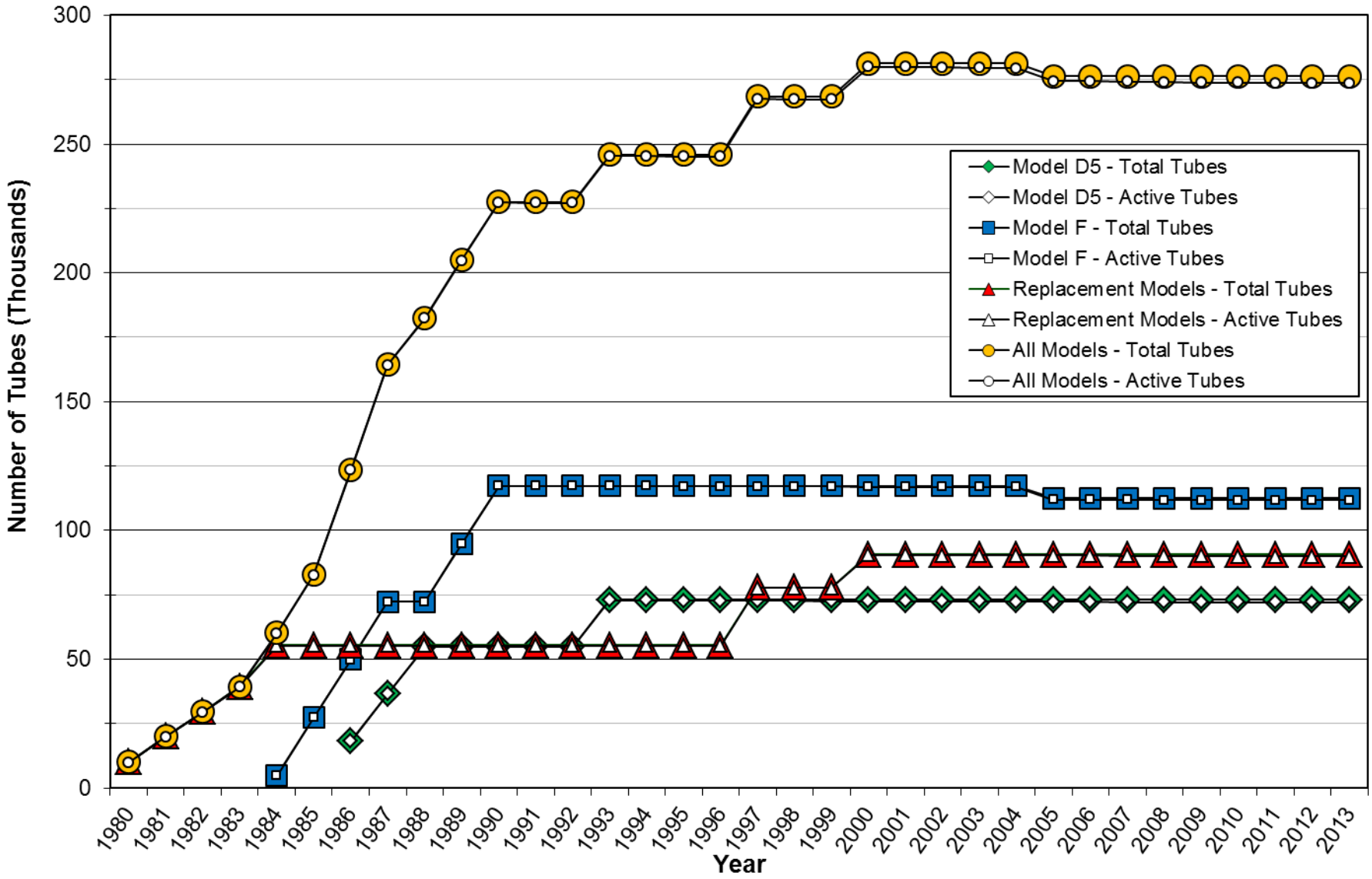

**Figure 4-14: All Models: Tubes Plugged Per Grouping/Model (12/2013)**

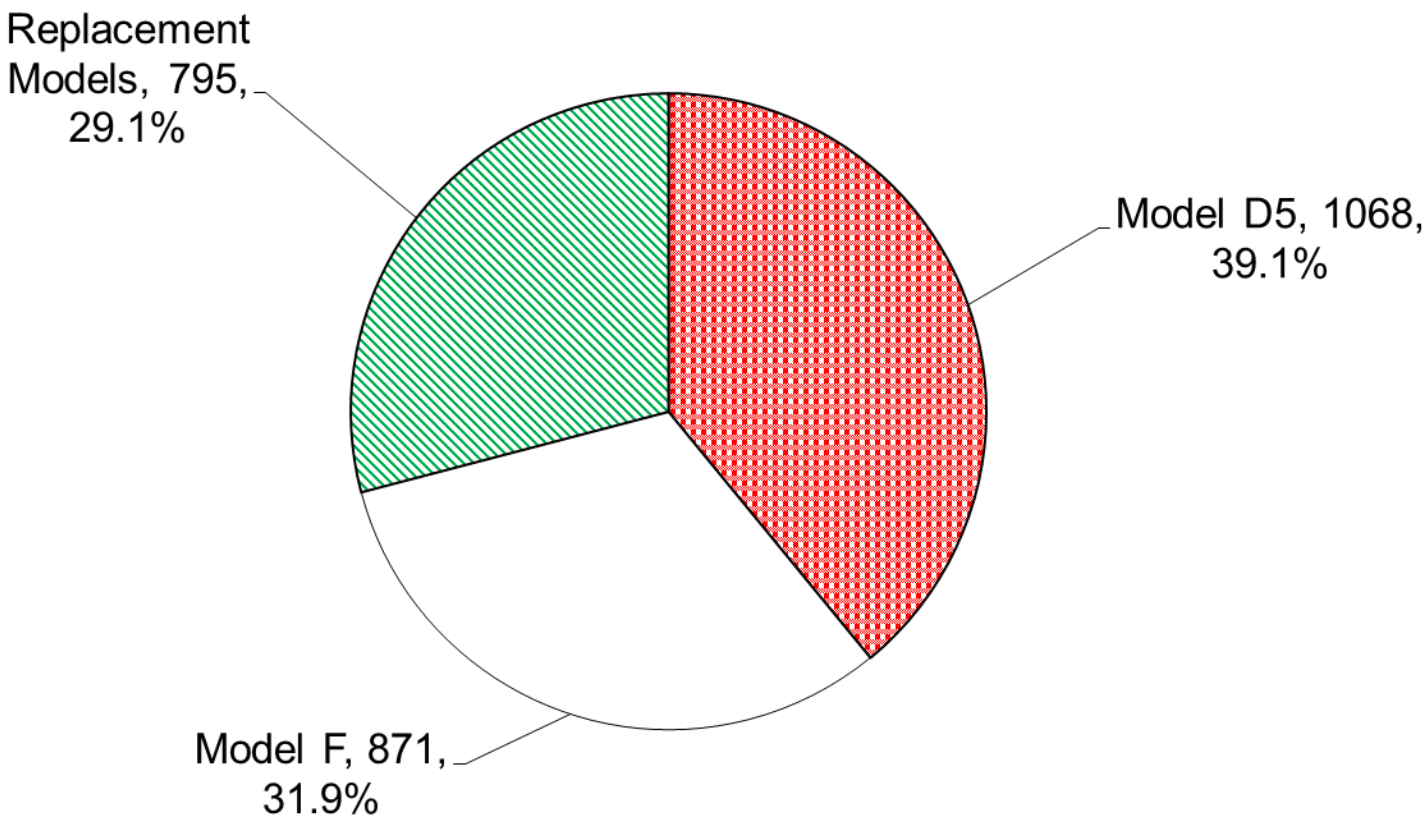

**Figure 4-15: All Models: Causes of Tube Plugging (12/2013)**

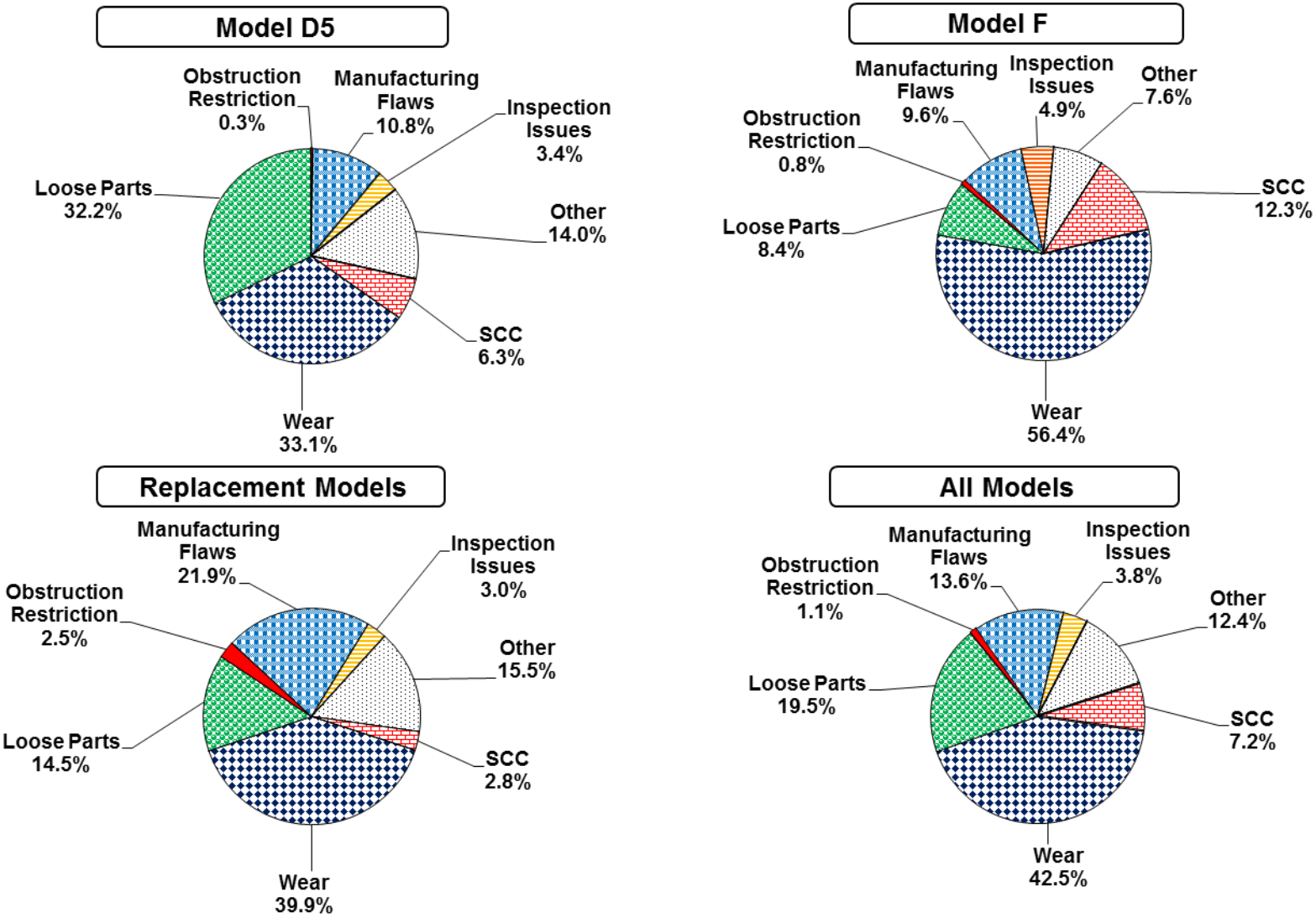

**Figure 4-16: All Models: Number of Tubes Plugged per Year (12/2013)**

**Figure 4-17: All Models: Percentage of Tubes Plugged per Year (12/2013)**

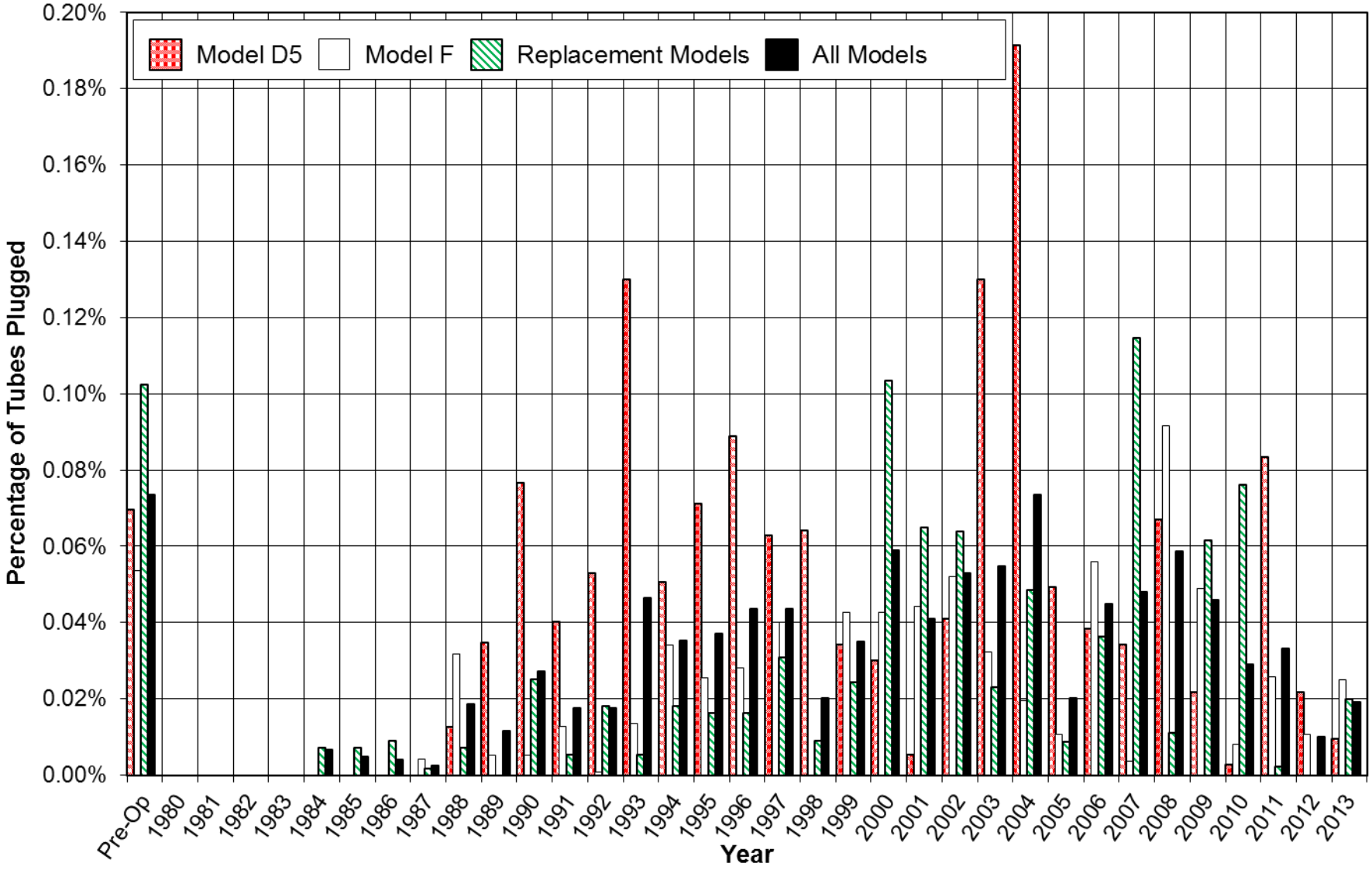

**Figure 4-18: All Models: Causes of Tube Plugging per Year (12/2013)**

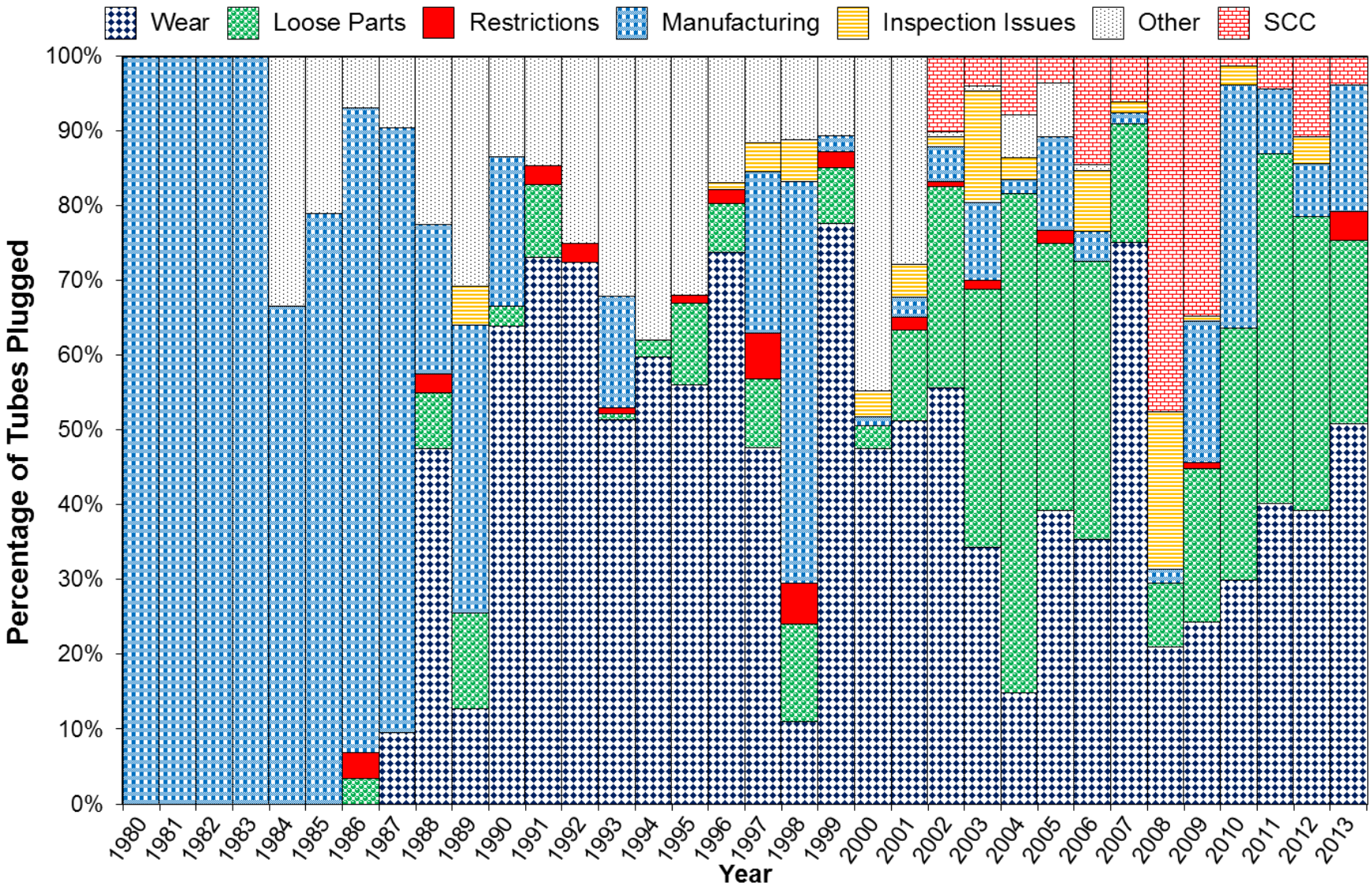

# APPENDIX A: BIBLIOGRAPHY


General

*Code of Federal Regulations*

Title 10, "Energy," Part 50, "Domestic Licensing of Production and Utilization Facilities."

Title 10, "Energy," Part 100, "Reactor Site Criteria."

*Electric Power Research Institute*

Electric Power Research Institute, "PWR [Pressurized-Water Reactor] Primary-to-Secondary Leak Guidelines, Revision 3," December 2004 (ADAMS Accession No. ML050840534).

*U.S. Nuclear Regulatory Commission*

Generic Letter 2004-01, "Requirements for Steam Generator Tube Inspections," August 30, 2004 (ADAMS Accession No. ML042370766).

Generic Letter 2006-01, "Steam Generator Tube Integrity and Associated Technical Specifications," January 20, 2006 (ADAMS Accession No. ML060200385).

Information Notice (IN) 2001-016, "Recent Foreign and Domestic Experience with Degradation of Steam Generator Tubes and Internals," October 31, 2001 (ADAMS Accession No. ML013030601).

IN 2002-02, "Recent Experience with Plugged Steam Generator Tubes," January 8, 2002 (ADAMS Accession No. ML013480327).

IN 2002-02, Supplement 1, "Recent Experience with Plugged Steam Generator Tubes," July 17, 2002 (ADAMS Accession No. ML021980191).

IN 2002-21, "Axial Outside-Diameter Cracking Affecting Thermally Treated Alloy 600 Steam Generator Tubing," June 25, 2002 (ADAMS Accession No. ML021770094).

IN 2002-21, Supplement 1, "Axial Outside-Diameter Cracking Affecting Thermally Treated Alloy 600 Steam Generator Tubing," April 1, 2003 (ADAMS Accession No. ML030900517).

IN 2003-13, "Steam Generator Tube Degradation at Diablo Canyon," August 28, 2003 (ADAMS Accession No. ML032410215).

IN 2004-10, "Loose Parts in Steam Generators," May 4, 2004 (ADAMS Accession No. ML041170480).

IN 2004-16, "Tube Leakage Due to a Fabrication Flaw in a Replacement Steam Generator," August 3, 2004 (ADAMS Accession No. ML041460357).

IN 2004-17, "Loose Part Detection and Computerized Eddy Current Data Analysis in Steam Generators," August 25, 2004 (ADAMS Accession No. ML042180094).

IN 2005-09, “Indications in Thermally Treated Alloy 600 Steam Generator Tubes and Tube-To-Tubesheet Welds,” April 7, 2005 (ADAMS Accession No. ML050530400).

IN 2005-29, “Steam Generator Tube and Support Configuration,” October 27, 2005 (ADAMS Accession No. ML052280011).

IN 2007-37, “Buildup of Deposits in Steam Generators,” November 23, 2007 (ADAMS Accession No. ML072910750).

IN 2008-07, “Cracking Indications in Thermally Treated Alloy 600 Steam Generator Tubes,” April 24, 2008 (ADAMS Accession No. ML080040353).

IN 2010-05, “Management of Steam Generator Loose Parts and Automated Eddy Current Data Analysis,” February 3, 2010 (ADAMS Accession No. ML093640691).

IN 2010-07, “Welding Defects in Replacement Steam Generators,” April 5, 2010 (ADAMS Accession No. ML100070106).

IN 2010-21, “Crack-Like Indication in the U-Bend Region of a Thermally Treated Alloy 600 Steam Generator Tube,” October 6, 2010 (ADAMS Accession No. ML102210244).

IN 2012-07, “Tube-to-Tube Contact Resulting in Wear in Once-Through Steam Generators,” July 17, 2012 (ADAMS Accession No. ML120740578).

IN 2013-11, “Crack-Like Indications at Dents/Dings and in the Freespan Region of Thermally Treated Alloy 600 Steam Generator Tubes,” July 3, 2013 (ADAMS Accession No. ML13127A236).

IN 2013-20, “Steam Generator Channel Head and Tubesheet Degradation,” October 3, 2013 (ADAMS Accession No. ML13204A143).

NUREG-0966, “Safety Evaluation Report Related to the D2/D3 Steam Generator Design Modification,” March 1983.

NUREG-1014, “Safety Evaluation Report Related to the D4/D5/E Steam Generator Design Modification,” October 1983.

NUREG-1604, “Circumferential Cracking of Steam Generator Tubes,” April 1997.

NUREG-1771, “U.S. Operating Experience with Thermally Treated Alloy 600 Steam Generator Tubes,” April 2003 (ADAMS Accession No. ML031140094).

NUREG-1841, “U.S. Operating Experience with Thermally Treated Alloy 690 Steam Generator Tubes,” August 2007 (ADAMS Accession No. ML072330588).

NUREG/CR-6365, “Steam Generator Tube Failures,” April 1996.

Regulatory Guide 1.121, “Bases for Plugging Degraded PWR Steam Generator Tubes,” August 1976 (ADAMS Accession No. ML003739366).

Regulatory Issue Summary (RIS) 2007-20, “Implementation of Primary-to-Secondary Leakage Performance Criteria,” August 23, 2007 (ADAMS Accession No. ML070570297).

RIS 2009-04, “Steam Generator Tube Inspection Requirements,” April 3, 2009 (ADAMS Accession No. ML083470557).

*Other*

“New Requirements for Ensuring Steam Generator Tube Integrity in Pressurized Water Reactors in the United States,” Emmett Murphy, Senior Materials Engineer, U.S. Nuclear Regulatory Commission, 2007 (ADAMS Accession No. ML071300355).

“Transmittal of TSTF-449 Revision 4, ‘Steam Generator Tube Integrity,’” April 14, 2005 (ADAMS Accession No. ML051090200).

“Transmittal of TSTF-510, Revision 0, ‘Revision to Steam Generator Program Inspection Frequencies and Tube Sample Selection,’” March 26, 2009 (ADAMS Accession No. ML090890367).

**Braidwood 2**

Letter from J.D. von Suskil, Exelon Generation Co., LLC, to the NRC, dated May 10, 2002, "Ninth Refuel Outage, Steam Generator Inservice Inspection Report." ADAMS Accession No. ML021480394

Letter from J.D. von Suskil, Exelon Generation Co., LLC, to the NRC, dated August 12, 2002, "Braidwood Station, Unit 2 Inservice Inspection Summary Report." ADAMS Accession No. ML022280412

Letter from J.D. von Suskil, Exelon Generation Co., LLC, to the NRC, dated April 9, 2003, "Braidwood Station, Unit 2 Ninth Refueling Outage Steam Generator Tube Inspection Report." ADAMS Accession No. ML031110379

Letter from M.J. Pacilio, Exelon Generation Co., LLC, to the NRC, dated July 29, 2003, "Braidwood Station, Unit 2 Ninth Refueling Outage Steam Generator Tube Inspection Report, Additional Information Pertaining to Steam Generator Secondary Side Inspections." ADAMS Accession No. ML032200254

Letter from M.J. Pacilio, Exelon Generation Co., LLC, to the NRC, dated November 24, 2003, "Tenth Refuel Outage, Steam Generator In-Service Inspection Report." ADAMS Accession No. ML033360656

Letter from M.L. Chawla, NRC, to J.L. Skolds, Exelon Generation Co., LLC dated January 15, 2004, "Summary of Conference Call with Exelon Nuclear Regarding the 2003 Steam Generator Inspections at Braidwood Unit 2 (TAC No. MC1367)." ADAMS Accession No. ML033580377

Letter from T.P. Joyce, Exelon Generation Co., LLC, to the NRC dated February 12, 2004, "Braidwood Station, Unit 2 Tenth Refueling Outage Steam Generator Inservice Inspection Summary Report." ADAMS Accession No. ML040540452

Letter from K.R. Jury, Exelon Generation Co., LLC, to the NRC dated October 29, 2004, "Response to NRC Generic Letter 2004-01, 'Requirements for Steam Generator Tube Inspections.'" ADAMS Accession No. ML043060328

Letter from G.F. Dick, NRC, to C.M. Crane, Exelon Generation Co., LLC, dated April 25, 2005, "Braidwood Station, Units 1 and 2—Issuance of Exigent Amendments Re: Revision of Scope of Steam Generator Inspections for Unit 2 Refueling Outage 11 (TAC Nos. MC6686 and MC6687)." ADAMS Accession No. ML051170149

Letter from K.J. Polson, Exelon Generation Co., LLC, to the NRC dated May 10, 2005, "April 2005, Eleventh Refuel Outage, Steam Generator Inservice Inspection Report." ADAMS Accession No. ML051370406

Letter from K.J. Polson, Exelon Generation Co., LLC, to the NRC dated July 27, 2005, "Braidwood Station, Unit 2, Eleventh Refueling Outage Steam Generator Inservice Inspection Summary Report." ADAMS Accession No. ML052140465

Letter from J.B. Hopkins, NRC, to C.M. Crane, Exelon Generation Co., LLC, dated September 16, 2005, “Braidwood Station, Unit 2—Summary of Conference Call Regarding 2005 Steam Generator Tube Inspections.” ADAMS Accession No. ML052550318

Letter from K.J. Polson, Exelon Generation Co., LLC, to the NRC, dated February 13, 2006, “Response to Request for Additional Information Regarding the Braidwood Station Unit 2 Spring 2005 Steam Generator Inspection.” ADAMS Accession No. ML060670367

Letter from R.F. Kuntz, NRC, to C.M. Crane, Exelon Generation Co., LLC, dated October 24, 2006, “Braidwood Station, Unit No. 2—Issuance of Amendments Re: Steam Generator Inspection Criteria (TAC No. MC8969).” ADAMS Accession No. ML062780507

Letter from T. Coutu, Exelon Generation Co., LLC, to the NRC, dated November 9, 2006, “October 2006, Twelfth Refueling Outage, Steam Generator In-Service Inspection Report.” ADAMS Accession No. ML063130425

Letter from T. Coutu, Exelon Generation Co., LLC, to the NRC, dated January 29, 2007, “Braidwood Station, Unit 2, Twelfth Refueling Outage Steam Generator Inservice Inspection Summary Report.” ADAMS Accession No. ML070290637

Letter from R.F. Kuntz, NRC, to C.M. Crane, Exelon Generation Co., LLC, dated March 30, 2007, “Byron Station, Unit Nos. 1 and 2, and Braidwood Station, Unit Nos. 1 and 2—Issuance of Amendments Re: Steam Generator Tube Surveillance Program (TAC Nos. MC8966, MC8967, MC8968, and MC8969).” ADAMS Accession Nos. ML070810354 and ML071210555

Letter from T. Coutu, Exelon Generation Co., LLC, to the NRC, dated August 17, 2007, “Response to Request for Additional Information Regarding the Braidwood Station, Unit 2 Fall 2006 Steam Generator Inspection.” ADAMS Accession No. ML072290564

Letter from M.J. David, NRC, to C.G. Pardee, Exelon Generation Co., LLC, dated April 18, 2008, “Braidwood Station, Units 1 and 2—Issuance of Amendments Re: Revision to Technical Specifications for the Steam Generator Program (TAC Nos. MD8158 and MD8159).” ADAMS Accession No. ML080920889

Letter from M.J. David, NRC, to C.G. Pardee, Exelon Generation Co., LLC, dated July 16, 2008, “Braidwood Station, Unit 2—Summary of Conference Call Regarding Spring 2008 Steam Generator Tube Inspections (TAC No. MD8409).” ADAMS Accession No. ML081640265

Letter from B. Hanson, Exelon Generation Co., LLC, to the NRC, dated November 11, 2008, “Braidwood Station, Unit 2 Thirteenth Refueling Outage Steam Generator Tube Inspection Report.” ADAMS Accession No. ML083220444

Letter from P.R. Simpson, Exelon Generation Co., LLC, to the NRC, dated May 15, 2009, “Response to Request for Additional Information Regarding the Braidwood Station, Unit 2, Spring 2008 Refueling Outage Steam Generator Tube Inspections.” ADAMS Accession No. ML091380475

Letter from M.J. David, NRC, to C.G. Pardee, Exelon Nuclear, dated October 16, 2009, “Braidwood Station, Units 1 and 2, and Byron Station, Unit Nos. 1 and 2—Issuance of Amendments Re: Revision to Technical Specifications for the Steam Generator Program (TAC Nos. ME1613, ME1614, ME1615, and ME1616).” ADAMS Accession No. ML092520512

Letter from A. Shahkarami, Exelon Generation Co., LLC, to the NRC, dated January 27, 2010, “Braidwood Station, Unit 2 Steam Generator Tube Inspection Report for Refueling Outage 14.” ADAMS Accession No. ML100350212

Letter from M.J. David, NRC, to M.J. Pacilio, Exelon Generation Co., LLC, dated September 17, 2010, “Braidwood Station, Unit 2—Review of the 2009 Steam Generator Tube Inservice Inspection Report (TAC No. ME3372).” ADAMS Accession No. ML102530544

Letter from N.J. DiFrancesco, NRC, to M.J. Pacilio, Exelon Nuclear, dated April 13, 2011, “Braidwood Station, Units 1 and 2, and Byron Station, Unit Nos. 1 and 2—Issuance of Amendments Re: Changes to Technical Specification Sections 5.5.9, ‘Steam Generator (SG) Program’ and 5.6.9 ‘Steam Generator (SG) Tube Inspection Report.’ (TAC Nos. ME5198, ME5199, ME5200, and ME5201).” ADAMS Accession No. ML110840580

Letter from D.J. Enright, Exelon Generation Co., LLC, to the NRC, dated August 10, 2011, “Braidwood Station, Unit 2 Steam Generator Tube Inspection Report for Refueling Outage 15.” ADAMS Accession No. ML11227A037

Letter from N.J. DiFrancesco, NRC, to M.J. Pacilio, Exelon Nuclear, dated September 22, 2011, “Braidwood Station, Unit 2—Summary of Conference Call Regarding 2011 Steam Generator Tube Inspections (TAC No. ME6106).” ADAMS Accession No. ML112590225

Letter from B.L. Mozafari, NRC, to M.J. Pacilio, Exelon Nuclear, dated April 12, 2012, “Braidwood Station, Unit 2—Review of the 2011 Steam Generator Tube Inservice Inspections at Braidwood Station Unit 2 (TAC No. ME7112).” ADAMS Accession No. ML120930296

Letter from M. Mahoney, NRC, to M.J. Pacilio, Exelon Generation Co., LLC, dated October 5, 2012, “Braidwood Station, Units 1 and 2, and Byron Station, Unit Nos. 1 and 2—Issuance of Amendments Re: Revise Technical Specifications 5.5.9 and 5.6.9 for Permanent Alternate Repair Criteria (TAC Nos. ME8296, ME8297, ME8298, and ME8299).” ADAMS Accession No. ML12262A360

Letter from D. Enright, Exelon Generation Co., LLC, to the NRC, dated February 5, 2013, “Braidwood Station, Unit 2 Steam Generator Tube Inspection Report for Refueling Outage 16.” ADAMS Accession No. ML13039A042

Letter from J.S. Wiebe, NRC, to M.J. Pacilio, Exelon Generation Co., LLC, dated March 21, 2013, “Braidwood Station, Units 1 and 2, and Byron Station, Unit Nos. 1 and 2—Issuance of Amendments Re: Application to Revise Technical Specifications to Adopt TSTF-510, ‘Revision to Steam Generator Program Inspection Frequencies and Tube Sample Selection’ (TAC Nos. ME8243, ME8244, ME8245, and ME8246).” ADAMS Accession No. ML13009A172

Letter from D.M. Gullott, Exelon Generation Co., LLC, to the NRC, dated August 6, 2013, “Response to Request for Additional Information Regarding the Steam Generator Tube Inspection Report for Braidwood Station, Unit 2, Refueling Outage 16.” ADAMS Accession No. ML13219A320

Letter from J.S. Wiebe, NRC, to M.J. Pacilio, Exelon Generation Co., LLC, dated January 7, 2014, “Braidwood Station, Unit 2—Review of the 2012 Steam Generator Tube Inservice Inspections (TAC No. MF0659).” ADAMS Accession No. ML13326A965

Letter from M.E. Kanavos, Exelon Generation Co., LLC, to the NRC, dated November 14, 2014, “Braidwood Station, Unit 2 Steam Generator Tube Inspection Report for Refueling Outage 17.” ADAMS Accession No. ML14318A211

**Byron 2**

"Preliminary Notification of Event or Unusual Occurrence—PNO-III-02-029," dated June 25, 2002. ADAMS Accession No. ML021760784

Letter from R.P. Lopriore, Exelon Generation Co., LLC, to the NRC, dated October 8, 2002, "Steam Generator Tube Repairs Resulting from Byron Station, Unit 2, Cycle 10 Refueling Outage." ADAMS Accession No. ML022900008

Letter from M.L. Chawla, NRC, to J.L. Skolds, Exelon Generation Co., LLC, dated November 8, 2002, "Byron Station, Unit 2—Summary of Conference Calls with Exelon Generation Co. Regarding Its 2002 Steam Generator Tube Inspection Results (TAC Nos. MB6310 and MB4017)." ADAMS Accession No. ML022950043

Letter from R.P. Lopriore, Exelon Generation Co., LLC, to the NRC, dated December 10, 2002, "Byron Station Unit 2 Steam Generator Inservice Inspection Summary Report." ADAMS Accession No. ML023520084

Letter from S.E. Kuczynski, Exelon Generation Co., LLC, to the NRC, dated April 17, 2004, "Steam Generator Tube Repairs Resulting from Byron Station, Unit-2, Cycle 11 Refueling Outage." ADAMS Accession No. ML041170314

Letter from S.E. Kuczynski, Exelon Generation Co., LLC, to the NRC, dated June 23, 2004, "Byron Station Unit 2 Steam Generator Inservice Inspection Summary Report." ADAMS Accession No. ML041830404

Letter from G.F. Dick, Jr., NRC, to C.M. Crane, Exelon Generation Co., LLC, dated August 12, 2004, "Summary of Conference Call with Exelon Generation Co., LLC Regarding the Results of the Spring 2004 Steam Generator Inspections at Byron Station, Unit 2 (TAC No. MC2597)." ADAMS Accession No. ML042260202

Letter from K.R. Jury, Exelon Generation Co., LLC, to the NRC, dated October 29, 2004, "Response to NRC Generic Letter 2004-01, 'Requirements for Steam Generator Tube Inspections.'" ADAMS Accession No. ML043060328

Letter from S.E. Kuczynski, Exelon Generation Co., LLC, to the NRC, dated November 10, 2004, "Response to Request for Additional Information Regarding the Byron Station, Unit 2 Spring 2004 Steam Generator Inspection." ADAMS Accession No. ML043210495

Letter from J.B. Hopkins, NRC, to C.M. Crane, Exelon Generation Co., LLC, dated September 19, 2005, "Byron Station, Unit 2—Issuance of Amendment (TAC No. MC7219)." ADAMS Accession No. ML052230019

Letter from S.E. Kuczynski, Exelon Generation Co., LLC, to the NRC, dated October 17, 2005, "Steam Generator Tube Repairs Resulting from Byron Station, Unit-2, Cycle 12 Refueling Outage." ADAMS Accession No. ML052920168

Letter from S.E. Kuczynski, Exelon Generation Co., LLC, to the NRC, dated January 3, 2006, "Byron Station Unit 2 Steam Generator Inservice Inspection Summary Report." ADAMS Accession No. ML060050335

Letter from M.L. Chawla, NRC, to C.M. Crane, Exelon Generation Co., LLC, dated March 22, 2006, “Byron Station, Unit 2—Summary of Conference Telephone Call Regarding Steam Generator Inspections from the Fall 2005 Outage (TAC No. MC8527).” ADAMS Accession No. ML060610209

Letter from D.M. Hoots, Exelon Generation Co., LLC, to the NRC, dated September 8, 2006, “Response to Request for Additional Information Regarding the Byron Station, Unit 2 Fall 2005 Steam Generator Inspection.” ADAMS Accession No. ML062560349

Letter from D.M. Hoots, Exelon Generation Co., LLC, to the NRC, dated January 16, 2007, “Response to Request for Additional Information Regarding the Byron Station, Unit 2 Fall 2005 Steam Generator Inspection.” ADAMS Accession No. ML070170225

Letter from R.F. Kuntz, NRC, to C.M. Crane, Exelon Generation Co., LLC, dated March 30, 2007, “Byron Station, Unit Nos. 1 and 2, and Braidwood Station, Unit Nos. 1 and 2—Issuance of Amendments Re: Steam Generator Tube Surveillance Program (TAC Nos. MC8966, MC8967, MC8968, and MC8969).” ADAMS Accession Nos. ML070810354 and ML071210555

Letter from D.M. Hoots, Exelon Generation Co., LLC, to the NRC, dated July 31, 2007, “Byron Station Unit 2 90-Day Inservice Inspection Report for Interval 3, Period 1, Outage 1 (B2R13).” ADAMS Accession No. ML072120471

Letter from D.M. Hoots, Exelon Generation Co., LLC, to the NRC, dated July 31, 2007, “Byron Station Unit 2 Steam Generator Inservice Inspection Summary Report for Refueling Outage 13.” ADAMS Accession No. ML072120520

Letter from P.R. Simpson, Exelon Generation Co., LLC, to the NRC, dated February 20, 2008, “Response to Request for Additional Information—Steam Generator Inspection Summary Report.” ADAMS Accession No. ML080510729

Letter from M.J. David, NRC, to C.G. Pardee, Exelon Generation Co., LLC, dated April 14, 2008, “Byron Station, Unit 2—Review of Spring 2007 Steam Generator Tube Inservice Inspection Reports (TAC No. MD6203).” ADAMS Accession No. ML080990790

Letter from M.J. David, NRC, to C.G. Pardee, Exelon Generation Co., LLC, dated October 1, 2008, “Byron Station, Unit Nos. 1 and 2—Issuance of Amendments Re: Revision to Technical Specifications for the Steam Generator Program (TAC Nos. MD9018 and MD9019).” ADAMS Accession No. ML082340799

Letter from M.J. David, NRC, to C.G. Pardee, Exelon Generation Co., LLC, dated November 20, 2008, “Byron Station, Unit No. 2—Summary of Conference Call Regarding Fall 2008 Steam Generator Tube Inspections (TAC No. MD9590).” ADAMS Accession No. ML083180783

Letter from D.M. Hoots, Exelon Generation Co., LLC, to the NRC, dated January 20, 2009, “Byron Station Unit 2 Steam Generator Inservice Inspection Summary Report for Refueling Outage 14.” ADAMS Accession No. ML090330274

Letter from M.J. David, NRC, to C.G. Pardee, Exelon Generation Co., LLC, dated October 5, 2009, “Byron Station, Unit No. 2—Review of Fall 2008 Steam Generator Tube Inservice Inspection Report (TAC No. ME0802).” ADAMS Accession No. ML092720611

Letter from M.J. David, NRC, to C.G. Pardee, Exelon Nuclear, dated October 16, 2009, “Braidwood Station, Units 1 and 2, and Byron Station, Unit Nos. 1 and 2—Issuance of Amendments Re: Revision to Technical Specifications for the Steam Generator Program (TAC Nos. ME1613, ME1614, ME1615, and ME1616).” ADAMS Accession No. ML092520512

Letter from D.J. Enright, Exelon Generation Co., LLC, to the NRC, dated July 23, 2010, “Byron Station Unit 2 Steam Generator Inservice Inspection Summary Report for Refueling Outage 15.” ADAMS Accession No. ML102100454

Letter from N.J. DiFrancesco, NRC, to M.J. Pacilio, Exelon Nuclear, dated April 13, 2011, “Braidwood Station, Units 1 and 2 and Byron Station, Unit Nos. 1 and 2—Issuance of Amendments Re: Changes to Technical Specification Sections 5.5.9, ‘Steam Generator (SG) Program’ and 5.6.9 ‘Steam Generator (SG) Tube Inspection Report.’ (TAC Nos. ME5198, ME5199, ME5200, and ME5201).” ADAMS Accession No. ML110840580

Letter from N.J. DiFrancesco, NRC, to M.J. Pacilio, Exelon Nuclear, dated November 7, 2011, “Byron Station, Unit No. 2—Summary of Conference Call Regarding 2011 Steam Generator Tube Inspections (TAC No. ME7191).” ADAMS Accession No. ML113010322

Letter from T.J. Tulon, Exelon Generation Co., LLC, to the NRC, dated January 4, 2012, “Byron Station Unit 2 Steam Generator Inservice Inspection Summary Report for Refueling Outage 16.” ADAMS Accession No. ML12019A194

Letter from M. Mahoney, NRC, to M.J. Pacilio, Exelon Generation Co., LLC, dated October 5, 2012, “Braidwood Station, Units 1 and 2, and Byron Station, Unit Nos. 1 and 2—Issuance of Amendments Re: Revise Technical Specifications 5.5.9 and 5.6.9 for Permanent Alternate Repair Criteria (TAC Nos. ME8296, ME8297, ME8298, and ME8299).” ADAMS Accession No. ML12262A360

Letter from J.S. Wiebe, NRC, to M.J. Pacilio, Exelon Generation Co., LLC, dated March 21, 2013, “Braidwood Station, Units 1 and 2, and Byron Station, Unit Nos. 1 and 2—Issuance of Amendments Re: Application to Revise Technical Specifications to Adopt TSTF-510, ‘Revision to Steam Generator Program Inspection Frequencies and Tube Sample Selection’ (TAC Nos. ME8243, ME8244, ME8245, and ME8246).” ADAMS Accession No. ML13009A172

Letter from J.S. Wiebe, NRC, to M.J. Pacilio, Exelon Generation Co., LLC, dated April 1, 2013, “Byron Nuclear Power Station, Unit 2—Review of Refueling Outage 16 Steam Generator Tube Inservice Inspections (TAC No. ME9447).” ADAMS Accession No. ML13087A420

**Catawba 2**

Letter from C.P. Patel, NRC, to G.R. Peterson, Duke Energy Corp., dated June 18, 2002. "Catawba Nuclear Station, Unit 2 RE: "Summary of Conference Call with Duke Energy Regarding 2001 Steam Generator Tube Inspection Results at Catawba Unit 2 (TAC No. MB3037)." ADAMS Accession No. ML021780129

Letter from G.R. Peterson, Duke Energy Corporation, to the NRC, dated April 7, 2003, "Catawba Nuclear Station, Unit 2, Docket No. 50-414, Steam Generator Tube Inspection Report, 2 End of Core (EOC) 12." ADAMS Accession No. ML031060081

Letter from K.S. Canady, Duke Energy Corp., to the NRC, dated June 18, 2003, "Duke Energy Corp., Catawba Nuclear Station (CNS), Unit 2, Docket Number 50-414, Inservice Inspection Report and Steam Generator Outage Summary Report for End of Cycle 12 Refueling Outage." ADAMS Accession No. ML031760596

Letter from D.M. Jamil, Duke Energy Corp., to the NRC, dated February 10, 2004, "Duke Energy Corp., Catawba Nuclear Station, Unit 2, Docket Number 50-414, Steam Generator Outage Summary Report for End of Cycle 12 Refueling Outage, Reply to Request for Additional Information (TAC No.MC0957)." ADAMS Accession No. ML040500713

Letter from D.M. Jamil, Duke Energy Corp., to the NRC, dated April 7, 2004, "Duke Energy Corp., Catawba Nuclear Station, Unit 2, Docket Number 50-414, Steam Generator Outage Summary Report for End of Cycle 12 Refueling Outage, Reply to Request for Additional Information (TAC No. MC0957)." ADAMS Accession No. ML041110904

Letter from D.M. Jamil, Duke Energy Corp., to the NRC, dated October 21, 2004, "Catawba Nuclear Station, Unit 2, Docket Number 50-414, Steam Generator Tube Plugging Report, 2 End of Core (EOC) 13." ADAMS Accession No. ML043070616

Letter from W.R. McCollum, Jr., Duke Energy Corp., to the NRC, dated October 28, 2004, "Duke Energy Corp. Oconee Nuclear Station, Units 1, 2, & 3, Docket Nos. 50-269, 50-270, 50-287, McGuire Nuclear Station, Units 1 & 2, Docket Nos. 50-369 and 50-370, Catawba Nuclear Station, Units 1 & 2, Docket Nos. 50-413, 50-414, Response to NRC Generic Letter 2004-01, Requirements for Steam Generator Tube Inspections." ADAMS Accession No. ML043090390

Letter from S.E. Peters, NRC, to D.M. Jamil, Duke Energy Corp., dated November 11, 2004, "Catawba Nuclear Station, Unit 2 Re: Summary of Conference Call Regarding the 2004 Steam Generator Tube Inspections (TAC No. MC4503)." ADAMS Accession No. ML043130438

Letter from D.M. Jamil, Duke Energy Corp., to the NRC, dated January 17, 2005, "Duke Energy Corp., Catawba Nuclear Station, Unit 2, Docket Number 50-414, Steam Generator Outage Summary Report for End of Cycle 13 Refueling Outage." ADAMS Accession No. ML050240371

Letter from J.F. Stang, NRC, to D. Jamil, Duke Energy Corp., dated March 31, 2006. "Catawba Nuclear Station, Unit 2, Issuance of Amendments Regarding the Steam Generator Program (TAC No. MC9430)." ADAMS Accession No. ML060760011 and ML060760111

Letter from D.M. Jamil, Duke Energy Corp., to the NRC dated July 18, 2006, “Duke Power Co., LLC d/b/a Duke Energy Carolinas, LLC (Duke), Catawba Nuclear Station, Unit 2, Docket Number 50-414, Steam Generator Outage Summary Inservice Inspection Report for End of Cycle 14 Refueling Outage.” ADAMS Accession No. ML062060296

Letter from D.M. Jamil, Duke Energy Corp., to the NRC dated August 31, 2006, “Duke Power Co. LLC d/b/a Duke Energy Carolinas, LLC (Duke), Catawba Nuclear Station, Unit 2, Docket Number 50-414, Steam Generator Outage Summary 180-Day Report for End of Cycle 14 Refueling Outage.” ADAMS Accession No. ML062550112

Letter from J.R. Morris, Duke Energy Corp., to the NRC dated May 31, 2007, “Duke Power Co., LLC d/b/a Duke Energy Carolinas, LLC (Duke), Catawba Nuclear Station, Unit 2, Docket Number 50-414, Reply to Request for Additional Information Concerning Steam Generator Outage Summary Reports for End of Cycle 14 and for End of Cycle 13 Refueling Outages (TAC No.MD3419).” ADAMS Accession No. ML071630231

Letter from J.F. Stang, NRC to J.R. Morris, Duke Power Co., LLC, dated October 31, 2007, “Catawba Nuclear Station, Unit 2, Issuance of Amendment Regarding Technical Specification 5.5.9 ‘Steam Generator Tube Surveillance Program’ (TAC No. MD5554).” ADAMS Accession No. ML072820013

Letter from J.R. Morris, Duke Energy Corp., to the NRC dated February 11, 2008, “Duke Power Co. LLC d/b/a Duke Energy Carolinas, LLC, Catawba Nuclear Station, Unit 2, Docket Number 50-414, Inservice Inspection Report and Steam Generator In-service Inspection Summary Report for End of Cycle 15 Refueling Outage.” ADAMS Accession No. ML080500179

Letter from J.R. Morris, Duke Energy Corp., to the NRC dated March 26, 2008, “Duke Power Co., LLC, d/b/a Duke Energy Carolinas, LLC (Duke), Catawba Nuclear Station, Unit 2, Docket Number 50-414, Steam Generator Outage Summary 180-Day Report for End of Cycle 15 Refueling Outage.” ADAMS Accession No. ML080930312

Letter from J.R. Morris, Duke Energy Corp., to the NRC dated December 18, 2008, “Duke Energy Carolinas, LLC (Duke), Catawba Nuclear Station, Unit 2, Docket Number 50-414, Reply to Request for Additional Information Concerning Steam Generator Tube Inspection Reports for End of Cycle 15 Refueling Outage (TAC No. MD8402).” ADAMS Accession No. ML083660086

Letter from J. Stang, NRC, to J.R. Morris, Duke Energy Carolinas, LLC, dated April 13, 2009, “Catawba Nuclear Station, Unit 2, Issuance of Amendment Regarding Interim Alternate Repair Criterion for Steam Generator Tube Repair (TAC No. ME0236).” ADAMS Accession No. ML091030088

Letter from J.R. Morris, Duke Energy Corp., to the NRC dated May 28, 2009, “Duke Energy Carolinas, LLC (Duke), Catawba Nuclear Station, Unit 2, Docket Number 50-414, Reply to Request for Additional Information Concerning Steam Generator Tube Inspection Reports for End of Cycle 15 Refueling Outage (TAC No. MD8402).” ADAMS Accession No. ML091550027

Letter from J.R. Morris, Duke Energy Carolinas, LLC, to the NRC dated July 14, 2009, “Duke Energy Carolinas, LLC, Catawba Nuclear Station, Unit 2, Docket Number 50-414, Inservice Inspection Report and Steam Generator In-service Inspection Summary Report for End of Cycle 16 Refueling Outage.” ADAMS Accession No. ML092010498

Letter from J.R. Morris, Duke Energy Corp., to the NRC dated May 20, 2010, “Duke Energy Carolinas, LLC (Duke Energy), Catawba Nuclear Station, Unit 2, Docket Number 50-414, Steam Generator In-service Inspection Summary Report for End of Cycle 16 Refueling Outage, Response to NRC Requests for Additional Information (RAIs).” ADAMS Accession No. ML101470067

Letter from J. Thompson, NRC, to J.R. Morris, Duke Energy Carolinas, LLC, dated July 14, 2010, “Catawba Nuclear Station, Unit 2 (Catawba 2)—Summary of Telephone Conference Call Regarding the 2009 Steam Generator (SG) Tube Inspections (TAC Nos. ME0910 and ME0911).” ADAMS Accession No. ML101900062

Letter from J. Thompson, NRC, to J.R. Morris, Duke Energy Carolinas, LLC, dated July 21, 2010, “Catawba Nuclear Station, Unit 2 (Catawba 2)—Summary of Telephone Conference Call Regarding the Fall 2007 Steam Generator (SG) Tube Inspections.” ADAMS Accession No. ML102010007

Letter from J. Thompson, NRC, to J.R. Morris, Duke Energy Carolinas, LLC, dated September 27, 2010, “Catawba Nuclear Station, Unit 2, Issuance of Amendment Regarding the Steam Generator Program (TAC No. ME4108).” ADAMS Accession No. ML102640537

Letter from J.R. Morris, Duke Energy Corp., to the NRC dated January 19, 2011, “Duke Energy Carolinas, LLC, Catawba Nuclear Station, Unit 2, Docket Number 50-414, Inservice Inspection Report and Steam Generator In-service Inspection Summary Report for End of Cycle 17 Refueling Outage.” ADAMS Accession No. ML110200322

Letter from J.R. Morris, Duke Energy Corp., to the NRC dated April 5, 2011, “Duke Energy Carolinas, LLC, Catawba Nuclear Station, Unit 2, Docket Number 50-414, Steam Generator (SG) Tube Inspection Report for End of Cycle 17 Refueling Outage Pursuant to Technical Specification (TS) 5.6.8.” ADAMS Accession No. ML110980601

Letter from J.R. Morris, Duke Energy Corp., to the NRC dated June 27, 2011, “Duke Energy Carolinas, LLC (Duke Energy), Catawba Nuclear Station, Unit 2, Docket Number 50-414, Steam Generator In-service Inspection Summary Report for End of Cycle 17 Refueling Outage, Response to NRC Requests for Additional Information (RAIs), TAC No. ME5834.” ADAMS Accession No. ML11180A269

Letter from J. Thompson, NRC, to J.R. Morris, Duke Energy Carolinas, LLC, dated March 12, 2012, “Catawba Nuclear Station, Units 1 and 2, Issuance of Amendments Regarding Technical Specifications Amendments for Permanent Alternate Repair Criteria for Steam Generator Tubes (TAC Nos. ME6670 and ME6671).” ADAMS Accession No. ML12054A692

Letter from R.M. Glover, Duke Energy Carolinas, LLC, to the NRC dated July 10, 2012, “Duke Energy Carolinas, LLC, Catawba Nuclear Station, Unit 2, Docket Number 50-414, Inservice Inspection Report and Steam Generator Inservice Inspection Summary Report for End of Cycle 18 Refueling Outage.” ADAMS Accession No. ML12195A346

Letter from J. Thompson, NRC, to K. Henderson, Duke Energy Carolinas, LLC, dated April 2, 2013, “Catawba Nuclear Station, Unit 2 (Catawba)—Review of the 2012 Steam Generator (SG) Tube Inspections During Refueling Outage 18 End-of-Cycle (EOC 18) (TAC No. ME9122).” ADAMS Accession No. ML13084A218

Letter from K. Henderson, Duke Energy, to the NRC dated January 13, 2014, “Duke Energy Carolinas, LLC (Duke Energy), Catawba Nuclear Station, Unit 2, Docket Number 50-414, Inservice Inspection Report and Steam Generator Inservice Inspection Summary Report for End of Cycle 19 Refueling Outage.” ADAMS Accession No. ML14016A147

Letter from R.J. Pascarelli, NRC, to K. Henderson, Duke Energy Carolinas, LLC, dated August 27, 2014, “Catawba Nuclear Station, Unit 2—Review of the Steam Generator Tube Inservice Inspection Report for the Fall 2013 Refueling Outage (TAC No. MF3355).” ADAMS Accession No. ML14237A008

**Comanche Peak 2**

Letter from C.L. Terry, TXU Energy, to the NRC dated April 18, 2002, “Comanche Peak Steam Electric Station (CPSES) – Unit 2, Docket No. 50-446, Unit 2, Sixth Refueling Outage (2RF06), Steam Generator Inservice Inspection Tube Plugging, Special Report No. 2-SR-02-001-00.” ADAMS Accession No. ML021210473

Letter from C.L. Terry, TXU Energy, to the NRC dated June 5, 2002, “Comanche Peak Steam Electric Station (CPSES) – Unit 2, Docket No. 50-446, Unit 2 Sixth Refueling Outage (2RF06), Steam Generator Twelve Month Report, Special Report No. 2-SR-02-002-00.” ADAMS Accession No. ML021640618

Letter from C.L. Terry, TXU Energy, to the NRC dated July 17, 2002, “Comanche Peak Steam Electric Station (CPSES)—Unit 2, Docket Nos. 50-446, Submittal of Unit 2 Sixth Refueling Outage (2RF06), Inservice Inspection (ISI) Summary Report (1986 Edition of ASME Code, Section XI, No Addenda; Unit 2 Interval Dates: August 3, 1993—August 3, 2003, First Interval).” ADAMS Accession No. ML022060178

Letter from M.R. Blevins, TXU Energy, to the NRC dated November 6, 2003, “Comanche Peak Steam Electric Station (CPSES)—Unit 2, Docket No. 50-446, Unit 2, Seventh Refueling Outage (2RF07), Steam Generator Inservice Inspection Tube Plugging, Special Report No. 2-SR-03-001-00.” ADAMS Accession No. ML033180430

Letter from M.R. Blevins, TXU Energy, to the NRC dated January 22, 2004, “Comanche Peak Steam Electric Station (CPSES), Unit 2 Docket No. 50-446, Submittal of Unit 2 Seventh Refueling Outage (2RF07), Inservice Inspection (ISI) Summary Report (Unit 2: 1986 Edition of ASME Code, Section XI, No Addenda; Interval Start Date – August 3, 1993, First Interval).” ADAMS Accession No. ML040290102

Letter from M.R. Blevins, TXU Power, to the NRC dated June 30, 2004, “Comanche Peak Steam Electric Station (CPSES), Docket No. 50-446, Unit 2 Seventh Refueling Outage (2RF07), Steam Generator Twelve Month Report.” ADAMS Accession No. ML041890306

Letter from M.R. Blevins, TXU Power, to the NRC dated October 14, 2004, “Comanche Peak Steam Electric Station (CPSES), Unit 2—Docket No. 50-446, Response to NRC Request for Additional Information, Re: 2RF06 and 2RF07 Steam Generator Reports.” ADAMS Accession No. ML042930638

Letter from M.R. Blevins, TXU Power, to the NRC dated October 14, 2004, “Comanche Peak Steam Electric Station (CPSES), Units 1 and 2—Docket Nos. 50-445 and 50-446, Response to NRC Generic Letter 2004-01; ‘Requirements For Steam Generator Tube Inspections.’ (TAC No MC4811).” ADAMS Accession No. ML042940371

Letter from M.R. Blevins, TXU Power, to the NRC dated April 28, 2005, “Comanche Peak Steam Electric Station (CPSES), Unit 2, Docket No. 50-446, Technical Specification 15-Day Report for Steam Generator Tube Plugging.” ADAMS Accession No. ML051250408

Letter from M.R. Blevins, TXU Power, to the NRC dated October 3, 2005, “Comanche Peak Steam Electric Station (CPSES), Docket No. 50-446, Submittal of Revised Unit 2 Eighth Refueling Outage (2RF08) Inservice Inspection (ISI) Summary Report (Unit 2: 1998 Edition of ASME Code Section XI, 1999 and 2000 Addenda, Interval Start Date—August 3, 2004, Second Interval).” ADAMS Accession No. ML052850272

Letter from M.R. Blevins, TXU Power, to the NRC dated February 14, 2006, “Comanche Peak Steam Electric Station (CPSES), Docket No. 50-446, Unit 2 Eighth Refueling Outage (2RF08), Steam Generator Twelve Month Report.” ADAMS Accession No. ML060540491

Letter from M.C. Thadani, NRC, to M.R. Blevins, TXU Power dated September 12, 2006, “Comanche Peak Steam Electric Station (CPSES), Units 1 and 2—Issuance of Amendments Re: Steam Generator Tube Surveillance Program (TAC Nos. MC9498 and MC9499).” ADAMS Accession No. ML062340117

Letter from M.R. Blevins, TXU Power, to the NRC dated November 1, 2006, “Comanche Peak Steam Electric Station (CPSES), Unit 2, Docket No. 50-446, Response to Request for Additional Information, 2RF08 Steam Generator Tube Inservice Inspection Report—(TAC No. MC6952).” ADAMS Accession No. ML063110573

Letter from M.R. Blevins, TXU Power, to the NRC dated January 24, 2007, “Comanche Peak Steam Electric Station (CPSES), Docket No. 50-446, Submittal of Unit 2 Ninth Refueling Outage (2RF09) Inservice Inspection (ISI) Summary Report (Unit 2: 1998 Edition of ASME Code Section XI, through 2000 Addenda, Interval Start Date – August 3, 2004, Second Interval).” ADAMS Accession No. ML070310371

Letter from B.K. Singal, NRC to M.R. Blevins, Luminant Generation Co., LLC, dated June 20, 2008, “Comanche Peak Steam Electric Station, Unit 2—Summary of Conference Call Regarding the Spring 2008 Steam Generator Tube Inspections (TAC No. MD8067).” ADAMS Accession No. ML081710055

Letter from M.R. Blevins, Luminant Power, to the NRC dated July 10, 2008, “Comanche Peak Nuclear Power Plant (CPNPP), Docket No. 50-446, Submittal of Unit 2 Tenth Refueling Outage (2RF10) Inservice Inspection (ISI) Summary Report (Unit 2: 1998 Edition of ASME Code Section XI, through 2000 Addenda, Interval Start Date – August 3, 2004, Second Interval).” ADAMS Accession No. ML082000122

Letter from M.R. Blevins, Luminant Power, to the NRC dated September 18, 2008, “Comanche Peak Steam Electric Station (CPSES), Unit 2 Tenth Refueling Outage (2RF10) Steam Generator 180 Day Report.” ADAMS Accession No. ML082690600

Letter from R. Flores, Luminant Power, to the NRC dated April 9, 2009, “Comanche Peak Steam Electric Station (CPSES), Unit 2, Docket No. 50-446, Response to Request for Additional Information, 2RF10 Steam Generator Tube Inservice Inspection Report—TAC No. ME0123.” ADAMS Accession No. ML091070586

Letter from B.K. Singal, NRC, to R. Flores, Luminant Generation Co., LLC, dated October 9, 2009, “Comanche Peak Steam Electric Station, Units 1 and 2—Issuance of Amendments to Modify Technical Specifications to Establish Alternate Repair Criteria and Include Reporting Requirements Specific to Alternate Repair Criteria for Steam Generator Program (TAC Nos. ME1446 and ME1447).” ADAMS Accession No. ML092740076

Letter from B.K. Singal, NRC, to R. Flores, Luminant Generation Co., LLC, dated April 6, 2011, “Comanche Peak Nuclear Power Plant, Units 1 and 2—Issuance of Amendments to Modify Technical Specifications to Establish Alternate Repair Criteria for Steam Generator Program (TAC Nos. ME5110 and ME5111).” ADAMS Accession No. ML110770322

Letter from B.K. Singal, NRC, to R. Flores, Luminant Generation Co., LLC, dated May 23, 2011, “Comanche Peak Nuclear Power Plant, Unit 2—Summary of Conference Call Regarding the Spring 2011 Steam Generator Tube Inspections (TAC No. ME5826).” ADAMS Accession No. ML111400148

Letter from F.W. Madden, Luminant Generation Co., LLC, to the NRC dated July 14, 2011, “Comanche Peak Nuclear Power Plant (CPNPP) Docket No. 50-446, Licensee Event Report 446/11-002-00, Unit 2 Manual Trip Due to High Steam Generator Sodium Concentration.” ADAMS Accession No. ML11203A077

Letter from F.W. Madden, Luminant Generation Co., LLC, to the NRC dated October 12, 2011, “Comanche Peak Nuclear Power Plant, Docket No. 50-446, Unit 2 Twelfth Refueling Outage (2RF12) Steam Generator 180 Day Report.” ADAMS Accession No. ML11306A012

Letter from R.B. Mays, Luminant Generation Co., LLC, to the NRC dated April 10, 2012, “Comanche Peak Nuclear Power Plant Unit 2, Docket No. 50-446, Response to Request for Additional Information, 2RF12 Steam Generator Tube Inservice Inspection Report—TAC No. ME7345.” ADAMS Accession No. ML12109A051

Letter from B.K. Singal, NRC, to R. Flores, Luminant Generation Co., LLC, dated October 18, 2012, “Comanche Peak Nuclear Power Plant, Units 1 and 2—Issuance of Amendments Re: License Amendment Request for Changes to Technical Specifications 5.5.9 and 5.6.9 Regarding Alternate Steam Generator Repair Criteria (TAC Nos. ME8374 and ME8375).” ADAMS Accession No. ML12263A036

Letter from B.K. Singal, NRC, to R. Flores, Luminant Generation Co., LLC, dated February 27, 2014, “Comanche Peak Nuclear Power Plant, Units 1 and 2—Issuance of Amendments Re: Adoption of TSTF-510, ‘Revision to Steam Generator Program Inspection Frequencies and Tube Sample Selection’ (TAC Nos. MF2651 and MF2652).” ADAMS Accession No. ML14042A223

Letter from F.W. Madden, Luminant Generation Co., LLC, to the NRC dated October 21, 2014, “Comanche Peak Nuclear Power Plant, Docket No. 50-446, Unit 2 Fourteenth Refueling Outage (2RF14) Steam Generator 180 Day Report.” ADAMS Accession No. ML14302A067

**Callaway**

Letter from W.A. Witt, Union Electric, to the NRC dated November 19, 2002, "Docket Number 50-483, Callaway Plant Unit 1, Union Electric Co., Facility Operating License NPF-30, Licensee Event Report 2002-011-00; Inservice Inspection Results for 'A' Steam Generator Classified as C-3." ADAMS Accession No. ML023310226

Letter from W.A. Witt, Union Electric, to the NRC dated November 19, 2002, "Docket Number 50-483, Callaway Plant Unit 1, Union Electric Co., Facility Operating License NPF-30, Special Report 2002-03, C-3 Classified Inservice Inspection Results for Steam Generator Tube Inspections." ADAMS Accession No. ML023310230

Letter from W.A. Witt, Union Electric, to the NRC dated November 21, 2002, "Docket Number 50-483, Callaway Plant Unit 1, Union Electric Co., Facility Operating License NPF-30, Special Report 2002-04, Inservice Inspection Results for Steam Generator Tube Inspections—Number of Tubes Plugged or Repaired." ADAMS Accession No. ML023360363

Letter from J.N. Donohew, NRC, to G.L. Randolph, Union Electric Co. dated March 5, 2003, "Callaway Plant—Summary of Conference Call with Union Electric Co. Regarding the 2002 Steam Generator Inspections (TAC No. MB6643)." ADAMS Accession No. ML030640628

Letter from W.A. Witt, Union Electric, to the NRC dated March 17, 2003, "Docket Number 50-483, Callaway Plant Unit 1, Union Electric Co., Facility Operating License NPF-30, Results of the Thirteenth Steam Generator Tube In-Service Inspection." ADAMS Accession No. ML030850274

Letter from K.D. Young, Union Electric, to the NRC dated August 22, 2003, "Docket Number 50-483, Callaway Plant Unit 1, Union Electric Co., Facility Operating License NPF-30, Request for Additional Information on November 2002 Steam Generator Tube Inspection." ADAMS Accession No. ML032510091

Letter from W.A. Witt, Union Electric, to the NRC dated May 25, 2004, "Docket Number 50-483, Callaway Plant Unit 1, Union Electric Co., Facility Operating License NPF-30, Licensee Event Report 2004-006-00, 'A' Steam Generator Tube Inspection Results Classified as C-3." ADAMS Accession No. ML041560005

Letter from W.A. Witt, Union Electric, to the NRC dated June 24, 2004, "Docket Number 50-483, Callaway Plant Unit 1, Union Electric Co., Facility Operating License NPF-30, Special Report, Inservice Inspection Results for Steam Generator Tube Inspections—Number of Tubes Plugged or Repaired." ADAMS Accession No. ML041830237

Letter from K.D. Young, Union Electric, to the NRC dated July 9, 2004, "Docket Number 50-483, Callaway Plant Unit 1, Union Electric Co., Facility Operating License NPF-30, Inservice Inspection (ISI) Summary Reports for Interval 2 Period 2." ADAMS Accession No. ML042150072

Letter from W.A. Witt, Union Electric, to the NRC dated September 30, 2004, "Docket Number 50-483, Callaway Plant Unit 1, Union Electric Co., Facility Operating License NPF-30, Steam Generator Condition Monitoring Report." ADAMS Accession No. ML042820060

Letter from K.D. Young, Union Electric, to the NRC dated October 27, 2004, “Docket Number 50-483, Callaway Plant Unit 1, Union Electric Co., Facility Operating License NPF-30, Response to NRC Generic Letter 2004-01: Requirements For Steam Generator Tube Inspections.” ADAMS Accession No. ML043140239

Letter from C.R. Younie, Union Electric, to the NRC dated June 2, 2005, “Docket Number 50-483, Callaway Plant Unit 1, Union Electric Co., Facility Operating License NPF-30, Results of the Fourteenth Steam Generator Tube Inservice Inspection.” ADAMS Accession No. ML051580381

Letter from J.N. Donohew, NRC, to C.D. Naslund, Union Electric Co. dated September 29, 2005, “Callaway Plant, Unit 1—Issuance of Amendment Regarding the Steam Generator Replacement Project (TAC No. MC4437).” ADAMS Accession No. ML052570086

**Millstone 3**

Letter from J.A. Price, Dominion Nuclear Connecticut, Inc., to the NRC dated October 7, 2002, "Millstone Power Station, Unit No. 3, Steam Generator Tube Plugging." ADAMS Accession No. ML022910045

Letter from V. Nerses, NRC, to J.A. Price, Dominion Nuclear Connecticut, Inc., dated November 8, 2002, "Millstone Power Station, Unit No. 3—Summary of Conference Calls with Dominion Nuclear Connecticut, Inc., Regarding the 2002 Steam Generator Inspection Results at Millstone Power Station, Unit No. 3 (TAC No. MB6183)." ADAMS Accession No. ML023110528

Letter from J.A. Price, Dominion Nuclear Connecticut, Inc., to the NRC dated August 25, 2003, "Millstone Power Station, Unit No. 3, Steam Generator Tube Inservice Inspection Report." ADAMS Accession No. ML032471591

Letter from L.N. Hartz, Dominion Nuclear Connecticut, Inc., to the NRC dated April 5, 2004, "Dominion Nuclear Connecticut, Inc., (DNC), Millstone Power Station Unit 3, Response to Request for Additional Information (RAI) Regarding Steam Generator Tube Inspection Summary For Fall 2002 Outage." ADAMS Accession No. ML040970336

Letter from L.N. Hartz, Dominion Nuclear Connecticut, Inc., to the NRC dated May 3, 2004, "Dominion Nuclear Connecticut, Inc., Millstone Power Station Unit 3, Steam Generator Tube Plugging Report." ADAMS Accession No. ML041260535

Letter from W.R. Matthews, Dominion Nuclear Connecticut, Inc., to the NRC dated October 29, 2004, "Virginia Electric and Power Co. (Dominion), Dominion Nuclear Connecticut, Inc. (DNC), North Anna Power Station Units 1 and 2, Surry Power Station Units 1 and 2, Millstone Power Station Units 2 and 3, Sixty Day Response to NRC Generic Letter 2004-01, Requirements for Steam Generator Tube Inspections." ADAMS Accession No. ML043060099

Letter from J.A. Price, Dominion Nuclear Connecticut, Inc., to the NRC dated April 7, 2005, "Dominion Nuclear Connecticut, Inc., Millstone Power Station Unit 3, Special Report, Steam Generator Tube Inservice Inspection," ADAMS Accession No. ML051040333

Letter from J.A. Price, Dominion Nuclear Connecticut, Inc., to the NRC dated October 26, 2005, "Dominion Nuclear Connecticut, Inc., Millstone Power Station Unit 3, Steam Generator Tube Plugging Report." ADAMS Accession No. ML053070547

Letter from J.A. Price, Dominion Nuclear Connecticut, Inc., to the NRC dated December 14, 2005, "Dominion Nuclear Connecticut, Inc., Millstone Power Station Unit 3, Supplement to Steam Generator Tube Inservice Inspection Report." ADAMS Accession No. ML053570271

Letter from V. Nerses, NRC, to D.A. Christian, Dominion Nuclear Connecticut, Inc. dated July 19, 2006, "Review of Steam Generator Tube Inservice Inspection Report for the 2004 Refueling Outage at Millstone Power Station, Unit No. 3 (TAC No. MC6714)." ADAMS Accession No. ML061930135

Letter from J.A. Price, Dominion Nuclear Connecticut, Inc., to the NRC dated October 2, 2006, "Dominion Nuclear Connecticut, Inc., Millstone Power Station Unit 3, Special Report, Steam Generator Tube Inservice Inspection." ADAMS Accession No. ML062860044

Letter from J.A. Price, Dominion Nuclear Connecticut, Inc., to the NRC dated May 8, 2007, “Dominion Nuclear Connecticut, Inc., Millstone Power Station Unit 3, Steam Generator Tube Plugging Report.” ADAMS Accession No. ML071350249

Letter from J. D. Hughey, NRC, to D.A. Christian, Dominion Nuclear Connecticut, Inc. dated May 31, 2007, “Millstone Power Station, Unit Nos. 2 and 3—Issuance of Amendments Regarding Steam Generator Tube Integrity (TAC Nos. MD2570 and MD2571).” ADAMS Accession No. ML071380257

Letter from J.A. Price, Dominion Nuclear Connecticut, Inc., to the NRC dated December 18, 2007, “Dominion Nuclear Connecticut, Inc., Millstone Power Station Unit 3, Response to Request for Additional Information, 2005 Steam Generator Tube Inspections.” ADAMS Accession No. ML073620218

Letter from J.A. Price, Dominion Nuclear Connecticut, Inc., to the NRC dated April 11, 2008, “Dominion Nuclear Connecticut, Inc., Millstone Power Station Unit 3, 2007 Steam Generator Tube Inspection Report.” ADAMS Accession No. ML081140138

Letter from J.A. Price, Dominion Nuclear Connecticut, Inc., to the NRC dated September 17, 2008, “Dominion Nuclear Connecticut, Inc., Millstone Power Station Unit 3, Response to Request for Additional Information Regarding the 2007 Steam Generator Tube Inspections.” ADAMS Accession No. ML082680092

Letter from C.J. Sanders, NRC, to D.A. Christian, Dominion Nuclear Connecticut, Inc., dated September 30, 2008, “Millstone Power Station, Unit No. 3—Issuance of Amendment Regarding Changes to Technical Specification (TS) Section 6.8.4.g, ‘Steam Generator Program’ and Section 6.9.1.7, ‘Steam Generator Tube Inspection Report’ (TAC No. MD8736).” ADAMS Accession No. ML082321292 and ML082810147

Letter from C.J. Sanders, NRC, to D.A. Christian, Dominion Nuclear Connecticut, Inc. dated December 12, 2008, “Millstone Power Station, Unit No. 3—Summary of Conference Call with Dominion Nuclear Connecticut, Inc., to Discuss 2008 Steam Generator Tube Inspections (TAC No. MD9954).” ADAMS Accession No. ML083370136

Letter from A.J. Jordan, Dominion Nuclear Connecticut, Inc., to the NRC dated March 13, 2009, “Dominion Nuclear Connecticut, Inc., Millstone Power Station Unit 3, End of Cycle 12 Steam Generator Tube Inspection Report.” ADAMS Accession No. ML090850344

Letter from A.J. Jordan, Dominion Nuclear Connecticut, Inc., to the NRC dated November 23, 2009, “Dominion Nuclear Connecticut, Inc., Millstone Power Station Unit 3, Response to Request for Additional Information Regarding 2008 Steam Generator Tube Inspections.” ADAMS Accession No. ML093350528

Letter from C.J. Sanders, NRC, to D.A. Heacock, Dominion Nuclear Connecticut, Inc. dated May 3, 2010, “Millstone Power Station, Unit No. 3—Issuance of Amendment Re: Changes to the Steam Generator Inspection Scope and Repair Requirements (TAC No. ME2978).” ADAMS Accession No. ML100770358

Letter from A.J. Jordan, Dominion Nuclear Connecticut, Inc., to the NRC dated October 28, 2010, “Dominion Nuclear Connecticut, Inc., Millstone Power Station Unit 3, End of Cycle 13 Steam Generator Tube Inspection Report.” ADAMS Accession No. ML103130038

Letter from A.J. Jordan, Dominion Nuclear Connecticut, Inc., to the NRC dated May 24, 2011, “Dominion Nuclear Connecticut, Inc., Millstone Power Station Unit 3, Response to Request for Additional Information Regarding the Steam Generator Tube Inservice Inspection Report for the End of Cycle 13.” ADAMS Accession No. ML11159A025

Letter from C.J. Sanders, NRC, to D.A. Heacock, Dominion Nuclear Connecticut, Inc., dated October 7, 2011, “Millstone Power Station, Unit No. 3—Issuance of Amendment Re: Steam Generator Tube Inspection Alternate Repair Criteria (TAC No. ME5389).” ADAMS Accession No. ML112580517

Letter from S.E. Scace, Dominion Nuclear Connecticut, Inc., to the NRC dated April 6, 2012, “Dominion Nuclear Connecticut, Inc., Millstone Power Station Unit 3, End of Cycle 14 Steam Generator Tube Inspection Report.” ADAMS Accession No. ML12109A044

Letter from S.E. Scace, Dominion Nuclear Connecticut, Inc., to the NRC dated October 1, 2012, “Dominion Nuclear Connecticut, Inc., Millstone Power Station Unit 3, Response to Request for Additional Information Regarding the End of Cycle 14 Steam Generator Tube Inspection Report (TAC No. ME8422).” ADAMS Accession No. ML12292A192

Letter from J. Kim, NRC, to D.A. Heacock, Dominion Nuclear Connecticut, Inc., dated December 6, 2012, “Millstone Power Station Unit No. 3—Issuance of Amendment Re: Revise Technical Specification 6.8.4.g, ‘Steam Generator (SG) Program,’ and Technical Specifications 6.9.1.7, ‘Steam Generator Tube Inspection Report,’ for a Permanent Alternate Repair Criteria (TAC No. ME8455).” ADAMS Accession No. ML12299A498

Letter from J. Kim, NRC, to D.A. Heacock, Dominion Nuclear Connecticut, Inc., dated January 11, 2013, “Millstone Power Station, Unit No. 3—Issuance of Amendment Re: Adopt TSTF-510, ‘Revision to Steam Generator Program Inspection Frequencies and Tube Sample Selection’ (TAC No. ME9189).” ADAMS Accession No. ML12333A255

Letter from S.E. Scace, Dominion Nuclear Connecticut, Inc., to the NRC dated October 2, 2013, “Dominion Nuclear Connecticut, Inc., Millstone Power Station Unit 3, End of Cycle 15 Steam Generator Tube Inspection Report.” ADAMS Accession No. ML13284A065

Letter from S.E. Scace, Dominion Nuclear Connecticut, Inc., to the NRC dated February 26, 2014, “Dominion Nuclear Connecticut, Inc., Millstone Power Station Unit 3, Response to Request for Additional Information Regarding End of Cycle 15 Steam Generator Tube Inspection Report.” ADAMS Accession No. ML14069A173

**Seabrook**

Letter from J.M. Peschel, North Atlantic Energy Service Corp., to the NRC dated June 3, 2002, "Seabrook Station, Steam Generator Tubes Plugged During Eighth Inservice Inspection." ADAMS Accession No. ML021640036

Letter from R.D. Starkey, NRC, to T.C. Feigenbaum, North Atlantic Energy Service Corp. dated July 2, 2002, "Summary of Conference Calls with North Atlantic Energy Service Corp. Regarding the 2002 Steam Generator Inspection Results at Seabrook Station, Unit No. 1 (Seabrook) (TAC No. MB5299)." ADAMS Accession No. ML021800003

Letter from R.D. Starkey, NRC, to T.C. Feigenbaum, North Atlantic Energy Service Corp. dated September 20, 2002, "Summary of Conference Call with North Atlantic Energy Service Corp. Regarding the 2002 Steam Generator Inspection Results at Seabrook Station, Unit No. 1 (TAC No. MB5299)." ADAMS Accession No. ML022590328

Letter from J.M. Vargas, North Atlantic Energy Service Corp., to the NRC dated October 31, 2002, "Seabrook Station, Unit No. 1, Response to Request for Information—Steam Generator Tubes." ADAMS Accession No. ML023100348

Letter from G.F. St. Pierre, FPL Energy Seabrook Station, to the NRC dated November 8, 2002, "Seabrook Station, Response to Request for Information—Steam Generator Tube." ADAMS Accession No. ML023240524

Letter from R.D. Starkey, NRC, to M.E. Warner, North Atlantic Energy Service Corp. dated November 26, 2002, "Summary of October 9, 2002, Conference Call with North Atlantic Energy Service Corp. Regarding the Seabrook Station Steam Generator Tube Laboratory Examination Results (TAC No. MB5299)." ADAMS Accession No. ML023300041

Letter from R.D. Starkey, NRC, to File dated November 26, 2002, "Summary of November 14, 2002, Meeting with FPL Energy Seabrook, LLC, (FPLE Seabrook) to Discuss the Root Cause Evaluation for Axial Outside Diameter Indications on Steam Generator Tubes at Seabrook Station, Unit No. 1." ADAMS Accession No. ML023300457

Letter from J.M. Peschel, FPL Energy Seabrook, LLC, to the NRC dated December 2, 2002, "Seabrook Station, Response to Request for Corrected Information—Steam Generator Tube." ADAMS Accession No. ML023470223

Letter from J.M. Peschel, FPL Energy Seabrook, LLC, to the NRC dated April 24, 2003, "Seabrook Station, Steam Generator Inservice Inspection." ADAMS Accession No. ML031220028

Letter from V. Nerses, NRC, to M.E. Warner, FPL Energy Seabrook, LLC, dated July 23, 2003, "Summary of Pre-Outage Conference Call with FPL Energy Seabrook, LLC Regarding the Inspection Scope For the Upcoming Steam Generator Inspections at the Seabrook Station, Unit No. 1 (TAC No. MB8928)." ADAMS Accession No. ML031970605

Letter from J.M. Peschel, FPL Energy Seabrook, LLC, to the NRC dated November 3, 2003, "Seabrook Station, Steam Generator Tubes Plugged During Ninth Inservice Inspection." ADAMS Accession No. ML033180464

Letter from V. Nerses, NRC, to M.E. Warner, FPL Energy Seabrook, LLC, dated December 29, 2003, “Seabrook Station, Unit No. 1—Summary of Conference Call with FPL Energy Seabrook, LLC, Regarding the 2003 Steam Generator Inspections (TAC No. MC0721).” ADAMS Accession No. ML033490139

Letter from V. Nerses, NRC, to M.E. Warner, FPL Energy Seabrook, LLC, dated February 18, 2004, “Review of Steam Generator Tube Inservice Inspection Report for the 2002 Refueling Outage at Seabrook Station, Unit No. 1 (TAC No. MB8928).” ADAMS Accession No. ML040360108

Letter from M.E. Warner, FPL Energy Seabrook, LLC, to the NRC dated October 12, 2004, “Seabrook Station, Steam Generator Inservice Inspection.” ADAMS Accession No. ML042940501

Letter from J.A. Stall, FPL Energy Seabrook, LLC, to the NRC dated October 29, 2004, “Florida Power and Light Co., St. Lucie Units 1 and 2, Docket Nos. 50-335 and 50-389, Turkey Point Units 3 and 4, Docket Nos. 50-250 and 50 251, FPL Energy Seabrook, LLC, Seabrook Station, Docket No. 50-443, NRC Generic Letter 2004-01, Requirements for Steam Generator Tube Inspections.” ADAMS Accession No. ML043070353

Letter from G.F. St. Pierre, FPL Energy Seabrook, LLC, to the NRC dated August 4, 2005, “Seabrook Station, Facility Operating License NPF-86, Response to Request for Additional Information Regarding Seabrook Station, Unit No. 1, Steam Generator Tube Inspection Summary for the Fall 2003 Outage.” ADAMS Accession No. ML052280221

Letter from G.E. Miller, NRC, to G.F. St. Pierre, FPL Energy Seabrook, LLC, dated September 29, 2006, “Seabrook Station, Unit No. 1—Issuance of Amendment Re: Limited Inspection of the Steam Generator Tube Portion within the Tubesheet (TAC No. MC8554).” ADAMS Accession No. ML062630457

Letter from G.F. St. Pierre, FPL Energy Seabrook, LLC, to the NRC dated October 26, 2006, “Seabrook Station, Steam Generator Tubes Plugged During Refueling Outage 11 Inservice Inspection.” ADAMS Accession No. ML063040324

Letter from G.E. Miller, NRC, to G.F. St. Pierre, FPL Energy Seabrook, LLC, dated March 28, 2007, “Seabrook Station, Unit No. 1—Issuance of Amendment Re: Technical Specification Task Force (TSTF)-449, ‘Steam Generator Tube Integrity,’ (TAC No. MD0696).” ADAMS Accession Nos. ML070510645 and ML071420135

Letter from G.F. St. Pierre, FPL Energy Seabrook, LLC, to the NRC dated May 23, 2007, “Seabrook Station, Steam Generator Inservice Inspection.” ADAMS Accession No. ML071510197

Letter from G.E. Miller, NRC, to G.F. St. Pierre, FPL Energy Seabrook, LLC, dated March 7, 2008, “Seabrook Station, Unit No. 1—Summary of Conference Call and Request for Additional Information Regarding the Fall 2006 Steam Generator Inspections (TAC No. MD2791).” ADAMS Accession No. ML073532041

Letter from G.F. St. Pierre, FPL Energy Seabrook, LLC, to the NRC dated June 18, 2008, "Seabrook Station, Response to Request for Additional Information Related to Steam Generator Inspections Performed During the Eleventh Refueling Outage." ADAMS Accession No. ML081750527

Letter from G.F. St. Pierre, FPL Energy Seabrook, LLC, to the NRC dated August 8, 2008, "Seabrook Station, Response to Clarifying Questions Related to Steam Generator Inspections Performed During the Eleventh Refueling Outage." ADAMS Accession No. ML082260306

Letter from D. Egan, NRC, to G.F. St. Pierre, NextEra Energy Seabrook, LLC, dated October 13, 2009, "Seabrook Station, Unit No. 1—Issuance of Amendment Re: Changes to the Steam Generator Inspection Scope and Repair Requirements (TAC No. ME1386)." ADAMS Accession No. ML092460184

Letter from M. O'Keefe, NextEra Energy Seabrook, LLC, to the NRC dated April 7, 2010, "Seabrook Station, Steam Generator Tube Inspection Report." ADAMS Accession No. ML101030109

Letter from P. Freeman, NextEra Energy Seabrook, LLC, to the NRC dated November 3, 2010, "Seabrook Station, Response to Request for Additional Information Regarding Seabrook Station 2009 Steam Generator Tube Inspection Report." ADAMS Accession No. ML103130033

Letter from G.E. Miller, NRC, to P. Freeman, NextEra Energy Seabrook, LLC, dated July 28, 2011, "Summary of Steam Generator Tube Mid-Inspection Conference Call for Spring 2011—Seabrook Station, Unit No. 1 (TAC No. ME5715)." ADAMS Accession No. ML112010532

Letter from M. O'Keefe, NextEra Energy Seabrook, LLC, to the NRC dated September 19, 2011, "Seabrook Station, Steam Generator Tube Inspection Report." ADAMS Accession No. ML11266A008

Letter from P. Freeman, NextEra Energy Seabrook, LLC, to the NRC dated March 6, 2012, "Seabrook Station, Response to Request for Additional Information, 2011 Steam Generator Tube Inspections." ADAMS Accession No. ML12072A065

Letter from J.G. Lamb, NRC, to K. Walsh, NextEra Energy Seabrook, LLC, dated September 10, 2012, "Seabrook Station, Unit No. 1—Issuance of Amendment Re: Permanent Application of Steam Generator Tube Alternate Repair Criteria, H* (TAC No. ME8513)." ADAMS Accession No. ML12178A537

Letter from M. O'Keefe, NextEra Energy Seabrook, LLC, to the NRC dated December 31, 2012, "Seabrook Station, Steam Generator Tube Inspection Report." ADAMS Accession No. ML13008A160

Letter from M.H. Ossing, NextEra Energy Seabrook, LLC, to the NRC dated September 13, 2013, "Seabrook Station, Response to Request for Additional Information Regarding the 2012 Steam Generator Tube Inspection Report." ADAMS Accession No. ML13261A149

Letter from J.G. Lamb, NRC, to K. Walsh, NextEra Energy Seabrook, LLC, dated October 25, 2013, “Seabrook Station, Unit No. 1—Issuance of Amendment Regarding License Amendment Request 13-02, Application to Revise Technical Specifications to Adopt TSTF-510, ‘Revision to Steam Generator Program Inspection Frequencies and Tube Sample Selection,’ Using the Consolidated Line Item Improvement Process (TAC No. MF1372).” ADAMS Accession No. ML13107A016

Letter from M. Ossing, NextEra Energy Seabrook, LLC, to the NRC dated October 14, 2014, “Seabrook Station, Steam Generator Tube Inspection Report.” ADAMS Accession No. ML14297A090

**Vogtle 1**

Letter from J.B. Beasley Jr., Southern Nuclear Operating Co., Inc., to the NRC dated April 5, 2002, "Vogtle Electric Generating Plant, Technical Specification Report 1-2002-1, Number of Steam Generator Tubes Plugged During 1R10."

Letter from J.B. Beasley Jr., Southern Nuclear Operating Co., Inc., to the NRC dated July 1, 2002, "Vogtle Electric Generating Plant, Inservice Inspection Summary Report." ADAMS Accession No. ML021920516

Letter from J.T. Gasser, Southern Nuclear Operating Co., Inc., to the NRC dated February 12, 2003, "Vogtle Electric Generating Plant, Response to Request for Additional Information, Steam Generator Tube Inspections." ADAMS Accession No. ML030510260

Letter from B.R. Bonser, NRC, to J.T. Gasser Jr., Southern Nuclear Operating Co., Inc., dated April 24, 2003, "Vogtle Electric Generating Plant—NRC Integrated Inspection Report 50-424/03-02 and 50-425/03-02." ADAMS Accession No. ML031150065

Letter from J.T. Gaser, Southern Nuclear Operating Co., Inc., to the NRC dated October 27, 2003, "Vogtle Electric Generating Plant, Technical Specification Report 1-2003-1, Number of Steam Generator Tubes Plugged During 1R11." ADAMS Accession No. ML033030404

Letter from J.T. Gasser, Southern Nuclear Operating Co., Inc., to the NRC dated January 16, 2004, "Vogtle Electric Generating Plant, Inservice Inspection Summary Report." ADAMS Accession No. ML040220620

Letter from J.T. Gasser, Southern Nuclear Operating Co., Inc., to the NRC dated August 26, 2004, "Vogtle Electric Generating Plant, Response to NRC Questions Regarding the 2002 Unit 2 (2R9) and 2003 Unit 1 (1R11) Steam Generator Tube Inspection Reports." ADAMS Accession No. ML042430424

Letter from L.M Stinson, Southern Nuclear Operating Co., Inc., to the NRC dated October 25, 2004, "Joseph M. Farley Nuclear Plant, Vogtle Electric Generating Plant, Response to NRC Generic Letter 2004-01, 'Requirements for Steam Generator Tube Inspections.'" ADAMS Accession No. ML043010265

Letter from L.M Stinson, Southern Nuclear Operating Co., Inc., to the NRC dated January 7, 2005, "Joseph M. Farley Nuclear Plant, Vogtle Electric Generating Plant, Supplemental Response to NRC Generic Letter 2004-01, 'Requirements for Steam Generator Tube Inspections.'" ADAMS Accession No. ML050110224

Letter from D.E. Grissette, Southern Nuclear Operating Co., Inc., to the NRC dated February 24, 2005, "Vogtle Electric Generating Plant, Revised Response to Generic Letter 97-06, 'Degradation of Steam Generator Internals.'" ADAMS Accession No. ML050590124

Letter from D.E. Grissette, Southern Nuclear Operating Co., Inc., to the NRC dated April 12, 2005, "Vogtle Electric Generating Plant, Technical Specification Report 1-2005-1, Number of Steam Generator Tubes Plugged During 1R12." ADAMS Accession No. ML051040239

Letter from C. Gratton, NRC, to D.E. Grissette, Southern Nuclear Operating Co., Inc., dated June 3, 2005, “Vogtle Electric Generating Station (Vogtle), Unit 1—Summary of Conference Call Regarding the 2005 Spring Outage Steam Generator Tube Inspections.” ADAMS Accession No. ML051400035

Letter from D.E. Grissette, Southern Nuclear Operating Co., Inc., to the NRC dated July 1, 2005, “Vogtle Electric Generating Plant, Inservice Inspection Summary Report.” ADAMS Accession No. ML052060257

Letter from C. Gratton, NRC, to D.E. Grissette, Southern Nuclear Operating Co., Inc., dated March 7, 2006, “Vogtle Electric Generating Plant, Unit 1 (Vogtle 1)—Summary of the Staff’s Review of the Steam Generator Tube Inservice Inspection Reports for the End-of-Cycle 12 Refueling Outage in Spring 2005 (TAC No. MC8105).” ADAMS Accession No. ML060320582

Letter from C. Gratton, NRC, to D.E. Grissette, Southern Nuclear Operating Co., Inc., dated August 28, 2006, “Vogtle Electric Generating Plant, Units 1 and 2, Issuance of Amendments Regarding Steam Generator Tube Integrity (TAC Nos. MD1075 and MD1076).” ADAMS Accession No. ML062360577

Letter from C. Gratton, NRC, to D.E. Grissette, Southern Nuclear Operating Co., Inc., dated September 12, 2006, “Vogtle Electric Generating Plant, Units 1 and 2, Issuance of Amendments Regarding the Steam Generator Tube Surveillance Program (TAC Nos. MD2642 and MD2643).” ADAMS Accession No. ML062260302

Letter from R.E. Martin, NRC, to D.E. Grissette, Southern Nuclear Operating Co., Inc., dated December 19, 2006, “Vogtle Electric Generating Plant, Unit 1 (Vogtle)—Summary of Conference Call Regarding the 2006 Fall Outage Steam Generator Tube Inspections (TAC No. MD3371).” ADAMS Accession No. ML063390165

Letter from B.J. George, Southern Nuclear Operating Co., Inc., to the NRC dated April 18, 2007, “Vogtle Electric Generating Plant Unit 1, 1R13 Steam Generator Tube Inspection Report.” ADAMS Accession No. ML072480031

Letter from D.H. Jones, Southern Nuclear Operating Co., Inc., to the NRC dated January 31, 2008, “Vogtle Electric Generating Plant, Unit 1, Response to NRC Request for Additional Information Regarding the 2006 Unit 1 (1R13) Steam Generator Tube Inspections.” ADAMS Accession No. ML080320298

Letter from S.P. Lingam, NRC, to T.E. Tynan, Southern Nuclear Operating Co., Inc., dated April 9, 2008, “Vogtle Electric Generating Plant, Units 1 and 2, Issuance of Amendments Regarding Changes to Technical Specification (TS) Sections TS 5.5.9, ‘Steam Generator (SG) Program’ and TS 5.6.10, ‘Steam Generator Tube Inspection Report’ (TAC Nos. MD7450 and MD7451).” ADAMS Accession No. ML080950232

Letter from R.A. Jervey, NRC, to D.E. Grissette, Southern Nuclear Operating Co., Inc., dated May 28, 2008, “Vogtle Electric Generating Plant, Unit 1—Summary of Conference Calls Regarding the Spring 2008 Steam Generator Tube Inspections During Refueling Outage 14.” ADAMS Accession No. ML081430126

Letter from M.J. Ajluni, Southern Nuclear Operating Co., Inc., to the NRC dated October 17, 2008, “Vogtle Electric Generating Plant – Unit 1, Fourteenth Maintenance/Refueling Outage, Steam Generator Tube Inspection Report.” ADAMS Accession No. ML082911083

Letter from D.N. Wright, NRC, to M.J. Ajluni, Southern Nuclear Operating Co., Inc. dated June 18, 2009, “Vogtle Electric Generating Plant, Unit 1—Review of the 2008 Refueling Outage Steam Generator Tube Inservice Inspection Report (TAC No. ME0213).” ADAMS Accession No. ML091660259

Letter from D.N. Wright, NRC, to M.J. Ajluni, Southern Nuclear Operating Co., Inc. dated September 24, 2009, “Vogtle Electric Generating Plant, Units 1 and 2, Issuance of Amendments Regarding Technical Specification (TS) Section 5.5.9, ‘Steam Generator Program,’ and TS 5.6.10, ‘Steam Generator Tube Inspection Report,’ for Interim Alternate Repair Criteria (TAC Nos. ME1339 and ME1340).” ADAMS Accession No. ML092170782

Letter from D.N. Wright, NRC, to M.J. Ajluni, Southern Nuclear Operating Co., Inc., dated November 5, 2009, “Vogtle Electric Generating Plant, Unit 1—Summary of Conference Call Regarding the Fall 2009 Steam Generator Inspections (TAC No. ME2166).” ADAMS Accession No. ML093070375

Letter from M.J. Ajluni, Southern Nuclear Operating Co., Inc., to the NRC dated February 1, 2010, “Vogtle Electric Generating Plant – Unit 1, Supplement to 1R14 Steam Generator Inspection Report—Tube Pull Examination Results.” ADAMS Accession No. ML100560265

Letter from M.J. Ajluni, Southern Nuclear Operating Co., Inc., to the NRC dated April 13, 2010, “Vogtle Electric Generating Plant – Unit 1, Fifteenth Maintenance/Refueling Outage, Steam Generator Tube Inspection Report.” ADAMS Accession No. ML101040084

Letter from M.J. Ajluni, Southern Nuclear Operating Co., Inc., to the NRC dated August 6, 2010, “Vogtle Electric Generating Plant-Unit 1, Response to Request for Additional Information Related to Fifteenth Maintenance/Refueling Outage Steam Generator Tube Inspection Report.” ADAMS Accession No. ML102210415

Letter from R.E. Martin, NRC, to M.J. Ajluni, Southern Nuclear Operating Co., Inc., dated September 16, 2010, “Vogtle Electric Generating Plant, Unit 1—Review of Steam Generator Tube Inspections Performed During Fall 2009 Outage and Destructive Examination of 2008 Pulled Tubes (TAC No. ME3825).” ADAMS Accession No. ML102520106

Letter from P.G. Boyle, NRC, to M.J. Ajluni, Southern Nuclear Operating Co., Inc., dated March 14, 2011, “Vogtle Electric Generating Plant, Units 1 and 2, Issuance of Amendments Regarding Steam Generator Tube Inspection Alternate Inspection Criteria (TAC Nos. ME5067 and ME5068).” ADAMS Accession No. ML110660264

Letter from M.J. Ajluni, Southern Nuclear Operating Co., Inc., to the NRC dated June 30, 2011, “Vogtle Electric Generating Plant-Unit 1, 1R16 Inservice Inspection Report Summary.” ADAMS Accession No. ML111820361

Letter from M.J. Ajluni, Southern Nuclear Operating Co., Inc., to the NRC dated September 21, 2011, “Vogtle Electric Generating Plant – Unit 1, Sixteenth

Maintenance/Refueling Outage, Steam Generator Tube Inspection Report." ADAMS Accession No. ML112650199

Letter from M.J. Ajluni, Southern Nuclear Operating Co., Inc., to the NRC dated July 30, 2012, "Vogtle Electric Generating Plant – Unit 1, Response to Request for Additional Information Regarding the 2011 Steam Generator Tube Inspection Summary." ADAMS Accession No. ML12212A335

Letter from R.E. Martin, NRC, to M.J. Ajluni, Southern Nuclear Operating Co., Inc. dated September 10, 2012, "Vogtle Electric Generating Plant, Units 1 and 2, Issuance of Amendments Regarding Revision to Technical Specifications 5.5.9, 'Steam Generator (SG) Program,' and 5.6.10, 'Steam Generator Tube Inspection Report,' (TAC Nos. ME8313 and ME8314)." ADAMS Accession No. ML12216A056

Letter from M.J. Ajluni, Southern Nuclear Operating Co., Inc., to the NRC dated January 16, 2013, "Vogtle Electric Generating Plant – Unit 1, 1R17 Inservice Inspection Report Summary." ADAMS Accession No. ML13017A377

Letter from C.R. Pierce, Southern Nuclear Operating Co., Inc., to the NRC dated April 2, 2013, "Vogtle Electric Generating Plant – Unit 1, Seventeenth Maintenance/Refueling Outage, Steam Generator Tube Inspection Report." ADAMS Accession No. ML13093A178

Letter from R.E. Martin, NRC, to C.R. Pierce, Southern Nuclear Operating Co., Inc., dated September 26, 2013, "Vogtle Electric Generating Plant, Units 1 and 2, Farley Nuclear Plant, Units 1 and 2, Issuance of Amendments Regarding Steam Generator Tube Inspection Program (TAC Nos. MF0564, MF0565, MF0562, and MF0563)." ADAMS Accession No. ML13218B274

Letter from R.E. Martin, NRC, to C.R. Pierce, Southern Nuclear Operating Co., Inc. dated December 18, 2013, "Vogtle Electric Generating Plant, Unit 1—Regarding the 2012 Steam Generator Tube Inspections (TAC No. MF2343)." ADAMS Accession No. ML13346A152

Letter from C.R. Pierce, Southern Nuclear Operating Co., Inc., to the NRC dated October 3, 2014, "Vogtle Electric Generating Plant – Unit 1, Eighteenth Maintenance/Refueling Outage, Steam Generator Tube Inspection Report." ADAMS Accession No. ML14276A430

**Vogtle 2**

Letter from J.T. Gasser, Southern Nuclear Operating Co., Inc., to the NRC dated October 31, 2002, "Vogtle Electric Generating Plant, Technical Specification Report 2-2002-1, Number of Steam Generator Tubes Plugged During 2R9." ADAMS Accession No. ML023110389

Letter from J.T. Gasser, Southern Nuclear Operating Co., Inc., to the NRC dated February 4, 2003, "Vogtle Electric Generating Plant, Inservice Inspection Summary Report." ADAMS Accession No. ML030410264

Letter from B.R. Bonser, NRC, to J.T. Gasser Jr., Southern Nuclear Operating Co., Inc., dated April 24, 2003, "Vogtle Electric Generating Plant—NRC Integrated Inspection Report 50-424/03-02 and 50-425/03-02." ADAMS Accession No. ML031150065

Morning Report—Region II, dated May 3, 2004, "Steam Generator Tubes Degraded." ADAMS Accession No. ML041240281

Morning Report—Region II, dated May 10, 2004, "Steam Generator Tubes Degraded—Update." ADAMS Accession No. ML041310366

Letter from L.M. Stinson, Southern Nuclear Operating Co., Inc., to the NRC dated May 20, 2004, "Vogtle Electric Generating Plant, Technical Specification Report 2-2004-1, Number of Steam Generator Tubes Plugged During 2R10." ADAMS Accession No. ML041450232

Letter from C. Gratton, NRC, to J.T. Gasser, Southern Nuclear Operating Co., Inc., dated June 10, 2004, "Vogtle Electric Generating Plant, Unit 2—Summary of Conference Call with Southern Nuclear Operating Co. Regarding the 2004 Steam Generator Tube Inspection Results (TAC Nos. MC3046 and MC3047)." ADAMS Accession No. ML041660086

Letter from J.T. Gasser, Southern Nuclear Operating Co., Inc., to the NRC dated August 13, 2004, "Vogtle Electric Generating Plant, Inservice Inspection Summary Report." ADAMS Accession No. ML042330493

Morning Report—Region II, dated August 19, 2004, "Steam Generator Tubes Degraded—Updated." ADAMS Accession No. ML042320667

Letter from J.T. Gasser, Southern Nuclear Operating Co., Inc., to the NRC dated August 26, 2004, "Vogtle Electric Generating Plant, Response to NRC Questions Regarding the 2002 Unit 2 (2R9) and the 2003 Unit 1 (1R11) Steam Generator Tube Inspection Reports." ADAMS Accession No. ML042430424

Letter from L.M. Stinson, Southern Nuclear Operating Co., Inc., to the NRC dated October 25, 2004, "Joseph M. Farley Nuclear Plant, Vogtle Electric Generating Plant, Response to NRC Generic Letter 2004-01, 'Requirements for Steam Generator Tube Inspections.'" ADAMS Accession No. ML043010265

Letter from D.E. Grissette, Southern Nuclear Operating Co., Inc., to the NRC dated December 21, 2004, "Vogtle Electric Generating Plant, 2R10 Steam Generator Tube Pull Test Results." ADAMS Accession No. ML050060198

Letter from L.M. Stinson, Southern Nuclear Operating Co., Inc., to the NRC dated January 7, 2005, “Joseph M. Farley Nuclear Plant, Vogtle Electric Generating Plant, Supplemental Response to NRC Generic Letter 2004-01, ‘Requirements for Steam Generator Tube Inspections.’” ADAMS Accession No. ML050110224

Letter from D.E. Grissette, Southern Nuclear Operating Co., Inc., to the NRC dated February 24, 2005, “Vogtle Electric Generating Plant, Revised Response to Generic Letter 97-06, ‘Degradation of Steam Generator Internals.’” ADAMS Accession No. ML050590124

Letter from C. Gratton, NRC, to D.E. Grissette, Southern Nuclear Operating Co., Inc., dated June 2, 2005, “Vogtle Electric Generating Station, Unit 2—Review of Steam Generator Tube Activities for the Spring 2004 (2R10) Outage (TAC Nos. MC4377, MC3046, and MC3047).” ADAMS Accession No. ML051430048

Letter from C. Gratton, NRC, to D.E. Grissette, Southern Nuclear Operating Co., Inc., dated September 21, 2005, “Vogtle Electric Generating Plant, Units 1 and 2 Re: Issuance of Amendments Regarding the Steam Generator Tube Surveillance Program (TAC Nos. MC8078 and MC8079).” ADAMS Accession No. ML052630014

Letter from D.E. Grissette, Southern Nuclear Operating Co., Inc., to the NRC dated October 20, 2005, “Vogtle Electric Generating Plant, Technical Specification Report 2-2005-1, Number of Steam Generator Tubes Plugged During 2R11.” ADAMS Accession No. ML052940077

Letter from D.E. Grissette, Southern Nuclear Operating Co., Inc., to the NRC dated January 11, 2006, “Vogtle Electric Generating Plant, Inservice Inspection Summary Report.” ADAMS Accession No. ML060180170

Letter from D.E. Grissette, Southern Nuclear Operating Co., Inc., to the NRC dated August 16, 2006, “Vogtle Electric Generating Plant, Response to NRC Request for Additional Information Regarding the 2005 Unit 2 (2R11) Steam Generator Tube Inspection Report.” ADAMS Accession No. ML062290288

Letter from C. Gratton, NRC, to D.E. Grissette, Southern Nuclear Operating Co., Inc., dated August 28, 2006, “Vogtle Electric Generating Plant, Units 1 and 2, Issuance of Amendments Regarding Steam Generator Tube Integrity (TAC Nos. MD1075 and MD1076).” ADAMS Accession No. ML062360577

Letter from C. Gratton, NRC, to D.E. Grissette, Southern Nuclear Operating Co., Inc., dated September 12, 2006, “Vogtle Electric Generating Plant, Units 1 and 2, Issuance of Amendments Regarding the Steam Generator Tube Surveillance Program (TAC Nos. MD2642 and MD2643).” ADAMS Accession No. ML062260302

Letter from B.J. George, Southern Nuclear Operating Co., Inc., to the NRC dated October 12, 2007, “Vogtle Electric Generating Plant Unit 2, Twelfth Maintenance/Refueling Outage, Steam Generator Tube Inspection Report.” ADAMS Accession No. ML072880102

Letter from D.H. Jones, Southern Nuclear Operating Co., Inc., to the NRC dated February 25, 2008, “Vogtle Electric Generating Plant, Response to NRC Request for Additional

Information Regarding the 2007 Unit 2 (2R12) Steam Generator Tube Inspections." ADAMS Accession No. ML080570195

Letter from R.E. Martin, NRC, to T.E. Tynan, Southern Nuclear Operating Co., Inc., dated September 16, 2008, "Vogtle Electric Generating Plant, Units 1 and 2, Issuance of Amendments Regarding Steam Generator Tube Inspection Program (TAC Nos. MD9148 and MD9149)." ADAMS Accession No. ML082530038

Letter from M.J. Ajluni, Southern Nuclear Operating Co., Inc., to the NRC dated April 9, 2009, "Vogtle Electric Generating Plant – Unit 2, Thirteenth Maintenance/Refueling Outage, Steam Generator Tube Inspection Report." ADAMS Accession No. ML090990606

Letter from D.N. Wright, NRC, to M.J. Ajluni, Southern Nuclear Operating Co., Inc., dated September 24, 2009, "Vogtle Electric Generating Plant, Units 1 and 2, Issuance of Amendments Regarding Technical Specification (TS) Section 5.5.9, 'Steam Generator Program,' and TS 5.6.10, 'Steam Generator Tube Inspection Report,' for Interim Alternate Repair Criteria (TAC Nos. ME1339 and ME1340)." ADAMS Accession No. ML092170782

Letter from M.J. Ajluni, Southern Nuclear Operating Co., Inc., to the NRC dated September 28, 2010, "Vogtle Electric Generating Plant – Unit 2, Fourteenth Maintenance/Refueling Outage, Steam Generator Tube Inspection Report." ADAMS Accession No. ML102710369

Letter from P.G. Boyle, NRC, to M.J. Ajluni, Southern Nuclear Operating Co., Inc., dated March 14, 2011, "Vogtle Electric Generating Plant, Units 1 and 2, Issuance of Amendments Regarding Steam Generator Tube Inspection Alternate Inspection Criteria (TAC Nos. ME5067 and ME5068)." ADAMS Accession No. ML110660264

Letter from P.G. Boyle, NRC, to M.J. Ajluni, Southern Nuclear Operating Co., Inc., dated April 26, 2011, "Vogtle Electric Generating Plant, Unit 2 (Vogtle 2)—Review of the 2010 Refueling Outage Steam Generator Tube Inservice Inspection Report (TAC No. ME4842)." ADAMS Accession No. ML11101A083

Letter from M.J. Ajluni, Southern Nuclear Operating Co., Inc., to the NRC dated January 10, 2012, "Vogtle Electric Generating Plant – Unit 2, 2R15 Inservice Inspection Report Summary." ADAMS Accession No. ML120110136

Letter from M.J. Ajluni, Southern Nuclear Operating Co., Inc., to the NRC dated March 30, 2012, "Vogtle Electric Generating Plant – Unit 2, Fifteenth Maintenance/Refueling Outage, Steam Generator Tube Inspection Report." ADAMS Accession No. ML12093A048

Letter from M.J. Ajluni, Southern Nuclear Operating Co., Inc., to the NRC dated August 29, 2012, "Vogtle Electric Generating Plant – Unit 2, Response to Request for Additional Information Regarding the 2011 Steam Generator Tube Inspections." ADAMS Accession No. ML12243A249

Letter from R.E. Martin, NRC, to M.J. Ajluni, Southern Nuclear Operating Co., Inc., dated September 10, 2012, "Vogtle Electric Generating Plant, Units 1 and 2, Issuance of Amendments Regarding Revision to Technical Specifications 5.5.9, 'Steam Generator (SG) Program,' and 5.6.10, 'Steam Generator Tube Inspection Report,' (TAC Nos. ME8313 and ME8314)." ADAMS Accession No. ML12216A056

Letter from R.E. Martin, NRC, to M.J. Ajluni, Southern Nuclear Operating Co., Inc., dated April 25, 2013, “Vogtle Electric Generating Plant, Unit 2—Conference Calls Summary Regarding the Spring 2013 Steam Generator Tube Inspections (TAC No. MF0736).” ADAMS Accession No. ML13112A225

Letter from C.R. Pierce, Southern Nuclear Operating Co., Inc., to the NRC dated July 2, 2013, “Vogtle Electric Generating Plant – Unit 2, 2R16 Inservice Inspection Report Summary.” ADAMS Accession No. ML13184A269

Letter from C.R. Pierce, Southern Nuclear Operating Co., Inc., to the NRC dated September 26, 2013, “Vogtle Electric Generating Plant – Unit 2, Sixteenth Maintenance/Refueling Outage, Steam Generator Tube Inspection Report.” ADAMS Accession No. ML14170A021

Letter from R.E. Martin, NRC, to C.R. Pierce, Southern Nuclear Operating Co., Inc. dated September 26, 2013, “Vogtle Electric Generating Plant, Units 1 and 2, Farley Nuclear Plant, Units 1 and 2, Issuance of Amendments Regarding Steam Generator Tube Inspection Program (TAC Nos. MF0564, MF0565, MF0562, and MF0563).” ADAMS Accession No. ML13218B274

Letter from C.R. Pierce, Southern Nuclear Operating Co., Inc., to the NRC dated January 12, 2015, “Vogtle Electric Generating Plant, Unit 2, Response to ‘Request for Additional Information on Spring 2013 Steam Generator Tube Inspections (TAC No. MF4288).’” ADAMS Accession No. ML15013A023

Letter from C.R. Pierce, Southern Nuclear Operating Co., Inc., to the NRC dated February 23, 2015, “Vogtle Electric Generating Plant – Unit 2, Clarification of Response to ‘Request for Additional Information on Spring 2013 Steam Generator Tube Inspections (TAC No. MF4288).’” ADAMS Accession No. ML15054A536

**Wolf Creek**

Letter from R.A. Muench, Wolf Creek Nuclear Operating Corp., to the NRC dated April 21, 2002, "Docket No. 50-482: Steam Generator Tube Plugging Report." ADAMS Accession No. ML021220567

Preliminary Notification of Event or Unusual Occurrence – PNO-IV-02-023 dated May 16, 2002, "Unplanned Shutdown Due to Loose Part in Steam Generator D." ADAMS Accession No. ML021360620

Memorandum from J.N. Donohew, NRC to Docket File dated August 27, 2002, "Response to Request for Information on Loose Parts Found in the Steam Generator at Wolf Creek Generating Station." ADAMS Accession No. ML022340708

Letter from G.B. Fader, Wolf Creek Nuclear Operating Corp., to the NRC dated December 11, 2002, "Docket No. 50-482: Results of the Eleventh Steam Generator Tube Inservice Inspection." ADAMS Accession No. ML030020006

Letter from K.L. Scherich, Wolf Creek Nuclear Operating Corp., to the NRC dated July 23, 2003, "Docket No. 50-482: Response to Follow-up Questions Concerning the Results of the Eleventh Steam Generator Tube Inservice Inspection." ADAMS Accession No. ML032130386

Letter from B.T. McKinney, Wolf Creek Nuclear Operating Corp., to the NRC dated November 10, 2003, "Docket No. 50-482: Steam Generator Tube Plugging Report." ADAMS Accession No. ML033240355

Letter from R.A. Muench, Wolf Creek Nuclear Operating Corp., to the NRC dated October 27, 2004, "Docket No. 50-482: Response to NRC Generic Letter 2004-01." ADAMS Accession No. ML043070595

Letter from R.A. Muench, Wolf Creek Nuclear Operating Corp., to the NRC dated October 27, 2004, "Docket No. 50-482: Results of the Twelfth Steam Generator Tube Inservice Inspection." ADAMS Accession No. ML043080306

Letter from J.N. Donohew, NRC, to R.A. Muench, Wolf Creek Nuclear Operating Corp. dated April 28, 2005, "Wolf Creek Generating Station—Issuance of Exigent Amendment Re: Steam Generator (SG) Tube Surveillance Program (TAC No. MC6757)." ADAMS Accession No. ML051230044

Letter from T.J. Garrett, Wolf Creek Nuclear Operating Corp., to the NRC dated May 4, 2005, "Docket No. 50-482: Steam Generator Tube Plugging Report." ADAMS Accession No. ML051370402

Letter from T.J. Garrett, Wolf Creek Nuclear Operating Corp., to the NRC dated July 14, 2005, "Docket No. 50-482: Wolf Creek Nuclear Operating Corp.'s (WCNOC's) Response to Request for Additional Information Regarding the Steam Generator Tube Inspection Summary Reports for the Fall 2003 Outage (TAC No. MC5022)." ADAMS Accession No. ML052080042

Letter from T.J. Garrett, Wolf Creek Nuclear Operating Corp., to the NRC dated April 14, 2006, "Docket No. 50-482: Results of the Thirteenth Steam Generator Tube Inservice Inspection." ADAMS Accession. No. ML061100519

Letter from J.N. Donohew, NRC, to R.A. Muench, Wolf Creek Nuclear Operating Corp. dated May 8, 2006, “Wolf Creek Generating Station—Issuance of Amendment Regarding Steam Generator Tube Integrity Using the Consolidated Line Item Improvement Process (TAC Nos. MC8842 and MD0122).” ADAMS Accession No. ML061280189

Letter from J.N. Donohew, NRC, to R.A. Muench, Wolf Creek Nuclear Operating Corp. dated October 10, 2006, “Wolf Creek Generating Station—Issuance of Amendment Re: Steam Generator Tube Inspections within the Tubesheet (TAC No. MD2467).” ADAMS Accession No. ML062580016

Letter from T.J. Garrett, Wolf Creek Nuclear Operating Corp., to the NRC dated November 7, 2006, “Docket No. 50-482: Response to Request for Additional Information Concerning the Results of the Thirteenth Steam Generator Tube Inservice Inspection.” ADAMS Accession No. ML063190301

Letter from K.J. Moles, Wolf Creek Nuclear Operating Corp., to the NRC dated January 31, 2007, “Docket No. 50-482: Inservice Inspection Program Third Interval, First Period, Refueling Outage 15 Owner’s Activity Report.” ADAMS Accession No. ML070430458

Letter from T.J. Garrett, Wolf Creek Nuclear Operating Corp., to the NRC dated March 19, 2007, “Docket No. 50-482: Results of the Fourteenth Steam Generator Tube Inservice Inspection.” ADAMS Accession No. ML070860222

Letter from T.J. Garrett, Wolf Creek Nuclear Operating Corp., to the NRC dated February 28, 2008, “Docket No. 50-482: Response to Request for Additional Information Concerning the Results of the Fourteenth Steam Generator Tube Inservice Inspection (TAC No. MD5946).” ADAMS Accession No. ML080660359

Letter from J.N. Donohew, NRC, to R.A. Muench, Wolf Creek Nuclear Operating Corp. dated April 4, 2008, “Wolf Creek Generating Station—Issuance of Amendment Re: Revision to Technical Specification 5.5.9 on the Steam Generator Program (TAC No. MD8054).” ADAMS Accession No. ML080840003

Letter from B.K. Singal, NRC, to R.A. Muench, Wolf Creek Nuclear Operating Corp. dated May 8, 2008, “Wolf Creek Generating Station—Summary of Conference Call Regarding the Spring 2008 Steam Generator Tube inspections During Refueling Outage 16 (TAC No. MD8099).” ADAMS Accession No. ML081280305

Letter from T.J. Garrett, Wolf Creek Nuclear Operating Corp., to the NRC dated October 27, 2008, “Docket No. 50-482: Results of the Fifteenth Steam Generator Tube Inservice Inspection.” ADAMS Accession No. ML083090879

Letter from T.J. Garrett, Wolf Creek Nuclear Operating Corp., to the NRC dated January 29, 2009, “Docket No. 50-482: Response to Request for Additional Information Concerning the Results of the Fifteenth Steam Generator Tube Inservice Inspection.” ADAMS Accession No. ML090430507

Letter from B.K. Singal, NRC, to R.A. Muench, Wolf Creek Nuclear Operating Corp. dated October 19, 2009, “Wolf Creek Generating Station—Issuance of Amendment Re: Revision to Technical Specification (TS) 5.5.9, ‘Steam Generator (SG) Program,’ and TS 5.6.10, ‘Steam

Generator Tube Inspection Report' for Alternate Repair Criteria (TAC No. ME1393)." ADAMS Accession No. ML092750606

Letter from T.J. Garrett, Wolf Creek Nuclear Operating Corp., to the NRC dated October 25, 2009, "Docket No. 50-482: Notification of Deviation from EPRI Pressurized Water Reactor Secondary Water Chemistry Guidelines." ADAMS Accession No. ML093080013

Letter from T.J. Garrett, Wolf Creek Nuclear Operating Corp., to the NRC dated April 8, 2010, "Docket No. 50-482: Results of the Sixteenth Steam Generator Tube Inservice Inspection." ADAMS Accession No. ML101100676

Letter from T.J. Garrett, Wolf Creek Nuclear Operating Corp., to the NRC dated July 15, 2010, "Docket No. 50-482: Response to Request for Additional Information Regarding the Sixteenth Steam Generator Tube Inservice Inspection." ADAMS Accession No. ML102080031

Letter from J.R. Hall, NRC, to M.W. Sunseri, Wolf Creek Nuclear Operating Corp. dated April 6, 2011, "Wolf Creek Generating Station—Issuance of Amendment Re: Changes to Technical Specification (TS) 5.5.9, 'Steam Generator (SG) Program,' and TS 5.6.10, 'Steam Generator Tube Inspection Report,' (TAC No. ME5121)." ADAMS Accession No. ML110840590

Letter from R.P. Clemens, Wolf Creek Nuclear Operating Corp., to the NRC dated October 19, 2011, "Docket No. 50-482: Results of the Seventeenth Steam Generator Tube Inservice Inspection." ADAMS Accession No. ML11298A261

Letter from T.A. Beltz, NRC, to M.W. Sunseri, Wolf Creek Nuclear Operating Corp. dated August 3, 2012, "Wolf Creek Generating Station—Review of the 2011 Steam Generator Tube Inspections During Refueling Outage 18 (TAC No. ME7755)." ADAMS Accession No. ML12137A280

Letter from C.F. Lyon, NRC, to M.W. Sunseri, Wolf Creek Nuclear Operating Corp. dated November 19, 2012, "Wolf Creek Generating Station—Issuance of Amendment Re: Adoption of TSTF-510, Revision 2, 'Revision to Steam Generator Program Inspection Frequencies and Tube Sample Selection,' Using the Consolidated Line Item Improvement Process (TAC No. ME8569)." ADAMS Accession No. ML12289A896

Letter from C.F. Lyon, NRC, to M.W. Sunseri, Wolf Creek Nuclear Operating Corp. dated December 11, 2012, "Wolf Creek Generating Station—Issuance of Amendment Re: Steam Generator Tube Permanent Alternate Repair Criteria (TAC No. ME8350)." ADAMS Accession No. ML12300A309

Letter from C.F. Lyon, NRC, to M.W. Sunseri, Wolf Creek Nuclear Operating Corp. dated April 1, 2013, "Wolf Creek Generating Station—Summary of Steam Generator Conference Calls For Refueling Outage 19 (TAC No. MF0736)." ADAMS Accession No. ML13077A073

Letter from J.P. Broschak, Wolf Creek Nuclear Operating Corp., to the NRC dated September 30, 2013, "Docket No. 50-482: Results of the Eighteenth Steam Generator Tube Inservice Inspection." ADAMS Accession No. ML13277A558

Letter from J.P. Broschak, Wolf Creek Nuclear Operating Corp., to the NRC dated February 6, 2014, "Docket No. 50-482: Response to Request for Additional Information Regarding the 2013 Steam Generator Inspections." ADAMS Accession No. ML14049A286

**Indian Point 2**

Letter from F. Dacimo, Entergy Nuclear Operations, Inc., to the NRC dated August 21, 2002, "Proposed Steam Generator Examination Program – 2002 Refueling Outage (2R15)." ADAMS Accession No. ML022390099

Letter from F. Dacimo, Entergy Nuclear Operations, Inc., to the NRC dated December 19, 2002, "Steam Generator Inservice Examination Program Results, 2002 Refueling Outage (2R15)." ADAMS Accession No. ML023580031

Letter from M.R. Kansler, Entergy Nuclear Operations, Inc., to the NRC dated October 21, 2003, "Indian Point Nuclear Generating Unit No. 2, Docket No. 50-247, Proposed Change to Technical Specifications: One-Time Change to the Indian Point 2 Steam Generator Tube Inspection Requirements." ADAMS Accession No. ML032960328

Letter from M.R. Kansler, Entergy Nuclear Operations, Inc., to the NRC dated March 31, 2004, "Indian Point Nuclear Generating Unit No. 2, Docket No. 50-247, Response to NRC Request for Additional Information Re: 'Proposed Change to Technical Specifications: One-Time Change to the Indian Point 2 Steam Generator Tube Inspection Requirements (TAC No. MC1260).'" ADAMS Accession No. ML040930142

Letter from P.D. Milano, NRC, to M.R. Kansler, Entergy Nuclear Operations, Inc., dated June 23, 2004, "Indian Point Nuclear Generating Unit No. 2—Amendment Re: One-Time Change to Steam Generator Tube Inspection Interval (TAC No. MC1260)." ADAMS Accession No. ML041750603

Letter from M.R. Kansler, Entergy Nuclear Operations, Inc., to the NRC dated October 27, 2004, "Indian Point Nuclear Generating Unit No. 2, Docket No. 50-247, Indian Point Nuclear Generating Unit No. 3, Docket No. 50-286, 60-Day Response to Generic Letter 2004-01, 'Requirements for Steam Generator Tube Inspections.'" ADAMS Accession No. ML043070599

Letter from P.W. Conroy, Entergy Nuclear Operations, Inc., to the NRC dated February 13, 2006, "Proposed Steam Generator Examination Program – 2006 Refueling Outage (2R17)." ADAMS Accession No. ML060530378

Letter from P.W. Conroy, Entergy Nuclear Operations, Inc., to the NRC dated March 29, 2006, "Reply to Request for Additional Information Regarding Indian Point 2 Steam Generator Examination Program for 2R17 (TAC No. MD0213)." ADAMS Accession No. ML061000616

"Condition Monitoring and Operational Assessment of Indian Point 2 Steam Generator Tubing for Cycles 18 and 19," dated May 9, 2006. ADAMS Accession No. ML081200225

Letter from F. Dacimo, Entergy Nuclear Operations, Inc., to the NRC dated June 14, 2006, "Steam Generator Examination Program Results, 2006 Refueling Outage (2R17)." ADAMS Accession No. ML061780303

Letter from F.R. Dacimo, Entergy Nuclear Operations, Inc., to the NRC dated November 15, 2006, "Reply to Request for Additional Information Regarding Steam Generator Examination Results for 2006 Refueling Outage (TAC No. MD2783)." ADAMS Accession No. ML063240144

Letter from J.P. Boska, NRC, to M.R. Kansler, Entergy Nuclear Operations, Inc., dated February 13, 2007, “Indian Point Nuclear Generating Unit Nos. 2 and 3—Issuance of Amendments Re: Steam Generator Tube Integrity Technical Specification Based on Technical Specification Task Force (TSTF) Document TSTF-449, ‘Steam Generator Tube Integrity’ (TAC Nos. MD0083, MD0084, MD2178, and MD2179).” ADAMS Accession No. ML063450333

Letter from F.R. Dacimo, Entergy Nuclear Operations, Inc., to the NRC dated January 4, 2008, “Reply to Request for Additional Information Regarding License Renewal Application—(Steam Generator Tube Integrity and Chemistry).” ADAMS Accession No. ML080160123

Letter from R. Walpole, Entergy Nuclear Operations, Inc., to the NRC dated October 20, 2008, “Technical Specification 5.6.7—Steam Generator Tube Inspection Report—Spring 2008 Refueling Outage.” ADAMS Accession No. ML083030054

Letter from R. Walpole, Entergy Nuclear Operations, Inc., to the NRC dated August 24, 2010, “Technical Specification 5.6.7—IP2 Steam Generator Tube Inspection Report—Spring 2010 Refueling Outage; Indian Point Unit No. 2; Docket No. 50-247; License No. DPR-26.” ADAMS Accession No. ML102440036

Letter from R. Walpole, Entergy Nuclear Operations, Inc., to the NRC dated February 16, 2011, “Response to Request for Additional Information on IP2 Steam Generator Inspection Report; Indian Point Unit Number 2; Docket No. 50-247; License No. DPR-26.” ADAMS Accession No. ML110550188

Letter from R. Walpole, Entergy Nuclear Operations, Inc., to the NRC dated April 3, 2012, “Technical Specification 5.6.7—IP2 Steam Generator Tube Inspection Report—Spring 2012 Refueling Outage; Indian Point Unit No. 2; Docket No. 50-247; License No. DPR-26.” ADAMS Accession Nos. ML12103A168 and ML12108A050

Letter from D.V. Pickett, NRC, to Entergy Nuclear Operations, Inc. dated September 5, 2014, “Indian Point Nuclear Generating Unit No. 2—Issuance of Amendment Re: H* Alternate Repair Criteria for Steam Generator Tube Inspection and Repair (TAC No. MF3369).” ADAMS Accession No. ML14198A161

Letter from J.A. Ventosa, Entergy Nuclear Operations, Inc., to the NRC dated September 8, 2014, “Steam Generator Examination Program Results 2014 Refueling Outage (2R21); Indian Point Unit No. 2; Docket No. 50-247; License No. DPR-26.” ADAMS Accession No. ML14262A059

Letter from D.V. Pickett, NRC, to Entergy Nuclear Operations, Inc. dated September 30, 2014, “Indian Point Nuclear Generating Unit No. 2—Correction Letter to Amendment No. 277 Re: H* Alternate Repair Criteria for Steam Generator Tube Inspection and Repair (TAC No. MF3369).” ADAMS Accession No. ML14252A679

**Point Beach 1**

Letter from G.D. Van Middlesworth, Nuclear Management Co., LLC, to the NRC dated June 10, 2004, "Summary of Spring 2004 Unit 1 (U1R28) Steam Generator Examinations." ADAMS Accession No. ML041740744

Letter from D.L. Koehl, Nuclear Management Co., LLC, to the NRC dated October 29, 2004, "60-Day Response to Generic Letter 2004-01, 'Requirements for Steam Generator Tube Inspections.'" ADAMS Accession No. ML043100523

Letter from D.L. Koehl, Nuclear Management Co., LLC, to the NRC dated January 6, 2005, "Response to Request for Additional Information Regarding the Point Beach Nuclear Plant License Renewal Application (TAC Nos. MC2099 and MC2100)." ADAMS Accession No. ML050180203

Letter from D.L. Koehl, Nuclear Management Co., LLC, to the NRC dated March 4, 2005, "Supplement to Spring 2004 Unit 1 (U1R28) Steam Generator Examination Report." ADAMS Accession No. ML050830168

Letter from D.L. Koehl, Nuclear Management Co., LLC, to the NRC dated February 21, 2006, "Fall 2005 Unit 1 (U1R29) Steam Generator Tube Inspection Report." ADAMS Accession No. ML060600189

Letter from D.L. Koehl, Nuclear Management Co., LLC, to the NRC dated July 14, 2006, "Response to Request for Additional Information, Fall 2005 Unit 1 (U1R29) Steam Generator Tube Inspection Report." ADAMS Accession No. ML061980407

Letter from C.F. Lyon, NRC, to D.L. Koehl, Nuclear Management Co., LLC dated August 22, 2006, "Point Beach Nuclear Plant, Units 1 and 2—Issuance of Amendments Re: Steam Generator Tube Integrity (TAC Nos. MD0194 and MD0195)." ADAMS Accession No. ML062050312

Letter from C.F. Lyon, NRC, to D.L. Koehl, Nuclear Management Co., LLC dated September 18, 2006, "Point Beach Nuclear Plant, Units 1 and 2—Correction to Amendments Re: Steam Generator Tube Integrity (TAC Nos. MD0194 and MD0195)." ADAMS Accession No. ML062440008

Letter from P.D. Milano, NRC, to D.L. Koehl, Nuclear Management Co., LLC dated April 4, 2007, "Point Beach Nuclear Plant, Unit 1—Issuance of Amendment Re: Steam Generator Tube Repair in the Tubesheet (TAC No. MD2583)." ADAMS Accession No. ML070800705

Letter from J.H. McCarthy, FPL Energy Point Beach, LLC, to the NRC dated October 25, 2007, "Spring 2007 Unit 1 (U1R30), Steam Generator Tube Inspection Report." ADAMS Accession No. ML072990108

Letter from J.H. McCarthy, FPL Energy Point Beach, LLC, to the NRC dated March 14, 2008, "Response to Request for Additional Information, Spring 2007 Unit 1 (U1R30), Steam Generator Tube Inspection Report." ADAMS Accession No. ML080770187

Letter from J. Cushing, NRC, to L. Myer, FPL Energy Point Beach, LLC. dated October 7, 2008, “Point Beach Nuclear Plant, Unit 1—Issuance of Amendment Re: Technical Specification 5.5.8 and 5.6.8 (TAC No. MD8800).” ADAMS Accession No. ML082540876

Memorandum from J. Cushing, NRC, to File dated November 20, 2008, “Point Beach Nuclear Plant, Unit 1—Teleconference Summary Regarding the 2008 Steam Generator Tube Inspection Results (TAC No. MD9468).” ADAMS Accession No. ML083230820

Letter from J. Costedio, NextEra Energy Point Beach, LLC, to the NRC dated May 7, 2009, “Fall 2008 Unit 1 (U1R31), Steam Generator Tube Inspection Report.” ADAMS Accession No. ML091280187

Letter from J. Costedio, NextEra Energy Point Beach, LLC, to the NRC dated October 16, 2009, “Response to Request for Additional Information, Fall 2008 Unit 1 (U1R31), Steam Generator Tube Inspection Report.” ADAMS Accession No. ML092890472

Letter from T. Beltz, NRC, to NextEra Energy Point Beach, LLC, dated December 7, 2011, “Point Beach Nuclear Plant, Unit 1—Summary of Conference Call Regarding Steam Generator Tube Inspections During Fall 2011 Refueling Outage (TAC No. ME7140).” ADAMS Accession No. ML113270240

Letter from J. Costedio, NextEra Energy Point Beach, LLC, to the NRC dated May 29, 2012, “Fall 2011 Unit 1 (U133), Steam Generator Tube Inspection Report.” ADAMS Accession No. ML12150A287

Letter from J. Costedio, NextEra Energy Point Beach, LLC, to the NRC dated September 25, 2012, “Response to Request for Additional Information, Fall 2011 Unit 1 (U1R33), Steam Generator Tube Inspection Report.” ADAMS Accession No. ML12270A037

Letter from M. Millen, NextEra Energy Point Beach, LLC, to the NRC dated January 31, 2013, “Fall 2011 Unit 1 Refueling Outage (U1R33), Steam Generator Tube Inspection Report.” ADAMS Accession No. ML13031A353

Letter from M. Millen, NextEra Energy Point Beach, LLC, to the NRC dated September 24, 2013, “Spring 2013 Unit 1 (U1R34), Steam Generator Tube Inspection Report.” ADAMS Accession No. ML13268A108

Letter from M. Millen, NextEra Energy Point Beach, LLC, to the NRC dated March 3, 2014, “Response to Request for Additional Information, Spring 2013 Unit 1 (U1R34), Steam Generator Tube Inspection Report.” ADAMS Accession No. ML14062A047

**Robinson 2**

Letter from C.T. Baucom, Carolina Power—Light Co., to the NRC dated November 11, 2002, "H.B. Robinson Steam Electric Plant, Unit No. 2, Docket No. 50-261/License No. DPR-23; Steam Generator Tube Plugging During Refueling Outage 21." ADAMS Accession No. ML023170211

Letter from C.T. Baucom, Carolina Power & Light Co., to the NRC dated November 14, 2002, "H.B. Robinson Steam Electric Plant, Unit No. 2, Docket No. 50-261/License No. DPR-23; Monthly Operating Report." ADAMS Accession No. ML023220203

Letter from C.T. Baucom, Carolina Power & Light Co., to the NRC dated February 11, 2003, "H.B. Robinson Steam Electric Plant, Unit No. 2, Docket No. 50-261/License No. DPR-23; Submittal of 90 Day Inservice Inspection Summary Report." ADAMS Accession No. ML030440106

Letter from C.T. Baucom, Carolina Power & Light Co., to the NRC dated July 16, 2003, "H.B. Robinson Steam Electric Plant, Unit No. 2, Docket No. 50-261/License No. DPR-23; Response to NRC Request for Additional Information on the Steam Generator Inservice Inspection Results." ADAMS Accession No. ML032020119

Letter from C.T. Baucom, Carolina Power & Light Co., to the NRC dated May 18, 2004, "H.B. Robinson Steam Electric Plant, Unit No. 2, Docket No. 50-261/License No. DPR-23; Steam Generator Tube Plugging Report for Refueling Outage 22." ADAMS Accession No. ML041460268

Letter from C.T. Baucom, Carolina Power & Light Co., to the NRC dated June 15, 2004, "H.B. Robinson Steam Electric Plant, Unit No. 2, Docket No. 50-261/License No. DPR-23; Monthly Operating Report." ADAMS Accession No. ML041680442

Letter from C.T. Baucom, Carolina Power & Light Co., to the NRC dated August 26, 2004, "H.B. Robinson Steam Electric Plant, Unit No. 2, Docket No. 50-261/License No. DPR-23; Submittal of 90 Day Inservice Inspection Summary Report." ADAMS Accession No. ML042430598

Letter from J.F. Lucas, Carolina Power & Light Co., to the NRC dated October 28, 2004, "H.B. Robinson Steam Electric Plant, Unit No. 2, Docket No. 50-261/License No. DPR-23; Response to NRC Generic Letter 2004-01, 'Requirements for Steam Generator Tube Inspections.'" ADAMS Accession No. ML043070395

Letter from C.P. Patel, NRC, to J.W. Moyer, Carolina Power & Light Co. dated December 20, 2004, "Summary of Conference Call with Carolina Power & Light Co. on the H.B. Robinson Unit No. 2 Spring 2004 Steam Generator Inspections (TAC No. MC3038)." ADAMS Accession No. ML043640546

Letter from C.T. Baucom, Carolina Power & Light Co., to the NRC dated May 25, 2005, "H.B. Robinson Steam Electric Plant, Unit No. 2, Docket No. 50-261/License No. DPR-23; Response to NRC Request for Additional Information on the Steam Generator Inservice Inspection Results (TAC No. MC4588)." ADAMS Accession No. ML051470117

Letter from C.T. Baucom, Carolina Power & Light Co., to the NRC dated January 16, 2006, "H.B. Robinson Steam Electric Plant, Unit No. 2, Docket No. 50-261/License No. DPR-23;

Submittal of 90 Day Inservice Inspection Summary Report." ADAMS Accession No. ML060240260

Letter from C.P. Patel, NRC to T.D. Walt, Carolina Power & Light Co. dated March 12, 2007, "H.B. Robinson Steam Electric Plant, Unit No. 2—Issuance of an Amendment—Steam Generator Tube Integrity (TAC No. MD2136)." ADAMS Accession No. ML070510368

Letter from C.P. Patel, NRC to T.D. Walt, Carolina Power & Light Co. dated April 9, 2007, "H.B. Robinson Steam Electric Plant, Unit No. 2—Issuance of an Amendment on Steam Generator Tube Repair in the Tubesheet (TAC No. MD4046)." ADAMS Accession No. ML071060259

Letter from C.T. Baucom, Carolina Power & Light Co., to the NRC dated August 2, 2007, "H.B. Robinson Steam Electric Plant, Unit No. 2, Docket No. 50-261/License No. DPR-23; Submittal of 90 Day Inservice Inspection Summary Report." ADAMS Accession No. ML072250364

Letter From C. Castell, Carolina Power & Light Co., to the NRC dated November 1, 2007, "H.B. Robinson Steam Electric Plant, Unit No. 2, Docket No. 50-261/License No. DPR-23; Steam Generator Tube Inspection Report." ADAMS Accession No. ML073110281

Letter From C. Castell, Carolina Power & Light Co., to the NRC dated April 30, 2008, "H.B. Robinson Steam Electric Plant, Unit No. 2, Docket No. 50-261/License No. DPR-23; Response to NRC Request for Additional Information on the Steam Generator Inservice Inspection Results." ADAMS Accession No. ML081270049

Letter From C. Castell, Carolina Power & Light Co., to the NRC dated June 24, 2008, "H.B. Robinson Steam Electric Plant, Unit No. 2, Docket No. 50-261/License No DPR-23; Response to NRC Request for Additional Information on the Steam Generator Inservice Inspection Results." ADAMS Accession No. ML081790164

Letter from M. Vaaler, NRC, to T.D. Walt, Carolina Power & Light Co. dated July 10, 2008, "H.B. Robinson Steam Electric Plant, Unit No. 2—Review of the Spring 2007 Refueling Outage 24 Steam Generator Tube Inspection Report (TAC No. MD7311)." ADAMS Accession No. ML081900019

Letter from C.A. Castell, Carolina Power & Light Co., to the NRC dated February 11, 2009, "H.B. Robinson Steam Electric Plant, Unit No. 2, Docket No. 50-261/License No. DPR-23; Submittal of 90 Day Inservice Inspection Summary Report." ADAMS Accession No. ML090500831

Letter from C.A. Castell, Carolina Power & Light Co., to the NRC dated September 22, 2010, "H.B. Robinson Steam Electric Plant, Unit No. 2, Docket No. 50-261/License No. DPR-23; Submittal of 90 Day Inservice Inspection Summary Report." ADAMS Accession No. ML102730790

Letter from C. Castell, Carolina Power & Light Co., to the NRC dated January 13, 2011, "H.B. Robinson Steam Electric Plant, Unit No. 2, Docket No. 50-261/License No. DPR-23; Steam Generator Tube Inspection Report." ADAMS Accession No. ML110190222

Letter from R. J. Rogalski, Carolina Power & Light Co., to the NRC dated October 26, 2011, "H.B. Robinson Steam Electric Plant, Unit No. 2, Docket No 50-261/Renewed License No. DPR-23; Response to NRC Request for Additional Information Regarding H.B. Robinson Steam Generator Tube Report Dated January 13, 2011." ADAMS Accession No. ML11305A077

Letter from W.R. Hightower, Carolina Power & Light Co., to the NRC dated June 15, 2012, "H.B. Robinson Steam Electric Plant, Unit No. 2, Docket No. 50-261/Renewed License No. DPR-23; Submittal of 90 Day Inservice Inspection Summary Report." ADAMS Accession No. ML12184A040

Letter from S.P. Lingam, NRC, to W.G. Gideon, Duke Energy Progress, Inc. dated December 13, 2013, "H.B. Robinson Steam Electric Plant Unit 2—Summary of Conference Call Regarding the Fall 2013 Steam Generator Tube Inservice Inspections (TAC No. MF2941)." ADAMS Accession No. ML13333B555

Letter from W.R. Gideon, Duke Energy Progress, Inc., to the NRC dated January 30, 2014, "H.B. Robinson Steam Electric Plant, Unit No. 2, Docket No. 50-261/Renewed License No. DPR-23; Submittal of Ninety Day Inservice Inspection Summary Report." ADAMS Accession No. ML14037A230

Preliminary Notification—PNO-II-14-004 dated March 10, 2014. ADAMS Accession No. ML14069A350

Preliminary Notification—PNO-II-14-004 dated April 7, 2014. ADAMS Accession No. ML14098A323

Letter from S.W. Peavyhouse, Duke Energy Progress, Inc., to the NRC dated April 29, 2014, "H.B. Robinson Steam Electric Plant, Unit No. 2, Docket No. 50-261/Renewed License No. DPR-23; Refueling Outage 28 Steam Generator Tube Inspection Report." ADAMS Accession No. ML14127A066

Letter from S.W. Peavyhouse, Duke Energy Progress, Inc., to the NRC dated September 29, 2014, "H.B. Robinson Steam Electric Plant, Unit No. 2, Docket No. 50-261/Renewed License No. DPR-23; Forced Outage R229F3 Steam Generator Tube Inspection Report." ADAMS Accession No. ML14282A020

Letter from M. Barillas, NRC, to Site Vice President, Duke Energy Progress, Inc. dated October 27, 2014, "H.B. Robinson Steam Electric Plant, Unit No. 2—Summary of Conference Call Regarding Steam Generator Inspections During a Forced Outage in Spring 2014 (TAC No. MF5001)." ADAMS Accession No. ML14293A672

Letter from S.W. Peavyhouse, Duke Energy Progress, Inc., to the NRC dated November 13, 2014, "H.B. Robinson Steam Electric Plant, Unit No. 2, Docket No. 50-261/Renewed License No. DPR-23; Response to NRC Request for Additional Information Related to Refueling Outage 28 Steam Generator Tube Inspection Report." ADAMS Accession No. ML14364A080

**Salem 1**

Letter from D.F. Garchow, PSEG Nuclear LLC, to the NRC dated November 5, 2002, “Steam Generator Tube Plugging Report; Technical Specification 4.4.5.5.a; Salem Generating Station Unit No. 1; Facility Operating License DPR-70; Docket No. 50-272.” ADAMS Accession No. ML023180283

Letter from G. Salamon, PSEG Nuclear LLC, to the NRC dated February 27, 2003, “Technical Specification 6.9.1.5 Annual Reports; Salem and Hope Creek Generating Stations; Docket Nos. 50-272, 50-311, and 50-354.” ADAMS Accession No. ML030630790

Letter from D.F. Garchow, PSEG Nuclear LLC, to the NRC dated January 7, 2004, “Response to NRC Request for Additional Information (RAI); Re: Steam Generator Tube Inspections Annual Report; (TAC Nos. MB8098 and MB8099); Salem Unit Nos. 1 and 2; Facility Operating License Nos. DPR-70 and DPR 75; Docket Nos. 50-272 and 50-311.” ADAMS Accession No. ML040140289

Letter from S.R. Mannon, PSEG Nuclear LLC, to the NRC dated May 3, 2004, “Steam Generator Tube Plugging Report; Technical Specification 4.4.5.5.a; Salem Generating Station Unit No. 1; Facility Operating License DPR-70; Docket No. 50-272.” ADAMS Accession No. ML041320507

Letter from M.H. Brothers, PSEG Nuclear LLC, to the NRC dated October 29, 2004, “Response to Generic Letter 2004-01, ‘Requirements for Steam Generator Tube Inspections’; Salem Generating Station Unit 1 and Unit 2; Docket Nos. 50-272 and 50-311; Facility Operating License Nos. DPR-70 and DPR-75.” ADAMS Accession No. ML043140237

Letter from C.L. Perino, PSEG Nuclear LLC, to the NRC dated February 25, 2005, “Technical Specification 6.9.1.5 Annual Reports; Salem and Hope Creek Generating Stations; Docket Nos. 50-272, 50-311, and 50-354.” ADAMS Accession No. ML050670560

Letter from S.N. Bailey, NRC, to W. Levis, PSEG Nuclear LLC dated October 14, 2005, “Salem Nuclear Generating Station, Unit No. 1—Issuance of Amendments Re: Steam Generator Tube Inservice Inspection Program (TAC No. MC6213).” ADAMS Accession No. ML052900201

Letter from R.B. Ennis, NRC, to W. Levis, PSEG Nuclear LLC dated March 27, 2007, “Salem Nuclear Generating Station, Unit No. 1, Issuance of Amendment Re: Steam Generator Alternate Repair Criteria (TAC No. MD4034).” ADAMS Accession No. ML070790081

Letter from R.C. Braun, PSEG Nuclear LLC, to the NRC dated October 10, 2007, “Steam Generator Tube Inspection Report—Eighteenth Refueling Outage (1R18).” ADAMS Accession No. ML072970094

Letter from C.T. Neely, PSEG Nuclear LLC, to the NRC dated April 30, 2008, “RAI Response, Steam Generator Tube Inspection Report—Eighteenth Refueling Outage (1R18).” ADAMS Accession No. ML081290513

Letter from R.B. Ennis, NRC, to T. Joyce, PSEG Nuclear LLC dated March 29, 2010, “Salem Nuclear Generating Station, Unit No. 1, Issuance of Amendment Re: Steam Generator Inspection Scope and Repair Requirements (TAC No. ME2374).” ADAMS Accession No. ML100570452

Letter from R.B. Ennis, NRC, to T. Joyce, PSEG Nuclear LLC dated August 31, 2010, "Summary of Conference Call Regarding the Spring 2010 Steam Generator Tube Inspections at Salem Nuclear Generating Station, Unit No. 1 (TAC No. ME3459)." ADAMS Accession No. ML102290044

Letter from C.J. Fricker, PSEG Nuclear LLC, to the NRC dated October 21, 2010, "Steam Generator Tube Inspection Report—Twentieth Refueling Outage (1R20)." ADAMS Accession No. ML102980089

Letter from C.J. Fricker, PSEG Nuclear LLC, to the NRC dated February 10, 2011, "Response to Salem Nuclear Generating Station, Unit No. 1, Draft Request for Additional Information (TAC No. ME4923)." ADAMS Accession No. ML110550192

Letter from J.D. Hughey, NRC, to T. Joyce, PSEG Nuclear LLC dated March 28, 2013, "Salem Nuclear Generating Station, Unit No. 1—Issuance of Amendment Re: Revision to Technical Specification 6.8.4.i, 'Steam Generator Program,' and Technical Specification 6.9.1.10, 'Steam Generator Tube Inspection Report,' for a Permanent Alternate Repair Criteria (TAC No. ME8578)." ADAMS Accession No. ML13072A105

Letter from J. Perry, PSEG Nuclear LLC, to the NRC dated November 4, 2013, "Steam Generator Tube Inspection Report—Twenty Second Refueling Outage (1R22)." ADAMS Accession No. ML13310A885

Letter from J. Perry, PSEG Nuclear LLC, to the NRC dated April 24, 2014, "RAI [Request for Additional Information] Response to the Steam Generator Tube Inspection Report—Twenty Second Refueling Outage (1R22)." ADAMS Accession No. ML14115A016

**Surry 1 and 2**

Letter from S.P. Sarver, Virginia Electric and Power Co., to the NRC dated April 3, 2002, "Virginia Electric and Power Co.; Surry Power Station Unit 2; Steam Generator Tube Inspection Report." ADAMS Accession No. ML020990363

Letter from G.E. Edison, NRC, to D.A. Christian, Virginia Electric and Power Co. dated May 24, 2002, "Surry Power Station Unit 2—Summary of Conference Call Regarding Steam Generator Inspection (TAC No. MB4773)." ADAMS Accession No. ML021440045

Letter from C.L. Funderburk, Virginia Electric and Power Co., to the NRC dated February 26, 2003, "Virginia Electric and Power Co. (Dominion); Surry Power Station Units 1 and 2; Annual Steam Generator Inservice Inspection Summary Report." ADAMS Accession No. ML030690393

Letter from C.L. Funderburk, Virginia Electric and Power Co., to the NRC dated May 14, 2003, "Virginia Electric and Power Co.; Surry Power Station Unit 1; Steam Generator Tube Inspection Report." ADAMS Accession No. ML031410078

Letter from C. Gratton, NRC, to D.A. Christian, Virginia Electric and Power Co. dated June 17, 2003, "Surry Unit 1—Summary of Conference Call with Virginia Electric and Power Co. Regarding the 2003 Steam Generator Tube Inspection Results (TAC No. MB8131)." ADAMS Accession No. ML031750893

Letter from C. Gratton, NRC, to D.A. Christian, Virginia Electric and Power Co. dated October 24, 2003, "Surry Unit 1—Revised Summary of Conference Call with Virginia Electric and Power Co. Regarding the 2003 Steam Generator Tube Inspection Results for Surry Power Station, Unit 1 (TAC No. MB8131)." ADAMS Accession No. ML033010026

Letter from C.L. Funderburk, Virginia Electric and Power Co., to the NRC dated February 23, 2004, "Virginia Electric and Power Co. (Dominion); Surry Power Station Units 1 and 2; Annual Steam Generator Inservice Inspection Summary Report." ADAMS Accession No. ML040630162

Letter from W.R. Matthews, Virginia Electric and Power Co., to the NRC dated October 29, 2004, "Virginia Electric and Power Co. (Dominion); Dominion Nuclear Connecticut, Inc. (DNC); North Anna Power Station Units 1 and 2; Surry Power Station Units 1 and 2; Millstone Power Station Units 2 and 3; Sixty Day Response to NRC Generic Letter 2004-01; Requirements for Steam Generator Tube Inspections." ADAMS Accession No. ML043060099

Letter from L.N. Hartz, Virginia Electric and Power Co., to the NRC dated November 1, 2004, "Virginia Electric and Power Co.; Surry Power Station Units 1 and 2; 2003 Annual Steam Generator Inservice Inspection Summary Report; Response to Request For Additional Information." ADAMS Accession No. ML043070192

Letter from C.L. Funderburk, Virginia Electric and Power Co., to the NRC dated February 21, 2005, "Virginia Electric and Power Co. (Dominion); Surry Power Station Units 1 and 2; Annual Steam Generator Inservice Inspection Summary Report." ADAMS Accession No. ML050530052

Letter from C.L. Funderburk, Virginia Electric and Power Co., to the NRC dated May 31, 2005, “Virginia Electric and Power Co. (Dominion); Surry Power Station Unit 2; Steam Generator Tube Inspection Report.” ADAMS Accession No. ML051600111

Letter from C.L. Funderburk, Virginia Electric and Power Co., to the NRC dated February 28, 2006, “Virginia Electric and Power Co. (Dominion); Surry Power Station Units 1 and 2; Annual Steam Generator Inservice Inspection Summary Report.” ADAMS Accession No. ML060600281

Letter from C.L. Funderburk, Virginia Electric and Power Co., to the NRC dated June 1, 2006, “Virginia Electric and Power Co. (Dominion); Surry Power Station Unit 1; Steam Generator Tube Inspection Report.” ADAMS Accession No. ML061520302

Letter from G.T. Bischof, Virginia Electric and Power Co., to the NRC dated August 2, 2006, “Virginia Electric and Power Co.; Surry Power Station Unit No. 2; Response to Request for Additional Information; Steam Generator Tube Inservice Inspection Reports for the 2005 Refueling Outage.” ADAMS Accession No. ML062140360

Letter from C.L. Funderburk, Virginia Electric and Power Co., to the NRC dated November 30, 2006, “Virginia Electric and Power Co.; Surry Power Station Unit 2; Steam Generator Tube Plugging Report.” ADAMS Accession No. ML063340555

Letter from S.P. Lingam, NRC, to D.A. Christian, Virginia Electric and Power Co. dated December 4, 2006, “Surry Power Station, Unit No. 1—Summary of Conference Call Regarding the Spring 2006 Steam Generator Tube Inspection Activities (TAC No. MD2420).” ADAMS Accession No. ML063380371

Letter from C.L. Funderburk, Virginia Electric and Power Co., to the NRC dated March 1, 2007, “Virginia Electric and Power Co. (Dominion); Surry Power Station Units 1 and 2; 2006 Annual Steam Generator Inservice Inspection Summary Report.” ADAMS Accession No. ML070650263

Letter from S.P. Lingam, NRC, to D.A. Christian, Virginia Electric and Power Co. dated March 29, 2007, “Surry Power Station, Unit Nos. 1 and 2, Issuance of Amendments Regarding Steam Generator Tube Integrity (TAC Nos. MD2097 and MD2098).” ADAMS Accession No. ML070880618

Letter from G.T. Bischof, Virginia Electric and Power Co., to the NRC dated August 10, 2007, “Virginia Electric and Power Co.; Surry Power Station Units 1 and 2; Response to Request for Additional Information; 2006 Steam Generator Inservice Inspection Reports.” ADAMS Accession No. ML072280196

Letter from S.P. Lingam, NRC, to D.A. Christian, Virginia Electric and Power Co. dated December 11, 2007, “Surry Nuclear Power Station, Unit 1, 2007 Steam Generator Tube Inspections (TAC No. MD7236).” ADAMS Accession No. ML073380143

Letter from S.P. Lingam, NRC, to D.A. Christian, Virginia Electric and Power Co. dated May 16, 2008, “Surry Power Station, Unit No. 2—Issuance of Exigent Amendment RE: Interim Alternate Repair Criteria for Steam Generator Tube Repair (TAC No. MD8504).” ADAMS Accession No. ML081340106

Letter from D.E. Jernigan, Virginia Electric and Power Co., to the NRC dated May 21, 2008, "Virginia Electric and Power Co.; Surry Power Station Unit 1; Steam Generator Tube Inservice Inspection Report for the 2007 Refueling Outage." ADAMS Accession No. ML081560216

Letter from S.P. Lingam, NRC, to D.A. Christian, Virginia Electric and Power Co. dated June 10, 2008, "Surry Power Station, Unit No. 2, Spring 2008 Refueling Outage Steam Generator Tube Inspections (TAC No. MD8615)." ADAMS Accession No. ML081490152

Letter from G.T. Bischof, Virginia Electric and Power Co., to the NRC dated October 9, 2008, "Virginia Electric and Power Co.; Surry Power Station Unit 1; Response to Request for Additional Information; 2007 Steam Generator Inservice Inspection Report." ADAMS Accession No. ML082970192

Letter from G.T. Bischof, Virginia Electric and Power Co., to the NRC dated November 14, 2008, "Virginia Electric and Power Co.; Surry Power Station Unit 2; Steam Generator Tube Inservice Inspection Report for the 2008 Refueling Outage." ADAMS Accession No. ML090060111

Letter from D.N. Wright, NRC, to D.A. Christian, Virginia Electric and Power Co. dated April 8, 2009, "Surry Power Station, Unit No. 1, Issuance of Amendment Regarding Proposed License Amendment Request—Interim Alternate Repair Criteria for Steam Generator Tube Repair (TAC No. MD9976)." ADAMS Accession No. ML090860735

Letter from D. Wright, NRC, to D.A. Christian, Virginia Electric and Power Co. dated April 16, 2009, "Surry Power Station, Unit No. 1 Correction Letter for License Amendment No. 263 Regarding Interim Alternate Repair Criteria for Steam Generator Tube Repair (TAC No. MD9976)." ADAMS Accession No. ML091040065

Letter from J. Stang, NRC, to D.A. Christian, Virginia Electric and Power Co. dated May 7, 2009, "Surry Power Station, Unit No. 1 Issuance of Amendment Regarding Modified Interim Alternate Repair Criteria for B Steam Generator Tube Repair (TAC No. ME1191)." ADAMS Accession No. ML091260386

Letter from G.T. Bischof, Virginia Electric and Power Co., to the NRC dated July 13, 2009, "Virginia Electric and Power Co.; Surry Power Station Unit 2; Response to Request for Additional Information; 2008 Steam Generator Inservice Inspection Report." ADAMS Accession No. ML092020251

Letter from K. Cotton, NRC, to D.A. Heacock, Virginia Electric and Power Co. dated September 16, 2009, "Surry Power Station, Unit No. 1—Summary of Conference Calls Regarding the Spring 2009 Steam Generator Inspections (TAC No. ME0981)." ADAMS Accession No. ML091950409

Letter from B.L. Stanley, Virginia Electric and Power Co., to the NRC dated November 4, 2009, "Virginia Electric and Power Co.; Surry Power Station Unit 1; Steam Generator Tube Inservice Inspection Report for the 2009 Refueling Outage." ADAMS Accession No. ML093200207

Letter from K. Cotton, NRC, to D.A. Heacock, Virginia Electric and Power Co. dated November 5, 2009, "Surry Power Station, Unit Nos. 1 and 2, Issuance of Amendments Regarding License Amendment Request for Alternate Repair Criteria for Steam Generator

Tubesheet Expansion Region (TAC Nos. ME1783 and ME1784)." ADAMS Accession No. ML092960484

Letter from G.T. Bischof, Virginia Electric and Power Co., to the NRC dated May 24, 2010, "Virginia Electric and Power Co.; Surry Power Station Unit 2; Steam Generator Tube Inservice Inspection Report for the 2009 Refueling Outage." ADAMS Accession No. ML101530533

Letter from B.L. Stanley, Virginia Electric and Power Co., to the NRC dated June 7, 2010, "Virginia Electric and Power Co.; Surry Power Station Unit 1; Response to Request for Additional Information; 2009 Steam Generator Inservice Inspection Report." ADAMS Accession No. ML101660088

Letter from G.T. Bischof, Virginia Electric and Power Co., to the NRC dated April 25, 2011, "Virginia Electric and Power Co. (Dominion); Surry Power Station Unit 2; Response to Request for Additional Information; Unit 2 2009 Steam Generator Tube Inspection Report." ADAMS Accession No. ML11124A009

Letter from K. Cotton, NRC, to D.A. Heacock, Virginia Electric and Power Co. dated May 20, 2011, "Surry Power Station, Unit No. 2, Issuance of Amendment Regarding Technical Specification Change to Sections 6.4Q, 'Steam Generator (SG) Program' and 6.6.A.3 'Steam Generator Tube Inspection Report' (H*) (TAC No. ME5368)." ADAMS Accession No. ML11090A000 (and ML111810163)

Letter from G.T. Bischof, Virginia Electric and Power Co., to the NRC dated May 24, 2011, "Virginia Electric and Power Co.; Surry Power Station Unit 1; Steam Generator Tube Inservice Inspection Report for the 2010 Refueling Outage." ADAMS Accession No. ML11154A101

Letter from K. Cotton, NRC, to D.A. Heacock, Virginia Electric and Power Co. dated June 30, 2011, "Surry Power Station, Unit No. 2—2009 Refueling Outage Steam Generator Tube Inspections Summary for End of Cycle 22 (TAC No. ME5689)." ADAMS Accession No. ML11144A252

Letter from K. Cotton, NRC, to D.A. Heacock, Virginia Electric and Power Co. dated July 5, 2011, "Surry Power Station, Unit No. 2—Summary of Conference Call Regarding the Spring 2011 Steam Generator Tube Inspections (TAC No. ME6146)." ADAMS Accession No. ML11173A154

Letter from G.T. Bischof, Virginia Electric and Power Co., to the NRC dated October 5, 2011, "Virginia Electric and Power Co.; Surry Power Station Unit 2; Steam Generator Tube Inservice Inspection Report for the 2011 Refueling Outage." ADAMS Accession No. ML11291A058

Letter from B.L. Stanley, Virginia Electric and Power Co., to the NRC dated December 15, 2011, "Virginia Electric and Power Co.; Surry Power Station Unit 1; Response to Request for Additional Information; 2010 Steam Generator Inservice Inspection Report." ADAMS Accession No. ML12003A242

Letter from K. Cotton, NRC, to D.A. Heacock, Virginia Electric and Power Co. dated April 17, 2012, "Surry Power Station, Unit Nos. 1 and 2, Issuance of Amendments Regarding Virginia Electric and Power Co. License Amendment Request for Permanent Alternate Repair Criteria for Steam Generator Tube Inspection and Repair (TAC Nos. ME6803 and ME6804)." ADAMS Accession Nos. ML120730304 and ML12109A270

Letter from N.L. Lane, Virginia Electric and Power Co., to the NRC dated June 22, 2012, "Virginia Electric and Power Co.; Surry Power Station Unit 2; Response to Request for Additional Information; 2011 Steam Generator Inservice Inspection Report." ADAMS Accession No. ML12187A165

Letter from N.L. Lane, Virginia Electric and Power Co., to the NRC dated October 30, 2012, "Virginia Electric and Power Co.; Surry Power Station Unit 1; Steam Generator Tube Inservice Inspection Report for the Spring 2012 Refueling Outage." ADAMS Accession No. ML12321A047

Letter from K. Cotton, NRC, to D.A. Heacock, Virginia Electric and Power Co. dated January 28, 2013, "Surry Power Station, Unit No. 1 and 2 Issuance of Amendments to Adopt Technical Specification Task Force (TSTF) 510, Revision 2, Revision to Steam Generator Program Inspection Frequencies and Tube Sample Selection (TAC Nos. ME9199 and ME9200)." ADAMS Accession No. ML13018A086

Letter from K. Cotton, NRC, to D.A. Heacock, Virginia Electric and Power Co. dated February 7, 2013, "Surry Power Station, Unit 1—Correction Letter to License Amendment No. 278 Regarding Adoption of Technical Specification Task Force (TSTF 510, Revision 2, Steam Generator Program Inspection Frequencies and Tube Sample Selection (TAC No. ME9199)." ADAMS Accession No. ML13032A206

Letter from D.C. Lawrence, Virginia Electric and Power Co., to the NRC dated April 1, 2013, "Virginia Electric and Power Co.; Surry Power Station Unit 1; Response to Request for Additional Information; 2012 Steam Generator Inservice Inspection Report." ADAMS Accession No. ML13105A134

Letter from K. Cotton, NRC, to D.A. Heacock, Virginia Electric and Power Co. dated April 23, 2013, "Surry Power Station, Unit Nos. 1 and 2, Correction Letter Regarding License Amendment Nos. 278 and 278 to Adopt Technical Specification Task Force (TSTF)-510, Revision 2, Revision to Steam Generator Program Inspection Frequencies and Tube Sample Selection." ADAMS Accession No. ML13099A106

Letter from N.L. Lane, Virginia Electric and Power Co., to the NRC dated May 10, 2013, "Virginia Electric and Power Co.; Surry Power Station Unit 2; Steam Generator Tube Inservice Inspection Report for the Fall 2012 Refueling Outage." ADAMS Accession No. ML13149A229

Letter from K. Cotton, NRC, to D.A. Heacock, Virginia Electric and Power Co. dated August 16, 2013, "Surry Power Station—Review of the Steam Generator Tube Inservice Inspection Report for the Surry Power Station, Unit 1, Refueling Outage in 2012 (TAC No. MF0062)." ADAMS Accession No. ML13212A363

Letter from N.L. Lane, Virginia Electric and Power Co., to the NRC dated January 23, 2014, "Virginia Electric and Power Co.; Surry Power Station Unit 2; Response to Request for Clarifying Information Regarding Steam Generator Tube Inservice Inspection Report for the Fall 2012 Refueling Outage." ADAMS Accession No. ML14028A256

Letter from N.L. Lane, Virginia Electric and Power Co., to the NRC dated May 6, 2014, "Virginia Electric and Power Co.; Surry Power Station Unit 1; Steam Generator Tube Inservice Inspection Report for the Fall 2013 Refueling Outage." ADAMS Accession No. ML14135A365

Letter from N.L. Lane, Virginia Electric and Power Co., to the NRC dated October 16, 2014, “Virginia Electric and Power Co.; Surry Power Station Unit 2; Steam Generator Tube Inservice Inspection Report for the Spring 2014 Refueling Outage.” ADAMS Accession No. ML14294A449

Letter from N.L. Lane, Virginia Electric and Power Co., to the NRC dated November 19, 2014, “Virginia Electric and Power Co.; Surry Power Station Unit 1; Response to Request for Additional Information; 2013 Steam Generator Inservice Inspection Report.” ADAMS Accession No. ML14335A606

**Turkey Point 3**

Letter from W. Jefferson, Jr., Florida Power and Light Co., to the NRC dated March 24, 2003, "Turkey Point Unit 3; Docket No. 50-250; Steam Generator Tube Plugging 15-Day Report." ADAMS Accession No. ML041310225

Letter from T.O. Jones, Florida Power and Light Co., to the NRC dated June 26, 2003, "Turkey Point Unit 3; Docket No. 50-250; Inservice Inspection Report." ADAMS Accession No. ML031820625

Letter from T.O. Jones, Florida Power and Light Co., to the NRC dated July 30, 2003, "Turkey Point Unit 3; Docket No. 50-250; Revision to End of Cycle 18; Steam Generator Tube Plugging Report." ADAMS Accession No. ML032580517

Letter from T.O. Jones, Florida Power and Light Co., to the NRC dated May 3, 2004, "Turkey Point Units 3 and 4; Docket Nos. 50-250 and 50-251; 10 CFR 50.59 Report." ADAMS Accession No. ML041330113

Letter from T.O. Jones, Florida Power and Light Co., to the NRC dated October 18, 2004, "Turkey Point Unit 3; Docket No. 50-250; Steam Generator Tube Plugging 15-Day Special Report." ADAMS Accession No. ML060040111

Letter from J.A. Stall, Florida Power and Light Co., to the NRC dated October 29, 2004, "Florida Power and Light Co.; St. Lucie Units 1 and 2; Docket Nos. 50-335 and 50-389; Turkey Point Units 3 and 4; Docket Nos. 50-250 and 50-251; FPL Energy Seabrook, LLC; Seabrook Station; Docket No. 50-443; NRC Generic Letter 2004-01; Requirements for Steam Generator Tube Inspections." ADAMS Accession No. ML043070353

Letter from T.O. Jones, Florida Power and Light Co., to the NRC dated November 5, 2004, "Turkey Point Units 3 and 4; Docket Nos. 50-250 and 50-251; Request for Additional Information—Steam Generator Tube Inspection Summary Reports." ADAMS Accession No. ML043220407

Letter from T.O. Jones, Florida Power and Light Co., to the NRC dated February 28, 2005, "Turkey Point Unit 3; Docket No. 50-250; Inservice Inspection Report." ADAMS Accession Nos. ML050670045 and ML050670057

Letter from T.O. Jones, Florida Power and Light Co., to the NRC dated June 17, 2005, "Turkey Point Unit 3; Docket No. 50-250; Steam Generator Tube Plugging; Inservice Inspection 12-Month Special Report." ADAMS Accession No. ML051810242

Letter from J.A. Stall, Florida Power and Light Co., to the NRC dated February 17, 2006, "Florida Power and Light Co.; St. Lucie Units 1 and 2; Docket Nos. 50-335 and 50-389; Turkey Point Units 3 and 4; Docket Nos. 50-250 and 50-251; FPL Energy Seabrook, LLC; Seabrook Station; Docket No. 50-443; Subject: 30-Day Response to NRC Generic Letter 2006-01, "Steam Generator Tube Integrity And Associated Technical Specifications," January 20, 2006 (ML060200385)." ADAMS Accession No. ML060530640

Letter from T.O. Jones, Florida Power and Light Co., to the NRC dated February 27, 2006, “Turkey Point Unit 3; Docket No. 50-250; Response to Request for Additional Information; Regarding Steam Generator Tube Plugging; Inservice Inspection Report (TAC No. MC8112).” ADAMS Accession No. ML060760370

Letter from T.O. Jones, Florida Power and Light Co., to the NRC dated June 28, 2006, “Turkey Point Unit 3; Docket No. 50-250; Inservice Inspection Report.” ADAMS Accession No. ML061860276

Letter from B.T. Moroney, NRC, to J.A. Stall, Florida Power and Light Co. dated November 1, 2006, “Turkey Point Plant, Units 3 and 4—Issuance of Amendments Regarding Steam Generator Alternate Repair Criteria (TAC Nos. MD1380 and MD1381).” ADAMS Accession No. ML062990193

Letter from B.L. Mozafari, NRC, to J.A. Stall, Florida Power and Light Co. dated April 27, 2007, “Turkey Point Plant, Units 3 and 4—Issuance of Amendments Regarding Steam Generator Tube Surveillance Program (TAC Nos. MD1389 and MD1390).” ADAMS Accession No. ML071080444

Letter from W. Jefferson, Jr., Florida Power and Light Co., to the NRC dated January 10, 2008, “Turkey Point Unit 3; Docket No. 50-250; Inservice Inspection Report.” ADAMS Accession No. ML080220439

Letter from W. Jefferson, Jr., Florida Power and Light Co., to the NRC dated April 3, 2008, “Turkey Point Unit 3; Docket No. 50-250; Steam Generator Tube Inspection Report.” ADAMS Accession No. ML081050248

Letter from W. Jefferson, Jr., Florida Power and Light Co., to the NRC dated January 30, 2009, “Turkey Point Unit 3; Docket No 50-250; Response to Request for Additional Information Regarding the 2007 Steam Generator Tube Inspection (TAC No. MD9234).” ADAMS Accession No. ML090570046

Letter from J.C. Paige, NRC, to M. Nazar, Florida Power and Light Co. dated October 30, 2009, “Turkey Point Units 3 and 4—Issuance of Amendments Regarding H*: Alternate Repair Criteria for Steam Generator Tubesheet Expansion Region (TAC Nos. ME1754 and ME1755).” ADAMS Accession No. ML092990489

Letter from J.C. Paige, NRC, to M. Nazar, Florida Power and Light Co. dated January 19, 2011, “Turkey Point Unit 3—Summary of October 12, 2010, Conference Call Regarding the Fall 2010, Steam Generator Inspections (TAC No. ME4556).” ADAMS Accession No. ML110030005

Letter from M. Kiley, Florida Power and Light Co., to the NRC dated April 19, 2011, “Turkey Point Unit 3; Docket No. 50-250; Steam Generator Tube Inspection Report.” ADAMS Accession No. ML11119A006

Letter from M. Kiley, Florida Power and Light Co., to the NRC dated May 6, 2011, “Turkey Point Unit 3; Docket No 50-250; Reportable Event: 2011-001-00; Date of Event: March 6, 2011; Manual Reactor Trip Due to Secondary Sodium Concentrations Exceeding Chemistry Limits.” ADAMS Accession No. ML11130A097

Letter from M. Kiley, Florida Power and Light Co., to the NRC dated November 23, 2011, “Turkey Point Unit 3; Docket No. 50-250; Response to Request for Additional Information Regarding the 2010 Steam Generator Tube Inspection.” ADAMS Accession No. ML11340A074

Letter from F.E. Saba, NRC, to M. Nazar, Florida Power and Light Co. dated November 5, 2012, “Turkey Point Nuclear Generating Station Unit Nos. 3 and 4—Issuance of Amendments Regarding Permanent Alternate Repair Criteria for Steam Generator Tubes (TAC Nos. ME8515 and ME8516).” ADAMS Accession No. ML12292A342

Letter from F.E. Saba, NRC, to M. Nazar, Florida Power and Light Co. dated November 6, 2012, “Turkey Point Nuclear Generating Station Unit Nos. 3 and 4—Issuance of Amendments Regarding Adoption of TSTF-510, ‘Revision to Steam Generator Program Inspection Frequencies and Tube Sample Selection’ (TAC Nos. ME9106 and ME9107).” ADAMS Accession No. ML12297A240

Letter from M. Kiley, Florida Power and Light Co., to the NRC dated October 6, 2014, “Turkey Point Unit 3; Docket No. 50-250; Steam Generator Tube Inspection Report.” ADAMS Accession No. ML14302A079

**Turkey Point 4**

Letter from J.P. McElwain, Florida Power and Light Co., to the NRC dated June 25, 2002, "Turkey Point Unit 4; Docket No. 50-251; Inservice Inspection Report." ADAMS Accession No. ML021900291

Letter from T.O. Jones, Florida Power and Light Co., to the NRC dated October 30, 2003, "Turkey Point Unit 4; Docket No. 50-251; Steam Generator Tube Plugging 15-Day Report." ADAMS Accession No. ML15205A315

Letter from T.O. Jones, Florida Power and Light Co., to the NRC dated January 30, 2004, "Turkey Point Unit 4; Docket No. 50-251; Inservice Inspection Report." ADAMS Accession No. ML040340484

Letter from T.O. Jones, Florida Power and Light Co., to the NRC dated May 3, 2004, "Turkey Point Units 3 and 4; Docket Nos. 50-250 and 50-251; 10 CFR 50.59 Report." ADAMS Accession No. ML041330113

Letter from T.O. Jones, Florida Power and Light Co., to the NRC dated October 12, 2004, "Turkey Point Unit 4; Docket No. 50-251; Steam Generator Tube Plugging; Inservice Inspection 12-Month Special Report." ADAMS Accession No. ML042940297

Letter from J.A. Stall, Florida Power and Light Co., to the NRC dated October 29, 2004, "Florida Power and Light Co.; St. Lucie Units 1 and 2; Docket Nos. 50-335 and 50-389; Turkey Point Units 3 and 4; Docket Nos. 50-250 and 50-251; FPL Energy Seabrook, LLC; Seabrook Station; Docket No. 50-443; NRC Generic Letter 2004-01; Requirements for Steam Generator Tube Inspections." ADAMS Accession No. ML043070353

Letter from T.O. Jones, Florida Power and Light Co., to the NRC dated November 5, 2004, "Turkey Point Units 3 and 4; Docket Nos. 50-250 and 50-251; Request for Additional Information—Steam Generator Tube Inspection Summary Reports." ADAMS Accession No. ML043220407

Letter from T.O. Jones, Florida Power and Light Co., to the NRC dated September 8, 2005, "Turkey Point Unit 4; Docket No. 50-251; 2005 Inservice Inspection Report." ADAMS Accession No. ML052630030

Letter from B.T. Moroney, NRC, to J.A. Stall, Florida Power and Light Co. dated November 1, 2006, "Turkey Point Plant, Units 3 and 4—Issuance of Amendments Regarding Steam Generator Alternate Repair Criteria (TAC Nos. MD1380 and MD1381)." ADAMS Accession No. ML062990193

Letter from M.E. Ernstes, NRC, to J.A. Stall, Florida Power and Light Co. dated January 26, 2007, "Turkey Point Nuclear Plant—Integrated Inspection Report 05000250/2006005 and 05000251/2006005 and Exercise of Enforcement Discretion." ADAMS Accession No. ML070260489

Letter from W. Jefferson, Jr., Florida Power and Light Co., to the NRC dated March 8, 2007, "Turkey Point Unit 4; Docket No. 50-251; Inservice Inspection Report." ADAMS Accession No. ML070710304

Letter from B.L. Mozafari, NRC, to J.A. Stall, Florida Power and Light Co. dated April 27, 2007, "Turkey Point Plant, Units 3 and 4—Issuance of Amendments Regarding Steam Generator Tube Surveillance Program (TAC Nos. MD1389 and MD1390)." ADAMS Accession No. ML071080444

Letter from W. Jefferson, Jr., Florida Power and Light Co., to the NRC dated March 12, 2008, "Turkey Point Unit 4; Docket No. 50-251; Response to Request for Additional Information Regarding the 2006 Steam Generator Tube Inspections (TAC No. MD6875)." ADAMS Accession No. ML080810192

Letter from J.C. Paige, NRC, to M. Nazar, Florida Power and Light Co. dated October 30, 2009, "Turkey Point Units 3 and 4—Issuance of Amendments Regarding H*: Alternate Repair Criteria for Steam Generator Tubesheet Expansion Region (TAC Nos. ME1754 and ME1755)." ADAMS Accession No. ML092990489

Conference Call Summary dated January 27, 2010, "Summary of November 10, 2009, Conference Call with Florida Power & Light, on the Fall 2009 Steam Generator Inspections (TAC No. ME2536)." ADAMS Accession No. ML100251277

Letter from M. Kiley, Florida Power and Light Co., to the NRC dated April 21, 2010, "Turkey Point Unit 4; Docket No. 50-251; Steam Generator Tube Inspection Report." ADAMS Accession No. ML101250532

Letter from F.E. Saba, NRC, to M. Nazar, Florida Power and Light Co. dated November 5, 2012, "Turkey Point Nuclear Generating Station Unit Nos. 3 and 4—Issuance of Amendments Regarding Permanent Alternate Repair Criteria for Steam Generator Tubes (TAC Nos. ME8515 and ME8516)." ADAMS Accession No. ML12292A342

Letter from F.E. Saba, NRC, to M. Nazar, Florida Power and Light Co. dated November 6, 2012, "Turkey Point Nuclear Generating Station Unit Nos. 3 and 4—Issuance of Amendments Regarding Adoption of TSTF-510, 'Revision to Steam Generator Program Inspection Frequencies and Tube Sample Selection' (TAC Nos. ME9106 and ME9107)." ADAMS Accession No. ML12297A240

Letter from M. Kiley, Florida Power and Light Co., to the NRC dated September 19, 2013, "Turkey Point Unit 4; Docket No. 50-251; Steam Generator Tube Inspection Report." ADAMS Accession No. ML13277A358

Letter from M. Kiley, Florida Power and Light Co., to the NRC dated February 19, 2014, "Turkey Point Unit 4; Docket No. 50-251; Response to Request for Additional Information Regarding Steam Generator Tube Inspection Report." ADAMS Accession No. ML14069A083

Letter from A. Klett, NRC, to M. Nazar, Florida Power and Light Co. dated June 19, 2014, "Turkey Point Nuclear Generating Unit No. 4—Review of Steam Generator Tube Inspection Report for Cycle 27 Refueling Outage (TAC No. MF2886)." ADAMS Accession No. ML14127A426

NRC FORM 335
(12-2010)
NRCMD 3.7

U.S. NUCLEAR REGULATORY COMMISSION

# BIBLIOGRAPHIC DATA SHEET

*(See instructions on the reverse)*

1. REPORT NUMBER
(Assigned by NRC, Add Vol., Supp., Rev., and Addendum Numbers, if any.)
NUREG-2188

2. TITLE AND SUBTITLE
U.S. Operating Experience with Thermally Treated Alloy 600 Steam Generator Tubes Through December 2013

3. DATE REPORT PUBLISHED

| MONTH | YEAR |
|---|---|
| February | 2016 |

4. FIN OR GRANT NUMBER

5. AUTHOR(S)
Kenneth J. Karwoski

6. TYPE OF REPORT
Technical

7. PERIOD COVERED (Inclusive Dates)
01/2002 through 12/2013

8. PERFORMING ORGANIZATION - NAME AND ADDRESS (If NRC, provide Division, Office or Region, U. S. Nuclear Regulatory Commission, and mailing address; if contractor, provide name and mailing address.)
Division of Engineering
Office of Nuclear Reactor Regulation
U.S. Nuclear Regulatory Commission
Washington DC 20555-0001

9. SPONSORING ORGANIZATION - NAME AND ADDRESS (If NRC, type "Same as above", if contractor, provide NRC Division, Office or Region, U. S. Nuclear Regulatory Commission, and mailing address.)
Same as above

10. SUPPLEMENTARY NOTES

11. ABSTRACT (200 words or less)
Steam generators placed in service in the 1960s and 1970s primarily had mill annealed Alloy 600 tubes. Over time, this material proved to be susceptible to stress corrosion cracking in the highly pure primary and secondary water chemistry environments of pressurized water reactors. The corrosion ultimately led to the replacement of steam generators at numerous facilities, the first U.S. replacement occurring in 1980. Many of the steam generators placed into service in the 1980s used tubes fabricated from thermally treated Alloy 600. This tube material was thought to be less susceptible to corrosion. NUREG-1771, "U.S. Operating Experience with Thermally Treated Alloy 600 Steam Generator Tubes," documented the operating experience associated with thermally treated Alloy 600 steam generator tubes as of December 2001. This document builds upon the information in NUREG-1771 and summarizes the operating experience with thermally treated Alloy 600 tubes through December 2013, with some information from 2014 included.

12. KEY WORDS/DESCRIPTORS (List words or phrases that will assist researchers in locating the report.)
PWR
steam generator (SG)
steam generator tube
Alloy 600
Inconel 600
thermally treated
eddy current testing
nondestructive evaluation

13. AVAILABILITY STATEMENT
unlimited

14. SECURITY CLASSIFICATION
*(This Page)*
unclassified
*(This Report)*
unclassified

15. NUMBER OF PAGES

16. PRICE

Printed
on recycled
paper

Federal Recycling Program

**UNITED STATES**
**NUCLEAR REGULATORY COMMISSION**
WASHINGTON, DC 20555-0001

OFFICIAL BUSINESS

@NRCgov

NUREG-2188

# U.S. Operating Experience with Thermally Treated Alloy 600 Steam Generator Tubes Through December 2013

February 2016