U.S.NRC
United States Nuclear Regulatory Commission
Protecting People and the Environment

2002 Davis-Besse Reactor Pressure Vessel Head Degradation Knowledge Management Digest

NUREG/KM-0005
February 2014
Office of Nuclear Regulatory Research

Table of Contents

Introduction 1

Overview of the 2002 Event 2

Lessons Learned from the 2002 Event 6

NRC Actions Based on Lessons Learned 8

Timeline 10

Legal 12

The 2010 Event 14

Retrospectives 14

Introduction

"Knowledge is power"
- Sir Francis Bacon (1561-1626)

The U.S. Nuclear Regulatory Commission (NRC) has an active knowledge management program that captures important historical events and critical information and preserves this knowledge for future generations.

The 2002 reactor pressure vessel (RPV) head incident at Davis-Besse Nuclear Power Station (DBNPS) in Oak Harbor, OH, was one of the most serious nuclear safety events in United States history. In March 2002, severe degradation of the reactor pressure vessel head was discovered during a refueling outage at Davis-Besse. Boric acid had eaten away the carbon steel of the RPV head, leaving only a thin layer of stainless steel cladding to withstand the full operating pressure of the coolant in the reactor core. This could have led to a rupture of the reactor pressure vessel head and caused a major public safety event.

Eight years later, in 2010, Davis-Besse experienced another serious safety event involving the reactor pressure vessel head. During an NRC-mandated inspection, plant staff found cracking of the control rod drive mechanism (CRDM) nozzles. Had the plant staff not performed the inspection and found the cracking, the event would have progressed and could have led to a situation similar to the 2002 event.

Fortunately, in both 2002 and 2010, the problems at the Davis-Besse were discovered before they caused a major public safety event. These near-miss accidents have driven NRC policies and research to ensure the continued safe operation of the entire U.S. nuclear fleet.

This knowledge management digest and accompanying DVD contain historical documents relating to the technical and regulatory aspects of these incidents.

Brian Sheron, Director of the Office of Nuclear Regulatory Research at the 2013 special seminar on Davis-Besse.

These documents can be accessed on the DVD through the interactive timelines or directly through the document listings.

The DVD also includes a multimedia presentation of the special NRC seminar "2002 Davis-Besse Reactor Pressure Vessel Degradation" held in January 2013, which offers a retrospective view of the 2002 incident.

Overview of the 2002 Event

Background

The reactor pressure vessel heads of pressurized-water reactors (PWR) contain penetrations for CRDM and instrumentation systems. These penetrations are made from nickel-based alloys (e.g., Alloy 600) and related weld metals. Primary coolant and the operating conditions of PWR plants have been known to cause cracking of the nickel-based alloys and weldments through a process called primary water-stress corrosion cracking (PWSCC). In response to the detection of PWSCC at several plants, the NRC issued NRC Bulletin 2001-01, "Circumferential Cracking of Reactor Pressure Vessel Head Penetration Nozzles," that requested information related to licensees' programs for inspection of vessel head penetration (VHP) nozzles. Bulletin 2001-01 and Davis-Besse's responses can be found on the DVD (see the **2002 Regulatory Timeline** or **Events Leading Up** in the documents section).

Through-Wall Cracking Detected

On February 16, 2002, in response to Bulletin 2001-01, the Davis-Besse Nuclear Power Station began a refueling outage with the intent to perform work that included remotely inspecting the VHP nozzles from underneath the head focusing on the CRDM. The licensee found that three CRDM nozzles had indications of through-wall axial cracking. Specifically, the licensee found these indications in CRDM nozzles 1, 2, and 3, which are located near the top of the reactor pressure vessel head. Condition reports discussing these findings are on the DVD (see the **2002 Regulatory Timeline** or **Events Leading Up** in the documents section).

Repair Attempts

The licensee attempted to repair these VHP nozzles remotely by approaching from underneath the pressure vessel head. On March 6, 2002, the licensee terminated the repair process on CRDM nozzle 3 to determine the cause of unusual equipment operation and removed the machining apparatus from the

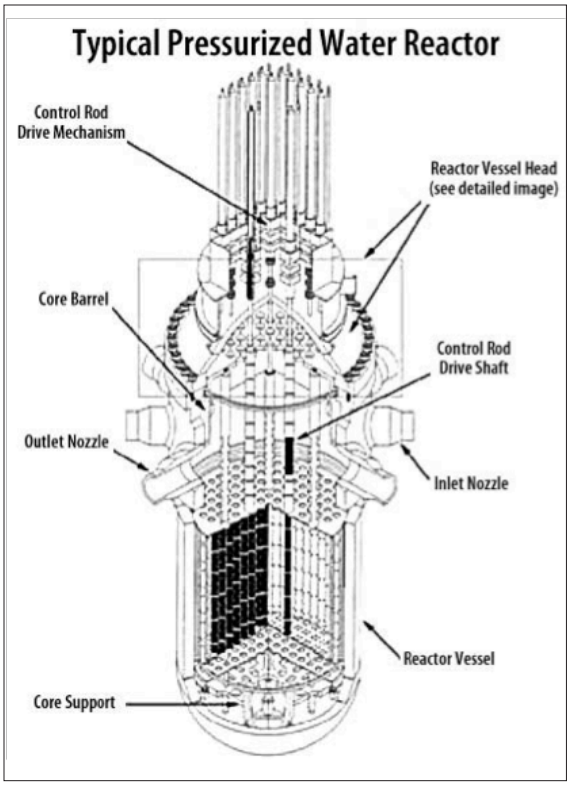

Typical pressurized water reactor

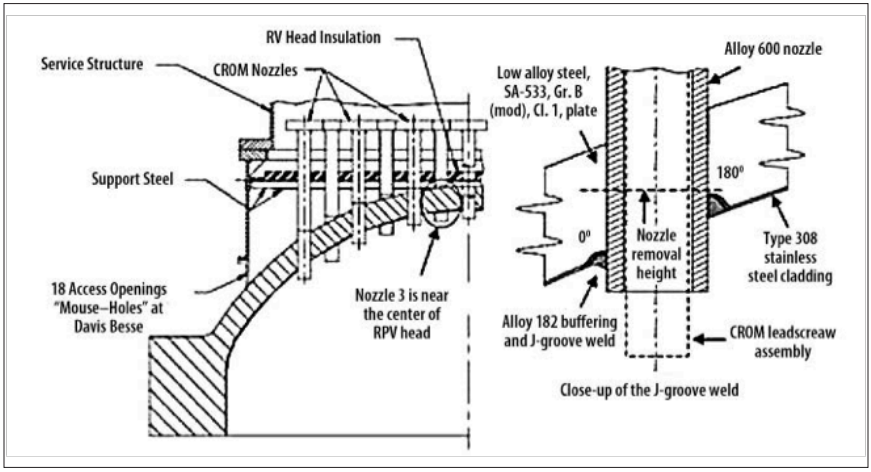

Detail of vessel head penetration nozzles

nozzle. During the removal, the nozzle tipped in the downhill direction until it rested against an adjacent CRDM. If the surrounding steel had been structurally sound, it should have held the nozzle in position.

Investigation

The licensee investigated the condition of the reactor pressure vessel head surrounding CRDM nozzle 3. The investigation included removing the CRDM nozzle and removing large boric acid deposits from the top of the reactor pressure vessel head. Upon completing the boric acid removal on March 8, 2002, the licensee conducted a visual examination of the area and identified a large cavity in the reactor pressure vessel head on the downhill side of CRDM nozzle 3. The corrosion was caused by borated water that leaked from the reactor coolant system onto the vessel head through cracks in the nozzle and the weld that attached nozzle 3 to the reactor pressure vessel head. The licensee discovered the remaining thickness of the reactor pressure vessel head in the wastage area to be about 9.5 mm (3/8 inch). This thickness consisted of only stainless steel cladding on the inside surface of the reactor pressure vessel head, which is nominally 9.5 mm (3/8 inch) thick. The stainless steel cladding is resistant to corrosion by boric acid, but it is not intended to provide structural integrity to the vessel. Failure of the stainless steel cladding would have resulted in a loss-of-coolant accident (LOCA). The LOCA would have resulted in actuation of the plant's emergency systems. Condition reports and technical reports can be found on the DVD (see the **2002 Technical Timeline** or **Davis-Besse Degradation** in the documents section).

NRC Actions

The NRC issued a confirmatory action letter that (1) required Davis-Besse to remain shut down until the situation could be satisfactorily addressed and (2) invoked the process outlined in Inspection Manual Chapter 0350, "Oversight of Reactor Facilities in a Shutdown Condition Due to Significant Performance and/or Operation Concern." This process establishes guidelines for the oversight of licensee performance during the shutdown. The process requires that the licensee must meet specific criteria before the plant can restart. Meeting these criteria ensure that the plant is operated in a manner that provides adequate protection of public health and safety. The confirmatory action letter can be found on the DVD (see the **2002 Regulatory Timeline** or **NRC Actions** in the documents section).

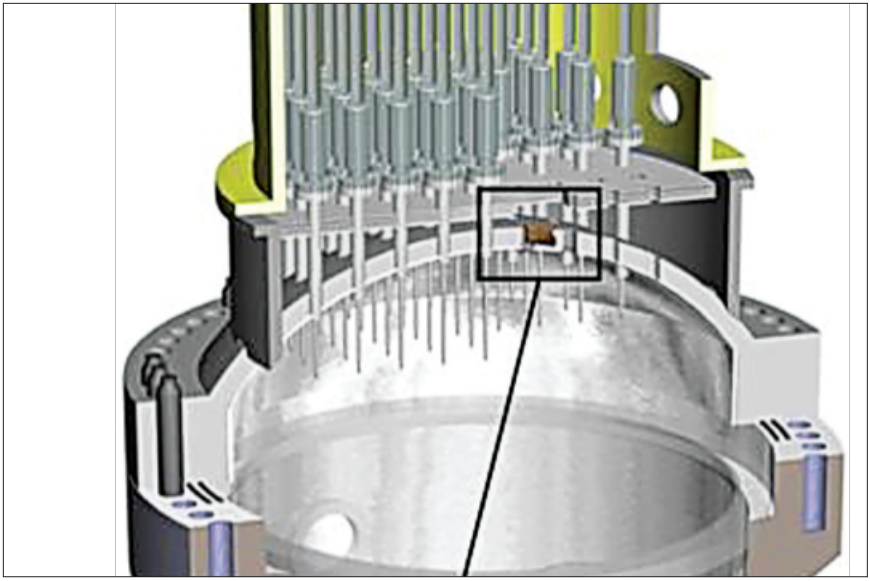

Region of the vessel head degradation.

Photo of the cavity after it was removed from the vessel head.

Lessons Learned from the 2002 Event

Operational Experience

During the early 1990s, the NRC and industry recognized the potential for boric acid corrosion of a reactor pressure vessel head. In 1993, the industry and NRC specifically addressed the possibility of extensive reactor pressure vessel head wastage stemming from undetected VHP nozzle leaks involving axial cracking caused by primary water-stress corrosion cracking (PWSCC). The industry concluded and the NRC agreed that the likelihood of this happening was low because VHP nozzle leaks would be detected before significant reactor pressure vessel head degradation could occur. Nevertheless, in spite of this awareness and contrary to this conclusion, the 2002 Davis-Besse event happened. A history of NRC publications regarding boric acid corrosion and primary water stress corrosion cracking can be found on the DVD (see the **2002 Regulatory Timeline** or **Events Leading Up** in the documents section).

Lessons Learned Task Force

The NRC's Executive Director for Operations (EDO) at the time, Dr. William D. Travers, directed the formation of an NRC task force to respond to the 2002 Davis-Besse event. The objective of this task force was to independently evaluate the NRC's regulatory processes related to assuring reactor pressure vessel head integrity to identify and recommend areas for improvement that may be applicable to either the NRC or the nuclear industry. Consistent with its charter, the task force reviewed five general areas including the following: (1) Reactor Oversight Process issues, (2) regulatory process issues, (3) research activities, (4) international practices, and (5) the NRC's Generic Issues Program.

Task Force Conclusions

The lessons learned task force concluded that the Davis-Besse VHP nozzle leakage and reactor pressure vessel head degradation event was preventable. Although this review was primarily introspective, this question could not be answered without considering industry activities and Davis-Besse's performance. At Davis-Besse, early indications of reactor pressure vessel corrosion were missed. These indications include the clogging of radiation element system filters by boric acid, the buildup of boric acid deposits on containment air cooler fins, and the buildup of large amounts of boric acid deposits on the RPV head. The task force concluded that the event was not prevented because: (1) the NRC, Davis-Besse, and the nuclear industry failed to adequately review, assess, and follow up on relevant operating experience; (2) Davis-Besse failed to ensure that plant

safety issues received appropriate attention; and (3) the NRC failed to integrate known or available information into its assessments of Davis-Besse's safety performance. Moreover, an NRC investigation concluded that Davis-Besse did not adequately execute the boric acid corrosion control program in response to an NRC generic communication, and the NRC did not adequately review the industry implementation of long-term commitments such as the commitment to maintain a boric acid corrosion control program. The lessons learned task force report can be found on the DVD (see **NRC Actions** in the documents section).

Reactor pressure vessel head flange area showing significant amounts of boric acid deposits (photo taken during the 2000 refueling outage at Davis-Besse Nuclear Power Station).

Boric acid deposits accumulating near a CRDM nozzle (still photo of video taken during the 2000 refueling outage at Davis-Besse Nuclear Power Station).

Close-up view of the cavity.

Oblique view of the cavity partially showing the J-groove weld at the bottom of the cavity.

NRC Actions

As a result of its review, the task force determined that the NRC should take specific actions to address contributing factors that led to the 2002 Davis-Besse event. The task force recommendations involved the following areas:
(1) stress corrosion cracking, (2) reactor coolant pressure boundary integrity, (3) operational experience, and (4) inspection and program management.

NRC Actions Based on Lessons Learned

The lessons learned task force developed recommendations in key technical and programmatic areas. The following are examples of some of the actions taken by the NRC to address the recommendations of the task force.

Stress Corrosion Cracking

The agency issued NRC Order EA-03-009 requiring all licensees with plants susceptible to reactor pressure vessel head degradation to visually inspect the reactor vessel head surface area for indications of leakage and boric acid accumulation and to inspect head penetrations using methods to detect cracks before leakage starts.

The NRC worked with the American Society of Mechanical Engineers (ASME) to develop Code Case N-729-1 to incorporate long-term inspection requirements of reactor pressure vessel heads into the ASME Code. The NRC will incorporate the finalized inspection requirements into Title 10 of the *Code of Federal Regulations* (10 CFR) 50.55a, "Codes and Standards," and allow the rescission of NRC Order EA-03-009. Order EA-03-009 can be found on the DVD (see the **2002 Regulatory Timeline** or **NRC Actions** in the documents section).

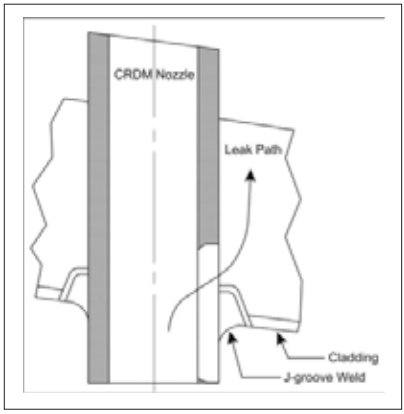

Schematic of the nozzle penetration cross section showing the leak path of the reactor coolant.

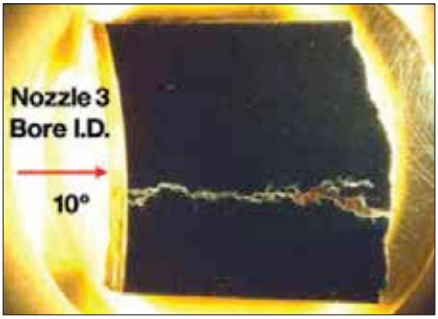

Left photo: Top view of the J-groove weld with an arrow pointing to a crack.
Right photo: Polished cross section of the area shown in the top photo showing the through-wall crack in the J-groove weld.

Operating Experience

In December 2004, the NRC codified a new operating experience program in Management Directive 8.7, "Reactor Operating Experience Program," to systematically collect, communicate, and evaluate operating experience information, including foreign operating experience. The program makes significant use of information technology to make operating experience information available to internal users and members of the public through a single Web access page.

The NRC established an organization within the agency to act as a clearinghouse that collects, communicates, and evaluates operating experience and applies the lessons learned to the core regulatory functions of oversight, licensing, rulemaking, and incident response. It also conducts a daily screening meeting at which incoming event reports and other operating experience items are reviewed. A recently established new operating experience information gateway consolidates a large collection of individual databases and web sources of information onto a single web access page. Through this gateway, all reported events can be reviewed and managed.

To ensure plant experience is adequately considered in licensing decisions, the NRC established new or revised expectations with regard to the duration of a licensing project manager assignment to a specific plant, frequency of site visits, communication with the resident inspector staff, and maintenance of a questioning safety attitude about plant events. Management Directive 8.7 can be found on the DVD (see **NRC Actions** in the documents section).

Inspection and Program Management

The staff made several changes to the process to enhance the NRC's ability to detect declining plant performance, including the specific issues identified at the Davis-Besse. For example, the review of the event indicated the deteriorating condition had been underway for several years and that the planned inspection, maintenance, and modification activities that could have prevented or enabled earlier discovery of the condition were frequently deferred.

The NRC increased the evaluation of licensees' programs and actions relating to longstanding unresolved problems. In addition, the NRC now audits the licensees' commitment management programs every 3 years by assessing the adequacy of the licensees' implementation of a sample of commitments made to the NRC in past licensing actions and activities.

The NRC inspector training program has been enhanced by a web-based system to provide more timely dissemination of information to the inspection staff and

a method for individual study. New training modules were developed to address lessons learned from the 2002 Davis-Besse event, such as the effects of boric acid corrosion and the importance of maintaining a questioning attitude toward safety.

The agency determined that safety culture weaknesses at Davis-Besse were at the root causes of the reactor vessel head degradation event. Therefore, the NRC took significant steps within the reactor oversight process to strengthen the ability to detect a weak safety culture in inspections and performance assessments. In this context, safety culture is defined as "that assembly of characteristics and attitudes in organizations and individuals which establishes that, as an overriding priority, nuclear plant safety issues receive the attention warranted by their significance." The NRC continues to seek ways to improve this and other aspects of its oversight processes.

The NRC has enhanced program management aspects of the reactor oversight process. For example, the guidance for managing NRC resources devoted to plants in an extended shutdown as a result of performance issues was revised to ensure less impact on routine oversight at other plants. Also, to ensure continuity of regulatory oversight, the staff developed and issued a site staffing metric to monitor gaps in permanent resident and senior resident staffing at reactor sites and established the criterion of maintaining a minimum of 90-percent coverage.

Timeline

The timeline of the 2002 incident has been broken down into three sections, a technical timeline that covers the technical aspects of the incident, a regulatory timeline that covers NRC actions related to the incident, and a legal timeline that provides a summary of criminal and civil cases stemmed from this incident. Interactive timelines with additional information and links to relevant documents can be found on the DVD (see the **2002 Timeline**).

Technical

Boric acid was first noted on the reactor pressure vessel head flange during an inspection in April 2000. The plant removed buildup and made repairs. The following year, the NRC issued Bulletin 2001-01 mandating licensees perform special inspections of CRDM nozzles and report results to the NRC. Davis-Besse staff requested to delay the inspections until the next refueling outage scheduled to take place in early 2002 to limit worker radiation dose. The NRC approved the requested delay after Davis-Besse provided justification that delaying the inspections would present a limited risk.

The 13th refueling outage started on February 16, 2002. In the subsequent weeks, the Davis-Besse staff performed multiple inspections. Boron crystal buildup on the reactor pressure vessel flange was found in the same area as the boric acid buildup noticed in 2000 but in larger quantity. Inspections of the CRDM nozzles found axial cracking in 5 nozzles and a 30-degree circumferential crack in one nozzle.

On March 7, 2002, during a repair attempt of CRDM nozzle 3, the repair equipment shifted unusually, prompting an examination of the reactor pressure vessel head. Davis-Besse staff discovered extensive degradation of the reactor pressure vessel head, and notified the NRC of the situation. The licensee assembled a corrective action plan to address issues identified with the plant's operation, including replacement of the reactor pressure vessel head; implementation began in June 2002.

Regulatory

As early as the 1980s, boric acid corrosion and primary water-stress corrosion cracking (PWSCC) were known phenomena and had been observed in commercial U.S. reactors. The NRC had begun addressing these issues through regulations such as Generic Letter 88-05, "Boric Acid Corrosion of Carbon Steel Reactor Pressure Boundary Components in PWR Plants," which mandated that licensees implement a program to address boric acid corrosion of carbon steel components.

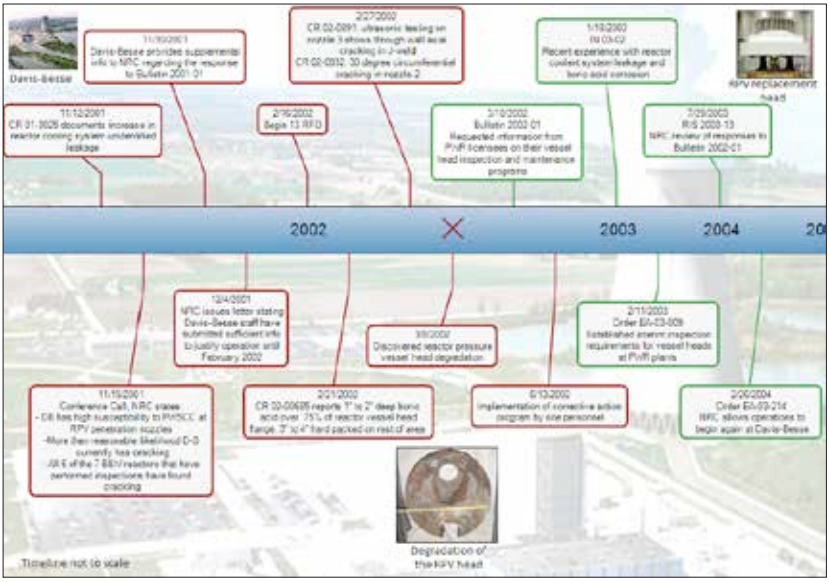

Timeline of the 2002 reactor pressure vessel head degradation event. Red indicates technical aspects and green indicates regulatory aspects.

In 2001, the NRC issued Bulletin 2001-01, "Circumferential Cracking of Reactor Pressure Vessel Head Penetration Nozzles", in response to circumferential cracking discovered in CRDM nozzles at a U.S. commercial reactor. The bulletin required that licensees perform inspections on their CRDM nozzles to check for cracking. Severe boric acid corrosion of the carbon steel reactor pressure vessel head was uncovered during these inspections. Following this discovery, the NRC issued Confirmatory Action Letter 03-02-001, which shut down operations at Davis-Besse until further notice.

Bulletin 2002-01 was issued on March 18, 2002, and it requested information from licensees regarding their vessel head inspection and maintenance programs to ensure they adequately protect against issues that would affect the reactor pressure vessel head integrity.

In February 2004, about 2 years after the degradation was found, NRC Order EA-03-214 allowed the restart of the Davis-Besse Nuclear Power Station provided the licensee met certain conditions. The order also required Davis-Besse to comply with additional requirements over the next 5 years including contracting with an outside organization to conduct annual comprehensive assessments of the operations at the Davis-Besse Nuclear Power Station. The licensee accepted these terms. In 2009, the NRC acknowledged that the licensee had met all the conditions of the Order and it was no longer in effect.

Legal

Davis-Besse Criminal Summary

On January 19, 2006, The United States District Court for the Northern District of Ohio issued a criminal indictment to the following individuals: David Geisen, Rodney Cook, and Andrew Siemaszko. The indictment charged each with five counts: one count for concealing material information and three counts for false statements.

On January 20, 2006, FirstEnergy Nuclear Operating Company (FENOC), agreed to pay $28 million in penalties, restitution, and community service projects as part of an agreement to defer criminal prosecution of the company. Under this deferred prosecution agreement, FENOC admitted that the Government could prove that FENOC employees, acting on the company's behalf, knowingly by making false representations to the NRC in the course of attempting to persuade the NRC that its Dave-Besse Nuclear Power Station was safe to operate beyond December 31, 2001.

On October 30, 2007, a jury in the Northern District of Ohio found two of the three indictees, David Geisen and Andre Siemaszko, guilty of three counts each of concealing a material fact and making false statements to the NRC. However, the jury found the third indictee, Rodney Cook, not guilty of all charges against him. The court placed David Geisen on probation for a term of 3 years on each of the 3 counts to be served concurrently with standard and additional conditions as noted. In addition, the court imposed a fine of $7,500.00 and a special assessment in the amount of $300.00 against Mr. Geisen. As for Andrew Siemaszko, the court placed him on probation for a term of 3 years on each count to run concurrently with standard and additional conditions as noted. The court also ordered that Mr. Siemaszko pay a fine of $1500 for each count (for a total of $4500) and a special assessment in the amount of $300.

On May 2, 2008, David Geisen filed an appeal to the United States Court of Appeals for the 6th Circuit from the judgment entered against him. Likewise, on February 6, 2009, Andrew Siemaszko also filed an appeal to the United States Court of Appeals for the 6th Circuit appealing the decision in district court. However, on July 15, 2010, The Court of Appeals held and affirmed the district court's decision on both matters.

Davis-Besse Civil Summary

In addition, to criminal charges against the company and individual employees, the NRC also pursued civil penalties against responsible parties. Based upon an NRC investigation, the NRC found that four individuals engaged in deliberate civil misconduct in the Davis-Besse matter. On April 21, 2005, the NRC issued an order to three of these four individuals (Andrew Siemaszko, Dale Miller, and Steven Moffitt), banning them from NRC licensed activities for 5 years for deliberately providing inaccurate and incomplete information to the NRC. On January 4, 2006, the NRC issued an order a fourth individual, Mr. Geisen, similarly imposing a 5 year ban against him. In addition, the NRC issued "Notice of Violation and Proposed Imposition of Civil Penalties" which fined Davis-Besse $5.45 million for its performance deficiency including the failure to properly implement its boric acid corrosion control and corrective action programs.

The company paid the civil penalty. The individuals, however, filed administrative appeals of the NRC orders issued against them. In the fall of 2006, Mr. Miller and Mr. Moffitt entered into settlement agreements with the NRC. They agreed to take various actions that will serve both to deter others and encourage compliance with NRC regulations in the future. In June 2009, Mr. Siemaszko agreed to the 5 year ban. With respect to Mr. Geisen, after the conduct

of an evidentiary hearing, the Atomic Safety and Licensing Board set aside the NRC's order on the basis that it had not been shown by a preponderance of evidence that Mr. Geisen acted knowingly regarding the falsity of the information he provided to the NRC. The Commission affirmed the Atomic Safety and Licensing Board's decision on appeal.

The 2010 Event

On February 28, 2010, Davis-Besse operators shut down the reactor to commence the 16th refueling outage. As part of the outage, the licensee conducted NRC-required inspections of the CRDM nozzles penetrating the reactor pressure vessel head. The inspections included direct visual and ultrasonic testing examinations of 100 percent of the CRDM nozzles. Small amounts of boric acid buildup were found on the reactor pressure vessel head, but it was determined that the boric acid had not compromised the structural integrity of the reactor pressure vessel head. Indications were identified through nondestructive evaluation, including ultrasonic testing, in 24 nozzles.

The flaws were consistent with primary water stress corrosion cracking (PWSCC) although its onset was unusually rapid since the head had been replaced following the 2002 incident. This early onset of PWSCC is largely attributed to the vessel head temperature being slightly higher than expected during the most recent operating cycle. It was determined that poor material microstructure was also likely a factor in the quickened pace of PWSCC onset.

The NRC commissioned a Special Inspection Team (SIT) to independently assess the licensee's evaluation of the CRDM nozzle flaws and safety analyses. The SIT concluded that licensee actions met NRC requirements and that the vessel head was in a suitable condition to return to service; however, the NRC also decided that licensee had to replace the head again in 2011. The SIT report can be found on the DVD (see **NRC Actions** in the documents section).

Retrospectives

In 2013, the NRC held a special seminar titled, "2002 Davis-Besse Reactor Pressure Vessel Head Degradation—A Retrospective View of the Event, the Actions that Followed, and the Lessons Learned." The seminar featured several presentations including a regulatory perspective from Jim Dyer, former Regional Administrator of NRC's Region III office, an analysis of political impacts from former NRC Chairman, Dr. Richard A. Meserve, and lessons learned from

Dr. Brian Sheron, Director of the NRC's Office of Nuclear Regulatory Research. A full agenda of the seminar as well as video and slides from all the presentations are available on the DVD included with this brochure.

NRC Deputy Regional Administrator, Cindy Pederson, speaks at the 2013 special seminar on Davis-Besse.

NRC Deputy Executive Director for Materials, Waste, Research, State, Tribal and Compliance Program, Mr. Mike Weber, introducing the January 2013 special seminar " 2002 Davis-Besse Reactor Pressure Vessel Head Degradation—A Retrospective View of the Event, the Actions that Followed, and the Lessons Learned."

DVD

To help navigate the DVD, the outline below provides topics and headings that the user can access directly from the interactive window.

Important Note: Many of the documents on the DVD are historical in nature and may contain information that is obsolete or superseded by today's regulations and research. Please refer to the NRC's public Web site (www.nrc.gov) for current information on regulations, Commission policy statements, regulatory guidelines, regulatory processes, and research results.

Main DVD

- **Timelines**
  - 2002 Event
  - PWSCC
- **Seminar**
  - Agenda
  - Part 1
    - Video
    - Slides
  - Part 2
    - Video
    - Slides
- **Documents**
  - 2002 Event
    - Events Leading Up
    - NRC Actions
    - Industry Response
  - 2010 Event
    - Events Leading Up
    - NRC Actions
    - Industry Response
  - Tech Reports
    - Davis-Besse Degradation
    - PWSCC

2002 Davis-Besse Reactor Pressure Vessel Head Degradation Knowledge Management Digest

Prepared By:

Jack Riley

Brian McGrattan

Raj Mohan Iyengar

Sabrina Allen

Jeanne Dion

Joshua Kusnick

Don Marksberry

Felix E. Gonzalez

Jay Collins

Mel Holmberg

Catherine Scott

Aladar Csontos

Mark Henry Salley

This DVD was developed using Visual Basic Express 2010.
Make sure you have Windows XP or newer and Visual Basic Framework 3.5 for the DVD to work correctly.

NUREG/KM-0005
February 2014

STAY CONNECTED