General Disclaimer

One or more of the Following Statements may affect this Document

- This document has been reproduced from the best copy furnished by the organizational source. It is being released in the interest of making available as much information as possible.

- This document may contain data, which exceeds the sheet parameters. It was furnished in this condition by the organizational source and is the best copy available.

- This document may contain tone-on-tone or color graphs, charts and/or pictures, which have been reproduced in black and white.

- This document is paginated as submitted by the original source.

- Portions of this document are not fully legible due to the historical nature of some of the material. However, it is the best reproduction available from the original submission.

Produced by the NASA Center for Aerospace Information (CASI)

JAN 1984
RECEIVED
NASA STI FACILITY
ACCESS DEPT.

CRinc

(NASA-CR-175356) WEIGHT AND BALANCE FOR THE AIRMASS INCORPORATED SUNBURST MODEL C ULTRALIGHT (Kansas Univ. Center for Research, Inc.) 92 p HC A05/MF A01 CSCL 01C

N84-16163

Unclas

G3/05 00543

FEB 1984
RECEIVED
NASA STI FACILITY
ACCESS DEPT.

THE UNIVERSITY OF KANSAS CENTER FOR RESEARCH, INC.

2291 Irving Hill Drive-Campus West

Lawrence, Kansas 66045

WEIGHT AND BALANCE FOR THE AIRMASS INCORPORATED SUNBURST MODEL 'C' ULTRALIGHT

KU-FRL-6135-2

John A. Woltkamp, Project Engineer
Carlos L. Blacklock, Project Manager
Dr. Jan Roskam, Principal Investigator

Prepared under NASA Grant NAG1-345
for
National Aeronautics and Space Administration
Langley Research Center

Flight Research Laboratory
University of Kansas Center for Research, Inc.
Lawrence, Kansas 66045

November 1983

SUMMARY

This report presents the results of the weight and balance determination done for an Airmass Incorporated Sunburst Model 'C' ultralight. The tests were done at the University of Kansas Aerospace Engineering hangar facilities at the Lawrence Municipal Airport in Lawrence, Kansas. The weight and balance determination encompassed

* finding weight and C.G. of each component
* determining the center of gravity of the ultralight in an X,Y,Z reference plane
* calculating the mass moments and products of inertia (I_{xx}, I_{yy}, I_{zz}, I_{xy}, I_{xz}, I_{zy}).

The above relations were calculated for various pilot weights and fuel loadings. The fuel varied from empty to five gallons (31.05 lbs), and the pilots ranged from 90 to 260 pounds. The weighings of components total 277.48 lbs (no pilot and no fuel). The centers of gravity and inertias of the empty vehicle are listed below:

Center of Gravity

$X_{c.g.}$ = 48.73 % MGC, 110.02 in. from reference ($\bar{c}$ = 50.34 in.)

$Y_{c.g.}$ = 233.77 in. from reference

$Z_{c.g.}$ = 58.91 in. from reference

Moments of Inertia

I_{xx} = 303.9 slugs-ft.^{2}

I_{yy} = 16.4 slugs-ft.^{2}

I_{zz} = 352.3 slugs-ft.^{2}

I_{xy} = -2.5 slugs-ft.^{2}

I_{xz} = 3.2 slugs-ft.^{2}

I_{zy} = -0.43 slugs-ft.^{2}

TABLE OF CONTENTS

Section	Page
Summary	i
Table of Contents	ii
List of Figures	iii
1. Introduction	1.1
2. Methods Implemented	2.1
2.1 Weighings	2.1
2.2 Materials	2.3
2.3 Calculations	2.5
2.3.1 Locating Components in Reference Axis System	2.5
2.3.2 Center of Gravity	2.19
2.3.3 Inertial Quantities	2.19
2.4 Weighing Check and Error Analysis	2.22
3. Presentation and Discussion of Test Results	3.1
4. Conclusions	4.1
5. References	5.1
6. Appendices	6.1
A. Weight and Balance Computer Program	A.i
B. Parts List with Description	B.i
C. Weighing Check and Error Analysis	C.i
D. Principal Inertial Quantities	D.i

LIST OF FIGURES

Number		Page
1.1	Airmass Incorporated Sunburst Model 'C' ultralight.	1.2
1.2	Sunburst ultralight front-view drawing.	1.3
1.3	Sunburst ultralight side-view drawing.	1.3
1.4	Sunburst ultralight top-view drawing	1.3
2.1.1	The typical marking convention for components	2.2
2.1.2	Wing skin C.G. location and reference rib.	2.2
2.2.1	Manufacturer ultralight specification listing for Sunburst Model 'C'. .	2.4
2.3.1	Measurement reference axis system for establishing X,Y, Z coordinates. .	2.5
2.3.2	Distance measurements being taken using a vertical distance tool, plumb line, and tape measure.	2.6
2.3.3	Measurement technique used to determine coordinates. . . .	2.6
2.3.2.1	Center of gravity in the defined reference X-Z plane. . .	2.20
2.3.2.2	Center of gravity in the defined X-Y reference plane. . .	2.21
3.1	Computer output listing for empty aircraft; zero fuel and no pilot. . .	3.3
3.2	Computer output listing for aircraft loading; aero fuel and 90 pound pilot. .	3.3
3.3	Computer output listing for aircraft loading; zero fuel and 175 pound pilot.	3.4
3.4	Computer output listing for aircraft loading; zero fuel and 260 pound pilot.	3.4
3.5	Computer output listing for aircraft loading; 2.5 gallons fuel and no pilot.	3.5
3.6	Computer output listing for aircraft loading; 2.5 gallons fuel and 90 pound pilot.	3.5
3.7	Computer output listing for aircraft loading; 2.5 gallons fuel and 175 pound pilot.	3.6
3.8	Computer output listing for aircraft loading; 2.5 gallons fuel and 260 pound pilot.	3.6

LIST OF FIGURES (continued)

Number		Page
3.9	Computer output listing for aircraft loading; 5.0 gallons fuel and no pilot.	3.7
3.10	Computer output listing for aircraft loading; 5.0 gallons fuel and 90 pound pilot.	3.7
3.11	Computer output listing for aircraft loading; 5.0 gallons and 75 pound pilot.	3.8
3.12	Computer output listing for aircraft loading; 5.0 gallons fuel and 260 pound pilot.	3.8
3.13	Ultralight longitudinal experimental flight envelope for pilot and fuel loadings.	3.9

1.0 INTRODUCTION

This report will address the weight and balance analysis of an ultralight aircraft, shown in Figures 1.1-1.4.

In recent years inflation, labor costs, complexity, and government regulations have driven up the cost of privately owned single engine general aviation aircraft. Previously, many of these airplanes had been used for recreational, or nonessential, use; but recently the cost has driven such users out of the market. Home-built aircraft have absorbed some of this market, but the time and inconvenience in construction have dampened its development. Enter: the ultralight aircraft.

Originally, the ultralight was a powered derivative of a hang-glider; but it has evolved into a more complex aircraft of many bizarrre configurations. Currently the Federal Aviation Administration (FAA) has few regulations that apply to this class of airplane, one exception being a 254 pound empty weight limit. The recent boom in this industry has gotten the attention of the Federal government and, namely, the FAA. This interest has been aroused by numerous fatal accidents that might have been avoided if some safety regulations had applied. The National Aeronautics and Space Administration (NASA) has, in response to this concern, granted the University of Kansas Center for Research, Incorporated, a contract to conduct tests and analyses of a typical ultralight aircraft to gain a better understanding of its characteristics and of the technologies used.

The Center for Research, Inc. (CRINC), in turn obtained a Sunburst Model 'C' ultralight from Airmass, Incorporated, in Olathe, Kansas. Currently a three-year research program is planned. This program will involve the following analyses:

* power plant test and analysis
  (Report # KU-FRL-6135-1, dd October 1983)
* weight and balance
  (this report, # KU-FRL-6135-2, dd December 1983)

* drag analysis
  (Report # KU-FRL-6135-3, dd December 1983)
* description of the assembly in process
  (Report # KU-FRL-6135-4, dd December 1983)
* stability and control
  (Report # KU-FRL-6135-5, planned dd February 1984)
* load analysis
  (Report # KU-FRL-6135-6, planned dd February 1984)
* stress analysis
  (Report # KU-FRL-6135-7, planned dd February 1984)
* nondestructive loads testing
  (Report # KU-FRL-6135-8, planned dd April 1984)
* flight test and analysis
  (Report # KU-FRL-6135-9, planned dd August 1984).

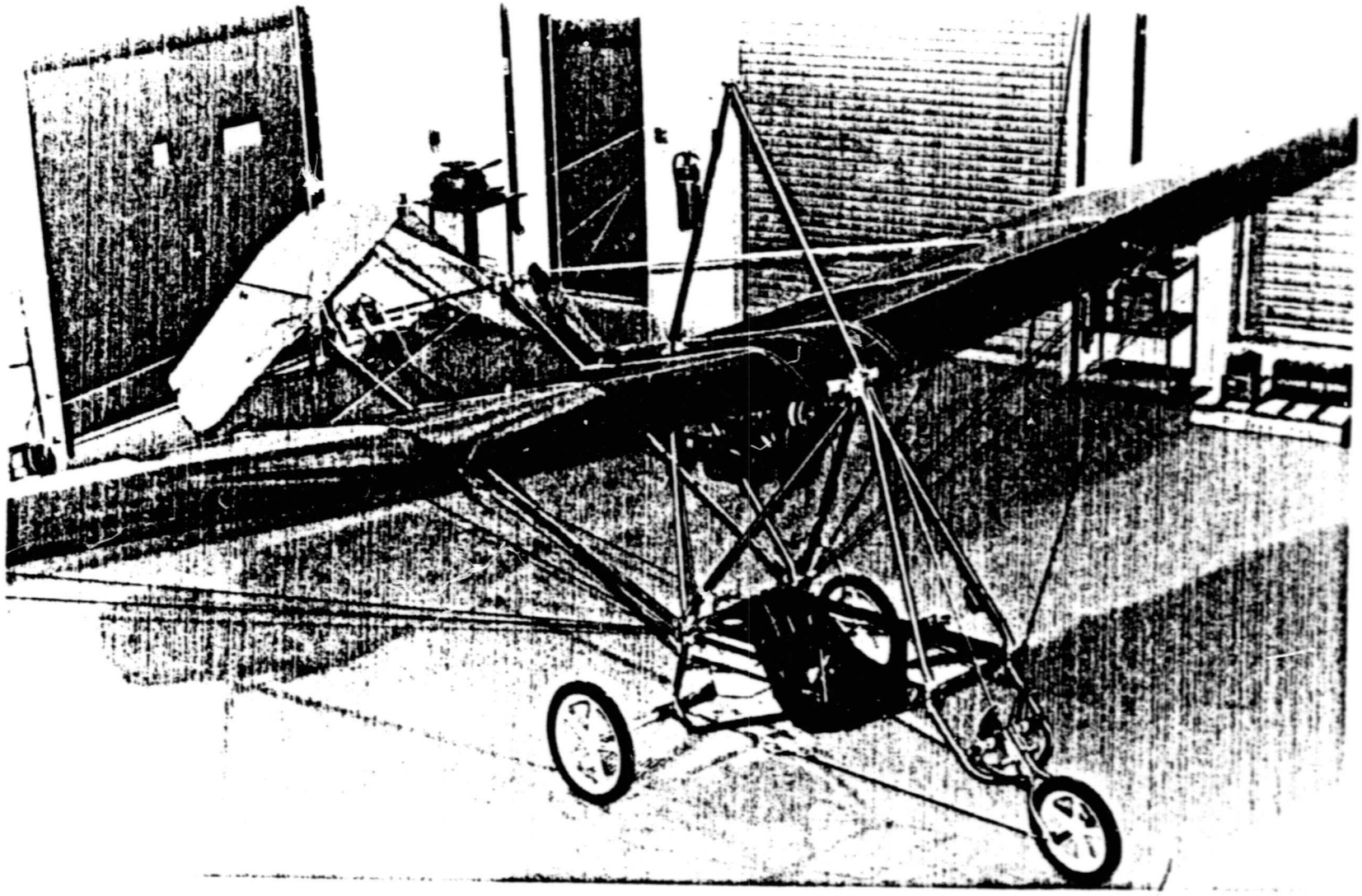

Figure 1.1 Airmass Incorporated Sunburst Model 'C' ultralight.

ORIGINAL PAGE IS
OF POOR QUALITY

ORIGINAL PAGE IS
OF POOR QUALITY

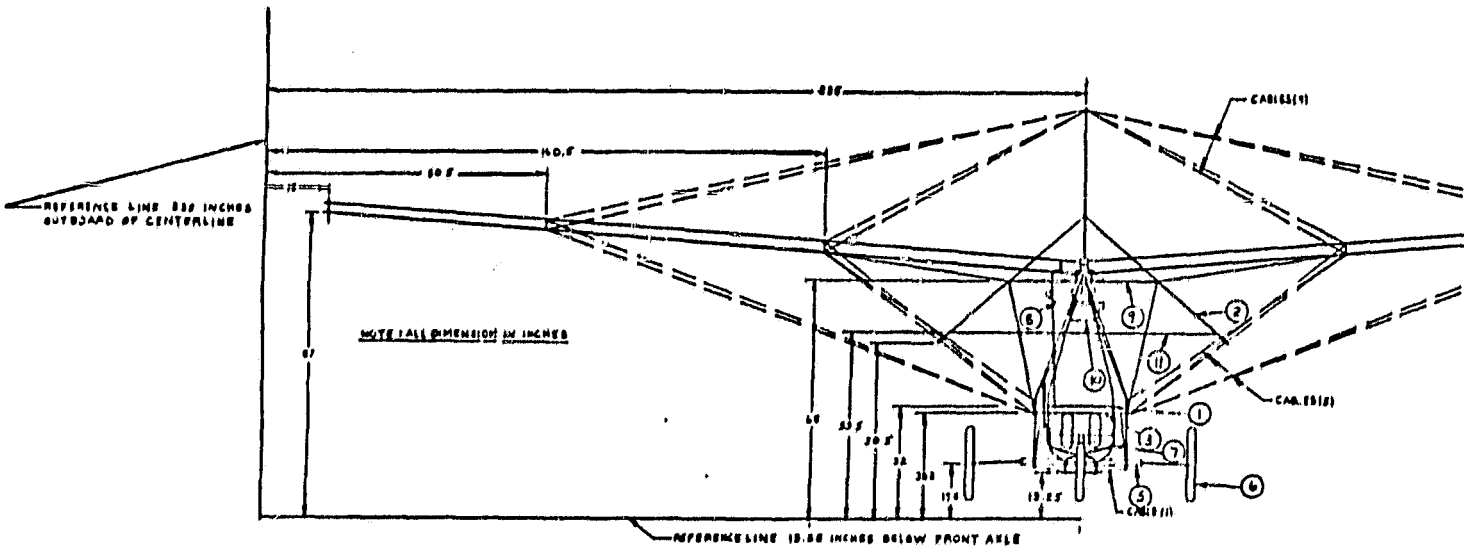

FOLDOUT FRAME

Figure 1.2 - Sunburst Ultralight Front-view Drawing

PAGE IS
QUALITY

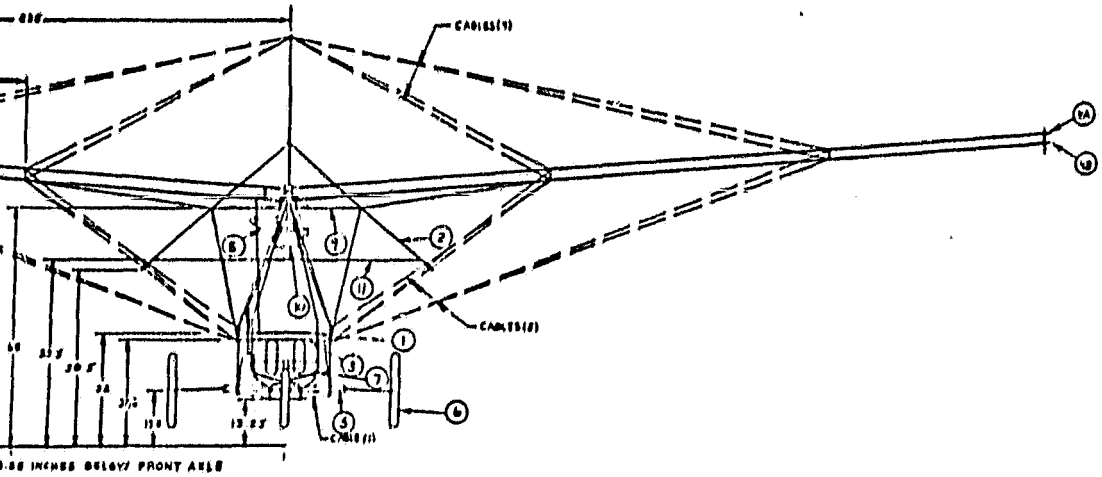

ORIGINAL PAGE IS
OF POOR QUALITY

2 FOLDOUT FRAME

ont-view Drawing

ULTRALIGHT RESEARCH GROUP		
AIRMASS SUNBURST MODEL C		
DR BY	UNIV. OF KANSAS	
CK BY	FRONTVIEW	
SCALE 1:20	17 SEPT 1983	1/3

AIRPLANE SURFACE GEOMETRY

SURFACE	AREA (SQ FT)	SPAN (FT)	ASPECT RATIO	TAPER RATIO	SWEEP ANGLE, LE (Λ_{LE}) (DEG)	DIHEDRAL (DEG)	AIRFOIL	C
WING	[illegible]	[illegible]	[illegible]	[illegible]	[illegible]	[illegible]	[illegible]	[illegible]
[illegible]	[illegible]	[illegible]	[illegible]	[illegible]	[illegible]	[illegible]	FLATPLATE	[illegible]
RUDDERVATOR	[illegible]	FULL	—	[illegible]	[illegible]	[illegible]	FLATPLATE	—
SPOILERS	[illegible]	[illegible]	[illegible]	[illegible]	[illegible]	[illegible]	FLATPLATE	—
FAIRED HULL	[illegible]	[illegible]	[illegible]	[illegible]	[illegible]	—	FLATPLATE	[illegible]
FAIRED WAT. TAIL	[illegible]	[illegible]	[illegible]	[illegible]	[illegible]	—	FLATPLATE	[illegible]

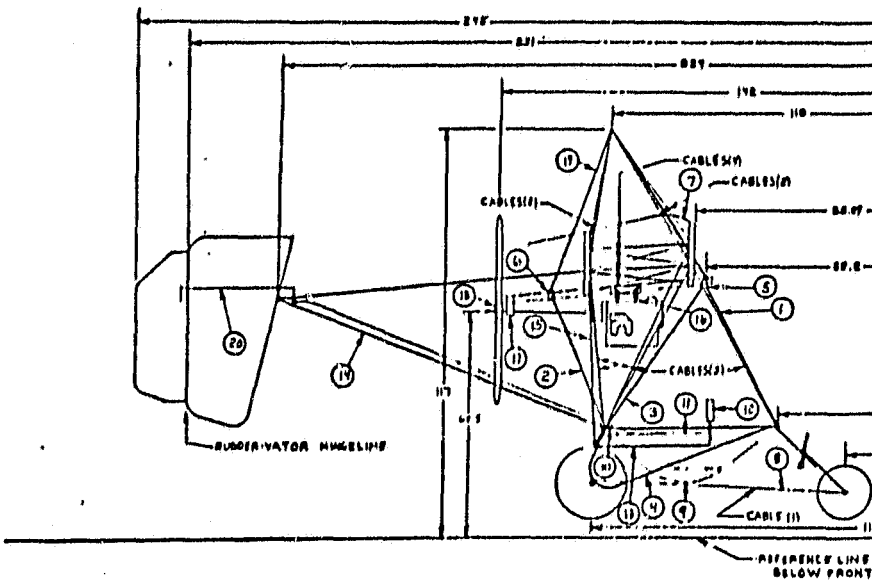

NOTE: ALL DIMENSIONS IN INCHES

ORIGINAL PAGE IS OF POOR QUALITY

FOLDOUT FRAME

Figure 1.3 - Sunburst Ultralight Side-view Drawing

DRAWING #	ULTRALIGHT PART #
1	[illegible]
2	[illegible]
3	[illegible]
4	[illegible]
5	[illegible]
6	[illegible]
7	[illegible]
8	[illegible]
9	[illegible]
10	[illegible]
11	[illegible]
12	[illegible]
13	[illegible]
14	[illegible]
15	[illegible]
16	[illegible]
17	[illegible]
18	[illegible]
19	[illegible]
20	[illegible]

[illegible]	AIRFOIL	C
		[illegible]
	FLATPLATE	[illegible]
	FLATPLATE	—
	FLATPLATE	—
	FLATPLATE	[illegible]
	FLATPLATE	[illegible]

ORIGINAL PAGE IS
OF POOR QUALITY

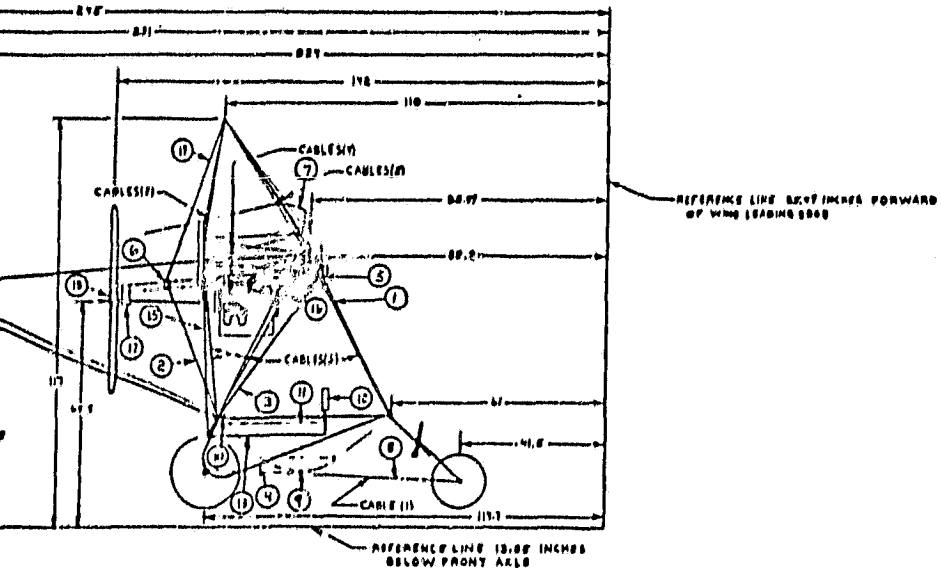

2 FOLDOUT FRAME

ULTRALIGHT RESEARCH GROUP	
AIRMASS SUNBURST MODEL C	
DR BY [illegible]	UNIV OF KANSAS
CK BY [illegible]	SIDEVIEW
SCALE 1:20	17 SEPT 1983	2/3

ORIGINAL PAGE IS
OF POOR QUALITY

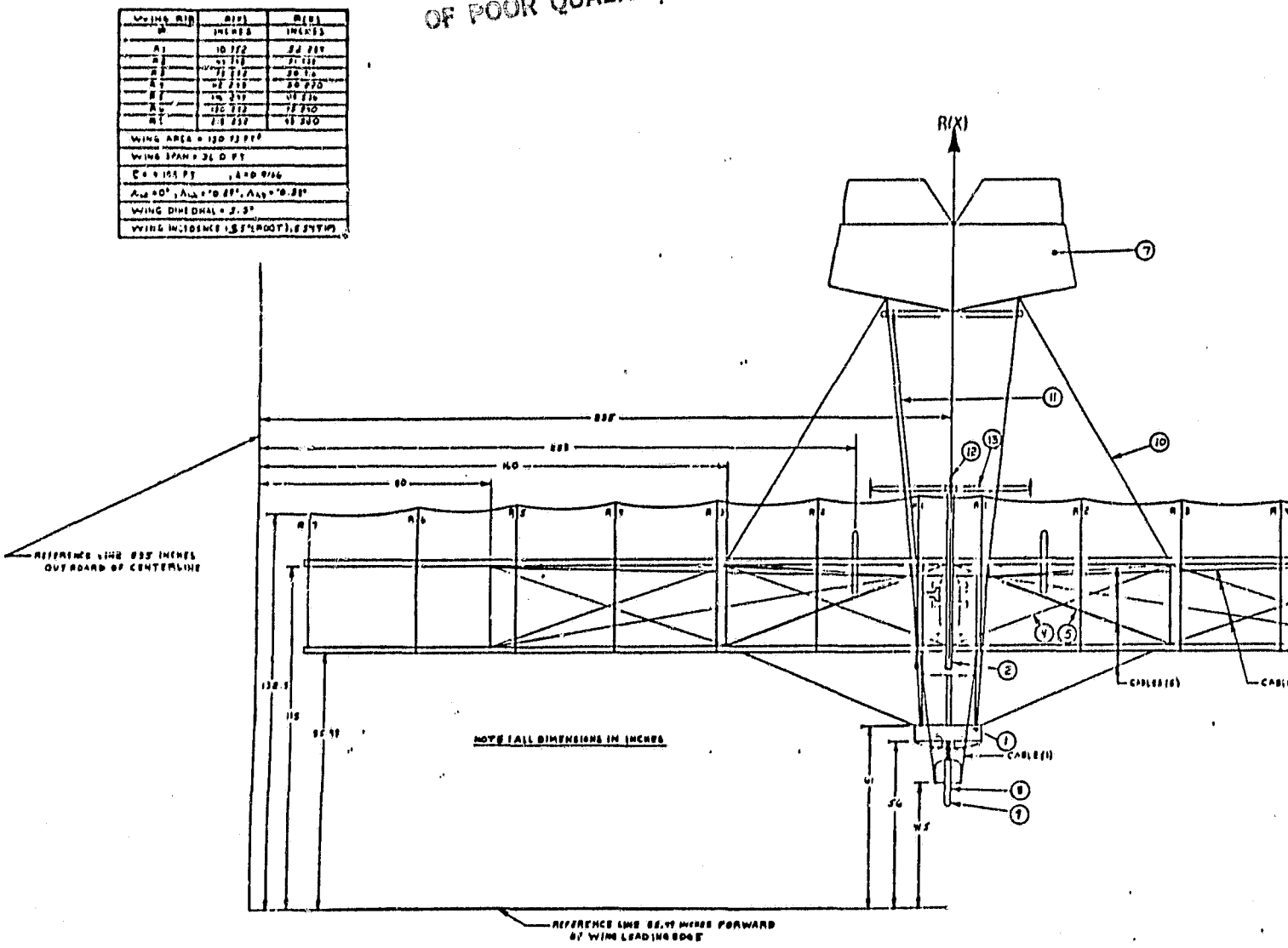

FOLDOUT FRAME

Figure 1.4 - Sunburst Ultralight Top-view Drawing

DRAWING #	ULTRALIGHT PART #
1	[illegible]
2	[illegible]
3	[illegible]
4	[illegible]
5	[illegible]
6	[illegible]
7	[illegible]
8	[illegible]
9	[illegible]
10	[illegible]
11	FAN FABRIC
12	[illegible]
13	[illegible]
14	[illegible]
15	[illegible]
16	[illegible]
17	[illegible]
18	[illegible]
19	PROPELLER

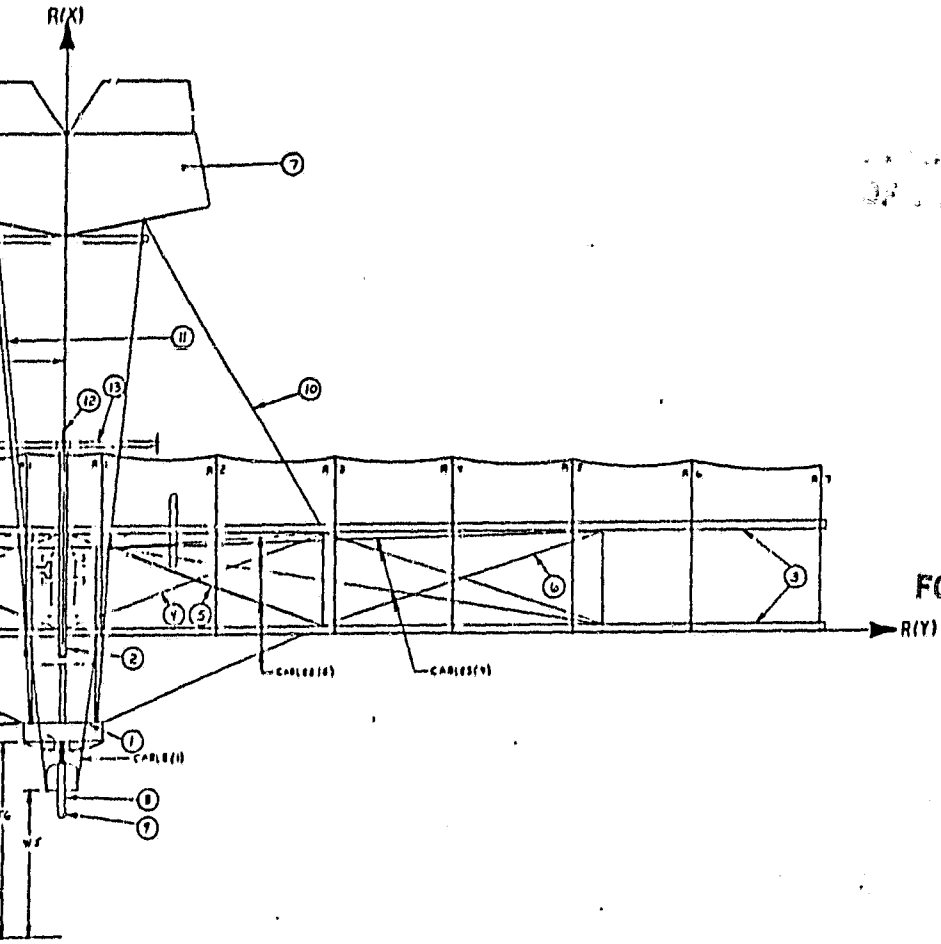

2

FOLDOUT FRAME

ULTRALIGHT RESEARCH GROUP		
AIRCAM SUNBURST MODEL C		
DR BY [illegible]	UNIV. OF KANSAS	
CK BY [illegible]	TOPVIEW	
SCALE 1:20	17 SEPT 1983	3/3

pg. 1.3(c)

2.0 METHODS IMPLEMENTED

To complete the specified goal of this weight and balance document, each individual component had to be weighed and its center of gravity determined relative to some reference axis system. This was necessary to determine the ultralight's center of gravity (C.G.), its mass moments of inertia, and the products of inertia.

2.1 WEIGHINGS

All weighings were done at the University of Kansas Department of Physics on a combination of two scales. The components that weighed less than two pounds were weighed on a triple-beam balance, while the items that weighed more were done on a larger scale.

The triple-beam balances measured the mass of each item, which then had to be converted into pounds-weight. Each item was marked with a part number and a C.G. was determined. The center of gravity of each item was found by placing the component on a knife-edged support and adjusting until a satisfactory balance point was found. The balance point was assumed to be the center of gravity and was marked accordingly. The typical marking convention for part number and C.G. location is shown in Figure 2.1.1. The only exception to this was the C.G. determination of the wing skin. To find its C.G., a rib was assumed to simulate the actual cross section of the airfoil. Using this reference rib (located halfway outboard on the wing), the underside of the airfoil was assumed to be a straight line from the leading edge to the trailing edge of the rib location; the center of gravity was chosen to be located halfway between the upper and lower skin surface, and half the distance of the upper and lower rib lengths aft of the leading edge (see Figure 2.1.3).

After marking and identifying of all the components, the ultralight was assembled. Upon completion of assembly, many parts were left over and determined to be superfluous. The parts list that was compiled for the ultralight includes only those items which were used for assembly. The compiled parts list is given in Appendix B, Table B-2.

ORIGINAL PAGE IS
OF POOR QUALITY

An error analysis was performed for the weighings and the results are presented in Chapter 2.4; this analysis is critical because the weighing results will later be used to calculate the aircraft weight, C.G., and inertias.

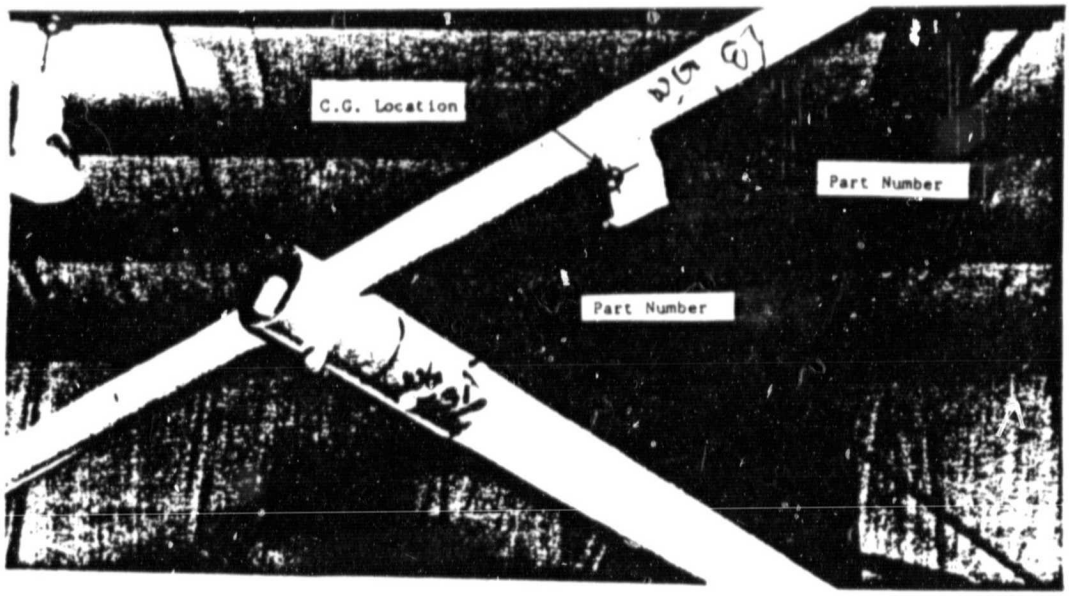

Figure 2.1.1 The typical marking convention for components.

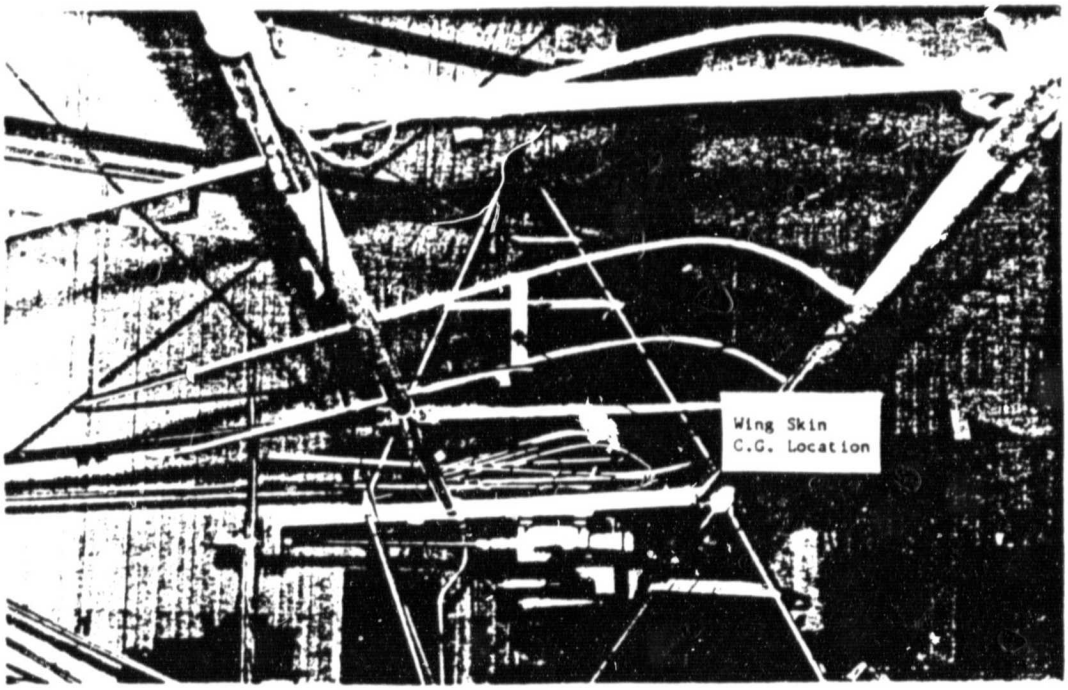

Figure 2.1.2 Wing skin C.G. location and reference rib.

2.2 MATERIALS

The majority of the structure on the Sunburst ultralight was made up of anodized aluminum tubing, as is the case on most ultralights. It was observed that the mixer assembly and wing spar tubes were not anodized. The aluminum used for these components was 6061-T6 stock (.049" and .058" thick) which was pre-cut,bent, drilled, and processed upon arrival from Airmass Incorporated(the only exception to this was that the upper and lower boom tubes which had to be drilled in accordance with the Assembly Manual, Reference 1). Other materials used were:

* 3/32" and 1/8" plastic coated stainless steel cable
  (the upper flying wires were not coated)
* AN-aircraft grade standard hardware
  (bolts, lock-nuts, washers)
* 3.9 ounce stabilized dacron wing and tail fabric
* propeller-54"x27" laminated 2 ply birch wood
* fiberglas bucket seat
* two large, one small fiber spoked wheels
* assorted plastic caps,plugs,saddles,and spacers

The actual manufacture's specification sheet for the ultralight is shown in Figure 2.2.1.

ORIGINAL PAGE IS
OF POOR QUALITY

SUNBURST

The ultralight aircraft designed for the discriminating pilot who demands the best in aluminum alloy and dacron design.

AIRMASS

Controls
A truly three axis design incorporating coordinated controls with stick and rudder inputs thru a mixer operated inverted V-tail and wing mounted spoilers.

Structure
Built with top quality aircraft hardware and components. It's triangulated main frame, substantial wing spars and rugged suspended landing gear give notice the Sunburst's element of structural integrity. In fact, the entire structure has been overbuilt and designed for the containment and safety of the pilot. Steerable nose gear and large diameter wheels facilitate the Sunburst's use in an all terrain environment.

Power System
A strong and reliable twin cylinder 430CC Cuyuna engine developing 30hp, is the heart of the Sunburst power system. It features dual CDI ignition, forced air cooling and mid-air restarting capabilities. The power system package with smooth planetary gear reduction drive—turning a 54" x 27" laminated hard wood propeller provides a power and confidence unparalleled by others in its class.

Performance
The Sunburst's impressive ground handling abilities along with its quick take off and rapid rate of climb allows its use in a wide variety of operating conditions. Once aloft, you experience the responsive controls and its wide range of speeds and soaring capabilities. Stalls are mild and are preceded by a gentle warning. The Sunburst has spiral stability and will not enter a stabilized flat spin condition. Landing is effected by properly setting the throttle to fly the Sunburst on the runway at a minimum cruising speed.

Comfort
Long range upholstered comfort is provided by a five point suspended bucket seat adjustable to a range tilt and leg length positions. Adjustable rudder pedals also improve the pilots comfort settings. The throttle and control stick are located in natural low fatigue positions to further enhance the ease of operation.

Finish
Bright blue anodized tubing, black coated stainless steel cables and color coordinated wheels and wind coverings combine to convey an elegant finish.

Overall; the performance, quality, comfort and finish are only hints that the Sunburst is the ultimate personal flying machine designed to give the pilot what he needs, the exhilaration and ease of ultralight flight.

STANDARD FEATURES

Tubing	6061-T6 bright blue anodized aluminum tubing, cut, bent, drilled and processed. Ready for assembly.
Hardware	AN-aircraft grade hardware and fittings.
Cables	3/32" and 1/8" black coated stainless steel cables, factory pre-swagged on jig.
Wing	36' span, 156 sq. ft., 8.3 aspect ratio, 4'4" chord, double surfaced.
Wing Coverings	3.9 oz. stabilized dacron; wing coverings are precision sewn and are ready for mounting. Ten standard color schemes. Custom wing color schemes available.
Engine	Cuyuna 430cc, 30hp, 2 cycle, recoil starter, quiet multichambered muffler, forced air cooling and dual CDI ignition—factory assembled components ready to bolt on.
Drive Train	Inline 2-1 ratio planetary gear reduction drive factory assembled ready to bolt on.
Propeller	Drive shaft driven, pusher mounted, 54"x 27" laminated 12 ply birch.
Carriage Assembly	Upholstered fiberglass bucket seat with five point suspended comfort adjustment system, positive retention shoulder harness, large diameter fiber spoked wheels, with shock cord suspension system. Wheels available in red, blue, yellow or black.

DIMENSIONS Height 9 ft. Length 16 ft. Width 36 ft.

PERFORMANCE SPECIFICATIONS

VNE (never exceed speed)	60 m.p.h.
Cruise Speed	35-50 m.p.h.
Stall speed	23 m p.h
Glide ratio	10/1
Takeoff distance	75'-100'
Landing distance	50'-100'
Rate of climb	800 f.p.m.
Fuel flow	1.6 g.p.h.
Fuel capacity	5 gallons
Endurance	3 hours
Average range	100 nautical miles
Empty weight	240 pounds
Wing loading	2.8 lbs. @ 170 lb. pilot w/5 gal. fuel
Pilot Weight range	90-260 pounds

OPTIONAL EQUIPMENT

Instruments:	**Others:**
Air speed indicator	Storage bags
Altimeter	Pontoons
Variometer	Parachute system
Tachometer	Wheel brake
EGT	Front fender
CHT	Wheel pants
Instrument pod	AG spraying system
2-way radio	Strobe light

Figure 2.2.1 Manufacturer's ultralight specifications listing for the Sunburst Model'C'.

ORIGINAL PAGE
OF POOR QUALITY

2.3 CALCULATIONS

2.3.1 LOCATING COMPONENTS IN A REFERENCE AXIS SYSTEM

To determine the center of gravity and moments of inertia the location of each component had to be referenced to an axis system. Because no technical drawings could be obtained from the manufacturer, these locations had to be determined by measurements. These measurements were taken relative to a reference axis that was arbitrarily chosen to be 'off' the aircraft to allow possible future test modifications to remain within the current axis system. The ultimate goal was to have the X,Y, and Z coordinate for each component. The coordinate system is shown in Figure 2.3.1 and in Figures 1.2, 1.3, and 1.4.

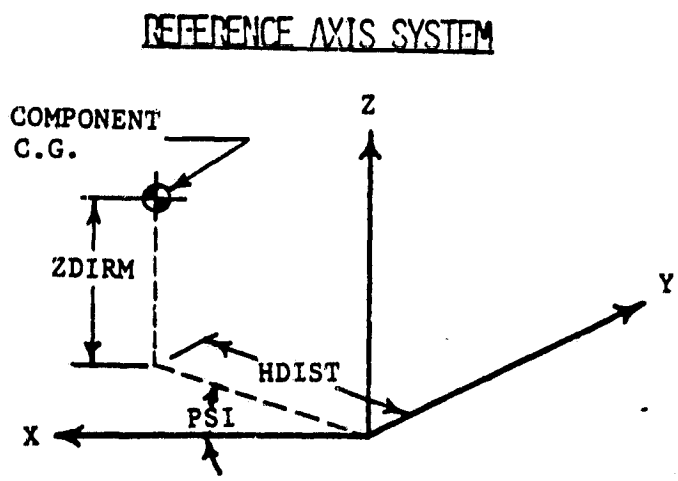

Figure 2.3.1 Measurement reference axis system for establishing X, Y, and Z coordinates.

The coordinates were found by using a vertical measurement tool, tape measure, plumb-bob, and transit(Figure 2.3.2). The measurements taken were (Figure 2.3.3):

* vertical distance
* horizontal distance to plumb-line
* hoizontal angle from reference axis using the transit

ORIGINAL PAGE IS
OF POOR QUALITY

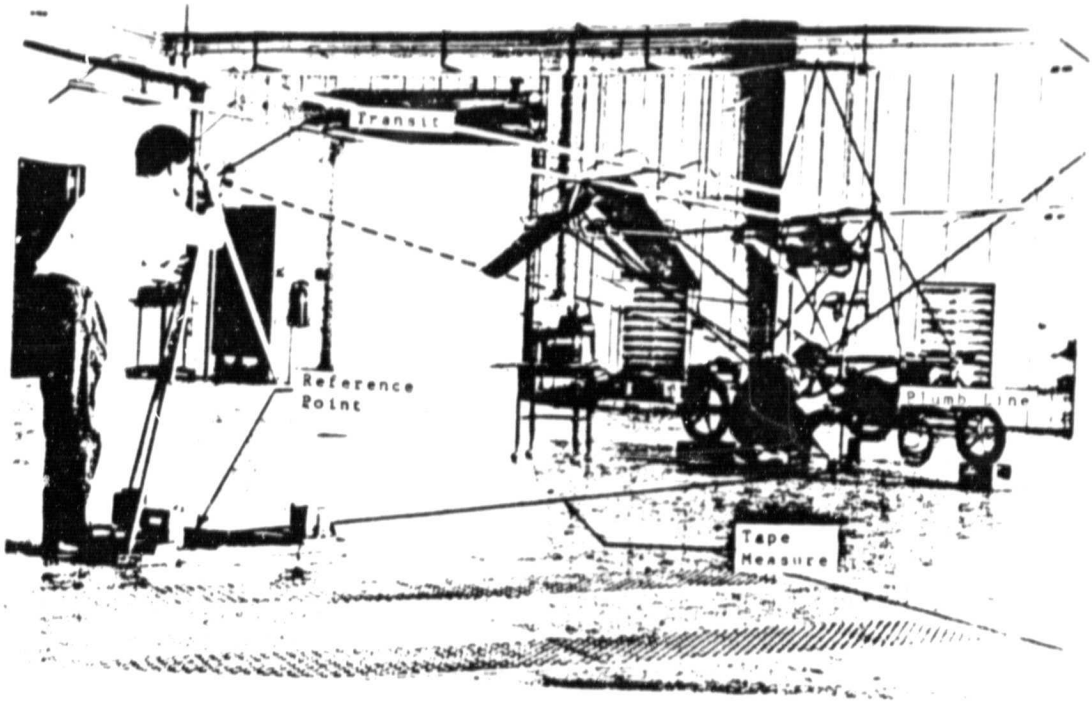

Figure 2.3.3 Measurement techniques used to determine coordinates.

Figure 2.3.2 Distance measurements being taken using vertical distance tool, plumb line, and tape measure.

The measurements, or raw data, taken are listed in Table A-1, Appendix A. The measurements are assumed to be accurate, or were read, to the nearest 1/8 inch and the angle to the nearest 10 minutes. The errors in these measurements and their effects are discussed in Section 2.4.

Once the measurements had been taken, the data were reduced to the reference coordinates desired. This was accomplished using a computer program subroutine that converted these raw data into usable material. The data taken, vertical height (Z-DIR), horizontal distance (HDIST), and horizontal angle (PSI) were reduced to X, Y, and Z coordinates as follows:

$$X_{ref} = HDIST \times COS(PSI)$$

$$Y_{ref} = HDIST \times COS(PSI)$$

Z_{ref} is measured as vertical height, Z-DIR.

These reference coordinates are listed in Table 2.3.1. With these data, the C.G. and moments of inertia can be calculated.

ORIGINAL PAGE IS
OF POOR QUALITY

Table 2.3.1 Reference coordinates for each component according to part number(583 components including pilot and fuel).

THIS FILE COORD CONTAINS X,Y,AND Z COORDINATES
WHERE Y AND Z ARE CALCULATED

ITEM	XREF	YREF	ZREF	WEIGHT(LBS.)
W6-62	91.445	18.887	90.250	.237600
AN4-24A 2F,2T	88.172	16.071	90.250	.054590
EC-9	77.717	13.466	90.620	.012790
W6-87	105.500	15.447	88.875	1.146000
EC-9	118.647	15.262	87.875	.012790
AN4-24A 3T	117.564	15.833	87.375	.052380
W6-63	116.899	17.825	87.750	.218500
NC-57	136.641	21.031	85.250	.007253
W6-66	112.368	55.609	87.875	.255900
W6-37	118.351	56.451	85.500	2.354000
W6-37	86.251	55.841	87.250	2.354000
AN4-30A 2T	86.033	78.367	85.625	.057180
W6-35	86.033	78.367	85.625	.005952
W6-53	91.412	81.360	85.375	.048670
AN4-14A 1T	91.412	81.360	85.375	.031670
CS-38	95.051	81.181	85.375	.014770
W6-93 & 94	94.087	78.251	85.250	.281000
W6-47	96.493	84.861	84.500	.288500
W6-77	112.257	77.876	84.625	.023530
AN3-16A 2F	112.694	77.684	83.750	.026370
AN4-14A 1T	113.032	77.192	83.875	.031670
W6-53	113.367	76.698	83.875	.048677
AN4-26A 2F	115.389	76.374	83.875	.056790
AN4-24A 2F	115.702	76.581	84.000	.053260
W6-66	108.195	86.063	85.625	.255900
W6-33	116.426	117.447	80.750	2.115000
W6-33	85.155	117.207	82.000	2.115000
W6-57	90.222	124.958	80.375	.215000
W6-57	90.222	124.958	80.375	.215000
W6-66	109.208	122.015	80.625	.255900
W6-35	85.300	158.221	75.625	.005952
AN4-30A 3F	85.355	158.192	78.625	.059380
W6-53	86.513	155.562	78.625	.048670
AN4-14A 1T	86.513	155.562	78.500	.031670
W6-46	105.013	156.690	77.500	.278300
W6-66	108.692	155.230	79.750	.255900
AN4-14A 1T	112.759	156.172	77.375	.031670
AN4-24A 1T	86.757	155.426	78.625	.049730
W6-93	91.672	153.599	78.250	.268300
W6-53	114.340	155.484	77.250	.048670
AN4-26A 2F	116.068	157.317	77.375	.056790
AN4-24A 2F	116.436	157.355	77.375	.053260
W6-97	117.655	156.134	77.250	.065480
AN4-17S 1F1TWR	117.655	156.134	77.250	.050500
CS-40	118.706	134.978	79.500	.343800
W6-75A	72.452	190.433	54.125	.687500
W6-56	100.087	193.666	74.375	.200000
W6-92	100.087	193.666	74.375	.812500
W6-66	107.663	188.984	76.500	.255900
W6-27	115.038	189.577	74.000	2.330000
W6-27	85.275	189.305	76.250	2.380000
W6-66	109.963	222.985	74.000	.255900

ORIGINAL PAGE IS
OF POOR QUALITY

Table 2.3.1 continued

ITEM	XREF	YREF	ZREF	WEIGHT(LBS.)
AN3-7A 5T	113.503	225.971	66.375	.020780
AN3-7A 5T	118.826	235.747	66.375	.020780
CS-33	114.606	227.375	68.750	.073520
CS-42	114.184	226.048	69.625	.008598
AN5-12A 5F	114.184	226.048	69.625	.062090
CS-32	113.925	225.338	70.625	.047950
AN3-24A 1T2F	113.839	226.641	71.375	.032730
AN3-24A 1T2F	114.606	227.375	71.375	.032730
BBX	115.130	229.210	70.875	.375900
AN4-24A 1F1T	115.859	230.662	70.875	.052160
BB2	84.106	227.981	73.500	.100300
AN4-24A 2F	84.106	227.981	73.500	.053260
WG-71	104.368	177.749	92.500	.812500
WG-74	105.414	169.817	58.750	1.562500
EC-9	86.759	453.526	92.000	.012790
AN4-24A 3F	86.595	452.667	91.625	.055690
WG-62	86.510	450.519	91.625	.237600
WG-87	105.145	429.698	89.375	1.146000
EC-9	119.280	453.061	89.000	.012790
AN4-24A 3F	118.440	451.473	88.625	.055690
WG-63	118.567	451.956	88.625	.238500
HC-57	136.079	449.869	85.875	.007253
WG-66	110.582	415.020	88.875	.255900
WG-37	118.144	412.021	85.625	2.354000
WG-37	87.419	414.124	88.250	2.354000
WG-35	84.152	377.100	86.250	.005952
AN4-30A 2F	83.626	377.217	86.250	.059380
WG-53	88.968	393.185	85.875	.048670
AN4-14A 1T	88.968	393.185	85.875	.031670
WG-93	95.162	388.901	85.500	.278900
CS-38	91.877	387.764	85.500	.014770
WG-47	107.353	389.216	84.625	.288500
WG-77	114.435	390.581	84.750	.023530
AN3-16A 2F	114.435	390.581	84.750	.026370
AN4-14A 1T	109.759	391.272	84.000	.031670
WG-53	116.571	389.297	84.000	.048670
AN4-24A 2F	117.549	388.611	84.000	.053260
AN4-25A 2F	118.305	388.904	84.000	.053260
WG-66	111.476	382.460	85.625	.255900
WG-57	102.302	349.849	81.625	.215000
WG-57	102.302	349.849	81.625	.215000
WG-33	85.662	348.759	82.625	2.115000
WG-33	118.722	351.359	80.625	2.115000
WG-66	110.751	347.661	82.875	.255900
WG-66	110.308	314.464	79.750	.255900
WG-35	85.526	311.990	79.125	.005952
AN4-30A 1F	86.451	311.135	79.125	.056950
WG-53	87.631	309.067	78.875	.048670
AN4-14A 1T	87.631	309.067	78.875	.031670
WG-93	94.143	307.930	78.500	.267800
WG-46	105.687	306.939	77.750	.278300
AN4-14A 1T	115.790	311.021	77.250	.031670
WG-53	116.224	310.859	77.250	.048670
AN4-28A 2F	117.213	308.081	77.250	.058290
AN4-26A 2F	117.213	308.081	77.250	.056790

ORIGINAL PAGE IS
OF POOR QUALITY

Table 2.3.1 continued

ITEM	XREF	YREF	ZREF	WEIGHT(LBS.)
AN4-17S 1F1TWR	119.445	308.429	76.750	.050500
WG-27	85.720	277.434	76.500	2.330000
WG 92	101.057	272.756	74.500	.012500
WG 56	101.057	272.756	74.500	.200000
WG-66	85.627	285.955	76.500	.255900
WG-27	116.350	276.383	74.875	2.330000
WG-66	110.225	247.571	74.000	.255900
BB1	86.539	238.803	73.375	.100300
AN4-24A 2F	86.539	238.803	73.375	.053260
BB3	117.371	237.172	71.000	.100300
AN4-24A 2F	161.725	326.797	71.000	.053260
CS-39	117.673	335.460	79.500	.343800
WG-75	72.239	275.951	55.625	.687500
WG-74	106.479	302.031	53.375	.562500
WG-72	105.022	289.807	94.500	.012500
WG-283	100.200	238.019	96.750	3.660000
AN365-524	109.891	234.807	117.875	.011270
AN4-5A,1T	81.838	232.783	74.375	.155000
WG-13	81.351	232.954	73.625	.075620
WG-8	82.516	231.350	73.375	.103600
WG-8	83.621	237.192	73.375	.103600
AN4-26A 2F	81.096	231.189	72.000	.056790
AN4-26A 2F	82.425	230.586	71.875	.056790
AN4-24A 2F	81.573	230.358	73.000	.053260
AN4-24A 2F	80.197	229.650	74.125	.053260
AN4-24A 2F	82.662	230.235	74.000	.053260
AN4-28A 2F	85.167	231.853	73.250	.058290
AN4-28A 2F	84.478	232.104	73.750	.058290
AN4-25A 1F	85.189	233.043	73.375	.052970
AN4-17S 2FWR	82.783	233.775	76.000	.051630
CS-28	83.110	233.660	76.000	.000661
CS-28	82.457	233.891	76.000	.000661
ENG,RED,MOUNT	102.273	233.319	65.375	78.375000
SPARK PLUG	100.640	233.348	57.500	.124000
SPARK PLUG	103.999	231.733	57.500	.124000
Y-PIPE	104.285	229.684	64.125	1.643500
J-PIPE	96.692	225.929	63.000	1.010400
MUFFLER	102.014	223.851	60.125	5.000000
MUFFLER SPR	100.934	224.066	64.625	.012130
MUFFLER SPR	100.768	226.331	66.250	.012130
MUFFLER SPR	95.777	225.639	59.875	.012130
MUFFLER SPR	95.883	227.765	59.875	.012130
AN4-12A 2F	99.766	228.140	57.500	.035780
RUB[illegible]16 WASHER	99.766	228.140	57.500	.024690
AN4-12A 2F	106.031	229.159	57.250	.035780
RUB[illegible]16 WASHER	106.031	229.159	57.250	.024690
AN4-28A 2T	99.299	232.019	72.250	.056090
AN4-28A 2T	105.330	231.499	72.250	.056090
EN-26	103.233	241.213	61.625	2.000000
WG-36	125.645	232.184	70.875	.068830
AN5-42A 2F	125.280	232.381	69.750	.128000
AN3-25A 2F	125.969	232.008	70.500	.031310
AN3-25A 2F	124.956	232.555	70.625	.031310
AN4-20A 2F	125.280	232.381	72.750	.044450
WG-36	126.229	234.141	72.750	.068830

Table 2.3.1 continued

ORIGINAL PAGE IS
OF POOR QUALITY

ITEM	XREF	YREF	ZREF	WEIGHT(LBS.)
CS-28	125.443	232.293	72.750	.000661
CS-28	121.464	236.649	72.750	.000661
PROPSHAFT	136.528	235.369	66.250	8.875000
EN-12	138.229	235.418	66.250	1.760000
EN-95	135.776	232.075	66.250	.110900
EN-95	139.013	232.920	66.125	.110900
AN4-35A 2F	135.334	231.319	65.000	.068420
AN4-35A 2F	136.959	230.942	67.625	.068420
EN-90	138.176	232.255	67.625	.282600
EN-90	138.995	237.577	67.625	.282600
EN-92 BIG WASH	138.995	237.577	69.125	.100100
EN-92	138.116	231.418	69.250	.100100
EN-99	138.490	236.714	69.125	.057540
EN-99	138.629	232.276	69.250	.057540
AN6-50A	138.177	234.579	69.125	.172000
AN5-16A 2F	113.154	232.001	66.625	.065280
TS-4	161.144	185.376	73.875	1.760000
TS-2	189.259	187.092	47.500	1.875000
TS-22	156.120	219.521	48.750	1.250000
TS-3	160.667	205.955	73.625	1.760000
TS-1	195.969	221.504	47.250	1.875000
PUSH CLEVIS	115.898	222.640	26.000	.149700
AN3-11A 2T	116.520	221.468	26.500	.019770
AN3-11A 2T	195.944	216.325	71.750	.019770
PUSH CLEVIS	195.033	214.114	72.375	.149700
CS-47	138.284	241.167	35.000	1.437500
HOSE CLAMP SM	120.661	247.393	33.750	.053790
HOSE CLAMP SM	125.555	264.182	45.125	.053790
AN3-6A 2T	114.582	222.477	25.000	.016580
AN3-6A 2T	199.011	215.894	73.125	.016580
AN4-14S 1FWR	196.469	211.945	66.500	.043730
AN4-14S 1FWR	199.651	209.133	71.000	.043730
AN4-14S 1FWR	196.629	256.253	66.000	.043730
AN4-14S 1FWR	197.086	256.848	70.625	.043730
AN3-11A 2T	200.245	209.766	69.500	.019770
MSA-4	199.622	210.359	69.500	.006944
MSA-18	200.605	210.804	69.500	.011900
TS-36	203.650	212.737	71.250	.152600
MSA-1	200.370	212.405	69.500	.030090
MSA-10B	202.642	215.416	71.625	.096560
AN3-12A 2T	200.802	214.058	69.500	.021380
AN3-12A 2T	200.807	214.738	69.500	.021380
AN3-6A 2T	203.372	215.587	74.500	.016580
MSA-5	201.871	216.481	69.500	.010690
MSA-18	201.568	217.446	69.500	.011900
MSA-2	201.214	218.284	69.500	.128200
MSA-11	201.653	217.537	72.250	.047000
AN3-5A 1T	202.553	217.212	71.250	.014310
AN3-5A 1T	203.282	216.701	71.250	.014310
MSA-26	199.950	224.656	68.625	1.023400
MSA-16	199.783	224.470	66.625	.021270
AN4-14A 2T	199.783	224.470	67.500	.022050
AN3-13A 2T	201.073	223.315	69.500	.021380
AN3-13A 2T	201.073	223.315	69.500	.021380
MSA-9B	200.896	221.791	68.750	.084880

ORIGINAL PAGE IS
OF POOR QUALITY

Table 2.3.1 continued

ITEM	XREF	YREF	ZREF	WEIGHT(LBS.)
AN3-5A 1F	201.709	222.066	71.500	.015300
AN3-5A 1F	202.046	222.436	70.875	.015300
AN3-6A 3T	203.943	222.566	67.625	.017770
MSA-12	203.859	222.474	70.500	.060300
AN3-12A 5T	203.198	223.078	73.750	.024950
MSA-13	203.879	224.564	72.500	.021940
MSA-8	205.111	222.511	74.250	.098320
MSA-7	207.516	223.863	70.625	.025350
MSA-23	207.516	223.863	70.625	.031860
MSA-12	200.409	223.911	72.875	.060300
MSA-15	206.212	223.706	70.625	.253200
AN3-6A 3T	198.785	224.687	72.125	.017770
MSA-9A	199.701	224.376	70.750	.084880
AN4-13A 2T	200.346	224.470	69.500	.021380
AN4-13A 2T	200.346	224.470	69.500	.021380
MSA-18	200.864	225.684	69.500	.011900
AN3-5A 1F	201.678	225.962	70.875	.015300
AN3-5A 1F	201.678	225.962	71.625	.015300
MSA-18	199.904	231.347	69.500	.011900
MSA-4	200.071	232.852	69.500	.006944
AN3-11A 2T	200.071	232.852	69.500	.019770
MSA-3	200.783	241.417	69.500	.345800
AN3-12A 2T	199.889	253.560	69.375	.021380
AN3-12A 2T	199.889	253.560	69.375	.021380
MSA-10A	199.967	253.658	71.250	.096560
MSA-1	201.157	255.902	69.375	.030090
MSA-18	200.705	256.892	69.375	.011900
TS-36	202.085	257.081	71.250	.152600
AN3-11A 2T	201.399	259.362	69.375	.019770
MSA-4	201.399	259.362	69.375	.006944
AN3-14A 2T	202.393	257.475	68.750	.022050
AN3-14A 2T	202.231	211.845	68.750	.022050
AN3-15A 2T	207.156	208.972	67.250	.023150
AN3-15A 2T	207.040	209.439	67.750	.023150
AN3-15A 2T	206.492	211.380	68.875	.023150
AN3-15A 2T	205.705	213.015	71.250	.023150
AN3-15A 2T	207.108	216.348	72.000	.023150
AN3-15A 2T	207.496	217.360	72.500	.023150
TS-37	206.516	212.583	70.125	.104600
TS-38	207.120	213.210	69.250	.248200
TS-11A	203.534	223.4[illegible]	79.250	.313000
TAIL TUBE 81	201.294	219.059	59.750	.875000
TS-8	214.180	205.034	63.500	1.010000
FABRIC(TAIL)	225.859	215.610	71.375	.718800
TS-19	219.784	214.703	73.625	.260000
AN3-6A 3T	233.164	213.656	73.625	.017770
TS-29	229.079	219.296	72.375	.085700
TS-31	232.387	216.705	72.000	.004299
AN3-15A 2T	232.387	216.705	71.500	.023150
TS-31	229.802	219.988	72.000	.042990
AN3-15A 2T	229.802	219.988	71.500	.023150
TS-20	236.569	215.488	71.500	.225600
AN3-14A 2T	231.287	216.966	71.500	.022050
TS-26	227.684	221.810	72.250	.017360
TS-26	230.740	216.453	70.750	.017360

ORIGINAL PAGE IS
OF POOR QUALITY

Table 2.3.1 continued

ITEM	XREF	YREF	ZREF	WEIGHT(LBS.)
TAIL TUBE #4	221.650	202.537	71.875	.687500
AN3-13A 2F	242.002	215.996	70.375	.023370
AN3-11A 1F	243.144	216.406	70.250	.019570
TS-28	243.144	216.406	70.250	.052360
AN3-11A 3T	230.868	198.929	57.500	.020960
TS-26	230.590	199.251	57.750	.017360
AN392-13 RIH	227.167	197.474	56.750	.003960
AN42-B13 11F	227.167	197.474	56.750	.025930
TS-28	226.979	197.310	56.000	.052360
AN3-11A 1T	227.837	196.318	55.750	.018580
AN3-11A 3T	230.448	231.821	85.250	.020960
TS-26	230.536	231.909	84.500	.017360
AN3-11A 2F	229.810	233.857	86.625	.021760
TS-28	229.810	233.857	86.375	.052360
AN3-11A 1T	229.810	233.857	86.500	.018580
TS-23	201.702	233.428	87.750	.022320
AN3-11A NO 1T	201.702	233.428	87.250	.013840
TS-34	199.864	234.675	88.000	.004255
AN3-11A 1F	200.886	233.800	87.500	.019570
AN3-15A 2T	206.755	261.517	66.625	.023150
AN3-15A 2T	206.304	260.759	67.000	.023150
AN3-15A 2T	206.400	261.161	68.500	.023150
AN3-15A 2T	205.224	255.705	71.500	.023150
AN3-15A 2T	205.267	255.029	71.375	.023150
AN3-15A 2T	205.787	254.127	72.375	.023150
TS-37	205.726	257.065	69.875	.104600
TS-39	206.663	258.236	69.000	.251500
AN3-6A 2T	199.922	254.330	74.375	.016580
TS-34	201.572	236.011	87.875	.004255
AN3-11A NO	202.352	235.507	87.875	.012650
TS-23	201.820	235.635	87.625	.022320
AN3-11A 2F	202.546	237.152	87.000	.021760
TS-11	203.306	246.631	78.250	.333000
TAIL TUBE #1	212.372	247.169	77.000	.875000
TS-7	213.024	263.064	63.250	1.010000
TS-3	218.541	268.246	59.375	1.760000
TAIL FABRIC LF	224.533	255.313	71.000	.718800
AN392-13 R	228.350	272.138	55.250	.003960
AN42-B13	228.350	272.138	55.250	.041560
AN3-11A NO	228.510	272.329	54.625	.012650
TS-38	228.510	272.329	54.625	.052360
AN3-11A 3T	230.398	271.390	56.000	.020960
TS-26	230.560	271.580	56.750	.017360
AN3-14A 2T	230.621	253.895	70.500	.022050
TS-26	229.326	251.817	71.750	.017360
TS-26	228.924	252.735	70.250	.017360
TS-20	237.335	254.511	71.375	.225600
TAIL TUBE #4	239.740	254.141	72.750	.687500
AN3-11A 2F	244.103	254.995	72.250	.014830
TS-28	244.459	254.654	72.250	.052360
AN3-11A 1F NO	244.459	254.654	72.250	.014830
TS-19	217.808	255.021	74.375	.260000
TS-30	232.238	254.959	72.875	.085700
AN3-6A 3T	232.575	255.329	74.375	.017770
AN3-11A 2T	231.396	254.035	71.750	.019770

ORIGINAL PAGE IS
OF POOR QUALITY

Table 2.3.1 continued

ITEM	XREF	YREF	ZREF	WEIGHT(LBS.)
AN3-11A 2T	232.900	252.657	71.750	.019770
TS-31	231.396	254.035	72.000	.004299
TS-31	232.900	252.657	72.000	.004299
TS-26	231.147	239.361	84.625	.017360
AN3-11A 3T	232.379	239.212	85.000	.020960
AN3-11A 1T NO	228.459	235.177	86.375	.013840
TS-28	227.760	235.854	85.875	.052360
AN3-11A 2F	227.934	236.034	85.750	.014830
AN4-12A 2F	225.761	235.176	87.250	.035780
AN4-12A 2F	225.104	235.805	87.250	.035780
AN4-12S 2FWR	226.458	234.505	87.250	.043080
TS-25	225.761	235.176	87.625	.041450
TS-21	228.808	235.536	54.875	.720000
AN4-26A 1F	116.568	233.802	70.750	.054360
AN3-6A 2T	114.602	229.056	69.250	.016580
CS-46	116.902	229.434	50.000	.563000
HC-3	119.371	226.889	50.875	.965800
HC-3	120.476	243.445	50.875	.965800
HC-2	97.867	226.920	52.000	1.156000
HC-1	71.455	226.627	53.000	1.000000
HC-1	73.649	243.480	53.000	1.000000
EN-94	68.809	242.684	42.375	.381800
HC-2	99.574	244.367	51.875	1.156000
NG-20	71.560	236.276	51.875	.192000
AN4-24A 1F	42.344	230.264	12.875	.050830
HC-88	42.344	230.264	12.875	.000683
NGSA-12	42.127	232.972	13.500	.010360
NGSA-10	42.229	231.683	13.250	.047820
NGSA-10	41.935	237.831	13.500	.047820
NGSA-11	42.430	232.790	13.500	.000880
NOSE WH&TIRE	41.764	234.942	13.500	3.120000
NGSA-11	42.005	236.296	13.500	.000880
NGSA-12	42.005	236.296	13.5[illegible]	.010360
HC-88	42.304	239.924	13.250	.000683
NGSA-9	41.764	234.942	13.500	.496000
AN4-24A 1F	42.304	239.924	13.500	.050830
NGSA-8	48.014	237.699	18.750	.434600
NGSA-8	48.390	232.646	19.000	.434600
NGSA-7	54.213	234.823	23.875	1.250000
NGSA-18	52.667	234.278	22.375	.169900
NGSA-14	52.832	235.010	23.375	.058820
NGSA-13	51.463	235.441	20.625	.058310
NGSA-13	51.972	234.433	21.125	.058310
NGSA-13	53.543	235.105	22.750	.058310
NGSA-13	54.044	234.092	23.375	.058310
NGSA-6	53.377	234.375	20.875	.098990
NGSA-19	52.161	235.287	22.625	.069550
NGSA-19	54.241	234.945	24.875	.069550
HC-57	55.365	236.609	25.500	.007253
HC-57	55.810	237.018	25.500	.007253
AN4-7A 1T NO	52.103	238.372	22.250	.019180
NG-27	53.197	238.386	22.000	.015980
NG-53	55.084	238.599	21.500	.039080
AN4 HALF NUT	53.709	238.912	21.875	.004630
AN4 HALF NUT	55.820	238.556	21.500	.004630

ORIGINAL PAGE IS
OF POOR QUALITY

Table 2.3.1 continued

ITEM	XREF	YREF	ZREF	WEIGHT(LBS.)
NG-27	56.544	238.643	21.375	.015980
AN4-14A 2F	48.843	240.990	21.250	.039080
AN3-10A 2T	53.051	235.985	22.375	.018200
AN3-10A 2T	52.498	232.010	22.250	.018200
NGSA-14	53.294	234.008	24.250	.058820
AN4-7A 1T NO	52.461	230.352	22.000	.019180
NG-27	53.200	230.439	21.875	.015980
AN4-16A 2F	56.609	227.049	24.250	.030290
NGSA-1	56.025	227.501	24.250	.036380
NGSA-2	55.915	228.508	24.250	.009700
NGSA-3	55.744	229.193	24.250	.033510
NGSA-4A	56.772	230.615	24.875	1.009700
NGSA-3	56.000	231.832	24.250	.032520
NGSA-2	55.497	232.596	24.250	.009700
NGSA-5	55.708	235.115	24.250	.572600
NGSA-2	56.419	238.672	24.125	.009700
NGSA-3	56.297	239.080	24.125	.033510
NGSA-4B	56.659	239.129	24.750	1.042300
NGSA-3	56.191	240.138	24.125	.033510
NGSA-2	55.926	240.714	24.125	.009700
NGSA-1	55.815	241.766	24.125	.036380
AN4-16A 2F	55.897	243.671	24.125	.042900
CS-50	55.703	241.279	29.375	.050970
AN393-61 R	55.450	240.182	29.250	.017630
NG-53	55.120	231.015	21.625	.039080
AN4 HALF NUT	54.613	230.493	21.750	.004300
AN4 HALF NUT	56.128	230.773	21.375	.004300
NG-27	56.802	230.736	21.250	.015980
AN4-14A 2F	57.486	230.567	21.125	.039080
HC-99	62.720	242.521	30.900	.063760
HC-57	64.528	242.176	32.450	.007187
AN4-35A 1F1T	64.159	243.696	31.850	.067320
HC-5	64.009	244.511	31.850	.009458
HC-12	64.104	244.873	31.850	.037170
AN4-16A 2F	63.939	245.821	31.850	.042900
HC-57	63.252	245.998	32.050	.007187
NG-18	61.690	241.495	30.000	.021270
AN4-35A 1T1F2P	61.413	243.242	29.900	.068640
TS-31	61.413	243.242	29.900	.004299
NG-35	62.532	241.795	29.900	.004299
CS-42	61.690	241.495	30.000	.008598
AN392-13 R	62.069	241.398	30.150	.003960
AN392-13 R	62.069	241.390	29.520	.003960
AN4-15A 2F	61.357	246.092	32.100	.040810
AN4-24A 2F	61.628	244.090	32.100	.053260
HC-11	61.244	244.187	30.300	.065480
HC-11	60.907	244.287	33.100	.065480
AN4-17A 2F2P	61.628	244.090	34.200	.045790
EC-9	60.059	243.966	32.100	.012790
HC-8	61.634	235.441	32.000	.820800
AN4-15A 2F	81.423	217.776	31.900	.040810
EC-9	60.466	225.665	31.900	.012790
AN4-17A 2F2P	61.897	225.795	34.150	.045790
HC-11	61.897	225.795	33.400	.065480
HC-11	61.897	225.795	30.700	.065480

ORIGINAL PAGE IS
OF POOR QUALITY

Table 2.3.1 continued

ITEM	XREF	YREF	ZREF	WEIGHT(LBS.)
AN4-17A 2F2P	61.897	225.795	29.800	.045790
HC-12	64.223	223.974	31.900	.037170
AN4-16A 2F	64.085	223.494	31.900	.042900
HC-5	64.013	224.424	31.900	.009458
HC-57	63.773	223.583	31.900	.007253
AN4-25A 1F1T	64.070	225.968	31.900	.054300
HC-6	81.203	225.181	31.400	2.540000
HC-13	82.796	225.399	30.500	.130000
AN3-23A 1T1F	82.796	225.399	31.400	.030440
AN4-24A 2F	82.796	225.399	29.300	.053260
AN3-6A 2T	82.765	224.345	30.000	.016580
CS-24	83.299	223.747	29.750	.097220
CS-21	83.528	222.461	29.750	.033680
CS-30	83.528	222.461	29.750	.008973
AN4-16A 2F2P	82.339	222.237	29.850	.044220
CS-22	81.144	222.942	31.650	.609800
AN4-6A 2T	82.116	222.586	26.600	.016580
HC-107	87.528	225.080	14.300	.562500
CS-38	94.849	223.453	14.300	.014770
HC-27	98.836	221.992	21.500	1.540000
CS-25	96.696	222.387	25.900	.450000
CS-26	98.119	222.993	28.900	.767400
HC-10	99.764	227.595	30.400	.439400
FT-1	108.669	229.580	22.900	2.021000
EN-92	108.612	232.921	22.900	.281500
FT-2	108.202	236.553	22.900	2.021000
HC-120	108.760	235.058	29.000	.070000
HC-91	108.760	235.058	29.000	.197100
MS-35420-14 R	108.644	226.962	29.000	.013870
TANK TANG	108.644	226.962	29.500	.018300
TANK TANG	108.395	243.460	29.500	.018300
AN365-428	108.395	243.460	29.000	.008179
AN4-23A 1F	107.681	225.760	30.050	.048570
AN4-23A 2F	109.306	225.810	30.050	.051000
HC-109	109.306	225.810	30.050	.464500
AN4-30A 2F	111.483	221.950	31.800	.059380
HC-12	111.470	222.795	31.500	.037170
HC-5	111.470	222.795	31.000	.009458
AN4-24A 2F	111.470	222.795	30.200	.053260
AN4-26A 2F	111.595	222.173	30.200	.056790
HC-12	111.595	222.173	30.200	.037170
HC-5	111.595	222.173	31.000	.009458
HC-5	111.595	222.173	28.900	.009458
HC-12	111.595	222.173	28.500	.037170
AN4-16A 2F	111.595	222.173	28.000	.042900
AN4-24A 2F	111.905	222.017	30.200	.053260
HC-5	112.384	222.195	30.200	.009458
HC-12	113.157	222.084	30.400	.037170
AN4-17S 2FWR	111.256	219.964	30.200	.051630
W6-105	111.256	219.964	30.200	.005842
AN3-6A 2T	114.215	222.525	25.200	.016580
CS-23	114.100	222.303	26.700	.050860
AN3-6A 2T	112.779	222.976	28.950	.016580
HC-110	113.615	226.194	29.050	.104200
AN5-23A 1F	112.664	225.971	29.800	.075760

ORIGINAL PAGE IS
OF POOR QUALITY

Table 2.3.1 continued

ITEM	XREF	YREF	ZREF	WEIGHT(LBS.)
AN5-23A 1F	112.571	226.576	29.800	.075760
HC-35	112.664	225.971	29.800	.009480
HC-35	112.571	226.576	29.800	.009480
CS-21	111.995	224.629	28.000	.033680
CS-30	111.716	224.069	28.800	.008973
CS-27	112.862	223.915	28.000	.019250
CS-30	112.805	223.803	28.000	.008973
HC-47	114.077	225.542	28.000	.138400
AN4-16A 2F	114.008	223.754	28.000	.042900
HC-57	115.384	224.033	28.000	.007253
AN3-6A 2T	115.092	227.549	27.700	.016580
WHEEL&TIRE RT	111.655	205.643	15.100	5.430000
AXLE STRIP	129.670	240.523	13.700	.055660
AXLE STRIP	121.131	245.631	13.700	.055660
AN4-14A 2T	106.820	223.954	13.500	.036880
AN4 LONG 24	110.516	224.106	15.400	.060560
AN4-16A 2F	108.393	224.725	23.800	.042900
HC-84	107.799	237.423	19.900	.250000
HC-84	107.799	237.423	19.900	.250000
REAR AXLE	110.341	237.494	15.500	7.007200
HC-9	106.236	237.716	30.000	2.021300
HC-25	99.860	237.212	30.200	.333000
HC-87	100.316	228.854	30.200	.005842
AN4-24A 1T1F	99.931	227.112	30.200	.052150
AN4-16A 2F	100.307	229.813	30.200	.042900
HC-12	100.417	229.083	30.200	.037170
AN4-16A 2F	99.480	244.135	30.200	.042900
HC-12	99.519	245.333	30.200	.037170
HC-87	99.598	246.515	30.200	.005842
AN4-24A 1T1F	99.645	246.631	30.200	.052150
HC-97(SEAT)	87.494	238.189	23.900	8.710000
HC-111	83.658	239.563	24.100	.975100
AN4-16A 2F	106.669	251.298	28.100	.042900
AN4-16A 2F	107.216	251.609	24.000	.042900
AN4 LONG 24	108.362	251.253	15.600	.060560
AN4-14A 2F	105.680	251.037	13.400	.039080
WHEEL&TIRE LF	109.292	269.427	15.200	5.460000
AN4-22S 1TWR	105.668	251.992	30.000	.053240
WG-105	105.668	251.992	30.000	.005842
AN4-26A 2F	123.047	243.277	30.000	.056790
HC-12	123.047	243.277	28.600	.037170
HC-5	123.047	243.277	29.300	.009458
HC-5	123.047	243.277	30.900	.037170
HC-12	105.936	249.572	31.300	.037170
HC-5	105.936	249.572	30.900	.009458
AN4-24A 2F	105.936	249.572	30.000	.053260
AN4-24A 2F	105.928	250.526	30.000	.053260
HC-28	107.119	250.291	30.800	.037170
HC-5	107.070	250.176	30.400	.009458
AN4-17S 2FWR	107.768	249.876	30.600	.051630
AN5 3/4 24	106.235	247.270	30.000	.063710
AN5 3/4 24	106.432	246.777	30.000	.063710
HC-35	106.284	247.385	30.000	.009480
HC-35	106.283	246.433	30.000	.009480
HC-109	103.590	247.035	30.150	.465000

ORIGINAL PAGE IS
OF POOR QUALITY

Table 2.3.1 continued

ITEM	XREF	YREF	ZREF	WEIGHT(LBS.)
AN4-23A 2F	103.692	246.314	30.150	.051000
AN4-23A 2F	102.859	246.257	30.150	.051000
HC-10	97.946	246.504	30.450	.439400
HC-27	92.806	249.285	20.850	1.540000
CS-38	97.595	244.625	14.600	.014770
HC-107	82.154	246.679	14.400	.562500
HC-7	76.322	245.798	31.500	2.540000
EN-95	70.097	240.493	40.200	.766800
HOSE CLAMP LG	70.218	244.082	32.700	.062170
HOSE CLAMP LG	73.363	245.002	32.200	.062170
CS-35	102.822	75.392	89.250	.747400
CS-34	102.663	85.142	88.850	.090170
AN3-5A 2T	100.961	85.220	88.850	.015500
AN3-5A 2T	104.459	86.109	88.850	.015500
AN8-524A	99.815	84.261	87.850	.013230
AN3-5A 2T	102.839	88.612	88.850	.015500
CS-37	101.811	91.671	88.750	.110900
AN3-5A 2T	101.517	95.498	87.150	.015500
CS-36	101.599	108.647	86.950	.749600
CS-35	91.638	396.934	90.150	.747400
CS-34	92.050	388.494	89.850	.090170
AN3-5A 2T	90.936	388.627	89.850	.015500
AN3-5A 2T	93.832	388.453	89.850	.015500
AN8-524A	88.462	388.429	88.850	.013230
AN3-5A 2T	92.239	384.208	89.650	.015500
CS-37	92.042	381.041	89.450	.110900
AN3-5A 2T	92.598	376.145	88.950	.015500
CS-36	92.937	363.817	87.450	.749600
WING FAB RT	106.384	129.054	79.800	8.125000
WING FAB LF	100.808	345.858	79.800	8.125000
FUEL LINE ASS.	99.574	244.367	51.875	.435000
FUEL BULB	99.433	244.019	53.000	.106000
WG-1	101.894	231.574	72.250	5.312500
PILOT	83.658	239.563	24.100	.000000
FUEL RIGHT	108.669	229.580	22.900	.000000
FUEL LEFT	108.202	236.553	22.900	.000000

ORIGINAL PAGE IS
OF POOR QUALITY

2.3.2 CENTER OF GRAVITY

The center of gravity of the ultralight was calculated using a computer program, listed in Appendix A, that used the coordinates and weights of each item to sum moments about the reference axes and solve for its moment arm. This moment arm was the location of the C.G. relative to the reference axis. The component build-up method C.G. locations are shown in Figures 2.3.2.1 and 2.3.2.2. The empty weight C.G. is shown in these figures. Centers of gravity were also determined for various loading conditions (pilot weight and fuel on board). The errors in measurement are addressed in Chapter 2.4.

2.3.3 INERTIAL QUANTITIES

The moments of inertia and products of inertia were calculated for a body-fixed axis system with the origin passing through the C.G. and parallel to the X, Y, and Z reference axis system shown in Figures 2.3.2.1 and 2.3.2.2. The inertias were calculated as follows:(slugs-ft.^{2})

$$I_{xx} = I_{xx_p} + W \times (Z^2 + Y^2)$$

$$I_{yy} = I_{yy_p} + W \times (Z^2 + X^2)$$

$$I_{zz} = I_{zz_p} + W \times (X^2 + Y^2)$$

* subscript 'p' represents principal inertia

$$I_{xy} = W \times (X \times Y)$$

$$I_{xz} = W \times (X \times Z)$$

$$I_{zy} = W \times (Z \times Y)$$

The principal inertias of components, which are defined here as the contribution to inertia about its own C.G., were calculated by hand knowing the component weight and individual geometry. This is shown in Appendix D and the assumptions made are outlined there. The results are presented in Figures 3.1-3.12.

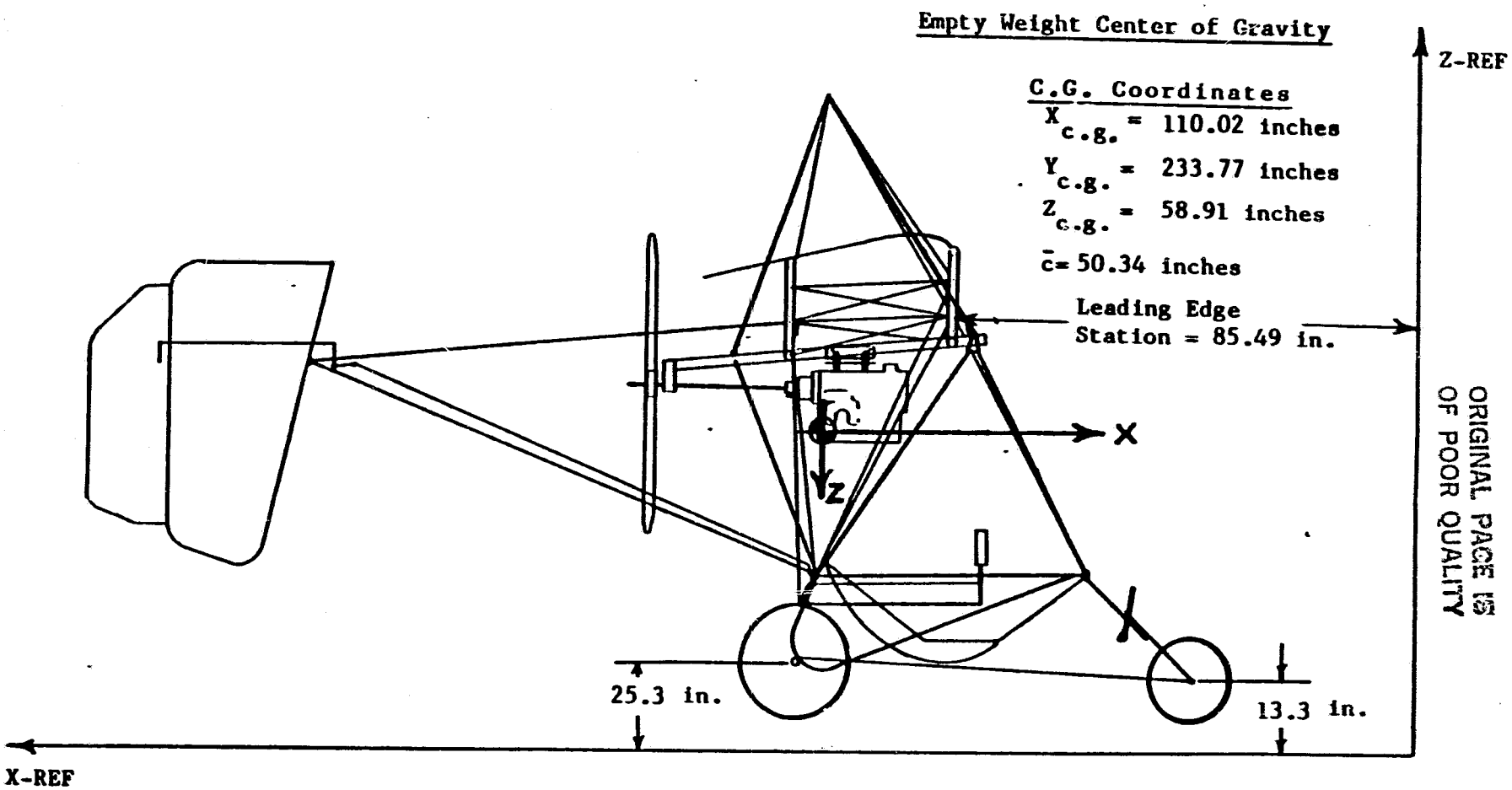

Figure 2.3.2.1 Center of gravity in the defined reference X-Z plane.

ORIGINAL PAGE IS
OF POOR QUALITY

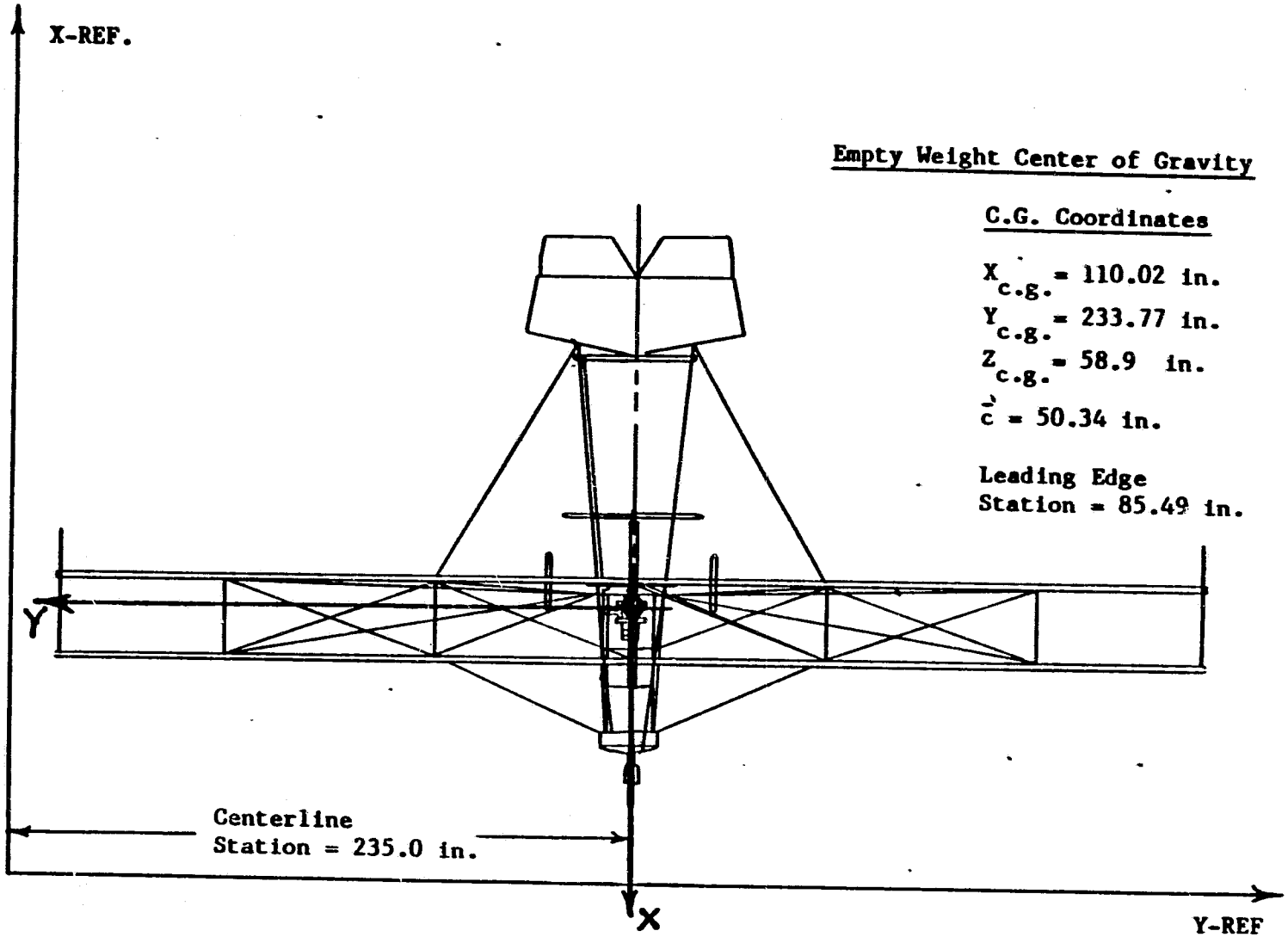

Figure 2.3.2.2 Center of gravity in the defined X-Y reference plane.

ORIGINAL PAGE IS
OF POOR QUALITY

2.4 WEIGHING CHECK AND ERROR ANALYSIS

The build-up method outlined in the previous sections was checked by weighing the assembled ultralight. This was done to establish a basis for comparison of the results.

The aircraft was placed on three scales at the same attitude as the reference axes. The main gear scales leveled and zeroed prior to setting the ultralight upon them. They were also calibrated by placing known weights on them with the conclusion that within the expected range of loading (100-150 pounds each) the scales were within 1/2 pound or 0.33%. This was considered to be negligible for these purposes. The nose gear scale was also checked for accuracy and found to be within 1/50 of one pound, and was also assumed to be negligible.

The ultralight was carefully weighed with the following results:

Attitude	Nose Reaction	Left Gear	Right Gear
parallel to reference axis	11.49 lb.	127.0 lb.	133.2 lb.
tilted nose down 16 deg.	--	102.5 lb.	103.2 lb.

By summing the reactions measured by the scales, an aircraft weight of 271.69 pounds was established. This differed from the component build-up method empty weight of 277.48 pounds, but as outlined in Appendix C the expected error is $\pm$ 7.183 pounds. The component build-up weight is within this error band.

The aircraft was tilted to determine the vertical C.G.. This method is very sensitive to angle measurement and is very difficult to measure accurately. A convenient angle of 16 degrees nose down was selected because without a pilot the tip-over (on the tail) angle did not allow the nose to be tilted upward. The experimental results are listed below:

$X_{c.g.}$ = 112.39 in. from reference axis

$Y_{c.g.}$ = 234.27 in. from reference axis

$Z_{c.g.}$ = 56.89 in. from reference axis

The center of gravity as determined from component build-up calculations is shown here with the error term listed alongside:

$$X_{c.g.} = 110.02 \pm 3.78 \text{ inches from reference axis}$$

$$Y_{c.g.} = 233.77 \pm 6.38 \text{ inches from reference axis}$$

$$Z_{c.g.} = 58.91 \pm 1.74 \text{ inches from reference axis}$$

The build-up method errors due to measurements and inaccuracies were calculated in Appendix C. Within the computed error bands the C.G. locations as obtained from the two methods are in agreement.

3.0 DISCUSSION OF EXPERIMENTAL RESULTS

This chapter presents a detailed discussion of the results achieved through the component build-up method for determining the Sunburst ultralight C.G. and moments of inertia.

The center of gravity calculated from the build-up method compared very well with that obtained from the entire vehicle weighing, with the exception of the vertical C.G. ($Z_{c.g.}$). The two methods results differed by 2.02 inches but the expected error was only $\pm$ 1.76 inches. This is probably due to the weighing check procedure which calls for a very accurate tilt angle measurement, Reference 3; also, the tilting method assumes a rigid aircraft which the ultralight is definitely not.

The X and Y reference C.G.'s (p. 3.2) were within the range of expected error. The $X_{c.g.}$ differed by 2.37 inches which is less than the predicted* $\pm$ 3.78 inches. The $Y_{c.g.}$ differed by only 0.5 inches considerably less than the predicted* $\pm$ 6.38 inches.

The C.G.'s were computed with the computer program of Appendix A for different pilot weights and fuel loadings. The computer print-out of these conditions are shown in Figures 3.1-3.12. The longitudinal C.G. envelope, created by these various loadings, are shown in Figure 3.13. It can be seen that the specified pilot weight range of 90-260 pounds, from Figure 2.2.1, shifts the C.G. from 35.9% MGC to 23.4% respectively; a shift of 12.5% due to the pilot. This large C.G. range will probably change the trim and control characteristics of the aircraft.

The vertical C.G. also changes from 50.38 inches for the 90 pound pilot to 42.07 inches for the 260 pound pilot. The C.G.'s and inertias are summarized in Table 3.1, page 3.2.

---

* Predictions of expected errors are presented in Appendix C.

ORIGINAL PAGE IS
OF POOR QUALITY

Table 3.1 C.G. and inertia summary.

Aircraft Weight	Pilot Weight	Fuel Quan.	Measured			Calculated			
			$X_{c.g.}$		$Z_{c.g.}$	Aircraft Moment of Inertia (slugs-ft.^{2})			
lbs.	lbs.	gal.	in.	%MGC	in.	I_{xx}	I_{yy}	I_{zz}	I_{xz}
277.48	0	0.	110.02	48.73	58.91	303.9	16.4	352.3	3.2
293.00	0	2.5	109.93	48.56	57.00	308.1	16.5	352.3	2.9
308.54	0	5.0	109.86	55.28	48.4	311.8	16.6	352.4	2.6
			pilot effects						
367.48	90	0.	103.56	35.90	50.38	322.2	17.0	362.9	-7.0
383.00	90	2.5	103.76	36.29	49.27	324.6	17.0	363.0	-6.8
398.54	90	5.0	103.94	36.66	48.24	326.9	17.1	326.9	-6.5
452.48	175	0.	99.82	28.47	45.45	332.7	17.3	369.1	-9.1
468.00	175	2.5	100.11	29.04	44.70	334.5	17.3	369.4	-8.9
483.54	175	5.0	100.38	29.57	44.00	336.1	17.4	369.7	-8.8
537.48	260	0.	97.27	23.40	42.07	340.0	17.5	373.4	-8.9
553.00	260	2.5	97.58	24.02	41.53	341.3	17.5	373.8	-8.8
568.54	260	5.0	97.88	24.61	41.02	342.5	17.6	374.3	-8.8

$\bar{c}$ = 50.34 inches

L.E. Station = 85.49 inches

Centerline = 235.0 inches from axis

ORIGINAL PAGE IS
OF POOR QUALITY

```
---------------------------------------------------
ULTRALIGHT WEIGHT=   277.481 (LBS)
---------------------------------------------------

  XCG IS     110.016  IN. FROM X-REF
  YCG IS     233.771 IN. FROM Y-REF.
  ZCG IS      58.909 IN. FROM Z-REF.
  C.G. IN PERCENT MGC       48.725%

              ******* INERTIAL QUANTITIES *******
                          SLUG-SQ.FT.

   IXX      303.898    IYY       16.383    IZZ       352.254
   IXY       -2.458    IXZ        3.158    IZY        -.429
```

Figure 3.1 Computer output listing for empty aircraft; zero fuel and no pliot.

```
---------------------------------------------------
ULTRALIGHT WEIGHT=    367.481 (LBS)
---------------------------------------------------

  XCG IS     103.562  IN. FROM X-REF
  YCG IS     235.190 IN. FROM Y-REF.
  ZCG IS      50.384 IN. FROM Z-REF.
  C.G. IN PERCENT MGC       35.901%

              ******* INERTIAL QUANTITIES *******
                          SLUG-SQ.FT.

   IXX      322.162    IYY       16.951    IZZ       362.937
   IXY       -4.698    IXZ       -6.991    IZY       -3.386
```

Figure 3.2 Computer output listing for aircraft loading; zero fuel and 90 pound pilot.

ORIGINAL PAGE IS
OF POOR QUALITY

```
-----------------------------------------------------
ULTRALIGHT WEIGHT=    452.481 (LBS)
-----------------------------------------------------

  XCG IS      99.823  IN. FROM X-REF
  YCG IS     236.011 IN. FROM Y-REF.
  ZCG IS      45.447 IN. FROM Z-REF.
  C.G. IN PERCENT MGC       28.473%

              ******* INERTIAL QUANTITIES *******
                          SLUG-SQ.FT.

   IXX      332.742    IYY       17.280    IZZ      369.125
    IXY      -5.995    IXZ       -9.061    IZY       -5.099
```

Figure 3.3 Computer output listing for aircraft loading; zero fuel and 175 pound pilot.

```
-----------------------------------------------------
ULTRALIGHT WEIGHT=    537.481 (LBS)
-----------------------------------------------------

  XCG IS      97.267  IN. FROM X-REF
  YCG IS     236.573 IN. FROM Y-REF.
  ZCG IS      42.071 IN. FROM Z-REF.
  C.G. IN PERCENT MGC       23.395%

              ******* INERTIAL QUANTITIES *******
                          SLUG-SQ.FT.

   IXX      339.974    IYY       17.505    IZZ      373.356
    IXY      -6.881    IXZ       -8.870    IZY       -6.270
```

Figure 3.4 Computer output listing for aircraft loading; zero fuel and 260 pound pilot.

ORIGINAL PAGE IS
OF POOR QUALITY

```
-----------------------------------------------------
ULTRALIGHT WEIGHT=    293.001 (LBS)
-----------------------------------------------------

  XCG IS     109.934  IN. FROM X-REF
  YCG IS     233.734 IN. FROM Y-REF.
  ZCG IS      57.002 IN. FROM Z-REF.
  C.G. IN PERCENT MGC       48.559%

              ******* INERTIAL QUANTITIES *******
                          SLUG-SQ.FT.

   IXX      308.051    IYY       16.513    IZZ      352.304
    IXY      -2.458    IXZ        2.875    IZY        -.349
```

Figure 3.5 Computer output listing for aircraft loading; 2.5 gallons fuel and no pilot.

```
-----------------------------------------------------
ULTRALIGHT WEIGHT=    383.001 (LBS)
-----------------------------------------------------

  XCG IS     103.760  IN. FROM X-REF
  YCG IS     235.104 IN. FROM Y-REF.
  ZCG IS      49.271 IN. FROM Z-REF.
  C.G. IN PERCENT MGC       36.293%

              ******* INERTIAL QUANTITIES *******
                          SLUG-SQ.FT.

   IXX      324.645    IYY       17.028    IZZ      363.069
    IXY      -4.734    IXZ       -6.757    IZY       -3.199
```

Figure 3.6 Computer output listing for aircraft loading; 2.5 gallons fuel and 90 pound pilot.

ORIGINAL PAGE IS
OF POOR QUALITY

```
-----------------------------------------------------
ULTRALIGHT WEIGHT=    468.001 (LBS)
-----------------------------------------------------

  XCG IS     100.109  IN. FROM X-REF
  YCG IS     235.914 IN. FROM Y-REF.
  ZCG IS      44.699 IN. FROM Z-REF.
  C.G. IN PERCENT MGC       29.040%

              ******* INERTIAL QUANTITIES *******
                          SLUG-SQ.FT.

   IXX      334.456    IYY       17.333    IZZ      369.432
    IXY       -6.079    IXZ       -8.905    IZY       -4.884
```

Figure 3.7 Computer output listing for aircraft loading; 2.5 gallons fuel and 175 pound pilot.

```
-----------------------------------------------------
ULTRALIGHT WEIGHT=    553.001 (LBS)
-----------------------------------------------------

  XCG IS      97.580  IN. FROM X-REF
  YCG IS     236.474 IN. FROM Y-REF.
  ZCG IS      41.533 IN. FROM Z-REF.
  C.G. IN PERCENT MGC       24.017%

              ******* INERTIAL QUANTITIES *******
                          SLUG-SQ.FT.

   IXX      341.251    IYY       17.544    IZZ      373.842
    IXY       -7.012    IXZ       -8.848    IZY       -6.051
```

Figure 3.8 Computer output listing for aircraft loading; 2.5 gallons fuel and 260 pound pilot.

ORIGINAL PAGE IS
OF POOR QUALITY

```
-----------------------------------------------------
ULTRALIGHT WEIGHT=    308.541 (LBS)
-----------------------------------------------------

  XCG IS     109.859  IN. FROM X-REF
  YCG IS     233.700 IN. FROM Y-REF.
  ZCG IS      55.284 IN. FROM Z-REF.
  C.G. IN PERCENT MGC        48.408%

              ******* INERTIAL QUANTITIES *******
                          SLUG-SQ.FT.

   IXX      311.800    IYY       16.629    IZZ      352.354
    IXY       -2.457    IXZ        2.625    IZY        -.276
```

Figure 3.9 Computer output listing for aircraft loading; 5.0 gallons fuel and no pilot.

```
-----------------------------------------------------
ULTRALIGHT WEIGHT=    398.541 (LBS)
-----------------------------------------------------

  XCG IS     103.942  IN. FROM X-REF
  YCG IS     235.024 IN. FROM Y-REF.
  ZCG IS      48.242 IN. FROM Z-REF.
  C.G. IN PERCENT MGC        36.655%

              ******* INERTIAL QUANTITIES *******
                          SLUG-SQ.FT.

   IXX      326.942    IYY       17.100    IZZ      363.194
    IXY       -4.767    IXZ       -6.540    IZY       -3.025
```

Figure 3.10 Computer output listing for aircraft loading; 5.0 gallons fuel and 90 pound pilot.

ORIGINAL PAGE IS
OF POOR QUALITY

```
---------------------------------------------------
ULTRALIGHT WEIGHT=    483.541 (LBS)
---------------------------------------------------

  XCG IS     100.377  IN. FROM X-REF
  YCG IS     235.822 IN. FROM Y-REF.
  ZCG IS      43.990 IN. FROM Z-REF.
  C.G. IN PERCENT MGC       29.572%

              ******* INERTIAL QUANTITIES *******
                          SLUG-SQ.FT.

   IXX      336.067    IYY       17.383    IZZ      369.726
    IXY       -6.159    IXZ       -8.750    IZY       -4.682
```

Figure 3.11 Computer output listing for aircraft loading; 5.0 gallons fuel and 175 pound pilot.

```
---------------------------------------------------
ULTRALIGHT WEIGHT=    568.541 (LBS)
---------------------------------------------------

  XCG IS      97.877  IN. FROM X-REF
  YCG IS     236.381 IN. FROM Y-REF.
  ZCG IS      41.023 IN. FROM Z-REF.
  C.G. IN PERCENT MGC       24.607%

              ******* INERTIAL QUANTITIES *******
                          SLUG-SQ.FT.

   IXX      342.463    IYY       17.582    IZZ      374.306
    IXY       -7.135    IXZ       -8.814    IZY       -5.844
```

Figure 3.12 Computer output listing for aircraft loading; 5.0 gallons fuel and 260 pound pilot.

ORIGINAL PAGE IS
OF POOR QUALITY

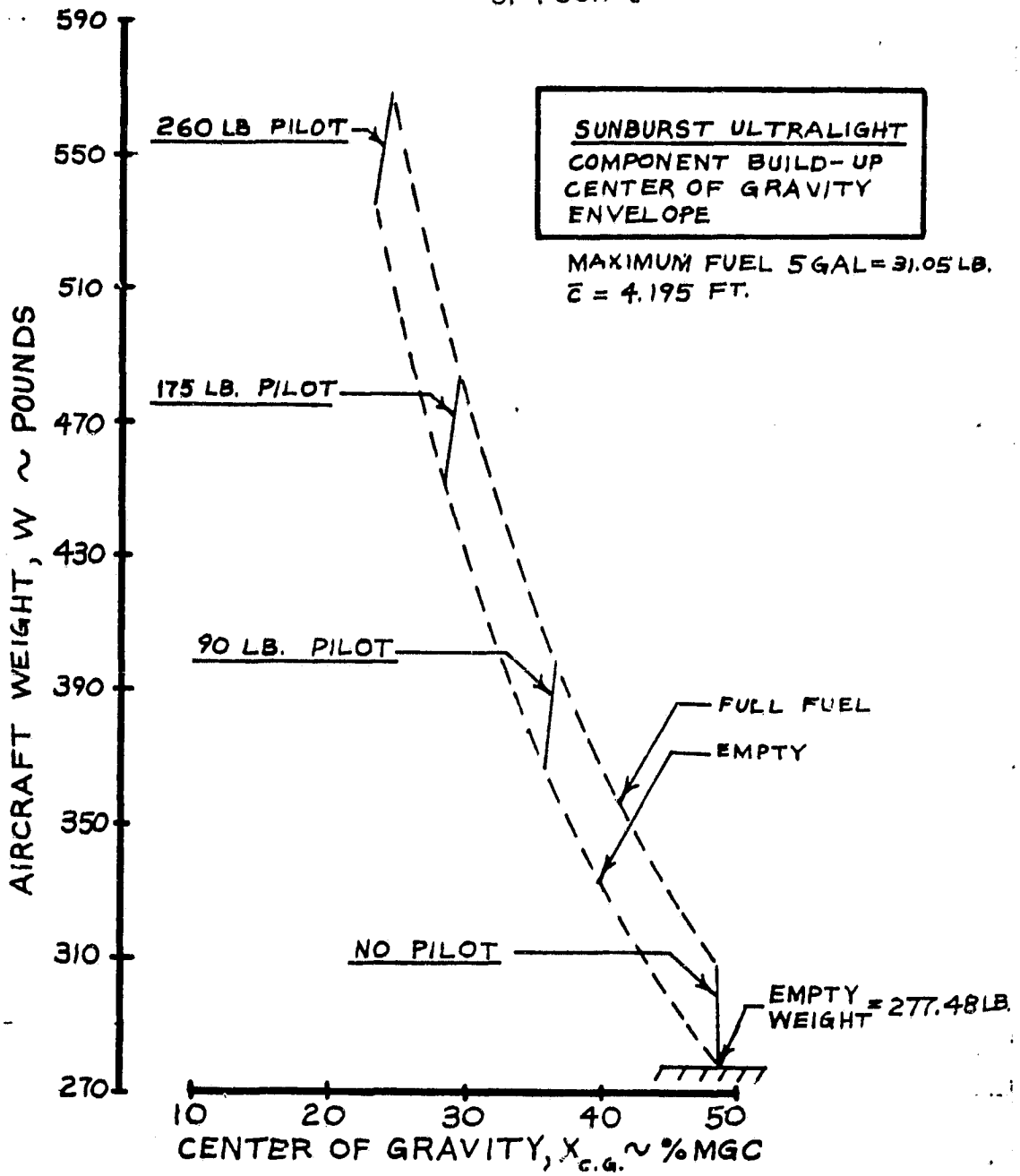

CALC	G. Wolthamp	11·10·83	REVISED	DATE	Figure 3.13 Ultralight longitudinal experimental flight envelope for pilot and fuel loadings.	
CHECK			GAW	12·20·83		
APPD						
APPD					K.U. Center for Research Inc.	PAGE 3.9

4.0 CONCLUSIONS

The first and most critical conclusion is that the Airmass Inc. Sunburst Model 'C' ultralight is in fact not an ultralight as defined by the FAA regulation of maximum empty weight of 254 pounds. This ultralight was found to have an empty weight of 277.48 pounds (component build-up method) and 271.69 pounds measured weight. These differ substantially from the published weight by Airmass Inc. of 240 pounds empty, see Figure 2.2.1.

The center of gravity location of this aircraft is greatly affected by the pilot's weight. A stability and control report that is planned for the future will give a detailed analysis of the effect of C.G. on controllability.

5.0 REFERENCES

1. Airmass Incorporated assembly manual furnished with the Sunburst Model 'C' ultralight, 1983.

2. Beer, F.P., Johnston, E.R., Jr., " Vector Mechanics for Engineers: Dynamics," 3rd Edition, McGraw-Hill, 1977, pp.932-951.

3. Schweikhard, W.G., Kohlman, D.L., " Flight Test Principles and Practices", University of Kansas,1983.

4. Tipler,P.A.,"Physics",Vol. 1, 2nd Edition, Worth,New York,1982, pp. 274-387.

5. Peery, D.J., Azar,J.J.,"Aircraft Structures", 2nd Edition,McGraw-Hill, 1982, pp. 409-424.

APPENDICES

APPENDIX A

WEIGHT AND BALANCE COMPUTER PROGRAM

ORIGINAL PAGE IS
OF POOR QUALITY

```
C  THIS PROGRAM COMPUTES THE ULTRALIGHT CENTER OF GRAVITY AND
C  MASS MOMENTS OF INERTIA.
C        1. IT READS FROM A DATA-FILE 'MEASURE' AND OUTPUTS TO 'COORD'
C        2. SUBROUTINE REDUCE CONVERTS THESE INTO X,Y,Z COORDINATES
C        3. THIS MAIN PROGRAM COMPUTES THE WEIGHT AND BALANCE
C           ( C.G.,IXX,IYY,IZZ,IXZ,IXY,IZY)
C
C ***************************************************************
C
C   THIS PROGRAM WAS DEVELOPED BY JOHN A. WOLTKAMP(SUMMER 1983).
C   THIS VERSION WAS WRITTEN FOR THE GOULD SEL 32/77 COMPUTER
C   WITH DUEL PROCESSOR AND SHARED MEMORY WHOSE SERVICES WERE
C    GRACIOUSLY MADE AVAILABLE BY KOHLMAN SYSTEMS RESEARCH IN
C   LAWRENCE KANSAS.
C ***************************************************************
C     DECLARE REALS AND INTEGERS
      REAL W(600),XW(600),YW(600),ZW(600),WXSUM,WYSUM,WZSUM,WSUM
      REAL MARGIN,CBAR,CG
      REAL CENTX,CENTZ,CENTY,X(600),Y(600),Z(600),ZDIRM(600),
     & HDIST(600),PSI(600)
      REAL*4 IXX,IYY,IZZ,IXZ,IXY,IZY,IXXP,IYYP,IZZP,IXZP
      INTEGER NUMPTS
      CHARACTER ITEM(600)*15,SETNAME*4,FILENAME*8,FILECORD*8
     &,FILEOUT*8
      CHARACTER*2 ANS
      REAL*4 DUMMY(600,5)
C
C  INITIALIZE ARRAYS
C
C     TYPE*,'HOW MANY MEASUREMENTS(ITEMS) ? >>>'
C     ACCEPT*,NUMPTS
      CBAR=4.195                        ! FROM S/C ESTIMATION REPORT
      DO I=1,1000
         X(I)=0.0
         Y(I)=0.0
         Z(I)=0.0
         W(I)=0.0
         XW(I)=0.0
         YW(I)=0.0
         ZW(I)=0.0
      END DO
C
      TYPE *  ,'WHAT INPUT FILE TO OPEN >>'
      ACCEPT 111,FILENAME
      SETNAME='PREP'
      OPEN(UNIT=5,FORM='FORMATTED',STATUS='OLD',IOSTAT=I1,ERR=515,
     &BLOCKED=.TRUE.,USER=SETNAME,FILE=FILENAME,FILESIZE=70)
      GO TO 13
 515  TYPE*,'******* ERROR IN OPEN *******'
      STOP
C    LOAD MEASUREMENTS INTO DUMMY ARRAY TO DECLARE THE REAL **
C
 13   DO J=1,3
         READ(5,510)
      END DO
```

ORIGINAL PAGE IS
OF POOR QUALITY

```
 510  FORMAT(' ')
      DO I=1,1000
          READ(5,102,END=800)ITEM(I)
  102     FORMAT(5X,A15)
      END DO
 800  REWIND(UNIT=5)
      DO J=1,3
         READ(5,510)
      END DO
      DO I=1,1000
          READ(5,105,END=900)(DUMMY(I,J),J=2,5)
  105     FORMAT(20X,4(F10.7))
         DO J=2,5
          TYPE *  ,DUMMY  (I,J)
C         TYPE 102,ITEM(I)
         END DO
      END DO
 900  CLOSE(UNIT=5)
      NUMPTS=I-1
C
C   ASSIGN VALUES TO Z-DIRM,HDIST ,PSI,AND WT
C
      DO K=1,NUMPTS
              ZDIRM(K)=DUMMY(K,2)/12
              HDIST(K)=DUMMY(K,4)/12
              PSI(K)=DUMMY(K,3)
              W(K)=DUMMY(K,5)
C     TYPE*,'ZDIRM=',ZDIRM(K)
C     TYPE*,'HDIST =',HDIST(K)
C     TYPE*,'PSI=',PSI(K)
C     TYPE*,'WEIGHT=',W(K)
C     TYPE*,'ITEM=',ITEM(K)
      END DO
      TYPE*,'FILE NAME TO STORE REFERENCE COORDINATES ?'
      ACCEPT 111,FILECORD
      OPEN(UNIT=3,FORM='FORMATTED',STATUS='UNKNOWN',ERR=515
     &,BLOCKED=.TRUE.,USER='PREP',FILE=FILECORD,FILESIZE=70)
      CALL REDUCE(NUMPTS,ITEM,W,ZDIRM,HDIST,PSI,X,Y)
  111 FORMAT(A)
      CLOSE(UNIT=3)
C     **** INITIALIZE INERTIA ARRAYS ****
C
      WSUM=0.0
      WXSUM=0.0
      WYSUM=0.0
      WZSUM=0.0
      IXX=0.0
      IYY=0.0
      IZZ=0.0
      IXZ=0.0
      IXY=0.0
      IZY=0.0
C
C  CALCULATE VALUES OF WSUM,XW(K),YW(K),ZW(K),WXSUM
C  WYSUM,WZSUM
```

ORIGINAL PAGE IS
OF POOR QUALITY

```
C
      DO  I=1,NUMPTS
         WSUM=WSUM+W(I)
         XW(I)=X(I)*W(I)
         YW(I)=Y(I)*W(I)
         Z(I)=ZDIRM(I)
         ZW(I)=Z(I)*W(I)
         WXSUM=WXSUM+XW(I)
         WYSUM=WYSUM+YW(I)
         WZSUM=WZSUM+ZW(I)
      END DO
         TYPE*,'ULTRALIGHT WEIGHT=',WSUM,'(POUNDS)'
C
C   ** CALCULATE CENTER OF GRAVITY **
C
      CENTX=WXSUM/WSUM
      CENTY=WYSUM/WSUM
      CENTZ=WZSUM/WSUM
      CG=((CENTX-85.49/12)/CBAR)*100
      TYPE*,'CGX=',CENTX,'CGY=',CENTY,'CGZ=',CENTZ,' C.G.% ',CG
C*****************************************************************
C  CALCULATE MOMENTS OF INERTIA ABOUT STABILITY AXIS
C
      DO I=1,NUMPTS
      IXX=IXX+W(I)*((Z(I)-CENTZ)**2+(Y(I)-CENTY)**2)
C
      IYY=IYY+W(I)*((Z(I)-CENTZ)**2+(X(I)-CENTX)**2)
C
      IZZ=IZZ+W(I)*((X(I)-CENTX)**2+(Y(I)-CENTY)**2)
C
C      PRODUCTS OF INERTIA (IXY,IXZ,IZY) *****
C
      IXY=IXY+W(I)*((X(I)-CENTX)*(Y(I)-CENTY))
      IXZ=IXZ+W(I)*((X(I)-CENTX)*(Z(I)-CENTZ))
      IXZ=-IXZ            ! CHANGE SIGN OF Z-AXIS
      IZY=IZY+W(I)*((Z(I)-CENTZ)*(Y(I)-CENTY))
      END DO
C
C     TYPE*,'DO YOU WISH TO ADD PRINCIPAL INERTIAS?>N'
C
C     ACCEPT 111,ANS
C     IF(ANS.EQ.'N')THEN
C       IXXP=0.
C       IYYP=0.
C       IZZP=0.
C       IXZP=0.
C      ELSE
C       TYPE*,'ENTER IXX SUM OF ALL COMPONENTS CONSIDERED(SLUG-FT**2)>'
C       ACCEPT*,IXXP
C       TYPE*,'ENTER IYY SUM OF ALL COMPONENTS CONSIDERED(SLUG-FT**2)>'
C       ACCEPT*,IYYP
C       TYPE*,'ENTER IZZ SUM OF ALL COMPONENTS CONSIDERED(SLUG-FT**2)>'
C       ACCEPT*,IZZP
C       TYPE*,'ENTER IXZ SUM OF ALL COMPONENTS CONSIDERED(SLUG-FT**2)>'
C       ACCEPT*,IXZP
```

ORIGINAL PAGE IS
OF POOR QUALITY

```
C      END IF
C     CONVERT TO SLUG-FT**2 AND ADD PRINCIPAL INERTIAS
       IXX=(IXX/32.174)+52.569
       IYY=(IXX/32.174)+6.938
       IZZ=(IZZ/32.174)+62.584
       IXY=IXY/32.174
       IXZ=(IXZ/32.174)+.278
       IZY=IZY/32.174
       TYPE*,'IXX=',IXX,'          IYY=',IYY
       TYPE*,'IZZ=',IZZ,'          IXY=',IXY
       TYPE*,'IXZ=',IXZ,'          IZY=',IZY
C    ******** OUTPUT TO FILE *************
C
       TYPE*,'ENTER FILENAME TO OUTPUT INERTIA FILE>>'
       ACCEPT 111,FILEOUT
C      FILEO='FILEOUT'
       OPEN(UNIT=6,FORM='FORMATTED',STATUS='UNKNOWN',BLOCKED=
      &.TRUE.,FILE=FILEOUT,USER='PREP',IOSTAT=I1,ERR=515,FILESIZE=70)
C
C     ***** FORMAT FOR OUTPUT OF ALL CALCULATIONS ********
C
       TYPE 100,     WSUM,CENTX,CENTY,CENTZ,CG     ,IXX,IYY,IZZ,
      &IXY,IXZ,IZY

         CENTX=CENTX*12
         CENTY=CENTY*12
         CENTZ=CENTZ*12
       WRITE(6,100) WSUM,CENTX,CENTY,CENTZ,CG,IXX,IYY,IZZ,IXY,IXZ,IZY
C     &IXY,IXZ,IZY
 100   FORMAT(11X,'-----------------------------------------------------',/
      1,10X,'ULTRALIGHT WEIGHT=',F10.3,' (LBS)',/
      2,10X,'-----------------------------------------------------',/
      3,/,12X 'XCG IS ',F10.3,'  IN. FROM X-REF  ',/
      4,12X,'YCG IS ',F10.3,' IN. FROM Y-REF.  ',/
      5,12X,'ZCG IS ',F10.3,' IN. FROM Z-REF.  ',/
      6,12X,'C.G. IN PERCENT MGC  ',F10.3,'%',//
      7,12X,'              ******* INERTIAL QUANTITIES ******* ',/
      8,12X,'                        SLUG-SQ.FT.                ',/
      9,/,12X,' IXX  ',F10.3 ,'   IYY  ',F10.3 ,'   IZZ  ',F10.3 ,/
      1,12X,'  IXY  ',F10.3 ,'   IXZ  ',F10.3 ,'   IZY  ',F10.3 ,/)
C
       CLOSE(UNIT=6)
       STOP
       END
C*********************************************************************
C  ********  SUBROUTINE REDUCE THAT CONVERTS TO X,Y,Z COORD.*********
C  ***********************************************************
       SUBROUTINE REDUCE(NUMPTS,ITEM,W,ZDIRM,HDIST,PSI,XDIR,YDIR)
C
C    *** READ INPUT DATA  *********
C  THIS SUBROUTINE CONVERTS THE Z-DIRECTION MEASUREMENT,HORIZONTAL
C ANGLE(PSI) THE MEASURED HORIZONTAL DISTANCE(HDIST) INTO X,Y,AND Z
C  COORDINATES (REFERENCED TO AN ARBITRARY AXIS).
       REAL*4 ZDIRM(600), HDIST(600),PSI(600),W(600),DUMMY(600,5)
       REAL*4         XDIR(600),YDIR(600)
```

ORIGINAL PAGE IS
OF POOR QUALITY

```
C
      INTEGER NUMPTS
C
      CHARACTER ITEM(200)*15,MEASURE(600,5)
C
C
C     ** BEGIN CALCULATIONS **
      DTOR=3.1415/180
C     REMEMBER TO READ PAST BANNER .
      WRITE(3,54)
 54   FORMAT(5X,'THIS FILE  COORD  CONTAINS X,Y,AND Z COORDINATES',
     &/,'WHERE Y AND Z ARE CALCULATED',/,'      ITEM  ',5X,'  XREF
     &  ',5X,'  YREF  ',5X,'  ZREF  ',8X,'WEIGHT(LBS.)')
      DO K=1,NUMPTS
            XDIR(K)=HDIST(K)*COS(PSI(K)*DTOR)
            YDIR(K)=HDIST(K)*SIN(PSI(K)*DTOR)
C
C  ** SEND THE NEW COORDINATES ZDIRM,XDIR,YDIR TO FILE 'COORD' **
         WRITE(3,55)ITEM(K),XDIR(K)*12,YDIR(K)*12,ZDIRM(K)*12,W(K)
 55      FORMAT(5X,A15,1X,F10.3,3X,F10.3,3X,F10.3,3X,F10.6)

      END DO
      RETURN
      END
```

APPENDIX B

PARTS LIST WITH DESCRIPTION

This appendix presents the parts list of all components (Table B-1) and the actual assembled ultralight parts list (Table B-2).

Table B-1 was compiled of all parts received, with a corresponding description. Table B-2 consists of only those components used for assembly.

ORIGINAL PAGE IS
OF POOR QUALITY

Table B-1 Preassembly parts list
(includes all parts received).

Part Number	Name	(Quant.)	Description
HC-6,7	Hang cage frame tube assemblies	(1 each)	50.5"x1.75"
HC-10	Hang cage frame tube sleeves	(2)	14" x 1.875"
HC-13	Control Stick Clamp	(1)	
HC-109	'T' Brackets	(2)	
HC-8	Front Carry-thru Tube	(1)	22.875" x 1.125" o.d.
HC-11	'U' shaped radius based brackets	(6)	
HC-12	'U' shaped square based brackets	(10)	
HC-87	Black Plastic Saddles	(2)	Designed to fit 1.875" tube
HC-9	Rear Carry-thru tube	(1)	30"x1.875" OD assembled with 1.75" OD tube inside
HC-28	Lower Boom Square 'U' shaped brackets	(2)	
HC-5	Aluminum Saddles	(10)	Designed to fit 1.875" OD tube with 0.25" hole in center
HC-110	Rear Control Stick Bracket with 'L' Shaped Flange	(1)	
HC-35	Aluminum Saddles	(4)	Designed to fit 1.875 " OD tube with 0.3125" hole in cent
HC-1	Front Vertical Strut Tube	(2)	43.5"x1" OD
HC-88	Black Plastic Washers	(8)	0.625" OD x 0.25" ID
HC-3	Rear Vertical Strut Tube	(2)	43"x1" OD

ORIGINAL PAGE IS
OF POOR QUALITY

Table B-1 continued

Part Number	Name	(Quant.)	Description
HC-2	Rear Diagonal Strut Tubes	(2)	51.75"x1" OD
HC-27	Main Gear Support Strut Tubes	(2)	72"x1" OD with 4"x1.125" OD Sleeve
HC-53	Cross Support Tube	(1)	36"x1" OD
HC-84	Main Gear Cross Support Cables	(2)	28.25" center to center of tangs
HC-57	Black Plastic Plug	(4)	1" OD 0.9375" ID
WG-1	Root Tube	(1)	57.75"x2" Square
WG-8	Front King Post Brackets	(2)	
WG-36	Rear King Post Brackets	(2)	
WG-27,WG-42 (A1,B1,C1,D1)	Inboard Section of Spars	(1 each)	78.5"x1.75" OD with 1.875" OD sleeve
WG-37,WG-38	Outboard Section of Spars	(2 each)	84"x1.75" OD with a wooden plug
WG-33,WG-40 (A2,B2,C2,D2)	Center Section of Spars	(1 each)	70.5625"x1.75" OD with 1.875" sleeve
WG-53	'W' Shaped U Bracket	(8)	
WG-56	Inboard Cable Assembly	(2)	82.75 " Center to Center of Tangs
WG-57	Outboard Cable Assembly	(4)	85" Center to Center of Tangs
WG-93	Slide Tube Assemblies	(4)	10"x1" OD with Slotted Tube and Knob Attached
WG-94	Compression Springs	(4)	
WG-92	Inboard Cable Assemblies	(2)	80.75 " Center to Center of Tangs

Table B-1 continued

ORIGINAL PAGE IS
OF POOR QUALITY

Part Number	Name	(Quant.)	Description
WG-46	Compression Strut Tube	(2)	17.75"x1" OD
WG-47	Compression Strut Tube	(2)	17.75"x1" OD
WG-77	Spoiler Pulley Assembly	(2)	
WG-54	Black Plastic Washers	(20)	0.625" OD 0.25" ID
WG-21	PIP pin	(1)	
WG-62	Leading Edge Rib Tip Sleeve	(2)	6"x1.875" OD
WG-63	Rear Spar Tip Sleeve	(2)	6"x1.875" OD
WG-87	Tip Rib Tubes	(2)	50"x1" OD at Center Line
WG-60	Black Plastic Plugs	(10)	1" OD 0.875" ID
WG-66	Batten Tubes	(12)	61.75"x0.5" OD with black plastic tips
KU-1	Tail Section Fabric	(2)	
KU-2	Tail Frame	(2)	4 Pieces(3 surface frames, 1 elevator frame)
TS-11	Leading Edge Stabilizer Tube	(2)	25.5"x0.75" OD
TS-23	Aluminum Insert for TS-11	(2)	1" long x 0.625" OD
TS-39,38	Stabilizer Mounting Bracket	(1each)	9.125"x1"x0.1875" Aluminum Angle
TS-37	Stabilizer Mounting Bracket Back-Up Plate	(2)	9.125"x1"x0.1875" Flat Aluminum plate

Table B-1 continued

ORIGINAL PAGE IS
OF POOR QUALITY

Part Number	Name	(Quant.)	Description
TS-28	Aluminum Inserts	(6)	Designed to fit 0.875" OD Tubes
TS-8,7	Upper Diagonal Tail Tubes	(1 each)	45.5"x1" OD with Large Bend
TS-6,5	Lower Diagonal Tail Tubes	(1 each)	44.5"x1" OD with Small Bend
TS-36	Mixer Assembly Mounting Brackets	(2)	
TS-20	Actuator Arm Control	(2)	13.75"x1" OD
TS-26	'L' Shaped Stainless Steel Brackets	(8)	1.625"x0.75"x0.5"
TS-29,30	Bell Crank	(2)	
TS-31	Black Plastic Saddle	(4)	Designed to fit TS-29,30
TS-21	Spreader Bar Assembly	(1)	72"x0.625" OD
TS-66	Range Grip Clevis Pin	(2)	0.1875"x0.625"
TS-33	Ring Pin	(12)	
TS-25	Triangle Shaped Tang	(2)	
TS-49	Wing Nuts	(28)	
TS-34	Black Plastic caps	(2)	Designed to fit 0.625" ID Tube
TS-69	Mixer Assembly	(1)	
KU - 3	Rear Axle Assembly	(1)	
HC-67	Bungee Chords	(2)	0.375"x36"
HC-107	Landing Gear Suspension Cables	(2)	

Table B-1 continued

ORIGINAL PAGE IS OF POOR QUALITY

Part Number	Name	(Quant.)	Description
HC-58	Main Gear Wheel, Tire, and Tube	(2 each)	20" in Diameter
KU-4	Nose Gear Assembly	(1)	Assembled at the Factory
NG-17	Cable Mounting Bracket	(1)	Cast Aluminum, 'L' Shaped with Small Diagonal Slot
NG-21	Black Plastic Washers	(2)	0.625"x0.25" ID
NG-49	Nose Gear Tire	(1)	16" in Diameter
NG-50	Nose Gear Tube	(1)	16x2.125
HC-97	Seat Sling	(1)	
HC-25	Seat Sling Back Rest Tube	(1)	15.75"x1" OD
HC-91	All Threaded Rod	(1)	17.875"x0.25" 28 threads
HC-120	Sleeve Tube	(1)	16.5"x0.5" OD
EN-22	Fuel Tanks	(2)	2.5 gallons/tank
NG-53	Threaded Rods	(2)	3"x0.25"-28 threads
NG-27	'Heim'-Ball Swivel Joints	(4)	
CS-24	'L'-Shaped Torque Tube Mounting Bracket	(1)	
CS-21	'PVC' White Plastic Bushings	(2)	
CS-26	Torque Tube	(1)	33"x1" OD

Table B-1 continued

ORIGINAL PAGE IS
OF POOR QUALITY

Part Number	Name	(Quant.)	Description
CS-21 (Steel)	Rear Torque Tube Sleeve Bushing	(1)	1"x1.125" CD
CS-30	Large Flat Washers	(3)	1" ID x 1.25" OD
CS-22	Joy Stick Control Assembly	(1)	
CS-28	Black Plastic Washers	(5)	0.625" OD x 0.25" ID
HC-47	Rear Torque Tube Bracket	(1)	
CS-23	Swing Arm Bracket	(1)	
CS-25	Short Control Tube	(1)	one end has swivel clevis
WG-2,3	King Post Tubes	(1each)	48"x1" OD assembly includes wrap brackets
WG-52	Ring Pins	(8)	
WG-71	Inboard Ground Cable Assembly	(1)	
WG-72	Outboard Ground Cable Assembly	(1)	
WG-35	Black Plastic Saddles	(4)	Designed to fit 1.875" OD Tube
CS-35,36	Spoiler Flap Stiffeners	(2 each)	4.75"x31.75" Flat Steel
CS-37	Spoiler Joining Plates	(2)	2.5"x9"
CS-34	Spoiler Activator Arms	(2)	0.25"x0.5"x7.5" Slightly Bent
WG-73,74	Flying Cable Assembly	(2 each)	
WG-105	Shackel Spacers	(2)	1.1875"x0.5" CD
WG-75	Forward Cable Assemblies	(2)	77.75" length

Table B-1 continued

ORIGINAL PAGE IS
OF POOR QUALITY

Part Number	Name	(Quant.)	Description
NG-20	Nose Gear Cable Assembly	(1)	50.75 length
WG-13	Root Tube Plug	(1)	
WG-67	Black Plastic Batten Tube Protective Caps	(12)	
TS-3,4	Upper Boom Tube	(1 each)	93"x1.125" OD
WG-97	Radius Based 'U' Shaped Bracket	(2)	
TS-1,2	Lower Boom Tube	(1 each)	97"x1.125" OD
TS-33	Ring Pin	(1)	
TS-19	Rudder/Elevator Control Rod	(2)	32" Long x 0.5" OD
TS-22	Long Elevator Control Rod	(1)	88.75"x0.75" OD
CS-46	Spoiler Control Rod	(1)	43.5"x0.625" OD
CS-33	'L' Shaped Spoiler Bracket	(1)	
CS-32	Spoiler Triangle Mounting Plate	(1)	
CS-42	Stand-Off Bushing	(1)	
CS-39,40	Spoiler Cables	(1 each)	Cable bushing at one end and nothing on the other end
CS-38	Long Bungee Chords	(2)	0.125"x20"
CS-47	Spoiler Cable Assem.	(1)	
NG-18	Brass Disconnect Lever	(1)	Designed to fit NG-17

Table B-1 continued

ORIGINAL PAGE IS
OF POOR QUALITY

Part Number	Name	(Quant.)	Description
CS-50	'Heim' Ball Swivel Joint Connector	(1)	
NG-51	Ring Pin	(2)	
EN-24	Engine	(1)	30 HP 2-Stroke Cuyuna Engine
KU-5	Fuel Line	-	Clear Plastic
EN-6,8	Engine Mounting Bracket Assem.	(2,1)	Preassembled
EN-17	Engine Drive Shaft Coupling	(1)	Short Sleeve to fit over engine output shaft
EN-12	Drive Shaft	(1)	Chrome-Moly Steel
KU-6	Eccentric Bearing Block for Drive Shaft	(1)	Set includes mounting kit for the Root Tube
EN-55	Reduction Drive Assembly	(1)	Aluminum cast frame flange mounted bearing assembly, 2-turnbuckle assemblies, 4 grooved pulley bearing, and shaft assembly
KU-7	V-belts	(4)	Pulley belts
EN-16	Propeller	(1)	54"x27" pitch
EN-15	Propeller Hub Plate	(1)	
EN-14	Propeller Hub	(1)	
EN-25	Engine Muffler	(1)	
EN-48	Manifold Header Pipes	(2)	
EN-96	Muffler Mounting Bolt Kit	(1 Kit)	
EN-26	Carburetor Assembly	(1)	
EN-95	Throttle Cable	(1)	Connected to Lever

Table B-1 continued

ORIGINAL PAGE IS
OF POOR QUALITY

Part Number	Name	(Quant.)	Description
KU-8	Adjustable Clamps	(2)	
EN-94	Ignition Switch Assembly	(1)	
EN-29	Squeeze Bulb	(1)	In-Line
EN-44	Fuel Filter	(1)	In-Line
KU-9	Nylon 'T'	(1)	Connects fuel line to both tanks
EN-92	Bungee Chord	(1)	Straps fuel tanks to vehicle
HC-111	Seat Sling Harness	(1)	
KU-10	Wing Fabric	(1)	

Note Regarding Compiled Parts List (Table B-2):

Table B-2 contains the raw data that had to be input into the computer before processing. This raw data table contains the measured parameters Z coordinate, horizontal angle (PSI), horizontal distance (HDIST), and component weight. All the components listed are actually used on the ultralight.

The following naming convention was adopted to distinguish the nut, bolt, and washer that were used:

Example:

$$\underbrace{\text{AN4-24A}}_{\text{bolt}}\ \underbrace{\text{2F2T}}_{\text{washer type and quantity}}$$

Note: This convention assumes the standard size nut unless otherwise states ('A').

Convention:

S - safety bolt

F - thick washer

T - thin washer

W - wing nut

R - safety ring.

The complete listing is shown in Table B-2.

ORIGINAL PAGE IS
OF POOR QUALITY

Table B-2 Compiled parts list and coordinate C.G. locations.

THIS FILE 'MEASURE' CONTAINS ALL THE MEASUREMENTS TAKEN
ON THE BASE CONFIGURATION.

COMPONENT	Z-COORD	PSI	DISTANCE	WEIGHT
MG-[illegible]	90.25	11.67	93.375	.2376
AN4-24A 2F,2T	90.25	10.33	89.625	.05459
EC-9	90.62	9.83	76.875	.01279
MG 87	88.875	8.33	106.625	1.146
EC-9	87.875	7.33	119.625	.01279
AN4-24A 3T	87.375	7.67	118.625	.05238
MG-63	87.75	8.67	118.25	.2185
MC-57	85.25	8.75	130.25	.007253
MG-66	87.875	26.33	125.375	.2559
MG-37	85.5	25.5	131.125	2.354
MG-37	87.25	32.92	102.75	2.354
AN4-30A 2T	85.625	42.33	116.375	.05718
MG-35	85.625	42.33	116.375	.005952
MG-53	85.375	41.67	122.375	.04867
AN4-14A 1T	85.375	41.67	122.375	.03167
CS-38	85.375	40.5	125.0	.01477
MG-93 & 94	85.25	39.75	122.375	.281
MG-47	84.5	41.33	128.5	.2885
MG-77	84.625	34.75	136.625	.02353
AN3-16A 2F	83.75	34.58	136.875	.02637
AN4-14A 1T	83.875	34.33	136.875	.03167
MG-53	83.875	34.08	136.875	.048677
AN4-26A 2F	83.875	33.5	138.375	.05679
AN4-24A 2F	84.0	33.5	138.75	.05326
MG-66	85.625	38.5	138.25	.2559
MG-33	80.75	45.25	165.375	2.115
MG-33	82.0	54.0	144.875	2.115
MG-57	80.375	54.17	154.125	.2150
MG-57	80.375	54.17	154.125	.2150
MG-66	80.625	48.17	163.75	.2559
MG-35	75.625	61.67	179.75	.005952
AN4-30A 3F	78.625	61.65	179.75	.05938
MG-53	78.625	60.92	178.0	.04867
AN4-14A 1T	78.50	60.92	178.0	.03167
MG-46	77.5	56.17	188.625	.2783
MG-66	79.75	55.0	189.5	.2559
AN4-14A 1T	77.375	54.17	192.625	.03167
AN4-24A 1T	78.625	60.83	178.0	.04973
MG-93	78.25	59.17	178.875	.2683
MG-53	77.25	53.67	193.0	.04867
AN4-26A 2F	77.375	53.58	195.5	.05679
AN4-24A 2F	77.375	53.5	195.75	.05326
MG-97	77.25	53.0	195.5	.06548
AN4-17S 1F1TWR	77.25	53.0	195.5	.0505
CS-40	79.5	48.67	179.75	.3438
MG-75A	54.125	69.17	203.75	.6875
MG-56	74.375	62.67	218.0	.2000
MG-92	74.375	62.67	218.0	.8125
MG-66	76.5	60.33	217.5	.2559
MG-27	74.0	58.75	221.75	2.330
MG-27	76.25	65.75	207.625	2.380
MG-66	74.0	63.75	248.625	.2559

Table B-2 CONTINUED

ORIGINAL PAGE IS
OF POOR QUALITY

COMPONENT	Z-COORD	PSI	DISTANCE	WEIGHT
AN3-7A 5T	66.375	63.33	252.875	.02078
AN3-7A 5T	66.375	63.25	264.0	.02078
CS-33	68.75	63.25	254.625	.07352
CS-42	69.625	63.20	253.25	.008598
AN5-12A 5F	69.625	63.2	253.25	.06209
CS-32	70.625	63.18	252.5	.04795
AN3-24A 1T2F	71.375	63.33	253.625	.03273
AN3-24A 1T2F	71.375	63.25	254.625	.03273
BBX	70.875	63.33	256.5	.3759
AN4-24A 1F1T	70.875	63.33	258.125	.05216
BB2	73.5	69.75	243.0	.1003
AN4-24A 2F	73.5	69.75	243.0	.05326
WG-71	92.5	59.58	206.125	.8125
WG-74	58.75	58.17	199.875	1.5625
EC-9	92.0	79.17	461.75	.01279
AN4-24A 3F	91.625	79.17	460.875	.05569
WG-62	91.625	79.13	458.75	.2376
WG-87	89.375	76.25	442.375	1.146
EC-9	89.0	75.25	468.5	.01279
AN4-24A 3F	88.625	75.30	466.75	.05569
WG-63	88.625	75.3	467.25	.2185
HC-57	85.875	73.17	470.0	.007253
WG-66	88.875	75.08	429.5	.2559
WG-37	85.625	74.0	428.625	2.3540
WG-37	88.25	78.08	423.25	2.3540
WG-35	86.25	77.42	386.375	.005952
AN4-30A 2F	86.25	77.50	386.375	.05938
WG-53	85.875	77.25	403.125	.04867
AN4-14A 1T	85.875	77.25	403.125	.03167
WG-93	85.5	76.25	400.375	.2789
CS-38	85.50	76.67	398.50	.01477
WG-47	84.625	74.58	403.75	.2885
WG-77	84.75	73.67	407.0	.02353
AN3-16A 2F	84.75	73.67	407.0	.02637
AN4-14A 1T	84.0	74.33	406.375	.03167
WG-53	84.0	73.33	406.375	.04867
AN4-24A 2F	84.0	73.17	406.0	.05326
AN4-25A 2F	84.0	73.08	406.5	.05326
WG-66	85.625	73.75	398.375	.2559
WG-57	81.625	73.70	364.5	.2150
WG-57	81.625	73.70	364.5	.2150
WG-33	82.625	76.20	359.125	2.115
WG-33	80.625	71.33	370.875	2.1150
WG-66	82.875	72.33	364.875	.2559
WG-66	79.75	70.67	333.25	.2559
WG-35	79.125	74.67	323.5	.005952
AN4-30A 1F	79.125	74.50	323.5	.05695
WG-53	78.875	74.17	321.25	.04867
AN4-14A 1T	78.875	74.17	321.25	.03167
WG-93	78.5	73.0	322.0	.2678
WG-46	77.7[illegible]	71.0	324.625	.2783
AN4-14A 1T	77.25	69.58	331.875	.03167
WG-53	77.25	69.50	331.875	.04867
AN4-28A 2F	77.25	69.17	329.625	.05829
AN4-26A 2F	77.25	69.17	329.625	.05679

Table B-2 CONTINUED

ORIGINAL PAGE IS
OF POOR QUALITY

COMPONENT	Z-COORD	PSI	DISTANCE	WEIGHT
AN4-17S 1F1TWR	76.75	68.83	330.75	.0505
WG-27	76.5	72.83	290.375	2.330
WG-92	74.50	69.67	290.875	.8125
WG-56	74.5	69.67	290.875	.2000
WG-66	76.5	73.33	296.5	.2559
WG-27	74.875	67.17	299.875	2.330
WG 66	74.0	66.0	271.0	.2559
BB1	73.375	70.08	254.0	.1003
AN4-24A 2F	73.375	70.08	254.0	.05326
BB3	71.0	63.67	264.625	.1003
AN4-24A 2F	71.0	63.67	364.625	.05326
CS-39	79.5	70.67	355.5	.3438
WG-75	55.625	75.33	285.25	.6875
WG-74	53.375	70.58	320.25	1.5625
WG-72	94.5	70.08	308.25	.8125
WG-283	96.75	67.17	258.25	3.660
AN365-524	117.875	64.92	259.25	.01127
AN4-5A 1T	74.375	70.63	246.75	.1550
WG-13	73.625	70.75	246.75	.07562
WG-8	73.375	70.37	245.625	.1036
WG-8	73.375	70.58	251.5	.1036
AN4-26A 2F	72.0	70.67	245.0	.05679
AN4-26A 2F	71.875	70.33	244.875	.05679
AN4-24A 2F	73.0	70.5	244.375	.05326
AN4-24A 2F	74.125	70.75	243.25	.05326
AN4-24A 2F	74.0	70.25	244.625	.05326
AN4-28A 2F	73.25	69.83	247.0	.05829
AN4-28A 2F	73.75	70.0	247.0	.05829
AN4-25A 1F	73.375	69.92	248.125	.05297
AN4-17S 2FWR	76.0	70.5	248.0	.05163
CS-28	76.0	70.42	248.0	.000661
CS-28	76.0	70.58	248.0	.000661
ENG,RED,MOUNT	65.375	66.33	254.75	78.375
SPARK PLUG	57.5	66.67	254.125	.1240
SPARK PLUG	57.5	65.83	254.0	.1240
Y-PIPE	64.125	65.58	252.25	1.6435
J-PIPE	63.0	66.83	245.75	1.0104
MUFFLER	60.125	65.5	246.0	5.000
MUFFLER SPR	64.625	65.75	245.75	.01213
MUFFLER SPR	66.25	66.0	247.75	.01213
MUFFLER SPR	59.875	67.0	245.125	.01213
MUFFLER SPR	59.875	67.17	247.125	.01213
AN4-12A 2F	57.5	66.38	249.0	.03578
RUBBB16 WASHER	57.5	66.38	249.0	.02469
AN4-12A 2F	57.25	65.17	252.5	.03578
RUBBB16 WASHER	57.25	65.17	252.5	.02469
AN4-28A 2T	72.25	66.83	252.375	.05609
AN4-28A 2T	72.25	65.33	254.75	.05609
EN-26	61.625	66.83	262.375	2.00
WG-36	70.875	61.58	264.0	.06883
AN5-42A 2F	69.75	61.67	264.0	.1280
AN3-25A 2F	70.5	61.5	264.0	.03131
AN3-25A 2F	70.625	61.75	264.0	.03131
AN4-20A 2F	72.75	61.67	264.0	.04445
WG-36	72.75	61.67	266.0	.06883

Table B-2 CONTINUED

ORIGINAL PAGE IS
OF POOR QUALITY

COMPONENT	Z-COORD	PSI	DISTANCE	WEIGHT
CS-28	72.75	61.63	264.0	.000661
CS-28	72.75	62.83	266.0	.000661
PROPSHAFT	66.25	59.92	272.0	[illegible]
EN-12	66.25	59.58	273.0	[illegible]
EN-95	66.25	59.67	268.875	.1109
EN-95	66.125	59.17	271.25	.1109
AN4-35A 2F	65.0	59.67	268.0	.06842
AN4-35A 2F	67.625	59.33	268.5	.06842
EN-90	67.625	59.25	270.25	.2826
EN-90	67.625	59.67	275.25	.2826
EN-92 BIG WASH	69.125	59.67	275.25	.1001
EN-92	69.25	59.17	269.5	.1001
EN-99	69.125	59.67	274.25	.05754
EN-99	69.25	59.17	270.5	.05754
AN6-50A	69.125	59.5	272.25	.1720
AN5-16A 2F	66.625	64.0	258.125	.06528
TS-4	73.875	49.0	245.625	1.760
TS-2	47.5	44.67	266.125	1.875
TS-22	48.75	54.58	269.375	1.250
TS-3	73.625	60.67	328.0	1.760
TS-1	47.25	48.50	295.75	1.875
PUSH CLEVIS	26.0	62.5	251.0	.1497
AN3-11A 2T	26.5	62.25	250.25	.01977
AN3-11A 2T	71.75	47.83	291.875	.01977
PUSH CLEVIS	72.375	47.67	289.625	.1497
CS-47	35.0	60.17	278.0	1.4375
HOSE CLAMP SM	33.75	64.0	275.25	.05379
HOSE CLAMP SM	45.125	64.58	292.5	.05379
AN3-6A 2T	25.0	62.75	250.25	.01658
AN3-6A 2T	73.125	47.33	293.625	.01658
AN4-14S 1FWR	66.5	47.17	289.0	.04373
AN4-14S 1FWR	71.0	46.33	289.125	.04373
AN4-14S 1FWR	66.0	52.50	323.0	.04373
AN4-14S 1FWR	70.625	52.50	323.75	.04373
AN3-11A 2T	69.5	46.33	290.0	.01977
MSA-4	69.5	46.5	290.0	.006944
MSA-18	69.5	46.42	291.0	.01190
TS-36	71.25	46.25	294.5	.1526
MSA-1	69.5	46.67	292.0	.03009
MSA-10B	71.625	46.75	295.75	.09656
AN3-12A 2T	69.5	46.83	293.5	.02138
AN3-12A 2T	69.5	46.92	294.0	.02138
AN3-[illegible] 2T	74.5	46.67	296.375	.01658
MSA-5	69.5	47.0	296.0	.01069
MSA-18	69.5	47.17	296.5	.01190
MSA-2	69.5	47.33	296.875	.1282
MSA-11	72.25	47.17	296.625	.04700
AN3-5A 1T	71.25	47.0	297.0	.01431
AN3-5A 1T	71.25	46.83	297.125	.01431
MSA-26	68.625	48.33	300.75	1.0234
MSA-16	66.625	48.33	300.5	.02127
AN4-14A 2T	67.5	48.33	300.5	.02205
AN3-13A 2T	69.5	48.0	300.5	.02138
AN3-13A 2T	69.5	48.0	300.5	.02138
MSA-9B	68.75	47.83	299.25	.08488

Table B-2 CONTINUED

ORIGINAL PAGE IS
OF POOR QUALITY

COMPONENT	Z-COORD	PSI	DISTANCE	WEIGHT
AN3-5A 1F	71.5	47.75	300.0	.01530
AN3-5A 1F	70.875	47.75	300.5	.01530
AN3-6A 3T	67.625	47.5	301.875	.01777
MSA-12	70.5	47.5	301.75	.06030
AN3-12A 5T	73.75	47.67	301.75	.02495
MSA-13	72.5	47.75	303.375	.02194
MSA-8	74.25	47.33	302.625	.09832
MSA-7	70.625	47.17	305.25	.02535
MSA-23	70.625	47.17	305.25	.03186
MSA-12	72.875	48.17	300.5	.06030
MSA-15	70.625	47.33	304.25	.2532
AN3-6A 3T	72.125	48.5	300.0	.01777
MSA-9A	70.75	48.33	300.375	.08488
AN4-13A 2T	69.5	48.25	300.875	.02138
AN4-13A 2T	69.5	48.25	300.875	.02138
MSA-18	69.5	48.33	302.125	.0119
AN3-5A 1F	70.875	48.25	302.875	.01530
AN3-5A 1F	71.625	48.25	302.875	.01530
MSA-18	69.5	49.17	305.75	.01190
MSA-4	69.5	49.33	307.0	.006944
AN3-11A 2T	69.5	49.33	307.0	.01977
MSA-3	69.5	50.25	314.0	.3458
AN3-12A 2T	69.375	51.75	322.875	.02138
AN3-12A 2T	69.375	51.75	322.875	.02138
MSA-10A	71.25	51.75	323.0	.09656
MSA-1	69.375	51.83	325.5	.03009
MSA-18	69.375	52.0	326.0	.01190
TS-36	71.25	51.83	327.0	.1526
AN3-11A 2T	69.375	52.17	328.375	.01977
MSA-4	69.375	52.17	328.375	.006944
AN3-14A 2T	68.75	51.83	327.5	.02205
AN3-14A 2T	68.75	46.33	292.875	.02205
AN3-15A 2T	67.25	45.25	294.25	.02315
AN3-15A 2T	67.75	45.33	294.5	.02315
AN3-15A 2T	68.875	45.67	295.5	.02315
AN3-15A 2T	71.25	46.0	296.125	.02315
AN3-15A 2T	72.0	46.25	299.5	.02315
AN3-15A 2T	72.5	46.33	300.5	.02315
TS-37	70.125	45.83	296.375	.1046
TS-38	69.25	45.83	297.25	.2482
TS-11A	79.25	47.67	302.25	.3130
TAIL TUBE #1	59.75	47.42	297.5	.8750
TS-8	63.5	43.75	296.5	1.010
FABRIC(TAIL)	71.375	43.67	312.25	.7188
TS-19	73.625	44.33	307.25	.2600
AN3-6A 3T	73.625	42.5	316.25	.01777
TS-29	72.375	43.75	317.125	.08570
TS-31	72.0	43.0	317.75	.004299
AN3-15A 2T	71.5	43.0	317.75	.02315
TS-31	72.0	43.75	318.125	.04299
AN3-15A 2T	71.5	43.75	318.125	.02315
TS-20	71.5	42.33	320.0	.2256
AN3-14A 2T	71.5	43.17	317.125	.02205
TS-26	72.25	44.25	317.875	.01736
TS-26	70.75	43.17	316.375	.01736

ORIGINAL PAGE IS
OF POOR QUALITY

Table B-2 CONTINUED

COMPONENT	Z-COORD	PSI	DISTANCE	WEIGHT
TAIL TUBE #4	71.875	42.42	300.25	.6875
AN3-13A 2F	70.375	41.75	324.375	.02337
AN3-11A 1F	70.25	41.67	325.5	.01957
TS-28	70.25	41.67	325.5	.05236
AN3-11A 3T	57.5	40.75	304.75	.02096
TS-26	57.75	40.83	304.75	.01736
AN392-13 RING	56.75	41.0	301.0	.00396
AN42-813 11F	56.75	41.0	301.0	.02533
TS-28	56.0	41.0	300.75	.05236
AN3-11A 1T	55.75	40.75	300.75	.01858
AN3-11A 3T	85.25	45.17	326.875	.02096
TS-26	84.5	45.17	327.0	.01736
AN3-11A 2F	86.625	45.5	327.875	.02176
TS-28	86.375	45.5	327.875	.05236
AN3-11A 1T	86.5	45.5	327.875	.01858
TS-23	87.75	49.17	308.5	.02232
AN3-11A NO 1T	87.25	49.17	308.5	.01384
TS-34	88.0	49.58	308.25	.004255
AN3-11A 1F	87.5	49.33	308.25	.01957
AN3-15A 2T	66.625	51.67	333.375	.02315
AN3-15A 2T	67.0	51.65	332.50	.02315
AN3-15A 2T	68.5	51.68	332.875	.02315
AN3-15A 2T	71.5	51.25	327.875	.02315
AN3-15A 2T	71.375	51.17	327.375	.02315
AN3-15A 2T	72.375	51.0	327.0	.02315
TS-37	69.875	51.33	329.25	.1046
TS-39	69.0	51.33	330.75	.2515
AN3-6A 2T	74.375	51.03	323.5	.01658
TS-34	87.875	49.5	310.375	.004255
AN3-11A NO	87.875	49.33	310.5	.01265
TS-23	87.625	49.42	310.25	.02232
AN3-11A 2F	87.0	49.5	311.875	.02176
TS-11	78.25	50.5	319.625	.333
TAIL TUBE #1	77.0	49.33	325.875	.875
TS-7	63.25	51.0	338.5	1.01
TS-3	59.375	50.83	346.0	1.76
TAIL FABRIC LF	71.0	48.67	340.0	.7188
AN392-13 R	55.25	50.0	355.25	.00396
AN42-813	55.25	50.0	355.25	.04156
AN3-11A NO	54.625	50.0	355.5	.01265
TS-38	54.625	50.0	355.5	.05236
AN3-11A 3T	56.0	49.67	356.0	.02096
TS-26	56.75	49.67	356.25	.01736
AN3-14A 2T	70.5	47.75	343.0	.02205
TS-26	71.75	47.67	340.625	.01736
TS-26	70.25	47.83	341.0	.01736
TS-20	71.375	47.0	348.0	.2256
TAIL TUBE #4	72.75	46.67	349.375	.6875
AN3-11A 2F	72.25	46.25	353.0	.01483
TS-28	72.25	46.17	353.0	.05236
AN3-11A 1F NO	72.25	46.17	353.0	.01483
TS-19	74.375	49.5	335.375	.260
TS-30	72.875	47.67	344.875	.0857
AN3-6A 3T	74.375	47.67	345.375	.01777
AN3-11A 2T	71.75	47.67	343.625	.01977

ORIGINAL PAGE IS
OF POOR QUALITY

Table B-2 CONTINUED

COMPONENT	Z-COORD	PSI	DISTANCE	WEIGHT
AN3-11A 2T	71.75	47.33	343.625	.01977
TS-31	72.0	47.67	343.625	.004299
TS-31	72.0	47.33	343.625	.004299
TS-26	84.625	46.0	332.75	.01736
AN3-11A 3T	85.0	45.83	333.5	.02096
AN3-11A 1T NO	86.375	45.83	327.875	.01384
TS-28	85.875	46.0	327.875	.05236
AN3-11A 2F	85.75	46.0	328.125	.01483
AN4-12A 2F	87.25	46.17	326.0	.03578
AN4-12A 2F	87.25	46.33	326.0	.03578
AN4-12S 2FWR	87.25	46.0	326.0	.04308
TS-25	87.625	46.17	326.0	.04145
TS-21	54.875	45.83	328.375	.72
AN4-26A 1F	70.75	63.5	261.25	.05436
AN3-6A 2T	69.25	63.42	256.125	.01658
CS-46	50.0	63.0	257.5	.563
HC-3	50.875	62.25	256.375	.9658
HC-3	50.875	63.67	271.625	.9658
HC-2	52.0	66.67	247.125	1.1560
HC-1	53.0	72.5	237.625	1.00
HC-1	53.0	73.17	254.375	1.00
EN-94	42.375	74.17	252.25	.3818
HC-2	51.875	67.83	263.875	1.156
NG-20	51.875	73.15	246.875	.1820
AN4-24A 1F	12.875	79.58	234.125	.05083
HC-88	12.875	79.58	234.125	.000683
NGSA-12	13.5	79.75	236.75	.01036
NGSA-10	13.25	79.67	235.5	.04782
NGSA-10	13.5	80.0	241.5	.04782
NGSA-11	13.5	79.67	236.625	.00088
NOSE WH&TIRE	13.5	79.92	238.625	3.120
NGSA-11	13.5	79.92	240.0	.00088
NGSA-12	13.5	79.92	240.0	.01036
HC-88	13.25	80.0	243.625	.000683
NGSA-9	13.5	79.92	238.625	.4960
AN4-24A 1F	13.5	80.0	243.625	.05083
NGSA-8	18.75	78.58	242.5	.4346
NGSA-8	19.0	78.25	237.625	.4346
NGSA-7	23.875	77.0	241.0	1.250
NGSA-18	22.375	77.33	240.125	.1699
NGSA-14	23.375	77.33	240.875	.05882
NGSA-13	20.625	77.67	241.0	.05831
NGSA-13	21.125	77.5	240.125	.05831
NGSA-13	22.75	77.17	241.125	.05831
NGSA-13	23.375	77.0	240.25	.05831
NGSA-6	20.875	77.17	240.376	.09899
NGSA-19	22.625	77.5	241.0	.06955
NGSA-19	24.875	77.0	241.125	.06955
HC-57	25.5	76.83	243.0	.007253
HC-57	25.5	76.75	243.5	.007253
AN4-7A 1T NO	22.25	77.67	244.0	.01918
NG-27	22.0	77.42	244.25	.01598
NG-53	21.5	77.0	244.875	.03908
AN4 HALF NUT	21.875	77.33	244.875	.004630
AN4 HALF NUT	21.5	76.83	245.0	.004630

Table B-2 CONTINUED

ORIGINAL PAGE IS
OF POOR QUALITY

COMPONENT	Z-COORD	PSI	DISTANCE	WEIGHT
NG-27	21.375	76.67	245.25	.01598
AN4-14A 2F	21.25	79.0	245.5	.03908
AN3-10A 2T	22.375	77.33	241.875	.0182
AN3-10A 2T	22.25	77.25	237.875	.0182
NGSA-14	24.25	77.17	240.0	.05882
AN4-7A 1T NO	22.0	77.17	236.25	.01918
NG-27	21.875	77.0	236.5	.01598
AN4-16A 2F	24.25	76.0	234.0	.03029
NGSA-1	24.25	76.17	234.375	.03638
NGSA-2	24.25	76.25	235.25	.0097
NGSA-3	24.25	76.33	235.875	.03351
NGSA-4A	24.875	76.17	237.5	1.0097
NGSA-3	24.25	76.42	238.5	.03252
NGSA-2	24.25	76.58	239.125	.0097
NGSA-5	24.25	76.67	241.625	.5726
NGSA-2	24.125	76.70	245.25	.0097
NGSA-3	24.125	76.75	245.625	.03351
NGSA-4B	24.75	76.67	245.75	1.0423
NGSA-3	24.125	76.83	246.625	.03351
NGSA-2	24.125	76.92	247.125	.0097
NGSA-1	24.125	77.0	248.125	.03638
AN4-16A 2F	24.125	77.08	250.0	.0429
CS-50	29.375	77.0	247.625	.05997
AN393-61 R	29.25	77.0	246.5	.01763
NG-53	21.625	76.58	237.5	.03908
AN4 HALF NUT	21.75	76.67	236.875	.00430
AN4 HALF NUT	21.375	76.33	237.5	.00430
NG-27	21.25	76.17	237.625	.01598
AN4-14A 2F	21.125	76.0	237.625	.03908
HC-99	30.9	75.50	250.5	.06376
HC-57	32.45	75.08	250.625	.007187
AN4-35A 1F1T	31.85	75.25	252.0	.06732
HC-5	31.85	75.33	252.75	.009458
HC-12	31.85	75.33	253.125	.03717
AN4-16A 2F	31.85	75.42	254.0	.04290
HC-57	32.05	75.58	254.0	.007187
NG-18	30.0	75.67	249.25	.02127
AN4-35A 1T1F2P	29.9	75.83	250.875	.06864
TS-31	29.9	75.83	250.875	.004299
WG-35	29.9	75.5	249.75	.004299
CS-42	30.0	75.67	249.25	.008598
AN392-13 R	30.15	75.58	249.25	.00396
AN392-13 R	29.52	75.58	249.25	.00396
AN4-15A 2F	32.10	76.0	253.625	.04081
AN4-24A 2F	32.10	75.83	251.75	.05326
HC-11	30.3	75.92	251.75	.06548
HC-11	33.1	76.0	251.765	.06548
AN4-17A 2F2P	34.20	75.83	251.75	.04579
EC-9	32.1	76.17	251.25	.01279
HC-8	32.0	75.33	243.375	.8208
AN4-15A 2F	31.9	69.5	232.5	.04081
EC-9	31.9	75.0	233.625	.01279
AN4-17A 2F2P	34.15	74.67	234.125	.04579
HC-11	33.40	74.67	234.125	.06548
HC-11	30.7	74.67	234.125	.06548

ORIGINAL PAGE IS
OF POOR QUALITY

Table B-2 CONTINUED

COMPONENT	Z-COORD	PSI	DISTANCE	WEIGHT
AN4-17A 2F2P	29.8	74.67	234.125	.04579
HC-12	31.9	74.0	233.0	.03717
AN4-16A 2F	31.9	74.0	232.5	.0429
HC-5	31.9	74.08	233.375	.009458
HC-57	31.9	74.08	232.5	.007253
AN4-25A 1F1T	31.9	74.17	234.875	.0543
HC-6	31.4	70.17	239.375	2.540
HC-13	30.5	69.83	240.125	.1300
AN3-23A 1T1F	31.4	69.83	240.125	.03044
AN4-24A 2F	29.3	69.83	240.125	.05326
AN3-6A 2T	30.0	69.75	239.125	.01658
CS-24	29.75	69.58	236.75	.09722
CS-21	29.75	69.42	237.625	.03368
CS-30	29.75	69.42	237.625	.008973
AN4-16A 2F2P	29.65	69.67	237.0	.04422
CS-22	31.65	70.0	237.25	.6098
AN4-6A 2T	26.6	69.75	237.25	.01658
HC-107	14.3	68.75	241.5	.5625
CS-30	14.3	67.0	242.75	.01477
HC-27	21.5	66.0	243.0	1.54
CS-25	25.9	66.5	242.5	.458
CS-26	28.9	66.25	243.625	.7674
HC-10	30.4	66.33	248.5	.4394
FT-1	22.9	64.67	254.0	2.021
EN-92	22.9	65.0	257.0	.2815
FT-2	22.9	65.42	260.125	2.021
HC-120	29.0	65.17	259.0	.0700
HC-91	29.0	65.17	259.0	.1971
MS-35420-14 R	29.0	64.42	251.625	.01387
TANK TANG	29.5	64.42	251.625	.01830
TANK TANG	29.5	66.0	266.5	.01830
AN365-428	29.0	66.0	266.5	.008179
AN4-23A 1F	30.05	64.5	250.125	.04857
AN4-23A 2F	30.05	64.17	250.875	.05100
HC-109	30.05	64.17	250.875	.46450
AN4-30A 2F	31.8	63.33	248.375	.05938
HC-12	31.5	63.42	249.125	.03717
HC-5	31.0	63.42	249.125	.009458
AN4-24A 2F	30.2	63.42	249.125	.05326
AN4-26A 2F	30.2	63.33	248.625	.05679
HC-12	30.2	63.33	248.625	.03717
HC-5	31.0	63.33	248.625	.009458
HC-5	28.9	63.33	248.625	.009458
HC-12	28.5	63.33	248.625	.03717
AN4-16A 2F	28.0	63.33	248.625	.04290
AN4-24A 2F	30.2	63.25	248.625	.05326
HC-5	30.2	63.17	249.0	.009458
HC-12	30.4	63.0	249.25	.03717
AN4-17S 2FWR	30.2	63.17	246.5	.05163
WG-105	30.2	63.17	246.5	.005842
AN3-6A 2T	25.2	62.83	250.125	.01658
CS-23	26.7	62.83	249.875	.05886
AN3-6A 2T	28.95	63.17	249.875	.01658
HC-110	29.05	63.33	253.125	.1042
AN5-23A 1F	29.8	63.5	252.5	.07576

ORIGINAL PAGE IS
OF POOR QUALITY

Table B-2 CONTINUED

COMPONENT	Z-COORD	PSI	DISTANCE	WEIGHT
AN5-23A 1F	29.8	63.58	253.0	.07576
HC-35	29.8	63.5	252.5	.00948
HC-35	29.8	63.58	253.0	.00948
CS-21	28.0	63.5	251.0	.03368
CS-30	28.80	63.5	250.375	.008973
CS-27	28.0	63.25	250.75	.01925
CS-30	28.0	63.25	250.625	.008973
HC-47	28.0	63.17	252.75	.1384
AN4-16A 2F	28.0	63.0	251.125	.0429
HC-57	28.0	62.75	252.0	.007253
AN3-6A 2T	27.7	63.17	255.0	.01658
WHEEL&TIRE RT	15.1	61.5	234.0	5.43
AXLE STRIP	13.7	61.67	273.25	.05566
AXLE STRIP	13.7	63.75	273.875	.05566
AN4-14A 2T	13.5	64.5	248.425	.03688
AN4 LONG 24	15.4	63.75	245.875	.06056
AN4-16A 2F	23.8	64.25	249.5	.0429
HC-84	19.9	65.58	260.75	.250
HC-84	19.9	65.58	260.75	.250
REAR AXLE	15.5	65.08	261.875	7.0072
HC-9	30.0	65.92	260.375	2.0213
HC-25	30.2	67.17	257.375	.333
HC-87	30.2	66.33	249.875	.005842
AN4-24A 1T1F	30.2	66.25	248.125	.05215
AN4-16A 2F	30.2	66.42	250.75	.0429
HC-12	30.2	66.33	250.125	.03717
AN4-16A 2F	30.2	67.83	263.625	.0429
HC-12	30.2	67.92	264.75	.03717
HC-87	30.2	68.0	265.875	.005842
AN4-24A 1T1F	30.2	68.0	266.0	.05215
HC-97(SEAT)	23.9	69.83	253.75	8.71
HC-111	24.1	70.75	253.75	.9751
AN4-16A 2F	28.1	67.0	273.0	.0429
AN4-16A 2F	24.0	66.92	273.5	.0429
AN4 LONG 24	15.6	66.67	273.625	.06056
AN4-14A 2F	13.4	67.17	272.375	.03908
WHEEL&TIRE LF	15.2	67.92	290.75	5.46
AN4-22S 1TWR	30.0	67.25	273.25	.05324
W6-105	30.0	67.25	273.25	.005842
AN4-26A 2F	30.0	63.17	272.625	.05679
HC-12	28.6	63.17	272.625	.03717
HC-5	29.3	63.17	272.625	.009458
HC-5	30.9	63.17	272.625	.03717
HC-12	31.3	67.0	271.125	.03717
HC-5	30.9	67.0	271.125	.009458
AN4-24A 2F	30.0	67.0	271.125	.05326
AN4-24A 2F	30.0	67.08	272.0	.05326
HC-28	30.8	66.83	272.25	.03717
HC-5	30.4	66.83	272.125	.009458
AN4-17S 2FWR	30.6	66.67	272.125	.05163
AN5 3/4 24	30.0	66.75	269.125	.06371
AN5 3/4 24	30.0	66.67	268.75	.06371
HC-35	30.0	66.75	269.25	.009480
HC-35	30.0	66.67	268.375	.00948
HC-109	30.15	67.25	267.875	.46500

ORIGINAL PAGE IS
OF POOR QUALITY

Table B-2 CONTINUED

COMPONENT	Z-COORD	PSI	DISTANCE	WEIGHT
AN4-23A 2F	30.15	67.17	267.25	.0510
AN4-23A 2F	30.15	67.33	266.875	.0510
HC-10	30.45	68.33	265.25	.4394
HC-27	20.85	69.58	266.0	1.540
CS-38	14.6	68.25	263.375	.01477
HC-107	14.4	71.58	260.0	.5625
HC-7	31.5	72.75	257.375	2.540
EN-95	40.2	73.75	250.5	.7668
HOSE CLAMP LG	32.7	74.0	254.75	.06217
HOSE CLAMP LG	32.2	73.33	255.75	.06217
CS-35	89.25	36.25	127.5	.7474
CS-34	88.85	39.67	133.375	.09017
AN3-5A 2T	88.85	40.17	132.125	.01550
AN3-5A 2T	88.85	39.5	135.375	.01550
ANB-524A	87.85	40.17	134.625	.01323
AN3-5A 2T	88.85	40.75	135.75	.01550
CS-37	88.75	42.0	137.0	.1109
AN3-5A 2T	87.15	43.25	139.375	.01550
CS-36	86.95	46.92	148.75	.7496
CS-35	90.15	77.0	407.375	.7474
CS-34	89.85	76.67	399.25	.09017
AN3-5A 2T	89.85	76.83	399.125	.01550
AN3-5A 2T	89.85	76.42	399.625	.01550
ANB-524A	88.85	77.17	398.375	.01323
AN3-5A 2T	89.65	76.5	395.125	.01550
CS-37	89.45	76.42	392.0	.1109
AN3-5A 2T	88.95	76.17	387.375	.01550
CS-36	87.45	75.67	375.5	.7496
WING FAB RT	79.8	50.50	167.25	8.125
WING FAB LF	79.8	73.75	360.25	8.125
FUEL LINE ASS.	51.875	67.83	263.875	.435
FUEL BULB	53.0	67.83	263.5	.1060
WG-1	72.25	66.25	253.0	5.3125
PILOT	24.1	70.75	253.75	0.000
FUEL RIGHT	22.9	64.67	254.0	0.000
FUEL LEFT	22.9	65.42	260.125	0.000

APPENDIX C

WEIGHING CHECK

AND

ERROR ANALYSIS

ORIGINAL PAGE IS
OF POOR QUALITY

C.1 WEIGHING CHECK AND ERROR ANALYSIS WEIGHING CHECK:

To determine the C.G. by weighing, the aircraft was placed on three scales; the left and right main gear on two large scales and the nose gear on a smaller scale.

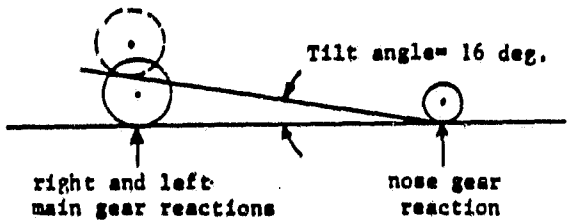

FIGURE C.1 Reaction Diagram of Weighing Check.

Two Measurements were taken:

1) Level: Right = 133.2 lb Nose = 11.49 lb

Left = 127.0 lb

Total = 271.69 pounds

2) 16° Tilted: Right = 103.2 lb R_N = 65.99 lb

Left = 102.5 lb

Total = 271.7 pounds

CENTER OF GRAVITY

The C.G. was calculated as follows:

Level: $\Sigma M_{x_{\substack{\text{Nose}\\\text{Gear}}}} = \ell_{x_{C.G.}} W_{TOT} - 73.75\,(R_{M_R} + R_{M_L}) = 0$

$$\ell_{x_{C.G.}} = \frac{73.75\,(133.2 + 127.0)}{271.69}$$

$\ell_{x_{C.G.}}$ = 70.63 in from nose gear

$\ell_{x_{C.G.}}$ = 112.39 in from reference

ORIGINAL PAGE IS
OF POOR QUALITY

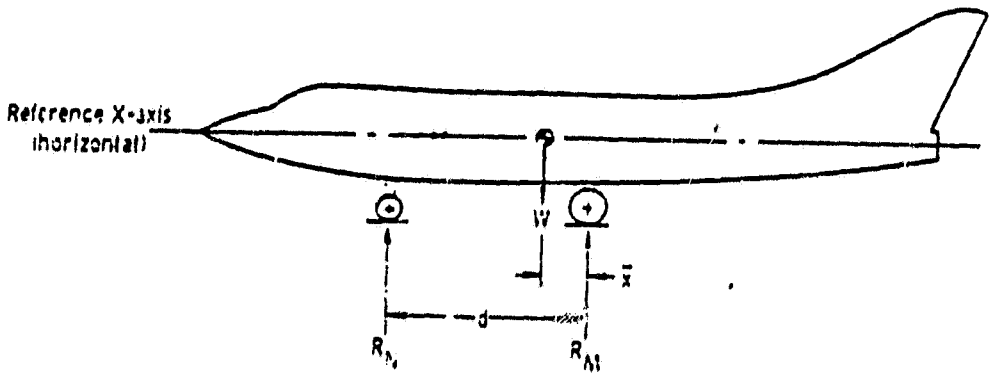

Weight and horizontal position of center of gravity.

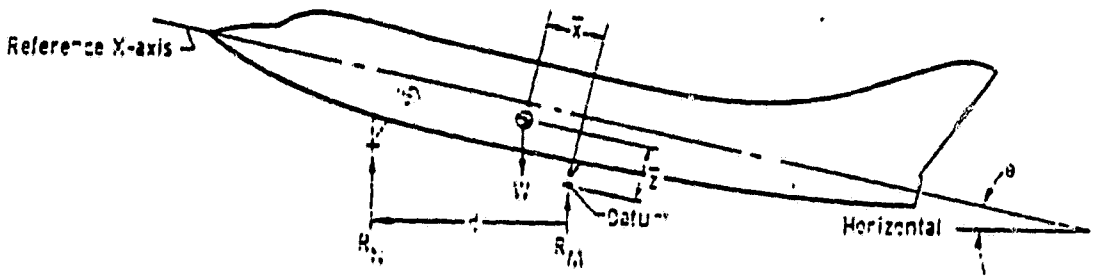

Weight and vertical and horizontal position of center of gravity.

FIGURE C.2.

Experimental Techniques for Determining Weight and Center-of-Gravity Positions

ORIGINAL PAGE IS
OF POOR QUALITY

The vertical center of gravity was calculated using techniques outlined in Ref. 3. Flight Test Principle and Practices.

Where $R_N d = W\ (\bar{x}\cos\theta - \bar{z}\sin\theta\ )$

See FIGURE C.1 and C.2

However, the ultralight was tilted nose gear down therefore:

$R_{Nose} = R_{Main}$ (Total)

$R_M d = W\ (\bar{x}\cos\theta - \bar{z}\sin\theta\ )$

$d = 73.75\ \cos(16) = 70.89$ in

$\bar{x} = 70.63$ in

$W = 271.69$

$\theta = 16$ deg.

$R_M = (103.2 + 102.5) = 205.7$ lb

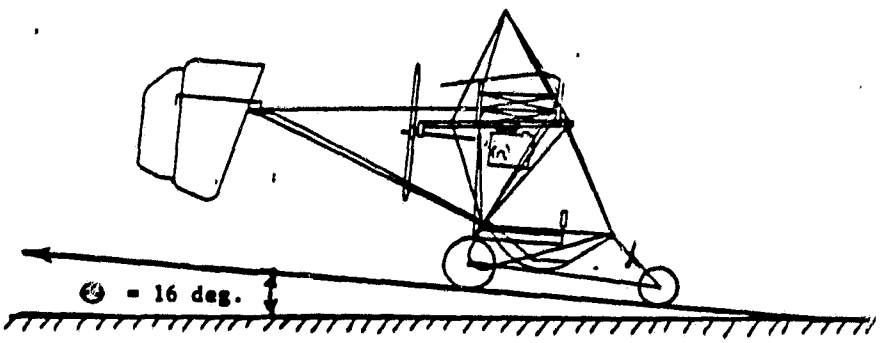

FIGURE C.3 Tilt Angle for Vertical C.G.

and

$$-\bar{z}\ \sin\theta = \frac{R_M d}{W} - \bar{x}\ \cos\theta$$

$$\bar{z} = (\bar{x}\cos\theta - \frac{R_M d}{W})\ /\sin\theta$$

$$= [70.63\cos(16) - \frac{205.7(70.89)}{271.69}\ ]\ /\sin(16)$$

ORIGINAL PAGE IS
OF POOR QUALITY

$\bar{z}$ = 51.59 in from ground

= 51.59 + 5.3 in from reference

$\bar{z}$ = 56.89 in from reference

Y-Direction C.G.:

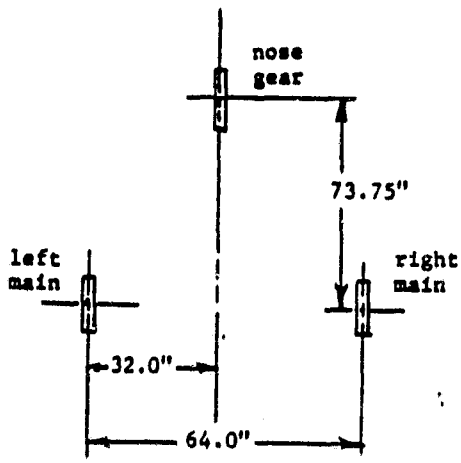

FIGURE C.4 Top-view of Ultralight Gear Geometry.

$$\Sigma M_{LF_{Main}} = 32\ (R_N) + 64(R_{M_{RT.}}) - \ell_{Y_{C.G.}}\ (W_{A/C})$$

R_N = 11.49

$R_{M_{RT.}}$ = 133.2

$W_{A/C}$ = 271.69

$$\ell_{Y_{C.G.}} = \frac{32(11.49) + 64(133.2)}{271.69}$$

$\ell_{Y_{C.G.}}$ = 32.73 in from left main

$\ell_{Y_{C.G.}}$ = +0.73 in from ℄

$\ell_{Y_{C.G.}}$ to C_L = 235.0 in

$\ell_{Y_{C.G.}}$ = 234.27 in from reference

TOTALS:

$\ell_{X_{C.G.}}$ = 112.39 in. from reference axis

$\ell_{Y_{C.G.}}$ = 234.27 in. from reference axis

$\ell_{Z_{C.G.}}$ = 56.89 in. from reference axis

ERROR ANALYSIS

Weighing: All weighing was done using scales and balances at the University of Kansas Department of Physics.

The pieces which weighed less than 2 pounds were weighed on a 'pounds-weight' balance that could handle the heavier items; the other components were weighed on two standard triple-beam balances.

	Error	Reason for Error
Triple Beam Balance	±0.10 grams = ±.00022 pounds	Reading Balance
	±0.05 grams = ±.00011 pounds	Balance Accuracy
Large Scale	±0.15 pounds	Reading Error
	±0.10 pounds	Accuracy

TOTALS: 28 parts weighed on large scale

555 parts weighed on triple beam balance

$$\text{Weight} = 555(.00022) + 555(.00011) + 0.15(28) + 0.10(28)$$

$$\text{Weight}_{err} = \pm 7.183 \text{ pounds}$$

Center of Gravity (3-axes)

The center of gravity was calculated using reference coordinates that were calculated from a horizontal distance, vertical height, and horizontal angle.

Error	Reason
Weight = ±7.183	
Measurements:	
±1.0" x,y direction	Non-stable Plumb Line
±0.5 inches	Vertical Height Error due to C.G. Location error.

Error	Reason
± 10 minutes = 0.167 deg.	Transit Reading

$$\sigma_{X_{C.G.}} = \frac{\Sigma\, W(X)[(\sigma_{\bar{w}}/w)^2 + (\sigma_{\bar{x}}/x)^2]^{\frac{1}{2}}}{W_{TOT} + \sigma_{\bar{W}_{TOT}}}$$

Where:

$\sigma_{\bar{W}_{each}} = \frac{7.183}{583} = .01232$ lb.: 7.183 weight error
583 number of items

$\sigma_{\bar{x}} = \pm 1.0 \pm \frac{.167\pi}{180} \sin$ (psi)

W - - component weight

x - - x - coordinate

W_{TOT} -- aircraft weight (empty): 277.48

$\sigma_{\bar{w}_{TOT}}$ -- average weight ovvor = ±7.183 lb

The $\sigma_{Y_{C.G.}}$ and $\sigma_{Z_{C.G.}}$ are identical to this except the coordiate Y or Z is interchanged with X_1 and i

$\sigma_{\bar{Y}} = \pm 1.0 \pm \frac{.167\pi}{180} \cos$ (psi)

$\sigma_{\bar{z}} = +0.5$

These errors were computed to be:

$\sigma_{\bar{X}} = \pm$ 3.78 inches

$\sigma_{\bar{Y}} = \pm$ 6.38 inches

$\sigma_{\bar{Z}} = \pm$ 1.74 inches

$X_{C.G._{empty}} = 110.02 \pm 3.78$ inches

$Y_{C.G._{empty}} = 233.77 \pm 6.38$ inches

$Z_{C.G._{empty}} = 58.91 \pm 1.74$ inches

APPENDIX D

PRINCIPAL INERTIAL QUANTITIES

D.1 PRINCIPAL INERTIAL QUANTITIES

This chapter presents the methods, assumptions, and results of the principal inertia calculations. The principal inertias are defined here as the inertial contribution to the total aircraft inertia due to the contribution of the larger components many components such as nuts, bolts, and many other small items' principal contribution was assumed negligible, but however were not excluded from the 'MR^2' term in the inertia calculations performed within the computer program in Appendix A.

To simplify the task of computing the principal inertia calculations the following assumptions were made:

* Each wing and tail half were considered to be rectangular prisms using the sum of the masses of its components
* Inertia of the tubes were calculated as if they were slender rods (see example calculation)
* Tires and wheels were considered to be circular cylinders

The following example problem justifies the slender rod assumption for the tubeing:

ORIGINAL PAGE IS
OF POOR QUALITY

SAMPLE CALCULATION:

Part HC - 9, see FIGURE D.1, Hang Cage Primary Structural Member.
(1.875" x .098" Aluminum Tubing)

$M_{HC-9} = 0.06282$ slugs

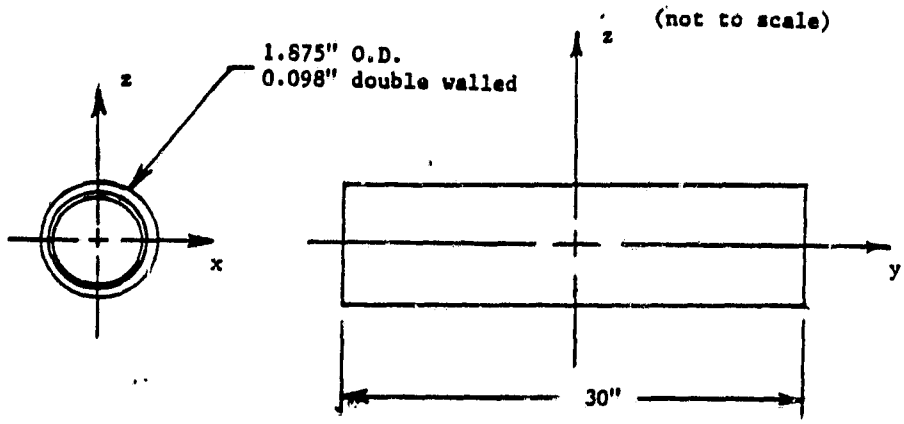

Figure D.1 Hang cage primary structural member.

* $I_{yy} = MR^2 = 0.06262(.07813)^2 = 0.000383$ slug/ft^2

* $I_{zz} = I_{xx} = 1/12\ ML^2 + 1/2\ MR^2$

$= 0.03272 + 0.000192 = 0.0329$ slug/ft^2

* assume member to be a cylindrical shell (Ref. 1, p 276).

Now assume member to be a slender rod:

$I_{yy} = 0$; $I_{xx} = I_{zz} = 1/12\ ML^2 = 0.03272$ slug/ft^2 (Ref. 1, p 276)

It can be seen that the results of the two methods are quite close. Part HC-9 was chosed for this example because it is one of the largest diameter, thick tubes on the aircraft.

Because the difference between the solutions is small all round tube members are assumed to be slender rods for the calculation of their individual moments of inertia.

ORIGINAL PAGE IS
OF POOR QUALITY

SAMPLE CALCULATION OF THE TAIL PLANES:

Tail Planes - assume solid rectangular parallelepiped

$b = 50''$, $c = 40''$, $\theta = \mathrm{Tan}^{-1}\ 3/4 = 36.89^{\circ}$, Figure D.2.

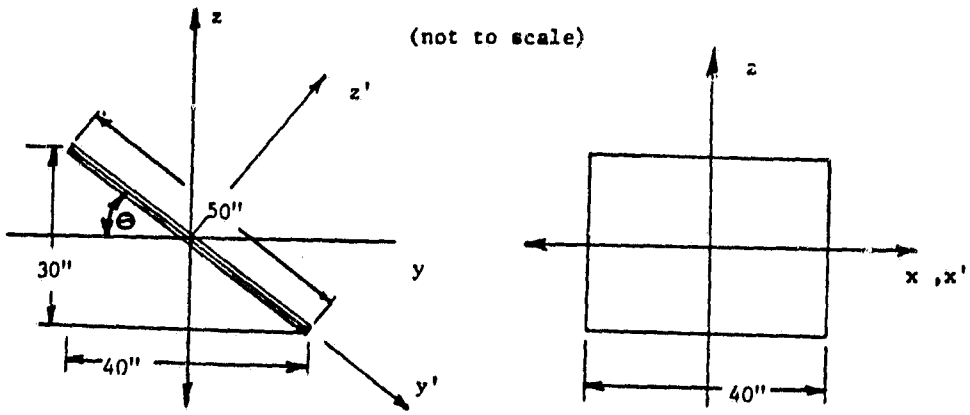

Figure D.2 Tail plane sample axis system for calculations.

$$I_{z'} = 1/2M(b^2+c^2) = 1/12(0.21695)\left(\left(\frac{50}{12}\right)^2+\left(\frac{40}{12}\right)^2\right)$$

$I_{z'} = 0.51474$ slug/ft^2 (Ref. 1, p. 276)

$$I_{y'} = 1/12\ Mc^2 = 1/12\ (.21695)(40/12)^2 = 0.20088 \text{ slug/ft}^2$$

$$I_{xx}=I_{x'}=1/12Mb^2=1/12(.21695)(50/12)^2 = 0.31387$$

I_{yy} and I_{zz} are found using the inclined axes method.

(Ref. 2, p 419).

The products of inertia $I_{x'x'}$, $I_{x'z'}$, $I_{y'z'}$ are assumed zero due to symmetry.

The above assumption will be applied to all components unless otherwise noted.

$$I_{yy} = I_{y'}\cos^2\theta - I_{y'z'}\sin 2\theta + I_{z'}\sin^2\theta$$

$$I_{zz} = I_{y'}\sin^2\theta + I_{y'z'}\sin 2\theta + I_{z'}\cos^2\theta$$

$$I_{yz} = I_{y'z'}\cos 2\theta + \frac{I_{y'} - I_{z'}}{2} \sin 2\theta$$

SAMPLE MOMENT OF INERTIA CALCULATIONS

Substitution of the previously obtained values of θ, $I_{y'}$, and $I_{z'}$ yields:

$$I_{yy} = 0.31387$$

$$I_{zz} = 0.40175$$

The results of these calculations are listed in Table D.1.

Table D.1 Results for the principal moments of inertia calculations

Part Description	Assumed Shape	Mass (slugs)	I_{xx}	I_{yy}	I_{zz}	I_{xz}	Notes*
			(slug/ft^2)				
HC-9 Tube	Rod	0.06262	0.03272	-	0.03272	-	1
HC-120/91 Tube&Rod	Rod	0.008302	0.00147	-	0.00147	-	1
HC-25 Tube	Rod	0.01026	0.00147	-	0.00147	-	1
HC-8 Tube	Rod	0.02549	0.00780	-	0.00780	-	1
NGSA-5 Tube	Rod	0.01780	0.00289	-	0.00289	-	1
NGSA-9 Tube	Rod	0.01542	0.00072	-	0.00072	-	1
NGSA-7 U-Tube							
-Horiz. sect.	Rod	0.01488	0.00295	-	0.00295	-	1
-Left. Vert.	Rod	0.01193	0.00077	0.00141	0.00116	-0.00070	1
-Right Vert	Rod	0.01198	0.00077	0.00141	0.00116	-0.00070	1
CS-46 Tube	Rod	0.0175	0.01872	0.01872	-	-	1
TS-21 Tube	Rod	0.02238	0.06902	-	0.06902	-	1
Mixer Assembly	Rectangular Parallelepiped	0.42355	0.11005	0.01422	0.10025	-	1
Propeller	Disk (2in thick)					-	1

*

1 - indicates single part

2 - indicates part listed is one of a pair. The values of parts with this notation were doubled for the totals.

Table D.1 continued

Part Description	Assumed Shape	Mass	I_{xx}	I_{yy}	I_{zz}	I_{xz}	Notes*
Prop Shaft	Rod						
King Posts	Rods						
WG-2	Rods	0.05688	0.06067	0.07584	0.01517	-0.0304	1
WG-3	Rods	0.05688	0.06067	0.07584	0.01517	+0.0304	1
WG-1 Root Tube	Rect. Prism	0.16512	0.00270	0.32183	0.31990	+0.02484	1
Engine & Mount	Rect. Prism	2.68072	0.42711	0.63954	0.63954	-0.02792	1
Main Wheel+Tire (R)	Circular Cylinder	0.1688	0.02970	0.05861	0.02970	-	1
Main Wheel+Tire (L)	Circular Cylinder	0.1697	0.02985	0.05892	0.02985	-	1
Nose Wheel + Tire	Circular Cylinder	0.09697	0.01168	0.02292	0.01168	-	1
Rear Axle	Long Circ. Cyl.	0.2178	0.6003	0.00170	0.6003	-	1
HC-6 Tube	Rod	0.07895	-	0.10092	0.10092	-	2
HC-10 Tube	Rod	0.01366	-	0.00155	0.00155	-	2
CS-22 Control Stick	Rod	0.01895	0.00185	0.00185	-	-	1
CS-26 Tube	Rod	0.02385	-	0.01503	0.01503	-	1
CS-25 Tube	Rod	0.01424	-	0.00817	0.00817	-	1
HC-27 (Vert. Sect.)	Rod	0.01071	0.00139	0.00139	-	-	2
HC-27 (Sloped Sect.)	Rod	0.03715	0.00776	0.05813	0.05037	+0.01062	2
Seat Back (HC-97)	Rectangular Parallelepiped	0.15469	0.04096	0.02292	0.04096	-0.02290	1
Seat Bottom	Parallelepiped	0.11601	0.01245	0.01719	0.02921	+0.00190	1
NG3A-8 Tube	Rod	0/01351	0.00094	0.00174	0.00079	-0.00086	2

* 1 - indicates single part

2 - indicates part listed is one of a pair. The values of parts with this notation were doubled for the totals.

Table D.1 continued

Part Description	Assumed Shape	Mass	I_{xx}	I_{yy}	I_{zz}	I_{xz}	Notes*
NGSA-4A Pedal	Rect. Prism	0.03138	0.00204	0.00210	0.00051	+0.00071	Right (1)
NGSA-4B Pedal	Rect. Prism	0.03240	0.00211	0.00217	0.00053	+0.00074	Left (1)
HC-1 Tube	Rod	0.03108	0.02086	0.02842	0.00756	-0.01256	2
HC-2 Tube	Rod	0.03593	0.01537	0.03286	0.01749	+0.01639	2
HC-3	Rod	0.03002	0.02795	0.03212	0.00417	-0.01080	2
Tail Plane	Rectangular Parallelepiped	0.21695	0.31387	0.31387	0.40175	-	2
Wing Left	Rect. Prism	0.9904	26.1618	1.4542	27.6023	-	1
Right	Rect. Prism	1.09716	28.9820	1.61100	30.5778	-	1
TS-1 or 2	Rod	0.05828	0.04718	0.31734	0.27016	-0.11289	2
TS-22 Tube	Rod	0.03885	0.03145	0.31154	0.18009	-0.07526	1
TS-3 or 4 Tube	Rod	0.05470	0.00150	0.27378	0.27378	+0.02075	2
	TOTALS		52.569	6.938	62.584	-0.2780	

* 1 - indicates single part

2 - indicates part listed is one of a pair. The values of parts with this notation were doubled for the totals.

ORIGINAL PAGE IS OF POOR QUALITY