U.S. Department of Transportation

Federal Railroad Administration

HIGHER SPEED FREIGHT TRUCK: STRUCTURAL ANALYSIS

Office of Research
and Development
Washington, DC 20590

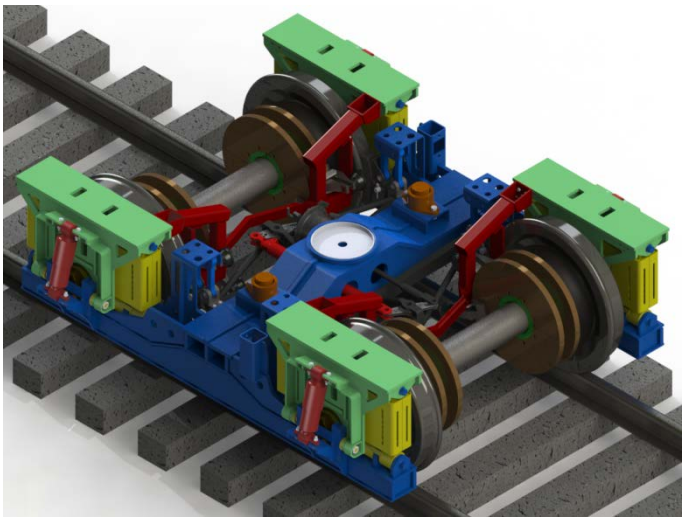

DOT/FRA/ORD-13/40

Final Report
October 2013

NOTICE

This document is disseminated under the sponsorship of the Department of Transportation in the interest of information exchange. The United States Government assumes no liability for its contents or use thereof. Any opinions, findings and conclusions, or recommendations expressed in this material do not necessarily reflect the views or policies of the United States Government, nor does mention of trade names, commercial products, or organizations imply endorsement by the United States Government. The United States Government assumes no liability for the content or use of the material contained in this document.

NOTICE

The United States Government does not endorse products or manufacturers. Trade or manufacturers' names appear herein solely because they are considered essential to the objective of this report.

REPORT DOCUMENTATION PAGE

Form Approved
OMB No. 0704-0188

Public reporting burden for this collection of information is estimated to average 1 hour per response, including the time for reviewing instructions, searching existing data sources, gathering and maintaining the data needed, and completing and reviewing the collection of information. Send comments regarding this burden estimate or any other aspect of this collection of information, including suggestions for reducing this burden, to Washington Headquarters Services, Directorate for Information Operations and Reports, 1215 Jefferson Davis Highway, Suite 1204, Arlington, VA 22202-4302, and to the Office of Management and Budget, Paperwork Reduction Project (0704-0188), Washington, DC 20503.

1. AGENCY USE ONLY (Leave blank)	2. REPORT DATE	3. REPORT TYPE AND DATES COVERED
	October 2013	Technical Report

4. TITLE AND SUBTITLE STRUCTURAL ANALYSIS: HIGHER SPEED FREIGHT TRUCK DESIGN FOR OPERATIONS OF UP TO 125 MPH	5. FUNDING NUMBERS BAA-2010-1 DTFR53-11-C-00009
6. AUTHOR(S) Sharma & Associates, Inc.	
7. PERFORMING ORGANIZATION NAME(S) AND ADDRESS(ES) Sharma & Associates, Inc. 5810 S. Grant Street Hinsdale, Illinois 60521	8. PERFORMING ORGANIZATION REPORT NUMBER
9. SPONSORING/MONITORING AGENCY NAME(S) AND ADDRESS(ES) U.S. Department of Transportation Federal Railroad Administration Office of Railroad Policy and Development Office of Research and Development Washington, DC 20590	10. SPONSORING/MONITORING AGENCY REPORT NUMBER DOT/FRA/ORD-13/40
11. SUPPLEMENTARY NOTES COTR: S. K. Punwani	
12a. DISTRIBUTION/AVAILABILITY STATEMENT This document is available to the public through the FRA Web site at http://www.fra.dot.gov.	12b. DISTRIBUTION CODE

13. ABSTRACT (Maximum 200 words)

Sharma & Associates, Inc. (SA) had previously (2005–2009) developed a higher speed freight truck under sponsorship of the Federal Railroad Administration (FRA). Under the current contract, SA was tasked with developing performance requirements for higher speed freight trucks, as well as conducting structural and dynamics simulations according to those performance specifications. The strength of various components of the truck was assessed against specification M-213 of the Association of American Railroads' (AAR) *Manual of Standards and Recommended Practices* (MSRP) using finite element analyses. The analyses showed that the prototype HST would meet the existing AAR structural strength performance requirements. The stress levels seen in the HST structure(s) were less than the corresponding allowable limits.

On the basis of these analyses, SA is confident that the truck will meet the structural performance requirements for higher speed use.

14. SUBJECT TERMS Higher speed freight truck, freight truck structural analyses, freight truck for 150 mph operation	15. NUMBER OF PAGES 27
	16. PRICE CODE

17. SECURITY CLASSIFICATION OF REPORT	18. SECURITY CLASSIFICATION OF THIS PAGE	19. SECURITY CLASSIFICATION OF ABSTRACT	20. LIMITATION OF ABSTRACT
Unclassified	Unclassified	Unclassified	

NSN 7540-01-280-5500

Standard Form 298 (Rev. 2-89)
Prescribed by ANSI Std. 239-18
298-102

METRIC/ENGLISH CONVERSION FACTORS

ENGLISH TO METRIC

LENGTH (APPROXIMATE)

1 inch (in)	=	2.5 centimeters (cm)
1 foot (ft)	=	30 centimeters (cm)
1 yard (yd)	=	0.9 meter (m)
1 mile (mi)	=	1.6 kilometers (km)

AREA (APPROXIMATE)

1 square inch (sq in, in^2)	=	6.5 square centimeters (cm^2)
1 square foot (sq ft, ft^2)	=	0.09 square meter (m^2)
1 square yard (sq yd, yd^2)	=	0.8 square meter (m^2)
1 square mile (sq mi, mi^2)	=	2.6 square kilometers (km^2)
1 acre = 0.4 hectare (he)	=	4,000 square meters (m^2)

MASS - WEIGHT (APPROXIMATE)

1 ounce (oz)	=	28 grams (gm)
1 pound (lb)	=	0.45 kilogram (kg)
1 short ton = 2,000 pounds (lb)	=	0.9 tonne (t)

VOLUME (APPROXIMATE)

1 teaspoon (tsp)	=	5 milliliters (ml)
1 tablespoon (tbsp)	=	15 milliliters (ml)
1 fluid ounce (fl oz)	=	30 milliliters (ml)
1 cup (c)	=	0.24 liter (l)
1 pint (pt)	=	0.47 liter (l)
1 quart (qt)	=	0.96 liter (l)
1 gallon (gal)	=	3.8 liters (l)
1 cubic foot (cu ft, ft^3)	=	0.03 cubic meter (m^3)
1 cubic yard (cu yd, yd^3)	=	0.76 cubic meter (m^3)

TEMPERATURE (EXACT)

[(x-32)(5/9)] °F = y °C

METRIC TO ENGLISH

LENGTH (APPROXIMATE)

1 millimeter (mm)	=	0.04 inch (in)
1 centimeter (cm)	=	0.4 inch (in)
1 meter (m)	=	3.3 feet (ft)
1 meter (m)	=	1.1 yards (yd)
1 kilometer (km)	=	0.6 mile (mi)

AREA (APPROXIMATE)

1 square centimeter (cm^2)	=	0.16 square inch (sq in, in^2)
1 square meter (m^2)	=	1.2 square yards (sq yd, yd^2)
1 square kilometer (km^2)	=	0.4 square mile (sq mi, mi^2)
10,000 square meters (m^2)	=	1 hectare (ha) = 2.5 acres

MASS - WEIGHT (APPROXIMATE)

1 gram (gm)	=	0.036 ounce (oz)
1 kilogram (kg)	=	2.2 pounds (lb)
1 tonne (t)	=	1,000 kilograms (kg)
	=	1.1 short tons

VOLUME (APPROXIMATE)

1 milliliter (ml)	=	0.03 fluid ounce (fl oz)
1 liter (l)	=	2.1 pints (pt)
1 liter (l)	=	1.06 quarts (qt)
1 liter (l)	=	0.26 gallon (gal)
1 cubic meter (m^3)	=	36 cubic feet (cu ft, ft^3)
1 cubic meter (m^3)	=	1.3 cubic yards (cu yd, yd^3)

TEMPERATURE (EXACT)

[(9/5) y + 32] °C = x °F

QUICK INCH - CENTIMETER LENGTH CONVERSION

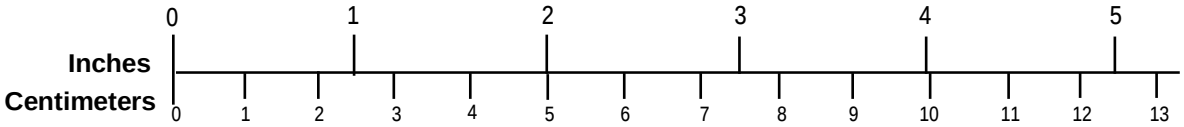

QUICK FAHRENHEIT - CELSIUS TEMPERATURE CONVERSIO

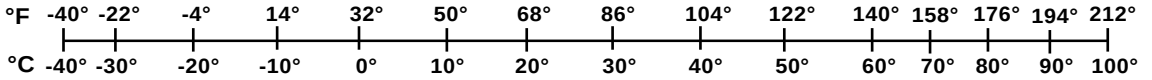

For more exact and or other conversion factors, see NIST Miscellaneous Publication 286, Units of Weights and Measures. Price $2.50 SD Catalog No. C13 10286

Updated 6/17/98

Contents

Executive Summary 6
1. Background 7
2. Strength Requirements 9
3. Finite Element Model 10
3.1 Elements 10
3.2 Materials 11
4. Finite Element Analyses 12
4.1 Load Cases 12
4.1.1 Vertical Load Case 12
4.1.2 Lateral Load Case 12
4.1.3 Longitudinal Load Case 12
4.1.4 Combined Load Case 12
4.2 Summary of Results 13
4.2.1 Vertical Load Case 13
4.2.2 Transverse Load Case 13
4.2.3 Longitudinal Load Case 13
4.2.4 Combined Load Case 13
5. Conclusions 15
6. Recommendations for Future Work 16
Appendix A. Figures—Vertical Load Case 17
Appendix B. Figures—Transverse Load Case 19
Appendix C. Figures—Longitudinal Load Case 21
Appendix D. Figures—Combined Load Case 23
Abbreviations and Acronyms 25

Illustrations

Figure 1. A CAD view of the HST and an assembled prototype HST 7
Figure 2. 3D CAD Model of the H-Frame Truck Used for Finite Element Mesh..... 10
Figure 3. Finite Element Model of the H-Frame Truck..... 11
Figure 4. Finite Element Model Showing Applied Vertical Load..... 17
Figure 5. Finite Element Model Showing Constraint for the Vertical Load Case..... 17
Figure 6. Vertical Loading—Nodal Stress Contour 18
Figure 7. Vertical Loading—Areas of Local High Stress..... 18
Figure 8. Finite Element Model Showing Applied Transverse Load 19
Figure 9. Finite Element Model Showing Constraint for the Transverse Load Case 19
Figure 10. Transverse Loading—Nodal Stress Contour..... 20
Figure 11. Transverse Loading—Areas of Local High Stress 20
Figure 12. Finite Element Model Showing Applied Longitudinal Load 21
Figure 13. Finite Element Model Showing Constraint for the Longitudinal Load Case 21
Figure 14. Longitudinal Loading—Nodal Stress Contour..... 22
Figure 15. Longitudinal Loading—Areas of Local High Stress 22
Figure 16. Combination Loading—Nodal Stress Contour 23
Figure 17. Combination Loading—Areas of Local High Stress..... 24

Tables

Table 1. Applied Loads and Allowable Stress for Various Load Cases 9
Table 2. Predicted Stress Levels Compared to Allowable Limits 14

Executive Summary

The Federal Railroad Administration (FRA) had previously (2005–2009) contracted Sharma & Associates, Inc. (SA) to design and develop a railway truck for higher speed freight operations. As part of that work, vehicle dynamic simulations were conducted to predict the truck's dynamic lateral stability, or hunting performance, for operations up to 150 miles per hour (mph). In addition, track worthiness simulations were carried out for pitch and bounce, twist and roll, and curving dynamics per the Association of American Railroads' (AAR) *Manual of Standards and Recommended Practices* (MSRP), Section C-II, Chapter 11 Service-Worthiness Tests and Analyses for New Freight Cars.

Under the current contract (BAA-2010-1), SA was tasked with developing structural strength and dynamic performance requirements for this truck, carrying out structural and vehicle dynamics simulations according to AAR MSRP requirements, and conducting a market analysis of business opportunities that could arise from the availability of such a truck where implementation of higher speed passenger service is concerned.

This report presents the truck structural analyses portion of the project. The strength of various components of the truck was assessed against proposed requirements using finite element analyses. Specification M-213 of the AAR MSRP prescribes the strength requirements of one-piece fabricated steel truck frames for freight equipment. SA determined that these prescribed requirements would be ideal for assessing the truck frame strength of the High Speed Truck (HST) prototype. In addition, SA determined load cases for other HST structural components to verify their respective strengths under expected operating conditions.

The analyses showed that the prototype HST would meet the existing AAR structural strength performance requirements. The stress levels seen in the HST structure(s) were below the corresponding allowable limits. On the basis of these analyses, SA is confident that the truck will meet the structural performance requirements for higher speed use.

1. Background

In a previous project sponsored by FRA (DTRS57-04-C-10023, Advanced Truck for High Speed Freight Operations), SA developed a higher speed freight truck design. Vehicle dynamic simulations were conducted to predict the truck's dynamic lateral stability, or hunting performance, for operations up to 150 mph. Track worthiness simulations were also carried out to assess pitch and bounce, twist and roll, and curving dynamics per AAR MSRP guidelines, Section C-II, Chapter-11 Service-Worthiness Tests and Analyses for New Freight Cars.

The AAR MSRP requirements define the analyses regimes (i.e., track defect amplitudes and shapes and speeds for freight operations up to 80 mph (FRA Class 5 Track) only). Figure 1 (below) shows a Computer Aided Design (CAD) model of the final design and a prototype that was tested in the yard track.

Based on the design developed in Phase I, two prototype trucks were manufactured and fitted under Amtrak mail/baggage cars. In Phase II of the project, the trucks were then tested at slow speeds in a yard environment for verification of overall design and fitment.

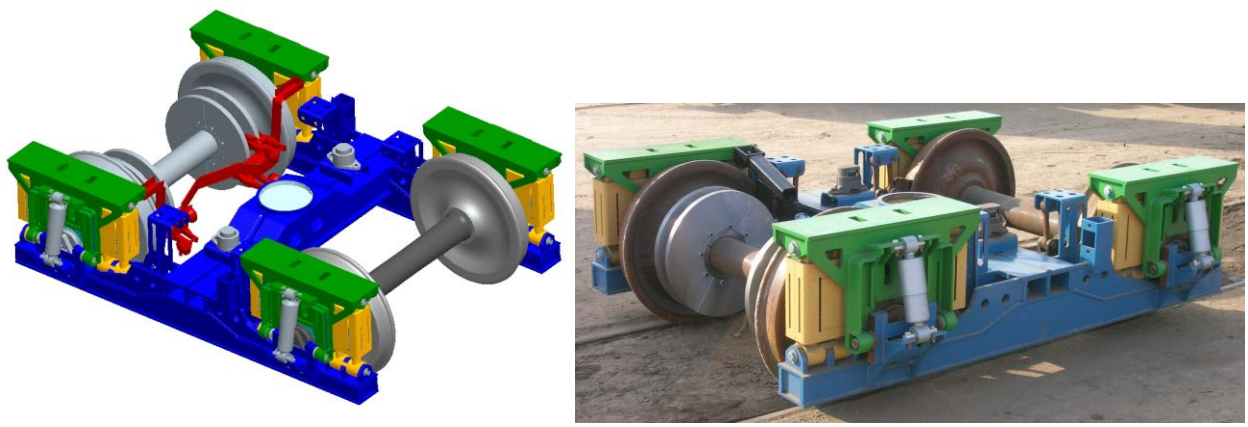

Figure 1. A CAD view of the HST and an assembled prototype HST

Under BAA-2010-1, Contract No: DTFR53-11-C-00009, SA was awarded a project to further the development of this higher speed freight truck. The project scope called for three distinct tasks:

1. Develop specifications for structural and vehicle dynamic performance.
2. Conduct stress analysis and vehicle dynamics simulations per AAR MSRP specifications.
3. Conduct a market analysis for higher speed railroad freight business opportunities when considering implementation of higher speed passenger lines.

Finite element analyses were conducted to determine the strength of the truck's H-Frame. In a previous phase of the higher speed truck development, SA had evaluated structural performance using simplified analytical models and the requirements outlined in Table 4.1 of the AAR MSRP, Section S, page S [M-213] 292. The intent of the current task was to confirm structural

integrity by conducting detailed finite element analyses with the appropriate analytical tools. SA used HyperMesh™ and ANSYS Mechanical™ to determine the strength of the H-Frame truck based on M-213 specifications.

This document reports the freight truck's structural analyses carried out as a part of Task 2 of the BAA-2010-1 contract.

2. Strength Requirements

AAR MSRP M-213 specifications prescribe the vertical load P shown in Table 1 as the basis for design and testing. For the higher speed truck, based on the journal size of 6 x 11 inches, the vertical load P is 101,000 pounds (lb). Table 1 summarizes the design loads and maximum allowable stresses provided in M-213. The design criteria are fairly conservative given that the stresses are being restricted to 30 percent of the yield strength and are intended to provide assurance of good performance under both strength and endurance conditions.

Table 1. Applied Loads and Allowable Stress for Various Load Cases

Load Case	Description	Load	Allowable Stress
1	Vertical	P = 101,000 lb	30% of YS = 14,100 psi
2	Longitudinal	0.25P = 25,250 lb	30% of YS = 14,100 psi
3	Transverse	0.20P = 20,200 lb	30% of YS = 14,100 psi
4	Combination	Vertical—101,000 lb Longitudinal—25,250 lb Transverse—20,200 lb	38% of YS = 17,860 psi

YS = Yield strength of respective materials

The H-Frame was fabricated using steel plates with the following material properties:

1-inch plates—Structural steel with YS = 47,000 psi, 22% elongation in 2 inches

½-inch plates—Structural steel with YS = 47,800 psi, 33% elongation in 2 inches

3. Finite Element Model

The 3D CAD model of the truck was first imported into HyperMesh™. The CAD model is shown in Figure 2 below. For components made out of relatively thin plates, shell elements ideally represent the structure. To define these shell elements, the midsurfaces of all components were first extracted, and junctions between all components were treated to ensure proper joint definition.

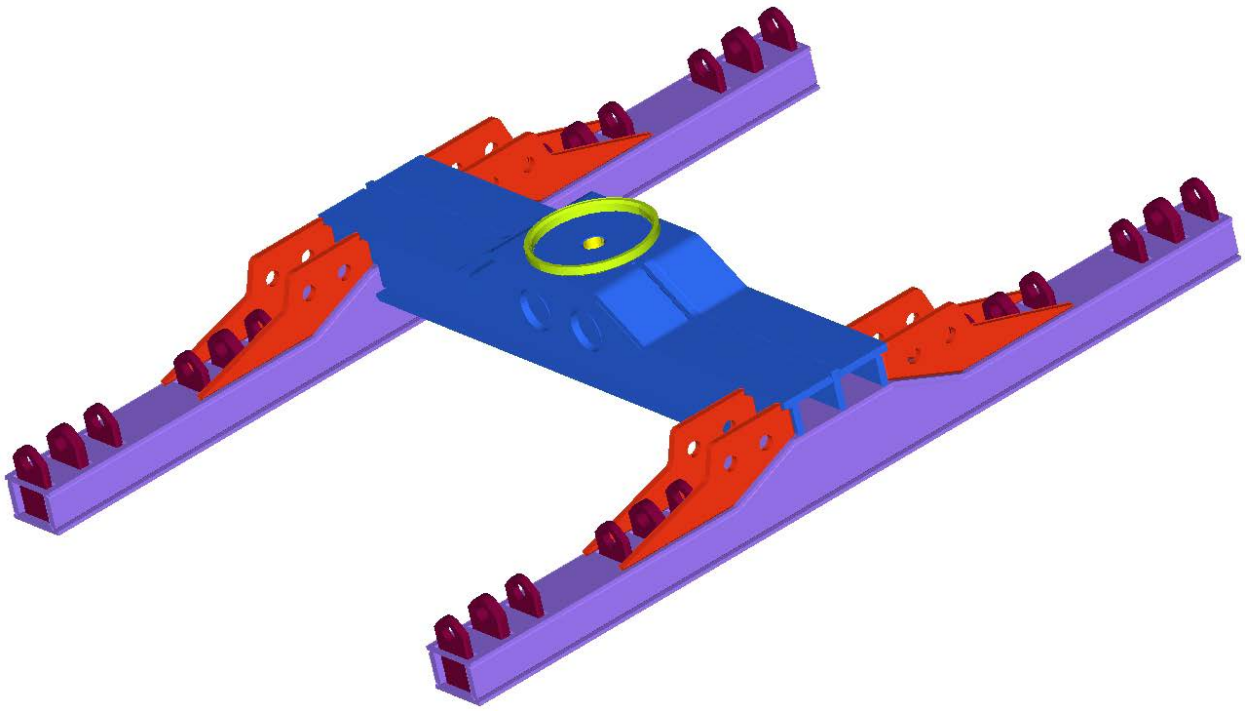

Figure 2. 3D CAD Model of the H-Frame Truck Used for Finite Element Mesh

3.1 Elements

Once the midsurface geometry was created with proper connectivity, the surfaces were meshed. Quad-element SHELL 63 was primarily used for the mesh, along with some "triangular" elements at transition points. The finite element mesh developed for the H-Frame is shown in Figure 3 on the following page.

The finite element model consisted of 58,572 nodes and 59,527 shell elements.

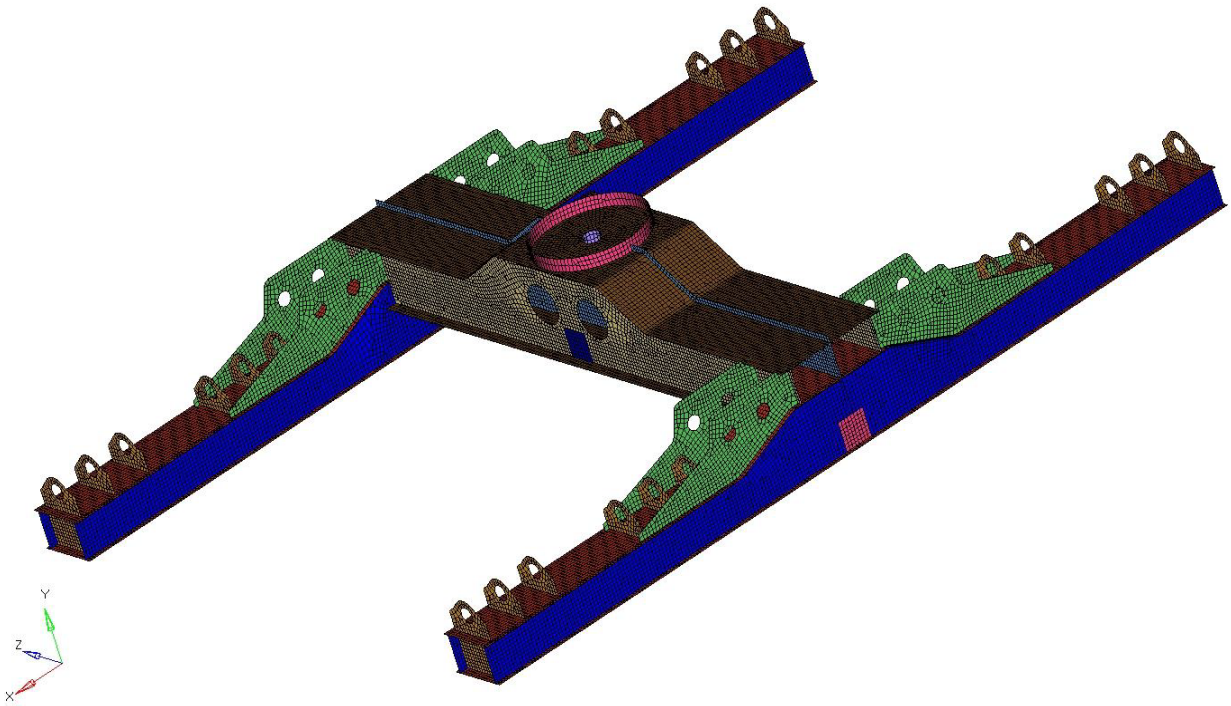

Figure 3. Finite Element Model of the H-Frame Truck

3.2 Materials

The H-Frame was made with steel plates. The bolster was fabricated from 1-inch-thick plates. The plates used for the gussets and brackets on the side frame were also 1-inch thick. The top and bottom plates of the side frame were made from ½-inch-thick plates, while the side plates of the side frame were 1-inch thick. The center bowl was made from a ⅞-inch plate. All the 1-inch-thick plates used in the fabrication of the H-Frame were made of structural steel with yield strength of 47,000 psi. Appropriate material properties and thicknesses were assigned to all the elements of the finite element model.

4. Finite Element Analyses

4.1 Load Cases

For analyzing the H-Frame, individual load cases and corresponding constraints are defined in the finite element model. For this evaluation, four different load cases were analyzed: vertical, longitudinal, transverse, and combination. Loads for the various load cases are described in the design section of M-213 (Pages S [M-213] 291-292) and also listed in Table 1. The constraints used were according to those shown in M-213 (Pages S [M-213] 294-295) loading diagrams for static tests.

4.1.1 Vertical Load Case

A total vertical load of 101,000 lb (P) was applied on the brackets of the H-Frame that connect to the spring yokes. The total load was evenly distributed to all the effective nodes of the brackets, as shown in Figure 4 in Appendix A. The bolster center plate was constrained in all three directions to simulate the center plate connection with a car center bowl. The vertical load constraint is shown in Figure 5 in Appendix A.

4.1.2 Lateral Load Case

A total transverse load of 20,200 lb (0.20P) was applied on the outer web of the side frame spread over a 4 x 4-inch block located at the longitudinal centerline of the truck and at the base of the side frame vertically. The load was evenly distributed to all the nodes in this block area, as shown in Figure 8 in Appendix B. The transverse load was reacted along two line locations on the opposite side frame, as shown in Figure 9 in Appendix B. These reaction points were 40 inches away from the longitudinal centerline of the truck.

4.1.3 Longitudinal Load Case

A total longitudinal load of 25,250 lb (0.25P) was applied on the outer web of the bolster spread over a 4 x 4-inch area located at the transverse centerline of the truck and at the base of the bolster vertically. The load was evenly distributed to all the nodes in the designated area, as shown in Figure 12 in Appendix C. The longitudinal load was reacted at the opposite four corners of the truck (side frame), as shown in Figure 13 in Appendix C.

4.1.4 Combined Load Case

For the combined load case, the above three load cases and their corresponding constraints were applied simultaneously. The individual loads and constraints for this case are described in the previous sections.

4.2 Summary of Results

The finite element model of the H-Frame, along with the loads, constraints, and load combinations, was imported into ANSYS and solved using linear static analyses. Upon completion of the analyses, results for the various load cases were post-processed. The following subsections describe the results of each load case.

4.2.1 Vertical Load Case

The nodal stress (von Mises equivalent stress) contour plot for the vertical loading case is shown in Appendix A, Figure 6. As can be seen from this plot, the stress levels are generally under the limits, except for a few local areas of high stress. This high stress area is mainly restricted to the bend radius of the top flange plate of the bolster near the center plate (Figure 7). High peak stresses generally result from singularities introduced by mid-surface and joint approximations. For this reason, AAR MSRP M-1001 C-II (page C-II [M-1001] 308) recommends that, for fatigue life calculations, stress values at a distance of four times the thickness of the parent material be used. Following this recommendation, SA certified that all the stresses in the H-Frame (away from all the joints) were within the allowable limit of 30 percent of yield strength (14,100 psi).

4.2.2 Transverse Load Case

The von Mises stress contour plot for the transverse loading case is shown in Appendix B, Figure 10. As can be seen in Figure 11, there are two local high stress locations (nodes); however, using the AAR MSRP M-1001 recommendation, the stresses in the H-Frame are well within allowable limits.

4.2.3 Longitudinal Load Case

The von Mises stress contour plot for the longitudinal loading case is shown in Appendix C, Figure 14. As can be seen, there are a few local areas of high stress in the region of the load application. Figure 15 shows the areas of higher stress on the bolster web. The applicable stresses in the H-Frame are well within the allowable limit of 30 percent of yield strength (14,100 psi).

4.2.4 Combined Load Case

The von Mises stress contour plot for the combination loading (vertical, longitudinal, and transverse) case is shown in Appendix D, Figure 16. As seen in Figure 17, there are a few areas of high local stresses, specifically along the bend radius of the top flange plate of the bolster; however, the applicable stresses in the H-Frame are well within the allowable limit of 38 percent of yield strength (17,860 psi).

The load case with the combined loads has addition deflection constraints applied, reflecting a combination of test support conditions defined inn M-213; these additional deflection constraints result in slightly lower stresses under the combined load case in comparison with the other cases.

Table 2 below provides a concise summary of the final results.

Table 2. Predicted Stress Levels Compared with Allowable Limits

Load Case	Description	Load	Allowable Stress	Predicted Stress
1	Vertical	P = 101,000 lb	14,100 psi	13,500 psi
2	Longitudinal	0.25P = 25,250 lb	14,100 psi	12,600 psi
3	Transverse	0.20P = 20,200 lb	14,100 psi	12,400 psi
4	Combination	Vertical—101,000 lb Longitudinal—25,250 lb Transverse—20,200 lb	17,860 psi	12,186 psi

*4T—Four times the thickness of the parent material away from joints

5. Conclusions

Based on the detailed finite element analyses performed using HyperMesh™ and ANSYS™, it is evident that the H-Frame of the high-speed truck performs well under the loading requirements specified in AAR MSRP M-213. Overall, the stresses in the components of the H-Frame are within allowable limits. Therefore, the prototype HST is expected to offer good structural performance.

6. Recommendations for Future Work

Although fatigue is not expected to be a concern, given that the stress levels are low and generally under the endurance limits, a detailed fatigue evaluation would increase confidence in the strength of freight truck performance. The best practices in fatigue analyses recommend use of expected load time histories for more accurate fatigue life prediction. SA recommends performing a full fatigue evaluation of the trucks' components after a field test that allows collection of load history.

Appendix A.
Figures—Vertical Load Case

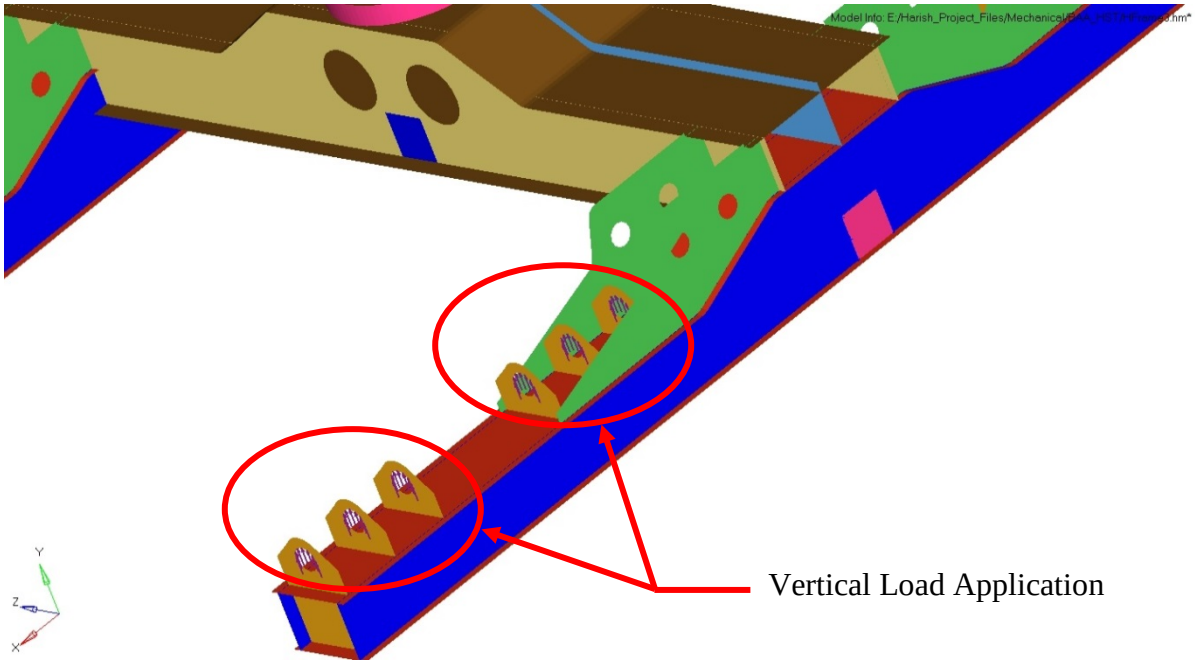

Figure 4. Finite Element Model Showing Applied Vertical Load

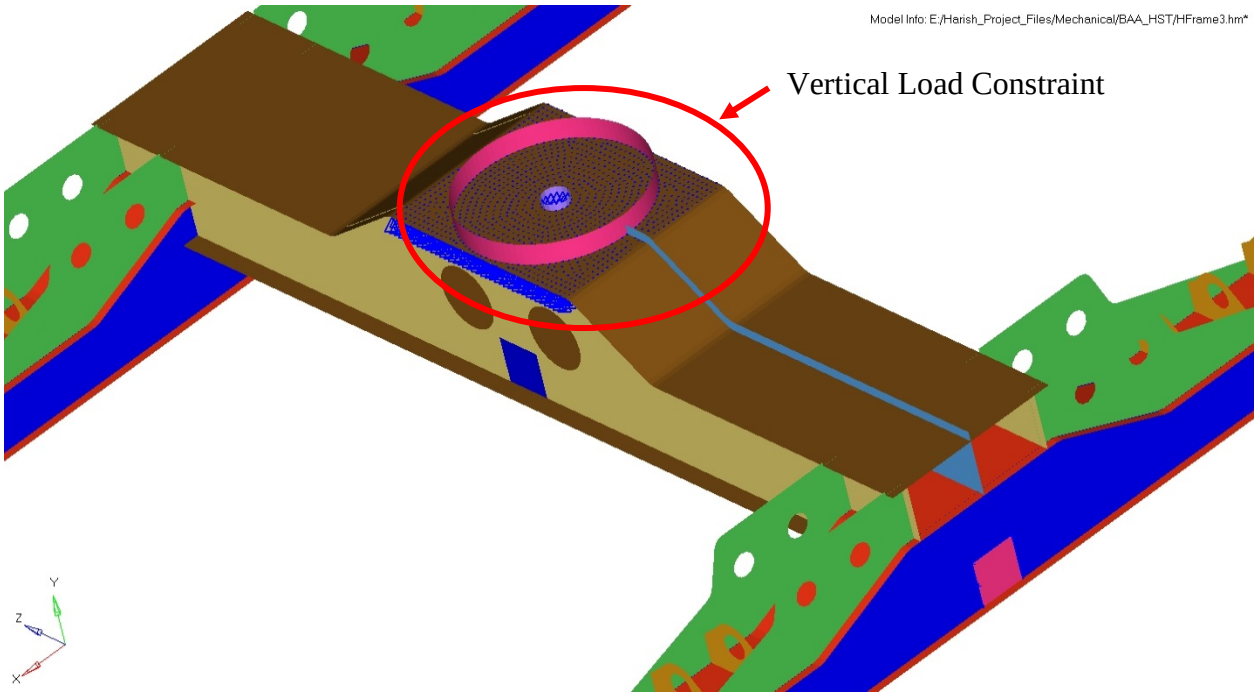

Figure 5. Finite Element Model Showing Constraint for the Vertical Load Case

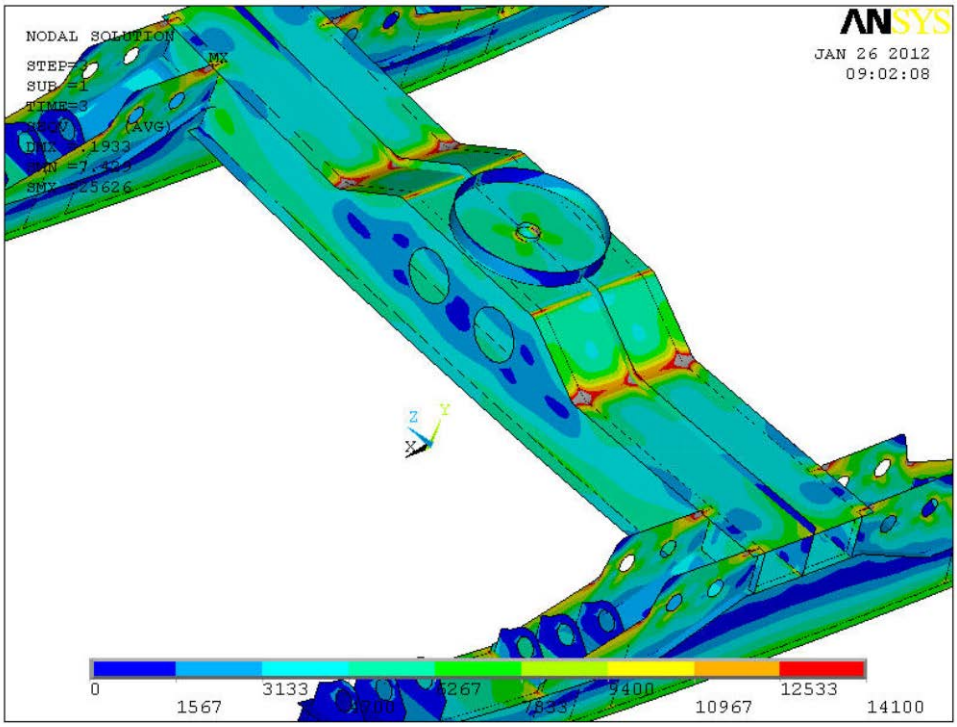

Figure 6. Vertical Loading—Nodal Stress Contour

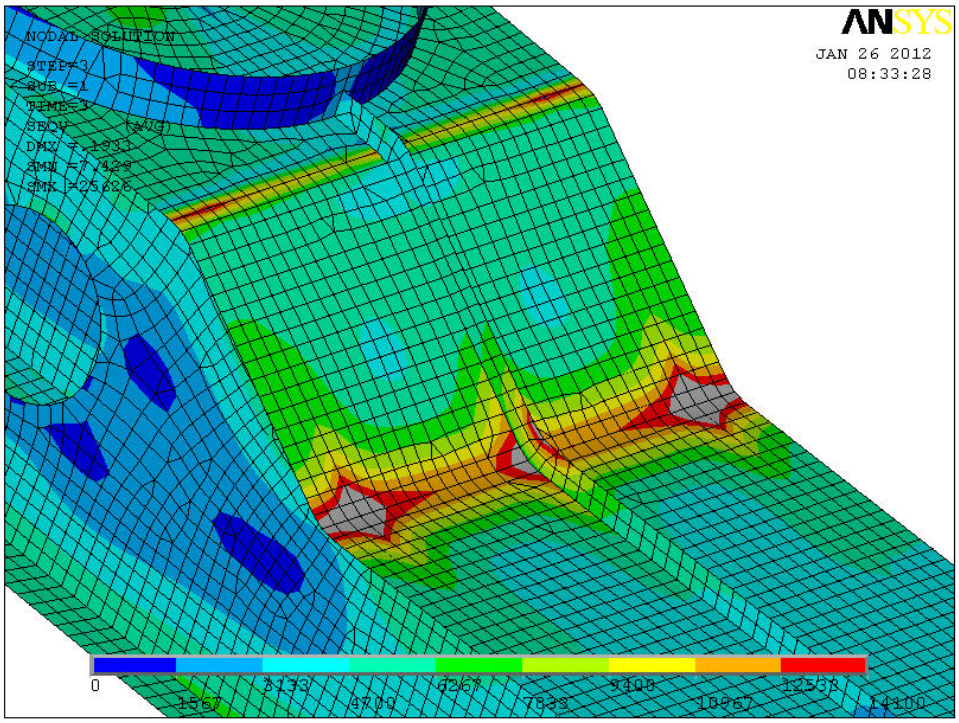

Figure 7. Vertical Loading—Areas of Local High Stress

Appendix B.
Figures—Transverse Load Case

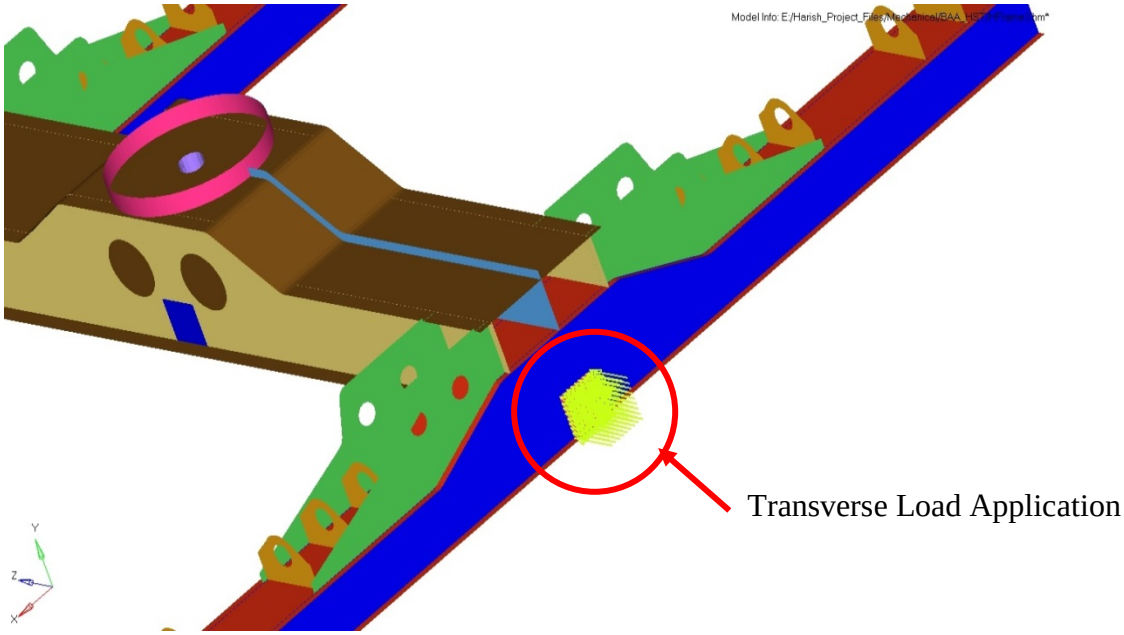

Figure 8. Finite Element Model Showing Applied Transverse Load

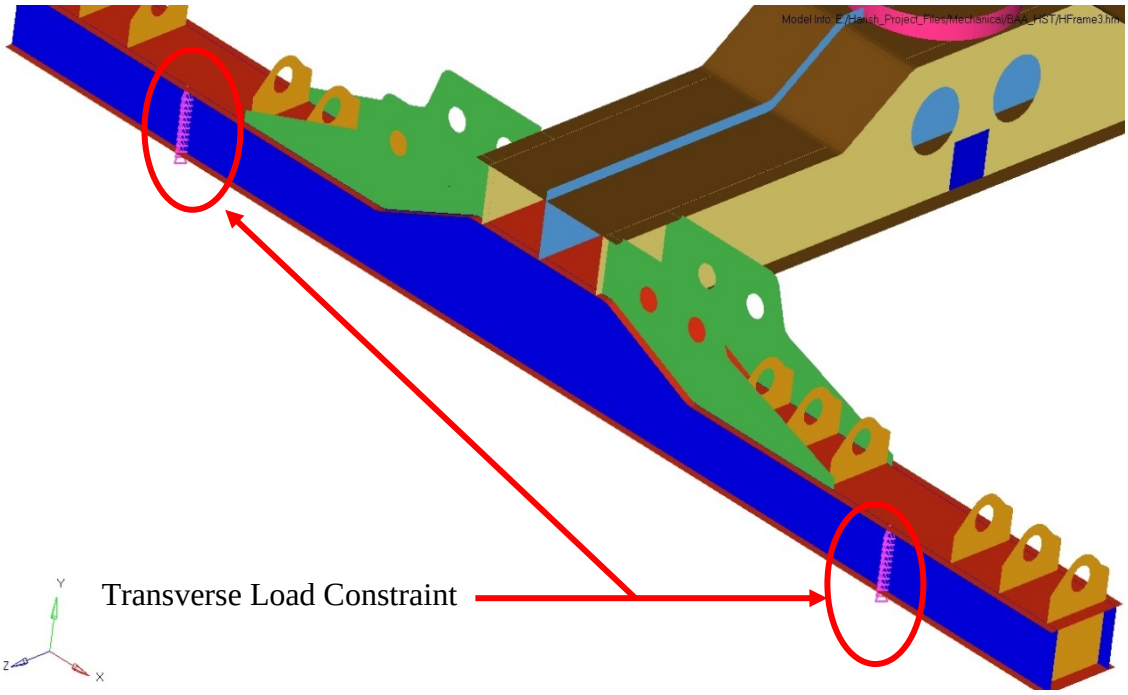

Figure 9. Finite Element Model Showing Constraint for the Transverse Load Case

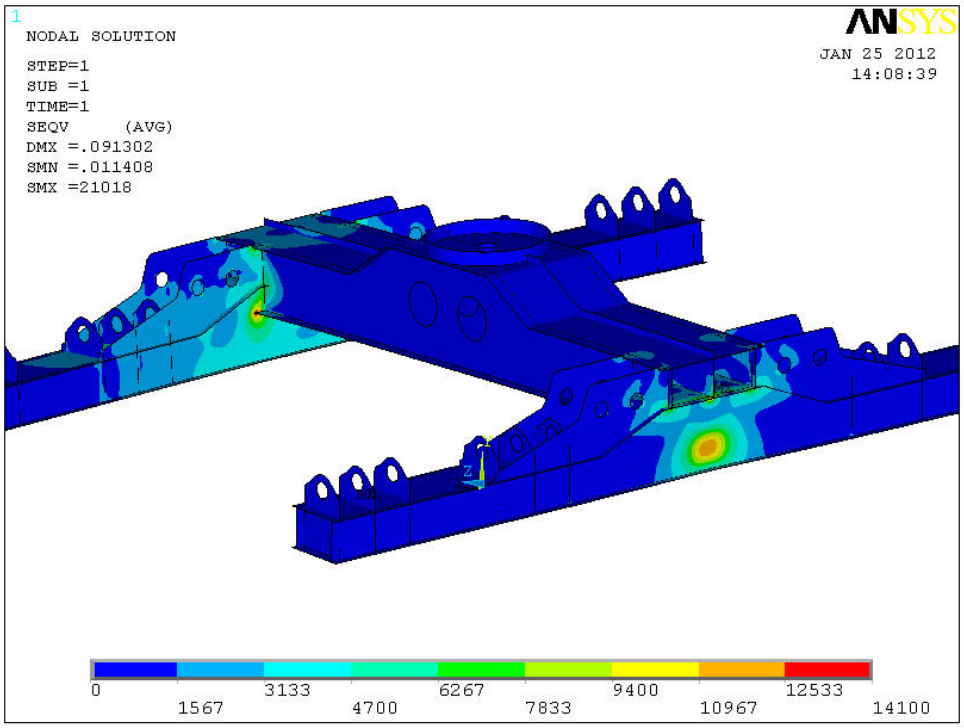

Figure 10. Transverse Loading—Nodal Stress Contour

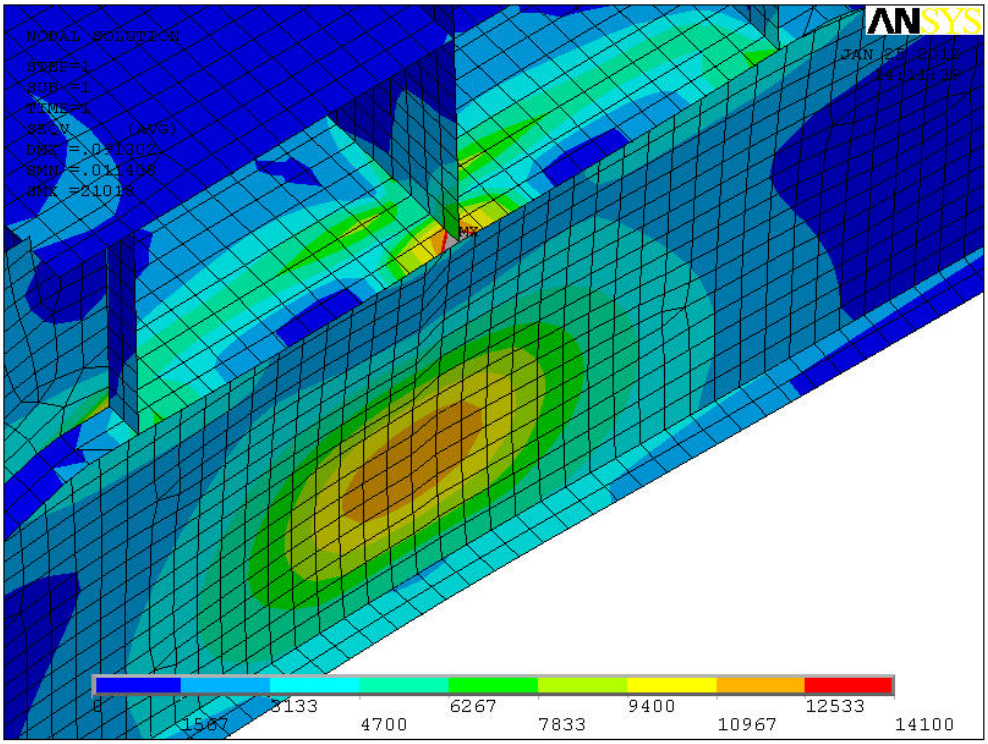

Figure 11. Transverse Loading—Areas of Local High Stress

Appendix C.
Figures—Longitudinal Load Case

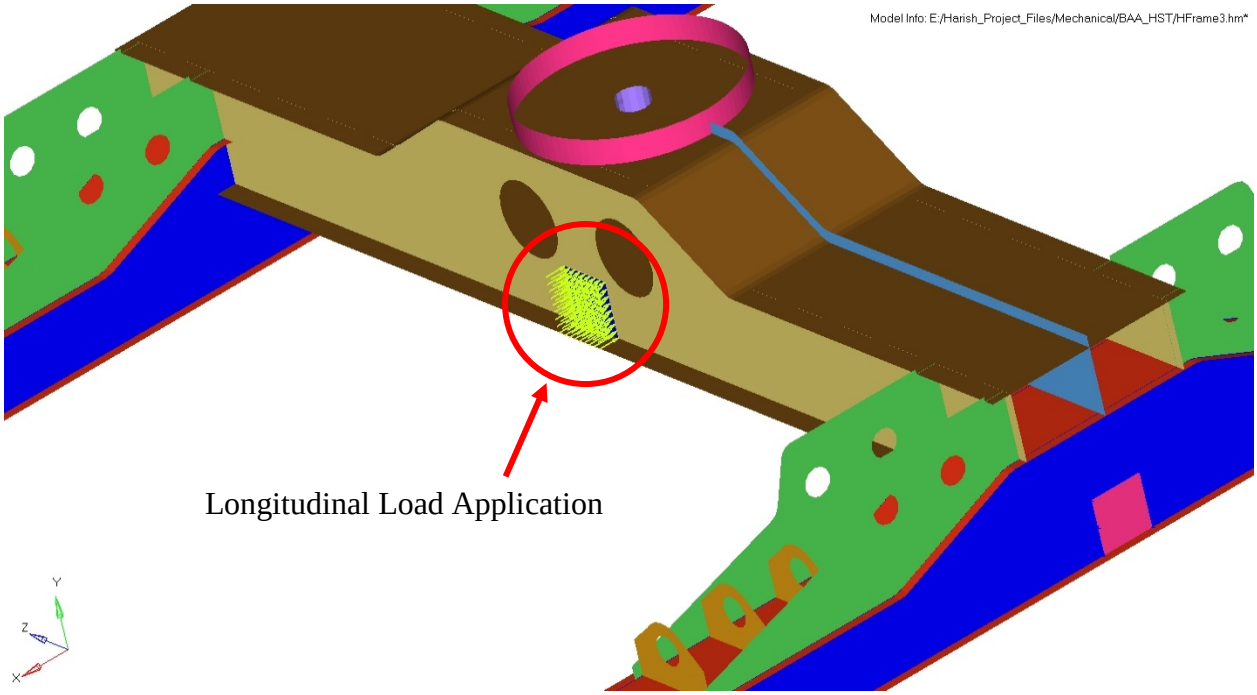

Figure 12. Finite Element Model Showing Applied Longitudinal Load

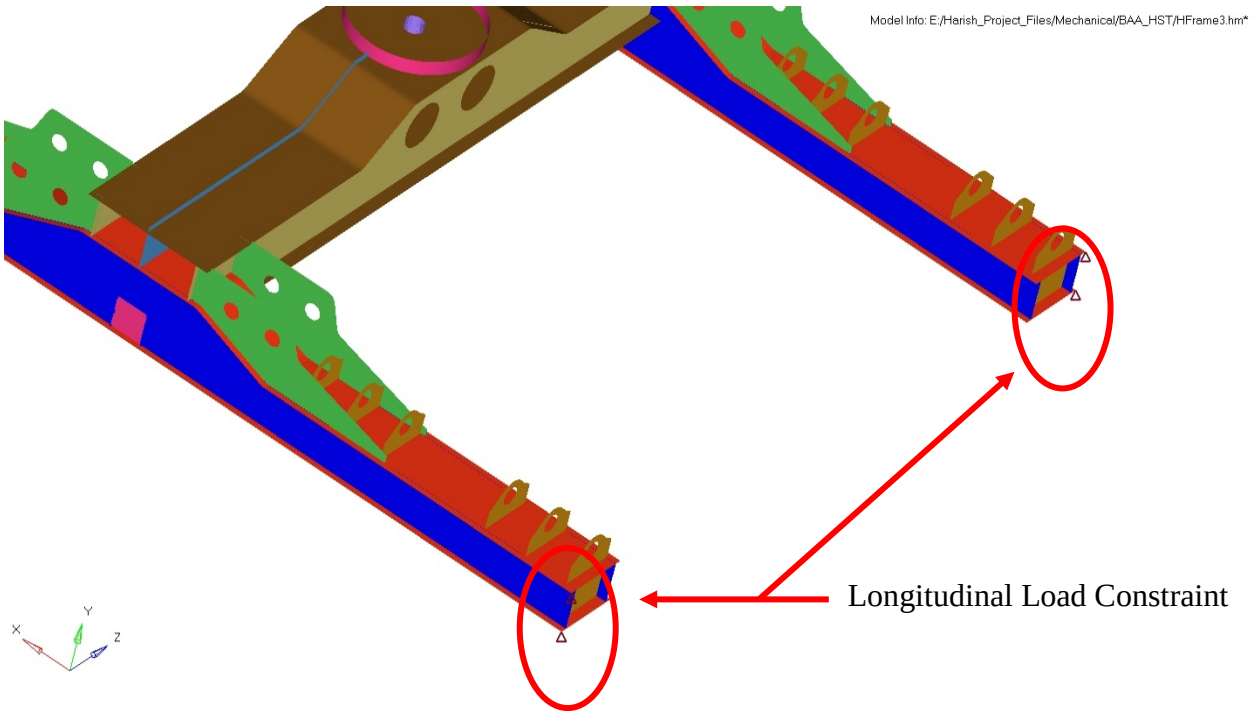

Figure 13. Finite Element Model Showing Constraint for the Longitudinal Load Case

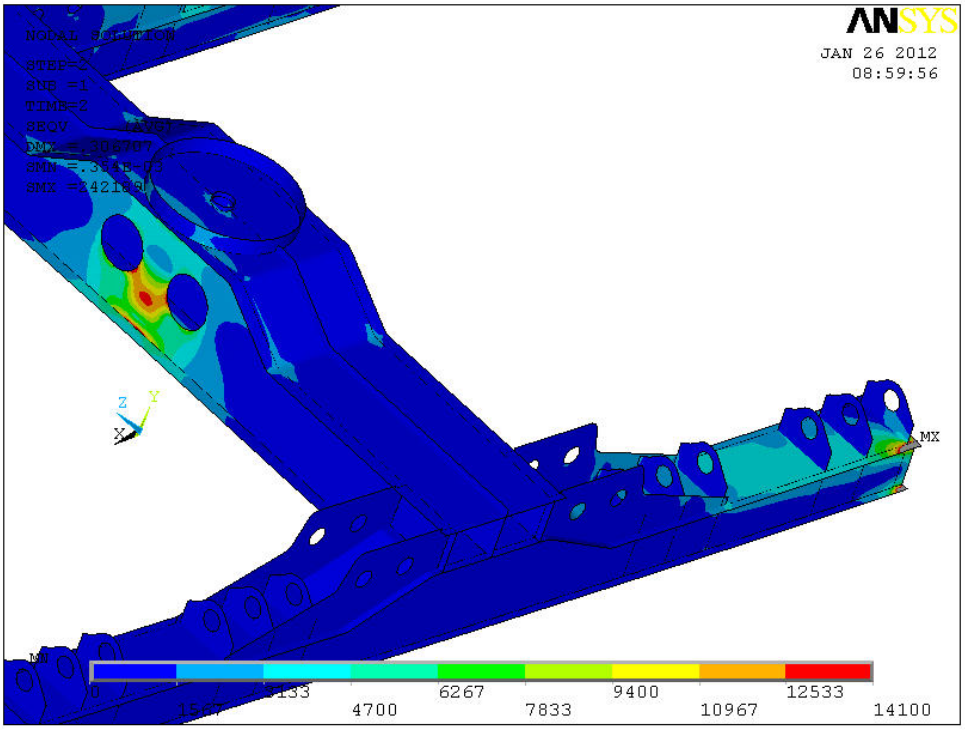

Figure 14. Longitudinal Loading—Nodal Stress Contour

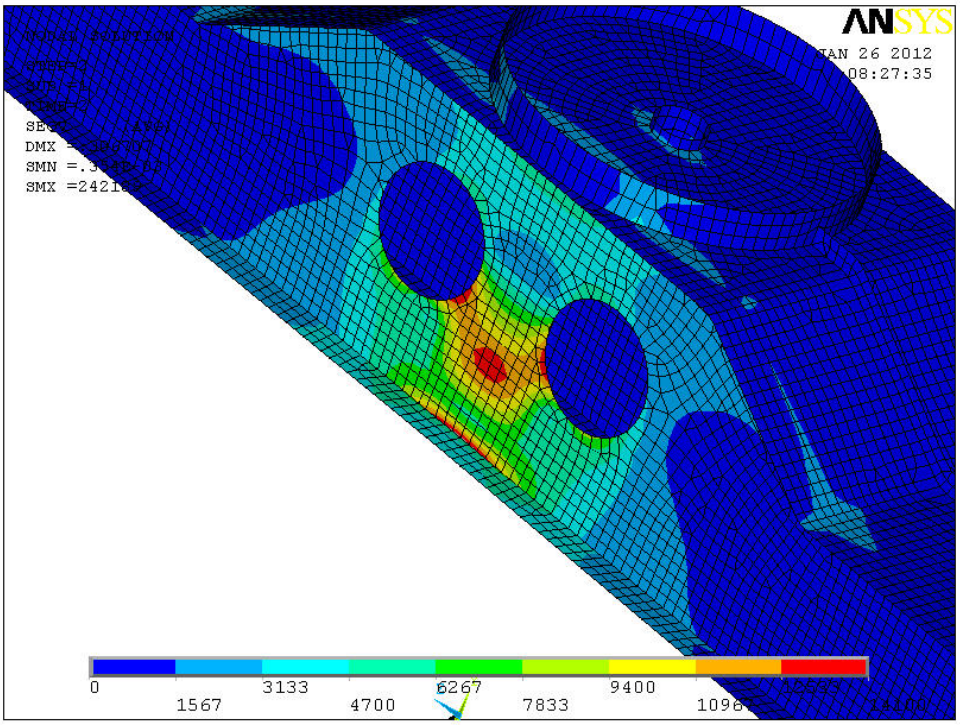

Figure 15. Longitudinal Loading—Areas of Local High Stress

Appendix D.
Figures—Combined Load Case

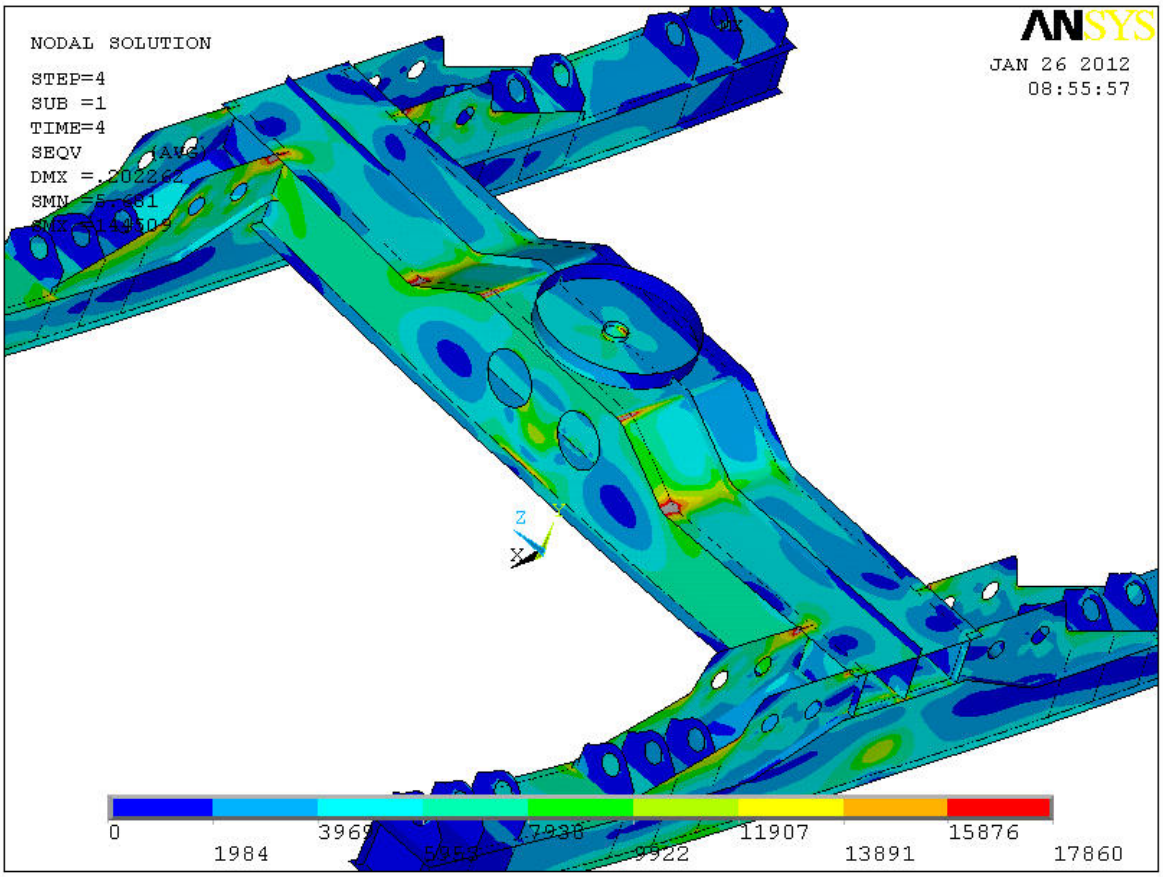

Figure 16. Combination Loading—Nodal Stress Contour

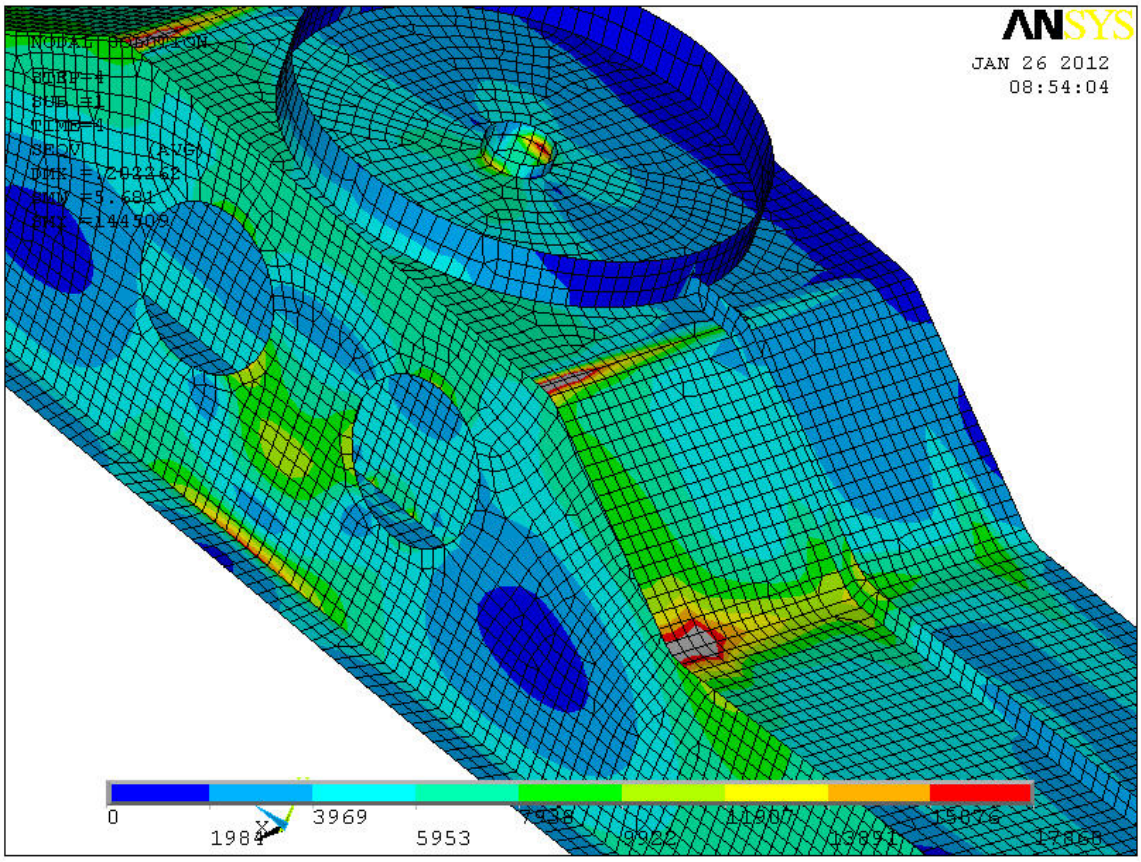

Figure 17. Combination Loading—Areas of Local High Stress

Abbreviations and Acronyms

AAR	Association of American Railroads
CAD	Computer Aided Design
FRA	Federal Railroad Administration
HST	Higher Speed Truck
MSRP	Manual of Standards and Recommended Practices
SA	Sharma & Associates, Inc.