STRESS-STRAIN RELATIONS IN WOOD AND PLYWOOD CONSIDERED AS ORTHOTROPIC MATERIALS

Information Reviewed and Reaffirmed

March 1956

INFORMATION REVIEWED
AND REAFFIRMED
1962

No. 1503

FOREST PRODUCTS LABORATORY
MADISON 5, WISCONSIN

UNITED STATES DEPARTMENT OF AGRICULTURE
FOREST SERVICE
In Cooperation with the University of Wisconsin

STRESS-STRAIN RELATIONS IN WOOD AND PLYWOOD CONSIDERED AS ORTHOTROPIC MATERIALS[1]

By

Forest Products Laboratory,[2] Forest Service
U. S. Department of Agriculture

In various reports (5), (10), (11), (12), (13), (18), (19)[3] issued by the U. S. Forest Products Laboratory dealing with the behavior of wood and plywood from the standpoint of the mathematical theory of elasticity, extensive use has been made of this theory as applied to orthotropic materials; that is, materials having three mutually perpendicular planes of elastic symmetry. The visible structure of wood suggests that planes perpendicular to the longitudinal, radial, and tangential directions, respectively, as shown in figure 1, may be considered planes of elastic symmetry. The purpose of this report is to present the fundamentals of the mathematical treatment of orthotropic materials, as found in various treatises on the theory of elasticity and in scientific papers in this field (1), (2), (3), (4), (6), (7), (8), (14), and the extension of this treatment to wood and plywood.

In the use of these materials, the applied forces may act in the direction of the axes perpendicular to the planes of symmetry or the forces may be inclined to these axes. Hence, the modification of the theory applicable to isotropic materials involves the expression of the relations between stress and strain in terms of the elastic constants associated with the three principal directions in wood and plywood and the use of transformations to permit stress and strain to be referred not only to axes perpendicular to the planes of elastic symmetry but to any other set of orthogonal axes.

---

[1]This is one of a series of progress reports prepared by the Forest Products Laboratory relating to the use of wood in aircraft issued in cooperation with the Army-Navy-Civil Committee on Aircraft Design Criteria. Original report published 1944.

[2]Maintained at Madison, Wis., in cooperation with the University of Wisconsin.

[3]Underlined numbers in parentheses refer to Literature Cited at the end of this report.

In this report, the axes perpendicular to the planes of symmetry will be called the orthotropic axes.

Notation

For the components of stress and strain, Love's notation will be used. The components of stress are (fig. 2):

$$X_x, \quad Y_y, \quad Z_z, \quad Y_z, \quad Z_x, \quad \text{and} \quad X_y$$

Of these, the first three are direct stresses, normal to the respective planes on which they act. The last three are shearing stresses. The other three components of shearing stress Z_y, X_z, and Y_x that could have been written down can be shown to be equal to Y_z, Z_x, and X_y, respectively, by considering the conditions for the equilibrium of an element of volume of the stressed material.

If u, v, and w are the components of the displacement of a point in the body at a position whose coordinates are x, y, and z, the components of strain are defined as follows:

$$e_{xx} = \frac{\partial u}{\partial x}, \qquad e_{yy} = \frac{\partial v}{\partial y}, \qquad e_{zz} = \frac{\partial w}{\partial z}$$

$$e_{yz} = \frac{\partial w}{\partial y} + \frac{\partial v}{\partial z}, \qquad e_{zx} = \frac{\partial u}{\partial z} + \frac{\partial w}{\partial x}, \qquad e_{xy} = \frac{\partial v}{\partial x} + \frac{\partial u}{\partial y} \tag{1}$$

The first three components are extensional strains (extension or contraction), the last three are shearing strains.

Relations Between Components of Stress and Strain in an Orthotropic Material

If the orthotropic axes are chosen as axes of reference, the following relations express the strain components in terms of the stress components and the elastic constants of the material:

$$e_{xx} = \frac{1}{E_x} X_x - \frac{\sigma_{yx}}{E_y} Y_y - \frac{\sigma_{zx}}{E_z} Z_z$$

$$e_{yy} = - \frac{\sigma_{xy}}{E_x} X_x + \frac{1}{E_y} Y_y - \frac{\sigma_{zy}}{E_z} Z_z \qquad (2)$$

$$e_{zz} = - \frac{\sigma_{xz}}{E_x} X_x - \frac{\sigma_{yz}}{E_y} Y_y + \frac{1}{E_z} Z_z$$

$$e_{yz} = \frac{1}{\mu_{yz}} Y_z \quad , \qquad e_{zx} = \frac{1}{\mu_{zx}} Z_x \quad , \qquad e_{xy} = \frac{1}{\mu_{xy}} X_y \qquad (3)$$

The significance of the constants in equations (2) and (3) is best seen by taking successively all but one of the stress components equal to zero. Thus, if X_x is the only stress component that is not equal to zero and if it is positive (a tension), the extensional strain components have the values:

$$e_{xx} = \frac{1}{E_x} X_x \quad , \qquad e_{yy} = - \frac{\sigma_{xy}}{E_x} X_x = - \sigma_{xy} e_{xx} \quad ,$$

$$e_{zz} = - \frac{\sigma_{xz}}{E_x} X_x = - \sigma_{xz} e_{xx}$$

In the first of these equations, the Young's modulus E_x appears in the relation between the component of tension X_x and the corresponding extension e_{xx}. The second and third equations express the fact that corresponding to the extension e_{xx}, associated with the tensile component of stress X_x, contractions occur in the directions parallel to OY

and OZ perpendicular to the line of action of the stress component. Thus, for example, the Poisson's ratio σ_{xy} is equal to the ratio of the contraction parallel to OY to the extension parallel to OX associated with a tension parallel to OX.

The remaining terms in equation (2) can be similarly interpreted by taking in turn Y_y and then Z_z as the only stress component different from zero. Equations (2) represent the superposition of the three states of stress and strain that have just been considered.

If the component X_y is the only stress component not equal to zero, the last of equations (3) shows that μ_{xy} is to be interpreted as the modulus of rigidity associated with a shearing strain in the XY plane. In writing equations (2) and (3), it was assumed that the extensional strain components are associated with the direct stress components only and that the shearing strain components are associated with the corresponding shearing stress components. The justification for this assumption will be given in the next section on the basis of the form that the expression for the strain energy of deformation must have for an orthotropic material when the axes of reference are the orthotropic axes.

Strain Energy Function for Orthotropic Material

An expression will be obtained for the strain energy per unit volume of an orthotropic material in a given state of deformation.

In figure 2, let the parallelepiped shown be considered very small and let its sides parallel to OX, OY, and OZ be a, b, and c, respectively. Let the component X_x increase slowly from the value 0 to a final value X_x. At the same time, the total elongation of the side a will increase from 0 to $e_{xx}a$. Then the energy stored in the parallelepiped will be equal to one-half the product of the final value of the force $X_x bc$ and the final value of the elongation $e_{xx}a$ or $\frac{1}{2} X_x e_{xx} abc$. In like manner, the energy stored by the component Y_z in increasing slowly from an initial value 0 to a final value Y_z is equal to

$$\frac{1}{2} Y_z e_{yz} abc$$

If then all components of stress increase slowly from initial values zero to the final values $\underline{X_x}$, $\underline{Y_y}$, $\underline{Z_z}$, $\underline{Y_z}$, $\underline{Z_x}$, $\underline{X_y}$, the total strain energy per unit volume stored in the small parallelepiped is given by the expression

$$W = \frac{1}{2}(X_x e_{xx} + Y_y e_{yy} + Z_z e_{zz} + Y_z e_{yz} + Z_x e_{zx} + X_y e_{xy}) \qquad (4)$$

where $\underline{e_{xx}}$, $\underline{e_{yy}}$, ... $\underline{e_{xy}}$ are to have the final values associated with the complete state of stress specified by the components

$$X_x, \quad Y_y, \quad \ldots \quad X_y \quad .$$

Now, in accordance with the generalized form of Hooke's law each component of stress is a linear function of all of the components of strain. That is, for the most general type of elastic material, equations of the following form connect the components of stress and strain:

$$X_x = c_{11} e_{xx} + c_{12} e_{yy} + c_{13} e_{zz} + c_{14} e_{yz} + c_{15} e_{zx} + c_{16} e_{xy}$$

$$Y_y = c_{21} e_{xx} + c_{22} e_{yy} + c_{23} e_{zz} + c_{24} e_{yz} + c_{25} e_{zx} + c_{26} e_{xy}$$

* * * * * * *

* * * * * * *

* * * * * * *

$$X_y = c_{61} e_{xx} + c_{62} e_{yy} + c_{63} e_{zz} + c_{64} e_{yz} + c_{65} e_{zx} + c_{66} e_{xy}$$

If these values of the stress components are substituted in (4) an expression of the second degree in the strain components will be obtained. It will contain 21 terms such as $\underline{e_{xx}^2}$, $\underline{e_{xx}\ e_{xy}}$, $\underline{e_{yz}\ e_{xy}}$.

If now the material is orthotropic and the axes of reference are the orthotropic axes, the strain energy function must be unchanged if the positive direction of any one of the axes is reversed.

If, for example, the direction of the X-axis is reversed, the form of the strain energy function must be unchanged when the transformation of coordinates

$$x' = -x, \qquad y' = y, \qquad z' = z$$

is made. As a result of this transformation, it is found that (see equations (1)):

$$e_{x'x'} = e_{xx} \quad , \qquad e_{y'y'} = e_{yy} \quad , \qquad e_{z'z'} = e_{zz}$$

$$e_{y'z'} = e_{yz} \quad , \qquad e_{z'x'} = -e_{zx} \quad , \qquad e_{x'y'} = -e_{xy}$$

Consequently, the coefficients of the following products in the expression for the strain energy function must vanish:

$$e_{zx}\, e_{xx} \quad , \qquad e_{zx}\, e_{yy} \quad , \qquad e_{zx}\, e_{zz} \quad , \qquad e_{zx}\, e_{yz}$$

$$e_{xy}\, e_{xx} \quad , \qquad e_{xy}\, e_{yy} \quad , \qquad e_{xy}\, e_{zz} \quad , \qquad e_{xy}\, e_{yz}$$

By considering in succession, the effects of reversing the positive direction of the Y- znd Z-axes, it is found that the coefficients of the following products must also vanish:

$$e_{xy}\, e_{zx} \quad , \qquad e_{yz}\, e_{xx} \quad , \qquad e_{yz}\, e_{yy} \quad , \qquad e_{yz}\, e_{zz}$$

Hence, the strain energy function of an orthotropic material must have the following form (9) when the axes of reference are the orthotropic axes:

$$W = \frac{1}{2}(Ae_{xx}^2 + Be_{yy}^2 + Ce_{zz}^2 + 2Fe_{yy}\, e_{zz} + 2Ge_{zz}\, e_{xx}$$

$$+ 2He_{xx}\, e_{yy} + Le_{yz}^2 + Me_{zx}^2 + Ne_{xy}^2) \tag{5}$$

The factors 1/2 and 2 are introduced for convenience in subsequent manipulations.

It is not necessary to discuss the significance of the coefficients A, B, C, ... in (5). They are numbers that characterize the elastic behavior of the material, but it is more convenient to use the moduli and Poisson's ratios that appear in equations (2) and (3). To establish the relations between the coefficients of equations (2) and (3) and those of (5), use is made of the following equations which can be established (9) by considering a small parallelepiped (see fig. 2) in a body in a given state of strain and giving each of the components of strain in succession a small increment:

$$X_x = \frac{\partial W}{\partial e_{xx}} \quad , \qquad Y_y = \frac{\partial W}{\partial e_{yy}} \quad , \qquad Z_z = \frac{\partial W}{\partial e_{zz}}$$

$$Y_z = \frac{\partial W}{\partial e_{yz}} \quad , \qquad Z_x = \frac{\partial W}{\partial e_{zx}} \quad , \qquad X_y = \frac{\partial W}{\partial e_{xy}} \tag{6}$$

It follows from (5) and (6) that

$$X_x = Ae_{xx} + He_{yy} + Ge_{zz}$$

$$Y_y = He_{xx} + Be_{yy} + Fe_{zz} \tag{7}$$

$$Z_z = Ge_{xx} + Fe_{yy} + Ce_{zz}$$

$$Y_z = Le_{yz} \quad , \qquad Z_x = Me_{zx} \quad , \qquad X_y = Ne_{xy} \tag{8}$$

If the system of equations (7) is solved for e_{xx}, e_{yy}, and e_{zz} a system of equations of the same form as equations (2) will result. On comparing the coefficients of this system with those of (2), it is readily found that if Δ denotes the determinant of the coefficients of the system of equations (7)

$$\frac{1}{E_x} = \frac{BC - F^2}{\Delta} \quad , \qquad \frac{1}{E_y} = \frac{CA - G^2}{\Delta} \quad , \qquad \frac{1}{E_z} = \frac{AB - H^2}{\Delta} \tag{9}$$

$$\frac{\sigma_{zy}}{E_z} = \frac{\sigma_{yz}}{E_y} = \frac{AF - GH}{\Delta} \quad , \qquad \frac{\sigma_{zx}}{E_z} = \frac{\sigma_{xz}}{E_x} = \frac{BG - HF}{\Delta} \quad ,$$

$$\frac{\sigma_{yx}}{E_y} = \frac{\sigma_{xy}}{E_x} = \frac{CH - FG}{\Delta} \tag{10}$$

Comparison of equations (3) and (8) shows that

$$\mu_{yz} = L \quad , \qquad \mu_{zx} = M \quad , \qquad \mu_{xy} = N \tag{11}$$

It has been shown from a consideration of the necessary form assumed by the strain energy function for an orthotropic material referred to the orthotropic axes that the relations between the components of stress and strain must be those given by equations (2) and (3).

In equations (2) and (3), there are 12 constants, namely, three Young's moduli, three moduli of rigidity, and six Poisson's ratios. As may be seen from equations (10), the following three relations hold among these constants:

$$\frac{\sigma_{zy}}{E_z} = \frac{\sigma_{yz}}{E_y} \quad , \qquad \frac{\sigma_{xz}}{E_x} = \frac{\sigma_{zx}}{E_z} \quad , \qquad \frac{\sigma_{yx}}{E_y} = \frac{\sigma_{xy}}{E_x} \tag{12}$$

Consequently, nine independent constants are needed to describe completely the elastic behavior of an orthotropic material.

For simplification in writing, the following abbreviations will be used:

$$\frac{1}{F_x} = \frac{\sigma_{zy}}{E_z} = \frac{\sigma_{yz}}{E_y} \quad , \qquad \frac{1}{F_y} = \frac{\sigma_{xz}}{E_x} = \frac{\sigma_{zx}}{E_z} \quad , \qquad \frac{1}{F_z} = \frac{\sigma_{yx}}{E_y} = \frac{\sigma_{xy}}{E_x} \tag{13}$$

Rotation of Axes -- Transformation of Components of Stress and Strain

Frequently, as in the case of a rectangular panel in which the grain of the wood is inclined to the edges, it is convenient to use a set of axes inclined to the orthotropic axes. Formulas are needed for the components of stress and strain as referred to the new axes in terms of the corresponding components as referred to the orthotropic axes. These formulas are well known and can be found in treatises on the theory of elasticity. They are reproduced below.

Let OX, OY, OZ be the orthotropic axes and let $O\xi$, $O\eta$, $O\zeta$ be another set of orthogonal axes. The components of stress $\underline{X_x}$ ... $\underline{X_y}$ and of strain $\underline{e_{xx}}$ ... $\underline{e_{xy}}$ as referred to the orthotropic axes are considered

to be known. It is desired to find the corresponding components as referred to the axes $O\xi$, $O\eta$, $O\zeta$.

For symmetry of notation, it will be convenient to follow Trefftz (17) (15), and denote the components of stress X_x ... X_y by t_{xx} ... t_{xy}, respectively. For the components of strain, we shall use temporarily the quantities γ_{xx} ... γ_{xy}, where

$$\gamma_{xx} = 2e_{xx} \quad , \qquad \gamma_{yy} = 2e_{yy} \quad , \qquad \gamma_{zz} = 2e_{zz} \quad ,$$

$$\gamma_{yz} = e_{yz} \quad , \qquad \gamma_{zx} = e_{zx} \quad , \qquad \gamma_{xy} = e_{xy} \quad , \tag{14}$$

$$\gamma_{zy} = e_{zy} = e_{yz} \quad , \qquad \gamma_{xz} = e_{xz} = e_{zx} \quad , \qquad \gamma_{yx} = e_{yx} = e_{xy}$$

Denote by $c_{\xi x}$, $c_{\xi y}$, $c_{\xi z}$ the direction cosines of the axis $O\xi$ with respect to the axes OX, OY, OZ and by similar symbols, the direction cosines of the axes $O\eta$ and $O\zeta$.

It can be shown (9) (15) (16) (17) that the stress components referred to the new axes are expressed in terms of those referred to the orthotropic axes by the following formulas:

$$t_{\xi\xi} = t_{xx}\, c^2_{\xi x} + t_{xy}\, c_{\xi x}\, c_{\xi y} + t_{xz}\, c_{\xi x}\, c_{\xi z} + t_{yx}\, c_{\xi y}\, c_{\xi x} + t_{yy}\, c^2_{\xi y}$$

$$+ t_{yz}\, c_{\xi y}\, c_{\xi z} + t_{zx}\, c_{\xi z}\, c_{\xi x} + t_{zy}\, c_{\xi z}\, c_{\xi y} + t_{zz}\, c^2_{\xi z}$$

$$t_{\xi\eta} = t_{xx}\, c_{\xi x}\, c_{\eta x} + t_{xy}\, c_{\xi x}\, c_{\eta y} + t_{xz}\, c_{\xi x}\, c_{\eta z} + t_{yx}\, c_{\xi y}\, c_{\eta x} \tag{15}$$

$$+ t_{yy} c_{\xi y} c_{\eta y} + t_{yz} c_{\xi y} c_{\eta z} + t_{zx} c_{\xi z} c_{\eta x} + t_{zy} c_{\xi z} c_{\eta y} + t_{zz} c_{\xi z} c_{\eta z}$$

The formulas for the remaining components $t_{\eta\eta}$, $t_{\zeta\zeta}$, $t_{\eta\zeta}$, $t_{\zeta\xi}$ can be readily written down. It will be observed that the first letters of the subscripts of c in a given term are the subscripts of t in the left hand member of the equation, while the second subscripts are those of t in the term under consideration.

The equations for the transformation (9) (15) (16) (17) of the components γ_{xx} ... γ_{xy} are identical with those for the components of stress t_{xx} ... t_{xy}.

For example,

$$\gamma_{\xi\xi} = \gamma_{xx} c_{\xi x}^2 + \gamma_{xy} c_{\xi x} c_{\xi y} + \gamma_{xz} c_{\xi x} c_{\xi z} + \gamma_{yx} c_{\xi y} c_{\xi x} + \gamma_{yy} c_{\xi y}^2$$

$$+ \gamma_{yz} c_{\xi y} c_{\xi z} + \gamma_{zx} c_{\xi z} c_{\xi x} + \gamma_{zy} c_{\xi z} c_{\xi y} + \gamma_{zz} c_{\xi z}^2 \tag{16}$$

Using (14), it follows that

$$e_{\xi\xi} = e_{xx} c_{\xi x}^2 + e_{yy} c_{\xi y}^2 + e_{zz} c_{\xi z}^2 + e_{yz} c_{\xi y} c_{\xi z}$$

$$+ e_{zx} c_{\xi z} c_{\xi x} + e_{xy} c_{\xi x} c_{\xi y} \tag{17}$$

In like manner it is found that

$$e_{\xi\eta} = 2e_{xx} c_{\xi x} c_{\eta x} + 2e_{yy} c_{\xi y} c_{\eta y} + 2e_{zz} c_{\xi z} c_{\eta z} + e_{yz} (c_{\xi y} c_{\eta z}$$

$$+ c_{\xi z} c_{\eta y}) + e_{zx} (c_{\xi z} c_{\eta x} + c_{\xi x} c_{\eta z}) + e_{xy} (c_{\xi x} c_{\eta y} + c_{\xi y} c_{\eta x}) \tag{18}$$

The expression for the remaining strain components can be obtained from (17) and (18) by changing the first subscripts of the c's. Thus

$$e_{\eta\eta} = e_{xx}\, c_{\eta x}^2 + e_{yy}\, c_{\eta y}^2 + e_{zz}\, c_{\eta z}^2 + e_{yz}\, c_{\eta y}\, c_{\eta z}$$

$$+ e_{zx}\, c_{\eta z}\, c_{\eta x} + e_{xy}\, c_{\eta x}\, c_{\eta y} \tag{19}$$

Relations Between Strain Components and Stress Components When Referred to an Arbitrarily Chosen Set of Orthogonal Axes

Relations will now be obtained between the strain components

$$e_{\xi\xi}, \quad e_{\eta\eta}, \quad e_{\zeta\zeta}, \quad e_{\eta\zeta}, \quad e_{\zeta\xi}, \quad e_{\xi\eta}$$

and the stress components

$$t_{\xi\xi}, \quad t_{\eta\eta}, \quad t_{\zeta\zeta}, \quad t_{\eta\zeta}, \quad t_{\zeta\xi}, \quad t_{\xi\eta}$$

as referred to axes $O\xi$, $O\eta$, $O\zeta$ which are inclined to the orthotropic axes OX, OY, OZ.

In general, associated with any given stress component, there will be six strain components which are different from zero. This is not the case when the axes of reference are the orthotropic axes. For then, equations (2) and (3) show that shearing strains, only, are associated with the shearing components of stress while extensional strains, only, are associated with the direct stress components.

The first and the last of six linear equations connecting the strain and stress components will be written down. The coefficients that appear in these equations will then be found in terms of the coefficients of equations (2) and (3).

$$e_{\xi\xi} = s_{11}\, t_{\xi\xi} + s_{12}\, t_{\eta\eta} + s_{13}\, t_{\zeta\zeta} + s_{14}\, t_{\eta\zeta} + s_{15}\, t_{\zeta\xi} + s_{16}\, t_{\xi\eta}$$

$$\begin{array}{ccccccc} * & * & * & * & * & * & * \\ * & * & * & * & * & * & * \end{array} \qquad (20)$$

$$e_{\xi\eta} = s_{61}\, t_{\xi\xi} + s_{62}\, t_{\eta\eta} + s_{63}\, t_{\zeta\zeta} + s_{64}\, t_{\eta\zeta} + s_{65}\, t_{\zeta\xi} + s_{66}\, t_{\xi\eta}$$

The equations that are omitted would give expressions for $e_{\eta\eta}$, $e_{\zeta\zeta}$, $e_{\eta\zeta}$, and $e_{\zeta\xi}$. The first subscripts of the coefficients in these equations would be 2, 3, 4, and 5, respectively. Among the coefficients 15 relations such as the following hold:

$$s_{12} = s_{21}\ ;\ \ldots\ ,\ \ldots\ ,\ s_{16} = s_{61}.$$

Thus the number of independent coefficients is reduced from 36 to 21.

The coefficients can be calculated in terms of the constants in equations (2) and (3) by taking, in turn, all but one of the stress components to be zero and making use of the equations (15), (17), and (18) for the transformation of the stress and strain components.

If $t_{\xi\xi}$ is the only stress component that is not equal to zero, it follows from (20) that:

$$s_{11} = \frac{e_{\xi\xi}}{t_{\xi\xi}}\ ,\quad s_{21} = \frac{e_{\eta\eta}}{t_{\xi\xi}}\ ,\quad \ldots\ ,\ \ldots\ ,\ \ldots\ ,\quad s_{61} = \frac{e_{\xi\eta}}{t_{\xi\xi}} \qquad (21)$$

To obtain s_{11} it is necessary to express $e_{\xi\xi}$ in terms of $t_{\xi\xi}$. From equation (15), interchanging the letters x, y, z and ξ, η, ζ, respectively, and noting that $t_{\xi\xi}$ is taken to be the only stress component different from zero, it is found that:

$$t_{xx} = t_{\xi\xi}\, c_{x\xi}^2 \;, \qquad t_{yy} = t_{\xi\xi}\, c_{y\xi}^2 \;, \qquad t_{zz} = t_{\xi\xi}\, c_{z\xi}^2 \tag{22}$$

$$t_{yz} = t_{\xi\xi}\, c_{y\xi}\, c_{z\xi} \;, \qquad t_{zx} = t_{\xi\xi}\, c_{z\xi}\, c_{x\xi} \;, \qquad t_{xy} = t_{\xi\xi}\, c_{x\xi}\, c_{y\xi} \tag{23}$$

The values of t_{xx}, t_{yy}, t_{zz}, given by (22), can be substituted in the right hand members of (2), since $t_{xx} = X_x$, $t_{yy} = Y_y$, $t_{zz} = Z_z$. The result of this substitution is that e_{xx}, e_{yy}, and e_{zz} are expressed in terms of $t_{\xi\xi}$. Equations (13) should be used to simplify the writing. In like manner, e_{yz}, e_{zx}, and e_{xy} can be expressed in terms of $t_{\xi\xi}$ by making use of (23) and (3). If these values of e_{xx}, . . . , e_{xy} are substituted in (17), it follows readily that

$$s_{11} = \frac{e_{\xi\xi}}{t_{\xi\xi}} = \frac{c_{x\xi}^4}{E_x} + \frac{c_{y\xi}^4}{E_y} + \frac{c_{z\xi}^4}{E_z} + c_{y\xi}^2\, c_{z\xi}^2 \left(\frac{1}{\mu_{yz}} - \frac{2}{F_x}\right)$$

$$+ c_{z\xi}^2\, c_{x\xi}^2 \left(\frac{1}{\mu_{zx}} - \frac{2}{F_y}\right) + c_{x\xi}^2\, c_{y\xi}^2 \left(\frac{1}{\mu_{xy}} - \frac{2}{F_z}\right) \tag{24}$$

The quantities F_x, F_y, F_z in (24) can be expressed with the aid of (13) in terms of the Poisson's ratios σ_{zy} . . . σ_{xy} and the Young's moduli E_x, E_y, E_z.

The modulus E_ξ is defined as the ratio of the stress component $t_{\xi\xi}$ to the strain component $e_{\xi\xi}$ in a state of stress in which all components of stress with the exception of $t_{\xi\xi}$ are zero. Then from (24)

$$s_{11} = \frac{1}{E_\xi} \tag{25}$$

The coefficients $s_{22} = 1/E_\eta$ and $s_{33} = 1/E_\zeta$ can be found from (24) by replacing ξ in the subscripts by η and ζ, respectively.

If the values of e_{xx}, ... , e_{xy} in terms of $t_{\xi\xi}$ that were used in obtaining (24) are substituted in (19) the following value of $s_{21} = e_{\eta\eta}/t_{\xi\xi}$ is obtained.

$$s_{21} = \frac{e_{\eta\eta}}{t_{\xi\xi}} = \frac{c^2_{\eta x}\, c^2_{\xi x}}{E_x} + \frac{c^2_{\eta y}\, c^2_{\xi y}}{E_y} + \frac{c^2_{\eta z}\, c^2_{\xi z}}{E_z} - \frac{c^2_{\eta y}\, c^2_{\xi z} + c^2_{\eta z}\, c^2_{\xi y}}{F_x}$$

$$- \frac{c^2_{\eta z}\, c^2_{\xi x} + c^2_{\eta x}\, c^2_{\xi z}}{F_y} - \frac{c^2_{\eta x}\, c^2_{\xi y} + c^2_{\eta y}\, c^2_{\xi x}}{F_z} + \frac{c_{\eta y}\, c_{\eta z}\, c_{\xi y}\, c_{\xi z}}{\mu_{yz}}$$

$$+ \frac{c_{\eta z}\, c_{\eta x}\, c_{\xi z}\, c_{\xi x}}{\mu_{zx}} + \frac{c_{\eta x}\, c_{\eta y}\, c_{\xi x}\, c_{\xi y}}{\mu_{xy}} \tag{26}$$

The significance of the coefficient s_{21} can be discovered by noting that the Poisson's ratio, $\sigma_{\xi\eta}$, is defined as follows:

$$\sigma_{\xi\eta} = -(e_{\eta\eta}/t_{\xi\xi}) \,/\, (e_{\xi\xi}/t_{\xi\xi})$$

$$= -(e_{\eta\eta}/t_{\xi\xi})\, E_\xi$$

Here it is to be understood that $t_{\xi\xi}$ is the only stress component different from zero.

Then

$$\sigma_{\xi\eta}/E_5 = -(e_{\eta\eta}/t_{\xi\xi}) \tag{27}$$

and from (26)

$$s_{21} = -\sigma_{\xi\eta}/E_{\xi}$$

From (26) it is evident that

$$\frac{e_{\eta\eta}}{t_{\xi\xi}} = \frac{e_{\xi\xi}}{t_{\eta\eta}} \tag{28}$$

because the right hand member of (26) is unchanged if ξ and η are interchanged. In the left hand member of (28) $t_{\xi\xi}$ is assumed to be the only stress component different from zero while in the right hand member the same is true of $t_{\eta\eta}$. It follows from (28) that:

$$s_{21} = s_{12} = -\sigma_{\xi\eta}/E_{\xi} = -\sigma_{\eta\xi}/E_{\eta} \tag{29}$$

If the values of e_{xx}, ... , e_{xy} in terms of $t_{\xi\xi}$, that were used in obtaining (24), are substituted in (18) it is found that:

$$s_{61} = \frac{e_{\xi\eta}}{t_{\xi\xi}} = \frac{2c^3_{\xi x}\, c_{\eta x}}{E_x} + \frac{2c^3_{\xi y}\, c_{\eta y}}{E_y} + \frac{2c^3_{\xi z}\, c_{\eta z}}{E_z} + c_{\xi y}\, c_{\xi z}\,(c_{\xi y}\, c_{\eta z}$$

$$+ c_{\xi z}\, c_{\eta y})\left(\frac{1}{\mu_{yz}} - \frac{2}{F_x}\right) + c_{\xi z}\, c_{\xi x}\,(c_{\xi z}\, c_{\eta x} + c_{\xi x}\, c_{\eta z})$$

$$\times\left(\frac{1}{\mu_{zx}} - \frac{2}{F_y}\right) + c_{\xi x}\, c_{\xi y}\,(c_{\xi x}\, c_{\eta y} + c_{\xi y}\, c_{\eta x})\left(\frac{1}{\mu_{xy}} - \frac{2}{F_z}\right) \tag{30}$$

This coefficient expresses the ratio of the shearing strain $e_{\xi\eta}$ to the direct stress component $t_{\xi\xi}$ when the latter is the only stress component that is not equal to zero. Such a shearing strain is not associated with a

direct stress component when the axes of reference are the orthotropic axes.

Now let $t_{\xi\eta}$ be the only one of the stress components that is not equal to zero.

From equation (15), interchanging English and Greek subscripts, it follows that

$$t_{xx} = 2t_{\xi\eta}\, c_{x\xi}\, c_{x\eta} \;, \qquad t_{yy} = 2t_{\xi\eta}\, c_{y\xi}\, c_{y\eta} \;,$$

$$t_{zz} = 2t_{\xi\eta}\, c_{z\xi}\, c_{z\eta} \tag{31}$$

$$t_{yz} = t_{\xi\eta}\left(c_{y\xi}\, c_{z\eta} + c_{y\eta}\, c_{z\xi}\right) \;, \qquad t_{zx} = t_{\xi\eta}\left(c_{z\xi}\, c_{x\eta} + c_{z\eta}\, c_{z\xi}\right) ,$$

$$t_{xy} = t_{\xi\eta}\left(c_{x\xi}\, c_{y\eta} + c_{x\eta}\, c_{y\xi}\right) \tag{32}$$

On substituting these expressions in (2) and (3), recalling that $t_{xx} = X_x$, ... , $t_{xy} = X_y$, and entering the resulting expressions for e_{xx} ... e_{xy} in terms of $t_{\xi\eta}$ in (18) the following value of the constant s_{66} is found:

$$\frac{1}{s_{66}} = \frac{e_{\xi\eta}}{t_{\xi\eta}} = 4\left[\frac{c^2_{\xi x}\, c^2_{\eta x}}{E_x} + \frac{c^2_{\xi y}\, c^2_{\eta y}}{E_y} + \frac{c^2_{\xi z}\, c^2_{\eta z}}{E_z} - \frac{2c_{\xi y}\, c_{\eta y}\, c_{\xi z}\, c_{\eta z}}{F_x}\right.$$

$$\left. - \frac{2c_{\xi x}\, c_{\eta x}\, c_{\xi z}\, c_{\eta z}}{F_y} - \frac{2c_{\xi y}\, c_{\eta y}\, c_{\xi x}\, c_{\eta x}}{F_z}\right] + \frac{\left(c_{\xi y}\, c_{\eta z} + c_{\xi z}\, c_{\eta y}\right)^2}{\mu_{yz}}$$

$$+ \frac{\left(c_{\xi z}\, c_{\eta x} + c_{\xi x}\, c_{\eta z}\right)^2}{\mu_{zx}} + \frac{\left(c_{\xi x}\, c_{\eta y} + c_{\xi y}\, c_{\eta x}\right)^2}{\mu_{xy}} \tag{33}$$

Since the modulus of rigidity $\mu_{\xi\eta}$ is equal to the ratio $t_{\xi\eta}$ to $e_{\xi\eta}$ when all of the remaining stress components are equal to zero it follows that:

$$s_{66} = \frac{1}{\mu_{\xi\eta}} \tag{34}$$

The remaining coefficients of the six equations such as (20) can be calculated by the methods used in finding s_{11}, s_{12}, s_{61}, and s_{66} or they can be obtained from the expressions for these coefficients by suitably changing the subscripts. It is to be recalled that the following relations hold:

$$s_{12} = s_{21}, \quad \ldots, \quad s_{16} = s_{61} .$$

Plane Stress. Orthotropic Material

In a state of plane stress in planes parallel to the XY-plane, the stress components $Z_z = t_{zz}$, $Y_z = t_{yz}$, and $Z_x = t_{zx}$ are zero. The equations of transformation from one set of axes to another in the XY-plane and the expressions for the elastic moduli are obtained from the corresponding equations for the general case by noting that in addition to the three components mentioned above, the direction cosines $c_{\xi z}$ and $c_{\eta z}$ also vanish. It will be assumed that the XY-plane is a plane of elastic symmetry and that the axes OX and OY are orthotropic axes.

It is convenient to introduce the angle θ, the angle through the axes have been rotated as shown in figure 3.

The equations of transformation (15) become:

$$t_{\xi\xi} = t_{xx} \cos^2 \theta + t_{yy} \sin^2 \theta + 2t_{xy} \sin \theta \cos \theta$$

$$t_{\eta\eta} = t_{xx} \sin^2 \theta + t_{yy} \cos^2 \theta - 2t_{xy} \sin \theta \cos \theta \tag{35}$$

$$t_{\xi\eta} = - t_{xx} \sin \theta \cos \theta + t_{yy} \sin \theta \cos \theta + t_{xy} (\cos^2 \theta - \sin^2 \theta)$$

The equations (2) and (3) reduce to the following:

$$e_{xx} = \frac{1}{E_x} t_{xx} - \frac{\sigma_{yx}}{E_y} t_{yy}$$

$$e_{yy} = - \frac{\sigma_{xy}}{E_x} t_{xx} + \frac{1}{E_y} t_{yy}$$

$$e_{zz} = - \frac{\sigma_{xz}}{E_x} t_{xx} - \frac{\sigma_{yz}}{E_y} t_{yy} \tag{36}$$

$$e_{xy} = \frac{1}{\mu_{xy}} t_{xy}$$

Hereafter, we shall not be concerned with the third of equations (36). Equations (17), (18), and (19), for the strain components become:

$$e_{\xi\xi} = e_{xx} \cos^2 \theta + e_{yy} \sin^2 \theta + e_{xy} \sin \theta \cos \theta \tag{37}$$

$$e_{\xi\eta} = - 2e_{xx} \sin \theta \cos \theta + 2e_{yy} \sin \theta \cos \theta$$

$$+ e_{xy} (\cos^2 \theta - \sin^2 \theta) \tag{38}$$

$$e_{\eta\eta} = e_{xx} \sin^2 \theta + e_{yy} \cos^2 \theta - e_{xy} \sin \theta \cos \theta \tag{39}$$

Equations (20) connecting the components of stress and strain, when they are referred to the axes $O\xi$ and $O\eta$ in the XY-plane as in figure 3, will be written in the following form:

$$e_{\xi\xi} = a_{11}\, t_{\xi\xi} + a_{12}\, t_{\eta\eta} + a_{13}\, t_{\xi\eta}$$

$$e_{\eta\eta} = a_{21}\, t_{\xi\xi} + a_{22}\, t_{\eta\eta} + a_{23}\, t_{\xi\eta} \tag{40}$$

$$e_{\xi\eta} = a_{31}\, t_{\xi\xi} + a_{32}\, t_{\eta\eta} + a_{33}\, t_{\xi\eta}$$

where in terms of the coefficients of equations (20):

$$a_{11} = s_{11}\ , \qquad a_{22} = s_{22}\ , \qquad a_{33} = s_{66}$$

$$a_{12} = a_{21} = s_{12} = s_{21}\ , \qquad a_{13} = a_{31} = s_{16} = s_{61} \tag{41}$$

$$a_{23} = a_{32} = s_{26} = s_{62}$$

The values of the coefficients a_{11} ... a_{33} can be obtained from (24), (26), (30), and (33) and corresponding equations that can be written down by changing subscripts, by noting that

$$c_{\xi z} = c_{\eta z} = 0$$

It is readily found that:

$$a_{11} = \frac{\cos^4\theta}{E_x} + \frac{\sin^4\theta}{E_y} + \sin^2\theta\ \cos^2\theta\ \left(\frac{1}{\mu_{xy}} - \frac{2}{F_z}\right) \tag{42}$$

$$a_{22} = \frac{\sin^4\theta}{E_x} + \frac{\cos^4\theta}{E_y} + \sin^2\theta\ \cos^2\theta\left(\frac{1}{\mu_{xy}} - \frac{2}{F_z}\right) \tag{43}$$

$$a_{33} = 4\left[\frac{\sin^2\theta\cos^2\theta}{E_x} + \frac{\sin^2\theta\cos^2\theta}{E_y} + \frac{2\sin^2\theta\cos^2\theta}{F_z}\right]$$

$$+ \frac{(\cos^2\theta - \sin^2\theta)^2}{\mu_{xy}} \tag{44}$$

$$a_{21} = a_{12} = \frac{\sin^2\theta\cos^2\theta}{E_x} + \frac{\sin^2\theta\cos^2\theta}{E_y} - \frac{\sin^4\theta + \cos^4\theta}{F_z}$$

$$- \frac{\sin^2\theta\cos^2\theta}{\mu_{xy}} \tag{45}$$

$$a_{31} = a_{13} = -\frac{2\cos^3\theta\sin\theta}{E_x} + \frac{2\sin^3\theta\cos\theta}{E_y}$$

$$+ \cos\theta\sin\theta\,(\cos^2\theta - \sin^2\theta)\left(\frac{1}{\mu_{xy}} - \frac{2}{F_z}\right) \tag{46}$$

$$a_{32} = a_{23} = -\frac{2\sin^3\theta\cos\theta}{E_x} + \frac{2\cos^3\theta\sin\theta}{E_y}$$

$$- \sin\theta\cos\theta\,(\cos^2\theta - \sin^2\theta)\left(\frac{1}{\mu_{xy}} - \frac{2}{F_z}\right) \tag{47}$$

In these equations in accordance with (13)

$$\frac{1}{F_z} = \frac{\sigma_{xy}}{E_x} = \frac{\sigma_{yx}}{E_y} \tag{48}$$

The quantities $\frac{1}{F_x}$ and $\frac{1}{F_y}$ were similarly defined in (13).

The significance of the coefficients $a_{11}, \ldots, a_{33}$ follows from the discussion of the three-dimensional case. Thus

$$a_{11} = 1/E_\xi \quad , \qquad a_{22} = 1/E_\eta \quad , \qquad a_{33} = 1/\mu_{\xi\eta}$$

$$a_{12} = a_{21} = -\sigma_{\xi\eta}/E_\xi = -\sigma_{\eta\xi}/E_\eta \tag{49}$$

The fact that shearing strains are associated with the direct stress components and extensional strains with the shearing stress component is made evident by the presence of the coefficients $a_{13} = a_{31}$ and $a_{23} = a_{32}$.

Plywood Plate Under the Action of Forces in Its Plane

A plywood plate will now be considered that is in a state of plane stress under the action of forces in the plane of the plate. The grain of the wood in adjacent plies will be taken to be mutually perpendicular and the construction will be assumed to be symmetrical with respect to the middle

plane of the plate so that bending of an initially flat plate does not occur under the specified system of forces so long as the stress remains below the buckling stress. The effect of the glue, other than that of securing adherence of adjacent plies, is assumed to be negligible. Hence the formulas derived are not intended to apply to partially or completely impregnated plywood. The lateral dimensions of the plate are assumed to be so large that irregularities in the stresses at the edges may be neglected. The shearing stress and the displacements will be continuous at the planes of separation of the plies. Each ply is considered to be homogeneous. This implies that the variations of the elastic constants from springwood to summerwood are disregarded and average values of the constants are used.

At first assume that all plies are of the same species of wood and that they are rotary cut.

As directions of the axes of reference OX and OY for a system of rectangular coordinates choose directions parallel and perpendicular, respectively, to the grain of the face plies.

Let

h_1 = sum of the thicknesses of plies with grain parallel to OX.

h_2 = sum of the thicknesses of plies with grain parallel to OY.

$h = h_1 + h_2$ = thickness of plywood.

$(X_x)_1$, $(Y_y)_1$, $(X_y)_1$ denote the components of stress in plies with grain parallel to OX.

$(X_x)_2$, $(Y_y)_2$, $(X_y)_2$ denote the components of stress in plies with grain parallel to OY.

At a given position $(\underline{x}, \underline{y})$ the components of strain $\underline{e_{xx}}$, $\underline{e_{yy}}$, and $\underline{e_{xy}}$ are the same in all plies. This is a consequence of the assumption that bending does not occur.

From the first two of equations (36) it follows that

$$(X_x)_1 = \frac{E_L}{\lambda}(e_{xx} + \sigma_{TL}\, e_{yy}) = \frac{E_L}{\lambda}\, e_{xx} + \frac{E_L \sigma_{TL}}{\lambda}\, e_{yy}$$

$$(X_x)_2 = \frac{E_T}{\lambda}(e_{xx} + \sigma_{LT}\, e_{yy}) = \frac{E_T}{\lambda}\, e_{xx} + \frac{E_L \sigma_{TL}}{\lambda}\, e_{yy} \tag{50}$$

where

$$\lambda = 1 - \sigma_{LT}\, \sigma_{TL} \tag{51}$$

Denote the mean stress components by $\underline{\overline{X}_x}$ and $\underline{\overline{Y}_y}$. Then

$$\overline{X}_x = \frac{h_1 (X_x)_1 + h_2 (X_x)_2}{h}$$

$$= \frac{h_1 E_L + h_2 E_T}{h}\, \frac{e_{xx}}{\lambda} + \frac{E_L \sigma_{TL}}{\lambda}\, e_{yy} \tag{52}$$

$$= \frac{E_a}{\lambda}\, e_{xx} + \frac{E_L \sigma_{TL}}{\lambda}\, e_{yy}$$

where

$$E_a = \frac{h_1 E_L + h_2 E_T}{h} \tag{53}$$

In like manner,

$$\overline{Y}_y = \frac{E_b}{\lambda}\, e_{yy} + \frac{E_L \sigma_{TL}}{\lambda}\, e_{xx} \tag{54}$$

where

$$E_b = \frac{h_1 E_T + h_2 E_L}{h} \tag{55}$$

To find the effective Poisson's ratios, $\underline{\bar{\sigma}_{xy}}$ and $\underline{\bar{\sigma}_{yx}}$ solve equations (52) and (54) for $\underline{e_{xx}}$ and $\underline{e_{yy}}$ and obtain

$$\begin{aligned} e_{xx} &= \frac{E_b}{H} \bar{X}_x - \frac{E_L \sigma_{TL}}{H} \bar{Y}_y \\ e_{yy} &= \frac{E_a}{H} \bar{Y}_y - \frac{E_L \sigma_{TL}}{H} \bar{X}_x \end{aligned} \tag{56}$$

where

$$H = \frac{E_a E_b - E_L^2 \sigma_{TL}^2}{\lambda} \tag{57}$$

Equations (56) can be written

$$\begin{aligned} e_{xx} &= \frac{1}{\bar{E}_x} \bar{X}_x - \frac{\bar{\sigma}_{yx}}{\bar{E}_y} \bar{Y}_y \\ e_{yy} &= - \frac{\bar{\sigma}_{xy}}{\bar{E}_x} \bar{X}_x + \frac{1}{\bar{E}_y} \bar{Y}_y \end{aligned} \tag{58}$$

where $\underline{\bar{E}_x}$ and $\underline{\bar{E}_y}$ are effective moduli given by the equations

$$\overline{E}_x = \frac{H}{E_b} \quad , \qquad \overline{E}_y = \frac{H}{E_a} \tag{59}$$

On comparing (58) and (56), it is found that:

$$\overline{\sigma}_{yx} = \overline{E}_y \frac{E_L \sigma_{TL}}{H} = \frac{E_L}{E_a} \sigma_{TL}$$

$$\overline{\sigma}_{xy} = \overline{E}_x \frac{E_L \sigma_{TL}}{H} = \frac{E_L}{E_b} \sigma_{TL} \tag{60}$$

The quantity $\underline{H}$ defined by (57) can ordinarily be replaced by $\underline{E_a E_b}$ because $\underline{E_L^2 \sigma_{TL}^2}$ can usually be neglected in comparison with $\underline{E_a E_b}$ and $\underline{\lambda}$ usually differs from unity by a few percent. With this approximation $\underline{\overline{E}_x}$ and $\underline{\overline{E}_y}$ defined by (59) become $\underline{E_a}$ and $\underline{E_b}$, respectively. Equations (56) can then be replaced by the approximate relations

$$e_{xx} = \frac{1}{E_a} \overline{X}_x - \frac{\overline{\sigma}_{yx}}{E_b} \overline{Y}_y$$

$$e_{yy} = - \frac{\overline{\sigma}_{xy}}{E_a} \overline{X}_x + \frac{1}{E_b} \overline{Y}_y \tag{61}$$

In all plies the relation, $\underline{X_y = \mu_{LT} e_{xy}}$ holds. Hence, $\underline{X_y}$ is identical with the mean stress component $\underline{\overline{X}_y}$.

If the veneers of the plywood are edge-grained, the letter $\underline{T}$ in all subscripts is to be replaced by $\underline{R}$.

In the foregoing analysis irregularities in the state of stress at the edges of the plate have been neglected. This amounts to assuming that on a loaded edge external forces statically equivalent to the applied external forces are distributed over the thickness of the plate in such a way that the strains e_{xx} and e_{yy} are constant across the thickness of the plate at any point of the edge. In the case of a free edge, a system of forces in statical equilibrium at each point of the edge is to be supposed to act to cause the strains to be constant across the thickness of the plate at all points of the edge. In both cases, it follows from St. Venant's principle that the states of stress and strain at points a short distance from the edges are the same as those under the actual distribution of external forces.

Now the requirement that the veneers are made of wood of the same species will be dropped. The plies will be considered to be numbered consecutively from the upper face to the lower face. The stress components in the ith ply will be denoted by $(X_x)_i$, $(Y_y)_i$, and $(X_y)_i$. The mean stress components will be denoted by $\overline{X}_x$ and $\overline{Y}_y$. The value of the factor λ (equation (50)) in the ith ply will be denoted by λ_i. A subscript affixed to the symbols for Poisson's ratios and the moduli will indicate the ply to which reference is made. The thickness of the ith ply is h_i. That of the plate is h. The strain components are uniform across the thickness of the plate.

In the ith ply:

$$(X_x)_i = \frac{(E_x)_i}{\lambda_i}[e_{xx} + (\sigma_{yx})_i \, e_{yy}] \tag{62}$$

Then

$$\overline{X}_x = \frac{1}{h} \Sigma \frac{(E_x)_i \, h_i}{\lambda_i} e_{xx} + \frac{1}{h} \Sigma \frac{(E_x)_i \, (\sigma_{yx})_i \, h_i}{\lambda_i} e_{yy} \tag{63}$$

$$= \frac{E_a}{\lambda_a} e_{xx} + \frac{\overline{\sigma}_{yx} \, E_a}{\lambda_a} e_{yy} \tag{64}$$

where

$$E_a = \frac{\Sigma (E_x)_i \; h_i}{h} \tag{65}$$

$$\frac{1}{\lambda_a} = \frac{\Sigma (E_x)_i \; h_i/\lambda_i}{\Sigma (E_x)_i \; h_i} \tag{66}$$

$$\overline{\sigma}_{yx} = \frac{\Sigma (E_x)_i \; (\sigma_{yx})_i \; h_i/\lambda_i}{\Sigma (E_x)_i \; h_i/\lambda_i} \tag{67}$$

In like manner,

$$\overline{Y}_y = \frac{1}{h} \; \Sigma \; \frac{(E_y)_i \; h_i}{\lambda_i} \; e_{yy} + \frac{1}{h} \; \Sigma \; \frac{(E_y)_i \; (\sigma_{xy})_i \; h_i}{\lambda_i} \; e_{xx} \tag{68}$$

$$= \frac{E_b}{\lambda_b} \; e_{yy} + \frac{\overline{\sigma}_{xy} \; E_b}{\lambda_b} \; e_{xx} \tag{69}$$

where

$$E_b = \frac{\Sigma (E_y)_i \; h_i}{h} \tag{70}$$

$$\frac{1}{\lambda_b} = \frac{\Sigma (E_y)_i \; h_i/\lambda_i}{\Sigma (E_y)_i \; h_i} \tag{71}$$

$$\overline{\sigma}_{xy} = \frac{\Sigma (E_y)_i \; (\sigma_{xy})_i \; h_i/\lambda_i}{\Sigma (E_y)_i \; h_i/\lambda_i} \tag{72}$$

Greatly simplified approximations are obtained by setting λ_i, λ_a, and λ_b all equal to unity. Normally the error committed by doing so is small.

The simplified approximate relations are:

$$\overline{X}_x = E_a e_{xx} + E_a \overline{\sigma}_{yx} e_{yy} \tag{73}$$

$$\overline{Y}_y = E_b e_{yy} + E_b \overline{\sigma}_{xy} e_{xx} \tag{74}$$

$$\overline{\sigma}_{yx} = \frac{\Sigma h_i (E_x)_i (\sigma_{yx})_i}{hE_a} \tag{75}$$

$$\overline{\sigma}_{xy} = \frac{\Sigma h_i (E_y)_i (\sigma_{xy})_i}{hE_b} \tag{76}$$

From equations (73) and (74)

$$e_{xx} = \frac{1}{E_a (1 - \overline{\sigma}_{xy} \overline{\sigma}_{yx})} \overline{X}_x - \frac{\overline{\sigma}_{yx}}{E_b (1 - \overline{\sigma}_{xy} \overline{\sigma}_{yx})} \overline{Y}_y \tag{77}$$

$$e_{yy} = \frac{1}{E_b (1 - \overline{\sigma}_{xy} \overline{\sigma}_{yx})} \overline{Y}_y - \frac{\overline{\sigma}_{xy}}{E_a (1 - \overline{\sigma}_{xy} \overline{\sigma}_{yx})} \overline{X}_x \tag{78}$$

The factor $1 - \overline{\sigma}_{xy} \overline{\sigma}_{yx}$ is usually approximately equal to unity. On replacing this factor by unity, the following approximate relations are obtained from (77) and (78):

$$e_{xx} = \frac{1}{E_a} \overline{X}_x - \frac{\overline{\sigma}_{yx}}{E_b} \overline{Y}_y \tag{79}$$

$$e_{yy} = \frac{1}{E_b} \overline{Y}_y - \frac{\overline{\sigma}_{xy}}{E_a} \overline{X}_x \tag{80}$$

These equations show that E_a and E_b may be considered as approximate effective Young's moduli of a plywood plate in a state of plane stress under the action of forces in the plane of the plate. The corresponding effective Poisson's ratios are $\overline{\sigma}_{yx}$ and $\overline{\sigma}_{xy}$ as defined by (75) and (76).

More exact expressions for the effective moduli can be obtained from equations (63) and (68). Thus, to obtain $\overline{E}_x$, the effective Young's modulus in a direction parallel to the X-axis, let $\overline{Y}_y = 0$ in (68), solve the resulting equation for e_{yy} in terms of e_{xx} and substitute the result in (63). It is found that:

$$X_x = \frac{1}{h} \left[\Sigma \frac{(E_x)_i \, h_i}{\lambda_i} - \frac{\Sigma \dfrac{(E_x)_i \, (\sigma_{yx})_i \, h_i}{\lambda_i} \, \Sigma \dfrac{(E_y)_i \, (\sigma_{xy})_i \, h_i}{\lambda_i}}{\Sigma \dfrac{(E_y)_i \, h_i}{\lambda_i}} \right] e_{xx} \tag{81}$$

The coefficient of e_{xx} is the effective Young's modulus in a direction parallel to the X-axis. It agrees with the expression obtained by Price (14) for the "apparent Young's modulus" E_x for stretching. In like manner the effective Young's modulus in a direction parallel to the Y-axis can be obtained.

For rotary-cut plywood with all of its plies of the same species, the effective modulus $\overline{E}_x$ just defined by equation (81) reduces to the modulus $\overline{E}_x$ as defined in equation (59). A similar procedure could obviously be followed for plywood made of quarter-sliced veneers.

It is to be observed that the effective moduli and Poisson's ratios just obtained for a plywood plate are associated with the stretching, compression, or shearing of a plate in its plane and not with the bending of the

plate. Different effective moduli and Poisson's ratios are associated with the bending of a plate than with stretching or compression.

For the mean shear modulus we obtain from the relation

$$(X_y)_i = (\mu_{xy})_i \; e_{xy} \tag{82}$$

the following definition

$$\bar{\mu}_{xy} = \frac{\Sigma \, h_i \, (X_y)_i}{h e_{xy}} = \frac{\Sigma \, h_i \, (\mu_{xy})_i}{h_i} \tag{83}$$

From the effective values of the constants $\underline{E_a}$, $\underline{E_b}$, $\underline{\bar{\sigma}_{xy}}$, $\underline{\bar{\sigma}_{yx}}$, $\underline{\bar{\mu}_{xy}}$, the constants associated with any orientation of axes of a given sheet of plywood of symmetrical construction can be obtained by applying formulas (42) - (49).

Literature Cited

(1) Carrington, H.
1921. The Determination of Values of Young's Modulus and Poisson's Ratio by the Method of Flexures. Phil. Mag. 41(242):206-210, Feb. 1921.

(2) _____
1921. Moduli of Rigidity for Spruce. Phil. Mag. 41(246):848-860, June 1921.

(3) _____
1922. Young's Modulus and Poisson's Ratio for Spruce. Phil. Mag. 43:871-878, May 1922.

(4) _____
1923. Elastic Constants of Spruce. Phil. Mag. 45(269):1055-1057, May 1923.

(5) Freas, Alan D.
1956. The Bending Strength and Stiffness of Plywood. U. S. Forest Products Laboratory Report No. 1304, revised Sept. 1956.

(6) Hörig, H.
1931. Zur Elastizitat de Fichtenholzes. I. Folgerung aus Messunger von. H. Carrington on Spruce. Ztschr. fur Tech. Physik 12(8):369-379.

(7) _____
1935. Anwendung der Elastizitatstheorie Anesotroper Körper auf Nessungen an Holz. Ing. Archiv. 6:8-14.

(8) Jenkin, C. F.
1920. Report on Materials of Construction Used in Aircraft. Aeronautics Research Committee, London.

(9) Love, A. E. H.
1944. A Treatise on the Mathematical Theory of Elasticity. 4th edition, New York.

(10) March, H. W.
1942. Flat Plates of Plywood Under Uniform or Concentrated Loads. U.S. Forest Products Laboratory Report No. 1312, reviewed and reaffirmed March 1956.

(11) March, H. W.
1942. Supplement to Buckling of Flat Plywood Plates in Compression, Shear, or Combined Compression and Shear. U.S. Forest Products Laboratory Report No. 1316-B, reviewed and reaffirmed March 1956.

(12) _____
1953. Summary of Formulas for Flat Plates of Plywood Under Uniform or Concentrated Loads. U. S. Forest Products Laboratory Report No. 1300, reviewed and reaffirmed January 1953.

(13) _____
1942. Buckling of Flat Plywood Plates in Compression, Shear, or Combined Compression and Shear. U. S. Forest Products Laboratory Report No. 1316, reviewed and reaffirmed Feb. 1956.

(14) Price, A. T.
1928. A Mathematical Discussion on the Structure of Wood in Relation to Its Elastic Properties. Phil. Trans. 228(659): 1-62, Dec. 11, 1928.

(15) Riemann-Weber
Differentialgleichungen der Physik. Band II:600-610.

(16) Southwell, R. V.
1942. Introduction to the Theory of Elasticity for Engineers and Physicists. Revised edition, Oxford, Clarendon Press.

(17) Trefftz, E.
Handbuch der Physik. Band VI.

(18) U. S. Forest Products Laboratory
1943. Supplement to Buckling of Flat Plywood Plates in Compression, Shear, or Combined Compression and Shear. Report No. 1316-C, reviewed and reaffirmed March 1956.

(19) _____
1942. Specific Gravity-Strength Relations for Wood. Report No. 1301, reviewed and reaffirmed March 1956.

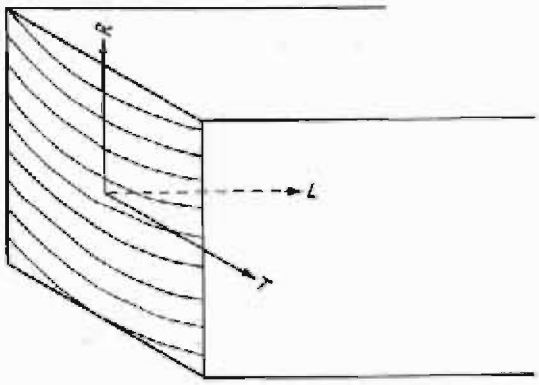

FIG. 1
THE THREE PRINCIPAL DIRECTIONS IN WOOD

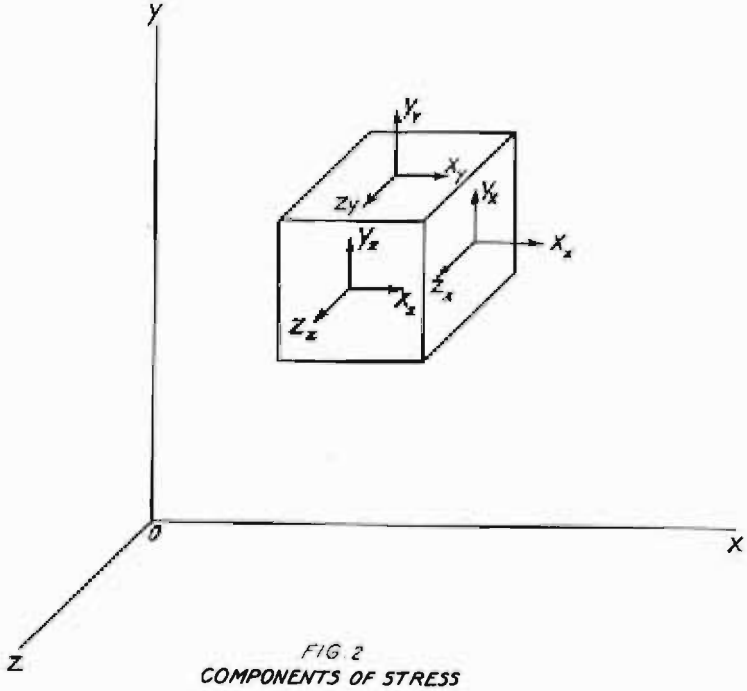

FIG 2
COMPONENTS OF STRESS

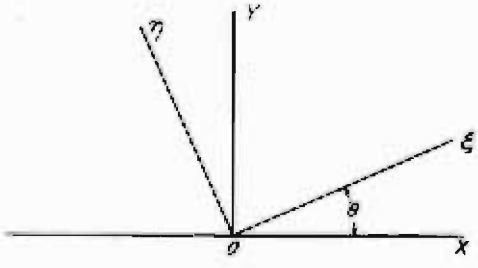

FIG.3
AXES INCLINED TO THE ORTHOTROPIC AXES OX AND OY