RESISTANCE TO FATIGUE STRESSING OF WOOD-TO-METAL JOINTS GLUED WITH SEVERAL TYPES OF ADHESIVES

Information Reviewed and Reaffirmed

July 1955

This Report is One of a Series Issued in Cooperation with the ARMY-NAVY-CIVIL COMMITTEE on AIRCRAFT DESIGN CRITERIA Under the Supervision of the AERONAUTICAL BOARD

No. 1545

UNITED STATES DEPARTMENT OF AGRICULTURE
FOREST SERVICE
FOREST PRODUCTS LABORATORY
Madison 5, Wisconsin
In Cooperation with the University of Wisconsin

RESISTANCE TO FATIGUE STRESSING OF WOOD-TO-METAL JOINTS GLUED WITH SEVERAL TYPES OF ADHESIVES[1]

By

H. W. EICKNER, Engineer
E. A. MRAZ, Technical Aid
H. D. BRUCE, Chemist

Introduction

The purpose of this study was to ascertain the resistance to fatigue stressing of wood-to-metal joints prepared with several adhesives commonly used for gluing wood to metal.

Lap-joint specimens prepared by gluing strips of metal to wood were stressed repeatedly with constant deflection in an electrically driven machine until each specimen had either failed or withstood 10 million vibrations without failure. The initial quality of the joints was estimated by testing some of the specimens in shear in a plywood testing machine and others by cantilever loading. The specimens and techniques were similar to those employed in the fatigue study of wood-to-wood joints discussed in Forest Products Laboratory Report No. 1539, "Resistance of Several Types of Glue in Wood Joints to Fatigue Stressing."

Materials

Specimens

The type of specimen used both in the fatigue tests and in the cantilever loading tests of this study is shown in figure 1. It consisted of a 1- by 5-inch piece of five-ply, 5/32-inch yellow birch plywood lap-jointed to a 1- by 2-1/2-inch piece of 3/16-inch aluminum. The grain direction of the face plies of the plywood was parallel to the length of the specimen. A kerf was cut through the plywood to the metal to leave 1/2 square inch of glue-joint area between the plywood and the aluminum for test. A 1/4-inch hole was bored 7/8 inch from the end of the plywood strip, as shown, to permit fastening it to the vibrating arm of the testing machine.

---

[1]This is one of a series of progress reports prepared by the Forest Products Laboratory relating to the use of wood in aircraft. Results here reported are preliminary and may be revised as additional data become available.

This type of specimen was also used for the shear tests by reducing its length to 3-1/4 inches, with the 1/2 square inch of glue-joint test area in the center, so that the specimen would fit in a plywood testing machine.

Glues

The following glues and combinations of glues were investigated in this study:

Gluing process	Glue symbol	Probable type
1	A	Hot-setting modified thermoplastic resin.
2	B_1	Hot-setting thermoplastic resin modified with thermosetting resin and pigment.
	B_2	Room-temperature-setting resorcinol resin.
3	C	Hot-setting mixture of thermosetting resin and synthetic rubber.
4	D_1	Hot-setting mixture of thermosetting resin and synthetic rubber.
	D_2	Intermediate-temperature-setting acid-catalyzed phenol resin.
5	E_1	Hot-setting mixture of thermosetting resin and synthetic rubber.
	E_2	Room-temperature-setting resorcinol resin.
6	F_1	Thermosetting combination of synthetic rubber and plastics.
	F_2	Modified low pressure thermoplastic resin.
7	G	Hot-setting, two-component adhesive of liquid thermosetting resin and thermoplastic powder.

Procedure

Gluing Conditions

Preparation of material.--The yellow birch plywood was of aircraft grade, bonded with phenol-formaldehyde film glue in a hot press. It was conditioned for at least 1 week at 80° F. and 65 percent relative humidity and lightly sanded with No. 0 sandpaper before it was glued to the metal.

The sheet aluminum was cut into pieces 1 by 2-1/2 inches in size, and all burrs were removed. The pieces were cleaned and etched by immersion for

about 15 minutes at 150° to 160° F. in a bath of the following composition: 10 parts by weight of concentrated sulfuric acid, 1 part of sodium dichromate, and 30 parts of distilled water. After etching, each peice was rinsed successively in cold water, boiling water, and acetone, and then allowed to dry in the air.

The specimens were prepared in panel form by gluing the small aluminum pieces onto 5-1/2- by 8-inch sheets of plywood. At least three panels were prepared with each glue. Six specimens were cut from each panel. Of these, one was selected at random for a tension shear test, one for a cantilever dead-load test, and four for fatigue tests.

Gluing Process 1.--The commercially formulated wood-to-metal glue, A, was thinned with an equal volume of ethyl acetate, and three coats were applied by brush to each surface to be jointed, with about 1 hour allowed for air drying between applications. After an open assembly period of 16 hours after the last coat, the joints were assembled, precured for 15 minutes at 320° F., and then pressed under a pressure of 300 pounds per square inch for 15 minutes more at 320° F.

Gluing Process 2.--The metal-priming adhesive, B_1, was thinned with two volumes of a thinner distributed by its manufacturer to one of the adhesives, and four coats were sprayed onto the metal, with a 5- to 10-minute drying period between coats. After air-drying for 16 hours after the last coat, the glue was baked on the metal for 30 minutes at 310° F. The thickness of the dry film of the glue was about 0.003 inch. Before assembling the joint, the baked film was lightly sanded with No. 1/2 emery cloth, and a medium coat of the resorcinol resin glue, B_2, was applied by brush to both the primary glue and the birch plywood. Closed assembly period of 10 minutes was allowed, after which the joints were pressed at a pressure of 150 pounds per square inch for 16 hours at 75° to 80° F.

Gluing Process 3.--One volume of the commercial wood-to-metal brush cement, C, was thinned with 0.8 volume of the manufacturer's recommended solvent, and six coats were applied by spraying, two passes per coat, to the metal and to the wood; about 5 minutes was allowed for drying between coats. In this way a film about 0.002 inch in thickness when dry was deposited on each surface. After it was dried at room temperature for 16 hours, the film was baked in an oven at 180° F. for 45 minutes. The joint was then assembled and cured at 320° F. for 25 minutes under a pressure of 300 pounds per square inch.

Gluing Process 4.--Glue D_1, identical to glue C, was thinned, applied to the metal, and dried at room temperature as for the direct process described in the preceding paragraph, then baked in an oven for 20 minutes at 325° F. The priming film was lightly sanded with No. 320A sandpaper to remove surface irregularities and coated by brushing with a medium spread of glue D_2, an intermediate-temperature-setting phenol resin, prepared with 6 parts by weight of acid catalyst per 100 parts of resin. A thin coat of a commercial sizing resin was applied to the plywood face. After an open assembly period of 24 hours for the sizing resin and 3 hours for the glue, the joints were assembled and cured for 2 hours at 220° F. under a pressure of 150 pounds per square inch.

Gluing Process 5.--The metal was primed with glue E_1, identical with glues C and D_1, in the same manner as described in the preceding paragraph. A medium spread of the resorcinol-resin glue, E_2, identical with glue B_2, was then applied to both the baked priming film and the plywood. The joints were assembled and, after a closed assembly period of 10 minutes, were pressed at a pressure of 150 pounds per square inch for 16 hours at 75° to 80° F.

Gluing Process 6.--The commercial wood-to-metal glue, F_1, was sprayed onto the metal in 10 double passes. A 10-minute flash-off period was allowed between coats, and the last coat was allowed to air-dry for 3 hours before assembly. The final dry film thickness was about 0.003 inch. Two thin coats of glue F_2, supplied by the same manufacturer, were applied by brushing to the wood, with a 10-minute period between coats and about 3 hours air-drying before assembly to the primed metal. The joint was then cured for 35 minutes at 340° F. under a pressure of 150 pounds per square inch.

Gluing Process 7.--The commercial wood-to-metal glue, G, is furnished in two parts by the manufacturer, a liquid resin and a powder. A medium coat of the liquid resin was spread by brush on the metal and on the wood. Immediately after each metal strip was spread, the powdered resin was liberally sprinkled onto the liquid coating the metal surface. After 16 hours of open assembly, the joint was assembled and cured under a pressure of 300 pounds per square inch for 15 minutes at 320° F.

Conditioning

After the panels were prepared as described in the foregoing paragraphs they were conditioned for at least 1 week at 65 percent relative humidity and 80° F.

Testing

For shear tests, lap joint specimens, prepared as previously described, were cut to 3-1/4 inches in length and tested in shear in a standard plywood testing machine, loading at a rate of 700 to 800 pounds per minute, in a room at 75° to 80° F.

For the cantilever load tests, the thick end of the specimen was clamped in the stationary grips of the fatigue machine, and the clamp with pin connection for the vibrating arm was attached to the thin end (fig. 2). Weights, in 1-pound increments, were suspended from the pin (A) at the free end of the specimen and increased until the specimen failed.

Fatigue-testing machines of the constant,deflection type (fig. 3) operating at 1,790 deflections per minute were used. The machines were provided with automatic counters and precision switches, which shut off the current to the motor whenever a specimen broke. The specimen was placed in the machine as shown in figure 2. The machine was so adjusted that the motion was a repeated stress cycle as indicated in the figure; that is, the deflection was

always to the tension side of the neutral point of zero stress in the glue line and never to the side at which the glue line would have been under compression. The test machines were operated in a room at 75° F.

Results of preliminary fatigue tests indicated that a load of 6 pounds, suspended from the pin (A) in figure 2, was slightly below that required to stress the plywood to its elastic limit and produced a deflection that caused joints glued by process 1 to fail after a convenient number of repeated deflections. In each individual determination the test specimen was clamped in the jaws; a load of 6 pounds suspended from the pin (A), and the deflection of the specimen measured by a dial gauge temporarily mounted near the end of the specimen as shown in figure 2. The machine was then adjusted to produce this downward deflection and the specimen vibrated to failure or through 10 million vibrations.

Discussion and Results

The results of the shear and cantilever load tests on glued wood-to-metal specimens are given in table 1. Although there was variation in the test values, all the panels appeared acceptable as judged from the joint strengths or the percentages of wood failure in each test.

The results of the fatigue tests are given in table 2. The joints of wood to metal made by processes 3 and 6 showed best resistance to fatigue stressing. Only 1 specimen glued with each of these 2 glues broke before the tests were stopped at 10 million vibrations. Six of the 14 specimens glued by process 7 withstood 10 million vibrations without breaking, and all but 1 of the remaining specimens withstood 4 to 10 million vibrations before failing. The wood-to-metal joints glued by processes 1, 4, and 5 were less resistant to fatigue than those glued by processes 3, 6, and 7, with most of the specimens failing before being stressed to 8 million vibrations. The specimens glued by process 2 had the least resistance to fatigue, with 11 of 13 specimens tested breaking when vibrated less than 4 million times.

The relative order of resistance to fatigue of the wood-to-metal joint bonded with the seven different processes tested in this study was as follows:

1
2 - processes 3 and 6
3 - process 7
4
5 - processes 1, 4, and 5
6
7 - process 2

Table 1.--Results of shear and cantilever load tests on individual wood-to-metal joints prepared with several processes

Process	Shear test results		Cantilever test results	
	Failing load	Wood failure	Failing load	Wood failure
	Lb. per 1/2 sq. in.	Percent	Pounds	Percent
1	1,360	90	15	75
	1,290	100	12	90
	1,370	90	14	80
2	1,250	90	11	75
	1,070	75	10	25
	1,020	50	12	50
3	1,245	10	17	70
	1,210	65	16	80
	910	25	15	80
4	910	65	13	50
	905	55	13	50
	980	80	15	60
	1,030	100	15	65
5	770	45	12	40
	780	5	13	35
	690	65	13	50
6	820	40	14	65
	900	30	14	85
	900	80	15	80
7	920	100	12	90
	700	100	12	90
	550	100	12	85

Table 2.--Results of fatigue tests on glued joints between 3/16-inch aluminum and 5/32-inch birch plywood

Number of vibrations to failure	Wood failure	Number of vibrations to failure	Wood failure	Number of vibrations to failure	Wood failure	Number of vibrations to failure	Wood failure
	Percent		Percent		Percent		Percent
Process 1		Process 2		Process 3		Process 4	
7,758,000	90	5,464,200	45	Over 10,000,000	---	13,941,800	40
7,725,900	20	4,508,100	80	Over 10,000,000	---	7,643,400	40
7,610,700	30	3,881,800	40	Over 10,000,000	---	7,157,700	30
7,166,200	80	3,276,600	25	Over 10,000,000	---	7,081,200	15
5,115,300	100	2,713,100	30	Over 10,000,000	---	6,841,900	40
4,822,300	70	2,392,600	35	Over 10,000,000	---	6,086,900	20
4,475,800	35	2,185,100	30	Over 10,000,000	---	5,245,500	25
4,034,400	80	2,155,600	25	Over 10,000,000	---	4,029,300	25
3,553,400	75	2,089,700	50	Over 10,000,000	---	3,131,300	25
3,253,200	25	1,853,400	30	Over 10,000,000	---	2,731,100	10
2,751,000	80	1,510,300	15	Over 10,000,000	---	2,547,200	15
2,269,000	35	657,900	25	6,250,300	90	2,539,200	30
1,618,300	40	141,000	20			2,041,900	30
1,409,000	85					2,030,400	30
						2,022,700	20
						1,730,500	15
Av. 4,540,200	60	2,525,300	35			4,800,100	25
Process 5		Process 6		Process 7			
10,582,900	60	Over 10,000,000	---	Over 10,000,000	---		
6,588,100	20	Over 10,000,000	---	Over 10,000,000	---		
5,175,100	10	Over 10,000,000	---	Over 10,000,000	---		
5,017,200	0	Over 10,000,000	---	Over 10,000,000	---		
4,322,600	0	Over 10,000,000	---	Over 10,000,000	---		
4,287,000	0	Over 10,000,000	---	Over 10,000,000	---		
2,590,700	0	Over 10,000,000	---	8,427,600	35		
2,547,200	0	Over 10,000,000	---	8,257,800	100		
1,938,300	0	Over 10,000,000	---	6,648,900	85		
1,502,600	0	Over 10,000,000	---	6,484,800	90		
350,800	0	Over 10,000,000	---	6,159,500	90		
		Over 10,000,000	---	5,139,500	85		
		Over 10,000,000	---	4,217,600	80		
		5,884,700	40	1,642,800	25		
Av. 4,082,000	8						

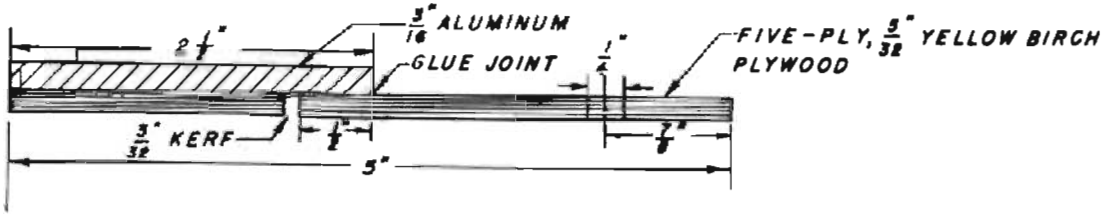

Figure 1.--Glued wood-to-metal specimen for fatigue testing.

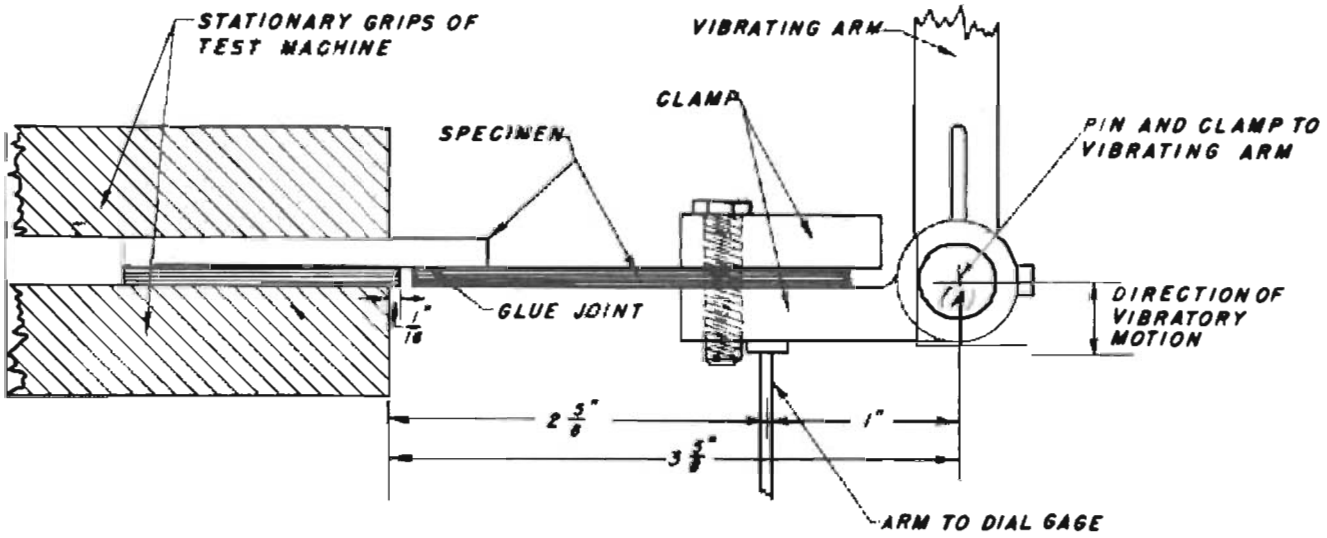

Figure 2.--Glued wood-to-metal specimen with fatigue-test machine attachments.

Z M 68068 F

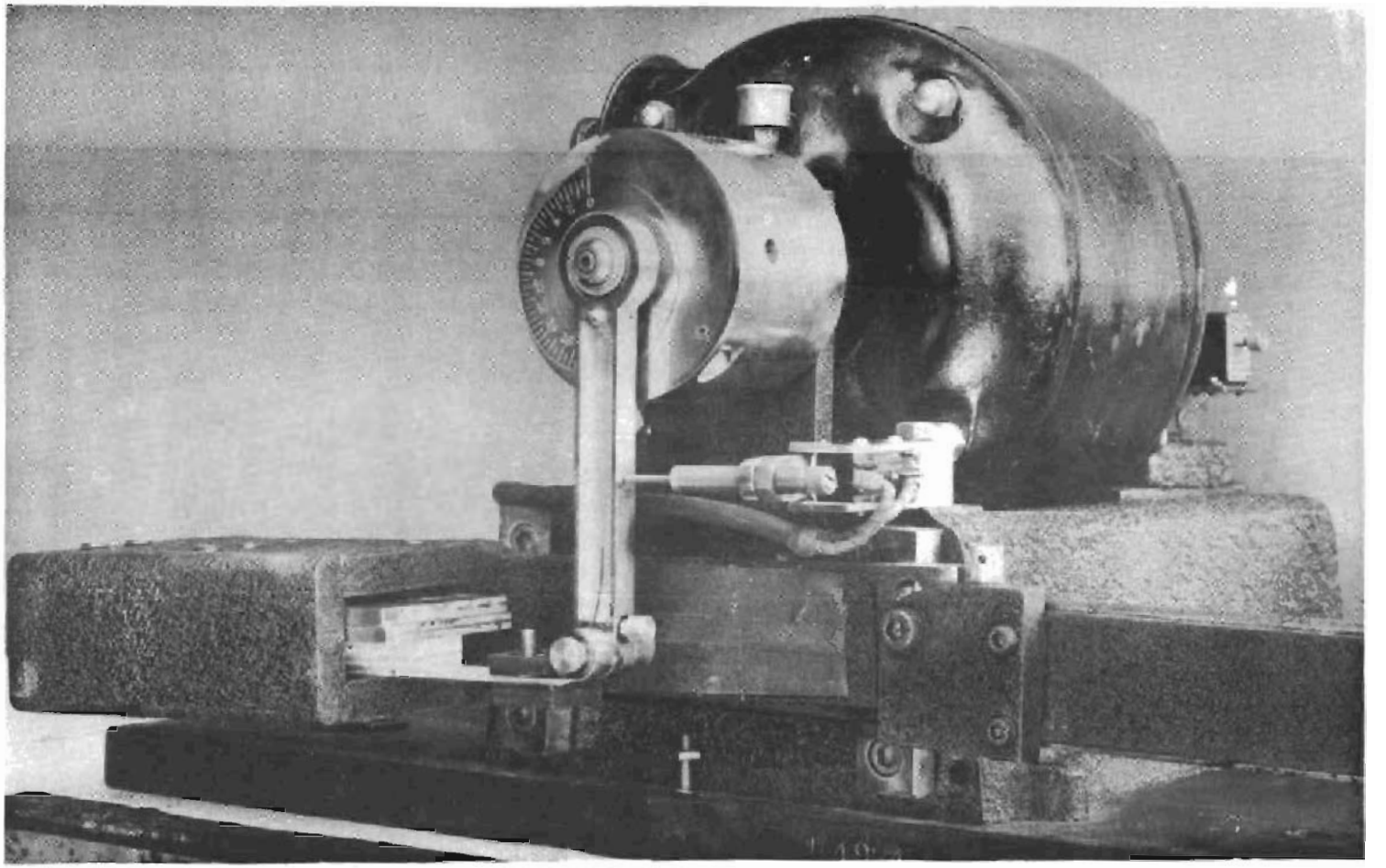

Figure 3.--Fatigue-test machine showing specimen mounted for testing. The eccentric vernier will be set to the proper position to provide the desired deflection before starting the machine.

Z M 65995 F