General Disclaimer

One or more of the Following Statements may affect this Document

- This document has been reproduced from the best copy furnished by the organizational source. It is being released in the interest of making available as much information as possible.

- This document may contain data, which exceeds the sheet parameters. It was furnished in this condition by the organizational source and is the best copy available.

- This document may contain tone-on-tone or color graphs, charts and/or pictures, which have been reproduced in black and white.

- This document is paginated as submitted by the original source.

- Portions of this document are not fully legible due to the historical nature of some of the material. However, it is the best reproduction available from the original submission.

Produced by the NASA Center for Aerospace Information (CASI)

JPL Publication 85-7

(NASA-CR-175649) PERIODIC BINARY SEQUENCE GENERATORS: VLSI CIRCUITS CONSIDERATIONS (Jet Propulsion Lab.) 200 p HC A09/MF A01 CSCL 09C
N85-22886
Unclas
G3/33 14806

Periodic Binary Sequence Generators: Very Large Scale Integrated (VLSI) Circuits Considerations

Marvin Perlman

MAY 1985
RECEIVED
NASA STI FACILITY
ACCESS DEPT.

December 1984

NASA
National Aeronautics and Space Administration

Jet Propulsion Laboratory
California Institute of Technology
Pasadena, California

JPL Publication 85-7

Periodic Binary Sequence Generators: Very Large Scale Integrated (VLSI) Circuits Considerations

Marvin Perlman

December 1984

NASA
National Aeronautics and Space Administration

Jet Propulsion Laboratory
California Institute of Technology
Pasadena, California

The research described in this publication was carried out by the Jet Propulsion Laboratory, California Institute of Technology, under contract with the National Aeronautics and Space Administration, NASA Task RE-210.

ABSTRACT

Feedback shift registers have proven to be efficient periodic binary sequence generators. Polynomials of degree r over a Galois field characteristic 2 (GF(2)) characterize the behavior of shift registers with linear-logic feedback.

The object of this report is the algorithmic determination of the trinomial of lowest degree, when it exists, that contains a given irreducible polynomial over GF(2) as a factor. This corresponds to embedding the behavior of an r-stage shift register with linear-logic feedback into that of an n-stage shift register with a single two-input modulo 2 summer (i.e., Exclusive-OR gate) in its feedback. This leads to Very Large Scale Integrated (VLSI) circuit architecture of maximal regularity (i.e., identical cells) with intercell communications serialized to a maximal degree.

ACRONYMS

Cp	clock pulse
CP	Compatible Pair
CPI	Clock Pulse Interval
FSR	Feedback Shift Register
GF	Galois Field
ISFSR	shift register with interstage feedback
LCM	Least Common Multiple
MOSFET	Metal-Oxide-Semiconductor Field-Effect Transistor
NMOS	N Channel Metal-Oxide Semiconductor
PN	Pseudonoise
SSFSR	shift register with single stage feedback
VLSI	Very Large Scale Integrated circuits

PRECEDING PAGE BLANK NOT FILMED

CONTENTS

I. BACKGROUND 1-1

II. GENERATORS OF PERIODIC BINARY SEQUENCES 2-1

A. FEEDBACK SHIFT REGISTERS 2-1

B. FEEDBACK SHIFT REGISTERS CHARACTERIZED BY RECURRENCE RELATIONS 2-8

III. AN ISOMORPHISM BETWEEN THE STATES OF AN r-STAGE SSFSR AND AN r-STAGE ISFSR 3-1

IV. THE EXISTENCE AND ALGORITHMIC DETERMINATION OF A TRINOMIAL OF LEAST DEGREE THAT CONTAINS A GIVEN IRREDUCIBLE POLYNOMIAL OVER GF(2) AS A FACTOR 4-1

A. PRIMITIVE POLYNOMIALS OVER GF(2) 4-1

B. IRREDUCIBLE NONPRIMITIVE POLYNOMIALS OVER GF(2) 4-33

V. VERY LARGE SCALE INTEGRATED CIRCUIT CONSIDERATIONS 5-1

VI. SUMMARY 6-1

VII. REFERENCES 7-1

APPENDIXES

A. NUMBER-THEORETIC FUNCTIONS A-1

B. TRINOMIAL OF LEAST DEGREE THAT CONTAINS A GIVEN PRIMITIVE POLYNOMIAL OF DEGREE r OVER GF(2) AS A FACTOR . . B-1

C. TRINOMIAL OF LEAST DEGREE THAT CONTAINS A GIVEN IRREDUCIBLE NONPRIMITIVE POLYNOMIAL OF DEGREE r OVER GF(2) AS A FACTOR C-1

PRECEDING PAGE BLANK NOT FILMED

Figures

2-1. Functional Logic Diagram of a Feedback Shift Register that Performs Multiplication by α Modulo $\alpha^6 + \alpha^5 + \alpha^2 + \alpha + 1$ 2-2

2-2. Functional Logic Diagram of a Feedback Shift Register that Performs Division by α Modulo $\alpha^6 + \alpha^5 + \alpha^2 + \alpha + 1$ 2-4

2-3. Functional Logic Diagram of an r-stage Shift Register with Linear Logic Feedback (SSFSR) 2-9

3-1. A 4-Stage SSFSR and a 4-Stage ISFSR with Isomorphic State Spaces 3-5

3-2. The One-to-One Correspondence Between $d_{k-1}d_{k-2}d_{k-3}$ and $b_2y^2 + b_1y + 1$ 3-19

3-3. An SSFSR and its Corresponding ISFSR of Identical Complexity 3-37

4-1. (a) A 31-bit PN Sequence, (b) its Run Length Properties, (c) Closure Illustrated in the Isomorphic Abelian Group . . 4-6

5-1. Master-Slave O-Enable JK Flip-Flop 5-2

5-2. NMOS Circuit of a Static O-Enable JK Flip-Flop 5-7

5-3. A Functional Logic Diagram of a n-Stage SSFSR Characterized by $X^n + X^a + 1$ 5-8

Tables

1-1. $GF(2^6)$ Generated by α, a Root of $f(x) = x^6 + x^5 + x^2 + x + 1$, with α^* Adjoined 1-3

1-2. Irreducible Factors of $x^{2^6-1} - 1$ Over GF(2) 1-8

1-3. Elements Generated by β, a Root of $f(x) = x^6 + x^5 + x^4 + x^2 + 1$ 1-10

1-4. Irreducible Factors of $x^{21} - 1$ Over GF(2) 1-12

1-5. Irreducible Self-Reciprocal Factors of $X^{513} - 1$ Over GF(2) Enumerated by the Order of their Roots and their Degree 1-19

2-1. Equal Length FSR Cycles of (nonzero) States Corresponding to the Decomposition of a Multiplicative Group into a Cyclic Subgroup $\{\beta^i\}$ and Cosets $\{\gamma\beta^j\}$ and $\{\delta\beta^k\}$ 2-7

2-2. State Table of a 7-Stage SSFSR and Components of a Decomposition for $f(x) = 1 + x + x^3 + x^4 + x^7 = (1 + x^2 + x^3)(1 + x + x^2 + x^3 + x^4)$ 2-21

2-3. Initial States of a 7-Stage SSFSR that Map onto a g(x) Containing $x^4 + x^3 + x^2 + x + 1$ as a Factor 2-28

3-1. The One-to-One Correspondence Between the States of an SSFSR and the g(x) Polynomials 3-2

3-2. Cycle Structure and Isomorphism of SSFSR and ISFSR States Whose Respective Next State Transformations are Affine . . . 3-23

4-1 A 63-State Cycle Associated with $x^6 + x^5 + x^2 + x + 1$ a Factor of $x^{11} + x^8 + 1$ 4-18

SECTION I

BACKGROUND

The root α of a primitive polynomial f(x) is a generator of the cyclic group

$$\alpha, \alpha^2, \ldots, \alpha^{2^r-2}, \alpha^{2^r-1} = 1$$

The $2^r - 1$ elements of the multiplicative group with the element 0 adjoined are members of a Galois Field of order 2^r (i.e., $GF(2^r)$). The elements 0 and 1 comprise GF(2), a subfield of $GF(2^r)$, and $GF(2^r)$ is a finite extension of GF(2).

Each element in $GF(2^r)$ satisfies

$$x^{2^r} - x = x(x^{2^r-1} - 1) = 0$$

The element 0 satisfies x = 0 and each of the nonzero elements satisfies

$$x^{2^r-1} - 1 = 0$$

Example 1

Consider the primitive polynomial GF(2)

$$f(x) = x^6 + x^5 + x^2 + x + 1$$

with one of 6 distinct roots denoted by α. Every nonzero element in $GF(2^6)$ is expressible as an integer power of α.

$$\alpha^j = b_5\alpha^5 + b_4\alpha^4 + b_3\alpha^3 + b_2\alpha^2 + b_1\alpha + b_0$$

where $b_i \in GF(2)$ and α^j is among the $2^r - 1$ roots of unity. The polynomial in α is of degree 5 or less since

$$\alpha^6 = \alpha^5 + \alpha^2 + \alpha + 1$$

The element 0 is the constant zero polynomial denoted by

$$\alpha^* = 0 \cdot \alpha^5 + 0 \cdot \alpha^4 + \ldots + 0$$

Members of $GF(2^6)$, generated by α with α^* adjoined, appear in Table 1-1.

The binary operation of "addition" defined on the field elements is termwise sum modulo 2 (i.e., vector addition over GF(2)).

For example,

$$\begin{array}{rl} 1\,1\,1\,1\,0\,0 & (\alpha^{14}) \\ +\ 1\,1\,0\,1\,1\,1 & (\alpha^{54}) \\ \hline 0\,0\,1\,0\,1\,1 & (\alpha^{19}) \end{array}$$

The binary operation of "multiplication" on the field elements is defined as

$$(b_5\alpha^5 + b_4\alpha^4 +, \ldots , + b_0)\ (d_5\alpha^5 + d_4\alpha^4 +, \ldots , + d_0)$$

with the result reduced modulo

$$f(\alpha) = \alpha^6 + \alpha^5 + \alpha^2 + \alpha + 1$$

Since each element is expressible as a power of α,

$$\alpha^i\alpha^j = \alpha^{(i + j) \bmod 63}$$

Table 1-1. $GF(2^6)$ Generated by α, a Root of $f(x) = x^6 + x^5 + x^2 + x + 1$, with α^* Adjoined

i of α^i	b_5	b_4	b_3	b_2	b_1	b_0	i of α^i	b_5	b_4	b_3	b_2	b_1	b_0
*	0	0	0	0	0	0	31	0	0	1	1	1	0
							32	0	1	1	1	0	0
0	0	0	0	0	0	1	33	1	1	1	0	0	0
1	0	0	0	0	1	0	34	0	1	0	1	1	1
2	0	0	0	1	0	0	35	1	0	1	1	1	0
3	0	0	1	0	0	0	36	1	1	1	0	1	1
4	0	1	0	0	0	0	37	0	1	0	0	0	1
5	1	0	0	0	0	0	38	1	0	0	0	1	0
6	1	0	0	1	1	1	39	1	0	0	0	1	1
7	1	0	1	0	0	1	40	1	0	0	0	0	1
8	1	1	0	1	0	1	41	1	0	0	1	0	1
9	0	0	1	1	0	1	42	1	0	1	1	0	1
10	0	1	1	0	1	0	43	1	1	1	1	0	1
11	1	1	0	1	0	0	44	0	1	1	1	0	1
12	0	0	1	1	1	1	45	1	1	1	0	1	0
13	0	1	1	1	1	0	46	0	1	0	0	1	1
14	1	1	1	1	0	0	47	1	0	0	1	1	0
15	0	1	1	1	1	1	48	1	0	1	0	1	1
16	1	1	1	1	1	0	49	1	1	0	0	0	1
17	0	1	1	0	1	1	50	0	0	0	1	0	1
18	1	1	0	1	1	0	51	0	0	1	0	1	0
19	0	0	1	0	1	1	52	0	1	0	1	0	0
20	0	1	0	1	1	0	53	1	0	1	0	0	0
21	1	0	1	1	0	0	54	1	1	0	1	1	1
22	1	1	1	1	1	1	55	0	0	1	0	0	1
23	0	1	1	0	0	1	56	0	1	0	0	1	0
24	1	1	0	0	1	0	57	1	0	0	1	0	0
25	0	0	0	0	1	1	58	1	0	1	1	1	1
26	0	0	0	1	1	0	59	1	1	1	0	0	1
27	0	0	1	1	0	0	60	0	1	0	1	0	1
28	0	1	1	0	0	0	61	1	0	1	0	1	0
29	1	1	0	0	0	0	62	1	1	0	0	1	1
30	0	0	0	1	1	1							

Logarithms of field elements to the base α are provided by Table 1-1 to simplify multiplication of nonzero elements as follows:

$$\begin{array}{rl} \alpha^{49} & (1\ 1\ 0\ 0\ 0\ 1) \\ \alpha^{34} & (0\ 1\ 0\ 1\ 1\ 1) \\ \hline \alpha^{34}\,\alpha^{49} = \alpha^{20} & (0\ 1\ 0\ 1\ 1\ 0) \end{array}$$

The (multiplicative) order of a nonzero element α in $GF(2^r)$ is the least integer m for which $\alpha^m = 1$. Furthermore, m divides $2^r - 1$, the order of the multiplicative group, in accordance with a corollary of a fundamental theorem due to Lagrange (see Reference 1).

As presented in Reference 2, consider the operation σ which squares each of the roots of

$$g(x) = \prod_{i=1}^{r}(x - \alpha^i)$$

any polynomial of degree r over GF(2). Noting that

$$-1 \equiv 1 \bmod 2 \text{ and } (a + b)^2 = a^2 + b^2 \text{ over } GF(2),$$

then

$$[g(x)] = \prod_{i=1}^{r}(x - \alpha_i^2) = \prod_{i=1}^{r}(t^2 - \alpha_i^2)$$

$$= \prod_{i=1}^{r}(t - \alpha_i)^2 = \left[\prod_{i=1}^{r}(t - \alpha_i)\right]^2$$

$$= [g(t)]^2 = g(t^2) = g(x)$$

The substitution $t^2 = x$ is appropriately employed in proving that $g(x)$ over GF(2) is invariant under the operation σ. The root-squaring operation σ on $g(x)$ which leaves $g(x)$ unchanged is termed an <u>automorphism</u>. If in particular $g(x)$ of degree r is irreducible, then $g(x)$ has the following r distinct automorphisms:

$$1, \sigma, \sigma^2, \ldots, \sigma^{r-1}$$

with respect to $GF(2^r)$. An operation on a root of $g(x)$ is an automorphism if and only if it is an integer power of σ, the root-squaring operation. Consequently, $g(x)$ has r distinct roots, namely,

$$\alpha, \alpha^2, \alpha^{2^2}, \ldots, \alpha^{2^{r-1}}$$

Since σ^r maps α into α^{2^r} and $\alpha^{2^r} = \alpha$ (from $\alpha^{2^r-1} = 1$), σ^r is the identity operation.

The product of all irreducible polynomials over GF(2) whose degrees divide r is $x\, x^{2^r} - x$. Complete factorization is best illustrated by arranging the $2^r - 1$ roots of unity into <u>cyclotomic cosets</u> (see References 2 and 3). Given a primitive polynomial $f(x)$ of degree r over GF(2). Each distinct root is of order $2^r - 1$, hence, a primitive root of unity.

A fundamental property associated with the multiplicative order of field elements is as follows:

If β has order m, then

$$\beta^j \text{ has order } m/(m,j)$$

where (m,j) denotes the <u>greatest common divisor</u> of m and j. Clearly m and $m/(m,j)$ divide $2^r - 1$, the number of nonzero elements in $GF(2^r)$. The integer (m,j) is called the <u>index</u> of the order of β^j. A primitive r^{th} .

degree polynomial has α, a primitive root of unity, as a root. Each of the r roots has order $2^r - 1$ since $(2^r - 1, 2^i) = 1$ for all i.

The set of integers

$$\{i\} = \{1, 2, 4, \ldots, 2^{r-1}\}$$

taken from the multiplicative group of integers modulo $2^r - 1$ form a subgroup. The corresponding set

$$\{\alpha^i\} = \{\alpha, \alpha^2, \alpha^2, \ldots, \alpha^{2^{r-1}}\}$$

contains the r distinct roots of f(x). The "generalized cosets"

$$\{iv\} = \{v, 2v, 4v, \ldots, (2^r - 1)v\}$$

are nonoverlapping sets which together with the subgroup $\{i\}$, the special coset where v = 1, comprise the multiplicative group modulo $2^r - 1$. If $(2^r - 1, v) = 1$, then $\{iv\}$ is a coset as defined in group theory. The elements of such a coset correspond to r $(2^r - 1)$st primitive roots of unity whose <u>minimal polynomial</u> is a primitive polynomial over GF(2) (see Reference 4). There are $\varphi(2^r - 1)/r$ such cosets (including the subgroup) and, therefore, $\varphi(2^r - 1)/r$ primitive polynomials of degree r over GF(2). The number-theoretic function $\varphi(m)$, known as the Euler phi-function, is the number of positive integers no greater than m (a positive integer) that are relatively prime to m (see Appendix A). The integers a and m are termed relatively prime if (a, m) = 1.

An "improper coset" results for values of v where $(2^r - 1, v) \neq 1$. If such a coset contains r distinct elements, the elements correspond to r $(2^r - 1)$st nonprimitive roots of unity whose minimal polynomial is an irreducible nonprimitive rth degree polynomial over GF(2). Whereas the elements of a coset containing $s < r$ distinct elements (where s necessarily divides r) correspond to s $(2^s - 1)$st roots of unity whose minimal polynomial is an irreducible polynomial of degree s over GF(2).

The product of the minimal polynomials associated with each of the cyclotomic cosets (i.e., generalized cosets which include improper cosets) yields $x^{2^r-1} - 1$. The set of minimal polynomials is comprised of <u>all irreducible polynomials</u> over GF(2) whose <u>degrees divide r</u>.

<u>Example 2</u>

The irreducible factors of $x^{2^6-1} - 1$ over GF(2) are given in Table 1-2. The 63 roots of unity are generated by α, a root of

$$F(x) = x^6 + x^5 + x^2 + x + 1$$

Consider the conjugate roots (i.e., roots of the same minimal polynomial)

$$\alpha^3, \alpha^6, \ldots, \alpha^{33}$$

corresponding to the cyclotomic coset

$$\left\{1\cdot 3,\ 2\cdot 3,\ \ldots,\ 2^5\cdot 3\right\} \bmod 63 = \left\{3,\ 6,\ \ldots,\ 33\right\}$$

The minimal polynomial for these roots is determined as follows:

$$f(\alpha^3) = (\alpha^3)^6 + d_5(\alpha^3)^5 + d_4(\alpha^3)^4 + d_3(\alpha^3)^3 + d_2(\alpha^3)^2 + d_1(\alpha^3) + 1 = 0$$

$$= \alpha^{18} + d_5\alpha^{15} + d_4\alpha^{12} + d_3\alpha^9 + d_2\alpha^6 + d_1\alpha^3 + 1 = 0$$

Substituting entries in Table 1-1 corresponding to the foregoing powers of α gives

Table 1-2. Irreducible Factors of $x^{2^6-1} - 1$ Over GF(2)

Cyclotomic Coset	Minimal Polynomial f(x)	Degree	Index	Order of Roots of f(x)
0	$x + 1$	1	63	1
1 2 4 8 16 32	$x^6 + x^5 + x^2 + x + 1$	6	1	63
3 6 12 24 48 33	$x^6 + x^5 + x^4 + x^2 + 1$	6	3	21
5 10 20 40 17 34	$x^6 + x^5 + x^3 + x^2 + 1$	6	1	63
7 14 28 56 49 35	$x^6 + x^3 + 1$	6	7	9
9 18 36	$x^3 + x + 1$	3	9	7
11 22 44 25 50 37	$x^6 + x^5 + 1$	6	1	63
13 26 52 41 19 38	$x^6 + x + 1$	6	1	63
15 30 60 57 51 39	$x^6 + x^4 + x^2 + x + 1$	6	3	21
21 42	$x + x + 1$	2	21	3
23 46 29 58 53 43	$x^6 + x^4 + x^3 + x + 1$	6	1	63
27 54 45	$x^3 + x^2 + 1$	3	9	7
31 62 61 59 55 47	$x^6 + x^5 + x^4 + x + 1$	6	1	63

$$
\begin{array}{ll}
 & [\,1\;1\;0\;1\;1\;0\,] \\
+\,d_5 & [\,0\;1\;1\;1\;1\;1\,] \\
+\,d_4 & [\,0\;0\;1\;1\;1\;1\,] \\
+\,d_3 & [\,0\;0\;1\;1\;0\;1\,] \\
+\,d_2 & [\,1\;0\;0\;1\;1\;1\,] \\
+\,d_1 & [\,0\;0\;1\;0\;0\;0\,] \\
+ & [\,0\;0\;0\;0\;0\;1\,] \\
\hline
= & [\,0\;0\;0\;0\;0\;0\,]
\end{array}
$$

The scalar multipliers, d_1 through d_5, are elements in GF(2). They represent unknowns in determining the linearly independent set of polynomials (i.e., field elements). In this example,

$$d_5 = d_4 = d_2 = 1 \text{ and } d_3 = d_1 = 0$$

The minimal polynomial containing α^3 as a root (as well as α^6, ... , α^{33}) is

$$x^6 + x^5 + x^4 + x^2 + 1$$

The order of α^3 (and its conjugates) is 21. Thus, α^3 is a generator of 21 of the 63 roots of $x^{63} - 1 = 0$ and is a nonprimitive root of unity. The minimal polynomial is, therefore, an irreducible nonprimitive polynomial of degree 6.

The 21 elements generated by $\beta \longleftrightarrow \alpha^3$ are tabulated in Table 1-3 where

$$\beta^6 = \beta^5 + \beta^4 + \beta^2 + 1$$

A one-to-one correspondence exists between β^i and α^{3i} (see Table 1-1). Furthermore,

$$\beta^i \beta^j = \beta^{(i+j) \bmod 21} \longleftrightarrow \alpha^{3(i+j) \bmod 63} = \alpha^{3i}\alpha^{3j}$$

Table 1-3. Elements Generated by β, a Root of $f(x) = x^6 + x^5 + x^4 + x^2 + 1$

i of β^i	c_5	c_4	c_3	c_2	c_1	c_0
0	0	0	0	0	0	1
1	0	0	0	0	1	0
2	0	0	0	1	0	0
3	0	0	1	0	0	0
4	0	1	0	0	0	0
5	1	0	0	0	0	0
6	1	1	0	1	0	1
7	0	1	1	1	1	1
8	1	1	1	1	1	0
9	0	0	1	0	0	1
10	0	1	0	0	1	0
11	1	0	0	1	0	0
12	1	1	1	1	0	1
13	0	0	1	1	1	1
14	0	1	1	1	1	0
15	1	1	1	1	0	0
16	0	0	1	1	0	1
17	0	1	1	0	1	0
18	1	1	0	1	0	0
19	0	1	1	1	0	1
20	1	1	1	0	1	0

and the two sets $\{\beta^i\}$ and $\{\alpha^{3i}\}$ are isomorphic groups under the defined operation of "multiplication." However, the 21 elements generated by $\beta \longleftrightarrow \alpha^3$ with 0 adjoined <u>do not</u> form a group under the defined operation of addition. Clearly

$$\beta^6 + \beta^5 + \beta^4 + \beta^2 + 1 = \beta^{21} - 1 = 0$$

and

$$x^6 + x^5 + x^4 + x^2 + 1 \text{ divides } x^{21} - 1$$

A fundamental theorem states that $x^d - 1$ divides $x^n - 1$ over any field if and only if d divides n. Thus,

$$x^{21} - 1 \text{ divides } x^{63} - 1$$

is another way of stating that the 21 roots of unity generated by $\beta \longleftrightarrow \alpha^3$ are among the 63 roots of unity in $GF(2^6)$.

The roots of

$$x^{2^r-1} - 1 = 0$$

are the nonzero elements in $GF(2^r)$. If s divides r, $2^s - 1$ divides $2^r - 1$ and

$$x^{2^s-1} - 1 \text{ divides } x^{2^r-1} - 1$$

and the roots of

$$x^{2^s-1} - 1 = 0$$

are the nonzero elements of the subfields $GF(2^s)$ in $GF(2^r)$.

In Example 2, $GF(2^6)$ contains the subfields $GF(2^2)$ and $GF(2^3)$. GF(2) is a subfield of $GF(2^2)$ and $GF(2^3)$ as well as of $GF(2^6)$. Although the 21 roots of unity with 0 adjoined do not form a finite field (i.e., 21 is not of the form $2^s - 1$), they contain GF(2), $GF(2^2)$, and $GF(2^3)$.

<u>Example 3</u>

The irreducible factors of $x^{21} - 1$ are given in Table 1-4. The set of integers

$$\{i\} = \{1, 2, 4, 8, 16, 11\}$$

Table 1-4. Irreducible Factors of $x^{21} - 1$ Over GF(2)

Cyclotomic Coset	Minimal Polynomial f(x)	Degree	Index	Order of Roots of f(x)
0	$x + 1$	1	21	1
1 2 4 8 16 11	$x^6 + x^5 + x^4 + x^2 + 1$	6	1	21
3 6 12	$x^3 + x + 1$	3	3	7
5 10 20 19 17 13	$x^6 + x^4 + x^2 + x + 1$	6	1	21
7 14	$x^2 + x + 1$	2	7	3
9 18 15	$x^3 + x^2 + 1$	3	3	7

taken from the multiplicative group of integers modulo 21 form a subgroup. The corresponding set

$$\left\{\beta^i\right\} = \left\{\beta, \beta^2, \beta^4, \beta^8, \beta^{16}, \beta^{11}\right\}$$

are the six distinct roots of

$$f(x) = x^6 + x^5 + X^4 + x^2 + 1$$

The index of each of the 21 roots of unity $\left\{\beta^j\right\}$ is relative to 21, the order of $\beta \longleftrightarrow \alpha^3$ (i.e., the generator in Table 1-3). Whereas the index of corresponding elements in $\left\{\alpha^{3j}\right\}$ (a subset of the 63 roots of unity) is relative to 63, the order of α (i.e., the generator in Table 1-2).

The number of irreducible polynomials over GF(2) of degree 6 whose roots have order 21 is

$$\varphi(21)/6 = \varphi(3)\varphi(7)/6 = 2$$

That is, the order of 12 of the 21 roots of unity are relatively prime to 21 (and, thus, have an index of 1). These elements correspond to two complete

cyclotomic cosets with six members each. Each set of elements are roots of a minimal, hence irreducible, polynomial of degree 6.

In general, if β has order $d < 2^r - 1$ and d divides $2^k - 1$ for $k = r$, but does not divide $2^k - 1$ for $k < r$, then β is a root of a nonprimitive irreducible polynomial over GF(2) of degree r.

Consider the two polynomials of degree r over GF(2):

$$f(x) = x^r + b_{r-1}x^{r-1} + \ldots + b_{r-i}x^{r-i} + \ldots + b_1x + 1$$

$$g(x) = x^r + b_1x^{r-1} + \ldots + b_ix^{r-i} + \ldots + b_{r-1}x + 1$$

The coefficient string of one is the reverse of the other.

$$f(x) = \sum_{i=0}^{r} b_ix^i \qquad g(x) = \sum_{i=0}^{r} b_{r-i}x^i$$

where b_0 and b_r are necessarily equal to 1 and

$$f(0) = g(0) = 1$$

Thus, $x = \alpha^* = 0$ is not a root of f(x) or g(x).

An equivalent expression for g(x) is

$$g(x) = x^r f(1/x)$$

The polynomial g(x) is defined to be the reciprocal polynomial of f(x) and vice versa. If α is a root of f(x), then α^{-1} (the multiplicative inverse of α) is a root of g(x).

$$g(\alpha^{-1}) = \alpha^{-r}f(\alpha) = 0$$

The transformation

$$f(x) \longleftrightarrow x^r f(1/x)$$

preserves the order of the roots as well as the degree. If α has order n, then $\alpha^{-1} = \alpha^{n-1}$ has order

$$n/(n - 1, n) = n$$

A polynomial f(x) of degree r over GF(2) where

$$f(x) = x^r f(1/x)$$

is defined to be self-reciprocal.

<u>Example 4</u>

There are a total of nine irreducible polynomials of degree 6 over GF(2) (see Table 1-2).

Six of the nine are primitive and comprised of three reciprocal pairs. One such pair of polynomials and their corresponding roots are

$x^6 + x^5 + x^3 + x^2 + 1$	$\alpha^5, \alpha^{10}, \alpha^{20}, \alpha^{40}, \alpha^{17}, \alpha^{34}$
$X^6 + x^4 + x^3 + x + 1$	$\alpha^{23}, \alpha^{46}, \alpha^{29}, \alpha^{58}, \alpha^{53}, \alpha^{43}$

The multiplicative inverse of each root in one set is contained in the other, e.g.,

$$(\alpha^5)^{-1} = \alpha^{-5} = \alpha^{63-5} = \alpha^{58}$$

The two nonprimitive polynomials whose roots have order 21 are reciprocal polynomials.

The nonprimitive polynomial whose roots have order 9, namely,

$$x^6 + x^3 + 1$$

is a self-reciprocal polynomial as implied by its corresponding cyclotomic coset. (If α is a root, so is α^{-1}.)

$$\{7, 14, 28, 56, 49, 35\} = \{7, 14, 28, -7, -14, -28\}$$

Reducible self-reciprocal polynomials contain as factors irreducible self-reciprocal polynomial(s) and/or irreducible reciprocal pairs of polynomials. The factors of $x^{63} - 1$, in particular, and $x^n - 1$, in general, are examples. Irreducible self-reciprocal polynomials are of even degree ($r = 2m$) with one exception (i.e., $x + 1$). Their coefficient strings are of the following form:

$$1\ b_1\ b_2\ \ldots\ b_{m-1}\ 1\ b_{m-1}\ \ldots\ b_2\ b_1\ 1$$

The coefficients of x^{2m}, x^m and x^0 are 1 and each b_i ($1 \leq i < m$) is 0 or 1 (an element of GF(2)). Such a coefficient string is of odd weight (i.e., contains an odd number of one's). Thus, the corresponding f(x) cannot contain $x + 1$ as a factor. Being of even degree and having the foregoing coefficient string are necessary, but not sufficient conditions for f(x) to be an irreducible self-reciprocal polynomial.

Assume the cyclotomic coset

$$(1, 2, \ldots, 2^{m-1}, 2^m, 2^{m+1}, \ldots, 2^{2m-1})$$

corresponds to the roots of a primitive polynomial of degree 2m. To be self-reciprocal, the following congruence relationship must hold:

$$2^m \equiv -1 \bmod 2^{2m} - 1$$

Applying rules of modulo arithmetic yields

$$(2^m + 1) \equiv 0 \bmod 2^{2m} - 1$$

$$(2^m + 1)/(2^{2m} - 1) = q \text{ where } q \text{ is an}$$

integer

and

$$(2^m + 1)/(2^{2m} - 1) = 1/(2^m - 1)$$

Thus, $2^{2m} - 1$ divides $2^m + 1$ only if $m = 1$. It follows that $x^2 + x + 1$ is a self-reciprocal primitive polynomial with roots α and $\alpha^2 = \alpha^{-1}$ of order 3. The only other self-reciprocal primitive polynomial over GF(2) is $x + 1$ whose root is $\alpha^0 = (\alpha^0)^{-1} = 1$ of order 1.

Irreducible <u>nonprimitive</u> self-reciprocal polynomials over GF(2) exist for every even degree greater than 2. Given α of order $2^{2m} - 1$ in $GF(2^{2m})$. The cyclotomic coset

$$\left\{v,\ 2v,\ \ldots,\ 2^{m-1}v,\ -v,\ -2v,\ \ldots,\ -2^{m-1}v\right\}$$

corresponds to the set of 2m distinct roots (which contain α^v) of an irreducible self-reciprocal polynomial of degree 2m.

$$2^m v \equiv -v \bmod 2^{2m} - 1$$

$$(2^m + 1)v \equiv 0 \bmod 2^{2m} - 1$$

$$v \equiv 0 \bmod (2^{2m} - 1)/(2^m + 1,\ 2^{2m} - 1)$$

$$v \equiv 0 \bmod 2^m - 1$$

The $2^m + 1$ solutions are

$$v = s(2^m - 1) \text{ where } 0 \leq s < 2^m + 1$$

and α^v for each v satisfies

$$x^{2^m+1} - 1 = 0$$

The root α^v where $v = 2^m - 1$ has order

$$(2^{2m} - 1)/(2^m - 1, 2^{2m} - 1) = 2^m + 1$$

and is a multiplicative generator of the $(2^m + 1)$st roots of unity. Of these, $\varphi(2^m + 1)$ have order $2^m + 1$, and for $m>1$, each is a root of one of the $\varphi(2^m + 1)/2m$ irreducible nonprimitive self-reciprocal polynomials. The order of each of the remaining roots divides $2^m + 1$ and is less than $2^m + 1$. Those corresponding to a complete coset (i.e., having 2m elements) are roots of a degree 2m irreducible <u>nonprimitive</u> self-reciprocal polynomial. Those corresponding to cosets containing fewer than 2m elements are roots of an irreducible self-reciprocal polynomial whose degree divides 2m and is less than 2m. Thus, every factor of

$$x^n - 1 \text{ where } n = 2^m + 1$$

is an irreducible self-reciprocal polynomial over GF(2).

<u>Example 5</u>

Given $m = 3$ and $2^m - 1 = 7$. The element α^7 is a generator of the roots of

$$x^n - 1 = 0 \text{ where } n = 2^m + 1 = 9$$

contained in $GF(2^6)$. Each of the roots is a root of an irreducible self-reciprocal polynomial whose degree divides $2m = 6$. The 9 roots represented as v of α^v are

$$\{0, 7, 14, 21, 28, 35, 42, 49, 56\}$$

Following are the minimal polynomials corresponding to each cyclotomic coset:

Cyclotomic Coset	Minimal Polynomial
0	$x + 1$
7 14 28 56(-7) 49(-14) 35(-28)	$x^6 + x^3 + 1$
21 42(-21)	$x^2 + x + 1$

For $m = 9$ and $2^m - 1 = 511$, the element α^{511} is a generator of the roots of $x^{513} - 1 = 0$ contained in $GF(2^{18})$. Included among these roots are the 9 which satisfy

$$x^9 - 1 = (x + 1)(x^2 + x + 1)(x^6 + x^3 + 1) = 0$$

each of which is member of $GF(2^{18})$ and one, and only one, of the subfields $GF(2)$, $GF(2^2)$, or $GF(2^6)$.

An enumeration of all the factors (i.e., irreducible self-reciprocal polynomials) of $x^{513} - 1$ by order of their roots and their degree is as follows: Let $\beta = \alpha^{511}$ in $GF(2^{18})$. The order of β^d is

$$n = 513/(d,513) \text{ where } d = 0, 1, \ldots, 512$$

Those values of d that divide $513 = 3^3 \cdot 19$ belong to distinct cyclotomic cosets and may be chosen as representatives (refer to Table 1-5). The last three entries correspond to factors whose roots are also members of a proper subfield of $GF(2^{18})$ (as shown in the first portion of this example).

Table 1-5. Irreducible Self-Reciprocal Factors of $x^{513} - 1$ Over GF(2) Enumerated by the Order of their Roots and their Degree

d	Order of β^d in $GF(2^{18})$ $n = 513/(d, 513)$	Number of Elements r in Cyclotomic Coset	$\varphi(n)/r$
1	513	18	18
3	171	18	6
9	57	18	2
19	27	18	1
27	19	18	1
57	9	6	1
171	3	2	1
$513 \equiv 0 \bmod 513$	1	1	1

$\varphi(n)/r$ denotes the number of irreducible self-reciprocal factors of degree r whose roots have order n. The total number of elements with order n (i.e., β^h where $(h, 513) = d$) is equal to $\varphi(n)$.

Finite fields of the same order are isomorphic, and every finite field is isomorphic to a Galois field (Reference 5). Thus, the study of finite fields of order p^r (namely, $GF(p^r)$) where p is a prime integer and r a nonzero positive integer. Each element in $GF(p^r)$ is a polynomial of degree r with coefficients in GF(p) - i.e., 0, 1, ... , or p - 1. Only polynomials in $GF(2^r)$ are discussed due to considerations associated with practical applications.

<u>Example 6</u>

Given γ, a root of the degree 3 primitive polynomial $x^3 + x + 1$. Thus, γ has order 7 and is a (multiplicative) generator of the nonzero elements in $GF(2^3)$.

Refer to Tables 1-1 and 1-2. The degree 6 primitive polynomial, $x^6 + x^5 + x^2 + x + 1$, has α whose order is 63 as a root. Thus, α^9 has order 7 and is a generator of the nonzero elements in the subfield $GF(2^3)$ properly contained in $GF(2^6)$. The minimal polynomial containing α^9 and its conjugates $[(\alpha^9)^2$ and $(\alpha^9)^4]$ as roots is $x^3 + x + 1$.

Refer to Tables 1-3 and 1-4. The element $\beta \longleftrightarrow \alpha^3$ is a root of the degree 6 irreducible nonprimitive polynomial $x^6 + x^5 + x^4 + x^2 + 1$. The order of β is 21. Whereas, β^6 has order 7 and is a generator of the nonzero elements of $GF(2^3)$, a proper subset of the 21 roots of unity. Furthermore, the minimal polynomial containing $(\beta^3)^2$ and its conjugates $[\beta^3$ and $(\beta^3)^4]$ as roots is $x^3 + x + 1$.

Consider the set of elements generated by γ, α^9, and β^6, respectively, with 0 adjoined to each set.

i of γ^i	$a_2a_1a_0$	j of α^j	$b_5b_4b_3b_2b_1b_0$	k of β^k	$c_5c_4c_3c_2c_1c_0$
*	0 0 0	*	0 0 0 0 0 0	*	0 0 0 0 0 0
0	0 0 1	0	0 0 0 0 0 1	0	0 0 0 0 0 1
1	0 1 0	9	0 0 1 1 0 1	6	1 1 0 1 0 1
2	1 0 0	18	1 1 0 1 1 0	12	1 1 1 1 0 1
3	0 1 1	27	0 0 1 1 0 0	18	1 1 0 1 0 0
4	1 1 0	36	1 1 1 0 1 1	3	0 0 1 0 0 0
5	1 1 1	45	1 1 1 0 1 0	9	0 0 1 0 0 1
6	1 0 1	54	1 1 0 1 1 1	15	1 1 1 1 0 0

Each set of 8 elements is a different representation of the elements in $GF(2^3)$. The one-to-one correspondence between elements of each set is

$$\gamma^i \longleftrightarrow \alpha^{9i} \longleftrightarrow \beta^{6i} \bmod 21$$

Multiplication defined on the nonzero elements of each set is as follows:

$$\gamma^i\gamma^j = \gamma^{(i+j) \bmod 7}$$

$$\gamma^7 - 1 = \gamma^3 + \gamma + 1 = 0$$

$$\alpha^i\alpha^j = \alpha^{(i+j) \bmod 63}$$

$$\alpha^{63}-1 = \alpha^6 + \alpha^5 + \alpha^2 + \alpha + 1 = 0$$

$$(\alpha^9)^7 - 1 = (\alpha^9)^3 + \alpha^9 + 1 = 0$$

$$\beta^i\beta^j = \beta^{(i+j) \bmod 21}$$

$$\beta^{21} - 1 = \beta^6 + \beta^5 + \beta^4 + \beta^2 + 1 = 0$$

$$(\beta^6)^7-1 = [(\beta^3)^7 - 1]^2 = 0$$

$$(\beta^3)^7 - 1 = 0$$

$$(\beta^6)^3 + \beta^6 + 1 = [(\beta^3)^3 + \beta^3 + 1]^2 = 0$$

$$(\beta^3)^3 + \beta^3 + 1 = 0$$

The foregoing illustrates that β^3 and $(\beta^3)^2$ are two of the three conjugate roots of $x^3 + x + 1$ a divisor of $x^7 - 1$.

SECTION II

GENERATORS OF PERIODIC BINARY SEQUENCES

A. FEEDBACK SHIFT REGISTERS

The Feedback Shift Register (FSR) in Figure 2-1 stores a representation of the coefficients of the polynomial

$$b_5\alpha^5 + b_4\alpha^4 + b_3\alpha^3 + b_2\alpha + b_2\alpha + b_1\alpha + b_0$$

Upon the application of the clock pulse (by clocking circuitry not shown), the FSR performs multiplication by α, a root of

$$x^6 + x^5 + x^2 + x + 1 = 0$$

and reduces the result modulo

$$\alpha^6 + \alpha^5 + \alpha^2 + \alpha + 1$$

The content of each register stage is shifted one stage to the left. Overflow resulting when $b_5 = 1$ prior to shifting, represents

$$\alpha^6 = \alpha^5 + \alpha^2 + \alpha + 1$$

which is "vector added" over GF(2) to the shifted contents. Equivalently,

$$\alpha^6 \equiv \alpha^5 + \alpha^2 + \alpha + 1 \bmod \alpha^6 + \alpha^5 + \alpha^2 + \alpha + 1$$

The contents of the FSR during two successive Clock Pulse Intervals (CPIs) (i.e., before and after the applicable of a clock pulse) is illustrated in the following example:

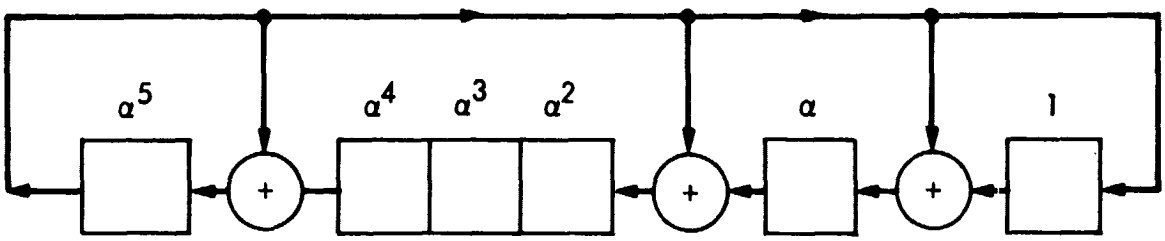

Figure 2-1. Functional Logic Diagram of a Feedback Shift Register that Performs Multiplication by α Modulo $\alpha^6 + \alpha^5 + \alpha^2 + \alpha + 1$

<u>Example 7</u>

$$
\begin{array}{cccccccl}
b_5, & b_4, & b_3, & b_2, & b_1, & b_0 & & \text{at CPI } j \\
 & & & & & & & \\
b_4, & b_3, & b_2, & b_1, & b_0, & 0 & & \\
b_5, & 0\ , & 0\ , & b_5, & b_5, & b_5 & & \\
\hline
b_5+b_4, & b_3, & b_2, & b_5+b_1, & b_5+b_0, & b_5 & & \text{at CPI } j+1
\end{array}
$$

In particular,

$$
\begin{array}{ll}
1\ 1\ 0\ 1\ 0\ 1 & \text{at CPI } j \\
1\ 0\ 1\ 0\ 1\ 0 & \\
1\ 0\ 0\ 1\ 1\ 1 & \\
\hline
0\ 0\ 1\ 1\ 0\ 1 & \text{at CPI } j + 1
\end{array}
$$

$$
\begin{array}{ll}
0\ 1\ 1\ 0\ 1\ 1 & \text{at CPI } j \\
1\ 1\ 0\ 1\ 1\ 0 & \\
0\ 0\ 0\ 0\ 0\ 0 & \\
\hline
1\ 1\ 0\ 1\ 1\ 0 & \text{at CPI } j + 1
\end{array}
$$

■

The FSR in Figure 2-1 can assume 2^6 or 64 distinct states. The FSR as configured splits the state space into two branchless cycles of states where distinct states have distinct successor states. One cycle is comprised of 63

nonzero states. The succession of these states are identical to those appearing in Table 1-1 where the length of the cycle (i.e., its period) is equal to the order of α. The all zeros state α^* is its own successor state. Thus, it is the single member of a cycle of length 1.

Given a primitive polynomial f(x) over GF(2) of degree $r \geq 2$. The number of terms in f(x) is necessarily odd (i.e., $2m + 1$ where $m \geq 1$). The FSR circuitry that realizes multiplication by α modulo $f(\alpha)$ splits the state space of 2^r binary r-tuples into two disjoint branchless cycles of states. One cycle contains $2^r - 1$ nonzero states identical in representation and sequence of those nonzero elements in $GF(2^r)$ generated by α. The other cycle consists of the singleton all zeros state α^*. The FSR circuitry is comprised of r delay elements (or register stages) and 2m-1 two-input modulo 2 summers (i.e., Exclusive-OR gates). See References 4 and 6.

Of particular interest are the binary sequences appearing at the output of each register stage. Given the sequence appearing at the output of one stage, the output of each of the other stages is a cyclic permutation of that sequence. The sequence is termed a Pseudonoise (PN) sequence because of its noise-like properties (see Reference 3 and Section IV.A.)

Consider the primitive polynomial

$$f(x) = x^6 + x^5 + x^2 + x + 1$$

where

$$f(\alpha) = \alpha^6 + \alpha^5 + \alpha^2 + \alpha + 1 = 0$$

and

$$\alpha^{-1} = \alpha^5 + \alpha^4 + \alpha + 1$$

The FSR in Figure 2-2 performs division by α (i.e., multiplication by α^{-1}) and reduces the result modulo

$$\alpha^6 + \alpha^5 + \alpha^2 + \alpha + 1$$

The FSR stores a representation of the coefficients of the polynomial

$$b_5\alpha^5 + b_4\alpha^4 + \ldots + b_0$$

Upon application of a clock pulse, the content of each register stage is shifted one stage to the right. Overflow resulting when $b_0 = 1$ prior to shifting represents

$$\alpha^{-1} = \alpha^5 + \alpha^4 + \alpha + 1$$

which is vector added over GF(2) to the shifted contents. In terms of congruences

$$\alpha^{-1} \equiv \alpha^5 + \alpha^4 + \alpha + 1 \bmod \alpha^6 + \alpha^5 + \alpha^2 + \alpha + 1$$

Note that

$$\alpha^{-1} = 1 \cdot \alpha^{-1} = \alpha^{63-1} = \alpha^{62}$$

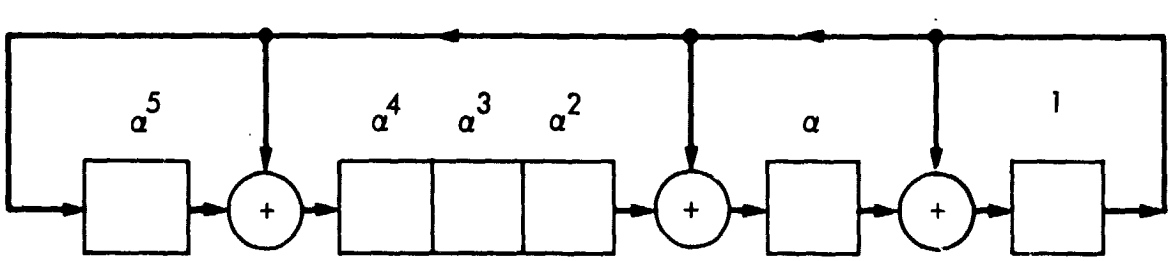

Figure 2-2. Functional Logic Diagram of a Feedback Shift Register that Performs Division by α Modulo $\alpha^6 + \alpha^5 + \alpha^2 + \alpha + 1$

is the last entry in Table 1-1. Successive nonzero states appearing in the register of the FSR in Figure 2-2 are in reverse order of those in Table 1-1. The binary sequence appearing at the output of a given stage of the FSR in Figure 2-2, initialized with a nonzero state, is a PN sequence. It is the reverse of the output of the corresponding stage of the FSR in Figure 2-1, initialized with the same nonzero state.

The element $\beta = \alpha^{-1}$ is a root of

$$g(x) = x^6 + x^5 + x^4 + x + 1$$

where g(x) is the reciprocal polynomial of

$$f(x) = x^6 + x^5 + x^2 + x + 1$$

Thus, an FSR configured to perform multiplication by

$$\beta \text{ modulo } \beta^6 + \beta^5 + \beta^4 + \beta + 1$$

(when initialized with a nonzero state) generates a PN sequence (at the output of each stage). This PN sequence is the reverse of the one generated by the FSR in Figure 2-1. If the FSR is configured to shift from left to right, the states appear in reverse order (of those associated with the FSR in Figure 2-1).

In Example 3, the 6 distinct roots of

$$f(x) = x^6 + x^5 + x^4 + x^2 + 1$$

have order 21, and f(x) is irreducible, but nonprimitive. The 21 roots of unity generated by β, a root of f(x), appear in Table 1-3.

Given an FSR configured to multiply the representation of

$$c_5\beta^5 + c_4\beta^4 + \ldots + c_0$$

by β and reduce the result modulo $\beta^6 + \beta^5 + \beta^4 + \beta^2 + 1$. The all zeros state β^* (representing the constant zero polynomial) is its own successor state and lies on a cycle of length 1. Each of the 63 nonzero states lies on one of three disjoint cycles (of states) of length 21 (see Table 2-1). One cycle corresponds to the 21 elements in Table 1-3 generated by β, a root of

$$f(x) = x^6 + x^5 + x^4 + x^2 + 1$$

The 63 nonzero states correspond to 63 nonzero polynomials over GF(2) which comprise a noncyclic group under polynomial multiplication reduced modulo $f(\beta)$. The remaining two cycles of 21 states correspond to cosets in the group of order 63 relative to the subgroup generated by β. The polynomial

$$\gamma = \beta + 1$$

was arbitrarily selected as one coset leader. Each polynomial in this coset is representable as $\gamma\beta^j$ where $0 \leq j < 21$. The polynomial

$$\delta = \beta^2 + 1$$

serves as the other coset leader in a similar manner. Each element in the latter coset is representable as $\delta\beta^k$ where $0 \leq k < 21$.

Every polynomial over GF(2) is uniquely expressible except for order as the product of powers of irreducible polynomials over GF(2). Irreducible polynomials over any finite are building blocks or atoms as are the primes in the field of integers of infinite order.

$$f(x) = [f_1(x)]^{e_1} \cdot [f_2(x)]^{e_2} \cdot \ldots \cdot [f_n(x)]^{e_n}$$

Table 2-1. Equal Length FSR Cycles of (nonzero) States Corresponding to the Decomposition of a Multiplicative Group into a Cyclic Subgroup $\left\{\beta^i\right\}$ and Cosets $\left\{\gamma\beta^j\right\}$ and $\left\{\delta\beta^k\right\}$

i of β^i	$c_5c_4c_3c_2c_1c_0$	j of $\gamma\beta^j$	$c_5c_4c_3c_2c_1c_0$	k of $\delta\beta^k$	$c_5c_4c_3c_2c_1c_0$
0	0 0 0 0 0 1	0	0 0 0 0 1 1	0	0 0 0 1 0 1
1	0 0 0 0 1 0	1	0 0 0 1 1 0	1	0 0 1 0 1 0
2	0 0 0 1 0 0	2	0 0 1 1 0 0	2	0 1 0 1 0 0
3	0 0 1 0 0 0	3	0 1 1 0 0 0	3	1 0 1 0 0 0
4	0 1 0 0 0 0	4	1 1 0 0 0 0	4	1 0 0 1 0 1
5	1 0 0 0 0 0	5	0 1 0 1 0 1	5	1 1 1 1 1 1
6	1 1 0 1 0 1	6	1 0 1 0 1 0	6	0 0 1 0 1 1
7	0 1 1 1 1 1	7	1 0 0 0 0 1	7	0 1 0 1 1 0
8	1 1 1 1 1 0	8	1 1 0 1 1 1	8	1 0 1 1 0 0
9	0 0 1 0 0 1	9	0 1 1 0 1 1	9	1 0 1 1 0 1
10	0 1 0 0 0 1	10	1 1 0 1 1 0	10	1 0 1 1 1 1
11	1 0 0 1 0 0	11	0 1 1 0 0 1	11	1 0 1 0 1 1
12	1 1 1 1 0 1	12	1 1 0 0 1 0	12	1 0 0 0 1 1
13	0 0 1 1 1 1	13	0 1 0 0 0 1	13	1 1 0 0 1 1
14	0 1 1 1 1 0	14	1 0 0 0 1 0	14	0 1 0 0 1 1
15	1 1 1 1 0 0	15	1 1 0 0 0 1	15	1 0 0 1 1 0
16	0 0 1 1 0 1	16	0 1 0 1 1 1	16	1 1 1 0 0 1
17	0 1 1 0 1 0	17	1 0 1 1 1 0	17	0 0 0 1 1 1
18	1 1 0 1 0 0	18	1 0 1 0 0 1	18	0 0 1 1 1 0
19	0 1 1 1 0 1	19	1 0 0 1 1 1	19	0 1 1 1 0 0
20	1 1 1 0 1 0	20	1 1 1 0 1 1	20	1 1 1 0 0 0

where $f_i(x)$ of finite degree is irreducible over GF(2) and the integers $e_i \geq 0$ $(1 \leq i \leq n)$. FSR cycles of states associated with reducible polynomials over GF(2) are investigated in the next section.

B. FEEDBACK SHIFT REGISTERS CHARACTERIZED BY RECURRENCE RELATIONS

The behavior of the r-stage shift register with linear-logic feedback, as shown in Figure 2-3, is characterized by the linear recurrence relation

$$a_k = \sum_{i=1}^{r} c_i a_{k-i}$$

See Reference 3.

Hereafter, FSRs (as shown in Figures 2-1 and 2-2) will be called <u>shift registers with interstage feedback</u> or ISFSRs. Whereas, those shown in Figure 2-3 will be referred to as <u>shift registers with single stage feedback</u> or SSFSRs.

The summation in the linear recurrence relation is to be considered a modulo 2 summation throughout. The content of the ith stage at CPI k is denoted by a_{k-i}. Shifting is implied by the subscripts. The content of the ith stage at CPI k becomes the content of the $(i + 1)^{th}$ stage at CPI k + 1. That is,

$$a_{k-i} \longrightarrow a_{(k+1)-(i+1)} \qquad 1 \leq i < r$$

The c_i's are Boolean constant multipliers. The ith stage contributes to the feedback if $c_i = 1$. The rth stage is necessarily connected to the feedback (switching) network (i.e., $c_r = 1$). Otherwise, the FSR is using a shift register comprised of less than r stages. The initial state of the

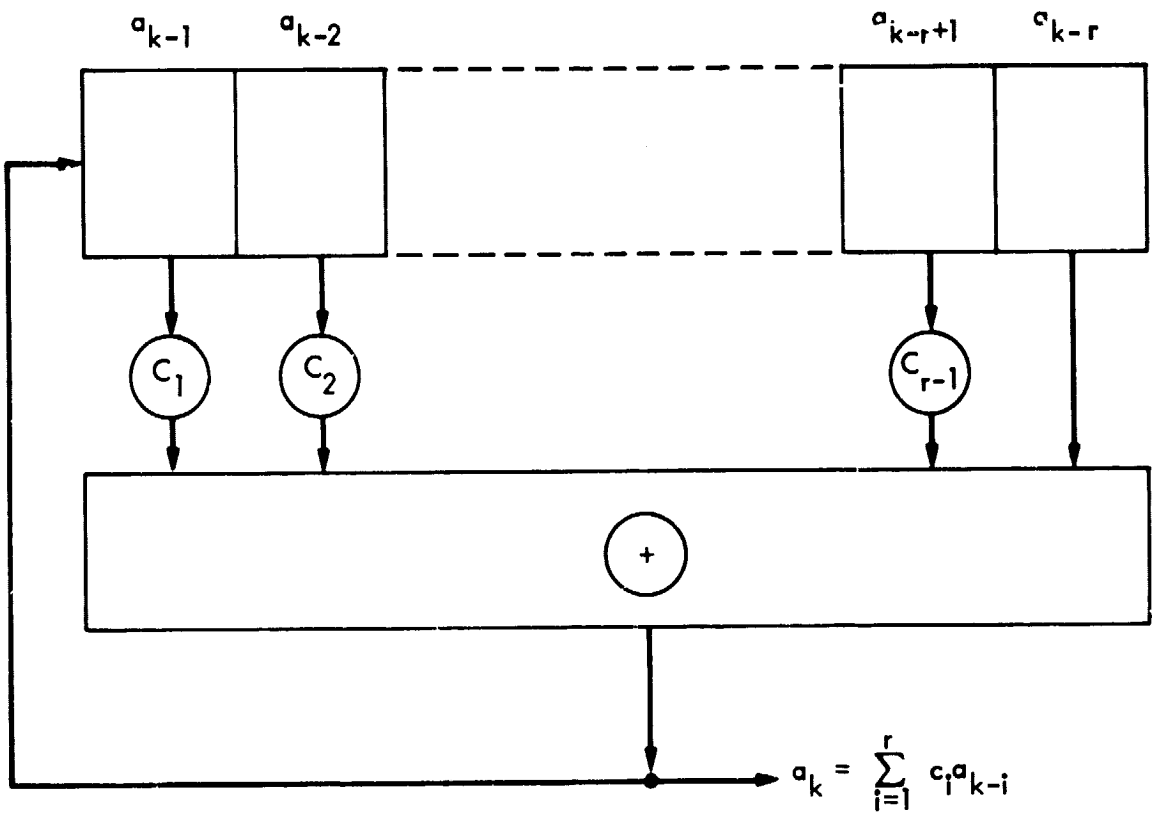

Figure 2-3. Functional Logic Diagram of an r-stage Shift Register with Linear Logic Feedback (SSFSR)

i^{th} stage is denoted by a_{-i} (i.e., a_{k-i} at CPI k = 0). The bit being fed back at CPI k is denoted by a_k and a_k becomes the content of the 1st stage at CPI k + 1.

$$a_k \longrightarrow a_{(k+1)-1}$$

Given

$$G(x) \sum_{k=0}^{\infty} a_k x^k = \sum_{k=0}^{\infty} \left(\sum_{i=1}^{r} c_i a_{k-i} \right) x^k$$

a generating function where the sequence of feedback bits are coefficients of ascending powers of x. Then,

$$G(x) = \sum_{i=1}^{r} c_i x^i \sum_{k=0}^{\infty} a_{k-i} x^{k-i}$$

and

$$G(x) = \sum_{i=1}^{r} c_i x^i \left[a_{-i} x^{-i} + a_{-i+1} x^{-i+1} + \ldots + a_{-1} x^{-1} + \sum_{k=0}^{\infty} a_k x^k \right]$$

Thus,

$$\left(1 - \sum_{i=1}^{r} c_i x^i\right) G(x) = \sum_{i=1}^{r} c_i x^i \left[a_{-i} x^{-i} + a_{-i+1} x^{-i+1} + \ldots + a_{-1} x^{-1} \right]$$

and

$$G(x) = \frac{g(x)}{f(x)}$$

The numerator

$$g(x) = \sum_{i=1}^{r} c_i x^i \left[a_{-i} x^{-i} + a_{-i+1} x^{-i+1} + \ldots + a_{-1} x^{-1} \right]$$

is of degree less than r and its form is dependent upon the initial state of the FSR (a_{-1}, a_{-2} , ... , a_{-r}) and the feedback connections (c_1, c_2 , ... , c_r). Whereas the denominator

$$f(x) = 1 - \sum_{i=1}^{r} c_i x^i = 1 + \sum_{i=1}^{r} c_i x^i$$

(since $-1 \equiv 1 \bmod 2$) is of degree r (i.e., $c_r = 1$) and its form is dependent upon the <u>feedback connections only</u>. Clearly, g(x) and f(x) are polynomials over GF(2).

The polynomial f(x) is called the characteristic polynomial of the SSFSR. The behavior of the SSFSR can be described by the periodic sequence $\{a_k\}$ corresponding to a given initial state. Overlapping r-bit subsequences of $\{a_k\}$ as seen when $\{a_k\}$ is bit serially passed through an r-bit window, correspond to the state sequence (i.e., cycle of states) assumed by the register portion of the SSFSR.

The period of the longest sequence is governed by the properties of f(x). Given the initial state of the SSFSR in Figure 2-3

$$a_{-1} = a_{-2} = \ldots = a_{-r+1} = 0, \; a_{-r} = 1$$

Then, g(x) = 1 and

$$G(x) = \frac{1}{f(x)}$$

Since the SSFSR can only assume a finite number of states before repeating, the sequence

$$\left\{a_k\right\} = \left\{a_0 \, , \, a_1 \quad \cdots \quad a_{\ell-1}\right\}$$

must have a finite period $\ell \leq 2^r$. Thus,

$$\begin{aligned} G(x) = \frac{1}{f(x)} &= a_0 + a_1 x + \quad \cdots \quad + a_{\ell-1} x^{-1} \\ &+ x^{\ell} (a_0 + a_1 x + \quad \cdots \quad + a_{\ell-1} x^{\ell-1}) \\ &+ x^{2\ell} (a_0 + a_1 x + \quad \cdots \quad + a_{\ell-1} x^{\ell-1}) \\ &\quad \vdots \\ &+ x^{m\ell} (a_0 + a_1 x + \quad \cdots \quad + a_{\ell-1} x^{\ell-1}) \\ &\quad \vdots \\ &= \frac{a_0 + a_1 x + \quad \cdots \quad + a_{\ell-1} x^{\ell-1}}{1 - x^{\ell}} \end{aligned}$$

and f(x) divided $1-x^{\ell}$ for some least integer value ℓ, the periodicity of $\left\{a_k\right\}$. Conversely, if f(x) divided $1-x^{\ell}$ for some least value of ℓ, then f(x) characterizes an SSFSR that generates a periodic sequence of length ℓ when initialized by the state 0 0 , ... , 0 1. Following Reference 3

$$\frac{1 - x^{\ell}}{f(X)} = \gamma_0 + \gamma_1 x + \quad \cdots \quad + \gamma_{\ell-1} x^{\ell-1}$$

for some least integer value ℓ. Then,

$$\frac{1}{f(x)} = \frac{\gamma_0 + \gamma_1 x + \ldots + \gamma_{\ell-1} x^{\ell-1}}{1 - x^{\ell}}$$

$$= (1 + x^{\ell} + x^{2\ell} + \ldots + x^{m\ell} + \ldots)(\gamma_0 + \gamma_1 x + \ldots + \gamma_{\ell-1} x^{\ell-1})$$

$$= G(x) = \sum_{k=0}^{\infty} a_k x^k$$

Equating coefficients of like powers of x gives $\{\gamma_k\} = \{a_k\}$

<u>Example 8</u>

Given the linear recurrence relation

$$a_k = a_{k-2} + a_{k-3}$$

and the initial conditions $a_{-1} = a_{-2} = 0$ and $a_{-3} = 1$. The linear recurrence relation of order 3 (a discrete analog of a linear differential equation of degree 3 with constant coefficients) with three boundary values (i.e., initial conditions) provides sufficient information to compute $a_0, a_1, \ldots$. The same information can be extracted from $f(x) = 1 + x^2 + x^3$ as follows:

$$
\begin{array}{l}
1 + x^2 + x^3 \div \dfrac{1 + x^2 + x^3 + x^4 + x^7}{1}\,(1 + x^2 + \ldots \\
\qquad\qquad \underline{1 + x^2 + x^3} \\
\qquad\qquad\quad x^2 + x^3 \\
\qquad\qquad\quad \underline{x^2 \qquad + x^4 + x^5} \\
\qquad\qquad\qquad\quad x^3 + x^4 + x^5 \\
\qquad\qquad\qquad\quad \underline{x^3 \qquad + x^5 + x^6} \\
\qquad\qquad\qquad\qquad\quad x^4 \qquad + x^6 \\
\qquad\qquad\qquad\qquad\quad \underline{x^4 \qquad + x^6 + x^7} \\
\qquad\qquad\qquad\qquad\qquad\qquad\qquad x^7 + \ldots
\end{array}
$$

and

$$\left\{a_k\right\} = \left\{1,\ 0,\ 1,\ 1,\ 1,\ 0,\ 0\right\}$$

The importance of f(x) is that its properties provide information about the periodicity of $\left\{a_k\right\}$ without the necessity of determining the components of $\left\{a_k\right\}$. Note that f(x) divides $1 - x^7$ and is a primitive polynomial over GF(2) of degree 3.

It will be shown that an r-stage SSFSR and an r-stage ISFSR having identical cycle structures are transformationally equivalent. An isomorphism exists between the states of one and the other.

The generating function of an SSFSR lends itself to readily determining the cycle length for a given initial state, especially when f(x) is reducible. Consider the generating function

$$G(x) = \frac{g(x)}{h(x)s(x)}$$

associated with an r-stage SSFSR whose initial state is nonzero. The characteristic polynomial, f(x), is of degree r and has distinct irreducible factors h(x) and s(x) whose degree exceeds 0. An initial state corresponding to a g(x) that has no common factor (of degree greater than 0) with f(x) lies on a cycle of longest length. That is,

$$(g(x),\ f(x)) = (g(x),\ (h(x)s(x))) = 1$$

denoting that the greatest common divisor polynomial is 1, the nonzero constant polynomial. The initial state 0 0 ... 0 1 corresponding to g(x) = 1 always lies on a cycle of longest length. By partial fraction expansion

$$G(x) = \frac{1}{h(x)s(x)} = \frac{u(x)}{h(x)} + \frac{v(x)}{s(x)}$$

and

$$u(x)s(x) + v(x)h(x) = 1$$

Unique solutions exist for u(x) and v(x) in the congruential forms

$$u(x)s(x) \equiv 1 \bmod h(x)$$
$$v(x)h(x) \equiv 1 \bmod s(x)$$

from finite field theory (see Reference 4). Since u(x) is of degree lower than that of h(x) (an irreducible polynomial),

$$(u(x),\ h(x)) = 1$$

Similarly,

$$((v(x),\ s(x)) = 1$$

The coefficients of ascending powers of x of the generating function

$$G(x) = \frac{u(x)}{h(x)} + \frac{v(x)}{s(x)}$$

has two components. Its period is the Least Common Multiple (LCM) of the periods of the two components. Thus, if h(x) divides $1 - x^{\ell_1}$, and s(x) divides $1 - x^{\ell_2}$ (for least integer values of ℓ_1 and ℓ_2, respectively), then

$$f(x) = h(x)s(x) \text{ divides } 1 - x^{\ell}$$

for the least integer value

$$\ell = \mathrm{LCM}(\ell_1, \ell_2)$$

<u>Example 9</u>

Given a seven-stage SSFSR with a characteristic polynomial

$$f(x) = 1 + x + x^3 + x^4 + x^7$$

$$= (1 + x^2 + x^3)\,(1 + x + x^2 + x^3 + x^4)$$

Corresponding to the initialization of 0 0 0 0 0 0 1 is the generating function

$$G(x) = \frac{1}{f(x)} = \frac{1}{1 + x + x^3 + x^4 + x^7}$$

$$= \frac{1}{(1 + x^2 + x^3)\,(1 + x + x^2 + x^3 + x^4)}$$

$$= \frac{u(x)}{1 + x^2 + x^3} + \frac{v(x)}{1 + x + x^2 + x^3 + x^4}$$

Thus,

$$u(x)\ (1 + x + x^2 + x^3 + x^4) + v(x)\ (1 + x^2 + x^3) = 1$$

and

$$u(x)\ (x^4 + x^3 + x^2 + x + 1) \equiv 1 \bmod (x^3 + x^2 + 1)$$

$$u(x)\ (x^2 + 1) \equiv 1 \bmod (x^3 + x^2 + 1)$$

Also,

$$v(x)\ (x^3 + x^2 + 1) \equiv 1 \bmod (x^4 + x^3 + x^2 + x + 1)$$

The polynomial $u(\alpha)$ is an element in $GF(2^3)$ whose multiplicative generator is α, a root of

$$h(x) = x^3 + x^2 + 1$$

a primitive polynomial. The multiplicative inverse modulo $x^3 + x^2 + 1$ of

$$(x^2 + 1) \longleftrightarrow (\alpha^2 + 1) \text{ is } u(x) \longleftrightarrow u(\alpha)$$

Since

$$\alpha^7 = 1 \text{ and } \alpha^2 + 1 = \alpha^3$$

$$u(\alpha) = \alpha^4 = \alpha^2 + \alpha + 1$$

and

$$u(x) = 1 + x + x^2$$

The polynomial $v(\beta)$ is an element in $GF(2^4)$. Multiplication of polynomials in the field is reduced modulo

$$s(\beta) = (\beta^4 + \beta^3 + \beta^2 + \beta + 1) \longleftrightarrow (x^4 + x^3 + x^2 + x + 1) = s(x)$$

Since $s(x)$ is a nonprimitive irreducible polynomial, its root β is not a multiplicative generator (of the nonzero elements) in $GF(2^4)$, i.e., $\beta^5 = 1$. It may be shown that $\beta + 1$ is one of $\varphi(15) = 8$ multiplicative generators in $GF(2^4)$ where β is a root of

$$s(x) = x^4 + x^3 + x^2 + x + 1$$

as follows:

i of $(\beta + 1)^i$	$c_3c_2c_1c_0$	i of $(\beta + 1)^i$	$c_3c_2c_1c_0$
0	0 0 0 1	8	1 0 0 1
1	0 0 1 1	9	0 1 0 0
2	0 1 0 1	10	1 1 0 0
3	1 1 1 1	11	1 0 1 1
4	1 1 1 0	12	0 0 1 0
5	1 1 0 1	13	0 1 1 0
6	1 0 0 0	14	1 0 1 0
7	0 1 1 1		

The nonzero polynomials in $GF(2^4)$ are expressible as

$$c_3\beta^3 + c_2\beta^2 + c_1\beta^1 + c_0 = (\beta + 1)^i \bmod \beta^4 + \beta^3 + \beta^2 + \beta + 1$$

The multiplicative inverse modulo $x^4 + x^3 + x^2 + x + 1$ of

$$(x^3 + x^2 + 1) \longleftrightarrow \beta^3 + \beta^2 + 1 \text{ is } v(x) \longleftrightarrow v(\beta)$$

Since

$$(\beta + 1)^{15} = 1 \text{ and } \beta^3 + \beta^2 + 1 = (\beta + 1)^5$$

$$v(\beta) = (\beta + 1)^{10} = \beta^3 + \beta^2$$

and

$$v(x) = x^2 + x^3$$

A version of Euclid's method which is recursive and detailed in Reference 4 is recommended for determining multiplicative inverses in finite fields of higher order.

The partial fraction expansion is, thus, complete and

$$G(x) = \frac{g(x)}{f(x)} = \frac{1}{1 + x + x^3 + x^4 + x^7}$$

$$= \frac{1 + x + x^2}{1 + x^2 + x^3} + \frac{x^2 + x^3}{1 + x + x^2 + x^3 + x^4}$$

$$= \frac{u(x)}{h(x)} + \frac{v(x)}{s(x)}$$

The seven-stage SSFSR may be viewed as being decomposed into a three-stage and a four-stage SSFSR. Its state behavior can be determined from the linear recurrence relation

$$a_k = a_{k-1} + a_{k-3} + a_{k-4} + a_{k-7}$$

with the initial conditions

$$a_{-1} = a_{-2} = \ldots = a_{-6} = 0, \; a_{-7} = 1$$

corresponding to $g(x) = 1$. Successive states $\alpha_{k-1}\ \alpha_{k-2}\ \cdots\ \alpha_{k-7}$ and α are tabulated in Table 2-2 for the cycle of states containing the initial state 0 0 , ... , 0 1. Its generating function is

$$G(x) = \frac{1}{1 + x + x^3 + x^4 + x^7}$$

The state behavior of the 3-stage SSFSR is described by

$$b_k = b_{k-2} + b_{k-3}$$

Its generating function, the first term of partial fraction expansion of $G(x)$, is

$$\frac{u(x)}{h(x)} = \frac{1 + x + x^2}{1 + x^2 + x^3}$$

The initial state is determined as follows:

$$\begin{array}{l} \quad b_{-2} + b_{-1}x \\ \underline{+\ b_{-3} + b_{-2}x + b_{-1}x^2} \\ = 1 \quad + \quad x + \quad x^2 = u(x) \end{array}$$

Thus,

$$b_{-1} = 1 \qquad 1 + b_{-2} = 1 \qquad 0 + b_{-3} = 1$$
$$b_{-2} = 0 \qquad b_{-3} = 1$$

Successive states $b_{k-1}\ b_{k-2}\ b_{k-3}$ and b_k appear in Table 2-2 for $b_{-1}\ b_{-2}\ b_{-3} = 1\ 0\ 1$. Since its characteristic polynomial $h(x)$ is of degree 3 and primitive, the periodicity of $\{b_k\}$ is $2^3 - 1$ or 7 and $b_{k-1} = b_{7k-1}$

Table 2-2. State Table of a 7-Stage SSFSR and Components of a Decomposition for $f(x) = 1 + x + x^3 + x^4 + x^7 = (1 + x^2 + x^3)(1 + x + x^2 + x^3 + x^4)$

k	a_{k-1}	a_{k-2}	a_{k-3}	a_{k-4}	a_{k-5}	a_{k-6}	a_{k-7}	a_k	b_{k-1}	b_{k-2}	b_{k-3}	b_k	d_{k-1}	d_{k-2}	d_{k-3}	d_{k-4}	d_k	$b_k+d_k = a_k$
0	0	0	0	0	0	0	1	1	1	0	1	1	1	0	1	0	0	1
1	1	0	0	0	0	0	0	1	1	1	0	1	0	1	0	1	0	1
2	1	1	0	0	0	0	0	1	1	1	1	0	0	0	1	0	1	1
3	1	1	1	0	0	0	0	0	0	1	1	0	1	0	0	1	0	0
4	0	1	1	1	0	0	0	0	0	0	1	1	0	1	0	0	1	0
5	0	0	1	1	1	0	0	0	1	0	0	0	1	0	1	0	0	0
6	0	0	0	1	1	1	0	1	0	1	0	1	0	1	0	1	0	1
7	1	0	0	0	1	1	1	0	1	0	1	1	0	0	1	0	1	0
8	0	1	0	0	0	1	1	1	1	1	0	1	1	0	0	1	0	1
9	1	0	1	0	0	0	1	1	1	1	1	0	0	1	0	0	1	1
10	1	1	0	1	0	0	0	0	0	1	1	0	1	0	1	0	0	0
11	0	1	1	0	1	0	0	1	0	0	1	1	0	1	0	1	0	1
12	1	0	1	1	0	1	0	1	0	0	0	0	0	1	0	0	1	1
13	1	1	0	1	1	0	1	1	0	1	0	1	1	0	0	1	0	1
14	1	1	1	0	1	1	0	0	1	0	1	1	0	1	0	0	1	0
15	0	1	1	1	0	1	1	1	1	1	0	1	1	0	1	0	0	1
16	1	0	1	1	1	0	1	0	1	1	1	0	0	1	0	1	0	0
17	0	1	0	1	1	1	0	1	0	1	1	0	0	0	1	0	1	1
18	1	0	1	0	1	1	1	1	0	0	1	1	1	0	0	1	0	1
19	1	1	0	1	0	1	1	1	1	0	0	0	0	1	0	0	1	1
20	1	1	1	0	1	0	1	1	0	1	0	1	1	0	1	0	0	1
21	1	1	1	1	0	1	0	1	1	0	1	1	0	1	0	1	0	1
22	1	1	1	1	1	0	1	0	1	1	0	1	0	0	1	0	1	0
23	0	1	[illegible]	1	1	1	0	0	1	1	1	0	1	0	0	1	0	0
24	0	0	1	1	1	1	1	1	0	1	1	0	0	1	0	0	1	1
25	1	0	0	1	1	1	1	1	0	0	1	1	1	0	1	0	0	1
26	1	1	0	0	1	1	1	0	1	0	0	0	0	1	0	1	0	0
27	0	1	1	0	0	1	1	0	0	1	0	1	0	0	1	0	1	0
28	0	0	1	1	0	0	1	1	1	0	1	1	1	0	0	1	0	1
29	1	0	0	1	1	0	0	0	1	1	0	1	0	1	0	0	1	0
30	0	1	0	0	1	1	0	0	1	1	1	0	1	0	1	0	0	0
31	0	0	1	0	0	1	1	0	0	1	1	0	0	1	0	1	0	0
32	0	0	0	1	0	0	1	0	0	0	1	1	0	0	1	0	1	0
33	0	0	0	0	1	0	0	0	1	0	0	0	1	0	0	1	0	0
34	0	0	0	0	0	1	0	0	0	1	0	1	0	1	0	0	1	0
0	0	0	0	0	0	0	1	1	1	0	1	1	1	0	1	0	0	0

The behavior of the 4-stage SSFSR is described by

$$d_k = d_{k-1} + d_{k-2} + d_{k-3} + d_{k-4}$$

Its generating function, the second term of the partial fraction expansion of G(x), is

$$\frac{v(x)}{s(x)} = \frac{x^2 + x^3}{1 + x + x^2 + x^3 + x^4}$$

The feedback connections and the initial state uniquely determines v(x).

$$\begin{array}{l} \quad d_{-1} \\ + d_{-2} + d_{-1}x \\ + d_{-3} + d_{-2}x + d_{-1}x^2 \\ + d_{-4} + d_{-3}x + d_{-2}x^2 + d_{-1}x^3 \\ \hline = \qquad\qquad\qquad x^2 + \quad x^3 = v(x) \end{array}$$

and $d_{-1}d_{-2}d_{-3}d_{-4} = 1\ 0\ 1\ 0$. Successive states $d_{k-1}d_{k-2}d_{k-3}d_{k-4}$ and d_k appear in Table 2-2 with the foregoing initial state. The characteristic polynomial s(x) is of degree 4. It is a nonprimitive irreducible polynomial whose roots have order 5, a divisor of $2^4 - 1$. Equivalently, s(x) divides $1 - x^{\ell}$ for the least integer value ℓ of 5. The periodicity of $\{d_k\}$ is, thus, 5 and $d_{k-i} = d_{5k-i}$.

As shown in Table 2-2

$$\{a_k\} = \{b_k\} + \{d_k\}$$

and $\{a_k\}$ has period 35, the LCM of 7 (the period of $\{b_k\}$) and 5 (the period of $\{d_k\}$). The LCM of two nonnegative integers a and b is

$$[a,b] = \frac{ab}{(a,b)} \qquad a + b > 0$$

Two meshed gears, one with seven teeth (corresponding to the period of $\{b_k\}$) and one with five teeth corresponding to the period of $\{d_k\}$, represent a mechanical analog of the decomposed SSFSRs. A scribe line, joining the centers of the gears before drive is applied to one, corresponds to the initial state. Upon the application of drive, the scribe line of the respective gears rotate (in opposite directions). Both scribe lines will simultaneously first return to their original positions after the number of distinct pairs of teeth that have passed through the point of contact is [7, 5] = 35. Equivalently,

$$f(x) = 1 + x + x^3 + x^4 + x^7 \text{ divides } 1 - x^{\ell}$$

for the least value of ℓ equal to 35, and the period of $\{\alpha_k\}$ is 35. The order of the roots of h(x), s(x), and f(x) is, respectively

$$\alpha^7 = 1, \beta^5 = 1 \text{ and } \delta^{35} = 1$$

where $h(\alpha) = s(\beta) = f(\delta) = 0$

Given

$$f(x) = \prod_{i=1}^{n} f_i(x)$$

where each factor $f_i(x)$ is an irreducible polynomial of degree $r_i > 0$ over GF(2) and $f_i(x) \neq f_j(x)$ for $i \neq j$. An irreducible polynomial $f_i(x)$ is said to "belong to exponent ℓ_i" if $f_i(x)$ divides $1 - x^{\ell_i}$ but does not divide $1 - x^s$ for $s < \ell_i$. Also, ℓ_i is the order of α_i where $f_i(\alpha) = 0$.

The "period of f(x)" is

$$= [\ell_1, \ell_2, \ldots, \ell_n]$$

the LCM of the exponents to which the distinct irreducible factors belong.

Every irreducible polynomial over GF(2) of degree $r \leq 16$ can be determined from Table C.2 in Appendix C of Reference 6. The table contains a partial list of irreducible polynomials for $16 < r \leq 34$ where factors of $x^{2^r-1} - 1$ belonging to all possible exponents are given. The octal equivalent of the binary coefficient string represents each polynomial. Associated with each polynomial is an integer power (corresponding to an element of a cyclotomic coset) of α, a root of the first entry, a primitive polynomial with a minimum number of terms. Each polynomial listed is the minimal polynomial of the roots corresponding to a cyclotomic coset represented by the element of least value. See Table 1-2 of this report, but note that the primitive polynomial whose root is α (corresponding to 1 in the coset $\{1, 2, 4, 8, 16, 32\}$) differs from the one given in Reference 6. In Reference 6, only one of a pair of reciprocal polynomials is listed. The order of the roots of a listed polynomial (i.e., the exponent to which the polynomial belongs) must be computed as shown in Section I.

Every irreducible polynomial over GF(2) through degree 19 can be determined from Reference 7. As in Reference 6, an octal representation is used for each irreducible polynomial. The octal representations are arranged lexicographically, and the period of each listed polynomial is given. Only the lower-valued octal representation of a reciprocal pair of polynomials is listed. The table enables one to readily determine whether a given polynomial is irreducible.

Reference 8 lists one primitive polynomial over GF(2) with the minimum possible number of terms for every degree through 168. Another list where the numbers of terms is not, in general, a minimum appears in Reference 9 for every degree through 100.

A method of deriving every primitive polynomial of degree r from a given r^{th} degree primitive polynomial appears in Reference 10. Also presented is an outline of an approach to the much more difficult problem of synthesizing a primitive polynomial.

Example 9 is illustrative of the relationship between the period of f(x) and the exponents to which its distinct irreducible factors belong. The period of f(x) corresponds to the period of the longest cycle(s) of states. By initializing the SSFSR with a state corresponding to a g(x) that has a factor in common with f(x), a minor cycle is generated.

Example 10

Consider the 7-stage SSFSR in Example 9. An initial state corresponding to

$$g(x) = s(x) = 1 + x + x^2 + x^3 + x^4$$

results in

$$G(x) = \frac{s(x)}{h(x)s(x)} = \frac{1}{1 + x^2 + x^3}$$

and a sequence $\{a_k\}$ whose period is length 7. From

$$a_k = a_{k-1} + a_{k-3} + a_{k-4} + a_{k-7}$$

$a_{-1}\ a_{-2}\ ,\ \ldots\ ,\ a_{-7}$ is determined as follows:

$$
\begin{aligned}
& a_{-1} \\
& + a_{-3} + a_{-2}x + a_{-1}x^2 \\
& = a_{-4} + a_{-3}x + a_{-2}x^2 + a_{-1}x^3 \\
& + a_{-7} + a_{-6}x + a_{-5}x^2 + a_{-4}x^3 + a_{-3}x^4 + a_{-2}x^5 + a_{-1}x^6 \\
\hline
= \ & 1 + x + x^2 + x^3 + x^4 \\
= \ & g(x)
\end{aligned}
$$

$$a_{-1} = a_{-2} = a_{-6} = 0, \quad a_{-3} = a_{-4} = a_{-5} = a_{-7} = 1$$

and the states $a_{k-1}\ a_{k-2}\ ,\ \ldots\ ,\ a_{k-7}$ and $\{a_k\}$ versus k are

k	a_{k-1}	a_{k-2}	a_{k-3}	a_{k-4}	a_{k-5}	a_{k-6}	a_{k-7}	a_k
0	0	0	1	1	1	0	1	1
1	1	0	0	1	1	1	0	0
2	0	1	0	0	1	1	1	1
3	1	0	1	0	0	1	1	1
4	1	1	0	1	0	0	1	1
5	1	1	1	0	1	0	0	0
6	0	1	1	1	0	1	0	1
0	0	0	1	1	1	0	1	1

It may be verified that the successive states under any 3 adjacent columns correspond to those generated by a 3-stage SSFSR described by the linear recurrence relationship

$$a_k = a_{k-2} + a_{k-3}$$

and appropriately initialized. In particular, $a_{k-1}\ a_{k-2}\ a_{k-3}$ where $a_{-1}\ a_{-2}\ a_{-3} = 0\ 0\ 1$ mimics the 3-stage SSFSR whose generating function is

$$G(x) = \frac{1}{1 + x^2 + x^3}$$

Refer to Table 2-3. Each of the states in the foregoing length 7 cycle is treated as an initial state and mapped onto its corresponding g(x). Each g(x) is nonzero, of degree 6 or less, and contains

$$s(x) = 1 + x + x^2 + x^3 + x^4$$

as a factor. The remaining factor $\hat{g}(x)$ for each g(x) must be nonzero and of degree 2 or less. There are a total of 7 such $\hat{g}(x)$'s where

$$\hat{g}(x) = c_2x^2 + c_1x + c_0$$

and at least one of the three coefficients is nonzero. Each of the 7 states in the length 7 cycle (when used as an initial state) yields

$$G(x) = \frac{\hat{g}(x)}{1 + x^2 + x^3} \qquad \text{where} \qquad (\hat{g}(x),\ 1 + x^2 + x^3) = 1$$

It can then be concluded that the 7-stage SSFSR generates one, and only one, cycle of length 7.

An initial state corresponding to

$$g(x) = \hat{g}(x)h(x) = \hat{g}(x)(1 + x^2 + x^3)$$

results in

$$G(x) = \frac{\hat{g}(x)h(x)}{h(x)s(x)} = \frac{\hat{g}(x)}{1 + x + x^2 + x^3 + x^4}$$

Table 2-3. Initial States of a 7-Stage SSFSR that Map onto a $g(x)$ Containing $x^4 + x^3 + x^2 + x + 1$ as a Factor

Initial State							$g(x)$							
a_{-1}	a_{-2}	a_{-3}	a_{-4}	a_{-5}	a_{-6}	a_{-7}	x^6	x^5	x^4	x^3	x^2	x	1	$g(x) = \hat{g}(x)(x^4 + x^3 + x^2 + x + 1)$
0	0	1	1	1	0	1	0	0	1	1	1	1	1	$(\quad 1)(x^4 + x^3 + x^2 + x + 1)$
1	0	0	1	1	1	0	1	0	0	0	0	1	0	$(x^2 + x \quad)(x^4 + x^3 + x^2 + x + 1)$
0	1	0	0	1	1	1	0	1	0	0	0	0	1	$(\quad x + 1)(x^4 + x^3 + x^2 + x + 1)$
1	0	1	0	0	1	1	1	0	1	1	1	0	1	$(x^2 + x + 1)(x^4 + x^3 + x^2 + x + 1)$
1	1	0	1	0	0	1	1	1	0	0	0	1	1	$(x^2 \quad + 1)(x^4 + x^3 + x^2 + x + 1)$
1	1	1	0	1	0	0	1	1	1	1	1	0	0	$(x^2 \quad)(x^4 + x^3 + x^2 + x + 1)$
0	1	1	1	0	1	0	0	1	1	1	1	1	0	$(\quad x \quad)(x^4 + x^3 + x^2 + x + 1)$
Characteristic Polynomial							$f(x) = (1 + x^2 + x^3)(1 + x + x^2 + x^3 + x^4)$							

Since $g(x)$ is of degree 6 or less, $\hat{g}(x)$ is of degree 3 or less and

$$(\hat{g}(x),\ x^4 + x^3 + x^2 + x + 1) = 1$$

There are 15 nonzero initial states corresponding to

$$g(x) = (c_3x^3 + c_2x^2 + c_1x + c_0)(x^3 + x^2 + 1)$$

where at least one c_i is nonzero. A simplified approach to determining one initial state is as follows:

k	a_{k-1}	a_{k-2}	a_{k-3}	a_{k-4}	a_{k-5}	a_{k-6}	a_{k-7}	a_k
0	0	0	0	1	-	-	-	1
1	1	0	0	0	1	-	-	1
2	1	1	0	0	0	1	-	0
3	0	1	1	0	0	0	1	0
				⋮	⋮			

Embedded in the left four stages is the state-behavior of a 4-stage SSFSR whose generating function is

$$G(x) = \frac{1}{1 + x + x^2 + x^3 + x^4}$$

Furthermore,

$$a_k = a_{k-1} + a_{k-2} + a_{k-3} + a_{k-4}$$
$$a_k = a_{k-1} + a_{k-3} + a_{k-4} + a_{k-7}$$

and

$$0 = a_{k-2} + a_{k-7}$$
$$a_{k-7} = a_{k-2}$$

is sufficient information to fill in the dashed entries.

One cycle of length 7 and 3 cycles of length 5 accounts for 22 states. Each of the states, when viewed as an initial state, maps onto a g(x) where

$$(g(x),\ f(x)) = x^4 + x^3 + x^2 + x + 1 \text{ or } x^3 + x^2 + 1$$

The all zeros state maps onto g(x) = 0 and

$$(0,\ f(x)) = f(x)$$

corresponds to

$$G(x) = \frac{0}{f(x)} = \frac{0}{1} = 0 = \{a_k\}$$

with periodicity 1. The remaining 105 (2^8 - 23) distinct nonzero states when viewed as initial states map onto 105 distinct g(x)'s. The greatest

common divisor of each g(x) and

$$f(x) = h(x)s(x) = 1 + x + x^3 + x^4 + x^7$$

is 1. Each of the 105 states is contained in one and only one cycle of length 35. The number of length 35 cycles is 7. The cycle structure of the SSFSR is summarized as follows:

Length of Cycle	Number of Cycle(s)	Number of States
1	1	1
5	3	15
7	1	7
35	7	105
		Total 128

Given that

$$f(x) = [s(x)]^e \qquad \text{where the integer } e > 1$$

The length of the longest cycle is the least integer value ℓ for which

$$[s(x)]^e \text{ divides } 1 - x^{\ell}$$

The exponent to which s(x) belongs is ℓ_1 and

$$s(x) \text{ divides } 1 - x^{\ell_1}$$

Also,

$$[s(x)]^e \text{ divides } \left(1 - x^{\ell_1}\right)^e$$

and

$$\left(1 - x^{\ell_1}\right)^{2^i} = 1 - x^{2^i \ell_1} \text{ over } GF(2)$$

for integer values $i \geq 0$. The period of $[s(x)]^e$ is thus

$$1 - x^{2^i \ell_1}$$

where $2^{i-1} < e \leq 2^i$

<u>Example 11</u>

Given a 9-stage SSFSR characterized by

$$f(x) = [s(x)]^e = (1 + x^2 + x^3)^3$$

The period of the s(x) is 7.

Since

$$2 < 3 < 2^2$$

f(x) has period $2^2 \cdot 7 = 28$ and the length of the longest cycle that the 9-stage SSFSR can generate is 28. Every state that maps onto a g(x) such that

$$(g(x), [s(x)]^3) = 1$$

is contained in a cycle of length 28. Every state that maps onto a g(x) such that

$$(g(x),\ [s(x)]^3) = s(x)$$

is contained in a cycle of length $2 \cdot 7 = 14$. Every state that maps onto a g(x) such that

$$(g(x),\ [s(x)]^3) = [s(x)]^2$$

is contained in a cycle of length 7. The all zeros state maps onto $g(x) = 0$ and

$$(0,\ [s(x)]^3) = [s(x)]^3$$

Thus, the all zeros state comprises a cycle of length 1.

An SSFSR characterized by

$$f(x) = \prod_{j=1}^{n} [f_j(x)]^{e_j} \qquad e_j \geq 1$$

where $f_j(x)$ has period ℓ_j when initialized with the state 0 0 , ... , 0 1 generates a cycle of longest length

$$\ell = [2^{i_1}\ell_1,\ 2^{i_2}\ell_2,\ \ldots\ ,\ 2^{i_n}\ell_n]$$

where $2^{i_j - 1} < e_j \leq 2^{i_j}$ and the length of every cycle divides ℓ, the length of the longest cycle.

SECTION III

AN ISOMORPHISM BETWEEN THE STATES OF AN r-STAGE SSFSR AND AN r-STAGE ISFSR

The sequence $\{a_k\}$ emanating from a 4-stage SSFSR satisfies the linear recurrence relation

$$a_k = a_{k-1} + a_{k-2} + a_{k-4} \tag{1}$$

The characteristic polynomial of (1) is

$$f(x) = (1 + x + x^2 + x^4) = (1 + x)(1 + x^2 + x^3) \tag{2}$$

The cycles of states and the corresponding $\{a_k\}$ are tabulated in Table 3-1. Each state in a cycle may be viewed as an initial state that maps onto a g(x). The coefficients of g(x) are linear functions of a_{-1}, a_{-2}, a_{-3} and a_{-4} as follows:

$$\begin{array}{l} \quad\;\; a_{-1} \\ + \; a_{-2} \qquad\qquad + \; a_{-1}x \\ + \; a_{-4} \qquad\qquad + \; a_{-2}x + a_{-2}x^2 + a_{-1}x^3 \\ \hline g(x) = (a_{-1} + a_{-2} + a_{-4}) + (a_{-1} + a_{-3})x + a_{-2}x^2 + a_{-1}x^3 \end{array} \tag{3}$$

The coefficients of g(x) are evaluated for each of the 16 states (when viewed as an initial state) on the right side of Table 3-1. It may be noted by inspection that distinct states map onto distinct g(x)'s. Thus, a one-to-one correspondence exists between the 16 possible (initial) states and the 16 distinct g(x)'s. The states comprise a vector space over GF(2) of dimension 4 (see References 1 and 5). The linearly independent unit vectors form a natural basis and map onto g(x)'s in accordance with (3).

Table 3-1. The One-to-One Correspondence Between the States of an SSFSR and the g(x) Polynomials

k	a_{k-1}	a_{k-2}	a_{k-3}	a_{k-4}	a_k		g(x) x^3	x^2	x	1
0	0	0	0	0	0	x*	0	0	0	0
0	0	0	0	0	0	x*	0	0	0	0
0	0	0	0	1	1	1	0	0	0	1
1	1	0	0	0	1	x^6	1	0	1	1
2	1	1	0	0	0	x^5	1	1	1	0
3	0	1	1	0	1	x^4	0	1	1	1
4	1	0	1	1	0	x^3	1	0	0	0
5	0	1	0	1	0	x^2	0	1	0	0
6	0	0	1	0	0	x	0	0	1	0
0	0	0	0	1	1	1	0	0	0	1
0	1	1	1	0	0	γ	1	1	0	0
1	0	1	1	1	0	γx^6	0	1	1	0
2	0	0	1	1	1	γx^5	0	0	1	1
3	1	0	0	1	0	γx^4	1	0	1	0
4	0	1	0	0	1	γx^3	0	1	0	1
5	1	0	1	0	1	γx^2	1	0	0	1
6	1	1	0	1	1	γx	1	1	1	1
0	1	1	1	0	0	γ	1	1	0	0
0	1	1	1	1	1	δ	1	1	0	1
0	1	1	1	1	1	δ	1	1	0	1

$a_k = a_{k-1} + a_{k-2} + a_{k-4}$

$f(x) = x^4 + x^2 + x + 1$

$= (x + 1)(x^3 + x^2 + 1)$

$x^{-1} = x^6 \equiv x^3 + x + 1 \bmod f(x)$

$\gamma = x^3 + x^2 = x^2(x + 1)$

$\delta = x^3 + x^2 + 1$

$$
\begin{array}{cccccccccc}
 & a_{-1} & a_{-2} & a_{-3} & a_{-4} & & x^3 & x^2 & x & 1 \\
[& 1 & 0 & 0 & 0 &] \longleftrightarrow [& 1 & 0 & 1 & 1] \\
[& 0 & 1 & 0 & 0 &] \longleftrightarrow [& 0 & 1 & 0 & 1] \\
[& 0 & 0 & 1 & 0 &] \longleftrightarrow [& 0 & 0 & 1 & 0] \\
[& 0 & 0 & 0 & 1 &] \longleftrightarrow [& 0 & 0 & 0 & 1]
\end{array}
$$

The vectors representing coefficients of corresponding g(x)'s are also linearly independent and span a vector space over GF(2) of dimension 4. Two vector spaces of the same dimension and over the same field are isomorphic. The mapping from an SSFSR state to its corresponding ISFSR state is realized by the linear transformation matrix

$$
T = \begin{bmatrix} 1 & 0 & 1 & 1 \\ 0 & 1 & 0 & 1 \\ 0 & 0 & 1 & 0 \\ 0 & 0 & 0 & 1 \end{bmatrix} \tag{4}
$$

An SSFSR state $a_{k-1}, a_{k-2}, a_{k-3}, a_{k-4}$, which need not be an initial state - i.e., $k \geq 0$, maps onto a ISFSR state as follows:

$$
\left[a_{k-1}, a_{k-2}, a_{k-3}, a_{k-4}\right]T = \left[b_3, b_2, b_1, b_0\right]
$$

where $\left[b_3, b_2, b_1, b_0\right]$ is the vector representation of

$$
b_3x^3 + b_2x^2 + b_1x + b_0 = g(x)
$$

Let u and $\hat{u}$ denote any two SSFSR states (not necessarily distinct). Then T in (4) yields

$$
(d_1u + d_2\hat{u})T = d_1(uT) + d_2(\hat{u}T)
$$

where c_1, $c_2 \in GF(2)$ are scalar multipliers. The inverse of T,

$$T^{-1} = \begin{bmatrix} 1 & 0 & 1 & 1 \\ 0 & 1 & 0 & 1 \\ 0 & 0 & 1 & 0 \\ 0 & 0 & 0 & 1 \end{bmatrix} \tag{5}$$

is the linear transformation matrix that maps every given g(x) to its corresponding SSFSR state. The vectors in T^{-1} in (5) (top to bottom), respectively, represent SSFSR states corresponding to the natural basis [1, 0, 0, 0], [0, 1, 0, 0], [0, 0, 1, 0], and [0, 0, 0, 1], representing x^3, x^2, x, and 1.

The cycles of g(x)'s mathematically describe the behavior of a 4-stage ISFSR that performs division by a root of f(x) in (2). Let be a root of f(x). Then,

$$\begin{aligned} f(\alpha) = 0 &= 1 + \alpha + \alpha^2 + \alpha^4 \\ 1 &= \alpha^4 + \alpha^2 + \alpha \\ \alpha^{-1} &= \alpha^3 + \alpha + 1 \end{aligned}$$

Note that α has order 7, and $\alpha^{-1} = \alpha^6$ has order 7. The elements α and x are equivalent, i.e., they are the same elements in $GF(2^4)$ with different labels. Thus, $x \longleftrightarrow \alpha$ and

$$x^{-1} = x^6 \equiv x^3 + x + 1 \bmod x^4 + x^2 + x + 1$$

The 4-stage ISFSR performs division by x and reduces the result modulo $x^4 + x^2 + x + 1$ (see Figure 3-1).

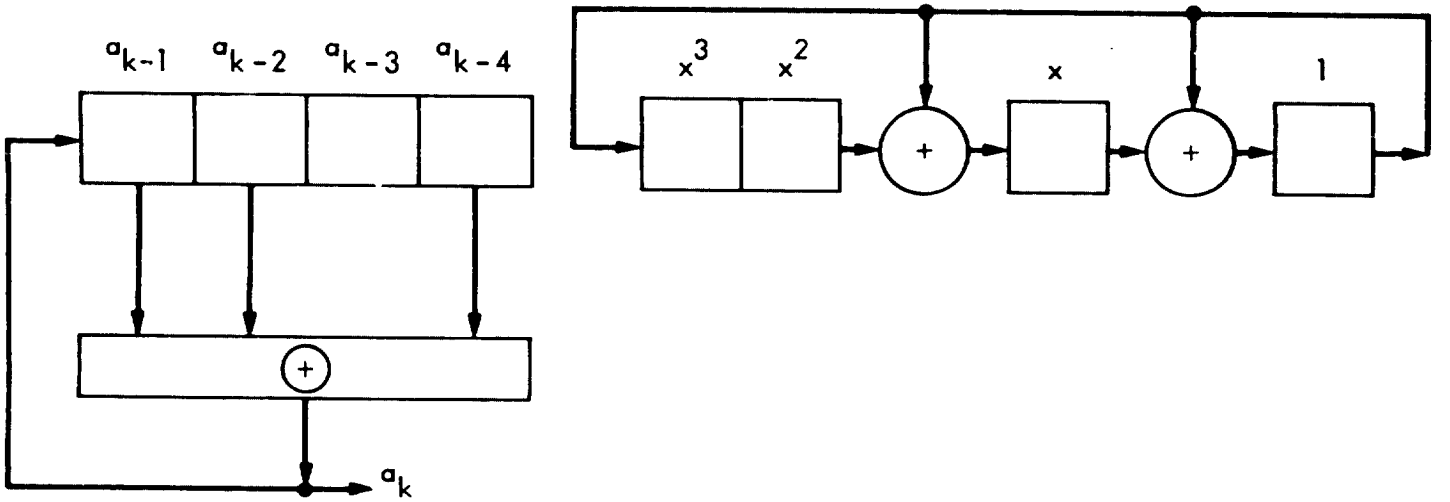

SSFSR

$$a_k = a_{k-1} + a_{k-2} + a_{k-4}$$

$$f(x) = x^4 + x^2 + x + 1$$

$$= (x + 1)(x^3 + x^2 + 1)$$

ISFSR

REALIZATION OF DIVISION BY

x MODULO $x^4 + x^2 + x + 1$

Figure 3-1. A 4-Stage SSFSR and a 4-Stage ISFSR with Isomorphic State Spaces

Each of the 16 possible SSFSR states in Table 3-1 maps onto an ISFSR as follows:

$$\left[a_{k-1},\ a_{k-2},\ a_{k-3},\ a_{k-4}\right]\underbrace{\begin{bmatrix}1&0&1&1\\0&1&0&1\\0&0&1&0\\0&0&0&1\end{bmatrix}}_{T} = \underbrace{\left[a_{k-1},\ a_{k-2},\ a_{k-1}+a_{k-3},\ a_{k-1}+a_{k-2}+a_{k-4}\right]}_{a_k} \tag{6}$$

The next SSFSR state (i.e., at CPI k + 1) is

$$\left[a_k,\ a_{k-1},\ a_{k-2},\ a_{k-3}\right]$$

where

$$a_k = a_{k-1} + a_{k-2} + a_{k-4}$$

and

$$\left[a_k,\ a_{k-1},\ a_{k-2},\ a_{k-3}\right]T = \left[a_k,\ a_{k-1},\ a_k + a_{k-2},\ a_k + a_{k-1} + a_{k-3}\right] \tag{7}$$

The right hand side of matrix equations (6) and (7) represent successive transformed SSFSR states appearing in the ISFSR in Figure 3-1 at CPI k and CPI k + 1, respectively. Given that the ISFSR stores

$$a_{k-1},\ a_{k-2},\ a_{k-1} + a_{k-3},\ a_k \qquad \text{at CPI } k$$

Applying a clock pulse to the ISFSR results in

$$\begin{array}{llll} 0, & a_{k-1}, & a_{k-2}, & a_{k-1} + a_{k-3} \\ a_k, & 0, & a_k, & a_k \\ \hline a_k, & a_{k-1}, & a_k + a_{k-2}, & a_k + a_{k-1} + a_{k-3} \end{array} \tag{8}$$

The ISFSR state (8) at CPI k + 1 is identical to the transformed SSFSR state in (7) at CPI k + 1. Thus, the succession of corresponding SSFSR and ISFSR states is preserved under the isomorphism. The next state mappings for the SSFSR and ISFSR are one-to-one onto and described by the following, respective, nonsingular transformation matrices:

$$N_{SS} = \begin{bmatrix} 1 & 1 & 0 & 0 \\ 1 & 0 & 1 & 0 \\ 0 & 0 & 0 & 1 \\ 1 & 0 & 0 & 0 \end{bmatrix} \qquad N_{IS} = \begin{bmatrix} 0 & 1 & 0 & 0 \\ 0 & 0 & 1 & 0 \\ 0 & 0 & 0 & 1 \\ 1 & 0 & 1 & 1 \end{bmatrix}$$

The unit vectors comprising the natural basis in an SSFSR vector space <u>do not, in general</u>, belong to the same cycle. However, <u>one cycle</u> in an ISFSR vector space <u>always contains the unit vectors</u> in <u>consecutive positions</u>. The mapping of the unit vectors (in the natural basis) representing SSFSR states is related to f(x) in (2) as follows:

$$f(x) = x^4 + c_3x^3 + c_2x^2 + c_1x + 1$$

where $c_3 = 0$ and $c_2 = c_1 = 1$

$a_{k-1}a_{k-2}a_{k-3}a_k$		x^3 x^2 x 1
[1 0 0 0]	$\longrightarrow$	[1 c_3 c_2 c_1]
[0 1 0 0]	$\longrightarrow$	[0 1 c_3 c_2]
[0 0 1 0]	$\longrightarrow$	[0 0 1 c_3]
[0 0 0 1]	$\longrightarrow$	[0 0 0 1]

The transformation matrix T in (4) is comprised of the foregoing image vectors. The unit vectors (in the natural basis) representing ISFSR states namely, x^3, x^2, x, and 1 are in consecutive positions (of a cycle). Their images may be determined directly.

$$x^4 f(1/x) = 1 + x^2 + x^3 + x^4$$

is the reciprocal polynomial of f(x) in (2). It is the characteristic polynomial of the linear recurrence relation

$$b_k = b_{k-2} + b_{k-3} + b_{k-4}$$

that describes the state behavior of a 4-stage SSFSR with the same cycle structure as the SSFSR in Figure 3-1. Corresponding cycles will contain the same states where successive states of one is the reverse of the other for a configuration of the former illustrated as follows.

k	b_{k-4}	b_{k-3}	b_{k-2}	b_{k-1}	a_{k-1}	a_{k-2}	a_{k-3}	a_{k-4}
0	0	0	0	1	0	0	0	1
1	0	0	1	0	1	0	0	0
2	0	1	0	1	1	1	0	0
3	1	0	1	1	0	1	1	0
4	0	1	1	0	1	0	1	1
5	1	1	0	0	0	1	0	1
6	1	0	0	0	0	0	1	0
0	0	0	0	1	0	0	0	1

Shifting (right to left) as well as labeling (b_{k-4} b_{k-3} b_{k-2} b_{k-1}) is the reverse of the SSFSR in Figure 3-1. Since

$$\begin{array}{ccc} a_{k-1}a_{k-2}a_{k-3}a_{k-4} & & x^3\ x^2\ x\ \ 1 \\ [\ 0\ \ 0\ \ 0\ \ 1\ \ ] & \longleftarrow & [\ 0\ \ 0\ \ 0\ \ 1\ ] \end{array}$$

the additional images of interest are those corresponding to the images of three successive predecessors of x^0 = [0 0 0 1], namely x, x^2, and x^3.

These are the three successor states of $b_{k-4}\ b_{k-3}\ b_{k-2}\ b_{k-1}$ = [0 0 0 1] in <u>reverse</u> order. Thus,

$a_{k-1}a_{k-2}a_{k-3}a_{k-4}$		$x^3\ x^2\ x\ 1$
[1 0 1 1]	←	[1 0 0 0]
[0 1 0 1]	←	[0 1 0 0]
[0 0 1 0]	←	[0 0 1 0]
[0 0 0 1]	←	[0 0 0 1]

The transformation matrix T^{-1} in (5) is comprised of the foregoing image vectors. Note that T in (4) and T^{-1} in (5) are equal for f(x) in (2). However T and T^{-1} are not necessarily equal for other f(x)'s.

The significance of the methods presented for determining T and T^{-1} is that they are applicable to every f(x) over GF(2). It obviates the need for generating the corresponding SSFSR and ISFSR cycles which is prohibitive except for small values of r.

The binary sequences in the feedback of the SSFSR and the ISFSR in Figure 3-1 are identical under the isomorphism. That is, a_k equals the coefficient of x^0 for every pair of isomorphic states in Table 3-1.

Self-reciprocal f(x)'s characterize FSRs that generate palindromic sequences.

Recall that the generating function

$$G(x) = \frac{g(x)}{f(x)} \tag{9}$$

where

$$g(x) = \sum_{i=1}^{r} c_i x^i \left[a_{-i} x^{-i} + a_{-i+1} x^{-i+1} + \ldots + a_{-1} x^{-1} \right] \tag{9a}$$

$$c_r = 1 \text{ and } f(x) = 1 - \sum_{i=1}^{r} c_i x^i \tag{9b}$$

characterizes the behavior of an r-stage SSFSR. As previously discussed, each possible SSFSR state may be viewed as an initial state that maps onto a g(x) that represents an isomorphic ISFSR state. If f(x) in (9b) is reducible, an ISFSR state that is a member of a cycle whose length equals the period of a particular irreducible or reducible factor may be determined directly. Furthermore, the length of the cycle to which any given ISFSR state belongs can be readily determined.

Example 12

The SSFSR in Figure 3-1 is characterized by

$$f(x) = (x + 1)(x^3 + x^2 + 1)$$

The nonzero ISFSR state belonging to a cycle of length 1 is represented by

$$g(x) = x^3 + x^2 + 1 \text{ or } 1 \quad 1 \quad 0 \quad 1$$

Since

$$G(x) = \frac{x^3 + x^2 + 1}{(x + 1)(x^3 + x^2 + 1)} = \frac{1}{x + 1}$$

is associated with its isomorphic SSFSR state, it is contained on a cycle of length 1 equal to the period of x + 1.

CPI	x^3	x^2	x	1
k	1	1	0	1
	0	1	1	0
	1	0	1	1
k + 1	1	1	0	1

and ISFSR state 1 1 0 1 is its own successor.

Example 13

Given an SSFSR described by

$$f(x) = x^{10} + x^9 + x^7 + x^5 + x + 1$$

$$= (x + 1)^3(x^3 + x^2 + 1)(x^4 + x^3 + 1)$$

The period of $(x + 1)^3$ is 4, $x^3 + x^2 + 1$ has period 7, and $x^4 + x^3 + 1$ has period 15. Therefore, the period of f(x) is

$$[4, 7, 15] = 420$$

The ISFSR state 1 1 0 0 1 1 1 0 0 1 corresponding to

$$g(x) = x^9 + x^8 + x^5 + x^4 + x^3 + 1$$

$$= (x + 1)(x^4 + x^3 + 1)(x^4 + x^3 + x^2 + x + 1)$$

is contained in a cycle whose length is equal to the period of

$$f(x)/(g(x), f(x))$$

Since

$$(g(x),\ f(x)) = (x + 1)(x^4 + x^3 + 1)$$

the period of

$$f(x)/((x + 1)(x^4 + x^3 + 1)) = (x + 1)^2(x^3 + x^2 + 1)$$

is [2, 7] or 14. Note that 14 divides 420, the length of the longest cycle(s). The cycle of 14 states is

i of γx^i		$\underline{x}^9$	$\underline{x}^8$	x^7	$\underline{x}^6$	x^5	$\underline{x}^4$	x^3	x^2	x	$\underline{1}$
0		1	1	0	0	1	1	1	0	0	1
419	(-1)	1	0	1	1	0	0	1	1	0	1
418		1	0	0	0	1	1	0	1	1	1
417		1	0	0	1	0	0	1	0	1	0
416		0	1	0	0	1	0	0	1	0	1
415		1	1	1	1	0	0	0	0	1	1
414		1	0	1	0	1	1	0	0	0	0
413		0	1	0	1	0	1	1	0	0	0
412		0	0	1	0	1	0	1	1	0	0
411		0	0	0	1	0	1	0	1	1	0
410		0	0	0	0	1	0	1	0	1	1
409		1	1	0	1	0	0	0	1	0	0
408		0	1	1	0	1	0	0	0	1	0
407	(-13)	0	0	1	1	0	1	0	0	0	1
0		1	1	0	0	1	1	1	0	0	1

where

$$x^{-1} = x^{419} \equiv x^9 + x^8 + x^6 + x^4 + 1 \bmod f(x)$$

$$\gamma = x^9 + x^8 + x^5 + x^4 + x^3 + 1$$

The SSFSR state isomorphic to the ISFSR state γ (i.e., 1 1 0 0 1 1 1 0 0 1) is

$$\gamma T^{-1} = 1\ 0\ 0\ 1\ 0\ 0\ 0\ 0\ 1\ 1$$

where

$$T^{-1} = \begin{bmatrix} 1 & 1 & 1 & 0 & 1 & 1 & 0 & 0 & 1 & 1 \\ 0 & 1 & 1 & 1 & 0 & 1 & 1 & 0 & 0 & 1 \\ 0 & 0 & 1 & 1 & 1 & 0 & 1 & 1 & 0 & 0 \\ 0 & 0 & 0 & 1 & 1 & 1 & 0 & 1 & 1 & 0 \\ 0 & 0 & 0 & 0 & 1 & 1 & 1 & 0 & 1 & 1 \\ 0 & 0 & 0 & 0 & 0 & 1 & 1 & 1 & 0 & 1 \\ 0 & 0 & 0 & 0 & 0 & 0 & 1 & 1 & 1 & 0 \\ 0 & 0 & 0 & 0 & 0 & 0 & 0 & 1 & 1 & 1 \\ 0 & 0 & 0 & 0 & 0 & 0 & 0 & 0 & 1 & 1 \\ 0 & 0 & 0 & 0 & 0 & 0 & 0 & 0 & 0 & 1 \end{bmatrix}$$

An SSFSR state (vector v) is transformed to its isomorphic ISFSR state by vT where

$$T = \begin{bmatrix} 1 & 1 & 0 & 1 & 0 & 1 & 0 & 0 & 0 & 1 \\ 0 & 1 & 1 & 0 & 1 & 0 & 1 & 0 & 0 & 0 \\ 0 & 0 & 1 & 1 & 0 & 1 & 0 & 1 & 0 & 0 \\ 0 & 0 & 0 & 1 & 1 & 0 & 1 & 0 & 1 & 0 \\ 0 & 0 & 0 & 0 & 1 & 1 & 0 & 1 & 0 & 1 \\ 0 & 0 & 0 & 0 & 0 & 1 & 1 & 0 & 1 & 0 \\ 0 & 0 & 0 & 0 & 0 & 0 & 1 & 1 & 0 & 1 \\ 0 & 0 & 0 & 0 & 0 & 0 & 0 & 1 & 1 & 0 \\ 0 & 0 & 0 & 0 & 0 & 0 & 0 & 0 & 1 & 1 \\ 0 & 0 & 0 & 0 & 0 & 0 & 0 & 0 & 0 & 1 \end{bmatrix}$$

The matrices T and T^{-1} are upper triangular matrices where the elements in the principal diagonal are all 1's. A right shift of the components in each row of T and T^{-1} yield the respective next row of each.

■

Consider the cycle structure of the SSFSR in Table 3-1. There are a pair of length 1 cycles and a pair of length 7 cycles. The states in one cycle of each pair are the 1's complement of those in the other. From

$$a_k = a_{k-1} + a_{k-2} + a_{k-4}$$

state

$$a_{k-1},\ a_{k-2},\ a_{k-3},\ a_{k-4}$$

is succeeded by

$$a_k,\ a_{k-1},\ a_{k-2},\ a_{k-3}$$

Whereas, state $\bar{a}_{k-1}, \bar{a}_{k-2}, \bar{a}_{k-3}, \bar{a}_k$, or

$$1 + a_{k-1},\ 1 + a_{k-2},\ 1 + a_{k-3},\ 1 + a_k$$

is succeeded by $\bar{a}_k, \bar{a}_{k-1}, \bar{a}_{k-2}, \bar{a}_{k-3}$

since

$$(1 + a_{k-1}) + (1 + a_{k-2}) + (1 + a_{k-4}) = 1 + a_k = \bar{a}_k$$

and

$$\left\{a_k\right\} = \left\{1\ 1\ 0\ 1\ 0\ 0\ 0\right\}$$

$$\left\{1 + a_k\right\} = \left\{0\ 0\ 1\ 0\ 1\ 1\ 1\right\}$$

are complementary feedback sequences associated, respectively, with the length 7 complementary cycles of states (see Reference 3).

Consider each pair of corresponding ISFSR cycles of states. The state(s) of one cycle of each pair are of odd weight (i.e., contain an odd number of 1's), whereas the state(s) of the other cycles are of even weight. The sequence of g(x)'s, namely, $\{1, x^6, x^5, \ldots, x\}$ represent the cycle of ISFSR states which are isomorphic to the cycle of SSFSR states characterized by

$$G(x) = \frac{1}{f(x)} = \frac{1}{(x + 1)(x^3 + x^2 + 1)}$$

The elements $\{1, x^6, x^5, \ldots, x\}$ form a cyclic group under multiplication. However, they with x* adjoined <u>do not</u> form a group under vector addition. The vector addition of two distinct vectors of odd weight result in a nonzero vector of even weight. Thus, closure is not satisfied and $\{1, x^6, x^5, \ldots, x\}$ with x* adjoined do not form a field. This is not surprising since f(x) associated with the cycle of nonzero isomorphic states is reducible, hence <u>nonprimitive</u>. The sequence of g(x)'s, namely, $\{\gamma, \gamma x^6, \gamma x^5, \ldots, \gamma x\}$ where γ equals $x^3 + x^2$ represent the cycle of ISFSR states which are isomorphic to the cycle of SSFSR states characterized by

$$G(x) = \frac{x^3 + x^2}{(x + 1)(x^3 + x^2 + 1)} = \frac{x^2}{x^3 + x^2 + 1}$$

whose denominator $x^3 + x^2 + 1$ is primitive. The elements $\{\gamma, \gamma x^6, \gamma x^5, \gamma x^5, \ldots, \gamma x\}$ with x* adjoined form a field. The multiplicative identity is $x^3 + x^2$ or γ, i.e., $\gamma^2 \equiv \gamma \bmod f(x)$

$$(x^3 + x^2)^2 = x^6 + x^4 \equiv x^3 + x^2 \bmod x^4 + x^2 + x + 1$$

The multiplicative inverse of γx^j is γx^{7-j}.

$$(\gamma x^j)(\gamma x^{7-j}) = \gamma^2 x^7$$

$$\equiv \gamma \bmod x^4 + x^2 + x + 1$$

The element $x^3 + x^2 + 1$ or δ with x^* adjoined form a field of two elements.

Given the linear recurrence relation

$$a_k = c_0 + \sum_{i=1}^{r} c_i a_{k-i} \tag{10}$$

where $c_i = 0,1$ for $0 \leq i < r$ and $c_r = 1$

$$G(x) = \sum_{k=0}^{\infty} a_k x^k = \sum_{k=0}^{\infty} \left(c_0 + \sum_{i=1}^{r} c_i a_{k-i} \right) x^k$$

$$= \sum_{k=0}^{\infty} c_0 x^k + \sum_{i=1}^{r} c_i x^i \sum_{k=0}^{\infty} a_{k-i} x^{k-i}$$

The first term expressed in closed form is

$$\frac{c_0}{1 - x}$$

The second term can be expressed as

$$g(x) + \left(\sum_{i=1}^{r} c_i x^i \right) G(x)$$

where g(x) is given in 9(a). It follows that

$$G(x) = \frac{\frac{c_0}{1 - x} + g(x)}{f(x)}$$

$$= \frac{c_0 + (1 - x)g(x)}{(1 - x)f(x)}$$

where f(x) is given in 9(b).

For $c_0 = 0$

$$G(x) = \frac{g(x)}{f(x)}$$

as given in (9).

For $c_0 = 1$

$$G(x) = \frac{1 + (1 - x)g(x)}{(1 - x)f(x)} = \frac{g_1(x)}{f_1(x)} \tag{11}$$

Since

$$g_1(1) = 1 + (1 - 1)g(1) = 1.$$

$g_1(x)$ does not contain $x + 1$ as a factor. Hence, $g_1(x)$ has an odd number of terms.

<u>Example 14</u>

$$d_k = 1 + d_{k-2} + d_{k-3}$$

and

$$f_1(x) = (x + 1)(x^3 + x^2 + 1)$$

describe the behavior of the SSFSR in Figure 3-2. The polynomial $g_1(x)$ in (11) versus $d_{-1}d_{-2}d_{-3}$ is derived as follows:

$$g(x) = \frac{\begin{matrix} d_{-2} & + d_{-1}x \\ + d_{-3} & + d_{-2}x + d_{-1}x^2 \end{matrix}}{d_{-2} + d_{-3} + (d_{-1} + d_{-2})x + d_{-1}x^2}$$

and

$$g_1(x) = (1 + d_{-2} + d_{-3}) + (d_{-1} + d_{-3})x + d_{-2}x^2 + d_{-1}x^3$$

The successive 3-component SSFSR state vectors map onto the $g_1(x)$ polynomials as shown in Figure 3-2. The two cycles of $g_1(x)$'s of odd weight are respectively identical to the two cycles of $g(x)$'s of odd weight appearing in Table 3-1. Complementation takes place in the feedback path of the SSFSR and the ISFSR in Figure 3-2. A one-to-one correspondence exists between the SSFSR states and ISFSR states. The linear transformation matrix

$$T = \begin{bmatrix} 1 & 1 & 0 \\ 0 & 1 & 1 \\ 0 & 0 & 1 \end{bmatrix}$$

maps $d_{k-1}d_{k-2}d_{k-2}$ into $b_2b_1b_0$ representing $b_2y^2 + b_1y + b_0$.
The inverse of T is

$$T^{-1} = \begin{bmatrix} 1 & 1 & 1 \\ 0 & 1 & 1 \\ 0 & 0 & 1 \end{bmatrix}$$

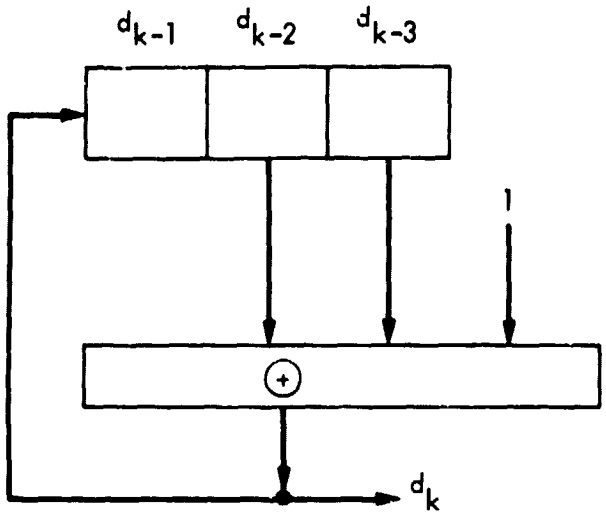

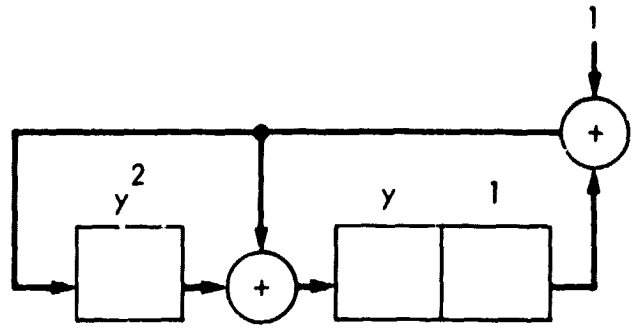

$$d_k = 1 + d_{k-2} + d_{k-3}$$

$$f_1(x) = (1 + x)(1 + x^2 + x^3)$$

k	d_{k-1}	d_{k-2}	d_{k-3}	d_k		$g_1(x)$ x^3	x^2	x	1	y^2	y	1
0	0	0	0	1	1	0	0	0	1	0	0	0
1	1	0	0	1	x^6	1	0	1	1	1	1	0
2	1	1	0	0	x^5	1	1	1	0	1	0	1
3	0	1	1	1	x^4	0	1	1	1	0	1	0
4	1	0	1	0	x^3	1	0	0	0	1	1	1
5	0	1	0	0	x^2	0	1	0	0	0	1	1
6	0	0	1	0	x	0	0	1	0	0	0	1
0	0	0	0	1	1	0	0	0	1	0	0	0
0	1	1	1	1	δ	1	1	0	1	1	0	0
0	1	1	1	1	δ	1	1	0	1	1	0	0

$$\delta = x^3 + x^2 + 1$$

Figure 3-2. The One-to-One Correspondence Between $d_{k-1}d_{k-2}d_{k-3}$ and $b_2y^2 + b_1y + 1$

Interestingly, T and T^{-1} are the same as those associated with an SSFSR described by

$$a_k = a_{k-2} + a_{k-3}$$

and

$$f(x) = 1 + x^2 + x^3$$

and an ISFSR that performs division by x modulo $x^3 + x^2 + 1$, i.e., where complementation does not appear in the feedback of the SSFSR or of the ISFSR.

The next state mappings for the SSFSR and the ISFSR in Figure 3-2 are one to one described by affine transformations, a transformation followed by a translation (see Reference 1). Let u denote the present state of the SSFSR and u' the next state. Then

$$u' = uN_{SS} + L_{SS}$$

where

$$N_{SS} = \begin{bmatrix} 0 & 1 & 0 \\ 1 & 0 & 1 \\ 1 & 0 & 0 \end{bmatrix} \qquad \text{and} \qquad L_{SS} = [\ 1\ 0\ 0\ ]$$

Let v denote the present state of the ISFSR and v' the next state. Then,

$$v' = vN_{IS} + L_{IS}$$

where

$$N_{IS} = \begin{bmatrix} 0 & 1 & 0 \\ 0 & 0 & 1 \\ 1 & 1 & 0 \end{bmatrix} \qquad \text{and} \qquad L_{IS} = [\ 1\ 1\ 0\ ]$$

The binary sequences appearing in the feedback of the SSFSR and ISFSR in Figure 3-2 are identical under the isomorphism. That is, d_k equals $1 + b_0$ (where b_0 is the coefficient of y^0) for every pair of isomorphic states.

Example 15

The behavior of a 4-stage SSFSR is characterized by

$$d_k = 1 + d_{k-1} + d_{k-2} + d_{k-4}$$

and

$$\begin{aligned} f_1(x) &= (1 + x)f(x) = (1 + x)\ (1 + x + x^2 + x^4) \\ &= (1 + x)[(1 + x)(1 + x^2 + x^3)] \\ &= (1 + x)^2\ (1 + x^2 + x^3) \end{aligned}$$

One $1 + x$ factor is due to complementation in the feedback, and the generating function is

$$G(x) = \frac{g_1(x)}{f_1(x)} = \frac{1 + (1 - x)g(x)}{(1 - x)f(x)}$$

Since $g_1(x)$ cannot contain $1 - x$ (i.e., $x + 1$) as a factor, the SSFSR splits the state space into two cycles. One is of length 14 and contains state 0000. The other is of length 2. For

$$d_{-1} = d_{-2} = d_{-3} = d_{-4} = 0$$

$$G(x) = \frac{1}{(1 + x)^2\ (1 + x^2 + x^3)}$$

The period of $(1 + x)^2$ is $2 \cdot 1$ and $1 + x^2 + x^3$ has period 7. Thus,

$$\ell = [2, 7] = 14.$$

For $g_1(x) = x^3 + x^2 + 1$

$$G(x) = \frac{1}{(x + 1)^2}$$

and the state that maps onto $g_1(x) = x^3 + x^2 + 1$ is 0101 (see Table 3-2).

$$g(x) = (d_{-1} + d_{-2} + d_{-4}) + (d_{-1} + d_{-3})x + d_{-2}x^2 + d_{-1}x^3$$

and

$$\begin{aligned} g_1(x) &= 1 + (1 - x)g(x) \\ &= s_0 + s_1 + s_2x^2 + s_3x^2 + s_4x^4 \end{aligned}$$

where

$$\begin{aligned} s_0 &= 1 + d_{-1} + d_{-2} + d_{-4} \\ s_1 &= d_{-2} + d_{-3} + d_{-4} \\ s_2 &= d_{-1} + d_{-2} + d_{-3} \\ s_3 &= d_{-1} + d_{-2} \\ s_4 &= d_{-1} \end{aligned}$$

Since (01) is the only periodic sequence of length 2, it could be deduced that

0 1 0 1 and 1 0 1 0

Table 3-2. Cycle Structure and Isomorphism of SSFSR and ISFSR States Whose Respective Next State Transformations are Affine

k	d_{k-1}	d_{k-2}	d_{k-3}	d_{k-4}	d_k		$g_1(x)$ x^4	x^3	x^2	x	1	$\underline{y}^3$	$\underline{y}^2$	$\underline{y}$	$\underline{1}$
0	0	0	0	0	1	1	0	0	0	0	1	0	0	0	0
1	1	0	0	0	0	x^{13}	1	1	1	0	0	1	0	1	1
2	0	1	0	0	0	x^{12}	0	1	1	1	0	0	1	0	1
3	0	0	1	0	1	x^{11}	0	0	1	1	1	0	0	1	0
4	1	0	0	1	1	x^{10}	1	1	1	1	1	1	0	1	0
5	1	1	0	0	1	x^9	1	0	0	1	1	1	1	1	0
6	1	1	1	0	1	x^8	1	0	1	0	1	1	1	0	0
7	1	1	1	1	0	x^7	1	0	1	1	0	1	1	0	1
8	0	1	1	1	1	x^6	0	1	0	1	1	0	1	1	0
9	1	0	1	1	1	x^5	1	1	0	0	1	1	0	0	0
10	1	1	0	1	0	x^4	1	0	0	0	0	1	1	1	1
11	0	1	1	0	0	x^3	0	1	0	0	0	0	1	1	1
12	0	0	1	1	0	x^2	0	0	1	0	0	0	0	1	1
13	0	0	0	1	0	x	0	0	0	1	0	0	0	0	1
0	0	0	0	0	1	1	0	0	0	0	1	0	0	0	0
0	0	1	0	1	1	δ	0	1	1	0	1	0	1	0	0
1	1	0	1	0	0	δx	1	1	0	1	0	1	0	0	1
0	0	1	0	1	1	δ	0	1	1	0	1	0	1	0	0

$$d_k = 1 + d_{k-1} + d_{k-2} + d_{k-4}$$

$$\delta = x^3 + x^2 + 1$$

$$f_1(x) = (1 + x)[(1 + x)(1 + x^2 + x^3)]$$

$$= (1 + x)^2(1 + x^2 + x^3)$$

are the SSFSR states comprising the cycle of length 2. State 0 1 0 1 maps onto

$$g_1(x) = x^3 + x^2 + 1 = \delta$$

whereas state 1 0 1 0 maps onto

$$g_1(x) = x^4 + x^3 + x = \delta x$$

Refer to Figure 3-2 and Table 3-1. The cycle structure (i.e., two cycles of length 7 and two of length 1) is changed to that of Table 3-2 by incorporating complemention into the feedback paths of the SSFSR and corresponding ISFSR. Note that

$$T = T^{-1} = \begin{bmatrix} 1 & 0 & 1 & 1 \\ 0 & 1 & 0 & 1 \\ 0 & 0 & 1 & 0 \\ 0 & 0 & 0 & 1 \end{bmatrix}$$

is the same for both sets of isomorphic SSFSR and ISFSR states. The next state mappings, however, are linear and affine transformations, respectively.

An r-stage SSFSR capable of generating $\{a_k\}$ that satisfies the recurrence relation

$$a_k = \sum_{i=1}^{r} c_i a_{k-i} \qquad c_i = 0,1 \quad \text{for } 1 \leq i < r,\ c_r = 1 \tag{12}$$

has a characteristic polynomial

$$f(x) = 1 + c_1 x + c_2 x^2 + \cdots + c_{r-1} x^{r-1} + x^r \tag{13}$$

The recurrence relation (12) and f(x) in (13) are implied in the following theorem.

THEOREM 1

Distinct r-stage SSFSR states when viewed as initial states map onto distinct polynomials g(x)'s of degree less than r.

Proof

Expanding (9a) gives

$$
\begin{aligned}
g(x) = {} & c_1 a_{-1} \\
& + c_2(a_{-2} + a_{-1}x) \\
& \vdots \\
& + c_{r-1}(a_{-r+1} + a_{-r+2}x + \dots + a_{-2}x^{r-3} + a_{-1}x^{r-2}) \\
& + a_{-r} + a_{-r+1}x + \dots + a_{-3}x^{r-3} + a_{-2}x^{r-2} + a_{-1}x^{r-1}
\end{aligned}
\tag{14}
$$

The 2^r state vectors of the SSFSR form a vector space U over GF(2) of dimension r that is spanned by the linearly independent r unit vectors. The mappings of the unit vectors which are a natural basis of the r-dimensional vector space follows from (14).

$$
\begin{array}{lcl}
\begin{array}{ccccc} a_{-1} & a_{-2} & \dots & a_{-r+1} & a_{-r} \end{array} & & \\
[1 \quad 0 \quad \dots \quad 0 \quad 0] & \longrightarrow & x^{r-1} + c_{r-1}x^{r-2} + \dots + c_2 x + c_1 \\
[0 \quad 1 \quad \dots \quad 0 \quad 0] & \longrightarrow & x^{r-2} + \quad + c_3 x + c_2 \\
\vdots & & \vdots \\
[0 \quad 0 \quad \dots \quad 1 \quad 0] & \longrightarrow & x + c_{r-1} \\
[0 \quad 0 \quad \dots \quad 0 \quad 1] & \longrightarrow & 1
\end{array}
\tag{15}
$$

The r images (i.e., g(x)'s are linearly independent polynomials that span a vector space V over GF(2) of dimension r. Thus, each of the 2^r distinct linear combinations maps onto a distinct polynomial g(x) of degree less than r.

Q.E.D.

Each coefficient in

$$b_{r-1}x^{r-1} + b_{r-1}x^{r-2} + \ldots + b_0 = g(x)$$

is a distinct linear combination of a_{-1}, a_{-2}, ... , and a_{-r}

COROLLARY 1.1

The linear transformation

$$T = \begin{array}{c} \begin{array}{cccccc} x^{r-1} & x^{r-2} & x^{r-3} & \ldots & x & 1 \end{array} \\ \begin{bmatrix} 1 & c_{r-1} & c_{r-2} & \cdots & c_2 & c_1 \\ 0 & 1 & c_{r-1} & \cdots & c_3 & c_2 \\ \vdots & \vdots & \vdots & \vdots & \vdots & \vdots \\ 0 & 0 & 0 & \ldots & 1 & c_{r-1} \\ 0 & 0 & 0 & \ldots & 0 & 1 \end{bmatrix} \end{array} \tag{16}$$

is an isomorphism of U onto V.

Proof

The linear transformation matrix T is the one-to-one mapping in (16) where

$$uT = v \qquad u \in U \text{ and } v \in V$$

Since the r row vectors of T are linearly independent, T is nonsingular and its inverse T^{-1} exits.

The inverse T^{-1} is a linear transformation. Given (state) vectors v and $\hat{v}$ in V and scalar multipliers e_1 and e_2 in GF(2).

$$(e_1 v + e_2 \hat{v})T^{-1}T = (e_1 v)I + (e_2 \hat{v})I$$
$$= [e_1(vT^{-1}) + e_2(\hat{v}T^{-1})]T$$

Postmultiplying both sides by T^{-1} yields

$$(e_1 v + e_2 \hat{v})T^{-1} = e_1(vT^{-1}) + e_2(\hat{v}T^{-1})$$

thus, T^{-1} is a linear transformation.

The one-to-one onto linear transformation

$$T : U \longrightarrow V$$

is an isomorphism. Every set of linearly independent vectors $u_1, u_2, \ldots, u_m$ in U where $m \leq r$ is mapped onto a linearly independent set of vectors $v_1, v_2, \ldots, v_m$ in V. When m = r, the vector space U is spanned and the vector space V is spanned. For $u_1 = [1, 0, \ldots, 0]$ $u_2 = [0, 1, \ldots, 0], \ldots, u_r = [0, 0 \ldots, 1]$, a natural basis for V, every vector $u \epsilon U$ has a unique expression

$$u = a_{-1}u_1 + a_{-2}u_2 + \ldots + a_r u_r \tag{17}$$

which is a linear combination of the u_i's. Given that u is expressible as

$$u = h_1 u_1 + h_2 u_2 + \ldots + h_r u_r$$

Then,

$$u - u = 0 = (a_{-1} - h_1)u_1 + (a_{-2} - h_2)u_2 + \ldots + (a_{-4} - h_r)u_r$$

and since $u_1, u_2, \ldots, u_r$ are linearly independent

$$a_{-i} - h_i = 0 \text{ and } h_i = a_{-i} \text{ for all } i.$$

Thus, (17) is unique and <u>uniqueness of representation</u> holds for every given basis.

The respective images of $u_1, u_2, \ldots, u_{r-1}, u_r$ are the polynomials in (15) where

$$x^{r-1} + c_{r-1}x^r + \ldots + c_2x + c_1$$

is the image of $u_1 = [1, 0, \ldots, 0, 0]$. The components of the image vector

$$v_1 = [1, c_{r-1}, \ldots, c_2, c_1]$$

are the ordered coefficients of the polynomial $g(x)$ of degree r-1 excluding c_0 resulting from the mapping of

$$[a_{-1}, a_{-2}, \ldots, a_{-4}] = [1, 0, \ldots, 0, 0]$$

in accordance with (15). The vectors $v_1, v_2, \ldots, v_r$ are linearly independent and form a basis in V. Postmultiplying both sides of (17) by the transformation matrix T in (16) gives

$$\begin{aligned} uT &= (a_{-1}u_1 + a_{-2}u_2 + \ldots + a_{-r}u_r)T \\ &= a_{-1}(u_1T) + a_{-2}(u_2T) + \ldots + a_{-r}(u_rT) \end{aligned}$$

Thus,

$$v = a_{-1}v_1 + a_{-2}v_2 + \dots + a_{-r}v_2 \tag{18}$$

and every vector $v \epsilon V$ is uniquely expressible relative to the basis v_1, v_2, $\dots$, v_r.

The a_{-i}'s in (17) and (18) are scalars in the field GF(2). From Reference 1, each basis u_1, u_2, ..., u_r in a vector space U over a field F provides an isomorphism of U onto space $U_r(F)$. The isomorphism C_u is the correspondence which assigns to each vector $u \epsilon U$ the r-tuple of its coordinates relative to u as follows:

$$(a_{-1}u_1 + a_{-2}u_2 + \dots + a_{-r}u_r)C_u = (a_{-1}, a_{-2}, \dots , a_{-r}) \epsilon U_r(F)$$

where F, in this case, is GF(2). Since the number of vectors r in a basis is determined by the dimension r, which is invariant (as proved in References 1 and 5), <u>every finite-dimensional</u> vector space over a field F is isomorphic to <u>one, and only one</u>, space $U_r(F)$.

Q.E.D.

A more convenient basis in V is

$$\begin{matrix} [x^{r-1}, & 0 & , \dots , & 0, & 0] \\ [0 & , x^{r-2} & , \dots , & 0, & 0] \\ \vdots & \vdots & \vdots & \vdots & \vdots \\ [0 & , 0 & , \dots , & x, & 0] \\ [0 & , 0 & , \dots , & 0, & 1] \end{matrix}$$

and every element in V may be expressed as

$$b_{r-1}x^{r-1} + b_{-2}x^{r-2} + \dots + b_1x + b_0 = g(x)$$

From (14),

$$
\begin{aligned}
b_{r-1} &= a_{-1} \\
b_{r-2} &= c_{r-1}a_{-1} + a_{-2} \\
&\vdots \\
b_1 &= c_2a_{-1} + c_3a_{-2} + \dots + c_{r-1}a_{-r+2} + a_{-r+1} \\
a_0 = b_0 &= c_1a_{-1} + c_2a_{-2} + \dots + c_{r-2}a_{-r+2} + c_{r-1}a_{-r+1} + a_{-r}
\end{aligned}
\tag{19}
$$

Given an r-stage SSFSR capable of generating $\{a_k\}$ that satisfies the linear recurrence relation in (12) and has the characteristic polynomial f(x) given in (13). The state

$$[a_{-1}, a_{-2}, \dots, a_{-r+1}, a_{-r}] = [0, 0, \dots, 0, 1]$$

always has [1, 0, . . ., 0, 0] as its successor state (which may be viewed as another initial state). The corresponding ISFSR states represented as polynomials are

$$
\begin{aligned}
[0, 0, \dots, 0, 1] &\longrightarrow 1 \\
[1, 0, \dots, 0, 0] &\longrightarrow x^{r-1} + c_{r-1}x^{r-2} + \dots + c_2x + c_1
\end{aligned}
$$

Note that

$$1 \cdot x^{-1} = x^{-1} \equiv (x^{r-1} + c_{r-1}x^{r-2} + \dots + c_2x + c_1) \bmod f(x)$$

and 1 divided by x reduced modulo f(x) in (13) is the polynomial representing the ISFSR successor to 1 (the nonzero constant polynomial).

THEOREM 2

Successor states of isomorphic SSFSR and ISFSR states are isomorphic.

Proof

$$[a_{-1}, a_{-2}, \ldots, a_{-r+1}, a_{-r}]T = [b_{r-1}, b_{r-2}, \ldots, b_1, b_0]$$

where T is given in (16) and each b_i is a distinct linear combination of the a_{-i}'s as shown in (19).

The next state transformation matrix N_{SS} of the r-stage SSFSR is

$$N_{SS} = \begin{bmatrix} c_1 & 1 & 0 & \ldots & 0 & 0 \\ c_2 & 0 & 1 & \ldots & 0 & 0 \\ \vdots & \vdots & \vdots & \vdots & \vdots & \vdots \\ c_{r-1} & 0 & 0 & \ldots & 0 & 1 \\ 1 & 0 & 0 & \ldots & 0 & 0 \end{bmatrix} \tag{20}$$

The next state transformation matrix N_{IS} of the corresponding r-stage ISFSR is

$$N_{IS} = \begin{bmatrix} 0 & 1 & 0 & \ldots & 0 & 0 \\ 0 & 0 & 1 & \ldots & 0 & 0 \\ \vdots & \vdots & \vdots & \vdots & \vdots & \vdots \\ 0 & 0 & 0 & \ldots & 0 & 1 \\ 1 & c_{r-1} & c_{r-2} & \ldots & c_2 & c_1 \end{bmatrix} \tag{21}$$

Denote the successor to

$$u = [a_{-1}, a_{-2}, \ldots, a_{-r+1}, a_{-r}]$$

$$\text{by } u' = [a'_{-1}, a'_{-2}, \ldots, a'_{-r+1}, a'_{-r}]$$

and the successor to

$$v = [b_{r-1}, b_{r-2}, \ldots, b_1, b_0]$$

$$\text{by } v' = [b'_{r-1}, b'_{r-2}, \ldots, b'_1, b'_0]$$

Then,

$$\begin{aligned} &[a'_{-1}, a'_{-2}, \ldots, a'_{-r+1}, a'_{-r}] \\ &= [a_{-1}, a_{-2}, \ldots, a_{-r+1}, a_{-r}]N_{SS} \\ &= [a_0, a_{-1}, \ldots, a_{-r+2}, a_{-r+1}] \end{aligned} \tag{22}$$

and

$$\begin{aligned} &[b'_{r-1}, b'_{r-2}, \ldots, b'_1, b'_0] \\ &= [b_{r-1}, b_{r-2}, \ldots, b_1, b_0]N_{IS} \\ &= [b_0, c_{r-1}b_0 + b_{r-1}, \ldots, c_2b_0 + b_2, c_1b_0 + b_1] \end{aligned} \tag{23}$$

where $a_0 = b_0$ is expressed in (19). The assertion that

$$[a'_{-1}, a'_{-2}, \ldots, a'_{-r+1}, a'_{-r}]T = [b'_{r-1}, b'_{r-2}, \ldots, b'_1, b'_0]$$

is shown as follows:

In accordance with (19), (22), and (23)

$$
\begin{aligned}
b'_{r-1} &= a'_{-1} \\
&= a_0 \\
&= \underline{b_0} \\
b'_{r-2} &= c_{r-1}a'_{-1} + a'_{-2} \\
&= c_{r-1}a_0 + a_{-1} \\
&= \underline{c_{r-1}b_0 + b_{r-1}} \\
&\vdots \\
b'_1 &= c_2a'_{-1} + (c_3a'_{-2} + \dots + c_{r-1}a'_{-r+2} + a'_{-r+1}) \\
&= c_2a_0 + (c_3a_{-1} + \dots + c_{r-1}a_{-r+1} + a_{-r+2}) \\
&= \underline{c_2b_0 + b_2} \\
b'_0 &= c_1a'_{-1} + (c_2a'_{-2} + \dots + c_{r-2}a'_{-r+2} + c_{r-1}a'_{-r+1} + a'_{-r}) \\
&= c_1a_0 + (c_2a_{-1} + \dots + c_{r-2}a_{-r+1} + c_{r-1}a_{-r+2} + a_{-r+1}) \\
&= \underline{c_1b_0 + b_1}
\end{aligned}
$$

Thus, if

$$uT = v$$

then

$$u'T = v'$$

Furthermore,

$$vT^{-1} = u \text{ and } v'T^{-1} = u'$$

Q.E.D.

It may be concluded from THEOREM 2 that the cycle structure (i.e., the number of cycles of a given length) is identical for an r-stage SSFSR and an r-stage ISFSR with isomorphic state spaces. This is a consequence of the preservation of the next-state operation under the isomorphism

$$T : U \longrightarrow V$$

COROLLARY 2.1

Matrices N_{SS} in (20) and N_{IS} in (21) are similar (see Reference 1).

Proof

$$(uN_{SS})T = u'T = v' = u(N_{sa}T)$$

where T is given in (16).

$$(uT)N_{IS} = vN_{IS} = v' = u(TN_{IS})$$

$N_{SS}T$ and TN_{IS} both map a given $u \in U$ onto the successor of the corresponding $v \in V$, namely v'. Therefore,

$$N_{SS}T = TN_{IS}$$

and

$$N_{SS} = TN_{IS}T^{-1}$$

Q.E.D.

Consider the affine transformation

$$u' = uN_{SS} + L_{SS}$$

where $L_{SS} = [1, 0, \ldots, 0]$ a 1 x r vector.

Then,

$$u'T = (uN_{SS})T + L_{SS}T$$

and

$$L_{SS}T = L_{IS} = [1, c_{r-1}, c_{r-2}, \ldots, c_2, c_1]$$

From THEOREM 2,

$$(uN_{SS})T = v'$$

<u>prior to the translation</u> by $L_{SS}T$. Given that $u \longleftrightarrow v$ and

$$v = [b_{r-1}, b_{r-2}, \ldots, b_1, b_0]$$

representing

$$b_{r-1}y^{r-1} + b_{r-2}y^{r-2} + \ldots + b_1 y + b_0$$

The successor to v, namely vN_{IS} is the vector summation

	y^{r-1}	y^{r-2}	...	y	1
	$[0,$	$b_{r-1},$	$\ldots,$	$b_2,$	$b_1]$
$+\ b_0$	$[1,$	$c_{r-1},$	$\ldots,$	$c_2,$	$c_1]$

prior to translation by L_{1S}. The vector summation

	y^{r-1}	y^{r-2}	...	y	1
	$[0,$	$b_{r-1},$	$\ldots,$	$b_2,$	$b_1]$
$+\ \bar{b}_0$	$[1,$	$c_{r-1},$	$\ldots,$	$c_2,$	$c_1]$

(where $\bar{b}_0 = 1 + b_0$) includes the effects of translation by L_{IS}. The content of the rightmost ISFSR stage is b_0, the scalar multiplier of the feedback vector $[1, c_{r-1}, \ldots, c_2, c_1]$. Translation by L_{IS} is realized by complementing b_0 which results in the feedback vector

$$\bar{b}_0[1, c_{r-1}, \ldots, c_2, c_1]$$

The implementation of the ISFSR in Figure 3-2 is an example.

Consider the logical circuitry associated with an SSFSR whose characteristic polynomial

$$f(x) = x^r + x^a + 1$$

is a trinomial. Let α be a root of $f(x)$. Then,

$$\alpha^{-1} = \alpha^{r-1} + \alpha^{a-1}$$

represents the feedback of a corresponding r-stage ISFSR. The ISFSR performs division by α modulo $f(\alpha)$ on its contents. As shown in Figure 3-3, the FSRs are topologically equivalent and of identical complexity (i.e., in the number of switching elements and propagation delay in the feedback).

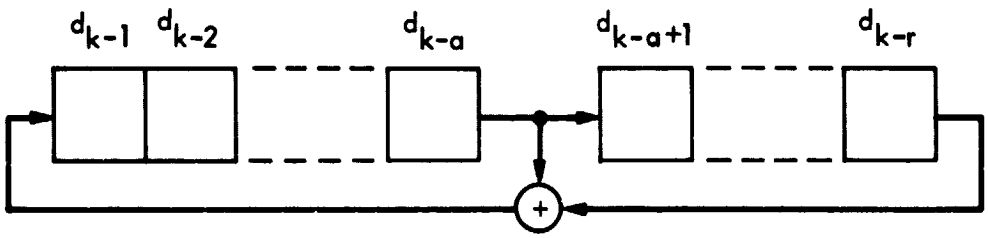

$$d_k = d_{k-a} + d_{k-r}$$

$$f(x) = x^r + x^a + 1$$

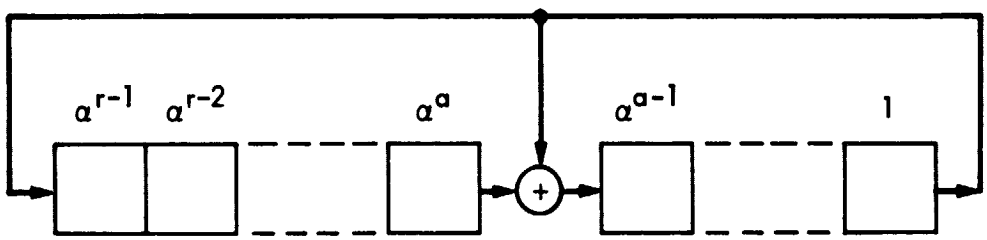

$$f(\alpha) = \alpha^r + \alpha^a + 1 = 0$$

$$\alpha^{-1} \equiv \alpha^{r-1} + \alpha^{a-1} \text{ MODULO } \alpha^r + \alpha^a + 1$$

Figure 3-3. An SSFSR and its Corresponding ISFSR of Identical Complexity

C-7

SECTION IV

THE EXISTENCE AND ALGORITHMIC DETERMINATION OF A TRINOMIAL OF LEAST DEGREE THAT CONTAINS A GIVEN IRREDUCIBLE POLYNOMIAL OVER GF(2) AS A FACTOR

A. PRIMITIVE POLYNOMIALS OVER GF(2)

Primitive polynomials of degree r over GF(2) correspond to r-stage SSFSRs (and ISFSRs) capable of generating PN sequences. A PN sequence satisfies three postulates of randomness as proven in Reference 3.

An example of a binary sequence that is random results from repeated tosses of an ideal coin. Associated with randomness are the following properties:

(1) The number of heads and tails are approximately equal.

(2) Short runs of consecutive heads or consecutive tails occur more frequently than long runs. Quantitatively, approximately 1/2 of the runs are of length 1, 1/4 of length 2, ... , $1/2^{i-1}$ of length i, ...

(3) The autocorrelation of random sequences is peaked in the middle and sharply drops at the ends.

Consider the periodic binary sequence

$$A_1 = \left\{a_1, a_2, \ldots, a_{\ell-1}, a_\ell\right\} \qquad \text{where } \ell = 2^r - 1$$

emanating from an r-stage SSFSR whose characteristic polynomial is an rth degree primitive polynomial. The randomness postulates satisfied by $\{a_k\}$ are:

P1. Balance

Let w_0 and w_1 denote the number of 0's and 1's, respectively, in $\{a_k\}$. Then,

$$\left| w_0 - w_1 \right| \leq 1$$

The disparity is exactly 1 for a PN sequence.

P2. Runs and their lengths

Within a period with a_ℓ and a_1 appearing consecutively, there are:

(1) One run of length r comprised of r consecutive 1's and one run of length r - 1 comprised of r - 1 consecutive 0's.

(2) Two runs of length L for each run of length L+1 for each value of L where $1 \leq L < r - 1$.

One-half of the runs of length L are comprised of 0's. Runs of 0's alternate with runs of 1's, and the total number of the runs of 0's are equal to the total number of runs of 1's.

P3. Two-valued autocorrelation

The set comprised of

$$\begin{aligned}
A_1 &= \{a_1, a_2, \ldots, a_{\ell-1}, a_\ell\} \\
A_2 &= \{a_2, a_3, \ldots, a_\ell, a_1\} \\
A_3 &= \{a_3, a_4, \ldots, a_1, a_2\} \\
&\vdots \\
A_\ell &= \{a_\ell, a_1, \ldots, a_{\ell-2}, a_{\ell-1}\}
\end{aligned}$$

and

$$A_0 = \{0, 0, \ldots, 0, 0\}$$

from an Abelian group G of order 2^r under the binary operation of "addition" defined on G as termwise sum modulo 2.

A_i and A_j satisfy the same <u>linear</u> recurrence relation. Therefore, $A_i + A_j$ for all i and j satisfies the linear recurrence relation. Thus, G is <u>closed</u> under " + " defined on G.

Denote a, b, and c over GF(2) as corresponding terms or components of A_i, A_j, and A_k, respectively. Since

$$(a + b) + c = a + (b + c) \bmod 2$$

elements in G are <u>associative</u> under "+."

The unique <u>identity element</u> of G is A_0.

$$A_i + A_0 = A_0 + A_i = A_i \text{ for all } i$$

Every element A_i in G has a unique (additive) <u>inverse</u>, namely, itself.

$$A_i + A_i = A_0 \text{ for all } i$$

The elements in G are <u>commutative</u> under "+" since

$$a + b = b + a \quad \bmod 2$$

Thus, G under "+" defined on G is an <u>Abelian group</u> (see References 1, 3, 4, and 5).

The PN sequence and each of its cyclic shifts can be uniquely identified by its first r terms (i.e., components). Each corresponds to a unique initial state of the r-stage SSFSR. Thus, only the first r terms of $A_i + A_j$ need to be determined to identify the resulting sequence.

Again, consider the PN sequence

$$A_1 = \left\{a_1, a_2, \ldots, a_{\ell-1}, a_\ell\right\} \qquad \text{where } \ell = 2^r - 1$$

Let

$$b_i = 1 - 2a_i \text{ for all } i$$

Then, replacing 0's by 1's and 1's by -1's in $A_0, A_1, \ldots, A_\ell$ yields $B_0, B_1, \ldots, B_\ell$, respectively. The two tables

a_i \ a_j	0	1
0	0	1
1	1	0

b_i \ b_j	1	-1
1	1	-1
-1	-1	1

reveal the isomorphism

$$(a_i + a_j) \bmod 2 \longleftrightarrow b_i b_j$$

Thus, $A_i + A_j = A_k$ corresponds to $B_i B_j = B_k$ where the product $B_i B_j$ is taken term-by-term.

The autocorrelation function $C(\tau)$ is two-valued. Explicitly,

$$\ell C(\tau) = \sum_{k=1}^{\ell} b_k b_{k+\tau} = \begin{cases} \ell \text{ for } \tau = 0 \\ -1 \text{ for } 0 < \tau < \ell \end{cases}$$

Note that $C(\tau)$ is the dot product of one vector whose components are comprised of 1's and -1's (corresponding to the 0's and 1's of a PN sequence), say B_1, and B_1 cyclically shifted by τ components. Since $B_i B_j = B_k$ is a vector corresponding to an element in the Abelian group G, it is comprised of ℓ 1's if $i = j$ (i.e., $B_k = B_0$) or one more -1 than 1 if $i \neq j$. Thus, a PN sequence is highly distinguishable from any phase shift of itself.

Example 16

A 31-bit PN sequence is generated by 5-stage SSFSR described by the linear recurrence relation

$$a_k = a_{k-1} + a_{k-2} + a_{k-3} + a_{k-5}$$

whose characteristic polynomial is

$$f(x) = x^5 + x^3 + x^2 + x + 1$$

a primitive polynomial. A period of $\{a_k\}$ appears in Figure 4-1(a).

Of the 31 bits in $\{a_k\}$, 15 are 0's and 16 1's. The postulate P1 on balance is thus satisfied. In general, a PN sequence of period $2^r - 1$ will contain 2^{r-1} 1's and $2^{r-1}-1$ 0's. The one less 0 is due to the absence of the all zeros state in the cycle of the states of the PN generator.

The run length properties of the PN sequence are shown in Figures 4-1(a) and (b). The distribution of runs is in accordance with postulate P2. In general, a PN sequence of period $2^r - 1$ contains one run of length r and one of length r-1. For $1 \leq L < r - 1$, there are 2^{r-1-L} runs of length L, half of which are 0's.

The closure of two distinct elements in $\{B_0, B_1, \ldots, B_\ell\}$ under termwise multiplication is shown in Figure 4-1(c). In general,

$$a_0 = a_\ell \longleftrightarrow b_\ell = b_0 \text{ since } \ell \equiv 0 \bmod 2^r - 1$$

Also,

$$\ell C(\tau) = \sum_{k=0}^{\ell-1} b_k b_{k+\tau} = \begin{cases} \ell \text{ for } \tau = 0 \\ -1 \text{ for } 0 < \tau < \ell \end{cases}$$

(a)

0	1	2	3	4	5	6	7	8	9	10	11	12	13	14	15	16	17	18	19	20	21	22	23	24	25	26	27	28	29	30
1	1	0	0	1	0	0	1	1	1	1	1	0	1	1	1	0	0	0	1	0	1	0	1	1	0	1	0	0	0	0

(b)

LENGTH L OF RUN	NUMBER N OF RUNS OF LENGTH L	NL
5	1	5
4	1	4
3	2	6
2	4	8
1	8	8
		31 TOTAL NUMBER OF BITS

(c)

k	0	1	2	3	4	5	6	7	8	9	10	11	12	13	14	15	16	17	18	19	20	21	22	23	24	25	26	27	28	29	30
b_k	−	−	+	+	−	+	+	−	−	−	−	−	+	−	−	−	+	+	+	−	+	−	+	−	−	+	−	+	+	+	+
b_{k+4}	−	+	+	−	−	−	−	−	+	−	−	−	+	+	+	−	+	−	+	−	−	+	−	+	+	+	+	−	−	+	+
$b_k b_{k+4} = b_{k+18}$	+	−	+	−	+	−	−	+	−	+	+	+	+	−	−	+	+	−	+	+	−	−	−	−	−	+	−	−	−	+	+

Figure 4-1. (a) A 31-bit PN Sequence, (b) its Run Length Properties, (c) Closure Illustrated in the Isomorphic Abelian Group

In normalized form,

$$C(\tau) = \begin{cases} 1 & \text{for } \tau \equiv 0 \bmod 2^r - 1 \\ -\dfrac{1}{2^r-1} & \text{for } \tau \not\equiv 0 \bmod 2^r - 1 \end{cases}$$

Specifically, in Figure 4-1(c),

$$31C(4) = -1$$

since

$$b_{k+18} = b_k b_{k+4}$$

is the same sequence as b_k cyclically shifted 18 places to the left. It, thus, has one more -1 than +1 components.

■

There are four known classes of binary sequences which satisfy both postulates P1 and P3. See Chapter 4 in Reference 11, which terms all sequence in these classes as PN. Of these four classes, only the class of length $2^r - 1$ sequences which can be generated by r-stage SSFSRs or ISFSRs satisfy P2 as well. In this report, only the length $2^r - 1$ sequences are referred to as PN or maximal-length sequences.

Of particular interest are primitive trinomials over GF(2) that characterize PN generators of minimal complexity. However, there are many values of r for which no irreducible r^{th} degree trinomial exists. Furthermore, there are other values of r where irreducible r^{th} degree polynomials exist, but none are primitive. Irreducible trinomials over GF(2) up to degree 1000 were determined by a sequence of four tests in References 12 and 13. The primitive trinomials are distinguished from the irreducible nonprimitive trinomials. The period and/or the index is given for many of the latter.

The only general nontrivial result on trinomials

$$T_{r,k}(x) = x^r + x^k + 1$$

was proven in Reference 14. The <u>parity</u> (even or odd) of the number of factors $T_{r,k}(x)$ is deterministic (from Corollary 5, page 1105 in Reference 14). $T_{r,k}(x)$ has an even number of irreducible factors and, thus, must be factorable if, and only if:

(1) r is even, k is odd, $r \neq 2k$, and $rk/2 \equiv 0$ or 1 mod 4

(2) r is odd, k is even, k does not divide 2r, and $r \equiv \pm 3 \bmod 8$

(3) r is odd, k is even, k divides 2r, and $r \equiv \pm 1 \bmod 8$

In all other cases $T_{r,k}(x)$ has an odd number of factors. Note that if r and k are both odd, the reciprocal trinomial $T_{r,r-k}(x)$ is subjected to test (2) or (3).

The foregoing test preceded by two simple tests were used in References 12 and 13 to speedily eliminate reducible trinomials before applying the fourth test (based on an efficient method developed by Berlekamp for factoring polynomials over a finite field). See Chapter 6 in Reference 4.

<u>Example 17</u>

The trinomials $T_{8m,k}(x)$ over GF(2) are reducible. If k is even, $k = 2k_1$, and

$$x^{8m} + x^{2k_1} + 1 = (x^{4m} + x^{k_1} + 1)^2$$

If k is odd,

$$8m \neq 2k \text{ and } 8mk/2 \equiv 0 \bmod 4$$

Thus, $T_{8m,k}(x)$ has an even number of factors for k odd.

A trinomial $T_{r,k}(x)$ is square-free if, and only if, r and k are not both even. If

$$T_{r,k}(x) = x^r + x^k + 1$$

has a repeated factor, then its derivative

$$T'_{r,k}(x) = (r \bmod 2)x^{r-1} + (k \bmod 2)x^{k-1}$$

is divisible by this factor. Then, $T_{r,k}(x)$ is either: (1) a power of x which is relatively prime to $T_{r,k}(x)$ or (2) is of the form $x^{r-1} + x^{k-1}$. However, a divisor of both

$$x^{r-1} + x^{k-1} \text{ and } x^r + x^k + 1$$

must also be as divisor of

$$x^r + x^k + 1 + x(x^{r-1} + x^{k-1}) = 1$$

Thus, $T_{r,k}(x)$ where r and k are not both even is square-free (see Reference 3). The period of such trinomials is the LCM of the periods of its irreducible factors.

The periods of square-free trinomials over GF(2), their factors, and the periods of their factors through degree 36 are given in Reference 3. Also, the factor of lowest degree is listed for square-free trinomials of degree 37 through 45. The wide applicability of PN sequences has been an impetus in searching for primitive trinomials.

The remainder of this subsection deals with finding trinomials which contain a given primitive polynomial as a factor. The state-behavior of an r-stage PN generator can, thus, be encapsulated by an n-stage SSFSR (or ISFSR) where n r. Additional register stages are the cost of reducing the complexity of the feedback to <u>one 2-input Exclusive-OR gate</u>.

Every nonzero element in $GF(2^r)$ is expressible as an integer power of α.

$$\alpha^j = b_{r-1}\alpha^{r-1} + b_{r-2}\alpha^{r-2} + \ldots + b_1\alpha + b_0 \tag{24}$$

where $b_i \in GF(2)$ and α is a root of a primitive polynomial $f(x)$ of degree r over GF(2). Two elements, α^j and α^k, are defined to be a Compatible Pair (CP) if

$$\alpha^j + \alpha^k = 1 \text{ (i.e., 00 ... 01)} \tag{25}$$

The CP α^j and α^k in (25) correspond to states in an r-stage ISFSR which differ only in b_0 (the content of stage $\alpha^0 = 1$). From (24), the two states are

$$b_{r-1}b_{r-2} \cdots b_1b_0 \text{ and } b_{r-1}b_{r-2} \cdots b_1\bar{b}_0$$

Lemma 3

Among the $2^r - 1$ nonzero elements in $GF(2^r)$, there are $2^{r-1} - 1$ compatible pairs. Each of the $2^r - 1$ binary r-tuples $(b_{r-1}b_{r-2} \ldots b_1b_0)$, except 00 ... 01 is compatible with one and only one nonzero r-tuple. The $2^r - 2$ such elements comprise $2^{r-1} - 1$ CPs.

THEOREM 3

Given any r^{th} degree primitive polynomial $f(x)$ over GF(2). Let α be a root of $f(x) = 0$. Then, for every CP α^j and α^k $(k > j)$,

$$f(\alpha) \text{ divides } \alpha^k + \alpha^j + 1$$

Thus,

$$f(x) \text{ divides } x^k = x^j + 1$$

Proof

Since α^j and α^k are a CP.

$$\alpha^j + \alpha^k = 1$$

and

$$f(\alpha) = \alpha^k + \alpha^j + 1 = 0$$

Thus, f(x) and $x^k + x^j + 1$ have a common polynomial factor (since they have a common root α in $GF(2^r)$). Since f(x) is irreducible over GF(2),

$$f(x) \text{ divides } x^k + x^j + 1$$

This implies that $k \geq r$ the degree of f(x). Consider the elements (i.e., the polynomials) $1, \alpha, \ldots,$ and α^{r-1} where α is a root of

$$f(x) = x^r + b_{r-1}x^{r-1} + b_{r-2}x^{r-2} + \ldots + b_1x + 1$$

a primitive polynomial over GF(2).

j of α^j	b_{r-1}	b_{r-2}	...	b_1	1
0	0	0	...	0	1
1	0	0	...	1	0
⋮			⋮		
r-2	0	1	...	0	0
r-1	1	0	...	0	0

No CP exists among $1, \alpha, \ldots, \alpha^{r-1}$ and

$$\alpha^r = b_{r-1}\alpha^{r-1} + b_{r-2}\alpha^{r-2} + \ldots + b_1\alpha + 1$$

is compatible with α^j for one value of $j < r$ if and only if $f(x)$ is a trinomial. If $f(x)$ is not a trinomial, then the degree k of

$$\alpha^k + \alpha^j + 1 = 0$$

exceeds r for all CPs α^j and α^k.

Q.E.D.

COROLLARY 3.1

If α^j and α^k are a CP, then

$$\alpha^{2j \bmod 2^r-1} \text{ and } \alpha^{2k \bmod 2^r-1}$$

are a CP in $GF(2^r)$

Proof

If $1 = \alpha^j + \alpha^k$, then

$$1 = (\alpha^j + \alpha^k)^2 = \alpha^{2j \bmod 2^r-1} + \alpha^{2k \bmod 2^r-1}$$

Q.E.D.

COROLLARY 3.2

A trinomial of degree $r + 1$ cannot contain an irreducible polynomial, hence, a primitive polynomial of degree r as a factor.

Proof

For a trinomial,

$$T(x) = x^{r+1} + x^j + 1$$

to contain an rth degree irreducible polynomial, it must also have a degree 1 factor. However, since

$$T(0) = 0 + 0 + 1 = 1$$

x is not a factor of T(x), and since

$$T(1) = 1 + 1 + 1 = 1$$

x + 1 is not a factor of T(x).

Q.E.D.

The trinomial of least degree (among $2^{r-1} - 1$ trinomials associated with $2^{r-1} - 1$ CPs) that contains a given r^{th} degree primitive polynomial (with five or more odd number of terms) as a factor is of degree $n \geq r + 2$.

Let β be a root of

$$h(x) = x^2 + x + 1$$

Since h(x) divides x^3-1, β is among the 3 roots of unity. Thus,

$$\beta^3 - 1 = \beta^2 + \beta + 1 = 0$$

and

$$\beta^3 = 1$$

A trinomial

$$T(x) = x^n + x^a + 1$$

is divisible by h(x) if and only if $T(\beta) = 0$. Thus, if

$$\beta^{n \bmod 3} + \beta^{a \bmod 3} + 1 = \beta^2 + \beta + 1$$

T(x) contains $x^2 + x + 1$ as a factor. It is, thus, possible for an rth degree irreducible polynomial to be a factor of a square-free T(x) of degree $n = r + 2$.

Example 18

The trinomial

$$T(x) = x^{16} + x^5 + 1$$

contains $x^2 + x + 1$ as a factor since

$$\beta^{16 \bmod 3} + \beta^{5 \bmod 3} + 1 = \beta^2 + \beta + 1$$

It may be verified that a degree 14 primitive polynomial is the only other factor.

Example 19

The trinomial of least degree that contains the primitive polynomial

$$f(x) = x^6 + x^5 + x^2 + x + 1$$

as a factor is determined algorithmically as follows:

(1) Initially, α, α^2, ... , α^6, and α^7 are computed and stored as a list of binary state-vectors (see Table 1-1).

i of α^i	b_5	b_4	b_3	b_2	b_1	b_0
1	0	0	0	0	1	0
2	0	0	0	1	0	0
3	0	0	1	0	0	0
4	0	1	0	0	0	0
5	1	0	0	0	0	0
6	1	0	0	1	1	1
7	1	0	1	0	0	1

(2) α^8 is computed and compared for compatibility with α, α^2, ... , and α^7.

(3) If α^8 is compatible with an element in the initial list, stop. If not, append α^8 to the list and repeat step 2 for a computed α^9 and the augmented list, and so on.

The first CP to be found is α^{11} and α^8.

i of α^i	b_5	b_4	b_3	b_2	b_1	b_0
1	0	0	0	0	1	0
2	0	0	0	1	0	0
3	0	0	1	0	0	0
4	0	1	0	0	0	0
5	1	0	0	0	0	0
6	1	0	0	1	1	1
7	1	0	1	0	0	1
8	1	1	0	1	0	1
9	0	0	1	1	0	1
10	0	1	1	0	1	0
11	1	1	0	1	0	0
α^{11}	1	1	0	1	0	0
α^8	1	1	0	1	0	1
α^0	0	0	0	0	0	1
$\alpha^{11} + \alpha^8 + 1$	0	0	0	0	0	0

$$f(\alpha) = \alpha^6 + \alpha^5 + \alpha^2 + \alpha + 1 = \alpha^{11} + \alpha^8 + 1 = 0$$

and

$$x^{11} + x^{8} + 1 = (x^5 + x^4 + x^3 + x + 1)\,\underline{(x^6 + x^5 + x^2 + x + 1)}$$

■

Consider an 11-stage ISFSR that performs multiplication by x and reduces the result modulo $x^{11} + x^8 + 1$. Successive states represent polynomials of degree less than 11 since

$$x^{11} \equiv x^8 + 1 \bmod x^{11} + x^8 + 1$$

The cycle in Table 4-1 of length 63 corresponding to the order of α, a root of

$$f(x) = x^6 + x^5 + x^2 + x + 1 = 0$$

contains the state γ representing the factor

$$x^5 + x^4 + x^3 + x + 1 \quad \text{of} \quad x^{11} + x^8 + 1$$

Recall the isomorphism between SSFSR and ISFSR states where an SSFSR state maps onto g(x) that represents the corresponding ISFSR state. The isomorphism was established using f(x), the characteristic polynomial of the SSFSR and an ISFSR that performs <u>division</u> by x and reduces the result modulo f(x) (see Table 3-1). However, an ISFSR that performs <u>multiplication by</u> x and reduces the result modulo the same f(x) <u>has the same cycle structure</u> with the <u>order</u> of <u>states reversed</u> in each cycle. Thus, g(x)'s in a cycle of the former, appear in reverse order in the corresponding cycle of the latter.

The 63-bit PN sequence under column heading b_0 in Table 1-1 is identical to the partially listed sequence under column heading <u>1</u> (i.e., x^0) in Table 4-1.

<u>COROLLARY 3.3</u>

The trinomial of least degree that contains a given primitive polynomial f(x) as a factor is square-free.

<u>Proof</u>

Assume

$$x^{2n} + x^{2a} + 1 = (x^n + x^a + 1)^2$$

is the trinomial of least degree that contains f(x) as a factor. From COROLLARY 3.1, α^n and α^a are compatible and

$$f(x) \text{ divides } x^n + x^a + 1$$

contradicting the assumption. Q.E.D.

Table 4-1. A 63-State Cycle Associated with $x^6 + x^5 + x^2 + x + 1$ a Factor of $x^{11} + x^8 + 1$

i of γx^i	x^{10}	x^9	$\underline{x}^8$	x^7	x^6	x^5	x^4	x^3	x^2	x	$\underline{1}$
0	0	0	0	0	0	1	1	1	0	1	1
1	0	0	0	0	1	1	1	0	1	1	0
2	0	0	0	1	1	1	0	1	1	0	0
3	0	0	1	1	1	0	1	1	0	0	0
4	0	1	1	1	0	1	1	0	0	0	0
5	1	1	1	0	1	1	0	0	0	0	0
6	1	1	1	1	1	0	0	0	0	0	1
7	1	1	0	1	0	0	0	0	0	1	1
8	1	0	0	0	0	0	0	0	1	1	1
9	0	0	1	0	0	0	0	1	1	1	1
10	0	1	0	0	0	0	1	1	1	1	0
11	1	0	0	0	0	1	1	1	1	0	0
12	0	0	1	0	1	1	1	1	0	0	1
13	0	1	0	1	1	1	1	0	0	1	0
14	1	0	1	1	1	1	0	0	1	0	0
15	0	1	0	1	1	0	0	1	0	0	1
16	1	0	1	1	0	0	1	0	0	1	0
17	0	1	0	0	0	1	0	0	1	0	1
18	1	0	0	0	1	0	0	1	0	1	0
19	0	0	1	1	0	0	1	0	1	0	1
20	0	1	1	0	0	1	0	1	0	1	0
21	1	1	0	0	1	0	1	0	1	0	0
⋮						⋮					
60	0	1	1	0	1	1	0	0	1	1	1
61	1	1	0	1	1	0	0	1	1	1	0
62	1	0	0	1	0	0	1	1	1	0	1

$\gamma = x^5 + x^4 + x^3 + x + 1$

The trinomial of least degree that contains a given primitive polynomial over GF(2) as a factor may be determined from Appendix B. One primitive polynomial, f(x), of every reciprocal pair is listed for degrees 5 through 12. The octal equivalent of the binary coefficients in descending powers of x represents f(x). In example 18, it was shown that

$$x^{11} + x^8 + 1 = (x^5 + x^4 + x^3 + x + 1)(\underline{x^6 + x^5 + x^2 + x + 1})$$

The octal representations of the respective factors are 73 and <u>147</u>. See Appendix B for row entries associated degree <u>r</u> of 6 and f(x) represented by <u>147</u>. Clearly,

$$x^{11} + x^3 + 1 = (x^5 + x^4 + x^2 + x + 1)(x^6 + x^5 + x^4 + x + 1)$$

The respective octal representations of the factors are 67 and 163. Since <u>147</u> and <u>163</u> represent a reciprocal pair of primitive polynomials of degree 6, only <u>147</u> (with the lower octal representation) and T(x) (n = 11, a = 8) of lowest degree containing <u>147</u> as a factor are listed.

Consider the entries in Appendix B associated with r of 9 (degrees of f(x)) and <u>1243</u>, the octal representation of f(x).

$$T(x) = x^{36} + x + 1 \quad (n = 36,\ a = 1)$$

The entries under the right-most four columns are as shown as follows:

Irreducible Factors of T(x) in Octal	Degree of Factor	Period	Index
<u>1243</u>	<u>9</u>	<u>511</u>	<u>1</u>
2257*	10	341	3
540663*	17	131071	1

All entries pertaining to f(x) represented as 1243 are in italics. The asterisk (*) appended to the degree 10 factor (2257*) and the degree 17 factor (540663*) indicate that

$$T(x) = x^{36} + x + 1$$

is also the trinomial of least degree that contains each of foregoing factors. The degree 10 factor is nonprimitive and has period 341 (i.e., the order of its roots is 341) and index 3

$$(\text{i.e., } (2^{10} - 1)/3 = 341)$$

In terms of Galois Fields, let β be a primitive root n $GF(2^{10})$ of

$$x^{2^{10}-1} - 1 = 0$$

Thus, β^3 has order 341 and is the root of an irreducible nonprimitive degree 10 polynomial whose period is 341 and index is $(3, 2^{10} - 1)$ or 3.

The independent parameters for all entries in Appendix B are r, the degree of f(x), and f(x), the primitive polynomial. The f(x)'s of a given degree r are listed in ascending order of n, the degree of the respective T(x) of lowest degree which contains f(x) as a factor. T(x)'s of degree $n < 70$ are factored if they are the lowest degree trinomial containing an f(x) of degree 12 or less. Factoring a T(x) (which was determined to be the trinomial of lowest degree containing f(x) of degree r as a factor) often yields irreducible polynomials (primitive and nonprimitive) of degrees greater than r which are not contained in a trinomial of lower degree. The octal representation of these polynomials (as well as those of the same or lower degree than r) are identified by an asterisk (*).

Example 20

The primitive polynomial f(x) of degree 11 represented by 5023 is contained as a factor in

$$T_{47,39}(x) = x^{47} + x^{39} + 1$$

$T_{47,39}(x)$ is the trinomial of least degree that contains 5023 as a factor as determined by the algorithm presented in Example 19. Prior to dividing $T_{47,39}(x)$ by 5023 and factoring the quotient polynomial, it is expedient to extract factors of low degree as follows:

All irreducible factors of degree r are factors of

$$x^{2^r-1} - 1$$

If

$$T_{n,a}(x) = x^n + x^a + 1$$

contains an rth degree factor, then

$$\alpha^{2^r-1} -1 = \alpha^n + \alpha^a + 1 = 0$$

where α is a root of the rth degree factor. Let $2^r - 1 = w$. Then, $\alpha^w = 1$ and if

$$\alpha^{n \bmod w} + \alpha^{a \bmod w} + 1$$

contains an irreducible r^{th} degree polynomial as a factor, so does $T_{n,a}(x)$. Simplification in extracting factors results only if $w < n$. Specifically,

$$\alpha^{47 \bmod 3} + \alpha^{39 \bmod 3} + 1 = \alpha^2$$

and $T_{47,39}(x)$ does not contain $x^2 + x + 1$ (the only degree 2 irreducible polynomial over GF(2)) as a factor.

$$\alpha^{47 \bmod 7} + \alpha^{39 \bmod 7} + 1 = \alpha^5 + \alpha^4 + 1$$

and $\alpha^3 + \alpha + 1$ is a factor of $\alpha^5 + \alpha^4 + 1$. Thus, $x^3 + x + 1$ (13) is a factor of $T_{47,39}(x)$.

$$\alpha^{47 \bmod 15} + \alpha^{39 \bmod 15} + 1 = \alpha^2 + \alpha^9 + 1$$

and $\alpha^4 + \alpha^3 + 1$ is a factor of $\alpha^9 + \alpha^2 + 1$ (see Reference 3). Thus $x^4 + x^3 + 1$ is a factor of $T_{47,39}(x)$

$$\alpha^{47 \bmod 31} + \alpha^{39 \bmod 31} + 1 = (\alpha^2 + \alpha + 1)^8$$

and $T_{47,39}(x)$ <u>does not contain a</u> degree 5 irreducible polynomial as a factor. Since $w = 2^6 - 1 > 47$, the foregoing test of divisibility cannot be extended beyond irreducible degree 5 factors. Dividing out the irreducible factors 13, 31, and <u>5023</u> yields the remaining degree 29 factor h(x) represented by 7036510105. It remains to determine if h(x) is irreducible. Since

$$\alpha^{2^{29}} \not\equiv \alpha \bmod h(\alpha)$$

h(x) is reducible. Repeated squaring

$$\alpha, \alpha^2, \alpha^{2^2}, \ldots, \alpha^{2^{29}}$$

where each result is reduced module $h(\alpha)$ is readily realizable on a digital computer.

Squaring any field element in $GF(2^r)$ is equivalent to multiplying the field element (i.e., an r-bit binary vector) by an rxr binary matrix M. Each term (i.e., power of α) is squared modulo $h(\alpha)$. See Chapter 2 of Reference 4 and Example 21.

The aforementioned 29th degree factor is then subjected to Berlekamp's factorization algorithm over GF(2) which is amenable to programming on a digital computer. Applying Berlekamp's factorization algorithm to the 29 degree factor 7036510105 (which is known to be reducible) reveals it has 2 factors. One is 1725 of degree 9 and the other is 4772721 of degree 20. The foregoing results are used to complete the entries in Appendix B which are factors of $T_{47,39}(x)$, the trinomial of least degree that contains f(x) of degree 11 represented by 5023 as a factor. The entries are as follows:

r	Coefficient of f(x) in Octal	T(x) n	T(x) a	Irreducible Factors of T(x) in Octal	Degree of Factor	Period	Index
11	5023	47	39	13	3	7	1
				31	4	15	1
				1725	9	511	1
				5023	11	2047	1
				4772721*	20	1048575	1

The irreducibility of a factor of degree 19 or less is verified in Reference 7. The test for irreducibility for factors of degree greater than 19 is applied (as illustrated in Example 21). The period of each irreducible factor of degree 19 or less can also be determined from Reference 7. The determination of the period of an irreducible factor of degree m > 19 is subsequentially discussed.

It remains to ascertain whether each of the factors of $T_{47,39}(x)$ other than 5023 are factors of a trinomial of degree less than $T_{47,39}(x)$. Of the four factors, only 4772721* (as denoted by (*)) of degree 20 is not a factor of a trinomial of degree less than $T_{47,39}(x)$.

Factors 13 and 31 of degrees 3 and 4, respectively, are trinomials, and $T_{45,25}(x)$ is the trinomial of least degree that contains factor 1725 of degree 9.

A 47-stage SSFSR or a 47-stage ISFSR, each with a single 2-input Exclusive-OR gate in the feedback, is characterized by $T_{47,39}(x)$. Properly initialized, the SSFSR and the ISFSR can generate a PN sequence of length 7, 15, 511, 2047, or 1,048,575. Of these, lengths 2047 ($2^{11} - 1$) and 1,048,575 ($2^{20} - 1$) correspond to the most efficient use of the periodic binary sequence generator. Furthermore, a binary sequence whose length is the LCM of any subset of the five available periods could be generated. Initialization is governed by the factors of $T_{47,37}(x)$.

Assume an ISFSR configuration where multiplication (or division) by α, a root of $T_{47,39}(x) = 0$, is performed. To generate a PN sequence of length 1,048,575 ($2^{20} - 1$), a suitable initial state corresponds to the product of the polynomial factors of $T_{47,39}(x)$ excluding 4772721, the primitive polynomial of degree 20. That is,

$$\gamma = (13)(31)(1725)(5023)$$

a polynomial of degree 27 corresponds to a state in the desired cycle.

Example 21

Given the polynomial

$$f(x) = x^8 + x^7 + x^4 + x^3 + x^2 + x + 1$$

Testing whether f(x) is irreducible without resorting to tables may be done as follows:

Any element

$$b_7\alpha^7 + b_6\alpha^6 + \ldots + b_1\alpha + b_0$$

represented by $[b_7, b_6, \ldots, b_1, b_0]$ may be squared by post multiplication by M over GF(2).

$$\begin{array}{cc} & \begin{array}{cccccccc} \alpha^7 & \alpha^6 & \alpha^5 & \alpha^4 & \alpha^3 & \alpha^2 & \alpha & 1 \end{array} \\ M = & \begin{bmatrix} 1 & 0 & 1 & 1 & 0 & 1 & 1 & 1 \\ 0 & 1 & 0 & 0 & 1 & 0 & 1 & 0 \\ 1 & 1 & 0 & 1 & 1 & 1 & 0 & 1 \\ 1 & 0 & 0 & 1 & 1 & 1 & 1 & 1 \\ 0 & 1 & 0 & 0 & 0 & 0 & 0 & 0 \\ 0 & 0 & 0 & 1 & 0 & 0 & 0 & 0 \\ 0 & 0 & 0 & 0 & 0 & 1 & 0 & 0 \\ 0 & 0 & 0 & 0 & 0 & 0 & 0 & 1 \end{bmatrix} \end{array}$$

where α is a root of $f(x) = 0$. Row 8, 7, ... , 1 in M correspond to polynomials

$$(\alpha^0)^2, (\alpha^1)^2, \ldots, (\alpha^7)^2 \quad \text{mod } f(\alpha)$$

respectively. Starting with

$$\alpha = [0\ 0\ 0\ 0\ 0\ 0\ 1\ 0],$$

$$\begin{aligned} \alpha M &= \alpha^2 \\ \alpha^2 M &= \alpha^4 = \alpha^{2^2} \\ &\vdots \\ \alpha^{2^7} M &= \alpha^{256} = \alpha^{2^8} \end{aligned}$$

Reducing each result modulo $f(\alpha)$, yields

	α^7	α^6	α^5	α^4	α^3	α^2	α	1
α^{2^0}	0	0	0	0	0	0	1	0
α^{2^1}	0	0	0	0	0	1	0	0
α^{2^2}	0	0	0	1	0	0	0	0
α^{2^3}	1	0	0	1	1	1	1	1
α^{2^4}	0	1	1	1	1	1	0	1
α^{2^5}	0	1	0	1	1	0	0	1
α^{2^6}	1	0	0	1	0	1	0	0
α^{2^7}	0	0	1	1	1	0	0	0
α^{2^8}	0	0	0	0	0	0	1	0

Since $\alpha^{2^n} \equiv \alpha \bmod f(\alpha)$

for a least value of n of 8, the order of α is $2^8 - 1 = 255$ or a divisor of 255. It may be concluded that f(x) is irreducible. However, its period is yet to be determined.

An rth degree irreducible f(x) polynomial over GF(2) has period d where d divides $2^r - 1$. Then, unique subsets of

$$\alpha, \alpha^2, \ldots, \alpha^{2^{r-1}}$$

reduced modulo f(x) are multiplied to form x^d modulo f(x). The least value of d for which

$$\alpha^d \equiv 1 \bmod f(\alpha)$$

is the period of f(x), i.e., the order of its roots. If the least value of d is $2^r - 1$, then f(x) is primitive.

Example 22

In Example 21, it was shown that

$$f(x) = x^8 + x^7 + x^4 + x^3 + x^2 + x + 1$$

is irreducible. The divisors $d > 1$ of 255 are

$$3,\ 5,\ 15,\ 17,\ 51,\ 85,\ 255$$

The number of irreducible polynomials of degree 8 whose roots have order d is $\varphi(d)/8$. Values of 3 and 5 for d can, thus, be ruled out. Clearly,

$$\alpha^d \not\equiv 1 \bmod f(\alpha) \text{ for } d = 3,\ 5.$$

Since

$$\alpha^{16} \not\equiv \alpha \bmod f(\alpha)$$

as shown in Example 21, α does not have order 15. Also,

$$\alpha^{17} = \alpha \cdot \alpha^{16} \not\equiv 1 \mod f(\alpha)$$

rules out d = 17 which could also be deduced from the fact that f(x) is not a self-reciprocal polynomial. The binary equivalent of 51 is 110011, and

$$\alpha^{51} = \alpha^{16}\,\alpha^{8}\,\alpha^{2}\,\alpha \equiv 1 \mod f(\alpha)$$

Thus,

$$f(x) = x^8 + x^7 + x^4 + x^3 + x^2 + x + 1$$

has period 51.

Given a primitive polynomial f(x) of degree r over GF(2) comprised of an odd number of terms greater than 3. No method is known of predicting the degree of T(x), a trinomial of lowest degree, which contains f(x) of degree r as a factor. A lower bound was shown to be degree r + 2 where

$$T_{r+2,a}(x) = (x^2 + x + 1)f(x)$$

Among

$$\alpha, \alpha^2, \alpha^3, \ldots, \alpha^{2^{r-1}}$$

there must be at least one CP. Each of the corresponding 2^{r-1} r-bit vectors has at least one 1 in the first r - 1 components. Among these 2^{r-1} r - 1 bit segments (where α^* and α^0 are excluded), there must be at least one identical pair. Thus, an upper bound of the degree of T(x) is 2^{r-1}. From entries in Appendix B for f(x)'s of degree r from 5 through 12, 2^{r-1} represents a crude upper bound. This is shown tabularly as follows:

r	Coefficient of f(x) in Octal	T(x) n	a	2^{r-1}
5	57	8	3	16
6	147	11	8	32
7	313	21	18	64
8	607	27	8	128
9	163	61	39	256
10	3117	83	14	512
11	5667	143	12	1024
12	1417	171	42	2048

The following statistical model leads to a more reasonable disparity of estimated and actual results. Every r-bit nonzero number appears once, and only once, in an r-stage ISFSR (or SSFSR) cycle characterized by a primitive polynomial of degree r over GF(2). The $2^r - 1$ numbers are, thus, uniformly distributed. Such an ISFSR generates random numbers although a strong dependence exists between a number (i.e., vector state) and its predecessor (see Reference 15).

The statistical model is comprised of cells into which random placing of balls occurs until the first time occurrence of placing a ball into a cell already occupied. The two balls correspond to a Compatible Pair (CP) of ISFSR states. This occupancy model is lucidly presented in Section 7 of Chapter II in Reference 16. Following Feller's approach, $(j_1, j_2, \ldots, j_n)$ denotes that the first, second, ... , and n^{th} ball are placed in cells numbered $j_1, j_2, \ldots, j_n$, and the process terminates on the nth step. The j_i are integers between 1 and $m = 2^r - 1$. For n, only the values 2, 3, ... , and m + 1 are possible. Two balls cannot occupy the same cell before the second step or after the (m + 1)st step.

Attributed to each sample point $(j_1, j_2, \ldots, j_n)$ involving exactly n balls is the probability m^{-n}.

The aggregate of all sample points $(j_1, j_2, \ldots, j_n)$ for a fixed n corresponds to the event that the process terminates on the nth step.

$$q_n = \frac{P(m, n-1) \cdot (n-1)}{m^n} \tag{26}$$

is the probability a CP is found on the nth step. The permutation of m things taken n - 1 at a time is denoted by

$$P(m, n-1) = m(m-1) \ldots (m-n+2)$$

The numbered cells j_1, j_2, ... , and j_{n-1} can be selected in P(m, n - 1) ways. The probability q_n in (26) can be expressed as

$$q_n = \left(1 - \frac{1}{m}\right)\left(1 - \frac{2}{m}\right) \ldots \left(1 - \frac{n-2}{m}\right)\left(\frac{n-1}{m}\right) \tag{27}$$

where $q_1 = 0$ and $q_2 = 1/m$

The probability that the process continues for more than n steps is

$$p_n = 1 - (q_1 + q_2 + \ldots + q_n)$$

where $p_1 = 1$. By induction,

$$p_n = \frac{P(m,n)}{m^n} = \left(1 - \frac{1}{m}\right)\left(1 - \frac{2}{m}\right) \ldots \left(1 - \frac{n-1}{m}\right) \tag{28}$$

For $n \ll m$, cross products can be dropped and

$$p_n \approx 1 - \frac{1 + 2 + \ldots + (n-1)}{m} = 1 - \frac{n(n-1)}{2m} \tag{29}$$

Since

$$\mathrm{Ln}(1 - x) \approx -x \qquad \text{for small } x > 0$$

where Ln denotes the natural logarithm,

$$\mathrm{Ln}\ p_n \approx -\frac{1 + 2 + \ldots + (n-1)}{m} = -\frac{n(n-1)}{2m}$$

and

$$-\mathrm{Ln}\ p_n \approx n^2/2m \tag{30}$$

Consider n for which

$$p_1 + p_2 + \dots + p_{n-1} \leq 1/2$$

and

$$p_1 + p_2 + \dots + p_n > 1/2$$

This value of n is the median of the distribution of $\{p_n\}$. The first CP is as likely to be found in n steps as for the process to continue beyond n steps for the first CP to be found. The value of n corresponding to the median of the distribution $\{p_n\}$ is closely approximated by

$$n = (2m \cdot Ln2)^{0.5} \tag{31}$$

(see Reference 16.) Each primitive polynomial of a given degree r in Appendix B may be considered as corresponding to an experiment. Each represents a different random number generator. The median of the value of n of $\{T_{n,a}(x)\}$ in Appendix B associated with primitive polynomials of a given degree r (5 through 12) is compared with n computed in (31). This is shown tabularly as follows:

r	Median of n in $\{T_{n,a}(x)\}$	$\lceil (2m \cdot Ln2)^{0.5} \rceil$
5	7	7
6	8	10
7	14	14
8	20	19
9	29	27
10	42	38
11	63	54
12	82	76

Note that $m = 2^r - 1$ and $\lceil x \rceil$ denotes the smallest integer $n \geq x$. The computed value of n corresponding to the median of the distribution $\{p_r\}$ increases with the square root $m = 2^r - 1$. In determining n of $T_{n,a}(x)$ algorithmically, each r-stage ISFSR initially generates the <u>identical ordered set of r r-bit vectors</u>, namely,

$$1, \alpha, \alpha^2, \ldots, \alpha^{r-1}$$

and a CP could not appear before step r + 3 [or r + 1 in the case where f(x) is a trinomial of degree r]. The statistical model does not account for this. Each initialization and succeeding numbers (i.e., vectors) are randomly selected. The low value of n corresponding to he median of the distributions of $\{T_{n,a}(x)\}$ and $\{p_n\}$ compared to the crude upper bound of 2^{r-1} for n is encouraging. Among primitive polynomials of degree $r > 12$, one would expect to find some contained in a $T_{n,a}(x)$ where $n < 10r$. See Appendix B where every $T_{n,a}(x)$ for values of $n < 70$ is factored if it contained a primitive polynomial of degree 12 or less. Irreducible polynomial factors up to degree 55 were found.

A partial list of primitive polynomials from degree 13 through 19 appears in Appendix B. Every (row) entry lists r, the degree of f(x), f(x) of index 1, its reciprocal $x^r f(1/x)$, and the powers of x (n and a) of T(x), the trinomial of lowest degree containing f(x) (or its reciprocal) as a factor. Another factor of T(x) is given if it is an entry that appears elsewhere in Appendix B or Appendix C. If the degree of the second factor is 12 or less, it serves as a cross reference. For example, consider the following row entry:

					Factor of T(x) Listed Elsewhere			
	f(x) of		T(x)			Coefficient		
r	Index 1	$x^r f(1/x)$	n	a	r	in Octal	Period	Index
<u>14</u>	70767	<u>73707</u>	<u>53</u>	<u>28</u>	<u>10</u>	<u>2305</u>	<u>1023</u>	<u>1</u>

$T_{53,28}(x)$ was found to be the trinomial of lowest degree to contain the degree 10 polynomial 2305 as a factor. The period of 2305 is 1023 and its index is 1, hence, 2305 is primitive. Among the entries of degree 10 in Appendix B, f(x) represented by 2305 is listed followed by n of 53 and a of 28 associated with T(x), i.e., $T_{53,28}(x)$. The factors of $T_{53,28}(x)$ include the polynomial 73707* of degree 14 whose period is 16,383 and index is 1. The factorization of $T_{53,28}(x)$ led to the primitive degree 14 polynomial 73707*. Note that the degree 14 reciprocal polynomial has a lower octal representation, namely, 70767. However, since 73707 is the factor of $T_{53,28}(x)$, it is italicized in the foregoing example of a listing of a degree 14 primitive polynomial.

There are entries in Appendix B of primitive polynomials of degree 14 through 19 for which no other factor of $T_{n,a}(x)$ is given. Each of the other irreducible factors are either a factor of a trinomial of degree less than n or the degree of each exceeds 19. In the latter cases, the single factor of $T_{n,a}(x)$ was found in the table of factors of square-free trinomials through degree 36 in Reference 3.

In Appendix B (as well as Appendix C), the period (and index) of irreducible factors of $T_{n,a}(x)$ whose degrees exceed 19 were not determined in many cases. These entries are blank.

B. IRREDUCIBLE NONPRIMITIVE POLYNOMIALS OVER GF(2)

Unlike primitive polynomials, there are irreducible nonprimitive polynomials over GF(2) which are not factors of any trinomial. Irreducible nonprimitive polynomials over GF(2) from degree 6 through 12 that are factors of trinomials are listed in Appendix C.

Every irreducible polynomial of degree r over GF(2) where $2^r - 1$ is prime is primitive (see Appendix A). Thus, every irreducible polynomial of degree 2, 3, 5, 7, 13, 17, 19 or 31 are primitive. Primes of the form

$$M_r = 2^r - 1$$

are known as Mersenne primes. A necessary, but not a sufficient condition for M_r to be prime, is that r is prime. See Chapter IX in Reference 3 for a list of 27 of 30 known Mersenne primes.

The Mersenne number (Reference 4)

$$M_{11} = 2^{11} - 1 = 2047 = 23 \cdot 89$$

is composite through 11 is prime. Of the 186 irreducible polynomials of degree 11, 176 are primitive and 10 are nonprimitive. None of the 10, degree 11 irreducible nonprimitive polynomials (2 of period 23 and 8 of period 89) divide a trinomial.

Given h(x), a degree r irreducible nonprimitive polynomial over GF(2), with an odd number of terms exceeding 3. The subset of elements of $GF(2^r)$ generated by α, a root of h(x) = 0, are

$$\alpha, \alpha^2, \ldots, \alpha^{d-1}, d^d = 1$$

The order of α is dd where $d < 2^r - 1$ and d divides $2^k - 1$ for k = r, but does not divide $2^r - 1$ for $r < k$. Since

$$d^d - 1 = h(\alpha)\ 0,$$

the r distinct roots of h(x) = 0 are among the d roots of unity. Assume d = sv. Then

$$\alpha^v, \alpha^{2v}, \ldots, \alpha^{(s-1)v}, \alpha^{sv} = 1$$

are among the d roots of unity. Substituting β for α^v yields

$$\beta, \beta^2, \ldots, \beta^{s-1}, \beta^s = 1$$

which comprise the s roots of unity. The s roots of unity are thus a subset of the d roots of unity if s divides d. Furthermore, every element whose

order s divides d must be a power of α, since an element of order s is a generator of the s roots of unity. If the integer s is of the form

$$s = 2^u - 1 > 1$$

then

$$\alpha^v, \alpha^{2v}, \ldots, \alpha^{(s-1)v}, \alpha^{sv} = 1$$

are roots of

$$x^{2^u-1} - 1 = 0$$

and are the nonzero elements of $GF(2^u)$. Among the $2^u - 1$ nonzero elements of $GF(2^u)$, there are $2^{u-1} - 1$ Compatible Pairs (CPs). This means that h(x), the irreducible nonprimitive polynomial of degree r, is a factor of a trinomial if the order of a root of h(x) = 0, say d, is divisible by s of the form

$$s = 2^u - 1$$

Example 23

The irreducible polynomial

$$h(x) = x^6 + x^5 + x^4 + x^2 + 1,$$

as discussed in Examples 2 and 3, has period 21 (and index 3). Its roots are among the 21 roots of unity. Thus,

$$\beta^{21} - 1 = \beta^6 + \beta^5 + \beta^4 + \beta^2 + 1 = 0$$

and h(x) divides $x^{21} - 1$. The 21 roots of unity are a subset of $GF(2^6)$ and form a group under the defined operation of "multiplication." However,

the 21 roots with 0 (β^*) adjoined do not form a group under the defined operation of "addition." Contained within the 21 roots of unity

$$\beta, \beta^2, \ldots, \beta^{20}, \beta^{21} = 1$$

are the nonzero elements of the subfields $GF(2^2)$ and $GF(2^3)$, respectively. Each nonzero element of $GF(2^2)$ is a root of

$$x^{2^2-1} - 1 = x^3 - 1 = 0$$

whereas, each nonzero element of $GF(2^3)$ is a root of

$$x^{2^3-1} - 1 = x^7 - 1 = 0$$

Let $\{\beta^w\}$ be the set of 3 roots of unity.

$$(\beta^w)^{3 \bmod 21} = 1 = \beta^0$$

and

$$\begin{aligned} 3w &\equiv 0 \bmod 21 \\ w &\equiv 0 \bmod 21/(3,21) \\ w &\equiv 0 \bmod 7 \\ w &= 0, 7, 14 \end{aligned}$$

Thus,

$$\{\beta^w = \beta^0, \beta^7, \beta^{14}\}$$

are the 3 solutions. From Table 1-3,

$$\beta^7 = 0\ 1\ 1\ 1\ 1\ 1 \quad \text{and} \quad \beta^{14} = 0\ 1\ 1\ 1\ 1\ 0$$

are a CP.

Similarly, let $\{\beta^y\}$ be the set of 7 roots of unity. Then,

$$(\beta^y)^{7 \bmod 21} = 1 = \beta^0$$

and

$$7y \equiv 0 \bmod 21$$
$$y \equiv 0 \bmod 21/(7,21)$$
$$y \equiv 0 \bmod 3$$
$$y = 3k \text{ for } k = 0, 1, \ldots, 6$$

Thus,

$$\left\{\beta^y\right\} = \left\{\beta^o, \beta^3, \beta^6, \beta^9, \beta^{12}, \beta^{15}, \beta^{18}\right\}$$

are the 7 solutions. Placing the nonzero y's into cyclotomic cosets yields

3	6	12
9	18	15

as shown in Table 1-4. Since each coset has an odd number of entries, each member of a CP is associated with a different coset. This is a consequence of Corollary 3.1. It may be verified in Table 1-3 that β^3 and β^9 are a CP. Hence, β^6 and β^{18} as well as β^{12} and β^{15} (due to Corollary 3.1) are CPs.

Applying the algorithm described in Example 19 to

$$h(x) = x^6 + c^5 + x^4 + x^2 + 1$$

in this example reveals that

$$T_{9,3}(x) = x^9 + x^3 + 1$$

is the trinomial of least degree that contains h(x) as a factor. It corresponds to the CP β^3 and β^9 in the subfield GF (2^3). The reciprocal of h(x), namely, $x^6h(1/x)$ represented by <u>127</u> contained in $T_{9,6}(x)$ is an entry in Appendix C.

Example 24

The order of the roots of the degree 12 irreducible nonprimitive polynomial

$$h(x) = x^{12} + x^{10} + x^9 + x^8 + x^7 + x^3 + x^2 + x + 1$$

is 585. The prime factors of 585 are 3^2, 5, and 13. Since 15 is a divisor of 585, the nonzero elements of $GF(2^4)$ are contained among the 585 roots of unity. Let $\{\beta^w\}$ be the set of 15 roots of unity. Then

$$\begin{aligned} 15w &\equiv 0 \bmod 585 \\ w &\equiv 0 \bmod 585/(15,585) \\ w &\equiv 0 \bmod 39 \\ w &= 39k \text{ for } k = 0, 1, \ldots, 14 \end{aligned}$$

The cyclotomic cosets containing the 14 nonzero values of w are as follows:

39	78	156	312
117	234	468	351
195	390		
273	546	507	429

Dividing each entry by 39 yields

1	2	4	8
3	6	12	9
5	10		
7	14	13	11

which correspond to the 15 roots of unity (excluding $\alpha^0 = 1$) in the isomorphic $GF(2^4)$ generated by a root of $x^4 + x + 1 = 0$ (or a root of its reciprocal $x^4 + x^3 + 1 = 0$). Consider the 7 CPs in the 15 roots of unity generated by α where $\alpha^4 + \alpha + 1 = 0$, the CP α^4 and α correspond to the CP β^{156}, and β^{39}, respectively, and

$$\beta^{156} + \beta^{39} + 1 = h(\beta) = 0,$$

the CP α^4 and α^3 correspond to the CP β^{156} and β^{117}, respectively, and

$$\beta^{156} + \beta^{117} + 1 = \beta^{12} = h(\beta^{12}) = 0.$$

Thus, $h(x)$ is a factor of $T_{156,39}(x)$ and $x^r\, h(1/x)$ is a factor of $T_{156,117}(x)$, the reciprocal of $T_{156,39}(x)$. There are

$$\frac{\varphi(585)}{12} = \frac{\varphi(3^2)\varphi(5)\varphi(13)}{12} = 24$$

degree 12 irreducible nonprimitive polynomials over GF(2) of period 585 and index 7. $T_{156,39}(x)$ contains one of each reciprocal pair (12 total) as factors and a degree 12 irreducible nonprimitive polynomial of period 45 (a divisor of 585) and index 91. These are listed as follows:

Irreducible Factors of $T_{156,39}(x)$ in Octal	Degree of Factor	Period	Index
11001	12	45	91
10245	12	585	7
11433	12	585	7
11637 (h(x))	12	585	7
12153	12	585	7
12673	12	585	7
13113	12	585	7
13145	12	585	7
13567	12	585	7
14043	12	585	7
14177	12	585	7
14315	12	585	7
17315	12	585	7

The reciprocal of each of the foregoing degree 12 factors of $T_{156,117}(x)$, the reciprocal of $T_{156,39}(x)$.

Among the 15 roots of unity are β^0, β^{195}, and β^{390}, the 3 roots of unity. All 24 degree 12 irreducible nonprimitive polynomials whose roots have order 585 are factors of $T_{390,195}(x)$.

Although $T_{156,39}(x)$ is the trinomial of lowest degree derived from the 7 CPs in the 15 roots of unity, it is not the trinomial of lowest degree to contain h(x), whose octal representation is 11637, as a factor. By applying the algorithm illustrated in Example 19, the first CP is found to be β^{11} and β^{23} where

$$\beta^{11} = 1\ 0\ 0\ 0\ 0\ 0\ 0\ 0\ 0\ 0\ 0\ 0$$

$$\beta^{23} = 1\ 0\ 0\ 0\ 0\ 0\ 0\ 0\ 0\ 0\ 0\ 1$$

Thus,

$$x^{23} + x^{11} + 1 = T_{23,11}(x)$$

is the trinomial of least degree to contain h(x) of degree 12 and period 585 (and index 7) represented by 11637 (see Appendix C). Note that β^{11} and β^{23} among the 585 roots of unity are not members of $GF(2^4)$.

Example 25

The order of the roots of the degree 8 irreducible nonprimitive polynomial

$$h(x) = x^8 + x^6 + x^5 + x^4 + x^2 + x + 1$$

is 85. The prime factors of 85 are 5 and 13, and 85 has no divisors of the form $2^u - 1$. It may be verified that

$$x^{11} + x^5 + 1 = T_{11,5}(x)$$

contains h(x) represented by 567 as a factor, although no subset of 85 roots of unity are the nonzero element of a Galois field. Furthermore, $T_{11,5}(x)$ is the trinomial of least degree containing h(x) as a factor (see Appendix C).

THEOREM 4

A sufficient but not a necessary condition for an irreducible nonprimitive polynomial, h(x), over GF(2) with an odd number of terms exceeding 3 to be a divisor of a trinomial is:

The order of its roots d contains a factor of the form $s = 2^u - 1 > 1$.

Proof

Given h(x) of degree r over GF(2) whose roots have order d where $d < 2^r - 1$ and d divides $2^k - 1$ for k = r, but does not divide $2^k - 1$ for k < r. Each root of h(x) = 0 generates the d roots of unity. If d = sv and

$$s = 2^u - 1 > 1,$$

then, a subset of the d roots of unity is comprised of the nonzero elements of $GF(2^u)$. Each element is a polynomial of degree less than r representable by an r-bit vector. These elements are isomorphic to the nonzero elements in $GF(2^u)$ representable as u-bit vectors. Clearly, u divides r. The $2^u - 1$ u-bit vectors contain $2^{u-1} - 1$ CPs. The isomorphic $2^u - 1$ r-bit vectors also contain $2^{u-1} - 1$ CPs where a compatible pair of r-bit vectors are isomorphic to a compatible pair of u-bit vectors (see Example 6).

The d roots of unity can contain CPs and no subset of elements that comprise a Galois field (see Example 25).

Q.E.D.

COROLLARY 4.1

If β^j and β^k are a CP among the d roots of unity, then

$$\beta^{2j \bmod d} \quad \text{and} \quad \beta^{2k \bmod d}$$

are a CP contained in the d roots of unity.

Proof

$$h(\beta) \Big| \beta^k + \beta^j + 1$$

and

$$h(x) \Big| x^k + x^j + 1$$

Thus,

$$h(x) \Big| (x^k + x^j + 1)^2 = x^{2k} + x^{2j} + 1$$

since

$$\left[g(x)\right]^2 = g(x^2)$$

where g(x) is any polynomial over GF(2). Then,

$$\beta^{2k \bmod d} \quad \text{and} \quad \beta^{2j \bmod d}$$

are each members of the d roots of unity

$$\beta, \beta^2, \ldots, \beta^{d-1}, \beta^d = 1$$

which form a group under "multiplication" where

$$\beta^w \beta^y = \beta^{(w+y) \bmod d}$$

Since

$$h(x) \Big| x^{2k} + x^{2j} + 1$$

$$h(\beta) = \beta^{2k \bmod d} + \beta^{2j \bmod d} + 1 = 0$$

and

$$\beta^{2k \bmod d} \quad \text{and} \quad \beta^{2j \bmod d}$$

are a CP. Q.E.D.

Example 26

The cyclotomic cosets associated with β^5 and β^{11}, where β is a root of $h(x) = 0$ given in Example 25, respectively, are:

5	10	20	40	80	75	65	45
11	22	44	3	6	12	24	48

The entries in each of the 8 columns are associated with a CP (β^k, β^j) which corresponds to a trinomial divisible by

$$h(x) = x^8 + x^6 + x^5 + x^4 + x^2 + x + 1$$

representable by 567. The square-free trinomials divisible by 567 are listed in ascending order of degree as follows:

$$x^{11} + x^5 + 1$$
$$x^{40} + x^3 + 1$$
$$x^{48} + x^{45} + 1$$
$$x^{65} + x^{24} + 1$$
$$x^{75} + x^{12} + 1$$

The additional square-free trinomials are another source of trinomials of lowest degree that contain an irreducible polynomial of degree greater than 19, e.g., the factors of

$$x^{40} + x^3 + 1$$

are 567 (i.e., h(x) of degree 8 and period 85 and 54556457063, an irreducible polynomial of degree 32. The factors of $2^{32}-1$ are

$$\underbrace{(2^2 - 1)}_{3}\ \underbrace{(2^2 + 1)}_{5}\ \underbrace{(2^4 + 1)}_{17}\ \underbrace{(2^8 + 1)}_{257}\ \underbrace{(2^{16} + 1)}_{65,537}$$

and the period of the degree 32 irreducible polynomial divides $2^{32} - 1$. Each of the prime factors may be expressed as

$$F_n = 2^{2^n} + 1$$

for

$$n = 0, 1, 2, 3, 4$$

These are known as Fermat primes. Every F_n Fermat number where $n > 4$, whose character has been determined to date, is composite.

It may be verified that $T_{40,3}(x)$ is the trinomial of least degree that contains the degree 32 irreducible polynomial <u>54556457063</u> over GF(2) as a factor.

The following theorem and corollaries are due to Golomb (see Reference 3).

THEOREM 5

A self-reciprocal polynomial over GF(2), h(x), divides a trinomial only if the three roots of unity β^{2a}, β^{a}, and β^{0} for some a are a subset of the elements generated by β, a root of h(x) = 0.

Proof

Assume

$$h(x) \mid x^n + x^a + 1$$

Then,

$$x^r\, h(1/x) \mid x^n + x^{n-a} + 1$$

Given

$$h(x) = x^r\, h(1/x)$$

Then,

$$h(x) \mid (x^n + x^a + 1) + (x^n + x^{n-a} + 1) = x^{n-a} + x^a$$

Therefore,

$$h(x) \mid x^a(x^{n-a} + x^a) + (x^n + x^a + 1) = x^{2a} + x^a + 1$$

and

$$h(\beta) = \beta^{2a} + \beta^{a} + 1 = 0$$

The elements β^{2a} and β^{a} are a CP, and the 3 roots of unity

$$\beta^{a}, \beta^{2a}, \beta^{3a} = 1$$

are a subset of the elements generated by β. The period of h(x) must, therefore, contain 3 (i.e., $2^2 - 1$) as a factor.

Q.E.D.

COROLLARY 5.1

No trinomial is divisible by both $x^3 + x + 1$ and $x^3 + x^2 + 1$.

Proof

$$u(x) = (x^3 + x + 1)\ (x^3 + x^2 + 1) = x^6 + x^5 + x^4 + x^3 + x^2 + x + 1$$

a self-reciprocal polynomial whose roots have order 7, and 7 is not divisible by 3.

The elements generated by β, a root of u(x) = 0 are

i of β^i	c_5	c_4	c_3	c_2	c_1	c_0
0	0	0	0	0	0	1
1	0	0	0	0	1	0
2	0	0	0	1	0	0
3	0	0	1	0	0	0
4	0	1	0	0	0	0
5	1	0	0	0	0	0
6	1	1	1	1	1	1
—						
0	0	0	0	0	0	1

and no CP is among them.

Q.E.D.

COROLLARY 5.2

No trinomial is divisible by

$$h(x) = x^4 + x^3 + x^2 + x + 1$$

an irreducible self-reciprocal polynomial whose roots have order 5.

Proof

Since 3 is not a divisor of 5,

$$x^3 - 1 \text{ does not divide } x^5 - 1$$

and all 3 roots of unity are not a subset of the 5 roots of unity.

The 5 roots of unity generated by β, a root of $h(x) = 0$, do not contain a CP.

Q.E.D.

Example 27

There are 6 self-reciprocal irreducible polynomials of degree 18 whose roots have order 171 (and index 1533). See Table 1-5.

Let $\{\beta^a\}$ be the set of 3 roots of unity which are a subset of the 171 roots of unity.

$$(\beta^a)^{3 \bmod 171} = 1 = \beta^0$$

and

$$\begin{aligned} 3a &\equiv 0 \bmod 171 \\ a &\equiv 0 \bmod 171/(171/3) \\ a &\equiv 0 \bmod 54 \\ a &= 0,\ 57,\ 114 \end{aligned}$$

Thus,

$$h(\beta) = \beta^{114} + \beta^{57} + 1 = 0$$

and

$$h(x) \Big| x^{114} + x^{57} + 1$$

where h(x) is any one of the 6 self-reciprocal irreducible polynomials of degree 18. Thus, $T_{114,57}(x)$ has 6 degree 18 factors when multiplied together over GF(2) yields a degree 108 polynomial.

The remaining degree 6 self-reciprocal polynomial is one of the following:

	Self-Reciprocal Polynomials							Binary Coefficients of Factors
	x^6	x^5	x^4	x^3	x^2	x	1	
(1)	1	0	0	1	0	0	1	irreducible
(2)	1	0	1	1	1	0	1	(1 1 1) (1 1 1 1 1)
(3)	1	1	0	1	0	1	1	(1 1 1) (1 1 1) (1 1 1)
(4)	1	1	1	1	1	1	1	(1 0 1 1) (1 1 0 1)

Polynomials (2) and (4) can be ruled out due to Corollaries 5.2 and 5.1, respectively. Since $T_{114,57}(x)$ is square-free, polynomial (3) cannot be a factor. Thus,

$$x^6 + x^3 + 1$$

with period 9 (and index 7) is the remaining factor. The irreducible factors of $T_{114,57}(x)$ are listed as follows:

Irreducible Factors of $T_{114,57}(x)$ in Octal	Degree of Factor	Period	Index
111	6	9	7
1055321	18	171	1533
1167671	18	171	1533
1315315	18	171	1533
1331155	18	171	1533
1505213	18	171	1533
1635347	18	171	1533

Note that β^{114} and β^{57} is the only CP among the 171 roots of unity. This is independent of the generation of the 171 roots of unity. Thus, applying the algorithm to each of the 6 self-reciprocal polynomials of degree 12 yields $T_{114,54}(x)$ as the trinomial of least degree containing the given self-reciprocal polynomial as a factor.

The polynomial $h_1(x)$ represented by 1055321 is listed in Appendix C of Reference 6 appended to its index 1533. The minimal polynomial $h_1(\beta^5) = 0$ was determined by a computer program to be $h_2(x)$ represented by 1167671, etc. The 6 self-reciprocal polynomials of degree 18 given in the foregoing table are listed in Reference 7. However, they are erroneously classified as primitive.

Golomb, in Reference 17, discusses irreducible polynomials, synchronization codes, and primitive necklaces in the context of cyclotomic algebra.

SECTION V

VERY LARGE SCALE INTEGRATED CIRCUIT CONSIDERATIONS

Switching elements comprise less than 10% of the active chip area of a Very Large Scale Integrated (VLSI) circuit chip. Interconnections make up the balance.

A static shift register is made up of identical stages or cells. Identical cells lead to a maximally regular topology in a VLSI layout known as a floor plan. The geometric design of one cell is replicated to a desired number to form a cascade. Each cell is a clocked memory element called a static flip-flop. The flip-flop is a bistable device capable of assuming one of two state-values.

A functional logic diagram of a JK flip-flop is shown in Figure 5-1. The state of the flip-flop is defined by its assertion output q at a particular CPI. The negation output is $\bar{q}$ (the complement of q).

The logic inputs are J and K. A change in the state of the flip-flop can only occur after the application of a clock pulse denoted by Cp. The logical behavior of the JK flip-flop is reflected in the following state table:

J	K	q	Q
0	0	0	1
0	0	1	0
0	1	0	1
0	1	1	1
1	0	0	0
1	0	1	0
1	1	0	0
1	1	1	1

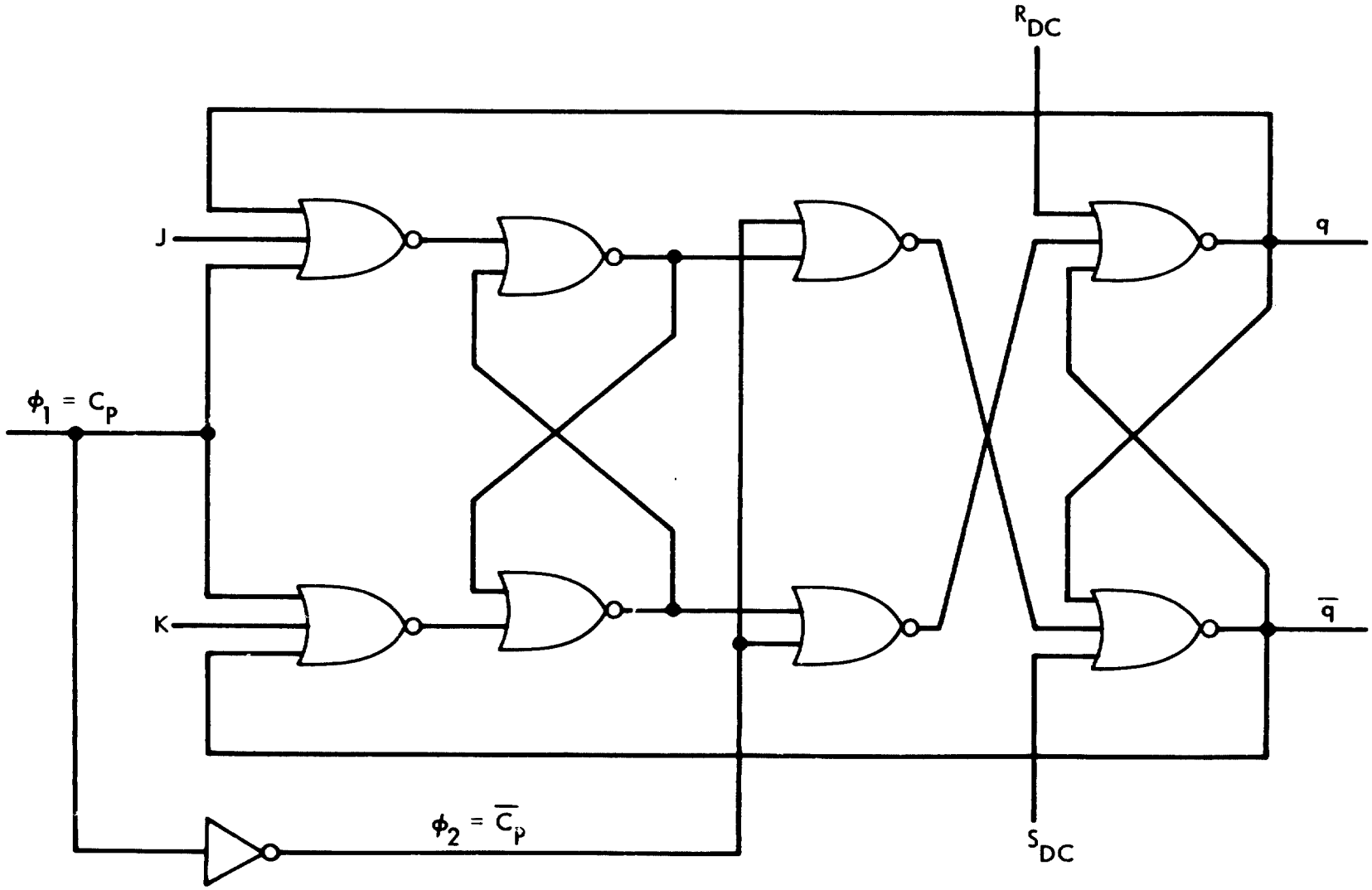

Figure 5-1. Master-Slave O-Enable JK Flip-Flop

J and K represent <u>present</u> inputs, and q represents the <u>present</u> (assertion) output or state of the flip-flop. Let k denote a CPI, the time between two consecutive clock pulses. Then,

$$q(k) \longrightarrow q(k+1) = Q$$

where Q denotes the state the flip-flop assumes after the application of a clock pulse. Q is referred to as the next (assertion) output or state of the flip-flop. The next state Q is a Boolean function of J, K, and q. Expressed in minimal (logical) sum of (logical) products form

$$Q = \bar{J}\bar{q} \vee kq \tag{31}$$

Juxtaposition denotes the logical product or the AND operation (e.g., K AND q is expressed as Kq). The symbol $\vee$ denotes the OR (i.e., Inclusive-OR operation). A detailed presentation on switching (Boolean) functions and clocked memory elements appears in Reference 18. The reader is cautioned to note that the symbols for the OR and Exclusive-OR operations in Reference 18 differ from those in this report. Expression (31) is the characteristic function of the JK flip-flop. It is a Boolean difference equation where time dependency is implied.

Let $J = \bar{K}$ in (26). Then,

$$\bar{J} = K$$

$$\text{and } Q = K\bar{q} \vee Kq = K$$

Thus, when inputs J and K are complementary, the next state Q, after the application of a clock pulse Cp, is the state-value of K prior to application of Cp. The assertion output, in effect, "copies" the state-value of K. The behavior of the JK flip-flop under the condition J equals $\bar{K}$ is that of a D flip-flop (i.e., a delay flip-flop). Let q_i and $\bar{q}_i$ denote the assertion and negation output of the ith JK flip-flop in a cascade. Let J_{i+1} and K_{i+1} denote the respective inputs to the (i + 1)th JK flip-flop whose

assertion output is q_{i+1}. Connecting q_i to K_{i+1} and $\overline{q}_i$ to J_{i+1} results in shifting the content of the ith flip-flop (i.e., q_i) to the (i + 1)th flip-flop upon the application of a Cp.

The JK flip-flop in Figure 5-1 is comprised of 8 NOR (OR-NOT) gates and one inverter for developing a two-phase clock. The JK flip-flop is made up of two clocked cross-coupled NOR gates called latches. One serves as a master and is clocked by ϕ_1 = Cp. The slave is clocked by $\phi_2 = \overline{C}p$ (the complement of Cp). The state of the master is determined by the J and K inputs when Cp = 0, while the inputs to the slave are disabled $\overline{C}p = 1$. The master (clocked latch) assumes a stable state prior to the time Cp becomes 1 as $\overline{C}p$ becomes 0. The state of the slave then assumes the state of the master during which time the inputs to the master (J and K) are disabled. Feedback from the assertion output q to the NOR gate, which has J and Cp as other inputs and feedback from the negation output $\overline{q}$ to the NOR gate, which has K and Cp as other inputs provide input gate steering. Gate steering allows a state-value of 0 to simultaneously be applied to the J and K input. The J input when at state-value 0 (and K = 1) is a set input which causes the assertion output q to assume a state-value of 1 (via the slave). Whereas, the K input when at state-value 0 (and J = 1) is a clear (or reset) input which causes the assertion output, q, to assume a state-value of 0 (via the slave). When J and K are both at state-value 0, the state of the JK flip-flop changes. From (26)

$$Q = \overline{J}\overline{q} \vee Kq$$

$$= \overline{0}\overline{q} \vee 0q = \overline{q}$$

Thus, J = K = 0 is a toggle input which is not employed in a shift register configuration. A J = K = 1 cause no change in q. A condensed state table of a 0-enable JK flip-flop is listed as follows:

J	K	Q
0	0	$\overline{q}$
0	1	1
1	0	0
1	1	q

The second and third entries where J and K are complementary correspond to D flip-flop behavior where Q copies the K input. S_{DC} and R_{DC} in Figure 5-1 are asynchronous set and clear inputs, respectively. S_{DC} when at state-value 1 sets the flip-flop, and R_{DC} when at state-value 1 resets the flip-flop.

$$S_{DC}R_{DC} = 0$$

is a constraint. That is, a state-value of 1 should not be applied to S_{DC} and R_{DC} simultaneously since q will assume an indeterminate state-value (i.e., Ø, a 0 or a 1). Both S_{DC} and R_{DC} override the clocked logical inputs J and K. The S_{DC} and R_{DC} inputs with added control logic provide a means for on-chip initialization of each flip-flop.

Another configuration of the 0 enable JK flip-flop where J = K = T is of interest. From (26)

$$Q = \overline{T}\overline{q} \vee Tq = \overline{T} + q$$

$$= 1 + T + q \qquad (32)$$

The next state Q is the complement of the Exclusive-OR of the T input and the present state q of the flip-flop. Connecting J and K inputs together results in a trigger or T flip-flop whose characteristic function is linear. In a subsequent report, it will be shown that the feedback of an SSFSR characterized by a trinominal may be reduced to a wire when the register

portion is made up of a combination of D and T flip-flops. The conditions under which the properties and the length of a given periodic sequence is preserved will be discussed.

An N channel Metal-Oxide-Semiconductor (NMOS) circuit of the 0-enable JK flip-flop appears in Figure 5-2. Each transistor is an N channel Metal-Oxide-Semiconductor Field-Effect Transistor (MOSFET). Those operating in the depletion mode serve as pull-ups and are labeled MD. Those operating in the enhancement mode are served as pull-downs and are labeled ME. The optimal length-to-width ratios of the gate geometries are discussed in Reference 19. The NOR gate configuration was chosen because its delay time for falling transitions is decreased as more or its inputs are active. Added stray capactance does, however, offset this decrease.

A functional logic diagram of an on-stage SSFSR characterized by

$$T_{n,a}(X) = X^n + X^a + 1$$

is given in Figure 5-3. Clock and initialization circuitry is omitted. The two-level logic function comprised of three NOR gates is effectively a 2-input Exclusive-OR circuit. Thirty transistors comprise the NMOS cell (i.e., JK flip-flop) in Figure 5-2. Intracell connections are highly localized. Whereas, intercell connections are simply two wires due to the fact that the shift register is a serial device. The celluarity of a shift register and the serialization of intercell connections leads to topological regularity amenable to VLSI chip designs.

Introducing feedback to the shift register enchances its usefulness beyond all expectations of the early 1950s when independent discoveries were surfacing (Reference 3). The combinational logic in feedback of a shift register, however, adversely affects the topological layout of a VLSI design. This is particularly true in a SSFSR where a two-level linear-logic function grows sharply with the number of arguments (Reference 18). A feedback network with a single 2-input modulo 2 summer (i.e., Exclusive-OR gate) is the least

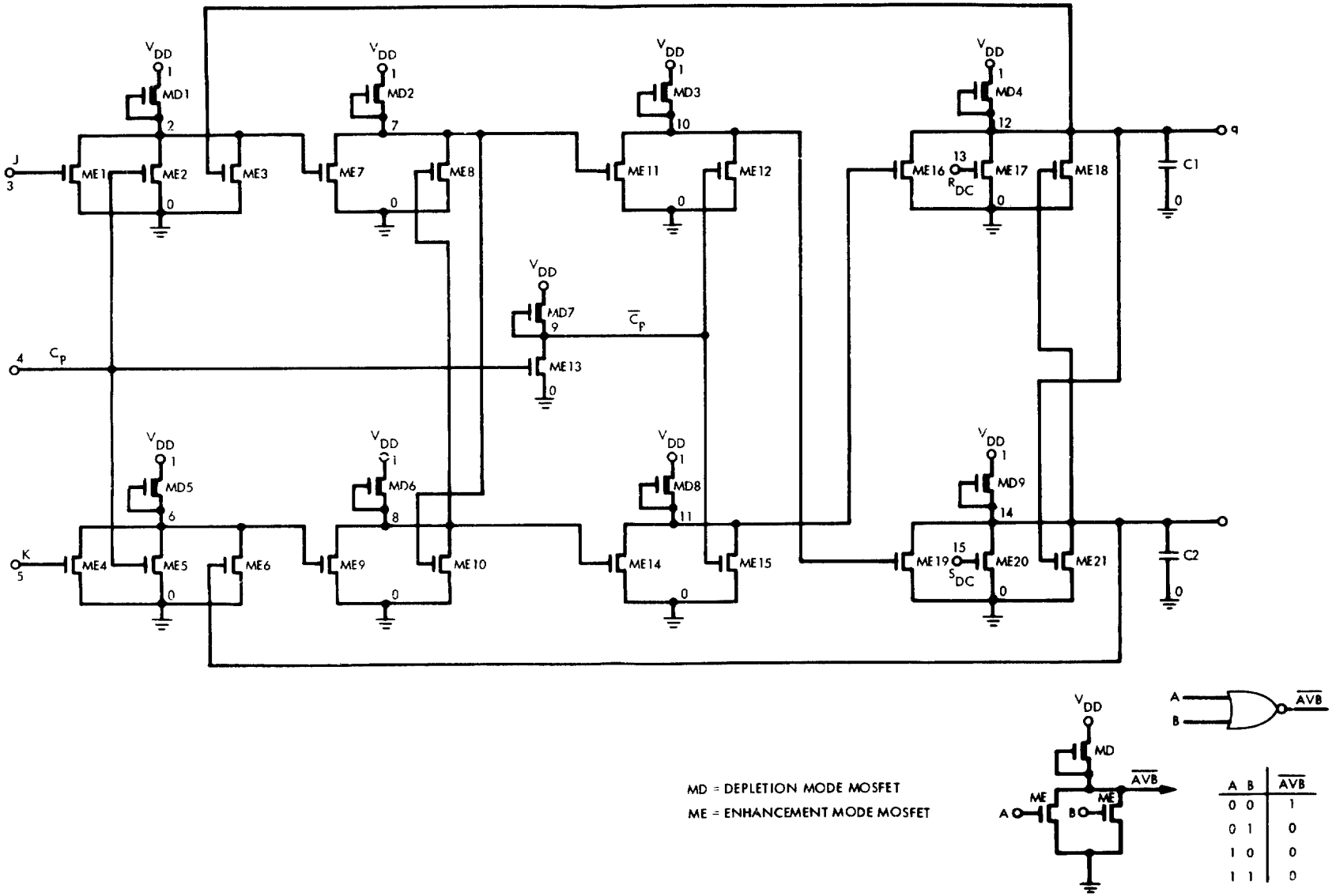

A	B	$\overline{AVB}$
0	0	1
0	1	0
1	0	0
1	1	0

Figure 5-2. NMOS Circuit of a Static 0-Enable JK Flip-Flop

$$J_1 = \overline{q}_a + q_n = \overline{K}_1$$

$$K_1 = q_a + q_n$$

$$Q_1 = q_a + q_n$$

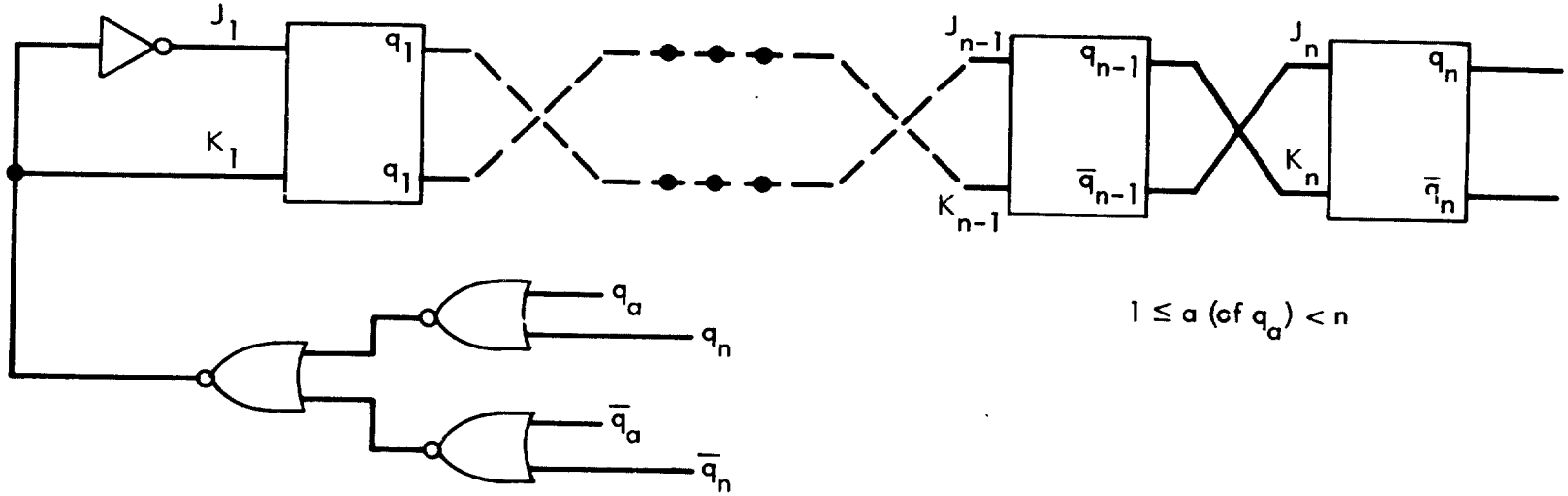

THE SYMBOL "+" DENOTES THE EXCLUSIVE – OR OPERATION

Figure 5-3. A Functional Logic Diagram of a n-Stage SSFSR Characterized by $X^n + X^a + 1$

complex without resulting in cycles (of states) of trivial length. Isomorphic SSFSR and ISFSR with such a feedback function are of identical complexity in terms of transistor count and propagation delay.

This report discusses the embedding of the behavior of an r-stage shift register with linear-logic feedback into that of an n-stage shift register with a single 2-input modulo summer in its feedback in Section IV. The sole purpose is to realize VLSI architecture of maximal regularity (i.e., identical cells) with intercell communications serialized to a maximal degree.

SECTION VI

SUMMARY

Feedback shift registers have proven to be efficient periodic binary sequence generators. Polynomials of degree r over a Galois Field characteristic 2 (GF(2)) characterize the behavior of shift registers with linear-logic feedback. Such FSRs are amenable to analysis and synthesis. Furthermore, the synthesis of shift registers with nonlinear feedback is often the result of "adding" nonlinear terms to a linear recurrence relation. See Reference 23 and Chapter VI entitled "Nonlinear Shift Register Sequences" in Reference 3.

Application of periodic binary sequences include random number generation (Reference 15), spread spectrum communications (Reference 20), and radar ranging (a forerunner of spread spectrum communications (Reference 11)), and VLSI testing (References 21 and 22).

Other applications of FSRs include encryption and decryption (Reference 23), algebraic error-detection and error-correction encoding and decoding (References 4 and 6), and FSR synthesis of sequential machines (Reference 24).

The vast intrinsic combinatorics of an FSR accounts for its varied and significant applications. This reports deals solely with shift registers with linear-logic feedback (the SSFSR and ISFSR) characterized by polynominals over GF(2). The objective is the algorithmic determination of the trinomial of lowest degree, when its exists, that contains a given irreducible polynomial over GF(2) as a factor. It was proven that every primitive polynomial of degree r is a factor of $2^{r-1} - 1$ trinomials and the one of lowest degree is square-free. A sufficient, but not a necessary condition, was proven for a nonprimitive irreducible polynomial to be a factor of a trinomial. Methods for determining the initial state of a SSFSR and ISFSR required to generate the periodic sequence associated with a factor of the trinomial was given.

A measure of complexity of a binary periodic sequence is the length of the shift register with linear-logic feedback which, when properly initialized, can generate the sequence (see References 4 and 25). It is proposed that a measure of complexity of an irreducible polynomial is the degree of the trinomial of least degree, if it exists, that contains the irreducible polynomial as a factor.

SECTION VII

REFERENCES

1. Birkoff, G., and MacLane, S., A Survey of Modern Algebra, Revised Edition, The Macmillan Co., New York, 1953.

2. Golomb, S.W., "Theory of Transformation Groups of Polynomials over GF(2) with Applications to Linear Shift Register Sequences," Information Sciences, Vol. 1, pp. 87-109, 1968.

3. Golomb, S.W., Shift Register Sequences, Revised Edition, Aegean Park Press, Laguna Hills, California, 1982.

4. Berlekamp, E.R., Algebraic Coding Theory, Revised 1984 Edition, Aegean Park Press, Laguna Hills, California, 1984.

5. Dean, R.A., Elements of Abstract Algebra, John Wiley and Sons, Inc., New York, 1966.

6. Peterson, W.W., and Weldon, Jr., E.J., Error-Correcting Codes, 2nd Edition, The M.I.T. Press, Cambridge, Massachusetts, 1972.

7. Marsh, R.W., Table of Irreducible Polynomials over GF(2) through Degree 19, distributed by the Office of Technical Services, Commerce Department, Washington, D.C., October 1957.

8. Stahnke, W., "Primitive Binary Polynomials," Mathematics of Computation, Vol. 27, No. 124, pp. 997-980, October 1973.

9. Watson, E.J., "Primitive Polynomials (Mod 2)," Mathematics of Computation, Volume 16, pp. 368-369, 1962.

10. Lempel, A., "Analysis and Synthesis of Polynomials and Sequences over GF(2)," IEEE Transactions on Information Theory, Vol. IT-17, pp. 297-303, 1971.

11. Golomb, S.W., Editor, Digital Communications with Space Applications, Prentice Hall, Englewood Cliffs, New Jersey, 1964, Second Edition, Peninsula Publishing, Los Altos, California, 1982.

12. Zierler, N. and Brillhart, J., "On Primitive Trinomials (Mod 2)," Information and Control, Vol. 13, No.6, pp. 541-554, December, 1968.

13. Zierler, N., and Brillhart, J., "On Primitive Trinomials, (Mod 2) II," Information and Control, Vol. 14, No. 6, pp. 556-569, June 1969.

14. Swan, R.G., "Factorization of Polynomials over Finite Fields," Pacific Journal of Mathematics, Vol. 12, pp. 1099-1106, 1962.

15. Tausworthe, R.C., "Random Numbers Generated by Linear Recurrence Modulo Two," Mathematics of Computation, Vol. 19, pp. 201-209, 1965.

16. Feller, W., An Introduction to Probability Theory and Its Applications, Vol. 1, Third Edition, John Wiley and Sons, Inc., New York, 1968.

17. Golomb, S.W., "Irreducible Polynomials, Synchronization Codes, Primitive Necklaces, and the Cyclotomic Algebra," Combinatorial Mathematics and Its Applications, Chapter 21, Proc. of the 1st U.N.C. Conference Conf. on Combinatorial Mathematics and Its Applications., April, 1967, University of North Carolina Press, pp. 358-370, 1969.

18. Perlman, M., "Abstract Algebra," Encyclopedia of Computer Science and Technology, Marcel Dekker, Inc., New York, Vol. 1, pp. 1-102, 1975.

19. Mead, C., and Conway, L., Introduction to VLSI Systems, Addison-Wesley Publishing Co., Reading, Massachusetts, 1980.

20. Holmes, J.K., Coherent Spread Spectrum Communications Systems, John Wiley and Sons, Inc., New York, 1982.

21. Williams, T.W. and Parker, K.P., "Design for Testability - A Survey," Special Issue on VLSI Design: Problems and Tools, Proceedings of the IEEE, Vol. 7, No. 1, pp. 98-112, January 1983.

22. Tang, D.T., and Chen, C.-L., "Logic Test Pattern Generation Using Linear Codes," IEEE Transactions on Computers, Vol. C-33, No. 9, pp. 845-850, September 1984.

23. Perlman, M., "Generation of Key in Cryptographic System for Secure Communications," NASA Technical Brief No. B75-10278, October 1975.

24. Martin, R.L., Studies in Feedback Shift-Register Synthesis of Sequential Machines, Research Monograph No. 50, The M.I.T. Press Cambridge, Massachusetts, 1969.

25. Massey, J.L , "Shift Register Synthesis and BCH Decoding," IEEE Transactions on Information Theory, IT15, pp. 122-127, 1969.

APPENDIX A

NUMBER THEORETIC FUNCTIONS

APPENDIX A

NUMBER-THEORETIC FUNCTIONS

A number-theoretic function is any function that is defined over positive integral arguments. A number-theoretic function f(m) is multiplicative if

$$f(ab) = f(a)f(b) \quad \text{whenever } (a,b) = 1$$

The prime-power factorization of a positive integer $m > 1$ is

$$m = \prod_{i=1}^{k} p_i^{e_i}$$

where k and e_i are positive integers and p_i prime integers. A <u>prime</u> is defined as an integer $p > 1$ that is divisible by 1 and p only. Thus, a multiplicative number-theoretic function over m may be expressed as

$$f(m) = f\left(\prod_{i=1}^{k} p_i^{e_i}\right) = \prod_{i=1}^{k} f\left(p_i^{e_i}\right)$$

since

$$\left(p_i^{e_i}, p_j^{e_j}\right) = 1 \quad \text{for } i \neq j$$

The Euler-phi function $\varphi(m)$ is defined as the number of positive integers no greater than m that are relatively prime to m. Furthermore, $\varphi(m)$

is multiplicative. The integers no greater than p^k that are <u>not</u> relatively prime to p^k are those that contain p as a factor, namely,

$$p,\ 2p,\ \ldots\ ,p^{k-1}p$$

There are a total of p^{k-1} such integers. Therefore,

$$\varphi(p^k) = p^k - p^{k-1} = p^{k-1}(p-1)$$

The integer 1 is neither a prime nor a composite. To be complete, $\varphi(1)$ is defined to be 1.

In general,

$$\varphi(m) = \begin{cases} 1 & \text{for } m = 1 \\ p - 1 & \text{for } m = p \\ \prod_{i=1}^{k} p_i^{e_i-1}(p_i-1) & \text{for } m = \prod_{i=1}^{k} p_i^{e_i} \end{cases}$$

As discussed in Section I, the number of primitive polynomials of degree r over GF(2) is

$$\varphi(2^r - 1)/r$$

Also, the number of irreducible nonprimitive polynomials of degree r and period d over GF(2) is $\varphi(d)/r$. The value of d is such that $d < 2^k-1$ and d divides $2^k - 1$ for $k = r$, but does not divide $2^k - 1$ for $k < r$.

The set of all cosets (proper and improper) relative to the multiplicative subgroup

$$\left\{1,\ 2,\ 4,\ \ldots,\ 2^{r-1}\right\}$$

correspond to the $2^r - 1$ roots of unity arranged into <u>cyclotomic cosets</u>. The number of cyclotomic cosets is

$$N_c = \frac{1}{r}\left[\sum_{d|r} \varphi(d)\ 2^{r/d}\right] - 1$$

where $d|r$ denotes "d divides r." The summation is taken over all $d \geq 1$ that divide r.

Another multiplicative number-theoretic function of interest is the Möbius function denoted by $\mu(m)$. The Möbius function is defined by

$$\mu(m) = \begin{cases} 1 & \text{if } m = 1 \\ 0 & \text{if } a^2|m \text{ for } a > 1 \\ (-1)^k & \text{if } m = p_1 p_2 \ldots p_k \text{ where } p_i \text{ are distinct primes} \end{cases}$$

The Möbius function shows up frequently in number theory, particularly in the Möbius inversion formula. If f is any number-theoretic function, not necessarily multiplicative, and

$$F(m) = \sum_{d|m} f(d)$$

then

$$f(m) = \sum_{d|m} F(d)\mu(n/d) = \sum_{d|m} F(n/d)\mu(d)$$

The number of irreducible polynomials of degree r over GF(2) is I_r where

$$2^r = \sum_{d|r} dI_d$$

For $r = 6$, I_6 is determined recursively. Divisors of 6 are 1, 2, 3, and 6.

$$
\begin{aligned}
2^1 &= 1 \cdot I_1 & I_1 &= 2 \\
2^2 &= 2 + 2I_2 & I_2 &= 1 \\
2^3 &= 2 + 3I_3 & I_3 &= 2 \\
2^6 &= 2 + 2 + 6 + 6I_6 & I_6 &= 9
\end{aligned}
$$

A closed form for I_r follows from applying the Möbius inversion formulas. For

$$F(r) = 2^r \quad \text{and} \quad f(d) = dI_d$$

$$rI_r = \sum_{d|r} 2^{r/d}\mu(d) \qquad \text{and} \qquad I_r = \frac{1}{r} \sum_{d|r} 2^{r/d}\mu(d)$$

For $r = 6$,

$$\mu(1) = 1,\ \mu(2) = -1,\ \mu(3) = -1,\ \mu(6) = 1$$

$$I_6 = \frac{1}{6}\left[2^6 - 2^3 - 2^2 + 2\right] = 9$$

The number-theoretic functions for determining the number of primitive and irreducible polynomials over GF(2) is applicable to GF(p). The number of primitive polynomials of degree r is a subset of I_r over GF(p). That is,

$$\frac{\varphi(p^r - 1)}{r} \leq \frac{1}{r} \sum_{d|r} p^{r/d}\mu(d)$$

Equality arises only for the case of GF(2) when $2^r - 1$ is prime. The reader is invited to see References 3, 4, and 17 for detailed presentations on $\varphi(m)$, $\mu(d)$, and the Möbius inversion formula.

APPENDIX B

TRINOMIAL OF LEAST DEGREE THAT CONTAINS A GIVEN PRIMITIVE POLYNOMIAL OF DEGREE r OVER GF(2) AS A FACTOR

APPENDIX B

TRINOMIAL OF LEAST DEGREE THAT CONTAINS A GIVEN PRIMITIVE POLYNOMIAL OF DEGREE r OVER GF(2) AS A FACTOR

r	COEFF. OF f(x) IN OCTAL	T(x) n	T(x) a	IRREDUCIBLE FACTORS OF T(x) IN OCTAL	DEGREE OF FACTOR	PERIOD	INDEX
5	45	5	2	45	5	31	1
	67	7	2	7	2	3	1
				67	5	31	1
	57	8	3	13	3	7	1
				57	5	31	1
6	103	6	1	103	6	63	1
	133	8	7	7	2	3	1
				133	6	63	1
	147	11	8	73	5	31	1
				147	6	63	1
7	203	7	1	203	7	127	1
	211	7	3	211	7	127	1
	235	10	9	15	3	7	1
				235	7	127	1
	277	13	3	133	6	63	1
				277	7	127	1
	247	14	13	7	2	3	1
				45	5	31	1
				247	7	127	1
	253	19	7	253	7	127	1
				12067*	12	4095	1
	217	19	13	217	7	127	1
				10663*	12	4095	1
	357	19	17	7	2	3	1
				357	7	127	1
				2035*	10	341	3

r	COEFF. OF f(x) IN OCTAL	T(x) n	T(x) a	IRREDUCIBLE FACTORS OF T(x) IN OCTAL	DEGREE OF FACTOR	PERIOD	INDEX
7	313	21	18	313	7	127	1
				72127*	14	381	43
8	537	13	11	7	2	3	1
				15	3	7	1
				537	8	255	1
	453	13	12	67	5	31	1
				453	8	255	1
	455	16	15	455	8	255	1
				675*	8	85	3
	543	20	9	13	3	7	1
				543	8	255	1
				1055*	9	511	1
	435	21	10	435	8	255	1
				21615*	13	8191	1
	515	23	1	7	2	3	1
				515	8	255	1
				34641*	13	8191	1
	717	27	2	13	3	7	1
				717	8	255	1
				375715*	16	65535	1
	607	27	8	607	8	255	1
				3745133*	19	524287	1
9	1021	9	4	1021	9	511	1
	1533	11	7	7	2	3	1
				1533	9	511	1
	1333	11	10	7	2	3	1
				1333	9	511	1

r	COEFF. OF f(x) IN OCTAL	T(x) n	T(x) a	IRREDUCIBLE FACTORS OF T(x) IN OCTAL	DEGREE OF FACTOR	PERIOD	INDEX
9	1157	13	6	23	4	15	1
				1157	9	511	1
	1473	15	13	147	6	63	1
				1473	9	511	1
	1207	19	8	7	2	3	1
				15	3	7	1
				51	5	31	1
				1207	9	511	1
	1175	19	9	1175	9	511	1
				2355*	10	341	3
	1055	20	9	13	3	7	1
				543*	8	255	1
				1055	9	511	1
	1275	26	1	7	2	3	1
				15	3	7	1
				1275	9	511	1
				12515*	12	4095	1
	1267	27	15	1267	9	511	1
				1234653*	18	1533	171
	1517	29	4	7	2	3	1
				313	7	127	1
				1517	9	511	1
				7723*	11	2047	1
	1437	29	7	7	2	3	1
				75	5	31	1
				1437	9	511	1
				32461*	13	8191	1
	1137	29	14	1137	9	511	1
				4533443*	20	349525	1
	1033	29	24	13	3	7	1
				73	5	31	1
				1033	9	511	1
				17233*	12	1365	3

r	COEFF. OF f(x) IN OCTAL	T(x) n	T(x) a	IRREDUCIBLE FACTORS OF T(x) IN OCTAL	DEGREE OF FACTOR	PERIOD	INDEX
9	1243	36	1	1243	9	511	1
				2257*	10	341	3
				540663*	17	131071	1
	1131	36	19	15	3	7	1
				1131	9	511	1
				171611245*	24	16777215	1
	1225	39	16	1225	9	511	1
				7137*	11	2047	1
				3411757*	19	524287	1
	1617	39	18	1617	9	511	1
				10011	12	45	91
				1540753*	18	1533	171
	1167	41	33	325	7	127	1
				1167	9	511	1
				373334507*	25	33554431	1
	1423	44	41	13	3	7	1
				31	4	15	1
				1423	9	511	1
				3323	10	1023	1
				1635423*	18	262143	1
	1257	45	20	1257	9	511	1
				1205764323423*	36	2555	26896077
	1577	55	50	7	2	3	1
				23	4	15	1
				31	4	15	1
				1577	9	511	1
				1627006717343*	36	2555	26896077
	1317	57	49	1317	9	511	1
				13555371*	21		
				1004427273*	27		
	1063	61	39	13	3	7	1
				1063	9	511	1
				11643	12	4095	1
				2541445310153*	37		

r	COEFF. OF f(x) IN OCTAL	T(x) n	T(x) a	IRREDUCIBLE FACTORS OF T(x) IN OCTAL	DEGREE OF FACTOR	PERIOD	INDEX
10	2011	10	3	2011	10	1023	1
	2627	13	9	13	3	7	1
				2627	10	1023	1
	2327	14	3	23	4	15	1
				2327	10	1023	1
	2475	17	8	13	3	7	1
				23	4	15	1
				2475	10	1023	1
	2617	17	13	7	2	3	1
				75	5	31	1
				2617	10	1023	1
	2157	23	7	7	2	3	1
				2157	10	1023	1
				6435*	11	2047	1
	3133	23	8	141	6	63	1
				247	7	127	1
				3133	10	1023	1
	2767	24	11	2767	10	1023	1
				55753*	14	16683	1
	2773	26	3	75	5	31	1
				2773	10	1023	1
				7173*	11	2047	1
	2707	32	31	7	2	3	1
				2707	10	1023	1
				3067*	10	1023	1
				3607*	10	341	3
	3067	32	31	7	2	3	1
				2707*	10	1023	1
				3067	10	1023	1
				3607*	10	341	3

r	COEFF. OF f(x) IN OCTAL	T(x) n	T(x) a	IRREDUCIBLE FACTORS OF T(x) IN OCTAL	DEGREE OF FACTOR	PERIOD	INDEX
10	2347	35	22	7	2	3	1
				141	6	63	1
				2347	10	1023	1
				430005*	17	131071	1
	2443	37	18	2443	10	1023	1
				1272414137*	27		
	2033	39	37	23	4	15	1
				1321	9	511	1
				2033	10	1023	1
				210435*	16	65535	1
	2213	40	11	7	2	3	1
				13	3	7	1
				2213	10	1023	1
				347702607*	25	33544431	1
	2415	49	24	455	8	255	1
				2415	10	1023	1
				27371170361*	31	2147483647	1
	2047	49	36	211	7	127	1
				2047	10	1023	1
				43207520343*	32		
	2503	49	45	57	5	31	1
				1151	9	511	1
				2503	10	1023	1
				4445*	11	2047	1
				46215*	14	16383	1
	3177	51	41	13	3	7	1
				3177	10	1023	1
				317313	16	21845	3
				23644577	22		
	2305	53	28	7	2	3	1
				2305	10	1023	1
				73707*	14	16383	1
				1321420701*	27		

r	COEFF. OF f(x) IN OCTAL	T(x) n	T(x) a	IRREDUCIBLE FACTORS OF T(x) IN OCTAL	DEGREE OF FACTOR	PERIOD	INDEX
10	3427	55	14	7	2	3	1
				3427	10	1023	1
				241461026171065*	43		
	2055	55	28	2055	10	1023	1
				15317555*	21	2097152	1
				164050421*	24		
	2527	57	30	1033	9	511	1
				2527	10	1023	1
				3465*	10	341	3
				3507	10	1023	1
				1022707*	18	1533	171
	2553	57	51	111	6	9	7
				235	7	127	1
				2553	10	1023	1
				3301	10	1023	1
				3367	10	341	3
				43445*	14	381	43
	3023	60	41	15	3	7	1
				3023	10	1023	1
				5444507177561433*	47		
	2363	61	9	1207	9	511	1
				2623	10	1023	1
				53623*	14	16383	1
				2310747647*	28		
	2377	65	6	13	3	7	1
				2377	10	1023	1
				6227*	11	2047	1
				60575*	14	16383	1
				1062067767*	27		
	2145	65	34	7	2	3	1
				13	3	7	1
				2145	10	1023	1
				2605	10	1023	1
				3573	10	341	3
				111041*	15	1057	31
				135407*	15	1057	31

r	f(x) OF INDEX 1	T(x) n	T(x) a
10	3337	79	73
	3117	83	14

r	COEFF. OF f(x) IN OCTAL	T(x) n	T(x) a	IRREDUCIBLE FACTORS OF T(x) IN OCTAL	DEGREE OF FACTOR	PERIOD	INDEX
11	4005	11	2	4005	11	2047	1
	6673	13	5	7	2	3	1
				6673	11	2047	1
	4565	16	9	45	5	31	1
				4565	11	2047	1
	5235	20	7	7	2	7	1
				357	7	127	1
				5235	11	2047	1
	5675	22	13	31	4	15	1
				325	7	127	1
				5675	11	2047	1
	5613	23	16	7	2	3	1
				3661*	10	1023	1
				5613	11	2047	1
	5337	24	5	5337	11	2047	1
				24703*	13	8191	1
	4237	25	24	163	6	63	1
				561	8	255	1
				4237	11	2047	1
	4261	26	5	4261	11	2047	1
				105621*	15	32767	1
	6747	26	23	57	5	31	1
				3375*	10	1023	1
				6747	11	2047	1

r	COEFF. OF f(x) IN OCTAL	T(x) n	T(x) a	IRREDUCIBLE FACTORS OF T(x) IN OCTAL	DEGREE OF FACTOR	PERIOD	INDEX
11	6277	29	25	7	2	3	1
				323	7	127	1
				1713*	9	511	1
				6277	11	2047	1
	4671	30	7	4671	11	2047	1
				2313171*	19	524287	1
	6367	31	20	7	2	3	1
				6367	11	2047	1
				1147625*	18	262143	1
	5025	32	17	5025	11	2047	1
				12575505*	21	2097151	1
	5733	33	14	23	4	15	1
				5733	11	2047	1
				1255515*	18	37449	7
	5253	33	27	5253	11	2047	1
				24246667*	22	6141	683
	4653	37	12	4653	11	2047	1
				460401267*	26		
	5373	37	33	163	6	63	1
				217	7	127	1
				5373	11	2047	1
				35147*	13	8191	1
	5575	38	3	235	7	127	1
				455	8	255	1
				5575	11	2047	1
				13245*	12	4095	1
	7137	39	16	1225*	9	511	1
				7137	11	2047	1
				3411757*	19	524287	1

r	COEFF. OF f(x) IN OCTAL	T(x) n	T(x) s	IRREDUCIBLE FACTORS OF T(x) IN OCTAL	DEGREE OF FACTOR	PERIOD	INDEX
11	5477	39	19	13	3	7	1
				51	5	31	1
				247	7	127	1
				5477	11	2047	1
				20213*	13	8191	1
	5657	39	24	111	6	9	7
				5657	11	2047	1
				24546213*	22	6141	683
	5007	39	28	67	5	31	1
				5007	11	2047	1
				64425725*	23	8388607	1
	4767	41	5	551	8	255	1
				4767	11	2047	1
				24577263*	22	4194303	1
	6013	43	6	23	4	15	1
				155	6	63	1
				6013	11	2047	1
				24064321*	22	60787	69
	4225	43	11	7	2	7	1
				75	5	31	1
				4225	11	2047	1
				260330363*	25	33554431	1
	6447	43	15	1207	9	511	1
				3417	10	341	3
				6447	11	2047	1
				24637*	13	8191	1
	4423	47	11	13	3	7	1
				4423	11	2047	1
				126643071475*	33		
	5023	47	39	13	3	7	1
				31	4	15	1
				1725	9	511	1
				5023	11	2047	1
				4772721*	20	1048575	1

r	COEFF. OF f(x) IN OCTAL	T(x) n	T(x) a	IRREDUCIBLE FACTORS OF T(x) IN OCTAL	DEGREE OF FACTOR	PERIOD	INDEX
11	6727	48	21	67	5	31	1
				3453	10	93	11
				6727	11	2047	1
				34424513*	22	6141	683
	5357	48	29	23	4	15	1
				155	6	63	1
				5357	11	2047	1
				1456104075*	27		
	4365	49	17	1	2	3	1
				51	5	31	1
				4365	11	2047	1
				12165	12	4095	1
				3321023*	19	524287	1
	6307	4	30	67	5	31	1
				613	8	85	3
				765	8	255	1
				6307	11	2047	1
				542667*	17	131017	1
	4505	49	39	4505	11	2047	1
				117767*	15	4681	7
				42000367*	23	8338607	1
	4445	49	45	57	5	31	1
				1151	9	511	1
				2503*	10	1023	1
				4445	11	2047	1
				46215*	14	16383	1
	6557	53	17	23	4	15	1
				6557	11	2047	1
				12727*	12	4095	1
				615627213*	26		
	4107	54	25	13	3	7	1
				2047	10	1023	1
				4107	11	2047	1
				51303*	14	16383	1
				232031*	16	13107	5

r	COEFF. OF f(x) IN OCTAL	T(x) n	T(x) a	IRREDUCIBLE FACTORS OF T(x) IN OCTAL	DEGREE OF FACTOR	PERIOD	INDEX
11	5557	55	10	5557	11	2047	1
				577532413432723*	44		
	4475	56	41	57	5	31	1
				1725	9	511	1
				4475	11	2047	1
				37157355273*	31	2147483647	1
	4347	51	11	23	4	15	1
				4347	11	2047	1
				112443714550031*	42		
	7237	58	55	13	3	7	1
				7237	11	2047	1
				731154217564031*	44		
	4317	59	25	7	2	3	1
				4317	11	2047	1
				11103*	12	1365	3
				312004430753*	34		
	4353	59	29	13	3	7	1
				4353	11	2047	1
				26761*	13	8191	1
				40561341405*	32		
	4603	61	43	15	3	7	1
				73	5	31	1
				1563	9	511	1
				4603	11	2047	1
				75273*	14	16383	1
				2041035*	19	524287	1
	6127	64	47	7	2	3	1
				15	3	7	1
				6127	11	2047	1
				17141473700110531*	48		
	6227	65	6	13	3	7	1
				2377*	10	1023	1
				6227	11	2047	1
				60575*	14	16383	1
				1062067767*	27		

r	COEFF. OF f(x) IN OCTAL	T(x) n	T(x) a	IRREDUCIBLE FACTORS OF T(x) IN OCTAL	DEGREE OF FACTOR	PERIOD	INDEX
11	4161	65	7	7	2	3	1
				771	8	85	3
				4161	11	2047	1
				514561*	17	131071	1
				110[illegible]74323*	27		
	4563	65	28	7	2	3	1
				4563	11	2047	1
				307036250332170[illegible]31*	52		
	4145	65	40	7	2	3	1
				23	4	15	1
				31	4	15	1
				4145	11	2047	1
				404454203214625*	44		
	4053	68	3	4053	11	2047	1
				452075*	17	131071	1
				2254024010025 3*	40		
	5537	68	55	7	2	3	1
				5537	11	2047	1
				3751431316172617015*	55		
	4473	69	21	111	6	9	7
				4473	11	2047	1
				20342647*	22		
				10001101111*	30		
	4215	69	41	271	7	127	1
				4215	11	2047	1
				4361545*	20		1
				26622761641*	31	2147483647	

r	f(x) of INDEX 1	n	a	r	f(x) of INDEX 1	n	a
11	4055	71	14	11	5607	93	14
	4173	71	47		5177	93	61
	4415	71	56		6417	94	83
	7047	71	68		5263	96	61

r	f(x) of INDEX 1	n	a
11	4251	72	15
	6153	73	17
	4451	73	34
	6163	73	40
	5155	75	72
	4617	79	39
	6507	79	61
	5747	81	38
	7317	82	17
	5265	82	23
	4533	86	9
	5513	88	75
	4745	89	87

r	f(x) of INDEX 1	n	a
11	4655	97	90
	6037	99	62
	4027	100	35
	5403	101	79
	4577	101	82
	5247	103	18
	6637	107	85
	5623	109	1
	4143	109	27
	4707	111	106
	5463	117	25
	6263	133	39
	6233	142	99
	5667	143	12

r	COEFF. OF f(x) IN OCTAL	T(x) n	T(x) a	IRREDUCIBLE FACTORS OF T(x) IN OCTAL	DEGREE OF FACTOR	PERIOD	INDEX
12	12067	19	7	253*	7	127	1
				12067	12	4095	1
	10663	19	13	217*	7	127	1
				10663	12	4095	1
	12753	25	21	45	5	31	1
				573	8	85	3
				12753	12	4095	1
	12515	26	1	7	2	3	1
				15	3	7	1
				1275*	9	511	1
				12515	12	4095	1
	10353	31	29	7	2	3	1
				13	3	7	1
				10353	12	4095	1
				60147*	14	16383	1
	10175	34	5	7	2	3	1
				51	5	31	1
				10175	12	4095	1
				163767*	15	32767	1

r	COEFF. OF f(x) IN OCTAL	T(x) n	T(x) a	IRREDUCIBLE FACTORS OF T(x) IN OCTAL	DEGREE OF FACTOR	PERIOD	INDEX
12	12117	37	3	15	3	7	1
				345	7	127	1
				12117	12	4095	1
				120403*	15	32767	1
	12165	37	30	12165	12	4095	1
				250303445*	25	33554431	1
	12255	38	35	271	7	127	1
				551	8	255	1
				5755*	11	2047	1
				12255	12	4095	1
	11177	42	17	11177	12	4095	1
				11066515603*	30		
	10737	47	13	7	2	3	1
				10737	12	4095	1
				151421301615*	33		
	11643	49	18	31	4	15	1
				1713	9	511	1
				7113	11	2047	1
				11643	12	4095	1
				31273*	13	8191	1
	11313	50	9				
				11313	12	4095	1
				4502237720127*	38		
	11163	53	16	7	2	3	1
				73	5	31	1
				11163	12	4095	1
				2773571010 57*	34		
	12727	53	17	23	4	15	1
				6557*	11	2047	1
				12727	12	4095	1
				615627213*	26		
	16317	55	1	357	7	127	1
				16317	12	4095	1
				1264522723457*	36		

r	COEFF. OF f(x) IN OCTAL	T(x) n	T(x) a	IRREDUCIBLE FACTORS OF T(x) IN OCTAL	DEGREE OF FACTOR	PERIOD	INDEX
12	11015	55	8	7	2	3	1
				235	7	127	1
				11015	12	4095	1
				53043	14	5461	3
				7054651*	20	95325	11
	10731	58	49	10731	12	4095	1
				2161250565777231*	46		
	11147	60	25	11147	12	4095	1
				13223	12	819	5
				13611*	12	4095	1
				14227*	12	4095	1
				16273*	12	4095	1
	14227	60	25	11147*	12	4095	1
				13223	12	819	5
				13611*	12	4095	1
				14227	12	4095	1
				16273*	12	4095	1
	11075	60	35	11075	12	4095	1
				14455	12	819	5
				15467*	12	4095	1
				16311*	12	4095	1
				16443*	12	4095	1
	15467	60	35	11075*	12	4095	1
				14455	12	819	5
				15467	12	4095	1
				16311*	12	4095	1
				16443*	12	4095	1
	11067	64	1	23	4	15	1
				11045	12	1365	3
				11067	12	4095	1
				11441*	12	4095	1
				11463	12	819	5
				11515*	12	4095	1

r	COEFF. OF f(x) IN OCTAL	T(x) n	T(x) a	IRREDUCIBLE FACTORS OF T(x) IN OCTAL	DEGREE OF FACTOR	PERIOD	INDEX
12	11515	64	1	23	4	15	1
				11045	12	1365	3
				11067*	12	4095	1
				11441*	12	4095	1
				11463	12	819	5
				11515	12	4095	1
	12007	64	27	12007	12	4095	1
				252442144723171333*	52		
	10231	64	63	31	4	15	1
				10231	12	4095	1
				12211	12	1365	3
				13131*	12	4095	1
				14631	12	819	5
				16611*	12	4095	1
	10605	67	61	13	3	7	1
				10605	12	4095	1
				55317733*	23	8388608	1
				4017247741*	29		

r	f(x) of INDEX 1	T(x) n	T(x) a	r	f(x) of INDEX 1	T(x) n	T(x) a
12	16027	70	29	12	13275	103	56
	15437	71	26		14433	103	57
	13677	71	41		10527	104	43
	11435	71	52		10123	107	97
	17057	72	19		16047	109	76
	12247	73	38		11477	109	91
	12323	78	53		13503	115	2
	12435	79	40		15033	117	80
	10173	80	43		14357	119	44
	15677	83	19		10407	125	94
	14573	83	73		16237	129	48
	10443	85	9		10473	135	53
	10553	85	67		11271	136	1
	14613	86	7		12735	145	108
	13663	87	72		12135	152	37
	14717	87	72		15527	153	75

r	f(x) of INDEX 1	T(x) n	T(x) a	r	f(x) of INDEX 1	T(x) n	T(x) a
12	10517	91	19	12	13107	161	84
	10437	91	64		12147	161	107
	11471	93	34		10321	162	151
	10151	93	52		14127	163	143
	12417	99	93		14747	164	113
	15053	101	67		11417	171	42
	12623	102	13				

r	f(x) of INDEX 1	$x^r f(1/x)$	T(x) n	T(x) a	FACTOR OF T(x) LISTED ELSEWHERE r	COEFF. IN OCTAL	PERIOD	INDEX
13	25627	35165	16	3				
	22637	37151	18	1				
	21135	27221	20	1				
	21615	26161	21	10	8	435	255	1
	20547	34641	23	1	8	515	255	1
	23737	37371	23	4				
	24703	30345	24	5	11	5377	2047	1
	30057	36403	25	6	9	113	73	7
	23005	24031	25	9				
	24061	21405	27	11				
	25775	27765	29	6	16	266745	65535	1
	21453	32461	29	7	9	1437	511	1
	22075	27411	31	4	14	52547	5461	3
	20715	26341	31	5	16	337377	4369	15
	24513	32245	31	21	10	3277	341	3

r	f(x) of INDEX 1	$x^r f(1/x)$	T(x) n	T(x) a	FACTOR OF T(x) LISTED ELSEWHERE r	COEFF. IN OCTAL	PERIOD	INDEX
13	25333	33325	35	4	14	60367	16383	1
	34627	35147	37	33	11	5373	2047	1
	20213	32101	39	19	11	5477	2047	1
	24637	37145	43	15	11	6447	2047	1
	31273	33523	49	18	12	11643	4095	1
	21557	36661	50	31	12	16276	273	15
	21755	26761	59	29	11	4531	2047	1
	30357	36703	63	38	12	13377	819	5
14	66673	63777	16	5				
	45627	72351	17	2				
	55753	65755	24	11	10	2767	1023	1
	40275	57201	26	11	9	1027	511	1
	60147	71403	31	29	12	10353	4095	1
	42335	52621	32	11	18	1206221	262143	1
	60367	73603	35	4	13	25333	8191	1
	51145	51445	35	11	21	12624165	2097151	1
	42645	51321	38	11				
	46215	54231	49	45	10	2503	1023	1
	70767	73707	53	28	10	2305	1023	1
	51303	60645	54	25	11	4107	2047	1
	53623	62365	61	9	10	2363	1023	1
	67257	75273	61	43	11	4603	2047	1

r	f(x) of INDEX 1	$x^r f(1/x)$	T(x) n	T(x) a	FACTOR OF T(x) LISTED ELSEWHERE r	COEFF. IN OCTAL	PERIOD	INDEX
14	57503	60575	65	6	10	2377	1023	1
	40473	67101	66	37	12	12315	585	7
15	100003	140001	15	1				
	100021	100201	15	4				
	100201	100401	15	7				
	134567	167235	18	5				
	104657	172621	19	3				
	103653	134741	23	3				
	121563	147305	25	12				
	104721	105621	26	5	11	4261	2047	1
	163327	165547	31	14				
	117143	143171	33	8				
	153677	176753	33	8				
	163767	167747	34	5	12	11735	4095	1
	113625	124751	34	13	19	2257305	524287	1
	102643	142641	35	6	20	7664741	1048575	1
15	120403	140205	37	3	12	12117	4095	1
	145453	152323	45	3				
	123453	152345	45	12				
	123433	154435	45	21				
	113637	174751	47	41	12	11737	1365	1
16	263677	375715	27	2	8	717	255	1

r	f(x) of INDEX 1	$x^r f(1/x)$	T(x) n	T(x) a	FACTOR OF T(x) LISTED ELSEWHERE r	COEFF. IN OCTAL	PERIOD	INDEX
16	266745	247555	29	6	13	27765	8191	1
	306313	323143	36	13	16	372705	21845	3
	210435	270421	39	37	10	2033	1023	1
	274577	376475	40	13				
17	400011	440001	17	3				
	400041	410001	17	5				
	400101	404001	17	6				
	666673	673333	19	5				
	431277	772461	22	5				
	454765	537151	22	7				
	443573	675611	25	11				
	437265	532761	29	10				
	431455	551461	29	3				
	436407	701361	34		11			
	441715	547411	35	8	18	1352111	262143	1
	430005	500061	35	22	10	2033	1023	1
	540663	633015	36	1	10	2257	1023	1
	542667	733215	49	30	11	6307	2047	1
	437771	477761	50	17	12	13773	1365	3
	452075	570271	68	3	11	4053	2047	1
18	1000201	1004001	18	7				
	1147625	1247631	31	20	11	6367	2047	1

r	f(x) of INDEX 1	$x^r f(1/x)$	T(x) n	T(x) a	FACTOR OF T(x) LISTED ELSEWHERE r	COEFF. IN OCTAL	PERIOD	INDEX
18	1044604	1206221	32	11	14	52621	16383	1
	1110535	1352111	35	8	17	547411	131071	1
	1037433	1543741	37	1	19	342043	524287	1
	1443347	1635423	44	41	9	1423	511	1
19	2713457	3647235	22	3				
	2327423	3107531	23	2				
	2352103	3021271	27	7	8	477	85	3
	3322477	3745133	27	8	8	607	255	1
	2746113	3221475	28	11				
	2516543	3065625	29	21	10	2437	341	3
	2313171	2363231	30	7	11	4671	2047	1

APPENDIX C

TRINOMIAL OF LEAST DEGREE THAT CONTAINS A GIVEN IRREDUCIBLE NONPRIMITIVE POLYNOMIAL OF DEGREE r OVER GF(2) AS A FACTOR

APPENDIX C

TRINOMIAL OF LEAST DEGREE THAT CONTAINS A GIVEN IRREDUCIBLE NONPRIMITIVE POLYNOMIAL OF DEGREE r OVER GF(2) AS A FACTOR

r	COEFF. OF h(x) IN OCTAL	T(x) n	T(x) a	IRREDUCIBLE FACTORS OF T(x) IN OCTAL	DEGREE OF FACTOR	PERIOD	INDEX
6	111	6	3	111	6	9	7
	127	9	6	13	3	7	1
				127	6	21	3
8	567	11	5	13	3	7	1
				567	8	85	3
	573	16	1	551*	8	255	1
				573	8	85	3
	477	27	7	477	8	85	3
				2352103*	19	524287	1
	613	33	18	13	3	7	1
				127	6	21	3
				561	8	255	1
				607	8	255	1
				613	8	85	3
	433	34	17	7	2	3	1
				433*	8	51	5
				661*	8	51	5
				637	8	51	5
				763*	8	51	5
	637	34	17	7	2	3	1
				433*	8	51	5
				661*	8	51	5
				637	8	51	5
				763*	8	51	5
9	1003	9	1	1003	9	73	7
	1145	17	10	7	2	3	1
				147	6	63	1
				1145	9	73	7

r	COEFF. OF h(x) IN OCTAL	T(x) n	T(x) a	IRREDUCIBLE FACTORS OF T(x) IN OCTAL	DEGREE OF FACTOR	PERIOD	INDEX
9	1113	25	6	15	3	7	1
				1113	9	73	7
				36403*	13	8191	1
	1027	26	11	13	3	7	1
				1027	9	73	7
				57201*	14	16383	1
10	3247	15	6	73	5	31	1
				3247	10	93	11
	2355	19	9	1175*	9	511	1
				2355	10	341	3
	2035	19	17	7	2	3	1
				357*	7	127	1
				2035	10	341	3
	2413	21	15	57	5	31	1
				111	6	9	7
				2413	10	93	11
	2251	22	11	7	2	3	1
				2251	10	33	31
				3043*	10	33	31
	3043	22	11	7	2	3	1
				2251*	10	33	31
				3043	10	33	31
	2065	24	15	13	3	7	1
				45	5	31	1
				127	6	21	3
				2065	10	93	11
	2633	26	9	2633	10	341	3
				272107*	16	21845	3
	2437	29	21	2437	10	341	3
				2516543*	19	524287	1

r	COEFF. OF h(x) IN OCTAL	T(x) n	T(x) a	IRREDUCIBLE FACTORS OF T(x) IN OCTAL	DEGREE OF FACTOR	PERIOD	INDEX
10	3277	31	21	537	8	255	1
				3277	10	341	3
				32245*	13	8191	1
	3417	32	1	7	2	3	1
				3417	10	341	3
				3435*	10	1023	1
				3543*	10	1023	1
	2257	36	1	1243*	9	511	1
				2257	10	341	3
				540663*	17	131071	1
	2017	48	23	13	3	7	1
				217	7	127	1
				2017	10	341	3
				2654016113*	28		
	2107	55	22	75	5	31	1
				2107	10	341	3
				2671	10	341	3
				3255*	10	341	3
				3315	10	341	3
				3367*	10	341	3
	3367	55	22	75	5	31	1
				2107*	10	341	3
				2671	10	341	3
				3255*	10	341	3
				3315	10	341	3
				3367	10	341	3
	2653	55	33	57	5	31	1
				2355	10	341	3
				2633	10	341	3
				2653	10	341	3
				3421*	10	341	3
				3573*	10	341	3

r	COEFF. OF h(x) IN OCTAL	T(x) n	T(x) a	IRREDUCIBLE FACTORS OF T(x) IN OCTAL	DEGREE OF FACTOR	PERIOD	INDEX
10	2547	57	27	1541	9	511	1
				2547	10	341	3
				3427	10	1023	1
				3525*	10	1023	1
				1616441*	18	1533	171
	2143	68	61	7	2	3	1
				2143	10	341	3
				6421727313413061551*	56		

r	COEFF. OF h(x) IN OCTAL	PERIOD	INDEX	T(x) n	T(x) a
10	2123	341	3	75	62
	2231	341	3	78	19

r	COEFF. OF h(x) IN OCTAL	T(x) n	T(x) a	IRREDUCIBLE FACTORS OF T(x) IN OCTAL	DEGREE OF FACTOR	PERIOD	INDEX
12	10011	12	3	10011	12	45	91
	10041	12	5	10041	12	819	5
	13627	15	10	13	3	7	1
				13627	12	35	117
	14537	17	16	7	2	3	1
				15	3	7	1
				14537	12	273	15
	11637	23	11	51	5	31	1
				133	6	63	1
				11637	12	585	7
	13617	26	13	7	2	3	1
				13617	12	39	105
				17075*	12	39	105

r	COEFF. OF h(x) IN OCTAL	T(x) n	T(x) a	IRREDUCIBLE FACTORS OF T(x) IN OCTAL	DEGREE OF FACTOR	PERIOD	INDEX
12	10555	28	21	23	4	15	1
				10555	12	105	39
				11073*	12	105	39
	11073	28	21	23	4	15	1
				10555*	12	105	39
				11073	12	105	39
	15457	29	5	15	3	7	1
				67	5	31	1
				1541*	9	511	1
				15457	12	1365	3
	14373	30	5	133	6	63	1
				14373	12	315	13
				15125*	12	315	13
	12513	30	25	155	6	63	1
				12513	12	315	13
				15743*	12	315	13
	11727	33	31	11727	12	1365	3
				13554513*	21	2097151	1
	13003	39	13	15	3	7	1
				11721*	12	91	45
				13003	12	91	45
				15173*	12	91	45
	15173	39	13	15	3	7	1
				11721*	12	91	45
				13003*	12	91	45
				15173	12	91	45
	10571	39	26	13	3	7	7
				10571	12	91	45
				14015*	12	91	45
				15713*	12	91	45

C-3

r	COEFF. OF h(x) IN OCTAL	T(x) n	T(x) a	IRREDUCIBLE FACTORS OF T(x) IN OCTAL	DEGREE OF FACTOR	PERIOD	INDEX
12	11105	40	5	7	2	3	1
				23	4	15	1
				31	4	15	1
				147	6	63	1
				11105	12	315	13
				16547*	12	315	13
	16327	40	35	7	2	3	1
				23	4	15	1
				31	4	15	1
				163	6	63	1
				12111*	12	315	13
				16327	12	315	13
	12133	41	10	7	2	3	1
				12133	12	1365	3
				160162 4601*	27		
	11657	43	16	11657	12	1365	3
				23757171023*	31	2147483647	1
	11045	44	35	221	7	127	1
				11045	12	1365	3
				202314645*	25		
	13157	46	43	13157	12	585	7
				255372610323*	34		
	11735	47	41	75	5	31	1
				163	6	63	1
				1707	9	511	1
				11735	12	1365	3
				174751*	15	32767	1
	13773	50	17	13	3	7	1
				13773	12	1365	3
				477761*	17	131071	1
				1151665*	18	87381	3

r	COEFF. OF h(x) IN OCTAL	T(x) n	T(x) a	IRREDUCIBLE FACTORS OF T(x) IN OCTAL	DEGREE OF FACTOR	PERIOD	INDEX
12	16267	50	31	7	2	3	1
				13	3	7	1
				16267	12	273	15
				36661*	13	8191	1
				6435053*	20		
	11463	51	3	15	3	7	1
				11463	12	1365	3
				14455*	12	819	5
				17235	12	1365	3
				17403*	12	819	5
	13223	51	48	13	3	7	1
				111	6	9	7
				127	6	21	3
				13223	12	819	5
				14037*	12	819	5
				14631*	12	819	5
	14037	51	48	13	3	7	1
				111	6	9	7
				127	6	21	3
				13223*	12	819	5
				14037	12	819	5
				14631*	12	819	5
	13143	51	49	313	7	127	1
				13143	12	585	7
				73716032155*	32		
	10065	52	13	31	4	15	1
				10065	12	195	21
				15347*	12	195	21
				16701*	12	195	21
				17277*	12	195	21
	15347	52	13	31	4	15	1
				1065*	12	195	21
				15347	12	195	21
				16701*	12	195	21
				17277*	12	195	21

r	COEFF. OF h(x) IN OCTAL	T(x) n	T(x) a	IRREDUCIBLE FACTORS OF T(x) IN OCTAL	DEGREE OF FACTOR	PERIOD	INDEX
12	17277	52	13	31	4	15	1
				10065*	12	195	21
				15347*	12	195	21
				16701*	12	195	21
				17277	12	195	21
	10167	52	39	23	4	15	1
				10167	12	195	21
				12601*	12	195	21
				16353*	12	195	21
				17657*	12	195	21
	10027	55	15	45	5	31	1
				141	6	63	1
				10027	12	315	13
				17513*	12	315	13
				4454725	20	155	6765
	15137	55	40	51	5	31	1
				103	6	63	1
				15137	12	315	13
				16401*	12	315	13
				5271511	20	155	6765
	16457	56	33	357	7	127	1
				16457	12	1365	3
				254375*	16	4369	15
				10416231*	21		
	16017	57	14	16017	12	1365	3
				1212717*	18	87381	3
				1601251105*	27		
	12673	59	17	12673	12	585	7
				5162322607102347*	47		
	11103	59	25	7	2	3	1
				4317*	11	2047	1
				11103	12	1365	3
				312004430753*	34		

r	COEFF. OF h(x) IN OCTAL	T(x) n	T(x) a	IRREDUCIBLE FACTORS OF T(x) IN OCTAL	DEGREE OF FACTOR	PERIOD	INDEX
12	13377	63	38	13377	12	819	5
				36703*	13	8191	1
				7210220000101*	38		
	12315	66	37	15	3	7	1
				765	8	255	1
				1715	9	511	1
				12315	12	585	7
				67101*	14	16383	1
				5267531*	20		
	10317	67	20	7	2	3	1
				15	3	7	1
				10317	12	273	15
				42527114525216661*	50		

r	COEFF OF h(x) IN OCTAL	PERIOD	INDEX	T(x) n	T(x) a
12	10467	819	5	70	3
	13475	1365	3	76	69
	10377	117	35	78	39
	13413	117	35	78	39
	16757	117	35	78	39
	10063	819	5	78	65
	10115	819	5	78	65
	10243	819	5	78	65
	11031	819	5	78	65
	11673	819	5	82	33
	10461	273	15	82	53
	13077	273	15	83	46
	13113	585	7	83	69
	12265	1365	3	85	5
	13033	1365	3	85	5
	14667	1365	3	85	35
	12153	585	7	89	21
	12177	819	5	92	57
	13563	585	7	93	61
	10743	273	15	97	11
	13303	819	5	97	69
	11763	1365	3	99	29

r	COEFF OF h(x) IN OCTAL	PERIOD	INDEX	T(x) n	a
12	11545	1365	3	102	53
	13347	819	5	104	13
	14513	819	5	104	13
	11265	819	5	107	14
	14177	585	7	107	96
	13363	1365	3	109	81
	11433	585	7	116	83
	10245	585	7	118	87
	14007	1365	3	122	35
	13737	1365	3	125	103
	13527	1365	3	126	115
	10653	819	5	139	133
	10077	1365	3	145	123
	10355	1365	3	146	61
	14043	585	7	156	39
	10757	1365	3	160	109
	10603	455	9	195	65
	11703	455	9	195	65
	11765	455	9	195	65
	12023	455	9	195	65
	15617	455	9	195	65
	10213	455	9	195	130
	11023	455	9	195	130
	12337	455	9	195	130
	13517	455	9	195	130
	14313	455	9	195	130
	14557	455	9	195	130
	16137	455	9	195	130
	14067	1365	3	217	201