1079

LMSC-HEC TR D065122

(NASA-CR-178828) FEASIBILITY STUDY AND VERIFIED DESIGN CONCEPT FOR NEW IMPROVED HOT GAS FACILITY Final Report (Lockheed Missiles and Space Co.) 111 p HC A06/MF A01 CSCL 14B G3/14

N86-24719

Unclas 42930

FEASIBILITY STUDY AND VERIFIED DESIGN CONCEPT FOR NEW IMPROVED HOT GAS FACILITY - FINAL REPORT

7 February 1986

Contract NAS8-36304

MAY 1986
RECEIVED
NASA STI FACILITY
ACCESS DEPT.

Prepared for

NATIONAL AERONAUTICS AND SPACE ADMINISTRATION
MARSHALL SPACE FLIGHT CENTER, AL 35812

by

Lockheed
Missiles & Space Company, Inc
Huntsville Engineering Center
4800 Bradford Drive, Huntsville, AL 35807

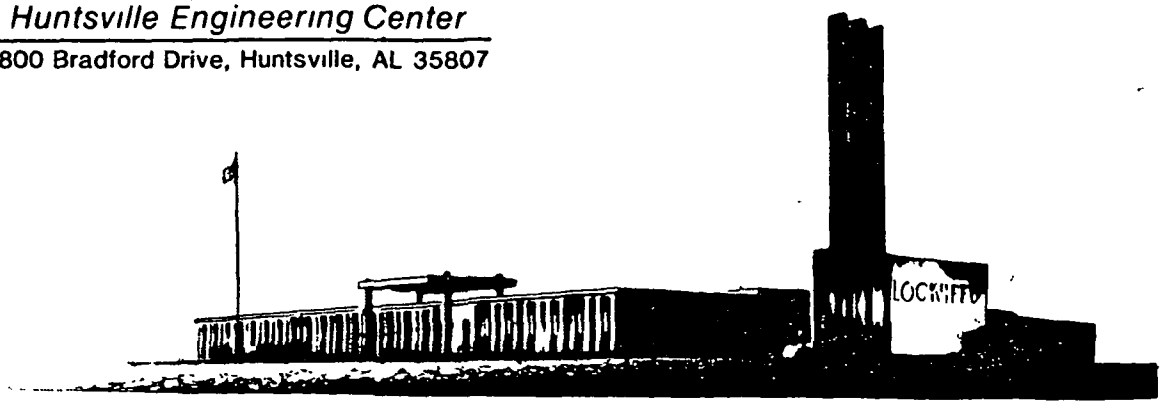

FOREWORD

This document was prepared by personnel of the Systems Analysis Section of Lockheed's Huntsville Engineering Center for NASA-Marshall Space Flight Center under Contract NAS8-36304. The NASA-MSFC Contracting Officer's Representative for this study was Mr. R.E. Tepool, ET62.

CONTENTS

Section		Page
	FOREWORD	ii
1	BACKGROUND AND INTRODUCTION	1
2	TECHNICAL DISCUSSION	3
	2.1 Hardware Design Fabrication, Delivery	3
	2.2 Test Plan	3
	2.3 On-Site Monitoring	3
	2.4 Data Analysis	6
	2.5 Interface Drawings and Detailed Sketches	7
3	CONCLUSION	8
	REFERENCE	9

Appendix

A DD-250 Form Showing Delivery of all Hardware

B Dimensioned Sketches of Redesigned HGF Diffuser

C Rough Stress Notes for Beef-Up of Structure to Increase Chamber Pressure from 150 to 300 psia (by Mike Tilley, LMSC-Huntsville)

D Typical Set of Calibration Run Data (for Run Number 38)

E Listing of Computer Program to Determine HGF Set Pressures, Chamber Pressures and Temperatures

F Listing of NASA-MSFC Static Measuring Program for HGF CAL Runs

G Calibration Panel Instrumentation Locations

H HGF GH_2 and Air Venturi Calibration Data

I HGF Interface Drawing and Detailed Sketches of HGF Hardware/Components

1. BACKGROUND AND INTRODUCTION

@ ABS

The MSFC Hot Gas Facility (HGF) was fabricated in 1975 as a temporary facility to provide immediate turnaround testing to support the SRB and ET TPS development. This facility proved to be very useful and was used to make more than 1300 runs, far more than ever intended in the original design. Therefore, it was in need of constant repair and needed to be replaced with a new improved design to support the continuing SRB/ET TPS product improvement and/or removal efforts. MSFC contracted with Lockheed-Huntsville to work on this improved design through Contract NAS8-36304 "Feasibility Study and Verified Design Concept for the New Improved Hot Gas Facility." ~~Figure 1 shows a photograph of this new facility. This final report summarizes~~ The results of Lockheed-Huntsville's efforts under this contract ~~which were to:~~ are summarized.

- Design and fabricate three Cal panels (10 thermocouple locations, one calorimeter location (GFE), four static pressures, one total pressure).
- Design and fabricate four dummy panels.
- Design and fabricate one ramped panel fixture.
- Design and fabricate 18 panel spacers (three each @ 1/16, 1/8, 3/16, 1/4, 3/8, and 1/2 in. thickness).
- Make facility drawings (see list below).
- Write, present, and revise a Test Plan.
- Monitor Cal runs on-site.
- Reduce and analyze data.
- Write final report.
- Fabricate 60 aluminum, TPS substrate panels.

List of Drawings To Be Furnished

I. Interface Drawings

- Nozzle
- Test Section
- Diffuser

II. Detailed Shop Drawings

- Flat Cal Panel
- Ramped Cal Panel
- Dummy Panel
- Ramped Panel Fixture
- Window Frame
- Panel Support Frame
- New TPS Ramped Panel Substrate.

2. TECHNICAL DISCUSSION

2.1 HARDWARE DESIGN FABRICATION, DELIVERY

The design and fabrication of all deliverable hardware was completed and delivered to NASA on schedule. Copies of the signed DD-250 forms are attached as Appendix A.

2.2 TEST PLAN

A test plan (Ref. 1) was prepared and delivered to MSFC.

2.3 ON-SITE MONITORING

Calibration runs were monitored on-site and the data were analyzed. Table 1 presents a run log from these runs.

When the calibration runs were first begun, the diffuser did not pump. Various combustor chamber conditions were tried to get the diffuser to "start" such as higher chamber pressure, different oxidizer-to-fuel (O/F) ratios, etc. However we were never able to get the diffuser to pump. Therefore, the diffuser design was changed to provide a larger second throat area. Sketches of this redesigned diffuser are shown in Appendix B. This redesigned configuration was rectangular rather than round. It was made from mild steel and was cooled by "spray bars" rather than by a double-walled cooling jacket as on the original. It was designed by Lockheed and built by MSFC in-house and was a "stop gap" measure to see if pumping could be attained. The second throat area was increased from approximately 298 in^2 to approximately 414 in^2. The second throat section length was also increased and an exit cone was added.

In connection with this diffuser redesign it was decided to increase the combustion chamber pressure from the original design allowable value of 150 psia to 300 psia to assist in starting the diffuser. In order to do this, additional structural strength was required. Lockheed designed the required "beefed-up" members and these were fabricated and installed by MSFC. Appendix C presents the detailed stress analysis/design of these structural changes.

After installing this new rectangular diffuser and raising the chamber pressure limit to 300 psia, additional calibration runs were made. It was found that the diffuser would now pump. It required a "start" pressure of approximately 280 psia and a "run" pressure of approximately 220 psia. Test section pressures showed the facility to be operating at a Mach number of approximately 4.7 as compared to the Mach 5 value originally planned. This was attributed to the slightly oversized throat. Heating rates in the test section varied from approximately 1 to 6 Btu/ft^2 sec.

After installing the new diffuser, another problem was encountered. Due to delayed ignition on run No. 16 the test section and diffuser were apparently filled with a combustable GH_2/air mixture and when ignition occurred, a simultaneous explosion ruptured the diffuser and knocked out all windows and calibration panels from the test section (see Figs. 2, 3, 4, and 5). This ignition delay was apparently due to the increased propellant mass flow rates at the higher chamber pressures. In order to alleviate these ignition problems, Lockheed made the following recommendations:

- Increase all igniter chamber pressures to 375 psia.
- Add water cooling to igniter bodies.
- Add a GH_2 detector to sample air from top of test section during countdown.
- Refurbish GH_2 main valve to prevent leakage.
- Add high response dynamic pressure measurement to main chamber to watch for detonation during start transients.
- Add two igniters to top of combustion chamber.
- Increase voltage to igniter spark plugs from 10,000 to 50,000 volts.
- "Soften" the attachment of the four test panels to the test section walls so they can serve as "blow out" ports.
- Bleed the igniter GH_2 feed lines through the vent stacks rather than through the main chamber.
- Put redline on P_c to shutdown if not up to 150 psia at 400 milliseconds after start of opening of oxidizer valve.

Several of these "fixes" were added, and a series of runs was made, without the diffuser attached to the test section to check out the new ignition sequence/procedure. In the meantime a replacement diffuser was fabricated to the same dimensions as the one which ruptured.

After the new ignition sequence was developed and checked out, then the replacement diffuser was attached to the test section. Additional runs were made and it was found that the diffuser would "start" and pump at a combustion chamber pressure of approximately 280 psia, and would continue to "run" down to a chamber pressure to approximately 220 psia. A "two-stage" start sequence procedure was developed to start the diffuser at 280 psia and then immediately ramp down to 220 psia for the duration of the run. This was necessary in order to reduce mass flow rates and, hence, increase the total run time.

After working out these procedures, additional calibration runs were conducted until a water leak occurred in the throat area (see Figs. 6, 7, and 8). The leak was caused by additional thermal stress in the rectangular tubing joints adjacent to the welds. This was a result of running the facility at the chamber pressure of up to 300 psia whereas the throat section was orginally designed to operate at conditions produced by a chamber pressure of 150 psia. This caused the throat heating rates to increase by a factor of approximately 1.75 times the original values. Also, because of this increase in gas-side pressures, the internal cooling water pressure had to be increased accordingly to prevent inward "dimpling" of the tube walls. The result was an over stressing of the tube walls, their fatigue life was drastically reduced and hence they failed after approximately 60 cycles as opposed to 1000 cycles which was the original design requirement.

Lockheed has offered to repair the welds and find a subcontractor who would be able to apply a thermal coating to the inside of the throat such as "Rock-Hide," MgO, or Al_2O_3. However, at the time of this writing, MSFC is considering replacing this throat section with a water-cooled copper section which would be designed to the higher pressure and heating rates.

2.4 DATA ANALYSIS

Table 1 shows the run log of the calibration runs made to date. A typical set of calibration run data is shown in Appendix D. The ramped, two-stage "start" procedure is seen in the first plot (page D-1), showing the chamber pressure versus time, measurements P0713 and P0714.

Analyses of the calibration runs showed that after the diffuser started pumping that the test section Mach number was approximately 4.7 as compared to the design Mach number of 5.0. This was attributed to the slightly oversized throat and to a thicker than anticpated boundary layer in the test section. The actual throat height was approximately 0.045 in. oversized in the center on both top and bottom halves of the nozzle as compared to a design value of 1.0 in. This difference was due to manufacturing tolerances which is not bad for a welded, unmachined structure. The throat height at the sides (i.e., next to the flanges) was right on 1.0 in.

The heating rates in the test section varied from approximately 1 to 6 Bt/ft^2-sec depending of the chamber conditions and on the location in the test section. The test section static pressures varied from 0.5 to 2.0 psia, depending on chamber conditions and position in the test section.

During the process of these calibration runs, chamber conditions were selected to yield three distinct enthalpy levels as shown in Table 2.

Table 2 HYDROGEN AND AIR SET PRESSURES REQUIRED FOR THREE ENTHALPY LEVELS

Enthalpy Level	Set Pressure (psia)	
	GH_2	Air
Low	900	1020
Medium	945	945
High	1010	880

One "endurance" run was made (Run No. 53) to see how long the propellant feed supply would hold the required chamber pressure. This resulted in a run time of 71.14 sec. The original run time requirement of 180 sec was not met because of the increased chamber pressure psia required to keep the larger diffuser running (220 versus 150 psia).

Appendix E presents a listing of a computer program for the IBM PC which was used to choose set pressures for the GH_2 and air regulators to yield a required combustion chamber pressure. This program is written in BASIC language.

Appendix F presents the Static Measurements Program Listing which was used during our data analysis efforts.

The calibration panel instrumentation locations are shown in Appendix G. A complete set of all calibration data plots is available from Dick Baker ET62, NASA-MSFC.

Appendix H presents the HGF air and GH_2 Venturi Calibration Data.

2.5 INTERFACE DRAWINGS AND DETAILED SKETCHES

Appendix I contains interface details and sketches of the hardware discussed in the Background and Introduction section. These are presented in lieu of the "detailed shop drawings" as originally planned. This substitution was agreed upon by the NASA Technical Contracting Officer's Representative.

Also shown are additional sketches of instrumentation locations, nozzle dimensions, etc., which may be useful in the future, although not originally required by the contract.

3. CONCLUSION

In conclusion, all requirements of the subject contract have now been completed.

REFERENCE

1. Karu, Z.S., "Test Plan for Initial Check Out/Troubleshooting and Calibration of the New NASA Hot Gas Facility," LMSC-HREC TN D951600, Lockheed Missiles & Space Company, Huntsville, Ala., 14 January 1985.

Table 1 MSFC HOT GAS FACILITY RUN LOG
(Obtained from Dick Baker, NASA Test Engineer)

Test	Model/ Notes	Set Time (sec)	(1985) Date	Action Run Time (sec)	Oxidizer Set Pressure (psig)	GH_2 Set Pressure (psig)	Remarks
0002	Cal	10	4/1	10.09	700	940	
0003	Cal	15		15.06	650	1000	
0004	Cal	15		15.04	625	1040	
0005	Cal	15		15.06	650	1040	
0006	Cal	15		13.61	585	940	
0007	Cal	10		10.06	765	1030	
0008	Cal	10		3.36	765	1300	
0009	Cal	10		2.39	765	1300	
0010	Cal	15	3/26	15.08	732	1300	
0011	Cal	15	3/26	4.46	732	1550	
0012	Cal	15	3/26	3.90	732	1790	
0013	Cal	15	3/26	2.20	732	1790	
0014	Cal	15	3/26	4.06	732	1790	
0015	Hot Firing	5	3/28	2.06	640	1440	Hard Start - broke two windows.
0016	Hot Firing	5	6/12	No Run	1150	1275	Hard Start - Damage to test section, diffuser top and bottom.
0017	Hot Firing	5	8/1	5.07	609	535	(Runs 17 through 22
0018	Hot Firing	5	8/1	5.05	630	725	were run without
0019	Hot Firing	5	8/1	5.04	630	735	diffuser)
0020	Hot Firing	5	8/2	5.06	1160	1120	
0021	Hot Firing	5	8/2	13.02	1145	1160 1260	Manual cut due to clock problem.
0022	Hot Firing	5	8/2	5.06	1155		
0023	Hot Firing	5	8/15	5.06	1134	1323	With the diffuser. West rear window fell out. Cut due combustor coolant
0024	Hot Firing	10	8/16	1.67	*	*	

Test	Model/ Notes	Set Time (sec)	(1985) Date	Action Run Time (sec)	Oxidizer Set Pressure (psig)	GH_2 Set Pressure (psig)	Remarks
0025	Hot Firing	10	8/16	10.04	1200	1180	
0026	Hot Firing	10	8/16	10.07	1165	1120	
0027	Hot Firing	10	8/23	10.07	1120	1005	
0028	Hot Firing	10	8/27	9.72	650	745	
0029	Hot Firing	12	8/28	12.06	660	630	
0030	Hot Firing	10	8/29	10.05	875	960	
0031	Cal Panel	7	9/5	7.06	940	940	
0032	Cal Panel	7	9/5	7.07	990	860	
0033	Cal Panel	14.5	9/6	14.57	965	Ramped	
0034	Cal Panel	14.5	9/6	13.43	880	Ramped	
0035	Cal Panel	7	9/10	7.04	870	970	
0036	Cal Panel	7	9/10	7.06	*	*	
0037	-- --	10.5	9/24	6.69	795	915	Cut due to low nozzle water pressure.
0038	HGF Cal	12	9/26	7.78	785	810	
0039	HGF Cal	6	9/27	6.04	870	970	
0040	HGF Cal	6	9/27	6.10	860	975	
0041	HGF Cal	6	9/27	6.06	920	935	
0042	HGF Cal	6	9/27	6.02	925	950	
0043	HGF Cal	6	10/3	2.74	*	*	
0044	HGF Cal	10	10/4	10.04	990	900	
0045	HGF Cal	10	10/4	10.08	995	900	
0046	HGF Cal	10	10/4	10.05	1010	860	
0047	HGF Cal	10	10/4	10.05	1010	855	
0048	HGF Cal	10	10/10	4.47	*	*	
0049	HGF Cal	10	10/10	4.22	*	*	
0050	HGF Cal	10	10/11	10.05	885	1005	
0051	HGF Cal	10	10/11	10.04	940	915	
0052	HGF Cal	10	10/11	10.03	1040	900	
0053	HGF-Endurance	90	10/16	71.14	920	940	
0054	HGF-Endurance	90	10/18	22.39	*	*	O_2 controller problem.
0055	Blind Panels	10	11/21	10.09	880	1040	Controller checked OK.
0056	Ramped Panel						Nozzle water leak.

* Data not available.

ORIGINAL PAGE IS
OF POOR QUALITY

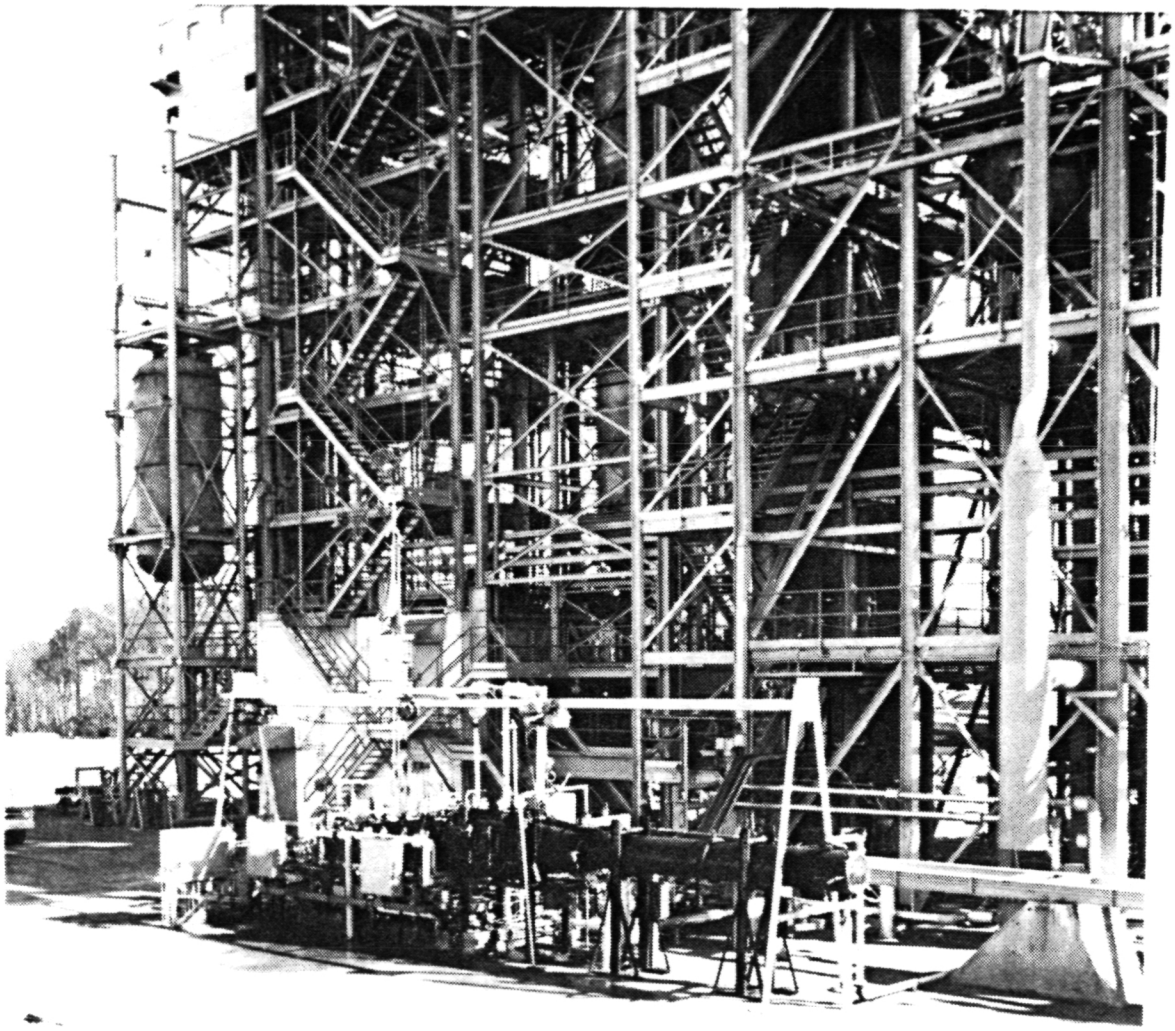

Fig. 1 Overall View of Assembled MSFC Hot Gas Facility (Lower Foreground)

ORIGINAL PAGE IS
OF POOR QUALITY

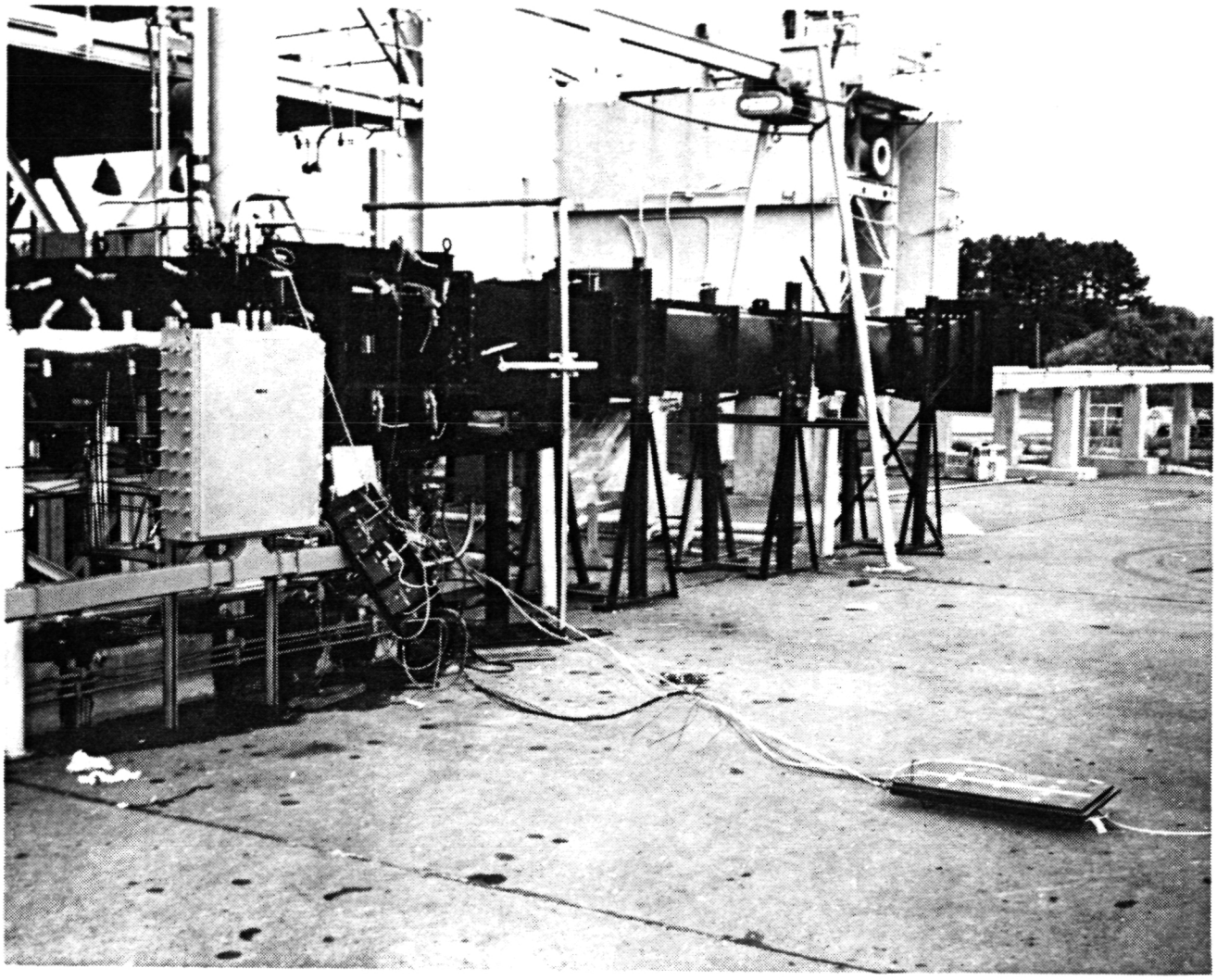

Fig. 2 MSFC Hot Gas Facility Showing Damage Caused by Overpressure Due to Delayed Ignition

Fig. 3 MSFC Hot Gas Facility Rectangular Diffuser Top Showing Damage Caused by Operpressure Due to Delayed Ignition

ORIGINAL PAGE IS
OF POOR QUALITY

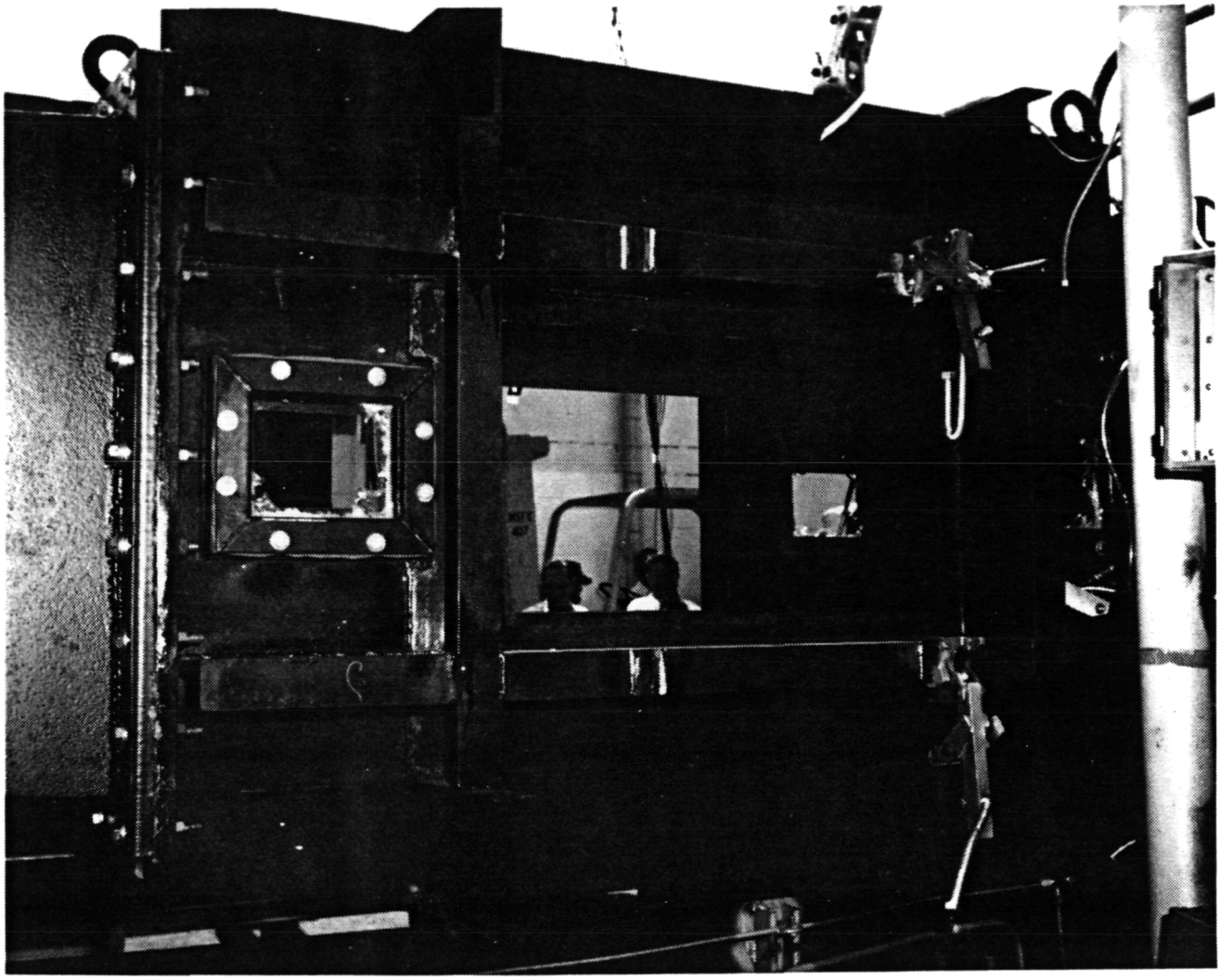

Fig. 4 MSFC Hot Gas Facility Test Section Showing Damage Caused by Overpressure Due to Delayed Ignition

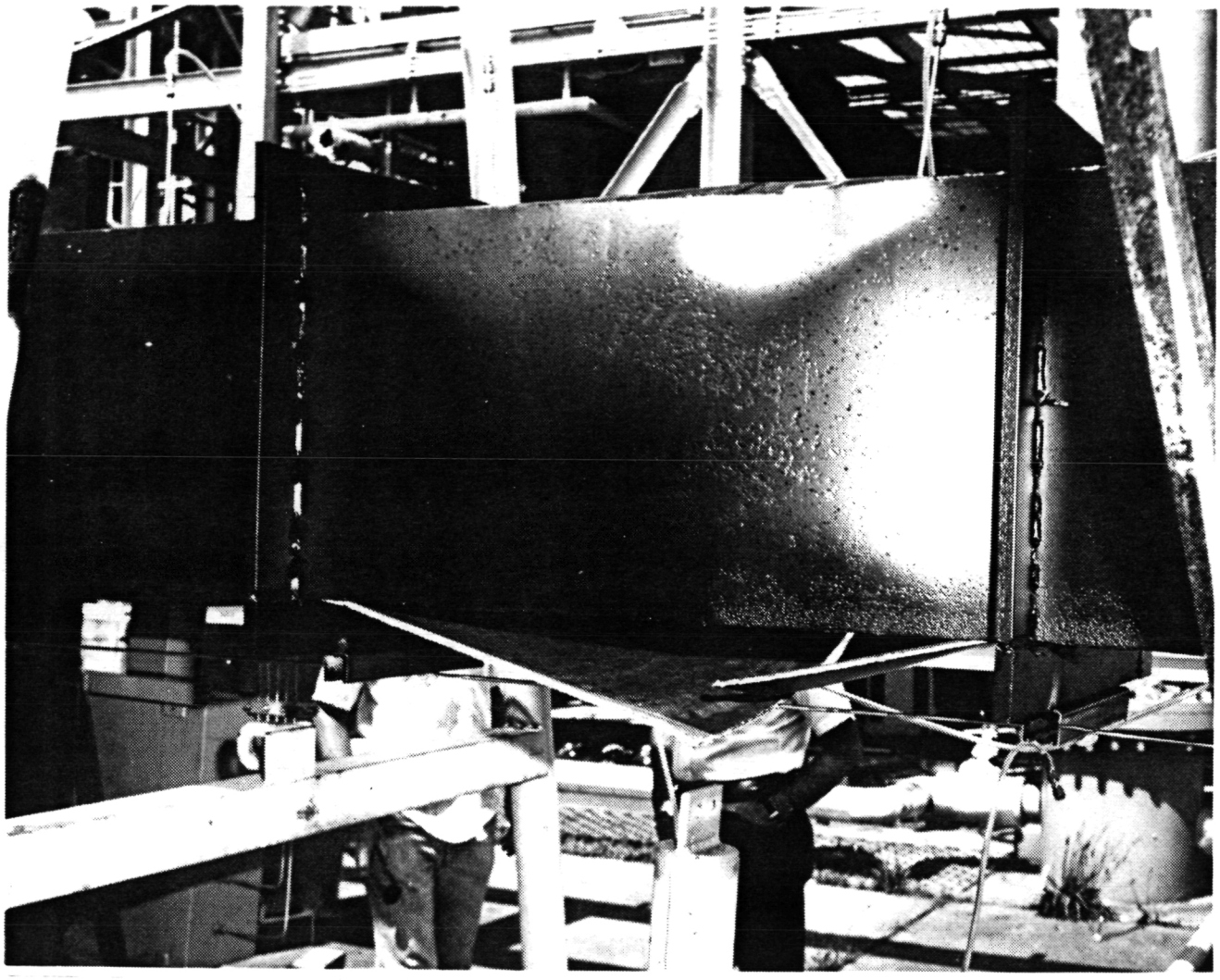

Fig. 5 MSFC Hot Gas Facility Rectangular Diffuser Bottom Showing Rupture Due to Overpressure Caused by Delayed Ignition

ORIGINAL PAGE IS
OF POOR QUALITY

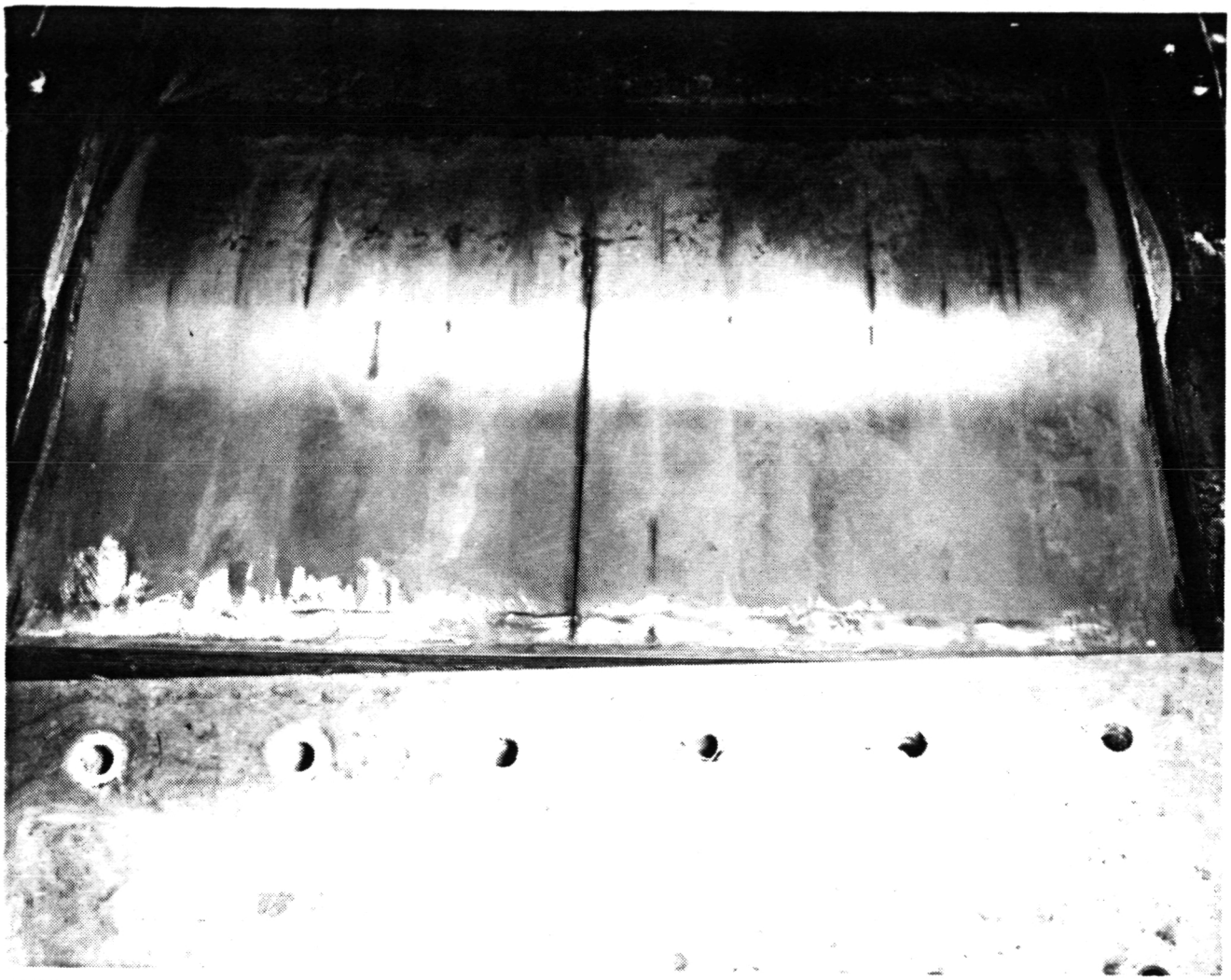

Fig. 6 Thermal Stress Cracks in Upper Half of MSFC Hot Gas Facility Nozzle/Combustor

Fig. 7 Thermal Stress Cracks in Lower Half of MSFC Hot Gas Facility Nozzle/Combustor

ORIGINAL PAGE IS
OF POOR QUALITY

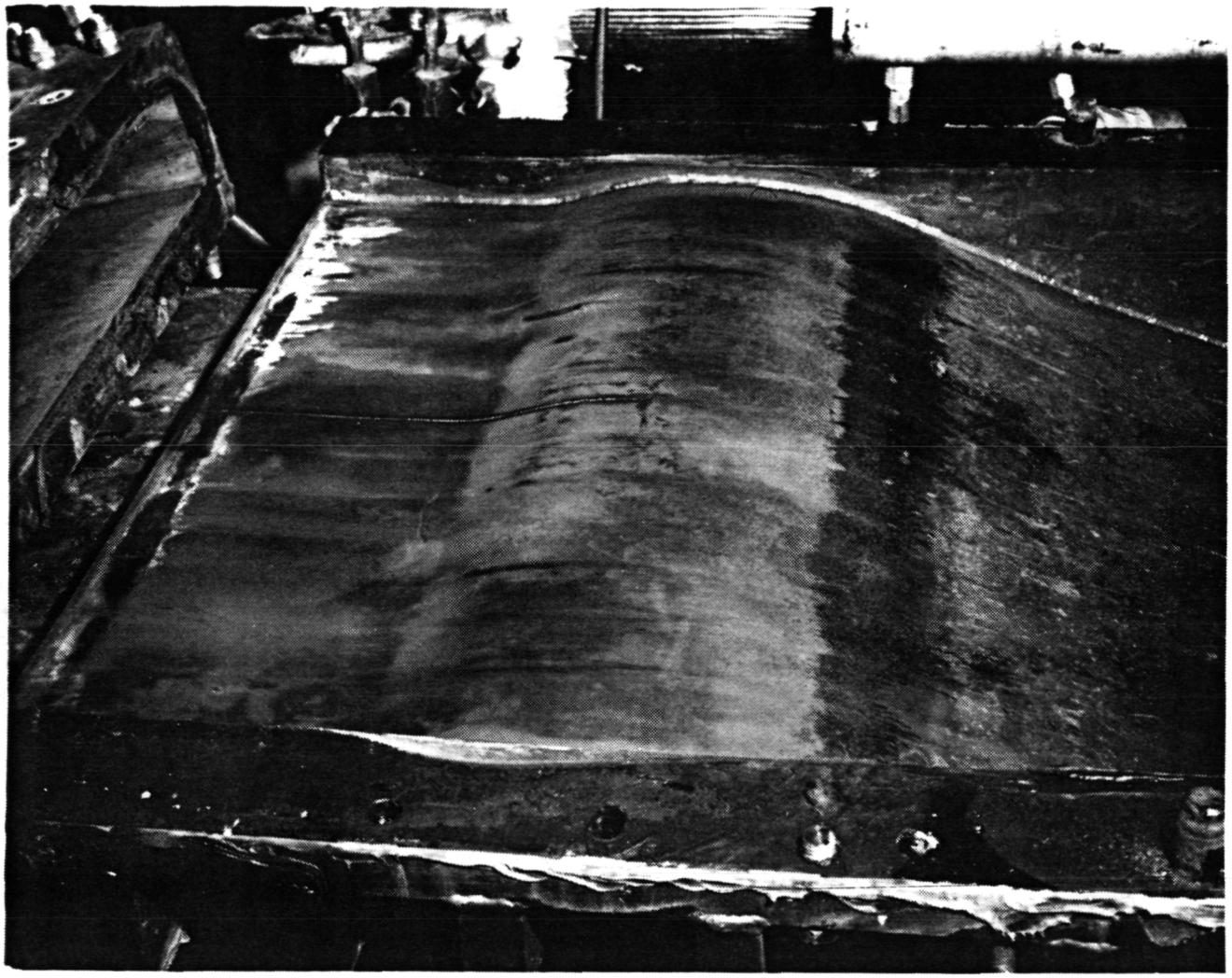

Fig. 8 Thermal Stress Cracks in Upper Half of MSFC Hot Gas Facility Nozzle/Combustor

Appendix A

DD-250 FORMS SHOWING DELIVERY OF ALL HARDWARE

MATERIAL INSPECTION AND RECEIVING REPORT

1 PROC INSTRUMENT IDENT (CONTRACT) NAS8-36304

(ORDER) NO

6 INVOICE NO

DATE 1/21/85

7 PAGE 1 OF 1

8 ACCEPTANCE POINT D

2 SHIPMENT NO RC00002

3 DATE SHIPPED 1/21/85

4 B/L TCN HREC/2875

5 DISCOUNT TERMS Net 30

9 PRIME CONTRACTOR CODE

Lockheed Missiles & Space Co., Inc.
P. O. Box 1103
Huntsville, AL 35807

10 ADMINISTERED BY CODE

DCASMA-Birmingham
2121 8th Avenue, N.
Room 104
Birmingham, AL 35203-2376

11 SHIPPED FROM (if other than 9) CODE FOB

Same as Block 9

12 PAYMENT WILL BE MADE BY CODE

Financial Management Office
George C. Marshall Space Flight Center
Marshall Space Flight Center, AL 35812

13 SHIPPED TO CODE

Transportation Officer, Bldg. 4471
National Aeronautics & Space Administration
Geroge C. Marshall Space Flight Center
Marshall Space Flight Center, AL 35812

14 MARKED FOR CODE

Richard Baker
ET65

15 ITEM NO	16 STOCK/PART NO DESCRIPTION (Indicate number of shipping containers type of container container number)	17 QUANTITY SHIP/REC'D *	18 UNIT	19 UNIT PRICE	20 AMOUNT
001	Hot Gas Test Section Calibration Panel	3	Ea	NA	NA

ORIGINAL PAGE IS OF POOR QUALITY

21 PROCUREMENT QUALITY ASSURANCE

A ORIGIN

☐ PQA ☐ ACCEPTANCE of listed items has been made by me or under my supervision and they conform to contract except as noted herein or on supporting documents

DATE SIGNATURE OF AUTH GOVT REP

TYPED NAME AND OFFICE

B DESTINATION

☐ PQA ☐ ACCEPTANCE of listed items has been made by me or under my supervision and they conform to contract except as noted herein or on supporting documents

DATE SIGNATURE OF AUTH GOVT REP

TYPED NAME AND TITLE

22 RECEIVER'S USE

Quantities shown in column 17 were received in apparent good condition except as noted

1-21-85 R. Baker ET-65

DATE RECEIVED SIGNATURE OF AUTH GOVT REP

TYPED NAME AND OFFICE

* If quantity received by the Government is the same as quantity shipped indicate by ✓ mark if different enter actual quantity received below quantity shipped and encircle

23 CONTRACTOR USE ONLY

To be picked up by NASA from Lockheed's Bldg. 401

DD FORM 250 1 NOV 68 REPLACES EDITION OF 1 AUG 67 WHICH MAY BE USED

MATERIAL INSPECTION AND RECEIVING REPORT	1 PROC INSTRUMENT IDEN(CONTRACT) NAS8-36304	(ORDER) NO	6 INVOICE NO / DATE 1/30/85	7 PAGE 1 OF 1 / 8 ACCEPTANCE POINT D

2 SHIPMENT NO	3 DATE SHIPPED	4 B/L TCN	5 DISCOUNT TERMS
HRC00003	1/30/85	HREC/2884	Net 30

9 PRIME CONTRACTOR CODE	10. ADMINISTERED BY CODE
Lockheed Missiles & Space Co., Inc. P.O. Box 1103 Huntsville, AL 35807	DCASMA-Birmingham 2121 8th Avenue, N. Room 104 Birmingham, AL 35203-2376
11 SHIPPED FROM (If other than 9) CODE FOB	12 PAYMENT WILL BE MADE BY CODE
Same as Block 9	Financial Management Office George C. Marshall Space Flight Center Marshall Space Flight Center, AL 35812
13 SHIPPED TO CODE	14 MARKED FOR CODE
Transportation Officer, Bldg. 4471 National Aeronautics & Space Administration George C. Marshall Space Flight Center Marshall Space Flight Center, AL 35812	Richard Baker ET65

15 ITEM NO	16 STOCK/PART NO DESCRIPTION (Indicate number of shipping containers type of container container number)	17 QUANTITY SHIP/REC'D *	18 UNIT	19 UNIT PRICE	20 AMOUNT
001	Hot Gas Test Section Panel Spacers	18	Ea	NA	NA

ORIGINAL PAGE IS OF POOR QUALITY

21 PROCUREMENT QUALITY ASSURANCE

A ORIGIN

☐ PQA ☐ ACCEPTANCE of listed items has been made by me or under my supervision and they conform to contract except as noted herein or on supporting documents

DATE SIGNATURE OF AUTH GOVT REP

TYPED NAME AND OFFICE

B DESTINATION

☐ PQA ☐ ACCEPTANCE of listed items has been made by me or under my supervision and they conform to contract except as noted herein or on supporting documents

DATE SIGNATURE OF AUTH GOVT REP

TYPED NAME AND TITLE

22. RECEIVER'S USE

Quantities shown in column 17 were received in apparent good condition except as noted

1-30-85 R Baker ET-65

DATE RECEIVED SIGNATURE OF AUTH GOVT REP

TYPED NAME AND OFFICE

* If quantity received by the Government is the same as quantity shipped, indicate by ✓ mark, if different enter actual quantity received below quantity shipped and encircle

23 CONTRACTOR USE ONLY

To be picked up by NASA from Lockheed's Bldg. 401.

DD FORM 250 1 NOV 68 REPLACES EDITION OF 1 AUG 67 WHICH MAY BE USED

MATERIAL INSPECTION AND RECEIVING REPORT	1 PROC INSTRUMENT IDENT (CONTRACT) NAS8-36304	(ORDER) NO	6 INVOICE NO DATE 3/7/85	7 PAGE 1 OF 1 / 8 ACCEPTANCE POINT D

2 SHIPMENT NO	3 DATE SHIPPED	4 B/L TCN HREC/2930	5 DISCOUNT TERMS
HRC00004	3/8/85		Net 30

9 PRIME CONTRACTOR CODE	10 ADMINISTERED BY CODE
Lockheed Missiles & Space Co., Inc. P.O. Box 1103 Huntsville, AL 35807	DCASMA-Birmingham 2121 8th Avenue, N. Room 104 Birmingham, AL 35203-2376
11 SHIPPED FROM (if other than 9) CODE FOB Same as Block 9	12 PAYMENT WILL BE MADE BY CODE Financial Management Office George C. Marshall Space Flight Center Marshall Space Flight Center, AL 35812
13 SHIPPED TO CODE Transportation Officer, Bldg. 4471 National Aeronautics & Space Administration George C. Marshall Space Flight Center Marshall Space Flight Center, AL 35812	14 MARKED FOR CODE Richard Baker ET65

15 ITEM NO	16 STOCK/PART NO DESCRIPTION (Indicate number of shipping containers type of container container number)	17 QUANTITY SHIP/REC'D *	18 UNIT	19 UNIT PRICE	20 AMOUNT
001	Hot Gas Test Section TPS Panel Substrates	60	Ea	NA	NA

ORIGINAL PAGE IS OF POOR QUALITY

21 PROCUREMENT QUALITY ASSURANCE

A ORIGIN

☐ PQA ☐ ACCEPTANCE of listed items has been made by me or under my supervision and they conform to contract except as noted herein or on supporting documents

DATE SIGNATURE OF AUTH GOVT REP

TYPED NAME AND OFFICE

B DESTINATION

☐ PQA ☐ ACCEPTANCE of listed items has been made by me or under my supervision and they conform to contract except as noted herein or on supporting documents

DATE SIGNATURE OF AUTH GOVT REP

TYPED NAME AND TITLE

22. RECEIVER'S USE

Quantities shown in column 17 were received in apparent good condition except as noted

3/7/85 W P Baker

DATE RECEIVED SIGNATURE OF AUTH GOVT REP

TYPED NAME AND OFFICE

* If quantity received by the Government is the same as quantity shipped indicate by ✓ mark if different enter actual quantity received below quantity shipped and encircle

23 CONTRACTOR USE ONLY

To be delivered to NASA at Bldg. 4707

DD FORM 250 1 NOV 68 REPLACES EDITION OF 1 AUG 67 WHICH MAY BE USED

MATERIAL INSPECTION AND RECEIVING REPORT	1 PROC INSTRUMENT (DEN(CONTRACT) NAS8-36304	(ORDER) NO	6 INVOICE NO / DATE 3/7/85	7 PAGE 1 OF 1 / 8 ACCEPTANCE POINT D

2 SHIPMENT NO	3 DATE SHIPPED	4 B/L	5 DISCOUNT TERMS
RC00005	3/8/85	TCN HREC/2930A	NET 30

9 PRIME CONTRACTOR CODE	10. ADMINISTERED BY CODE
Lockheed Missiles & Space Co., Inc. P.O. Box 1103 Huntsville, AL 35807	DCASMA-Birmingham 2121 8th Avenue, N Room 104 Birmingham, AL 35203-2376
11 SHIPPED FROM (If other than 9) CODE FOB	12 PAYMENT WILL BE MADE BY CODE
Same as Block 9	Financial Management Office George C. Marshall Space Flight Center Marshall Space Flgiht Center, AL 35812
13 SHIPPED TO CODE	14 MARKED FOR CODE
Transportation Officer, Bldg, 4471 National Aeronautics & Space Administration George C. Marshall Space Flight Center Marshall Space Flight Center, AL 35812	Richard Baker ET 65

15 ITEM NO	16 STOCK/PART NO DESCRIPTION (Indicate number of shipping containers - type of container container number)	17 QUANTITY SHIP/REC'D *	18 UNIT	19 UNIT PRICE	20 AMOUNT
001	RAMPED PANEL FIXTURE	1	ea	NA	NA

21 PROCUREMENT QUALITY ASSURANCE

A ORIGIN

☐ PQA ☐ ACCEPTANCE of listed items has been made by me or under my supervision and they conform to contract except as noted herein or on supporting documents

DATE SIGNATURE OF AUTH GOVT REP

TYPED NAME AND OFFICE

B DESTINATION

☐ PQA ☐ ACCEPTANCE of listed items has been made by me or under my supervision and they conform to contract except as noted herein or on supporting documents

DATE SIGNATURE OF AUTH GOVT REP

TYPED NAME AND TITLE

22 RECEIVER'S USE

Quantities shown in column 17 were received in apparent good condition except as noted

DATE RECEIVED SIGNATURE OF AUTH GOVT REP

TYPED NAME AND OFFICE

* If quantity received by the Government is the same as quantity shipped indicate by (✓) mark if different, enter actual quantity received below quantity shipped and encircle

23 CONTRACTOR USE ONLY

To be delviered to NASA at Bldg. 4707

DD FORM 250 1 NOV 68 REPLACES EDITION OF 1 AUG 67 WHICH MAY BE USED

MATERIAL INSPECTION AND RECEIVING REPORT

1. PROC INSTRUMENT IDEN (CONTRACT): NAS8-36304
(ORDERING)
4. INVOICE NO
DATE 12/19/84
7. PAGE 1 OF 1
8. ACCEPTANCE POINT: D

2. SHIPMENT NO: C00001
3. DATE SHIPPED: 12/19/84
4. B/L TCN: HREC/2856
5. DISCOUNT TERMS: Net 30

9. PRIME CONTRACTOR CODE
Lockheed Missiles & Space Co., Inc.
P.O. Box 1103
Huntsville, AL 35807

10. ADMINISTERED BY CODE
DCASMA-Birmingham
2121 8th Avenue, N.
Room 104
Birmingham, AL 35203-2376

11. SHIPPED FROM (if other than 9) CODE FOB
Same as Block 9

12. PAYMENT WILL BE MADE BY CODE
Financial Management Office
George C. Marshall Space Flight Center
Marshall Space Flight Center, AL 35812

13. SHIPPED TO CODE
Transportation Officer, Bldg. 4471
National Aeronautics & Space Administration
George C. Marshall Space Flight Center
Marshall Space Flight Center, AL 35812

14. MARKED FOR CODE
Richard Baker
ET 65

15 ITEM NO	16 STOCK/PART NO DESCRIPTION (Indicate number of shipping containers - type of container - container number)	17 QUANTITY SHIP/REC'D *	18 UNIT	19 UNIT PRICE	20 AMOUNT
001	Hot Gas Test Section Dummy Panel	4	Ea	NA	NA

ORIGINAL PAGE IS OF POOR QUALITY

21. PROCUREMENT QUALITY ASSURANCE

A. ORIGIN
☐ PQA ☐ ACCEPTANCE of listed items has been made by me or under my supervision and they conform to contract, except as noted herein or on supporting documents

DATE SIGNATURE OF AUTH GOVT REP
TYPED NAME AND OFFICE

B. DESTINATION
☐ PQA ☐ ACCEPTANCE of listed items has been made by me or under my supervision and they conform to contract except as noted herein or on supporting documents

DATE SIGNATURE OF AUTH GOVT REP
TYPED NAME AND TITLE

22. RECEIVER'S USE
Quantities shown in column 17 were received in apparent good condition except as noted

12/19/84 ET-65
DATE RECEIVED SIGNATURE OF AUTH GOVT REP
TYPED NAME AND OFFICE

* If quantity received by the Government is the same as quantity shipped, indicate by ✓ mark; if different, enter actual quantity received below quantity shipped and encircle

23. CONTRACTOR USE ONLY

To be picked up by NASA from Lockheed's Bldg. 401.

DD FORM 250 1 NOV 68 REPLACES EDITION OF 1 AUG 67 WHICH MAY BE USED

Appendix B

DIMENSIONED SKETCHES OF REDESIGNED HGF DIFFUSER

TAIL CONE SECTION OF HGF DIFFUSER

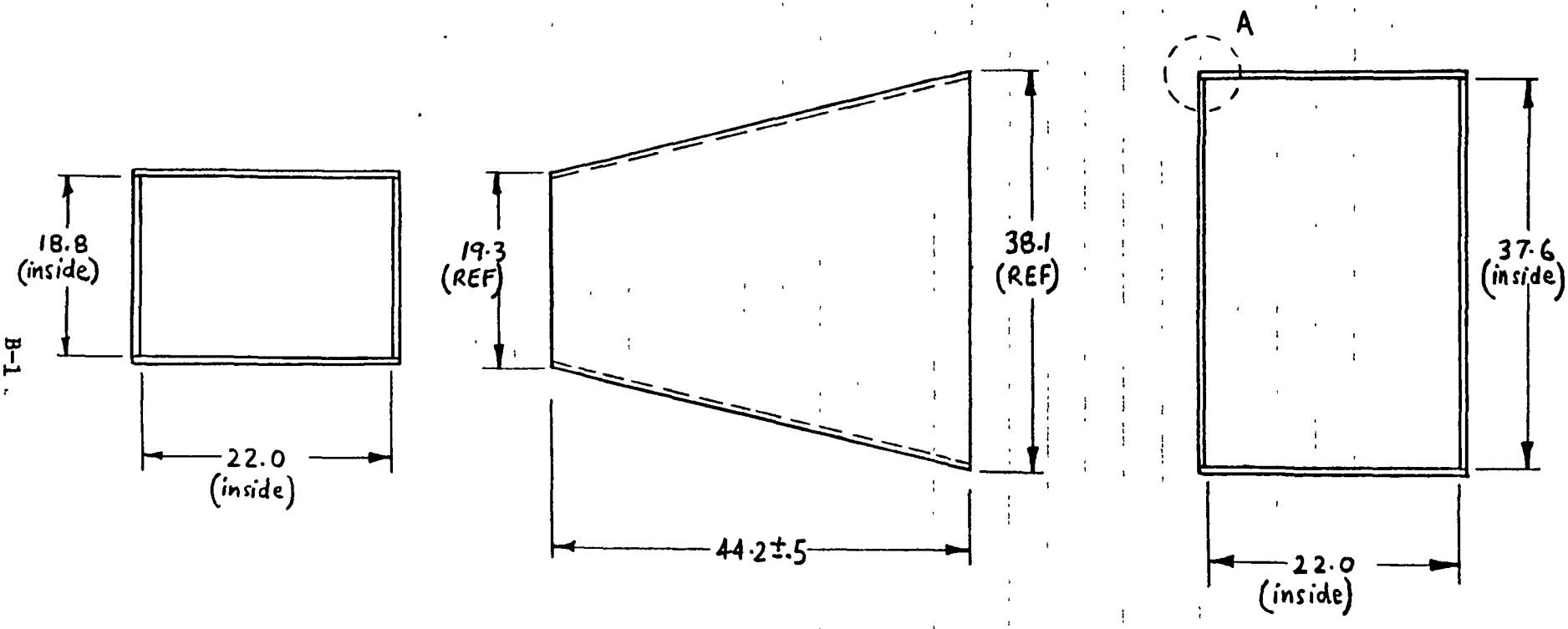

NOTES:

1. CORNERS OF COMPLETED SECTION TO BE SQUARE
2. WELD CONTINUOUS AT ALL JOINTS AS IN DETAIL A

MATERIAL : 1/4 IN. MILD STEEL PLATE

TOL : .X = $\pm^{.100}_{.000}$ SCALE : NONE

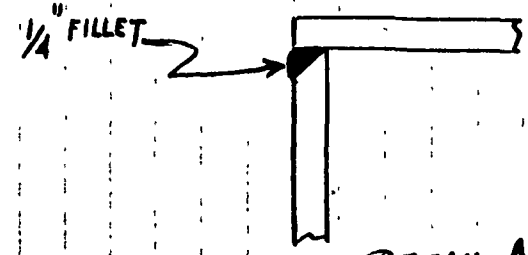

DETAIL A

ORIGINAL PAGE IS OF POOR QUALITY

TRANSITION SECTION OF HGF DIFFUSER

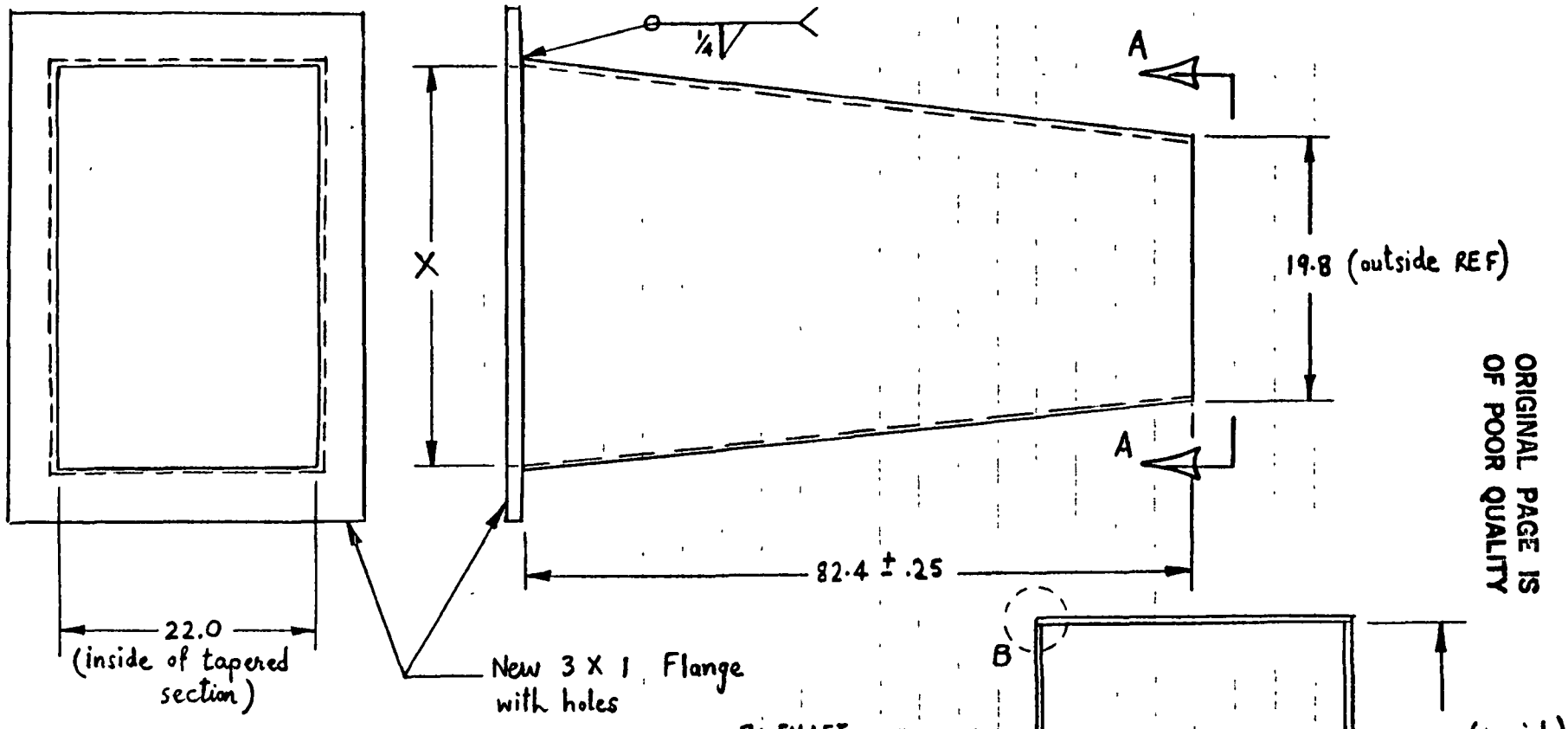

NOTES

1. INSIDE DIM. "X" OF TAPERED SECTION TO MATCH INSIDE DIM OF NEW FLANGE
2. CORNERS OF TAPERED SECTION TO BE SQUARE
3. WELD CONTINUOUS AT ALL JOINTS AS IN DETAIL B

MATERIAL: ½ IN. MILD STEEL PLATE

TOL: ·X $^{+.100}_{-.000}$ SCALE: NONE

ORIGINAL PAGE IS OF POOR QUALITY

CENTER SECTION OF HGF DIFFUSER

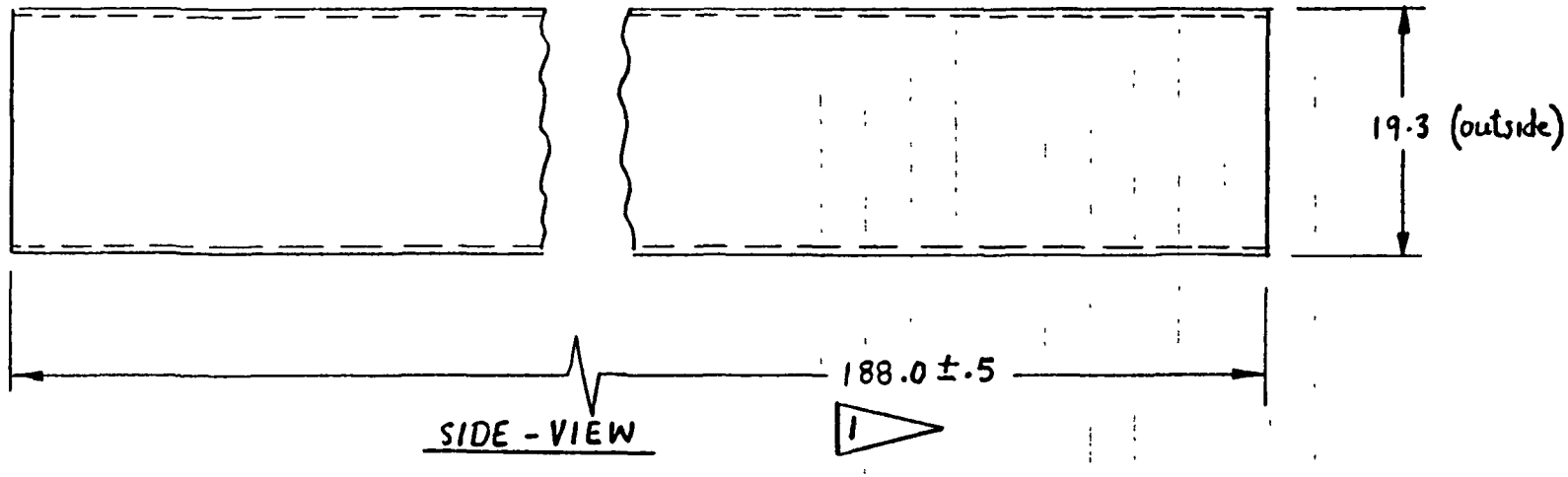

SIDE - VIEW

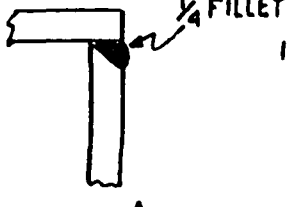

DETAIL A

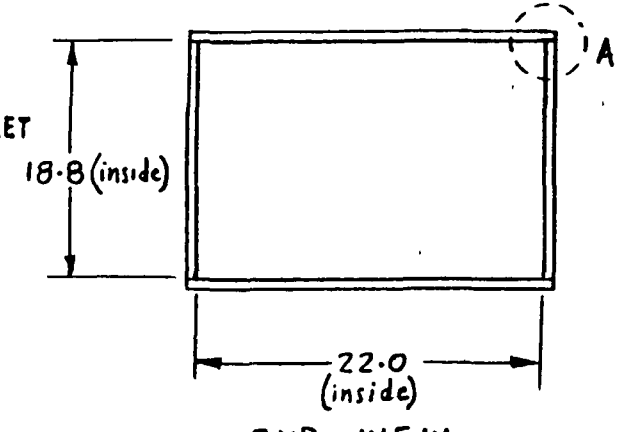

END - VIEW

NOTES:

1. IF REQD. CUT LENGTH IN TWO PIECES & BUTT WELD, FLUSH INSIDE SMOOTH
2. CORNERS OF COMPLETED DUCT TO BE SQUARE
3. WELD CONTINUOUS AT ALL JOINTS AS IN 'A'

MATERIAL: 1/4 IN. MILD STEEL PLATE

TOL: .X $^{+.100}_{-.000}$

SCALE: NONE

INSTALLATION OF STIFFENERS ON HGF DIFFUSER

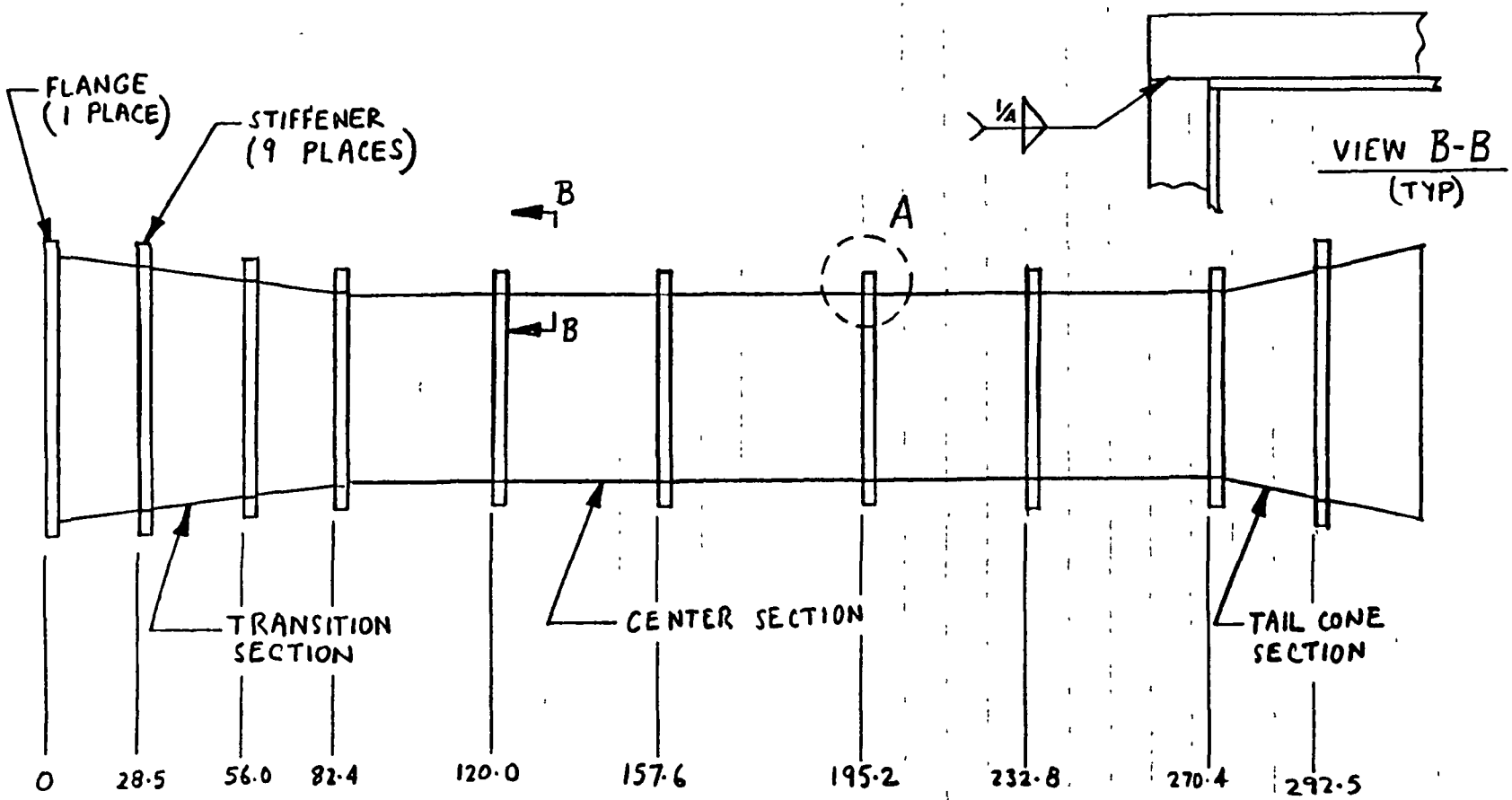

NOTES:

1. MAKE STIFFENERS FROM 4 X 1 MILD STEEL FLAT BAR & WELD CONTINUOUS AS IN DETAIL A

TOL : .X ± .25 SCALE: NONE

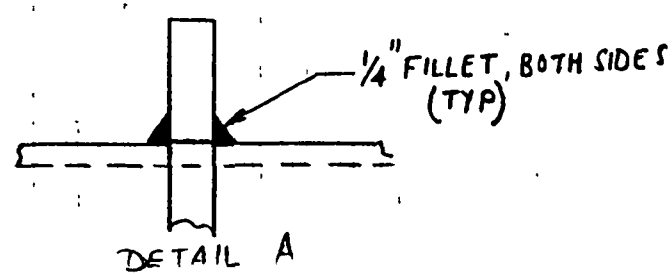

INSTALLATION OF STATIC & TOTAL PRESSURE TUBES IN HGF DIFFUSER

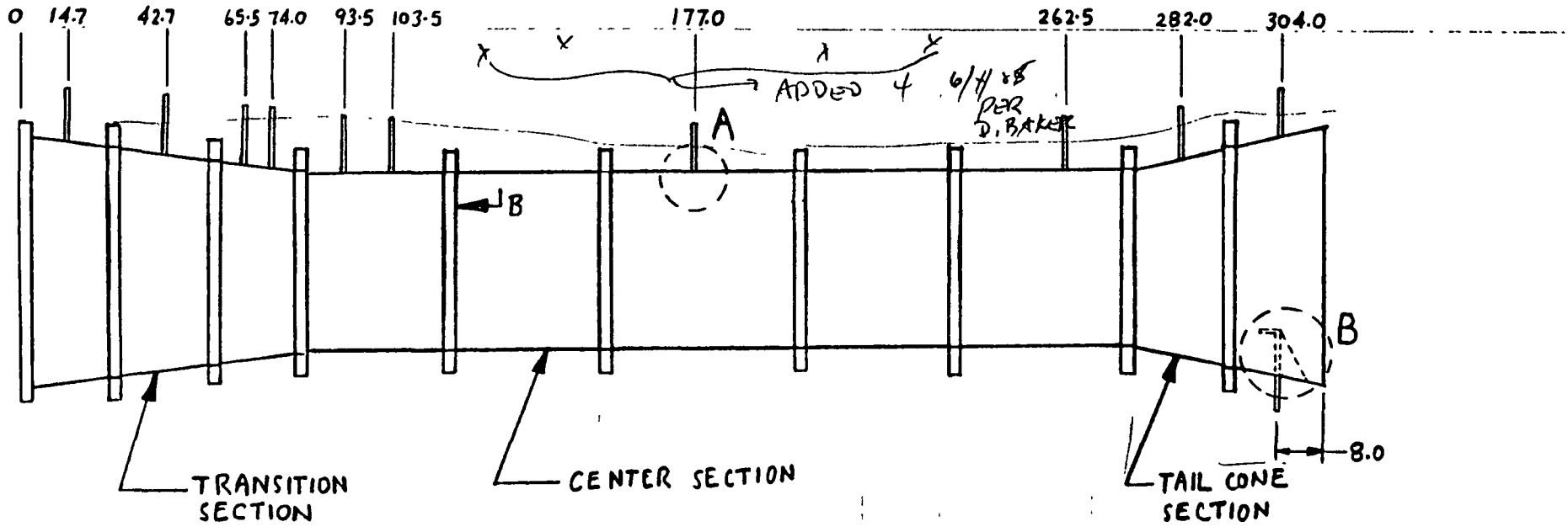

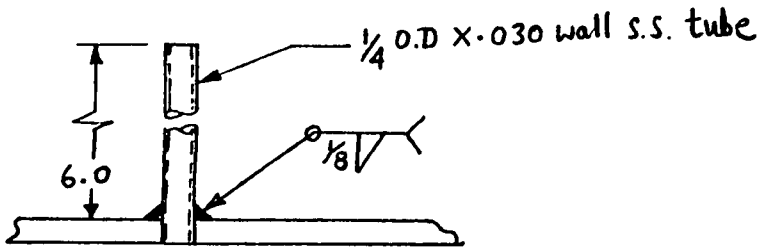

DETAIL A

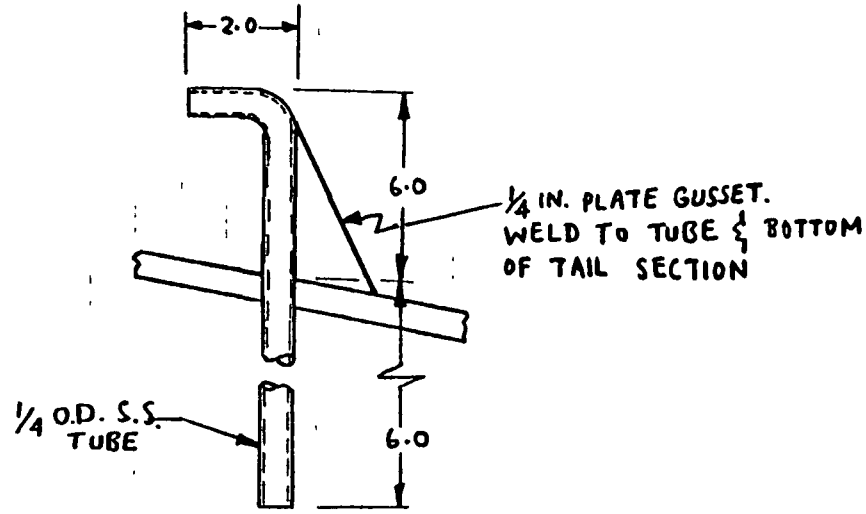

DETAIL B

Appendix C

ROUGH STRESS NOTES FOR BEEF-UP OF STRUCTURE TO INCREASE CHAMBER PRESSURE FROM 150 TO 300 PSIA (BY MIKE TILLEY, LMSC-HUNTSVILLE)

Prepared by.	Date	LOCKHEED MISSILES & SPACE COMPANY. INC.	Page 1 Temp. Form.
Checked by.	Date	Title	Model
Approved by	Date		Report No.

	BAR 3	BAR 2	BAR-1
CHANNEL	C6 X 13	C4 X 7.25	C4 X 7.25
ADDED PLATE TO SECTION	NONE (SHIM UNDERNEATH)	.25 IN THK (SEE NOTE WRT SHIM)	.25 IN THK (SHIM AS REQ)
ROD	≥ 3/8" D 4340 ONE EACH END (USE 1.0 DIA 4340)	≥ 3/8 D 4340 ONE EACH END (USE 1.0 DIA 4340)	≥ .375 D 4340 TWO EACH END REQD TO STRADDLE EXISTING TUBING (USE .375 DIA 4340)

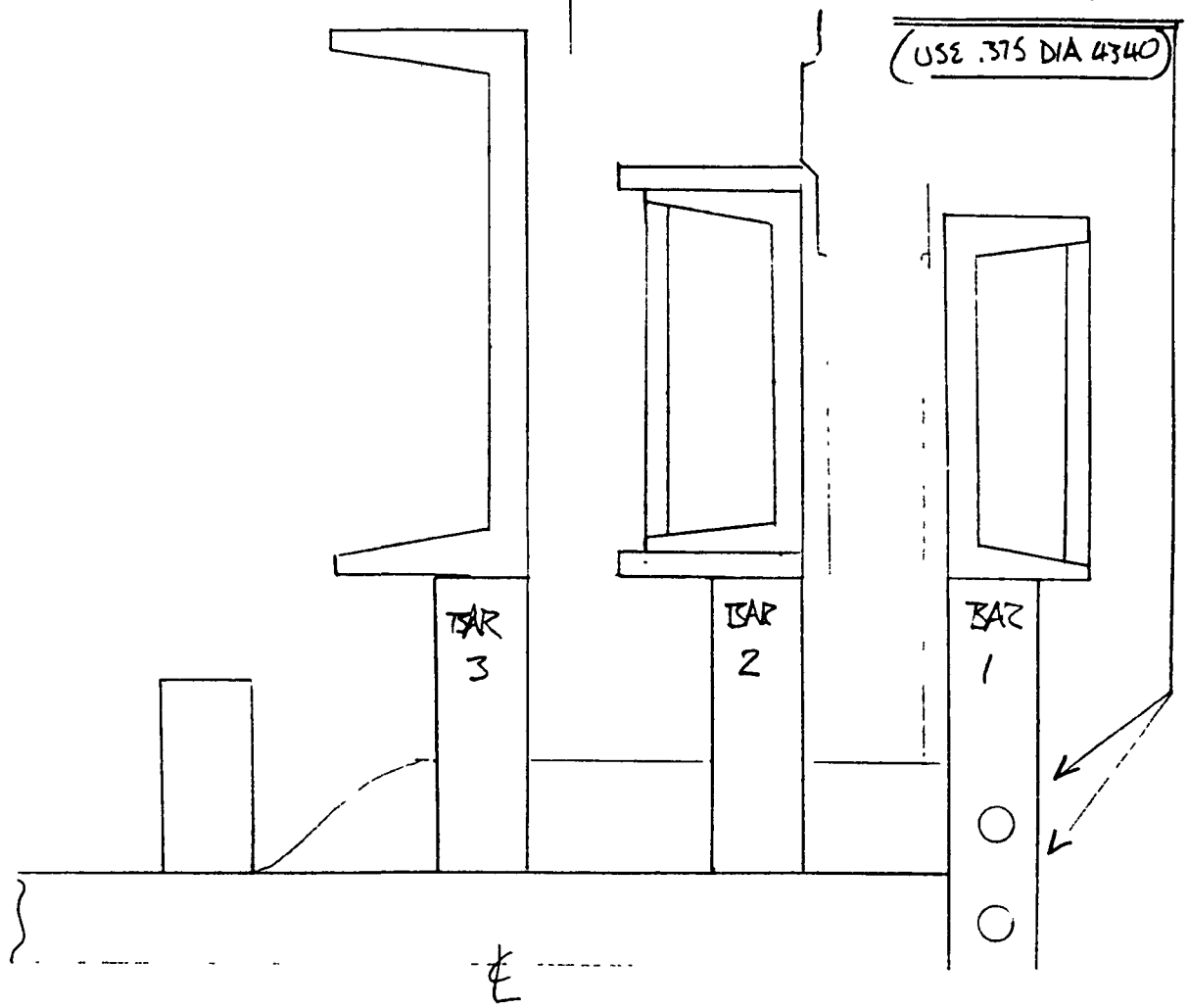

SAME REQUIRED ON UNDERSIDE —

FORM LMSC 362 B-3

Prepared by.	Date	LOCKHEED MISSILES & SPACE COMPANY. INC.	Page 2 Temp. Form.
Checked by:	Date	Title ORIGINAL PAGE IS OF POOR QUALITY	Model
Approved by	Date		Report No.

BAR 3 REINFORCEMENT 2 REQD.

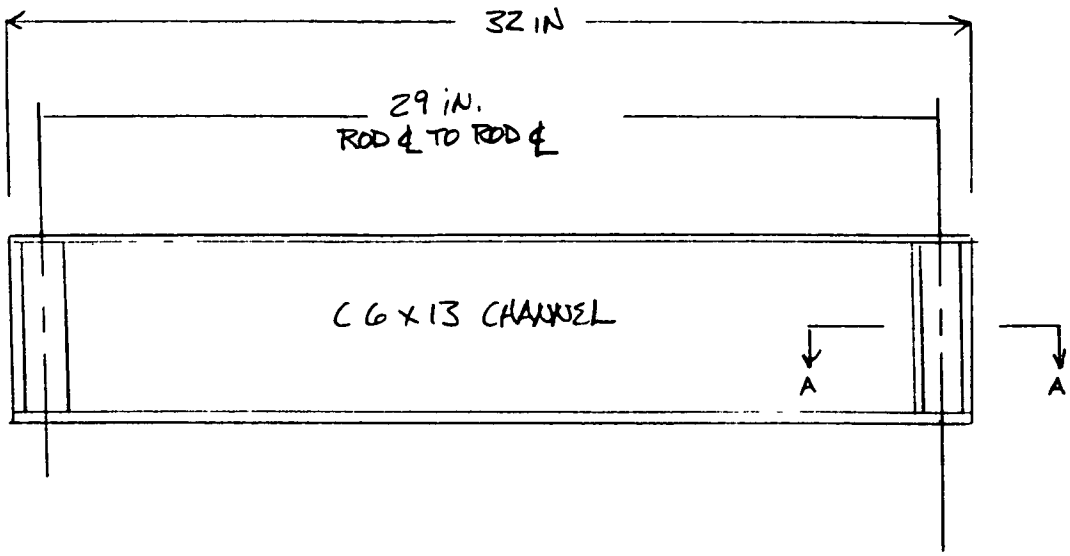

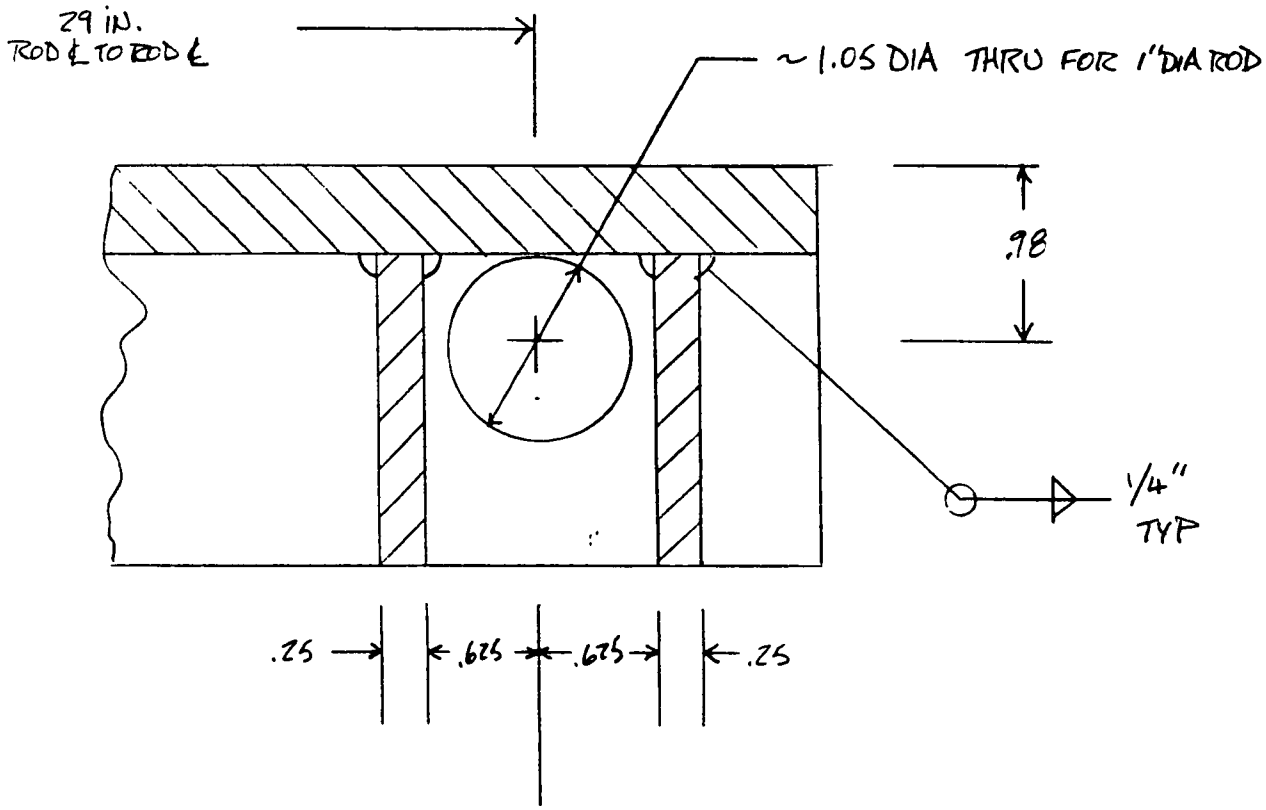

FORM LMSC 362 8-3

Prepared by:	Date	LOCKHEED MISSILES & SPACE COMPANY, INC.	Page 3
Checked by.	Date	Title	Model
Approved by.	Date		Report No.

BAR 2 REINFORCEMENT

2 REQD

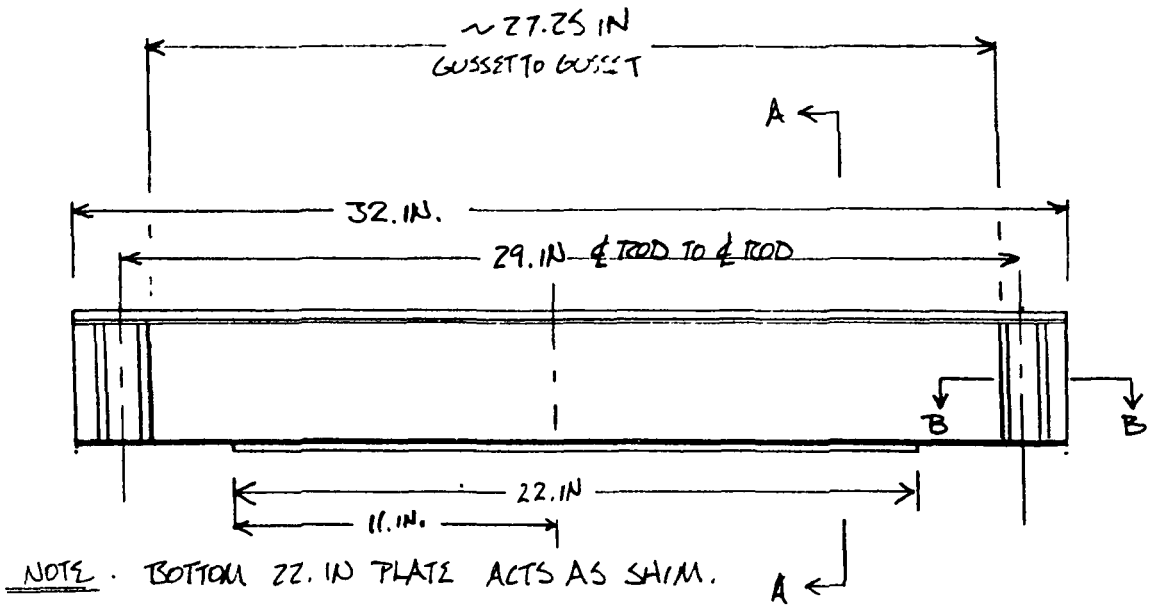

NOTE. BOTTOM 22. IN PLATE ACTS AS SHIM.

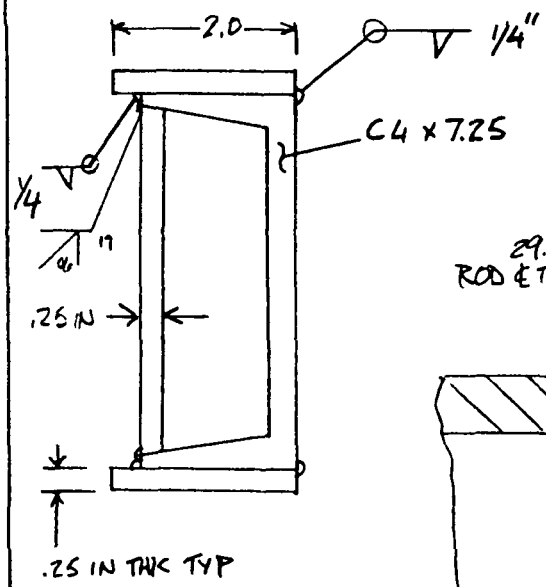

A-A

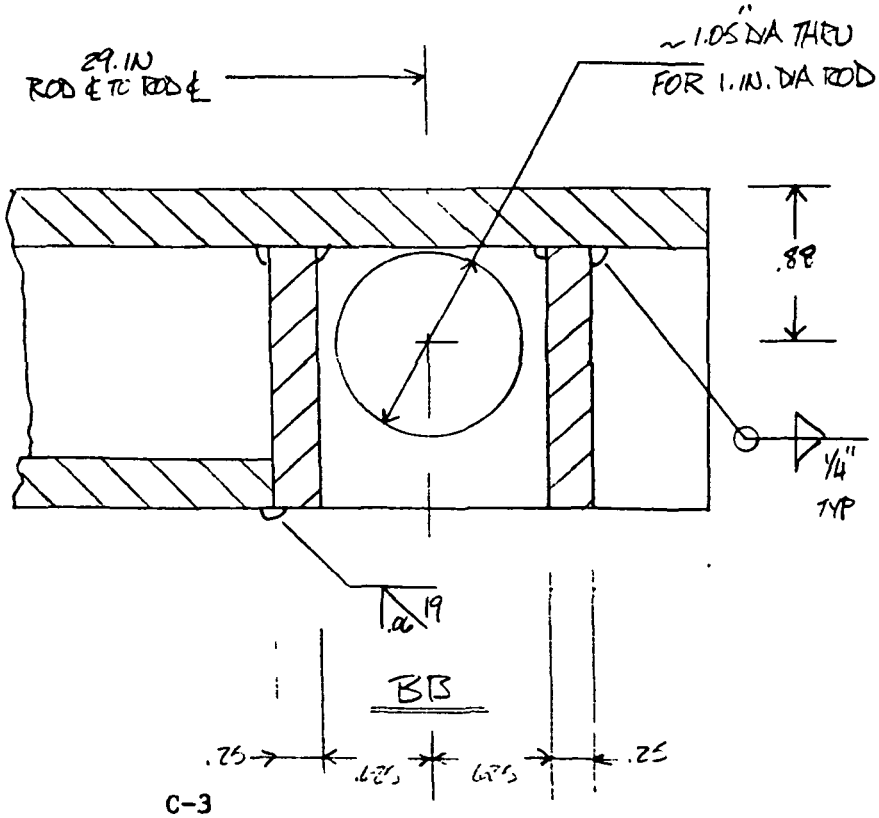

BB

FORM LMSC 362 B-3

Prepared by.	Date	LOCKHEED MISSILES & SPACE COMPANY. INC	Page 4
Checked by.	Date	Title ORIGINAL PAGE IS OF POOR QUALITY	Model
Approved by	Date		Report No.

BAR 1 REINFORCEMENT

2 REQD

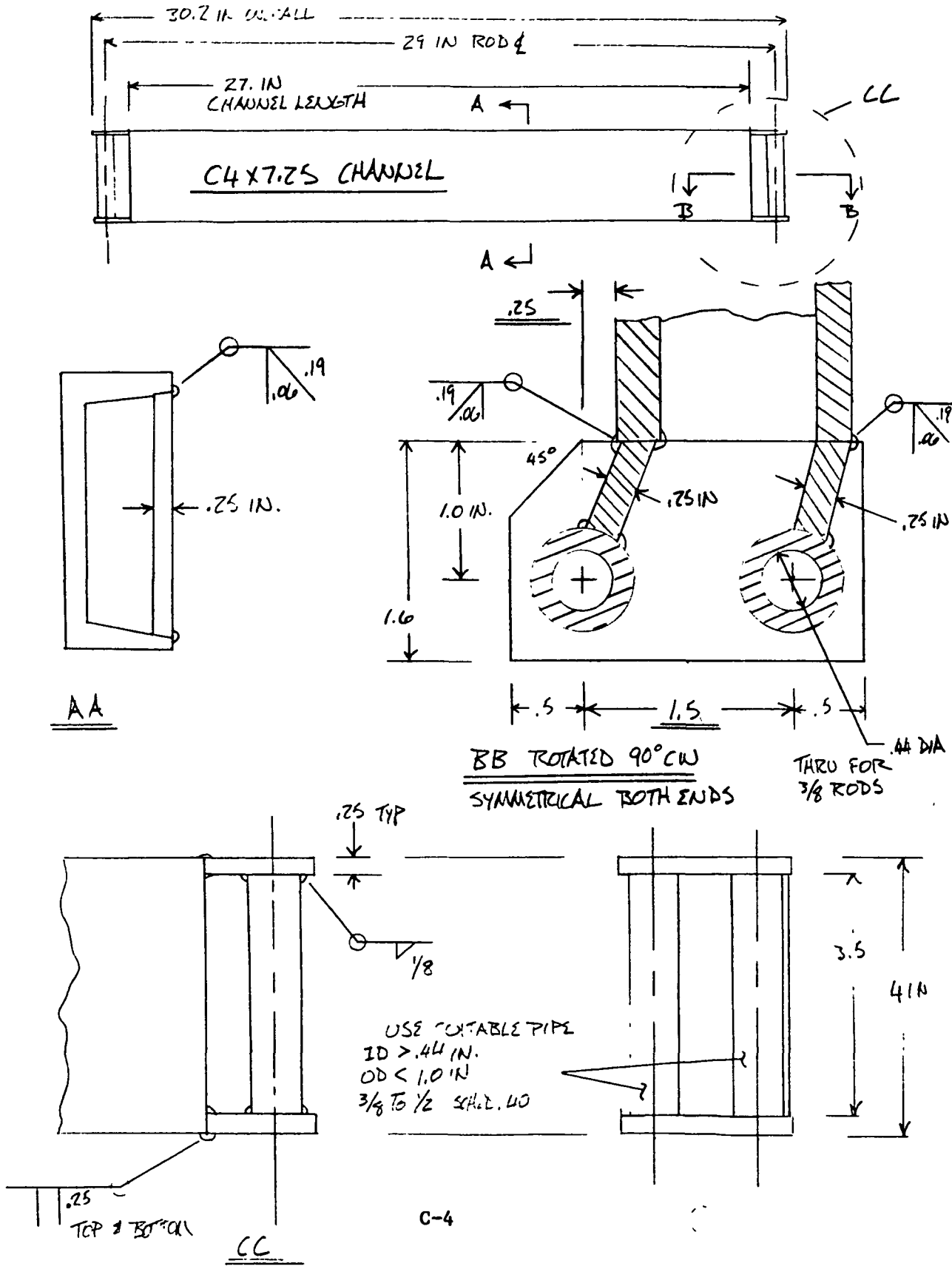

FORM LMSC 362 B-3

Prepared by	Date	LOCKHEED MISSILES & SPACE COMPANY, INC.	Page 5 Temp. Form.
Checked by.	Date	Title	Model
Approved by.	Date		Report No.

RODS — 4340 ST

FOR BAR 3 REINFORCEMENT

2 1.IN DIA 24.0 IN. LONG THREADED 2. IN EACH END

FOR BAR 2 REINFORCEMENT

2 1. IN DIA 21. IN LONG THREADED 2. IN EACH END

FOR BAR 3 REINFORCEMENT

4 3/8 IN. DIA 19. IN LONG THREADED 2 IN EACH END

FORM LMSC 362 B-3

Prepared by:	Date	LOCKHEED MISSILES & SPACE COMPANY, INC.	Page 1
Checked by	Date	Title COMBUSTION CHAMBER REINFORCEMENT	Model
Approved by.	Date		Report No.

— REINFORCE 'CLAMP' BEAM ACROSS W CHAMBER BOX
— CUT AWAY INTERFERING TABLE SUPPORT BEAM —

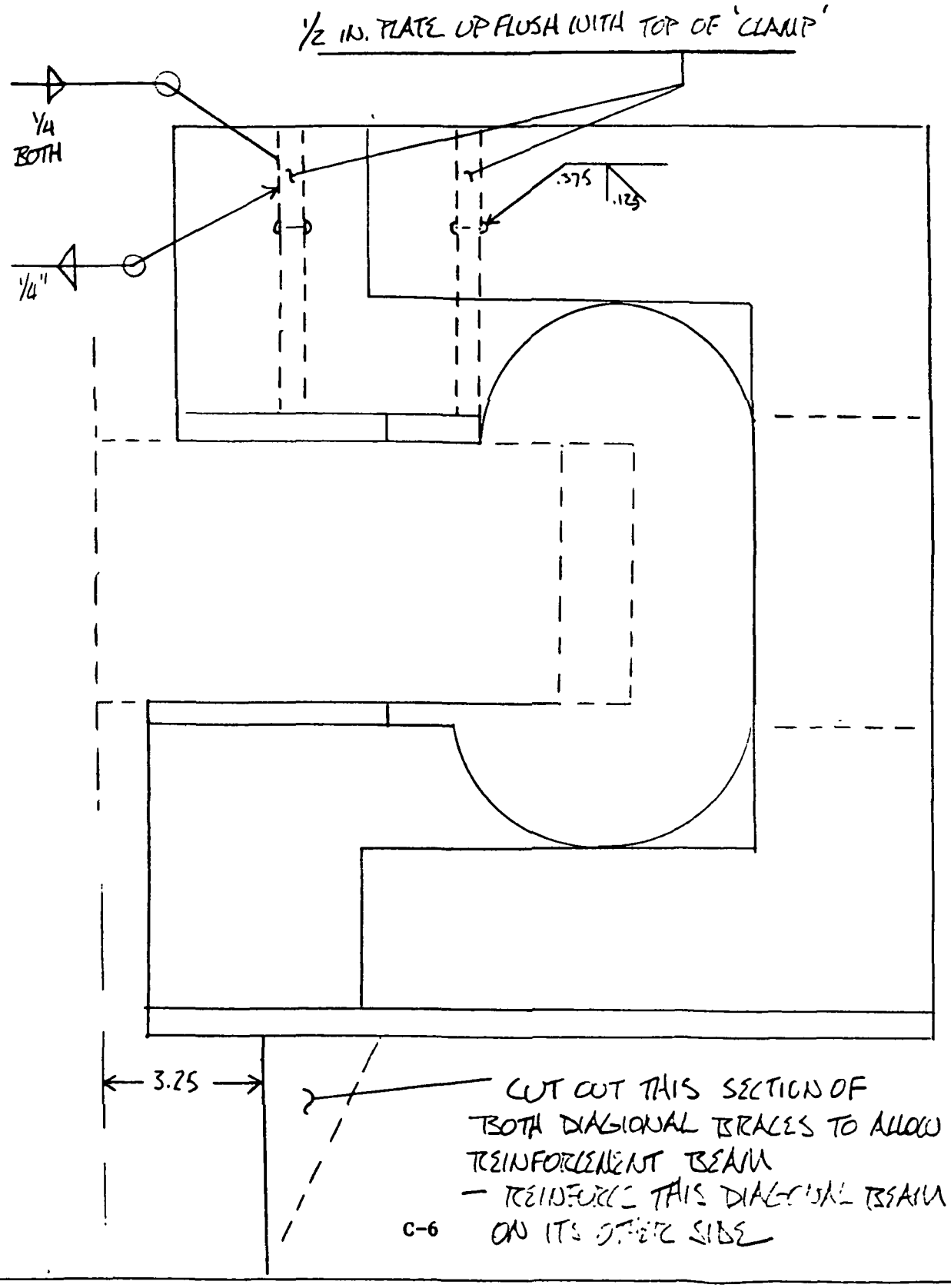

FORM LMSC 382 R-3

Prepared by:	Date	LOCKHEED MISSILES & SPACE COMPANY, INC.	Page 2 Temp. Perm.
Checked by	Date	Title COMBUSTION CHAMBER REINFORCEMENT	Model
Approved by	Date		Report No.

2 REQUIRED

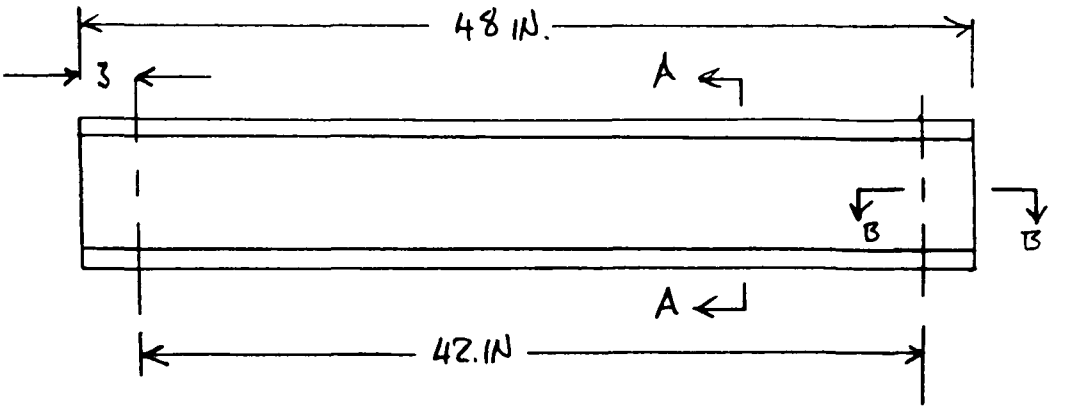

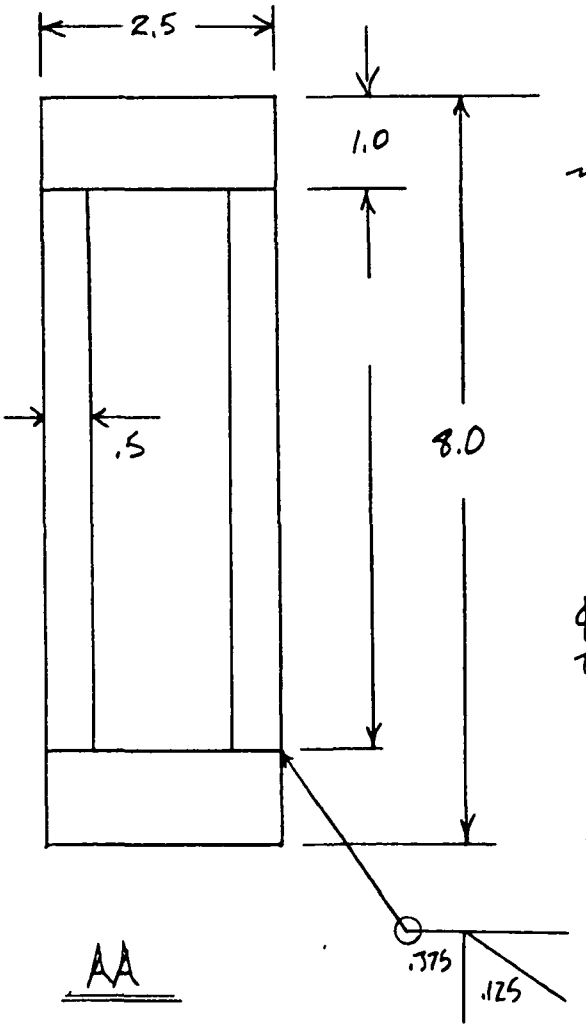

AA

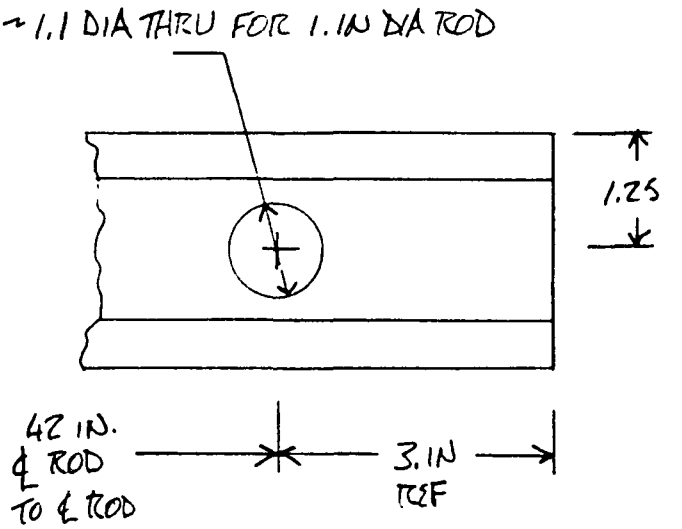

ALSO

2 1.IN DIA 4340 RODS

40.IN LONG
THREADED 3 IN. EACH END

FORM LMSC 382 B-3

Prepared by:	Date	LOCKHEED MISSILES & SPACE COMPANY. INC.	Page 3 Temp. Form.
Checked by	Date	Title	Model
Approved by	Date		Report No.

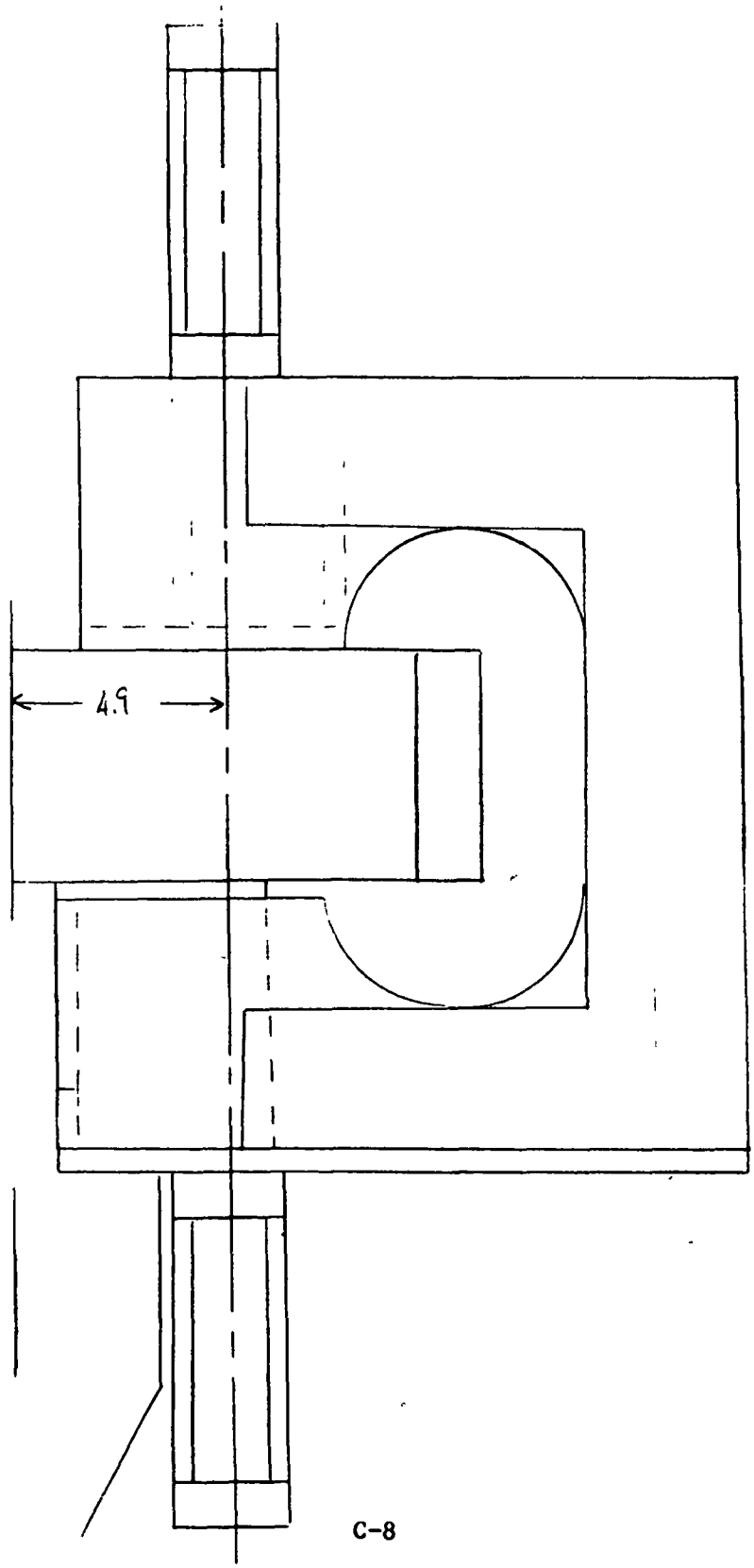

FORM LMSC 362 8-3

Appendix D

TYPICAL SET OF CALIBRATION RUN DATA (FOR RUN NUMBER 38)

K+E 10 X 10 TO INCH 7 X 10 INCHES
KEUFFEL & ESSER CO. MADE IN U.S.A.

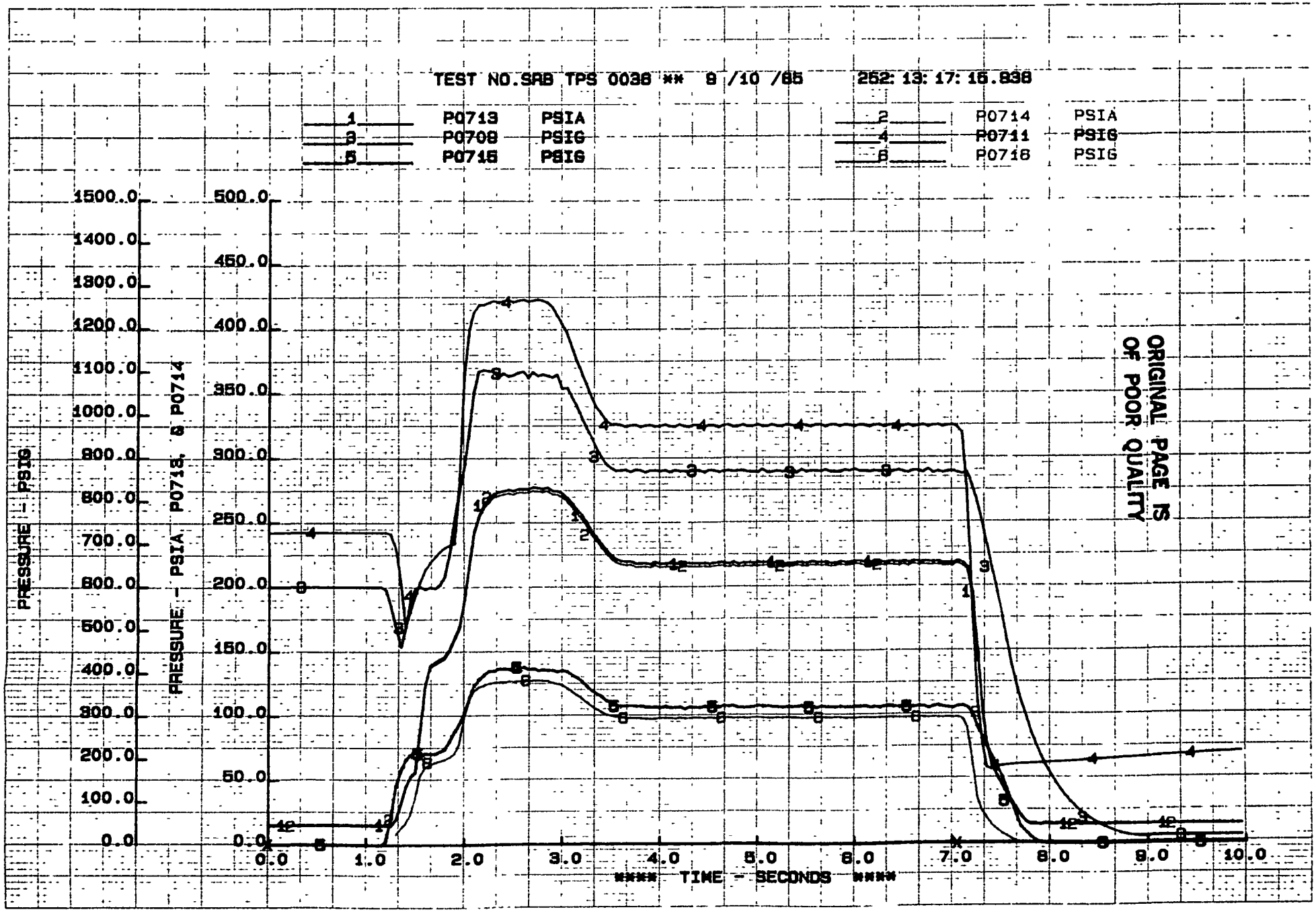

K+E 10 X 10 TO 1/2 INCH 7 X 10 INCHES KEUFFEL & ESSER CO. MADE IN U.S.A.

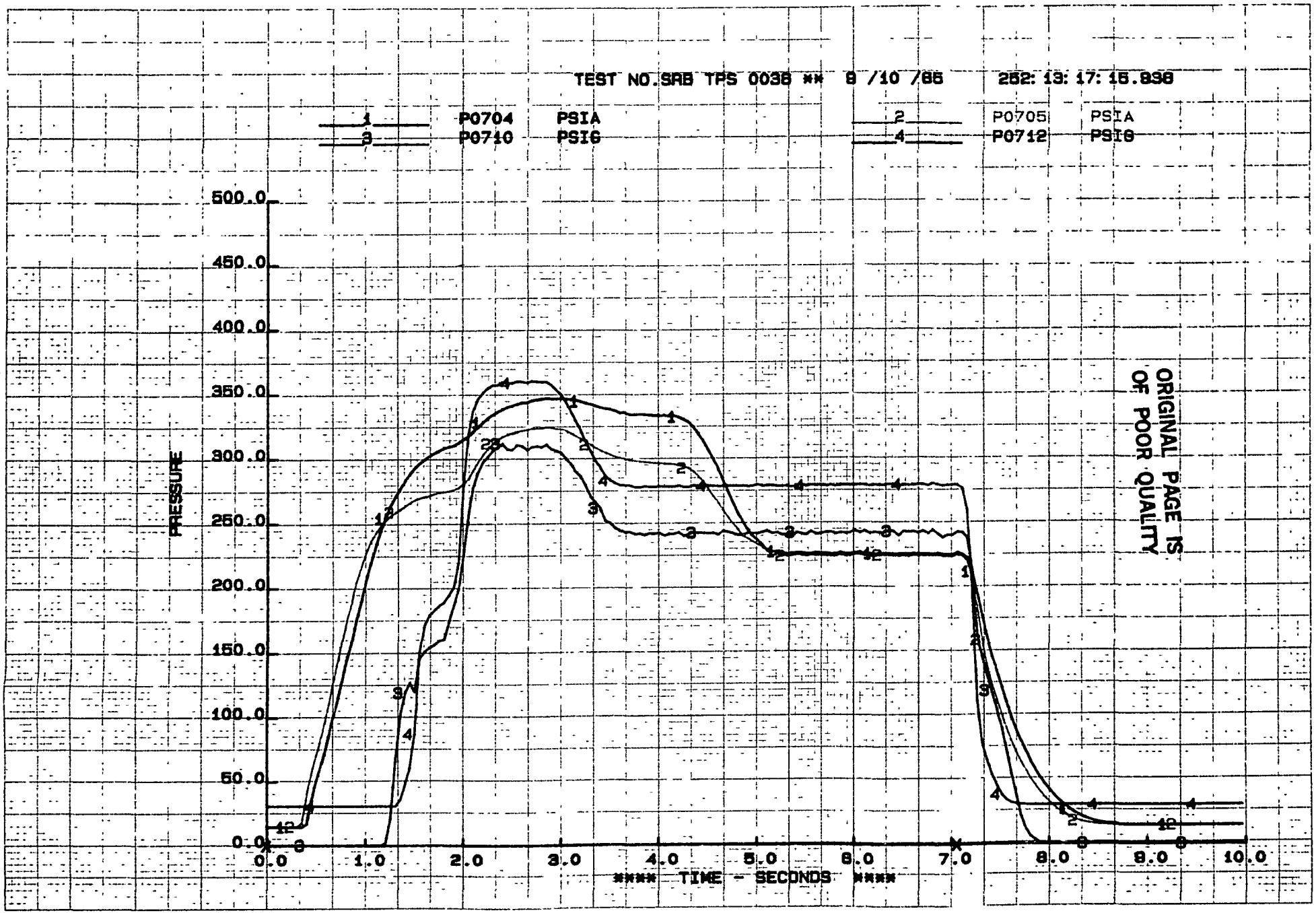

ORIGINAL PAGE IS OF POOR QUALITY

K+E 10 X 10 TO ½ INCH 7 X 10 INCHES
KEUFFEL & ESSER CO. MADE IN U.S.A.

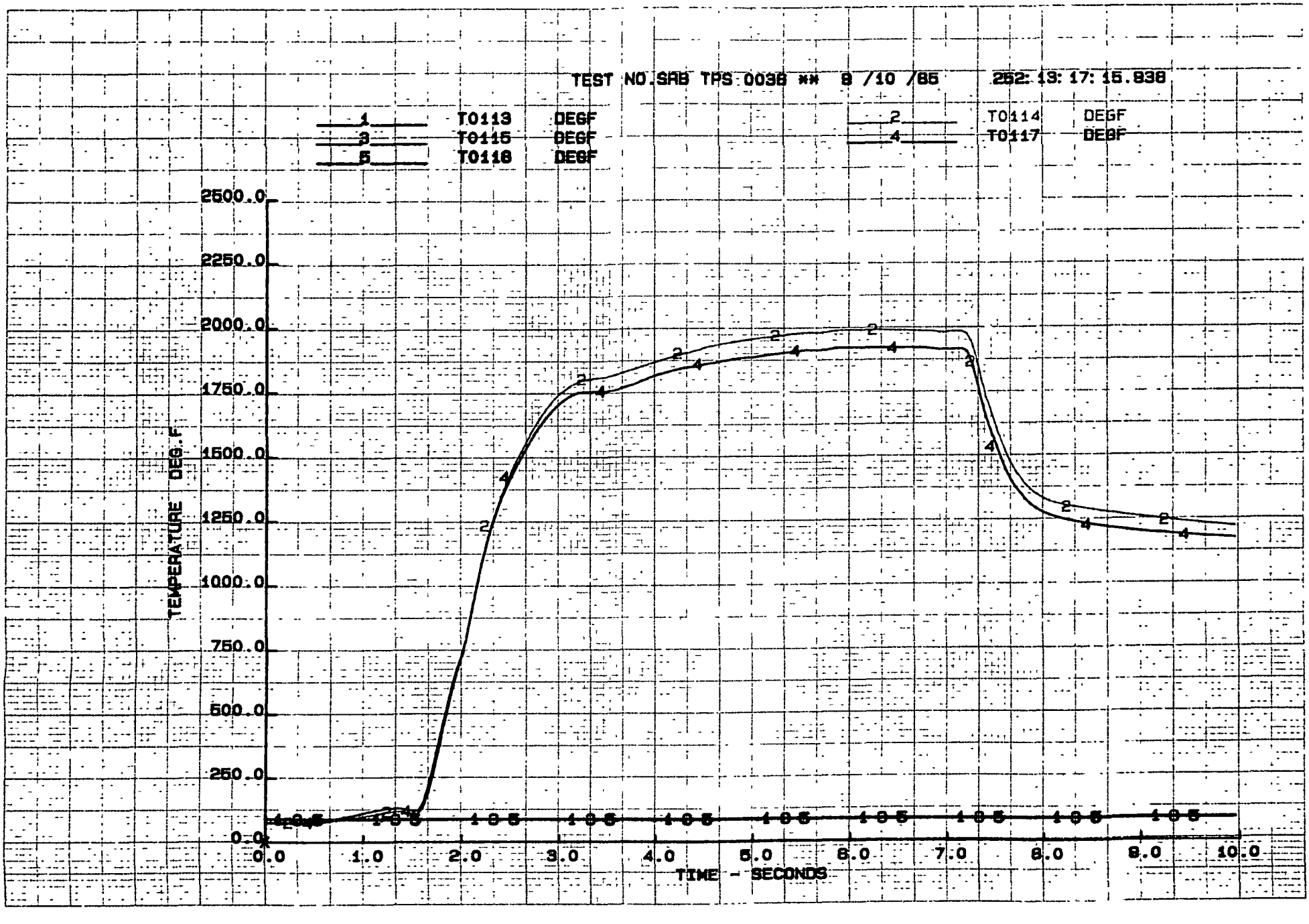

K+E 10 X 10 TO ½ INCH 7 X 10 INCHES
KEUFFEL & ESSER CO. MADE IN U.S.A.

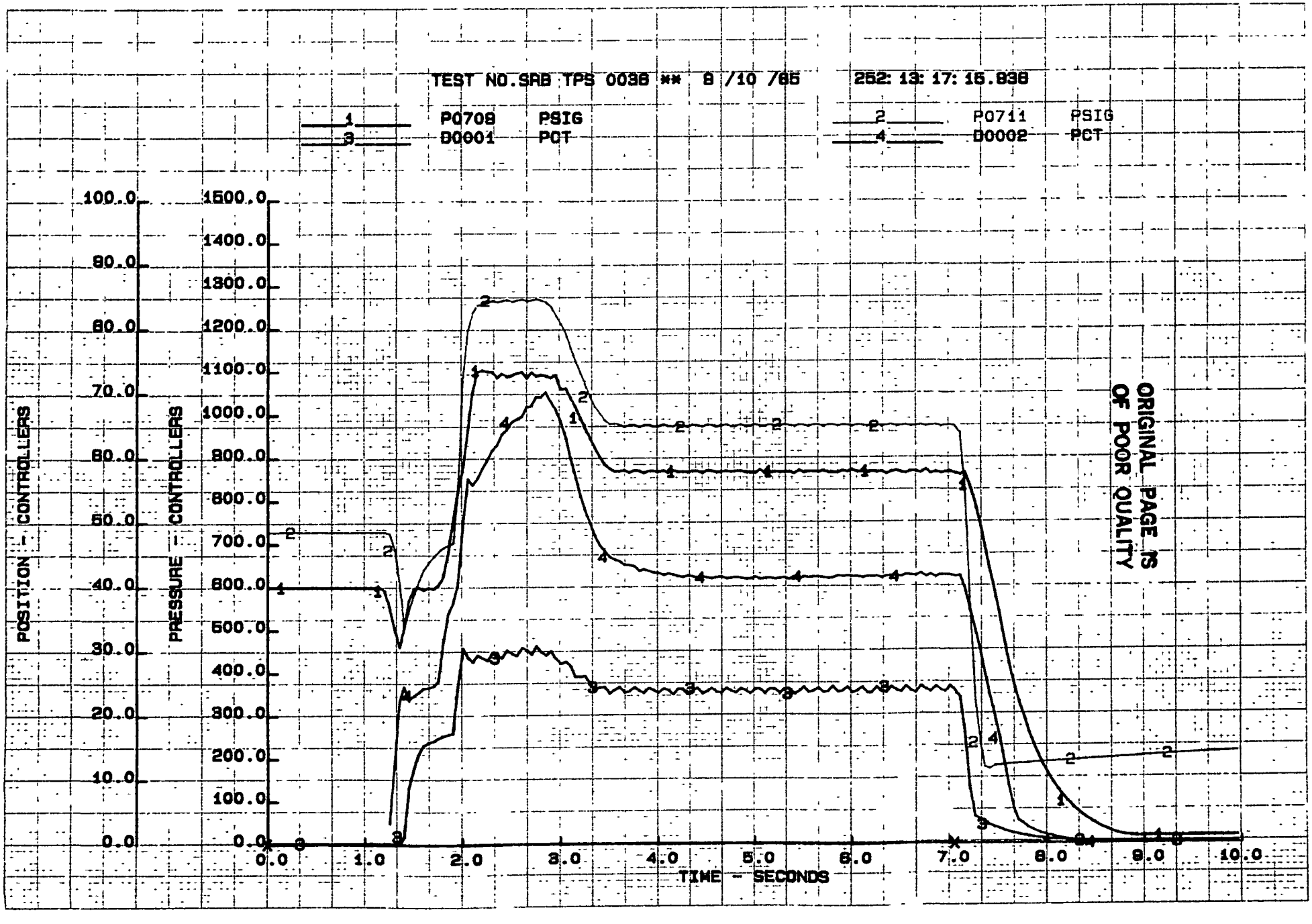

ORIGINAL PAGE IS
OF POOR QUALITY

K+E 10 X 10 TO 1 INCH 7 X 10 INCHES
KEUFFEL & ESSER CO. MADE IN U.S.A.

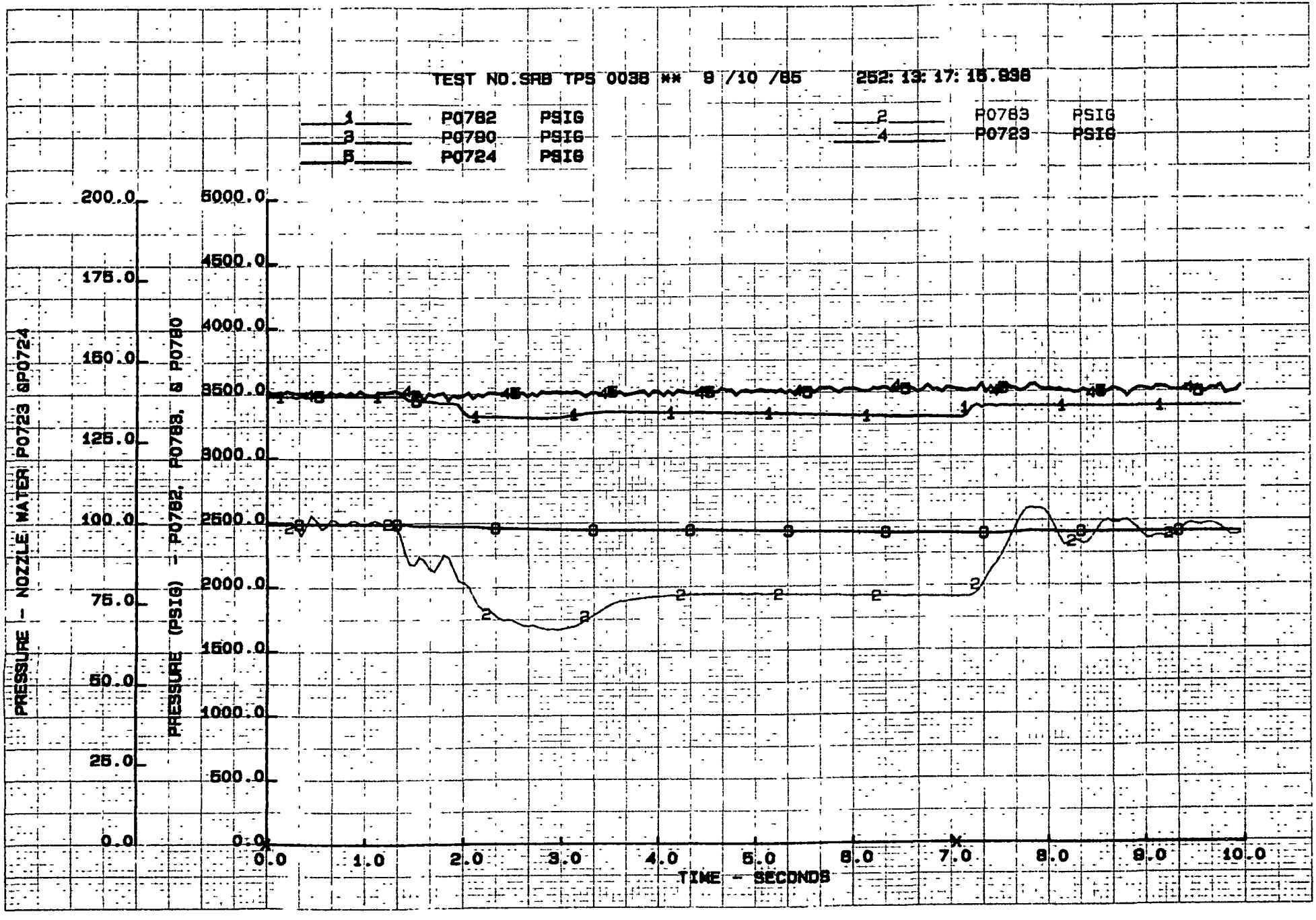

K+E 10 X 10 TO ½ INCH 7 X 10 INCHES KEUFFEL & ESSER CO. MADE IN U.S.A.

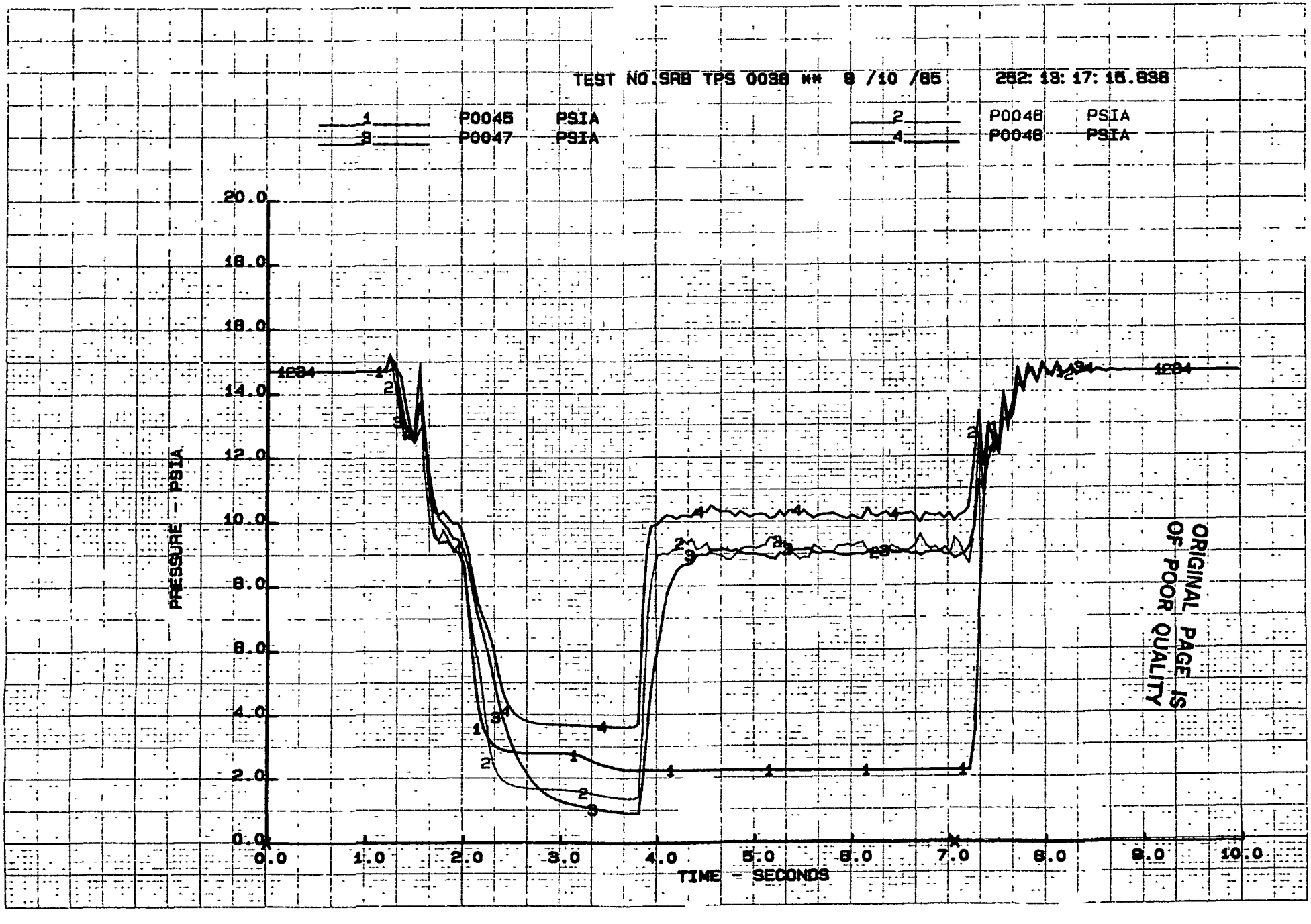

ORIGINAL PAGE IS OF POOR QUALITY

K+E 10 X 10 TO 1/2 INCH 7 X 10 INCHES
KEUFFEL & ESSER CO. MADE IN U.S.A.

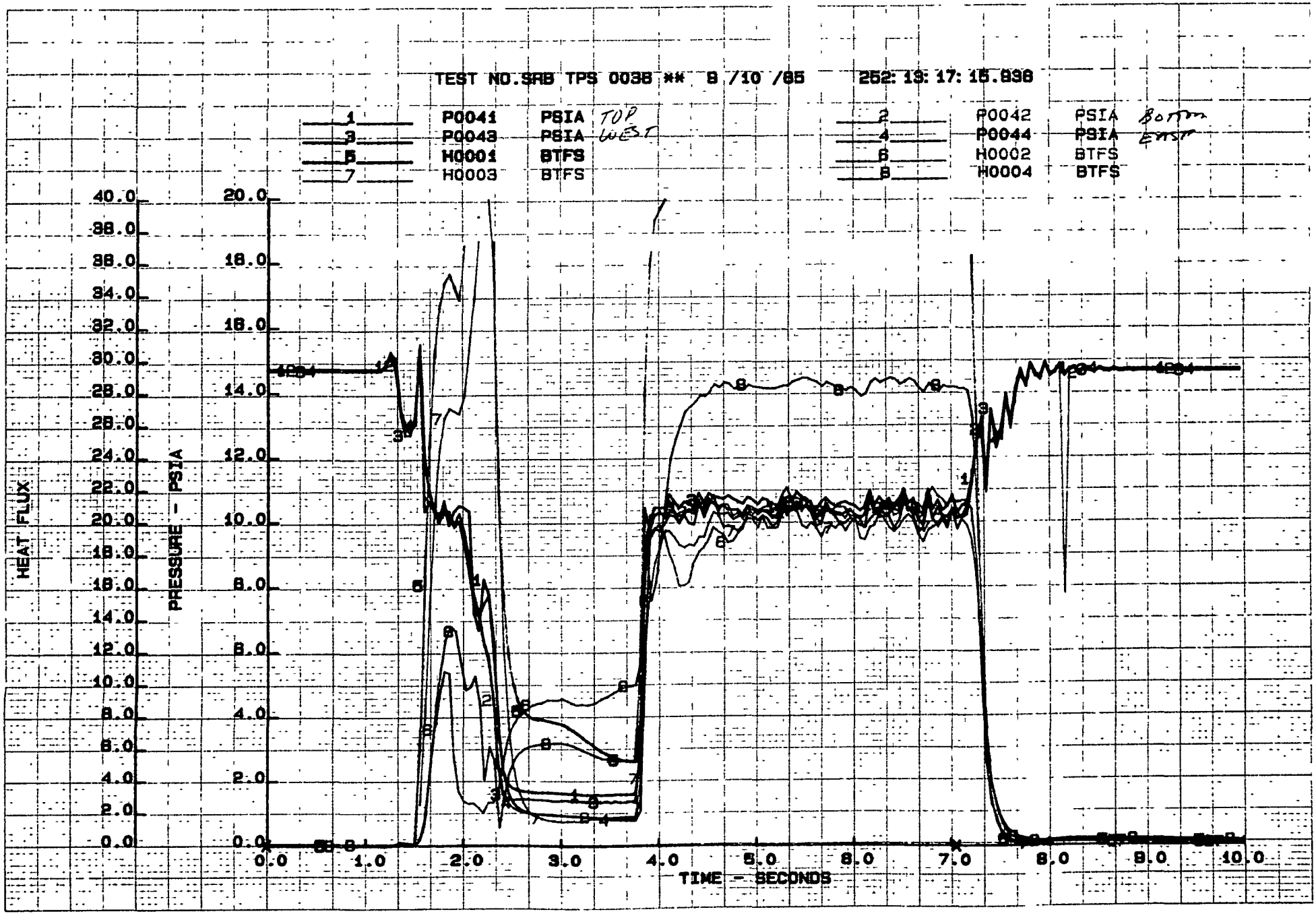

K+E 10 X 10 TO ½ INCH 7 X 10 INCHES
KEUFFEL & ESSER CO. MADE IN U.S.A.

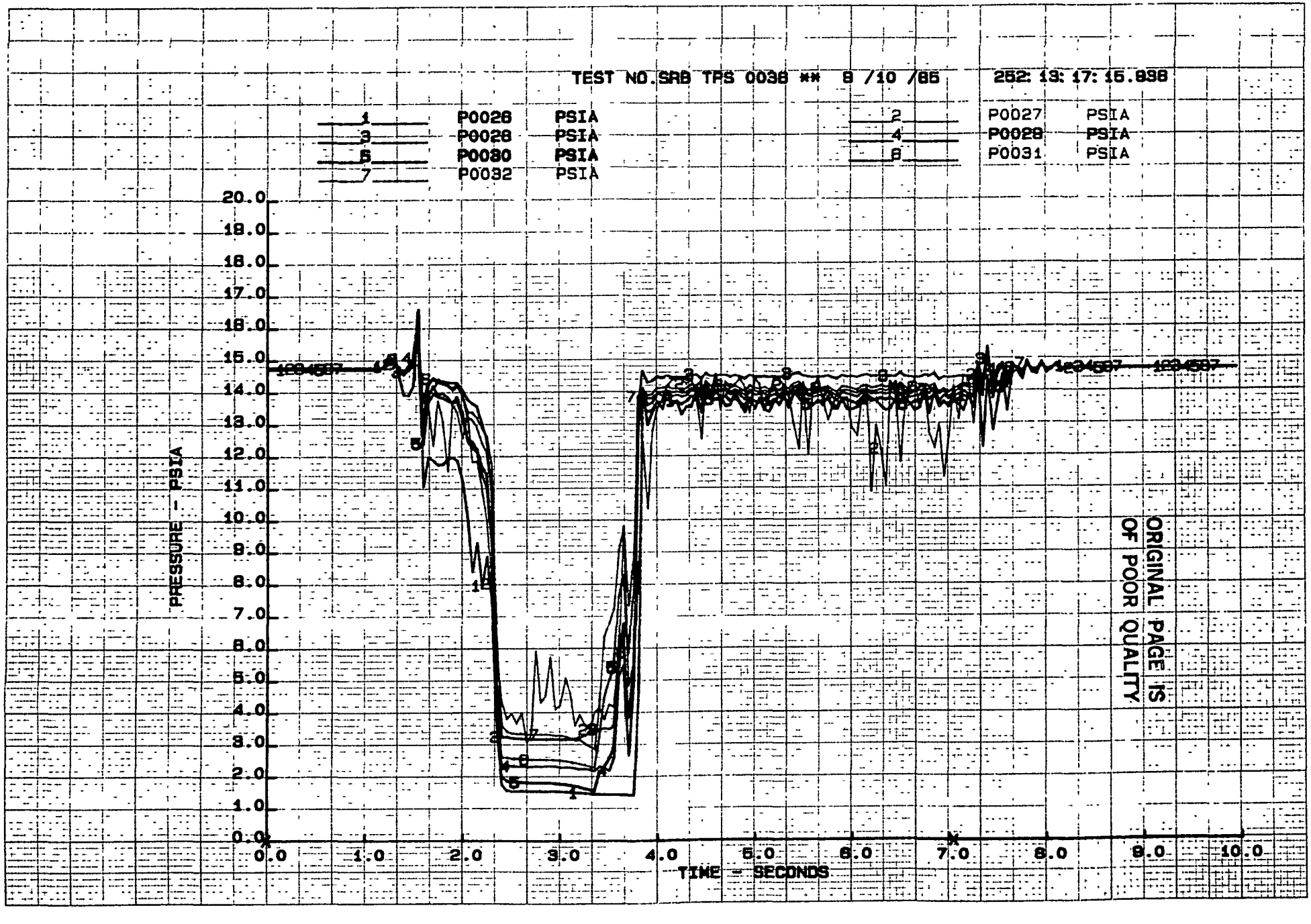

ORIGINAL PAGE IS
OF POOR QUALITY

K+E 10 X 10 TO 1/2 INCH 7 X 10 INCHES
KEUFFEL & ESSER CO. MADE IN U.S.A.

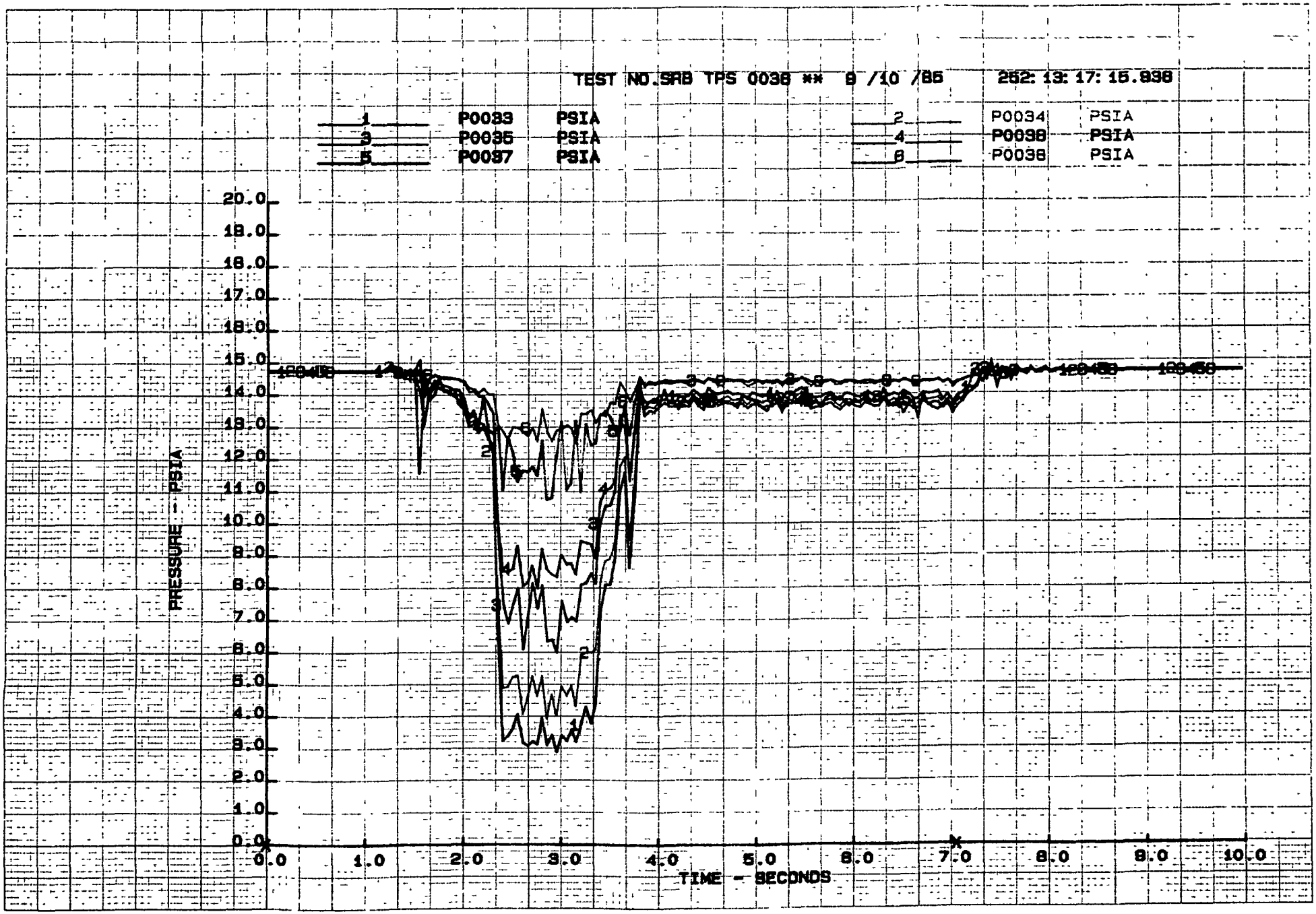

K+E 10 X 10 TO INCH KEUFFEL & ESSER CO

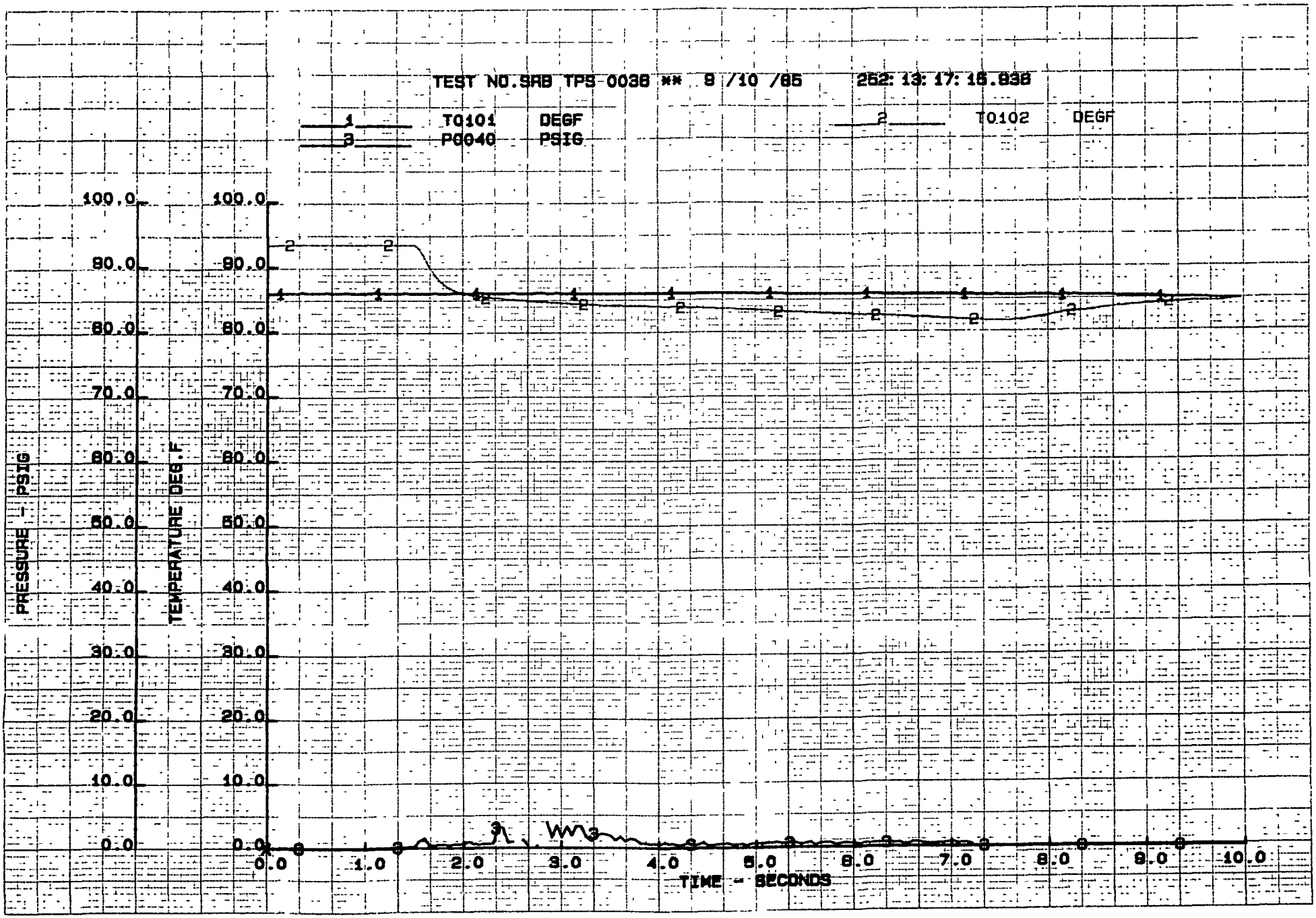

K+E 10 X 10 TO 1 INCH 7 X 10 INCHES KEUFFEL & ESSER CO MADE IN U.S.A.

46 1320

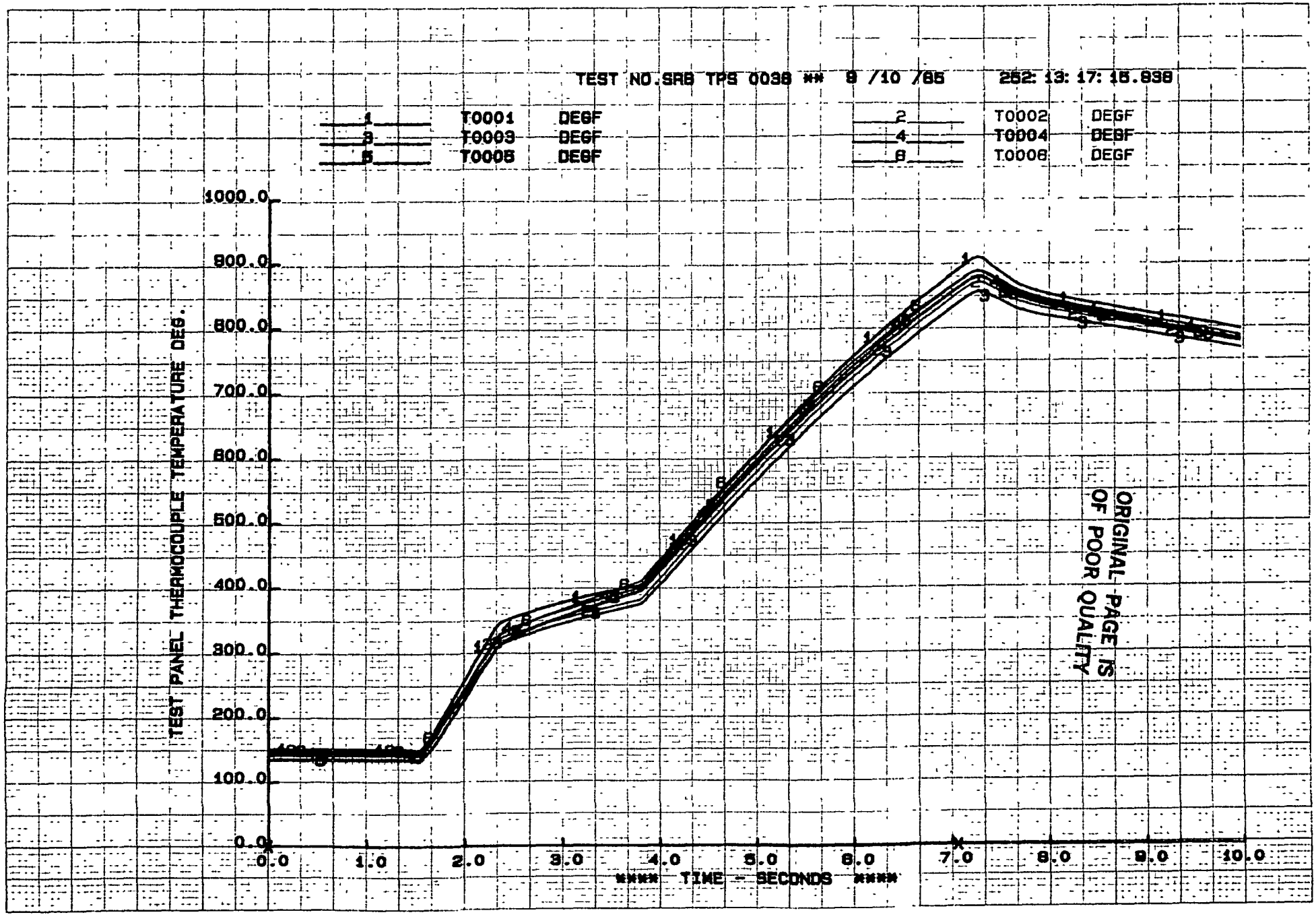

ORIGINAL PAGE IS OF POOR QUALITY

K+E 10 X 10 TO 1/2 INCH 7 X 10 INCHES KEUFFEL & ESSER CO. MADE IN U.S.A.

46 1320

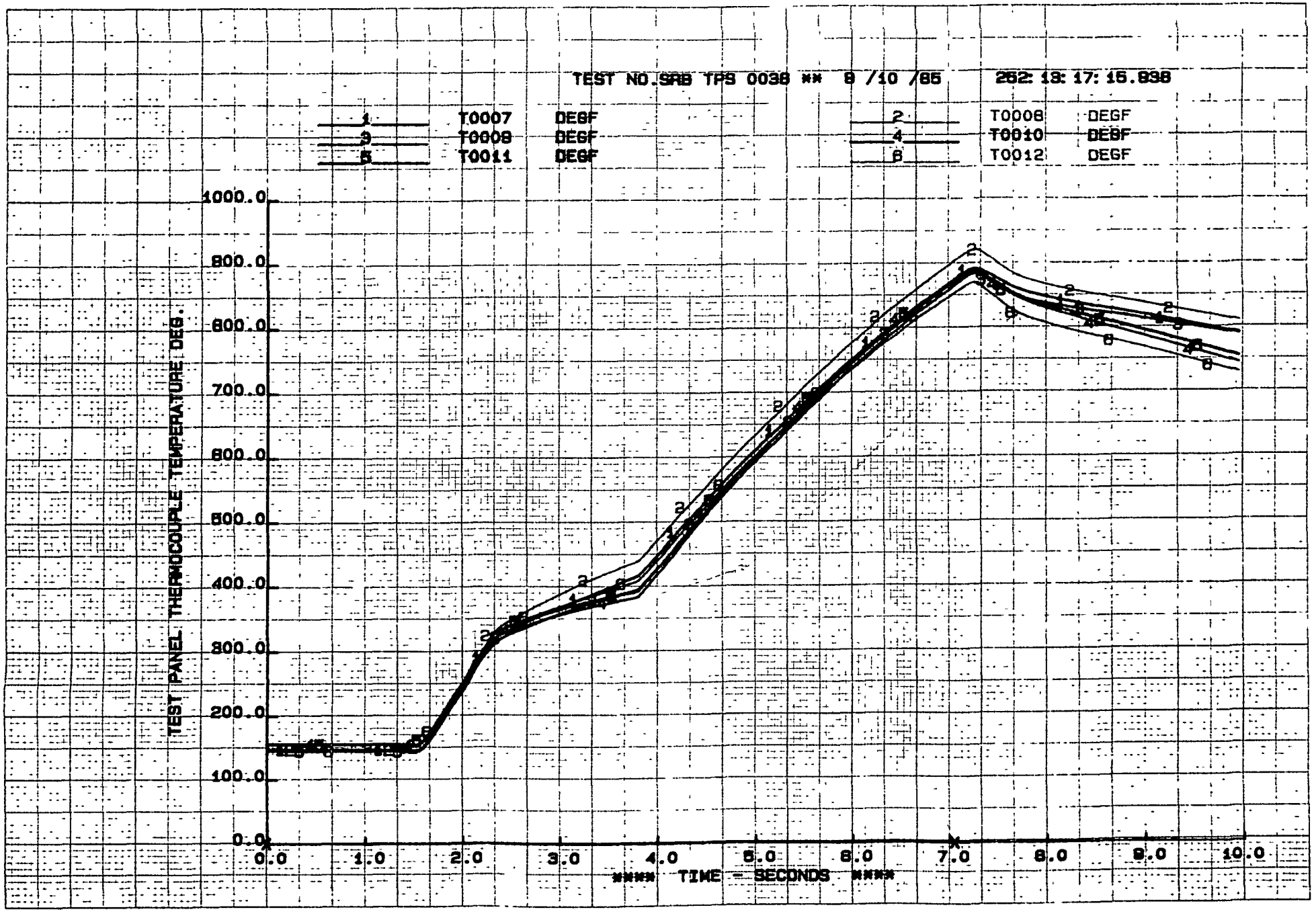

K+E 10 X 10 TO ½ INCH 7 X 10 INCHES KEUFFEL & ESSER CO MADE IN U.S.A.

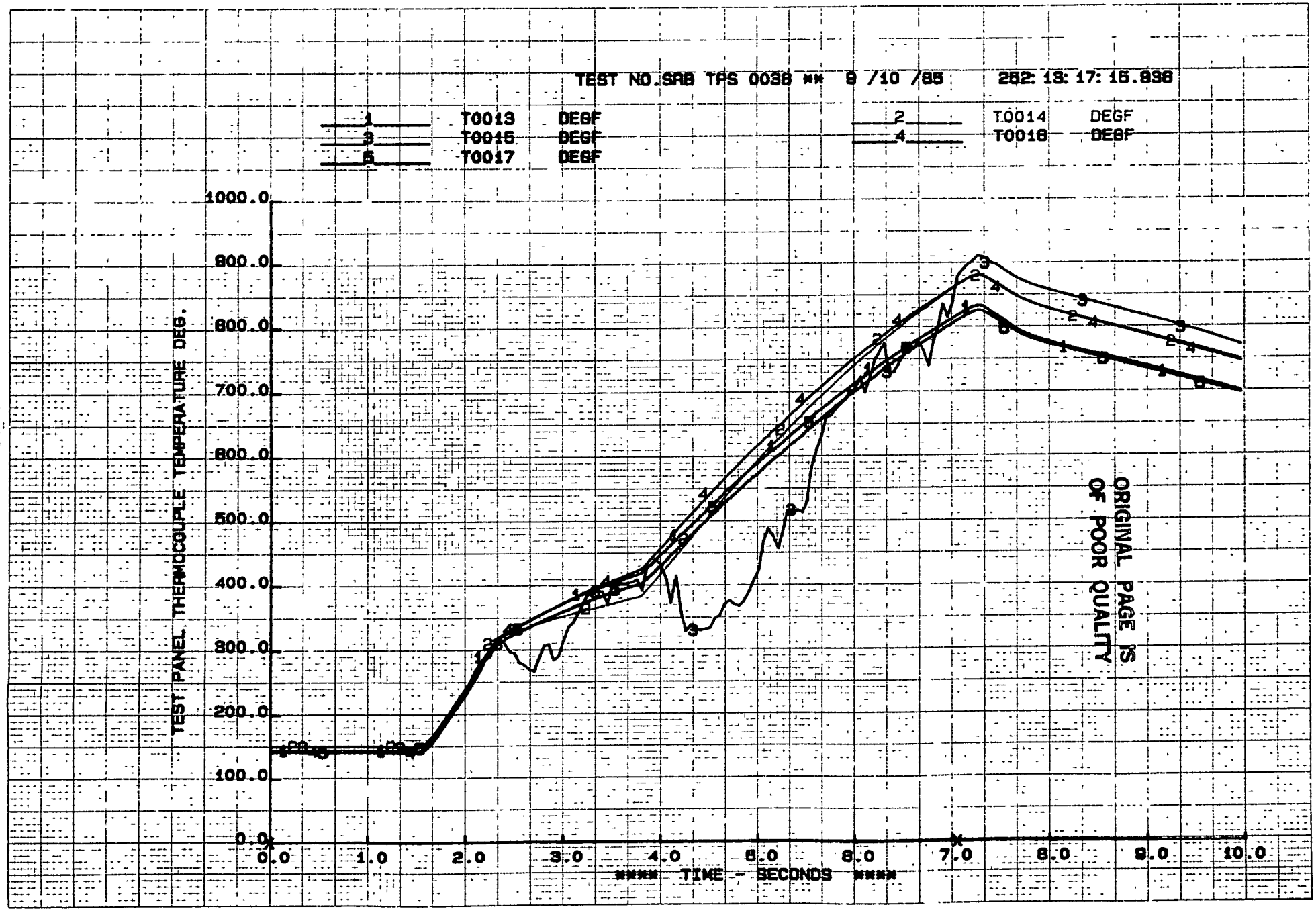

ORIGINAL PAGE IS OF POOR QUALITY

K+E 10 X 10 TO ½ INCH 7 X 10 INCHES
KEUFFEL & ESSER CO. MADE IN U.S.A.
46 1320

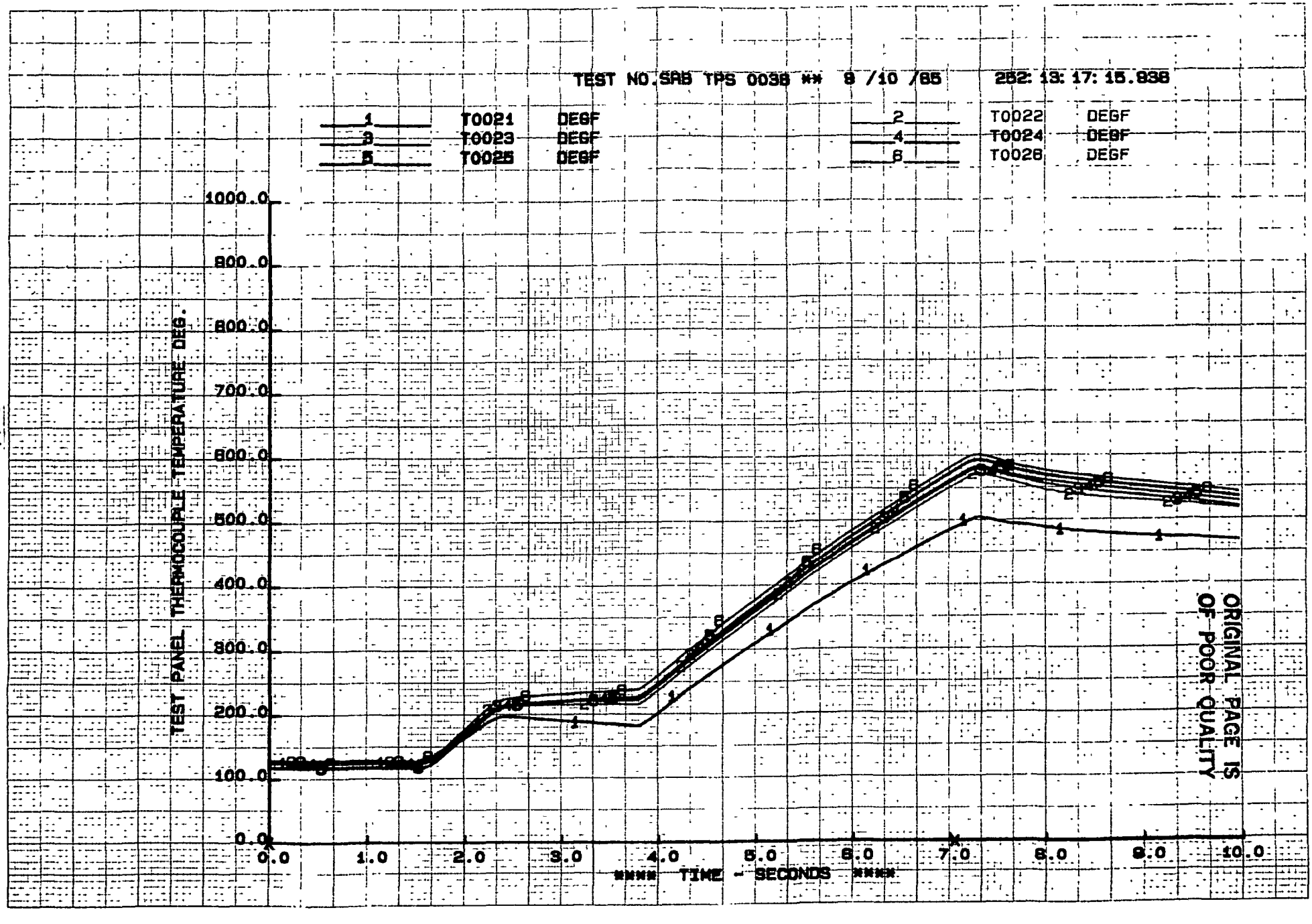

ORIGINAL PAGE IS
OF POOR QUALITY

K+E 10 X 10 TO 1/2 INCH 7 X 10 INCHES
KEUFFEL & ESSER CO. MADE IN U.S.A.

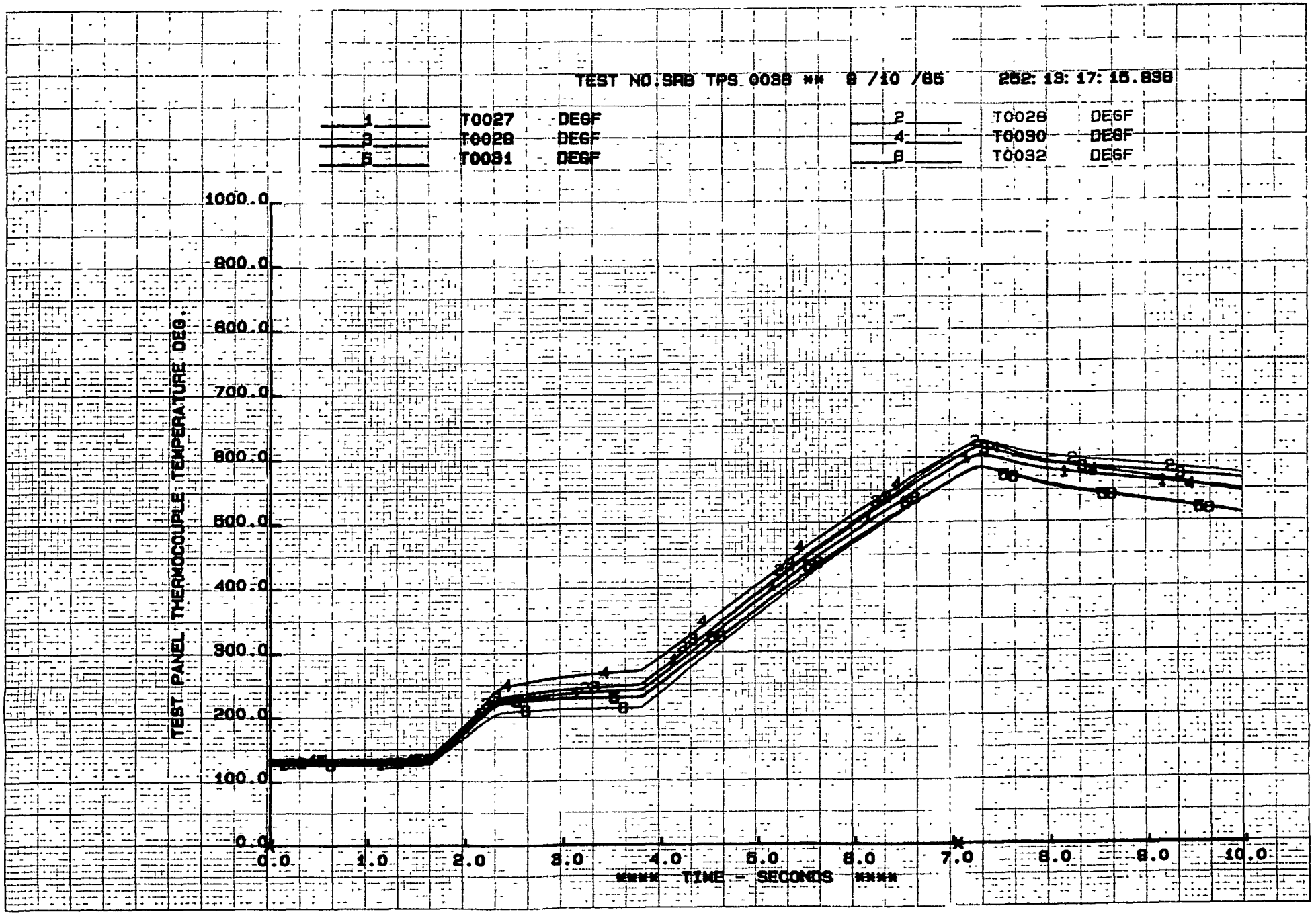

K+E 10 X 10 TO ½ INCH 7 X 10 IN. KEUFFEL & ESSER CO. MADE IN U.S.A.

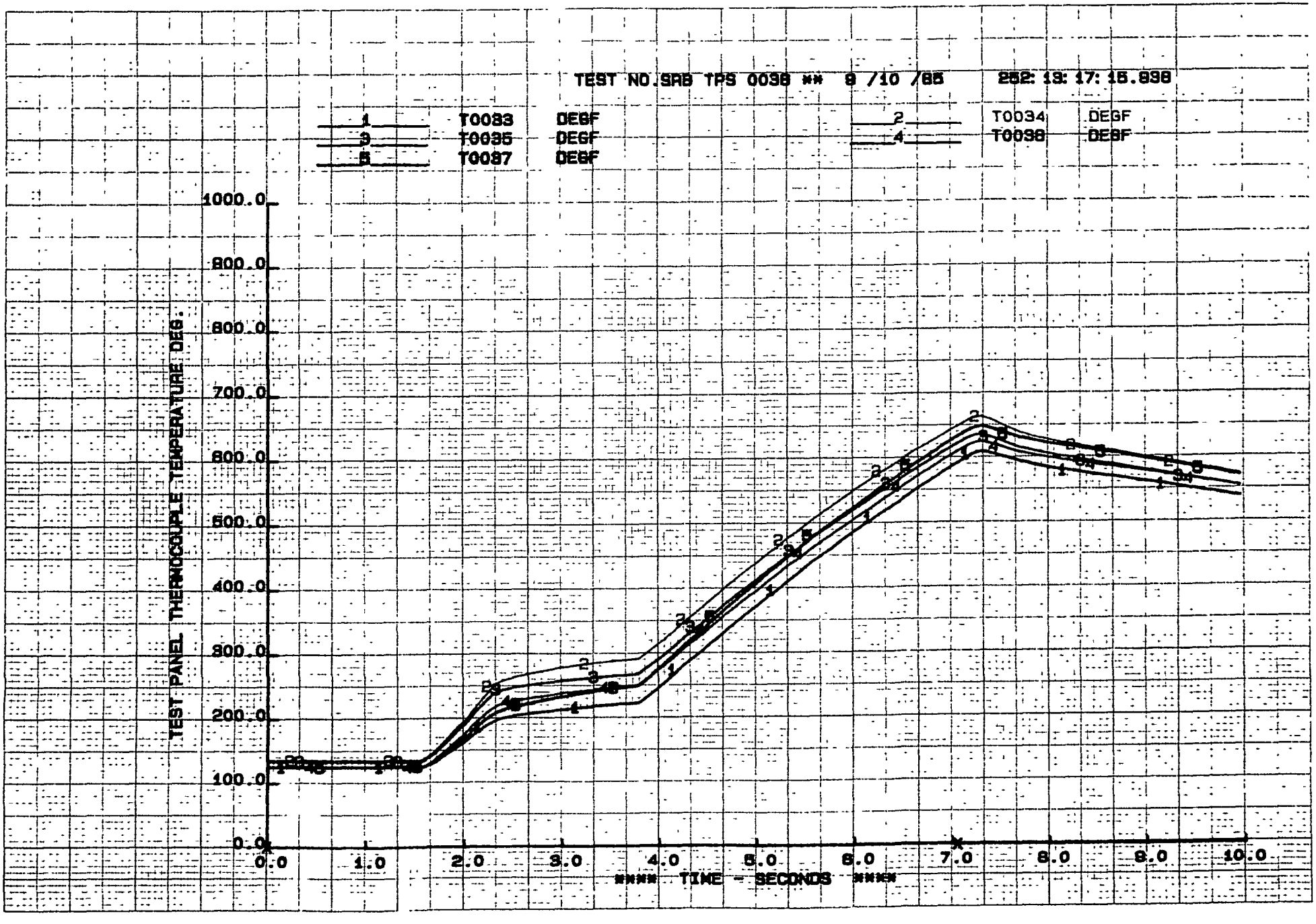

K+E 10 X 10 TO ½ INCH 7 X 10 INCHES KEUFFEL & ESSER CO MADE IN U.S.A.

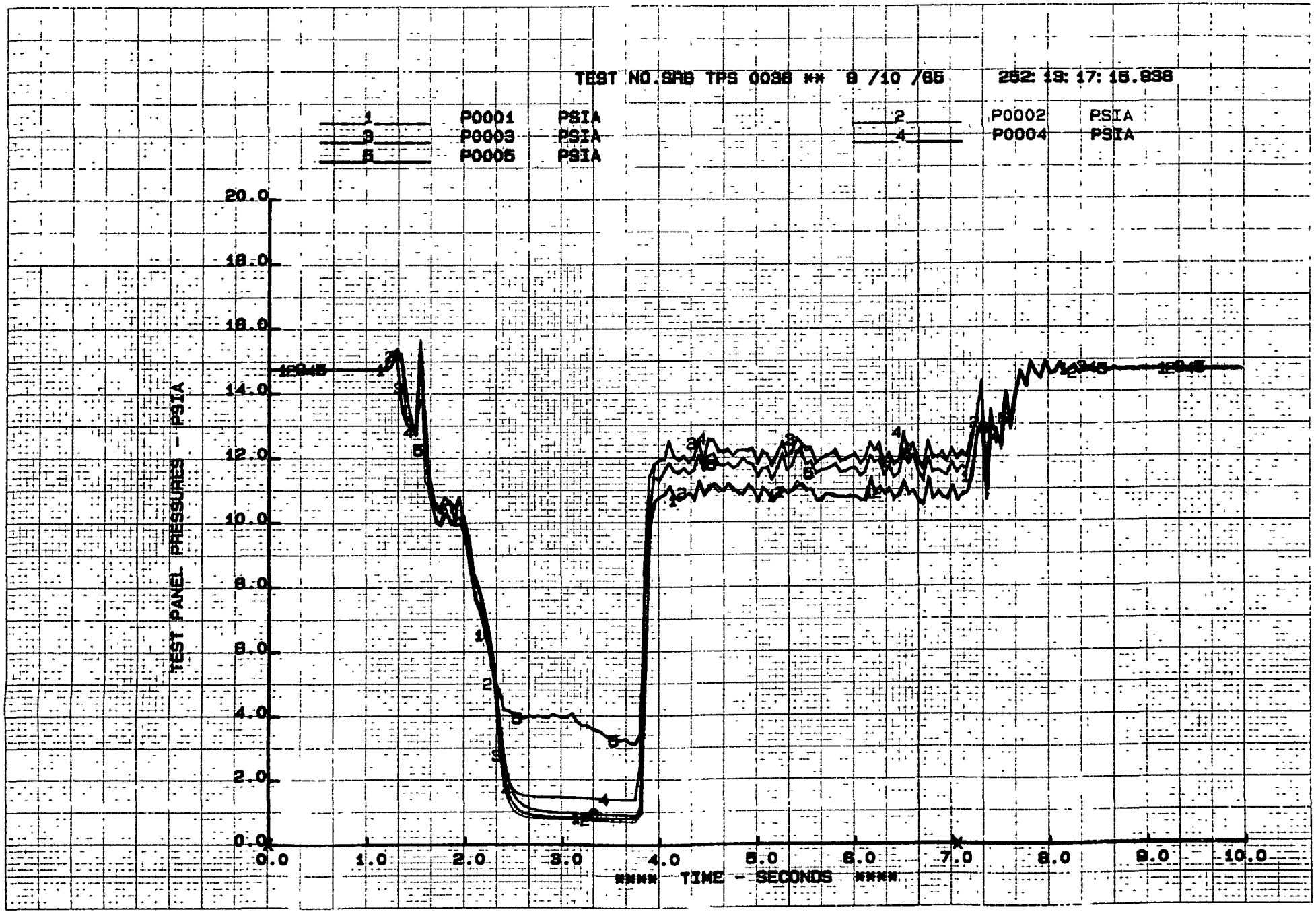

K+E 10 X 10 TO 1 INCH 7 X 10 INCHES KEUFFEL & ESSER CO MADE IN U.S.A.

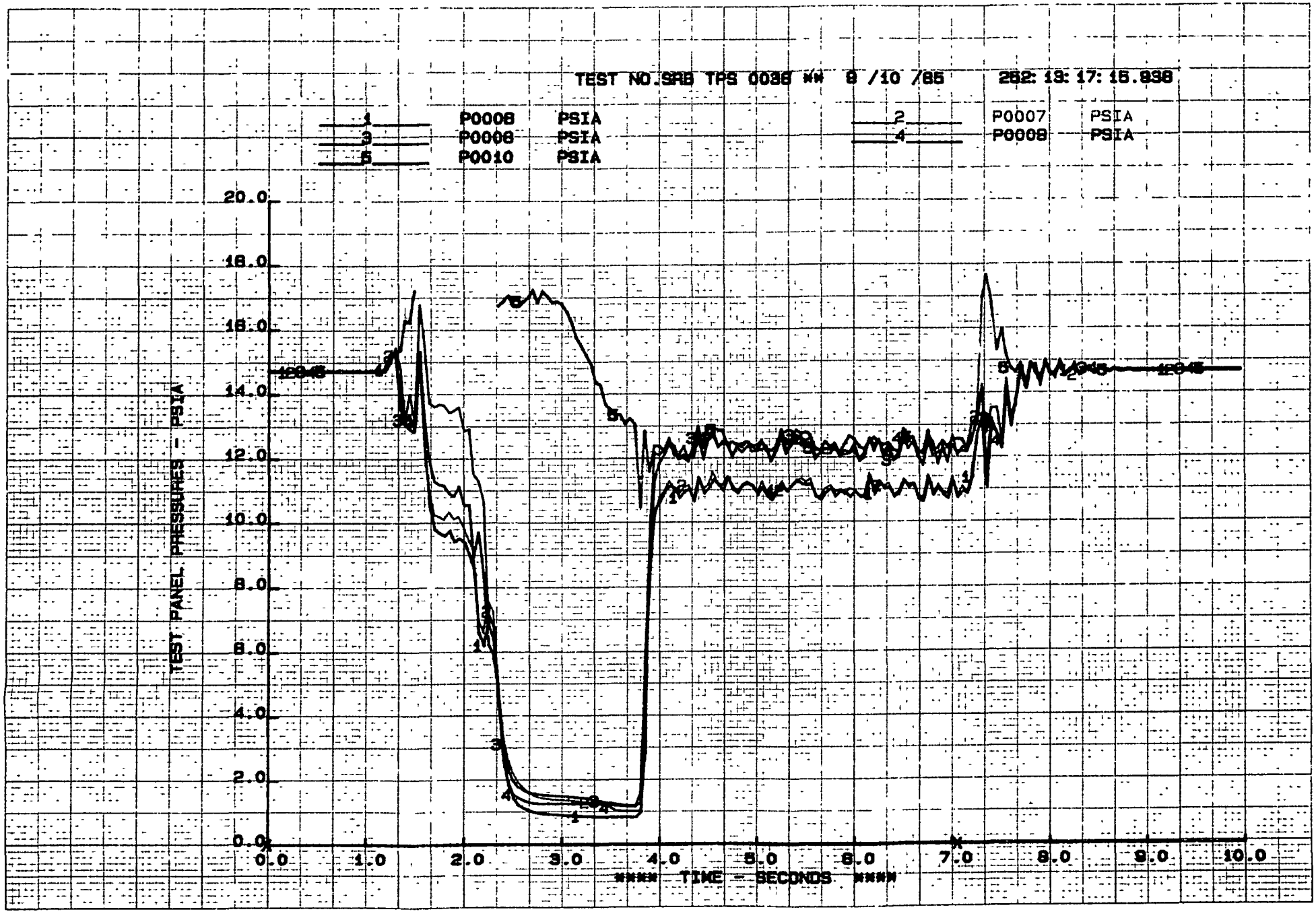

K+E 10 X 10 TO ½ INCH 7 X 10 INCHES KEUFFEL & ESSER CO MADE IN U.S.A.

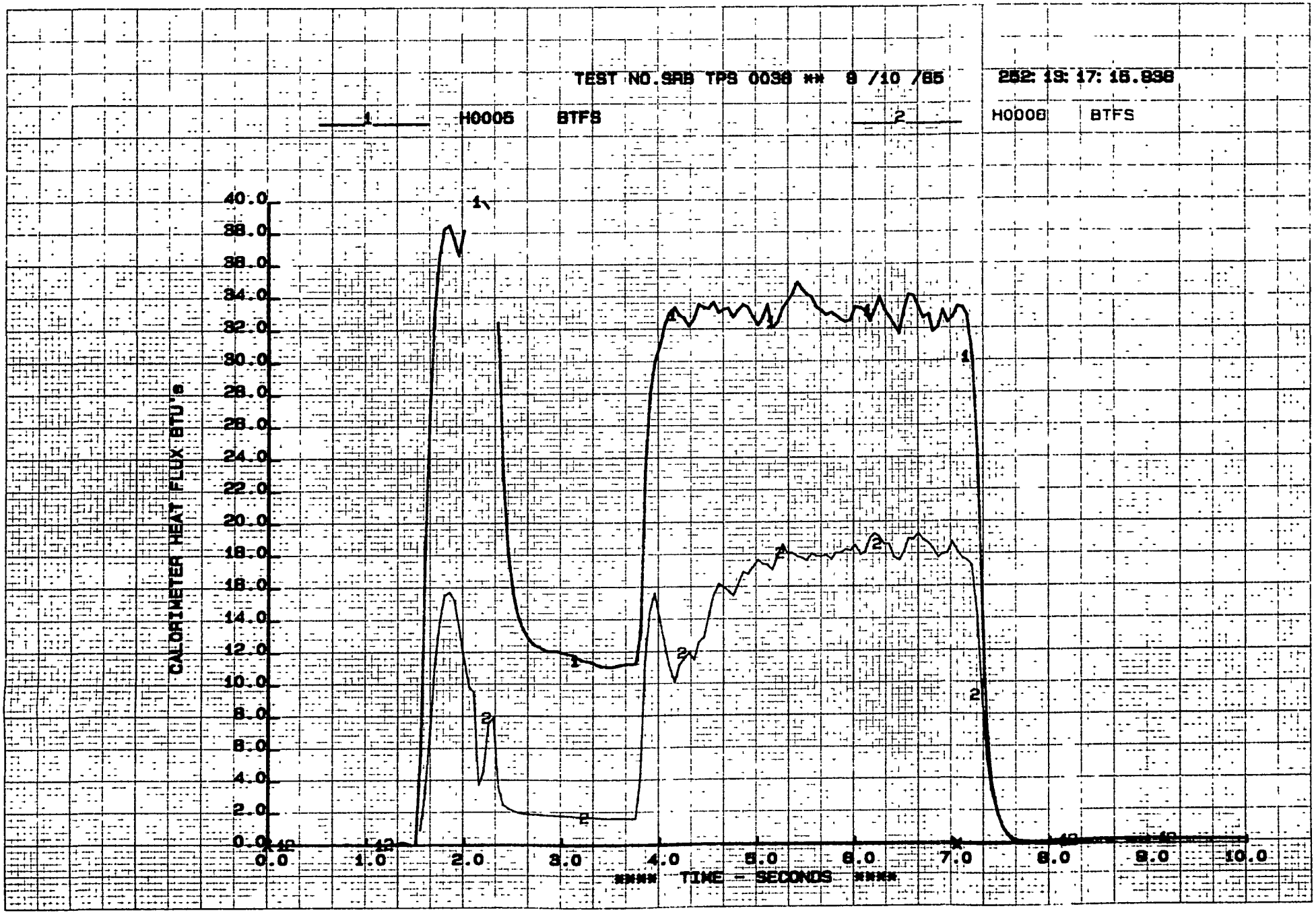

Appendix E

LISTING OF COMPUTER PROGRAM TO DETERMINE HGF SET PRESSURES, CHAMBER PRESSURES AND TEMPERATURES

ORIGINAL PAGE IS
OF POOR QUALITY

```
30 REM  PROGRAM TO DETERMINE HGF OPERATIONAL PARAMETERS SUCH AS
40 REM  O2 PRESSURES,  H2 PRESSURES, AND Tc TEMPERATURES.
50 REM
60 REM  ****  INITIALIZE PROGRAM ****
70 REM PRINT CHR$(27);CHR$(43): PRINT
80 PRINT
90 PRINT
100 PRINT "THE PURPOSE OF THIS PROGRAM IS TO ACT AS A TOOL IN CALCULATING"
110 PRINT "FOR ANY TWO OF THE FOUR VARIABLE HGF TEST REQUIREMENTS.": PRINT
120 PRINT TAB(5);"ASSIGNED DESIGNATORS FOR EACH VARIABLE ARE AS FOLLOWS:": PRINT
130 PRINT TAB(5);"OXIDIZER CONTROLLER PRESSURE...........'Pa' "
140 PRINT TAB(5);"HYDROGEN CONTROLLER PRESSURE...........'Ph' "
150 PRINT TAB(5);"COMBUSTION CHAMBER PRESSURE............'Pc' "
160 PRINT TAB(5);"COMBUSTION CHAMBER TEMPERATURE.........'Tc' "
170 PRINT TAB(15);"SELSCT DESIRED FUNCTION FROM THE FOLLOWING:":PRINT
180 PRINT TAB(25);"(1) FOR Pc IF Pa & Ph ARE KNOWN"
190 PRINT TAB(25);"(2) FOR Tc IF Pa & Ph ARE KNOWN"
200 PRINT TAB(25);"(3) FOR Pa IF Pc & Ph ARE KNOWN"
210 PRINT TAB(25);"(4) FOR Pa IF Tc & Ph ARE KNOWN"
220 PRINT TAB(25);"(5) FOR Pa IF Pc & Tc ARE KNOWN"
230 PRINT TAB(25);"(6) FOR Ph IF Pc & Tc ARE KNOWN"
240 PRINT TAB(25);"(7) TO QUIT THIS PROGRAM AND EXIT TO CP/M."
250 PRINT: PRINT
260 INPUT "ENTER NUMBER 1-7 FROM THE ABOVE MENU";E$
270 IF E$="1" GOTO 1000
280 IF E$="2" GOTO 2000
290 IF E$="3" GOTO 3000
300 IF E$="4" GOTO 4000
310 IF E$="5" GOTO 5000
320 IF E$="6" GOTO 6000
330 IF E$="7" GOTO 500
340 IF E$<"7" GOTO 60
500 PRINT CHR$(27);CHR$(43)
510 SYSTEM
520 END
1000 PRINT CHR$(27);CHR$(43): PRINT:PRINT:PRINT
1010 PRINT "SUBROUTINE FOR DETERMINING Pc IF Pa AND Ph PRESSURES ARE KNOWN"
1020 PRINT
1030 INPUT "ENTER PRESSURE (PSIG) VALUE FOR 'Pa' "; X%
1040 PRINT
1050 INPUT "ENTER PRESSURE (PSIG) VALUE FOR 'Ph' "; Y%
1070 ANS1= 17.72 + .1115 * (X% + Y%)
1080 PRINT "COMBUSTION CHAMBER PRESSURE (Pc) IS..... ";ANS1;"PSIG.": PRINT
1090 INPUT "ENTER 1 TO RETURN TO MENU OR 2 TO EXIT TO CP/M.";G$
1100 IF G$="1" GOTO 60
1110 IF G$="2" GOTO 500
1120 IF G$>"2" GOTO 1090
2000 PRINT CHR$(27);CHR$(43): PRINT:PRINT:PRINT
2010 PRINT "SUBROUTINE FOR DETERMINING Tc IF Pa AND Ph PRESSURES ARE KNOWN"
2020 PRINT
2030 INPUT "ENTER PRESSURE (PSIG) VALUE FOR 'Pa' "; X%
2040 PRINT
2050 INPUT "ENTER PRESSURE (PSIG) VALUE FOR 'Ph' "; Y%
2060 REM
2070 ANS2=  4704 - 3116 * (X% / Y%)
2080 PRINT "COMBUSTION CHAMBER PRESSURE (Pc) IS..... ";ANS2;"DEG.F":PRINT
2090 INPUT "ENTER 1 TO RETURN TO MENU OR 2 TO EXIT TO CP/M."; G$
2100 IF G$="1" GOTO 60
2110 IF G$="2" GOTO 500
2120 IF G$>"2" GOTO 2090
3000 PRINT CHR$(27);CHR$(43): PRINT:PRINT:PRINT
3010 PRINT "SUBROUTINE FOR DETERMINING OXIDATION CONTROLLER PRESSURES (Pa)"
3020 PRINT "IF Pc & Ph PRESSURES ARE KNOWN.":PRINT:PRINT
3030 INPUT "ENTER PRESSURE (PSIG) VALUE FOR 'Pc' "; X%
```

```
3040 PRINT
3050 INPUT "ENTER PRESSURE (PSIG) VALUE FOR 'Ph' "; F%
3070 ANS3= (( X% -17.72) / .1115) - F%
3080 PRINT "COMBUSTION CHAMBER PRESSURE (Pc) IS..... ";ANS3;"PSIG.":PRINT
3090 INPUT "ENTER 1 TO RETURN TO MENU OR 2 TO EXIT TO CP/M."; G$
3100 IF G$="1" GOTO 60
3110 IF G$="2" GOTO 500
3120 IF G$>"2" GOTO 3090
4000 PRINT CHR$(27);CHR$(43): PRINT:PRINT:PRINT
4010 PRINT "SUBROUTINE FOR DETERMINING OXIDIZER CONTROLLER PRESSURES (Pa)"
4020 PRINT "IF Tc TEMPERATURE & Ph PRESSURES IS KNOWN.":PRINT:PRINT
4030 INPUT "ENTER TEMPERATURE (DEG.F) VALUE FOR 'Tc' "; T%
4040 PRINT
4050 INPUT "ENTER PRESSURE (PSIG) VALUE FOR 'Ph'. "; F%
4070 ANS4= ((4704 - T%) / 3116) * F%
4080 PRINT "OXIDATION CONTROL PRESSURE (Pa) SETTING IS ";ANS4;"PSIG.":PRINT
4090 INPUT "ENTER 1 TO RETURN TO MENU OR 2 TO EXIT TO CP/M."; G$
4100 IF G$="1" GOTO 60
4110 IF G$="2" GOTO 500
4120 IF G$>"2" GOTO 4090
5000 PRINT CHR$(27);CHR$(43): PRINT:PRINT:PRINT
5010 PRINT "SUBROUTINE FOR DETERMINING OXIDATION CONTROL PRESSURES  (Pa)"
5020 PRINT "IF Pc PRESSURE & Tc TEMPERATURE ARE KNOWN.":PRINT:PRINT
5030 INPUT "ENTER PRESSURE (PSIG) VALUE FOR 'Pc' "; C%
5040 PRINT
5050 INPUT "ENTER TEMPERATURE (DEG.F) VALUE FOR 'Pc' "; T%
5070 ANS5= (( 4704 - T%) / 3116) * ( 27946.2 * ( C% - 17.72)) / ( 7820 - T%)
5080 PRINT "OXIDATION CONTROL PRESSURE (Pa) SETTING IS ";ANS5;"PSIG.":PRINT
5090 INPUT "ENTER 1 TO RETURN TO MENU OR 2 TO EXIT TO CP/M.";G$
5100 IF G$="1" GOTO 60
5110 IF G$="2" GOTO 500
5120 IF G$>"2" GOTO 5090
6000 PRINT CHR$(27);CHR$(43): PRINT:PRINT:PRINT
6010 PRINT "SUBROUTINE FOR DETERMINING HYDROGEN(FUEL) CONTROLLER PRESSURES(Ph)"
6020 PRINT " IF Pc PRESSURE & Tc TEMPERATURE ARE KNOWN.": PRINT: PRINT
6030 INPUT "ENTER PRESSURE (PSIG) VALUE FOR 'Pc'. "; X%
6040 PRINT
6050 INPUT "ENTER TEMPERATURE (DEG.F) VALUE FOR 'Pc'. "; Y%
6070 ANS6= (( X% - 17.72) / .115) / ( 1 + (( 4704 - T%) / 3116))
6080 PRINT "HYDROGEN CONTROLLER  PRESSURE (Ph) SETTING IS ";ANS6;"PSIG.":PRINT
6090 INPUT "ENTER 1 TO RETURN TO MENU OR 2 TO EXIT TO CP/M.";G$
6100 IF G$="1" GOTO 60
6110 IF G$="2" GOTO 500
6120 IF G$>"2" GOTO 6090
```

Appendix F

LISTING OF NASA-MSFC STATIC MEASURING PROGRAM FOR HGF CAL RUNS

53-2576
R. SMITH

STATIC MEASURING PROGRAM
ET64

HOT GAS FACILITY IA

P092-0017 FORWARD

8/13/85

GEORGE C. MARSHALL SPACE FLIGHT CENTER
TEST LABORATORY
HUNTSVILLE, AL

STATIC NO.	SIU R/C	MEASUREMENT DESCRIPTION	TRANSDUCER NAME	CALIB. RANGE	REMARKS
T 1	0500	TOP TEST PANEL T/C #1	TC CR/A	0/1000F	
T 2	0501	TOP TEST PANEL T/C #2	TC CR/A	0/1000F	
T 3	0502	TOP TEST PANEL T/C #3	TC CR/A	0/1000F	
T 4	0503	TOP TEST PANEL T/C #4	TC CR/A	0/1000F	
T 5	0504	TOP TEST PANEL T/C #5	TC CR/A	0/1000F	
T 6	0505	TOP TEST PANEL T/C #6	TC CR/A	0/1000F	
T 7	0506	TOP TEST PANEL T/C #7	TC CR/A	0/1000F	
T 8	0507	TOP TEST PANEL T/C #8	TC CR/A	0/1000F	
T 9	0508	TOP TEST PANEL T/C #9	TC CR/A	0/1000F	
T 10	0509	TOP TEST PANEL T/C #10	TC CR/A	0/1000F	
T 11	0510	TOP TEST PANEL T/C #11	TC CR/A	0/1000F	
T 12	0511	TOP TEST PANEL T/C #12	TC CR/A	0/1000F	
T 13	0512	TOP TEST PANEL T/C #13	TC CR/A	0/1000F	
T 14	0513	TOP TEST PANEL T/C #14	TC CR/A	0/1000F	
T 15	0514	TOP TEST PANEL T/C #15	TC CR/A	0/1000F	
T 16	0515	TOP TEST PANEL T/C #16	TC CR/A	0/1000F	
T 17	0516	TOP TEST PANEL T/C #17	TC CR/A	0/1000F	
T 18	0517	TOP TEST PANEL T/C #18	TC CR/A	0/1000F	
T 19	0518	TOP TEST PANEL T/C #19	TC CR/A	0/1000F	
T 20	0519	TOP TEST PANEL T/C #20	TC CR/A	0/1000F	
T 21	0520	WEST TEST PANEL T/C #1	TC CR/A	0/1000F	
T 22	0521	WEST TEST PANEL T/C #2	TC CR/A	0/1000F	

STATIC NO.	SIU R/C	MEASUREMENT DESCRIPTION	TRANSDUCER NAME	CALIB. RANGE	REMARKS
T 23	0522	WEST TEST PANEL T/C #3	TC CR/A	0/1000F	
T 24	0523	WEST TEST PANEL T/C #4	TC CR/A	0/1000F	
T 25	0524	WEST TEST PANEL T/C #5	TC CR/A	0/1000F	
T 26	0525	WEST TEST PANEL T/C #6	TC CR/A	0/1000F	
T 27	0526	WEST TEST PANEL T/C #7	TC CR/A	0/1000F	
T 28	0527	WEST TEST PANEL T/C #8	TC CR/A	0/1000F	
T 29	0528	WEST TEST PANEL T/C #9	TC CR/A	0/1000F	
T 30	0529	WEST TEST PANEL T/C #10	TC CR/A	0/1000F	
T 31	0530	WEST TEST PANEL T/C #11	TC CR/A	0/1000F	
T 32	0531	WEST TEST PANEL T/C #12	TC CR/A	0/1000F	
T 33	0600	WEST TEST PANEL T/C #13	TC CR/A	0/1000F	
T 34	0601	WEST TEST PANEL T/C #14	TC CR/A	0/1000F	
T 35	0602	WEST TEST PANEL T/C #15	TC CR/A	0/1000F	
T 36	0603	WEST TEST PANEL T/C #16	TC CR/A	0/1000F	
T 37	0604	WEST TEST PANEL T/C #17	TC CR/A	0/1000F	
T 38	0605	WEST TEST PANEL T/C #18	TC CR/A	0/1000F	
T 39	0606	WEST TEST PANEL T/C #19	TC CR/A	0/1000F	
T 40	0607	WEST TEST PANEL T/C #20	TC CR/A	0/1000F	
T 41	0608	EAST TEST PANEL T/C #1	TC CR/A	0/1000F	
T 42	0609	EAST TEST PANEL T/C #2	TC CR/A	0/1000F	
T 43	0610	EAST TEST PANEL T/C #3	TC CR/A	0/1000F	

STATIC NO.	SIU R/C	MEASUREMENT DESCRIPTION	TRANSDUCER NAME	CALIB. RANGE	REMARKS
T 44	0611	EAST TEST PANEL T/C #4	TC CR/A	0/1000F	
T 45	0612	EAST TEST PANEL T/C #5	TC CR/A	0/1000F	
T 46	0613	EAST TEST PANEL T/C #6	TC CR/A	0/1000F	
T 47	0614	EAST TEST PANEL T/C #7	TC CR/A	0/1000F	
T 48	0615	EAST TEST PANEL T/C #8	TC CR/A	0/1000F	
T 49	0616	EAST TEST PANEL T/C #9	TC CR/A	0/1000F	
T 50	0617	EAST TEST PANEL T/C #10	TC CR/A	0/1000F	
T 51	0618	EAST TEST PANEL T/C #11	TC CR/A	0/1000F	
T 52	0619	EAST TEST PANEL T/C #12	TC CR/A	0/1000F	
T 53	0620	EAST TEST PANEL T/C #13	TC CR/A	0/1000F	
T 54	0707	EAST TEST PANEL T/C #14	TC CR/A	0/1000F	
T 55	0708	EAST TEST PANEL T/C #15	TC CR/A	0/1000F	
T 56	0709	EAST TEST PANEL T/C #16	TC CR/A	0/1000F	
T 57	0710	EAST TEST PANEL T/C #17	TC CR/A	0/1000F	
T 58	0711	EAST TEST PANEL T/C #18	TC CR/A	0/1000F	
T 59	0712	EAST TEST PANEL T/C #19	TC CR/A	0/1000F	
T 60	0713	EAST TEST PANEL T/C #20	TC CR/A	0/1000F	
T 61	0714	BOTTOM TEST PANEL T/C #1	TC CR/A	0/1000F	
T 62	0715	BOTTOM TEST PANEL T/C #2	TC CR/A	0/1000F	
T 63	0716	BOTTOM TEST PANEL T/C #3	TC CR/A	0/1000F	
T 64	0717	BOTTOM TEST PANEL T/C #4	TC CR/A	0/1000F	
T 65	0718	BOTTOM TEST PANEL T/C #5	TC CR/A	0/1000F	

STATIC NO.	SIU R/C	MEASUREMENT DESCRIPTION	TRANSDUCER NAME	CALIB. RANGE	REMARKS
T 66	0719	BOTTOM TEST PANEL T/C #6	TC CR/A	0/1000F	
T 67	0720	BOTTOM TEST PANEL T/C #7	TC CR/A	0/1000F	
T 68	0721	BOTTOM TEST PANEL T/C #8	TC CR/A	0/1000F	
T 69	0722	BOTTOM TEST PANEL T/C #9	TC CR/A	0/1000F	
T 70	0723	BOTTOM TEST PANEL T/C #10	TC CR/A	0/1000F	
T 71	0724	BOTTOM TEST PANEL T/C #11	TC CR/A	0/1000F	
T 72	0725	BOTTOM TEST PANEL T/C #12	TC CR/A	0/1000F	
T 73	0212	BOTTOM TEST PANEL T/C #13	TC CR/A	0/1000F	
T 74	0213	BOTTOM TEST PANEL T/C #14	TC CR/A	0/1000F	
T 75	0214	BOTTOM TEST PANEL T/C #15	TC CR/A	0/1000F	
T 76	0215	BOTTOM TEST PANEL T/C #16	TC CR/A	0/1000F	
T 77	0216	BOTTOM TEST PANEL T/C #17	TC CR/A	0/1000F	
T 78	0217	BOTTOM TEST PANEL T/C #18	TC CR/A	0/1000F	
T 79	0218	BOTTOM TEST PANEL T/C #19	TC CR/A	0/1000F	
T 80	0219	BOTTOM TEST PANEL T/C #20	TC CR/A	0/1000F	
T 101	0621	AIR BOTTLE TEMP	TC CR/A	0/150F	
T 102	0622	AIR BOTTLE PROBE TEMP	TC CR/A	0/150F	
T 103	0623	OXIDIZER IGN NOZ W	TC CR/A	0/150F	
T 104	0624	GH_2 IGN NOZZLE W	TC CR/A	0/150F	
T 105	0625	OXIDIZER ORIFICE IN	TC CR/A	-150/150F	
T 106	0626	GH_2 NOZZLE	TC CR/A	0/150F	

STATIC NO.	SIU R/C	MEASUREMENT DESCRIPTION	TRANSDUCER NAME	CALIB. RANGE	REMARKS
T 110	0630	AMBIENT TC CHECK	TC CR/A	0/150F	
T 113	0631	MAIN CHAMBER #1 TC	TC CR/A	0/2000F	
T 114	0627	MAIN CHAMBER #2 TC	TC CR/A	0/2000F	
T 115	0628	MAIN CHAMBER #3 TC	TC CR/A	0/2000F	
T 116	0629	MAIN CHAMBER #4 TC	TC CR/A	0/2000F	
T 117	0705	MAIN CHAMBER #5 TC	TC CR/A	0/2000F	
T 118	0706	MAIN CHAMBER #6 TC	TC CR/A	0/2000F	
T 119	0700	INLET WATER TEMP.	T/C CR-A	0/1000F	
T 120	0701	NOZZLE #1 OUTLET WATER TEMP.	T/C CR-A	0/1000F	
T 121	0702	NOZZLE #2 OUTLET WATER TEMP.	T/C CR-A	0/1000F	
T 122	0703	DIFFUSER DUCT T/C #1 TEMP.	T/C CR-A	0/2000F	
T 123	0704	DIFFUSER DUCT T/C #2 TEMP.	T/C CR-A	0/2000F	
T 124	0714	DIFFUSER DUCT T/C #3 TEMP.	T/C CR-A	0/2000F	
PRESSURES					
P 701	0300	GH_2 IGN REG	G-TABR 751786	2000 PSIS	
P 702	0301	GH_2 IGN NOZ E DOWNSTREAM ORIFICE	SB-TABR 751792	1000 PSIS	
PU702	0328	GH2 IGN NOZ E UPSTREAM ORIFICE	TABER 751794	1000 PSIA	
P 703	0302	GH_2 IGN NOZ W	SG-TABR 751793	1000 PSIS	
PU703	0329	GH2 IGN NOZ W UPSTREAM ORIFICE	TABER 850505	1000 PSIA	

STATIC NO.	SIU R/C	MEASUREMENT DESCRIPTION	TRANSDUCER NAME	CALIB. RANGE	REMARKS
P 704	0000	IGN CHAMBER E	DATA SENSORS 191	1000 PSIA	150 LOW 375 HIGH 1 SEC DELAY
P 705	0001	IGN CHAMBER W	SG-AL 751791	1000 PSIA	150 LOW 375 HIGH 1 SEC DELAY
P 706	0303	OXIDIZER IGN REG	G-DYN 35616	1000 PSIS	
P 707	0304	OXIDIZER IGN NOZ E DOWNSTREAN ORIFICE	SG-DYN 28341	1000 PSIS	
PU707	0330	OXIDIZER IGN NOZ E UPSTREAM ORIFICE	TABER 850506	1000 PSIA	
P 708	0305	OXIDIZER IGN NOZ W DOWNSTREAM ORIFICE	SG-DYN 27673	1000 PSIS	
PU 708	0331	OXIDIZER IGN NOZ W UPSTREAM ORIFICE	TABER 761760	1000 PSIA (PSIG ADJ)	
P 709	0306	OX FLOW CON REG PR.	TABER 802028	3000 PSIS	
P 710	0307	OX INJ PR.	SG-AL 43776	300 PSIS	
P 711	0308	GH_2 FLO CON REG PR.	SG-TABR 781337	5000 PSIS	
P 712	0309	GH_2 INJECTOR	SG-TABR 820522	500 PSIS	
P 713	0028	MAIN CHAMBER PC	SG-AL 41794	200 PSIA (PSIS)	75 LOW 150 HIGH 1.5 SEC DELAY
PQ713	0324	MAIN CHAMBER PC CLOSED-COUPLE	DYNISCO 27167	500 PSIA (PSIG-ADJ)	ANALOG BAY 29 # 14
P 714	0003	MAIN CHAMBER (BACKUP) PC	ALINCO 41582	200 PSIA (PSIS)	75 LOW 150 HIGH 1.5 SEC DELAY
P 715	0325	OXIDIZER VALVE MANIFOLD	DYNISCO 27686	1500 PSIS	

STATIC NO.	SIU R/C	MEASUREMENT DESCRIPTION	TRANSDUCER NAME	CALIB. RANGE	REMARKS
P 716	0326	GH2 VALVE MANIFOLD	TABER 811887	2500 PSIG	
P 719	0310	HYDRAULIC SUPPLY	TABER 761490	5000 PSIG	
P 722	0311	COMB CHAMBER H20 INLET PRESS	SG-ST.C 6704	200 PSIG	
P 723	0319	NOZZLE H20 INLET PRESS	ALINCO 41315	200 PSIG	CUTOFF 100 PSIA HIGH 75 PSIA LOW
P 724	0320	NOZZLE H20 INLET PRESS BACKUP	STANDARD 6691	200 PSIG	CUTOFF 100 PSIA HIGH 1.00 VDC = 100 PSI 75 PSIA LOW
P 725	0321	DIFFUSER SUPPLY COOLANT SYSTEM	ALLEGANY 22133	50 PSIG	CUTOFF 30 PSIA LOW 47.2 PSIA HIGH 1.00 VDC = 30 PSI
P 726	0322	DIFFUSER SUPPLY COOLANT SYSTEM	TABER 781313	0-50 PSIG	CUTOFF 30 PSIA LOW 47.2 PSIA HIGH
P 753	0312	DP GH_2 INJ/CMBR #1	TABER 813405	100 PSID	5 LOW 1.5 SEC DELAY
P 754	0313	DP GH_2 INJ/CMBR #2	TABER 813406	100 PSID	5 LOW 1.5 SEC DELAY
P 781	0314	DP MAIN OXID ORF	SG-DYN 29636	2500 PSID	
P 782	0315	GH2 TRAILER PRESSURE	SG-TABR 781385	5000 PSIG	
P 783	0316	AIR SUPPLY	DYNISCO 25225	5000 PSIG	
P 790	0323	AIR BOTTLE PRESS.	DYNISCO 25622	3000 PSIG	
P 791	0004	PITOT TUBE PRESS	SG-TABR 830715	50 PSIA	

STATIC NO.	SIU R/C	MEASUREMENT DESCRIPTION	TRANSDUCER NAME	CALIB. RANGE	REMARKS
P 1	0005	STATIC #1	SG-TABR 752295	25 PSIA	
P 2	0006	STATIC #2	SG-TABR 752302	25 PSIA	
P 3	0007	STATIC #3	SG-TABR 752273	25 PSIA	
P 4	0027	STATIC #4	SG-TABR 752268	25 PSIA	
P 5	0009	STATIC #5	SG-TABR 752306	25 PSIA	
P 6	0010	STATIC #6	SG-TABR 752279	25 PSIA	
P 7	0011	STATIC #7	SG-TABR 840713	25 PSIA	
P 8	0012	STATIC #8	SG-TABR 840711	25 PSIA	
P 9	0013	STATIC #9	SG-TABR 840712	25 PSIA	
P 10	0014	STATIC #10	SG-TABR 752294	25 PSIA	
P 11	0015	STATIC #11	SG-TABR 752306	25 PSIA	
P 12	0016	STATIC #12	TABER 752298	25 PSIA	
P 13	0017	STATIC #13	TABER 840708	25 PSIA	
P 14	0018	STATIC #14	TABER 840714	25 PSIA	

STATIC NO.	SIU R/C	MEASUREMENT DESCRIPTION	TRANSDUCER NAME	CALIB. RANGE	REMARKS
P 15	0019	STATIC #15	TABER 840716	25 PSIA	
P 16	0100	STATIC #16	TABER 752303	25 PSIA	
P 17	0101	STATIC #17	TABER 752287	25 PSIA	
P 18	0102	STATIC #18	TABER 840715	25 PSIA	
P 19	0103	STATIC #19	TABER 752286	25 PSIA	
P 20	0104	STATIC #20	TABER 752281	25 PSIA	
P 21	0105	STATIC #21	TABER 752284	25 PSIA	
P 22	0106	STATIC #22	TABER 840710	25 PSIA	
P 26	0110	DIFFUSER #1	CEC 2848	0-10 PSIA	
P 27	0111	DIFFUSER #2	CEC 2823	0-10 PSIA	
P 28	0112	DIFFUSER #3	CEC 1573	0-10 PSIA	
P 29	0113	DIFFUSER #4	CEC 2844	0-10 PSIA	
P 30	0114	DIFFUSER #5	CEC 2820	0-10 PSIA	
P 31	0115	DIFFUSER #6	CEC 2825	0-10 PSIA	
P 32	0116	DIFFUSER #7	CEC 2826	0-10 PSIA	
P 33	0117	DIFFUSER #8	CEC 2828	0-10 PSIA	
P 34	0118	DIFFUSER #9	CEC 2831	0-10 PSIA	
P 35	0119	DIFFUSER #10	CEC 2834	0-10 PSIA	

STATIC NO.	SIU R/C	MEASUREMENT DESCRIPTION	TRANSDUCER NAME	CALIB. RANGE	REMARKS
P 36	0120	DIFFUSER #11	TABER 830710	0-15 PSIA	
P 37	0121	DIFFUSER #12	CEC 2839	0-10 PSIA	
P 38	0122	DIFFUSER #13	CEC 2843	0-10 PSIA	
P 39	0123	DIFFUSER #14	TABER 820718	0-30 PSIA	
P 40	0124	PITOT DIFFUSER PRES.	STANDARD 6671	100 PSIG	
P 41	0125	TEST SECTION #1 (TOP)	CEC 2842	0-20 PSIA	
P 42	0126	TEST SECTION #2 (BOTTOM)	TABER 752272	0-25 PSIA	
P 43	0127	TEST SECTION #3 (WEST SIDE)	TABER	0-25 PSIA	
P 44	0128	TEST SECTION #4 (EAST SIDE)	ALINCO 47199	0-20 PSIA	
P 45	0129	NOZZLE #1	TABER 830709	0-15 PSIA	
P 46	0130	NOZZLE #2	TABER 830712	0-15 PSIA	
P 47	0131	NOZZLE #3	TABER 820714	0-15 PSIA	
P 48	0200	NOZZLE #4	TABER 820716	0-15 PSIA	
H 1	0020	HEAT FLUX 1 TEST SECTION-TOP.	MEDTHERM 7248417	0-40 BTU	
H 2	0021	HEAT FLUX 2 TEST SECTION-BOT.	MEDTHERM 7248437	0-40 BTU	

STATIC NO.	SIU R/C	MEASUREMENT DESCRIPTION	TRANSDUCER NAME	CALIB. RANGE	REMARKS
H 3	0022	HEAT FLUX 3 TEST SECTION-WEST SIDE	MEDTHERM 7248422	0-40 BTU	
H 4	0023	HEAT FLUX 4 TEST SECTION-EAST SIDE	MEDTHERM 7248438	0-40 BTU	
H 5	0024	TOP TEST PANEL HEAT FLUX	MEDTHERM 98837	0-40BTU	
H 6	0025	WEST TEST PANEL HEAT FULX	MEDTHERM 98838	0-40BTU	
H 7	0026	SPARE CALORIMETER	MEDTHERM 7248433	0-40BTU	
FLOWMETERS					
F 1	0202	FLOW COMBUSTER COOL	POTTER RAA 235	100 GPM 190HZ=5.00 V=250GPM	CUTOFF 85 GPM MINIMU
F 2	0207	INLET COMBUSTION CHAMBER #1	POTTER 346	0-10 GPM 400HZ=4.00V 10.4 GPM	CUTOFF 2.0 GPM LOW
F 3	0208	OUTLET COMBUSTION CHAMBER #2	POTTER 317	400HZ=2.5V =10.75 GPM	CUTOFF 2.0 GPM LOW
F 4	0209	OUTLET COMBUSTION CHAMBER #1	POTTER 335	400HZ=2.5V 10.2 GPM	CUTOFF 2.0 GPM LOW
F 5	0210	INLET COMBUSTION CHAMBER #2	POTTER 357	400HZ=2.5V =10.2GPM	CUTOFF 2.0 GPM LOW
POSITION INDICATOR					
D1	0030	HYDROGEN VALVE POSITION		0-100%	
D2	0031	OXIDIZER VALVE POSITION		0-100%	

STATIC NO.	SIU R/C	MEASUREMENT DESCRIPTION	TRANSDUCER NAME	CALIB. RANGE	REMARKS
HYDROGEN DETECTION SENSORS					
GH1	0428	IGNITER		0-100% LEL	
GH2	0429	H2 VALVE		0-100% LEL	
GH3	0430	MAIN GH2 VALVE		0-100% LEL	
GH4	0431	DIFFUSER DUCT SENSOR		0-100% LEL	
CONTROL TRANSDUCERS					
C 1		GH2 SUPPLY CONTROL TRANSDUCER	TABER 751787	0-2000 PSIG	
C 2		GH2 CONTROL TRANSDUCER	PACE 9874	0-1500 PSIG	MODEL P2G-1500 PSI

Appendix G

CALIBRATION PANEL INSTRUMENTATION LOCATIONS

HGF CAL PANEL

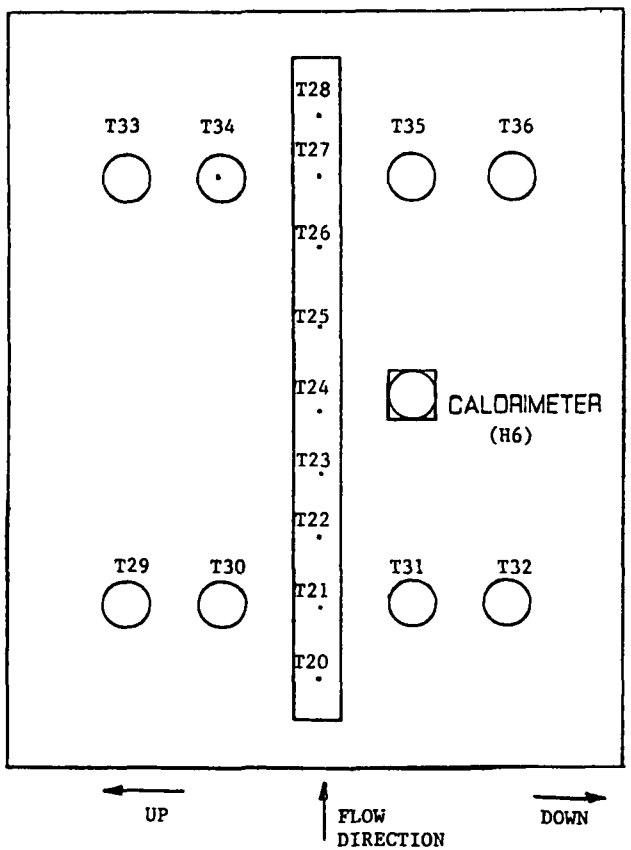

	Dimensions with Cal Panel in West Side of Test Panel
EDGE TO T20	2"
T20 TO T21	3"
T21 TO T22	3"
T22 TO T23	3"
T23 TO T24	2 13/16"
T24 TO T25	3 13/16"
T25 TO T26	2"
T26 TO T27	3"
T28 TO EDGE	3"
TOP EDGE TO T32	2"
EDGE TO T29	6 7/8"
T29 TO T30	2"
T30 TO CENTER	3"
T31 TO CENTER	1 3/4"
T31 TO T32	1 3/4"
T32 TO EDGE	3½"
BOT EDGE TP T33	2"
EDGE TO T33	6 7/8"
T33 TO T34	2"
T34 TO CENTER	3"
T35 TO CENTER	1 3/4"
T35 TO T36	1 3/4"
T36 TO EDGE	3½"
CALORIMETER TO EDGE	2"
CALORIMETER TO BOT	5½"
	13 13/16"

Notes:
1. Calibration panel thermocouple and calorimeter locations with panel installed in the west side of the test section.
2. No runs were made with the Cal panels in the east side or bottom of test section.

HGF CAL PANEL

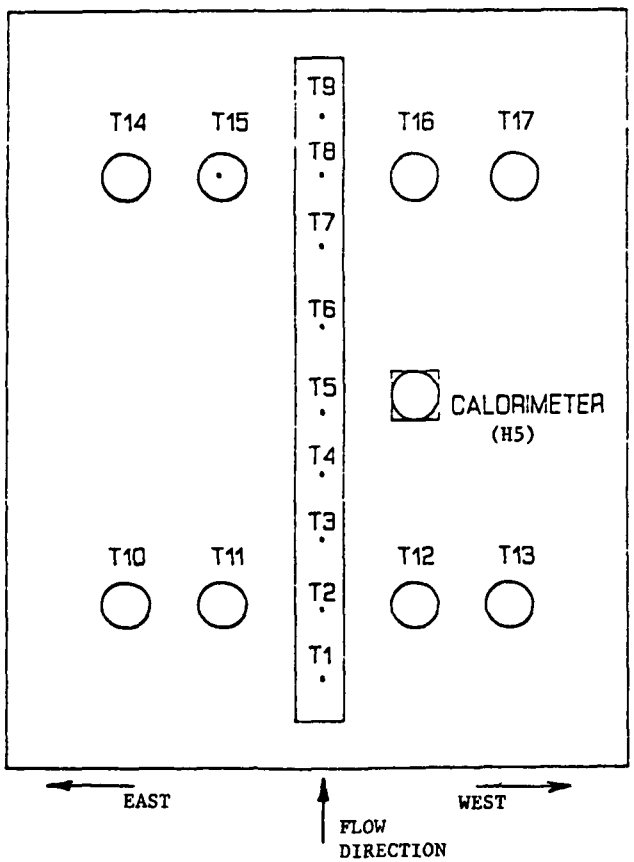

TOP VIEW

	Dimensions with Cal Panel in Top of Test Section
EDGE TO T1	2½"
T1 TO T2	2½"
T2 TO T3	3"
T3 TO T4	3"
T4 TO T5	3"
T5 TO T6	2 3/4"
T6 TO T7	3"
T7 TO T8	3"
T8 TO T9	3"
T9 TO EDGE	2"
TOP EDGE TO T10 - T13	6 7/8"
EDGE TO T10	2"
T10 TO T11	3"
T11 TO CENTER	1 3/4"
T12 TO CENTER	1 3/4"
T12 TO T13	3½"
T13 TO EDGE	2"
BOT EDGE TO T14 - T17	6 7/8"
EDGE TO T14	2"
T14 TO T15	3"
T15 TO CENTER	1 3/4"
T16 TO CENTER	1 3/4"
T16 TO T17	3½"
T17 TO EDGE	2"
CALORIMETER TO EDGE	5½"
CALORIMETER TO BOT	13 13/16"

Notes:

1. Calibration panel thermocouple and calorimeter locations with the Cal panel installed in the top of the test section.
2. No runs were made with the Cal panels in the east side or bottom of the test section.

Appendix H

HGF GH_2 AND AIR VENTURI CALIBRATION DATA

HGF GH2 VENTURI

CONTROL PRESSURE (psig)	FLOW RATE (lbm/sec)	CONTROL PRESSURE (psig)	FLOW RATE (lbm/sec)	CONTROL PRESSURE (psig)	FLOW RATE (lbm/sec)	CONTROL PRESSURE (psig)	FLOW RATE (lbm/sec)
500	0.355	750	0.532	1000	0.710	1250	0.887
505	0.358	755	0.536	1005	0.713	1255	0.891
510	0.362	760	0.539	1010	0.717	1260	0.894
515	0.366	765	0.543	1015	0.720	1265	0.898
520	0.369	770	0.546	1020	0.724	1270	0.901
525	0.373	775	0.550	1025	0.727	1275	0.905
530	0.376	780	0.554	1030	0.731	1280	0.908
535	0.380	785	0.557	1035	0.735	1285	0.912
540	0.383	790	0.561	1040	0.738	1290	0.916
545	0.387	795	0.564	1045	0.742	1295	0.919
550	0.390	800	0.568	1050	0.745	1300	0.923
555	0.394	805	0.571	1055	0.749	1305	0.926
560	0.397	810	0.575	1060	0.752	1310	0.930
565	0.401	815	0.578	1065	0.756	1315	0.933
570	0.405	820	0.582	1070	0.759	1320	0.937
575	0.408	825	0.586	1075	0.763	1325	0.940
580	0.412	830	0.589	1080	0.767	1330	0.944
585	0.415	835	0.593	1085	0.770	1335	0.947
590	0.419	840	0.596	1090	0.774	1340	0.951
595	0.422	845	0.600	1095	0.777	1345	0.955
600	0.426	850	0.603	1100	0.781	1350	0.958
605	0.429	855	0.607	1105	0.784	1355	0.962
610	0.433	860	0.610	1110	0.788	1360	0.965
615	0.436	865	0.614	1115	0.791	1365	0.969
620	0.440	870	0.617	1120	0.795	1370	0.972
625	0.444	875	0.621	1125	0.798	1375	0.976
630	0.447	880	0.625	1130	0.802	1380	0.979
635	0.451	885	0.628	1135	0.806	1385	0.983
640	0.454	890	0.632	1140	0.809	1390	0.987
645	0.458	895	0.635	1145	0.813	1395	0.990
650	0.461	900	0.639	1150	0.816	1400	0.994
655	0.465	905	0.642	1155	0.820		
660	0.468	910	0.646	1160	0.823		
665	0.472	915	0.649	1165	0.827		
670	0.476	920	0.653	1170	0.830		
675	0.479	925	0.656	1175	0.834		
680	0.483	930	0.660	1180	0.837		
685	0.486	935	0.664	1185	0.841		
690	0.490	940	0.667	1190	0.845		
695	0.493	945	0.671	1195	0.848		
700	0.497	950	0.674	1200	0.852		
705	0.500	955	0.678	1205	0.855		
710	0.504	960	0.681	1210	0.859		
715	0.507	965	0.685	1215	0.862		
720	0.511	970	0.688	1220	0.866		
725	0.515	975	0.692	1225	0.869		
730	0.518	980	0.696	1230	0.873		
735	0.522	985	0.699	1235	0.877		
740	0.525	990	0.703	1240	0.880		
745	0.529	995	0.706	1245	0.884		

HGF AIR VENTURI

CONTROL PRESSURE (PSIG)	FLOW RATE (LBM/SEC)	CONTROL PRESSURE (PSIG)	FLOW RATE (LBM/SEC)	CONTROL PRESSURE (PSIG)	FLOW RATE (LBM/SEC)	CONTROL PRESSURE (PSIG)	FLOW RATE (LBM/SEC)
500	24.115	531	25.567	562	27.020	593	28.472
501	24.162	532	25.614	563	27.066	594	28.519
502	24.208	533	25.661	564	27.113	595	28.566
503	24.255	534	25.708	565	27.160	596	28.613
504	24.302	535	25.755	566	27.207	597	28.659
505	24.349	536	25.801	567	27.254	598	28.706
506	24.396	537	25.848	568	27.301	599	28.753
507	24.443	538	25.895	569	27.348	600	28.800
508	24.490	539	25.942	570	27.394	601	28.847
509	24.536	540	25.989	571	27.441	602	28.894
510	24.583	541	26.036	572	27.488	603	28.941
511	24.630	542	26.083	573	27.535	604	28.987
512	24.677	543	26.129	574	27.582	605	29.034
513	24.724	544	26.176	575	27.629	606	29.081
514	24.771	545	26.223	576	27.676	607	29.128
515	24.818	546	26.270	577	27.722	608	29.175
516	24.864	547	26.317	578	27.769	609	29.222
517	24.911	548	26.364	579	27.816	610	29.269
518	24.958	549	26.411	580	27.863	611	29.315
519	25.005	550	26.457	581	27.910	612	29.362
520	25.052	551	26.504	582	27.957	613	29.409
521	25.099	552	26.551	583	28.004	614	29.456
522	25.146	553	26.598	584	28.050	615	29.503
523	25.192	554	26.645	585	28.097	616	29.550
524	25.239	555	26.692	586	28.144	617	29.596
525	25.286	556	26.739	587	28.191	618	29.643
526	25.333	557	26.785	588	28.238	619	29.690
527	25.380	558	26.832	589	28.285	620	29.737
528	25.427	559	26.879	590	28.331	621	29.784
529	25.473	560	26.926	591	28.378	622	29.831
530	25.520	561	26.973	592	28.425	623	29.878
531	25.567	562	27.020	593	28.472	624	29.924

HGF AIR VENTURI

CONTROL PRESSURE (PSIG)	FLOW RATE (LBM/SEC)	CONTROL PRESSURE (PSIG)	FLOW RATE (LBM/SEC)	CONTROL PRESSURE (PSIG)	FLOW RATE (LBM/SEC)	CONTROL PRESSURE (PSIG)	FLOW RATE (LBM/SEC)
625	29.971	656	31.424	687	32.876	718	34.329
626	30.018	657	31.471	688	32.923	719	34.375
627	30.065	658	31.517	689	32.970	720	34.422
628	30.112	659	31.564	690	33.017	721	34.469
629	30.159	660	31.611	691	33.064	722	34.516
630	30.206	661	31.658	692	33.110	723	34.563
631	30.252	662	31.705	693	33.157	724	34.610
632	30.299	663	31.752	694	33.204	725	34.657
633	30.346	664	31.799	695	33.251	726	34.703
634	30.393	665	31.845	696	33.298	727	34.750
635	30.440	666	31.892	697	33.345	728	34.797
636	30.487	667	31.939	698	33.392	729	34.844
637	30.534	668	31.986	699	33.438	730	34.891
638	30.580	669	32.033	700	33.485	731	34.938
639	30.627	670	32.080	701	33.532	732	34.984
640	30.674	671	32.127	702	33.579	733	35.031
641	30.721	672	32.173	703	33.626	734	35.078
642	30.768	673	32.220	704	33.673	735	35.125
643	30.815	674	32.267	705	33.719	736	35.172
644	30.861	675	32.314	706	33.766	737	35.219
645	30.908	676	32.361	707	33.813	738	35.266
646	30.955	677	32.408	708	33.860	739	35.312
647	31.002	678	32.454	709	33.907	740	35.359
648	31.049	679	32.501	710	33.954	741	35.406
649	31.096	680	32.548	711	34.001	742	35.453
650	31.143	681	32.595	712	34.047	743	35.500
651	31.189	682	32.642	713	34.094	744	35.547
652	31.236	683	32.689	714	34.141	745	35.594
653	31.283	684	32.736	715	34.188	746	35.640
654	31.330	685	32.782	716	34.235	747	35.687
655	31.377	686	32.829	717	34.282	748	35.734
656	31.424	687	32.876	718	34.329	749	35.781

HGF AIR VENTURI

CONTROL PRESSURE (PSIG)	FLOW RATE (LBM/SEC)	CONTROL PRESSURE (PSIG)	FLOW RATE (LBM/SEC)	CONTROL PRESSURE (PSIG)	FLOW RATE (LBM/SEC)	CONTROL PRESSURE (PSIG)	FLOW RATE (LBM/SEC)
750	35.828	781	37.280	812	38.733	843	40.185
751	35.875	782	37.327	813	38.780	844	40.232
752	35.922	783	37.374	814	38.826	845	40.279
753	35.968	784	37.421	815	38.873	846	40.326
754	36.015	785	37.468	816	38.920	847	40.372
755	36.062	786	37.514	817	38.967	848	40.419
756	36.109	787	37.561	818	39.014	849	40.466
757	36.156	788	37.608	819	39.061	850	40.513
758	36.203	789	37.655	820	39.107	851	40.560
759	36.249	790	37.702	821	39.154	852	40.607
760	36.296	791	37.749	822	39.201	853	40.654
761	36.343	792	37.796	823	39.248	854	40.700
762	36.390	793	37.842	824	39.295	855	40.747
763	36.437	794	37.889	825	39.342	856	40.794
764	36.484	795	37.936	826	39.389	857	40.841
765	36.531	796	37.983	827	39.435	858	40.888
766	36.577	797	38.030	828	39.482	859	40.935
767	36.624	798	38.077	829	39.529	860	40.982
768	36.671	799	38.124	830	39.576	861	41.028
769	36.718	800	38.170	831	39.623	862	41.075
770	36.765	801	38.217	832	39.670	863	41.122
771	36.812	802	38.264	833	39.717	864	41.169
772	36.859	803	38.311	834	39.763	865	41.216
773	36.905	804	38.358	835	39.810	866	41.263
774	36.952	805	38.405	836	39.857	867	41.310
775	36.999	806	38.452	837	39.904	868	41.356
776	37.046	807	38.498	838	39.951	869	41.403
777	37.093	808	38.545	839	39.998	870	41.450
778	37.140	809	38.592	840	40.045	871	41.497
779	37.187	810	38.639	841	40.091	872	41.544
780	37.233	811	38.686	842	40.138	873	41.591
781	37.280	812	38.733	843	40.185	874	41.637

HGF AIR VENTURI

CONTROL PRESSURE (PSIG)	FLOW RATE (LBM/SEC)	CONTROL PRESSURE (PSIG)	FLOW RATE (LBM/SEC)	CONTROL PRESSURE (PSIG)	FLOW RATE (LBM/SEC)	CONTROL PRESSURE (PSIG)	FLOW RATE (LBM/SEC)
875	41.684	906	43.137	937	44.589	968	46.042
876	41.731	907	43.184	938	44.636	969	46.088
877	41.778	908	43.230	939	44.683	970	46.135
878	41.825	909	43.277	940	44.730	971	46.182
879	41.872	910	43.324	941	44.777	972	46.229
880	41.919	911	43.371	942	44.823	973	46.276
881	41.965	912	43.418	943	44.870	974	46.323
882	42.012	913	43.465	944	44.917	975	46.370
883	42.059	914	43.512	945	44.964	976	46.416
884	42.106	915	43.558	946	45.011	977	46.463
885	42.153	916	43.605	947	45.058	978	46.510
886	42.200	917	43.652	948	45.105	979	46.557
887	42.247	918	43.699	949	45.151	980	46.604
888	42.293	919	43.746	950	45.198	981	46.651
889	42.340	920	43.793	951	45.245	982	46.698
890	42.387	921	43.840	952	45.292	983	46.744
891	42.434	922	43.886	953	45.339	984	46.791
892	42.481	923	43.933	954	45.386	985	46.838
893	42.528	924	43.980	955	45.433	986	46.885
894	42.575	925	44.027	956	45.479	987	46.932
895	42.621	926	44.074	957	45.526	988	46.979
896	42.668	927	44.121	958	45.573	989	47.025
897	42.715	928	44.167	959	45.620	990	47.072
898	42.762	929	44.214	960	45.667	991	47.119
899	42.809	930	44.261	961	45.714	992	47.166
900	42.856	931	44.308	962	45.760	993	47.213
901	42.902	932	44.355	963	45.807	994	47.260
902	42.949	933	44.402	964	45.854	995	47.307
903	42.996	934	44.449	965	45.901	996	47.353
904	43.043	935	44.495	966	45.948	997	47.400
905	43.090	936	44.542	967	45.995	998	47.447
906	43.137	937	44.589	968	46.042	999	47.494

HGF AIR VENTURI

CONTROL PRESSURE (PSIG)	FLOW RATE (LBM/SEC)	CONTROL PRESSURE (PSIG)	FLOW RATE (LBM/SEC)	CONTROL PRESSURE (PSIG)	FLOW RATE (LBM/SEC)	CONTROL PRESSURE (PSIG)	FLOW RATE (LBM/SEC)
1000	47.541	1031	48.993	1062	50.446	1093	51.898
1001	47.588	1032	49.040	1063	50.493	1094	51.945
1002	47.635	1033	49.087	1064	50.539	1095	51.992
1003	47.681	1034	49.134	1065	50.586	1096	52.039
1004	47.728	1035	49.181	1066	50.633	1097	52.086
1005	47.775	1036	49.228	1067	50.680	1098	52.132
1006	47.822	1037	49.274	1068	50.727	1099	52.179
1007	47.869	1038	49.321	1069	50.774	1100	52.226
1008	47.916	1039	49.368	1070	50.820	1101	52.273
1009	47.963	1040	49.415	1071	50.867	1102	52.320
1010	48.009	1041	49.462	1072	50.914	1103	52.367
1011	48.056	1042	49.509	1073	50.961	1104	52.413
1012	48.103	1043	49.555	1074	51.008	1105	52.460
1013	48.150	1044	49.602	1075	51.055	1106	52.507
1014	48.197	1045	49.649	1076	51.102	1107	52.554
1015	48.244	1046	49.696	1077	51.148	1108	52.601
1016	48.290	1047	49.743	1078	51.195	1109	52.648
1017	48.337	1048	49.790	1079	51.242	1110	52.695
1018	48.384	1049	49.837	1080	51.289	1111	52.741
1019	48.431	1050	49.883	1081	51.336	1112	52.788
1020	48.478	1051	49.930	1082	51.383	1113	52.835
1021	48.525	1052	49.977	1083	51.430	1114	52.882
1022	48.572	1053	50.024	1084	51.476	1115	52.929
1023	48.618	1054	50.071	1085	51.523	1116	52.976
1024	48.665	1055	50.118	1086	51.570	1117	53.023
1025	48.712	1056	50.165	1087	51.617	1118	53.069
1026	48.759	1057	50.211	1088	51.664	1119	53.116
1027	48.806	1058	50.258	1089	51.711	1120	53.163
1028	48.853	1059	50.305	1090	51.758	1121	53.210
1029	48.900	1060	50.352	1091	51.804	1122	53.257
1030	48.946	1061	50.399	1092	51.851	1123	53.304
1031	48.993	1062	50.446	1093	51.898	1124	53.351

HGF AIR VENTURI

CONTROL PRESSURE (PSIG)	FLOW RATE (LBM/SEC)	CONTROL PRESSURE (PSIG)	FLOW RATE (LBM/SEC)	CONTROL PRESSURE (PSIG)	FLOW RATE (LBM/SEC)	CONTROL PRESSURE (PSIG)	FLOW RATE (LBM/SEC)
1125	53.397	1156	54.850	1187	56.302	1218	57.755
1126	53.444	1157	54.897	1188	56.349	1219	57.801
1127	53.491	1158	54.943	1189	56.396	1220	57.848
1128	53.538	1159	54.990	1190	56.443	1221	57.895
1129	53.585	1160	55.037	1191	56.490	1222	57.942
1130	53.632	1161	55.084	1192	56.536	1223	57.989
1131	53.678	1162	55.131	1193	56.583	1224	58.036
1132	53.725	1163	55.178	1194	56.630	1225	58.083
1133	53.772	1164	55.225	1195	56.677	1226	58.129
1134	53.819	1165	55.271	1196	56.724	1227	58.176
1135	53.866	1166	55.318	1197	56.771	1228	58.223
1136	53.913	1167	55.365	1198	56.818	1229	58.270
1137	53.960	1168	55.412	1199	56.864	1230	58.317
1138	54.006	1169	55.459	1200	56.911	1231	58.364
1139	54.053	1170	55.506	1201	56.958	1232	58.411
1140	54.100	1171	55.553	1202	57.005	1233	58.457
1141	54.147	1172	55.599	1203	57.052	1234	58.504
1142	54.194	1173	55.646	1204	57.099	1235	58.551
1143	54.241	1174	55.693	1205	57.146	1236	58.598
1144	54.288	1175	55.740	1206	57.192	1237	58.645
1145	54.334	1176	55.787	1207	57.239	1238	58.692
1146	54.381	1177	55.834	1208	57.286	1239	58.739
1147	54.428	1178	55.881	1209	57.333	1240	58.785
1148	54.475	1179	55.927	1210	57.380	1241	58.832
1149	54.522	1180	55.974	1211	57.427	1242	58.879
1150	54.569	1181	56.021	1212	57.473	1243	58.926
1151	54.616	1182	56.068	1213	57.520	1244	58.973
1152	54.662	1183	56.115	1214	57.567	1245	59.020
1153	54.709	1184	56.162	1215	57.614	1246	59.066
1154	54.756	1185	56.208	1216	57.661	1247	59.113
1155	54.803	1186	56.255	1217	57.708	1248	59.160
1156	54.850	1187	56.302	1218	57.755	1249	59.207

HGF AIR VENTURI

CONTROL PRESSURE (PSIG)	FLOW RATE (LBM/SEC)	CONTROL PRESSURE (PSIG)	FLOW RATE (LBM/SEC)	CONTROL PRESSURE (PSIG)	FLOW RATE (LBM/SEC)	CONTROL PRESSURE (PSIG)	FLOW RATE (LBM/SEC)
1250	59.254	1281	60.706	1312	62.159	1343	63.611
1251	59.301	1282	60.753	1313	62.206	1344	63.658
1252	59.348	1283	60.800	1314	62.252	1345	63.705
1253	59.394	1284	60.847	1315	62.299	1346	63.752
1254	59.441	1285	60.894	1316	62.346	1347	63.799
1255	59.488	1286	60.941	1317	62.393	1348	63.845
1256	59.535	1287	60.987	1318	62.440	1349	63.892
1257	59.582	1288	61.034	1319	62.487	1350	63.939
1258	59.629	1289	61.081	1320	62.534	1351	63.986
1259	59.676	1290	61.128	1321	62.580	1352	64.033
1260	59.722	1291	61.175	1322	62.627	1353	64.080
1261	59.769	1292	61.222	1323	62.674	1354	64.126
1262	59.816	1293	61.269	1324	62.721	1355	64.173
1263	59.863	1294	61.315	1325	62.768	1356	64.220
1264	59.910	1295	61.362	1326	62.815	1357	64.267
1265	59.957	1296	61.409	1327	62.861	1358	64.314
1266	60.004	1297	61.456	1328	62.908	1359	64.361
1267	60.050	1298	61.503	1329	62.955	1360	64.408
1268	60.097	1299	61.550	1330	63.002	1361	64.454
1269	60.144	1300	61.596	1331	63.049	1362	64.501
1270	60.191	1301	61.643	1332	63.096	1363	64.548
1271	60.238	1302	61.690	1333	63.143	1364	64.595
1272	60.285	1303	61.737	1334	63.189	1365	64.642
1273	60.331	1304	61.784	1335	63.236	1366	64.689
1274	60.378	1305	61.831	1336	63.283	1367	64.736
1275	60.425	1306	61.878	1337	63.330	1368	64.782
1276	60.472	1307	61.924	1338	63.377	1369	64.829
1277	60.519	1308	61.971	1339	63.424	1370	64.876
1278	60.566	1309	62.018	1340	63.471	1371	64.923
1279	60.613	1310	62.065	1341	63.517	1372	64.970
1280	60.659	1311	62.112	1342	63.564	1373	65.017
1281	60.706	1312	62.159	1343	63.611	1374	65.064

HGF AIR VENTURI

CONTROL PRESSURE (PSIG)	FLOW RATE (LBM/SEC)
1375	65.110
1376	65.157
1377	65.204
1378	65.251
1379	65.298
1380	65.345
1381	65.392
1382	65.438
1383	65.485
1384	65.532
1385	65.579
1386	65.626
1387	65.673
1388	65.719
1389	65.766
1390	65.813
1391	65.860
1392	65.907
1393	65.954
1394	66.001
1395	66.047
1396	66.094
1397	66.141
1398	66.188
1399	66.235
1400	66.282

Appendix I

HGF INTERFACE DRAWING AND DETAILED SKETCHES OF HGF HARDWARE/COMPONENTS

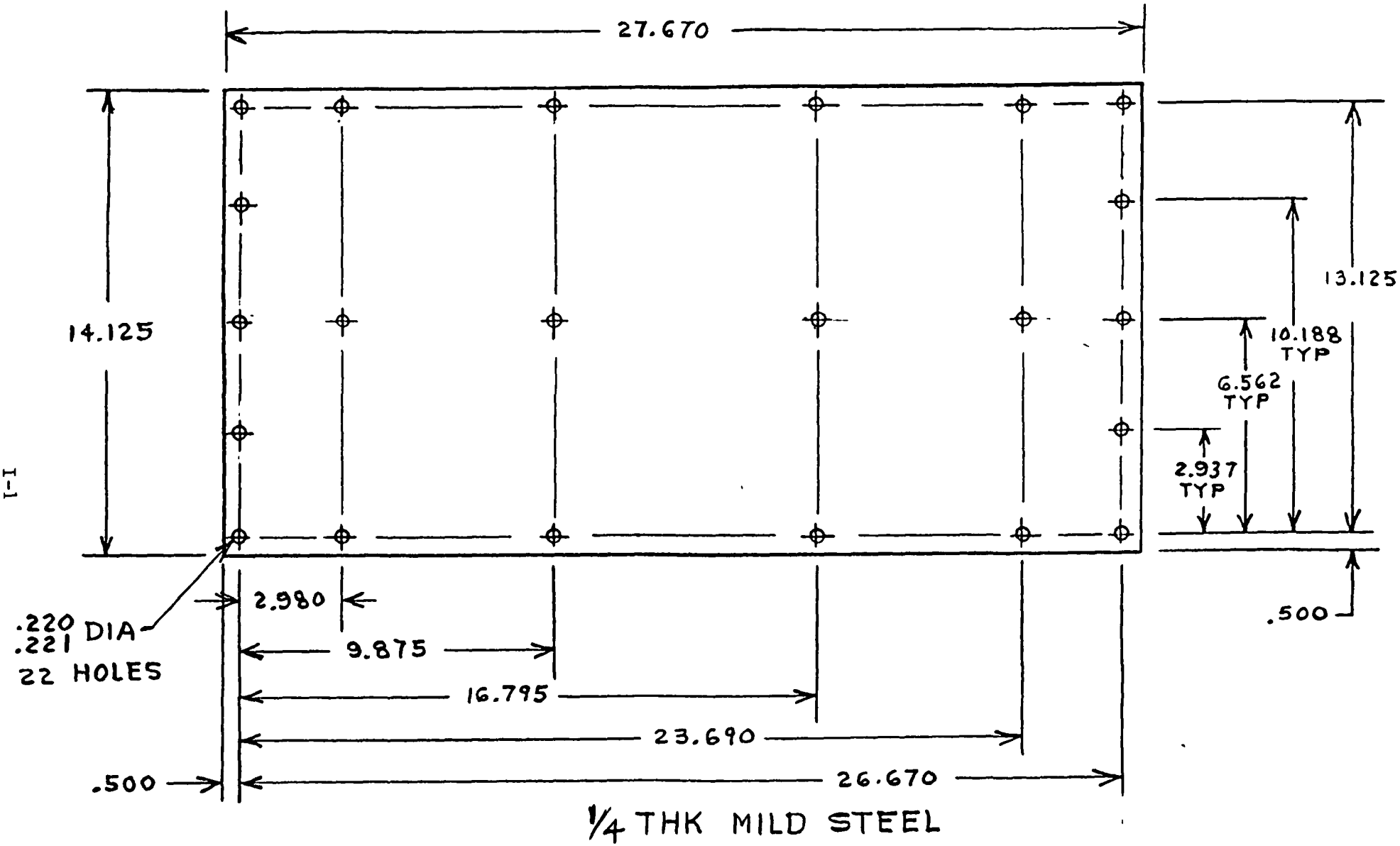

DUMMY PANEL
MACH 5 TEST SECTION
MSFC HOT GAS FACILITY

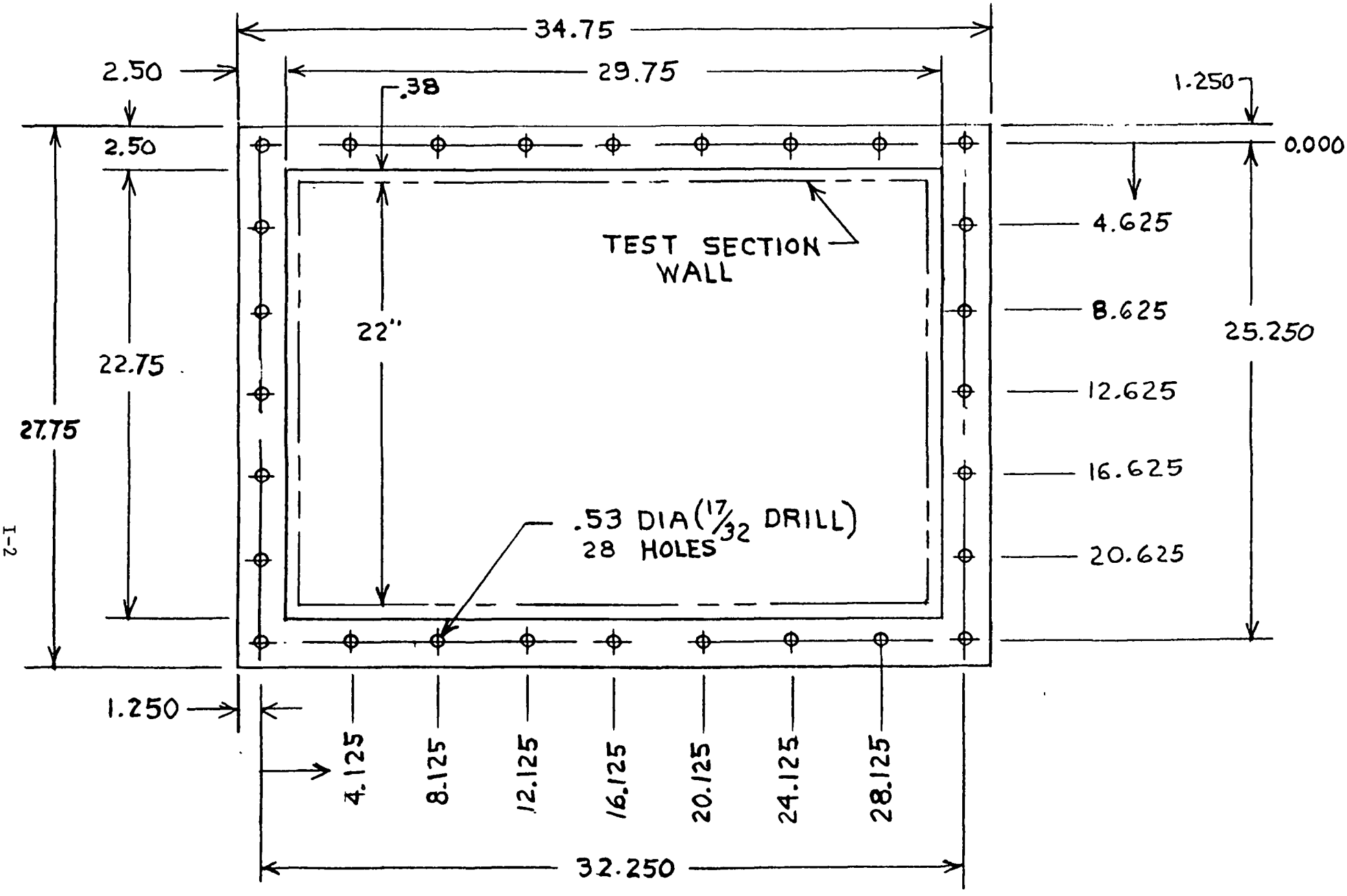

TEST SECTION TO DIFFUSER INTERFACE FOR MACH 5 TEST SECTION MSFC HOT GAS FACILITY

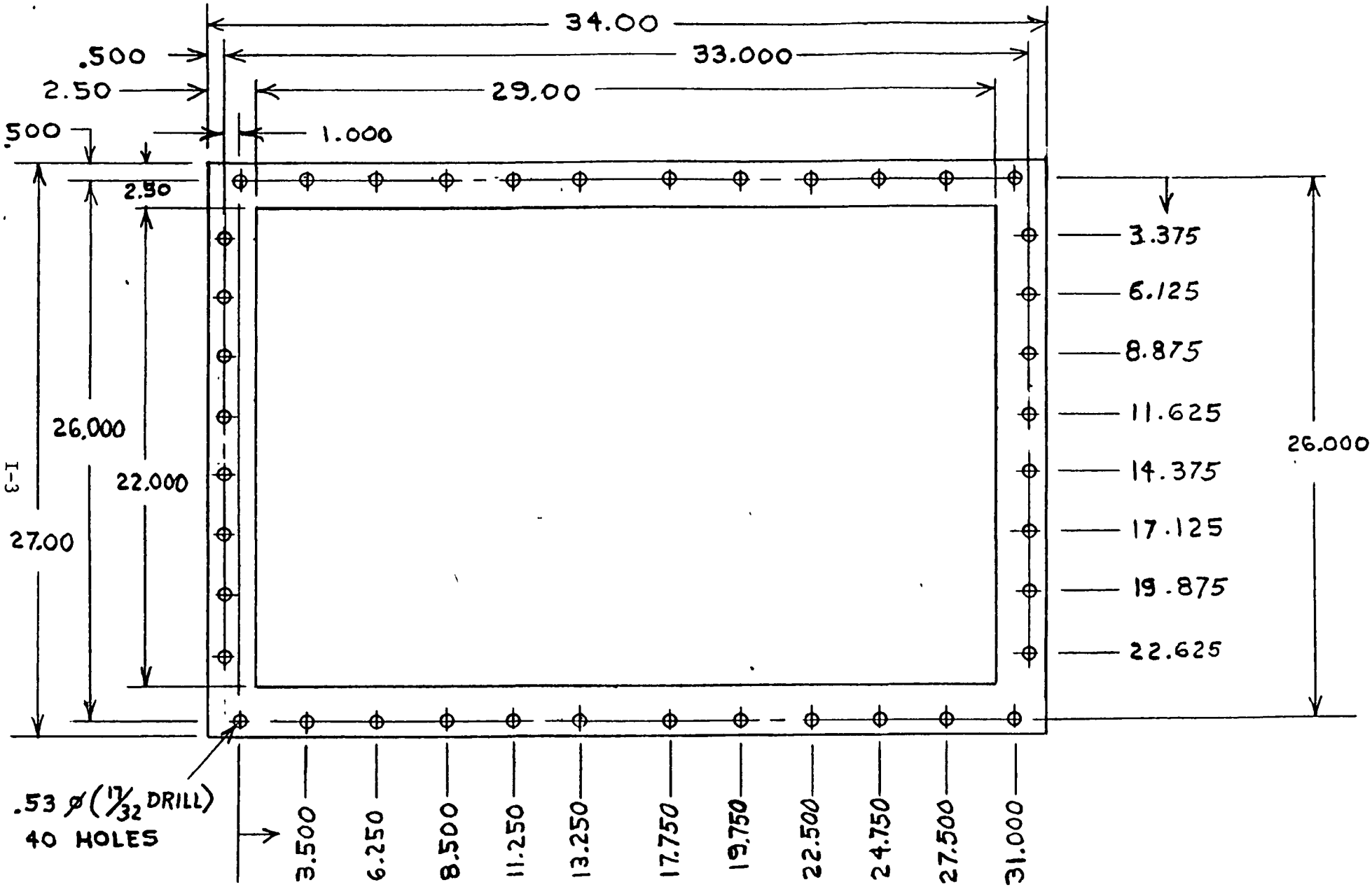

TEST SECTION TO NOZZLE INTERFACE
FOR MACH 5 TEST SECTION
MSFC HOT GAS FACILITY

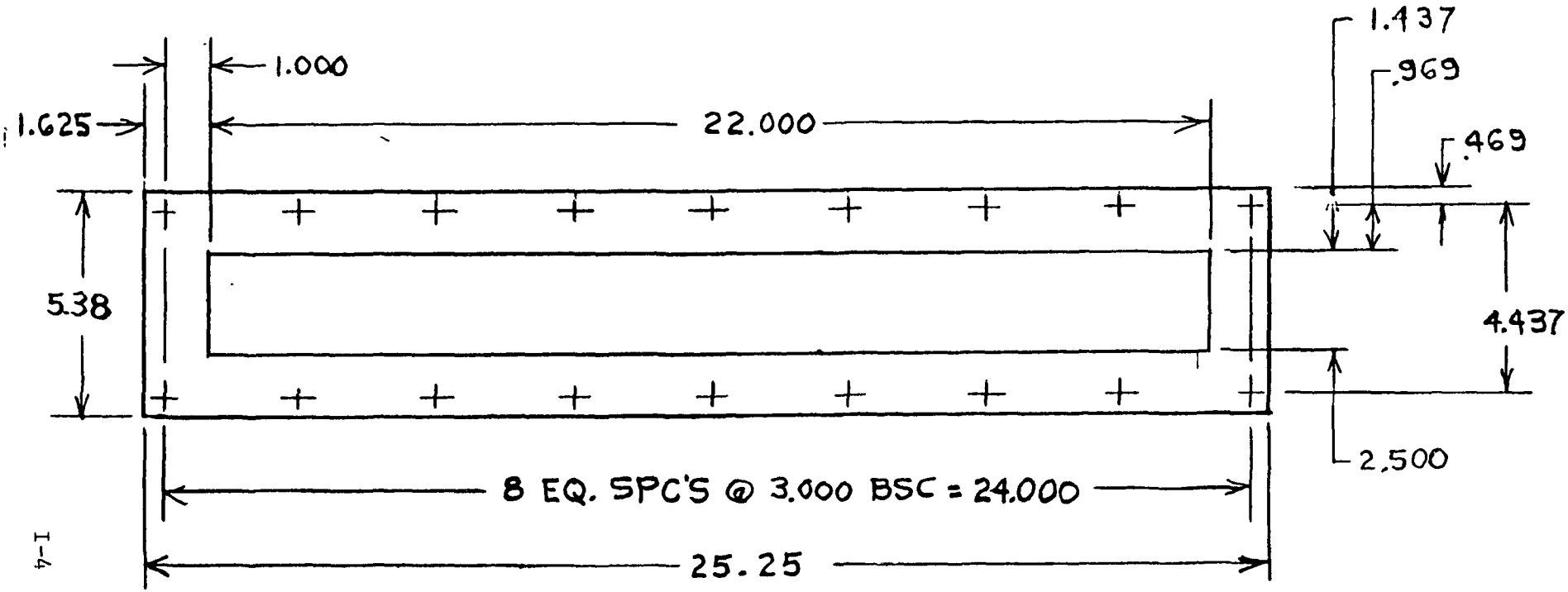

NOZZLE TO COMBUSTOR INTERFACE
FOR MACH 5 TEST SECTION
MSFC HOT GAS FACILITY

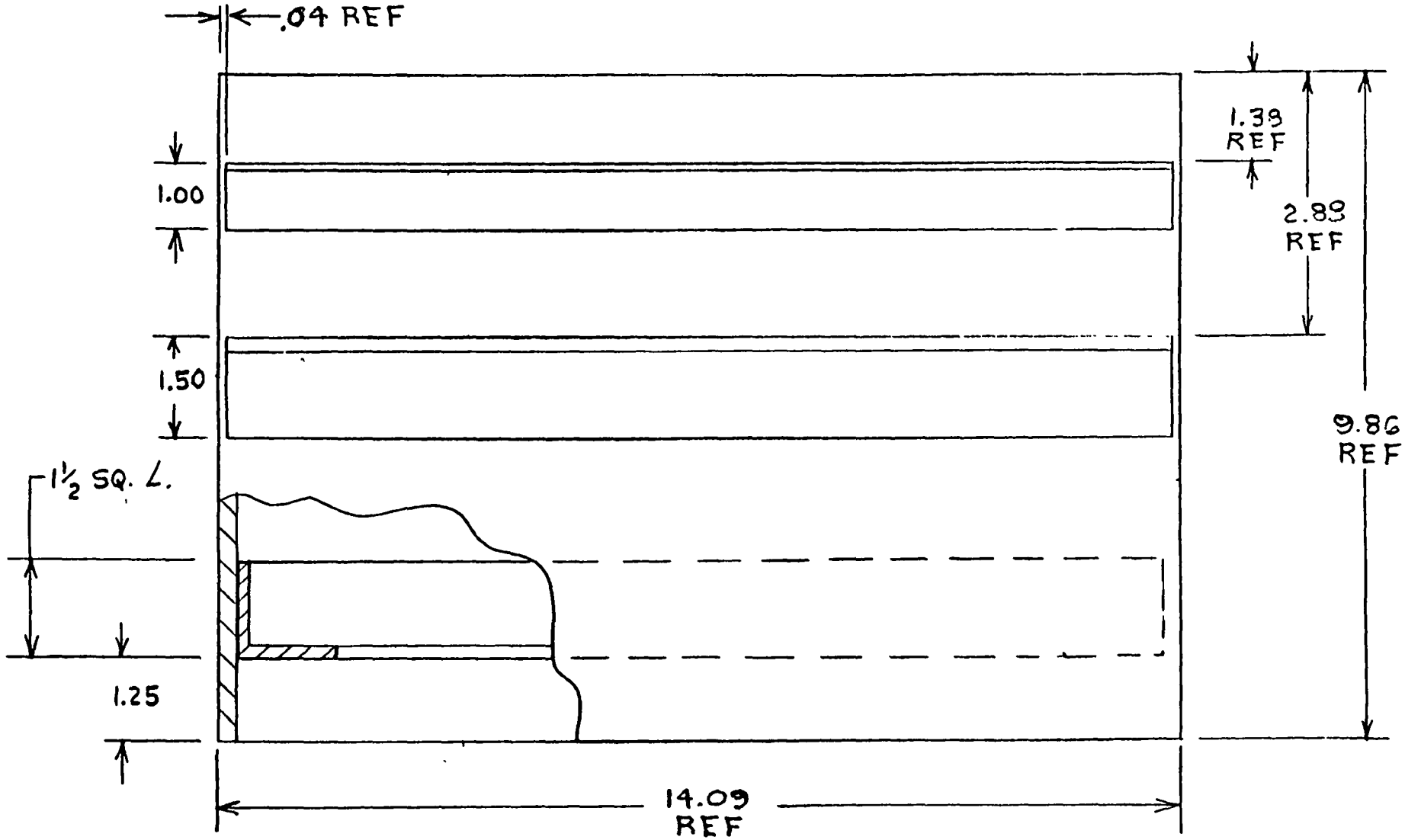

END VIEW

RAMPED PANEL FIXTURE
MACH 5 TEST SECTION
MFSC HOT GAS FACILITY
SH. 3

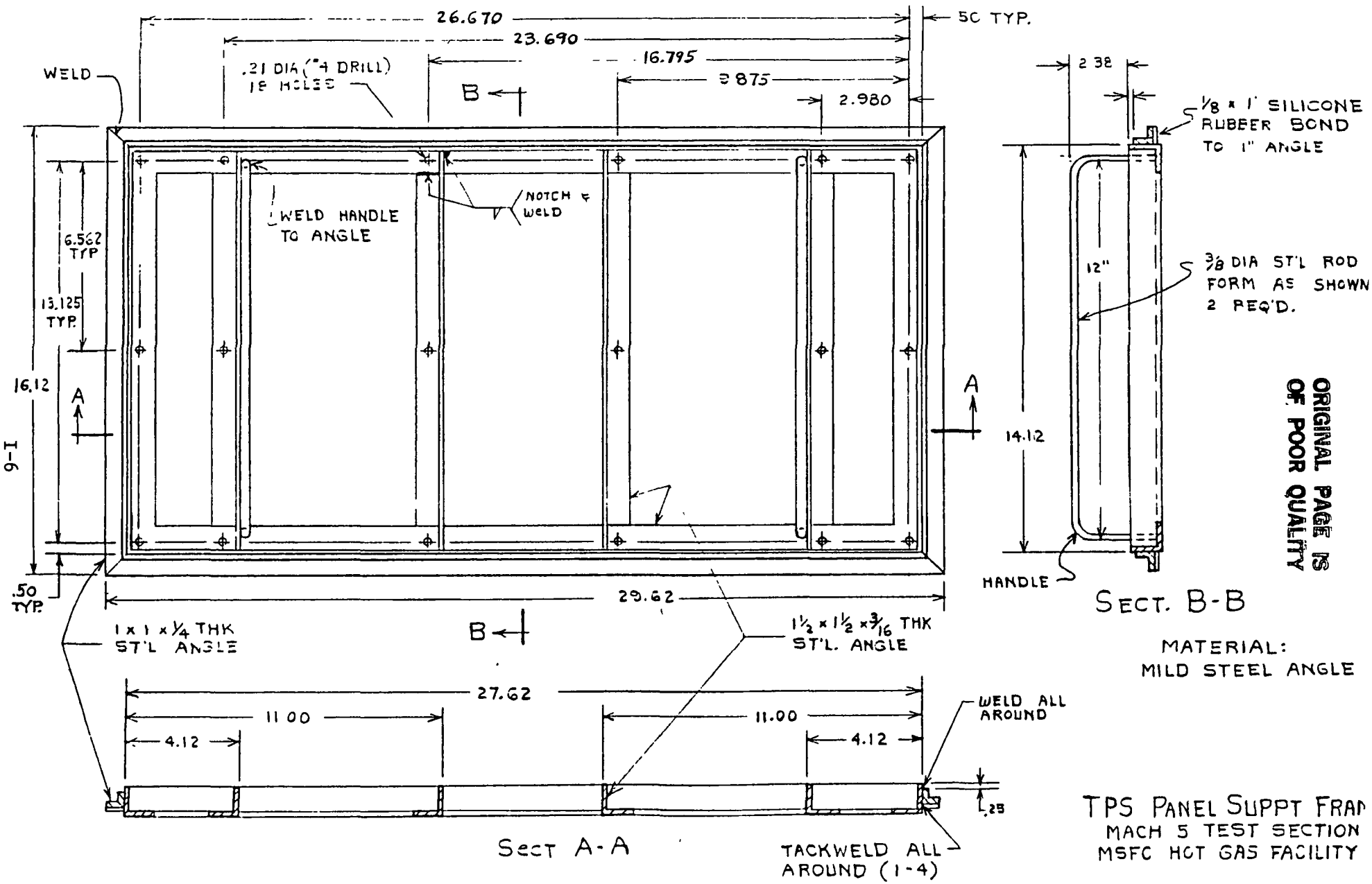

ORIGINAL PAGE IS OF POOR QUALITY

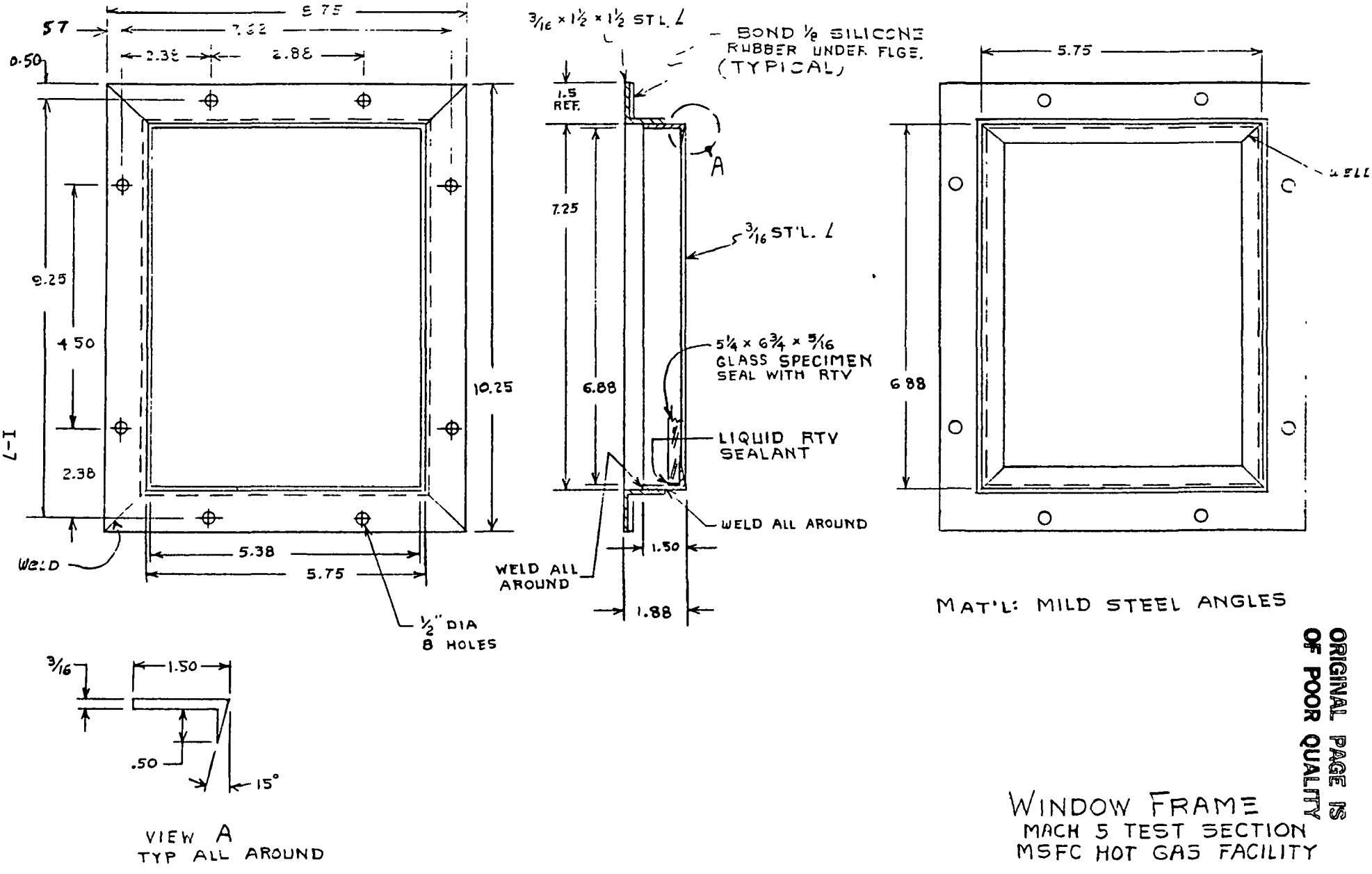

WINDOW FRAME
MACH 5 TEST SECTION
MSFC HOT GAS FACILITY

ORIGINAL PAGE IS OF POOR QUALITY

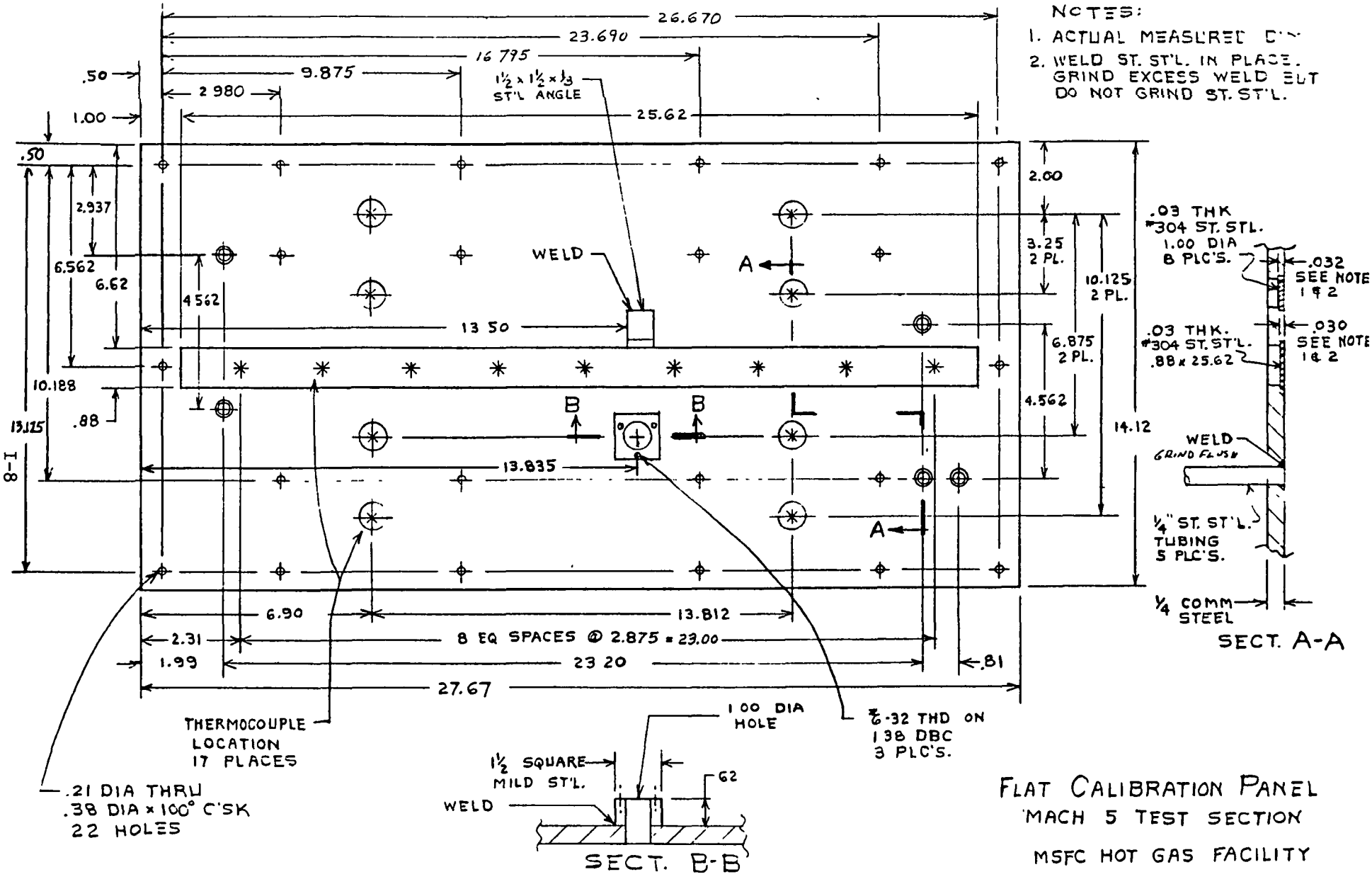
NOTES:
1. ACTUAL MEASURED DIM
2. WELD ST. ST'L. IN PLACE. GRIND EXCESS WELD BUT DO NOT GRIND ST. ST'L.
26.670
23.690
16.795
9.875
2.980
25.62
.50
1.00
1½ x 1½ x ⅛ ST'L ANGLE
WELD
A
B
2.937
6.562
6.62
4.562
13.50
10.188
.88
13.125
13.835
2.00
3.25 2 PL.
10.125 2 PL.
6.875 2 PL.
4.562
14.12
.03 THK #304 ST. STL. 1.00 DIA 8 PLC'S.
.032 SEE NOTE 1 & 2
.030 SEE NOTE 1 & 2
.03 THK. #304 ST. ST'L. .88 x 25.62
WELD GRIND FLUSH
¼" ST. ST'L. TUBING 5 PLC'S.
¼ COMM STEEL
SECT. A-A
6.90
13.812
2.31
8 EQ SPACES @ 2.875 = 23.00
1.99
23.20
.81
27.67
THERMOCOUPLE LOCATION 17 PLACES
.21 DIA THRU .38 DIA x 100° C'SK 22 HOLES
1.00 DIA HOLE
⅞-32 THD ON 1.38 DBC 3 PLC'S.
1½ SQUARE MILD ST'L.
.62
WELD
SECT. B-B
FLAT CALIBRATION PANEL
MACH 5 TEST SECTION
MSFC HOT GAS FACILITY

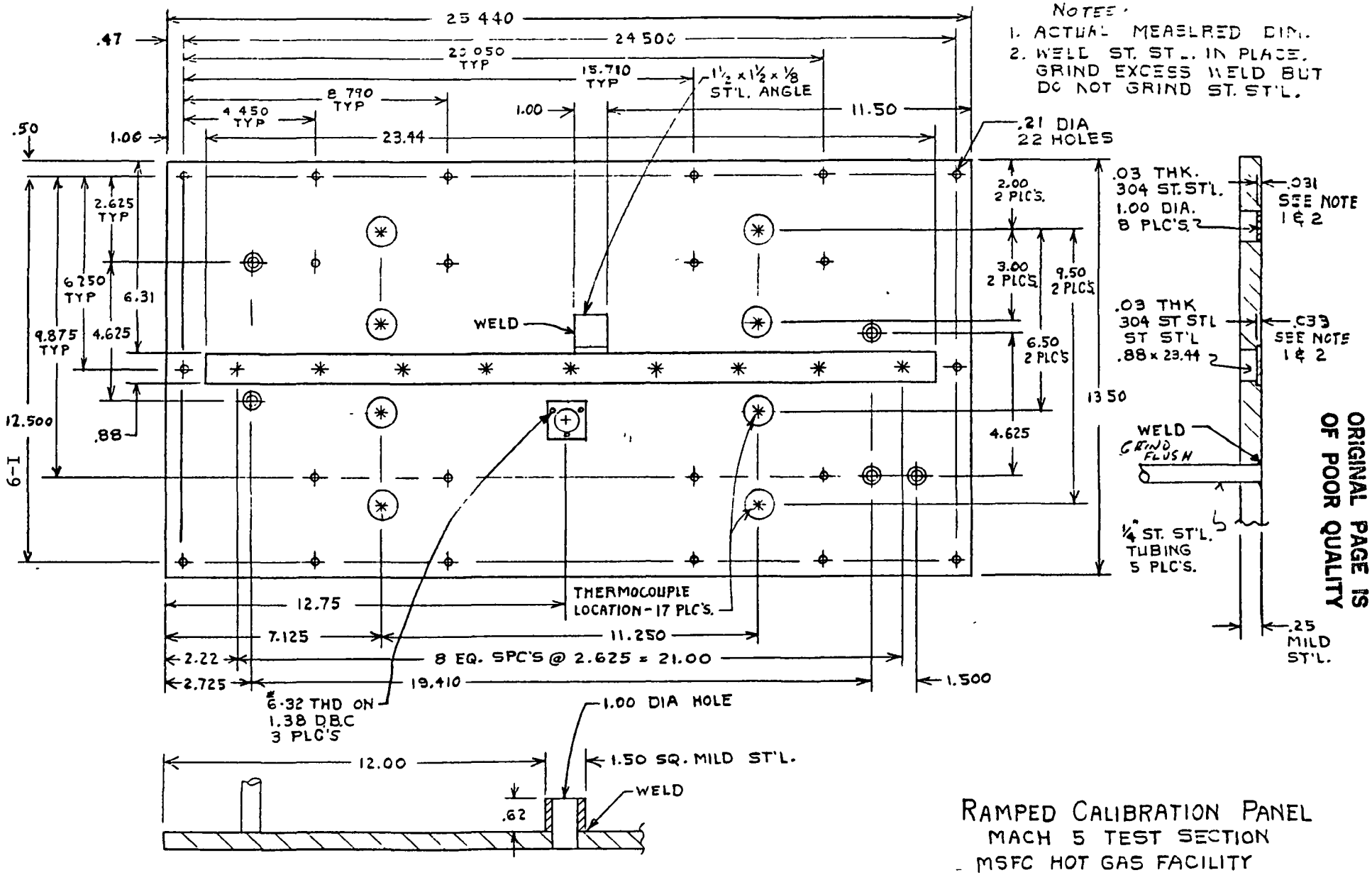

RAMPED CALIBRATION PANEL
MACH 5 TEST SECTION
MSFC HOT GAS FACILITY

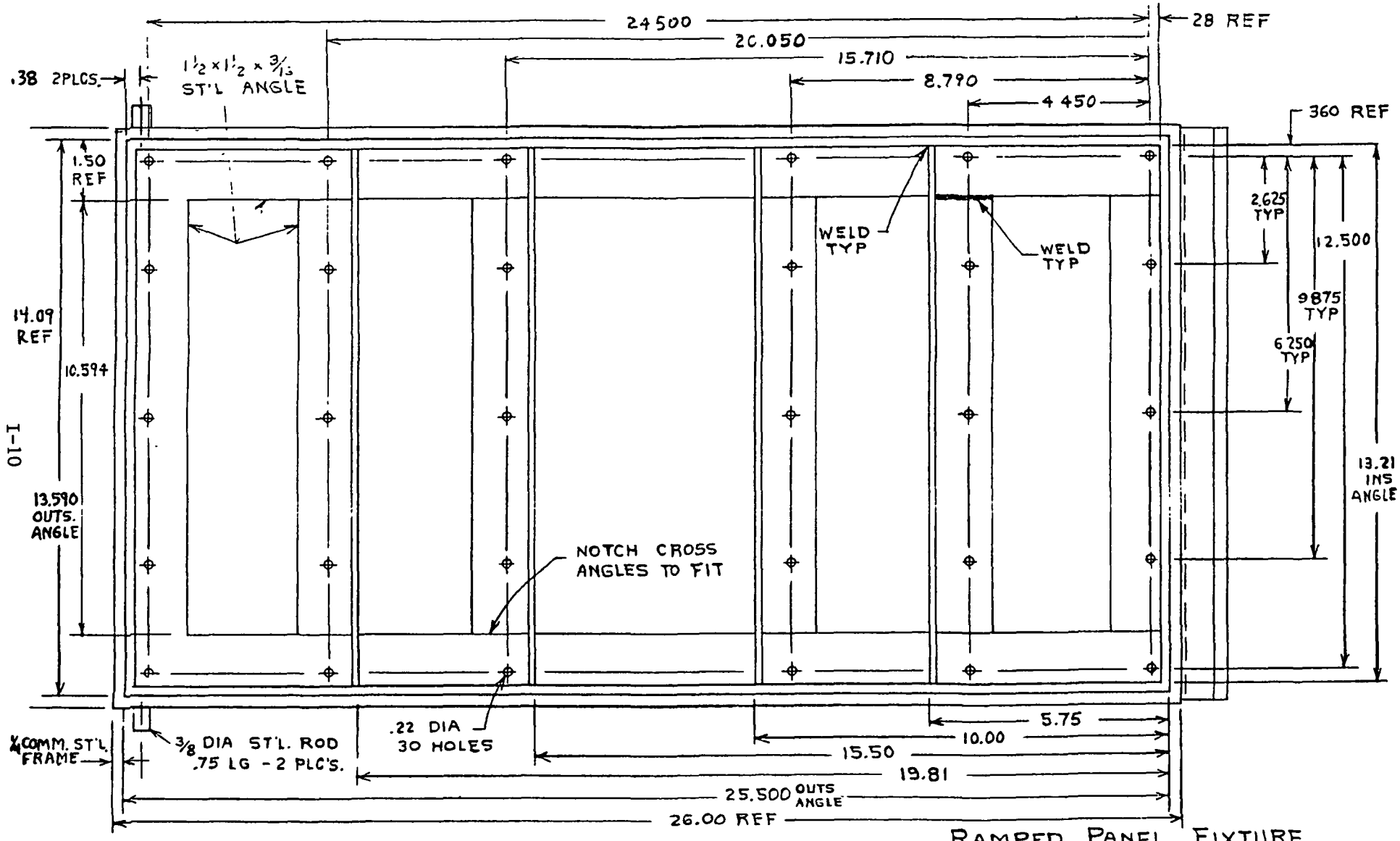

TOP VIEW

RAMPED PANEL FIXTURE
MACH 5 TEST SECTION
MSFC HOT GAS FACILITY
SH. 1

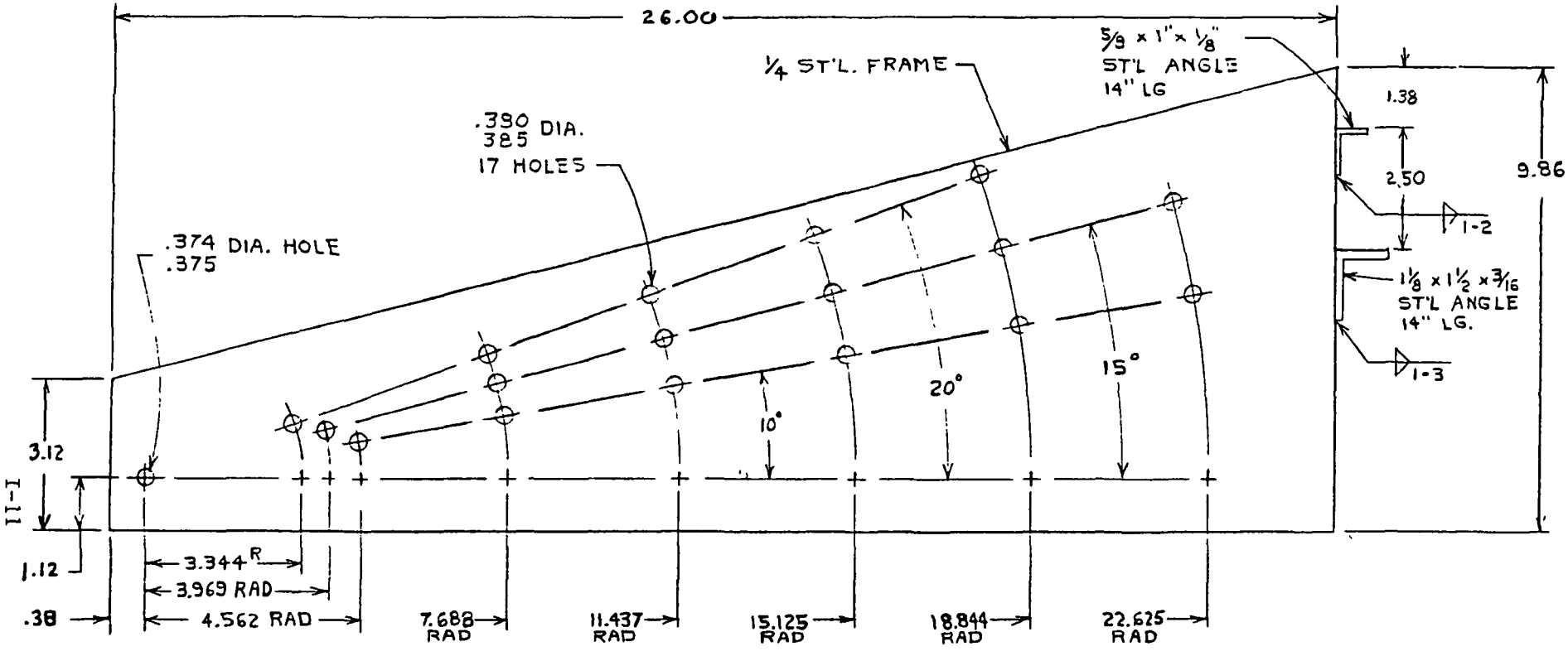

SIDE VIEW
TYP BOTH SIDES

RAMPED PANEL FIXTURE
MACH 5 TEST SECTION
MSFC HOT GAS FACILITY
SH 2

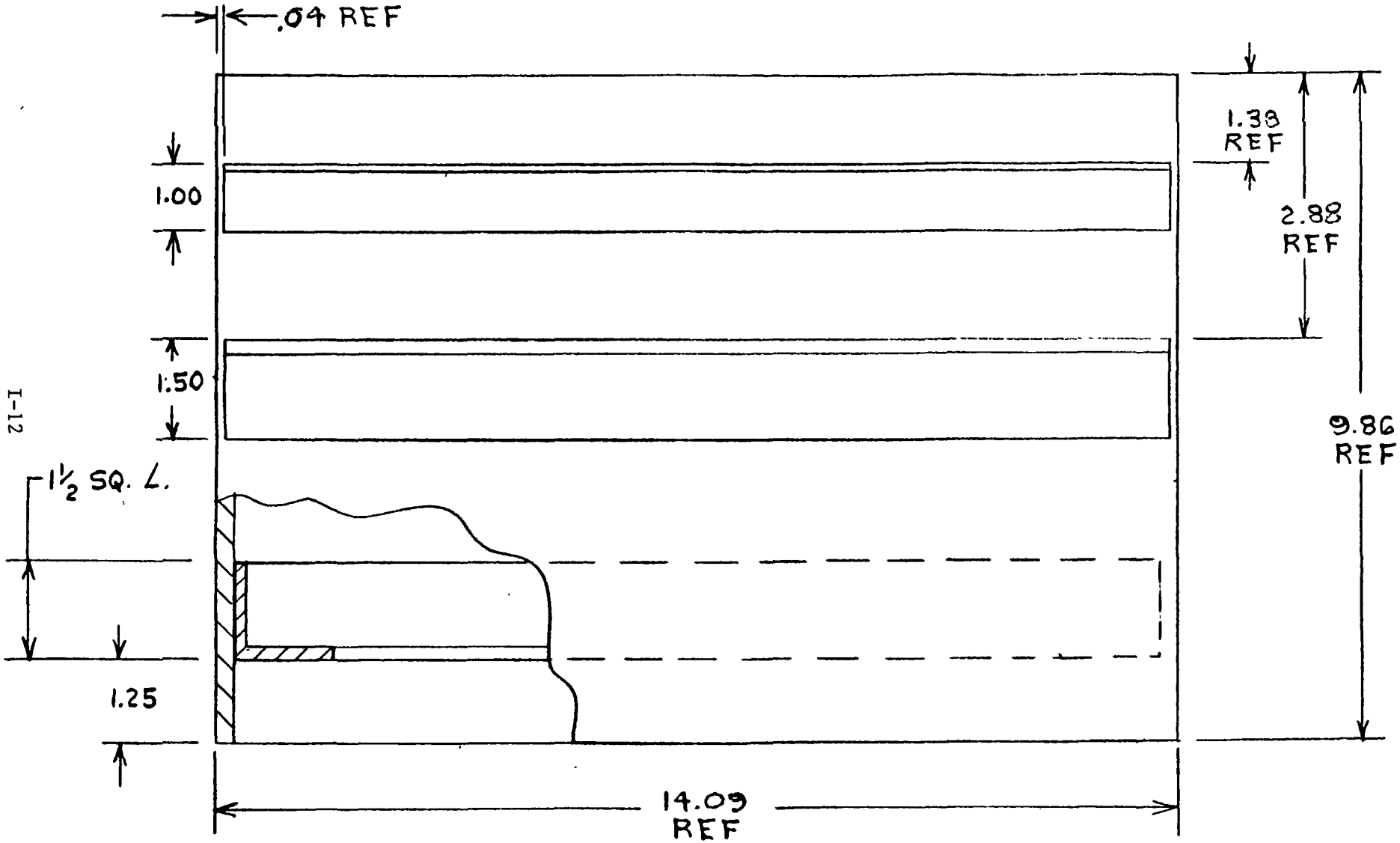

END VIEW

RAMPED PANEL FIXTURE
MACH 5 TEST SECTION
MFSC HOT GAS FACILITY
SH. 3

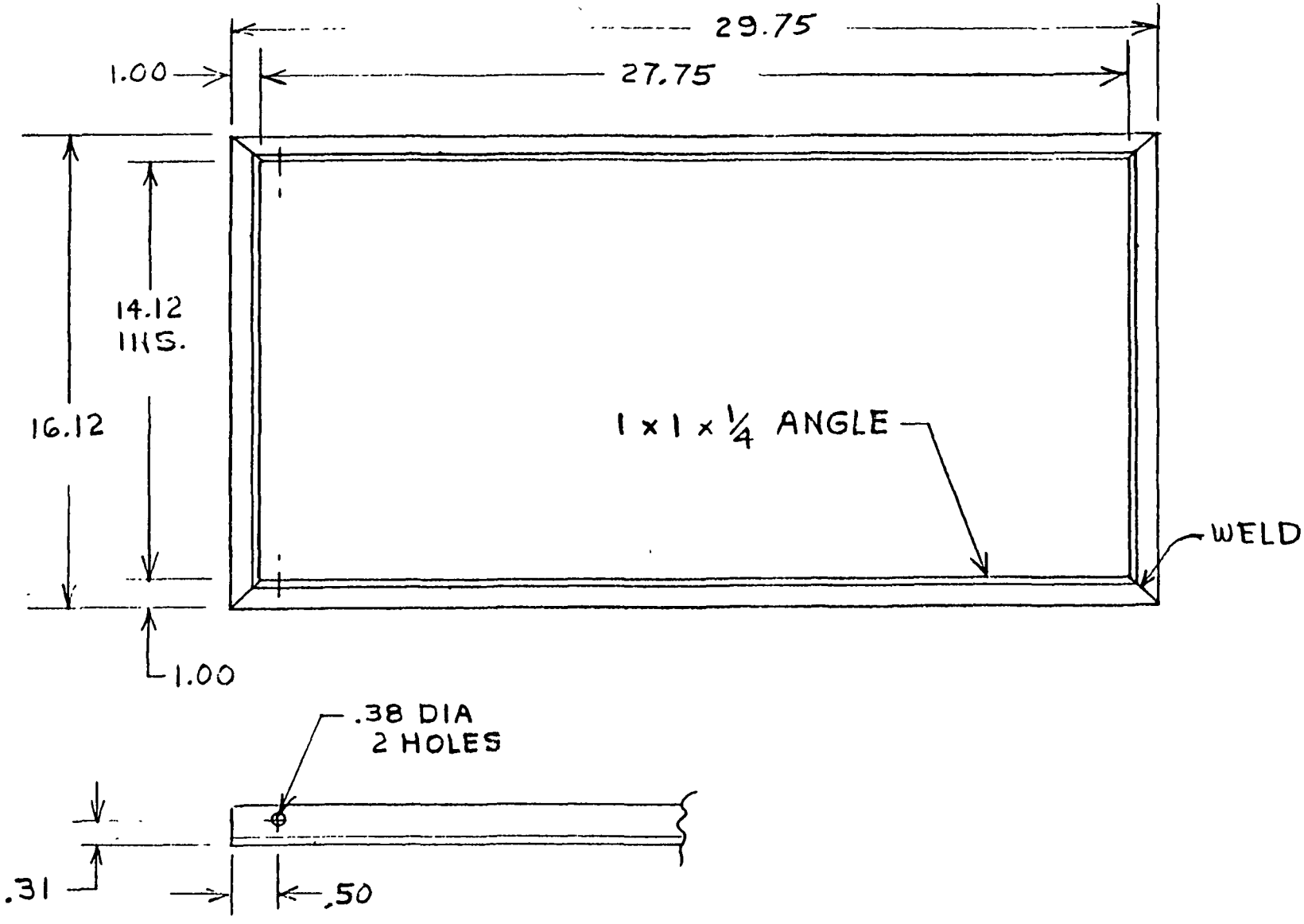

RAMPED PANEL HOLDER
MACH 5 TEST SECTION
MSFC HOT GAS FACILITY
SH 4

P709 -- P_{AIR}
P711 - P_{GH_2}

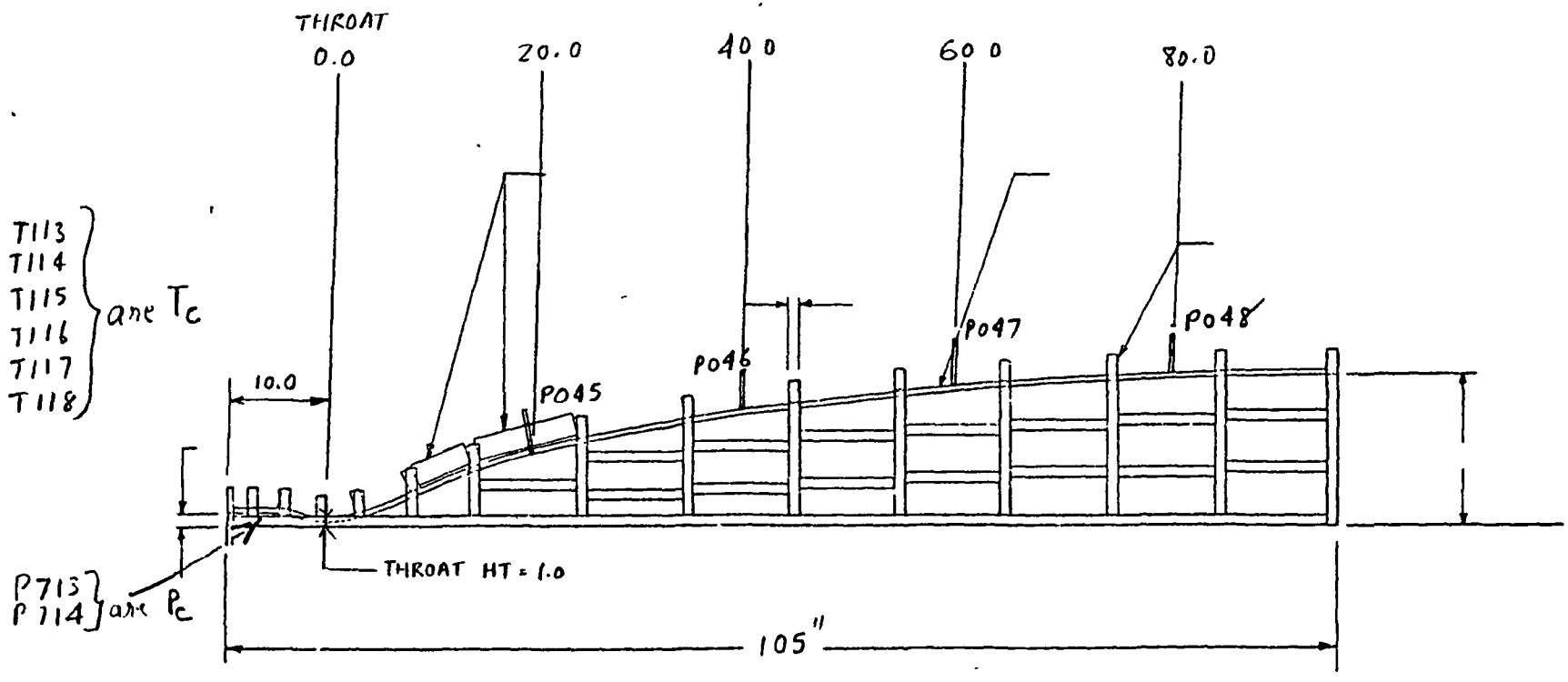

TRANSITION SECTION PRESSURES

P032 — No. 1
P031 — No. 2
P030 — No. 3

DIFFUSER PRESSURES

P029 - No 1
P028 - No 2
P027 - No. 3
P026 - No. 4
P038 - No 5
P039 - No 6
P037 - No. 7
P036 - No. 8
P035 - No. 9
P034 - No. 10
P033 - No. 11

TEST SECTION PRESSURES

P041 - TOP
P042 - WEST
P043 - BOTTOM
P044 - EAST

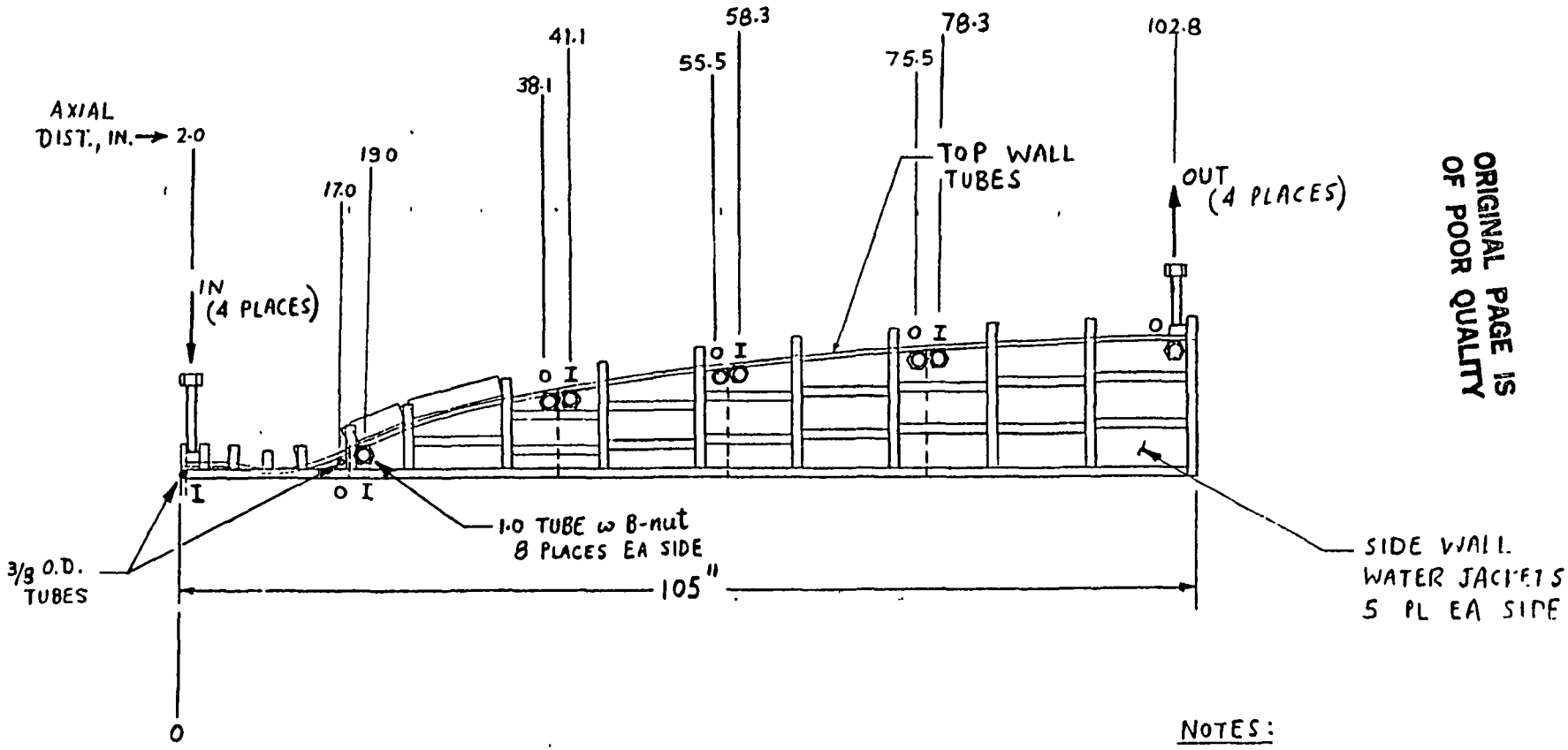

ORIGINAL PAGE IS OF POOR QUALITY

NOTES:

- I → WATER IN
  O → WATER OUT
- WATER PASSAGES IN EITHER SIDE OF BOTH HALVES OF NOZZLE SYMMETRICAL

LAYOUT OF WATER INLET/OUTLET
HGF NOZZLE

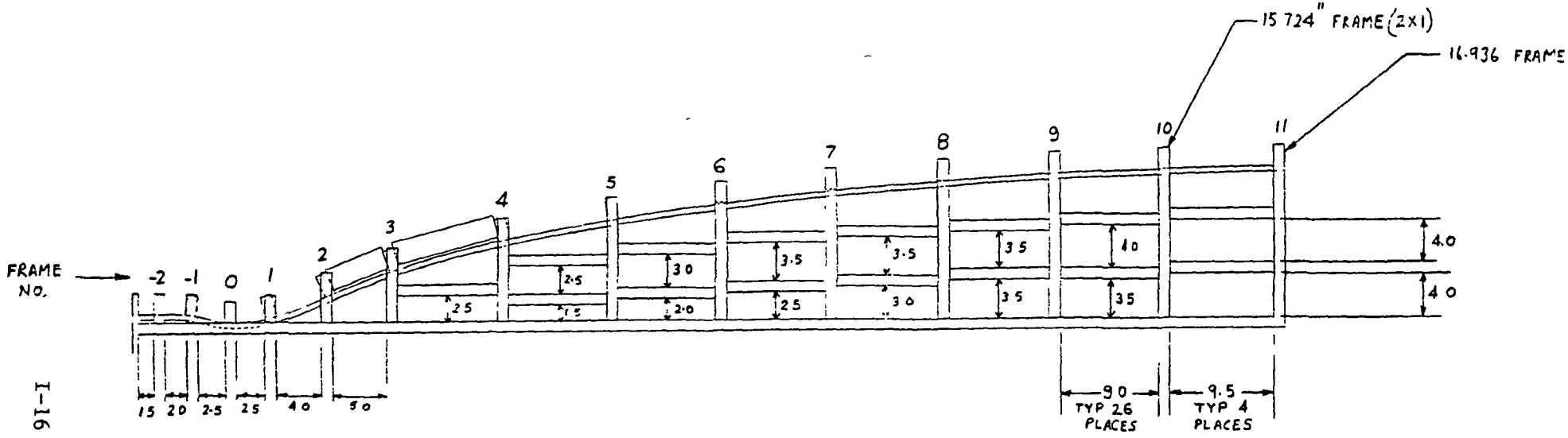

QTY REQD	CODE IDENT	PART OR IDENTIFYING NO	NOMENCLATURE OR DESCRIPTION	MATERIAL DESCRIPTION OR NOTE

PARTS LIST

UNLESS OTHERWISE SPECIFIED DIM ARE IN INCHES TOLERANCES ON
FRACTIONS = ± 1/16
DECIMALS X = ± 1
X X = ± .03

DATE	LOCKHEED
DWN	
APVD	
APVD	
ENGRG	

ORIGINAL PAGE IS OF POOR QUALITY

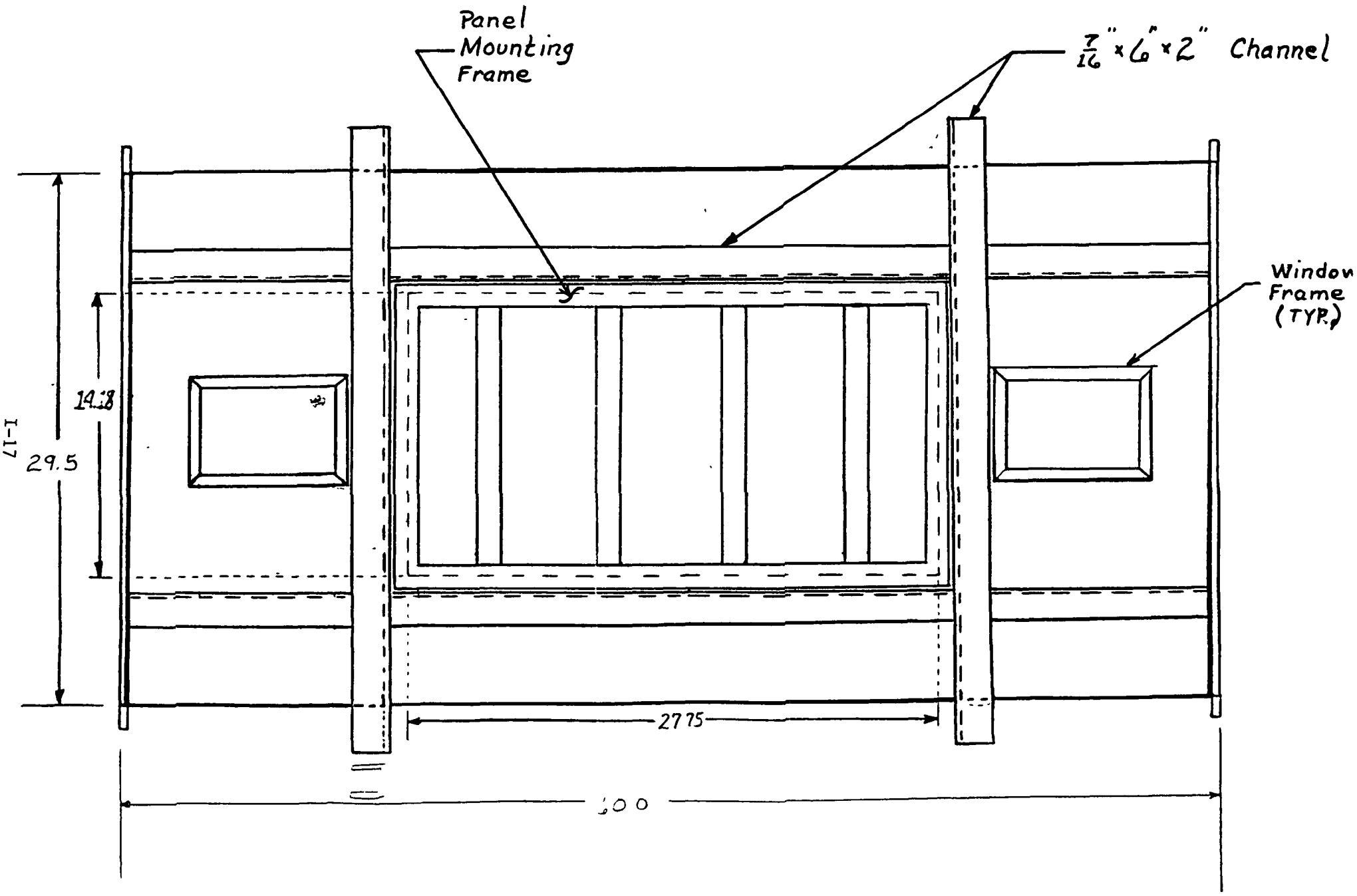
Panel Mounting Frame
7/16" x 6" x 2" Channel
Window Frame (TYP.)
14.18
29.5
27.75
100