MCR-85-1365
Contract NAS8-35625
DPD 650
DR-5

James R. Turner
PF14

Final
Technical
Report

December 1985

Servicer System Demonstration Plan and Capability Development

(NASA-CR-178714) SERVICERS SYSTEM DEMONSTRATION PLAN AND CAPABILITY DEVELOPMENT Final Technical Report (Martin Marietta Aerospace) 496 p HC A21/MF A01 CSCL 22A G3/12

N86-23611

Unclas
05994

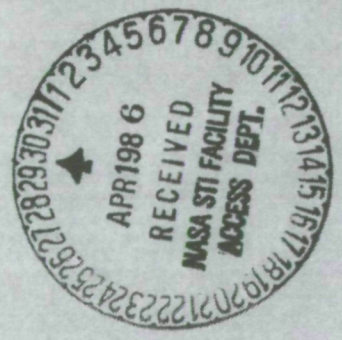

MARTIN MARIETTA
DENVER AEROSPACE
P.O. Box 179
Denver, Colorado 80201

MARTIN MARIETTA

MCR-85-1365
Contract NAS8-35625
DPD 650
DR-5

Final
Technical
Report

December 1985

SERVICER SYSTEM DEMONSTRATION PLAN AND CAPABILITY DEVELOPMENT

Prepared by:

M.A. Bulboaca
J. A. Cuseo
W. L. DeRocher, Jr.
R. W. Maples
P. C. Reynolds
R. A. Sterrett

Approved

W. L. DeRocher, Jr.

W. L. DeRocher, Jr.
Program Manager

MARTIN MARIETTA
DENVER AEROSPACE
P.O. Box 179
Denver, Colorado 80201

FOREWORD

This document was prepared by Martin Marietta Corporation under Contract NAS8-35625, Servicer System Demonstration Plan and Capability Development, Data Procurement Document 650, Data Requirement DR-5, Final Technical Report. This effort was accomplished for the George C. Marshall Space Flight Center of the National Aeronautics and Space Administration under the technical direction of the Orbital Maneuvering Vehicle Task Team, with Mr. James R. Turner as the Contract Technical Manager.

CONTENTS

		Page
	Foreword	ii
	Contents	iii
1.0	SUMMARY	1- 1
1.1	Introduction	1- 3
1.2	Study Objectives	1- 6
1.3	Relationship to Other NASA Efforts	1- 10
1.4	Study Approach	1- 14
1.5	Significant Conclusions and Recommendations	1- 16
1.5.1	On-Orbit Servicing Development	1- 16
1.5.2	Multi-Mission Modular Spacecraft Servicing	1- 17
1.5.3	Ground Demonstrations	1- 18
1.5.4	Cargo-Bay Demonstration	1- 22
1.5.5	Free-Flight Verification	1- 25
1.5.6	Servicer/MMS 1-g Demonstration Plan	1- 27
1.5.7	Servicer/MMS 1-g Demonstration Equipment	1- 29
1.5.8	Servicer Control Software - Basic Modules	1- 31
1.5.9	Servicer Control Software - MMS Modules	1- 33
1.5.10	Servicer Software Demonstrations	1- 35
1.6	Suggested Additional Effort	1- 38
1.6.1	Servicing Tasks	1- 39
1.6.2	Servicing Mechanism	1- 39
1.6.3	Demonstrations	1- 40
2.0	INTRODUCTION AND BACKGROUND	2- 1
2.1	Study Objectives	2- 3
2.2	Background	2- 8
2.3	Study Approach	2- 15
3.0	MMS SERVICING CONSIDERATIONS	3- 1
3.1	MMS Servicing Requirements	3- 7
3.2	MST Adaptation for 1-g	3- 11
3.2.1	Modified Module Servicing Tool Requirements	3- 11
3.2.2	Modified MST Mechanical Concept Definition	3- 14
3.2.3	Modified MST Electrical Concept Definition	3- 16
3.3	Module Exchange Options	3- 19
3.3.1	Servicer Configuration	3- 19
3.3.2	Alternative Modules	3- 32
3.4	Extended Remote Maintenance/Resupply Concepts	3- 37

CONTENTS (Cont.)

		Page
4.0	DEVELOPMENT PLAN SUMMARY	4- 1
4.1	Development Program Plan Introduction	4- 1
4.2	1-g Demonstrations	4- 2
4.2.1	1-g Demonstration Objectives	4- 3
4.2.2	1-g Demonstration Issues	4- 5
4.2.3	1-g Demonstration Recommended Approach	4- 5
4.2.4	1-g Demonstration Schedule and Cost Estimates	4- 7
4.3	Cargo-Bay Demonstration	4- 10
4.3.1	Cargo-Bay Demonstration Objectives	4- 11
4.3.2	Cargo-Bay Demonstration Issues	4- 12
4.3.3	Cargo-Bay Demonstration Recommended Approach	4- 13
4.3.4	Cargo-Bay Demonstration Schedule and Cost Estimate	4- 15
4.4	Free-Flight Verification	4- 19
4.4.1	Free-Flight Verification Objective	4- 19
4.4.2	Free-Flight Verification Recommended Approach	4- 20
4.4.3	Free-Flight Verification Schedule and Cost Estimates	4- 22
4.5	User Community Coordination	4- 25
5.0	1-g DEMONSTRATION PLAN	5- 1
5.1	1-g Demonstration Requirements	5- 4
5.2	1-g Demonstration Elements	5- 6
5.2.1	Multi-Mission Modular Spacecraft Module Exchange	5- 7
5.2.2	Fluid Resupply Demonstrations	5- 8
5.2.3	Control Mode Analysis and Testing	5- 9
5.2.4	AXAF Module Exchange Demonstrations	5- 13
5.2.5	Battery Module Exchange Demonstration	5- 14
5.2.6	Automatic Target Recognition and Error Correction	5- 15
5.2.7	Engineering Test Unit Electronics Update	5- 17
5.2.8	Convert ETU Control System from Analog to Digital	5- 17
5.2.9	Tank Exchange	5- 18
5.2.10	Interface Mechanism Development	5- 18
5.2.11	Adapter Tools for Specialized Tasks	5- 19
5.2.12	Recommended Approach	5- 19
5.2.13	Optional Support Tasks	5- 21
5.3	1-g Demonstration Schedule	5- 21
5.4	1-g Demonstration Cost Estimate	5- 23
6.0	CARGO-BAY DEMONSTRATION PLAN	6- 1
6.1	Cargo-Bay Demonstration Requirements	6- 4
6.2	Cargo-Bay Demonstration Elements	6- 10
6.2.1	Space Transportation System Support	6- 14
6.2.2	Servicer System	6- 14
6.2.3	Spacecraft Mockup	6- 18
6.2.4	Airborne Support Equipment	6- 21
6.2.5	Ground System	6- 22

		Page
6.3	Cargo-Bay Demonstration Configuration Alternatives	6- 23
6.3.1	Alternative Configurations	6- 23
6.3.2	Configuration Descriptions	6- 26
6.3.3	Use of the RMS During 0-g Demonstrations	6- 34
6.3.4	Configuration Selection Criteria	6- 38
6.3.5	Configuration Selection	6- 41
6.4	Cargo-Bay Demonstration Schedule	6- 44
6.5	Cargo-Bay Demonstration Cost Estimate	6- 48
7.0	FREE-FLIGHT VERIFICATION PLAN	7- 1
7.1	Free-Flight Verification Requirements	7- 3
7.2	Free-Flight Verification Elements	7- 9
7.2.1	Space Transportation System Support	7- 12
7.2.2	OMV With Servicer System	7- 13
7.2.3	Serviceable Spacecraft	7- 14
7.2.4	Airborne Support Equipment	7- 15
7.2.5	Ground System	7- 15
7.3	Free-Flight Verification Schedule	7- 17
7.4	Free-Flight Verification Cost Estimate	7- 19
8.0	SERVICER/MMS 1-g DEMONSTRATION	8- 1
8.1	Servicer/MMS 1-g Demonstration Plan	8- 1
8.1.1	Subsystem Requirements	8- 2
8.1.2	Torque Loads on ETU Drives for MMS Servicing Demonstrations	8- 9
8.1.3	Concept Definition of the MMS Module Mockup	8- 37
8.1.4	Concept Definition of the Modified MST	8- 49
8.1.5	Spacecraft Mockup Configuration Selection	8- 50
8.1.6	Stowage Rack Mockup Configuration Selection	8- 55
8.1.7	Servicer System Configuration - 1-g Demonstrations	8- 65
8.1.8	Schedule and Cost Considerations	8- 67
8.2	Servicer/MMS 1-g Demonstration Design	8- 71
8.2.1	MMS Module Mockup	8- 74
8.2.2	Stowage Rack Module Support	8- 76
8.2.3	MMS Spacecraft Mockup	8- 80
8.2.4	Connector Positioner Mechanism	8- 81
8.2.5	MST Storage Rack	8- 84
8.2.6	Optical Targets	8- 86
8.2.7	Electrical Design	8- 88
8.2.8	Parts and Materials Procurement	8- 88
8.2.9	ETU/MST/MMS Interface Coordination	8- 88
8.2.10	Design Coordination	8- 89
8.3	Servicer/MMS 1-g Demonstration Equipment	8- 90
8.4	Conclusions	8- 96

		Page
9.0	SERVICER CONTROL SOFTWARE - BASIC MODULES	9- 1
9.1	Software Requirements	9- 6
9.1.1	System Requirements	9- 12
9.1.2	Coordinate System Definition	9- 17
9.1.3	Supervisory Mode	9- 21
9.1.4	Supervisory Trajectory Hierarchy	9- 24
9.1.5	Supervisory Operations and Displays	9- 37
9.1.6	Trajectory Display Construction	9- 44
9.1.7	Manual-Augmented Control Mode	9- 48
9.1.8	Interface Definition	9- 51
9.2	Software Preparation	9- 53
9.2.1	Software Development	9- 53
9.2.2	Software User's Manual	9- 55
10.0	SERVICER CONTROL SOFTWARE - MMS MODULES	10- 1
10.1	Software Requirements	10- 3
10.1.1	System Requirements	10- 5
10.1.2	Supervisory Trajectory Hierarchy	10- 11
10.1.3	Supervisory Operations and Displays	10- 18
10.1.4	Interface Definition	10- 21
10.2	Software Preparation	10- 23
10.2.1	Software Development	10- 23
10.2.2	Software User's Manual	10- 24
11.0	SERVICER 1-g DEMONSTRATIONS	11- 1
11.1	Basic Module Exchange Demonstration	11- 3
11.1.1	Basic Module Software Installation	11- 3
11.1.2	Basic Module Control System Checkout	11- 5
11.1.3	Basic Module Demonstrations	11- 9
11.2	MMS Module Exchange Demonstration	11- 10
11.2.1	MMS Module Exchange Equipment Installation and Checkout	11- 11
11.2.2	MMS Module Software Installation	11- 18
11.2.3	MMS Module Control System Checkout	11- 18
11.2.4	MMS Module Demonstrations	11- 29
12.0	CONCLUSIONS AND RECOMMENDATIONS	12- 1
12.1	On-Orbit Servicing Development	12- 1
12.2	Multi-Mission Modular Spacecraft Servicing	12- 2
12.3	Ground Demonstrations	12- 3
12.4	Cargo-Bay Demonstration	12- 4
12.5	Free-Flight Verification	12- 6
12.6	Servicer/MMS 1-g Demonstration Plan	12- 7
12.7	Servicer/MMS 1-g Demonstration Equipment	12- 9
12.8	Servicer Control Software - Basic Modules	12- 10
12.9	Servicer Control Software - MMS Modules	12- 12
12.10	Servicer Software Demonstrations	12- 13
A	Cargo-Bay Demonstration Work Breakdown Structure	A- 1

Figures

		Page
1-1	IOSS On-Orbit Servicer Configuration	1- 4
1-2	Engineering Test Unit	1- 5
1-3	Study Task Flow Chart	1- 15
1-4	On-Orbit Servicing Development Schedule	1- 17
1-5	Multi-Mission Modular Spacecraft Mechanical System	1- 18
1-6	MMS Module Exchange Using Straight Docking Probe Adapter and Tool Adapter	1- 19
1-7	Engineering Test Unit Adaptation for MMS Servicing	1- 20
1-8	Ground Demonstrations Schedule	1- 21
1-9	Artists Concept of Cargo-Bay Demonstration	1- 22
1-10	Servicer Cargo-Bay Demonstration Schedule	1- 24
1-11	The Operational Servicer with the OMV	1- 25
1-12	Free-Flight Verification Program Schedule	1- 27
1-13	Servicer System Configuration - 1-g Demonstrations	1- 28
1-14	Connector Positioner Mechanism	1- 30
1-15	MMS Module Mockup	1- 31
1-16	Demonstration System Block Diagram	1- 32
1-17	Representative MMS Software Menus	1- 35
1-18	Module Servicing Tool for Ground Demonstrations of MMS Module Exchange	1- 36
1-19	Ground Demonstration of MMS Module Exchange	1- 37
2-1	On-Orbit Servicer Configuration	2- 2
2.2-1	Serviceable Spacecraft Designs from the 70's	2- 9
2.2-2	Servicer Mechanism Working Volume	2- 11
2.2-3	Engineering Test Unit	2- 14
2.3-1	Study Task Flow Chart	2- 17
3-1	Solar Maximum Mission Version of MMS	3- 2
3-2	Multi-Mission Modular Spacecraft Mechanical System	3- 3
3-3	MMS Module Structure with Module Retention System	3- 4
3-4	MMS Module Exchange Using Straight Docking Probe Adapter and Tool Adapter	3- 6
3-5	Docking and Berthing Pin Combined Design	3- 7
3.2-1	Modified MST Configuration for Ground Demonstrations	3- 15
3.2-2	MST Related Electrical Design Concepts	3- 18
3.3-1	MMS Docking Probe Adapter	3- 23
3.3-2	Revised MMS Docking Probe Adapter	3- 24
3.3-3	Baseline MMS Servicing Configuration	3- 26
3.3-4	Alternative MMS Servicing Configuration	3- 27
3.3-5	Module Characteristics Histogram	3- 35
3.4-1	Candidate Regions for Extension of Remote Maintenance/Resupply	3- 38
3.4-2	Candidate Uses of On-Orbit Servicer at Space Station	3- 40

Figures (Cont.)

		Page
4.2-1	The Engineering Test Unit of the IOSS	4- 3
4.2-2	Ground Demonstrations Schedule	4- 9
4.3-1	Artists Concept of the Cargo-Bay Demonstration	4- 10
4.3-2	Servicer Cargo-Bay Demonstration Schedule	4- 16
4.4-1	The Operational Servicer with the OMV	4- 19
4.4-2	Free-Flight Verification Program Schedule	4- 23
5-1	The Engineering Test Unit of the IOSS	5- 3
5-2	Ground Demonstrations Schedule	5- 22
6-1	Cargo-Bay Development Program Plan Approach	6- 2
6.2-1	Cargo-Bay Demonstration Equipment	6- 12
6.2-2	Cargo-Bay Demonstration Hardware Breakdown	6- 13
6.2-3	Representative Servicer Mechanism Configuration	6- 15
6.2-4	Stowage Rack Configuration	6- 17
6.2-5	Module Support Structure	6- 18
6.2-6	0-g Spacecraft Mockup Arrangement	6- 20
6.3-1	Cargo-Bay Equipment Arrangement 2	6- 27
6.3-2	Cargo-Bay Equipment Arrangement 3	6- 29
6.3-3	Cargo-Bay Equipment Arrangement 9	6- 31
6.3-4	Cargo-Bay Equipment Arrangement 11	6- 33
6.3-5	Cargo-Bay Equipment Arrangement 16	6- 35
6.3-6	Cargo-Bay Equipment Arrangement 2 Variation	6- 36
6.4-1	Servicer Cargo-Bay Demonstration Schedule	6- 45
7.2-1	Free-Flight Verification Equipment	7- 11
7.2-2	The Operational Servicer with the OMV	7- 13
7.3-1	Free-Flight Verification Program Schedule	7- 17
8-1	Servicer End Effector/Modified MST Interface	8- 7
8-2	Existing ETU Configuration and its Reference Coordinates System	8- 10
8-3	ETU Arm Configuration	8- 12
8-4	End Effector Position in Cylindrical Coordinates	8- 13
8-5	Cylindrical Coordinates	8- 14
8-6	End Effector Attitude Definition	8- 14
8-7	Reference Position of ETU (U = W = Y = Z = 0)	8- 16
8-8	ETU Wrist Joints in the Reference Position (W = Y = Z = 0).	8- 17
8-9	Fastener Orientation Angle Alpha	8- 19
8-10	Relationship between Z, Theta, and Alpha Angles	8- 19
8-11	Y-Drive Position Relative to Modified MST and MMS Module	8- 21
8-12	Allowable Modified MST Weight	8- 23
8-13	Module Orientation Relative to the Arm for FLIP Starting Position	8- 25
8-14	MMS Module Mockup and Modified MST Geometry	8- 27

Figures (Cont.)

		Page
8-15	MMS Module Mockup in Mid-FLIP Position	8- 28
8-16	Alternative Locations for FLIP for MMS Servicing	8- 29
8-17	Torque Load vs. Speed of the "Y" Drive	8- 32
8-18	ETU Counterbalance System	8- 33
8-19	"U" Drive Actuator Load - Cases 1 and 2	8- 35
8-20	Load vs. Speed of the "U" Drive	8- 36
8-21	MMS Module Structure with Module Retention System	8- 37
8-22	MMS Module Outside Dimensions, Including the Insulation	8- 38
8-23	Existing MMS Module Retention Fastener	8- 39
8-24	Modified Module Attachment for 1-g Demonstration	8- 40
8-25	Maximum Axial Force in the Fastener	8- 41
8-26	Accidental Load Case	8- 43
8-27	MMS Module Mockup Truss Structure	8- 44
8-28	MMS Module Mockup with Torque Box Structure	8- 46
8-29	MMS Module Mockup with Central Torque Box Structure	8- 47
8-30	MMS Module Partial Mockup	8- 49
8-31	Configuration 1) of the Spacecraft Mockup	8- 52
8-32	Configuration 2) with Added MMS Mockup	8- 53
8-33	Configuration 3) with MMS Mockup and Payload Section	8- 54
8-34	Configuration 4) Interchangeable Mockups	8- 55
8-35	Stowage Rack Alternative Arrangements	8- 57
8-36	Trajectory Sequence for MMS Module Exchange	8- 60
8-37	Variant 1 - Trajectory Sequence for Minimum MMS Servicing Time	8- 63
8-38	Recommended Stowage Rack Arrangement	8- 64
8-39	Servicer System Configuration - 1-g Demonstrations	8- 66
8-40	Change Order 3 Activity Schedule	8- 70
8-41	Servicer/MMS Equipment Drawing Tree	8- 73
8-42	MMS Module Assembly	8- 74
8-43	Stowage Rack Module Support	8- 77
8-44	Floating Nut Unit	8- 78
8-45	Electrical Connector Receptacle Mockup	8- 79
8-46	MMS Spacecraft Mockup	8- 81
8-47	Connector Positioner Mechanism	8- 82
8-48	MST Storage Rack	8- 85
8-49	Optical Target Assembly	8- 87
8-50	MMS Module Mockup Foam Structure	8- 92
8-51	MMS Module Mockup, Front View	8- 92
8-52	MMS Module Mockup, Partial Back View	8- 93
8-53	MMS Spacecraft Mockup Assembly	8- 93
8-54	MMS Module Support for Stowage Rack	8- 94
8-55	MMS Module Mockup on Stowage Rack Support	8- 95
8-56	Connector Positioner Mechanism	8- 96

Figures (Cont.)

		Page
9-1	Software Development Approach	9- 3
9-2	Demonstration System Block Diagram	9- 5
9.1-1	Servicer Servo Drive Console Interfaces	9- 13
9.1-2	Mockup Configuration Layout	9- 18
9.1-3	Cylindrical Coordinates	9- 19
9.1-4	Servicer Mechanism Gimbal Coordinates	9- 21
9.1-5	Analytical Block Diagram - Supervisory Mode	9- 25
9.1-6	Analytical Block Diagram - Manual-Augmented Mode	9- 50
11-1	ETU Configuration for Demonstration of Basic and MMS Module Exchange	11- 2
11-2	Operator's Console Arrangement	11- 4
11-3	Engineering Test Unit Configuration for Ground Demonstrations of Basic or MMS Module Exchange	11- 13
11-4	Stowage Rack Supports for "Temporary" Locations of Basic and MMS Modules	11- 15
11-5	Stowage Rack "Good" Locations for Basic and MMS Modules	11- 16
11-6	Module Servicing Tool for Ground Demonstrations	11- 17
11-7	ETU End Effector and Its Connector Positioner Mated with MST	11- 19
11-8	ETU End Effector Standing Off from MST	11- 28
11-9	MST Probe Entering MMS Module Guide	11- 31
A-1	Cargo-Bay Demonstration Work Breakdown Structure	A- 2

Tables

		Page
1-1	Study and Program Objectives	1- 7
2.1-1	Study and Program Objectives	2- 4
3.3-1	MMS Module Servicing Method Alternatives	3- 20
3.3-2	Servicer Configuration Evaluation Criteria	3- 21
3.3-3	On-Orbit Servicer Characteristics	3- 33
3.3-4	Candidate Alternative Modules	3- 36
4.2-1	Candidate 1-g Demonstration Issues	4- 5
4.2-2	Recommended Activities for the Ground Demonstrations	4- 6
4.2-3	Optional Activities for the Ground Demonstrations	4- 7
4.2-4	Estimated Costs of the Ground Demonstrations	4- 9
4.3-1	Candidate Cargo-Bay Demonstration Activities	4- 12
4.3-2	Servicer Cargo-Bay Demonstration Characteristics	4- 13
4.3-3	Cost Breakdown for the Cargo-Bay Demonstration	4- 18
4.4-1	Free-Flight Verification Characteristics	4- 22
4.4-2	Free-Flight Verification Cost Breakdown	4- 24
5-1	Recommended Activities for the Ground Demonstrations	5- 19
5-2	Optional Activities for the Ground Demonstrations	5- 21
5-3	Estimated Costs of the Ground Demonstrations	5- 24
6.1-1	Candidate Cargo-Bay Demonstration Activities	6- 6
6.2-1	Space Transportation System Equipment	6- 14
6.3-1	Candidate 0-g Demonstration Arrangements	6- 25
6-3-2	Equally Applicable Cargo-Bay Demonstration Requirements	6- 39
6.3-3	Alternative Arrangement Comparison	6- 40
6.3-4	Alternative Arrangement Evaluation	6- 42
6.5-1	Cost Breakdown for the Cargo-Bay Demonstration	6- 49
7.1-1	Free-Flight Verification Activities	7- 4
7.1-2	Free-Flight Verification Characteristics	7- 9
7.2-1	Free-Flight Verification Equipment	7- 12
7.2-2	Space Transportation System Equipment	7- 12
7.4-1	Free-Flight Verification Cost Breakdown	7- 20
8-1	Weight Data for "Y" Drive Torque Load Calculation	8- 31
8-2	Coordinates and Joint Angles	8- 59
8-3	Times Necessary to Perform the Six Steps	8- 62
8-4	Change Order 3 Activities	8- 67
8-5	Change Order 3 Deliverable Mockups	8- 68
8-6	Assembly Drawings for Servicer/MMS 1-g Demonstrations	8- 72
8-7	Change Order 3 Equipment List	8- 90

Tables (Cont.)

		Page
9.1-1	Software Components	9- 6
9.1-2	Geometrical Approach	9- 7
9.1-3	Associated Functions	9- 11
9.1-4	Simulation Initialization	9- 38
9.1-5	Total Trajectory Initialization	9- 41
9.1-6	Shut-Down Procedure	9- 42
9.1-7	Example Radial Total Trajectory Display	9- 45
9.1-8	Example Axial Total Trajectory Display	9- 47
10.1-1	Total Trajectory Initialization	10- 20
10.1-2	Shut-Down Procedure	10- 21
11.1-1	Basic Module Demonstrations	11- 9
11.2-1	MMS Module Exchange Equipment	11- 11

1.0 SUMMARY

An upgraded spacecraft servicing demonstration plan, based on a preliminary plan from contract NAS8-35496, has been prepared that leads to a fully verified operational on-orbit servicing system based on the module exchange, refueling, and resupply technologies by late 1992. The resulting system can be applied at the Space Station, in low earth orbit with an Orbital Maneuvering Vehicle (OMV), or be carried with an OMV to geosynchronous orbit by an Orbital Transfer Vehicle (OTV). The three recommended overlapping phases are:

1) Ground demonstrations using the MSFC Robotics Laboratory;

2) Cargo-bay demonstrations in the Orbiter using the Remote Manipulator System to dock a Multi-Mission Modular Spacecraft (MMS) mockup, carried to and from orbit on the MMS Flight Support System, to the servicer and spare module stowage rack. Two forms of module exchange and fluid resupply are recommended for demonstration on a single Orbiter flight;

3) Free-flight verification using the OMV as the carrier vehicle and a rented spacecraft bus to carry the MMS serviceable spacecraft mockup.

The plan emphasizes the exchange of Multi-Mission Modular Spacecraft modules as the MMS is a significant ongoing program involving space-repairable satellites.

Three servicer mechanism configurations are included in the plan:

1) The Engineering Test Unit currently in use at MSFC would be used for early ground demonstrations, procedures development, and training;

2) A proto-flight quality unit would be used for the demonstration flight in the Orbiter cargo bay and subsequently for ground demonstrations, procedures development, and training;

3) One fully operational unit that has been qualified and documented would be used in the free-flight verification activity.

The plan balances costs and risks by overlapping study phases, utilizing existing equipment for the ground demonstrations, maximizing use of existing MMS equipment, taking advantage of the ongoing NASA-JSC orbital refueling program, and rental of a spacecraft bus rather than building a new unit for a one-time use in the free-flight verifications. The preliminary funding estimate is $1.0M for the ground demonstrations, $9.3M for the cargo-bay demonstrations, $35M for the free-flight verifications, and a total of $45.3M in 1985 dollars.

The plan must be significant and long-term to encourage users and spacecraft designers to include on-orbit servicing in the form of module exchange in their plans.

The capability development portion of the study effort had two parts - software development and provision of MMS module exchange demonstration mockup equipment. Software was developed, documented and successfully demonstrated for the separate exchange of basic (24 in. cube) modules and MMS (48 in. square by 20.5 in. deep) modules. Exchange of each type of module was demonstrated in three control modes.

A plan for the demonstration of the exchange of MMS modules using the servicer mechanism Engineering Test Unit (ETU) was prepared and executed. The plan included: (1) establishment of requirements, (2) conceptual design, (3) selection of MMS spacecraft mockup configuration, (4) selection of MMS module mockup configuration, (5) evaluation of adequacy of ETU load capability, and (6) selection of a stowage rack arrangement.

The MMS module exchange demonstration mockup equipment was designed, fabricated, checked out, shipped, installed, and demonstrated in the MSFC Robotics Laboratory.

1.1 INTRODUCTION

Many studies and demonstrations during the past decade have clearly proven the overwhelming cost effectiveness benefits of an unmanned on-orbit satellite servicing capability. The ability to change out failed or worn-out satellite modules and to replenish fuels and other expendable commodities offers satellite programs a greatly reduced operating cost when compared with replacement of an entire satellite. Development activities that will eventually lead to routine orbital servicing operations were initiated in the early 1970's. Several alternative servicing systems, including satellite modules and component design approaches, were defined and evaluated during this period.

With the Space Transportation System now operational, the capability exists to deliver and retrieve an operational servicer system. It was thus appropriate to initiate in 1983 the planning that will lead directly to the operational servicing capability.

Since the early 1970's various alternatives for satellite maintenance have been identified, conceptualized, and evaluated--unmanned orbital servicing systems, manned extravehicular activities, highly reliable expendable designs, and retrieval for ground refurbishment and return to orbit. The first Integrated Orbital Servicing System (IOSS) study completed in September 1975 along with a parallel study, Integrated Orbital Servicing and Payloads Study, conducted by COMSAT Laboratories of the Communications Satellite Corporation, jointly concluded:

1) On-orbit servicing is the most cost-effective satellite maintenance approach;

2) Development of a single on-orbit servicer maintenance system is compatible with many spacecraft programs;

3) Spacecraft can be designed to be serviceable with acceptable design, weight, volume, and cost effects;

4) The evolving Space Transportation System (STS) is designed to support on-orbit maintenance;

5) Users need guarantees that servicing will be available and assurances that it will be cost effective.

As satellite designs continue to evolve and the Space Station era approaches, it becomes apparent that there is room for virtually all the alternatives of satellite maintenance at one point or other in the future. However, to minimize servicer system development costs, the IOSS follow-on study, completed in June 1978, recommended that a single servicer system having the capability to accommodate both low earth and geosynchronous orbit applications should be evolved. This requirement has been satisfied effectively by the servicer mechanization (Fig. 1-1) conceptualized during the IOSS studies. The single design is compatible with maintenance of most spacecraft of the Space Transportation System era. Adapters may be used to accommodate support structure differences across the applications.

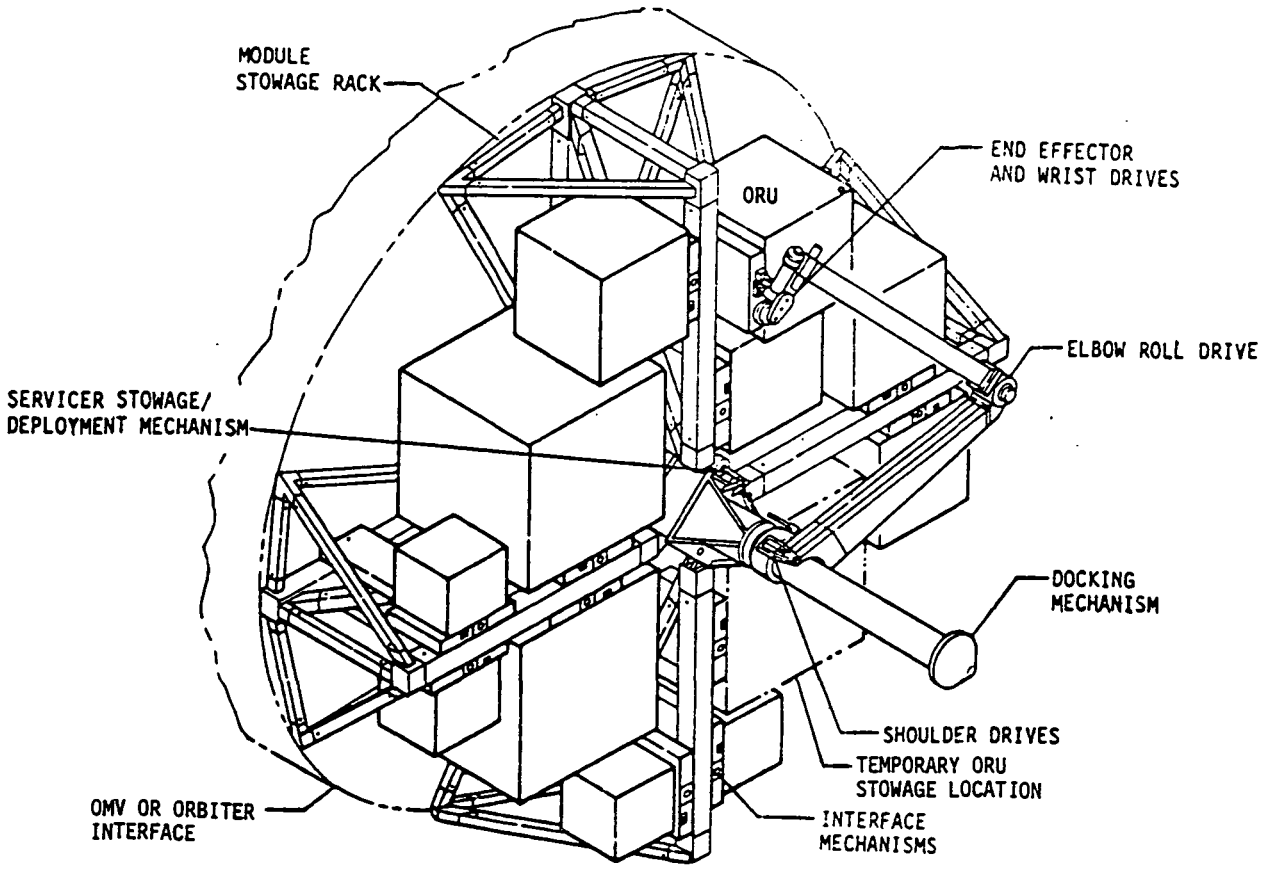

Figure 1-1 IOSS On-Orbit Servicer Configuration

ORIGINAL PAGE IS
OF POOR QUALITY

An effective interface between each orbital replaceable unit (ORU), or module, and the spacecraft and the servicer was defined and breadboarded. The interface mechanism provides a logical and cost effective method of incorporating orbital replaceable units (ORU) for module exchange in all spacecraft.

The value of demonstrations in furthering on-orbit servicing development was recognized in the decision to build a 1-g version of the Integrated Orbital Servicing System of Figure 1-1. The result is the Engineering Test Unit (ETU) of the IOSS shown in the photograph of Figure 1-2. This unit was built and delivered to MSFC in 1978. It has been used for over 350 demonstrations during the intervening seven years.

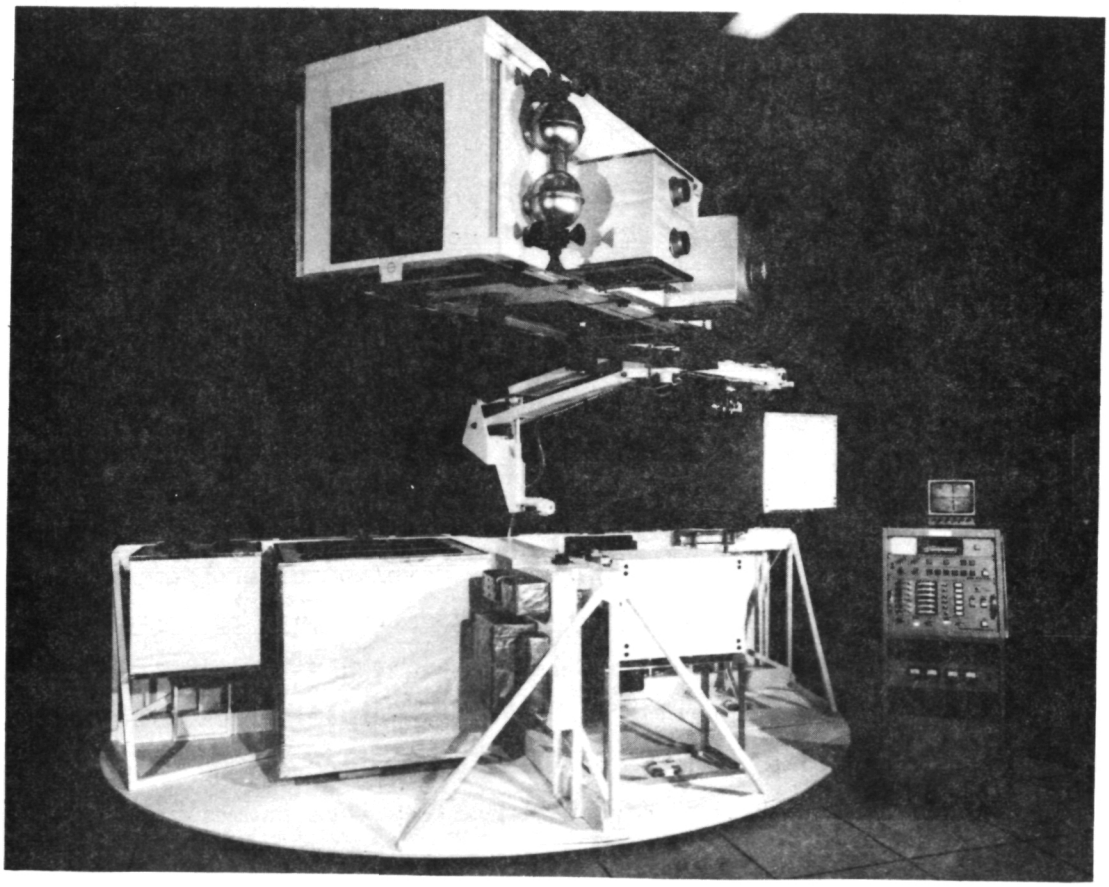

Figure 1-2 Engineering Test Unit

Considerable interest in spacecraft maintenance was expressed by both the Department of Defense and the commercial sector, however, the general tenor of their support was that a demonstration of orbital maintenance must be conducted prior to any commitment on their part. A flight demonstration of the all-up maintenance capability is also a NASA requirement prior to wholesale commitment to the concept.

However, a reduced capability test that exercises the basic concept and exchanger capability can and should be demonstrated prior to the time that a full capability will exist. With this background material in hand, and with renewed interest by the space flight community, it was appropriate to perform the prior study (Contract NAS8-35496) that defined a path leading to demonstration of the servicing capability. The cargo-bay demonstration part of the development plan from the prior study was felt to be too expensive so it has been extensively revised in the current study. The 1-g part of the development plan was found acceptable and the portions of it having to do with basic and MMS module software development and with the preparation of mockup equipment for the demonstration of MMS module exchange were performed as part of the subject contract activity. This software and mockup equipment activity led to a series of successful 1-g module exchange demonstrations.

1.2 STUDY OBJECTIVES

The objectives of this Servicer System Demonstration Plan and Capability Development study are to identify all major elements and characteristics of an on-orbit servicing development program and to integrate them into a coherent set of demonstrations, to upgrade the Engineering Test Unit control system for basic and MMS module exchange demonstrations, and to upgrade the MSFC 1-g servicing demonstration facility mockups to permit the exchange of MMS modules. These objectives, along with the program objectives, are summarized in Table 1-1. The on-orbit servicing development plan was to be a revision of the plan prepared during the prior study with increased emphasis on low cost and use of MMS equipment. The revisions primarily addressed the cargo-bay demonstrations.

Table 1-1 Study and Program Objectives

Study Objectives
To identify and integrate the major characteristics of an on-orbit servicing demonstration program plan. To upgrade the engineering test unit control system for MMS and basic module exchange demonstrations. To upgrade the 1-g demonstration facility to permit exchange of MMS modules.
Program Objectives
Fully verified and documented operational on-orbit servicing system a) Based on module exchange and fluid resupply technologies, b) Suitable for use with Space Station. Major issue is balance between the number and complexity of development activities and cost.

The goal of the development program is a fully verified operational on-orbit servicing system based on the module exchange and fluid resupply technologies that is also suitable for use with and at the Space Station. The plan must be significant and long-term to encourage users and spacecraft designers to include on-orbit servicing in the form of module exchange in their plans.

The second study objective involves the development of two software programs - one for the exchange of basic modules and one for the exchange of MMS modules - and the demonstration of the exchange of both types of modules. The demonstrations were to be performed for three different control modes which are:

1) Supervisory with minimal operator assistance;

2) Supervisory with operator assistance at each action;

3) Manual-Augmented.

The third study objective involved the design, fabrication, and installation of MMS demonstration equipment. The Martin Marietta provided equipment included:

1) Two MMS module mockups;

2) One spacecraft mounted module receptacle;

3) Two stowage rack mounted module receptacles;

4) A connector positioner drive;

5) An MST storage rack;

6) A set of MMS module targets;

7) A set of related wiring.

A light weight form of the Module Servicing Tool, which was adapted to the Engineering Test Unit and modified for remote location of its control system was provided by Goddard Space Flight Center. The mechanical and electrical design was performed by Fairchild Space Company, the mechanical equipment was built by GSFC, and the electrical equipment was built by Fairchild.

The combination of the second and third study objectives amounted to the goal of adapting the on-orbit servicer ETU to exchange MMS modules and conducting successful demonstrations in 1-g. The challenge of this goal was accepted and accomplished.

The first of two key study issues was the need to balance the number and complexity of development activities against available funds. The proposed approach, recommended in the Spacecraft Servicing Demonstration Plan (SSDP) study, is to lay out a program with most of the desired features, that overlaps the 1-g, 0-g, and operational servicer demonstrations, and attempts to get an early operational

capability. It minimizes costs by taking advantage of parallel activities such as the JSC refueling program, and advocates renting a spacecraft bus rather than buying a new one. The program was also scoped large enough to become a recognized part of NASA's long-range plans. The promise of a clear plan by NASA to develop and use module exchange for many years will encourage the user, or spacecraft designer, to incorporate module exchange in his plans.

The second key study issue was the need to maintain a close working relationship between MSFC and Martin Marietta personnel during servicer control software development. A number of interfaces were defined so both organizations could work towards the same goal:

1) Computer and interface electronics operations;

2) Functions to and from the Servicer Servo Drive Console and the ETU;

3) Functions to and from the control station for Manual-Augmented control mode implementation.

The close working relationship between MSFC and Martin Marietta personnel was particularly effective during the installation of the MMS module exchange equipment and rework of the spacecraft mockup. The cooperation and assistance of MSFC personnel, especially the Contract Technical Monitor, Mr. James Turner and Messers. Tom Bryan and Don Scott of the Robotics Laboratory, in obtaining needed materials and performing the installation and rework resulted in the effort being completed early and with better results than had been originally planned. Their efforts are greatly appreciated.

The servicer system development plan was prepared to provide implementors and users with a single development approach that will culminate in orbital servicing operations. The plan is necessary because only by providing a planned development program will both development and user support be focused on the servicing issue. Current planning for the Orbital Maneuvering Vehicle is such that

servicer development must be started soon if a servicing capability is to exist shortly after the OMV reaches an operational status. Verification of a servicing capability with the OMV will result in a well-proven system being available for potential use with the Space Station. Many prior and current studies have addressed individual elements of servicing. Many tools and support hardware elements have been defined that will aid a future servicing program. These efforts, however, have not resulted in a general move on the part of the user community to incorporate serviceability in the form of module exchange into their spacecraft designs. It is only through the implementation of a development program that produces a demonstrated on-orbit servicing capability that the benefits of this program will be realized in future spacecraft operations. The upgraded development program plan described in this report was prepared to satisfy this need.

1.3 RELATIONSHIP TO OTHER NASA EFFORTS

Prior and ongoing NASA activities, as well as future plans, in the area of satellite servicing are discussed in relation to the objectives and approach of this servicer system demonstration plan and capability development study.

Servicing development activities were initiated in the early 1970's and continue through the present time. Studies and development work have been performed by NASA, other government agencies, and contractors. Early study results concluded that on-orbit servicing was a more cost effective approach than ground refurbishment of satellites.

Recommendations included that spacecraft be designed for servicing and that module exchange was the most cost-effective method of servicing. During the Integrated Orbital Servicing System study an Engineering Test Unit was designed and built and has been in use at MSFC since 1978 for ground demonstrations of remote satellite servicing and other development activities. A wealth of experimental data was accumulated during that servicer demonstration and development program and constitutes the basis for further development of an on-orbit satellite servicing capability.

As the Space Transportation System is operational, satellites in low earth orbit are accessible for on-orbit maintenance and repair. Many NASA efforts are now directed towards definition of the requirements, interfaces and programmatic aspects of the three main approaches to satellite servicing: (1) manned, using extravehicular activities, (2) remote servicing, using a simple specialized mechanism for module exchange, refueling, and resupply and controlled in manual and automated modes, and (3) remote servicing operations using telepresence technology and artificial intelligence.

EVA satellite servicing participated in a successful demonstration during the Solar Maximum Repair Mission when equipment modules were exchanged on a Multi-Mission Modular Spacecraft utilizing the Orbiter Remote Manipulator System (RMS), the Manned Maneuvering Unit (MMU) and a module servicing tool (MST). Many tools and auxiliary devices have been developed for use by the Shuttle or Space Station EVA crews to perform various servicing tasks. The accumulated EVA experience emphasizes the need for simple, easy maintenance and repair tasks, ample clearances to accommodate the rather bulky EVA suit, and provision for handrails and foot restraint brackets. Due to EVA time and space limitations and the high cost and risk involved, baselining EVA for maintenance, repair and refueling/resupply of spacecraft needs to be determined by the user on an individual basis. Because of man's direct involvement in the operations, the safety aspects are particularly important and difficult to resolve. However, EVA remains the main back-up system for repair in contingency situations at the Orbiter and Space Station, due to its superior flexibility and ability to perform unscheduled and unplanned repair operations.

An Orbital Maneuvering Vehicle is being developed by NASA-MSFC, with the participation of other NASA centers, to supplement the STS for satellite delivery, retrieval and on-orbit servicing. It will utilize the Orbiter for launch and will have applications in both low earth orbits (LEO) and geostationary earth orbit (GEO), when transported to GEO by an Orbital Transfer Vehicle (OTV) or other orbit transfer stage. Early availability of the OMV as a reusable vehicle will

obviate the necessity of including integral propulsion in many new space initiatives for satellite deployment or retrieval. The OMV will have a man-in-the-loop control capability from a ground control station (GCS). Rendezvous and docking capability and an OMV compatible servicer kit can be developed in subsequent phases to add satellite retrieval and on-orbit servicing capabilities. The incongruity between desirable polar orbits and the STS capability can be eased by use of an OMV.

Servicing functions and approaches are being investigated by NASA and its contractors in connection with Space Station operations. Maintenance and repair missions are being evaluated for the Space Station. For the proximity operations an RMS may be used, with manual control from a special servicing platform. For LEO satellite deployment and retrieval, the OMV will be used. In situ satellite servicing at LEO can be performed using an OMV and a servicer from the Space Station. Similar operations at GEO can use an OTV from the Space Station to deploy and retrieve the OMV and the servicer. The control of the servicer can be from the Space Station or from the ground. Operating the OMV/servicer or OTV/OMV/servicer from the Space Station can provide better availability of servicing and can reduce launch costs.

The promise of advanced automation, including capabilities such as telepresence and artificial intelligence, is being examined by the MSFC Space Station project as part of a "smart front end" for the OMV. The requirements for the smart front end include those functions that the IOSS approach can do, and much more. However, it is also possible to refine the IOSS design so that the basic mechanism can also be used on a smart front end. The major differences in the two approaches are in the sensors used and complexity of the control systems. It thus seems that the IOSS concepts should be considered for inclusion in the development process leading to a Space Station applicable smart front end for the OMV.

The Astro Electronics part of the RCA Government Systems Division has contracted with Martin Marietta to help RCA investigate the application of IOSS concepts to Polar Platform configurations. The information provided by Martin Marietta is to help RCA decide on a servicing system approach for this element of the Space Station program.

Many studies during the past decade proved the cost benefits of on-orbit fluid resupply. The areas of fluid management requiring new technology have been identified. Cargo-bay experiments are now planned by NASA-JSC to demonstrate fluid transfer in 0-g and to test new quick disconnects and sensors. For these first experiments, EVA operations are planned. Safety aspects are of prime concern. Standardization of the fluid resupply interface is an important issue affecting the economics and ultimately the success of the satellite fluid resupply activities. An interface standardization project is being pursued by NASA-JSC. The objective is to develop a standard propellant servicing interface for all satellites. A committee will be formed consisting of appropriate NASA elements, the DoD and those industrial firms active in the design and fabrication of satellite propulsion stages. This committee will define the fluid interconnects, mechanical attachment hardware, isolation philosophy, data format requirements, and instrumentation and control interfaces consistent with safety requirements and minimization of crew time lines. The program objectives are to develop and certify a standardized disconnect design for on-orbit resupply of earth storable, gaseous and cryogenic fluids and to provide earth storable fluid disconnect flight hardware for the Gamma Ray Observatory by March 1986.

The prior study, Spacecraft Servicing Demonstration Plan, made use of the experience accumulated during the IOSS demonstrations and expanded its scope to encompass demonstrations of Multi-Mission Modular Spacecraft servicing, other module and component exchange, and refueling demonstrations utilizing the present state of the art technology. Timing of various planned activities was such that it could take advantage of the results of the NASA-JSC refueling development effort and match the milestones of the OMV development program schedule.

A simple, proven servicer mechanism, with a standardized end effector interface and supplemented by specialized adapters and interface mechanisms, like the IOSS, can be built today with the present technology. It can provide a much needed satellite servicing capability now and the ability to test and develop the elements of future generation servicers.

1.4 STUDY APPROACH

Our approach to the proposed study was to use the four tasks identified in the contract statement of work. These are:

1) Task 1 - Servicer Development Program Plan;

2) Task 2 - Servicer Control Software;

3) Task 3 - Servicer Demonstration;

4) Task 4 - Program Management.

Figure 1-3 shows an overall logic flow for the four study tasks. Other than the program management task, the work divides naturally into two parts - preparation of the Servicer Development Program Plan (Task 1) and generation of the servicer control software as well as conducting servicer demonstrations at MSFC (Tasks 2 and 3). The MMS 1-g servicing demonstration definition effort of Change Order 1 and the MMS 1-g demonstration equipment drawing, fabrication, checkout, and installation effort of Change Order 3 were included in Task 1. The MMS module software requirements, programming, and user's manual preparation effort of Change Order 3 were included in Task 2, while the software installation and MMS module exchange activity of Change Order 3 were included in Task 3. MMS module exchange demonstrations required the availability of a GSFC MMS Module Servicing Tool designed for use in 1-g with the MSFC Engineering Test Unit. A more detailed description of the approach to each of the four tasks of this study is presented in Section 2.3.

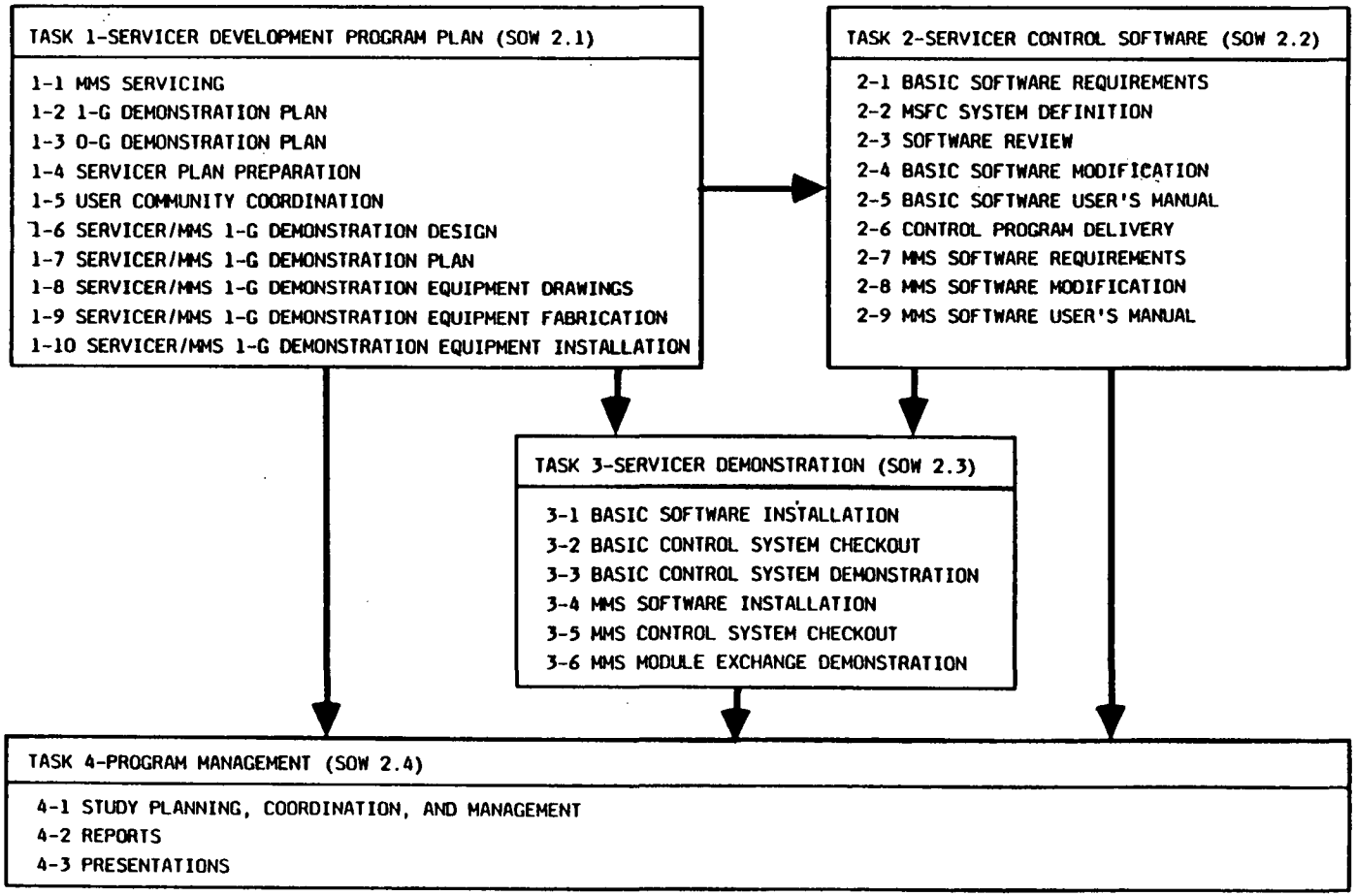

Figure 1-3 Study Task Flow Chart

1.5 SIGNIFICANT CONCLUSIONS AND RECOMMENDATIONS

The significant conclusions and recommendations from this Servicer System Demonstration Plan and Capability Development activity are presented below. Many secondary conclusions and recommendations are given in Sections 3.0 through 11.0. The conclusions and recommendations which span the study are given first.

1.5.1 On-Orbit Servicing Development

The following conclusions and recommendations apply to the overall on-orbit servicing development:

1) The recommended plan leads to the free-flight verification of an operational servicer suitable for use with the OMV and the Space Station;

2) The plan has three phases

   - Ground demonstrations,
   - Cargo-bay demonstration,
   - Free-flight verification;

3) The free-flight verification can be completed by late 1992 (see Figure 1-4);

4) The total estimated cost is 45.3 million 1985 dollars;

5) The plan includes three servicer mechanism configurations:

   - The Engineering Test Unit currently in use at MSFC would be used for early ground demonstrations, procedures development, and training for the cargo-bay demonstration,
   - A proto-flight quality unit would be used for the demonstration flight in the Orbiter cargo bay and for procedures development and training related to the operational servicer,

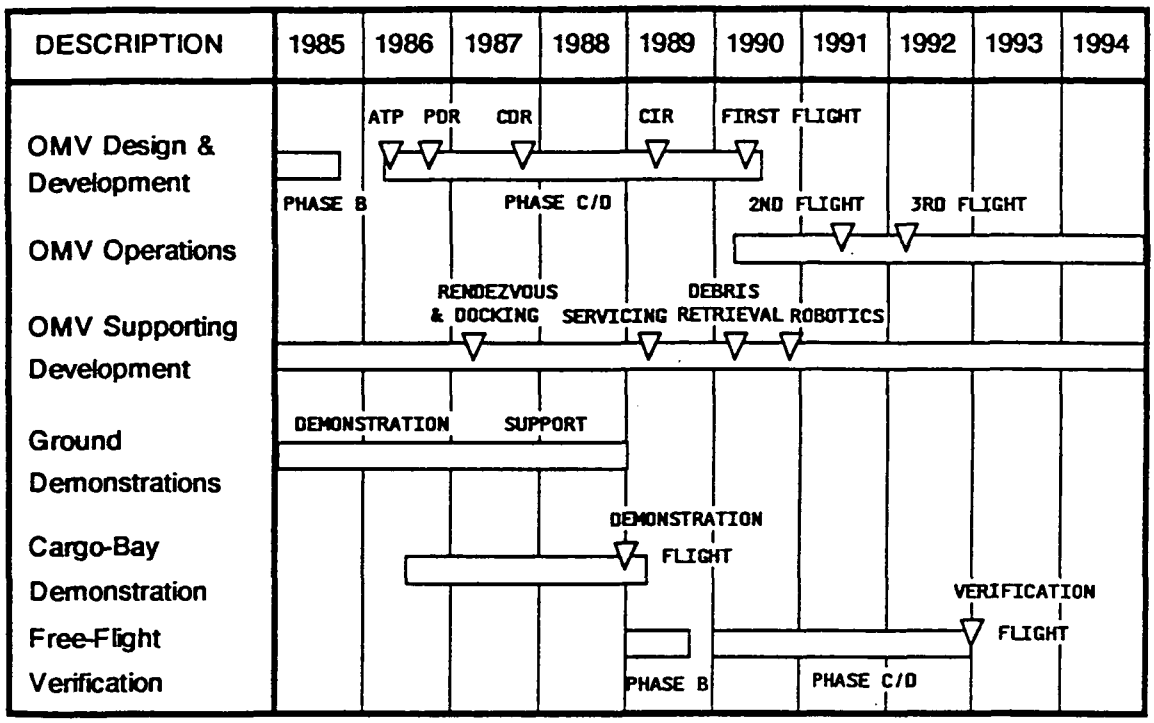

Figure 1-4 On-Orbit Servicing Development Schedule

- One fully operational unit that has been qualified and documented for use in the free-flight verification activity and in subsequent operations;

6) The plan is based on use of proven IOSS designs and test hardware;

7) Areas for application of the module exchange form of on-orbit servicing to the Space Station were identified.

1.5.2 Multi-Mission Modular Spacecraft Servicing

The following conclusions and recommendations apply to the involvement of MMS equipment in the demonstration plan and in subsequent operations:

1) Primary emphasis would be on demonstrating the exchange of MMS modules (see Figure 1-5);

2) The MMS Module Servicing Tool should be adapted to work with the servicer end effector for the exchange of MMS modules;

3) A set of requirements for the MST adaptation was prepared;

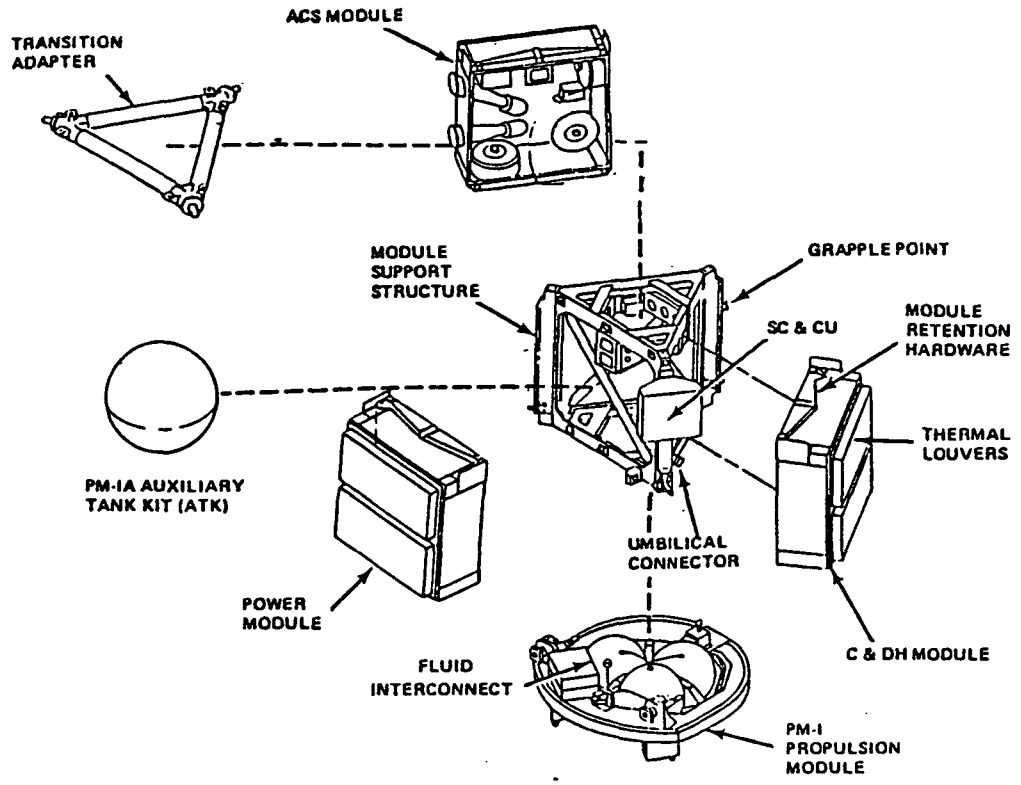

Figure 1-5 Multi-Mission Modular Spacecraft Mechanical System

4) Light weight MMS module mockups with dimensionally correct standard MMS attachment fixtures and connector shells should be used for ground demonstrations;

5) On-orbit servicing of MMS modules should be effected by use of lateral docking with a straight docking probe adapter, tool adapter and modified stowage rack (see Figure 1-6).

1.5.3 Ground Demonstrations

The following conclusions and recommendations were developed during the ground demonstration analyses:

1) The servicer system Engineering Test Unit, shown in Figure 1-2, should be used as the mechanism for early ground demonstrations;

2) Continue the ability to demonstrate separately the exchange of both basic and MMS modules;

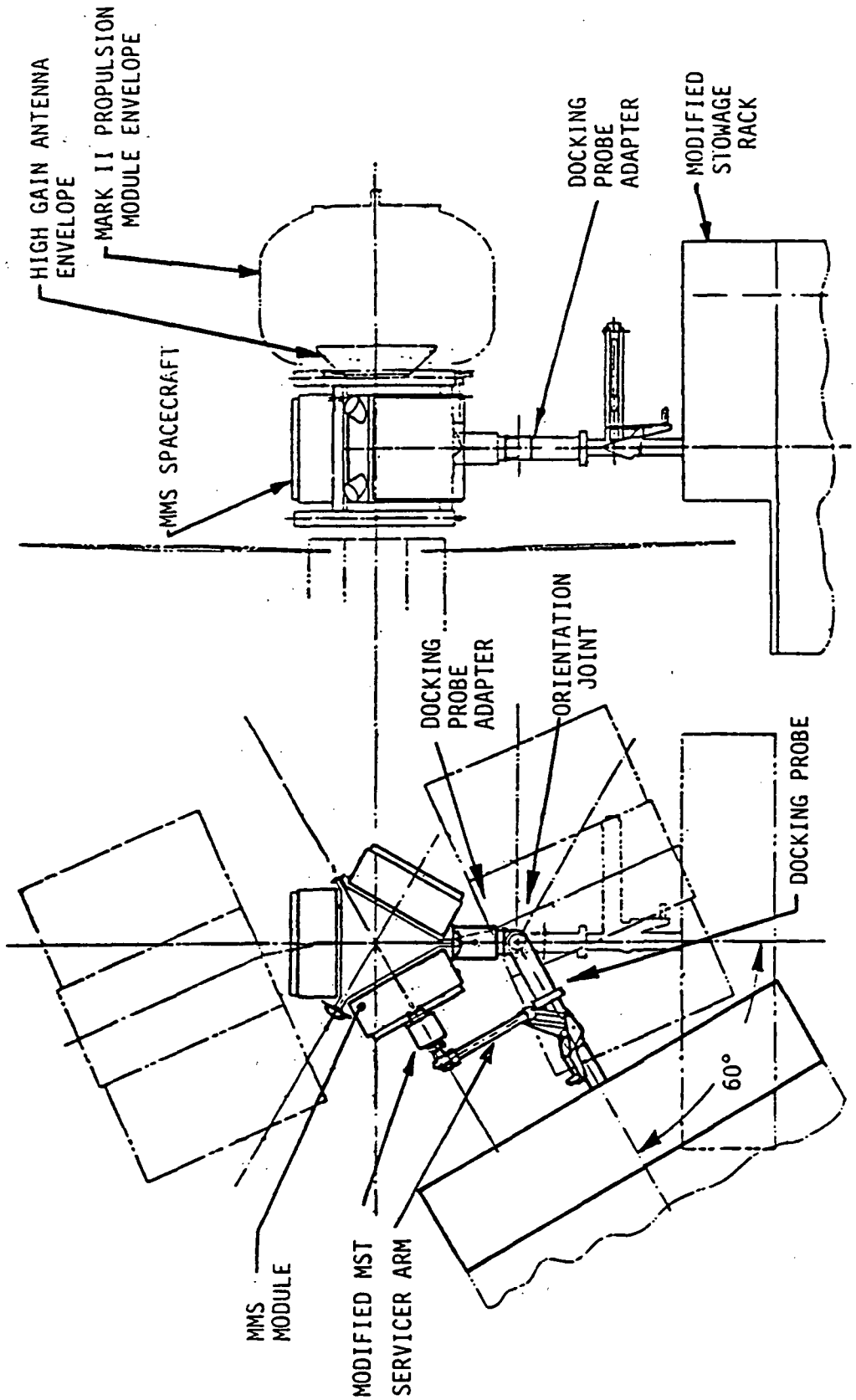

Figure 1-6 MMS Module Exchange Using Straight Docking Probe Adapter and Tool Adapter

Figure 1-6

ORIGINAL PAGE IS
OF POOR QUALITY

3) The control system software of the MSFC servicing demonstration facility has been upgraded;

4) MMS module exchange under computer control has been demonstrated (see Figure 1-7);

5) Control mode analysis and testing for exchange of both module types should be continued;

6) Approaches for the cargo-bay demonstration and for free-flight verification should be developed;

7) Fluid resupply hardware should be developed and the process demonstrated;

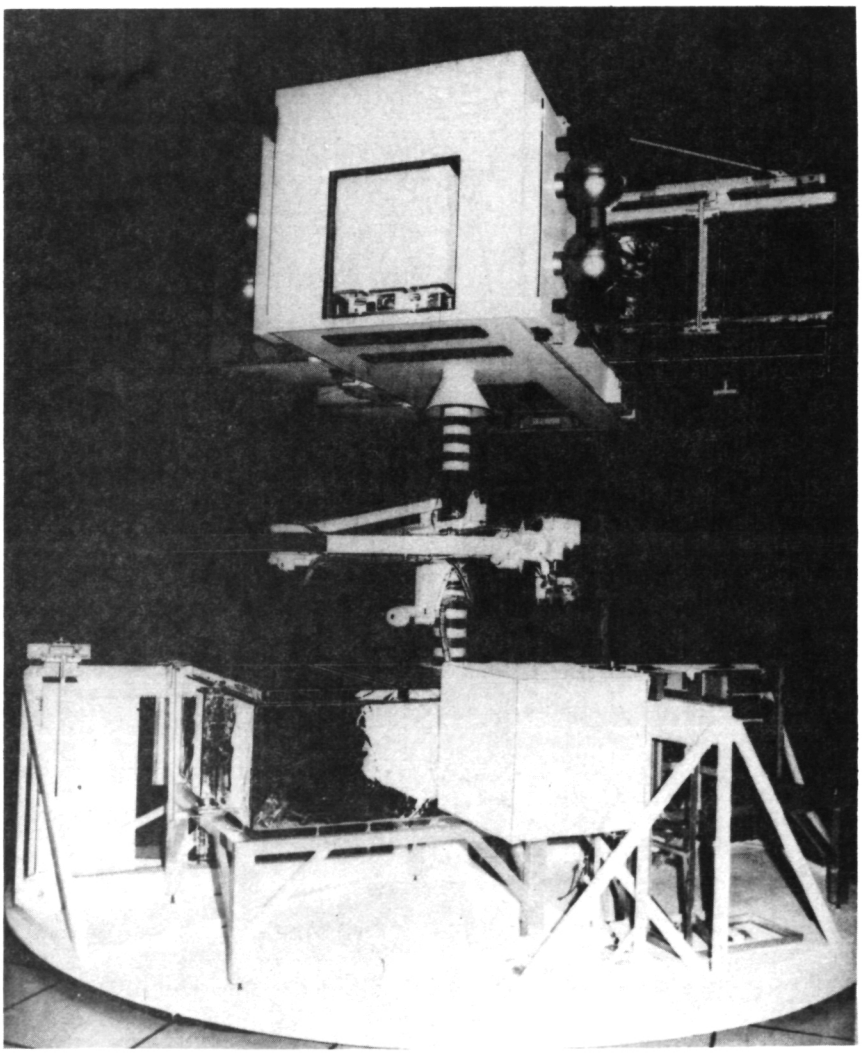

Figure 1-7 Engineering Test Unit Adaptation for MMS Servicing

8) The exchange of batteries or other individual components should be demonstrated along with thermal blanket/access cover removal and replacement;

9) An automatic target recognition and error correction system should be developed and demonstrated;

10) The MSFC servicing demonstration facility should be made available for support of flight operations in terms of simulations, procedures development, training, and problem solving. The facility should also be made available as a laboratory development tool;

11) The first five ground demonstration activities can be accomplished by late 1986 (Figure 1-8) if they are funded in time.

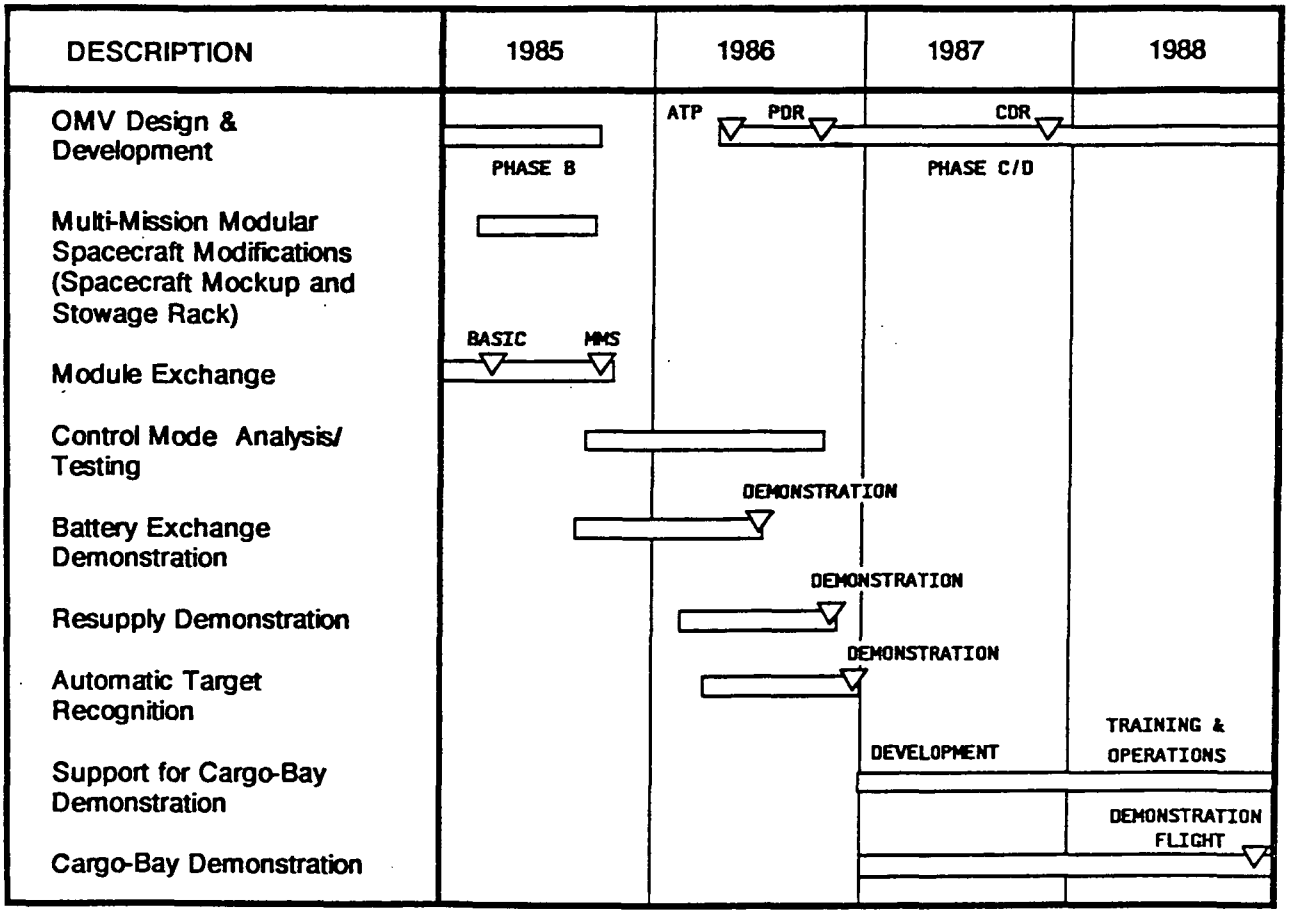

Figure 1-8 Ground Demonstrations Schedule

1.5.4 Cargo-Bay Demonstration

The following conclusions and recommendations were developed during the cargo-bay demonstration analyses:

1) A proto-flight quality servicer mechanism should be built for use in the single cargo-bay demonstration flight;

2) The MMS Flight Support System should be used to support the MMS spacecraft representation during the cargo-bay demonstration;

3) The Orbiter Remote Manipulator System end effector should be used for a docking system;

4) A specific arrangement of servicing demonstration elements in the Orbiter cargo bay was selected and recommended for use (see Figure 1-9);

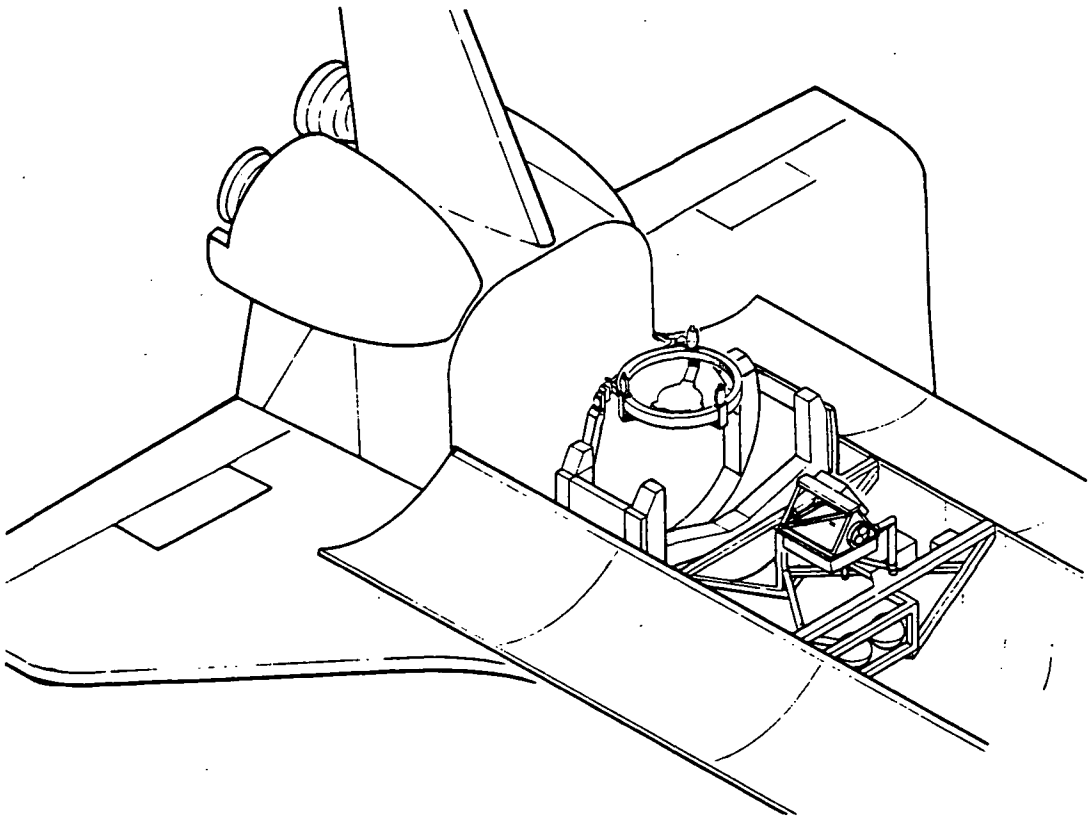

Figure 1-9 Artists Concept of the Cargo-Bay Demonstration

5) The characteristics of the recommended servicer cargo-bay demonstration are:

- MMS mockup dock and undock by RMS,
- Supply of power, attitude control, thermal control and communications by Orbiter,
- Servicer control station in Orbiter,
- Docking rigidization by servicer docking probe,
- Electrical connection between servicer and spacecraft via the docking mechanism,
- Use of MMS triangular module support structure,
- Module exchange demonstration,
- Fluid resupply demonstration,
- Servicing equipment performance demonstration,
- Unassisted Supervisory control mode,
- Man-machine interaction evaluations,
- Compliance with Orbiter system safety requirements,
- Servicer spare module stowage rack mounted in trumnions in Orbiter cargo bay,
- Use of representative servicing operational equipment,
- Operator training;

6) The hardware for the fluid resupply demonstrations should be obtained from the ongoing Johnson Space Center refueling demonstration flight program;

7) The first cargo-bay demonstration flight can be completed by late 1988 (Figure 1-10);

8) The recommended activities for the test flight are:

- The replacement of a Multi-Mission Modular Spacecraft type module using an MMS Module Servicing Tool, incorporating an electrical connector, and mounted so that the module moves axially,

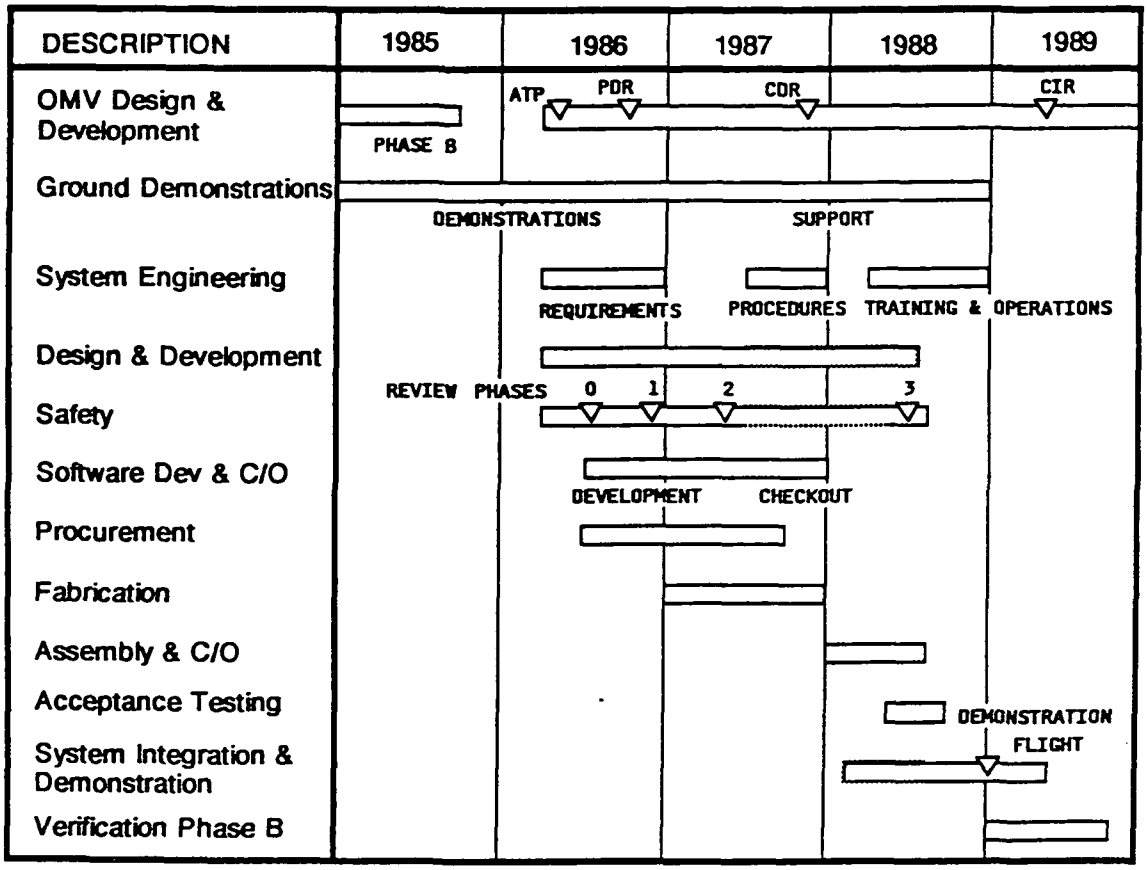

Figure 1-10 Servicer Cargo-Bay Demonstration Schedule

- The replacement of a battery module on a light weight side interface mechanism using an electrical connector and with a near-radial module motion direction,

- The transfer of a fluid using a multiple line fluid resupply module including a fluid interface unit and a hose and cable management device mounted in a far-axial direction;

9) The cargo-bay demonstration servicer mechanism, after its flight use, should be used to replace the ETU for ground demonstrations, procedures development, and operator training.

ORIGINAL PAGE IS
OF POOR QUALITY

1.5.5 Free-Flight Verification

The following conclusions and recommendations were developed during the free-flight verification analyses:

1) A fully operational servicer system (Figure 1-11) that has been qualified and documented should be built for use in the free-flight verification activity;

2) One servicer system should be built;

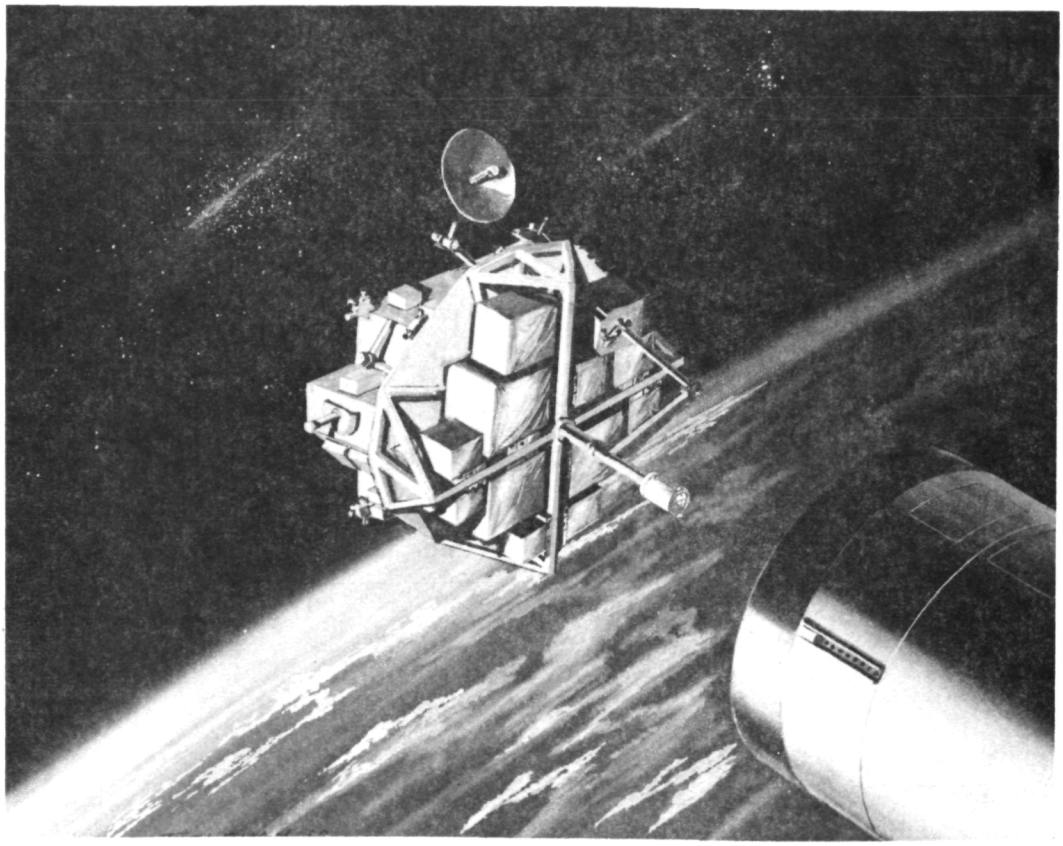

Figure 1-11 The Operational Servicer with the OMV

3) The unassisted Supervisory control mode should be used;

4) A spacecraft bus, such as the SPAS-01, should be rented rather than a new spacecraft being built for this one-time application;

5) The characteristics of the recommended servicer free-flight verification are:

- One verification flight,
- Serviceable satellite mockup supported by a rented spacecraft bus,
- Supply of power, attitude control, communications, and thermal protection and control of the servicer from the OMV,
- Use of OMV for rendezvous and docking of servicer to the serviceable spacecraft mockup,
- Use of serviceable spacecraft mockup and modules from cargo-bay demonstration,
- Two way communication links to ground through TDRSS,
- Servicer control station at OMV ground control station,
- Docking rigidization by servicer docking probe,
- Deployment of stowed servicer mechanism and docking probe,
- MMS module exchange demonstration,
- Fluid resupply demonstration,
- Servicing equipment performance verification,
- Control mode verification,
- Operator training;

6) The recommended flight verification activities are:

- Exchange of MMS module,
- Exchange of other representative modules,
- Fluid transfer;

7) The free-flight verification of an operational servicer can be completed by late 1992 (Figure 1-12).

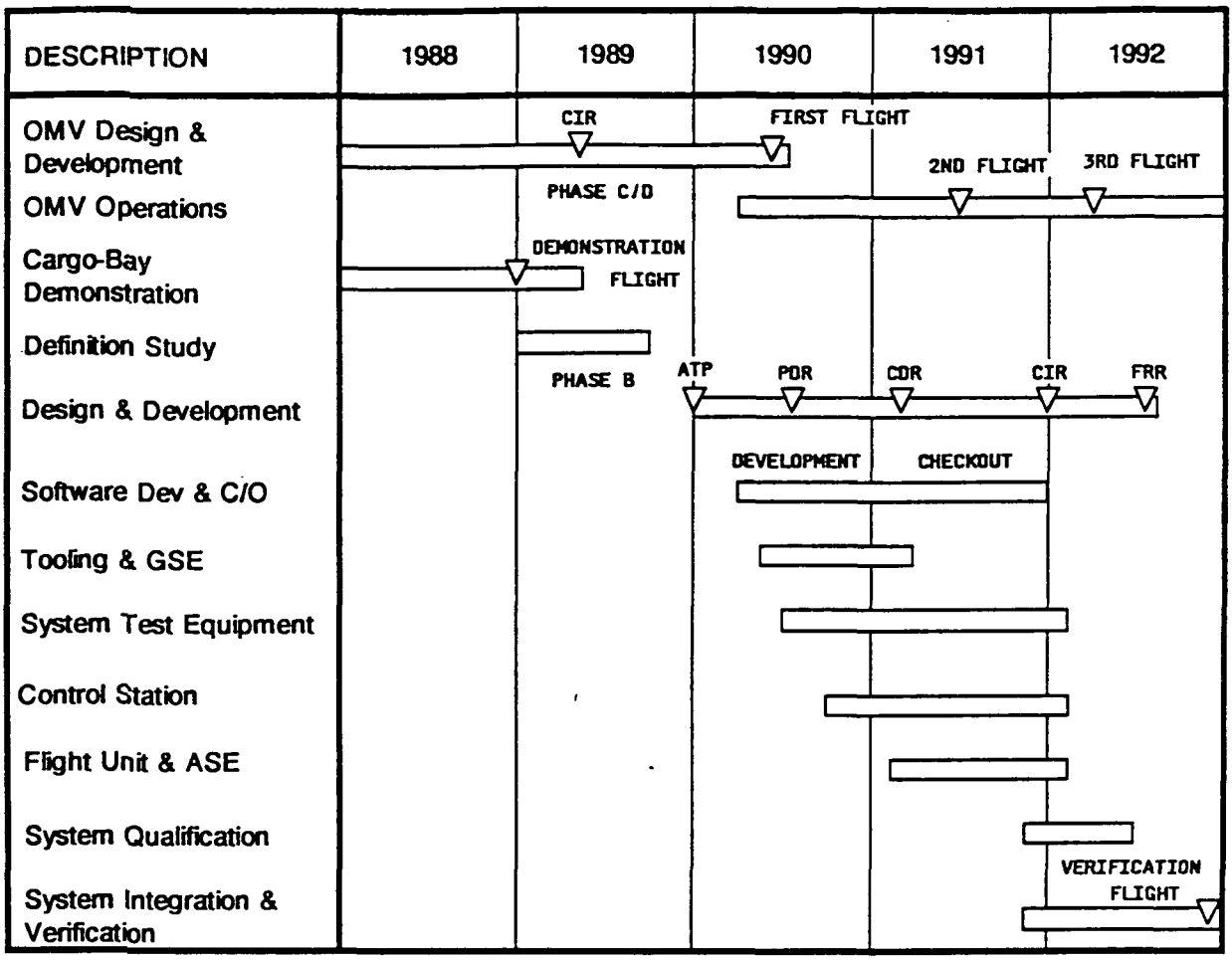

Figure 1-12 Free-Flight Verification Program Schedule

1.5.6 Servicer/MMS 1-g Demonstration Plan

The following conclusions and recommendations were developed during the preparation of the servicer/MMS 1-g demonstration plan:

1) The servicer/MMS 1-g demonstration subsystem requirements were identified for the MMS module mockup, spacecraft mockup, stowage rack mockup, electrical connector positioner mechanism, and optical targets;

2) A preliminary system concept design was performed and the relative positions of the main components were established as shown in Figure 1-13;

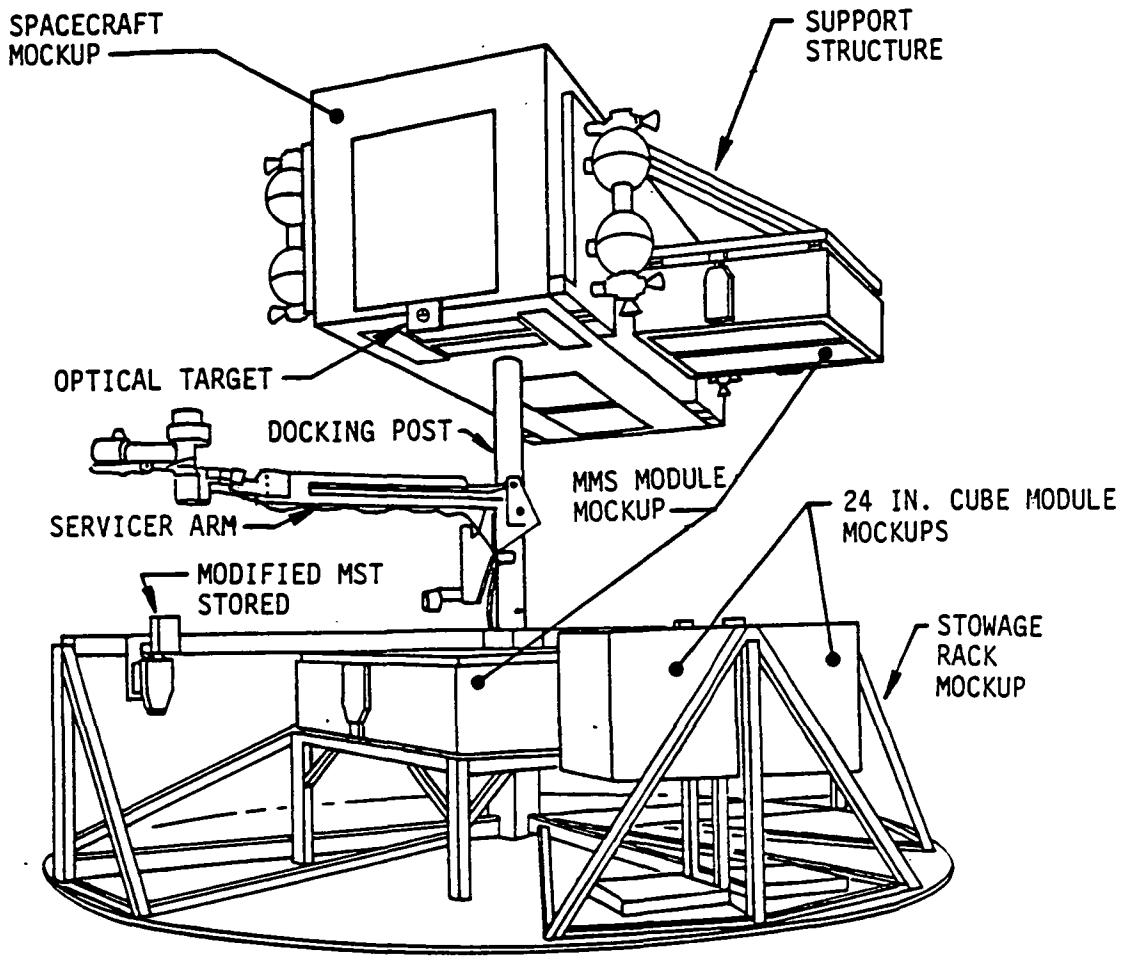

Figure 1-13 Servicer System Configuration - 1-g Demonstrations

3) Several characteristics of the servicer/MMS demonstration equipment were selected:

   - MMS bolt tightening torque of 10 $\pm$ 1 ft-lbs and loosening torque of 20 $\pm$ 1 ft-lbs,
   - Maximum torque of 50 ft-lbs for the wrist pitch (Y) drive of ETU,
   - Maximum weight of 12.5 lbs for MMS module mockup,
   - Maximum distance of 7.25 in. between the end effector interface and module latch interface,
   - Maximum weight of 15 lbs for the modified MST;

4) A light weight configuration and a structural concept were selected for the MMS module mockup;

5) A simple, straightforward configuration was selected for the spacecraft mockup, that emphasizes the MMS module while providing realistic MMS servicing trajectories and preserving the existing basic module exchange capability;

6) The arangement of the MMS module mockups, basic module mockups and MST storage rack on the ETU stowage rack was selected based on:

- Minimum modification of the existing stowage rack,
- Minimum MMS servicing demonstration time,
- No system reconfiguration between MMS module and basic module exchange demonstrations.

1.5.7 Servicer/MMS 1-g Demonstration Equipment

The following conclusions and recommendations were developed as part of the servicer/MMS demonstration equipment design and fabrication activities:

1) The design effort included:

- Drawing preparation,
- Coordination of MST integration,
- Design coordination,
- Materials and components procurement;

2) The connector positioner mechanism (see Figure 1-14) features:

- A compact, eccentric type mechanism,
- Accurate linear ball slide,
- 5/8 in. mating stroke,
- 20 lb connector mating/demating force,
- Adjustable position for end of stroke,
- Simple interface with ETU end effector;

3) The optical target features:

- Common design for all MMS fastener locations and for the MST storage rack,
- Compliant attachment to its support,
- Minimal resetting in case of accidental displacement;

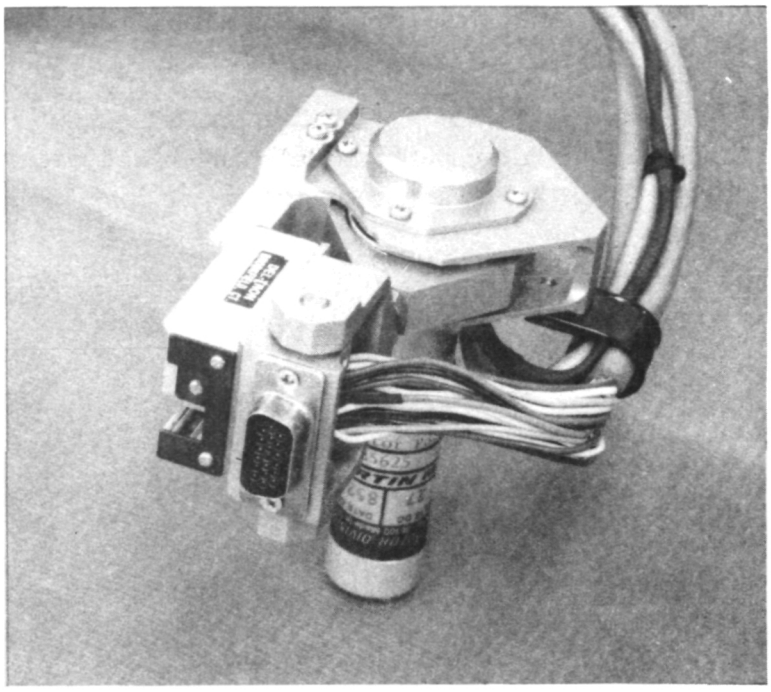

Figure 1-14 Connector Positioner Mechanism

4) The weight of the fabricated and assembled MMS module mockup (Figure 1-15) is 10.0 lbs, compared to the 12.5 lbs maximum design limit;

5) The fabricated and assembled connector positioner mechanism:

- Was tested on a special bracket, prior to shipment to MSFC,
- Smoothly mated and demated with the electrical connector,
- The mating and demating times were within the design goals.

ORIGINAL PAGE IS
OF POOR QUALITY

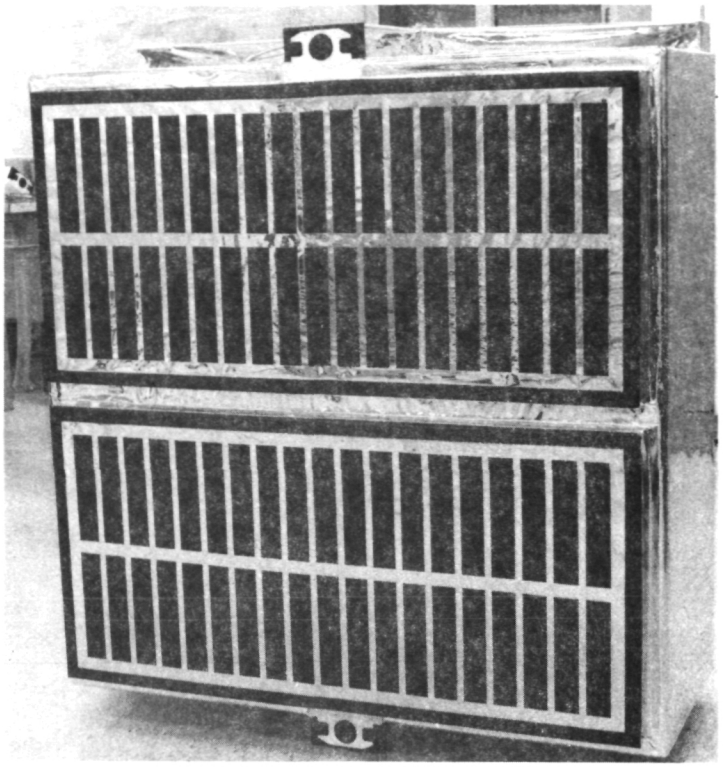

Figure 1-15 MMS Module Mockup

1.5.8 Servicer Control Software - Basic Modules

The following conclusions and recommendations were identified during development of the servicer control software for the demonstration of basic module exchange:

1) Three control modes were implemented;

2) Software requirements were explicitly defined and documented;

3) All required interfaces between the computer and the electrical equipment were defined and documented (see Figure 1-16);

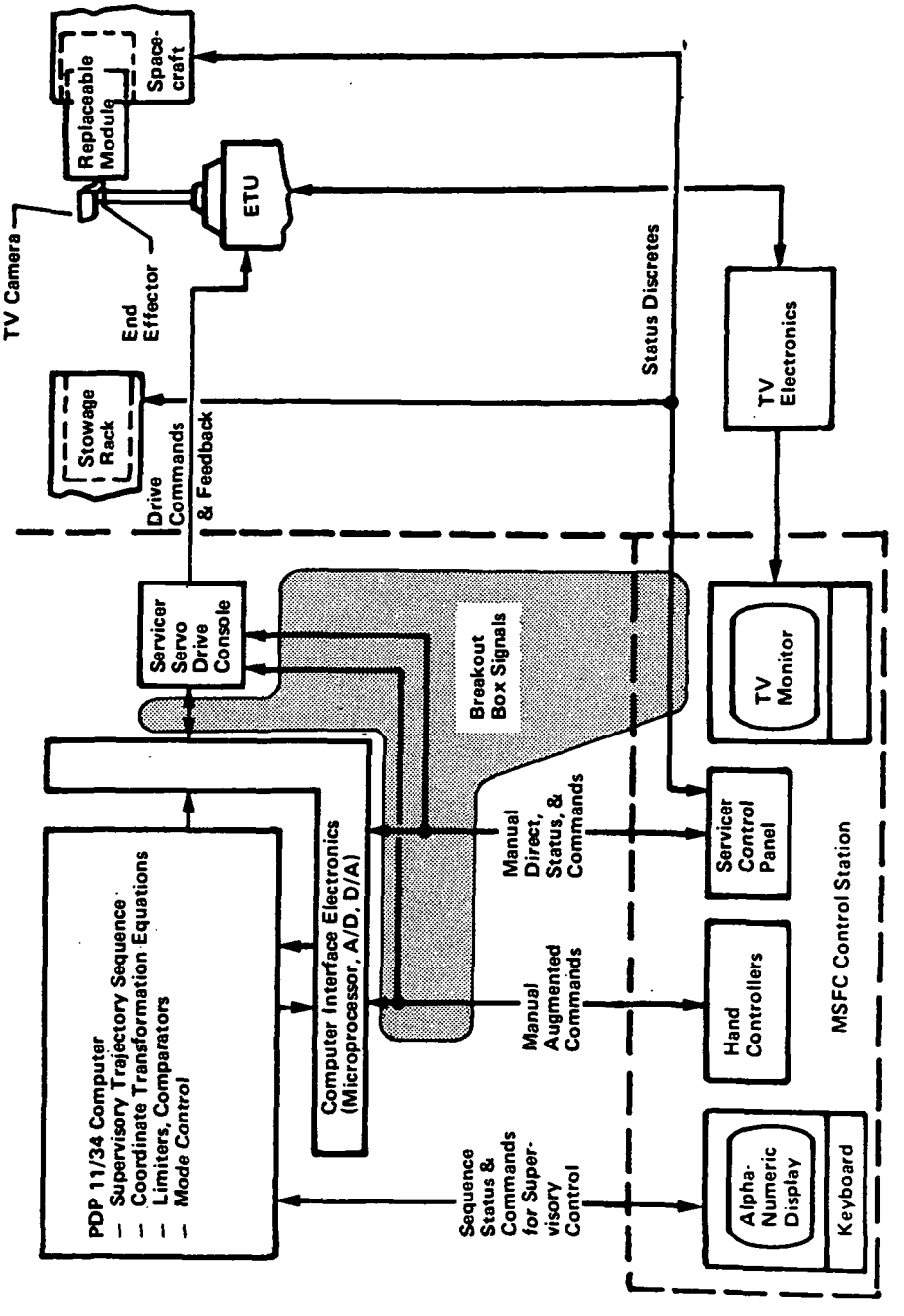

Figure 1-16 Demonstration System Block Diagram

Figure 1-16

4) The characterictics of the Supervisory control mode trajectory hierarchy for basic modules are:

- Four total trajectories,
- Twenty trajectories,
- Nine steps,
- Eight actions,
- Each hierarchy level is composed of elements below it in the hierarchy,
- Four types of coordinate transformations,
- Closed loop operation of ETU joints,
- Control of end effector and interface mechanism drives,
- Operator assisted and unassisted modes;

5) Software program is menu driven;

6) Procedures and trajectory sequences for the Manual-Augmented control mode were documented;

7) Simulated hardware characteristics are included in software so program can be run independent of servicer hardware;

8) A test program for verifying the computer to servicer hardware interfaces was provided;

9) A separate Software User's Manual was prepared for the basic module software.

1.5.9 Servicer Control Software - MMS Modules

The following conclusions and recommendations were identified during development of the servicer control software for the demonstration of MMS module exchange:

1) The MMS module software follows the basic patterns and philosophy of the basic module software;

2) Three control modes were implemented;

3) Software requirements were explicitly defined and documented;

4) All required interfaces between the computer and the electrical equipment were defined and documented;

5) The characteristics of the Supervisory control mode trajectory hierarchy for MMS modules are:

- One total trajectory,
- Nine trajectories,
- Thirteen steps,
- Ten actions,
- Each hierarchy level is composed of elements below it in the hierarchy,
- Four types of coordinate transformations,
- Closed loop operation of ETU joints,
- Control of end effector, connector positioner drive, and MST latch and bolt drives,
- Operator assisted and unassisted modes;

6) Software program is menu driven (Figure 1-17);

7) Procedures and trajectory sequences for the Manual-Augmented control mode were documented;

8) Simulated hardware characteristics are included in software so program can be run independent of servicer hardware;

9) A test program for verifying the computer to servicer hardware interfaces was provided;

10) A separate Software User's Manual was prepared for the MMS module software.

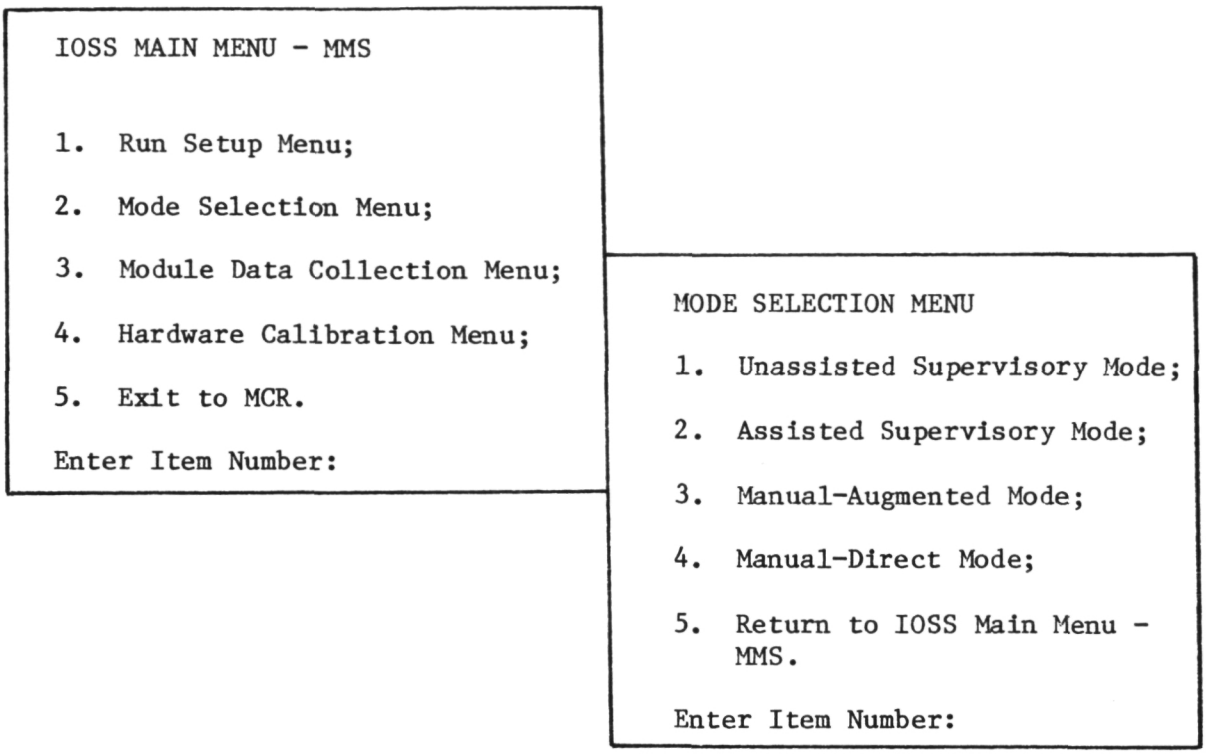

Figure 1-17 Representative MMS Software Menus

1.5.10 Servicer Software Demonstrations

The following conclusions and recommendations were identified during the conduct of the basic and MMS module exchange demonstrations using the two servicer software programs:

1) All of the demonstration equipment operated satisfactorily and was comprised of:

- ETU and associated electronics by MSFC,
- PDP-11/34 computer with D/A and A/D's by MSFC,
- MMS modules, spacecraft mockup, and stowage rack modifications by Martin Marietta,
- Connector positioner and wiring changes by Martin Marietta,
- 1-g Module Servicing Tool by GSFC (see Figure 1-18),
- MST electronics by Fairchild Space Co;

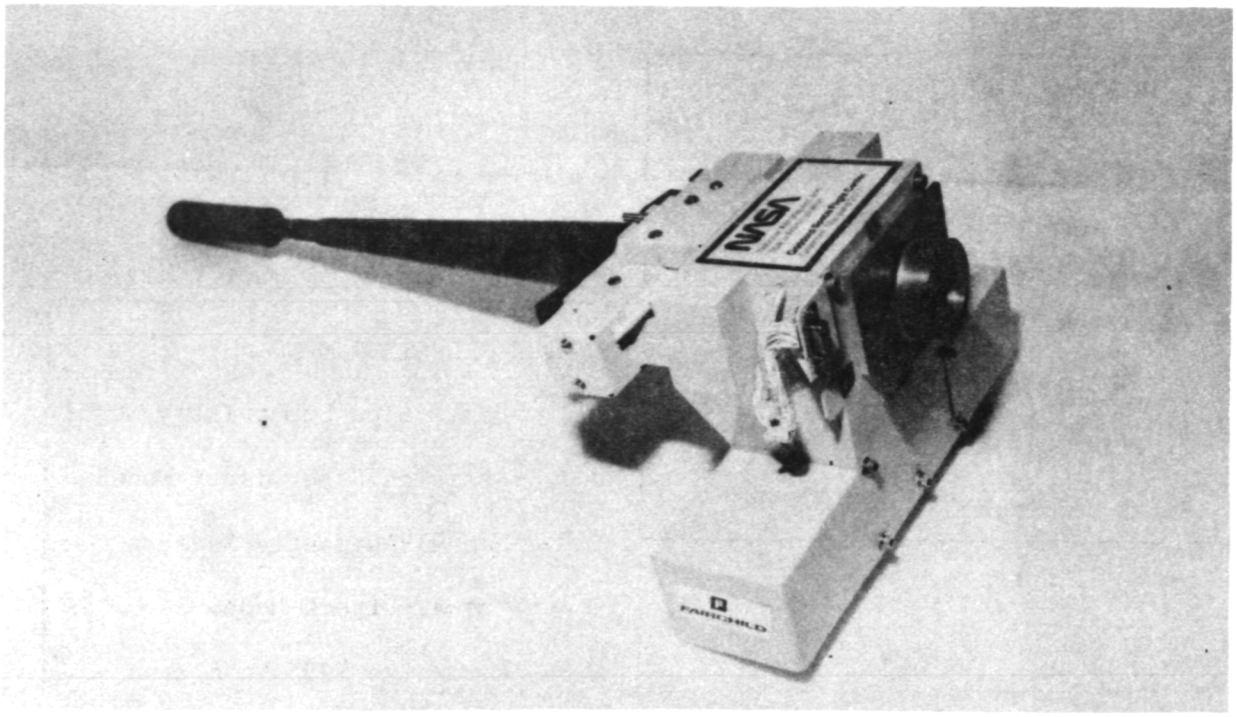

Figure 1-18 Module Servicing Tool for Ground Demonstrations of MMS Module Exchange

2) Specific module location data could be readily collected for use in the software program and in the Manual-Augmented trajectory sequences using the procedures that were developed;

3) Separate demonstrations of basic and MMS module exchange were successfully made in all three control modes (Figure 1-19);

4) Conduct of demonstrations in the Supervisory control mode in the operator assisted or unassisted modes was easy to learn. Operation in the Manual-Augmented control mode takes a little longer to learn, as was expected;

5) Motion of the ETU during module exchanges in either Supervisory mode was very smooth and precision was well within the basic module equipment capture volumes and just within the tighter MMS equipment capture volumes;

6) Integration of the MST was accomplished by operating philosophy revisions, software modifications, and hardware adjustments;

ORIGINAL PAGE IS
OF POOR QUALITY

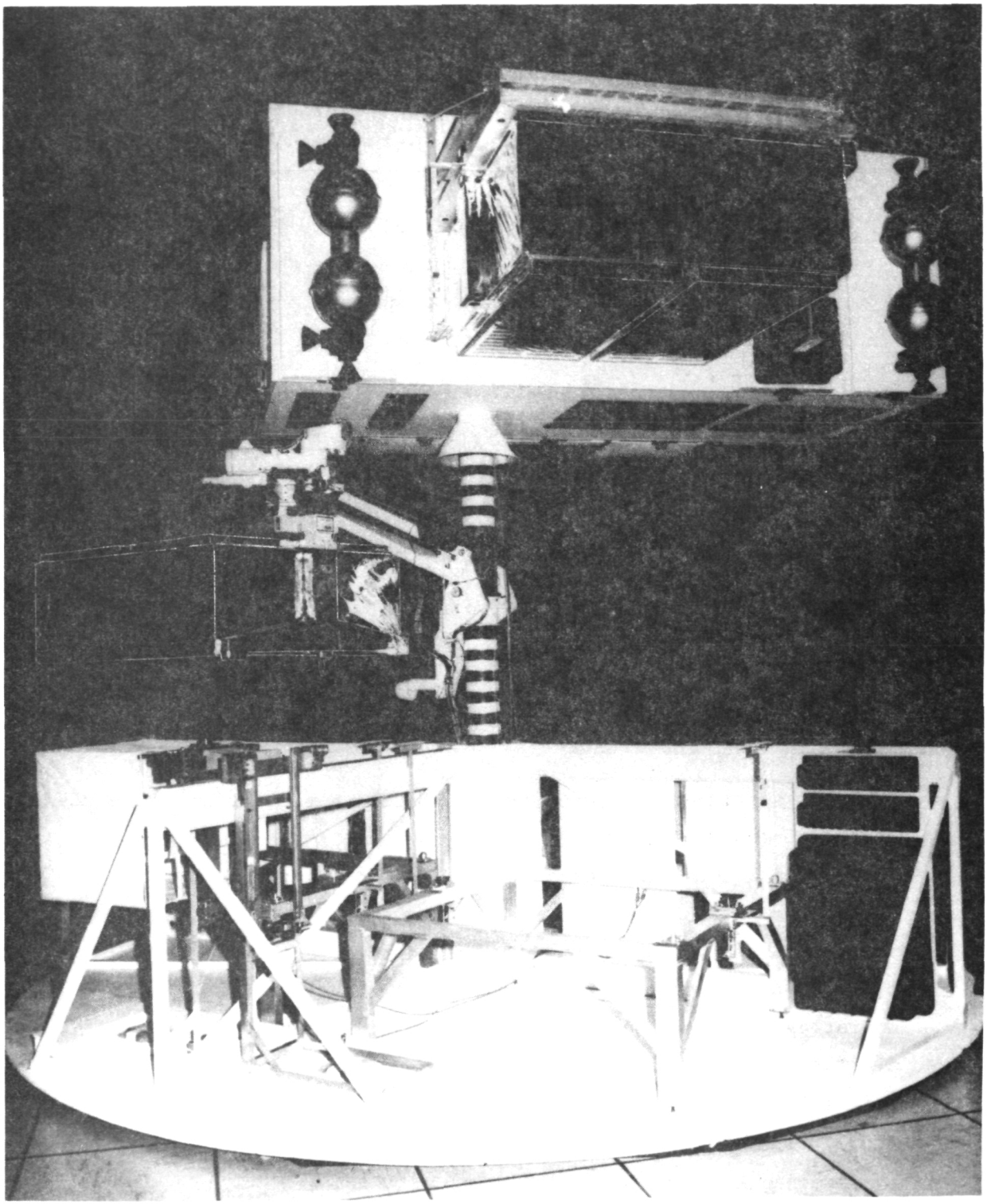

Figure 1-19 Ground Demonstration of MMS Module Exchange

7) Non-orthogonality of the MMS module with respect to the docking post (axial cylindrical coordinate) when the module top bolt is tight and the bottom bolt is loose were accommodated by the addition of a pseudo-combined motion capability where all six cylindrical coordinates are changed together in a step-wise fashion to approximate the desired path;

8) System operating techniques were identified for overcoming anomalies so that the system should not be thought of as a pre-programmed entity that cannot continue past the first anomaly. Rather it is a system with three levels of control that can be used interchangeably to get the job done in spite of a variety of anomalies.

1.6 SUGGESTED ADDITIONAL EFFORT

A review of the study efforts and conclusions identified a number of areas that merit consideration for additional effort. In addition to the items listed below, it is assumed that the TDRSS program and the OMV program including a docking system, payload rigidization system, and ground control station will continue.

On-orbit servicing of spacecraft has become a part of the Space Station development activity over the last year, as it should. These activities are on-going at several NASA centers and at their Space Station contractors. The work has been emphasizing robotics and automation because of a Congressional directive to assign 10% of the Space Station budget to advanced automation activities so that operating costs can be reduced. The module exchange activities, which are the subject of this report, and the associated equipment and software should be brought to the attention of the Space Station project for consideration. The IOSS concepts could form the first phase of an on-orbit servicing capability and then evolve into a smart front end with telepresence and artificial intelligence, as the needs are understood and the technology is developed. It is recommended that the IOSS concepts of module exchange for the on-orbit repair of

spacecraft be fully considered for its potential application to Space Station.

1.6.1 Servicing Tasks

The following additional efforts are related to servicing tasks and in particular to the Multi-Mission Modular Spacecraft, fluid resupply demonstrations, and representative satellite modules:

1) The Module Servicing Tool and the servicer mechanism end effector should be adapted to work together for the exchange of MMS modules in 0-g;

2) The fluid resupply interface should be standardized;

3) The fluid resupply demonstration equipment should be based on the NASA-JSC standardization effort;

4) Thermal cover removal/replace mechanisms and sensors for fastener and attach interface status need to be developed;

5) A small, light interface mechanism or a tool adapter to remove conventional captive fasteners should be developed.

1.6.2 Servicing Mechanism

The following additional efforts are related to the servicing mechanism:

1) The interface between the servicer end effector and the interface mechanism, tools, and adapters should be standardized;

2) Special adapters should be developed as required for other types of modules or servicing tasks;

3) An activity for continuing repair and maintenance of the 1-g servicing demonstration equipment, including documentation and configuration control, should be established.

1.6.3 Demonstrations

The following additional efforts are related to the ground and cargo-bay demonstrations or to the free-flight verification:

1) Servicing control modes for the 1-g servicer should be analyzed and investigated. Nine candidate subjects are discussed in Section 5.2.3 of this report;

2) Refueling and resupply hardware should be developed and the process demonstrated;

3) An automatic target recognition and error correction system should be developed and demonstrated;

4) Status of the MSFC Robotics Laboratory computer facilities should be addressed to identify and implement an approach to obtaining a higher level of reliability. This review should also consider use of a 14 or 16 bit analog to digital converter;

5) Definition of the cargo-bay demonstration equipment should be continued in the areas of servicer mechanism definition and identification of the microprocessor and associated peripherals;

6) Additional development areas include:

   - Special refueling disconnects for cryogenics or high pressures, and self aligning conical electrical connectors,
   - Development of in-line fluid couplings for replacement of tanks and other propulsion system components,
   - Demonstration of other servicing tasks specific to Space Station operations;

7) Demonstration of the mating of the servicer stowage rack to the OMV should be a part of the Space Station technology development missions.

2.0 INTRODUCTION AND BACKGROUND

The study activities that this report documents are part of a resurgence of interest in on-orbit servicing that is based on the many studies performed in the past. Those studies were able to clearly show that orbital maintenance functions can be supported by the Space Transportation System (STS) to effect large reductions in the cost of spacecraft programs. This was found to be true both in geosynchronous and low earth orbits. These economic benefits were augmented by significant operational benefits, the totality of which implied that the development of an on-orbit servicing capability should be undertaken by the NASA.

Orbital servicing has a number of applications. The servicer and the Orbital Manuevering Vehicle (OMV) can be carried to geosynchronous earth orbit (GEO) on an Orbital Transfer Vehicle (OTV). Communications satellites are typical geosynchronous spacecraft that can realize cost benefits from servicing. In low earth orbit the OMV can be used as the carrier vehicle for the servicer system. Where contamination or thruster impingement effects are a concern, the cold gas propulsion system of the OMV could be used. For spacecraft in different orbits (altitude or inclination) the larger propulsive capability versions of the OMV, or the OTV with OMV, are appropriate. The servicer system can also be deployed in the Orbiter cargo bay and the failed spacecraft docked to it using the Remote Manipulator System (RMS). A major opportunity for the use of orbital maintenance technologies is the emerging Space Station. The Space Station can be used as a base for the OMV and OTV, which can transport a remotely controlled servicer system to the failed spacecraft for repair in situ. Alternatively, failed spacecraft can be returned by the OMV and OTV to the Space Station for repair. Spacecraft repair at the Space Station can be by a variety of techniques including remotely controlled module exchange.

One of the early servicing studies, the Integrated Orbital Servicing System (IOSS) series, recommended that, to minimize servicer system development costs, a single servicer system having the capability to

accommodate both low and high earth orbit applications should be evolved. This requirement has been satisfied effectively by the servicer mechanization (Figure 2-1) conceptualized during the IOSS studies. The single design is compatible with maintenance of most spacecraft of the STS era. Adapters are used to accommodate support structure differences across the applications. An effective interface between the spacecraft and the servicer was defined and breadboarded. The interface mechanism provides a logical and cost effective method of incorporating orbital replaceable units (ORU) for module exchange in all spacecraft and can be applied to the Space Station itself.

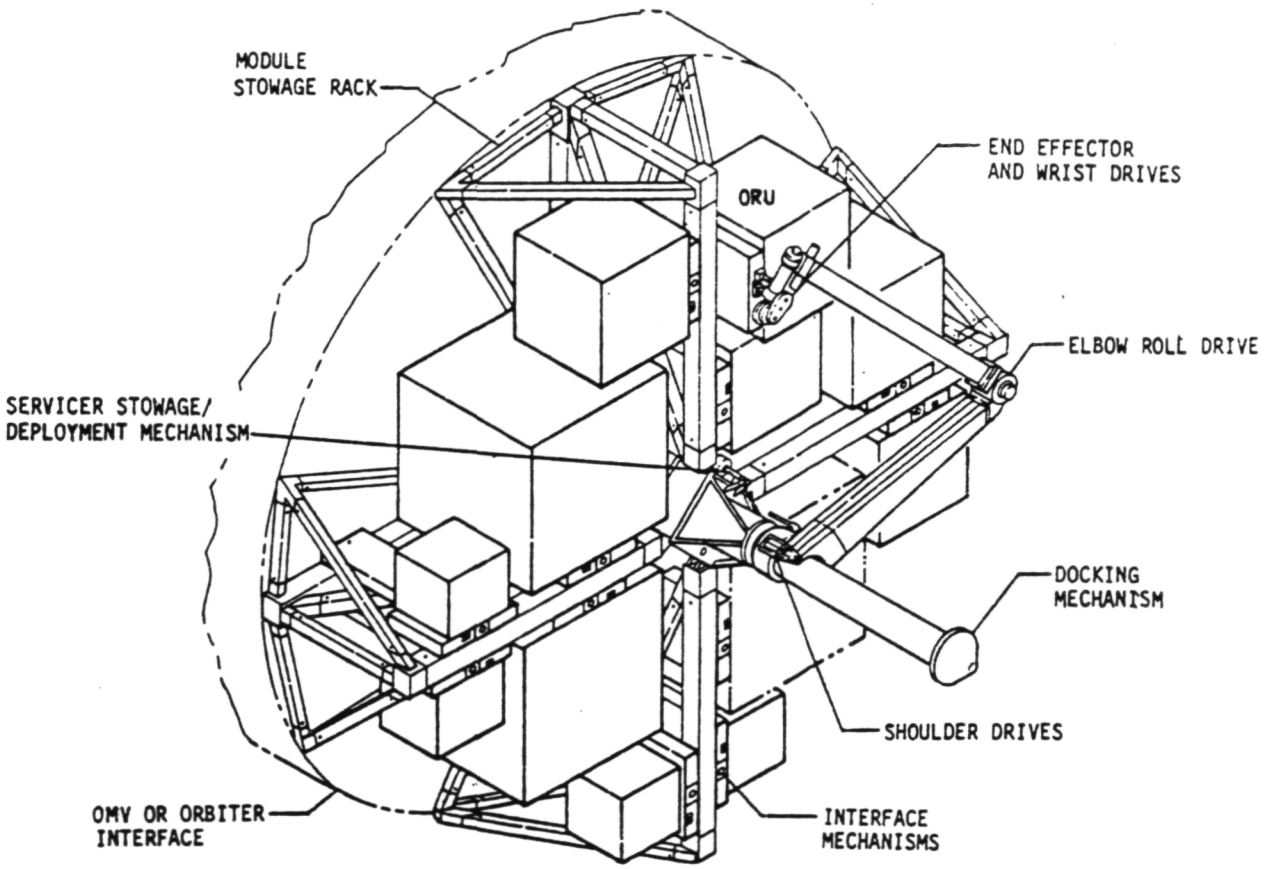

Figure 2-1 On-Orbit Servicer Configuration

Considerable interest in spacecraft maintenance was expressed by both the Department of Defense and the commercial sector; however, the general tenor of their support was that a demonstration of orbital

maintenance must be conducted prior to any commitment on their part. A flight demonstration of the all-up maintenance capability is also a NASA requirement prior to wholesale commitment to the concept. However, a reduced capability test that exercises the basic concept and exchanger capability can and should be demonstrated prior to the time when the full capability will exist. With this background material in hand, and with renewed interest by the space flight community, it was appropriate to perform the prior study (NAS8-35496), which defines a path culminating in the demonstration of an on-orbit servicing capability. The objective of that study was to provide a single unified development program for both servicing implementors and users to guide their future development and operational plans for this important technology. The objectives of the current study are to refine the servicer development plan and to begin the 1-g testing in terms of demonstrating basic and MMS module exchange in three control modes.

2.1 STUDY OBJECTIVES

The objectives of this Servicer System Demonstration Plan and Capability Development study are to identify all major elements and characteristics of an on-orbit servicing development program and to integrate them into a coherent set of demonstrations, to upgrade the Engineering Test Unit control system for basic and MMS module exchange demonstrations, and to upgrade the MSFC 1-g servicing demonstration facility mockups to permit the exchange of MMS modules. These objectives, along with the program objectives, are summarized in Table 2.1-1. The on-orbit servicing development plan was to be a revision of the plan prepared during the prior study with increased emphasis on low cost and use of MMS equipment. The revisions primarily addressed the cargo-bay demonstrations.

The goal of the development program is a fully verified operational on-orbit servicing system based on the module exchange and fluid resupply technologies that is also suitable for use with and at the Space Station. A ground demonstration plan is envisioned that will provide confidence in the development and operation of the on-orbit

system. The servicing ground demonstrations cover a range of satellite module sizes and include the ability to service propellant systems. They also include a servicing mechanism configuration that is representative of an eventual flight unit. Emphasis was placed on the exchange of MMS modules.

Table 2.1-1 Study and Program Objectives

Study Objectives
To identify and integrate the major characteristics of an on-orbit servicing demonstration program plan. To upgrade the engineering test unit control system for MMS and basic module exchange demonstrations. To upgrade the 1-g demonstration facility to permit exchange of MMS modules.
Program Objectives
Fully verified and documented operational on-orbit servicing system a) Based on module exchange and fluid resupply technologies, b) Suitable for use with Space Station. Major issue is balance between the number and complexity of development activities and cost.

The Orbiter cargo-bay demonstrations utilize a protoflight version of the servicer mechanism to reduce project costs. A single flight is planned to demonstrate the exchange of a variety of modules, adequacy of control from the Orbiter using the Supervisory control mode, and accuracy of spacecraft to stowage rack alignment when the Remote Manipulator System end effector is used as a docking mechanism. A free-flyer (Orbital Maneuvering Vehicle) demonstration is planned as a way of verifying the capabilities of an operational servicer. The plan must be significant and long-term to encourage users and spacecraft designers to include on-orbit servicing in the form of module exchange in their plans.

The second study objective involves the development of two software programs - one for the exchange of basic modules and one for the

exchange of MMS modules - and the demonstration of the exchange of both types of modules. The demonstrations were to be performed for three different control modes which are:

1) Supervisory with minimal operator assistance;

2) Supervisory with operator assistance at each action;

3) Manual-Augmented.

The basic module is a 24 in. cube and uses a side interface mechanism to provide the structural interface between the module and spacecraft, or stowage rack. Basic module exchanges were of four types:

1) A failed module in a spacecraft axial location being replaced;

2) A failed module in a spacecraft radial location being replaced;

3) A module being transferred from a spacecraft axial to a radial location;

4) A module being transferred from a spacecraft radial to an axial location.

The last two transfer types were used to simplify setting the demonstration equipment up for either of the first two replacement activities.

The MMS module has a 48 in. square plan form and is 20.5 in. deep. It is fastened in place with two bolts. The bolts are tightened or loosened with a Module Servicing Tool. MMS module exchanges involved replacing a failed module in a spacecraft axial location with a good module from the spare module stowage rack.

The third study objective involved the design, fabrication, and installation of MMS demonstration equipment. The Martin Marietta provided equipment included:

1) Two MMS module mockups;

2) One spacecraft mounted module receptacle;

3) Two stowage rack mounted module receptacles;

4) A connector positioner drive;

5) An MST storage rack;

6) A set of MMS module targets;

7) A set of related wiring.

A light weight form of the Module Servicing Tool, which was adapted to the Engineering Test Unit and modified for remote location of its control system was provided by Goddard Space Flight Center. The mechanical and electrical design was performed by Fairchild Space Company, the mechanical equipment was built by GSFC, and the electrical equipment was built by Fairchild.

The first of two key study issues was the need to balance the number and complexity of development activities against available funds. The proposed approach, recommended in the Spacecraft Servicing Demonstration Plan (SSDP) study, is to lay out a program with most of the desired features, that overlaps the 1-g, 0-g, and operational servicer demonstrations, and attempts to get an early operational capability. It minimizes costs by taking advantage of parallel activities such as the JSC refueling program, and advocates renting a spacecraft bus rather than buying a new one. The program was also scoped large enough to become a recognized part of NASA's long-range plans. The promise of a clear plan by NASA to develop and use module

exchange for many years will encourage the user, or spacecraft designer, to incorporate module exchange in his plans.

In evolving the SSDP recommended approach, a range of alternatives was considered. At the high end of the spectrum was a servicer development program to demonstrate several forms of module exchange, several cover door opening or removal approaches, three or four approaches to refueling (fluid resupply), and several approaches to cryogenic resupply in each of three areas -- 1-g, 0-g, and free-flight. The three phases were put in series so full advantage of prior work could be incorporated in subsequent activities; this resulted in a long and expensive program. Additionally, on-orbit servicing opportunities would be lost with a concurrent loss of potential savings.

At the other end of the spectrum was a minimum cost program where minimum cost equated to fewer functions being demonstrated, fewer demonstrations, and a higher level of risk acceptance. However, a significant failure could be enough to delay development of module exchange by 10 years, or possibly ending it forever. It was decided to go with a low cost program and mitigate risks by overdesign and use of existing equipment where possible.

The second key study issue was the need to maintain a close working relationship between MSFC and Martin Marietta personnel during servicer control software development. A number of interfaces were defined so both organizations could work towards the same goal:

1) Computer and interface electronics operations;

2) Functions to and from the Servicer Servo Drive Console and the ETU;

3) Functions to and from the control station for Manual-Augmented control mode implementation.

An initial defintion of these interfaces was discussed at the orientation meeting. The interface defintion was then refined and documented as software requirements were specified and the software code was prepared. When the software was delivered to MSFC, these interfaces were verified before control system demonstrations were initiated. Effective interface definitions led to their being quickly verified.

2.2 BACKGROUND

One of the justifications for the Space Transportation System was its potential for supporting the repair or recovery of failed spacecraft. This approach was extended to the concept of making less expensive spacecraft, accepting the higher predicted failure rates, and using the Shuttle to permit repair of those spacecraft that did fail. This spawned a large number of government, academic, and industry studies on how spacecraft might be configured for on-orbit servicing. Figure 2.2-1 illustrates the variety of concepts that were documented. The whole gamut from recovery and ground refurbishment, through repair at the Orbiter, through remote operations in low earth orbit, to repair in geosynchronous orbit were addressed. All of the concepts discussed now were addressed then except for Space Station related operations. The long cylindrical spacecraft represents the Space Tug whose missions are now to be handled by the Orbital Maneuvering Vehicle (OMV) and the Orbital Transfer Vehicle (OTV). A good summary of the early work is given in Proceedings of the Second Conference on Payload Interfaces, MDC G4818, McDonnell Douglas Astronautics Company, Huntington Beach, California, September 6-7, 1973.

Benefits from orbital servicing of spacecraft were identified in these early studies and potential savings continue to be well recognized. The three general approaches to orbital servicing are:

1) Man on extravehicular activity (EVA);

ORIGINAL PAGE IS
OF POOR QUALITY

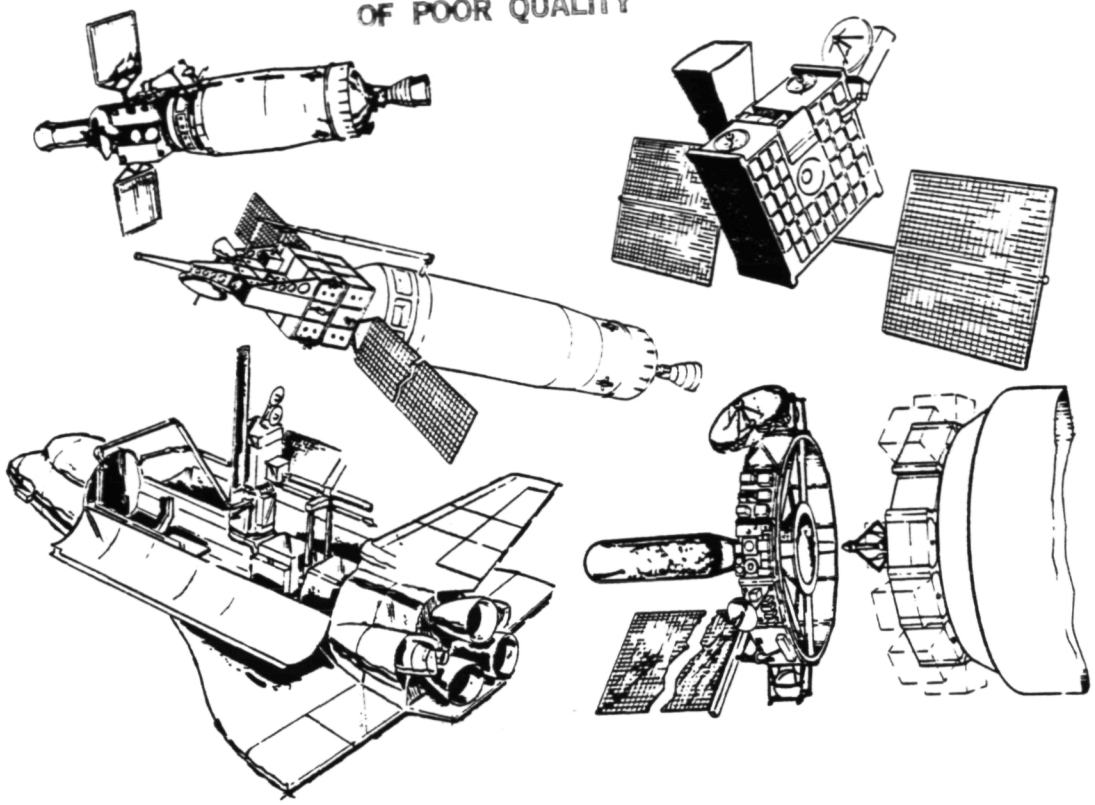

Figure 2.2-1 Serviceable Spacecraft Designs from the 70's

2) Operations remote from the man using telepresence technology;

3) Module exchange and refueling/resupply using a simple remotely controlled mechanism.

Remote module exchange and refueling/resupply for on-orbit servicing were examined and had the broadest application in the near-term of the three servicing approaches. They are not as time- or space-limited as EVA is. The technology is here and available while telepresence technology is still in the research stage. Therefore, it is appropriate that work on the module exchange and refueling/resupply form of on-orbit servicing be continued. Martin Marietta has been active in this technology since 1974 and is committed to actively promoting it.

The extensive resource base was used in the 1974 through 1978 Integrated Orbital Servicing System (IOSS) study conducted by Martin Marietta for Marshall Space Flight Center. The IOSS study initially used the 1973 NASA mission model as a basis for establishing cost benefits. The model included 47 NASA satellite programs for which maintenance was applicable. Applicability of maintenance was based on: spacecraft fleet size on orbit, program lifetime, and need for equipment replacement.

If a satellite program was short, or the spacecraft value was low, then maintenance was not attempted. Cost comparisons were made between:

1) Expendable spacecraft;

2) Return to the ground for refurbishment;

3) Return to the Orbiter for refurbishment;

4) Module exchange in the operational orbit (in situ servicing).

Generally, module exchange in the operational orbit was most cost effective. If spacecraft are cheap, then it is cost effective to expend them. The costs of returning a spacecraft to the ground and relaunching were high enough to rule out ground refurbishment. Orbit phasing effects and the launch costs related to propellant usage in bringing spacecraft, especially geosynchronous spacecraft, back to the Orbiter ruled out maintenance at the Orbiter. However, the orbits of some spacecraft make this an acceptable approach. There were significant cost savings from repair by module exchange in the spacecraft's operational orbit. These savings are larger than the costs of servicer system development. The same results were obtained using much smaller mission models. These study results are applicable to current-day situations. Some specific satellite programs have changed since these study results were generated; however, the conclusions on cost effectiveness are as applicable to today's satellite programs as they were to the program projected in 1973.

A wide variety of servicer mechanism configurations were identified in the literature. They ranged from simple one degree-of-freedom (DOF) devices, through a three DOF rectangular travel system, to two-arm concepts, each with 7 DOF. The IOSS selected approach started with the Shuttle launch cost rules that favored flat disk-shaped spacecraft such as the Orbital Maneuvering Vehicle. From this, the servicer working volume and observations shown in Figure 2.2-2 were developed.

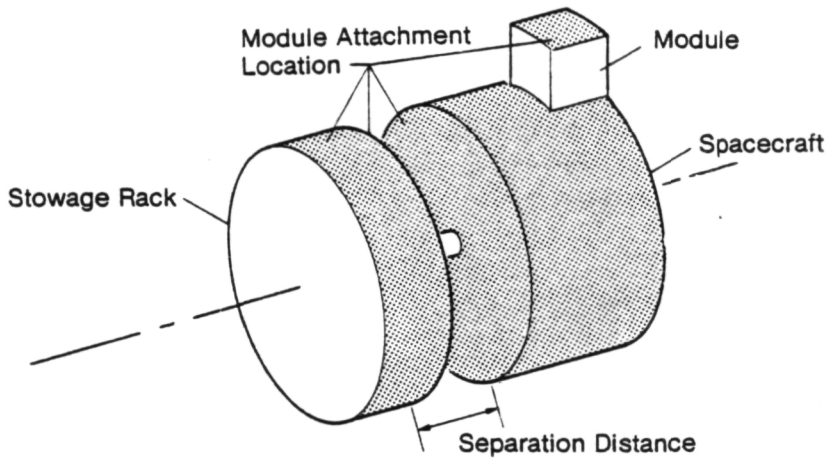

Observations:

- The module attachment locations form a surface of revolution about the spacecraft centerline.
- The first servicer degree of freedom should be roll about the base of the docking probe.
- The need for minimum arm length and separation distance implies the servicer mechanism must "reach around" the spacecraft and module surfaces.

Figure 2.2-2 Servicer Mechanism Working Volume

The shaded area on Figure 2.2-2 represents the regions where the servicer mechanism end effector must reach. The direction of module removal is generally perpendicular to the shaded surface. The applicability of a roll rotation for the first degree-of-freedom is quite apparent. As the separation distance between the spacecraft and stowage rack is reduced, the space available for servicer mechanism elements near the base is reduced and the "reach-around" problem becomes more difficult. The minimum separation distance was taken as 60 in., which allows for a 40 in. module, a 10 in. end effector, and a 5 in. clearance on each end. The "reach-around" problem leads to use of a redundant degree-of-freedom.

Figure 2.2-2 implies that two layers, or tiers, of modules could be incorporated at a single docking location. It was later decided to simplify the servicer design to permit module exchange only from the first tier and to wait until a specific need is identified before the servicer configuration is grown to handle the second tier.

An extensive review and analysis of servicer mechanism configurations and 28 serviceable spacecraft configurations was performed to arrive at the selected servicer configuration shown in Figure 2-1. From the review and analysis, extensive sets of requirements were prepared and refined. All servicer configurations involving one or two arm segments and many three arm segment configurations were considered.

The Figure 2-1 design has only two major components: 1) a servicer mechanism and 2) a stowage rack for module transport. A docking mechanism is also shown for reference. The servicer mechanism and the stowage rack were designed separately with interfaces for individual removal and replacement. Stowage racks can be configured and loaded for particular flights prior to attachment to the carrier vehicle. It may be desirable to have available several stowage racks for this purpose. The stowage rack shown mounts directly to an upper stage such as the Orbital Maneuvering Vehicle. A flight support structure has been designed to adapt the stowage rack shown to the Orbiter.

The entire design of the servicer system has been predicated on the simple nature of the module exchange task as compared to the broader variety of tasks that a general purpose manipulator is called upon to perform. The simple activities of remove, flip, relocate, and insert modules, when combined with the facts that all aspects of the module trajectories are known far in advance of use and that the work volume is a simple solid of revolution, were used in many ways to result in a basically simple design in terms of mechanism configuration, control system design, and operations approach. This simplicity was accentuated by performing the mechanism and control system designs concurrently in an integrated manner so that each of the needed

functions was allocated to the system that could most effectively accomplish it.

Three modes of control were included. The Supervisory mode of control was proposed as the normal mode of operation. All servicer arm motions and trajectories are determined before flight and stored on board. A Manual-Direct mode is provided as a totally unsophisticated means of backup control. It sends commands directly to the joints themselves. The Manual-Augmented mode has man doing most of the arm control as in the Manual-Direct mode only using hand controllers instead of panel switches.

The value of demonstrations in furthering on-orbit servicing development was recognized in the decision to build a 1-g version of the Integrated Orbital Servicing System of Figure 2-1. The result is the Engineering Test Unit (ETU) shown in the photograph of Figure 2.2-3. This unit was built and delivered to MSFC in 1978. It has been used for over 350 demonstrations during the intervening seven years. The ETU has shorter segment lengths than the IOSS as it was designed initially for axial module exchange only. The later addition of a sixth degree-of-freedom extended the ETU's capability to radial module removal, albeit at a radius less than that of the Orbiter cargo-bay.

To date, satellite systems in general have not been designed and built with the capability of changeout of subsystem or component modules. The only satellite family that is currently in use and has a module exchange capability is the Goddard Space Flight Center's Multi-mission Modular Spacecraft (MMS). This satellite family is in operation in several programs and is projected for continued use throughout the remainder of this century. The Marshall Space Flight Center's Space Telescope has been designed for on-orbit repair by an astronaut on EVA and is expected to fly soon. The U.S. Air Force has also shown interest in the design of serviceable spacecraft, although the particulars are not known to the authors.

ORIGINAL PAGE IS
OF POOR QUALITY

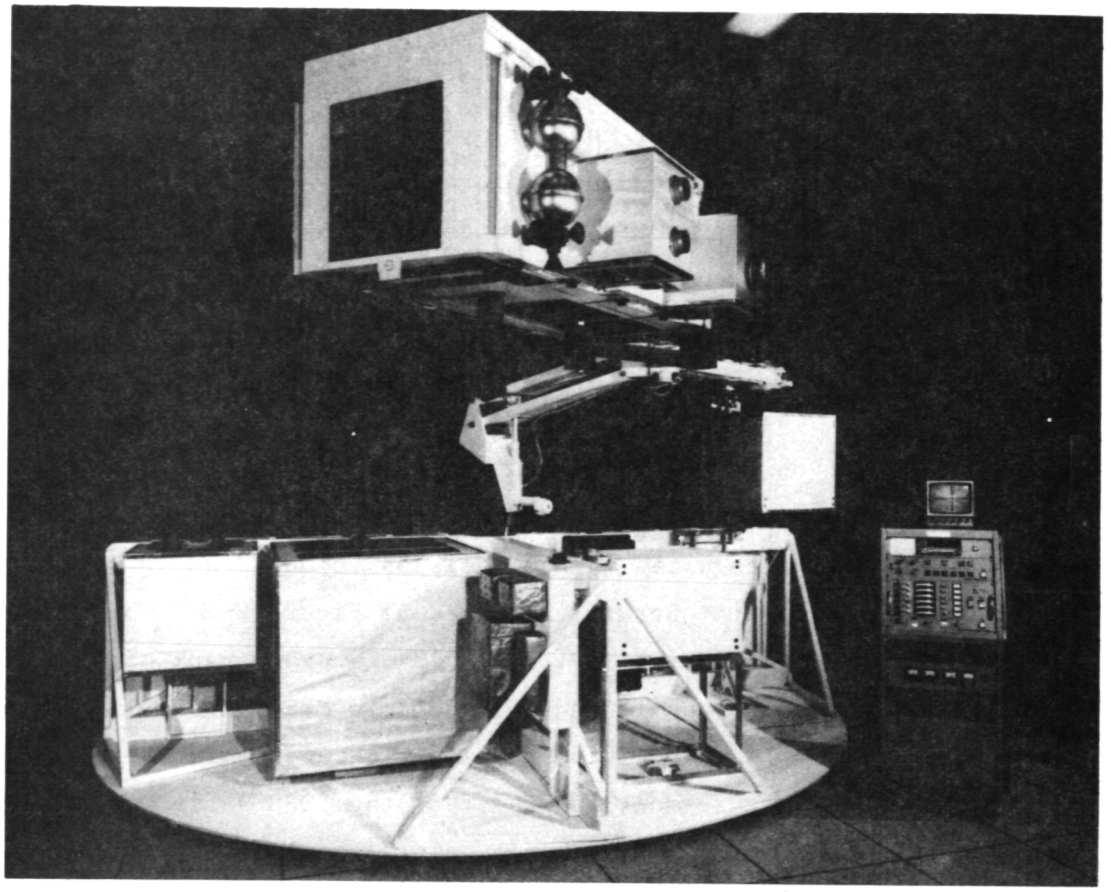

Figure 2.2-3 Engineering Test Unit

Several demonstrations and investigations of on-orbit refueling capability are currently being planned. These efforts will include definition and demonstration of connect/disconnect devices in support of the transfer of fluids. Electrical umbilicals and connectors have been developed in conjunction with the MMS subsystem modules as well as on other programs.

The emerging Space Station program with its use as a base for many spacecraft and with its associated polar platforms is a unique opportunity to develop and implement on-orbit servicing in the form of module exchange. The simple forms of a servicer and control system can be used first and they can then be modified to the more advanced forms of telepresence and artificial intelligence as these technologies become available.

2.3 STUDY APPROACH

The work completed under contract NAS8-35496 indicated that a viable plan for module exchange demonstration in the Orbiter cargo bay could be prepared and integrated with a free-flyer based verification of an operational servicer system. One of the first steps of the servicer demonstration plan is upgrading the control system for the ETU to have all three control modes - Supervisory, Manual-Augmented, and Manual-Direct - operable. The incorporation of control equations specifically generated for the unique geometrical configuration of the ETU promised to result in smooth demonstrations with the ETU.

Our approach to the proposed study was to use the four tasks identified in the contract statement of work. These are:

1) Task 1 - Servicer Development Program Plan;

2) Task 2 - Servicer Control Software;

3) Task 3 - Servicer Demonstration;

4) Task 4 - Program Management.

Other than the program management task, the work divides naturally into two parts - preparation of the Servicer Development Program Plan (Task 1) and generation of the servicer control software as well as conducting servicer demonstrations at MSFC (Tasks 2 and 3). The MMS 1-g servicing demonstration definition effort of Change Order 1 and the MMS 1-g demonstration equipment drawing, fabrication, checkout, and installation effort of Change Order 3 were included in Task 1. The MMS module software requirements, programming, and user's manual preparation effort of Change Order 3 were included in Task 2, while the software installation and MMS module exchange activity of Change Order 3 were included in Task 3. MMS module exchange demonstrations required the availability of a GSFC MMS Module Servicing Tool designed for use in 1-g with the MSFC Engineering Test Unit.

Figure 2.3-1 shows an overall logic flow for the four study tasks. Task 1 was to expand the Servicer Development Program Plan to include detail planning and cost estimating for ground, in-bay, and free-flight servicer demonstrations using a servicer system compatible with the Orbital Maneuvering Vehicle (OMV). Special emphasis was to be devoted to MMS servicing demonstrations. The Servicer Development Program Plan produced under this task was to be used as input for the reports to be produced under Task 4.

Preparation of the Servicer Development Program Plan was a natural outgrowth of our work on Contract NAS8-35496, Spacecraft Servicing Demonstration Plan. Both versions of the plan involve:

1) Use of the existing ETU at MSFC to demonstrate remotely controlled exchange of a variety of modules and fluid resupply in 1-g;

2) Demonstrations of module exchange and fluid resupply in the Orbiter cargo bay in 0-g;

3) A free-flight demonstration of module exchange and fluid resupply using the OMV to bring the servicer to a spacecraft bus that supports the modules to be exchanged.

The work emphasized exchange of Multi-Mission Modular Spacecraft modules and the adaptation of the MMS Module Servicing Tool to the ETU.

Task 1 also included the servicer system Multi-mission Modular Spacecraft 1-g demonstration design and plan. The overall configuration and specific design requirements necessary to effect the MMS 1-g module exchange demonstration were identified. Also in Task 1 was the fabrication, delivery, and installation of a set of mockup equipment to aid in the demonstration of MMS module exchange in 1-g. This equipment was integrated with the light weight Module Servicing Tool provided by GSFC.

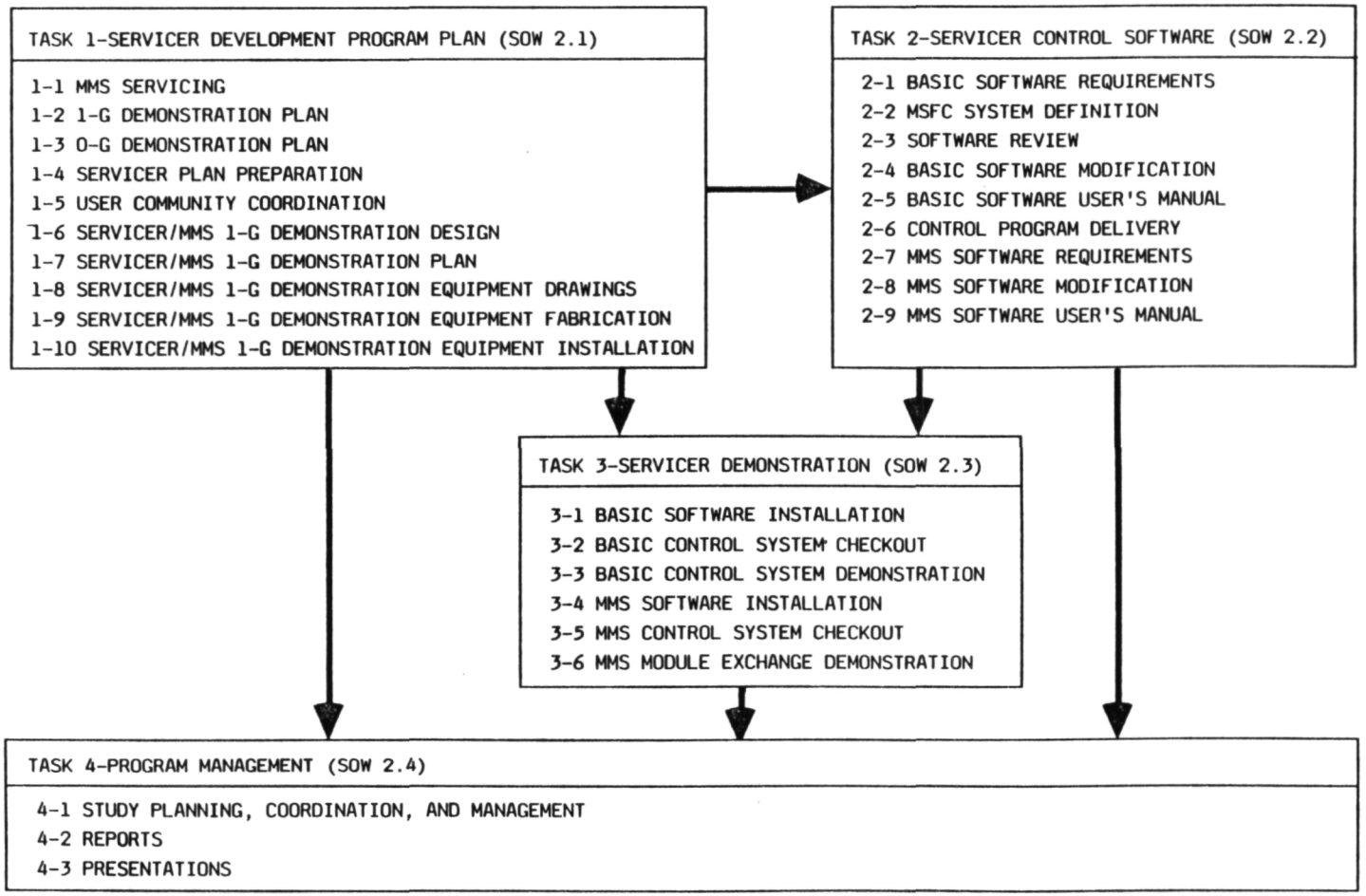

Figure 2.3-1 Study Task Flow Chart

The first six subtasks of Task 2 were completed before the first three subtasks of Task 3 could be started. Similarly, the last three subtasks of Task 2 were completed before the last three subtasks of Task 3 could be started. The main inputs to Task 3 (the basic and MMS control software programs and the control Software User's Manuals) were produced under Task 2 at Martin Marietta Aerospace. As indicated in Figure 2.3-1, the initial set of software for the exchange of modules using the side interface mechanism is designated as "basic" software, while that used for MMS module exchange is designated as "MMS" module software.

Our approach to generating the software for servicer control system upgrading was to start with the software used during the ETU design acceptance review conducted at Martin Marietta. The requirements for that software were modified extensively to handle the more complete trajectories required, to enable use, or avoidance, of operator steps when in the Supervisory mode, and to incorporate the end effector and interface mechanism latching functions. The software was modified to operate on the PDP-11/34 computer system at MSFC. Additional modifications were made for operation with the MSFC electronic interfacing equipment. All software modifications were checked out on a PDP/11-34 computer at Denver Aerospace. These checks included use of integrators to simulate joint drive motion.

In this way, it was possible to check out the software in a closed-loop manner. Equations and instructions for both the Supervisory and Manual-Augmented servicer control modes were provided. Software User's Manuals were prepared under Subtasks 2.5 and 2.9 for basic and MMS module exchange demonstrations. The necessary interfaces between the new software and the MSFC equipment were initially established at the Orientation meeting for the basic module software and at a Design Coordination meeting for the MMS module software.

The basic software was checked out and demonstrated at MSFC on the existing Engineering Test Unit (ETU), under Task 3. The MMS software was checked out and demonstrated at MSFC on the existing ETU using the

MMS module mockups prepared under Task 1 and the 1-g version of the Module Servicing Tool provided by GSFC.

Our initial approach to the servicer demonstrations was to have the study manager and a software engineer travel to MSFC for a one week period for each demonstration. However, several additional trips were found to be necessary. During those visits the following occured:

1) New software was installed on the MSFC PDP-11/34 and certain functional checks were conducted;

2) The software was interfaced with the Servicer Servo Drive Console, the MSFC hand controller, and the ETU;

3) Servicer system operation using the new control system software was demonstrated as defined in Task 3.

MSFC personnel were directly involved in these activities and obtained hands-on training in using the new software. The cooperation and help of the MSFC Robotics Laboratory personnel in performing the demonstrations is appreciated very much. Without their efforts, we would not have been able to successfully conduct the demonstrations.

Task 4 received timely inputs from Tasks 1, 2, and 3 as needed for monthly progress reports, the final report, and the midterm and final presentations. Updating of the Study Plan was also done under Task 4.

3.0 MMS SERVICING CONSIDERATIONS

The objective of this phase of the study was to review and update the Multi-Mission Modular Spacecraft work of the prior study with the view of placing increased emphasis on MMS module exchange and identifying an approach to adapting the MMS module servicing tool to the ETU end effector for ground, cargo-bay, and free-flight demonstrations. The MMS, and MMS modules, have been, or will be, used in a number of satellites that are currently flying, such as the Solar Maximum Mission (Figure 3-1), that are being designed and built, such as the Landsat-D and some defense systems, and they are being considered for other spacecraft programs. The MMS evolved from a desire to standardize subsystems and thus obtain low costs. The concept also involved an ability to remove and replace modules while in orbit. Although the initial concepts included a remotely controlled mechanism to exchange modules, recent emphasis has been on use of man on EVA to exchange MMS modules. This was demonstrated in 1984 during the Solar Max Repair Mission.

Thus, one of the best ways to advance the satellite servicing technology, using module exchange techniques, is to demonstrate an MMS module exchange. However, the pivoting arm form of servicer mechanism used in the Integrated Orbital Servicing Study was not explicitly designed to interface with the MMS module attachment system. The capability of the IOSS servicer to exchange MMS modules was developed in the prior study. That work demonstrated the usefulness and adaptability of the pivoting arm configuration.

The basic MMS spacecraft (Figure 3-2) consists of three standard spacecraft subsystem modules and a mechanical structure that supports the spacecraft subsystem modules. The structure also provides the support for the instrument (payload) module, which is not part of the MMS. The standard spacecraft subsystem modules are a communications and data handling (C&DH) module, an attitude control subsystem (ACS), and a modular power subsystem (MPS). The instrument module, which includes the payload instruments and other mission unique equipment

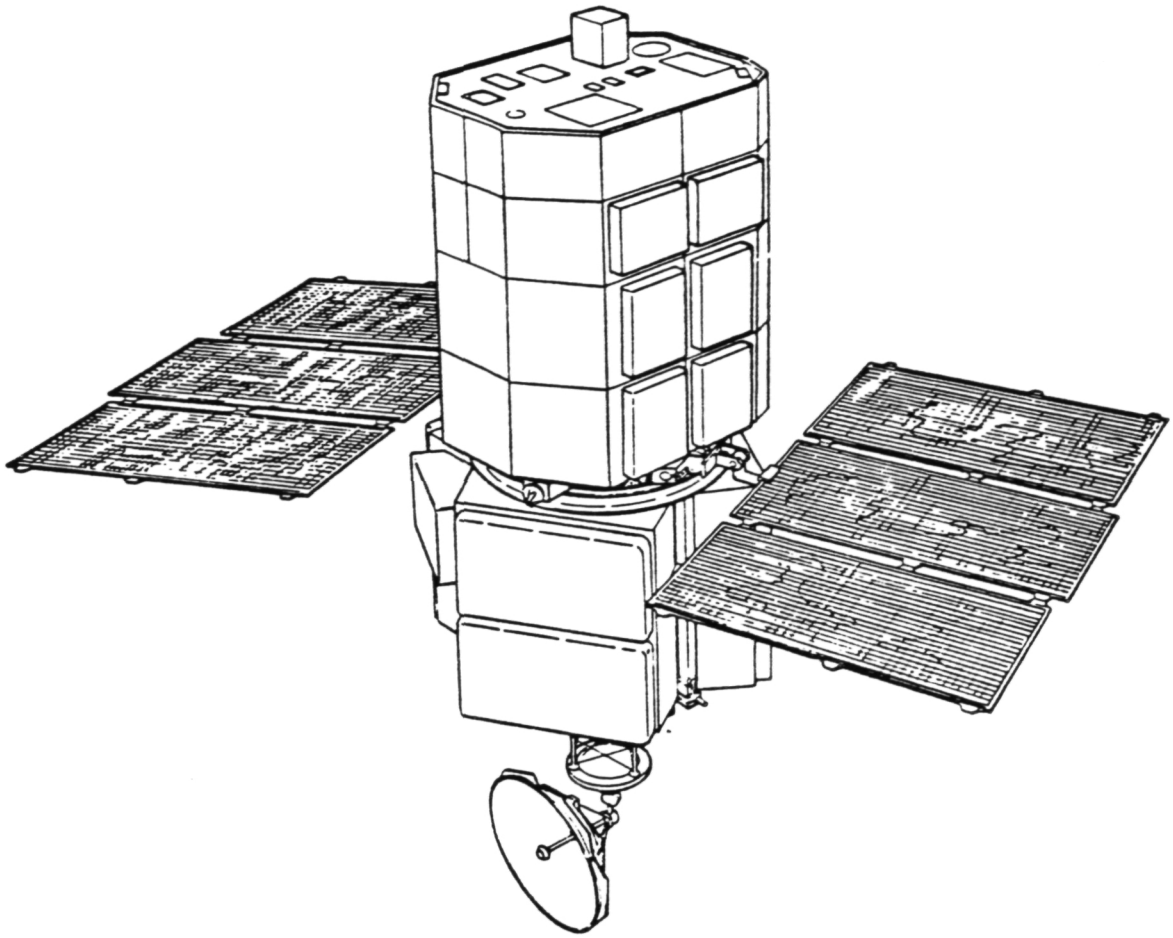

Figure 3-1 Solar Maximum Mission Version of MMS

(such as solar arrays, high-gain antennas, etc.), attaches to a transition adapter frame on the forward end of the MMS. A propulsion module (PM) or a high gain antenna may be added to the aft end of the MMS as a mission option. A signal conditioning and control unit (SC&CU) and the electrical interconnecting harness complete the basic MMS.

Associated with the MMS is a flight support system. The FSS is mounted in the Orbiter and is used to support the MMS during launch and return. It can also be used to elevate the MMS for direct deployment or for deployment, or retrieval, by the Orbiter remote manipulator system (RMS). The FSS was used to hold the MMS during EVA exchange of modules during the Solar Max Repair Mission.

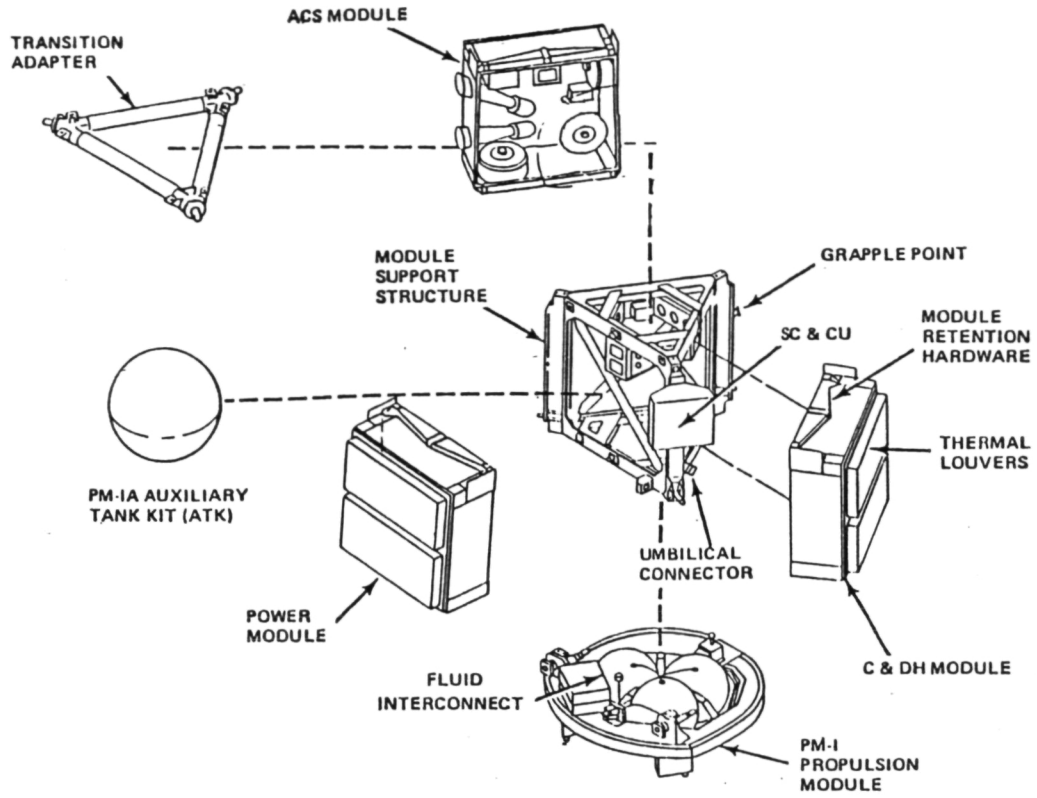

Figure 3-2 Multi-Mission Modular Spacecraft Mechanical System

Each MMS module is fastened with two bolts (module retention system). Despite the radial arrangement of the modules with respect to the MMS centerline, they cannot be removed in a direction perpendicular to the servicer docking axis because each end of the central triangular structure is blocked: one end by the transition adapter and experiments; the other end by a propulsion system or a high-gain antenna.

Each of the three large replaceable MMS modules is similar in external configuration as shown in Figure 3-3. The maximum weight of an MMS module is 500 lbs and the module structure (frame, cover, module retention system (MRS) and thermal hardware) weighs approximately 95 lbs. For ground demonstrations, the module retention system and the electrical connectors may be used in a MMS module mockup weighing approximately 15 lbs. The upper module retention system consists of a beam, two restraint sockets and a preload bolt. The lower MRS consists of a beam, two optional snubbers, and a preload bolt with reaction pads. The overall result is a non-redundant attachment if the two optional snubbers are not used.

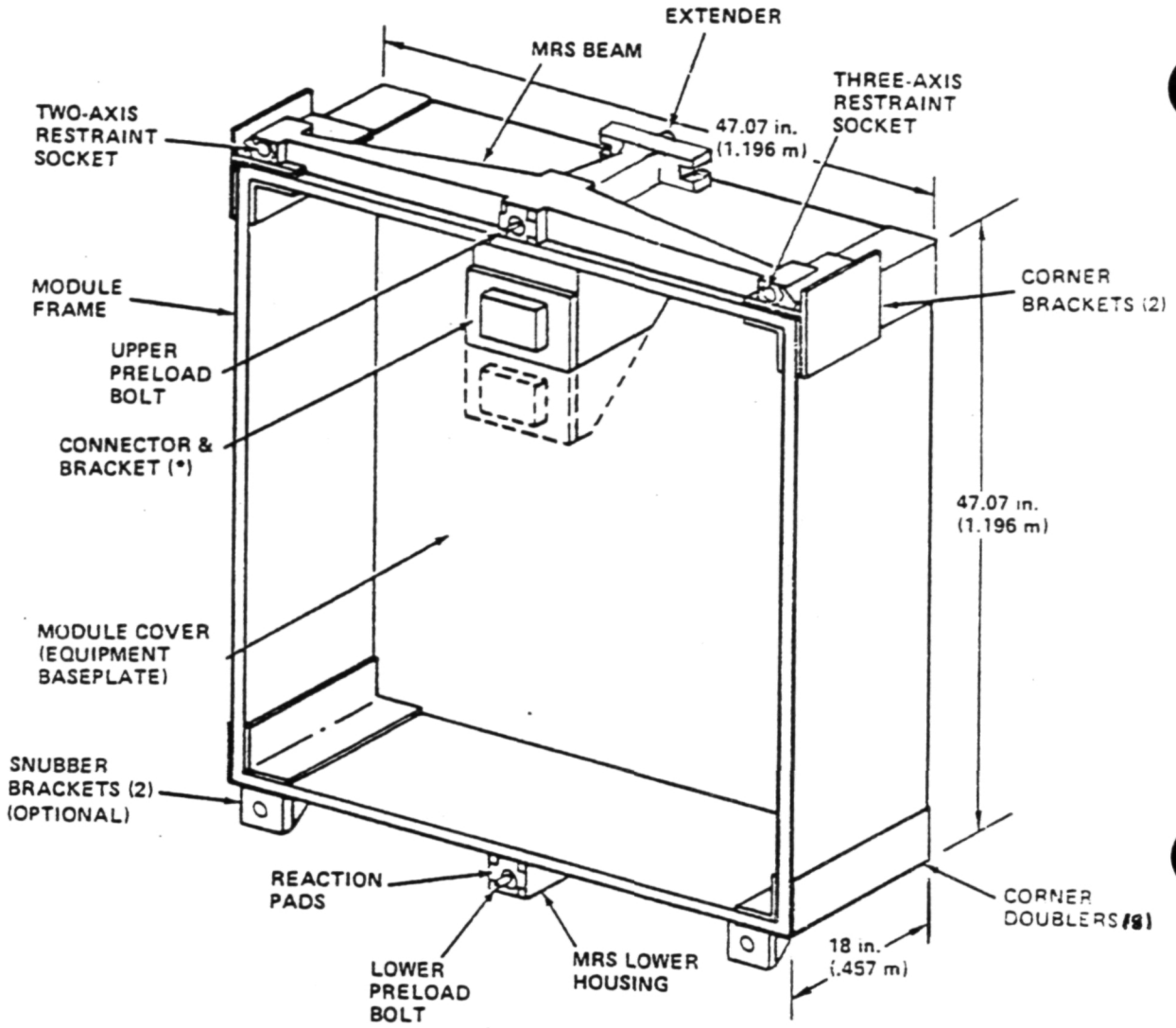

Figure 3-3 MMS Module Structure with Module Retention System

A module servicing tool (MST) was designed and built as a battery powered EVA hand tool. It was designed to loosen and tighten the MMS module retention hardware to predetermined torques of up to 160 ft-lb. It provides a means for locking onto the modules in a manner that avoids reaction torques on the crew member. Power is supplied by a battery housed in the tool assembly. This tool has three separate motors to perform two functions (1) latch the MST to the module to react bolt-driving torques and to provide a handle for maneuvering the module (2 motors) and (2) drive the preload bolts in and out. The MST is quite bulky and heavy because of the self-contained batteries. However, it can be provided with a servicer standard interface and can be used as an adapter for exchanging the MMS modules using the servicer.

Various alternative servicing methods for a Multi-Mission Modular Spacecraft were analyzed in the prior study. The recommended method for remote, on-orbit servicing of the MMS was to use the standard servicer configuration fitted with a straight docking probe adapter, a modified Module Servicing Tool (MST) and a modified stowage rack (Figure 3-4). The servicer docks with the MMS laterally, on its existing grapple fixture or on a grapple fixture/berthing pin combination that replaces the existing berthing pin between the power module and the C&DH module, as shown in Figure 3-5. The docking probe adapter is designed to be compatible with the servicer docking probe interface at one end and with the MMS docking aid interface at the other. A joint similar in design to the other servicer joints is included in the docking probe adapter to allow tilting of the servicer with respect to the MMS after docking to bring the servicer mechanism into a plane parallel to the face of the module to be exchanged. The joint is powered through an electrical connection across the servicer docking interface. This feature allows the simple, axial mode of operation of the servicer without modifying its basic configuration. Either one of the two modules adjacent to the grapple fixtures can be serviced in one docking. Two grapple devices, the standard one and the grapple fixture/berthing pin combination, are required if it is desired to be able to service any of the three modules. No modifications of the MMS modules or module retention system (MRS) are required. Instead, a modified MST compatible with the existing MRS and with the servicer standard end effector interface is recommended.

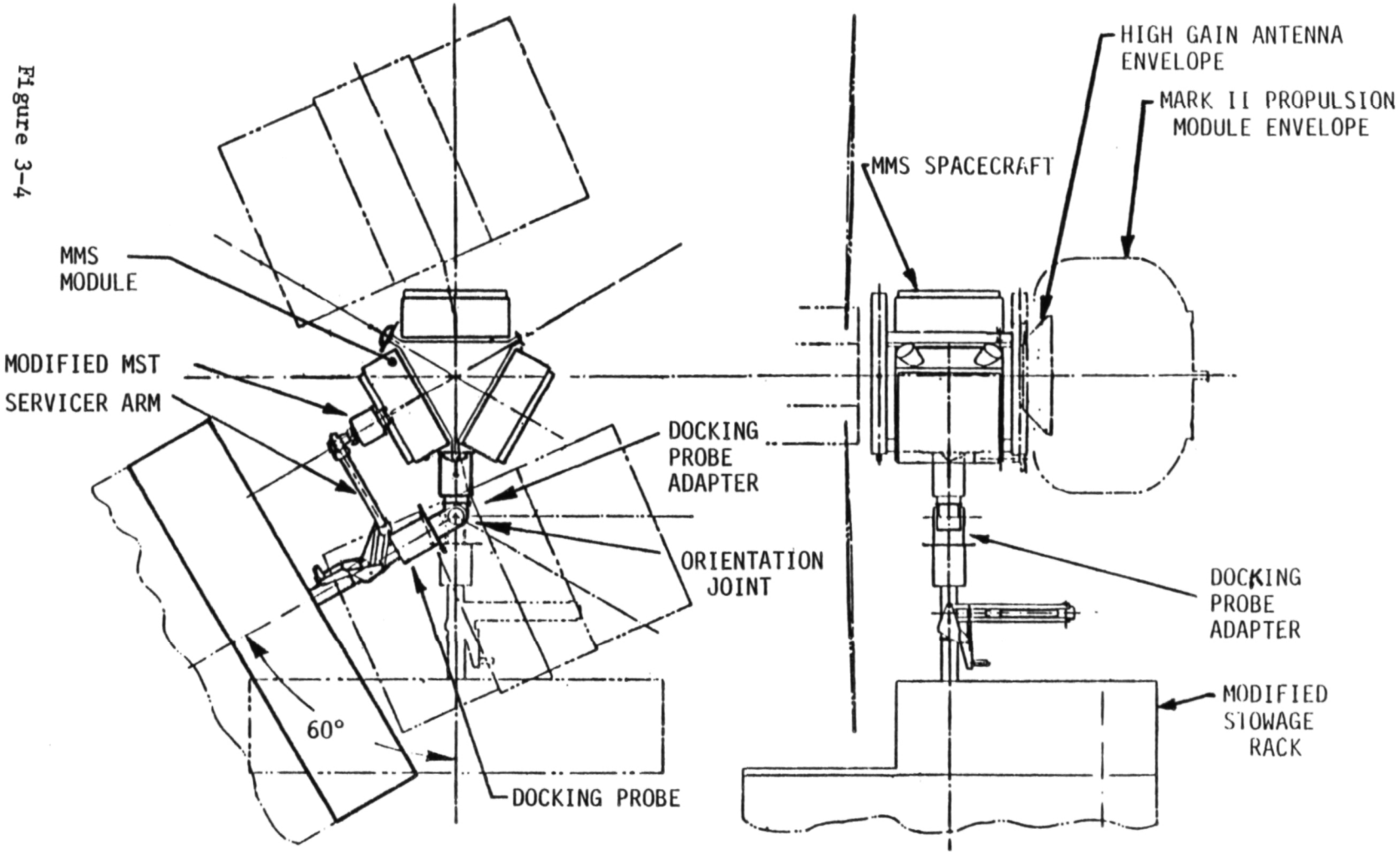

Figure 3-4 MMS Module Exchange Using Straight Docking Probe Adapter and Tool Adapter

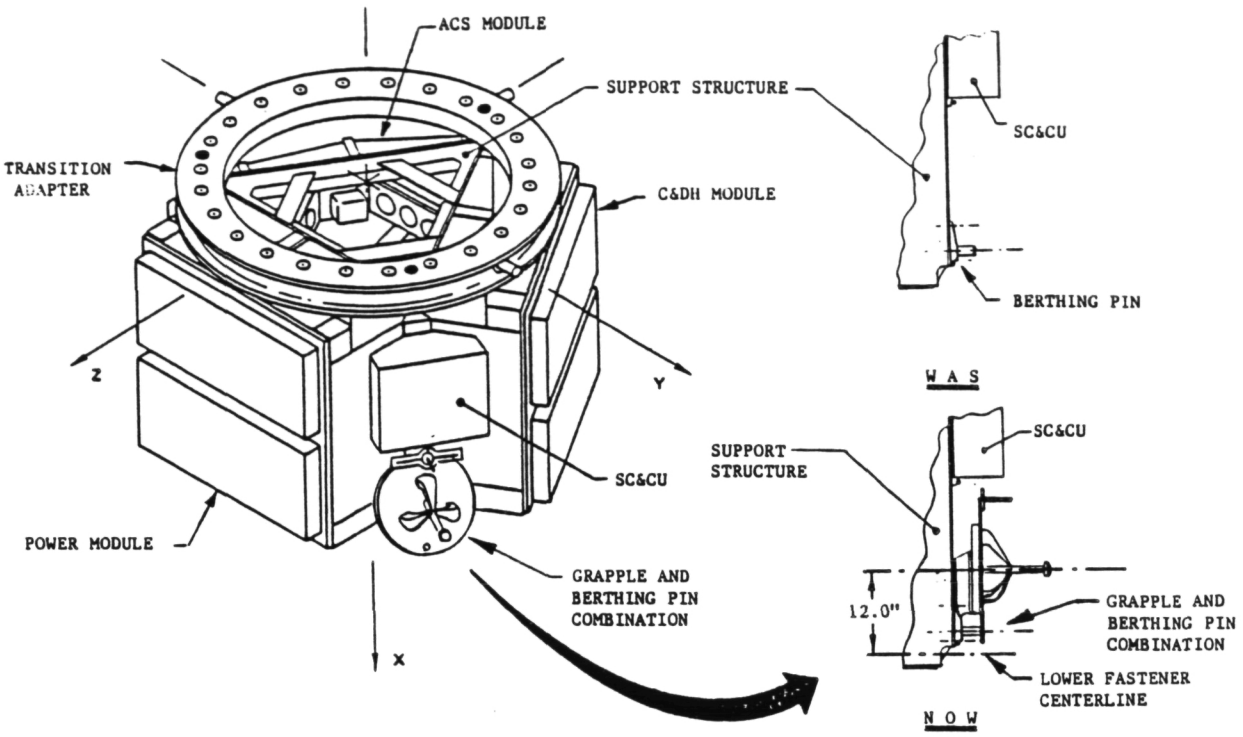

Figure 3-5 Docking and Berthing Pin Combined Design

The remainder of this section includes:

1) A discussion of MMS servicing requirements with emphasis on the operational case;

2) A discussion of an approach to modifying the module servicing tool for use in a 1-g servicing demonstration;

3) An analysis of MMS module exchange options;

4) A discussion of extended remote maintenance and resupply concepts.

3.1 MMS SERVICING REQUIREMENTS

During the prior study, a set of requirements for operationally servicing spacecraft with MMS modules was derived. These requirements were reviewed and complemented in this study. The resulting requirements to be placed on the servicing system are:

1) Minimum modification of the present configuration of the MMS modules and/or module support structure;

2) Minimum modification of the standard configuration of the servicer. An adapter may be used in connection with the standard end effector interface in order to service MMS modules;

3) The method of removal/attachment of the MMS module shall be compatible with the demating/mating of the existing electrical connector(s) situated on the back of the module;

4) Adequate clearance shall be provided at all times between module and satellite structure or other components;

5) The servicer shall clear the propulsion module or high gain antenna at the lower end of the MMS support structure. A clearance envelope of 86 in. by 103 in. diameter is required for satellites using the Mark II propulsion system. The servicer should also clear the payload envelope, including solar panels, antennas and other appendages;

6) The number of times the servicer docks with the MMS in order to perform all the servicing tasks shall be kept to a minimum;

7) The accuracy in positioning the servicer for module engagement shall be within the capture envelope of the module retention system. The adapter design shall be such as to minimize the errors and the softness of the coupling at the interface;

8) Demonstration of other servicing tasks such as battery exchange, other types of module exchange and expendable resupply, in addition to MMS module changeout, should be performable on the same mission without need for system reconfiguration.

The basic philosophy behind these requirements is that there should be minimum changes required for any MMS components. The MMS is a fully developed, operational system. Therefore, MMS design changes to accommodate servicer existing interfaces or other servicer requirements affect existing hardware and tooling and their implementation is expensive. This cost element was considered in defining a servicer system capable of exchanging MMS modules. However, some changes are necessary and it may not be possible to service those MMS spacecraft that have not been configured for remotely controlled servicing. The requirements placed on the MMS spacecraft for remotely controlled on-orbit servicing are:

1) Attitude stability that is within the capture envelope of the Orbital Maneuvering Vehicle docking system;

2) RMS grapple fixture(s) adjacent to the module(s) to be exchanged;

3) Electrical power control and an RMS grapple fixture electrical connector that allows the servicer to control electrical power to the module to be replaced and to put the MMS attitude control system into a safe condition;

4) A target that allows the servicer to estimate post-docking alignment errors;

5) Attachment targets near each module retention device if a Manual-Augmented control mode is to be used;

6) A method of transferring module "ready to latch", "latch", and "unlatched" signals to the servicer control system.

Each MMS is fitted with electrical connectors that are mateable with corresponding connectors in the flight support system. The MMS electrical power distribution and attitude control system can be controlled through these connectors. While these berthing connectors are not easily reachable by the servicer, it might be practical to parallel the necessary leads to connectors at the grapple fixtures.

The provision of electrical connections between the MMS and the servicer for control, power and status is the most significant requirement on MMS spacecraft. The provision of the various targets should not be difficult.

In the prior study, it was decided to use the MMS module servicing tool as a basis for the interface between the servicer and the MMS modules. As the MST is self-contained and designed to be used by an astronaut on EVA, it will require some modification for use in an operational servicer configuration. The MST adaptation requirements are:

1) The modified MST shall be compatible with the servicer end effector interface (including the electrical disconnect). The translation mechanism for mating/demating the electrical disconnect should be located on the servicer end effector;

2) The number of electrical connections between the end effector and the modified MST should be minimized;

3) The hand controls, electronics and power supply of the modified MST should be in a remote location;

4) The modified MST interfaces with the end effector and the module should be capable of transmitting all the moments and loads with adequate margin for stiffness and safety;

5) The modified MST should stand 400 complete cycles of demonstration operations without failure;

6) The modified MST should clear the TV camera, the lights, and all other servicer components at all times during MMS servicing;

7) The modified MST should allow full view of the optical targets and obstruct as little as possible the TV camera field of view;

8) The modified MST should have a ready-to-latch sensor at the interface with the module;

9) The distance between the end effector interface and the MMS module latch interface shall be 17.25 in. for 0-g demonstrations;

10) The modified MST unit for cargo-bay servicing operations shall be provided with an EVA override for manual unlatching.

The above requirements are complemented by additional requirements in the sections on the 1-g, 0-g, and free-flight demonstration and verification plans and in the next section involving adaptation of the module servicing tool.

3.2 MST ADAPTATION FOR 1-g

A brief analysis was conducted to evaluate whether it was better to modify the servicer engineering test unit (ETU) or the module servicing tool for 1-g operation. It quickly became obvious that the load carrying capability of the ETU would have to be increased by more than an order of magnitude unless the MST weight was severely reduced. Concurrently, it was observed that certain parts of the MST could be readily removed, certain functions must be remotely located, and that MST performance (bolt driving torque) could be greatly reduced for the 1-g demonstrations. These observations led to a decision to minimize changes to the ETU and to make most of the changes to the MST. The logic and the associated requirements were discussed with Goddard Space Flight Center personnel and were accepted.

3.2.1 Modified Module Servicing Tool Requirements

The use of the MMS Module Servicing Tool as it might be adapted or modified for use with the on-orbit servicer system, especially for 1-g demonstrations was evaluated. The basic premise was that there would be minimum changes to the MMS functional attachments and to the Engineering Test Unit. However, an electrical connection interface

between the ETU end effector and the modified MST, with the connector mated and demated by a connector positioner on the end effector, would be provided. For the 1-g demonstrations, an electronic power supply (driven by 110 vac, 60 Hz power) would be used in place of the battery system. The following requirements apply to the modified MST as an on-orbit servicer end effector adapter:

1) The 1-g and 0-g versions of the modified MST may be different but should have the same ETU and MMS interfaces and approximately the same overall dimensions;

2) The modified MST shall be compatible with the ETU end effector interface (including the electrical disconnect). The positioner mechanism for mating/demating the electrical disconnect should be located on the ETU end effector;

3) The number of electrical connections between the end effector and the modified MST should be minimized;

4) The hand controls, electronics and power supply of the modified MST should be in a remote location;

5) The modified MST for the ground demonstration should have reduced torque capability and longer operating time in order to save weight;

6) The modified MST interfaces with the end effector and the module should be capable of transmitting all the moments and loads with adequate margin for stiffness and safety;

7) The modified MST should stand 400 complete cycles of ground demonstrations without failure;

8) The modified MST should clear the TV camera, the lights, and all other servicer components at all times during MMS servicing;

9) The modified MST should allow full view of the optical targets and obstruct as little as possible the TV camera field of view;

10) The modified MST should be as compact as practical to allow maneuvering in volume restricted zones;

11) The modified MST should have a ready-to-latch sensor at the interface with the module;

12) The distance between the end effector interface and the MMS module latch interface, for the ground demonstration, shall be 7.25 in.;

13) The weight of the modified MST for the ground demonstrations shall be less than 15 lbs;

14) The modified MST unit for cargo-bay servicing demonstrations shall be provided with an EVA override for manual unlatching;

15) For the 1-g demonstration, MST control should be selectable from either an MST control panel, mounted in the MSFC control station, or from a computer;

16) The MST latches would be modified to delete the inward motion function, and to hold the module tightly during module transfer operations.

The weight and size requirements for the 1-g version of the modified MST were derived from an analysis of the ETU drive torque capabilities (see Section 8.1.2). The critical ETU actuator is the wrist pitch (Y) drive. The torque required from this drive must not exceed 50 ft-lb to avoid overheating and to provide an acceptable speed. For a 50 ft-lb load torque, the drive will take 15 sec to flip a module upside down as compared to 5 sec with no load. .

The above requirements were discussed with GSFC and Fairchild Space Company personnel and were used as a basis for their modified MST design and fabrication activity.

3.2.2 Modified MST Mechanical Concept Definition

The weight of the existing MST, as configured for EVA use, is approximately 67 lbs. The modified MST to be used for ground demonstrations needs to be redesigned for a drastic weight reduction and reduction of the distance between the end effector interface and the module latch interface (called the "B" distance).

For the 0-g MMS servicing demonstration, existing MST hardware can be used if the battery, battery case, EVA handles and the controls are removed and a standard ETU end effector interface, including an electrical disconnect, is added opposite to the tool/latch end. A distance "B" of 17.25 in. between the two interface reference planes can be accommodated without modifications to the EVA overrides or tool drive. Minor modifications to the latch mechanism will be required to provide a firm grip on the module during exchange operations.

For the 1-g demonstrations, however, this simple adaptation is not appropriate. In the analyses of Section 8.0, it was determined that for a module weight of 12.5 lbs and B = 17.25 in. the maximum allowable weight of the modified MST would be only 3.5 lbs, which is not feasible. Therefore, the shape and the design of the modified MST for the ground demonstrations should be different from the one used in 0-g.

Several ways of achieving the required light weight and compactness were identified:

1) Reduction of fastening torque from 170 ft-lb to 20 ft-lb;

2) Longer latch and wrench cycle time to reduce the motors power and size;

3) Offset motor/gearbox;

4) Use of composite and other light weight materials;

5) Elimination of the bolt drive extension simple removal feature.

A maximum module mockup weight of 12.5 lbs and a "B" distance of 7.25 in. were selected for the ground demonstrations. From the Section 8.0 analyses, the maximum allowable weight of the modified MST is 15 lbs. An allowance of approximately 0.5 lb was made for the electrical connector positioner mechanism to be added to the end effector. Other applicable requirements are given in Section 3.2.1.

In Figure 3.2-1 the general configuration of the modified MST for the ground demonstrations, the critical dimensions required for providing adequate clearances and the approximate c.g. position are given.

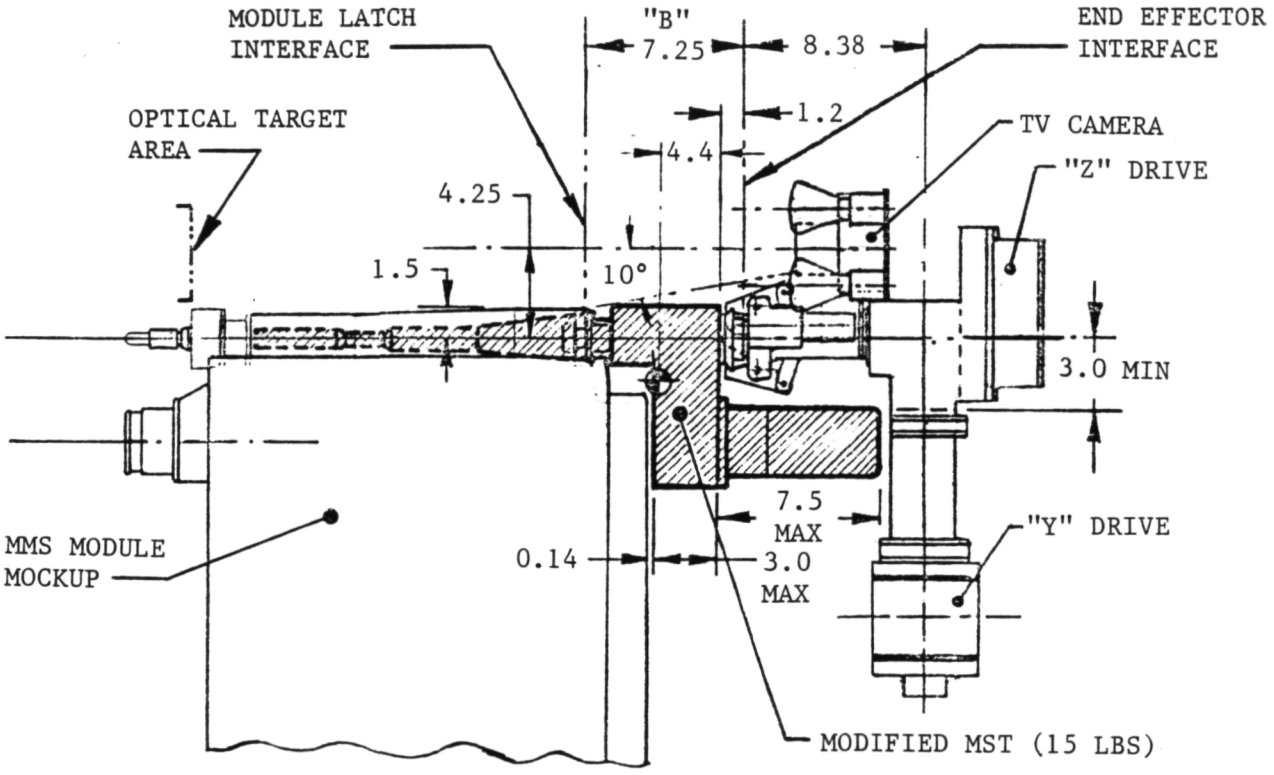

Figure 3.2-1 Modified MST Configuration for Ground Demonstrations

Adequate clearance between the modified MST and the servicer arm and the MMS module mockup must be provided. The tool should not obstruct the field of view of the TV camera, inside of the 10° cone shown, except for the very tip of the tool. The servicer operator should have a good view of the module latch interface on the TV screen prior to tool insertion and of the optical target during module attachment.

A sketch of one approach to the design of a modified MST for 1-g use that appeared to satisfy the above requirements was prepared. Parts were generally sized to provide the desired torque and speed. Separate motors were used for the bolt and latch drives with one motor driving both latches through a cogged belt. Copies of the sketch were provided to GSFC and Fairchild personnel to encourage them that the 15 lb weight allowance could be met.

3.2.3 Modified MST Electrical Concept Definition

A conceptual arrangement of the modified MST wiring and its interface with the Engineering Test Unit was prepared to better define the interfaces between the four parties involved - Marshall Space Flight Center, Goddard Space Flight Center, Fairchild Space Company, and Martin Marietta Corporation. This arrangement was reviewed with the four parties and accepted as a basis for hardware design and fabrication. The MSFC responsibility included:

1) Computer interface equipment;

2) MSFC breakout box changes;

3) Location of MST control panel.

The GSFC/Fairchild responsibility included:

1) MST wiring;

2) MST electronics box;

3) MST power supply;

4) MST control panel;

5) Wiring between GSFC provided components (except MST) and between MST electronics box and existing ETU junction box.

The Martin Marietta responsibilities included:

1) ETU connector positioner wiring;

2) Cabling changes along ETU mechanism;

3) Changes in existing ETU junction box;

4) Changes in existing Servicer Servo Drive Console wiring;

5) Changes to existing Servicer Control Panel to add connector positioner functions;

6) Wiring and cabling to MST tool storage rack;

7) Changes in existing ETU cabling;

8) Wiring of a new MMS junction box.

These areas of responsibility and the cabling involved are shown in Figure 3.2-2 along with the MMS module receptacle wiring suggested for the MMS module exchange demonstrations. The MST power supply is to be plugged into an existing 60 Hz receptacle in the Servicer Servo Drive Console (SSDC) that is switched off when the ETU main power is turned off. In this way, it will be possible to shut down the entire MMS 1-g demonstration equipment (except for computer) by operating one switch.

The arrangement shown in the figure requires that cable connector P2 be moved from the existing ETU junction box to the new MMS junction box when MMS module exchange demonstrations are to be made. An earlier alternative required the exchange of six basic module location connectors with six MMS module location connectors. However, the earlier design would have taken too much time between module exchange demonstrations so the version shown in the figure was used.

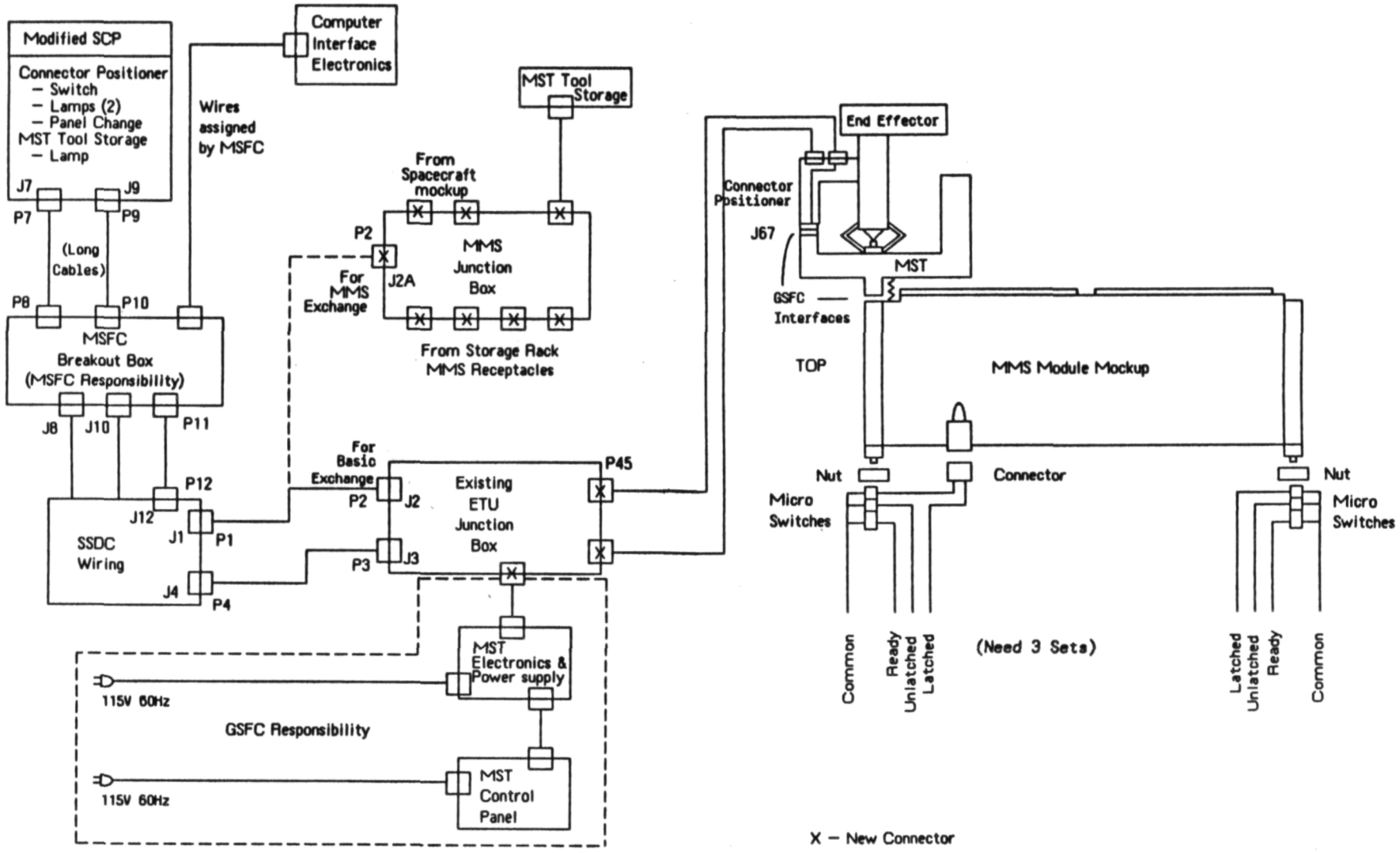

Figure 3.2-2 MST Related Electrical Design Concepts

3.3 MODULE EXCHANGE OPTIONS

The results of the prior study with respect to adapting the servicer to the MMS were reviewed to determine if any simplifications or increases in capability could be identified. The primary areas of interest were the servicer configuration including the docking probe and alternative modules that could be involved. The basic approach is to use the Integrated Orbital Servicing System (IOSS) concept as the reference and then to modify the reference as necessary for MMS servicing. The acronym IOSS is used to denote both the system and the study. The context of use will generally indicate which meaning was intended. In this way, the axial and near-radial capabilities of the IOSS for exchanging modules from 15 ft-diameter spacecraft would be maintained along with the capability to extend to radial exchange of a second tier of modules.

3.3.1 Servicer Configuration

The prior study examined seven different alternative methods for adapting the IOSS servicer to the servicing of MMS spacecraft. The variations involved docking direction, servicer arm segment lengths, type of adapter tool between servicer end effector and MMS module, interface mechanism type, docking probe adapter type, and stowage rack modifications. The selected configuration involved a docking probe adapter with a hinge, Engineering Test Unit arm lengths and a modified form of the MMS module servicing tool. The selected configuration is shown in Figure 3-4.

3.3.1.1 Prior Study Results - The seven alternatives and three variations listed in Table 3.3-1 were addressed in the prior study to select an adaptation of the IOSS servicer to service MMS spacecraft. All of the alternatives used the 45 in. lower and upper arm lengths of the servicer Engineering Test Unit rather than the 79 in. arm lengths of the IOSS. The ETU lengths were used because the prior study started with the 1-g equipment and evaluated that equipment for the cargo-bay demonstrations and the operational situation. The results of the prior

study servicer configuration trade study are not affected by a change to the longer arm lengths of the IOSS. Some of the details may change, but the results should be the same.

Table 3.3-1 MMS Module Servicing Method Alternatives

Axial Docking Methods 1) Modified servicer end effector and specialized adapter tool 2) Use of existing side interface mechanism 3) Use of alternative interface mechanisms a) Single power takeoff b) Dual power takeoff c) Latches directly actuated with electric motors 4) Use of one latch mechanism in back of modified MMS module 5) Use of one active latch at bottom of modified MMS module and a passive hook-up point at the top
Lateral Docking Methods 6) Use of an offset docking probe adapter and tool adapter 7) Use of straight docking probe adapter, tool adapter and modified stowage rack.

The prior study recommended the use of alternative 7) of Table 3.3-1. The variety of MMS configurations to be addressed was a driving consideration. In particular, the solar arrays of the Solar Maximum Mission and the Mark II propulsion module were difficult to work around. Those servicer configurations involving docking at one end of the MMS and using the MMS berthing pins for docking were cumbersome and were judged to have a low probability of successful docking. These criteria ruled out the first five candidates, including the variants, of Table 3.3-1. A list of the criteria used for servicer configuration selection is given in Table 3.3-2. There are few criteria associated with changes to the MMS as it was strongly desired to avoid any significant changes to the MMS. Some changes will be necessary as noted in Section 3.1. The large number of criteria listed under

Impacts on Servicer Design result from a willingness to look at different servicer alternatives. Alternative 7) of Table 3.3-1 was selected over Alternative 6) because it provided better clearance between the servicer and the MMS, has better accuracy and is stiffer, has an easier-to-use docking system, is mechanically simpler, and is lighter; even though the Alternative 7) stowage rack must be modified.

Table 3.3-2 Servicer Configuration Evaluation Criteria

General - Ability to service MM spacecraft fitted with Mark II propulsion system - Loss of capability to service other spacecraft types - Use of three berthing pins for docking - Use of proven module latch mechanism - Ease of operation of both MMS module attachment bolts - Number of MMS module attachment bolt engagements - Adaptability to 1-g demonstrations - Applicability to MMS type satellites currently in orbit
Impacts on MMS Design - MMS structure configuration changes - MMS module configuration changes - Module servicing tool changes - Weight increases
Impacts on Servicer Design - ETU mechanism configuration changes - Inability to use standard interfaces - Docking system used - Docking system stiffness and accuracy - Increases in operational complexity - Increases in mechanical complexity - Decreases in servicer dexterity - Weight increases - Need for docking probe adapter - Need for stowage rack modifications - Arm segment length increases - Servicer arm stiffness and accuracy

Both alternatives require that electrical connections be made between the servicer and the module servicing tool and between the servicer and the MMS. One, and preferably two, electrical grapple fixtures must be mounted on the MMS structure for docking. The module servicing tool must be modified to move its control functions to a remote location and to interface mechanically and electrically with the servicer.

3.3.1.2 MMS Docking Probe Adapter - The MMS docking probe adapter is shown in Figure 3.3-1 installed in the IOSS docking probe. Both docking probes are adaptations of the Orbiter RMS standard end effector. The hinge is used so that the two docking probes can be colinear for docking with an MMS and can be placed at the proper orientation for MMS module exchange. When the MMS docking probe is oriented to the other side of the servicer centerline, then a second MMS module can be exchanged. The hinge also allows the MMS docking probe to be folded down for storage during launch in the Orbiter cargo bay.

The concept of a docking probe adapter was selected, rather than a bolt-on connection, so that the adapter could be installed, or removed, during a servicing mission. This permits the IOSS to service both an MMS and a serviceable spacecraft with standard side interface mechanisms on the same mission (mixed spacecraft missions). The servicer arm has the reach and controllability to remove and install the MMS docking probe adapter. The IOSS is also capable of being used from the Space Station. The MMS docking probe adapter concept of Figure 3.3-1 would simplify its installation by astronauts on EVA for MMS servicing missions.

The work on the cargo bay demonstrations of Section 6.0 indicated that the use of two docking probes would increase the flexibility and inaccuracy of the connection between the spacecraft and servicer. Unlike the steady state misalignments, which can be measured and accounted for in the servicer computer, the flexibility effects are not so easy to handle. The RMS standard end effector has a connector with a limited number of pins. The IOSS docking probe must handle all of the signals between the servicer and the spacecraft, plus the signals

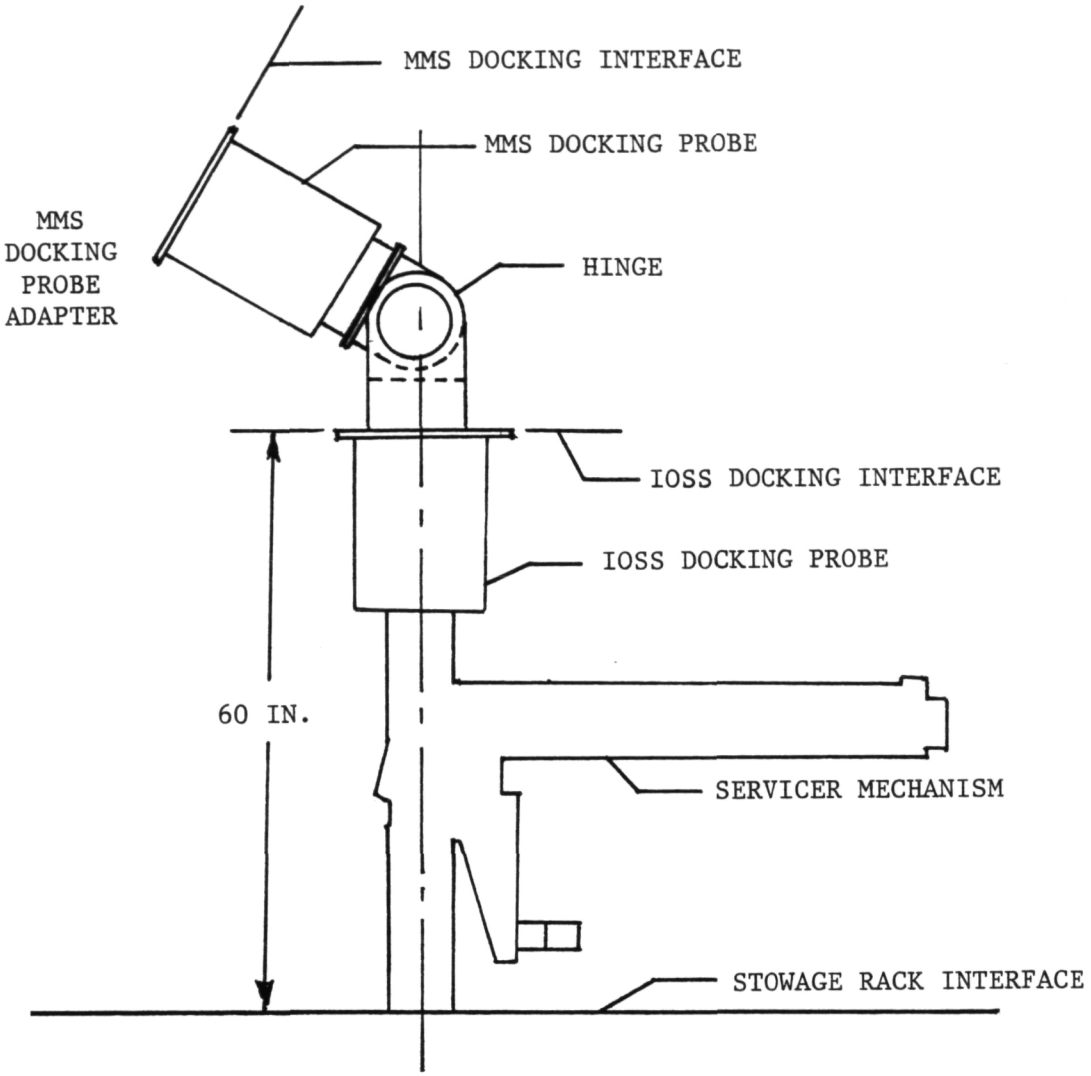

Figure 3.3-1 MMS Docking Probe Adapter

to and from the hinge joint. A rough estimate of the number of wires needed indicates that the standard RMS connector is marginal.

These considerations lead to a recommendation that the IOSS docking probe be replaced by a separation collar as shown in Figure 3.3-2. The separation collar would be designed for easy operation by an astronaut on EVA. The pin limitation of the RMS connector would no longer be of concern. The separation collar would permit installation of either the MMS type docking probe adapter or the IOSS docking probe. The ability to conduct mixed spacecraft missions would be lost. However, a much

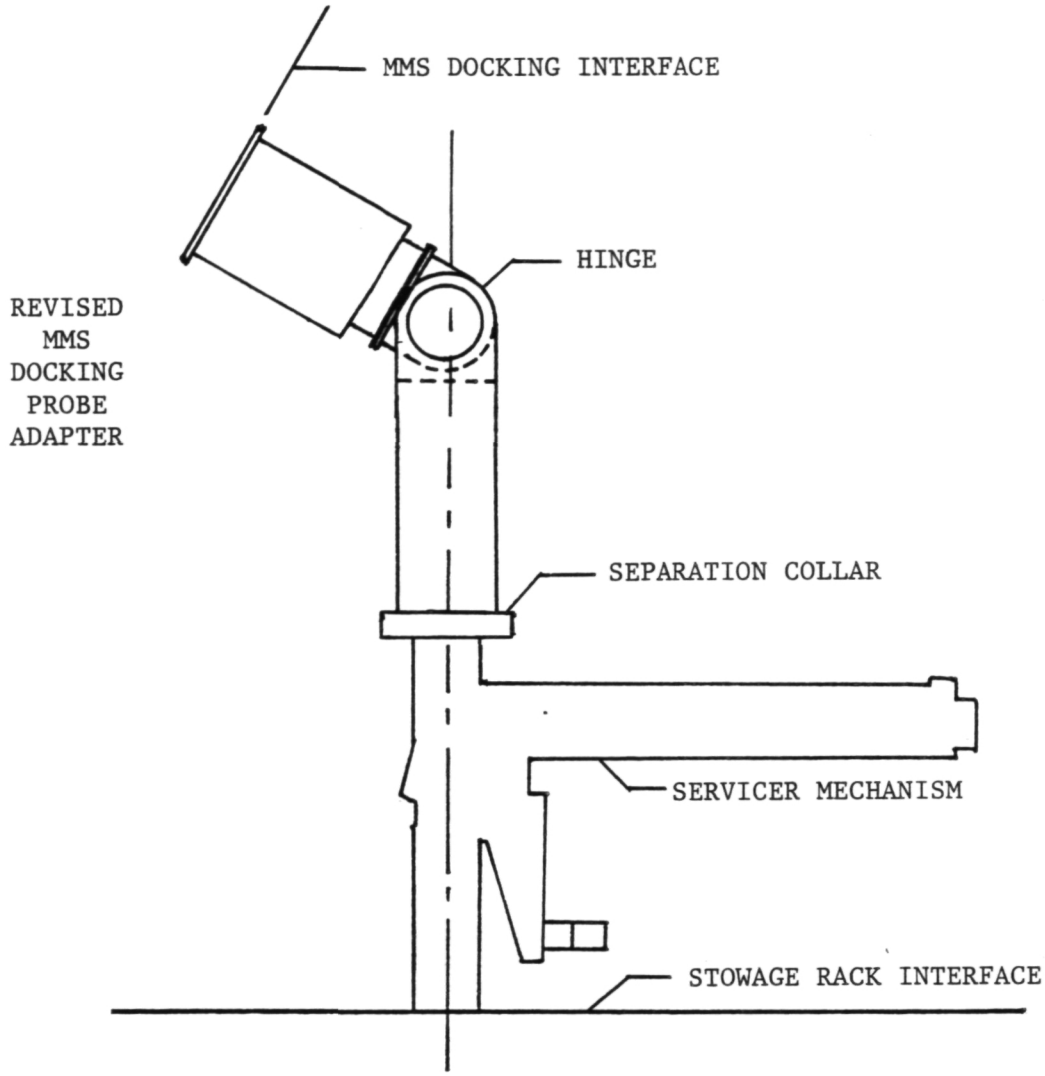

Figure 3.3-2 Revised MMS Docking Probe Adapter

stiffer structure would result. It is recommended that the revised MMS docking probe adapter be used until a firm requirement to conduct mixed spacecraft missions is identified.

3.3.1.3 Docking Probe Hinge - Because the MMS docking probe hinge, or orientation joint, represents an additional cost, its deletion was reviewed. An approach to servicing the Solar Maximum Mission Spacecraft, without using the docking probe hinge, was identified and evaluated. The conclusion of this analysis was to retain the docking probe hinge as the advantages of its removal do not clearly outweigh the corresponding disadvantages.

The baseline servicer configuration for servicing the MMS in 0-g is shown in Figure 3.3-3. The servicer is fitted with a straight docking probe adapter, a modified Module Servicing Tool (MST) and a modified stowage rack. The servicer docks with the MMS laterally, on its existing electrical grapple fixture or on a grapple fixture/berthing pin combination that replaces an existing berthing pin. An orientation joint similar in design to the other servicer joints is included in the docking probe adapter to allow tilting of the servicer with respect to the MMS after docking to bring the servicer mechanism into a plane parallel to the face of the module to be exchanged. The joint is powered through an electrical connection across the servicer docking interface. This feature permits the simple, axial mode of operation of the servicer without modifying its basic configuration. Either one of the two modules adjacent to a grapple fixture can be serviced in one docking. Adequate clearance is provided between the servicer and the solar panels or other spacecraft elements.

For MMS servicing missions the standard docking probe would be detached from the servicer at the servicer mechanism interface and replaced by a MMS type docking probe that is longer and includes the orientation joint. The changeover to the MMS docking probe can be done at the same time as the stowage rack is set up for the MMS servicing mission. No modifications of the MMS modules or module retention system (MRS) are required. Instead, a modified MST compatible with the existing MRS and with the servicer standard end effector interface is recommended.

An alternative MMS servicing configuration for 0-g is shown in Figure 3.3-4. The servicer docks with a Solar Maximum Mission version of the MMS laterally on its existing electrical grapple fixture or on an added grapple fixture/ berthing pin combination that replaces an existing berthing pin. Unlike the baseline configuration, the docking probe does not have an orientation joint. A simple, straight docking probe, with an RMS end effector is used. Both modules adjacent to a grapple fixture can be serviced in one docking. Several modifications to the servicer mechanism and its control software are necessary in order to increase the axial reach and allow operating the two fasteners of each

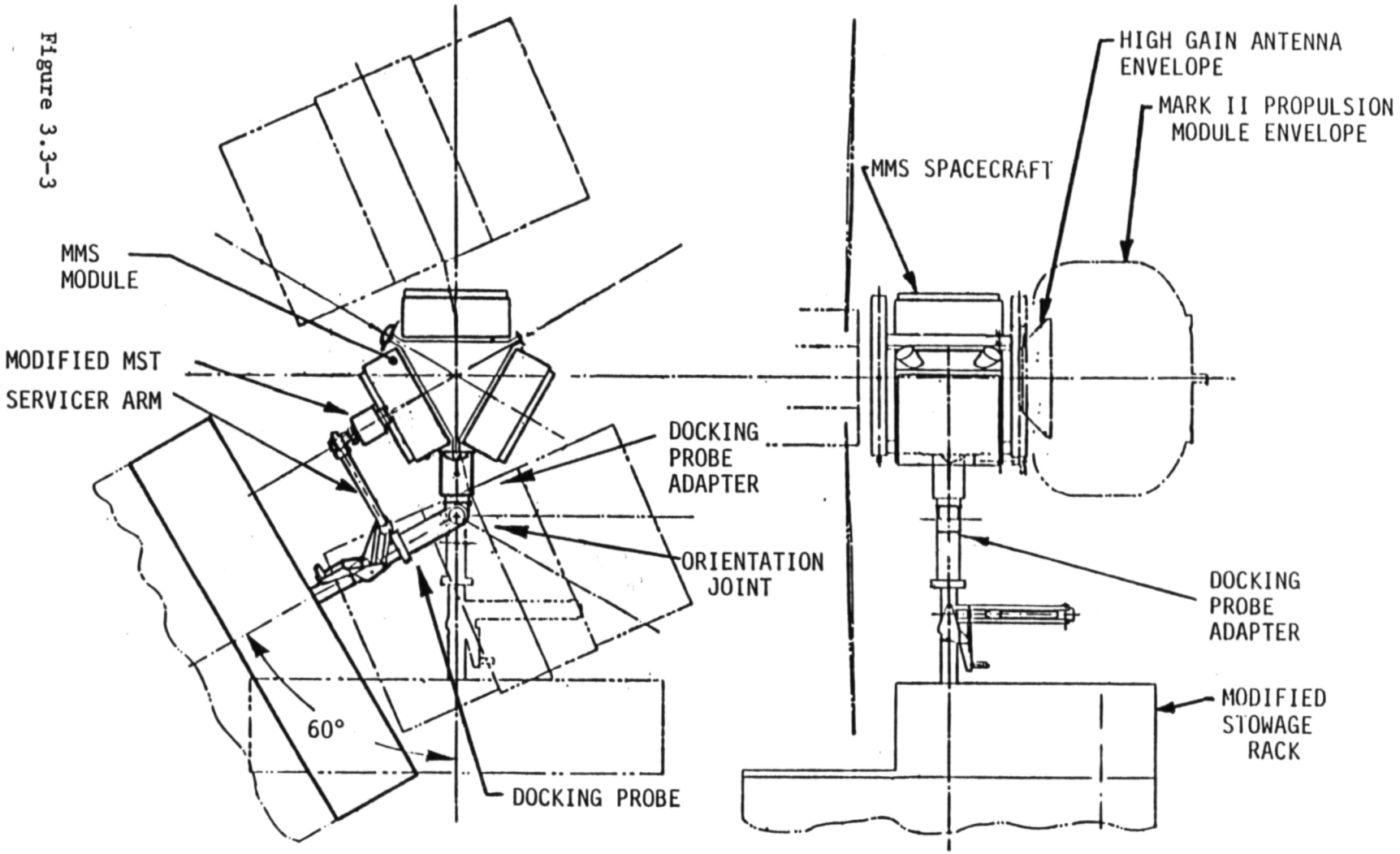

Figure 3.3-3 Baseline MMS Servicing Configuration

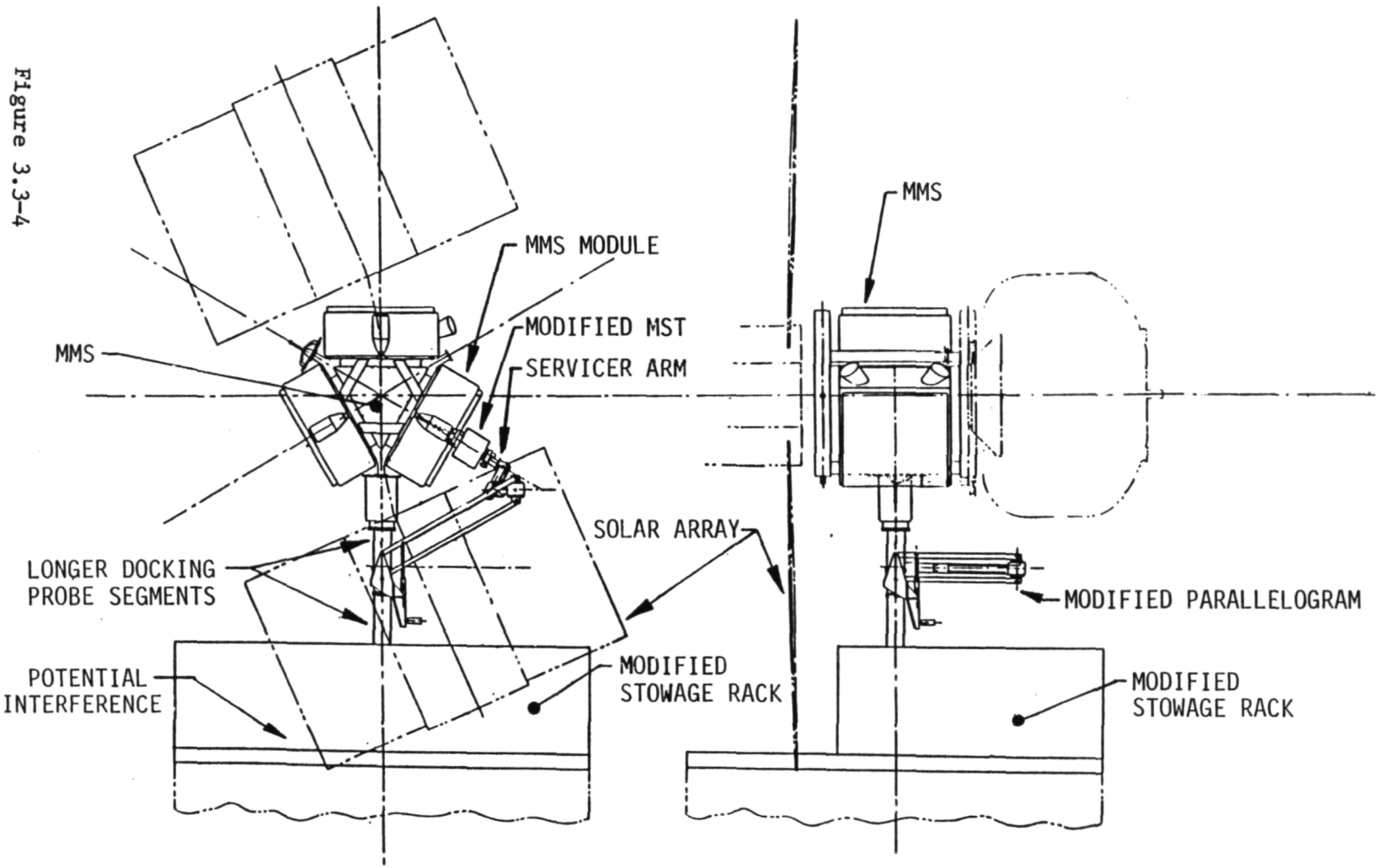

Figure 3.3-4 Alternative MMS Servicing Configuration

module with the end effector at a 60° angle relative to the docking probe. As in the baseline configuration a modified MST is used to adapt the standard end effector of the servicer arm to the standard MMS module retention system.

The stowage rack is modified by eliminating one modular beam in order to clear the spacecraft solar panels. Both segments of the docking probe, between the stowage rack and the arm and between the arm and the RMS end effector are longer in order to increase the arm reach in the axial direction and to provide clearance between the stowage rack and spacecraft. These modifications can be implemented at the same time as the stowage rack is set up for the MMS servicing mission.

The tradeoff study on elimination of the orientation joint, or hinge, from the MMS docking probe involved layout preparation and analysis of interferences of the servicer with the solar arrays and other spacecraft elements. To minimize interference between the Solar Maximum Mission solar array and the OMV, the docking post must be reworked to put the shoulder pitch joint halfway along the lengthened docking post. This increases the number of changes involved in going from a basic to an MMS servicing mission. A modified servicer mechanism, with increased shoulder pitch joint travel, can reach the MMS module latches. While the 45 in. arm segment length of the ETU could be used, the long sides of the parallelogram would have to be spaced farther apart because of the larger shoulder pitch joint angular travel required. Figure 3.3-4 shows an arm segment length between that of the ETU and that of the IOSS.

While the above mechanical changes permit the servicer mechanism end effector to reach all points along the desired paths, certain control system complexities arise when combined motions are involved. Module exchange as shown in the figure means that the MMS module must move straight along a line at a 60° angle with respect to the docking post.

This is a form of combined (axial and radial) motion. The servicer control and trajectory generation system has been developed so that it is only necessary to change one cylindrical coordinate at a time when a module is being moved. For combined motion, it is necessary to change more than one cylindrical coordinate at the same time and to synchronize the variations in the three cylindrical coordinates. While this is generally possible, an extra level of complexity is added to the module exchange trajectory generation system. Additionally, in order to orient the end effector properly while moving the MST along the centerline of an MMS module fastener, all three wrist joints of the arm must also be actuated at the same time at varying rates. Control software modifications are needed to perform these more complex maneuvers.

The Manual-Direct (joint-by-joint) control mode is more difficult, almost impossible, to apply because of the need for joint synchronization. Without this simple back-up control mode, the reliability of the servicer system is lower, as compared to the baseline. One possible solution may be to redesign the wrist yaw and shoulder pitch joints for backdrivability.

The required arm modifications needed for reaching the module were defined and some of the equations governing the arm motion were established. Important software modifications would be required as well as design changes affecting the shoulder segment parallelogram arrangement. The time allocated to equation derivation did not permit us to obtain an explicit solution for each of the joint angles. The solution form was implicit, which means that an iterative solution approach would be required. The solution is complicated by the fact that multiple solutions are possible at certain steps because of the range of allowable angles involved. All potential solutions must be followed and checked until the correct solution is identified. Once a correct solution is identified for a particular trajectory action, then subsequent solutions can use the first solution to simplify the solution "tree" because the functions are continuous and the servicer does not move far between solutions. It may also be that the iteration

converges quickly. However, with additional effort, it is likely that a better approach to solving the equations can be found. It is clear that the resulting equation solution technique will be more complex than that used for the simple radial and axial exchange used. The radial and axial motion equations, each involve only four degrees of freedom as opposed to the six involved in combined motions.

The advantages of removing the orientation joint from the docking post do not clearly outweigh the disadvantages that have been identified. These servicer system modifications address only the servicing of one form of spacecraft utilizing MMS modules. Servicing the MMS module in an axial mode can be applicable to other spacecraft, as well as MMS. Additional analyses are required to further define the hardware and software modifications and the reliability aspects of the orientation joint elimination.

For the ground and cargo-bay MMS servicing demonstrations, the baseline configuration of the servicer shown in Figure 3.3-3 is recommended.

3.3.1.4 Servicer to MMS Electrical Connections - Certain functions on MMS and other spacecraft being serviced on orbit need to be safed or controlled during the servicing operations. While some of these functions might be controlled from the ground if the spacecraft communications system was working, a more direct approach is to provide an umbilical connection between the servicer and the spacecraft. Representative functions that will require control include:

1) The spacecraft attitude control system should have its actuators (thrusters) turned off so they do not fight the OMV attitude control system and waste propellant;

2) Orientable appendages, e.g., solar panels or communication antennas, should be fixed in position if they could physically interfere with the servicing operation;

3) Flow of fluids in lines to and from quick disconnects and associated purging functions will need to be controlled;

4) Pressures, temperatures, and fluid flow rates in and out of tanks will need to be controlled;

5) Electrical power will need to be provided to continue certain functions or to keep modules warm while spacecraft power is off during spacecraft component replacement;

6) Electrical power to modules being replaced should be controlled to prevent arcing between pins as module electrical connectors are disengaged;

7) Preliminary checkout of spacecraft after modules are replaced including a check that connector continuity exists;

8) Provision to the servicer of ready-to-latch, latched, and unlatched signals for each module location. These signals are used in the servicer control system.

The concept of an electrical umbilical connection between the servicer and the spacecraft being serviced is not new. The MMS flight support system (FSS) has two umbilical connectors that can be remotely actuated. These umbilical connections were used during the Solar Maximum Repair Mission and are used during normal launch operations for the above types of functions as well as for caution and warning functions. MMS functions can be controlled and monitored on the Orbiter or on the ground by using the Orbiter communications system. The FSS umbilical connector actuators can be controlled from the Orbiter along with other FSS functions.

The recommended approach for on-orbit servicer operations is to use the electrical connector on the RMS end effector used for servicer docking to provide the necessary connections. Because of the limited number of pins in this connector, it will be necessary to use signal multiplexing

to obtain enough control and sensing functions. Spacecraft control would be from the ground, or Space Station, using the OMV communications link with the signals passing through the servicer. For MMS vehicles the RMS grapple fixture (servicer docking system) connections should be integrated with the FSS umbilical connection signals so that the spacecraft could be controlled through either connection.

For those cases where the pins in the RMS end effector connector are insufficient in number or in current-carrying capacity, the servicer mechanism can be used to mate an auxiliary umbilical connection between the servicer and the spacecraft. This auxiliary electrical umbilical connection could use some of the concepts of the fluid resupply umbilical connection approach.

3.3.2 Alternative Modules

The emphasis given to MMS modules and spacecraft should not be interpreted to imply that less emphasis has been placed on the full range of capabilities for which the flight version of the IOSS was designed. The Engineering Test Unit is a small (45 in. arm segment lengths) version of the flight design (79 in. arm segment lengths). The flight servicer was designed to exchange up to 40 in. cube and 700 lb modules in axial and radial directions where the radial attachment point was near the docking end of the spacecraft. The flight servicer capability can be extended to removal of two tiers of modules in a radial direction when the need is established. Table 3.3-3 lists a few of the on-orbit servicer characteristics along with the accommodations required from a carrier vehicle.

Table 3.3-3 On-Orbit Servicer Characteristics

Compatible with operations at/with Orbiter, OMV, OMV/OTV, Space Station
Multiple spacecraft servicing per mission
Axial module replacement
Radial module replacement -- attach locations in a common plane
Maximum operating radius - 7.5 ft radial, 11.2 ft axial
Module mass - 10 to 700 lbs
Module size - 17 in. cube to 40 in. cube
Provides failed module temporary stowage
Degrees of freedom - 6
Stowed length - 27 in.
Tip force > 20 lbs
Latch actuator located in end effector
Time to replace one module - 10 minutes
Compatible with automated, supervisory and remotely manned control
Accommodations required from carrier vehicle
- Transport capability
- Rendezvous and docking
- Electrical power
- Two way communications
- Attitude control
- Assistance in thermal control
- Data processing

The on-orbit servicer design requirements were developed from an extensive review and analysis of servicer mechanism configurations and 28 serviceable spacecraft configurations from the literature available in 1975. Ten preliminary servicer configurations were analyzed, mocked up with a one-tenth scale model of a spacecraft and stowage rack, and evaluated. The initial recommendation was judged to be too capable and not simple enough. A major point in the selection was that the eventual form of servicer that will become accepted and used could not be identified, so the selection had to be made on the basis of a best estimate of the probable situation. It was decided to go with a relatively simple configuration that has natural and easy growth options.

The selected design has only two major components: (1) a servicer mechanism, and (2) a stowage rack for module transport. The servicer mechanism and the stowage rack were designed separately with interfaces for individual removal and replacement. This allows for simple removal for maintenance and also for quick ground reconfiguration. Stowage racks can be configured and loaded for particular flights prior to attachment to the carrier vehicle. It may be desirable to have available several stowage racks for this purpose. The stowage rack mounts directly to an upper stage such as the Orbital Maneuvering Vehicle. A flight support structure has been designed to adapt the stowage rack to the Orbiter.

Figure 3.3-5 is a histogram of data on 683 modules from 30 different serviceable spacecraft. One graph shows the average weight vs largest module dimension and the second graph shows the 90 percentile weight vs largest module dimension. This data was used to select representative module size and weight sets as indicated by the design value curve. The design value sets are:

1) 40 in. cube - up to 400 lb;

2) 26 in. cube - up to 200 lb;

3) 17 in. cube - up to 75 lb.

These sets were used to establish reference characteristics for different interface mechanism sizes. The interface mechanism provides the structural attachment between a module and the stowage rack. It also provides the alignment and mating/demating forces for the electrical connectors. The above data suggested the development of an interface mechanism as a two-part kit in perhaps three sizes. These standard interface mechanisms could be made available to spacecraft designers. Each designer could then make his choice within his own set of design and economic constraints. The recommended interface mechanism standard sizes thus became - 17 in., 26 in., and 40 in.

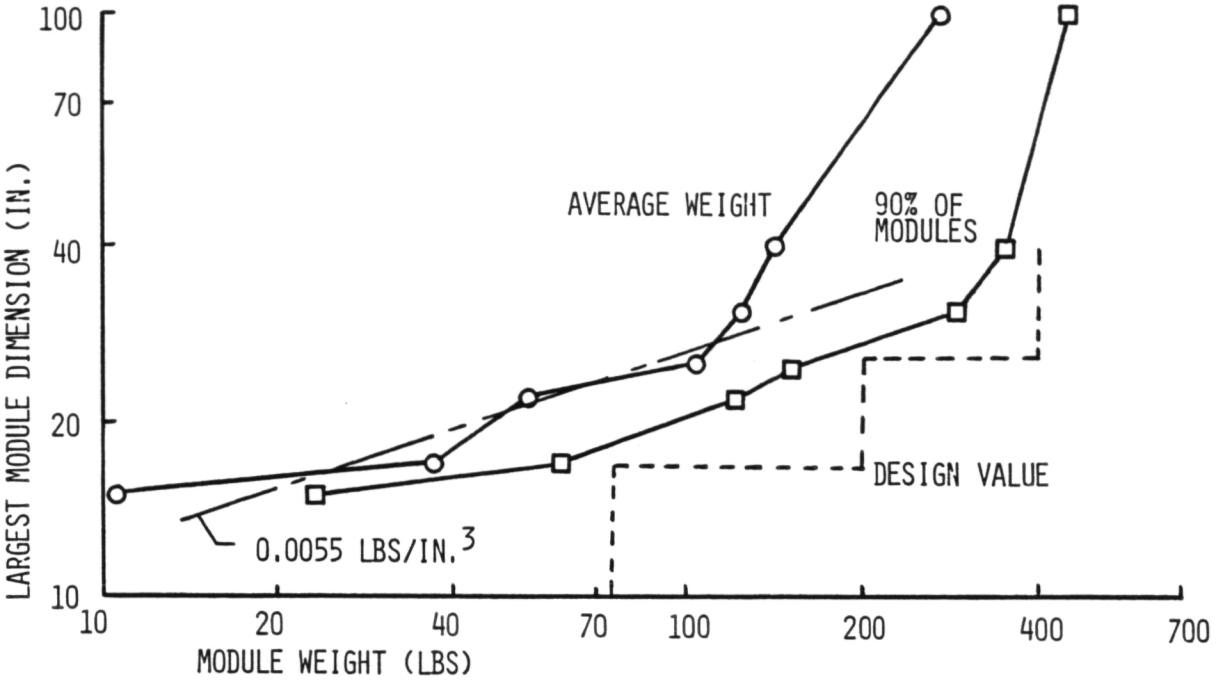

Figure 3.3-5 Module Characteristics Histogram

These correspond to modules no larger than a cube of the indicated dimension. As the interfaces between the interface mechanism and the module and the spacecraft both seem to lie within the spacecraft designer's usual responsibilities, it would be possible to leave these design aspects up to the spacecraft designer. However, the interface with the servicer mechanism end effector and its mechanical drive system would have to be standardized across all interface mechanisms. Similarly, the method for attaching the interface mechanism baseplate receptacle alternatives into the stowage rack would also have to be standardized. In this way, a single--or few--stowage rack designs could be used for all missions.

While the above discussion appears to limit the size and weight of orbital replaceable units to 40 in. cubes and 400 lbs, this is not really the case. Larger and heavier modules can be handled if they are advantageously located with respect to the servicer's operating volume. The spacecraft designer should look at the options of reducing module size and weight or of locating the module and its attachment points for easier handling by the servicer. In some cases, it may be

necessary to go to a seven degree of freedom growth version of the servicer. Using these approaches, it should be possible to exchange instruments comparable in size to those on the Space Telescope.

A number of other alternative modules were identified in the Spacecraft Servicing Demonstration Plan study. They are listed in Table 3.3-4 and sketches of some can be found in the referenced study. The battery module is used to represent a small heavy module. Batteries will need to be replaced because of their limited and somewhat unpredictable lifetimes. The fluid tank module with an in-line coupling is an alternative to the fluid umbilical interface unit. Replacing an empty tank with a full one may be appropriate for smaller tanks or where it is difficult to obtain required high pressures on orbit. The in-line coupling term is used to indicate that the coupling must seal for long periods and that a quick disconnect may not provide adequate sealing. The in-line coupling would be tightened using a mechanical drive. Two types of umbilical interface units are listed - fluid and electrical. They are similar and they both require connections (cables or hoses) back to the stowage rack that must be managed.

Table 3.3-4 Candidate Alternative Modules

Battery module
Fluid tank module with in-line coupling
Electrical umbilical interface unit
Fluid umbilical interface unit
Access door
Hinged access cover drive

Combinations of electrical connection and refueling/resupply umbilicals have also been proposed. While small electrical connectors may be mated using a simple interface mechanism, large electrical connectors and the fluid disconnects will likely require a translation device to provide the high mating and demating forces required. Dust covers with their removal mechanisms may be required on both the spacecraft and servicer sides of the fluid and electrical umbilical interface units.

The access door is listed as a module type to show that access covers or doors can be treated as a module where the interface mechanism is a special configuration to properly secure the door. This form of access door would be completely removed and temporarily stored to one side. The underlying module would then be removed and replaced. The hinged access cover drive is another approach to using covers over modules to provide thermal protection. In this case, the cover is hinged to the satellite and latched down. The servicer end effector attaches to a fitting on the satellite near the door. The interface mechanism drive, or end effector power takeoff, is used to power a mechanism that frees the access cover latches and drives the cover to an open position. The end effector jaws are then opened and the servicer can be used to remove the uncovered module in the normal way. After the module has been replaced, the access door can be driven closed and latched by using the servicer end effector and interface mechanism drive.

3.4 EXTENDED REMOTE MAINTENANCE/RESUPPLY CONCEPTS

The extension of remote maintenance/resupply can occur in three directions or regions - applications, orbits, and functions. These are illustrated schematically in Figure 3.4-1. The Integrated Orbital Servicing System was initially considered as a front end for the Space Tug and is now considered as a kit for the Orbital Maneuvering Vehicle. As such, its primary application has been to free-flying spacecraft. However, with the advent of the Space Station, the Space Station itself and its attendant free-flying platforms become potential areas of application. The connotation of platforms being larger than spacecraft implies that there will be more docking locations and/or larger modules associated with platforms. As the IOSS was designed to work with objects taken to orbit by the Orbiter, and platforms are taken to orbit by the Orbiter, then it is likely that the IOSS capabilties will also fit the elements of free-flying platforms. The slow, deliberate motions of module exchange should minimize induced platform accelerations. The potential applications at the Space Station are extensive and are discussed below.

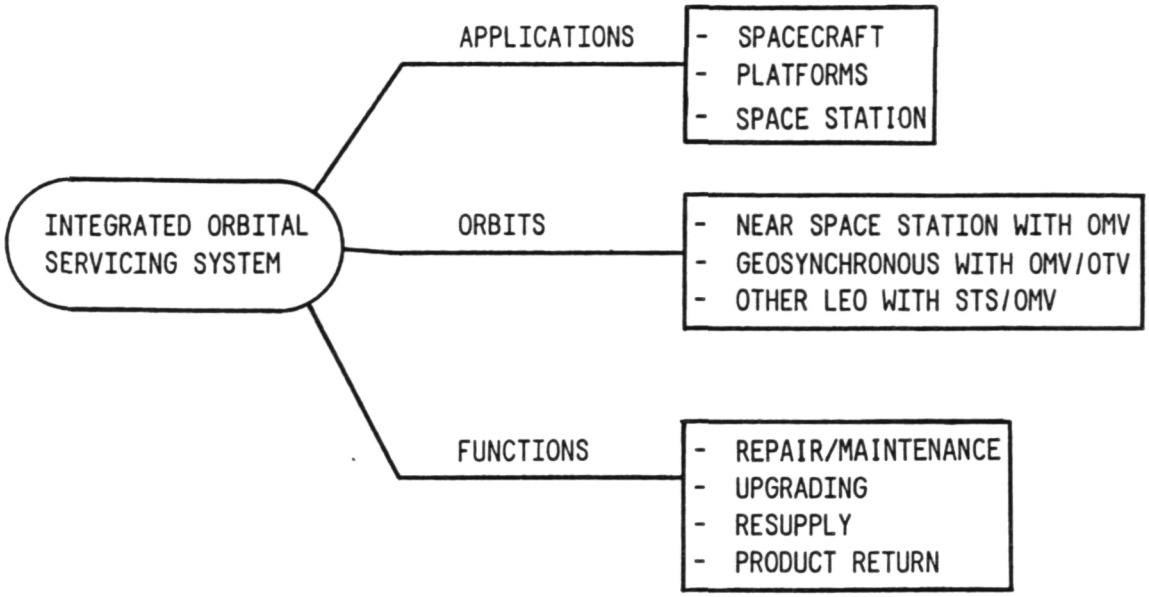

Figure 3.4-1 Candidate Regions for Extension of Remote Maintenance/Resupply

The orbit applicability of the Integrated Orbital Servicing System is dependent on the carrier vehicles available. It is straightforward to use the Orbiter, OMV and the OMV with OTV as carrier vehicles for the IOSS. This should provide the orbit coverage listed in the figure along with the polar orbits that are reachable with the Orbiter/OMV combination. The polar orbits are particularly significant because there are not current plans to have a Space Station in polar orbit, just free-flying platforms. These orbits are the same as have been extensively considered in the past. It still appears that propellant costs are too high to consider the extension of on-orbit servicing to planetary probes. Perhaps if an extensive Lunar presence occurs in the future, then it may be appropriate to extend servicing to Lunar orbits.

The servicing and maintenance functions that can be performed with module exchange and umbilical connection are shown in the figure. The first three functions have been addressed for some time and include such things as inspection, fault isolation, and clean up. The supply

of materials for making products is similar to resupply, and can include solids, powders, or fluids. The new element is the return of completed product to earth. The IOSS can transfer properly packaged product to the Space Station or to the Orbiter for return to earth from free-flying platforms or even between platforms should that become a requirement. The return of a failed module has much in common with the return of a processed product except that the product may require additional environmental control or monitoring functions. This type of thing should be within the capabilities of an extended servicer system.

The IOSS functions of module exchange and umbilical connection for electrical signal or fluid transfer are widely applicable to the Space Station as shown in Figure 3.4-2. The sketch on the left hand side of the figure is a Martin Marietta concept for servicing of objects that are brought to the Space Station. Examples of servicing functions that can be performed by the IOSS are listed on the right.

The IOSS could be involved in the assembly process by bringing modules to prepared locations on the deployed trusswork. The prepared locations also make it easy to replace any subsystems that subsequently fail or otherwise become obsolete. The servicer could also be used as a small manipulator during the assembly process. The repair of spacecraft at the Space Station could be similar to the remote maintenance of spacecraft. However, the servicer would need to be supported by a mobility unit to move it around in the servicing facility, particularly to transport replacement modules and special adapters and tools.

The portable manipulator function is appropriate with the servicer in the servicing facility and mounted on the mobile remote manipulator system. The mobile RMS could be fitted with power and communications links so the servicer could be operated while supported on the mobile RMS. The concept of an operating servicer on the mobile RMS could also be applied to the installation and servicing of experiments at the Space Station. This feature could be valuable for those experiments

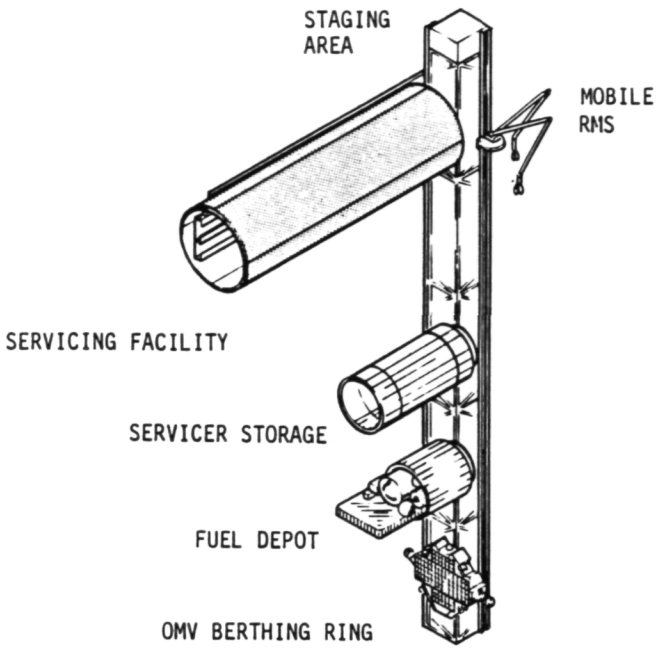

- ASSEMBLY PROCESS

- REPAIR OF SPACECRAFT
- PORTABLE MANIPULATOR

- EXPERIMENT INSTALLATION WITH MRMS
- EXPERIMENT SERVICING WITH MRMS

- FLUID UMBILICAL CONNECTIONS

- REPAIR OF SPACE STATION
- REPAIR OF OMV
- REPAIR OF OTV

Figure 3.4-2 Candidate Uses of On-orbit Servicer at Space Station

located on the Space Station, but far from the habitable areas. As is discussed elsewhere in this report, the servicer can be used to resupply fluid or make umbilical connections. These features could be used at the Space Station fuel depot. However, the use of dedicated actuators for the fluid umbilical connection could be more appropriate. Much depends on the variety of umbilical locations and types that are likely to be used. This is an obvious area for standardization.

Another possibility, is to incorporate the IOSS concepts into the warehouses that store replacement modules much as trucks and fork-lifts are used in terrestrial warehouses. These and similar concepts could be used to reduce EVA workloads, especially those that are repetitive or hazardous.

The repair of the OMV and OTV are also candidates for application of the servicer as they are just spacecraft and can have many of their components configured for module exchange. Some repairs will be better done by EVA because of their type or component locations on the spacecraft. It may also be useful to configure parts of the Space Station itself in modular form, especially the functions outside the habitable areas. The servicer, perhaps on the mobile RMS, could then be used to replace or resupply external Space Station components.

The configuration of spacecraft to be on-orbit serviceable also simplifies pre-launch operations. The systems used for fault location and diagnosis while on orbit can also be applied during pre-launch checkout. Once a fault has been traced to a specific module, then that module can be replaced simply and easily. Thus, spacecraft configured for on-orbit servicing will be much easier to operate with during pre-launch preparations.

4.0 DEVELOPMENT PLAN SUMMARY

The objective of this section of the study final report is to summarize the work reported in MCR-85-1313, Servicer Development Program Plan, Martin Marietta Aerospace, Denver, CO, July 1985. It also serves as an introduction to the material in Sections 5.0, 6.0, and 7.0 and shows how they integrate together.

4.1 DEVELOPMENT PROGRAM PLAN INTRODUCTION

The concept of remote servicing involves the refurbishment of a spacecraft in its normal orbit without the direct use of EVA personnel. A typical mission would include rendezvous and docking with the disabled spacecraft, performing the refurbishing operations and returning the vehicle to its normal operation. Several spacecraft can be serviced during a single mission. The basis of our approach is to use module exchange. It should be thought of in a most general way - the replacement of one object with another. The objects need not be the same, nor need they perform the same function. They just need to have a similar interface. Fluids inside tanks can even be resupplied in the form of module exchange. This approach can fulfill many on-orbit servicing needs. It can be applied to the Shuttle, Space Station, LEO satellites, free-flying platforms, and geosynchronous satellites.

The objectives of the spacecraft servicing demonstration plan are to identify all major elements and characteristics of an on-orbit servicing development program and to integrate them into a coherent plan. The extent to which these objectives can be met is defined by the available funding and how well the development program is planned and executed. The selection of the elements to be included must be thoroughly thought through to maximize the benefits of the demonstrations and meet the cost goals.

Program cost is a critical aspect of this development plan. Innovative approaches have been used to reduce the cost while maintaining high technical standards. The ultimate goal of the development program is a fully verified operational, on-orbit servicing system based on the module exchange, refueling, and resupply technologies.

The availability of an on-orbit servicing capability can be convincingly demonstrated to the user community only through flight tests. The acceptance of on-orbit servicing methods by the spacecraft designer is also linked to the financial and programmatic commitment of NASA for timely development of the operational capability.

The development program plan is an improvement on the plan proposed as part of the final report of the previous contract (NAS8-35496, Spacecraft Servicing Demonstration Plan, MCR84-1866, Martin Marietta Corporation, Denver, CO July 1984).. Although the ground demonstrations and free-flight verification have been modified, the majority of the effort has been on the cargo-bay demonstration. The major criticism of the previous plan was the high cost of this demonstration. We have attempted to lower the cost by better defining the tasks and concentrating on the primary objectives.

The work on the ground demonstrations and the free-flight verification consisted of a critical review of the previous plans. The plan was updated to reflect recent program changes. The schedules and cost estimates were revised based on these minor changes, which are described in the sections associated with these two activities.

4.2 1-g DEMONSTRATIONS

The ground demonstrations are designed to develop and demonstrate the basic techniques of remotely controlled servicing of spacecraft. The Engineering Test Unit (ETU) of the IOSS was selected as the servicer mechanism for ground demonstrations based on the results of the tradeoff study done as part of the prior contract. The actual ETU is shown in Figure 4.2-1. Details of this selection process as well as the selection of the related hardware is documented in Section 3 of the

ORIGINAL PAGE IS
OF POOR QUALITY

"Spacecraft Servicing Demonstration Plan - Final Report," July 1984 (MCR-84-1866).

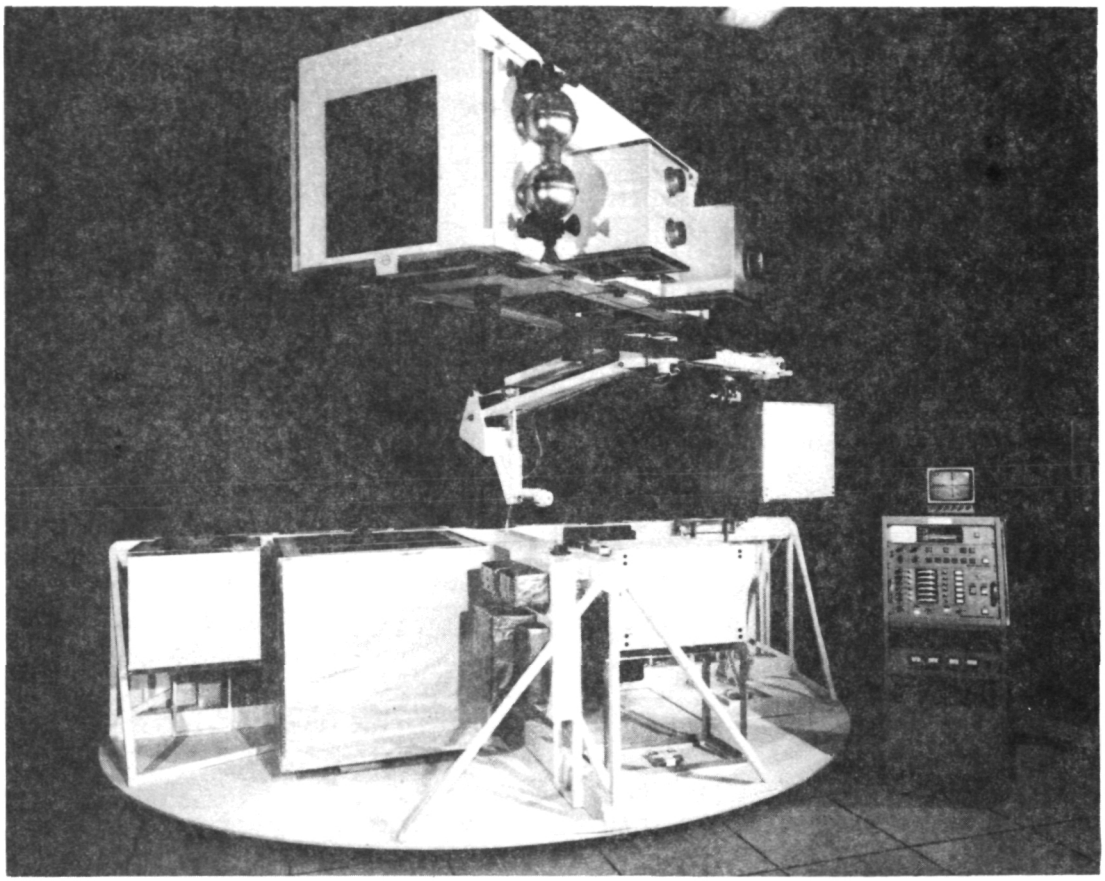

Figure 4.2-1 The Engineering Test Unit of the IOSS

Work on the ground demonstrations is a continuation of the ongoing work with the ETU. Some of the elements included are part of the current activities and have been included in the plan for completeness. The cost estimate reflects the work to be done and does not include the currently funded tasks.

The main role of the servicing ground demonstrations is to support further flight demonstrations.

4.2.1 1-g Demonstration Objectives

The ground demonstrations are the next step in gaining acceptance of the concepts of remote servicing of spacecraft. They are a

continuation of the on-going activities that have developed the techniques of module exchange. The principal objectives of the servicer ground demonstrations, using a modified ETU, are:

1) To demonstrate the adaptability and flexibility of the module exchange concept - This can best be done by demonstrating an exchange of the MMS module mockup, because it is the only on-orbit serviceable spacecraft modular concept that is operational and it was designed for a different servicing interface. Additional demonstrations should be conducted to show that the IOSS is a flexible servicing system, and does not impose significant constraints on spacecraft design;

2) To evaluate approaches for the cargo-bay demonstration and free-flight verification - The ground demonstration will be used to select the control strategies to be used in the demonstration and verification tasks. Operating procedures can be varied and checked for overall effectiveness in the use of available resources. These types of issues are best answered with relatively inexpensive ground testing rather than expensive flight experiments;

3) To demonstrate the use of the ground servicer as a laboratory tool - The development of new servicing concepts, new hardware, and software before further flight testing and operational implementation can be readily investigated on the ground. A good example is the development of a satellite remote propellant resupply capability.

   If problems arise during the flight tests or operational servicing, the ground demonstration unit could be used for finding and checking out solutions;

4) To demonstrate the use of the ground servicer as a training facility - Training of the operators for the flight demonstrations as well as for actual servicing operations can be done using the ground servicer system.

4.2.2 1-g Demonstration Issues

Table 4.2-1 lists the issues that were considered in selecting the approach for the ground demonstrations. These tasks include a broad range of activities that could be done with the ETU. These issues, or elements, are described in Section 5.0. The table should be considered as a shopping list of activities that could be done if there was sufficient funding, as opposed to what must be done in order to meet the requirements.

Table 4.2-1 Candidate 1-g Demonstration Issues

Multi-Mission Modular Spacecraft Module Exchange
Fluid Resupply Demonstrations
Control Mode Analysis and Testing
AXAF Module Exchange Demonstrations
Battery Module Exchange Demonstration
Automatic Target Recognition and Error Correction
Engineering Test Unit Electronics Update
Conversion of ETU Control System from Analog to Digital
Tank Exchange
Interface Mechanism Development
Adapter Tools for Specialized Tasks

4.2.3 1-g Demonstration Recommended Approach

The activities listed in Table 4.2-1 were reviewed and screened. Those selected for the baseline approach are necessary to support the cargo-bay demonstration and free-flight verification. The activities selected are shown in Table 4.2-2.

Table 4.2-2 Recommended Activities for the Ground Demonstrations

Activity Description
MMS Module Exchange*
Fluid Resupply Demonstrations
Control Mode Analysis and Testing
Battery Module Exchange Demonstration
Automatic Target Recognition and Error Correction

* Being worked as part of the current contract

The three primary servicer functions are included in the recommended activities. These include the exchange of modules in the axial and radial directions and the demonstration of fluid resupply operations. The exchange of the MMS modules was selected over the exchange of the AXAF modules as it was felt to be a more widely accepted application. There are MMS satellites currently being flown, such as the Solar Maximum Mission and Landsat. By showing that the servicer can adapt to an existing design, its flexibility will be demonstrated.

The battery module was selected to demonstrate radial exchange as it is a practical application of servicing. The normal servicing mission will include the exchange of failed modules (as demonstrated with the exchange of the MMS module) and the routine replacement of components that have a limited life. A battery module is a primary example of the second case. The exchange of a battery module also demonstrates the demating and mating of an electrical connector that carries a substantial amount of current. This type of connection can cause arcing problems if not properly deenergized.

The fluid resupply demonstration was selected as it is one of the primary servicing functions. Its demonstration is timely, as a number of fluid disconnect interface units are being developed and they can be adapted to operate with the servicer.

The activities of the control mode analysis and the automatic target recognition system will advance the design of the servicer to a point that it is possible to have an operational unit. The control mode analyses will improve this system and lessen the risk of failure. By better understanding the controls of the servicer, future versions can be improved. The automatic target recognition and error correction system will permit automatic operation of the servicer. It will also lead to a reduction in cost by permitting a less accurate docking mechanism to be used and compensated for with the error correction function.

The analyses and demonstrations identified in Table 4.2-3 will enhance the results, but were felt to be nonessential to meeting the primary objectives of a cost conscious program. Many of these tasks may be funded as part of other programs. It is felt that the ETU servicer will be upgraded to a digital system if the cargo-bay demonstrations are carried out. The tasks such as the tank exchange and special tools and interfaces will be included as part of the programs requiring their use. It is beyond the scope of this program to accommodate every case of remote servicing.

Table 4.2-3 Optional Activities for the Ground Demonstrations

Activity Description
AXAF Module Exchange Demonstrations
Engineering Test Unit Electronics Update
Convert ETU Control System from Analog to Digital
Tank Exchange
Interface Mechanism Development
Adapter Tools for Specialized Tasks

4.2.4 1-g Demonstration Schedule and Cost Estimates

The schedules and cost estimates were updated from those developed during the prior contract. Data is presented for the activities in the

baseline approach. These activities are designed to support the demonstration of remotely controlled module exchange and fluid resupply in the Orbiter cargo-bay.

The schedule for the ground demonstrations is shown in Figure 4.2-2. The OMV design and development schedule is shown as a reference. The MMS modification and module exchange activities shown on the schedule will be completed as part of the current contract. The control mode activities will cover a period of approximately one year. The schedule permits the results to be used in establishing the approach to the cargo-bay demonstration flight. The battery exchange demonstration, the refueling demonstration, and the automatic target recognition and error correction activities will run concurrent with the control modes studies. These elements will involve the design and fabrication of the necessary hardware, integration into the ETU and a short period of checkout and demonstration. There should be no conflict in schedules due to the availability of the ETU as each element should only require a few weeks of actual testing.

The last ground demonstration element is supporting the cargo-bay demonstration flight. This includes operations simulations, flight training and problem solving.

Cost estimates were made for each of the elements of the recommended approach for the ground demonstrations. These are engineering estimates based on our previous experience in preparing for demonstrations with the ETU. The estimates are based on the schedule of Figure 4.2-2. The estimates can be revised to reflect changes in the schedule.

The cost estimates for the ground demonstrations are presented in Table 4.2-4. As previously noted, the costs for the MMS modifications and module exchange demonstrations are included as part of the current funding. The cost for supporting the cargo-bay demonstrations is included as part of that task.

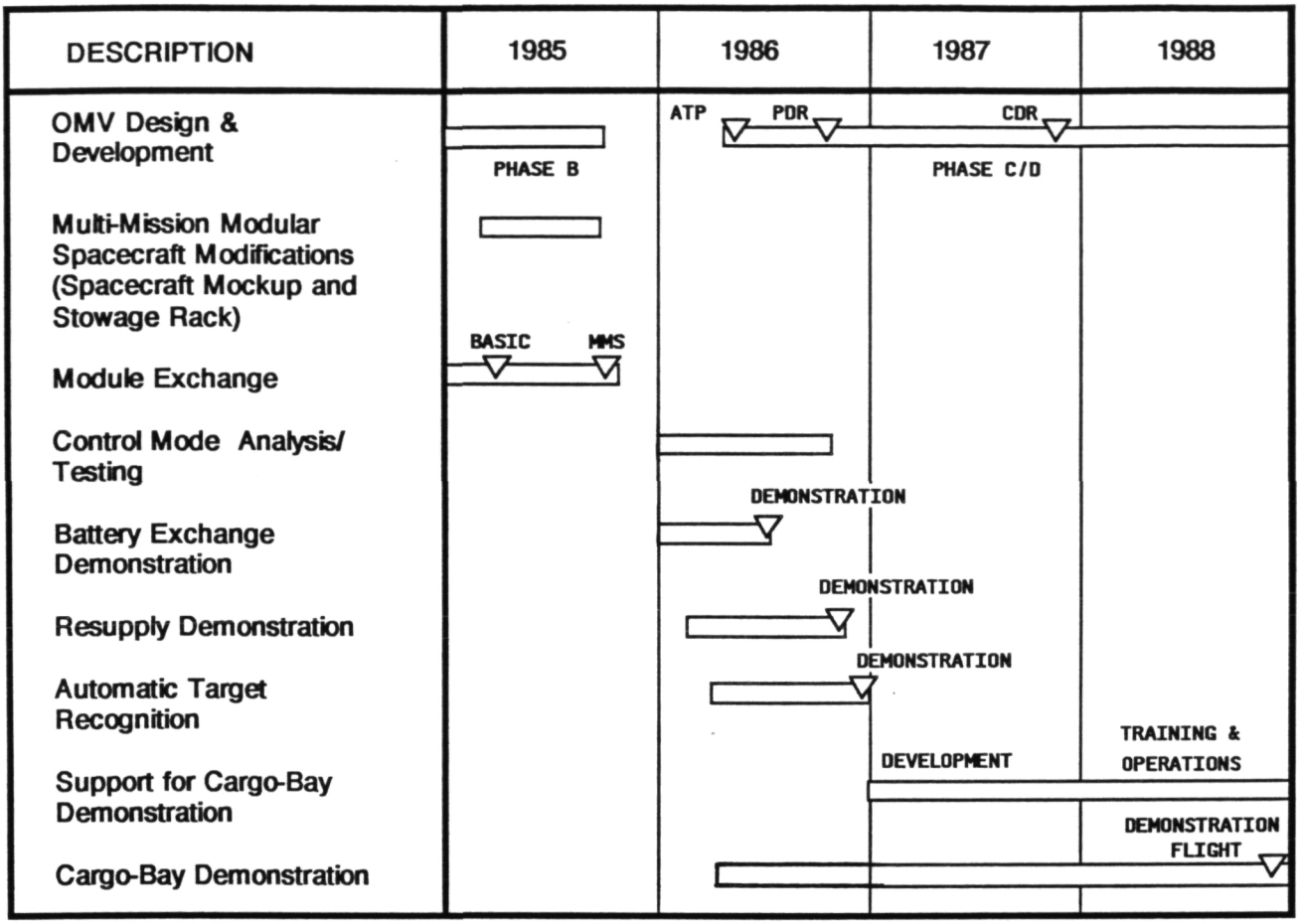

Figure 4.2-2 Ground Demonstrations Schedule

Table 4.2-4 Estimated Costs of the Ground Demonstrations

Description	Estimated Cost*
Control Mode Analysis/Testing	250
Battery Module Exchange	250
Fluid Resupply Demonstration	300
Automatic Target Recognition	150
Total Estimated Cost	950

* In Thousands of 1985 Dollars

4.3 CARGO-BAY DEMONSTRATION

An experimental version of the spacecraft servicer will be demonstrated in the zero-g environment of the Orbiter cargo-bay. An artists concept of the demonstration is shown in Figure 4.3-1. A concerted effort was made to reduce the cost of this demonstration. For example our approach in the prior contract was to mount the servicer and stowage rack on the flight support system of the MMS and to use a generic spacecraft. It was suggested by Goddard Space Flight Center that we use the MMS as our spacecraft and to mount it on the flight support system. This approach helps reduce the cost by making use of existing equipment. A mockup spacecraft consisting of a MMS triangular support structure, a MMS module, a battery module and a fluid storage tank will be serviced. The Orbiter RMS will be used to place the MMS mockup on the servicer and return it when the experiment is completed. The experiment will be controlled from the Orbiter's aft flight deck by an astronaut using a minicomputer.

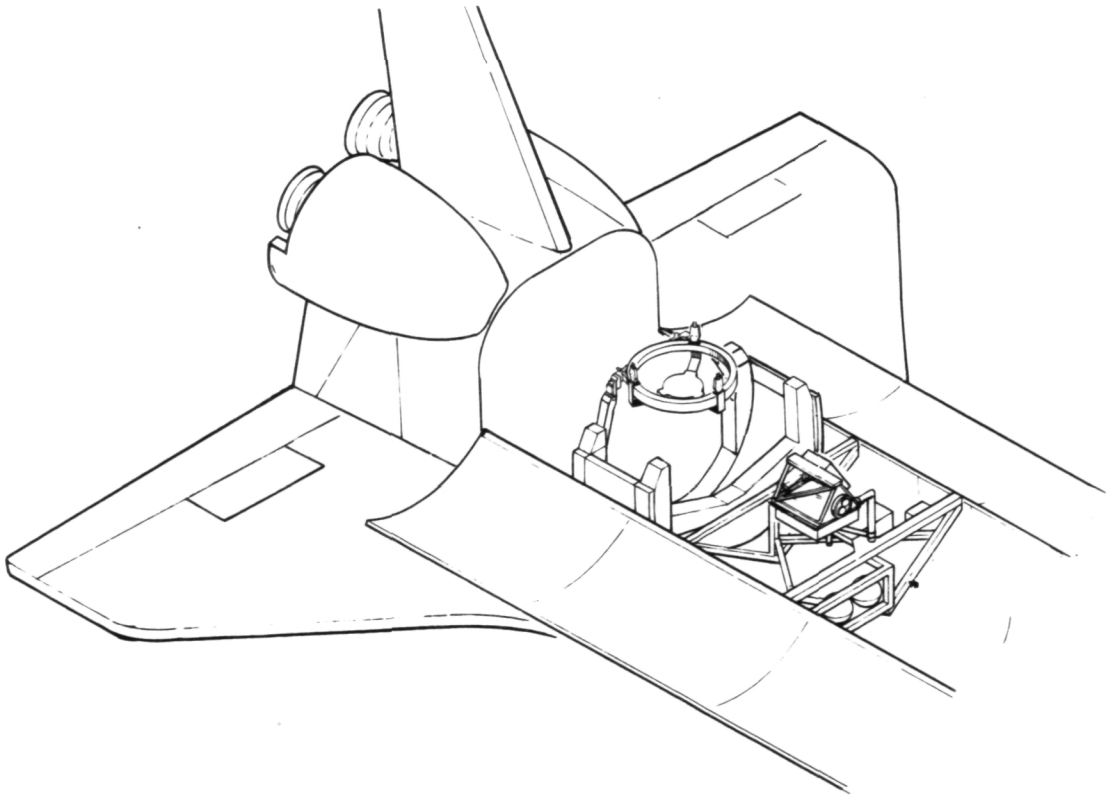

Figure 4.3-1 Artists Concept of the Cargo-Bay Demonstration

The revisions to this task represent the majority of the work done on this version of the development plan. The work has involved reducing the cost of the program while still including the major servicing functions.

4.3.1 Cargo-Bay Demonstration Objectives

The cargo-bay demonstrations are to demonstrate the servicing techniques developed on the ground in the controlled 0-g environment of the Orbiter. This demonstration is a key step in the process of convincing the user that remote servicing is a viable technology. The principal objectives of the servicer cargo-bay demonstration are:

1) To enhance users acceptance of on-orbit servicing by demonstrating the servicer in the zero-g environment of the Orbiter cargo-bay. The users are likely to look favorably on the concept if they are shown there are no anomalies in the zero-g environment. It is important to demonstrate the key servicing operations;

2) To incorporate representative servicing equipment of the type that could be used for the free-flight verification. The degree to which the equipment is operational will have an effect on the user and his acceptance of the servicing concept;

3) To limit risk of failure by making extensive use of procedure verification, analysis and 1-g simulations. A failure, even if it were not directly related to the servicer, would hurt its acceptance by the users;

4) To demonstrate the servicers adaptability to change by including designs that show the servicers flexibility to accommodate changes due to technology advances or variations in user requirements;

5) To show the compatibility of the OMV and servicer schedules. The development of the servicer should correspond with the development

schedule of the OMV. A primary function of the OMV will be to repair and maintain spacecraft using the servicer. It is important that the development schedule of the servicer is such as to complement the OMV development schedule.

4.3.2 Cargo-Bay Demonstration Issues

The major issues of remote servicing were considered when the approach for the cargo-bay demonstration was established. The ideal situation would be to address all of the issues and demonstrate the full capabilities of the servicer. A representative list of what might be included is presented in Table 4.3-1. The characteristics of the different categories are summarized in Section 6.0.

Table 4.3-1 Candidate Cargo-Bay Demonstration Activities

Module Type
- Battery module
- Multi-mission Modular Spacecraft type module
- Propellant tank module
- Electrical connection interface unit
- Propellant resupply module with interface unit
- Access door
- Electrical connector
- Fluid in-line coupling
- Wave guide connector
- Fiber optics connector
- Thermal connector

Interface Mechanism Type
- Lightweight side interface mechanism
- Alternative interface mechanism concepts
- Hinged access cover drive

Special Tools
- MMS module servicing tool
- Other interchangeable adapter tools
- Refueling/resupply interface unit
- Hose or cable management device
- Propellant in-line coupling drive

Direction of Module Motion
- Near axial
- Far axial
- Near radial
- Compound motions

4.3.3 Cargo-Bay Demonstration Recommended Approach

The approach used for the cargo-bay demonstration attempts to match the technical requirements with the cost constraints. The prior study, NAS8-35496, recommended two separate Orbiter flights and a cargo-bay arrangement with on-orbit servicing equipment attached to the MMS flight support system. The first flight was to demonstrate module exchange in a variety of ways while the second flight was to demonstrate the resupply of fluids. A disk shaped spacecraft mockup was recommended to support the modules to be exchanged. The resulting 0-g flight demonstrations were judged to be too expensive.

The emphasis has been changed for this study to a minimum cost 0-g demonstration that incorporates a few important servicing functions. However, a range of additional servicing activities were identified that can be incorporated into the plan. The demonstration of MMS servicing also received increased emphasis in this study. The general characteristics of the recommended approach are listed in Table 4.3-2.

Table 4.3-2 Servicer Cargo-Bay Demonstration Characteristics

One demonstration flight
MMS triangular structure for spacecraft mockup
Axial MMS module exchange
Radial battery module exchange
Propellant transfer to PM-1 propulsion module
MMS to and from orbit on flight support system
MMS dock and undock by RMS
Supply of power, attitude control, thermal control, and communications by Orbiter
Servicer control station in Orbiter
Unassisted Supervisory control mode
Docking rigidization by servicer docking probe
Electrical connection between servicer and spacecraft via the docking mechanism
Servicing equipment performance demonstration
Man-machine interactions included
Compliance with Orbiter system safety requirements
Use of representative servicing operational equipment
Operator training
Servicer docking probe normal to Orbiter wing plane

A single flight experiment will be used to demonstrate the axial exchange of a MMS module, the radial exchange of a battery module, and fluid transfer. The servicer and stowage rack will be stored and operated in the cargo-bay. The spacecraft mockup will consist of a MMS triangular support structure, a MMS module, a battery module and a PM-1 propulsion module. The spacecraft will be stored in the cargo-bay on a Flight Support System (FSS) provided by GSFC along with the MMS hardware. The Orbiter RMS will be used to remove the spacecraft from the FSS and to dock the spacecraft to the servicer.

The arm of the servicer will unlatch and remove the MMS module from the spacecraft and store it on the stowage rack. A replacement module will be taken from the stowage rack and installed on the spacecraft mockup. The MMS module from the spacecraft is then moved from the temporary location on the stowage rack to the location previously occupied by the replacement module. Once secured, the process is repeated for the battery module. The difference in the process is that the MMS modules are removed axially and the battery modules are removed radially from the spacecraft mockup.

The servicer will then get the fluid resupply interface from the stowage rack and physically connect it to the spacecraft. A hose management system will be provided to prevent the fluid and electrical lines from becoming entangled in the servicer or spacecraft structure. The fluid connections are mated to an interface near the PM-1 propulsion module using the servicer mechanism. After the mating is completed a low hazard fluid(e.g., alcohol) will be transferred to the propulsion module. The fluid resupply interface will then be demated and returned to the stowage rack. The spacecraft mockup is removed from the servicer and returned to the FSS using the Orbiter RMS.

The entire process is controlled from the aft flight deck by an astronaut who uses a small computer terminal to interface with a mini-computer, which is located on the stowage rack. The operator

monitors the experiment with video images from the Orbiter cameras in the cargo-bay and cameras mounted on the RMS and the servicer mechanism. Data and the video signals are sent to the ground station using the standard Space Transportation System communications links. The ground support technicians will be available for trouble shooting but can not control the servicer directly.

The servicer mechanism will be similar to the Engineering Test Unit (ETU) used in the ground demonstrations with design modifications for 0-g operation. It will be based on the preliminary design for the on-orbit servicer developed during the IOSS study effort. The servicer control system will be upgraded to include digital circuits.

The demonstration has been considered as a flight experiment rather than as an operational activity. This approach reduces the cost by limiting the amount of the formal review process and testing. The hardware used can be a commercial grade that is modified to meet the requirements. The safety requirements of the Shuttle become a driving force in the design. Many of the requirements are satisfied by over designing the part and performing extensive analyses. The testing is limited to those items that need qualification for safety or are critical development items. This approach helps to reduce the cost, but increases the chance for an unsuccessful flight. We have tried to balance the risk of failure with the cost constraints.

4.3.4 Cargo-Bay Demonstration Schedule and Cost Estimate

New schedules and cost estimates were developed for the cargo-bay demonstration based on the approach described in the previous section. The schedule was made compact in order to reduce costs.

The servicer cargo-bay demonstration schedule was developed from an OMV development schedule. The key point from the OMV schedule was an OMV authority to proceed (ATP) for Phases C and D in late April of 1986. This date is shown on Figure 4.3-2 along with other OMV milestones.

The January 1989 date selected as the beginning of Phase B for the free-flight verification or operational servicer development corresponds with the end of the OMV supporting development of a servicer kit. This approach integrated well with the use of representative time spans for the various demonstrations and verification activities. It was decided that the results of the servicer cargo-bay demonstration would be most useful if the cargo-bay demonstration was completed at the start of the operational servicer development in January 1989. The cargo-bay flight is completed before the operational servicer preliminary design review (PDR) so that the cargo-bay demonstration results can be factored into the operational servicer design and development.

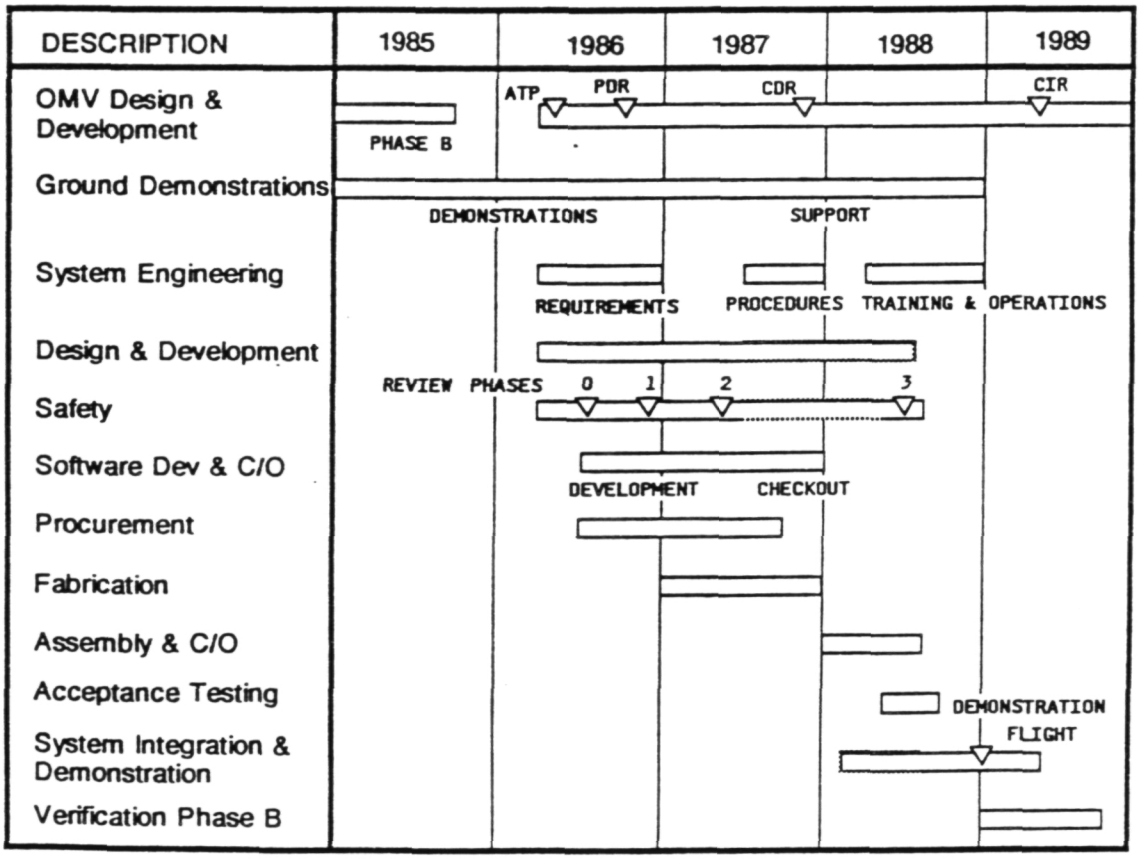

Figure 4.3-2 Servicer Cargo-Bay Demonstration Schedule

A preliminary cost estimate was prepared for the proposed cargo-bay demonstration. A primary function of this effort was to reduce the cost of the cargo-bay demonstration.

The cargo-bay demonstration was treated as a flight experiment rather than a flight qualified unit. This changes the technical approach used in the program, which in turn affects the procedures to estimate the costs. The approach used was to estimate the program cost of a flight qualification program using the normal cost estimating relationships (CER). To these results a complexity factor was applied to account for the difference between experimental and flight qualified units. The data from the equipment lists and the work breakdown structure were used to establish the inputs to the CERs.

The complexity factor was arrived at by reviewing recent programs of a similar nature. These include the Westar/Palapa rescue mission, the Solar Max repair mission and a Shuttle demonstration of storable fluid management techniques. From this data, a complexity factor of 0.4 was derived.

The total estimated cost of the servicer cargo-bay demonstrations is approximately $9.3 million. A breakdown of this estimate and a summary of the basis of cost is presented in Table 4.3-3.

The estimated cost of 9.3 million dollars is more than a 50 % reduction over the previous estimate. These savings result from reducing the number of Shuttle flights, utilizing as much existing equipment as possible, and treating the demonstration as a flight experiment. Although these measures reduce the cost, there is a price associated with them. The risk of an unsuccessful mission from the technical standpoint is increased (the plan does not increase the risk to the Shuttle or the crew). The depth to which the servicing techniques will be demonstrated has been reduced, but all the major activities have been included. The proposed plan has been designed to demonstrate the major servicing functions in the most economical manner possible.

Table 4.3-3 Cost Breakdown for the Cargo-Bay Demonstration

TOTALS	SYSTEMS	SUBTOTALS	SUBSYSTEMS	COSTS	ELEMENTS	BASIS OF COST
1.60	PROJECT SUPPORT					
		1.00	D & D			NASA FACTOR OF 25% ON ALL D & D COSTS
		0.50	FABRICATE			NASA FACTOR OF 20% ON ALL FAB & C/O COSTS
		0.05	ASSEMBLY			NASA FACTOR OF 10% ON ASSEM & C/O COSTS
		0.05	OPERATIONS			ENGINEERING ESTIMATE OF LABOR REQUIRED
6.0	SERVICER SYSTEM					
		3.40	SERVICER UNIT	1.80	MECHANISMS - D & D	50/50 RISK OF SEVERAL COST MODELS USING WT OF
				0.80	- FAB	164# WITH 70/30 SPLIT BETWEEN D&D/FAB
				0.50	ELECTRONICS - D & D	50/50 RISK OF TWO COST MODELS USING WT OF
				0.30	- FAB	45# WITH 60/40 SPLIT BETWEEN D&D/FAB RESULTS OF ONE MODEL OUT OF RANGE SO NOT USED
		2.20	STOWAGE RACK	0.90	STRUCTURE - D & D	50/50 RISK OF TWO COST MODELS USING WT OF
				0.40	- FAB	45# WITH 70/30 SPLIT BETWEEN D&D/FAB
				0.10	BAT MOD LATCH - FAB	TWO LATCHES @ $50,000 BUILT FROM EXISTING DESIGN
				0.20	TANKAGE - D & D	ENGINEERING ESTIMATE 70/30 SPLIT
				0.10	- FAB	
				0.30	HOSE MANAGE - D & D	ENGINEERING ESTIMATE 60/40 SPLIT
				0.20	- FAB	
		0.10	VIDEO		CAMERA & CABLING	ENGINEERING ESTIMATE FOR PURCHASE & INTEGRATION
		0.30	ASSEMBLY & C/O			FACTOR OF 15% ON ALL FABRICATION COSTS
0.70	SPACE-CRAFT MOCKUP					
		0.20	BATTERY MOD	0.07	D & D	RATE OF $10,000 / # DERIVED FROM WESTSTAR FOR
				0.13	FABRICATE	SIMILAR HARDWARE APPLIED TO 20 # 30/70 SPLIT
		0.40	GRAPPLE FIXTURE	0.13	D & D	PREVIOUS ESTIMATE FELT STILL VALID 30/70 SPLIT
				0.27	FABRICATE	
		0.10	ASSEMBLY & C/O			FACTOR OF 20% ON ALL FABRICATION COSTS
0.35	AIRBORNE SUPPORT					
		0.30	CONTROL STATION	0.10	D & D	BASED ON VENDOR DATA AND ENGINEERING ESTIMATE
				0.20	FABRICATE	30/70 SPLIT
		0.05	ASSEMBLY & C/O			FACTOR OF 20% OF ALL FABRICATION COSTS
0.65	GROUND SUPPORT					
		0.60	EQUIPMENT			NASA FACTOR OF 15% ON ALL OF D & D COSTS
		0.05	OPERATIONS			ENGINEERING ESTIMATE OF REQUIRED MANPOWER

Project Total= 9.3 Million Dollars

IN 1985 DOLLARS

ORIGINAL PAGE IS
OF POOR QUALITY

4.4 FREE-FLIGHT VERIFICATION

The free-flight verification is intended to demonstrate the operational capability of the servicer. Figure 4.4-1 shows an artists concept of the servicer and the OMV just prior to docking with a spacecraft. The servicer will be flight qualified and ready for operations. It will be compatible with both the OMV and the Space Station.

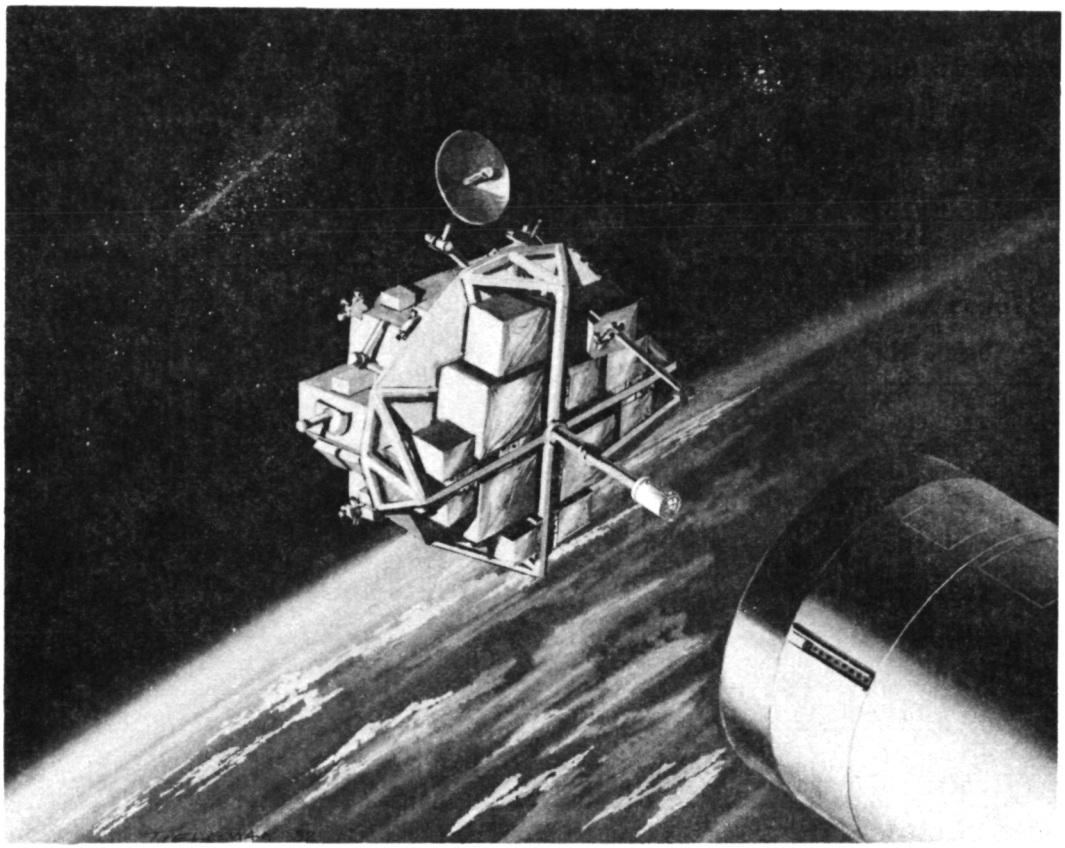

Figure 4.4-1 The Operational Servicer with the OMV

4.4.1 Free-Flight Verification Objective

The objective of the free-flight verification tests is to verify that an operational servicer capability exists and is available for use by the user community. These verification tests should also increase confidence that the servicer can be used at the Orbiter, at, or near, the Space Station, and in geosynchronous orbit. The servicer used for

the verification flight will become the first operational servicer. It will be necessary to fully qualify the unit and document its development, fabrication and test.

The servicer is intended to be used as a kit for the OMV. The verification will demonstrate the two vehicles compatibility and how they form an effective system for performing servicing operations. Both will be controlled from the OMV ground station. The servicer extends the capability of the OMV by enabling it to perform module exchange and fluid resupply operations.

The servicer will be a valuable tool for the Space Station. A servicer unit could be located in the servicing bay to perform repairs to spacecraft and equipment. The operators would be located on the ground, freeing the astronauts for other tasks. The OMV/servicer could be used as a backup to the station's RMS, moving equipment around the station and using the servicer mechanism to install it. It could replace EVA personnel in many circumstances, especially where hazardous materials are involved. For example, the servicer could be used to refuel the OMV and OTV. The design of the operational servicer will consider the needs of the Space Station.

4.4.2 Free-Flight Verification Recommended Approach

The approach to be used for the free-flight verification is in the formulative stages. As a result, the distinction between the issues to be considered and the baseline plan are not as clearly defined as for the ground or cargo-bay demonstrations. We have attempted to identify the major elements needed to meet the objectives of the free-flight verification. We feel the verification flight will include the same basic servicing functions demonstrated in the cargo-bay, adding the features of operations with the OMV and control from a ground station.

The servicer system must go through the full design and development process including the preparation of production tooling so that further units may be produced. The cost estimate is based on the production of

a single servicer system. A single verification flight is recommended. It is possible to use less fully qualified components for the serviceable spacecraft and the modules to be exchanged as the serviceable spacecraft is to be used only once. It may be possible to rent a spacecraft bus and use it to support the serviceable spacecraft. The serviceable spacecraft and module mockups are the units used for the cargo-bay demonstrations.

The proposed plan calls for the servicer and OMV to be mated on the ground and carried to space in the Orbiter. Table 4.4-1 presents the major characteristics of the verification flight. The servicer's stowage rack will carry the modules, tools, and stored fluids necessary to service the spacecraft mockup.

Once in space, the OMV with the servicer and the spacecraft mockup will be separately deployed from the Orbiter cargo-bay. After a reasonable amount of separation has been achieved, the OMV will rendezvous and dock with the spacecraft. The servicer will exchange a MMS module (axial) and a battery module (radial). It will demonstrate fluid resupply operations by mating a fluid interface device to the spacecraft and transferring fluid to the spacecraft. The vehicles will be returned to the Orbiter and transported to the ground.

Table 4.4-1 Free-Flight Verification Characteristics

One verification flight
MMS triangular structure for spacecraft mockup
Spacecraft mockup attached to rented spacecraft bus
Axial MMS module exchange
Radial battery module exchange
Fluid transfer to PM-1 type propulsion module
Servicer's supply of power, attitude control, thermal control, and communications by OMV
Spacecraft mockup's supply of power, attitude control, thermal control, and communications by spacecraft bus
Servicer control station on ground
Unassisted Supervisory control mode
Docking rigidization by servicer docking probe
Electrical connection between servicer and spacecraft via the docking mechanism
Servicing equipment performance demonstration
OMV-servicer interactions included
Man-machine interactions included
Compliance with Orbiter system safety requirements
Use of representative servicing operational equipment
Operator training (ground personnel)

4.4.3 Free-Flight Verification Schedule and Cost Estimates

A set of schedules and cost estimates have been defined for the proposed verification program. These numbers are based on the approach defined in the previous section. This approach is basically the same as proposed in the earlier study, except only one unit will be built. The cost for production tooling has been kept in the schedule and cost estimates.

The development of the operational servicer is to be coordinated with the development of the OMV. Being an "OMV kit", it is desirable to have the servicer flight qualified at the start of OMV operations. A schedule showing the development of the servicer and the major OMV milestones is shown on Figure 4.4-2. The key OMV milestones are the first flight occurring in early 1990 and the start of normal operations in mid 1992.

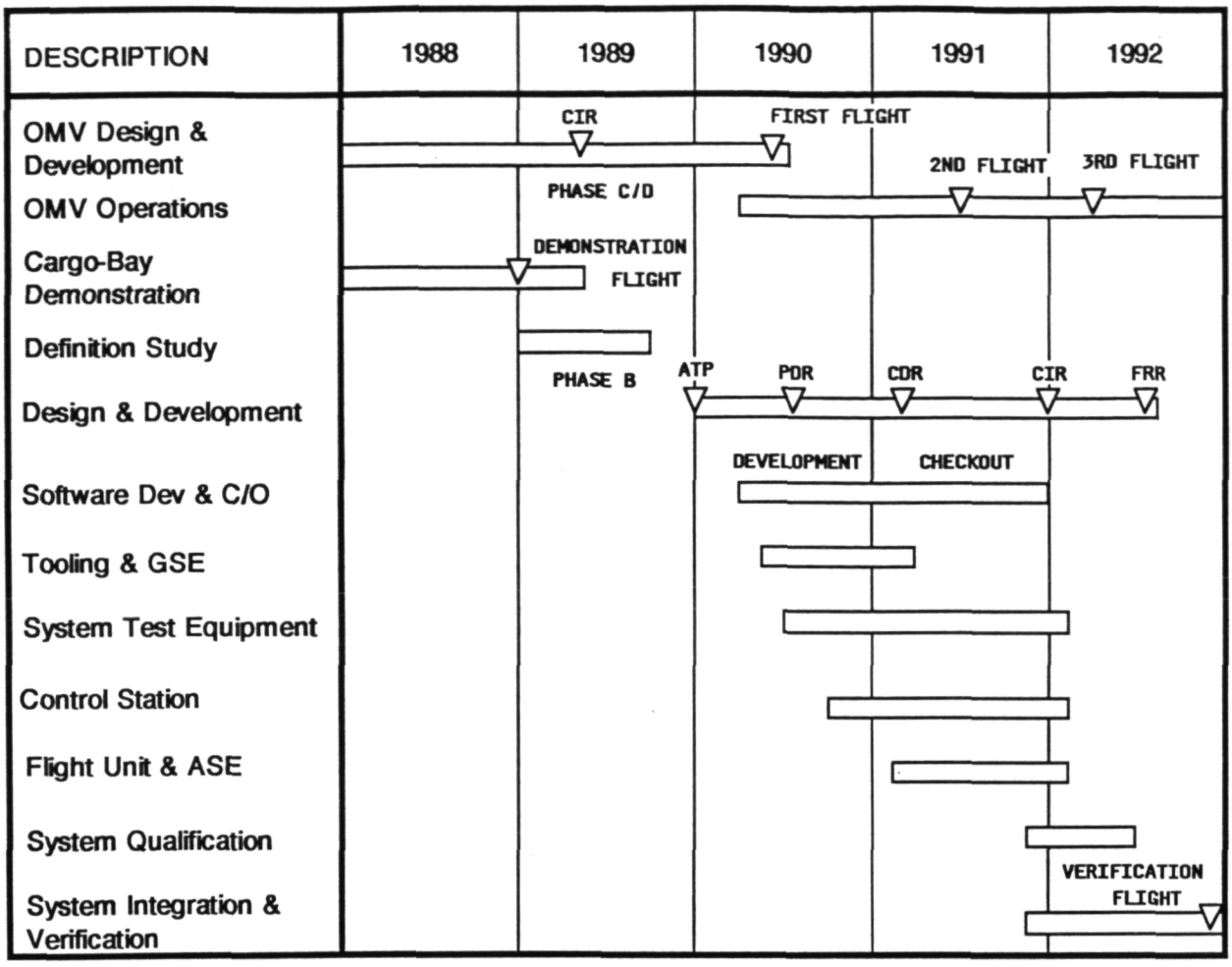

Figure 4.4-2 Free-Flight Verification Program Schedule

The phase B study for the servicer has been shortened to 9 months due to the extensive amount of definition work that has been done as part of earlier contracts. A three year period has been allocated for the C and D phases, which is a representative timespan for operational equipment of this complexity. The development schedules of the servicer and the serviceable spacecraft have been combined. It is felt that the definition period of the spacecraft may be somewhat longer than that of the servicer as little work has been done in this area. The design and development of the servicer will take comparatively longer as the spacecraft will be used only once and will probably consist of a combination of existing equipment. The development of a servicer ground control station has been included. Due to the "kit" relationship with the OMV, the servicer control station will likely be

collocated with the OMV ground control station, and will utilize much of their support equipment.

A preliminary cost estimate was prepared for the free-flight servicer system verification. The costing was based on estimated weights of the equipment for the free-flight servicer verification. The cost estimate was developed using cost estimating relationships (CER) contained in the Martin Marietta Aerospace Cost Data Base and in several NASA pricing models.

A breakdown of the cost estimate is shown in Table 4.4-2. The total estimated cost of the engineering effort and building the servicer system for free-flight verification is approximately $35 million.

The estimated cost of 35 million dollars is the same as was previously estimated. The cost of the servicer unit was reduced by using the proto-flight approach. This approach permits a single unit to be used for qualification testing and operations. The tests are performed on the flight unit in such a manner as to verify the capability, but not damage the unit. The savings were offset by increased costs due to inflation and the need to incorporate several items that were previously included in the cargo-bay demonstrations.

Table 4.4-2 Free-Flight Verification Cost Breakdown

Flight Equipment		Ground Equipment	
Servicer Mechanism	8.0	Servicer Checkout	0.2
Airborne Support Equip.	8.2	Stowage Rack Checkout	0.1
Servicer I/F Equip.	3.0	Spacecraft Checkout	0.1
Stowage Rack	4.0	Ground Control Station	3.3
Stowage Rack I/F	0.5	Personnel	0.1
Spacecraft Bus Rental	2.2		
Mockup Equipment	0.8	Subtotal	3.8
Docking Probe	4.5		
Subtotal	31.2		
Program Total	35.0*		

* Costs are in millions of 1985 dollars

4.5 USER COMMUNITY COORDINATION

The user community coordination activity has been primarily with NASA personnel as many United States non-DoD spacecraft programs look to NASA for direction. Emphasis has been on presenting the remotely controlled module exchange capabilities to personnel within the Space Station program as that program is at a stage where these on-orbit servicing concepts could be accepted and implemented.

In September 1984 a presentation was made to Goddard Space Flight Center personnel involved in the Multi-mission Modular Spacecraft program. The presentation described the early studies, servicer configuration, economic advantages, and remote servicer demonstration plan. This meeting led to increased emphasis on the inclusion of MMS module exchange for near-term activities.

The March 1985 Mid-Term Review presentation was expanded to include a section on servicing background. Presentations were made to Space Station program personnel at MSFC and at NASA Headquarters. GSFC personnel also attended the NASA Headquarters meeting. The presentation material included: fundamentals/perspective on spacecraft servicing, servicing alternatives, evaluation of alternative maintenance modes, guidelines for application of spacecraft servicing, example serviceable spacecraft configurations, implications on serviceable spacecraft design, on-orbit servicer configuration, control mode description, on-orbit servicer Engineering Test Unit, and candidate concepts for use of on-orbit servicing with and at the Space Station. The presentations were well received.

A Servicer Development Program Plan report was prepared and distributed to a wide variety of potential users. The draft plan was distributed in April 1985 and the final version was distributed in July 1985. This plan proposes a sequence of ground demonstrations, a 0-g demonstration in the Orbiter cargo-bay, and a free-flight verification with the servicer system mounted on the Orbital Maneuvering Vehicle. This plan

leads to an operational on-orbit servicing capability that can be used on the OMV or at the Space Station.

A presentation was made to the MSFC Propulsion and Vehicle Accommodations Splinter Group during the Space Station Orientation meetings at the request of the Martin Marietta Space Station team in April of 1985. The presentation included: OMV kits with application to Space Station, description of Integrated Orbital Servicing System, on-orbit servicer characteristics, on-orbit servicer control modes, on-orbit servicing fundamentals, on-orbit servicer development plan summary, description of the Engineering Test Unit of the on-orbit servicer, Orbiter cargo-bay demonstration of on-orbit servicing, fluid resupply with on-orbit servicer, automatic umbilical isometric, automatic umbilical characteristics, on-orbit servicer system at Space Station, remote satellite servicing mission activities, suggested basic approaches to accommodation of on-orbit servicing kit at Space Station, general accommodation requirements for on-orbit servicer, additional accommodations requirements for OMV kit, for mobile RMS, and for servicing facility, summary of current related contract research and development, summary of current related independent research and development activities, and a listing of open issues. The presentation was well received and additional material and assistance has been provided to the Martin Marietta Space Station team.

A number of discussions were held with a representative of RCA Government Systems Division of Princeton, NJ during the first half of 1985. A number of documents were also sent to RCA. Subjects discussed included: on-orbit servicing in the form of module exchange, spacecraft design for servicing, application of servicing to Space Station, application of servicing to polar platforms, and use of OMV in polar orbits to service platforms. The discussions are continuing.

A presentation was made to Fairchild Space Company personnel on June 5, 1985. This presentation included a summary of prior work on on-orbit servicing, objectives and progress on the then-current study, and

advantages of involving the MMS and the Module Servicing Tool in the 1-g and Orbiter cargo-bay demonstrations.

A presentation was made to the MSFC Science and Engineering Technology Manager for Teleoperation and Automation on June 6, 1985. This presentation included: a general on-orbit servicing background discussion, objectives and progress on the then-current study, and a summary of the work being done and planned for the Engineering Test Unit in his laboratory. The presentation was well received.

A paper entitled "Spacecraft Design for Servicing" was presented at the Satellite Services Workshop II. The paper was well received. The workshop was held at the Johnson Space Center in Houston, Texas on November 6, 7 and 8, 1985.

5.0 1-g DEMONSTRATION PLAN

The objective of this study activity was to update and expand the ground demonstrations section of the servicer development program plan proposed under the previous contract. The 1-g demonstration plan emphasizes the MMS servicing demonstrations along with the development and the demonstration of the basic techniques of remote on-orbit servicing. The specific MMS servicing demonstration requirements, the available options, and the approach selected were discussed in Section 3.0. In this section, the general requirements of the 1-g demonstrations, as well as elements of the ground demonstration plan developed under the previous contract are updated and expanded. The schedule of the ground demonstrations and a cost estimate are also presented.

The ground demonstrations are conducted first as they are less expensive than the 0-g demonstrations, the equipment is more accessible and is easier to reconfigure, a wider range of tests can be conducted, and the data is easier to collect.

The objectives of the ground demonstrations are to obtain a better understanding of on-orbit servicing so that the cargo-bay demonstrations may be better focused and to increase user confidence in the technology and in the program. These objectives can be expanded as:

1) To demonstrate the adaptability and flexibility of the module exchange concept - This can best be done by demonstrating an exchange of the MMS module mockup, because it is the only on-orbit serviceable spacecraft modular concept that is operational and it was designed for a different servicing interface. Additional demonstrations should be conducted to show that the IOSS is a flexible servicing system, and does not impose significant constraints on spacecraft design. Exchange of equipment at the individual component level, such as battery replacement, including the opening or removal of an access door/thermal protection cover can further demonstrate the versatility of this servicer system;

2) To evaluate approaches for the cargo-bay demonstration and free-flight verification - The ground demonstration will be used to select the control strategies to be used in the demonstration/ verification tasks. Through the use of a parametric analysis of the identified control strategies the optimal control system can be selected. Operating procedures can be varied and checked for overall effectiveness in the use of available resources. This includes such things as ground support, astronaut time, and Shuttle interfaces. These types of issues are best answered with relatively inexpensive ground testing rather than expensive flight experiments;

3) To demonstrate the use of the ground servicer as a laboratory tool - The development of new servicing concepts, new hardware, and software can be readily investigated on the ground before flight testing and operational implementation. A good example is the development of a satellite remote fluid resupply capability. The ground servicer can also be used as an integration and checkout facility. Development of an automatic target recognition and error correction system, of new controls or of new tools and adapters can benefit from the use of the ground servicing demonstration system as a laboratory tool. New sensors, sophisticated end effectors, and other elements of the next generation of servicing systems can be developed using the ground and the flight demonstration units.

   If problems arise during the flight tests or operational servicing, the ground demonstration unit could be used for finding and/or checking out solutions;

4) To demonstrate the use of the ground servicer as a training facility - Training of the operators for the flight demonstrations as well as for actual servicing operations can be done using the ground servicer system. For this reason, it is important that hardware and software commonality with the flight units be designed

ORIGINAL PAGE IS
OF POOR QUALITY

into the ground demonstration servicer. This will also make possible more convincing, high fidelity, ground servicing demonstrations.

The main role of the servicing ground demonstrations is to support further flight demonstrations. The availability of an on-orbit servicing capability can be convincingly demonstrated to the user community only through flight tests. The acceptance of on-orbit servicing methods by the spacecraft designer is also linked to the financial and programmatic commitment of NASA for timely development of the operational capability.

The Engineering Test Unit (ETU) of the IOSS was selected as the servicer mechanism for ground demonstrations based on the results of a tradeoff study done as part of the prior contract. The actual ETU is shown in Figure 5-1. Details of this selection process as well as the selection of the related hardware are documented in Section 3 of the "Spacecraft Servicing Demonstration Plan - Final Report", July 1984 (MCR-84-1866).

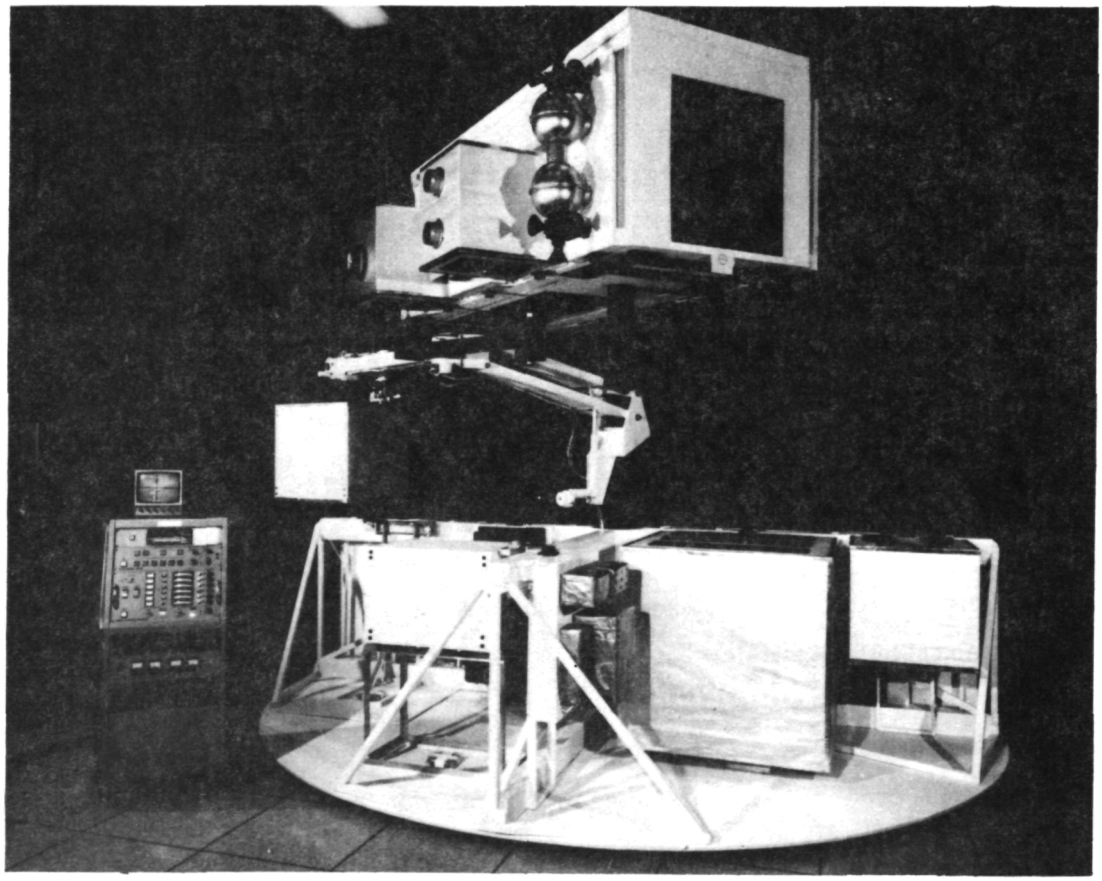

Figure 5-1 The Engineering Test Unit of the IOSS

The activities selected for the ground demonstration plan represent a continuation of the ongoing demonstration tasks, using the ETU. Some of the elements included are part of the current activities and have been included in the plan for completeness. The cost estimate reflects the work to be done and does not include the currently funded tasks.

5.1 1-g DEMONSTRATION REQUIREMENTS

The system requirements applicable to the servicing ground demonstration equipment defined in the prior study were analyzed and expanded. The top level requirements used for the definition and the selection of the elements of the 1-g demonstration plan are presented below. Additional subsystem requirements used in the design of the servicer/MMS 1-g demonstration equipment are presented in Section 8.0. The specific requirements developed for the Module Servicing Tool (MST) adaptation for 1-g demonstrations and other MMS servicing requirements, with emphasis on the operational case are listed in Section 3.1.

The following requirements, or guidelines, apply to the ground demonstration servicing system:

1) The existing Engineering Test Unit of the IOSS will be used for all the ground servicing demonstration activities;

2) Minimum modifications will be made to the existing ETU configuration. An adapter shall be used in connection with the standard end effector interface in order to service MMS modules or for fluid resupply;

3) The ground demonstration servicer system shall be capable of 1-g demonstration of MMS module exchange in addition to the present capability of exchanging the 24 in. cube module with side interface mechanism in axial and radial directions, without any system reconfiguration. The design of the servicer system shall provide a capability for later expansion to include ground demonstrations of fluid resupply and demonstration of other servicing tasks;

4) The trajectories used during ground demonstrations of MMS module exchange and the relative position of the servicing system elements shall provide a good representation of the on-orbit servicing of an MMS, using lateral docking and axial module exchange;

5) The increased end effector load due to MMS module mockup, modified MST, and other servicer modifications, such as for fluid resupply, shall not exceed the servicer design load capability;

6) The positioning accuracy of the servicer arm with modified MST and with or without module mockup shall be within the capture envelope of the MMS module retention system;

7) Adequate clearance shall be provided between all servicer system elements;

8) The ground demonstration servicer system shall be capable of 400 complete cycles of MMS module exchange demonstrations without refurbishment;

9) Optical targets shall be provided for all locations where the servicer end effector engages module attach interfaces, fluid resupply interfaces, or adapters, at their storage locations;

10) The adapters used for performing special servicing tasks shall obstruct as little as possible of the field of view of the existing TV camera and lights;

11) The 1-g demonstrations of fluid resupply shall be designed so that this operation can be performed as part of the same overall demonstration with other servicing activities, such as module exchange or inspection;

12) Initial ground demonstrations of fluid resupply may use water and air pressurant in order to minimize risk and cost;

13) The fluid resupply servicing interface should conform with the industry established fluid resupply standard interface;

14) The mate/demate subsystem of the fluid resupply interface shall include an auto-indexing feature to assure the correct mating of the disconnect valves;

15) The hose/cable management system for 1-g fluid resupply demonstration shall be counterbalanced and shall assure servicing at all required locations;

16) The following real time control functions shall be provided as a minimum for the fluid resupply 1-g demonstrations:

    a) Control of disconnect mate, demate, leak test, and purge functions,

    b) Control of liquid and gas pressures,

    c) Valve position indication;

17) The servicer control modes, Supervisory, Manual-Augmented and Manual-Direct, and the associated control software should be common to all ground servicing demonstrations;

18) Separate specific software programs for each demonstration/activity are permissible.

5.2 1-g DEMONSTRATION ELEMENTS

Several ground demonstration tasks were identified as possible candidates for a representative 1-g demonstration plan and they are described in the following paragraphs. The ground demonstration plan elements were selected from among these candidates considering the development work needed to support the next phases of cargo-bay servicing demonstration and free-flight verification. An effort was

made to minimize the cost by using existing equipment and control software whenever possible.

5.2.1 Multi-Mission Modular Spacecraft Module Exchange

This task involves the fabrication of two lightweight MMS modules, modification of the existing MMS module servicing tool, adapting the existing spacecraft and stowage rack, and providing the related software.

A lightweight mockup of the MMS module will be designed and two units built. The design goal is a maximum weight of 15 lb for the module, including the electrical connector(s) and the module retention hardware. The module mockup will be a full size representation of the outside shape and dimensions of the MMS module, will have the same attachment interface and provide adequate structural support for the two attaching fasteners and for the two latch receiving brackets. A lightweight version of the module retention and connector mounting hardware will be designed and fabricated for the mockup. The fastener operating torque will be reduced to the minimum value that will secure the module in place.

A modified, lightweight Module Servicing Tool (MST) will be designed and built. It will be compatible with the ETU end effector interface, including an electrical disconnect and it will have the same interface with the MMS module retention system. The MST latches will hold the module tightly during the module transfer operations, being modified to delete the inward motion function of the existing EVA tool. The electronics, power supply and controls will be in a remote location and the MST will be designed for a lower operating torque to reduce its weight to less than 15 lbs, as the ETU has a limited lifting capability. The modified MST will be provided with a "ready to latch" sensor.

A lightweight and compact connector positioner will be attached to the ETU end effector and will be used for mating and demating the electrical connection to the MST.

Modification of the present spacecraft mockup is necessary in order to incorporate support structure, compatible attachment interfaces, connectors and sensors for one MMS module. Modification of the stowage rack mockup is necessary for receiving the MMS module in two locations. One location is for temporary stowage of the failed module from the spacecraft mockup and the other for the replacement module that is to be transferred and fastened to the spacecraft mockup.

The MMS module exchange activity has been performed as part of the existing contract. It was supported by the MST redesign and fabrication work by the GSFC, which was assisted by Fairchild Space Company. The demonstration plan, design, and equipment are discussed in Section 8.0. The servicer control software for MMS module exchange is described in Section 10.0 and the MMS module exchange demonstrations are described in Section 11.2.

5.2.2 Fluid Resupply Demonstrations

For initial ground demonstrations, a nonhazardous fluid will be transferred from the stowage rack to the spacecraft mockup. This will demonstrate fluid transfer in an economical and safe manner. The added expense of transferring a hazardous fluid provides no additional information to the program. Those types of activities are better suited for programs specifically addressing propellant transfer rather than this program, which deals with remote servicing.

A servicer fluid resupply module mockup comprised of a fluid tank, air tank, piping, flow control, hose/cable management system, fluid transfer interface unit, instrumentation, controls, and support structure should be assembled. The fluid transfer interface unit should carry disconnects for liquids, gases and electric cables. It should also have a translation mechanism, attachment alignment mechanism, and a dust cover removal mechanism. Such a device will be obtained either from within Martin Marietta or from NASA. The development of such an interface is not within the scope of this program. Goddard Space Flight Center has recommended that the

refueling interface being developed by Johnson Space Center be used for the demonstration. This option will be evaluated, as using existing hardware will reduce the program cost. Simplified functional mockups should be built for disconnect valves with leak test and purge capabilities.

Modifications of the spacecraft mockup are necessary in order to accommodate the fluid and pressurized air tanks, piping, valves, instrumentation and controls, and the fluid transfer interface. The same approaches used on the fluid resupply module mockup will be applied to the spacecraft mockup.

5.2.3 Control Mode Analysis and Testing

A series of tests and analyses will be conducted to evaluate the effectiveness of the different control modes. Variations in the standard approaches will be tried to shorten the time requirements and improve the accuracy. The result of this activity will be recommendations on the control modes to be used in the flight experiments.

5.2.3.1 Reconfigurable Control Console - The ETU controls and displays have been set up around the Servicer Servo Drive Console as this arrangement was convenient during checkout of the basic module and MMS module exchange software. However, the various input devices and displays are not well placed from a human factors viewpoint. The result is that the system is not as easy to work with as it might be. Also the effects of rearranging the controls and displays is not easy to evaluate.

It is recommended that the pertinent equipment be moved to one of the available reconfigurable control consoles at MSFC. The pertinent equipment includes:

1) Servicer Control Panel;

2) TV Monitor;

3) Computer Monitor and Keyboard;

4) Hand Controllers for Manual-Augmented Control Mode;

5) MST Control Panel.

Provisions should be made for an ability to use one six degree-of-freedom hand controller or two three degree-of-freedom hand controllers. The equipment should be designed to accommodate additional servicing demonstrations, such as fluid resupply, at a later time.

5.2.3.2 Module Trajectory Modifications - The trajectories used to exchange the basic and MMS modules were developed primarily on the basis of collision avoidance. Few attempts were made to refine these trajectories to reduce the demonstration time. It is recommended that the trajectories be reexamined to determine if the demonstration time can be significantly reduced. Items for consideration include: 1) module location; 2) clearances required; 3) velocity limits. The Supervisory control mode software limits the system velocities at both the cylindrical coordinate and the joint drive levels. It may be possible to raise these velocity limits and still operate along true cylindrical coordinates.

5.2.3.3 Supervisory Control Mode Assistance Level - The current Supervisory control mode incorporates two levels of operator assistance. The "unassisted" level only requires operator actions at safety-related points once the basic module exchange trajectory has been initiated. There are three inputs for basic module exchange and six inputs for MMS module exchange. The "operator assisted" level requires operator responses for each and every action listed on the computer display. An analysis should be conducted to identify if there is a better form for the "operator assisted" mode and to define that form.

5.2.3.4 Manual-Augmented Control Mode Variations - One form of the Manual-Augmented control mode and one improved form of the related trajectory sequences have been implemented. No data has been collected

to determine if the forms being used are among the better forms. It is recommended that a series of analyses and test activities with different operators be conducted to identify forms of the Manual-Augmented control mode and related trajectory sequences that will speed up the module exchange process, produce more accurate trajectories while in the guides, and ease the learning process. Items for consideration include:

1) Specific trajectory sequences;

2) Form of displays used;

3) Use of rotational hand controller.

The form of the targets and TV monitor reticle used has not been examined in any detail. They were assembled quickly from convenient materials. It is now difficult to watch the error meters and the target/reticle positions at the same time because of their relative locations. Consideration should be given to overlaying the error meter data on the TV screen so the operator can respond more easily to the display information.

At the study Orientation Meeting it was decided to use a single-degree-of-freedom hand controller for the wrist roll function. When it became impractical to incorporate the rotational hand controller into the setup, it was decided to use the rocker switches on the Servicer Control Panel to command end effector rotations. The result is clearly non-optimum. It is recommended that the subject of rotational control be reviewed, better approaches tested, and a preferred system selected.

5.2.3.5 RMS Control Modes - The Orbiter Remote Manipulator System incorporates a set of control modes that have evolved over the years and that are familiar to the astronauts. It is recommended that information be obtained on these control modes, the rationale for their use, and what

characteristics are preferred by the astronauts. This information would then be used to determine if the servicer control modes should be made similar to the RMS control modes. An easy correspondence between the control modes would make the learning process easier because of similar use patterns and operational philosophies.

5.2.3.6 Error Correction via Manual-Augmented Control Mode - As discussed in Section 5.2.6, the errors associated with the docking system can cause the end effector to fail to attach to the interface mechanism or the interface mechanism to fail to be captured by its guides. One way to overcome these errors is to use the Manual-Augmented mode to realign the target and reticle and thus generate bias signals that can be used in the Supervisory control system. There are a number of problems to be addressed, but solutions should be possible. Areas of concern are:

1) Changes to Supervisory mode software to permit returning to a specific point in a trajectory sequence after switching to the Manual-Augmented mode;

2) Philosophy of and method for computing the error signals and incorporating them into the module location data. For example, should the corrections be applied to all module locations or just to the one where the errors were measured;

3) Method for measuring the errors;

4) Target and reticle changes to permit identifying all six error components.

Use of the Manual-Augmented control mode for error measurement can be considered as an alternative to, or as a complement to, the automatic target recognition and error correction system of Section 5.2.6.

5.2.3.7 Software for Combined Motions - While the servicer mechanism is electromechanically capable of performing combinations of radial and axial motions along straight lines of arbitary direction, the control

system has not been designed for combined motions. The premise for control system development has been to keep it simple. Combined motions add significantly to control system complexity. However, the analyses of MMS module exchange indicated that it would be possible to delete the orientation joint if combined motions could be effected. It is suggested that the effects of incorporating combined motions in the control software be assessed and if the complexities are not too severe then a combined motion capability should be developed.

5.2.3.8 Error Correction via Automatic System - The automatic target recognition and error correction system activity of Section 5.2.6 would primarily address the error measurement and transformation of errors to a reference coordinate system. This activity would develop a philosophy and methodology for how the generated errors would be used by the system and how they would be incorporated in the software.

5.2.3.9 Inadvertent Module Release Warning System - As a result of an Orientation Meeting Action Item, an approach for warning the operator of an inadvertent end effector jaw opening was generated. The transfer of MMS modules introduces another modality where modules could be inadvertently dropped; namely inadvertent unlatching by the 1-g Module Servicing Tool. It is suggested that this problem be readdressed and if felt to be significant then a warning system should be implemented.

5.2.4 AXAF Module Exchange Demonstrations

A demonstration of focal plane instrument module exchange, such as for the AXAF, requires building two large volume, lightweight module mockups. The module retention system could be a lightweight version of the base mounting interface mechanism. The design should include electrical and fluid disconnects.

Modification of the spacecraft mockup is required to accommodate radial removal of the AXAF module mockup including a hinged thermal cover with an unlatching/opening mechanism, actuated by the power takeoff (interface mechanism drive) of the servicer.

Modification of the stowage rack to accommodate the AXAF module in two locations is needed to provide structural support and latch interfaces. A hinged thermal cover, similar to the one on the spacecraft mockup should be fitted on one of the two stowage rack locations. The second location is used for temporary storage.

The above discussion assumes that the focal plane instruments are selected for AXAF remote servicing demonstration. This is a reasonable assumption as the focal plane instruments are likely to be the most difficult to service. However, AXAF project personnel should assist in determining which specific AXAF equipment should be selected for a remote servicing demonstration. They should also assist in defining other parameters of the demonstration such as need for covers, allowable time without electrical power, and need to be compatible with EVA module exchange. The specific equipment selected will generally be required in the quantities and at the locations identified above.

5.2.5 Battery Module Exchange Demonstration

Battery module exchange can be used to demonstrate radial exchange of equipment at the component level, in order to prove the operational flexibility of the ETU servicer. A representative battery module mockup should be designed and two units should be built. The mockup should have an electrical disconnect and a lightweight latch mechanism capable of mating/demating the disconnect. The latch mechanism will be developed from the existing side interface mechanism concept. As an alternative, the module battery mockup could be attached to the base structure using captive fasteners. An adapter tool should then be built to actuate the fasteners, mate or demate the disconnect, and support the battery during transfer operations. MMS type fasteners and the MMS adapter tool could be used instead of standard captive fasteners.

The stowage rack and the spacecraft should be modified to receive the battery modules: one for the replacement module and one for temporary attachment to the stowage rack.

Data resulting from this demonstration will be used for the design of the cargo-bay demonstration of battery exchange in the radial direction.

5.2.6 Automatic Target Recognition and Error Correction

A prior study* of the expected error of mechanical arms, conducted by Martin Marietta Aerospace with internal funding, shows that errors approaching ± 0.80 in. can occur for a system like the IOSS. This number should not be compared with the ETU repeatability of 1/8 in., which is only one small component of the overall error. Among the dominant sources of error considered, is the vehicle docking misalignment. Without special provisions, docking misalignment can be on the order of degrees. Docking misalignment not exceeding 0.3 deg in any of the three axes was considered in the above-mentioned study. However, if the standard RMS end effector is used as a docking probe, post rigidization accuracy of ± 0.4 deg is expected in the roll direction and ± 0.15 deg in the pitch and yaw directions**. Roll is the most critical error component and is unfortunately the most difficult to reduce for small central-type docking systems. Large roll errors about the docking axis can be easily measured and easily compensated for when performing an axial module removal. However, the roll error is hard to measure and compensate for during a radial module removal.

The IOSS end effector capture envelope is ± 0.75 in. and the guide capture capability of the side mounting interface mechanism is ± 0.50 in. These capture capabilities are marginal, when using the RMS end effector as a docking probe. The use of adapters for the ETU end

---

* Orbital Inflight Maintenance (Project 27D) Vol. 2 - Accuracy Capability of Mechnical Arms, Martin Marietta Aerospace, Report No. D76-48727-002, December 1976.

** R. G. Daniell, et al., "The Design and Development of an End Effector for the Shuttle Remote Manipulator System" 16th Aerospace Mechanisms Symposium (J. F. Kennedy Space Center, Florida) May 13-14, 1982, NASA Conference Publication 2221.

effector and/or docking probe enhances the system operational flexiblity, but at the same time, may appreciably decrease its accuracy below the minimum acceptable level. For radial module removal up to 63% larger errors are expected.

In manual control modes the operator can make the required corrections before engaging the module or the end effector, by using the video camera capability.

In the Supervisory mode, however, an equivalent capability needs to be developed, in the form of an automatic target recognition and error correction system. The system can use the existing video equipment, and the on-board computing capability, to scan and interpret the TV image prior to engagement, detect the error, issue the required commands for correction to the servicer control system, verify the results, and then command the final engagement.

All six components of the relative location error must be identified - three in linear displacement and three in angular displacement. As most sensors have an image plane, they can only measure three error components. If the targets have a known size, then stadiametric ranging can be used to obtain a fourth error component. If the target is also given some depth (as for the RMS target), then all six error components can be measured. The sensor system must know, and be able to recognize, the geometry of the target. Another approach, applicable to the servicer mechanism with its degrees-of-freedom, is to use two planar targets of known geometry at right angles to each other. Another consideration is the gross error situation such as docking at the incorrect docking port or having a 120 deg roll docking error. These kinds of errors can be recognized by properly coding each of the specific targets.

An autonomous video rendezvous and docking system development was initiated by Martin Marietta Aerospace under a contract from MSFC***.

*** Development of an Autonomous Video Rendezvous and Docking System, Martin Marietta Aerospace MCR-83-584, Phase 2, June 1983, MSFC Contract NAS8-34679

It requires a modified optical target with three reflective spots, special software and a special computer interface box to handle the data processing. The system has been operated in the Space Operations Simulation Laboratory of Martin Marietta Aerospace and the technology is readily applicable to the servicer. However, the Martin Marietta autonomous video rendezvous and docking system has a larger capability than is needed for servicer error measurement so alternative, simpler devices should also be considered. The range of servicer system errors is expected to be small and this fact should be considered. The expanding use of robotics has led to the development of small optical devices that may be applicable to the error measurement problem. Also charge coupled device (CCD) cameras with sensing arrays that are fixed in size and are at the camera's focal plane are better than vidicons for accurate measurement.

5.2.7 Engineering Test Unit Electronics Update

Improvements in the reliability of the Engineering Test Unit can be obtained by updating some of its controls electronics, such as replacement of relays with solid state switches, replacement of wire wrapped boards with printed circuit boards, and by improving some other circuit elements. The ETU has had few failures compared to the expected level for equipment of its complexity. Most of the recorded problems are linked to failures of electronic components. The changes proposed have a potential for improving the ETU if it is to be used extensively in the future.

5.2.8 Convert ETU Control System from Analog to Digital

The modifications list includes digital sensors (like optical encoders inside the joints), digital inputs and displays, microprocessor computations, and a new control panel. These modifications will improve the accuracy and the stability of the controls system. Process

controllers are available off-the-shelf for use as microprocessors. It is likely that the control electronics for the operational servicer system will use digital technology. This activity could also assist in the design of the servicer system for the cargo-bay demonstration.

5.2.9 Tank Exchange

As the capability of the servicer expands, the replacement of individual components will be possible. It will be desirable to change components that contain fluids such as tanks, regulators, valves, and thrusters. In order to change out these components, it will be necessary to develop an on-orbit serviceable in-line coupling that will not leak under pressure, vibration, and mechanical load for the entire life of the spacecraft, when connected or when disconnected. If fluid were allowed to escape, there could be a significant contamination problem as well as fluid pressure loss. The device will have to be designed to be operated by the servicer. The actual process involved with the changeout of a fluid component will probably require special adapter tools.

5.2.10 Interface Mechanism Development

The development of interface mechanisms for other spacecraft modules is appropriate. These interface mechanisms would be for special applications where existing interfaces don't meet the requirements. The requirements might include unusual geometry situations, special alignment, or unique connector problems. These interface devices should include a standard end effector interface, so that the servicer does not need to be modified to exchange the unusual module. This does not limit changes in the design of the actual interface mechanism.

As part of this activity, it may be appropriate to form a committee that would establish standards for the interface between the end effector and the interface mechanisms. These standards would include physical, functional, and electrical considerations. Committee members should be drawn from all interested groups.

5.2.11 Adapter Tools for Specialized Tasks

This development may include adapter tools for removing special fasteners, or a PFMA type end effector for gripping and deploying an antenna or performing other contingency tasks. These specialized tools will include a standard interface to the servicer end effector allowing for a simple exchange of the tool in the servicing environment. The tool would be carried on the stowage rack and mounted to the servicing arm when required. These tools will greatly add to the capability of the servicer and its ability to adapt to change. The MMS Module Servicing Tool adaptation is an excellent example of this kind of specialized task.

5.2.12 Recommended Approach

The proposed activities were reviewed and screened. Those selected for the baseline approach are necessary to support the cargo-bay demonstration and free-flight verification. The activities selected are shown in Table 5-1.

Table 5-1 Recommended Activities for the Ground Demonstrations

Activity Description	Reference Section
MMS Module Exchange	5.2.1*
Fluid Resupply Demonstrations	5.2.2
Control Mode Analysis and Testing	5.2.3
Battery Module Exchange Demonstration	5.2.5
Automatic Target Recognition & Error Correction	5.2.6

* Worked as part of the current contract.

The three primary servicer functions are included in the recommended activities. Among them are the exchange of modules in the axial and radial directions and the demonstration of fluid resupply operations.

The exchange of the MMS modules was selected over the exchange of the AXAF modules as it was felt to be a more widely accepted application. There are MMS satellites currently being flown, such as the Solar Maximum Mission and Landsat. By showing that the servicer can adapt to an existing design, its operational flexibility will be demonstrated.

The battery module was selected to demonstrate radial exchange as it is a practical application of servicing. The normal servicing mission will include the exchange of failed modules (as demonstrated with the exchange of the MMS module) and the routine replacement of components that have a limited life. A battery module is a primary example of the second case. The exchange of a battery module also demonstrates the demating and mating of an electrical connector that carries a substantial amount of current. This type of connection can cause arcing problems if not properly deenergized.

The fluid resupply demonstration was selected as it is one of the primary servicing functions. Its demonstration is timely, as a number of fluid disconnect interface units are being developed, and they can be adapted to operate with the servicer.

The activities of the control mode analysis and the automatic target recognition system will advance the design of the servicer to a point that it is possible to have an operational unit. The control mode analyses will improve this system and lessen the risk of failure. By better understanding the controls of the servicer, future versions can be improved. No attempt has been made to prioritize the nine suggested control system activities. Further discussion with NASA personnel is recommended. The automatic target recognition and error correction system will permit automatic operation of the servicer. It will also lead to a reduction in cost by permitting a less accurate docking mechanism to be used and compensated for with the error correction function.

5.2.13 Optional Support Tasks

The analyses and demonstrations identified in Table 5-2 will enhance the development of on-orbit servicing, but were felt to be nonessential to meeting the primary objectives of a cost conscious program. Many of these tasks may be funded as part of other programs. It is felt that the ETU servicer will be upgraded to a digital system if the cargo-bay demonstrations are carried out. The tasks such as the tank exchange and special tools and interfaces will be included as part of the programs requiring their use. It is beyond the scope of this program to accommodate every aspect of remote servicing development.

Table 5-2 Optional Activities for the Ground Demonstrations

Activity Description	Reference Section
AXAF Module Exchange Demonstrations	5.2.4
Engineering Test Unit Electronics Update	5.2.7
Convert ETU Control System from Analog to Digital	5.2.8
Tank Exchange	5.2.9
Interface Mechanism Development	5.2.10
Adapter Tools for Specialized Tasks	5.2.11

5.3 1-g DEMONSTRATION SCHEDULE

The schedules were updated from those developed for the prior contract. Data is presented for the activities in the baseline approach. These activities are designed to support the demonstration of remotely controlled module exchange and fluid resupply in the Orbiter cargo bay.

The schedule for the ground demonstrations is shown in Figure 5-2. The OMV design and development schedule is shown as a reference. The MMS modification and module exchange activities shown on the schedule were

completed as part of the current contract. The control mode activities will cover a period of approximately one year. The schedule permits the results to be used in establishing the approach to the cargo-bay demonstration flight. The battery exchange demonstration, the refueling demonstration, and the automatic target recognition and error correction activities will run concurrent with the control mode studies. These elements will involve the design and fabrication of the necessary hardware, integration into the ETU, and a short period of checkout and demonstration. There should be no conflict in schedules due to the availability of the ETU as each element should only require a few weeks of actual testing.

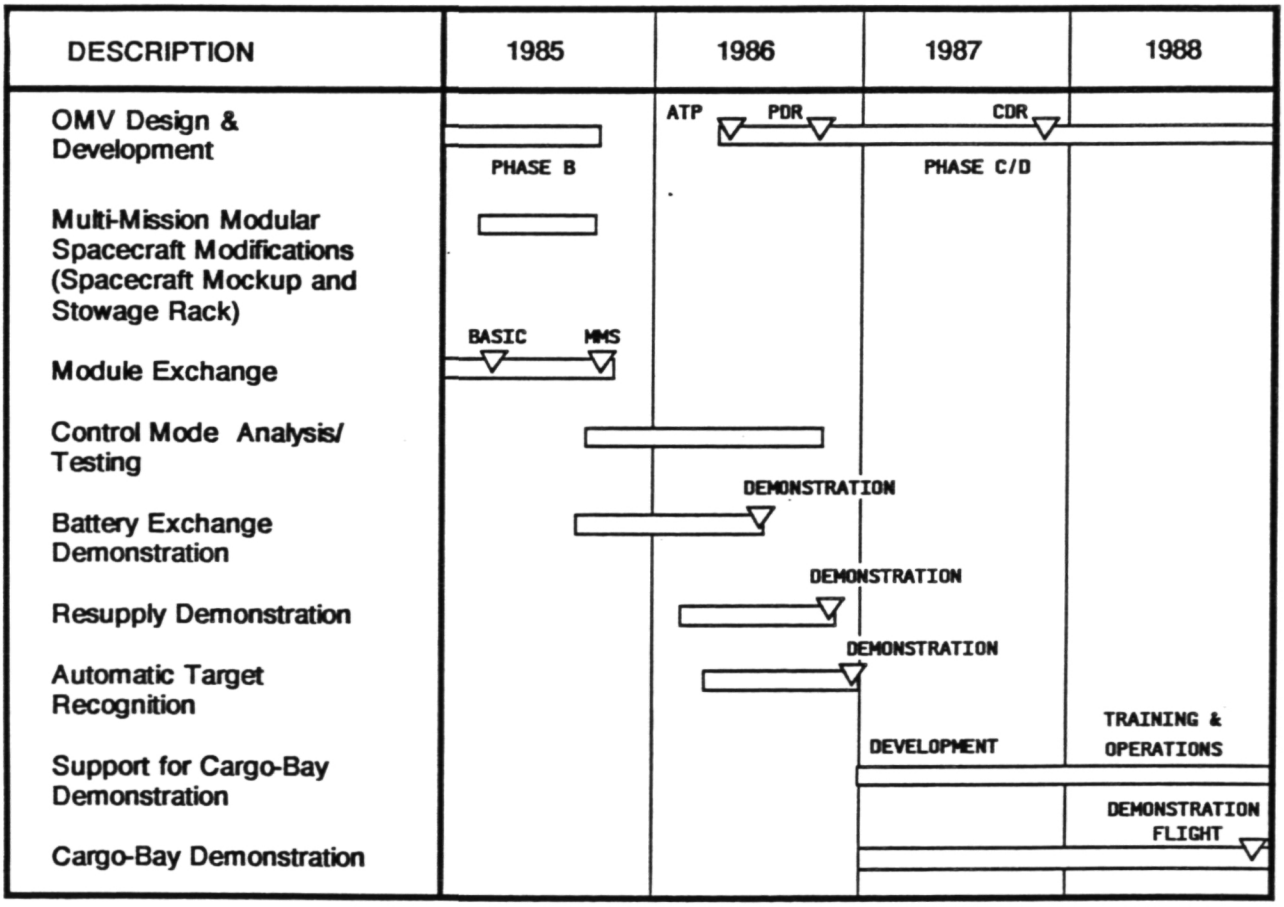

Figure 5-2 Ground Demonstrations Schedule

The schedule of Figure 5-2 was prepared early in the contract. At the time of the Final Report printing, it appears that the Figure 5-2 schedule is not compatible with funding constraints.

The last ground demonstration element is supporting the cargo-bay demonstration flight. This includes operations simulations, flight training, and problem solving. Other activities that could be supported by the ground servicer demonstrations during the breaks in the flight support activities are:

1) Development of special refueling and electrical disconnects such as cryogenic or high pressure disconnects, self aligning conical electrical disconnects, etc.;

2) Development of in-line fluid couplings for replacement of tanks and other propulsion system components;

3) Demonstration of other servicing tasks specific to the Space Station operations such as resupply of other fluids, space maintenance and assembly tasks, and return of products from a space manufacturing facility.

5.4 1-g DEMONSTRATION COST ESTIMATE

Cost estimates were made for each of the elements of the recommended approach for the ground demonstrations. These are engineering estimates based on our previous experience in preparing for demonstrations with the ETU. The estimates are based on the schedule presented in Section 5.3. The estimates can be revised to reflect changes in the schedule. The following assumptions were made in estimating the costs:

1) All costs are in 1985 dollars;

2) Costs include the design, development, and fabrication of the experiment hardware;

3) The labor to perform the actual testing of the control modes has been assumed to be provided by NASA personnel. The analysis of the results is assumed to be part of the contractors work.

The cost estimates for the ground demonstrations are presented in Table 5-3. The estimated cost shown for control mode analysis and testing is not adequate to perform all of the work identified under Section 5.2.3, rather it is an estimate of what might validly be attempted during the next contract phase. The other Section 5.2.3 activities could be performed in later years. As previously noted, the costs for the MMS modifications and module exchange demonstrations are included as part of the current funding. The cost for supporting the cargo-bay demonstrations is included as part of that task.

Table 5-3 Estimated Costs of the Ground Demonstrations

Description	Estimated Cost*
Control Mode Analysis and Testing	250
Battery Module Exchange	250
Fluid Resupply Demonstration	300
Automatic Target Recognition	150
Total Estimated Cost	950

* In Thousands of 1985 Dollars

6.0 CARGO-BAY DEMONSTRATION PLAN

The objective of this phase of the work activity was to identify and define the major elements of an on-orbit servicing demonstration in the Orbiter cargo bay. The objective of the cargo-bay demonstration is to help convince satellite designers that on-orbit servicing in the form of remote module exchange and fluid supply can be done on orbit and that the major elements of the system can be designed, built, and operated.

The cargo-bay demonstrations are conducted after the ground demonstrations so they can benefit from the results of the ground demonstrations. A smaller number of demonstrations will be required for the cargo bay and a set of equipment that satisfies the requirements of the experiments to be conducted in the Orbiter was selected. The derived objectives of the cargo-bay demonstrations are to confirm the ground tests, show that there are no anomalies, to demonstrate that module exchange and on-orbit refueling can be done, to incorporate servicing equipment that is representative of expected operational equipment, to limit risk of failure, to demonstrate the servicers adaptability to change, to show compatibility of the OMV and servicer schedule, and thereby to increase confidence in the technology and the program. The cargo-bay demonstrations are considered to be a significant step on the path to obtaining user acceptance of on-orbit servicing.

A flow chart of the approach used for revising the cargo-bay demonstration plan is shown in Figure 6-1. This process reviews the technical, safety and cost aspects of the project, selects an arrangement of equipment in the Orbiter cargo-bay, and combines the results into a coherent plan. The first step in revising the plan for the cargo-bay demonstrations from the prior work was to review the existing plan and determine the key cost factors. The objectives of the plan and the associated requirements were reviewed and updated to reflect the current views on the development of the servicer. The cargo-bay plan will meet the objectives of demonstrating the basic

activities of module exchange and fluid resupply. Additional activities are limited to those items necessary to support these primary servicing tasks. Optional elements that can enhance the program are described, but are not included in the basic program. Several trade studies were performed to select the activities and configuration for the cargo-bay demonstration.

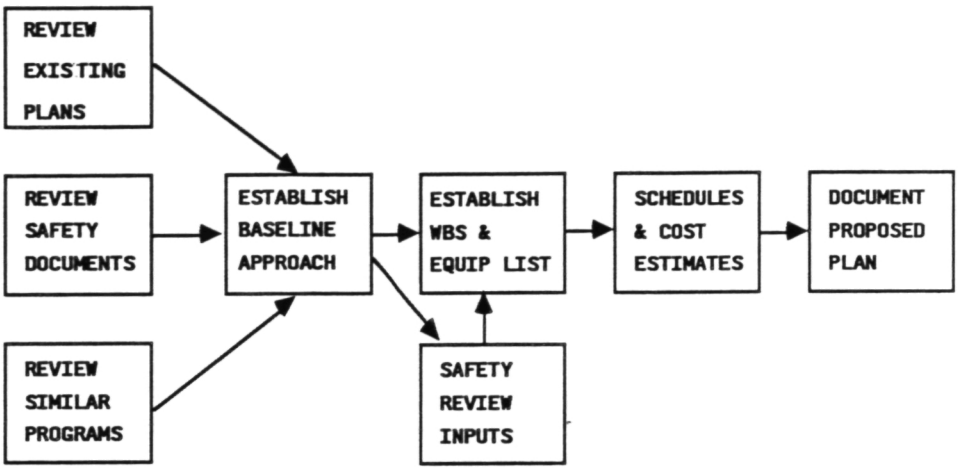

Figure 6-1 Cargo-Bay Development Program Plan Approach

A review of the appropriate Shuttle safety requirements was made to determine their effect on the program and whether or not there were alternatives that could reduce the cost. For example, it was recommended that the use of pyrotechnic devices and propellants should be avoided, as they required a significant amount of safety work due to their hazardous nature.

A review of similar type programs was made to determine how they were able to reduce their program costs. These included the Weststar/Palapa rescue mission, the Solar Max repair mission and a demonstration of storable fluid management techniques. Cost and technical information was collected for these programs. The basic plan was formulated with the information gathered as part of these reviews. The basic approach was used to generate a work breakdown structure and equipment lists (see Appendix A). These were made to a level of detail that permitted the major analysis and test activities to be identified.

A review of the plan was made by one of Martin Marietta's Shuttle integration safety engineers, to insure that all major activities necessary to meet the safety requirements were included. We recognize the importance of safety and have included the necessary tasks in our plan.

These documents and information were used to produce the plan for the cargo-bay demonstrations. Schedules and cost estimates were developed to meet the requirements of the plan. These were reviewed to assure that they were realistic and fulfilled the objectives of the program. The final step was to document the work as part of the development program plan and this study final report.

The prior study addressed the source and eventual utilization of the cargo-bay demonstration hardware, in particular the servicer mechanism itself. The early suggested approach had been to upgrade the on-orbit servicer Engineering Test Unit (ETU). The recommended approach for this study is to design and fabricate a new set of equipment that will be better than the ETU but will not be as expensive as an operational unit. The ETU was built in 1977 using early 1970's technology. The cargo-bay servicer should be more representative of what will be used for the operational system that will probably use late 1980's technology. The differences are in sensors, motor types, digital vs. analog computations, and local area networks for communications. The ETU would also have been in use for ten years by the time it was flown. A ground unit is needed for support during the cargo-bay demonstration flights. The cargo-bay demonstration equipment can be used as the ground unit during use of the operational servicer. While the servicer mechanism is a significant cost item, it is not a dominant one. A 50% reduction in the servicer mechanism cost corresponds to a 14% reduction in total cargo-bay demonstration costs. The recommendation is to build a new servicer mechanism and associated electronics that will provide a high confidence in a successful cargo-bay demonstration yet will be significantly cheaper than an operational unit. The differences in cost will be due to lower program requirements, fewer reviews, and less extensive testing.

6.1 CARGO-BAY DEMONSTRATION REQUIREMENTS

The prior study, NAS8-35496, recommended two separate Orbiter flights and a cargo-bay arrangement with the on-orbit servicing equipment attached to the Multi-Mission Modular Spacecraft (MMS) flight support system (FSS). The first flight was to demonstrate module exchange in a variety of ways while the second flight was to demonstrate propellant resupply. A disk shaped spacecraft mockup was recommended to support the modules to be exchanged. The resulting 0-g demonstration was judged to be too expensive.

The emphasis has been changed for this study to a minimum cost 0-g demonstration that incorporates a few important servicing functions. However, a range of additional servicing functions are identified that can be incorporated into the plan. The demonstration of MMS servicing also received increased emphasis in this study. As a result, the following guidelines, or requirements, for development of the 0-g flight demonstrations were identified:

1) There will be only one demonstration flight;

2) The MMS triangular structure will be used as the basis for the spacecraft mockup;

3) The MMS module exchange direction will be axial with respect to the servicer;

4) A battery module with side interface mechanism will be used to demonstrate radial direction exchange;

5) Access to the PM-1 propulsion module will be provided for demonstrating propellant resupply;

6) The short (45 in.) servicer arms will be used instead of the long (79 in.) servicer arms;

7) It is desirable to carry the MMS equipment to orbit on its flight support system;

8) The MMS docking probe adapter will be attached directly to the servicer without the servicer's primary docking equipment.

The single demonstration flight is recommended as a way of reducing costs. Use of the MMS triangular structure as a basis for the spacecraft mockup increases the involvement of MMS equipment in the demonstration. It also should reduce cost because a set of flight qualified hardware is available at GSFC. The MMS module exchange direction from the spacecraft was selected to be axial as that is the direction recommended for normal operations (see Section 3.0 and Figure 3-4). The servicer docking probe is fitted with a hinged adapter so the servicer base (docking post) can be swung to either side permitting the MMS modules to be exchanged in an axial direction. This simplifies the module exchange process and permits exchanging modules on either side of the grapple fixture (used for docking). If all three modules are to be exchanged, then a second docking must be performed. It was recommended that each future MMS spacecraft be fitted with two grapple fixtures so that any of the three modules could be exchanged.

With regard to requirements 3), 4), and 5) a representative list of candidate activities that might be included is presented in Table 6.1-1. The following paragraphs summarize the different categories.

The module types include the several typical modules and various types of connectors. The two basic types of module exchange are represented by a MMS module (axial exchange) and a battery module (radial exchange). The propellant tank module is considered a special case as fluids are more likely to be resupplied than their container replaced. A remote servicer will be capable of opening access doors and performing simple servicing functions. These might involve the replacement of batteries or the removal of samples for return to earth.

Table 6.1-1 Candidate Cargo-Bay Demonstration Activities

Module Type - Battery module - Multi-Mission Modular Spacecraft type module - Propellant tank module - Electrical connection interface unit - Propellant resupply module with interface unit - Access door - Electrical connector - Fluid in-line coupling - Wave guide connector - Fiber optics connector - Thermal connector
Interface Mechanism Type - Lightweight side interface mechanism - Alternative interface mechanism concepts - Hinged access cover drive
Special Tools - MMS module servicing tool - Other interchangeable adapter tools - Refueling/resupply interface unit - Hose or cable management device - Propellant in-line coupling drive
Direction of Module Motion - Near axial - Far axial - Near radial - Compound motions

The two most used types of interface connectors are electrical and fluid. Most module interfaces include one or the other of these two. The electrical interfaces can include electrical power, instrumentation, data, and control signals. The size and number of connectors varies with the application. Fluid connectors can handle propellant, coolants, pressurants, and fluid supply. The transferring of cryogenic fluids is considered a special subset of fluid

connectors. There are a number of advanced types of connectors that are not widely used. These include connectors for wave guides, fiber optics, and thermal energy transfer.

There are a number of different types of interface mechanisms that have been developed for use with modules. Most of them have been developed for specific applications. The servicer is not affected by the actual type of mechanism used, but it does need to have a standard interface or an adapter tool to operate the mechanism. A mechanism was developed as part of an earlier IOSS contract that attaches to the side of the module. The servicer arm interface consists of an attachment point and a drive unit. There is a need to standardize these interfaces, allowing for the necessary functions. The three primary functions are the physical attachment, a method of operating the interface mechanism, and an electrical connector to communicate with and control the module. It is possible to replace some of these functions with the interfaces of the docking probe of the servicer, but a standard interface unit should have all three.

Special tools are required to perform some servicing activities. This is especially true when the original spacecraft element was not designed for remote servicing. Their use permits the servicer to be extremely adaptive to a variety of needs. There are a number of tools that have been developed for special functions. For example, an interface unit has been developed by NASA - JSC which permits the resupply of fluid systems. In addition to the actual interface mechanisms, a system is required to manage the hoses. These types of special tools greatly enhance the potential of the remote servicer.

There are a number of ways by which a module can be removed. The first, and probably the easiest is to remove the module in the axial direction. The trajectory of the module being removed is parallel to the axis of the docking probe of the servicer. The second basic trajectory is to remove the modules in the radial direction. Again this is with respect to the docking probe axis. These two cases require the servicer to move in a single direction during the removal

process. By being along one of the principal axes of the servicer, the control is reasonably simple. The third case is where the module is removed along a direction that is not parallel to one of the principal axes of the servicer. This requires the servicer to move in a compound motion. This type of operation requires much more complicated control software. Although the IOSS can perform any of the three trajectories, given the proper software, it is recommended that the first two approaches be used whenever possible.

A minimum set of activities from Table 6.1-1 is:

1) Exchange of an MMS module in an axial direction;

2) Exchange of a battery module with a side interface mechanism;

3) Resupply of propellant through an umbilical connection.

These three activities are the most important ones and cover all of the basic servicing functions. The other candidate activities of Table 6.1-1 can be considered for addition to the basic plan at a later time.

The short (45 in.) servicer arm lengths are recommended for the cargo-bay demonstration rather than the longer (79 in.) arm lengths recommended for the operational servicer. All three recommended activities can be accomplished with the short arms and the resulting configuration should be less expensive. Shorter arms imply lower joint torque and thus smaller joints and lower electrical power requirements. The shorter arm lengths are also appropriate if it is decided to use the cargo-bay demonstration servicer as the 1-g unit after completing its flight objectives.

With regard to Requirement 7, the decision to use the MMS triangular structure as a basis for the spacecraft mockup leads to the desirability of using the MMS flight support system to support the MMS in the Orbiter cargo-bay during launch and return. The FSS was

designed to support the MMS and its use avoids the need for designing and flight qualifying an alternative support structure. A fully qualified FSS is available for use.

Figure 3-4 shows two docking mechanisms used between the servicer and the MMS, one on either side of an orientation joint. The docking mechanism closest to the servicer is all that is needed for most spacecraft servicing missions. However, the triangular configuration of the MMS led to the need for the orientation joint so that the MMS modules could be removed axially with respect to the servicer. The orientation joint permits the docking post to be straight during docking so that this operation is easier. The joint also permits reorientating the stowage rack so that it can be aligned for axial module removal of the modules on either side of the grapple fixture. The concept is that the orientation joint, and the second docking mechanism, would be an adapter that would only be used on those flights involving an MMS. However, as the 0-g demonstration flight will only involve an MMS configuration there is no need to be able to dock without the orientation joint. Thus, it is recommended that the previously proposed docking mechanism closest to the stowage rack be deleted in order to reduce cost and to increase stiffness of the docking post (Requirement 8).

An electrical connection is necessary to demonstrate that the servicer can take control of a disabled spacecraft and properly shut off and turn on spacecraft equipment to conduct orderly module exchanges. The recommended docking system is the RMS end effector and the grapple fixture with electrical connections. These equipments have a standard connector that can be used to provide the electrical connections necessary for control of the spacecraft subsystems.

A number of requirements regarding involvement of support systems for the on-orbit servicer were identified in the prior study. These are:

1) The Orbiter Remote Manipulator System (RMS) should be involved in the demonstration because the RMS will be part of many servicer operations scenarios;

2) Electrical power, attitude control, data transfer, and thermal control assistance should all be provided by the Orbiter as the Orbiter is the carrier vehicle, which normally provides these functions;

3) Servicer control station should be provided in the Orbiter to simplify the communications paths for control;

4) The adequacy of ridigizing the docking connection as well as its alignment accuracy should be checked as part of the cargo-bay demonstrations.

Additionally, the cargo-bay demonstration objectives of Section 4.3.1 can be thought of as programmatic requirements and they were considered in developing the definition of the cargo-bay demonstration.

There will also be other sets of requirements placed on the equipment by other interfacing systems. One example is the set of safety requirements placed on any equipment that is carried or operated in the Orbiter. The Johnson Space Center has established a process for the safety review of all such equipment. A series of four safety reviews are conducted on each project. Areas of concern include: structural strength; potential for debris in cargo-bay; rupture of sealed containers; flammability and toxic outgassing of materials used in the crew cabin; and effects of STS environments especially vibroacoustics. These requirements must be met to the satisfaction of JSC safety personnel.

6.2 CARGO-BAY DEMONSTRATION ELEMENTS

The elements involved in the cargo-bay demonstration can be separated into the following groups:

1) Space Transportation System Support;

2) Servicer System;

3) Spacecraft Mockup;

4) Airborne Support Equipment;

5) Ground System.

Each of these groups are discussed in turn. Certain of the cargo-bay demonstration elements are shown in Figure 6.2-1 so they may be more readily visualized in the following discussion. The flight support system is part of the airborne support equipment and will be provided by GSFC. The Multi-Mission Modular Spacecraft is the spacecraft mockup where the basic triangular structure, the MMS module, and the PM-1 propulsion module will be provided by GSFC. The ground monitoring station can be located at the JSC Mission Operations Control Center or at the MSFC Huntsville Operations Support Center.

The servicer control station will be mounted on the Orbiter aft flight deck so that the operator can look out one of the windows and view the module exchange operations. A special stowage rack configuration has been selected for the cargo-bay demonstration to minimize the launch and return length in the cargo-bay. The servicer mechanism is shown mounted on a representative docking post. An RMS end-effector is used as a docking mechanism and is mounted at the end of the docking post along with the orientation joint used for MMS module exchange. Also shown on the stowage rack is the fluid resupply module with its fluid tanks and hose management device.

The hardware that must be specially built or obtained for the cargo-bay demonstration is shown in Figure 6.2-2 organized into the groups used in the following discussion.

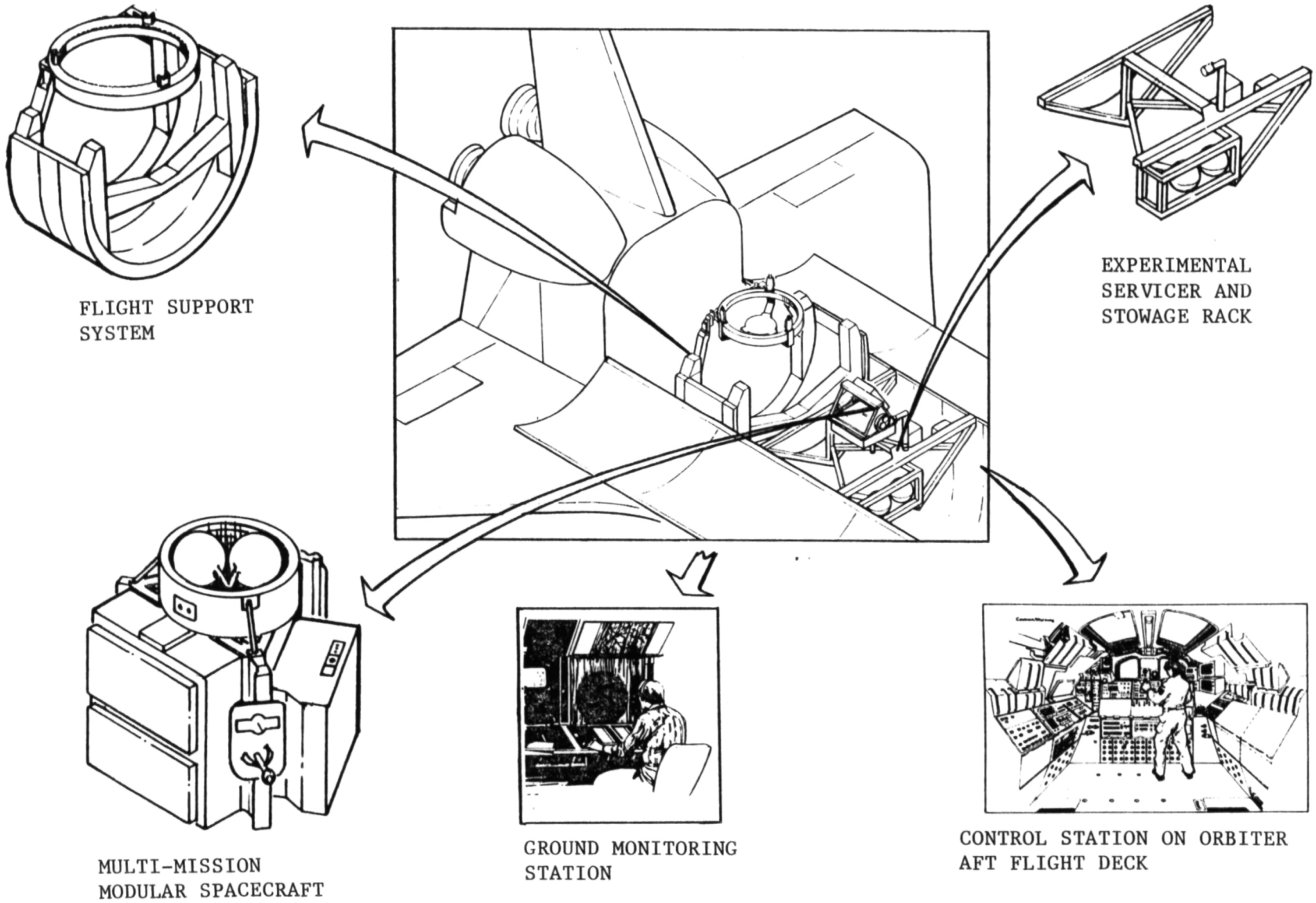

Figure 6.2-1 Cargo-Bay Demonstration Equipment

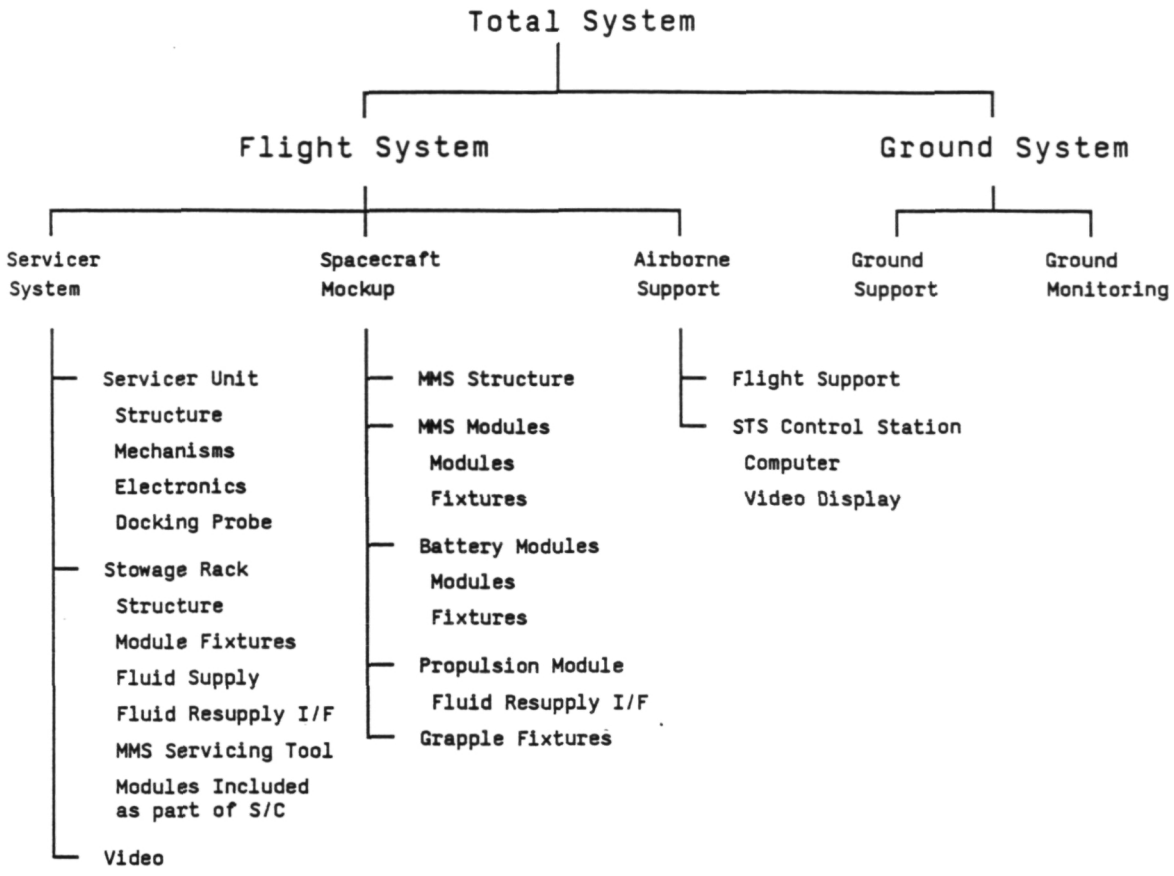

Figure 6.2-2 Cargo-Bay Demonstration Hardware Breakdown

The equipment organization of Figure 6.2-2 was also used for the Work Breakdown Structure (WBS), which is presented in Appendix A. The WBS was prepared to aid in organizing the project so that major cost items and activities such as environmental tests would not be overlooked.

During the prior study, demonstration sequences were prepared for each of the two cargo-bay demonstration flights. The first flight involved an estimated 1010 min and the second involved an estimated 725 min. Much of that time involved using the manual control mode to perform servicing operations. With the exchange of fewer modules and use of only the unassisted Supervisory control mode, the flight operations should take approximately nine hours. Thus, the servicer system demonstration should be effected in one day by the astronaut crew.

6.2.1 Space Transportation System Support

Certain of the equipment required for the servicer cargo-bay demonstration is auxiliary equipment available for use on or with the Orbiter as part of the Space Transportation System. This equipment is listed in Table 6.2-1. Its provision, control, and use should present no difficulties.

Table 6.2-1 Space Transportation System Equipment

Space Shuttle including Orbiter
Remote Manipulator System
Attitude control, electrical power, data processing, and thermal control assistance
Communication links
Cargo-bay cameras
RMS cameras
Control center consoles

As control of the module exchange process will be totally at the Orbiter, the need for continuous two-way communications with the ground is lessened. Ground personnel will monitor the servicing operations, however, continuous monitoring is probably not required. Ground personnel can only tell astronauts what is happening and advise them of suggested actions. They can not control the servicer mechanism directly.

It may be useful to have a second astronaut, perhaps the RMS operator, controlling the RMS and cargo-bay cameras. The second astronaut could also operate a hand-held motion picture camera to supplement data collection by the video cameras.

6.2.2 Servicer System

The servicer system includes the servicer unit, stowage rack, and video system. The servicer unit includes its structure, the mechanism,

ORIGINAL PAGE IS
OF POOR QUALITY

electronics, and docking probe. The servicer system structure is the tube connecting the mechanism to the stowage rack.

A representation of the servicer system mechanism is shown in Figure 6.2-3, which is a photograph of the Engineering Test Unit with the counterbalances blacked out. The 0-g servicer mechanism will externally look much like the ETU and will have the same length arm segments (45 in.). The joint ordering will be the same although the design of some joints, e.g., shoulder pitch, may well be different. The position feedback elements will also be different.

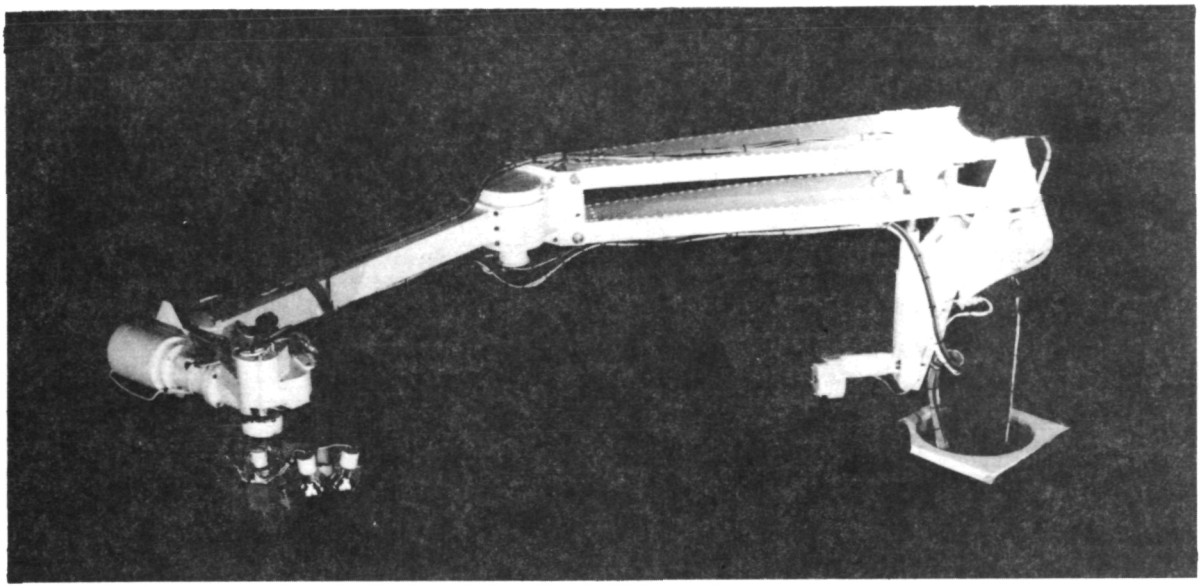

Figure 6.2-3 Representative Servicer Mechanism Configuration

The 0-g electronics will be packaged for mounting on the stowage rack. The electronics will include most of the Servicer Servo Drive Console functions such as: motor drive amplifiers; mode control logic; signal conditioning; precision power supplies; and interfaces with the computer and the Orbiter data processing and communications systems.

The docking probe will include an RMS end-effector with electrical connector and the orientation joint, or hinge, for aligning the stowage rack with the appropriate faces of the MMS triangular structure. The orientation joint will have additional travel so that the docking probe can be folded back on itself. This will allow the stowage rack to be mounted higher in the cargo bay for better viewing of the module exchange process while providing clearance for closing the cargo-bay doors.

The stowage rack configuration is shown in Figure 6.2-4. It is a simple truss configuration made especially for the cargo-bay demonstration. The stowage rack mounts in the Orbiter sill trunnions and uses one keel fitting to provide lateral location. In addition to the "good" battery and MMS modules, temporary locations for each of these modules is provided. There is also a storage location for a 0-g Module Servicing Tool modified for use with the servicer system. The fluid resupply system is shown as a two tank module on the forward end of the stowage rack fastened to the main structural cross member. A hose management system and umbilical connection mechanism are included in the fluid resupply module. The intent is to overdesign the stowage rack to avoid the need for environmental test except perhaps for the non-operational vibroacoustics test.

The video system will consist of a charge coupled device (CCD) video camera mounted on the servicer mechanism end-effector and a camera control box located on the stowage rack. A CCD camera is used because it will not be damaged if it inadvertently looks at the sun and because the sensor has a very short length that satisfies the packaging requirements of the servicer end-effector. The resolution of the video camera need only be on the order of a 200 line TV system.

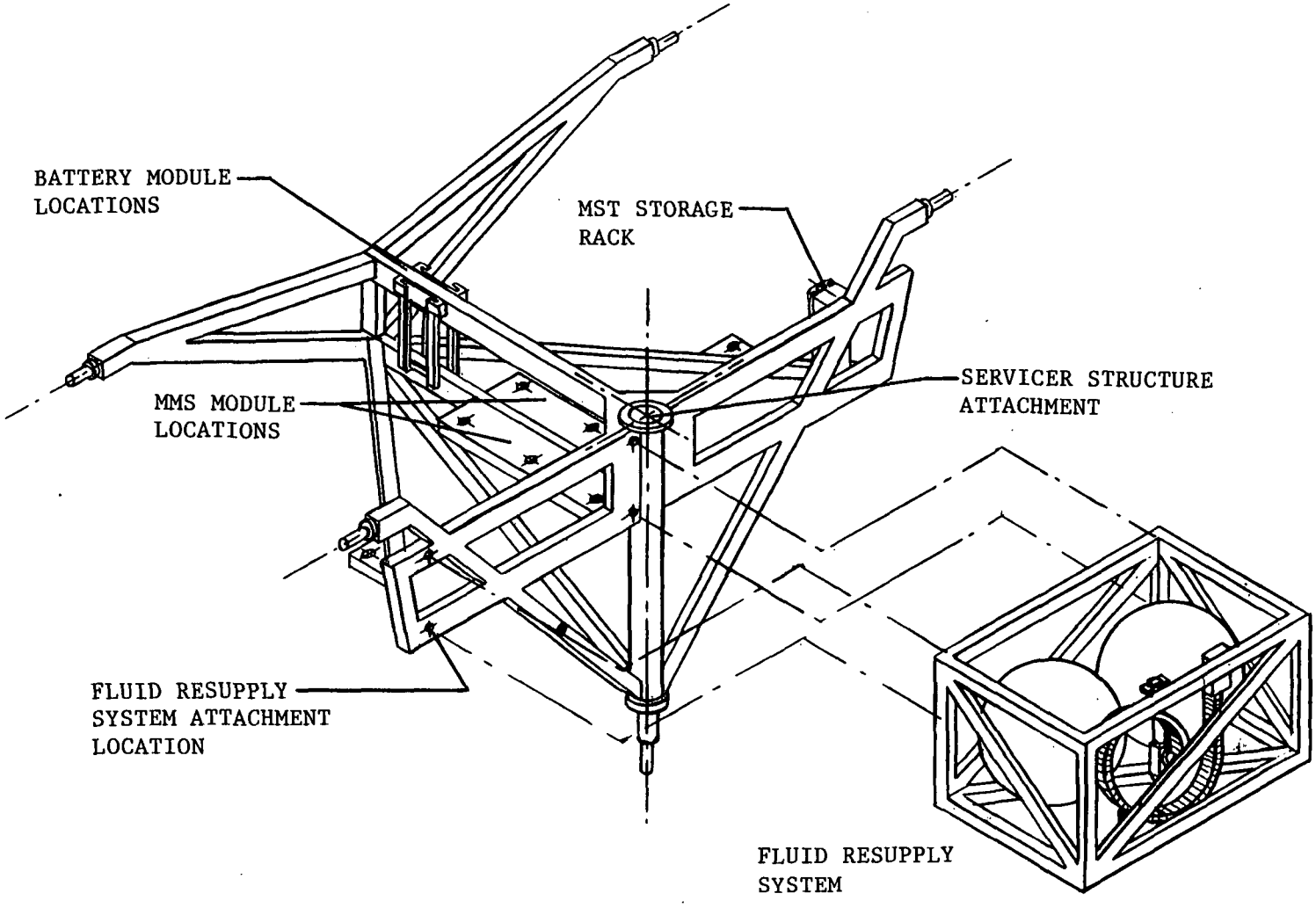

Figure 6.2-4 Stowage Rack Configuration

6.2.3 Spacecraft Mockup

The spacecraft mockup is based on the use of a MMS module support structure as shown in Figure 6.2-5. A development version of this triangular structure is available at GSFC and it could be used for the cargo-bay demonstration. Its use not only saves design and fabrication costs, but also should save some testing cost as the unit was designed and built to meet the STS environments. While the figure shows one grapple fixture, a second grapple fixture is needed for the cargo-bay demonstration.

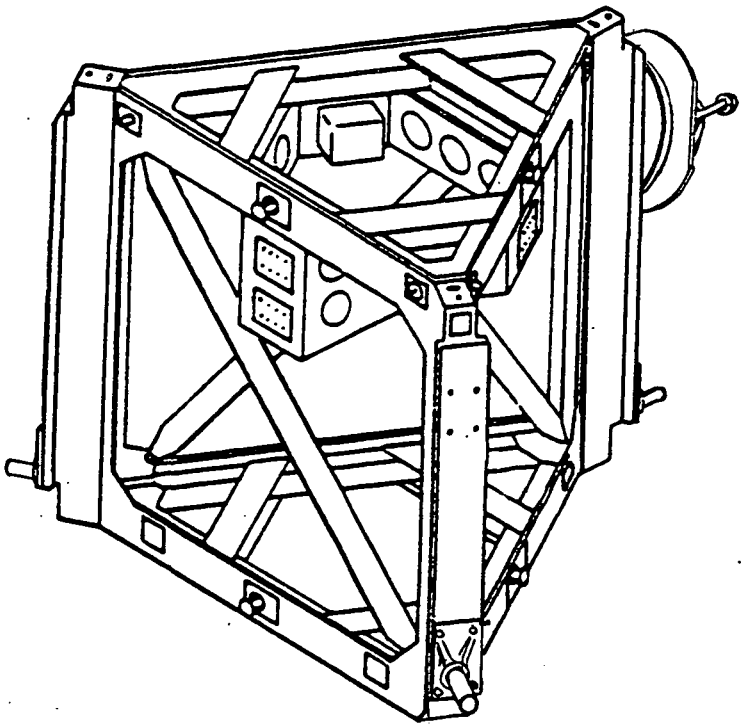

Figure 6.2-5 Module Support Structure

The spacecraft mockup will also require a MMS module, a battery module, a fluid tank, fluid connections and control, wiring, and an electrical umbilical at one of the grapple fixtures. The MMS module will also be provided by GSFC. A complete MMS module is not required. Only the physical and electrical interfaces and the module structure are

required. Several mockup modules are available at GSFC that should be adequate. The battery module with its side interface mechanism for radial module removal and electrical connections will be new. The fluid tank can be a PM-1, a PM-1A, or any similar tank that is available and can be easily qualified for flight. A set of fluid piping equipment including flow control, flow measurement, quick disconnect, tank pressurization, etc. will also be required. It is expected that this equipment can be obtained on loan from GSFC, or from the on-going JSC fluid resupply program. Some work will be required to integrate the fluid handling equipment into the MMS module support structure. The wiring will be for control, status monitoring and thermal control. It will be designed and fabricated for this specific use.

One method for arranging the three candidate activities on the MMS triangular structure is shown in Figure 6.2-6. The MMS module would be attached on side A in the normal way. Side B would have the battery module mounted to demonstrate radial module exchange. The PM-1 propulsion module umbilical connection is shown near the end of the structure where the PM-1 is normally fitted. A special fitting would need to be provided to demonstrate propellant resupply.

Figure 6.2-6 also shows the 20 in. minimum operating radius and the 82 in. maximum operating radius that correspond to the 45 in. arm segment lengths of the servicer Engineering Test Unit. A servicer mechanism with these arm lengths is recommended as it will be less expensive that one with the 79 in. arm segment lengths of the flight version of the Integrated Orbital Servicer System mechanism. One effect of the short arm lengths is that the battery module will have to be one to three inches smaller than the 24 in. cube used for the 1-g demonstrations. However, this is not felt to be a significant factor.

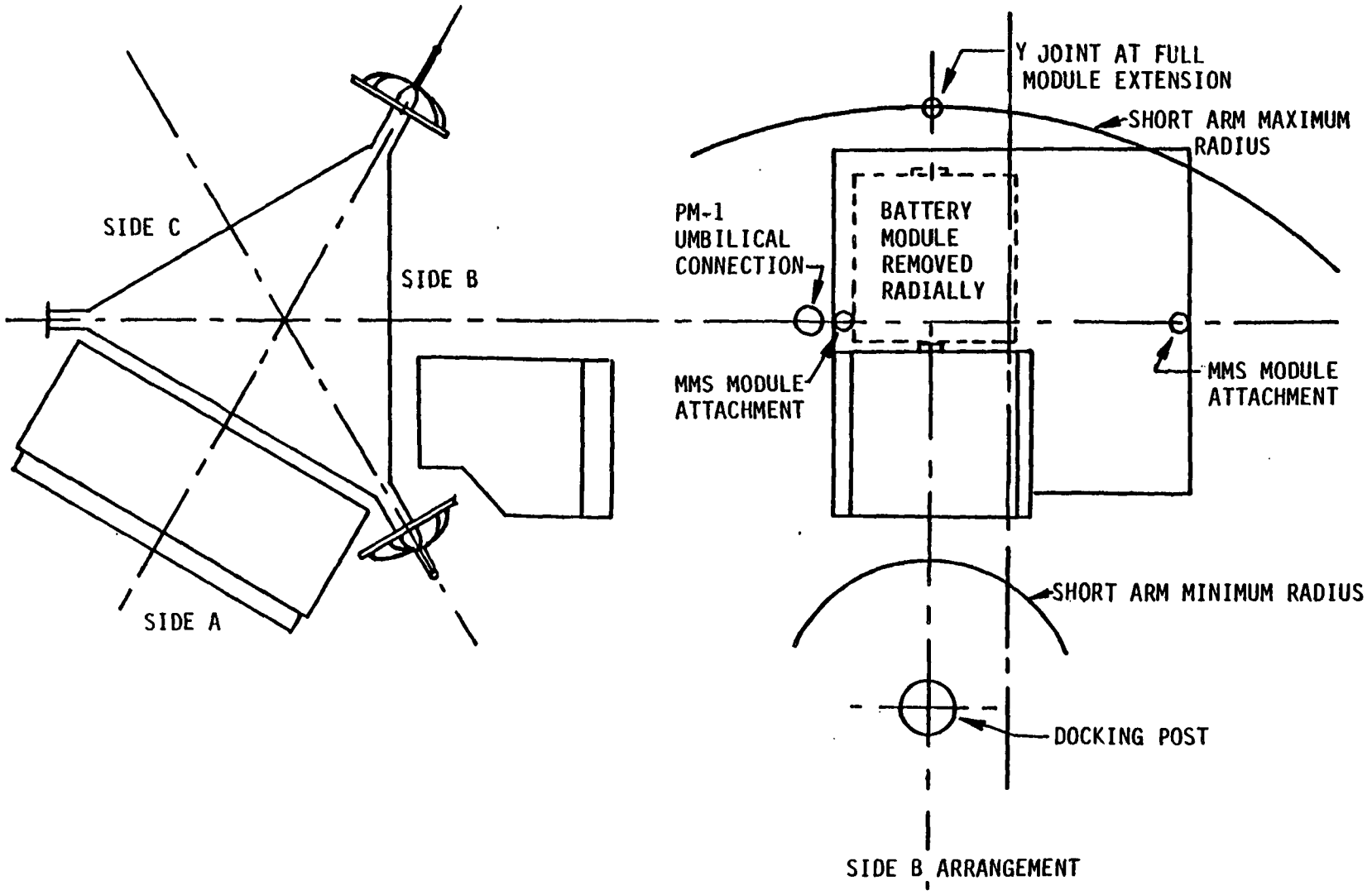

Figure 6.2-6 0-g Spacecraft Mockup Arrangement

A preliminary layout of the allowable battery module size based on ETU mechanism arm lengths was made. In addition to requiring a smaller module size, it was found that the module attach point would have to be approximately five inches back from the MMS module centerline. There is also an interaction of the relative locations of the MMS module attachments, the battery module attachment, and the second grapple fixture location. It is desired to have the battery module motion along a radial line from the docking post. The primary MMS grapple fixture is in a plane half way between the MMS module attach points. Use of the secondary grapple fixture location, nearer the lower trunnion fittings, as shown in Figure 6.2-6, provides a larger space for the location of additional servicing functions.

6.2.4 Airborne Support Equipment

The airborne support equipment consists of the MMS Flight Support System and a control station on the Orbiter Aft Flight Deck. The FSS is shown on Figure 6.2-1 and consists of cradles A, A' and B. All three cradles are necessary to properly support the spacecraft mockup and to deploy it for easy capture and transfer. Operations with the FSS have been developed and all of the necessary ancillary equipment is available. It is also fully redundant in terms of operational functions. Equipment for connecting into Orbiter systems and a control and display panel exist.

The prior study recommended that the servicer control station be located on the ground because that case is representative of the operational case and so that the effects of the two way communication links could be brought into the demonstration. This was not judged to be a low cost approach because of the ground station costs and the Orbiter integration costs. The minimum cost case will be for servicer control from the Orbiter if the crew training and integration costs can be constrained. The increased involvement of MMS equipment, especially the flight support system, and the RMS involvement imply that a certain amount of crew training will be necessary in any case.

A minimum cost approach would involve use of only a few control modes during the 0-g demonstrations. The backup, or Manual-Direct, control mode is necessary to overcome computer failures. It is recommended that various forms of the Supervisory and Manual-Augmented control modes be investigated in the 1-g demonstrations and that one control mode, in addition to Manual-Direct, be selected for the 0-g demonstrations. It will be assumed here that the selected mode will be a form of the unassisted Supervisory control mode. If another control mode is selected, then appropriate changes in the 0-g demonstrations will need to be made.

The use of a ground control station, inclusion of the two way communication link effects, and involvement of other control modes can be considered as alternative servicing functions that can be brought into the 0-g demonstrations if time and funding permit.

The resulting control station at the Orbiter Aft Flight Deck will include a minicomputer, a keyboard and display unit, and a television monitor for display of the servicer end effector camera picture. Standard Orbiter interconnecting cables and interfaces to the Orbiter communication links will be used. Where possible, equipment will be borrowed, or rented. It is expected that 10 to 12 thousand lines of code will be required in the airborne computer. Depending on the computer selected, 256K bytes of internal memory and 5 M bytes of hard disk memory will be required.

6.2.5 Ground System

The ground system consists of ground support and ground monitoring. The ground support consists of the usual development, test, and handling equipment for the flight articles as well as use of the 1-g servicer system demonstration facility at MSFC. Development, test, and handling equipment for GSFC supplied flight equipment will also be provided by GSFC. The remainder of this equipment will be new. It is expected that the MSFC 1-g servicer demonstration facility will be set up to represent the flight situation and that it will be used for procedures development, flight crew training and anomaly investigation.

The ground monitoring equipment will consist of consoles and display equipment located either at JSC or at MSFC. Existing equipment should be adequate with some software development to be able to generate appropriate displays. Data will consist of joint angles, trajectory coordinates, TV views, and discrete events. The ground monitoring personnel will follow the planned scenarios and check that all planned events occur in the proper order and that no unplanned events occur. Ground personnel will not be able to control the servicer demonstration directly. Rather they will be able to inform the flight operator of any pertinent observations.

6.3 CARGO-BAY DEMONSTRATION CONFIGURATION ALTERNATIVES

The revised basis for the cargo-bay demonstrations indicated that the configuration, or arrangement of the flight equipment should be reevaluated. This section of the study final report identifies a range of alternative arrangements, does a preliminary screening, describes the resulting configurations, identifies selection criteria, and recommends a specific configuration.

6.3.1 Alternative Configurations

The major elements to be arranged in the Orbiter's cargo bay for 0-g demonstration of on-orbit servicing are:

1) The servicer mechanism and stowage rack;

2) The spacecraft mockup (based on the MMS triangular structure);

3) The MMS flight support system.

The arrangement for the servicing demonstration operations was addressed first and the arrangement for launch and return was evolved from the operational arrangement. The range of operational arrangements considered first were based on the following considerations:

1) The MMS triangular structure could be horizontal, vertical, or transverse with respect to the Orbiter. Variations from these cardinal directions were to be considered later if there were any specific advantages identified. The one variation identified had potential interference problems with the Orbiter cargo-bay doors and was dropped from further consideration. The MMS centerline directions result in three possibilities;

2) The servicer docking post, at the stowage rack, must be perpendicular to the MMS centerline. This is necessary so that the MMS is oriented for axial MMS module removal. The servicer docking post orientation increases the number of possibilities by a factor of two;

3) The servicer can be attached to the Orbiter, FSS, or MMS. Attachment to the MMS would be via the docking probe. The servicer attachment variations increase the number of possibilities by a factor of three;

4) The MMS will be attached to the servicer. However, the MMS could also be attached to the FSS if the servicer is not attached to the Orbiter or the FSS. No new arrangement possibilities are introduced by this consideration.

The number of possible arrangements is 18. Each of the candidates were defined and evaluated as shown in Table 6.3-1. The results of the evaluation are:

1) Five candidates are valid arrangements. These are: 2, 3, 9, 11, and 16;

2) Four candidates were variants of valid arrangements. Each variant was a 90 degree rotation of the MMS centerline or of the docking post direction. The variants are: 1 of 16, 8 of 11, 15 of 9, and 18 of 3;

Table 6.3-1 - Candidate 0-g Demonstration Arrangements

Arrangement Number	MMS Centerline Direction*	Docking Post Direction*	Servicer Attached to	MMS Attached to	Comments
1	Horizontal	Vertical	FSS	Servicer	Variant of 16.
2	Horizontal	Vertical	MMS	FSS	Valid Candidate.
3	Horizontal	Vertical	Orbiter	Servicer	Valid Candidate.
4	Horizontal	Transverse	FSS	Servicer	Inconsistent With FSS Orientation.
5	Horizontal	Transverse	MMS	FSS	Cargo-bay Width Limit.
6	Horizontal	Transverse	Orbiter	Servicer	Cargo-bay Width Limit.
7	Vertical	Horizontal	FSS	Servicer	FSS Capabilities Not Used.
8	Vertical	Horizontal	MMS	FSS	Variant of 11.
9	Vertical	Horizontal	Orbiter	Servicer	Valid Candidate.
10	Vertical	Transverse	FSS	Servicer	Inconsistent with FSS Orientation.
11	Vertical	Transverse	MMS	FSS	Valid Candidate.
12	Vertical	Transverse	Orbiter	Servicer	Cargo-bay Width Limit.
13	Transverse	Horizontal	FSS	Servicer	FSS Capabilities Not Used.
14	Transverse	Horizontal	MMS	FSS	Inconsistent with FSS Orientation.
15	Transverse	Horizontal	Orbiter	Servicer	Variant of 9.
16	Transverse	Vertical	FSS	Servicer	Valid Candidate.
17	Transverse	Vertical	MSS	FSS	Inconsistent With FSS Orientation.
18	Transverse	Vertical	Orbiter	Servicer	Variant of 3.

* Horizontal is parallel to the Orbiter X axis.
Vertical is parallel to the Orbiter Z axis.
Transverse is parallel to the Orbiter Y axis.

3) Four candidates were inconsistent in that an element orientation was transverse and it was to be attached to the FSS. However, the FSS cannot accept a transverse orientation. The inconsistent arrangements are: 4, 10, 14, and 17;

4) Three arrangements would not fit because the docking post had a transverse orientation and the stowage rack was to be down in the Orbiter cargo bay. These arrangements are: 5, 6, and 12;

5) Two arrangements had the servicer docking post axis in a horizontal orientation with the stowage rack attached to the FSS. These arrangements used only a minimum of the FSS capabilities. These arrangements are: 7 and 13.

The five valid candidate arrangements were selected for further evaluation.

6.3.2 Configuration Descriptions

Simple layouts were made for each of the five valid configurations and for a variant of arrangement 2. Figure 6.3-1 shows arrangement 2 in the operational and stowed configurations. The MMS is attached to the FSS and the centerline of the MMS is horizontal in the cargo bay. The servicer is cantilevered off the MMS and is not otherwise supported. There is marginal clearance around the mockups for servicer mechanism operation. When it is desired to go from demonstrations of MMS module exchange to demonstrations of battery module exchange, it is necessary to rotate the MMS using the FSS rotational system. As the MMS is rotated, the orientation joint in the servicer docking post is driven in the opposite direction so the stowage rack remains in a horizontal plane with respect to the Orbiter. This process is called a dual rotation to differentiate it from those arrangements that only involve operation of the servicer docking post orientation drive when switching from MMS to battery module demonstrations.

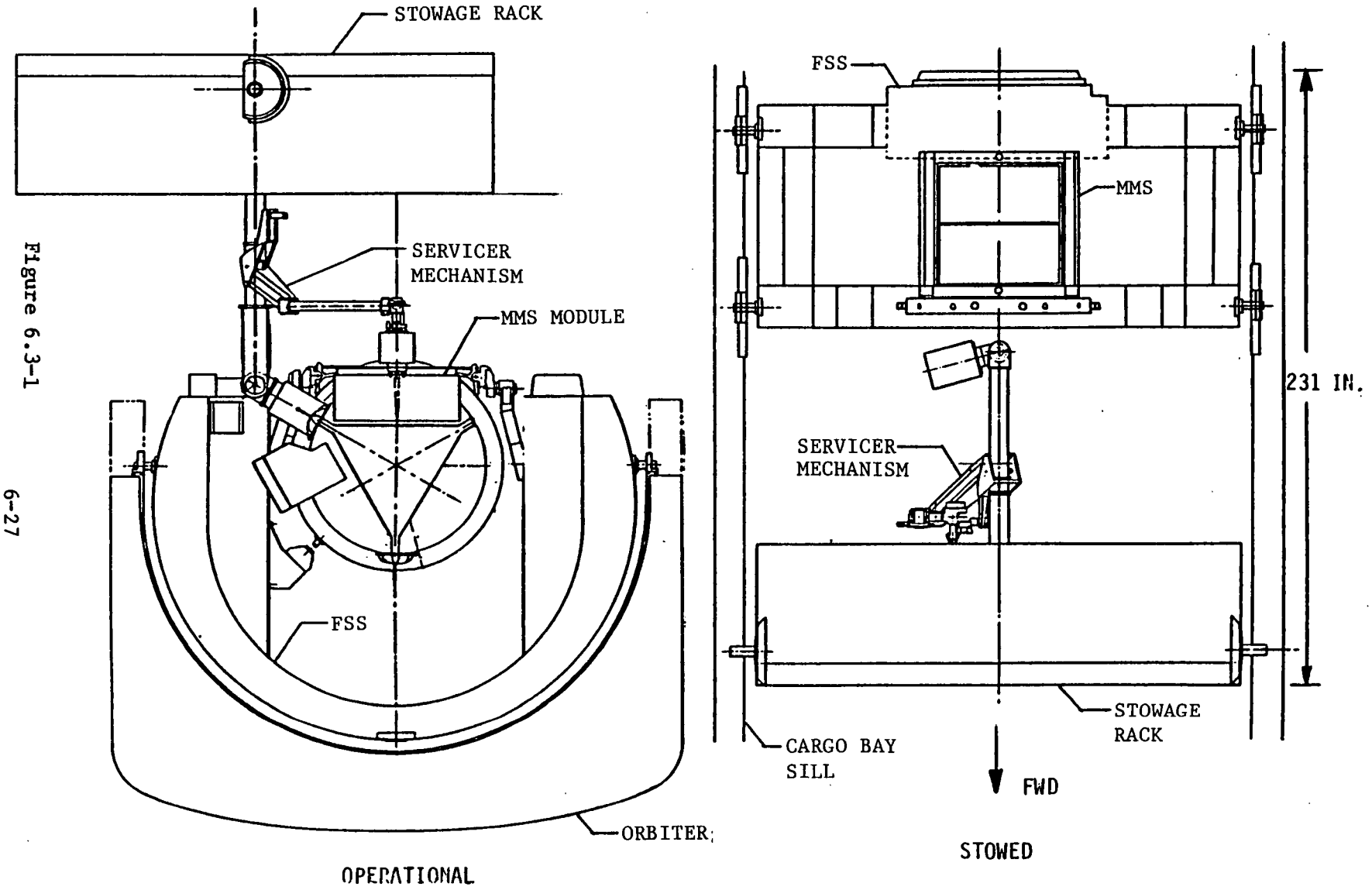

Figure 6.3-1 Cargo-Bay Equipment Arrangement 2

The stowed configuration shows the use of the FSS cradles A, B, and A prime to properly support the MMS during launch and return and to reorient the MMS during operations. The orientation joint on the servicer is used to fold the docking mechanism out of the way and thereby reduce the overall length of the stowed configuration. The docking post is not folded back. That servicing function is left as an alternative for later consideration. It would be good to be able to test the servicer mechanism deployment mechanism and it is advantageous to decrease the stowed length of equipment in the Orbiter cargo bay. However, the recommended approach is to delete servicer functions and reduce cost.

There are a number of difficulties with arrangement 2. It will be necessary to have a long umbilical from the servicer to the Orbiter for power, commands, and data transfer. It is not as easy to arrange for jettisoning this configuration as the docking mechanism, or the servicer mechanism, may be connecting the stowage rack to the MMS. Two sets of separation devices must be provided or else the MMS, and possibly the FSS, must be jettisoned with the servicer.

The most flexible part of the docking post and mechanism is the RMS end effector to grapple fixture attachment and it is next to the MMS. This means that the large mass of the stowage rack is cantilevered far out from the soft point in the structure. The result is an arrangement with a low stiffness and a low natural frequency.

Arrangement 3 is shown in Figure 6.3-2. The MMS is docked to the servicer that is fastened into the Orbiter cargo bay. The docking post is vertical and the MMS centerline is parallel to the Orbiter centerline. The MMS centerline could also be transverse to the Orbiter centerline, but viewing from the aft flight deck windows would not be as good. The use of intermediate angular positions to improve the viewing can be investigated during detail design. The operational clearance is excellent and the full range of arm motions can be exercised.

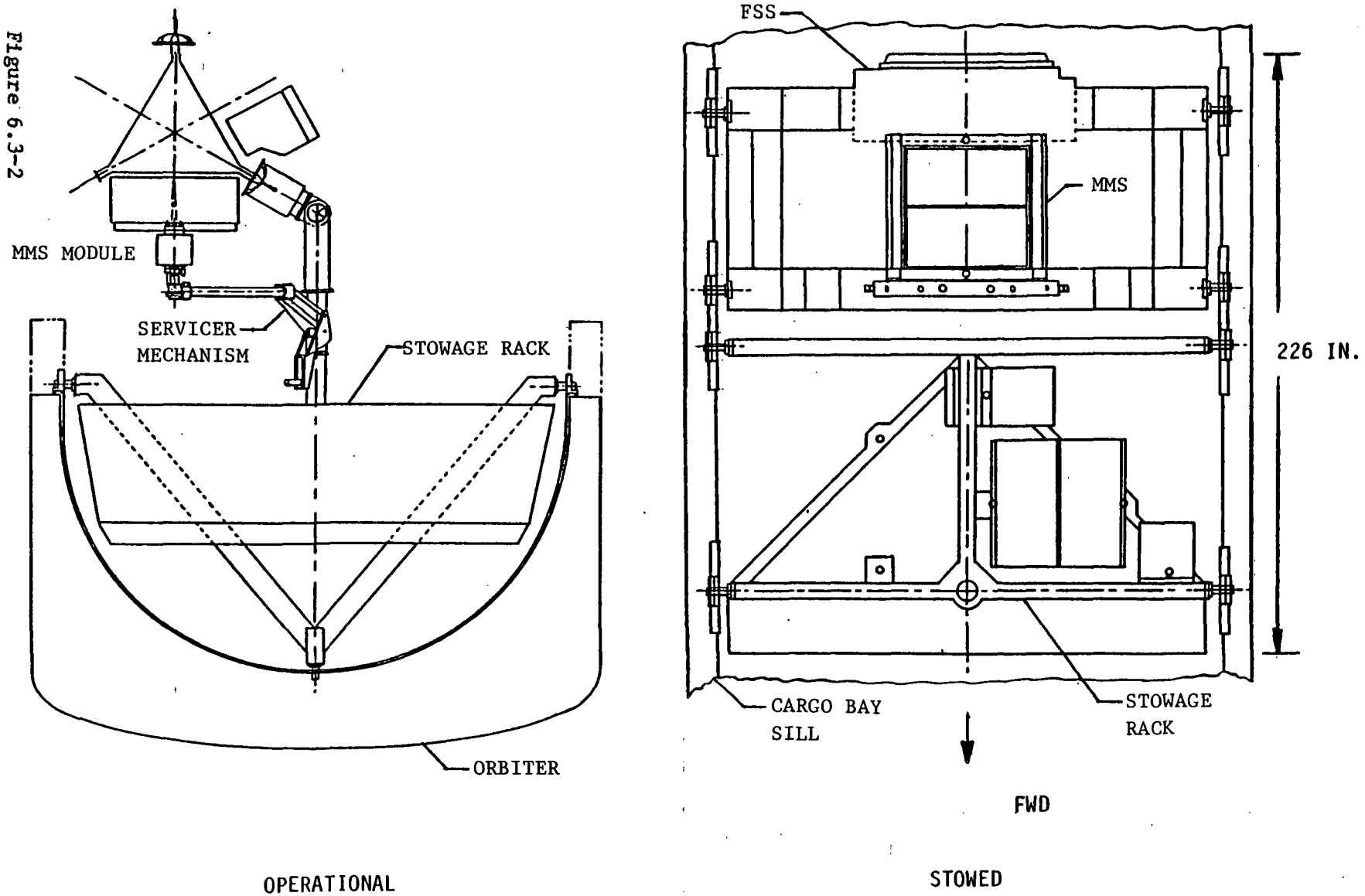

Figure 6.3-2 Cargo-Bay Equipment Arrangement 3

The stowed configuration for the MMS is similar to that for arrangement 2. The stowed arrangement for the stowage rack is the same as for the operational configuration except that the docking mechanism is folded back to allow the cargo-bay doors to close. A special form of the stowage rack is shown that is specially configured for the 0-g demonstration equipment and module arrangements. The arrangement 3 configuration of the stowage rack can also be adapted to some of the other arrangements.

The operational configuration of arrangement 3 does not include having the MMS fastened to the FSS. In this sense, some of the capabilities of the FSS are not well used. The stowage rack configuration does not lend itself to natural containment of loose modules during reentry and landing. Thus it will be necessary to carefully address how to assure that all modules and the servicer mechanism are well secured or jettisoned before deorbit is initiated.

Arrangement 9 is shown in Figure 6.3-3. The MMS is docked to the servicer that is fastened into the Orbiter cargo bay with the docking post horizontal. The MMS centerline is shown vertical to the Orbiter for better viewing from the aft flight deck, although the MMS centerline could also be transverse to the Orbiter centerline. The operational clearance is acceptable but there are some combinations of servicer mechanism position and MSS module orientation that must be avoided.

The stowed configuration of the MMS involves only the FSS cradle A prime. The other cradles were deleted to reduce length in the cargo bay. The servicer system stowage is similar to arrangement 2 except that it is stowed farther away from the FSS. This was necessary to provide room for the RMS end effector when docking the MMS to the servicer. The stowed length is almost 60 in. longer than the other arrangements. There are several ways to reduce the stowed length if it should become critical. The most obvious way is to have the stowage rack near the FSS during launch and then move it back, using the RMS, when setting up for the servicing demonstrations on orbit.

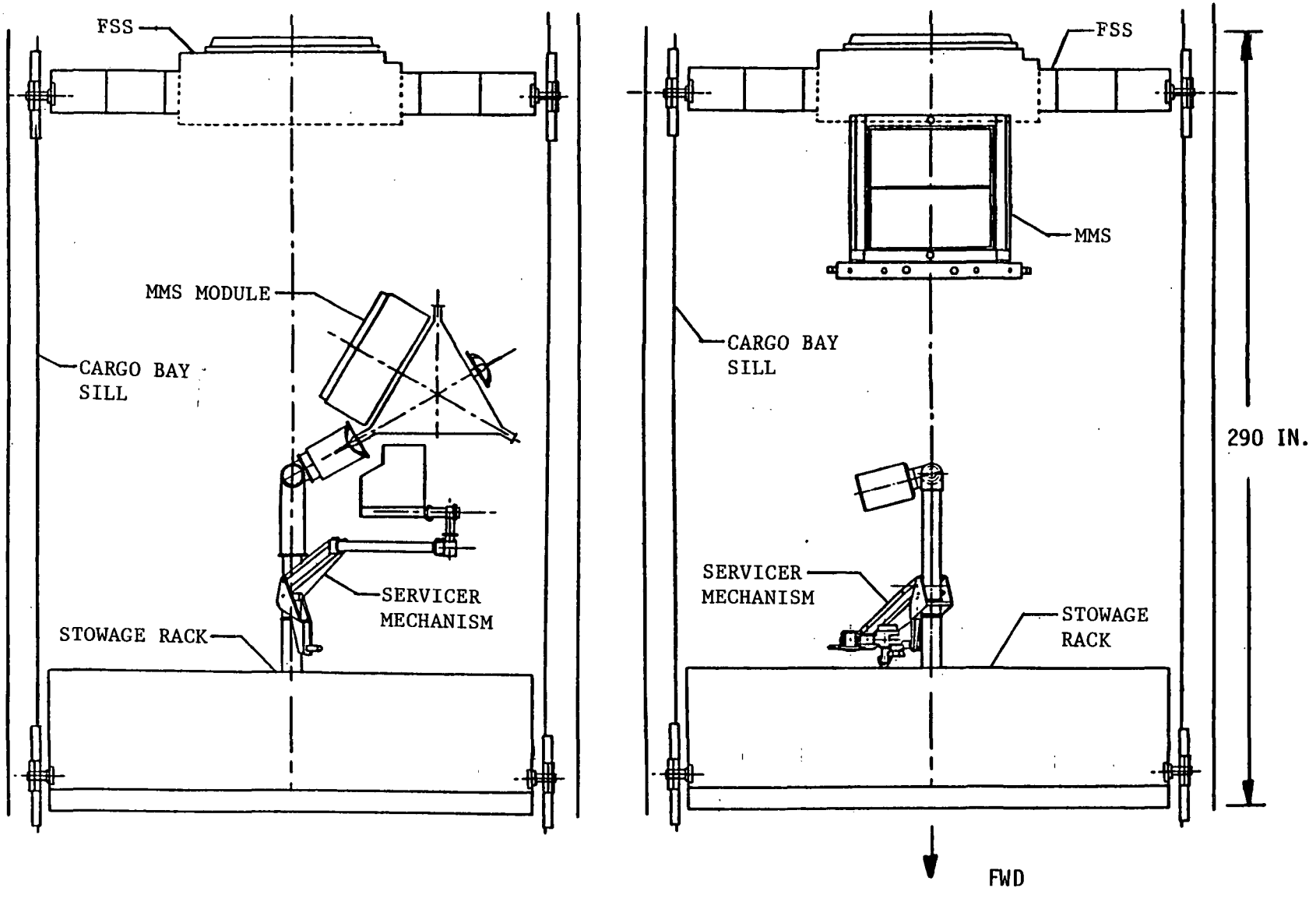

Figure 6.3-3 Cargo-Bay Equipment Arrangement 9

The view of a module exchange from the Orbiter aft flight deck will be obscured either by the stowage rack or by the FSS. The MMS is not attached to the FSS during operations so the full capability of the FSS is not used. There is a concern that the RMS reach might not be adequate to dock the MMS to the servicer. A second grapple fixture is required.

Arrangement 11 is shown in Figure 6.3-4. The MMS is attached to the FSS with the MMS centerline vertical with respect to the Orbiter. The servicer is docked to the MMS with the docking post axis transverse to the Orbiter. The docking post could have been parallel to the Orbiter centerline except that the view from the aft flight deck would be degraded. While not obvious from the figure, a portion of the stowage rack has been cut off so that an adequate clearance exists over the cargo-bay sill.

It is necessary to have an electrical umbilical between the cargo bay and the servicer to conduct commands, data, and power. It is difficult to jettison the servicer without undocking the MMS should the servicer fail while it is docked and attached to a module. The stowed length is near average for all arrangements and is such that the stowage rack will readily contain any improperly stowed parts during reentry and landing. As the servicer and stowage rack are cantilevered from the MMS, the docking system stiffness is low and could be a problem when the Orbiter thrusters fire. This is especially difficult if the arm is trying to place a module in the stowage rack when the thrusters fire.

The location of the docking post, only 38 in. above the Orbiter sill clearance line, restricts the range of operation of the servicer arm and will require careful planning to assure that proper clearance is maintained. This means that it is unlikely that representative trajectories can be used. As with arrangement 2, the servicer orientation hinge must be rotated in opposition to the FSS rotational drive when switching from modules on one side of the MMS to modules on the other side.

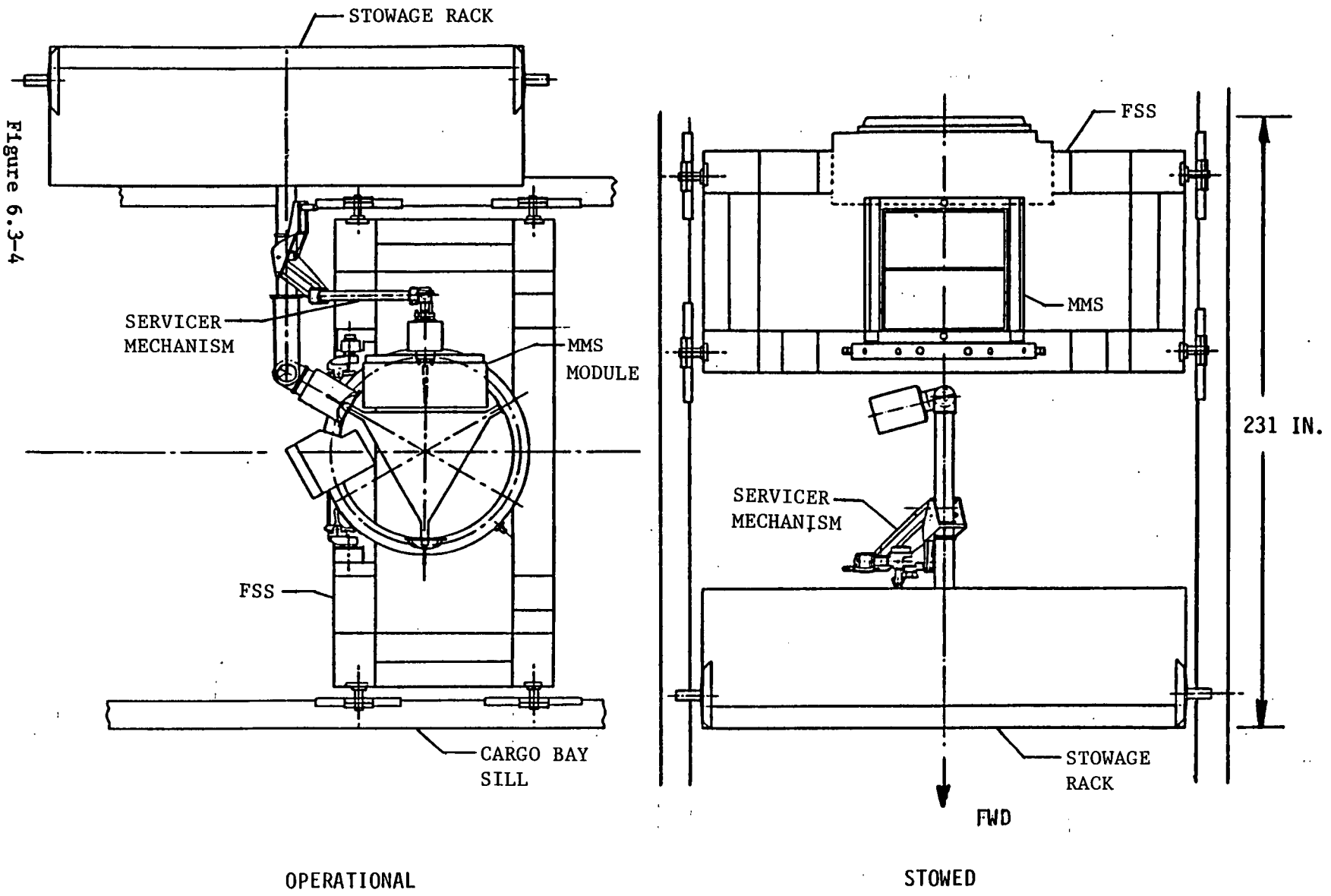

Figure 6.3-4

Figure 6.3-4 Cargo-Bay Equipment Arrangement 11

Arrangement 16 is shown in Figure 6.3-5. This was the preferred arrangement from the prior study before the MMS was used as the spacecraft structure. The stowage rack is mounted on the FSS and the FSS is used to elevate the stowage rack out of the cargo bay and to rotate the stowage rack and MMS so that it can be seen better from the Orbiter aft flight deck. The MMS could also be positioned transverse with respect to the Orbiter. However, there is little or no difference in the two arrangements. This configuration has the shortest stowed length as the MMS can be fitted in next to the servicer docking probe. A separate, new structure is needed to support the MMS in the cargo bay.

Wiring from the Orbiter to the servicer can be routed directly through the FSS cable management system and umbilical connections. This arrangement may cost a little more than the other arrangements because of the need to provide a separate launch and return support system for the MMS. The servicer stowage rack will require additional structure and adapters to properly interface with the FSS. The MMS is not used with the FSS although these two were designed to be used together. The MMS also needs a second grapple fixture.

A variation of arrangement 2 is shown in Figure 6.3-6. In this case the MMS grapple fixture is vertical in the Orbiter cargo bay and the docking post is tipped 60 degrees away from the Orbiter vertical. The variation avoids the dual rotation requirement of arrangement 2. However, there is an interference between the stowage rack and the Orbiter sill clearance volume. This means that the stowage rack must be cut off on both sides. There are also restrictions on the servicer arm motion and on the trajectories that can be accomodated. Because of these restrictions, it was decided to drop the variant from further consideration and to retain arrangement 2 for further evaluation.

6.3.3 Use of the RMS During 0-g Demonstrations

It is recommended that the Orbiter remote manipulator system (RMS) be used for docking the MMS to the servicer or the servicer to the MMS.

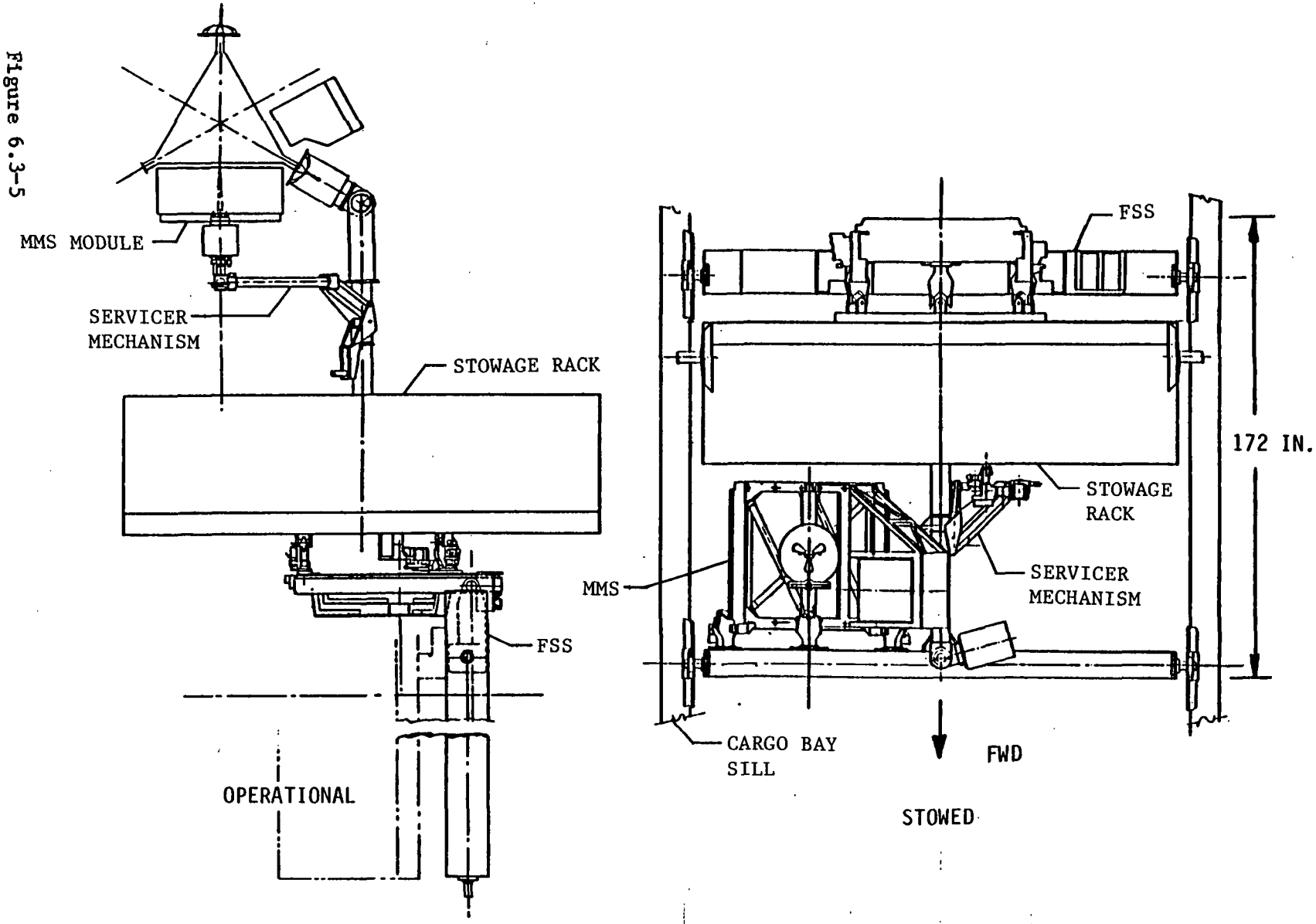

Figure 6.3-5 Cargo-Bay Equipment Arrangement 16

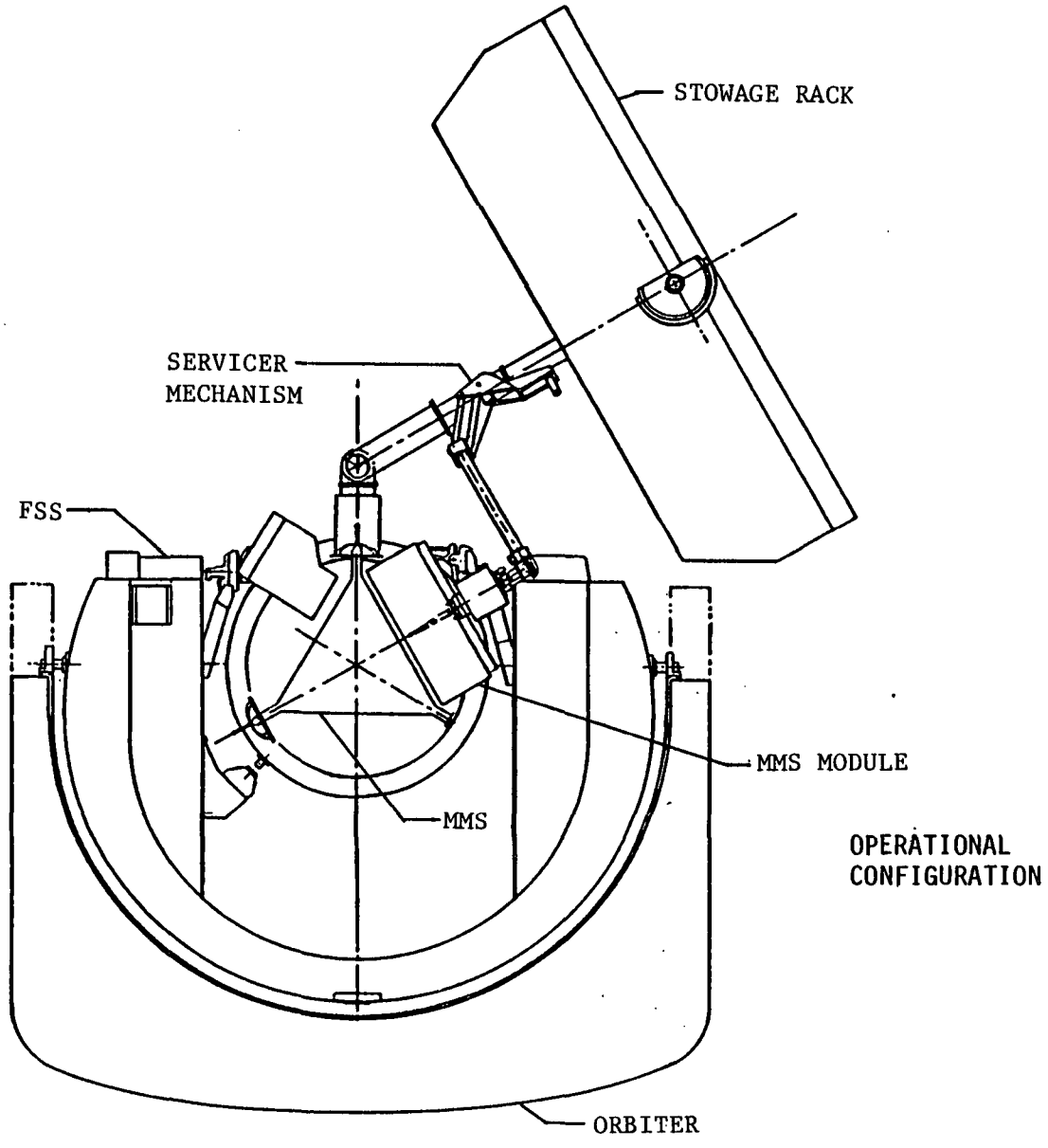

Figure 6.3-6 Cargo-Bay Equipment Arrangement 2 Variation

The RMS will be available for the 0-g demonstrations and will also probably be used for assembling the servicer to the OMV for some missions. It could also be used for docking failed spacecraft to the servicer in the Orbiter cargo bay as an alternative to EVA servicing. When the RMS is being used for docking or berthing a spacecraft, the RMS wrist camera view of the berthing location will be obscured by the spacecraft being handled. The RMS has a capability for moving its end effector along a straight line path from point A to point B under computer control. The A and B points can be input before launch or during flight. More than one segment can be input and used. However, there are many error contributors including thermal deflections of the cargo-bay sill at the RMS attachment point. The result is that the location of the berthing point on the spacecraft relative to the berthing latch locations are not well known. In particular, the RMS errors can exceed the capture volume of the recommended docking mechanism. The recommended docking mechanism is the same as for the Orbital Maneuvering Vehicle (OMV) and is the RMS end effector and grapple device.

One advantage of the recommended docking process for the cargo-bay demonstration is that one side of the docking interface is fixed and not moving. An approach for assisting the docking is to use the servicer camera. The orientation drive can be positioned so that the docking mechanism is colinear with the docking post. The servicer arm would be positioned so that the servicer camera views a similarly positioned target. When the target is aligned in the servicer camera field of view, then the docking mechanism and the grapple fixture would also be lined up. This approach is better if the servicer camera picture could be put on the RMS wrist camera display. Another aid would be to transform the RMS hand controller signals into the servicer camera coordinates. However, this last transformation might involve too much interfacing between the RMS and servicer systems. It should be possible to orient the servicer TV camera so that its axes are parallel to the docked position grapple fixture axes. This might be a simple way to reduce the RMS to servicer system TV display cross coupling effects.

The auxiliary cargo-bay cameras can also be positioned so their view helps in the docking operation. These cameras can additionally be used for viewing and recording the module exchange operations. After the RMS has completed the docking operation, it should be disconnected from the spacecraft to simplify operations when the MMS is rotated to those positions where module exchange can take place. The RMS wrist and elbow TV cameras could also be used to monitor and record the module exchange operations.

6.3.4 Configuration Selection Criteria

The arrangement, or configuration, selection criteria were identified by reviewing the criteria used in the prior study and considering the advantages and disadvantages of the candidate arrangements. It was possible to sort the criteria into two categories--those that apply equally to all five arrangements and those that can be used in a comparative evaluation of the five candidate arrangements. Those requirements that apply equally to all five candidates are listed in Table 6.3-2. These requirements were discussed in some detail in the prior study and in "Integrated Orbital Servicing Study Follow-On Implementation and Test Program Plan", MCR-76-258, Martin Marietta Corporation, April 1978. The Table 6.3-2 requirements should be considered in subsequent levels of definition of the Orbiter cargo bay servicer demonstrations.

Those criteria and requirements that can be used to help select a 0-g servicer demonstration arrangement are listed in Table 6.3-3. Certain of these requirements were carried over from the prior study while others are more directly related to this particular evaluation. Emphasis has been given to the use of MMS program equipment in the manner for which it was designed. The comparative data was obtained by comparing the layouts that went into the preparation of Figures 6.3-1 through 6.3-6. Generally the items near the top of Table 6.3-3 are considered to be more important. The data entries of Table 6.3-3 have been addressed as part of the Section 6.3.3 discussion for each arrangement.

Table 6.3-2 Equally Applicable Cargo-Bay Demonstration Requirements

1.	Enhance User Acceptance of On-Orbit Servicing
2.	Incorporate Representative Servicing Operational Equipment
3.	Include Verification of Procedures, Analysis Techniques, and 1-g Simulations
4.	Adaptability to Changes in Knowledge Level
5.	Compatible with OMV Development Schedule
6.	Costs That Are Phased to User Acceptability
7.	MMS Involvement
8.	Provision of Electrical Power, Attitude Control, Thermal Control, and Communications
9.	Spacecraft Deployment and Retrieval by RMS
10.	Use of RMS for Docking
11.	Docking Misalignment Effects
12.	Spacecraft to Servicer Alignment
13.	Servicer Mechanism Performance
14.	System Force and Torque Levels
15.	Repeatability Accuracy (Electro/Mechanical)
16.	End Effector Capture
17.	Methods of Accommodating Attach Errors (compliance)
18.	Interface Mechanism Performance
19.	Interface Mechanism Capability for Capture, Latch, Unlatch and Release
20.	Connector Performance including Mate and Demate - Electrical, Waveguide, Thermal, and Fluids
21.	Control System Mode Validation
22.	Man Machine Interaction
23.	Servicer Control Station Location
24.	Communications Link
25.	Lighting
26.	Malfunction Mode/Backup System
27.	Mission/Man/STS System Safety
28.	Pre and Post Module Exchange Condition Analysis
29.	Supplementary Visual Aids
30.	Supplementary TV Cameras
31.	Deployment of Servicer Mechanism and Docking Probe
32.	Similarity to 1-g Arrangement
33.	Sequence of Specific On-Orbit Activities
34.	Module Stowage Space Availability
35.	Routing of Wiring to MMS

Table 6.3-3 Alternative Arrangement Comparison

Consideration	Arrangement				
	2	3	9	11	16
1. Similarity to Operational Use	Good	Excellent	Good	Good	Excellent
2. Docking System Stiffness	Poor	Good	Good	Poor	Good
3. Ease of Jettisoning Equipment	Hard	OK	Easy	Hard	Easy
4. View of Operations from Aft Flight Deck	Acceptable	Excellent	Poor	Excellent	Excellent
5. MMS Launch/Return Support System	FSS	FSS	FSS	FSS	Separate
6. MMS on FSS During Operations	Yes	No	No	Yes	No
7. Stowed Length in Cargo Bay (in.)	231	226	290	231	172
8. RMS Reach Concerns	None	None	Yes	None	None
9. Routing of Orbiter to Servicer Wiring	Umbilical	Direct	Direct	Umbilical	Via FSS
10. Launch/Return Weight	Nominal	Nominal	No A or B Cradles	Nominal	No A or B Cradles
11. Equipment List Deltas	Nominal	Nominal	No A or B Cradles	Nominal	No A or B Cradles Add MMS Support
12. Relative Cost	Nominal	Nominal	Nominal	Nominal	Add Some
13. Operational Clearance	Poor	Excellent	Acceptable	Acceptable	Excellent
14. Representative Trajectory Accomodation	Acceptable	Excellent	Acceptable	Good	Excellent
15. Range of Servicer Arm Travel	Full	Full	Full	Reduced	Full
16. Containment of Loose Parts During Return	OK	Poor	OK	OK	OK
17. Transition Between MMS Sides	Dual Rotation	Single Rotation	Single Rotation	Dual Rotation	Single Rotation
18. Need for Second Grapple Fixture	No	Yes	Yes	No	Yes
19. Adaptability to Deployment of Stowage Rack	No	Yes	No	No	No

6.3.5 Configuration Selection

The data of Table 6.3-3 are given a quantitative assessment in Table 6.3-4. A first order comparative approach was used in that a nominal case was assigned a zero, a better than nominal case was given a plus, and a less than nominal case was given a minus. Totals for each arrangement for number of pluses, nominals, and minuses are given at the bottom of Table 6.3-4 along with the net pluses (total pluses less total minuses). Arrangement 3 is seen to score a little better on this basis than arrangement 16, which is the preferred arrangement from the prior study. The data of Table 6.3-4 may be weighted in a wide variety of ways. If the table is divided into three parts (6 items, 7 items, 6 items), then arrangement 3 is best in the top and middle parts and comparable to arrangement 16 in the lowest part. This indicates that arrangement 3 will be best for a wide range of weighting approaches that give higher weights to the items near the top of Table 6.3-4.

Arrangement 3 is given a negative for item 6 of Table 6.3-4. However, it is given a positive for Item 2. No way has been identified to get high stiffness in the docking system while operating with the MMS attached to the FSS. The next negative is for a low capability to contain loose parts during reentry and landing. These loose parts could be due to a failure of a module to be latched down or a failure of the servicer mechanism to restow itself. If the problem is felt to be severe during the detail design process, then corrective approaches will be necessary. The last negative for arrangement 3 is item 18 that is the need for a second grapple fixture. Again this negative is concomitant with a plus for docking system stiffness.

Arrangement 3 (see Figure 6.3-2) is recommended. For this arrangement the MMS is docked to the servicer that has its stowage rack fastened into the Orbiter cargo bay. The docking post is vertical and the MMS centerline is parallel to the Orbiter centerline for good viewing of the module exchange operations from the Orbiter aft flight deck. This arrangement is further described in Section 6.2 of this report.

Table 6.3-4 Alternative Arrangement Evaluation

Consideration	Arrangement				
	2	3	9	11	16
1. Similarity to Operational Use	0	+	0	0	+
2. Docking System Stiffness	-	+	+	-	+
3. Ease of Jettisoning Equipment	-	0	+	-	+
4. View of Operations from Aft Flight Deck	0	+	-	+	+
5. MMS Launch/Return Support System	+	+	+	+	-
6. MMS on FSS During Operations	+	-	-	+	-
7. Stowed Length in Cargo Bay (in.)	0	0	-	0	+
8. RMS Reach Concerns	0	0	-	0	0
9. Routing of Wiring to Servicer	-	+	+	-	0
10. Launch/Return Weight	0	0	+	0	+
11. Equipment List Deltas	0	0	+	0	-
12. Relative Cost	0	0	0	0	-
13. Operational Clearance	-	+	0	0	+

Table 6.3-4 Alternative Arrangement Evaluation (Cont)

Consideration	Arrangement				
	2	3	9	11	16
14. Representative Trajectory Accommodation	0	+	0	-	+
15. Range of Servicer Arm Travel	0	0	0	-	0
16. Containment of Loose Parts During Return	0	-	0	0	0
17. Transition Between MMS Sides	-	+	+	-	+
18. Need for Second Grapple Fixture	0	-	-	0	-
19. Adaptability to Deployment of Stowage Rack	0	+	0	0	0
Total Plus	2	9	7	3	9
Total Nominal	12	7	7	10	5
Total Minus	5	3	5	6	5
Net Plus	(3)	6	2	(3)	4

A failure analysis of arrangement 3 should be conducted during a subsequent design activity to identify:

1) Critical failure modes;
2) Redundancy requirements;
3) Methods for overcoming failures;
4) Margins of safety;
5) Backup provisions.

This analysis should result in a more reliable system and will confirm the reliability of arrangement 3 or indicate any necessary changes.

Similarly a risk assessment analysis is required during a subsequent design activity to identify:

1) Risk elements or areas;
2) Probability of occurence;
3) Program schedule impacts;
4) Program cost impacts;
5) Risk management actions.

The risk assessment analysis will also help to confirm the viability of arrangement 3 and will indicate any necessary changes.

6.4 CARGO-BAY DEMONSTRATION SCHEDULE

The servicer cargo-bay demonstration schedule (Figure 6.4-1) was based on an OMV development schedule. The first two lines show the OMV design and development schedule and the ground demonstrations schedule for reference. The servicer cargo-bay demonstration schedule was developed to correlate with this OMV schedule. The key point from the OMV schedule was an OMV authority to proceed (ATP) for Phases C and D in late April of 1986. This date is shown on Figure 6.4-1 along with other OMV milestones. The start of the cargo-bay demonstration corresponds with the ATP of Phase C/D of OMV. This start time permits the completion of the demonstration by the start of the free-flight

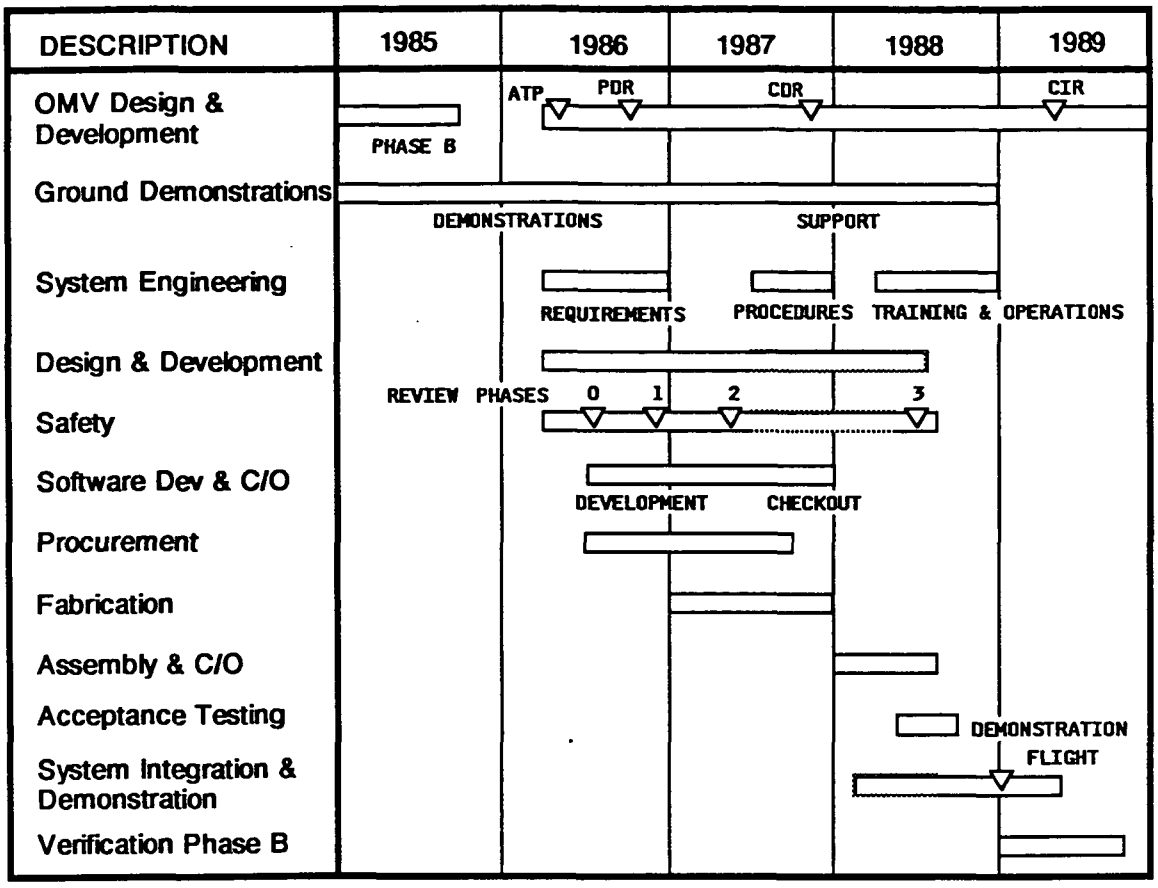

Figure 6.4-1 Servicer Cargo-Bay Demonstration Schedule

verification program. The January 1989 date, selected as the beginning of Phase B for the free-flight verification or operational servicer development, corresponds with the end of the OMV supporting development of a servicer kit. This approach integrated well with the use of representative time spans for the various demonstrations and verification activities. It was decided that the results of the servicer cargo-bay demonstration would be most useful if the cargo-bay demonstration was completed at the start of the operational servicer development in January 1989. The cargo-bay flight is completed before the operational servicer preliminary design review (PDR) so that the cargo-bay demonstration results can be factored into the operational servicer design and development.

The cargo-bay demonstration flight program is recommended to start in 1986 and has been treated more as a development experiment than as a full fledged program. The normal phases of a program have been combined into a single, 3 year program. Most of the early work has been completed as part of the ground demonstration activity. Three additional support tasks are required from the 1-g demonstration equipment. The first is for design support and parallels the servicer design. The second task is for procedures development and the third is for astronaut training as system operators. Additional astronaut training will be involved in terms of RMS and FSS operations, data collection, and assistance in overcoming anomalies.

The safety review phases (0 - 3) required for Shuttle payloads are shown on the schedule. The importance of crew and Orbiter safety have been included in the plan. To insure no major safety related task was overlooked, the plan was reviewed by one of Martin Marietta's Shuttle integration safety engineers. The formal design review process has been reduced, relying on the safety reviews and program annual reviews to provide the needed customer interaction. This approach was selected in order to better meet the funding allocations and fulfill the technical objectives.

The schedule items are representative of this type of project. The fabrication and assembly of the flight unit and airborne support equipment (ASE) are estimated to take 13 months. Software development and documentation for the ASE is included in the software development block. The monitoring station software, and checkout has been scheduled to start after the preliminary design is completed and to be finished by the start of system qualification tests.

A single schedule has been shown for the total of the cargo-bay demonstration equipment. Separate schedules will need to be prepared for each of the major sets of equipment, which are:

1) Servicer System;

2) Spacecraft Mockup;

3) Airborne Support;

4) Ground Support;

5) Ground Monitoring.

Second level schedules were prepared for the demonstration servicer and the spacecraft mockup during the prior contract. From that work certain schedule implications can be drawn. The deletion of the second cargo-bay demonstration flight would save 10 months. Also the time from program initiation to first flight was reduced by a further nine months to maintain correspondence with the OMV schedule. The result was deletion of both Phase B and the separate procurement for Phase C/D. Some of the Phase B work has been accomplished on the current contract but the resulting time span is tight.

The schedule makes the assumption that the equipment to be provided by GSFC can be provided to meet the implied schedule requirements, e.g., FSS available throughout 1988 for systems integration and demonstration. It may be that GSFC has other plans for the FSS in this time span. Also no attempt has been made to identify a specific Shuttle flight where the current manifest would permit adding the on-orbit servicer demonstration activity. These elements should properly await the identification of an approved funding stream. However, the decision to go with one Shuttle flight should ease this type of schedule concern.

The schedule of Figure 6.4-1 assumed funding availability in Fiscal Year 1986. This funding is not available, thus the Figure 6.4-1 schedule will slip until funding becomes available. If funding is not obtained relatively soon, then the servicer may not be ready when it is needed, both for the OMV and for the Space Station.

6.5 CARGO-BAY DEMONSTRATION COST ESTIMATE

A preliminary cost estimate was prepared for the recommended cargo-bay demonstration. A primary function of this effort was to reduce the cost of the cargo-bay demonstration.

The cargo-bay demonstration was treated as a flight experiment rather than as a flight qualified unit. This changes the technical approach used in the program, which in turn affects the procedures to estimate the costs. The approach used was to estimate the program cost of a flight qualification program using the normal cost estimating relationships (CER). To these results a complexity factor was applied to account for the difference between an experimental and flight qualified unit. The data from the equipment lists of Section 6.2 and the work breakdown structure of Appendix A were used to establish the inputs to the CERs.

The complexity factor was arrived at by reviewing recent programs of a similar nature. These include the Westar/Palapa rescue mission, the Solar Max repair and a Shuttle demonstration of storable fluid management techniques. From this data, a complexity factor of 0.4 was derived.

The total estimated cost of the servicer cargo bay demonstrations is approximately $9.3 million. A breakdown of this estimate and a summary of the basis of cost is presented in Table 6.5-1. In estimating the costs of the cargo-bay servicer demonstrations, the following assumptions were made:

1) All costs are in 1985 dollars;

2) Costs include the design, development and fabrication of the experiment hardware;

3) The costs for the Shuttle flight, the standard RMS, the RMS grapple fixture and the crew time are not included in the cost estimate;

Table 6.5-1 Cost Breakdown for the Cargo-Bay Demonstration

TOTALS	SYSTEMS	SUBTOTALS	SUBSYSTEMS	COSTS	ELEMENTS	BASIS OF COST
1.60	PROJECT SUPPORT					
		1.00	D & D			NASA FACTOR OF 25% ON ALL D & D COSTS
		0.50	FABRICATE			NASA FACTOR OF 20% ON ALL FAB & C/O COSTS
		0.05	ASSEMBLY			NASA FACTOR OF 10% ON ASSEM & C/O COSTS
		0.05	OPERATIONS			ENGINEERING ESTIMATE OF LABOR REQUIRED
6.0	SERVICER SYSTEM					
		3.40	SERVICER UNIT	1.80	MECHANISMS - D & D	50/50 RISK OF SEVERAL COST MODELS USING WT OF
				0.80	- FAB	164# WITH 70/30 SPLIT BETWEEN D&D/FAB
				0.50	ELECTRONICS - D & D	50/50 RISK OF TWO COST MODELS USING WT OF
				0.30	- FAB	45# WITH 60/40 SPLIT BETWEEN D&D/FAB RESULTS OF ONE MODEL OUT OF RANGE SO NOT USED
		2.20	STOWAGE RACK	0.90	STRUCTURE - D & D	50/50 RISK OF TWO COST MODELS USING WT OF
				0.40	- FAB	45# WITH 70/30 SPLIT BETWEEN D&D/FAB
				0.10	BAT MOD LATCH - FAB	TWO LATCHES @ $50,000 BUILT FROM EXISTING DESIGN
				0.20	TANKAGE - D & D	ENGINEERING ESTIMATE 70/30 SPLIT
				0.10	- FAB	
				0.30	HOSE MANAGE - D & D	ENGINEERING ESTIMATE 60/40 SPLIT
				0.20	- FAB	
		0.10	VIDEO		CAMERA & CABLING	ENGINEERING ESTIMATE FOR PURCHASE & INTEGRATION
		0.30	ASSEMBLY & C/O			FACTOR OF 15% ON ALL FABRICATION COSTS
0.70	SPACE-CRAFT MOCKUP					
		0.20	BATTERY MOD	0.07	D & D	RATE OF $10,000 / # DERIVED FROM WESTSTAR FOR
				0.13	FABRICATE	SIMILAR HARDWARE APPLIED TO 20 # 30/70 SPLIT
		0.40	GRAPPLE FIXTURE	0.13	D & D	PREVIOUS ESTIMATE FELT STILL VALID 30/70 SPLIT
				0.27	FABRICATE	
		0.10	ASSEMBLY & C/O			FACTOR OF 20% ON ALL FABRICATION COSTS
0.35	AIRBORNE SUPPORT					
		0.30	CONTROL STATION	0.10	D & D	BASED ON VENDOR DATA AND ENGINEERING ESTIMATE
				0.20	FABRICATE	30/70 SPLIT
		0.05	ASSEMBLY & C/O			FACTOR OF 20% OF ALL FABRICATION COSTS
0.65	GROUND SUPPORT					
		0.60	EQUIPMENT			NASA FACTOR OF 15% ON ALL OF D & D COSTS
		0.05	OPERATIONS			ENGINEERING ESTIMATE OF REQUIRED MANPOWER

IN 1985 DOLLARS

Project Total= 9.3 Million Dollars

Table 6.5-1

4) The costs associated with crew training are not included;

5) The following items will be provided by Goddard Space Flight Center and are not included in the estimate:

   a) Flight Support System (FSS);
   b) FSS checkout, handling and transportation equipment;
   c) Multi-Mission Modular Spacecraft (MMS) support structure;
   d) MMS checkout, handling and transportation equipment;
   e) 2 MMS modules and 3 interfaces;
   f) Modified Module Servicing Tool;

   NOTE: The cost of integrating the item 5 equipment into the system is included in the estimate.

6) The ground monitoring station, which consists of a display console and data handling equipment, is assumed to be an existing NASA facility and is not included in the estimate;

7) The installation and removal of the experiment hardware into/from the Orbiter cargo bay will be performed by NASA personnel. The cost of the NASA portion is not included in the estimate. Martin Marietta will have a limited number of personnel for support, and their cost is included in the estimate.

A major objective of the demonstration plan activities, namely to reduce the cost of the cargo-bay demonstration, has been achieved. The estimated cost of 9.3 million dollars is more than a 50 % reduction over the previous estimate. These savings result from reducing the number of Shuttle flights, utilizing as much existing equipment as possible, treating the demonstration as a flight experiment, limiting the amount of qualification and development testing, and limiting the formal design and review process. This new approach treats the cargo-bay demonstration as a flight experiment rather than as a flight qualified spacecraft. A number of changes result, some of which are not readily apparent. The program structure is less formal, there are

fewer design reviews, less traceability and lowered customer/contractor interaction. The standards on the hardware are also reduced. Commercially available hardware is used, and modified to meet the requirements if necessary. For example, a commercially available valve might be used for the fluid resupply system, to meet the sealing requirements the valve seat may be reworked or replaced, but the overall cost is much less than for a flight qualified unit. Efforts will be made to use previously qualified hardware if available. This will include small components and large systems. The MMS structure and empty modules will be loaned from Goddard, as well as the MMS flight support system.

Although these measures reduce the cost, there is a price associated with them. The risk of an unsuccessful mission from the technical standpoint is increased (the plan does not increase the risk to the Shuttle or the crew). This approach has successfully been used by Martin Marietta in previous flight experiments. The depth to which the servicing techniques will be demonstrated has been reduced, but all the major activities have been included. The proposed plan has been designed to demonstrate the major servicing functions in the most economical manner possible.

7.0 FREE-FLIGHT VERIFICATION PLAN

While the objective of the Orbiter cargo-bay experiment was to encourage potential users of on-orbit servicing in the form of module exchange and show that the major elements of the system can be designed, built and operated, the objective of a free-flight verification is to verify that the equipment is operational and ready for use. The free-flight verification tests are considered to be the final proof that establishes an orbital servicing capability. Thus the design, development, and test process must be suitable for operational equipment. Similarly all the appropriate documentation must be prepared so that the capability can be used by others. The prior study recommended that at least two production units and adequate spares be procured so there would be a higher availability of servicing equipment for operational flights. However, the response to that recommendation was that using programs should pay for all equipment past the first set. Thus, this study includes costs for only the first production servicer system.

The emphasis on redefinition of the cargo-bay demonstrations resulted in little new work on the free-flight verification plan. This approach is satisfactory as it is still three years until Phase B is scheduled to start and further 1-g investigations and the evolving 0-g demonstration will help to better define the free-flight verification plan. The free-flight verification plan from the prior study was reviewed and modified to reflect the identified changes. This led to the revised schedule and cost estimates presented here.

Just as the cargo-bay demonstration will benefit from the ground demonstrations so will the free-flight verification benefit from both the ground and cargo-bay demonstrations. The module exchange and fluid resupply parts of the verification are expected to be similar to the cargo-bay demonstration activities and to use the same spacecraft mockup. The control modes demonstrated are also expected to be similar except for the incorporation of lessons learned from the cargo-bay

demonstration. It is recommended that the cargo-bay demonstration servicer system hardware be modified and adapted to become the 1-g test equipment. Not only will this provide a newer set of equipment but it should be easier to make the cargo-bay equipment functionally similar to the free-flight equipment. Functional similarity is important for procedures development, operator training, and anomalies investigation.

The prior free-flight verification plan emphasized the operational use of the servicer system as a kit on the Orbital Maneuvering Vehicle. The emphasis within NASA on the Space Station led to consideration of how the servicer system could be used on the Space Station. A number of potential alternatives were identified and are introduced in Section 3.4. As the Space Station becomes better defined it may be appropriate to include Space Station requirements in the free-flight verification plan.

The approach to be used for the free-flight verification remains in the formulative stages. As a result, the distinction between the issues to be considered and the baseline plan are not as clearly defined as for the ground or cargo-bay demonstrations. We have attempted to identify the major elements needed to meet the objectives of the free-flight verification. We feel the verification flight will include the same basic servicing functions demonstrated in the cargo bay, adding the features of operations with the OMV and control from a ground station.

The basic approach to the free-flight verification tests is based on the desire to have a fully operational on-orbit servicer system at the end of the program. This means that the servicer must go through the full design and development process including obtaining production tooling, which will be available for future units.

For the flight, the servicer can be mated with the OMV on the ground and transported to space in the Orbiter or the servicer and OMV can be mated in orbit near the Orbiter. A spacecraft mockup similar to the one used on the cargo-bay demonstration is mounted on a rented

spacecraft bus and carried into space on the same Orbiter. The spacecraft and the servicer with OMV are deployed separately from the Orbiter. Both are controlled from ground stations. The OMV with servicer would rendezvous with the spacecraft and dock with it, using the grapple fixture of the MMS mockup. The servicer would exchange MMS and battery modules and perform fluid resupply operations. This activity would be controlled from the servicer ground station, which would likely be collocated with the OMV ground station. The servicer/OMV returns the spacecraft to the Orbiter. The RMS is used to return both vehicles to the Orbiter bay where they are stowed for the return to earth.

7.1 FREE-FLIGHT VERIFICATION REQUIREMENTS

The basic objectives of the free-flight verification process are to:

1) Establish a servicer system operational capability;

2) Increase confidence of potential users in the servicer concept;

3) Demonstrate compatibility of the OMV and servicer system;

4) Demonstrate rendezvous and docking techniques;

5) Demonstrate free-flight module exchange and fluid resupply.

These verification tests should also increase confidence that the servicer can be used at the Orbiter, at or near the Space Station, in other low earth orbits, and in geosynchronous orbit.

The free-flight verification tests are considered to be the final proof that establishes an orbital servicing capability. Thus the design, development, and test process must be suitable for operational equipment. Similarly, all the appropriate documentation must be prepared so that the capability can be used by others. It is

recommended that one prototype unit be built with production tooling so additional units can be built to meet the operational requirements. A preliminary list of the verification flight activities is presented in Table 7.1-1. As the program matures a better definition of these activities will be developed.

Table 7.1-1 Free-Flight Verification Activities

Demonstration of MMS Module Exchange
Demonstration of Other Module Exchange Activities
Demonstration of Refueling
Demonstration of Rendezvous and Docking
Communication Links
Control Station Location
Deployment of Servicer Docking Probe
Servicer Mechanism Performance
Interface Mechanism Performance
Connector Performance Including Mate And Demate--Electrical and Fluids
Methods of Accommodating Attach Errors (Compliance)
End Effector Capture
Interface Mechanism Capability for Capture, Latch, Unlatch, and Release
Repeatability Accuracy (Electro/Mechanical)
Spacecraft to Servicer Alignment
Control System Modes Validation
Man Machine Interaction
Malfunction Mode/Backup Systems
Mission/STS System Safety
Pre- and Post-Module Exchange Condition Analysis

The list of Table 7.1-1 was prepared from a similar list in the prior study and from extended lists prepared during the IOSS activity. The demonstration of rendezvous and docking is a necessary activity for remote servicing of spacecraft. The OMV should have demonstrated rendezvous and docking, as part of its spacecraft retrieval function, several times before the servicer free-flight verification. However, in this case it will be necessary to either use the servicer TV camera or to arrange things so the OMV TV camera can properly see its target. One potential solution is to mount the stowage rack on the OMV so that the OMV TV camera, and other ranging equipment, looks through the region reserved for temporary module storage as this region will be open at the time of rendezvous and docking and is fairly large.

The OMV communication links will similarly have been checked out during early OMV flights. It will only be necessary to extend the links slightly on both ends with hard wires. It appears desireable to collocate the servicer control station with the OMV control station as they both use the same communication links.

It is desireable to include a servicer system docking probe deployment device in the design. The docking probe extends 60 in. in front of the servicer stowage rack in the operational configuration. An IOSS design of a deployment mechanism reduced this extension to 28 in., which implies a reduction in launch costs. Additionally, it is easier to support the servicer mechanism so it can absorb Orbiter launch and reentry loads when it is folded back as opposed to being deployed.

It is recommended that the cargo-bay demonstrations be limited to operation in one form of Supervisory control and the Manual-Direct control mode so that astronaut training and operating time could be limited. For the free-flight verification, where control is from the ground and the astronauts need not be involved, there is no strong need to limit control mode selection. Thus, it is recommended that all four control modes should be exercised and perhaps multiple module exchanges in each control mode should be performed.

An example flight plan was prepared in the prior study. A slightly modified form of that plan is presented here for completeness. The example flight plan is considered to be representative and alternative plans, with different initial assumptions, can also be prepared and evaluated. One of the precursors to a free-flight verification is the need to demonstrate mating of the servicer stowage rack and the OMV while in orbit. This demonstration has been suggested as part of the Space Station technology development missions (TDM). It is also assumed that the OMV has progressed through its development program to where an OMV is available and can be launched with adequate propellant for the free-flight verification mission onboard.

The serviceable spacecraft is assumed to be a special spacecraft for the verification. It might be that there is a failed spacecraft requiring servicing of the kinds to be demonstrated when it is needed, but it is very unlikely. So the plan is to obtain a special serviceable spacecraft. In addition to the full size operable modules to be exchanged, the spacecraft would require an attitude control system, two-way communications to the ground through the TDRSS, a docking receptacle, a translational thrust capability to put it on a drift orbit with respect to the Orbiter, and the usual structure, power supplies, and thermal control. This plan shows the serviceable spacecraft being returned to earth (to avoid more space debris), but it may be possible to use it for some other mission after servicing has been verified. An alternative to a special design and build of a serviceable spacecraft is to use the Shuttle Pallet Satellite (SPAS-01) built by Messerschmitt-Boelkow-Blohm (MBB). The SPAS-01 would have to be reconfigured to this special use including the addition of the MMS triangular support structure, modules, and propellant tankage and handling system from the cargo-bay demonstrations. Additionally its communications system must be upgraded to work with the TDRSS. However, the SPAS-01 is an interesting alternative that should be considered.

The flight plan starts out with the servicer, with replacement modules, the OMV, and the serviceable spacecraft being launched in a single Orbiter. The servicer would be fastened to the OMV before launch and would be returned to earth with the OMV. At the appropriate time in the mission, the servicing activities would be started. All activities, other than those involving the Orbiter Remote Manipulator System (RMS), are controlled from the ground. Because of the close relationship between the servicer and the OMV, ground control of the servicer could be from the OMV ground control station (GCS).

At the appropriate time, the spacecraft attitude control system must be shut off so that it does not fight the OMV attitude control system. Two types of servicing are recommended - module exchange and fluid transfer. The servicing functions are the same as are planned for the

cargo-bay demonstration. Alternatives to the OMV for boosting the spacecraft back towards the Orbiter would be to use the spacecraft attitude control system thrusters to initiate the transfer or for the OMV and spacecraft to return to near the Orbiter in the docked configuration.

The OMV is put into a quiescent mode when it is near the Orbiter. The Orbiter will then do whatever maneuvering is necessary for the RMS to be able to reach out and retrieve the OMV and servicer. When both the servicer and spacecraft have been stowed in the Orbiter, the Orbiter crew can continue with their other mission tasks or initiate reentry and landing.

The mission duration time was estimated at 21 hrs. This time period can be modified extensively depending on the desired separation between the Orbiter and spacecraft and on whether time or propellant is used to achieve and remove the separation distance. Of the total mission time of 21 hrs, the Orbiter crew need only be involved for eight hrs. The ground operations crew will need to be involved for the total mission time. The module exchange and propellant transfer time allocations were four hours. This time would be increased if it is desired to verify all control modes repeatedly as is recommended. However, the module exchange verification time would still be a small part of the total time because the orbit transfer time is expected to be long.

As with the cargo-bay demonstration, a number of support systems will be involved. They include the Space Transportation System to get the verification equipment to and from orbit. The OMV will be expected to provide: 1) communications; 2) attitude control; 3) rendezvous and docking; 4) electrical power; 5) assistance in thermal control; and 6) servicer control station location. The RMS will be used to deploy and retrieve the OMV, servicer system, and serviceable spacecraft. The TDRSS will be used for communications by both the OMV and the serviceable spacecraft.

It is anticipated that the OMV to servicer mechanical interface will be made fairly rigid to withstand the OMV large engine thrusting and to provide an adequate structural frequency. The alignment and flexibility effects of the servicer to spacecraft docking system will affect the module exchanges and must be properly accounted for in the design.

Other requirements appropriate for an operational system will also be applied. Example subjects include:

1) Safety;

2) Operability;

3) Reliability;

4) Maintainability.

Table 7.1-2 presents the major characteristics of the verification flight. The servicer's spare module stowage rack will carry the replacement modules, tools, and stored fluids necessary to service the spacecraft mockup.

Several alternatives have been proposed that demonstrate extended capabilities of the servicer. For example, the servicer and OMV could be carried to space separately and then mated in free space. This would probably be more representative of an actual mission or operations from the Space Station. These types of options will be evaluated as more requirements are defined and plan funding becomes more certain.

Table 7.1-2 Free-Flight Verification Characteristics

One verification flight
MMS triangular structure for spacecraft mockup
Spacecraft mockup attached to rented spacecraft bus
Axial MMS module exchange
Radial battery module exchange
Fluid transfer to PM-1 type propulsion module
Servicer's supply of power, attitude control, thermal control, and communications by OMV
Spacecraft mockup's supply of power, attitude control, thermal control, and communications by spacecraft bus
Servicer control station on ground
Unassisted Supervisory control mode
Docking rigidization by servicer docking probe
Electrical connection between servicer and spacecraft via the docking mechanism
Servicing equipment performance demonstration
OMV-servicer interactions included
Man-machine interactions included
Compliance with Orbiter system safety requirements
Use of representative servicing operational equipment
Operator training (ground personnel)

7.2 FREE-FLIGHT VERIFICATION ELEMENTS

The elements involved in the verification flight can be separated into the following groups:

1) Space Transportation System Support;

2) OMV with Servicer System;

3) Serviceable Spacecraft;

4) Airborne Support Equipment;

5) Ground System.

The two major pieces are the servicing system/OMV and the serviceable spacecraft. These are shown in Figure 7.2-1. Each of them requires a ground-based control station, interface equipment with the Orbiter, and ground checkout equipment. It is recommended that the servicer system be built to operational equipment standards and that planning include the delivery of production tooling. The prototype approach will be used for the servicer. This is to say, that the qualification testing will be performed on the actual flight unit, rather than on a duplicate. The servicer support equipment should also be designed to operational standards for repeated use. The serviceable spacecraft and its support equipment could be designed on a one-time use basis and might even incorporate equipment from other programs into its design or the SPAS-01 spacecraft built by MBB might be used. Items such as the MMS modules and structure, the fluid resupply equipment, and the Orbiter interfaces from the cargo-bay demonstrations will be used. The cost estimates are based on rental of a spacecraft bus and an allowance for refurbishment of the rented spacecraft.

Certain "existing" equipment will also be needed. The Orbiter and other parts of the STS, such as the TDRSS, will be used, as will certain OMV related equipment including, the OMV, its ground control station, and its docking and rigidization equipment. It is also required that the OMV be on orbit and have sufficient propellant onboard to perform the free-flight verification. It is assumed that a servicer 1-g trainer is available from the servicer cargo-bay demonstration program.

ORIGINAL PAGE IS
OF POOR QUALITY

Figure 7.2-1

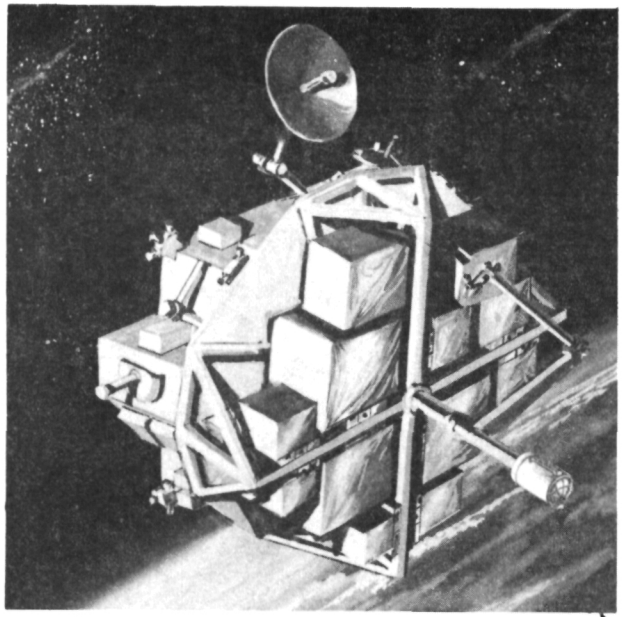

OMV/SERVICER

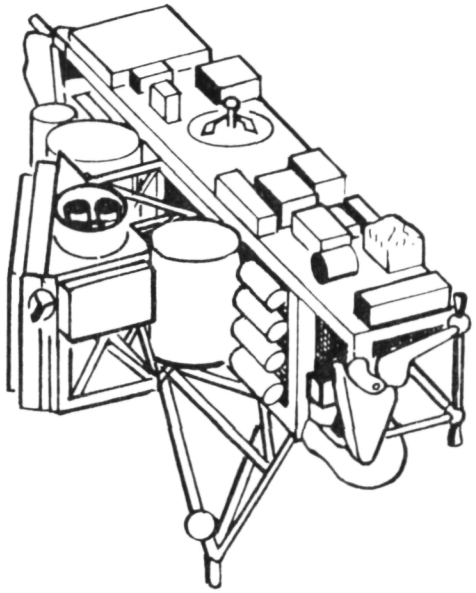

MMS MOCKUP ON RENTED SPACECRAFT BUS

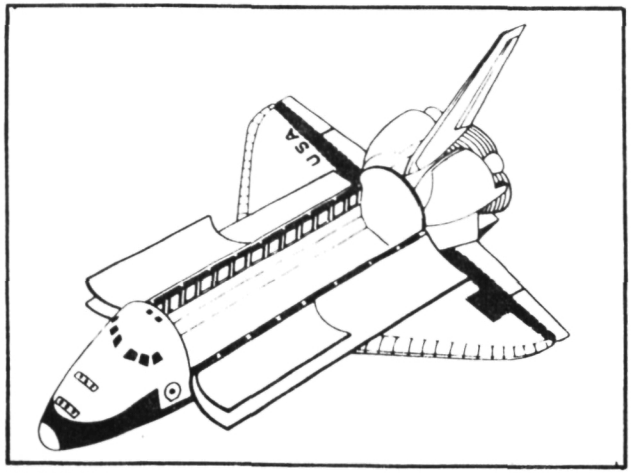

ORBITER

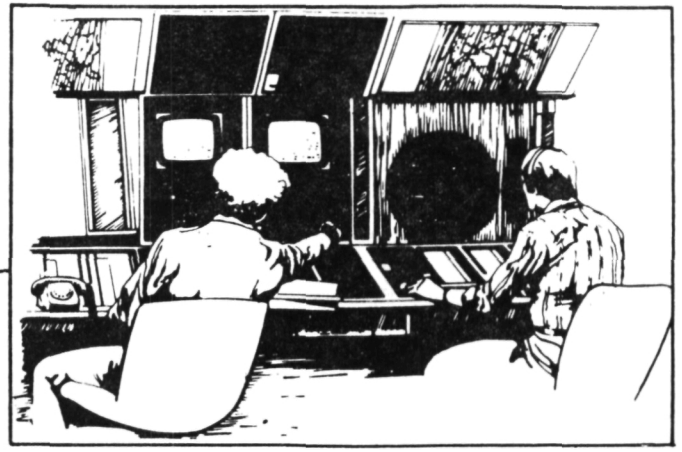

GROUND CONTROL STATION

Figure 7.2-1 Free-Flight Verification Equipment

The free-flight verification equipment that must be procured specifically for the free-flight verification project is listed in Table 7.2-1. This list was used in preparation of the cost estimates.

Table 7.2-1 Free-Flight Verification Equipment

Integrated Orbital Servicing System
Servicer Control System in OMV Ground Control Station
Replacement Modules
Propellant Resupply Equipment
Servicer to Orbiter Interface Equipment
Servicer Ground Checkout Equipment
Serviceable Spacecraft
Spacecraft Control System in OMV Ground Control Station
Spacecraft to Orbiter Interface Equipment
Spacecraft Ground Checkout Equipment

7.2.1 Space Transportation System Support

Certain of the equipment required for the servicer free-flight verification is auxiliary equipment available for use on or with the Orbiter as part of the Space Transportation System. This equipment is listed in Table 7.2-2. Its provision, control, and use should present no difficulties.

Table 7.2-2 Space Transportation System Equipment

Space Shuttle including Orbiter
Remote Manipulator System
Cargo-bay cameras
RMS cameras

Control equipment at the Orbiter will be for control of the Orbiter during proximity operations, control of the RMS during equipment deployment and retrieval, operation of Orbiter trunnions, and safety related caution and warning displays. Module exchange operations will be conducted away from the Orbiter and thus it need not be involved in these operations.

ORIGINAL PAGE IS
OF POOR QUALITY

7.2.2 OMV With Servicer System

An artists concept of the servicer system mounted on the OMV just prior to docking with a spacecraft is shown in Figure 7.2-2. The verification flight would involve a different module complement in the spare module stowage rack. A representative module complement, to which a fluid transfer module must be added, is shown in Figure 6.3-2. Similarly, the spacecraft for the verification flight would look more like the sketch in the upper right hand corner of Figure 7.2-1.

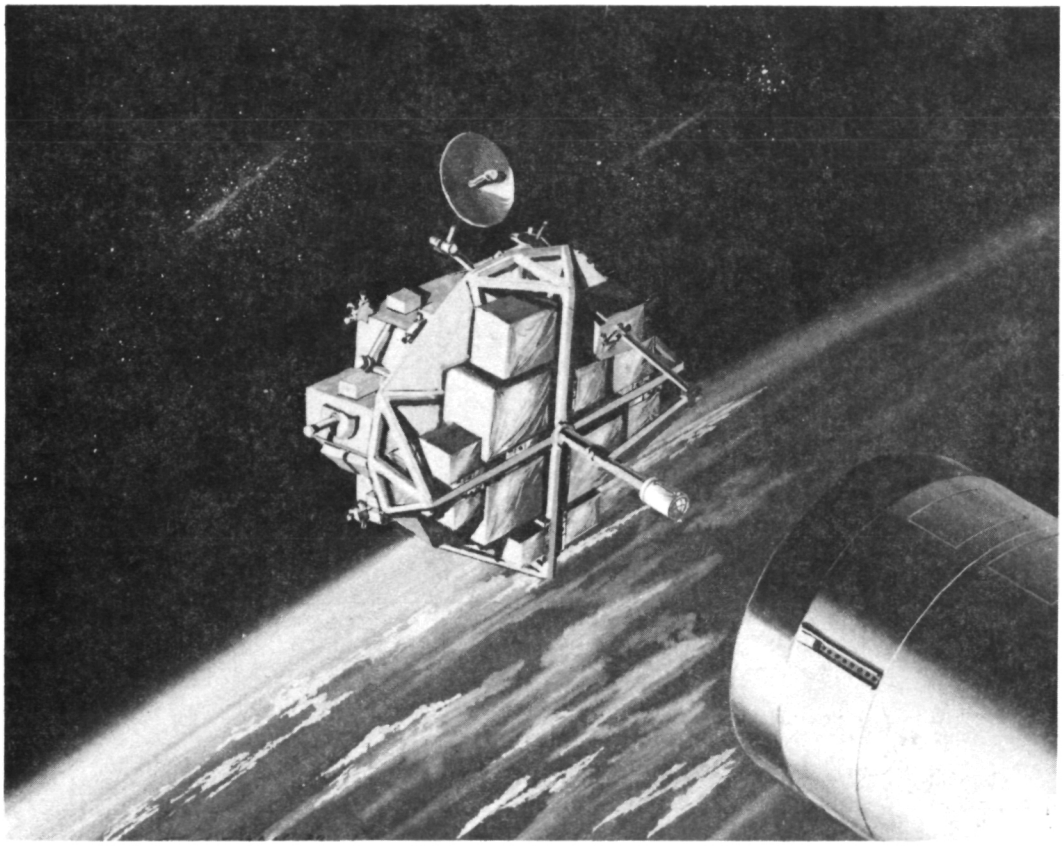

Figure 7.2-2 The Operational Servicer with the OMV

The OMV is assumed to be far enough along in its development that all of its flight tests have been completed and it is fully operational. This means that it has been used to deploy and retrieve spacecraft. All of its interfaces with the Orbiter and its elements such as the RMS will have been fully verified as will the ability of the TDRSS to

provide satisfactory communications. Demonstration of spacecraft retrieval by the OMV implies that operation of its rendezvous and docking system has also been verified. Similarly, the OMV payload rigidization system will also have been demonstrated. It will be necessary to conduct a precursor test on the servicer to OMV interfaces. This test can be conducted on the ground.

The on-orbit servicer will be more like that identified during the IOSS program (see Figure 2-1), than the version shown for the cargo-bay demonstration. In particular the longer (79 in.) arm segment length should be used. The servicer docking post deployment system should also be included because of its value in reducing stowed length and thus launch costs for the operational system. The stowage rack configuration should generally be like that identified during the IOSS program except that it should contain the same module complement as for the cargo-bay demonstrations.

7.2.3 Serviceable Spacecraft

A representation of a candidate serviceable spacecraft is shown in the upper right hand corner of Figure 7.2-1. The spacecraft bus shown is the SPAS-01, although other candidate spacecraft should be considered. As this flight is a one-time use, it appears reasonable to rent a spacecraft rather than to design and build a spacecraft for this one use. The requirements on the spacecraft as identified in Section 7.1 are not unusual or stringent and thus it may not be difficult to identify candidates. One possibility is to refurbish and use the spacecraft, or parts of it, that was retrieved by the OMV during the OMV flight test program. The spacecraft will be needed for 18 to 24 months to allow for rework, checkout, flight preparation, and post-flight examinations and rework.

The spacecraft bus will be modified by adding the spacecraft mockup from the cargo-bay tests. An MMS module support structure (see Figure 6.2-5) forms the basis of the serviceable part of the spacecraft. The

module complement and arrangement are shown in Figure 6.2-6 and discussed in Section 6.2.3. Few changes in the module equipment used for the cargo-bay test are expected to be required for the verification flight. While only one electrical grapple fitting is required on the serviceable spacecraft, it may be advantageous to leave the two grapple fixtures on the spacecraft mockup from the cargo-bay demonstrations.

7.2.4 Airborne Support Equipment

Airborne support equipment for the free-flight verification is not extensive. The primary items are devices to support the OMV and serviceable spacecraft in the Orbiter along with electrical interfaces and caution and warning equipment. It is expected that the servicer spare module stowage rack will be fitted with trunnion adapters and a keel fitting so that the servicer system can be mechanically installed in standard Orbiter cargo-bay fittings. The electrical interface and caution and warning provisions will need to be developed.

The OMV will be made compatible with the Orbiter as part of its development process. Similarly, one criteria for selecting a spacecraft bus is that it have a set of developed interfaces with the Orbiter. Thus, development of airborne support equipment for the free-flight verification should not be a major task.

7.2.5 Ground System

The ground system consists of ground support, ground monitoring, and ground control. These functions will be available for the OMV and their existence should be a criteria in selection of a serviceable spacecraft bus. For the servicer system, the ground support consists of the usual development, test, and handling equipment for the flight articles as well as use of the 1-g servicer system demonstration facility at MSFC. Development, test, and handling equipment for GSFC supplied flight equipment can be provided by GSFC. The remainder of

this equipment will be new. It is expected that the MSFC 1-g servicer demonstration facility will be set up to represent the flight situation and that it will be used for procedures development, flight crew training, and anomaly investigation.

The servicing system ground monitoring equipment will consist of consoles and display equipment located near the control station. New equipment will be required along with software development to be able to generate appropriate displays. Data will consist of joint angles, trajectory coordinates, TV views, and discrete events. The ground monitoring personnel will follow the planned scenarios and check that all planned events occur in the proper order and that no unplanned events occur. Ground monitoring personnel will not be able to control the servicer demonstration directly. Rather they will be able to inform the ground operator of any pertinent observations.

The servicer control station should be located on the ground and near the OMV control station as all servicer communications pass through the OMV links and some interfacing between OMV and servicer control operators is likely to be required. The control station will include a computer, a keyboard and display unit, and a television monitor for display of the servicer end effector camera picture. Interconnecting cables and interfaces to the OMV communication links will be used. It is expected that 10 to 12,000 lines of code will be required in the computer. Depending on the computer selected, 256 K bytes of internal memory and 5 M bytes of hard disk memory will be required. These computer requirements may be increased when redundancy, failure, fault isolation, and trajectory generation requirements are considered.

All of the ground system equipment should be designed, fabricated, tested, and controlled as operational equipment that will be used for many years and upgraded as needs evolve. It is important that the existing ETU be replaced by a more representative unit, possibly the cargo-bay demonstration unit, for use as the operational 1-g training system.

7.3 FREE-FLIGHT VERIFICATION SCHEDULE

The development of the operational servicer is to be coordinated with the development of the OMV. Being an "OMV kit", it is desirable to have the servicer flight qualified at the start of OMV operations. A schedule showing the development of the servicer and the major OMV milestones is shown on Figure 7.3-1. The key OMV milestones are the first flight occurring in early 1990 and the start of normal operations in mid 1992.

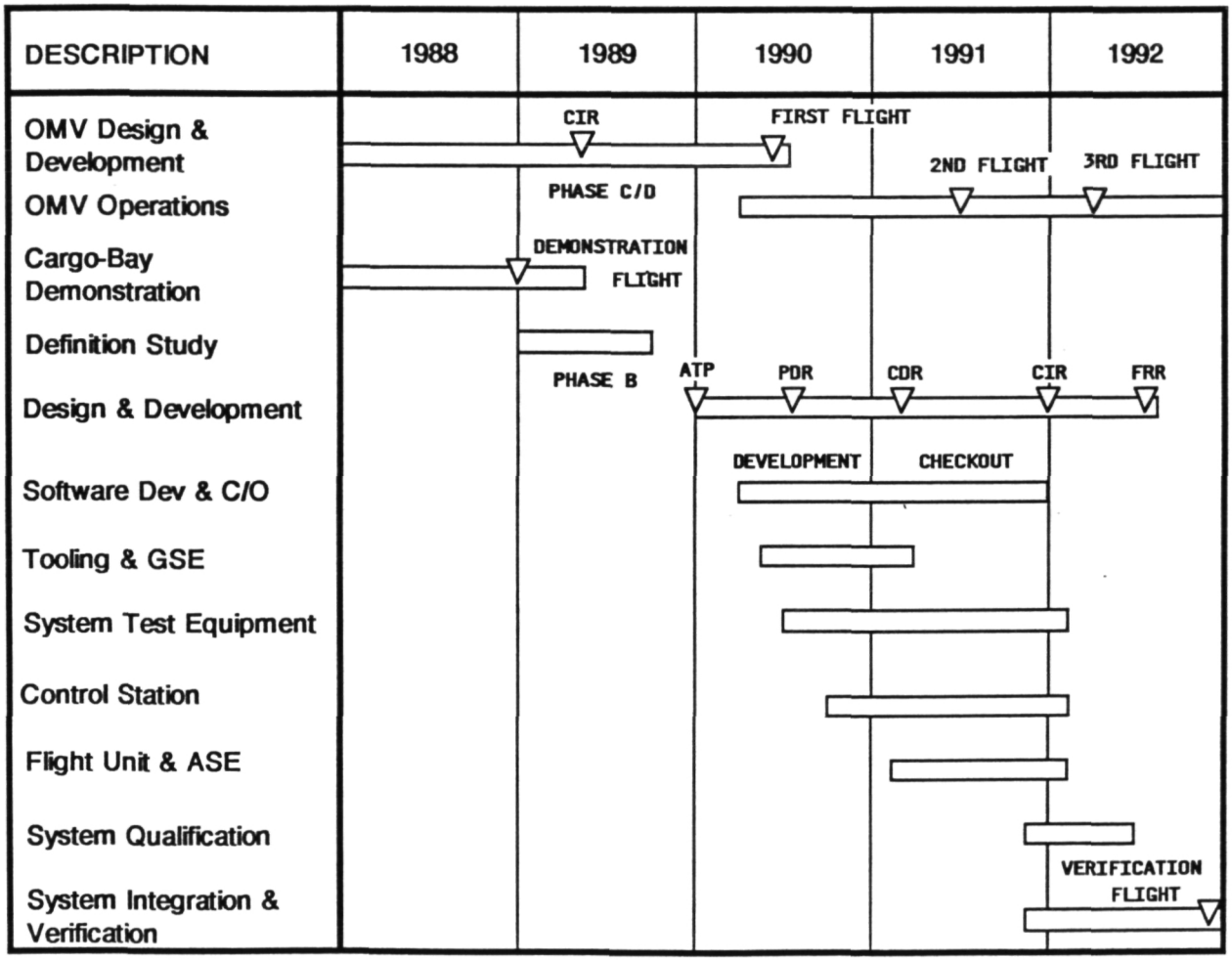

Figure 7.3-1 Free-Flight Verification Program Schedule

The first two lines of the figure show the OMV design and development schedule and the OMV operations schedule for reference. A line indicating the cargo-bay demonstration schedule is also shown. The

servicer development is coordinated with the OMV schedule to provide a qualified "kit" for when the OMV becomes fully operational.

The phase B study for the servicer has been shortened to 9 months due to the extensive amount of definition work that has been done as part of earlier contracts. A three year period has been allocated for the C and D phases, which is a representative timespan for operational equipment of this complexity. The development schedules of the servicer and the serviceable spacecraft have been combined. It is felt that the definition period of the spacecraft may be somewhat longer than that of the servicer as little work has been done in this area. The design and development of the servicer will take longer as the spacecraft will be used only once and will probably consist of a combination of existing equipment. The development of a servicer ground control station has been included. Due to the "kit" relationship with the OMV, the station will likely be collocated with the OMV ground control station, and will utilize much of its support equipment.

The servicer system will be transported to space in the cargo bay of the Orbiter, making it necessary to meet the safety standards of the Shuttle. All four safety review phases have been included in the plan. Additional reviews may be necessary after the servicer becomes operational, depending on the type of operations to be performed.

The schedule includes time for the fabrication of production tooling, although only a single unit is to be built as part of this effort. This will permit the future production of servicer units in a timely and economical manner.

The verification flight date of late 1992 corresponds to the operational time frame of the OMV. The schedule for the servicer could be accelerated if there was a need to do so, allowing for an earlier flight date. The servicer schedule not only complements the development of the OMV, but ties nicely to the schedule of the Space Station.

7.4 FREE-FLIGHT VERIFICATION COST ESTIMATE

A preliminary cost estimate was prepared for the free-flight servicer system verification. The costing was based on estimated weights of the equipment for the free-flight servicer verification. The cost estimate was developed using cost estimating relationships (CER) contained in the Martin Marietta Aerospace Cost Data Base and in several NASA pricing models.

In estimating the costs of the servicer free-flight verification, the following assumptions were made:

1) All costs are in 1985 dollars;

2) Costs include the design, development, fabrication, testing, and checkout of the verification hardware;

3) The costs for the Shuttle flight, the OMV, the standard RMS, the RMS grapple fixture and the crew time are not included in the cost estimate;

4) The costs associated with crew training are not included;

5) The following items will be provided by Goddard Space Flight Center and are not included in the estimate:

   a) Multi-Mission Modular Spacecraft (MMS) support structure;

   b) MMS checkout, handling and transportation equipment;

   c) Two MMS modules and three interfaces;

   d) Modified Module Servicing Tool;

   NOTE: The cost of integrating the Item 5) equipment into the system is included in the estimate.

6) The design and build of one servicer for the free-flight verification will use the traceability, configuration control and qualification requirements of fully operational equipment. The proto-flight approach will be used for the servicer;

7) Leasing of the SPAS-01 satellite, or its equivalent, and its modification for the module exchange and fluid resupply functions as the serviceable satellite was assumed to be possible for minimum cost;

8) Replaceable modules and the fluid resupply module will be reused and reworked as necessary from the cargo-bay servicer demonstration tests;

9) The installation and removal of the experiment hardware into/from the Orbiter cargo bay will be performed by NASA personnel. The cost of the NASA portion is not included in the estimate.

A breakdown of the cost estimate is shown in Table 7.4-1. The total estimated cost of the engineering effort and building the servicer system for free-flight verification will be approximately $35 million.

Table 7.4-1 Free-Flight Verification Cost Breakdown

Flight Equipment		Ground Equipment	
Servicer Mechanism	8.0	Servicer Checkout	0.2
Airborne Support Equip	8.2	Stowage Rack Checkout	0.1
Servicer I/F Equip	3.0	Spacecraft Checkout	0.1
Stowage Rack	4.0	Ground Control Station	3.3
Stowage Rack I/F	0.5	Personnel	0.1
Spacecraft Bus Rental	2.2		
Mockup Equipment	0.8	Subtotal	3.8
Docking Probe	4.5		
Subtotal	31.2		
Program Total	35.0		

The estimated cost of 35 million dollars is the same as was previously estimated. The cost of the servicer unit was reduced by using the proto-flight approach. This approach permits a single unit to be used for qualification testing and operations. The tests are performed on the flight unit in such a manner as to verify the capability, but not damage the unit. The savings were offset by increased costs due to inflation and the need to incorporate several items that were previously included in the cargo-bay demonstrations.

8.0 SERVICER/MMS 1-g DEMONSTRATION

During this phase of the study, the elements of the Servicer/MMS 1-g Demonstration Plan presented in the Sections 4.0 and 5.0 were expanded to provide the basis for the design and fabrication of the MMS demonstration hardware.

The servicer configuration for 1-g demonstration was reevaluated to include MMS module changeout. The requirements of the MMS servicing ground demonstrations were analyzed and a preliminary system concept design was performed to establish the relative position of the main components. The configuration of the MMS module mockup and of the modified MST were selected and the c.g. locations were calculated. Unbalanced moment loads on the ETU drive motors for MMS ground servicing demonstrations were analyzed and were found to be within the existing mechanism capability. The servicing times corresponding to various arrangements of the modules on the stowage rack were analyzed. The MMS module locations were selected to minimize the servicing time.

Schedule specifics and cost considerations for the basic contract and Change Orders 1 and 3 presented at the Midterm Review were included in this Section, along with a description of the Servicer/MMS 1-g Demonstration Equipment Drawings and of the equipment fabrication and tests, as part of the Change Order 3 activity.

8.1 SERVICER/MMS 1-g DEMONSTRATION PLAN

This activity was a continuation of the study completed under the prior contract, NAS8-35496, and expanded and updated the Servicer Development Program Plan to include high fidelity ground demonstrations of a servicer system. As part of Change Order 1 of the subject contract, the servicer system/MMS 1-g demonstration was further defined as described in this section. More detailed requirements, at the subsystem level, were identified. An engineering analysis was performed to verify that the loads on the drives of the ETU, during the demonstrations of MMS module exchange, are within the existing drive

capability. Trade studies were conducted to select the overall configuration of the servicer system and a preliminary concept design of specific demonstration equipment was performed. A detailed schedule for the servicer/MMS 1-g demonstration equipment design and fabrication was prepared along with a cost estimate.

8.1.1 Subsystem Requirements

The servicer/MMS 1-g demonstration system requirements presented in Sections 3.1 and 5.1 were reviewed and subsystem requirements were identified for the MMS module mockup, spacecraft mockup, stowage rack mockup, electrical connector positioner mechanism, and optical targets. The specific requirements developed for the Module Servicing Tool (MST) adaptation for 1-g demonstrations are included in Section 3.1.

The selected configuration of the MMS 1-g demonstration servicer will be the alternative that satisfies more of these requirements and to a higher degree.

The following requirements apply to the MMS module mockup:

1) The MMS module mockup should have the same size, shape and physical appearance as the actual module;

2) The module retention system shall have the same interface with the support structure as the actual hardware except that lower torque levels and different materials are allowable for the ground demonstration in order to reduce weight;

3) The weight of the MMS module mockup shall be kept to a minimum;

4) The interface of the module mockup with the modified MST shall be the same as for the actual hardware except that different materials may be used for the ground demonstration in order to reduce weight;

5) The MMS module mockup shall be designed to withstand, with proper margins of safety, all the loads generated during all phases of servicing demonstrations. For the module mockups used in flight servicing demonstrations, additional verification for the launch, deployment and return loads is required;

6) The module mockup shall have provisions for operating "ready to latch", "latched" and "unlatched" sensors for both attachment fasteners;

7) The mockup of the module electrical connector shall have the same interface with the spacecraft support structure mockup as the actual hardware, including the misalignment capability, except that, for the ground demonstration, different materials and a smaller, rack and panel type connector may be used in order to reduce the mate/demate forces and the weight. The number and size of the wires across this interface shall be minimized;

8) The module mockup should be easily repairable in case of accidental damage, using common tools and readily available materials;

9) The module mockup should withstand 400 complete cycles of ground demonstrations without refurbishment.

The following requirements apply to the spacecraft mockup for the ground MMS servicing demonstration:

1) The spacecraft mockup shall be provided with one MMS module location in addition to the existing axial and radial module locations;

2) The position of the MMS module mockup on the spacecraft mockup, shall represent the expected relative position of the MMS module with respect to the servicer when using lateral docking and axial MMS module exchange;

3) The interface of the support structure with the module mockup shall be the same as the actual hardware except that different materials and a smaller electrical connector may be used;

4) The support structure interface shall include proper sensors to indicate the "ready to latch", "latched" and "unlatched" conditions for each of the two fasteners;

5) Provisions for later expansion of the spacecraft mockup to incorporate fluid resupply demonstration hardware shall be made;

6) Adequate stiffness of the spacecraft mockup attachment to the docking probe mockup shall be provided in order to maintain the accuracy of positioning of the servicer arm and modified MST (with and without module) within the capture envelope of the module retention system or of the module latch interface;

7) Optical targets shall be provided on the spacecraft mockup, one for each fastener (and fluid resupply interface, if applicable). The targets shall be located so that they are clearly visible on the TV camera monitor, during module/tool attachment/detachment;

8) The spacecraft mockup shall withstand 400 complete cycles of MMS module exchange demonstrations without refurbishment.

The following requirements apply to the stowage rack mockup for the ground demonstration of MMS servicing:

1) The stowage rack mockup shall accommodate two functional attachment locations for MMS modules (a "temporary" and a "good" module location), in addition to attachment locations for two 24 in. cube modules and a modified MST storage rack;

2) The interface with the MMS module mockups shall be the same as for the operational hardware except that lower torques, different materials and a smaller electrical connector may be used. An

electrical connector mockup, incorporating a small electrical connector, to verify proper mating, shall be provided at the "good" module location only;

3) The support structure interface shall include sensors to indicate "ready to latch", "latched" and "unlatched" conditions for each of the two fasteners, at each module location;

4) Modifications to the current configuration of the ETU stowage rack mockup shall be minimized;

5) A storage location for the modified MST shall be provided on the stowage rack mockup having the same interface as the MMS module. The modified MST shall be secured in this location using its latches. A sensor for the presence of the modified MST in the storage location shall be provided;

6) The location of the modified MST on the stowage rack mockup shall be such that no interference with the arm operation occurs during demonstrations and good visibility is assured for the operator and other persons watching the MMS module exchange demonstrations;

7) The location of the MMS module mockups on the stowage rack shall provide good visibility for the persons watching the servicing demonstrations and a minimum total MMS servicing time;

8) Optical targets shall be provided on the stowage rack, one for each MMS fastener and for the modified MST storage location, positioned so that they are clearly visible on the TV camera monitor during attachment/detachment;

9) The stowage rack mockup shall withstand 400 complete cycles of MMS module exchange demonstrations without refurbishment.

The following requirements apply to the electrical connector positioner mechanism to be installed on the existing ETU end effector:

1) The connector positioner shall provide proper alignment and translation stroke for mating a subminiature, double density, type "D" connector with 19 pins, for up to 22 AWG leads;

2) The stroke of the mechanism shall be 5/8 in.;

3) The insertion force capability of the mechanism shall be more than 20 lbs;

4) The power supply for the mechanism actuator shall be 24 $\pm$ 2 Vdc;

5) The total time of translation for the mating or demating stroke shall be less than 6 sec;

6) The net weight of the mechanism (without cabling) shall be less than 0.5 lbs;

7) The connector positioner mechanism shall be as compact as practical. Adequate clearance with respect to all servicer system elements shall be provided. In the retracted position, the mechanism shall allow at least $\pm 5°$ of angular misalignment of the end effector with respect to its mating interface, prior to jaw closing;

8) The mechanism or its wiring shall not obstruct the field of view of the TV camera attached to the servicer end effector;

9) The connector positioner mechanism shall be attached to the existing ETU end effector, opposite to the existing power takeoff (interface mechanism drive). Its position relative to the ETU end effector shall be in accordance with the Servicer End Effector/Modified MST Interface Drawing shown in Figure 8-1. The existing "ready-to-latch" sensor of the ETU end effector shall be relocated to the position shown in the figure;

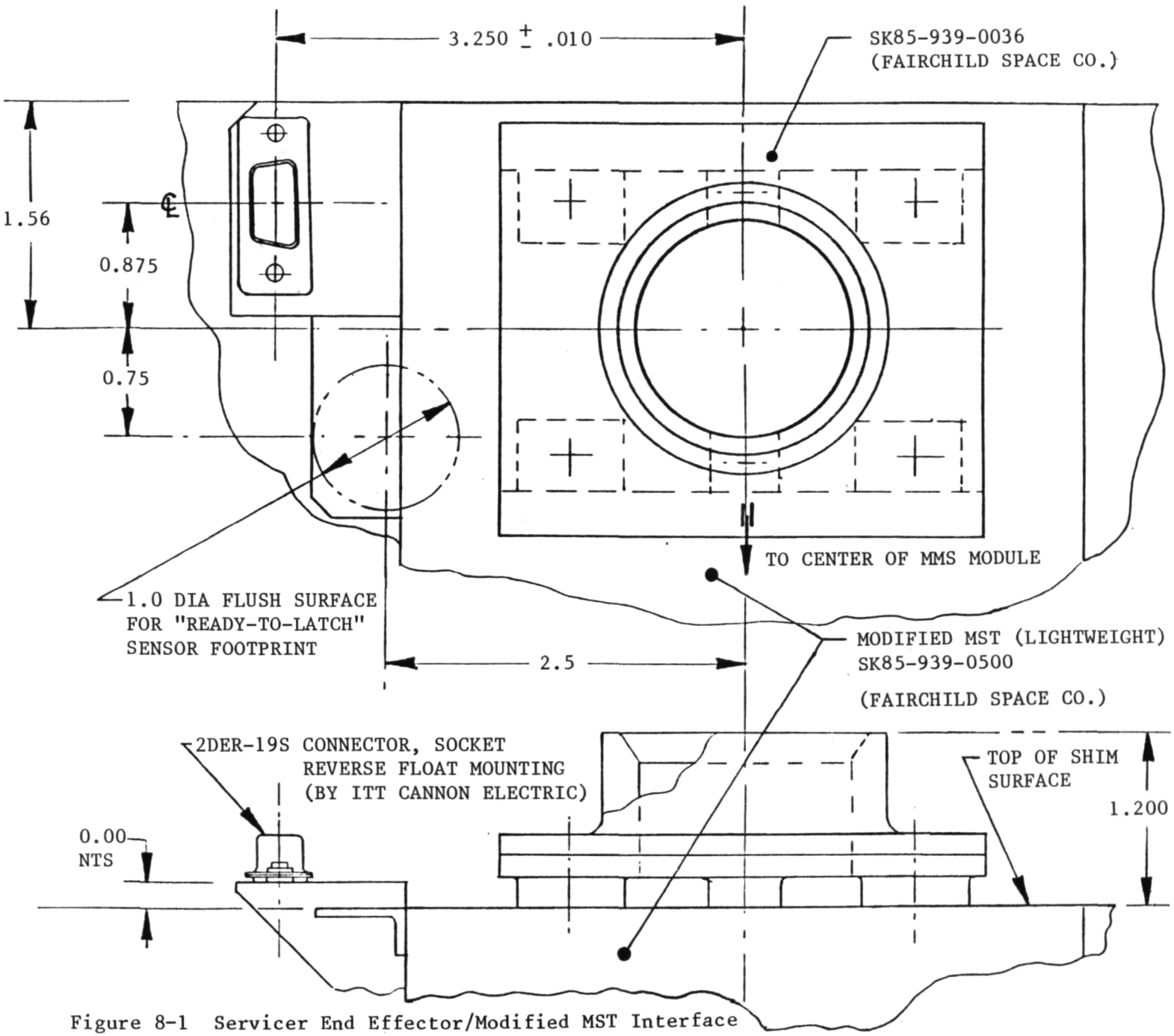

Figure 8-1 Servicer End Effector/Modified MST Interface

10) The connector positioner mechanism shall be provided with sensors to indicate the completion of the stroke in each direction;

11) Mechanical stops shall be provided for the end of stroke in each direction, capable of stalling the electrical actuator and preventing mechanical overload of the mating connectors;

12) The "connected" end of stroke of the mechanism shall be adjustable within 1/8 in.;

13) The connector positioner mechanical interface with the existing ETU end effector shall be kept as simple as possible for ease of installation;

14) The connector positioner shall be a self contained unit, capable of being fully adjusted and tested prior to its installation on the ETU;

15) The adjustment points for the end of stroke and sensors shall be accessible before and after the installation of the mechanism on the ETU. Common tools should be used for making the adjustment;

16) The connector positioner mechanism should withstand 400 complete cycles of MMS module exchange demonstrations without refurbishment.

The following requirements apply to the optical targets:

1) An optical target shall be provided at each MMS fastener location on the stowage rack and spacecraft mockups and at the MST storage location, for verification of end effector alignment, using the existing TV camera and lights;

2) The optical targets for the MMS servicing demonstrations shall be of similar design and have patterns similar to the existing targets for the basic module exchange. The horizontal line shall be at least 7 in. long to take full advantage of the existing TV monitor image size, for improved alignment capability;

3) The relative position of the optical target with respect to the end effector interface and TV camera lens shall be the same for both basic and MMS module exchange demonstrations;

4) The targets shall have a white background and black lines. The line width shall be 0.1 in.;

5) The optical targets shall be mounted directly on the module supports, both on the stowage rack and the spacecraft mockups, to minimize the need for resetting in case of accidental module support movement;

6) Adequate clearance between targets and the MMS modules shall be provided at all times during module exchange. Compliant attachment of the target plate to its bracket is recommended to minimize damage to the MMS module mockup in case of accidental interference;

7) The optical target shall be adjustable in its plane within $\pm 3/8$ in. in all directions. Positional adjustment in the direction perpendicular to the target plane is not required. The target plate shall be perpendicular to the optical axis of the TV camera within $\pm 2°$;

8) The design of the optical target for MMS module exchange should be such that its alignment can be done with the existing template used for the basic module optical targets.

8.1.2 Torque Loads on ETU Drives for MMS Servicing Demonstrations

An analysis of the unbalanced torques acting on the ETU drive motors during the ground demonstrations of MMS module exchange was performed. It was found that all the loads are within the existing ETU configuration capability.

The existing ETU coordinate system definition, the coordinate transformation equations and the arm geometry were reviewed. The same

ORIGINAL PAGE IS
OF POOR QUALITY

coordinate variables, equations and arm geometry will be used in the conceptual design of the servicer configuration for ground demonstrations of MMS module exchange.

The existing configuration of the ETU and the three axes (X, Y and Z) of its reference system are shown in Figure 8-2. The origin is on the docking probe centerline, midway between the upper and lower joints of the parallelogram of the shoulder segment of the arm, which is 33.25 in. above the top of the stowage rack mockup beams. X is along the

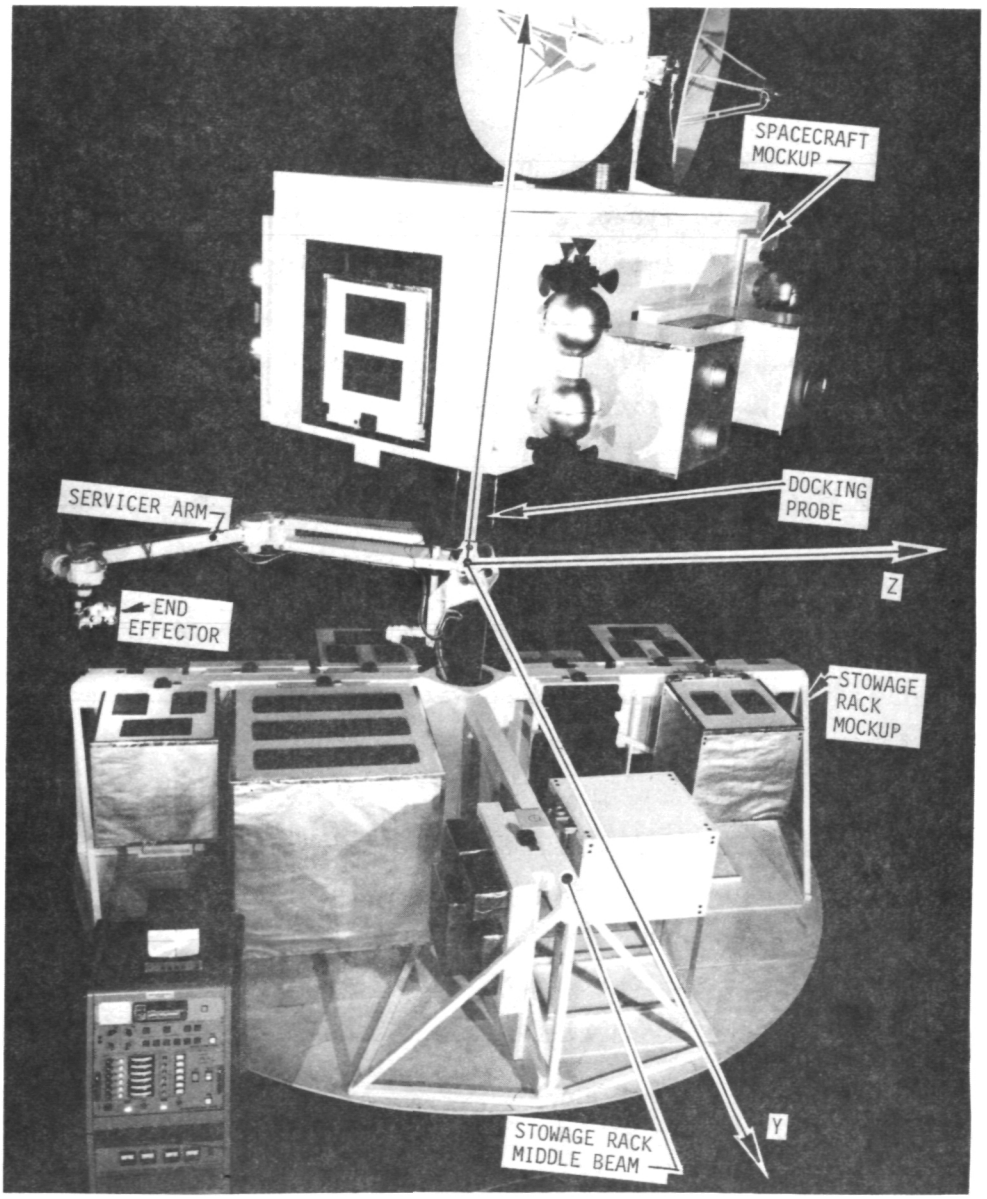

Figure 8-2 Existing ETU Configuration and its Reference Coordinates System

docking axis, positive towards the spacecraft mockup. Y is along the middle rib (beam) of the stowage rack mockup and Z completes a right handed system.

The ETU arm configuration is shown in Figure 8-3. The six joints and their alphabetical designation, as well as the principal dimensions of the arm are shown on the figure.

There are six degrees of freedom of the servicer mechanism. These six can be combined into two groups of three each. One relates to the position of the end effector, thinking of the end effector as a single point. The second group relates to the attitude of the end effector, now thinking of the end effector as a movable hand capable of rotating about three different independent axes. These movements are independent of the position of the end effector, which may or may not change at all while the attitude of the end effector is changed. The definitions that follow treat end effector "position" and "attitude" separately. Also treated separately are the cylindrical coordinates from the specific joint coordinates of the ETU.

The variables in the cylindrical coordinate system, defining the end effector position are x, r, and Theta, where:

1) x is along X, +x for +X, same origin as for the XYZ reference system;

2) r is the radial distance, always positive;

3) Theta, the central angle, is defined in Figure 8-4. The +Y axis is the zero reference. Theta is + towards +Z.

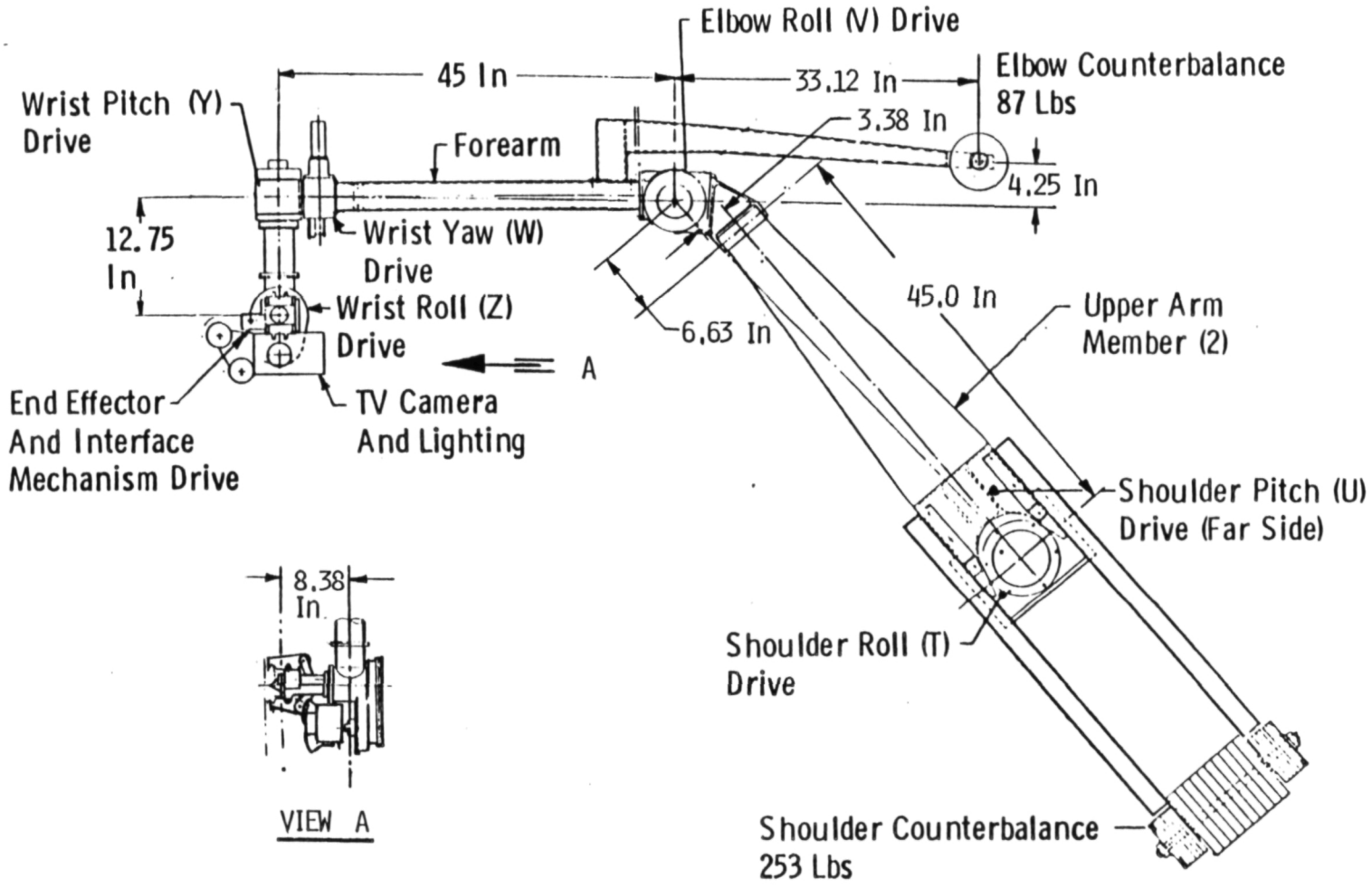

Figure 8-3 ETU Arm Configuration

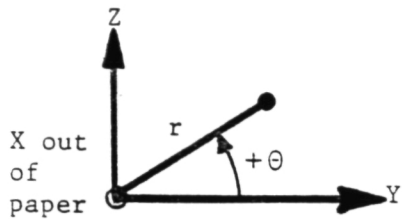

Figure 8-4 End Effector Position in Cylindrical Coordinates

Three variables are used to define the attitude of the end effector. They are the angles Psi, Phi and Omega, which are shown in Figure 8-5.

While Figure 8-5 shows the axes of rotation of Psi and Omega being colinear and indicating a sigularity, the singularity is not of significance. Phi is +90 or -90 degrees for axial operation and the singularity is avoided because the Psi and Phi axis are at 90 degrees to each other. For radial motion Phi is 180 degrees, however, the singularity can be ignored because of the way in which the Psi and Omega cylindrical coordinates are used.

An auxiliary reference system, X', Y' and Z' is considered attached to the end effector as shown in Figure 8-5. The three rotations, Psi, Phi and Omega have the desired meaning only when they are taken in sequence - Psi, then Phi and then Omega. They modify the attitude of the end effector auxiliary reference system with respect to its previous intermediate step position as shown in Figure 8-6.

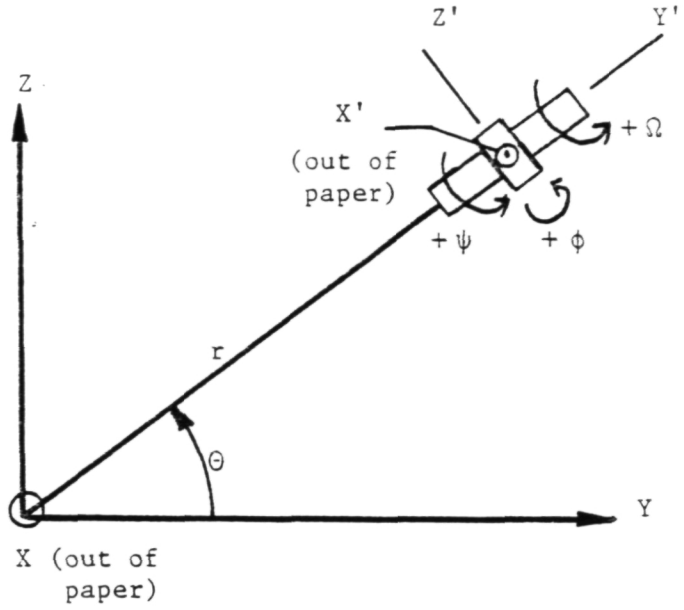

Figure 8-5 Cylindrical Coordinates

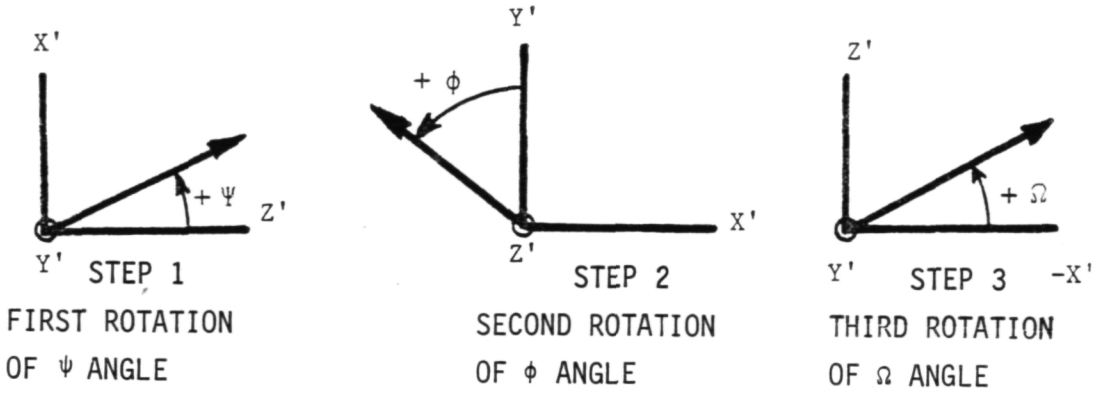

Figure 8-6 End Effector Attitude Definition

The ETU joint coordinates expressed in terms of angles of rotation of the six drives of the servicer mechanism are also used to define the arm position.

The position and the attitude of the end effector is physically changed by actuating the six drives T, U, V, W, Y and Z. The final result is a function of the reference position, the value of the six angles of joint rotation, also designated T, U, V, W, Y and Z respectively, and the dimensions of the arm segments l_1, l_2, l_3, l_5 and l_6. A conventional reference position of the arm was selected as shown in Figure 8-7 for the purpose of establishing the origin or zero values for the six angles of rotation of the joints. All joint angles are zero in the reference position, except for the elbow "V" and the shoulder roll "T" drive angles, which are measured as shown. The arm in the reference position is horizontal, that is parallel to the YZ plane of the servicer reference system.

In the reference position the end effector faces outward as shown in Figures 8-7 and 8-8. The latter shows also the positive directions of wrist joint rotation for the W, Y and Z drives.

ORIGINAL PAGE IS
OF POOR QUALITY

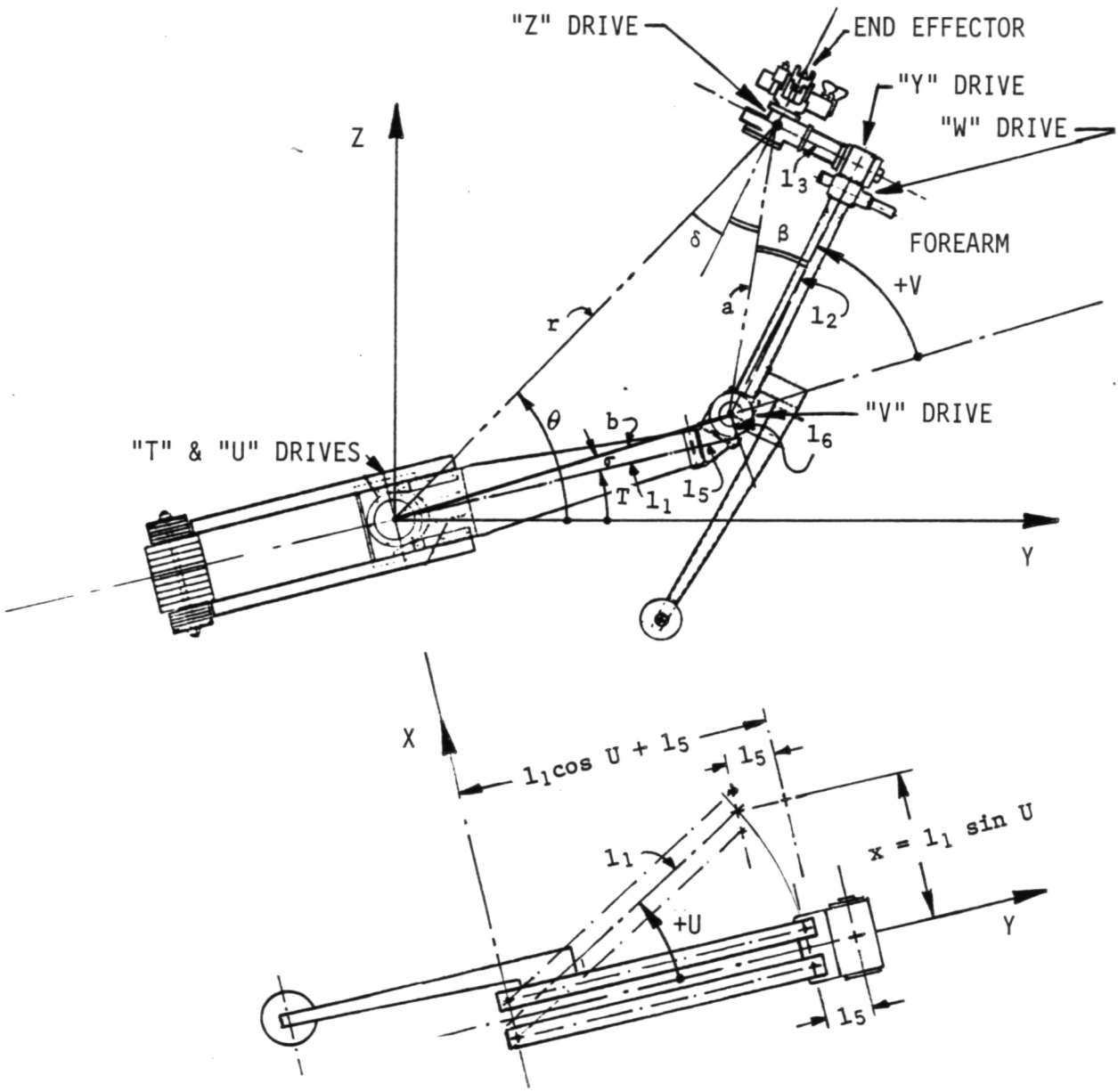

Figure 8-7 Reference Position of ETU (U = W = Y = Z = 0)

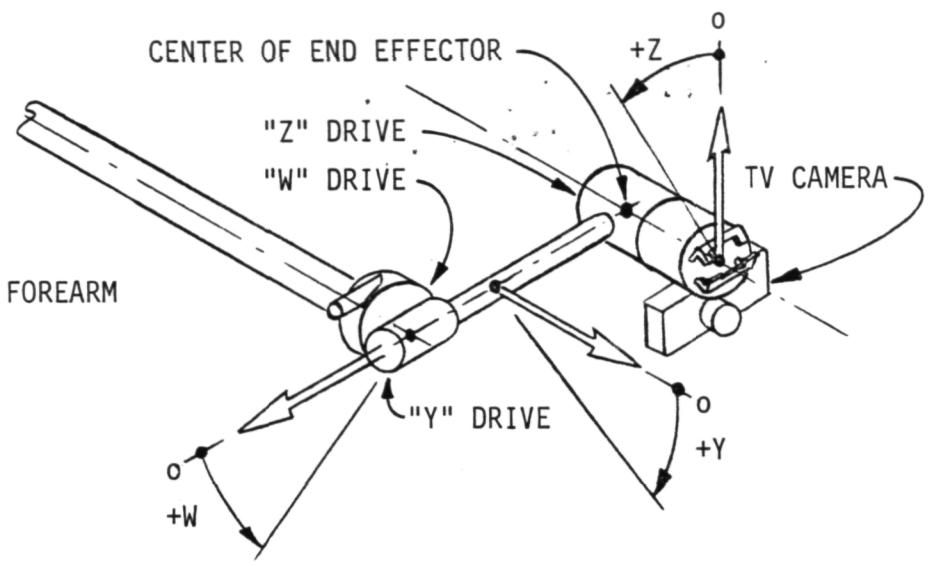

Figure 8-8 ETU Wrist Joints in the Reference Position (W = Y = Z = 0)

The length of ETU arm segments are:

l_1 = 45.0 in.
l_2 = 45.0 in.
l_3 = 12.875 in.
l_5 = 6.625 in.
l_6 = 3.375 in.

For MMS module exchange demonstrations the ETU operates in the axial mode only, therefore, W = Psi = 0 at all times. Except during the FLIP or IFLIP steps the end effector centerline is vertical. When it is facing the stowage rack mockup Y = Phi = +90°. When facing the spacecraft mockup Y = Phi = -90°.

Once the position of the MMS module mockup on the stowage rack or spacecraft mockup is selected, the cylindrical coordinates x, r and Theta of its fastener locations are defined. Also known is the angle Alpha, between the Y axis and the orientation vector of the fastener (see Figure 8-9). The equations used to calculate the corresponding

joint angles T, U, V and Z and the end effector attitude angle Omega are given below. More detailed explanation is given in the Servicer Simulation Software Requirements (MMS Modules) document, MCR85-1331, Martin Marietta Corporation, June 1985.

$$U = \sin^{-1}\left(\frac{x}{l_1}\right) ; \quad a = \sqrt{l_2^2 + l_3^2} = 46.81 \text{ in.} ; \beta = \tan^{-1}\left(\frac{l_3}{l_2}\right) = 15.97^{\circ} ;$$

$$V = -\beta + \cos^{-1}\left[\frac{r^2 - a^2 - (l_1 \cos U + l_5)^2 - l_6^2}{2ab}\right]$$

where:

$$T = \theta - \sigma + \delta - V$$

$$W = \psi = 0$$

$$Y = \phi = \pm 90^{\circ}$$

$$b = \sqrt{(l_1 \cos U + l_5)^2 + l_6^2}$$

$$\delta = V - \sin^{-1}\left[\frac{a}{r} \sin (V + \beta)\right]$$

$$\sigma = \tan^{-1}\left[\frac{l_6}{l_1 \cos U + l_5}\right]$$

$Z = \delta + \theta - \alpha$ and $\Omega = Z - \delta$ when facing the stowage rack

$Z = 180^{\circ} - (\delta + \theta - \alpha)$ and $\Omega = Z + \delta$ when facing the spacecraft (see Figure 8-10)

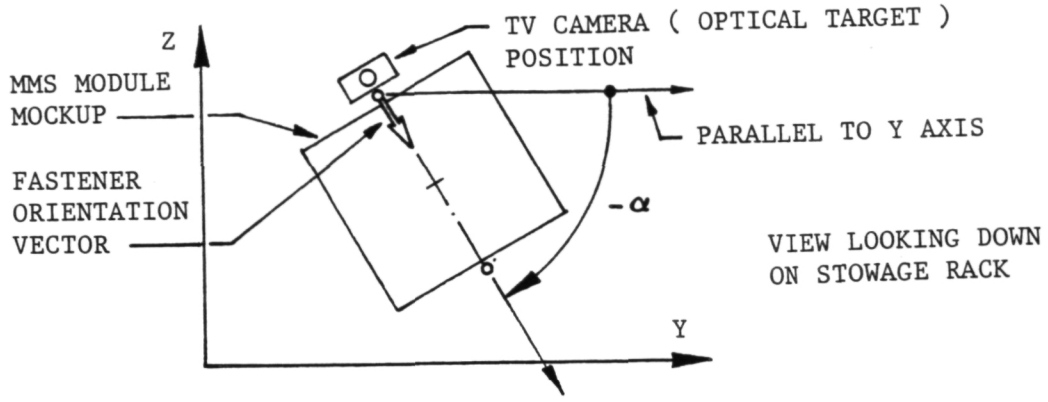

Figure 8-9 Fastener Orientation Angle Alpha

END EFFECTOR FACING STOWAGE RACK

END EFFECTOR FACING SPACECRAFT

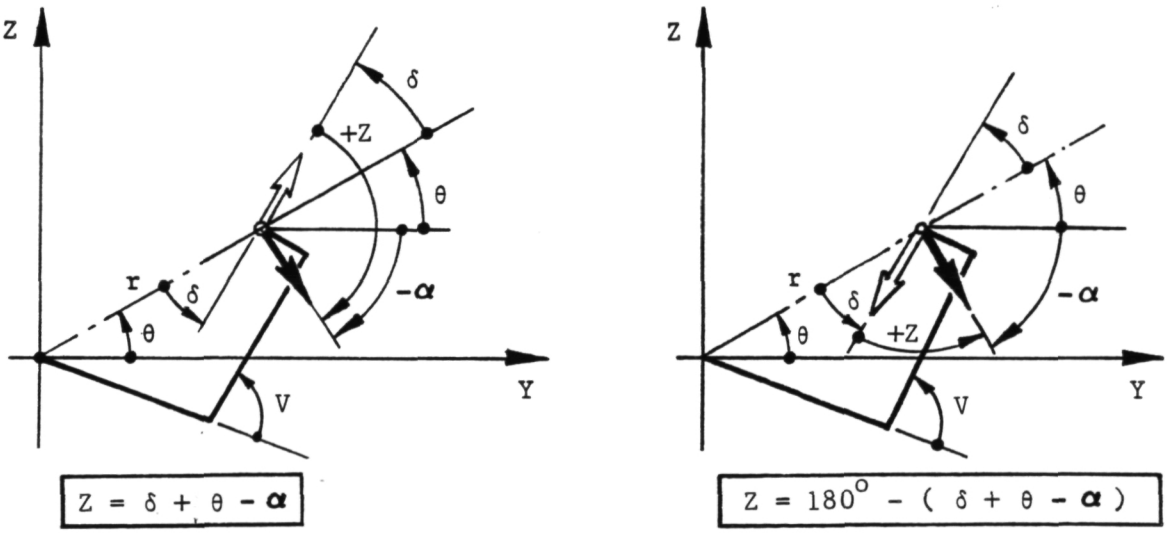

NOTE: BOTH DIAGRAMS SHOW VIEWS OF ETU ARM, LOOKING DOWN ON STOWAGE RACK

Figure 8-10 Relationship between Z, Theta and Alpha Angles

The arm configuration and the alphabetical designation of its drives was shown in Figure 8-3. Because the axes of the T and V drives remain vertical at all times, the unbalanced gravity moments do not load their drive motors (except for a negligible increase in bearing friction). The large diameter bearings have sufficient load carrying capability margin in all load cases for MMS servicing demonstrations.

The Z drive is also vertical at all times during MMS module exchange demonstrations except during the FLIP or IFLIP steps, when the motor is not actuated and the brake is applied.

The W drive motor is only actuated to correct for minor arm bending and fabrication misalignments, as the ETU remains in the axial mode at all times. W drive motions are less than 1 deg. The worm gear speed reducer does not back drive so there in no need for a brake. The load on the W drive motor was checked and found to be within the existing mechanism capability at all times during the demonstration of the MMS module exchange.

The remaining drive motors that are subject to torque loads due to unbalanced gravity moments, during the ground demonstrations of MMS module exchange, are the wrist pitch Y drive and shoulder pitch (elevating) U drive motors.

8.1.2.1 Engineering Test Unit Load Limitations - A critical actuator of the ETU is the wrist pitch (Y) drive. The torque required from this drive must not exceed 50 ft-lb to avoid overheating and provide adequate speed. Under a 50 ft-lb torque load the drive will require 15 sec for a 180° flip, as compared to 5 sec with no load.

A number of sketches were prepared to identify the baseline shown in Figure 8-11. The MMS module mockup is shown extending horizontally from the "Y" drive centerline. The unbalanced moment on the servicer wrist pitch "Y" drive is maximum in this position, occurring during the module exchange demonstration. The torque value depends on the weight of the module mockup (W_M) and of the modified MST (W_T), on the

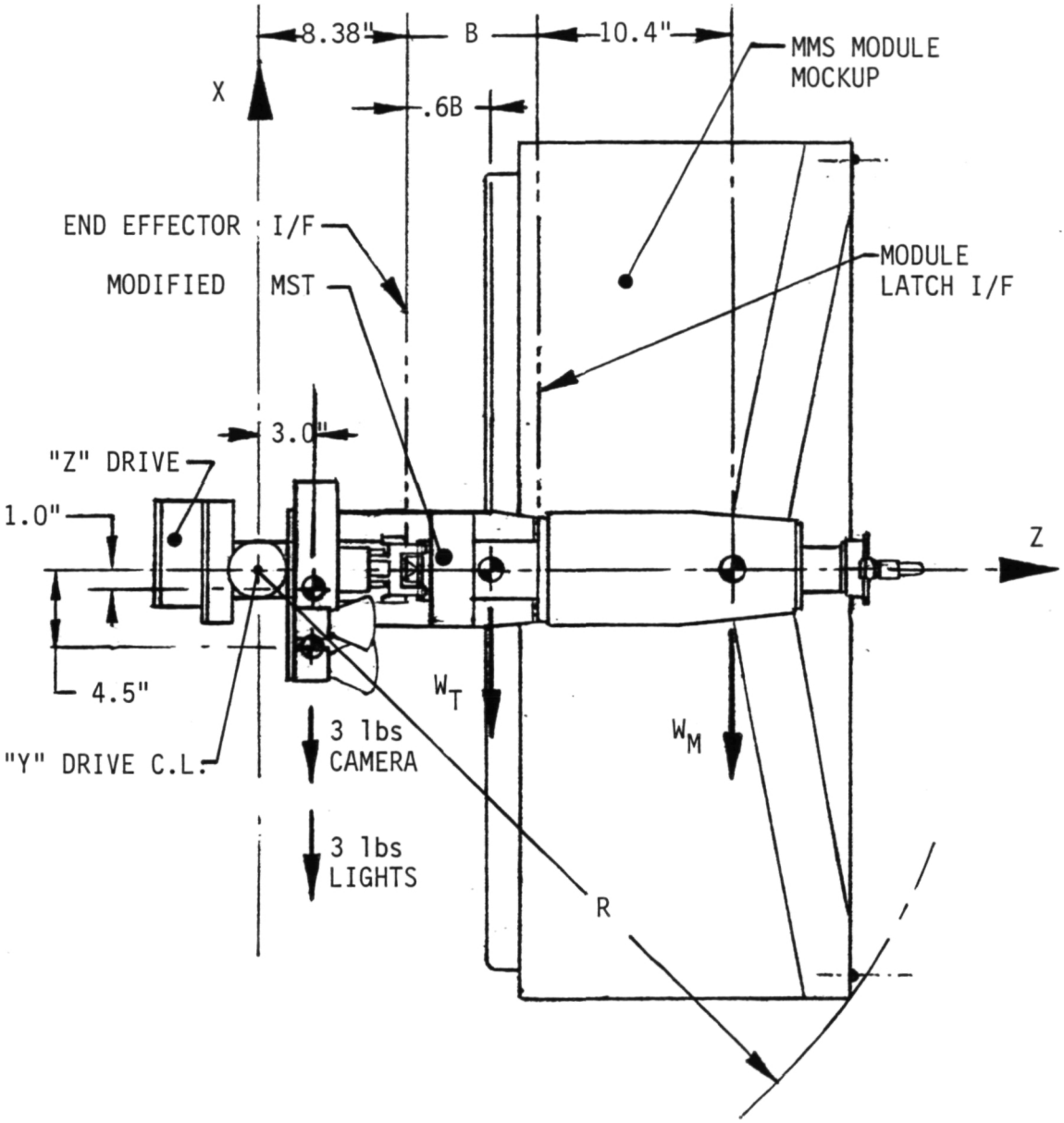

Figure 8-11 Y-Drive Position Relative to Modified MST and MMS Module

positions of the centers of gravity and on the distance "B" between the end effector interface and the module latch interface. The c.g. of the modified MST was assumed to be at a 0.6B distance from the end effector interface. The position of the module mockup c.g. was calculated based on a preliminary design. While the end effector and "Z" drive combined c.g. is approximately on the "Y" drive centerline, the weight of the TV camera and of the lights contribute to the total unbalanced torque on the "Y" drive.

Using the weights and distances shown in Figure 8-11 and a 50 ft-lb Y-drive load capability, calculations were made for the maximum distance between the end effector and module latch interface (distance "B" on the figure) as a function of the module mockup and modified MST weights. The results of the calculations are plotted on the graph of Figure 8-12.

If the MMS module mockup weighs 20 lbs and the modified MST weighs only 7.5 lbs, the maximum distance between the end effector interface and module attach interface (distance "B" on Figure 8-11) is 3.5 in. This distance can be 7.25 in. if the module mockup weight is 12.5 lbs and the modified MST weighs 15 lbs. With B = 5 in. and module mockup weight of 12.5 lbs, the MST could weigh as much as 20 lbs. After discussions with GSFC and Fairchild Space Company, the selected requirements became:

1) "B" distance 7.25 in.;

2) MST weight 15.0 lbs maximum;

3) Module weight 12.5 lbs maximum.

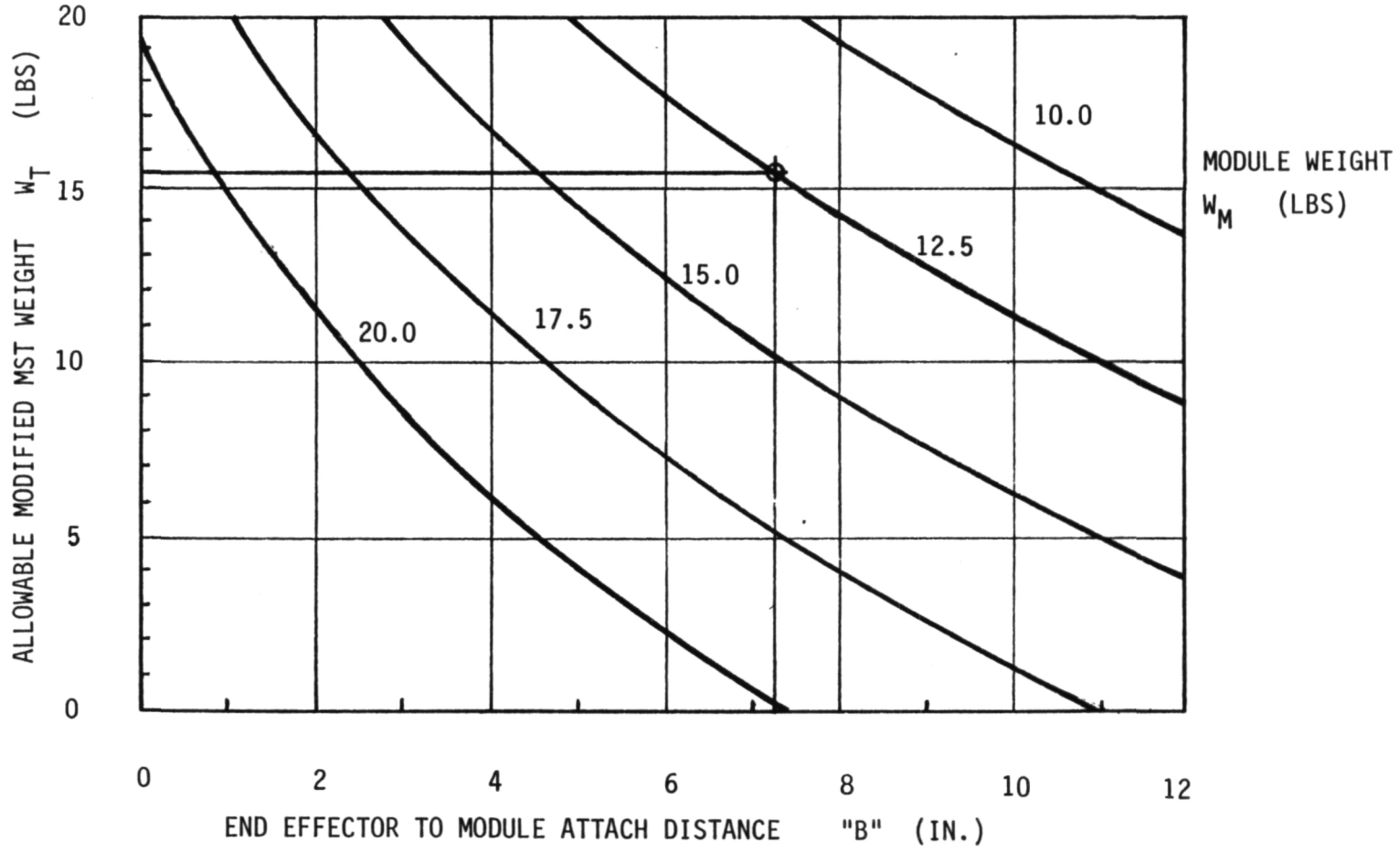

Figure 8-12 Allowable Modified MST Weight

8.1.2.2 Selection of the FLIP Position - The FLIP is a step in an ETU trajectory that changes the attitude of the end effector from vertical, facing the stowage rack to vertical, facing the spacecraft, by rotating the Y drive from $+90^{o}$ to -90° while all other drives are at rest with the brakes applied. This provides a simple motion of the module, which is easy to anticipate, avoiding personnel injury and/or damage to the module mockup due to interference. The IFLIP is the inverse step, from the end effector facing the spacecraft to facing the stowage rack.

Both the FLIP location, in terms of x, r and Theta values and the module orientation with respect to the arm, in terms of the Z value need to be selected. The following requirements apply:

1) The FLIP location and the module orientation must be such that adequate clearance is provided between all the servicer system elements;

2) The FLIP location and the module orientation should be such that the unbalanced gravity moment applied to the "Y" and "U" drive motors is minimized;

3) Changes in the existing ETU configuration and control software in order to demonstrate MMS module exchange shall be minimized;

4) The selected FLIP location and module orientation should be such that the total module exchange time is minimized;

5) The selected FLIP location and module orientation should allow good viewing by visitors, during demonstrations;

6) The selected FLIP location should allow later expansion of the spacecraft mockup to add a propulsion module mockup for refueling demonstrations.

Four module orientations relative to the arm were considered for FLIP. They are the A, B, C and D orientations shown in Figure 8-13 in the

starting position for FLIP, when the module is facing the stowage rack. During the FLIP the module rotates 180 degrees around the "Y" drive axis, from Y = +90° to Y = -90°. The module must be rotated so that it passes through Y = 0 position, for the B, C and D orientations because, otherwise, the forearm is in the way. Passing through Y = 180° is possible for orientation A, however, this way of performing the FLIP is not recommended because it requires extending the arm to a larger radius in order to avoid interference with the spacecraft. Also, the "Y" joint position sensor and limit switches does not allow the joint to reach the 180° position.

The advantages and disadvantages of each of the four orientations were analyzed, based on the above requirements in order to select the module orientation with respect to the arm during the FLIP step. A layout of the modified ETU for the MMS ground servicing demonstration was prepared in order to compare the flip alternatives and check for interferences.

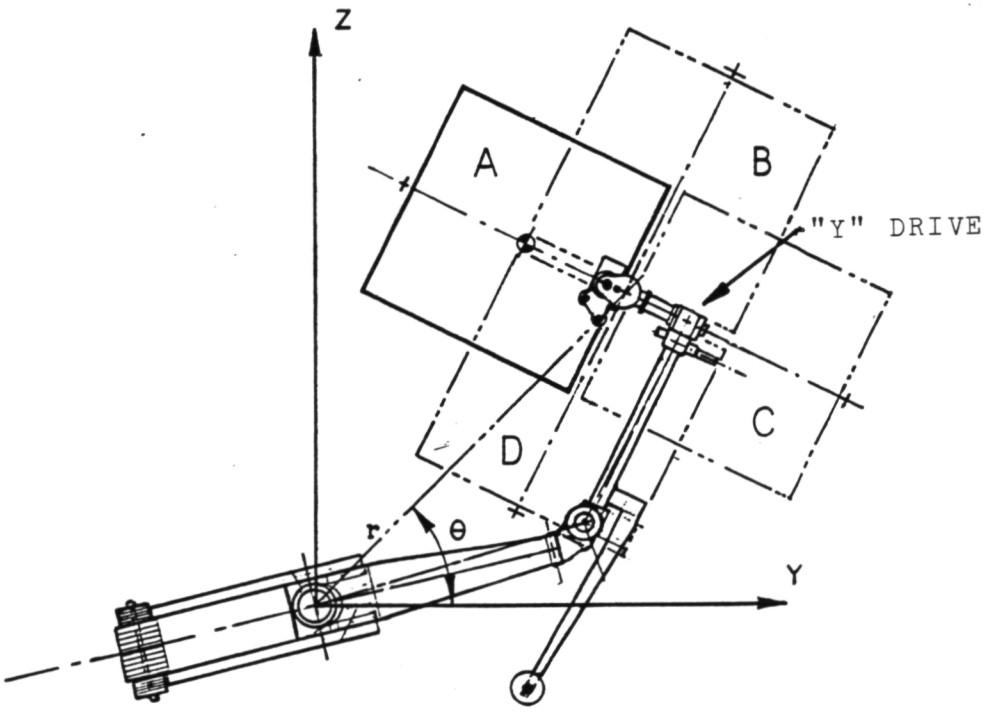

Figure 8-13 Module Orientation Relative to the Arm for FLIP Starting Position

The assumed geometry of the MMS module mockup and the modified MST for the ground demonstrations and the c.g. positions are shown in Figure 8-14. The flip clearance radius of 62.1 in. for the B and D orientations and the 11.0 in. dimension of the clearance envelope for the end effector wire harness are shown. The clearance radius "R" for the A and C orientations was shown on Figure 8-11. For B = 7.25 in.; R = 41.5 in.

The B and D orientations require extending the arm to a larger radius for FLIP compared to A and C, in order to avoid interference with the module mockups in the stowage rack and with the spacecraft mockup. Extending the arm and the module to a larger radius increases the unbalanced torque on the "U" drive motor. For the B and D orientations, in order to provide adequate clearance, the end effector should be at a radius of at least 82 in., while the A and C orientations require only a 75 in. radius. For the D orientation, interference will occur unless the FLIP and IFLIP steps are performed at different locations. This increases the complexity of the control software unnecessarily.

The maximum unbalanced moment on the "Y" drive motor occurs at mid-FLIP, when the combined c.g. of the module mockup and the modified MST is in the same horizontal plane as the "Y" drive centerline (see Figure 8-15).

For the B and D orientations the maximum unbalanced torque on the "Y" drive motor is larger than in the case of the A and C orientations because the horizontal distance between the combined c.g. and the drive centerline is larger (22.08 in. for B and D vs. 18.69 in. for A and C).

Although the unbalanced torque on the "Y" drive is the same for both the A and C orientations, A is better than C because it provides an unobstructed view of the end effector. Also, the maximum unbalanced moment on the "U" drive is smaller for the A orientation as compared to C because the combined c.g. of the module mockup and the modified MST is closer to the "U" drive centerline, as can be seen in Figure 8-15.

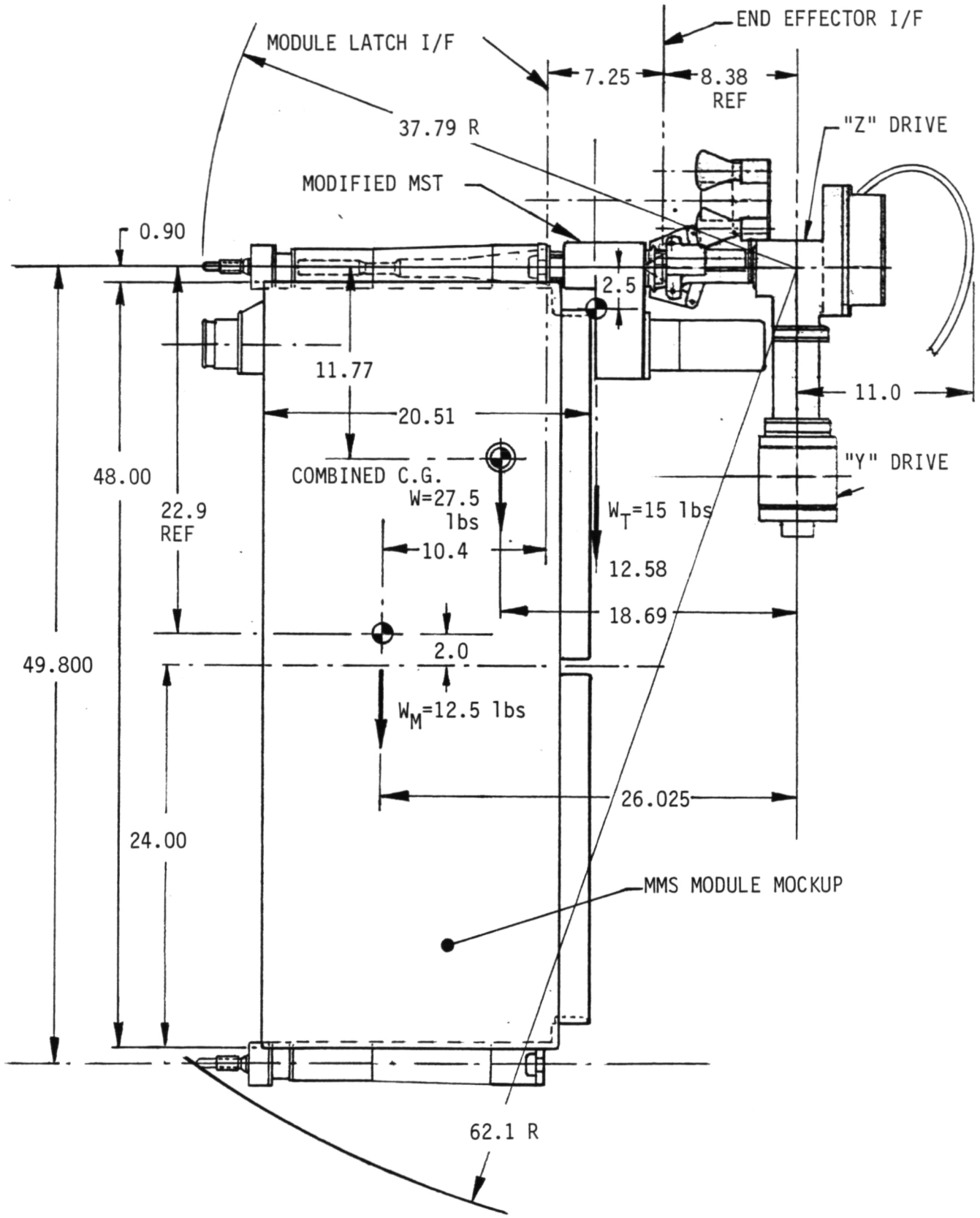

Figure 8-14 MMS Module Mockup and Modified MST Geometry

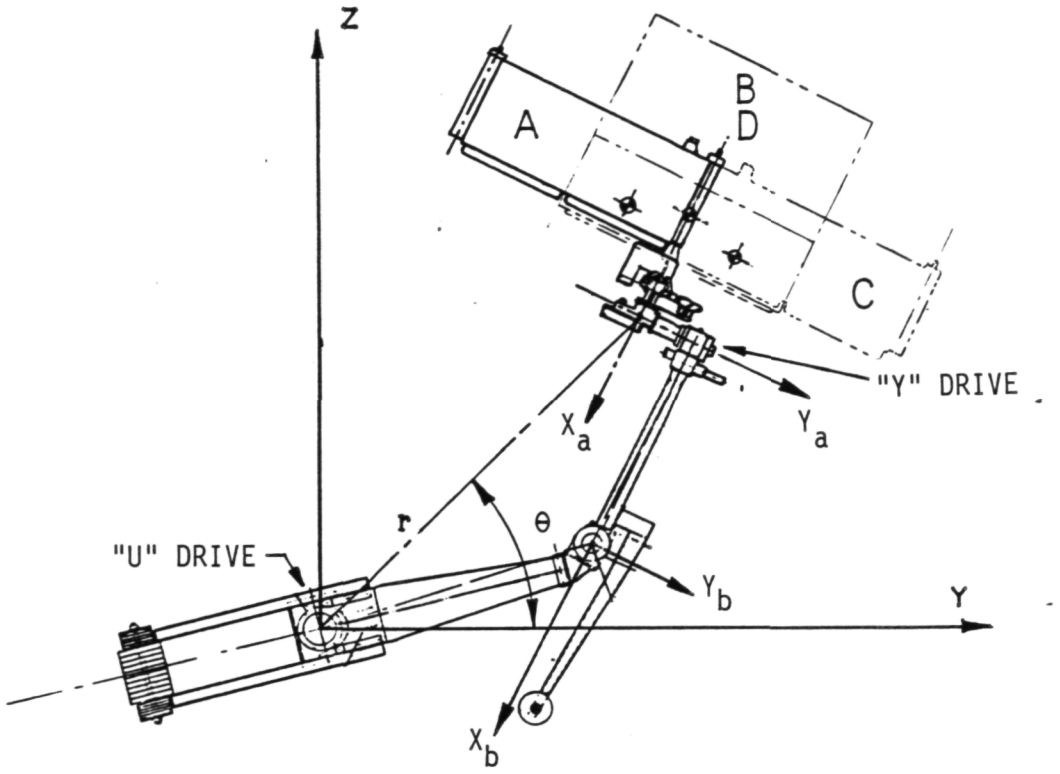

Figure 8-15 MMS Module Mockup in Mid-FLIP Position

In conclusion, the A orientation provides minimum unbalanced torque loads on both "U" and "Y" drives, results in a better view of the end effector during demonstrations and there is adequate clearance with less radial extension of the ETU arm. This orientation of the module with respect to the arm was selected for the FLIP step of the MMS servicing ground demonstrations.

The value of the Z angle during the FLIP, using the A orientation, is -90 degrees.

The selection of the x, r and Theta coordinates for the FLIP was made considering the existing ETU FLIP location and three alternative locations.

The existing FLIP location of the ETU is at x = +20 in., r = 82 in. and Theta + 45° (location 0 on Figure 8-16). A layout was made for the servicer system configuration for ground demonstrations of MMS module exchange and it showed that this location for FLIP is not feasible, due to interference with the spacecraft mockup.

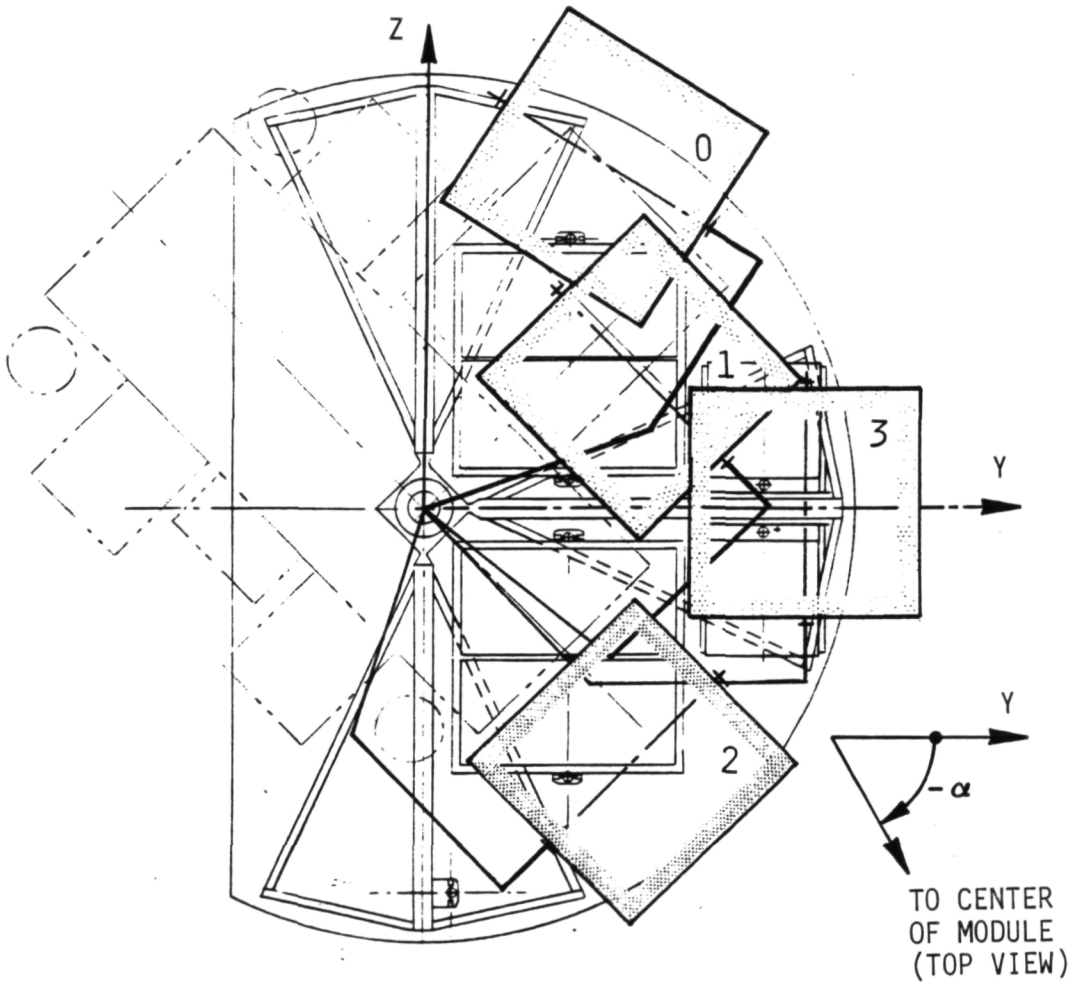

Figure 8-16 Alternative Locations for FLIP for MMS Servicing

Three alternative locations for FLIP were considered (see Figure 8-16):

1) Module parallel to MMS spacecraft module location,

x = +11.00 in.
r = 63.00 in.
Theta = 8.87°;

2) Module in front of spacecraft radial module location,

x = +13.00 in.
r = 75.00 in.
Theta = -70.00°;

3) Module parallel to Z axis, above middle rib of stowage rack,

x = +14.00 in.
r = 82.00 in.
Theta = -16.67°.

These alternative FLIP locations were analyzed and traded off against the requirements. Location No. 1 provides too little clearance, only 1 to 2 inches between the module mockup and the spacecraft mockup or the module in the stowage rack. Location No. 3 offers good visibility of the FLIP but does not provide adequate room for later addition of a propulsion module on the spacecraft mockup.

The recommended alternative is the FLIP Location No. 2. It provides adequate clearance, allows an unobstructed view during demonstrations and leaves ample room available for expansion of the spacecraft mockup. During MMS module exchange system checkout, it was necessary to increase the value of x to 19.00 in. to provide adequate clearance.

8.1.2.3 Torque Load on "Y" Drive - Maximum torque load occurs at mid-FLIP, when the combined c.g. of the module mockup and modified MST is in the same horizontal plane with the "Y" drive centerline. The A orientation of the module mockup was assumed as shown in Figure 8-15. A reference system Xa, Ya, Za, attached to the end effector is also shown in the figure. Other assumptions were the weight of the module mockup of 12.5 lb, the weight of the modified MST of 15 lb and a horizontal distance of 18.69 in. from the combined c.g. to the centerline of the "Y" drive (see Figure 8-14).

The weight and the c.g. position of the elements considered in the calculations are given in Table 8-1 and were shown previously in Figure 8-11.

Table 8-1 Weight Data for "Y" Drive Torque Load Calculation

ELEMENT	WEIGHT (lb)	Xa (in.)	Za (in.)
End Effector and "Z" Drive	22.46	0	0
Module and Modified MST	27.5	-18.69	0
TV Camera	3.0	- 3.0	- 1.0
Lights	3.0	- 3.0	- 4.5

The calculated unbalanced torque applied to the "Y" drive output flange is 44.35 ft-lb. The dual path internal gearing of the "Y" drive has a ratio of 103.09:1 and an estimated efficiency of 90%. The corresponding maximum motor torque load is 0.48 ft-lb. Assuming a linear variation of the motor torque vs. motor speed (see Figure 8-17), with a stall torque of the existing motor of 0.85 ft-lb and a no-load speed of 67 rad/sec, the motor speed under the maximum torque load will be 29.2 rad/sec. The corresponding speed for the output flange of the "Y" drive will be 16 deg/sec, which is more than the minimum "Y" rate of 12 deg/sec established in the Servicer Simulation Software Requirements (MMS Modules) document.

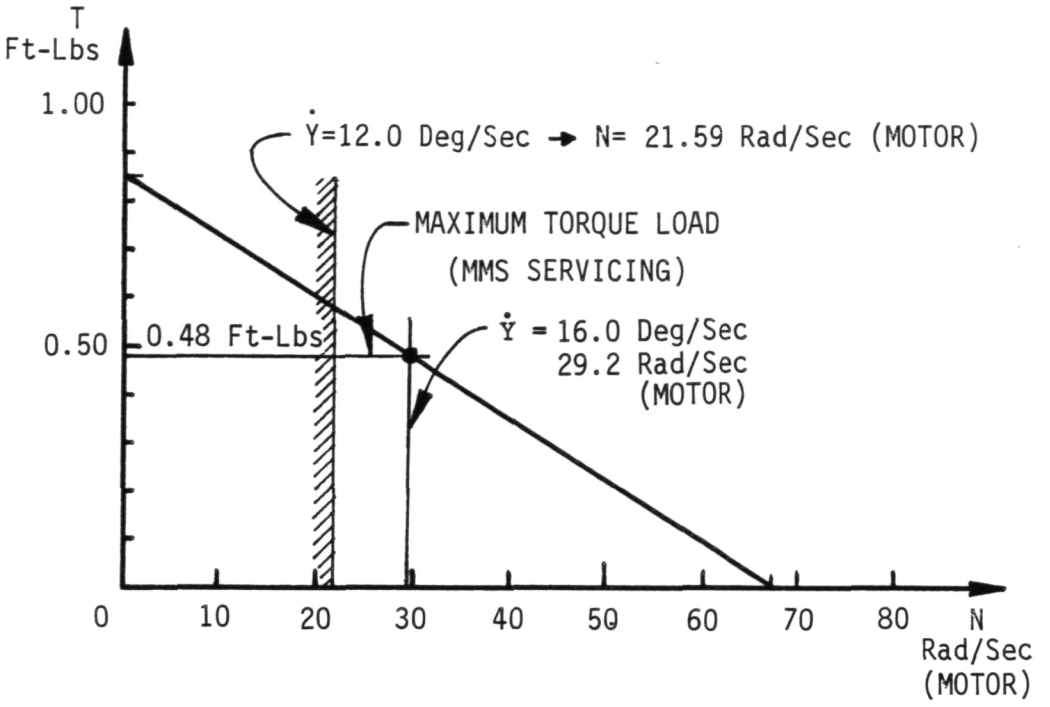

Figure 8-17 Torque Load vs. Speed of the "Y" Drive

In conclusion, under the maximum unbalanced torque load, during the ground demonstrations of MMS module exchange, the "Y" drive motor will maintain enough speed to prevent overheating or stalling.

8.1.2.4 Torque Load on "U" Drive (Shoulder Elevation) - A top view of the Engineering Test Unit servicing mechanism was shown in Figure 8-3. A counterbalance system, comprised of the elbow and the shoulder counterbalance, minimizes the load on the shoulder elevation drive in 1-g operation (see Figure 8-18).

Ideally, in a perfectly counterbalanced system, the "U" drive would have no motor load except for inertia and friction. However, this condition cannot be achieved mainly because during the arm operation

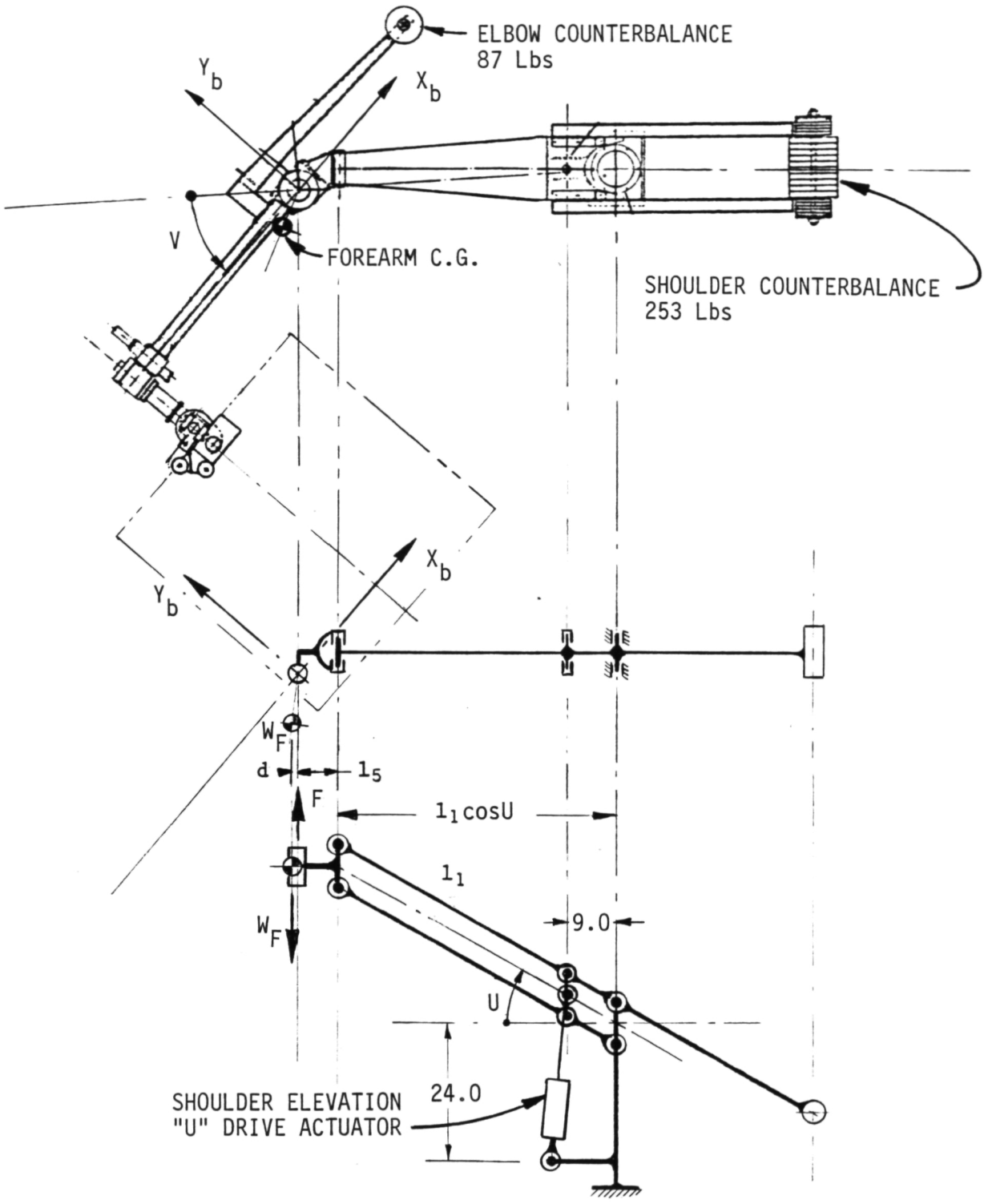

Figure 8-18 ETU Counterbalance System

the module mockup and/or a tool adapter is not attached to the end effector at all times. The elbow counterbalance weight of 87 lbs was set during the ETU design and testing activities to bring the c.g. of the forearm as close as possible to the center of the elbow "V" drive for all operational conditions. Twenty-two cases were considered then to determine two extreme positions of the c.g. relative to the center of the "V" drive. The counterbalance weight was set so that the center of the "V" drive is midway between these two extreme positions of the forearm c.g., providing minimum variation of the unbalanced load on the shoulder "U" drive. When a module is attached to the end effector, the shoulder elevation drive is slightly unbalanced so the backlash is always taken up. Without a module, the backlash is taken up in the opposite direction in a similar way. This feature of the ETU counterbalance system was used to increase the accuracy and made possible the use of a less expensive linear actuator for the shoulder elevation drive.

The twenty-two cases considered in the ETU design were reviewed to determine the two extreme cases that give maximum unbalanced gravity moments and motor torques on the "U" drive in the two directions during the ground demonstrations of MMS module exchange. These two cases are described below.

CASE 1 This case produces the maximum unbalanced load on the "U" drive linear actuator in the "down" direction. The arm is in mid-FLIP position with the modified MST and the MMS module mockup attached to the end effector using orientation A, as shown in Figure 8-18. Maximum loading of the "U" drive actuator is obtained by having the arm horizontal and extended to the maximum radius r = 89.0 in. The loads and dimensions applicable to Case 1 are shown in Figure 8-19. The value of the load acting "down" on the "U" drive linear actuator is F_U = 171.6 lbs and was determined from the moment equilibrium around the "U" drive centerline.

CASE 2 This case produces the maximum unbalanced load on the "U" drive actuator in the "up" direction. The arm is in the mid-FLIP position as shown in Figure 8-19 except that no module or modified MST is attached to the end effector. In order to get the c.g. of the forearm as close as possible to the "U" drive centerline, the end effector is set at a maximum x (x = +20 in., U = 26.39°) and the end effector faces the spacecraft and is rotated so that the c.g. of the TV camera and lights is closest to the "U" drive (Y = -90°, Z = 160.54°). Other loads and dimensions applicable to Case 2 are shown in Figure 8-19. The value of the maximum load acting "up" on the "U" drive linear actuator, determined from the moment equilibrium around the "U" drive centerline is F_U = -177.9 lbs.

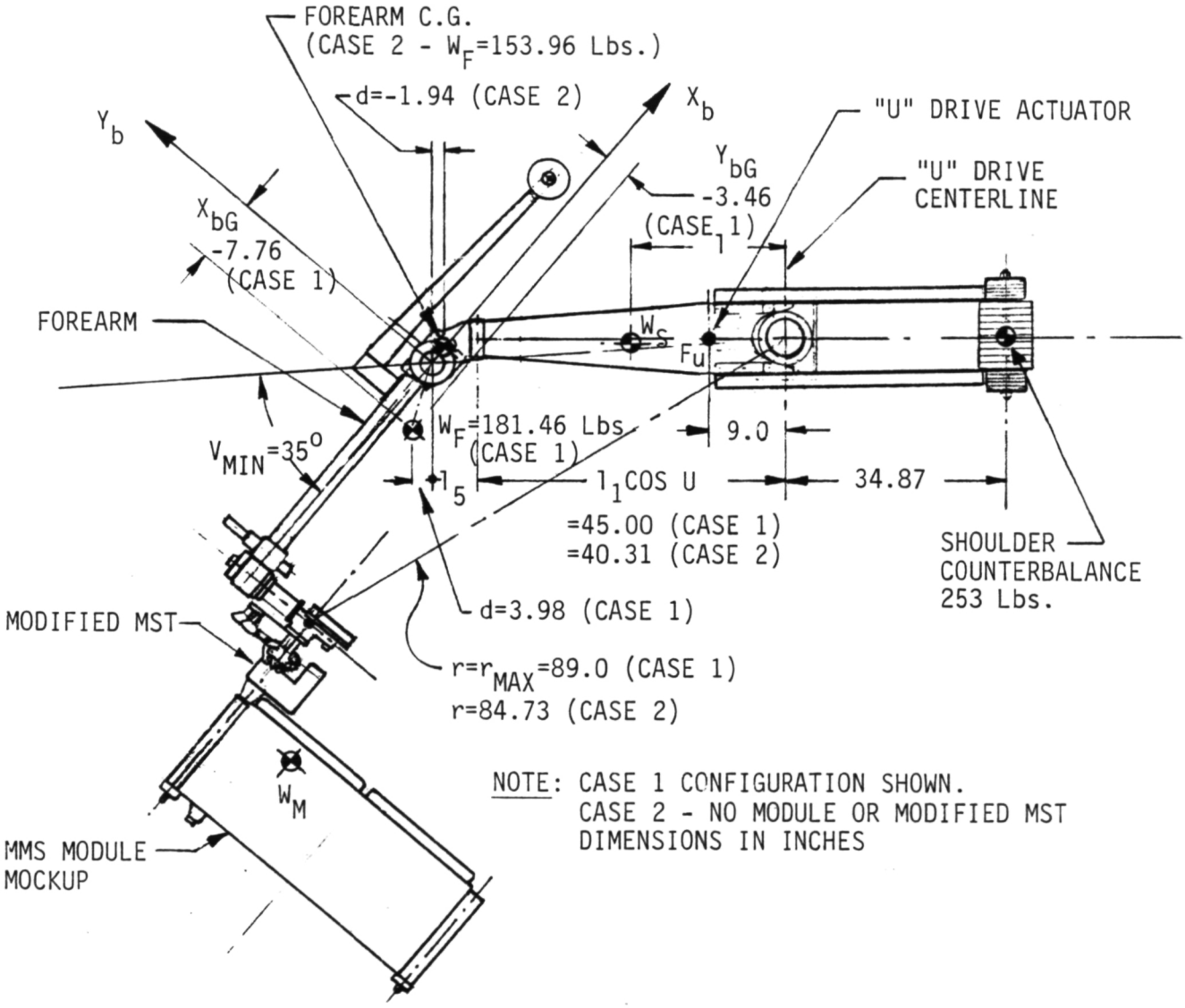

Figure 8-19 "U" Drive Actuator Load - Cases 1 and 2

The maximum unbalanced force on the "U" drive actuator occurs in Case 2 and is -177.9 lbs (up). It is practically equal in absolute value to the maximum force down, of 171.6 lb. This means that the existing ETU counterbalance system is almost perfectly suited to the MMS module exchange demonstrations and no modifications are necessary.

Assuming a 90% efficiency for the "U" drive, the equivalent load seen by the motor is 197.7 lbs. The existing "U" drive linear actuator is a Duff-Norton Model MPD-6405 with a stall force of 500 lbs at the tip and a no-load speed of 68 in./min, corresponding to 7.22 deg/sec for the "U" angle. Assuming linear variation of the speed with the load, as shown in Figure 8-20, the "U" rate under maximum load will be 4.37 deg/sec, which is larger than the rate limit of 4 deg/sec, established in the Servicer Simulation Software Requirements document.

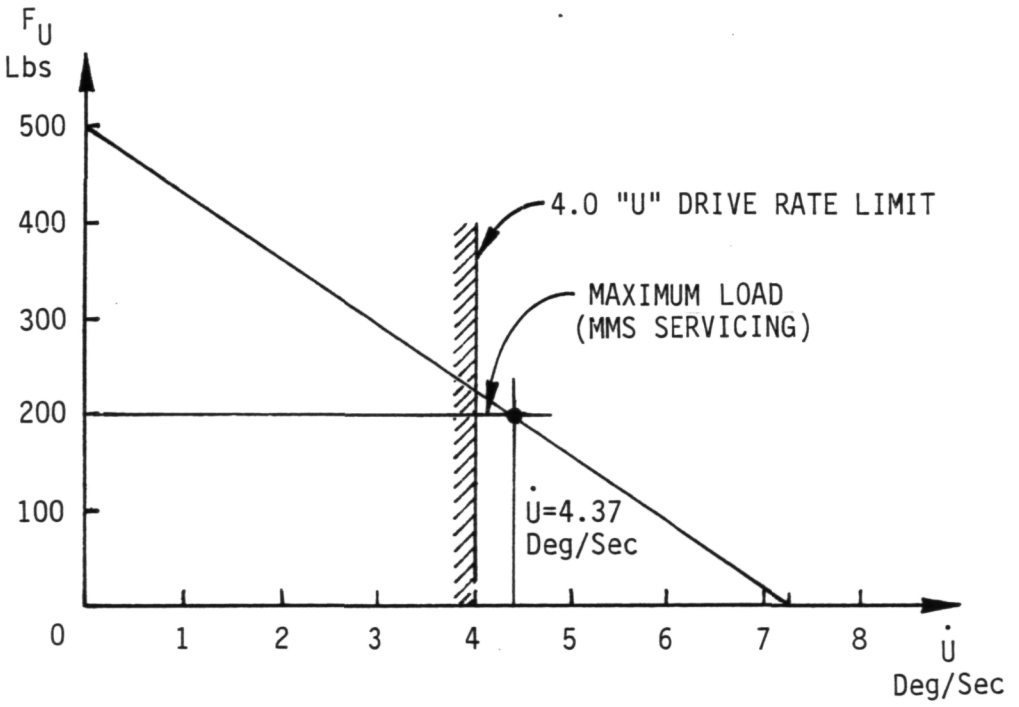

Figure 8-20 Load vs. Speed of the "U" Drive

In conclusion, during the MMS module exchange demonstrations the "U" drive motor will maintain enough speed, under the maximum load, to prevent overheating and stalling and all the ETU drives will be loaded within their capability.

8.1.3 Concept Definition of the MMS Module Mockup

The MMS module mockup for the ground servicing demonstrations should be a realistic representation of the actual hardware (see Figures 8-21 and 8-22). It should have the same outside shape and dimensions.

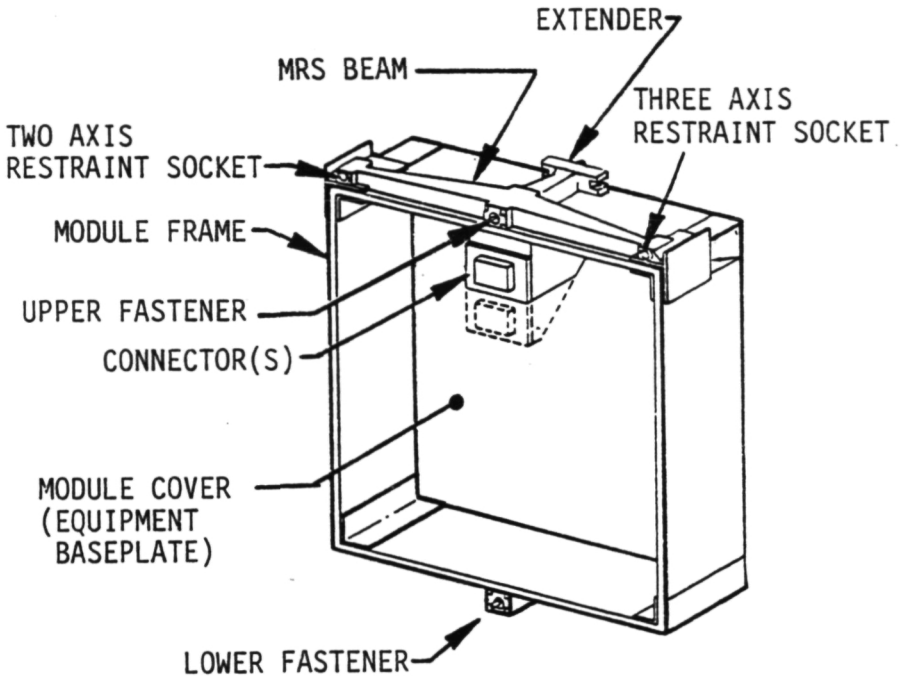

BACK VIEW

Figure 8-21 MMS Module Structure with Module Retention System

The module retention system (MRS) hardware, the latch interface, the multi-layer insulation and the front louvers should be simulated as closely as possible while their weight should be kept to an absolute minimum.

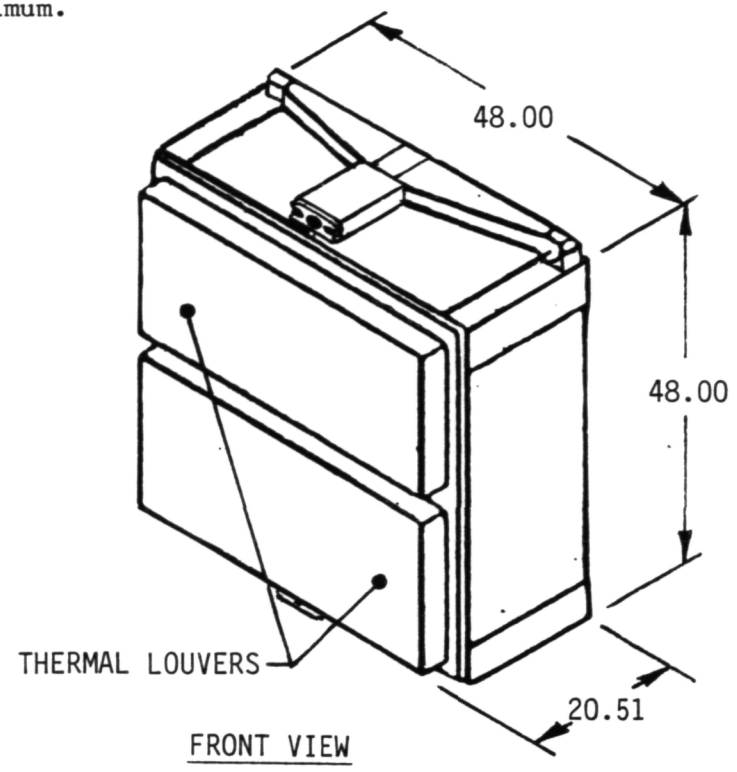

Figure 8-22 MMS Module Outside Dimensions, Including the Insulation

Preliminary calculations have shown that a very lightweight MMS module mockup weighing less than 15 lbs is feasible. A modified, lightweight fastener arrangement was used. Instead of the existing titanium bolt (see Figure 8-23) an aluminum bolt having the same thread interface but reduced shank diameter and hollow core was used (see Figure 8-24). The disc spring arrangement was replaced by a spring washer. A sintered bronze thrust washer was used under the bolt head to reduce the tightening torque while providing enough friction to prevent self loosening under load and vibration.

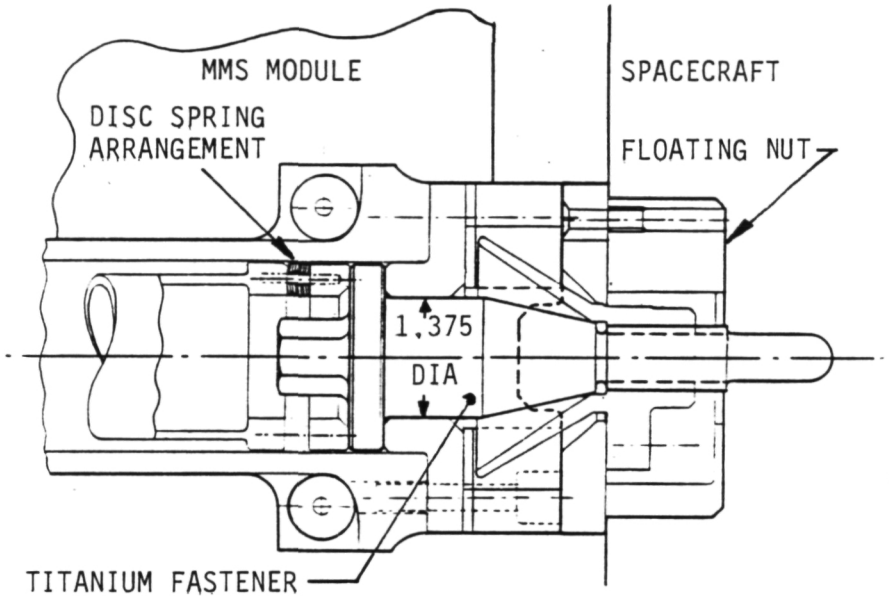

Figure 8-23 Existing MMS Module Retention Fastener

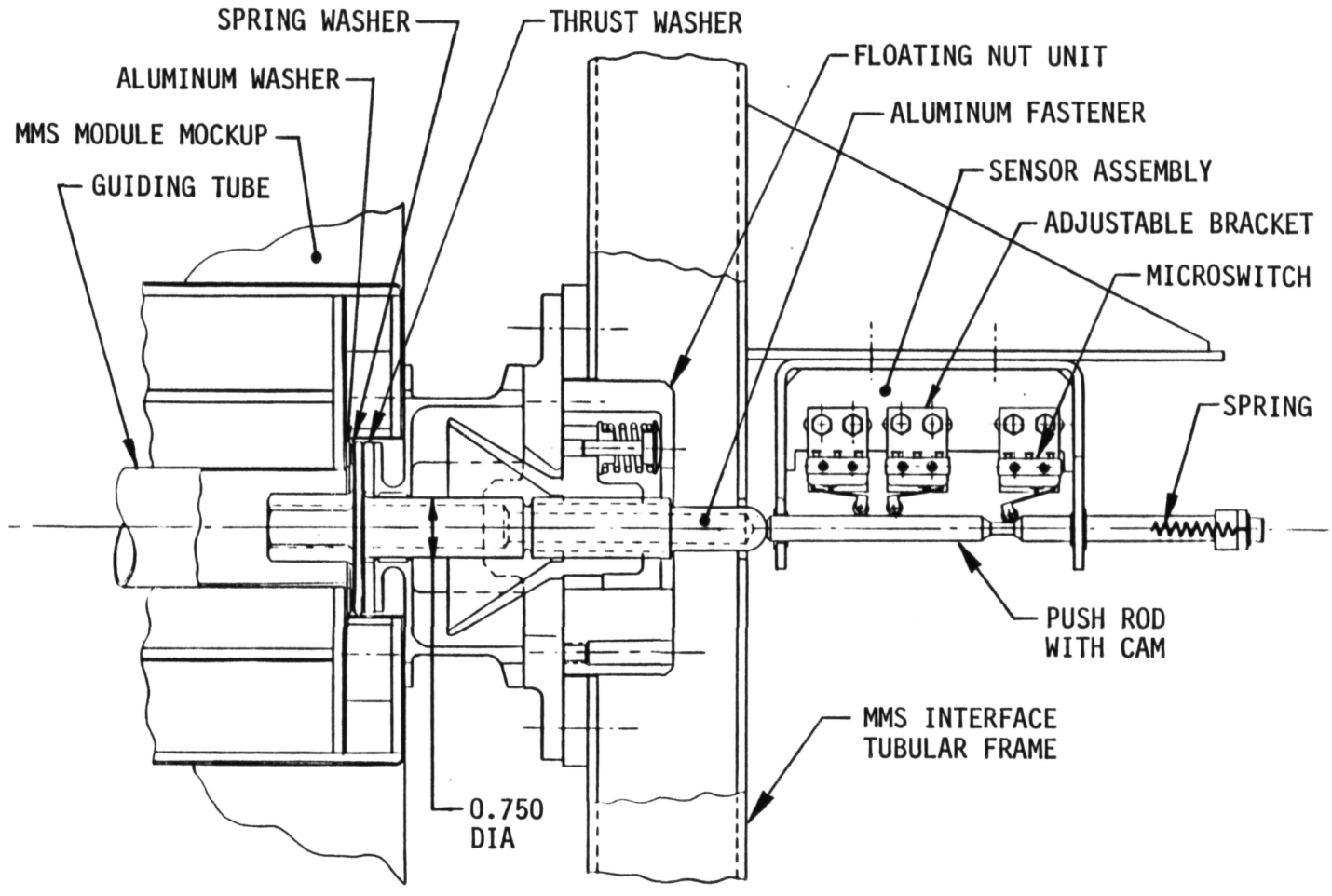

Figure 8-24 Modified Module Attachment for 1-g Demonstration

8.1.3.1 Fastener Tightening and Loosening Torques - In order to reduce the weight of the module mockup and of the modified MST, the torque applied to the fasteners when tightening and loosening them, and the corresponding reaction torques applied to the module latch interface should be as low as possible. However, enough clamping force should be provided when tightening, to prevent self loosening under vibration. The fastener tightening and loosening torques needed to be determined before the module mockup structural concept could be established.

The critical case for the fastener tightening torque is shown in Figure 8-25. The servicer supports the weight of the module mockup before starting to tighten the first fastener to the spacecraft mockup. The weight of the overhanging module and the force resisting the mating of the electrical connector produce slight deflections in the servicing mechanism so that the first fastener to be tightened gets to be engaged first with the spacecraft mockup interface. During fastening, a corner of the module retention hardware contacts the spacecraft and the axial load in the fastener acts to straighten the module.

A 10 lb mating force was assumed for the small electrical connector placed inside of the connector mockup.

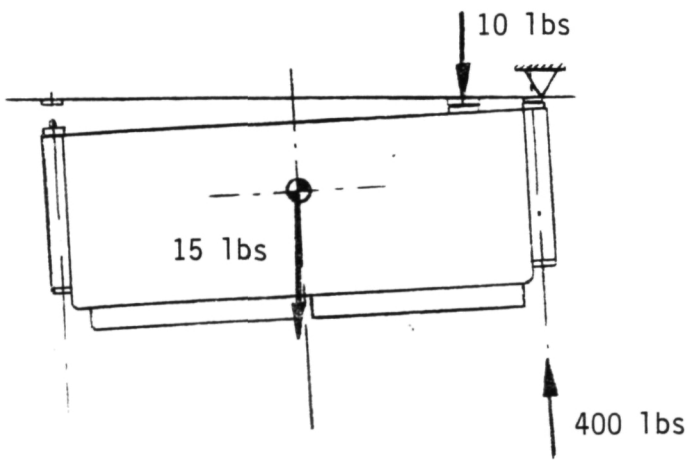

Figure 8-25 Maximum Axial Force in the Fastener

A maximum axial force in the fastener of 400 lbs was calculated from the moment equilibrium including an assumed 70 lbs clamping force, when the module is in a horizontal position, being attached to the spacecraft mockup. A friction coefficient of 0.1 sliding and 0.3 static was assumed for the thread.

For the overhead position the required tightening torque is 6.8 ft.-lb. A tightening torque setting of 10 $\pm$ 1 ft-lb for the modified MST was chosen.

The critical case for loosening the fastener is when the module is removed from the stowage rack. The weight of the module mockup is supported by the stowage rack and is not helping to reduce the loosening torque. With the torque setting for tightening established from the spacecraft case, 650 lbs clamping force is produced in the fastener in this case. The corresponding loosening torque is 16.7 ft-lb. A loosening torque setting of 20 $\pm$ 1 ft-lb was chosen for the modified MST. This will be the maximum torque reacted by the module mockup structure between the two fastener attachment locations and either of the latch interfaces.

8.1.3.2 Module Accidental Load - In addition to the reacted torque from fastener tightening and loosening and the loads from its own weight the module should withstand reasonable accidental loads from handling and improper operation without incurring permanent deflections or extensive damage. The module structure should resist without damage a load of 25 lbs applied on any corner and in any direction when an opposite face is supported (see Figure 8-26). It corresponds to the dynamic load that occurs when the module is dropped from a height equivalent to the maximum elevation of the end effector.

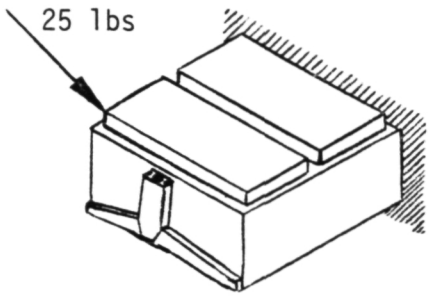

Figure 8-26 Accidental Load Case

The structure should maintain its original dimensions and remain square after the accidental load is removed. However, local damage to the corners or outer surface finish is acceptable to allow absorption of the energy of impact and protect the rest of the structure. The module mockup should be easily repairable in case of accidental damage, using common tools and readily available materials.

8.1.3.3 Module Mockup Structure - Various structural arrangements were investigated:

1) Truss structure, using small diameter, thin wall aluminum tubing (see Figure 8-27);

2) Box construction, using lightweight paper honeycomb/fiberglass panels and formed balsa wood and fiberglass sandwich panels;

3) Torque tube structure connecting the module retention hardware, the connector and the latch interface and use of foam board for simulation of the outside surface (see Figure 8-28);

4) Use of foam board for both central torque box and outer surface, and balsa wood/fiberglass for module latch interface and connector mockup (see Figure 8-29).

The truss type module mockup (Variant No. 1) has a welded truss structure, made of 3/8 in. diameter, thin wall tubing, connecting the two module latch interfaces, the electrical connector and the two fasteners. The outer tubes represent the faces and the edges of the actual module. Fiberglass guide tubes between the latch interfaces and fasteners are also used as structural members. A removable cover made of medium weight metallized polyester film is attached to the structure with Velcro type fasteners. The total weight of the module mockup is 14.2 lbs compared to 12.5 lbs for the foam board module (Variant No. 4).

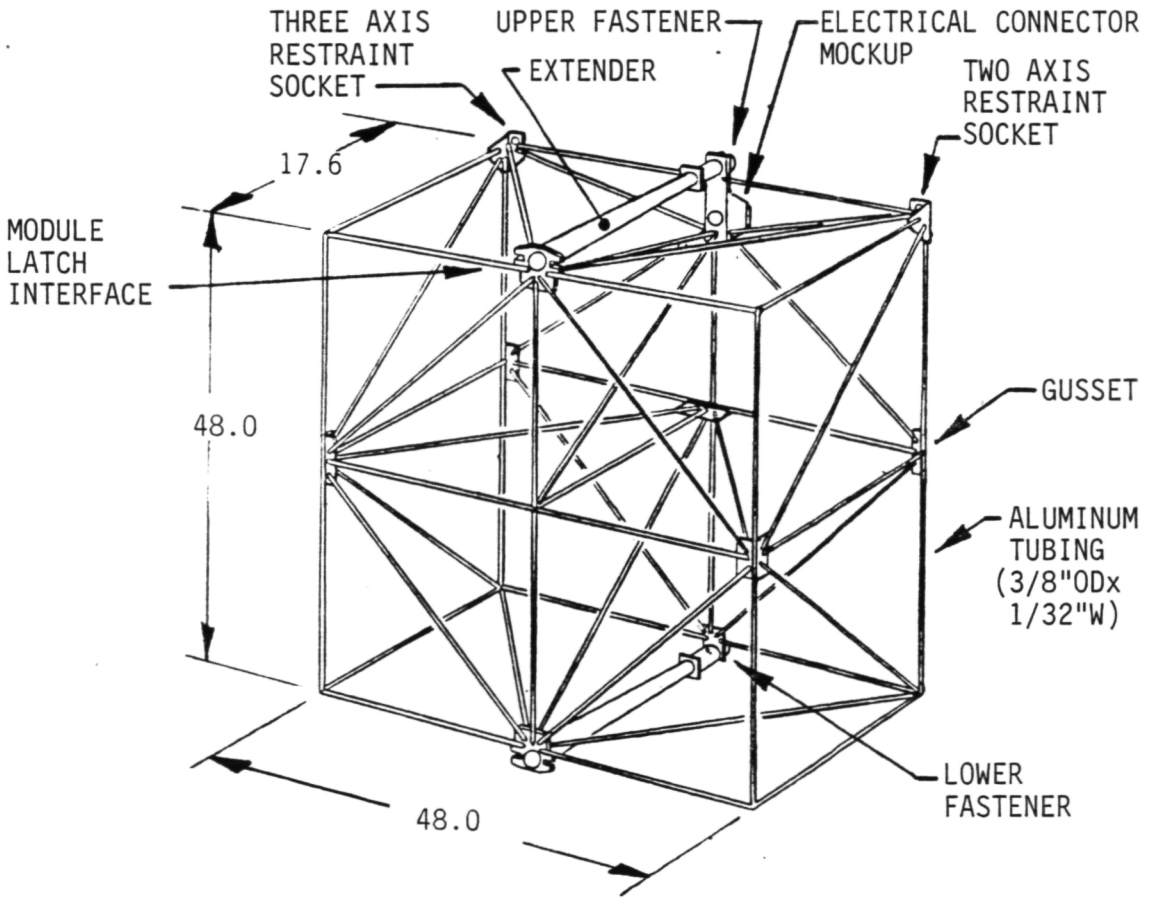

Figure 8-27 MMS Module Mockup Truss Structure

The cost of the truss structure module is higher because of the welding fixtures required and of the difficulty of welding thin wall (1/32 in.) aluminum tubing. Lower fidelity is obtained because the front louvers are not simulated. However, it has the advantage of higher damage resistance than the foam board module and allows the operator and the observers to see through the module if the cover is removed.

The paper honeycomb/fiberglass module (Variant No. 2) is a box type construction simulating the outside surface of the actual module and having an internal torque tube structure. It is similar to Variant No. 3, shown in Figure 8-28, except for the material used for the box. The honeycomb core is 3/8 in. thick and is made of phenolic impregnated paper. The inner and outer skin are made of fiberglass 0.006 in. thick. Large cutouts in the core and in the inner skin are provided in order to reduce weight. Fiberglass skin and 1/8 in. thick balsa wood core are used for the module latch interface support structure and for the torque tube. The total weight is 17.4 lbs and is almost 5 lbs heavier than the foam board type module (Variant No. 4). The paper core is subject to damage from a high humidity atmosphere. A sample of paper honeycomb core impregnated and fully cured failed our 20 minutes water submersion test. The cost is higher than Variant No. 4 because of extra work required for wall panel fabrication. The structure is stiffer but more subject to damage on impact than the foam board type. It is also difficult to repair.

The torque tube structure, Variant No. 3, (see Figure 8-28) is made of formed sandwich panels of fiberglass with balsa wood core 1/8 in. thick and the outer surface of the module is simulated by a foam board enclosure.

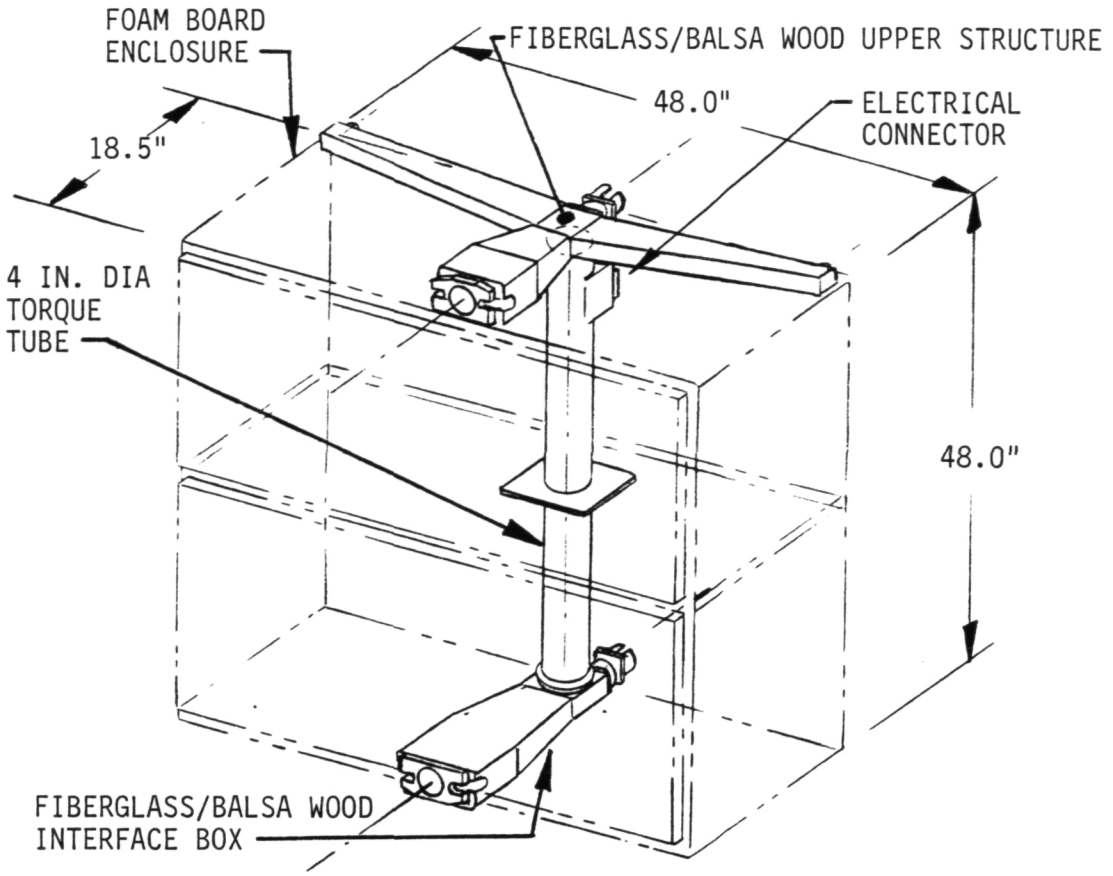

Figure 8-28 MMS Module Mockup with Torque Box Structure

The material used for the box is 3/4 in. styrofoam board bonded with urethane adhesive. Preliminary tests showed that this material provides high resiliency, resistance to water, minimum weight and ease of repair of localized accidental damage. Metallized polyester film is bonded to the outside surface to simulate the multi-layer thermal insulation. Because the foam board enclosure does not carry loads except for its own weight and inertia, the module is heavier than the Variant No. 4. It weighs 14.6 lbs.

Minimum weight is obtained with an integral torque box construction made of styrofoam board (Variant No. 4, see Figure 8-29), and this is the recommended structure design for the MMS module mockup.

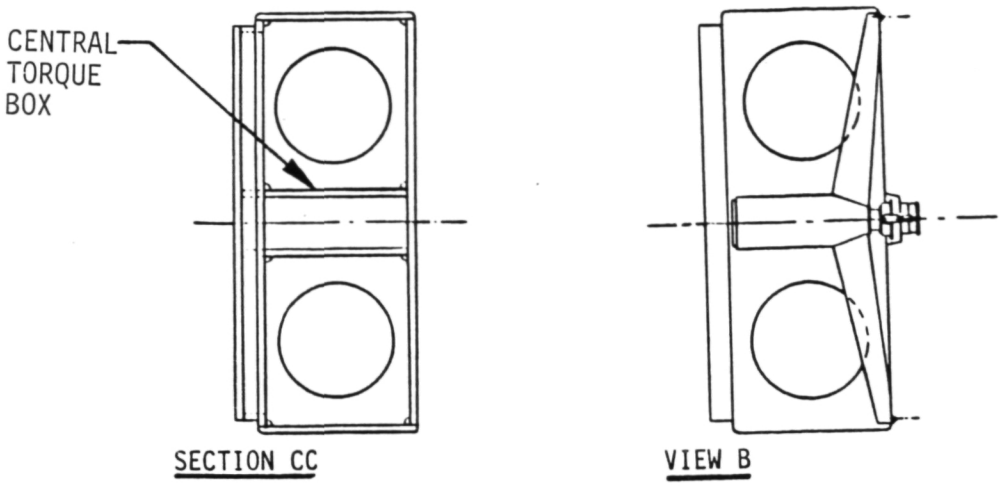

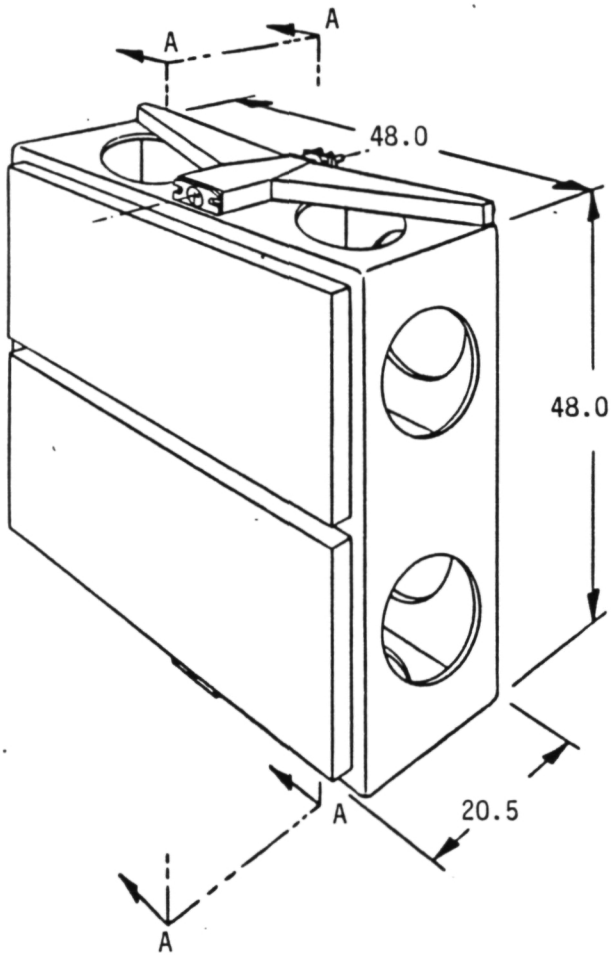

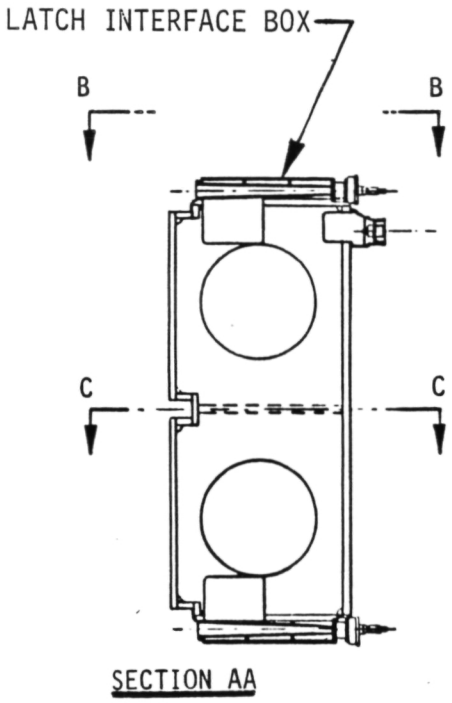

Figure 8-29 MMS Module Mockup with Central Torque Box Structure

This arrangement gives a better weight to stiffness ratio, the central box structure providing a direct connection between all attachment points. The foam board is 3/4 in. thick styrofoam that can be cut and bonded with ease and minimum fixturing. It deflects on impact without shattering and accidentally damaged areas can be easily cut out and rebuilt. A thin film of metallized polyester bonded to the outside surface simulates the thermal insulation while rigidizing the structure. Urethane foam is used to reinforce the edge bond lines. The upper and lower latch interface boxes are made of balsa wood/fiberglass sandwich construction. Large cutouts are provided in the foam board panels to keep down the weight. A weight estimate showed that the module can be built for a total weight of 12.5 lbs. The c.g. is 10.4 in. aft of the module latch interface and 22.9 in. below the upper fastener centerline as shown on Figure 8-14. The module mockup can be made to simulate in more detail the outer shape and size of the actual equipment than is possible in the case of the truss structure.

A partial mockup, representing one quarter of the MMS module was designed and built as a development version to validate the structural concept, the assembly method and the combination of materials selected (see Figure 8-30). It is within the weight allowance, has a nice appearance and is rugged. Two foot drops on a corner and transport as baggage on a commercial aircraft did not damage the mockup. The approach was accepted by the MSFC personnel and was used for the deliverable MMS module mockups.

ORIGINAL PAGE IS
OF POOR QUALITY

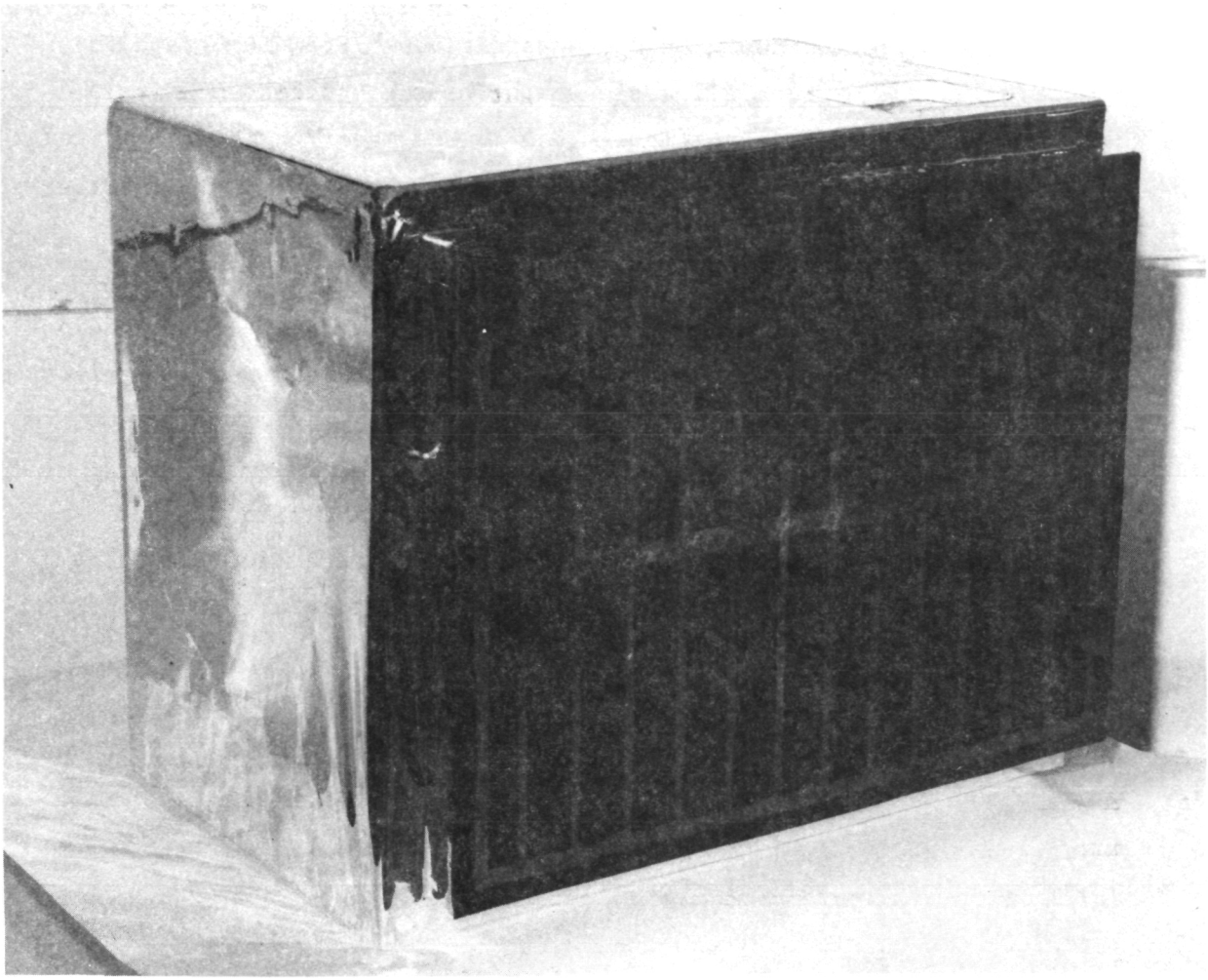

Figure 8-30 MMS Module Partial Mockup

8.1.4 Concept Definition of the Modified MST

The existing Module Servicing Tool (MST) weighs approximately 67 lbs and in order to be used for ground demonstrations needs to be redesigned for a drastic weight reduction and reduction of the "B" distance, between end effector interface and the module latch interface.

Several ways of achieving the required light weight and compactness were identified.

A maximum module mockup weight of 12.5 lbs. and a "B" distance of 7.25 in. were selected for the ground demonstrations. From the graph in Figure 8-12, the maximum allowable weight of the modified MST is 15 lbs. An allowance of approximately 0.5 lb was made for the electrical connector positioner mechanism to be added to the end effector. Other applicable requirements are given in Section 2.1.

Details of the modified MST concept definition effort are reported in Section 3.2.2. Other applicable MST requirements are given in Section 3.2.1.

In Figure 3.2-1 the general configuration of the modified MST for ground demonstration, the critical dimensions required for providing adequate clearances and the approximate c.g. position are given.

This figure also defines the mechanical interface between the ETU, the modified MST designed by Fairchild Space Company and built by GSFC and the MMS module mockup provided by Martin Marietta Aerospace.

8.1.5 Spacecraft Mockup Configuration Selection

Four candidate configurations were identified and evaluated for the spacecraft mockup of the servicer system for ground demonstrations of MMS module exchange. These candidate configurations were:

1) Addition of a MMS module and simple support structure to the existing ETU spacecraft mockup;

2) As in 1), except for an MMS mockup added around the support structure to give a higher level of fidelity;

3) An MMS mockup replacing the existing ETU spacecraft mockup;

4) Use of two separate interchangeable mockups.

This set of 1-g spacecraft mockup configuration alternatives was reviewed with MSFC personnel, including the NASA Technical Manager. It was agreed that these four alternatives spanned the range of interest and provided an adequate variety of advantages and disadvantages.

The relative position of the MMS module mockup with respect to the servicer arm location, in all these four alternative configurations, corresponds to the actual module position when performing on-orbit module exchange, using lateral docking of the servicer to the MMS and a docking probe fitted with an orientation joint.

The advantages and disadvantages of these four candidate configurations were analyzed, based on the requirements developed in Section 8.11, and Configuration 1) was recommended for ground demonstrations of MMS module exchange.

8.1.5.1 Configuration 1) - A MMS module mockup is bracketed off one side of the existing spacecraft mockup as shown in Figure 8-31. The concept is simple and straightforward. The existing boxes that are attached to one side of the ETU spacecraft mockup are replaced by a support structure, which was provided with the necessary module retention hardware, sensors, connector and wiring to receive a MMS module mockup. The existing axial and radial cubic module locations of the ETU spacecraft mockup are retained together with the existing capability of basic module exchange demonstrations. Ample room is available for later expansion of the spacecraft mockup to include a propulsion mockup for fluid resupply demonstrations. There is no appearance of an MMS triangular structure configuration. However, realistic trajectories of MMS module exchange can be demonstrated at a relatively low cost. This spacecraft mockup configuration emphasizes the use of MMS modules. The approach is consistent with the use of MMS modules on spacecraft other than those using the MMS triangular structure.

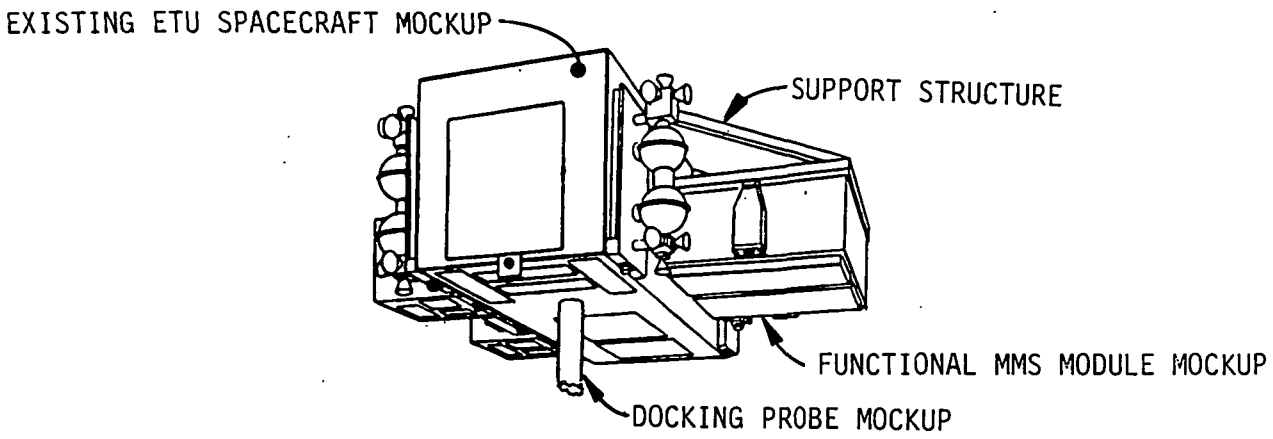

Figure 8-31 Configuration 1) of the Spacecraft Mockup

8.1.5.2 Configuration 2) - Configuration 1) is modified by adding an MMS mockup around the support structure as shown in Figure 8-32. The existing capability for basic module exchange demonstration is retained. A good representation of the MMS helps understand the positional relationship with the servicer and increases the fidelity of the module exchange demonstrations by providing the same clearances between the module and MMS support structure, grapple fixture and other spacecraft elements. However, the cost is higher because of the additional mockup, the orientation joint of the docking probe mockup is not visible and it is somewhat difficult to explain the demonstration setup because there are two spacecraft mockups looking like one mockup.

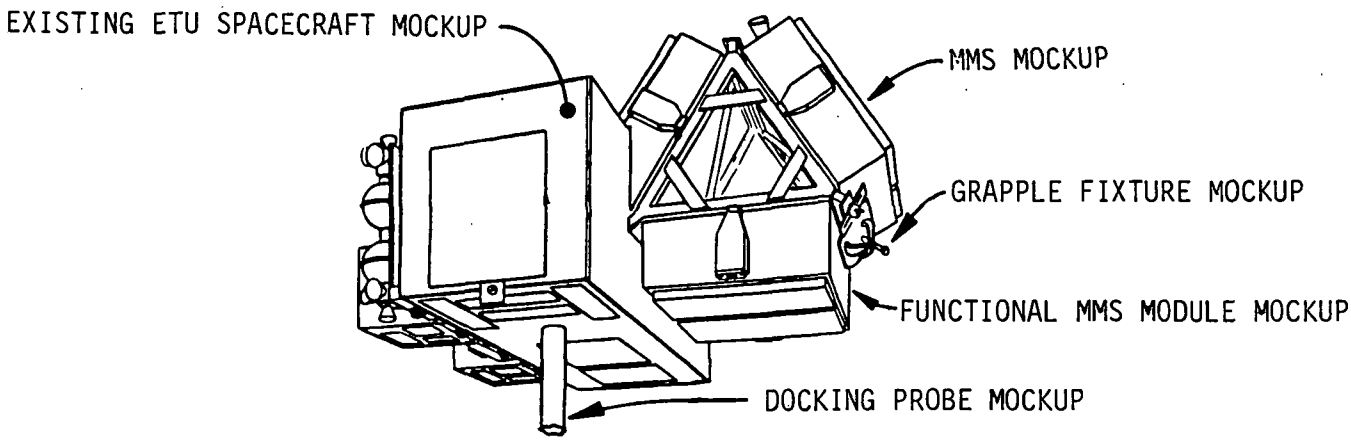

Figure 8-32 Configuration 2) with Added MMS Mockup

8.1.5.3 Configuration 3) - The existing ETU spacecraft mockup is replaced by one representing an MMS. The basic axial and radial module exchange would be performed in the payload section of the MMS (see Figure 8-33). Because of the reach envelope limitations, the existing ETU arm being shorter than the flight version of the servicer arm (45 in. vs. 79 in. length of shoulder or forearm segments), the basic radial module insertion is performed in the wrong direction (out from, instead of in towards the docking probe).

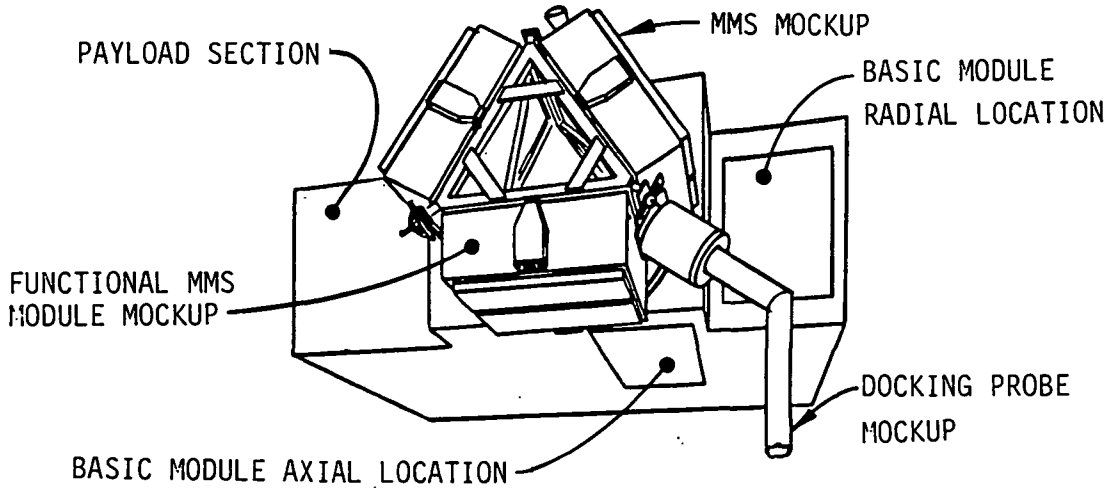

Figure 8-33 Configuration 3) with MMS Mockup and Payload Section

This demonstration setup tends to decrease the apparent importance of the basic radial and axial module exchange. The cost of the spacecraft mockup is higher than in the case of Configurations 1) or 2) and exceeds the available funds.

8.1.5.4 Configuration 4) - Two separate, interchangeable mockups are used: the existing ETU spacecraft mockup and an MMS mockup as shown in Figure 8-34. The mockups would be interchanged using the new MSFC high capacity manipulator system.

The concept of exchanging the two spacecraft mockups has significant disadvantages. The large mockups are relatively fragile, the realignment of the spacecraft mockup is difficult, additional time is required for mockup interchange and the room to store the unused mockup is not available.

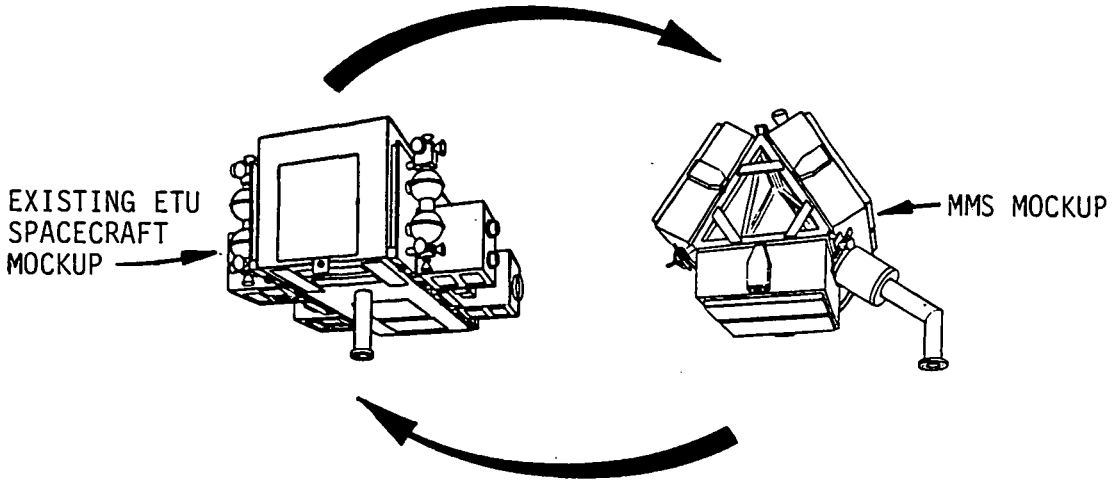

Figure 8-34 Configuration 4) Interchangeable Mockups

8.1.5.5 Configuration Selection - The advantages and disadvantages of the four alternative configurations were analyzed and a trade study was performed based on requirements. Configuration 1), shown in Figure 8-31, was selected and is recommended for the MMS module exchange ground demonstrations.

8.1.6 Stowage Rack Mockup Configuration Selection

The existing ETU stowage rack can be used with minor modifications to perform ground demonstrations of MMS module exchange and basic, 24 in. cube, module exchange. An MST storage rack and supports to receive MMS module mockups in two locations must be added to the existing stowage rack mockup. The two existing 24 in. cube module supports also need modification of their baseplates to permit their installation closer to the end-of-beam triangular structure in order to make room for the large MMS modules. The interface of the MMS module with the stowage rack support should be identical to the one used on the spacecraft mockup. The same module retention hardware, electrical connector and sensors should be used. Only the "good" module location should be

provided with a connector interface. The support structure should allow small displacements parallel to the baseplate to avoid damage in case of an accident. Ease of realignment of the supports and optical targets is an important requirement. Wiring modifications are necessary for interfacing between the Servicer Servo Drive Console and the MMS supports and the modified MST. The MST storage rack should be provided with a standard MMS module latch interface plate, guide tube, sensor for MST presence and with an optical target. The MST latches will be used for MST attachment to the storage rack.

The location of the modified MST storage rack and of the MMS and basic modules were selected based on the requirements developed in Section 8.1.1.

8.1.6.1 Modified MST Storage Position Selection - The modified MST, when stored in its storage rack, extends vertically about 12 in. above the top of the stowage rack beams. Because of a potential interference with the servicer arm operation and the need to provide good visibility during the demonstrations, the MST storage location was selected first. The location needs to be at a large radius, away from the operating range of the servicer arm and close to the stowage rack beam to minimize the support structure. The selected location is shown in Figure 8-35 and the cylindrical coordinates are: r = 80.00 in. and Theta = -87.38°. The latch interface plate of the MST storage rack is at the same height as the module latch interfaces, corresponding to X = -19.5 in. for the end effector coordinate.

8.1.6.2 Stowage Rack Alternative Arrangements - The MMS module mockups must be located with one corner close to the docking probe (locations IV and V in Figure 8-35) to be able to fit in, with adequate clearance for two 24 in. cube modules. Also the MMS module fasteners must not be in line with either cube module to avoid interference. Because of these requirements, only the two alternative arrangements, shown in Figure 8-35, are feasible (arrangements I-III-IV-V and II-III-IV-V).

C-4

The 24 in. cube module with side interface mechanism can be stowed in two of the three locations marked I, II and III while the MMS module mockup occupies locations IV and V.

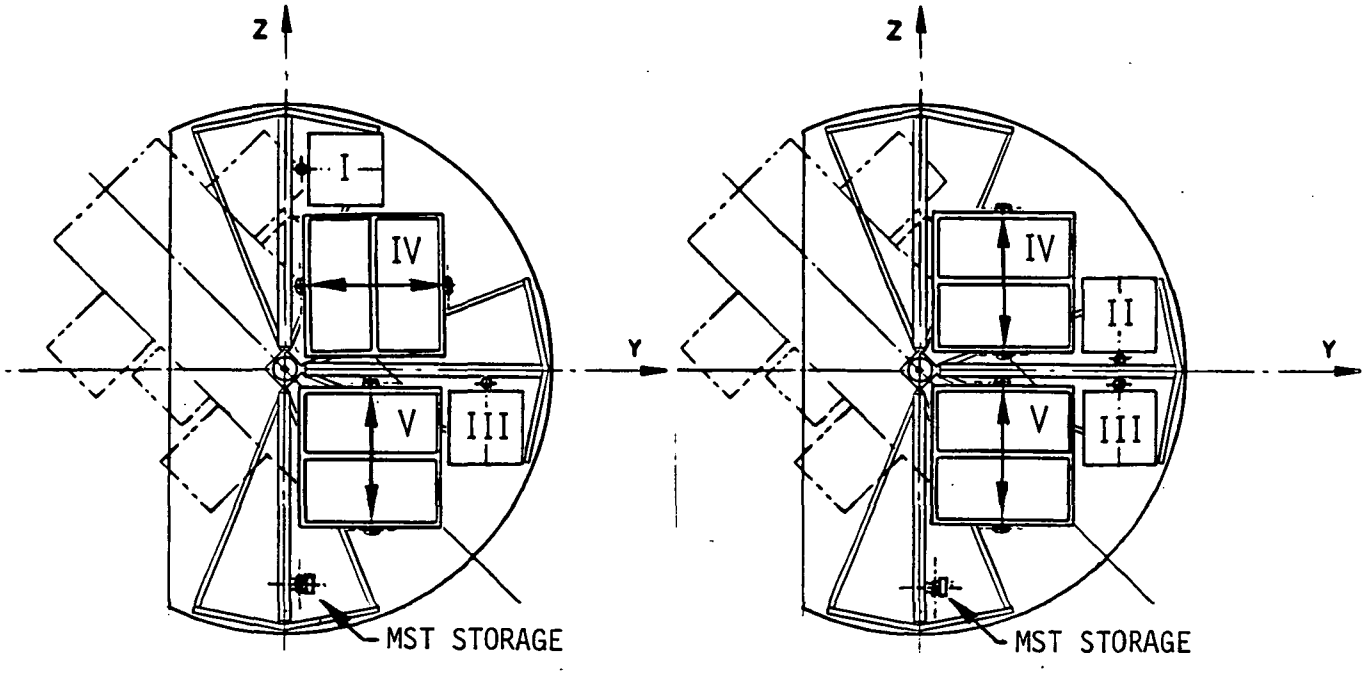

Figure 8-35 Stowage Rack Alternative Arrangements

There are two possibilities for arranging the "good" and the "temporary" MMS module locations, the "good" module can be either in location IV or V, with the " temporary" position in the other location.

The top of the MMS module has a cross beam reinforcement for the restraint sockets and is considerably more rigid than the bottom. In order to improve the accuracy of positioning the module, the top fastener location should be used for attachment to the modified MST and servicer when handling the module. The arrows in Figure 8-35 indicate the possible location of the top fasteners for each MMS module location. There are four possible alternatives from this standpoint.

In all, there are 16 variants of the stowage rack arrangement that are feasible and that were evaluated in a study of servicing times to select the stowage rack mockup configuration.

8.1.6.3 Coordinates of Fastener Locations - The coordinates of the MMS module fastener locations for all the positions used in the 16 variants of module arrangement as well as of the modified MST storage rack and of the FLIP locations were calculated and are shown in Table 8-2. Also shown are the values of the joint angles and of the fastener orientation angle alpha. The equations used to calculate these coordinates and angles were presented in Section 8.1.2. For each MMS fastener location of the stowage rack two different x coordinate values were considered to allow proper clearance when the end effector has only the modified MST attached (Tool case) or when both the module and the modified MST are attached (Module case). The MMS module fastener location in the top line of the table is identified by the module location (IV or V) and by the fastener orientation with respect to the module (N-E-S-W), the "north" direction being parallel to the "Z" axis of the servicer. The values of the coordinates used in this phase of the study were preliminary and vary slightly from the actual values selected in a later phase. However, the results of this analysis are not affected substantially by these variations and the conclusions based on these calculations remain valid.

Table 8-2 Coordinates and Joint Angles

LOCATION / COORD.		IV N	IV E	IV S	IV W	V N	V S	FLIP	TOOL
r (in.)		63.35	63.35	30.59	30.59	30.59	63.35	75.00	80.00
Theta (deg)		+61.74	+28.26	+11.31	+78.69	-11.31	-61.74	-69.95	-85.71
x (in.)	Tool	+5.50	+5.50	+5.50	+5.50	+5.50	+5.50	+12.00	+5.50
	Mod.	+11.00	+11.00	+11.00	+11.00	+11.00	+11.00	+12.00	n/a
Alpha (deg)		+90.00	-180.00	-90.00	+0.00	+90.00	-90.00	+45.00	+0.00
Delta (deg)	Tool	+37.12	+37.12	+64.29	+64.29	+64.29	+37.12	+24.96	+21.44
	Mod.	+35.84	+35.84	+62.16	+62.16	+62.16	+35.84	+24.96	n/a
T (deg)	Tool	+11.25	-22.23	-56.29	+11.09	-78.91	-112.23	-111.54	-123.06
	Mod.	+10.99	-22.49	-57.94	+9.44	-80.56	-112.49	-111.54	n/a
U (deg)	Tool	+7.02	+7.02	+7.02	+7.02	+7.02	+7.02	+15.47	+7.02
	Mod.	+14.15	+14.15	+14.15	+14.15	+14.15	+14.15	+15.47	n/a
V (deg)	Tool	+83.84	+83.84	+128.12	+128.12	+128.12	+83.84	+62.68	+55.02
	Mod.	+82.75	+82.75	+127.57	+127.57	+127.57	+82.75	+62.68	n/a
W (deg)	Tool	0.00	0.00	0.00	0.00	0.00	0.00	0.00	0.00
	Mod.	0.00	0.00	0.00	0.00	0.00	0.00	0.00	n/a
Y (deg)	Tool	+90.00	+90.00	+90.00	+90.00	+90.00	+90.00	+90.00	+90.00
	Mod.	+90.00	+90.00	+90.00	+90.00	+90.00	+90.00	+90.00	n/a
Z (deg)	Tool	+8.86	+245.38	+165.60	+142.98	-37.02	+65.38	-89.99	-64.27
	Mod.	+7.58	+244.10	+163.47	+140.85	-39.15	+64.10	-89.99	n/a
Psi (deg)	Tool	0.00	0.00	0.00	0.00	0.00	0.00	0.00	0.00
	Mod.	0.00	0.00	0.00	0.00	0.00	0.00	0.00	n/a
Phi (deg)	Tool	+90.00	+90.00	+90.00	+90.00	+90.00	+90.00	+90.00	+90.00
	Mod.	+90.00	+90.00	+90.00	+90.00	+90.00	+90.00	+90.00	n/a
Omega (deg)	Tool	-28.26	+208.26	+101.31	+78.69	-101.31	+28.26	-114.95	-85.71
	Mod.	-28.26	+208.26	+101.31	+78.69	-101.31	+28.26	-114.95	n/a

8.1.6.4 Representative Servicing Trajectory Sequence - The diagram shown in Figure 8-36 represents schematically the 23 steps of the total trajectory used to exchange an MMS module. The starting or ending points of each step are the MMS module fastener locations on the stowage rack and spacecraft mockups, the rest position of the arm, the modified MST storage location or the FLIP location.

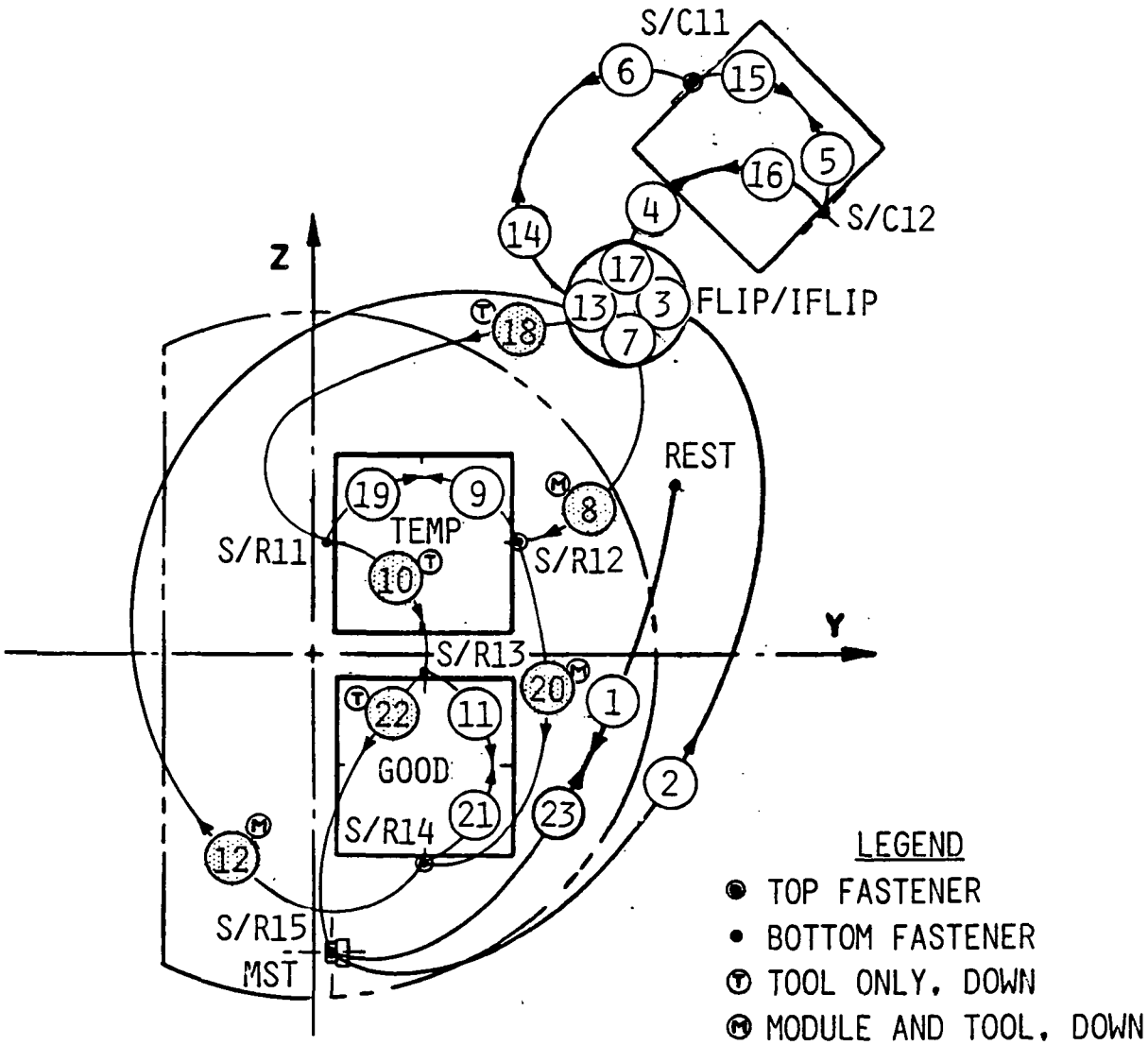

Figure 8-36 Trajectory Sequence for MMS Module Exchange

The arm moves from the rest position to the modified MST storage location, picks up the tool and goes to the FLIP location. After the FLIP step is completed, the arm goes to detach the bottom MMS fastener of the spacecraft mockup. The next step is to go to and detach the top fastener and then, with the MST latches still closed, to carry the module through the FLIP step to the "temporary" MMS module location on the stowage rack. Handling of the module is done using the top fastener latch interface. Module attachment is done in a reverse sequence, the bottom fastener being tightened last. In a similar manner, the "good" module is picked up from the stowage rack mockup and is installed on the spacecraft, passing through the FLIP step. Finally, the arm and the tool return to the stowage rack, move the module from the "temporary" to the "good" location, then the tool is stored and the arm returns to the rest position, completing the total trajectory. The steps can be followed on the diagram using the arrows and the sequential numbering.

Once the spacecraft mockup configuration, the FLIP location, the rest position and the storage location of the modified MST are established, the time necessary to complete the total trajectory depends on the module arrangement on the stowage rack. When using a different variant of module arrangement for the stowage rack, only 6 steps (shaded on the diagram) out of 23 take a different length of time to be performed. The total time to perform these 6 steps was calculated for each of the 16 variants of module arrangement in the stowage rack to determine which arrangement corresponds to the minimum servicing time. A computer was used in performing these calculations. The allowance of 3 sec for speeding up when starting and slowing down when ending each step was neglected, being a constant for all variants. Four coordinates (x, Theta, r and Z) were considered to be driven at the same time at constant rates from their initial to final values, in each step. The rates, established in the Servicer Simulation Software Requirements document, were: $\dot{x}$ = 2 in./sec; $\dot{\theta}$ = 6 deg/sec; $\dot{r}$ = 2 in./sec and $\dot{Z}$ = 12 deg/sec. The time to perform each step was taken as the largest of the time intervals for the individual coordinates. The other three coordinates remain constant to the end of the step, upon

reaching their final values. For each variant, a total time necessary to perform the six steps was calculated. The results are shown in Table 8-3.

Table 8-3 Times Necessary to Perform the Six Steps

Variant 1	T = 109.9 sec
Variant 2	T = 119.2 sec
Variant 3	T = 114.6 sec
Variant 4	T = 114.5 sec
Variant 5	T = 132.6 sec
Variant 6	T = 120.2 sec
Variant 7	T = 115.7 sec
Variant 8	T = 137.2 sec
Variant 9	T = 114.6 sec
Variant 10	T = 119.2 sec
Variant 11	T = 119.4 sec
Variant 12	T = 114.6 sec
Variant 13	T = 137.4 sec
Variant 14	T = 120.3 sec
Variant 15	T = 115.7 sec
Variant 16	T = 132.6 sec

Variant 1 corresponds to the minimum servicing time. The module arrangement and the trajectory sequence diagram is shown in Figure 8-37. The maximum amount of time saved over the variant taking the longest time is 27.5 seconds. Most of the time saving comes from the fact that all four MMS module fasteners are in line, reducing the arm travel distances between them. Also step 22 returning the modified MST to its storage location is the shortest possible.

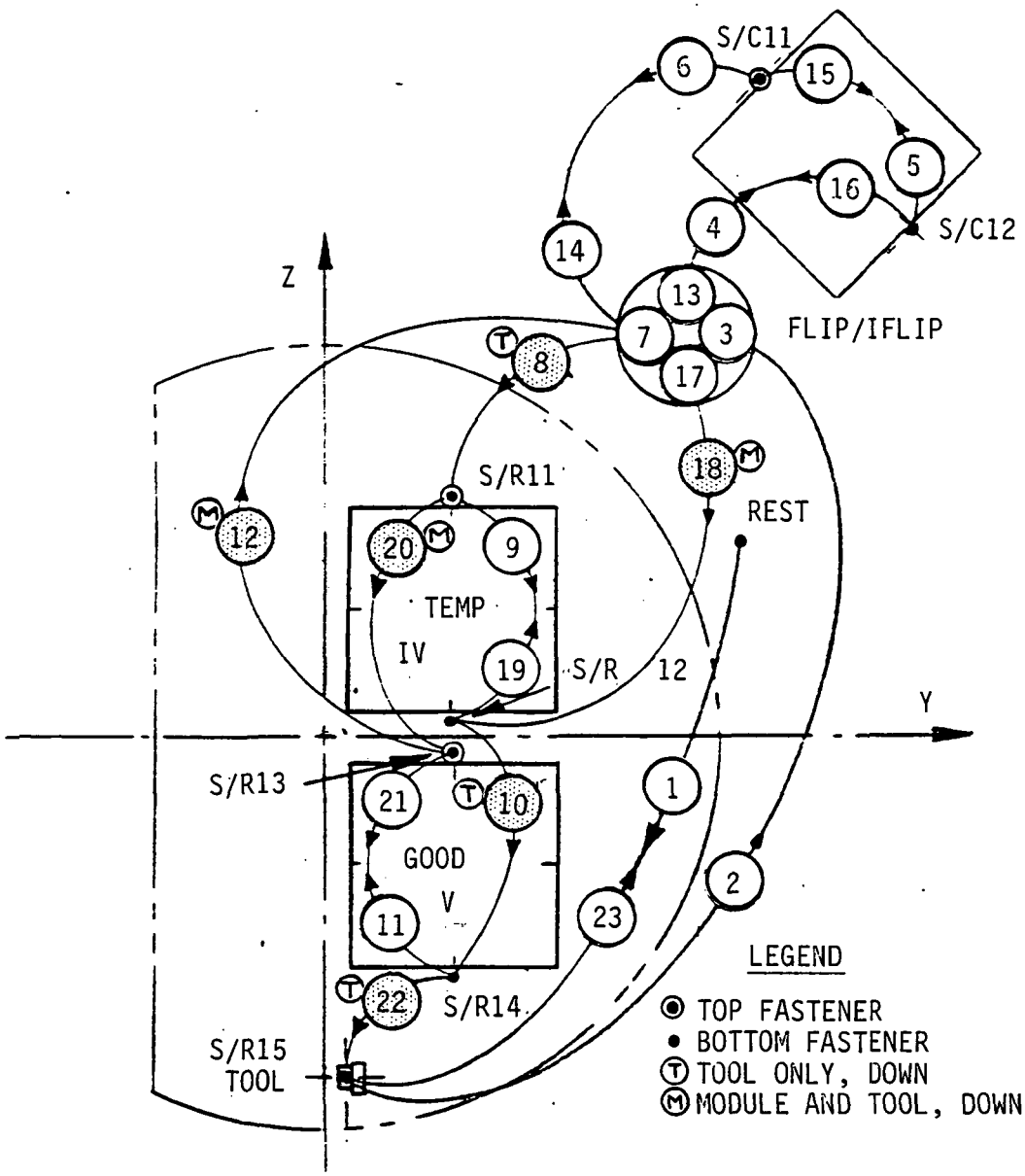

Figure 8-37 Variant 1 - Trajectory Sequence for Minimum MMS Servicing Time

8.1.6.5 Selection of Stowage Rack Arrangement - The recommended stowage rack arrangement is shown in Figure 8-38. It corresponds to the minimum servicing time. The "temporary" MMS module location is "IV," both top fasteners are in the 12 o'clock orientation (S/R 11 and S/R 13) and the 24 in. cube modules are in the "II" and "III" locations.

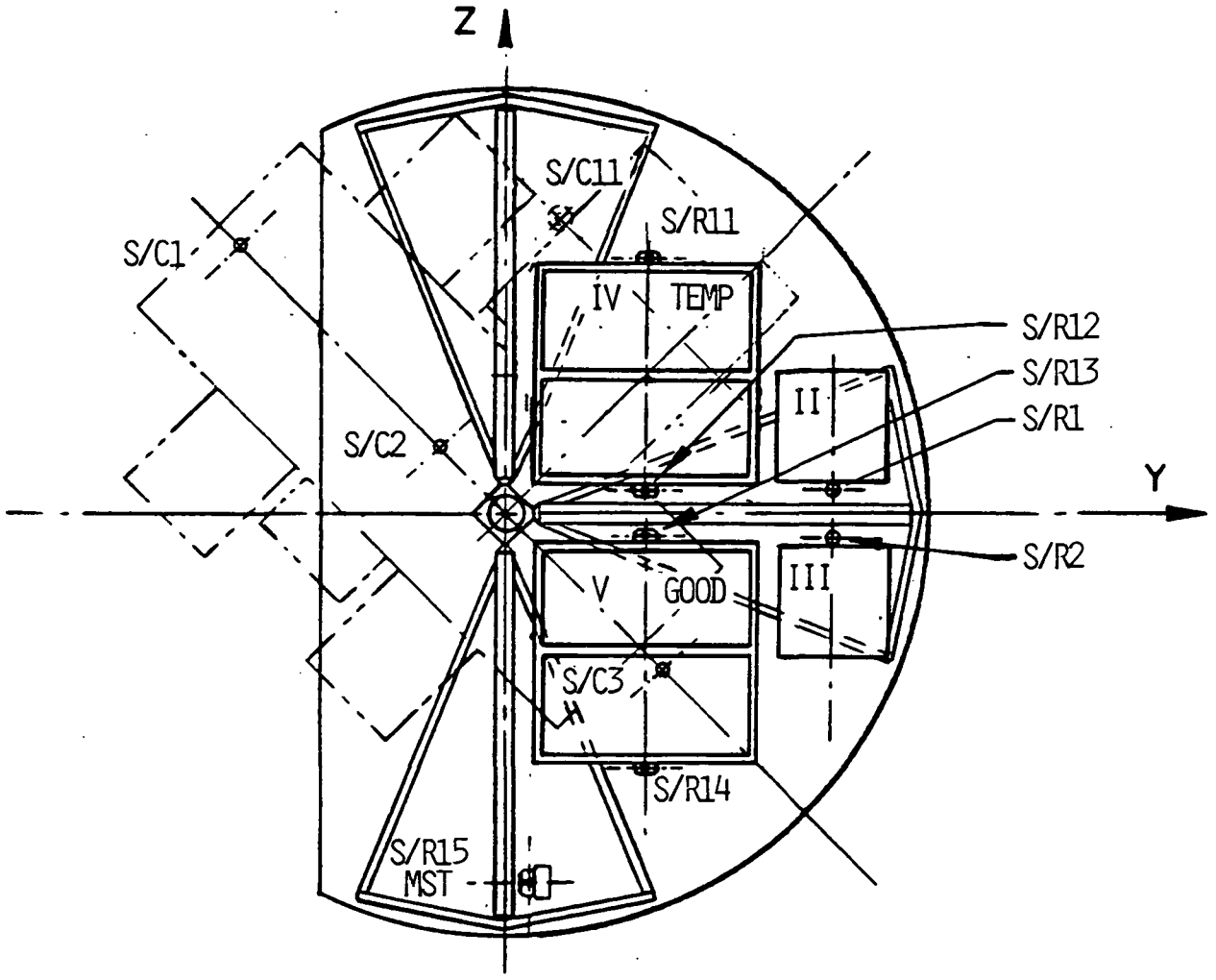

Figure 8-38 Recommended Stowage Rack Arrangement

The outline of the spacecraft mockup is shown in this top view using phantom lines. Fastener locations, both for the stowage rack (S/R) and for the spacecraft (S/C) are indicated. The modified MST storage location is S/R 15. All the requirements, presented in Section 8.1.1, for the stowage rack configuration are met.

The two existing 24 in. cube modules with side interface mechanisms and their existing support structures are used in locations II and III. The baseplates of these support structures needed to be modified to prevent interference with the stowage rack beams when the modules are located as shown in the figure. A corner of each baseplate was removed to provide clearance with the stowage rack end-of-beam triangular structure. Cutouts were provided in the bottom frame of the baseplate that is used in location III to clear the radial structural member adjacent to the bottom plate of the stowage rack.

The modified MST storage rack will include a module latch interface and a guide tube similar to the ones used on the MMS module mockup and will be attached to the stowage rack structure using a simple bracket. A sensor for the presence of the modified MST in the storage rack and an optical target will be provided. The modified MST will be secured in this location using its latches.

8.1.7 Servicer System Configuration - 1-g Demonstrations

The servicer system configuration definition included trade studies to select the spacecraft mockup configuration, the MMS module design and the stowage rack module arrangement.

The servicer system configuration for 1-g demonstrations of MMS module exchange is shown in Figure 8-39. It includes a spacecraft mockup with a MMS module mockup bracketed off one side of the existing spacecraft mockup, the servicer arm attached to the docking post and a stowage rack mockup, modified to receive the MMS module in two locations, the 24 in. cube module with side interface mechanism in two locations and a modified MST storage rack.

The arrangement of the modules in the stowage rack mockup was selected based on the minimum servicing time by analyzing sixteen alternatives.

The selected servicer configuration permits going easily from demonstrations of axial or radial module exchange using the 24 in. cube modules to demonstrations of axial exchange of MMS module mockups or vice versa. It will only be necessary to select the proper set of software, make a change in one electrical connection, and select the desired trajectory.

The spacecraft mockup configuration emphasizes the use of MMS module exchange. This approach is consistent with the use of MMS modules on spacecraft other than those that use the MMS triangular structure.

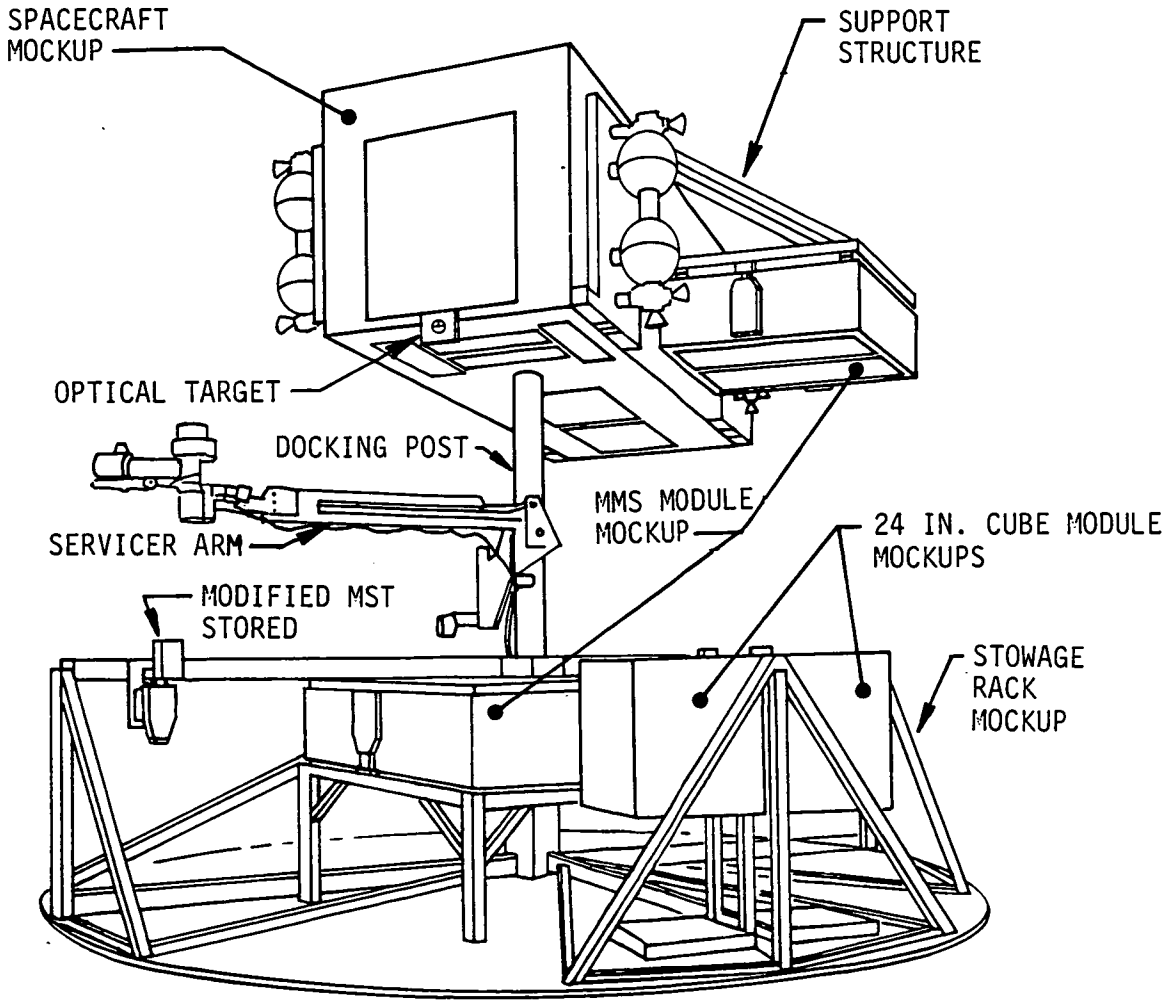

Figure 8-39 Servicer System Configuration - 1-g Demonstrations

8.1.8. Schedule and Cost Considerations

The next step after the servicer system configuration for 1-g demonstrations of MMS module exchange was selected was to develop the schedule and estimate the cost of design, fabrication, and installation of the new equipment and ETU modifications according to Change Order 3 to this contract. The Change Order 3 schedule and cost specifics were presented to MSFC in March 1985 at the Midterm Review and are summarized in the following paragraphs.

8.1.8.1 Change Order 3 Activities - Change Order 3 represented a major increase in the contract activities as listed in Table 8-4. The first activity involved drawing preparation and fabrication of most of the mockup and electrical equipment needed to demonstrate the exchange of Multi-Mission Modular Spacecraft modules using the Engineering Test Unit.

Table 8-4 Change Order 3 Activities

Servicer/MMS 1-g Demonstration Equipment
- Drawing Preparation
- Fabrication and Assembly
- Installation at MSFC and Checkout
MMS Module Exchange Software
- Requirements Documentation
- Manual-Augmented Trajectory Sequence Documentation
- Software Preparation
- Software User's Manual
Servicer Demonstration
- Software Installation and Checkout
- MMS Module Exchange Demonstration

A 1-g version of the MMS Module Servicing Tool was provided by Goddard Space Flight Center. The MST is used as an interface between the ETU end effector and the MMS modules and provides the mechanical torque to tighten and loosen the MMS attachment bolts. Requirements for design of the 1-g version of the MST have been prepared. Upon completion of fabrication at Martin Marietta, the Change Order 3 equipment was checked out, shipped to MSFC, installed, and checked out again.

The MMS module exchange software was developed along the same lines as the basic module exchange software. The same form of trajectory hierarchy was used, but with the necessary differences to allow for use of the MST, two attachment bolts, and for the size of the modules. All documentation and the software program itself for the MMS modules, were separate from the basic module exchange software.

The software was delivered to MSFC and checked out on their PDP-11/34 computer with the Engineering Test Unit. Initial demonstrations of MMS module exchange in all three control modes were made.

8.1.8.2 Change Order 3 Deliverable Mockups - The equipment listed in Table 8-5 was delivered and installed at MSFC as part of Change Order 3. Two MMS module mockups were produced — one "failed" module for the spacecraft mockup and one "good" module for the stowage rack.

Table 8-5 Change Order 3 Deliverable Mockups

MMS Module Mockups (2 sets)
Spacecraft Mockup with MMS Module Receptacle
MMS Module Receptacle with Support Structure (2 sets)
ETU Wiring Modifications
Electrical Connector Positioner
Module Servicing Tool Storage Rack
MMS Module Location Targets

A receptacle for an MMS module was produced and fastened to the existing spacecraft mockup with brackets. There is no spacecraft mockup that looks like the Multi-Mission Modular Spacecraft, rather the visual emphasis is on MMS module exchange.

Two MMS module locations were required in the stowage rack — one for temporary module storage and one for storage of the "good" module. Each of these locations consists of a receptacle for the MMS module and a support structure of the proper height.

The ETU wiring modifications included: 1) wiring to the MST; 2) wiring to the electrical connector positioner; 3) revisions to the servicer control panel; 4) junction box changes; and 5) wiring to indicators at each fastener of each module location.

The electrical connector positioner was fastened on the ETU end effector and is used to make an electrical connection between the ETU and the MST after the MST has been grasped by the ETU end effector jaws.

8.1.8.3 Change Order 3 Schedule and Cost Specifics - Figure 8-40 shows the major schedule milestones for the Change Order 3 activity as presented to MSFC at the Midterm Review, in March 1985. The schedule was generally followed as planned with one difference being that the MST integration meeting was held at the beginning of June, one day before the Design Coordination Meeting.

The Change Order 3 activity started on April 1, 1985 to provide time to complete most of the work associated with the basic contract and Change Order 1.

The equipment (Task 1) and software (Task 2) activities were conducted in parallel and led to the software installation and initial MMS module exchange demonstration in October of 1985. The equipment activity was arranged as a waterfall of drawing, fabrication, and installation. The installation subtask included assembly and the checkout at Martin Marietta, shipping to MSFC, and installation and checkout at MSFC.

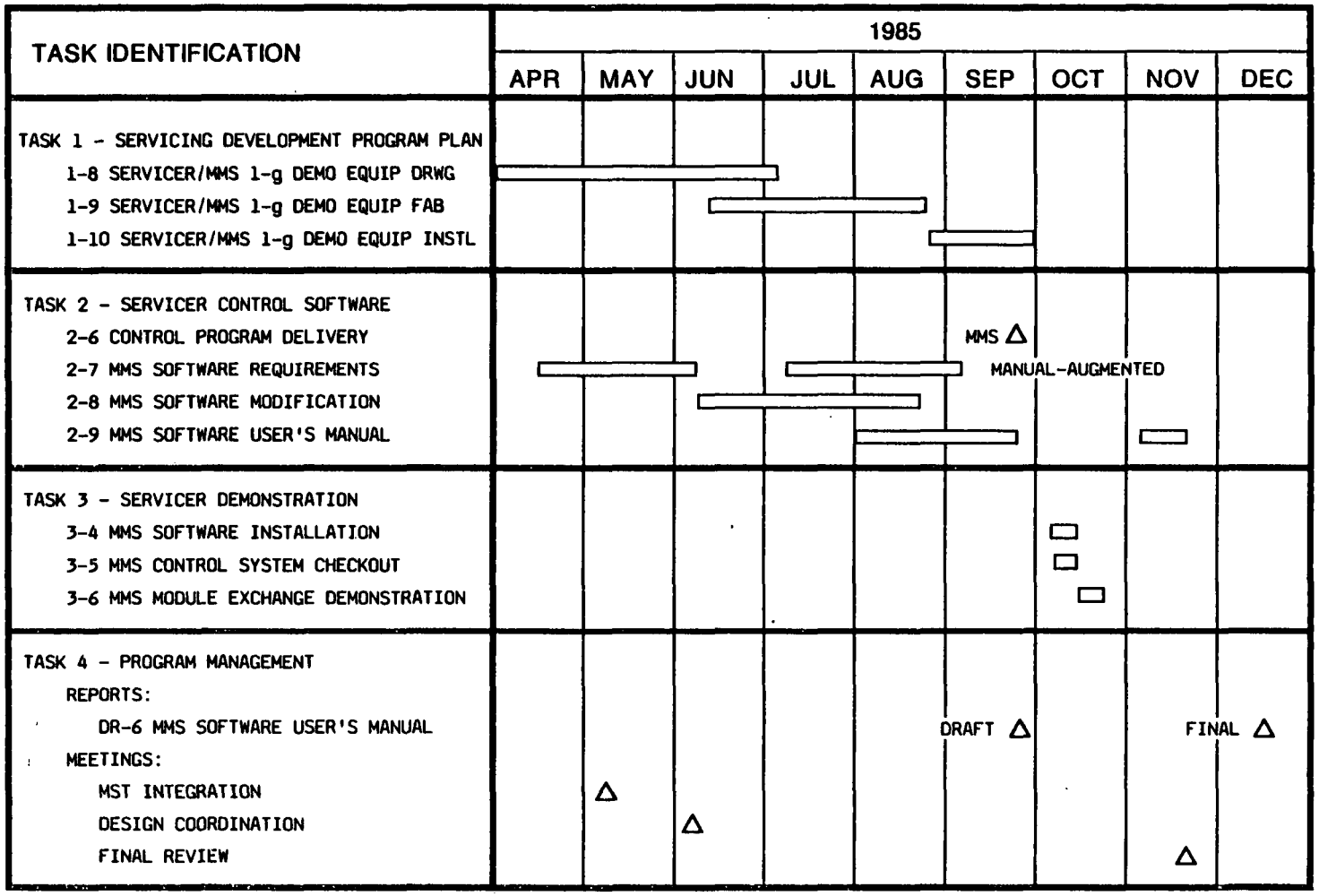

Figure 8-40 Change Order 3 Activity Schedule

The software activities consisting of requirements definition, software development, and preparation of a Software User's Manual were scheduled in the waterfall pattern. The second part of the software requirements subtask was the preparation of the trajectory sequence documentation necessary to conduct a module exchange in the Manual-Augmented control mode. A time span was allowed in November for updating the Software User's Manual. The MMS Software User's Manual was prepared to the requirements of DR-6 of DPD650.

Two meetings were planned -- one for MST integration at GSFC and one to review the drawings at MSFC, in addition to the final review, which was scheduled in mid-November of 1985.

The total cost of the Change Order 3 activities was estimated at $200 K at the time of the proposal preparation. The cost of design, fabrication, testing, and installation of the Modified MST by Fairchild Space Company and GSFC was not included in this amount, being funded separately.

8.2 SERVICER/MMS 1-g DEMONSTRATION DESIGN

Change Order 3 activities included the design of the necessary equipment for adding a MMS module exchange capability to the existing Engineering Test Unit. With the preliminary concept design completed under Change Order 1 of the contract, the effort consisted mainly of design refinement and coordination and drawing preparation and checking.

The main assembly drawings produced are listed in Table 8-6 and the drawing tree is presented in Figure 8-41. The drawings produced were "Form 4" level for cost reduction, with the parts list and notes on the same drawing and with parts call-outs on the drawing field, simplified call-out of standard processes and some "not-to-scale" dimensions permitted. Also the same person preparing the drawings was providing all the engineering support functions, such as stress analysis, materials and standard parts and processes selection, procurement and drawing checking.

Table 8-6 Assembly Drawings for Servicer/MMS 1-g Demonstrations

DESCRIPTION	DRAWING NO.
MMS Module Mockup Assembly	RES4100000
Spacecraft Mockup Assembly	RES4200000
Stowage Rack and Spacecraft Interface Assembly	RES4300000
Connector Positioner Mechanism Assembly	RES4400000
MST Storage Rack Assembly	RES4500000
Optical Targets Assembly	RES4600000
New Cable Assemblies	RES4X00XX0
MMS Junction Box Assembly	RES3159950

In addition to drawing preparation, this effort included preparation of MST interface documents, attending MST Integration Meeting and Design Review Meeting as well as incorporation of modifications to the drawings and MST Interface Documents.

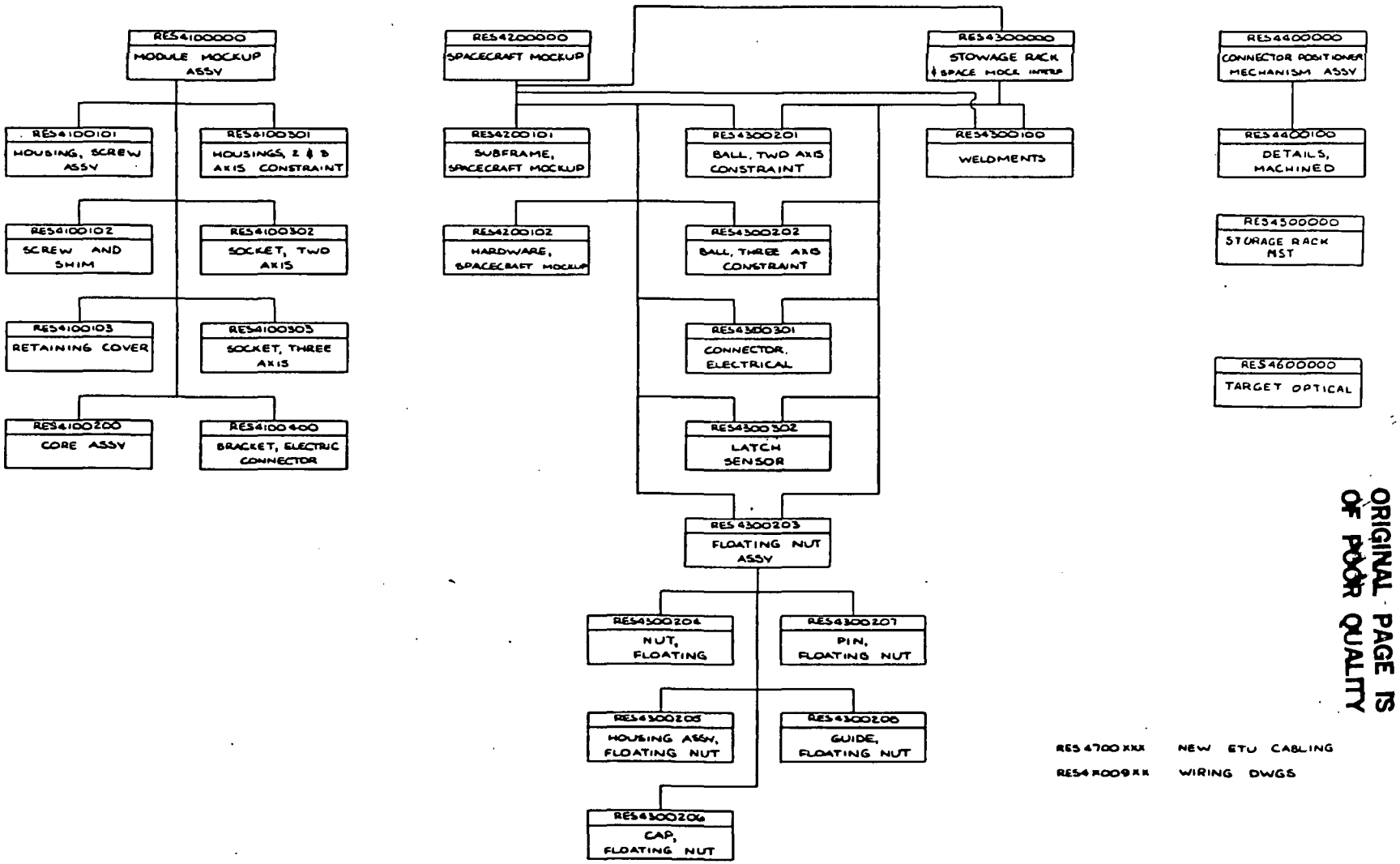

Figure 8-41 Servicer/MMS Equipment Drawing Tree

Figure 8-41.

ORIGINAL PAGE IS OF POOR QUALITY

8.2.1 MMS Module Mockup

The mockup of the MMS module (see Figure 8-42) has the same outside dimensions and shape as the actual module. The lightweight box structure is reinforced by an internal torque box, directly connecting the upper and lower fasteners. Not shown on the figure is a layer of metallized polyester film, that covers the box and is bonded to it. The plastic film is 0.002 in. thick and represents the thermal multilayer insulation, while strengthening the box. The material used for building the box and its internal structure is 3/4 in. thick styrofoam board, with large cutouts for weight reduction and accessibility during construction.

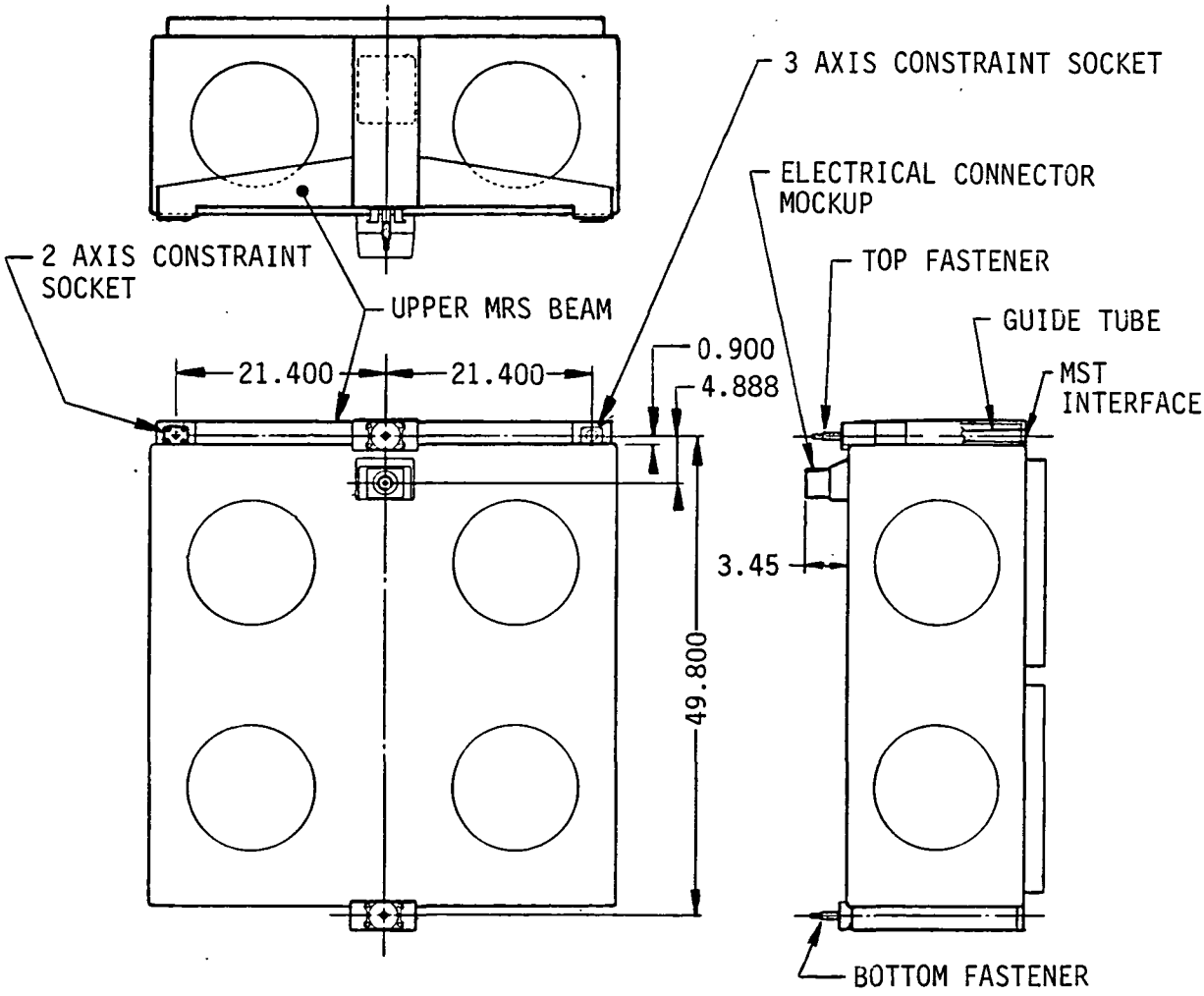

Figure 8-42 MMS Module Assembly

Special attention was paid to the proper selection of the adhesives used for joining the styrofoam parts to themselves and to the outer layer of film. The majority of adhesives readily available are not suitable because they dissolve or etch the styrofoam or stain the metallized film. A special styrofoam panel adhesive was used for the box and urethane foam was used to reinforce the bond lines. Urethane bond was used to install the metallized film, as well as the upper and lower interface boxes and the electrical connector mockup, that are made of balsa wood and covered with fiberglass.

The MST interface is the same as for the actual module except that different materials were used. The front interface plate is made of thin wall fiberglass with aluminum inserts for the latch attachment area instead of solid aluminum. The guide tube is made of 0.015 in. instead of 0.030 in. thick fiberglass.

The electrical connector mockup has the same shape, size, and relative position as the plug side of the actual disconnect used in the back of the MMS power module. A small, five pin connector half, housed within the mockup, mates with the other half installed on the spacecraft or stowage rack interface.

The module retention system has the same interface with the spacecraft as the actual hardware. It is comprised of the upper and lower fastener assembly and two constraint sockets. A description of the materials used for the fastener assembly was given in Section 8.1.3 and Figure 8-24. The hollow core aluminum bolt is permanently lubricated with dry lube finish. A maximum loosening torque of 20 $\pm$ 1 ft-lb was considered for the design of the fastener, MST interface plate, and the supporting structure.

The constraint sockets are thin aluminum shells riveted to the upper beam of the module. The two-axis socket is mounted in slotted holes allowing 3/8 in. horizontal float (parallel to the beam). The sockets have approximately 0.020 in. preload when the central bolt is tightened.

The design total weight was 12.5 lbs maximum. The lightweight and resilient styrofoam material of the box and the box design assure the ruggedness required to withstand 400 cycles of MMS module exchange demonstrations and the accidental load due to a 2 ft drop on a flat surface, without substantial damage. The mockup is easy to repair in case of accidental damage using available styrofoam and urethane bond.

8.2.2 Stowage Rack Module Support

The two MMS module mockups built under Change Order 3 can interchangeably be installed in two locations on the stowage rack mockup, a "good" location and a "temporary" one, as well as in one location on the spacecraft mockup. The design of the module interface is the same for all three locations. Each of them is comprised of an aluminum tubular frame supporting two floating nut units for the two bolts of the module and two constraint balls to match the sockets of the module (see Figure 8-43).

Near each floating nut unit, on the opposite side of the frame, there is a sensor unit with three microswitches and a spring loaded rod. It senses the "ready-to-latch", "latched", and "unlatched" condition of the fastener by gaging the protrusion of the bolt through the floating nut.

Four legs, braced to the module interface frame provide the support and the proper elevation at both stowage rack MMS module locations. They are provided with swivel leveling pads for ease of height adjustment and leveling.

The floating nut unit (see Figure 8-44) is of the same construction as the actual unit except for the use of aluminum instead of stainless steel for the housing and cap.

The stainless steel nut is integral with the guiding cone. Its floating capability is ±0.100 in. radially and ±8.5° for angular misalignment. Softer springs, as compared with the actual hardware, were used to reduce the loads on the module mockup structure.

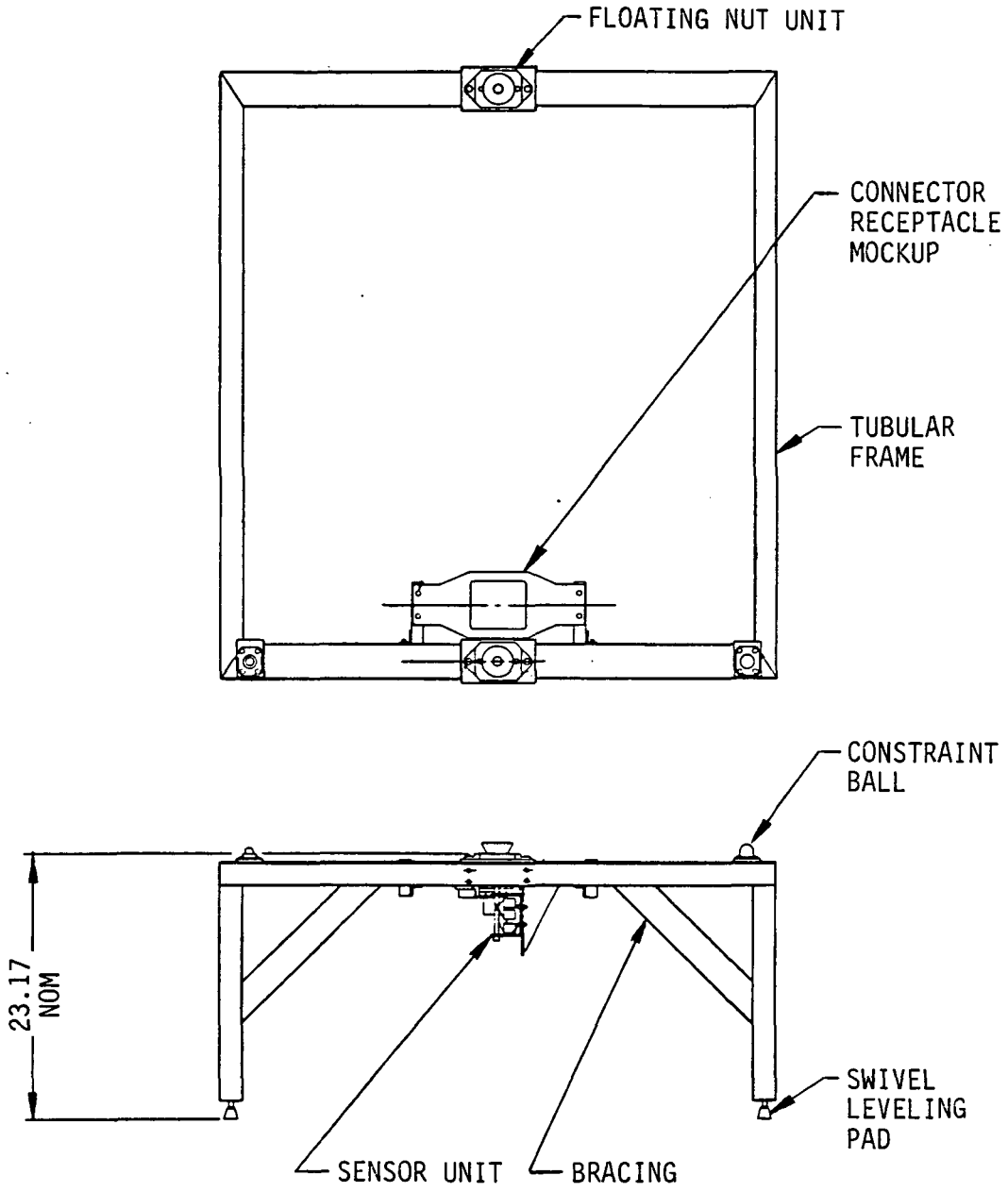

Figure 8-43 Stowage Rack Module Support

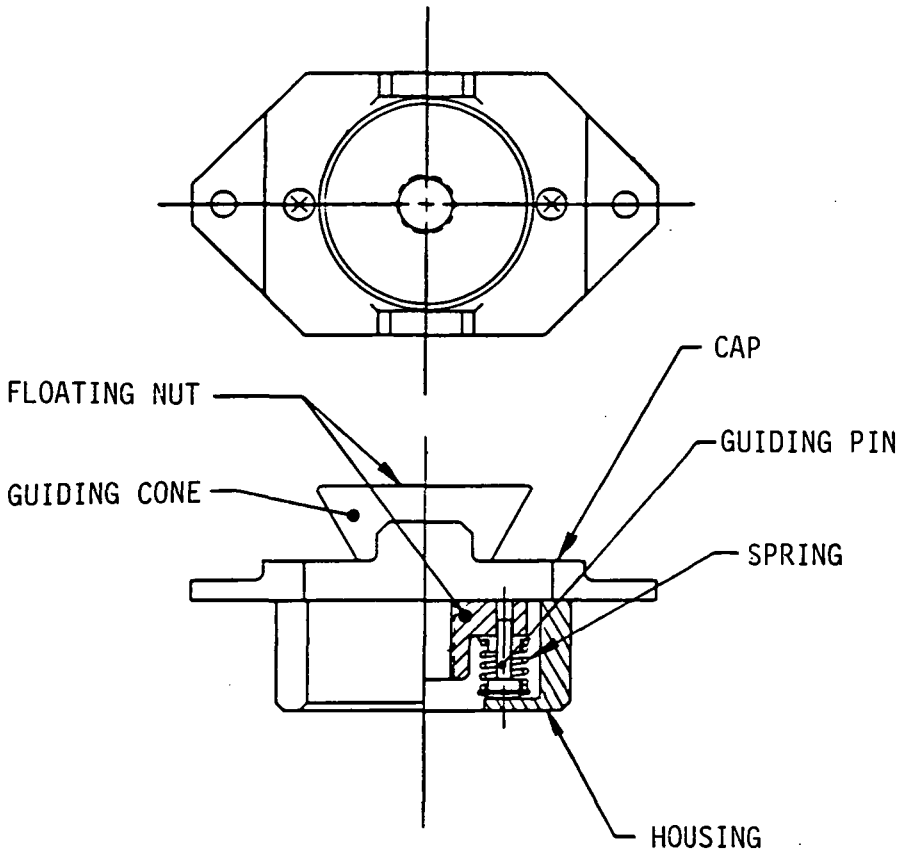

Figure 8-44 Floating Nut Unit

An electrical connector receptacle mockup is attached to the spacecraft module interface and to the "good" location of the MMS module support on the stowage rack. The receptacle (see Figure 8-45) is mounted in a spring loaded housing that allows $\pm$0.20 in. mismatch and large angular misalignment at the start of engagement with the connector mockup of the module. The tapered walls of the receptacle guide the connector mockup and provide alignment of the small electrical disconnects within 0.010 in. during their mating. Bevels on all four sides of the receptacle flange and on the mounting plate help center the receptacle under spring pressure after removing the module mockup. This compliant mounting of the receptacle provides smooth engagement of the small electrical disconnect that is housed within it and limits the loads on

the MMS module mockup structure. An added safety feature is the redundancy of contacts of the five-pin electrical disconnect. The pin half of the disconnect that is mounted on the module has all the contacts electrically connected with jumpers. On the receptacle side, the socket half of the disconnect has three contacts connected to one wire and two to the other. Thus the electrical circuit is closed upon mating the disconnects even if one pin is accidentally broken.

The attachment brackets of the electrical connector receptacle mockup are adjustable in all directions using slotted holes.

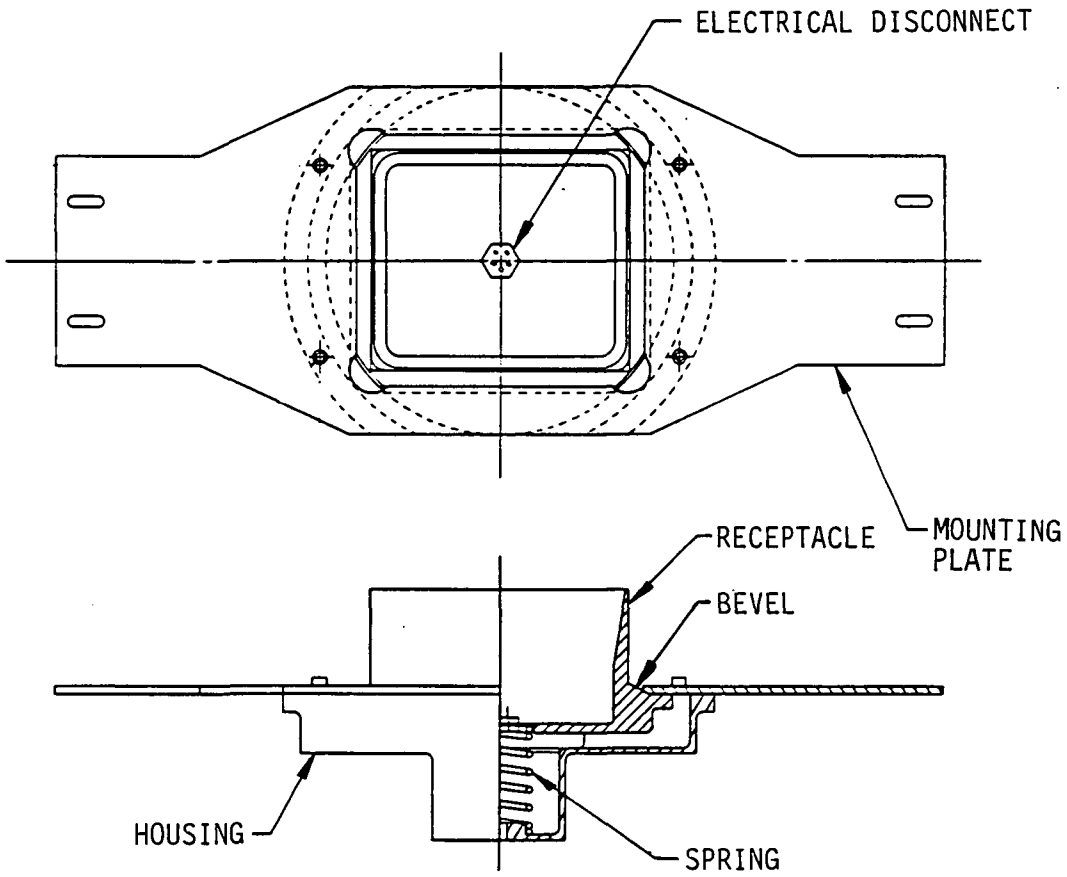

Figure 8-45 Electrical Connector Receptacle Mockup

8.2.3 MMS Spacecraft Mockup

In order to emphasize the MMS module exchange and not the triangular configuration of the existing spacecraft, only a simple structure that supports the module interface frame and allows its adjustment and leveling was provided (see Figure 8-46). This is consistent with the use of MMS modules on spacecraft other than those using the MMS triangular structure. However, the relative position of the module with respect to the ETU arm and stowage rack mockup represents the actual module position when performing on-orbit module exchange, using lateral docking of the servicer to the MMS and a docking probe fitted with an orientation joint.

The MMS module interface frame is the same as the ones used for module support on the stowage rack, except that instead of the four legs, four adjustable rods are used for structural attachment. They permit vertical adjustment and leveling of the module interface frame. Two adjustable links, a subframe, two angle brackets, and two adjustable clevises form the support structure that is attached to the existing spacecraft mockup. Rework of the existing ETU spacecraft mockup to receive the MMS module included deletion of the boxes on one side of the mockup body and local internal structural reinforcement at the attachment points.

Later expansion of the MMS spacecraft mockup to incorporate fluid resupply demonstration hardware is possible at each end of the interface frame. Tanks and plumbing components can also be fitted within the support structure of the MMS spacecraft mockup.

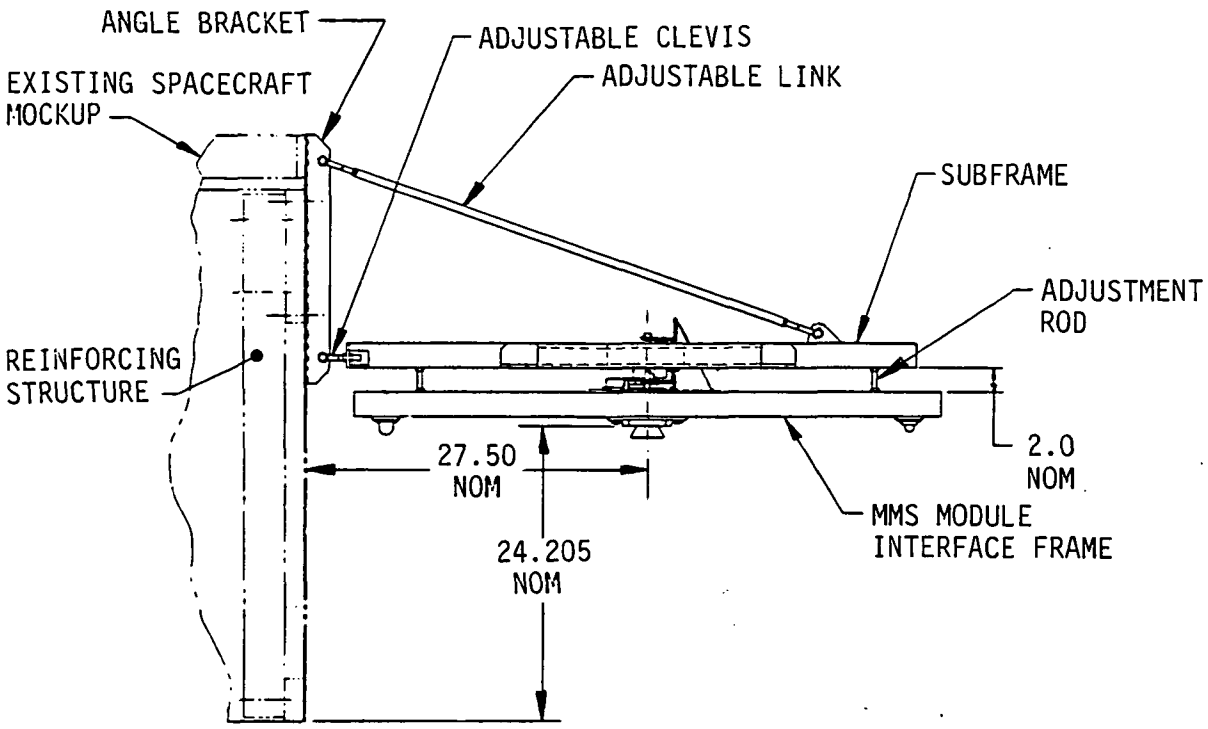

Figure 8-46 MMS Spacecraft Mockup

8.2.4 Connector Positioner Mechanism

The connector positioner mechanism installed on the existing ETU end effector provides proper alignment and translation stroke for mating a subminiature, double density 19-pin connector, part number 2DE-19P, by ITT Cannon. It connects up to 19 22 AWG leads across the interface between the ETU end effector and the modified MST for the provision of power, control, and monitoring circuits. The socket side of the connector, part number 2DER-19S, is installed on the MST and has a floating mount, permitting 0.030 in. of diametral float.

Figure 8-47 shows the main features of the connector positioner mechanism. Several types of mechanisms were considered for the connector positioner: a solenoid actuated mechanism with direct drive,

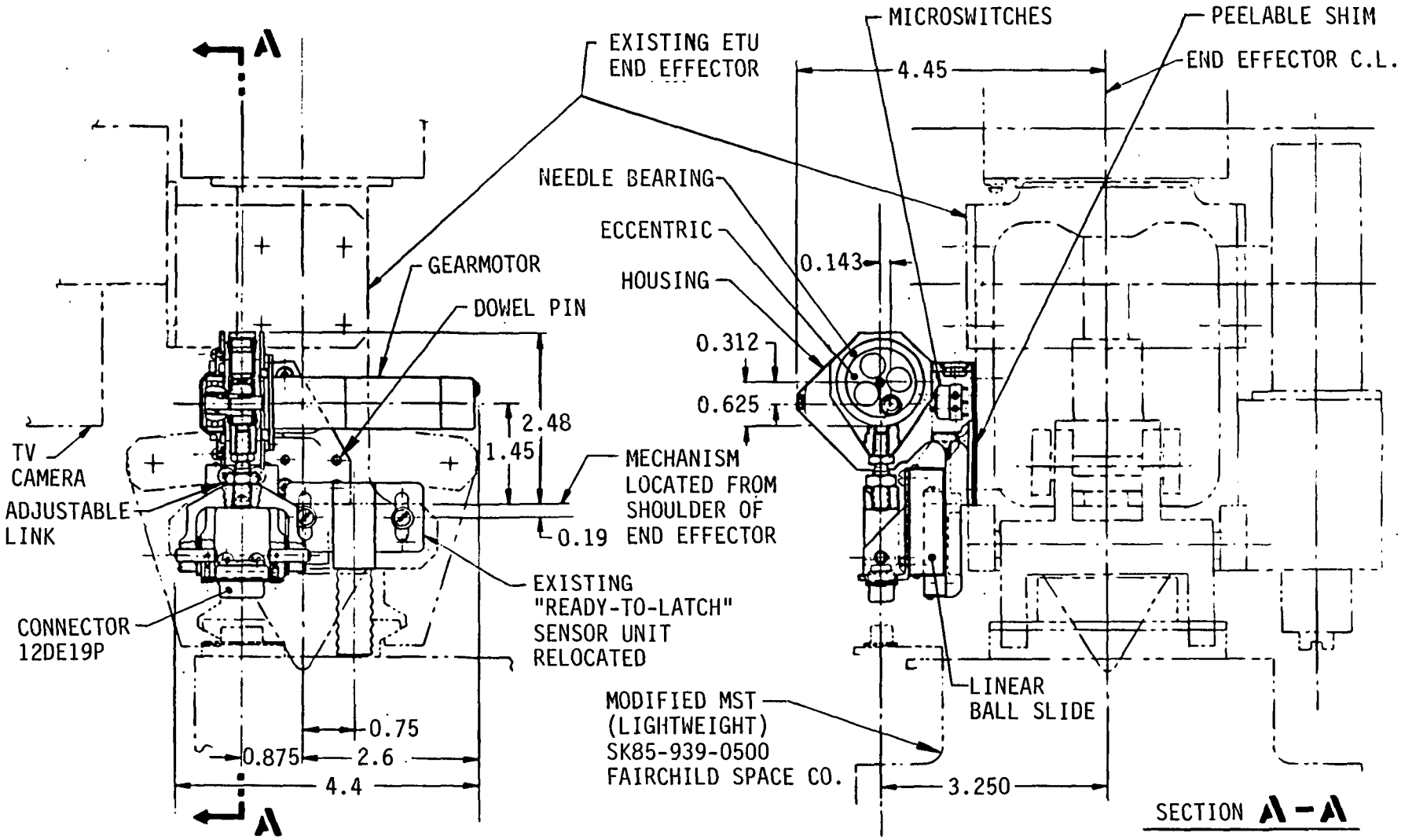

Figure 8-47 Connector Positioner Mechanism

ORIGINAL PAGE IS
OF POOR QUALITY

a paralellogram linkage, a single lever arrangement with compliant connector attachment, a ball screw and nut with direct drive and an eccentric actuated mechanism, with linear ball slide guiding. These candidate mechanisms were traded against the requirements given in Section 8.1.1. The solenoid mechanism was too heavy, the parallelogram linkage was too complex, not compact enough and difficult to set up and test before installation on the ETU. The single lever and the ball screw and nut mechanisms were too complex and not compact enough. The eccentric mechanism best met all the requirements and was selected for the connector postioner. The short stroke, high final force, compactness, and light weight characteristics made the eccentric mechanism well suited for this particular application.

The mechanism uses an electrical (28 Vdc) gearmotor, a 1.0 in. diameter eccentric, a needle bearing mounted adjustable link and a linear ball slide unit to provide 5/8 in. mating stroke and 20 lbs mating/demating force for the connector. It was designed as a compact, self-contained unit that is bolted to one side of the end effector, opposite to the existing power takeoff. The simple interface with the ETU end effector and the built-in adjustability simplified the integration at MSFC and allowed adjusting and testing of the unit prior to delivery. The cost and the weight of the mechanism was kept low by minimizing the number of parts. A thin wall aluminum housing was used to position and connect all the mechanism parts, to provide end-of-stroke solid stops and to support cabling and adjustable limit switches. A standard miniature ball slide unit was used to provide very accurate linear guiding during the translation motion. The cumulative error of the end effector and mechanism interface is smaller than the floating capability of the disconnect half, mounted on the MST, providing a very smooth engagement. The free end of the gearmotor shaft is supported by a ball bearing that prevents overloading of the small gearmotor bearings. Special seals, attached one each side of the eccentric help prevent contamination of the needle bearing. The motor is stalled at each end of the stroke by butting the link against a solid stop on the housing. All the screws were installed with locking compound or lock washers to prevent self loosening through vibration.

There are three places for adjustment of the connector positioner mechanism. The link length is adjustable using a turnbuckle type screw with two jam nuts. The smaller jam nut has a left hand thread. The screw has a 5/32 in. hexagonal socket. Thus, the fully extended position of the connector holder can be adjusted within 1/8 in. Two subminiature microswitches are mounted stacked opposite to each other inside the housing, using two screws in slotted holes. Their position is adjustable within 0.088 in. using a Phillips screwdriver. The adjustment can be made both before or after installation on the ETU. A peelable shim was provided with the unit, to be installed between the mechanism mounting flange and the ETU end effector for proper line-up with the connector half on the MST. The installation required drilling and tapping of three holes in the end effector body for the 6-32 size screws. Two 1/8 in. diameter dowel pins, installed through the flange, shim and end effector, take the shear loads and prevent shifting. The existing "ready-to-latch" sensor of the ETU was relocated as shown on Figure 8-47 and a 3/16 in. thick spacer was used for its installation to prevent interference with the end effector.

Adequate clearances were provided with respect to all servicer system elements. The compact mechanism configuration was critical in providing the required clearance to the TV camera. The 5/8 in. stroke of the mechanism is more than the approximately 1/4 in. stroke actually required for mating/demating the connector and is needed for providing $\pm 5°$ angular misalignment capability of the end effector with respect to its mating interface, prior to jaw closing. The connector positioner is compact enough and is installed such that it does not obstruct the field of view of the TV camera.

8.2.5 MST Storage Rack

When not in use, the modified MST is stored in a special rack, attached to the stowage rack mockup and it is secured using its latches. The storage rack (see Figure 8-48) has the same interface with the MST as

the MMS module mockup. The same fiberglass interface plate with aluminum inserts for latches and the same fiberglass guiding tube are used, enclosed in a balsa wood and fiberglass box. The box is attached to the stowage rack using a simple plywood bracket.

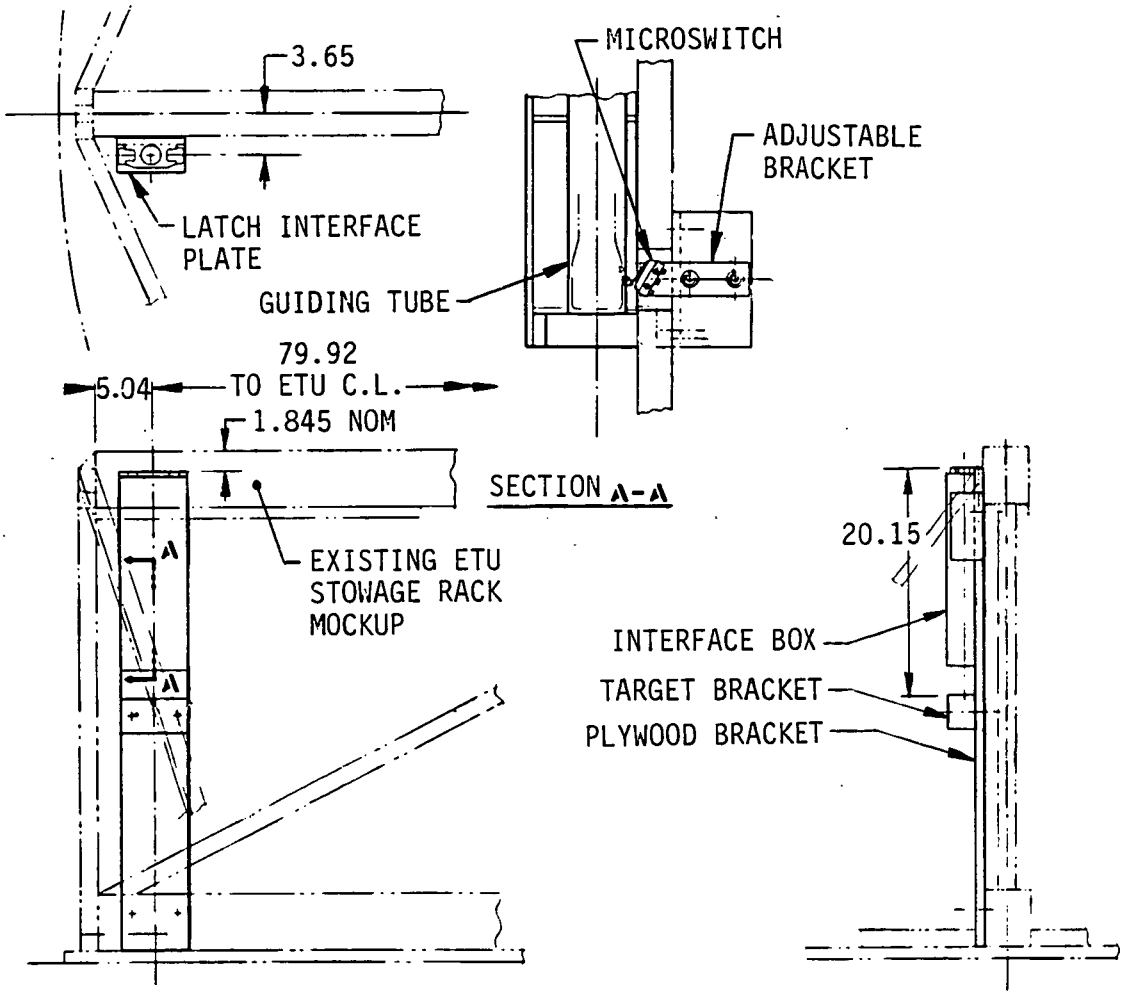

Figure 8-48 MST Storage Rack

A microswitch on an adjustable bracket senses the presence of the MST. An optical target of the same design as the one used for MMS module interface with the spacecraft or with the stowage rack is attached to a wooden bracket on the MST rack. The relative position of the optical target with respect to the latch interface plate is the same as for the targets of the MMS modules.

8.2.6 Optical Targets

An optical target is installed at each MMS fastener location on the stowage rack and spacecraft mockups and at the MST storage location, for verification of the end effector alignment, using the existing TV camera and lights (see Figure 8-49).

The target plate design is similar to the other targets of the ETU, used for the basic module exchange and has a similar pattern. It consists of a 2 1/4 in. square with its centerlines arranged such as to indicate the top direction, towards the center of the MMS module mockup. The lines are black on a flat white background and are 0.10 in. wide. The width of the line was selected to provide optimum resolution when using the existing 244 x 188 pixels TV camera. The horizontal centerline extends over the full 8 in. width of the target plate to take full advantage of the existing TV monitor image size for improved alignment capability. The relative position of the optical target with respect to the end effector interface and TV camera objective is approximately the same for both basic and MMS module exchange demonstrations.

Approximately 1.5 in. clearance is provided between the optical target and the MMS module mockup during the servicing demonstrations. Two corners of the target plate are beveled to assure proper clearance during module insertion or retrieval. In addition, the target plate support has a compliant attachment to its mounting bracket. A spring loaded double hinge arrangement was used to prevent damaging the MMS module mockup in case of accidental interference and to return automatically the target to its preset alignment. Because the mounting bracket is attached directly to the MMS module interface frame, the need for target resetting is minimized, in case of accidental module support displacement.

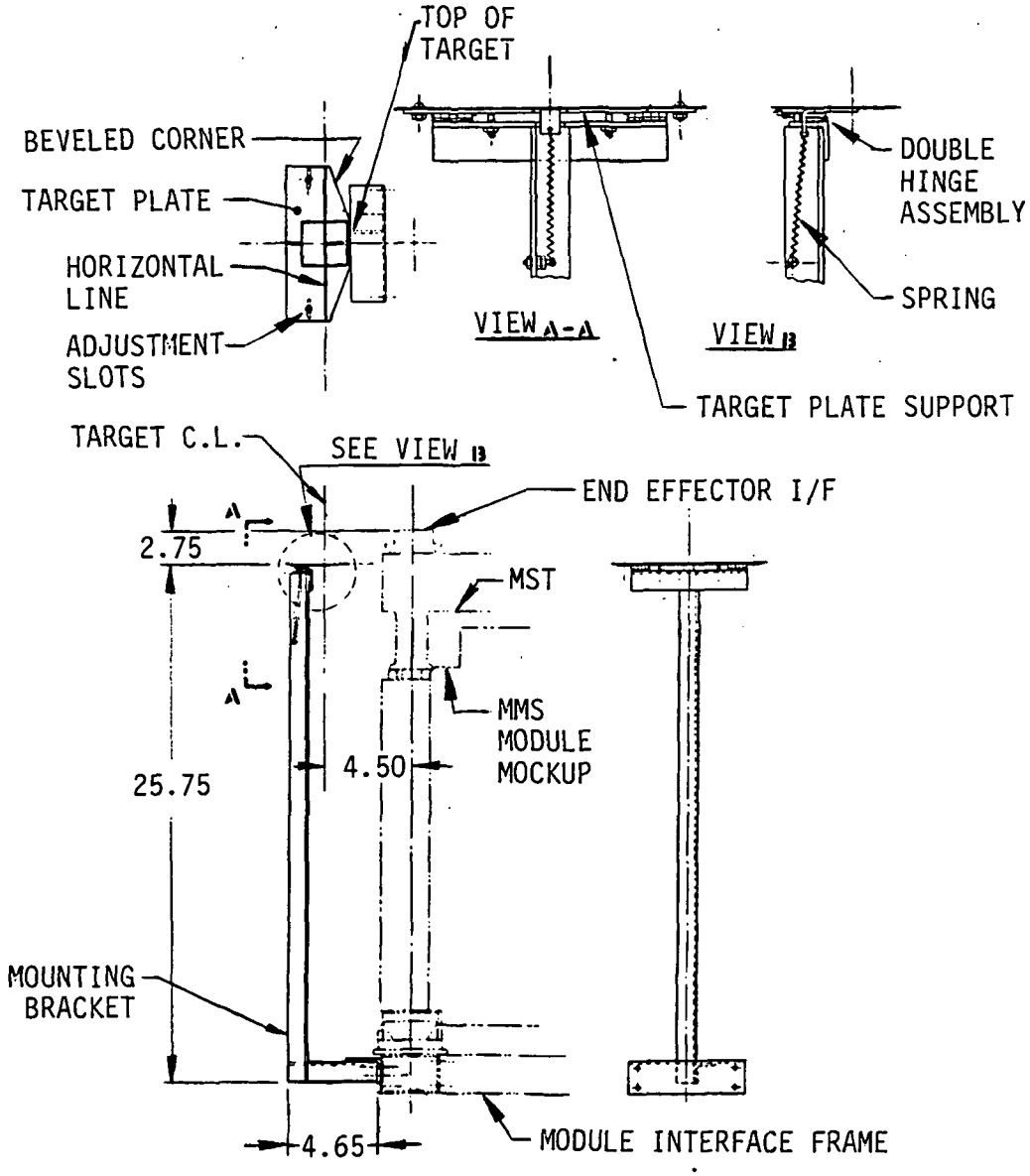

Figure 8-49 Optical Target Assembly

The optical target is adjustable ±3/8 in. in all directions in its plane. The two mounting screws are installed in slotted holes in the target plate and in its support. Target plate alignment can be done using the existing template, made for the basic module optical targets. A spacer block, 1 in. square by 2 in. approximate dimensions, can be used for proper alignment of the MMS target, using the existing template.

8.2.7 Electrical Design

The electrical design activity of Change Order 3 involved the revision of certain drawings from MCR-78-535, SSDC Electronics Identification, March 15, 1978, the creation of new drawings, parts ordering, and coordination with Fairchild Space Company. Eight drawings were revised and eighteen new drawings were created. They incuded the new MST/MMS connecting diagram, new cable drawings, Servicer Control Panel modification for connector positioner controls, and the MMS junction box assembly drawing. The Lisa computer was used for the new drawings because of the computer availability, ease of use, ease of incorporating changes, and quality of output. The drawings generally look like schematics but contain sufficient information for assembly and wiring.

8.2.8 Parts and Materials Procurement

The design activity of Change Order 3 involved also the selection of the materials and purchased components, contacting vendors and preparation of the necessary procurement documents.

8.2.9 ETU/MST/MMS Interface Coordination

An important activity that was part of the Change Order 3 equipment design involved coordination of the interfaces between the ETU and the modified Module Servicing Tool and between the MST and the MMS module

mockup. Parties involved were the Marshall Space Flight Center Contract Technical Manager, the MSFC Robotics Laboratory personnel handling the modifications of the ETU control panel, the MMS office of the Goddard Space Flight Center, in charge of building the modified Module Servicing Tool and cabling, Fairchild Space Company performing the design of the MST, as well as the design and manufacture of the MST power supply and controls, and Martin Marietta Denver Aerospace Division designing and building the rest of the equipment and the related controls modifications for MMS servicing demonstrations with the ETU.

Coordination of both the electrical and mechanical interfaces was performed. It included requirements definition, connector selection, pin assignment, cable length and MST control panel configuration. We prepared and updated drawings of the mechanical interface between MST and end effector and MMS module mockup. The interface coordination involved exchange of drawings by mail, telephone conversations, as well as an MST Interface Coordination Meeting held at Fairchild Space Company, in Germantown, MD on June 5, 1985 and attended by representatives of all parties involved.

8.2.10 Design Coordination

The design coordination between Martin Marietta and MSFC was assured through regular telephone conversations between the Study Manager and the MSFC Contract Technical Manager, a series of vists of Martin Marietta personnel to Marshall Space Flight Center, document exchanges through mail or telex and a Design Coordination Meeting held at MSFC on June 6 and 7, 1985. During the meeting, we presented assembly and detail drawings of the connector positioner mechanism, stowage rack mockup, spacecraft mockup, MMS module mockup, and cabling. Comments were received and go-ahead with parts manufacturing was approved. Details of the MMS software/computer system and servicer electrical interfaces between MSFC and Martin Marietta were discussed. The clarification items identified at the Integration Meeting were expanded and resolved at the Design Coordination Meeting.

Measurements of the existing spacecraft and stowage rack mockups of the ETU were taken at MSFC to help verify the installation requirements for the MST rack and optical targets as well as the necessary refurbishment for MMS module exchange demonstrations.

8.3 SERVICER/MMS 1-g DEMONSTRATION EQUIPMENT

The equipment fabricated, tested, and prepared for shipment as part of the Change Order 3 (subtask 1-9) of this contract is listed in Table 8-7. The electrical equipment included cable assemblies, MMS junction box and a servicer control panel modification kit for control of the connector positioner.

Table 8-7 Change Order 3 Equipment List

- MMS Module Mockup	Pt. No. RES4100000-009	2 units
- MMS Spacecraft Mockup	Pt. No. RES4200000-009	1 unit
- MMS Stowage Rack Support	Pt. No. RES4300000-009	1 unit
- MMS Stowage Rack Support	Pt. No. RES4300000-029	1 unit
- MMS Target Assembly	Pt. No. RES4600000-009	6 units
- MMS Target Assembly for MST Rack	Pt. No. RES4600000-019	1 unit
- Connector Positioner	Pt. No. RES4400000-009	1 unit
- MST Rack	Pt. No. RES4500000-009	1 unit
- Electrical Equipment		12 pieces

Included in the shipment was a repair or maintenance kit comprised of materials and spares that might have been necessary had any damage occurred during transportation.

Fabrication of the Change Order 3 equipment started with the fiberglass items (interface boxes, upper structure, and connector mockups) for the MMS module mockup. Tooling design and fabrication, as well as aluminum inserts and complete assemblies of balsa wood covered with fiberglass were made in our Advanced Composite Materials Shop.

Fabrication of all the assemblies of Table 8-7, except for the fiberglass items, wiring and electrical equipment was done in our Prototype Development Shop.

The electrical equipment fabrication and testing, was done in our Space Operations Simulation Laboratory.

The MMS module mockups fabrication started with cutting details of the styrofoam box using a high speed, carbide tipped table saw. Important weight savings were achieved by making precise, square cuts for the styrofoam details, thus minimizing the glue line thickness and the amount of glue required. Figure 8-50 shows the MMS module in the process of assembly. Details of the foam structure, of the fiberglass upper and lower interface boxes, and of the top fiberglass cross beam are visible. During the next stage of assembly, a layer of metallized polyester film was bonded to the outside surface of the box. A black paint pattern was added on the front surface of the module to represent the thermal louvers and to reduce glare. A contrasting black and white pattern was painted on the MST interface plate. A front view of the completed MMS module mockup is shown in Figure 8-51. A partial view of the back side of the module, showing the upper bolt and the related hardware, the two constraint sockets, riveted to the cross beam and the electrical connector mockup, can be seen in Figure 8-52. The total weight of the MMS module mockup is 10.0 lbs, compared to the design limit of 12.5 lbs maximum.

The MMS spacecraft mockup assembly is shown in Figure 8-53. The module interface frame is shown assembled with the two floating nut units, two constraint balls, and an electrical connector receptacle mockup. Attached to the back of the frame is the support structure for installation on the ETU. It is comprised of a subframe, adjustable links, and two angle brackets. Two optical targets, mounted on the interface frame, one for each fastener location, are also shown in the photograph.

ORIGINAL PAGE IS
OF POOR QUALITY

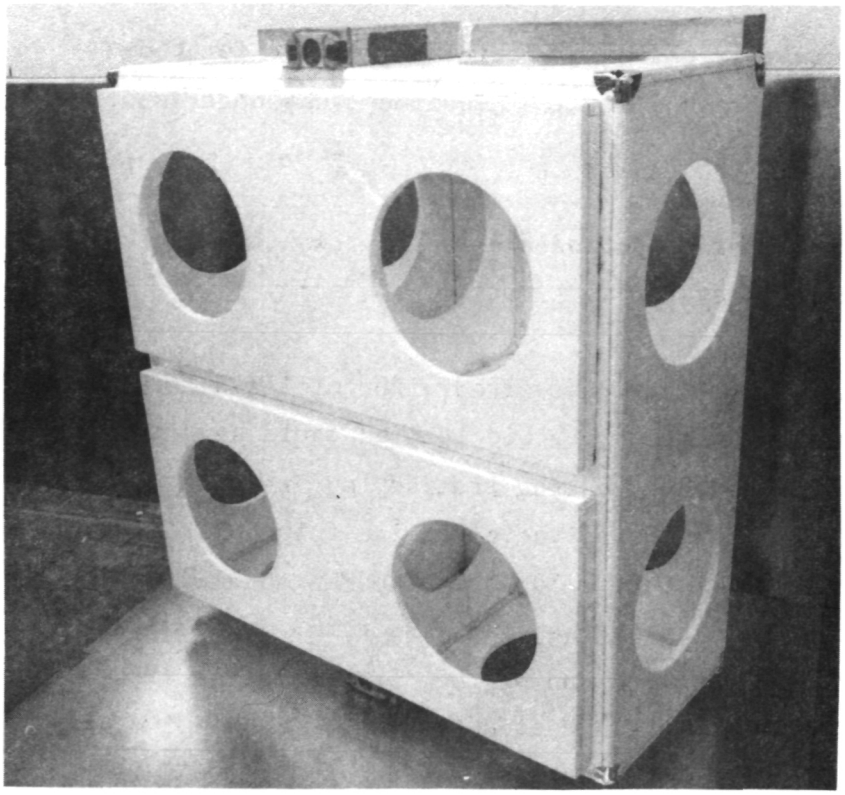

Figure 8-50 MMS Module Mockup Foam Structure

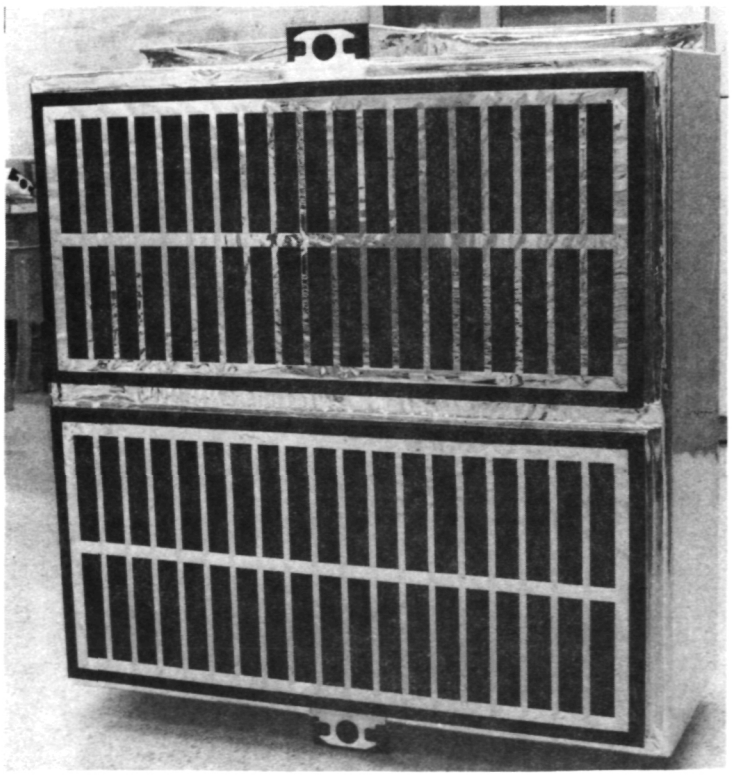

Figure 8-51 MMS Module Mockup, Front View

ORIGINAL PAGE IS
OF POOR QUALITY

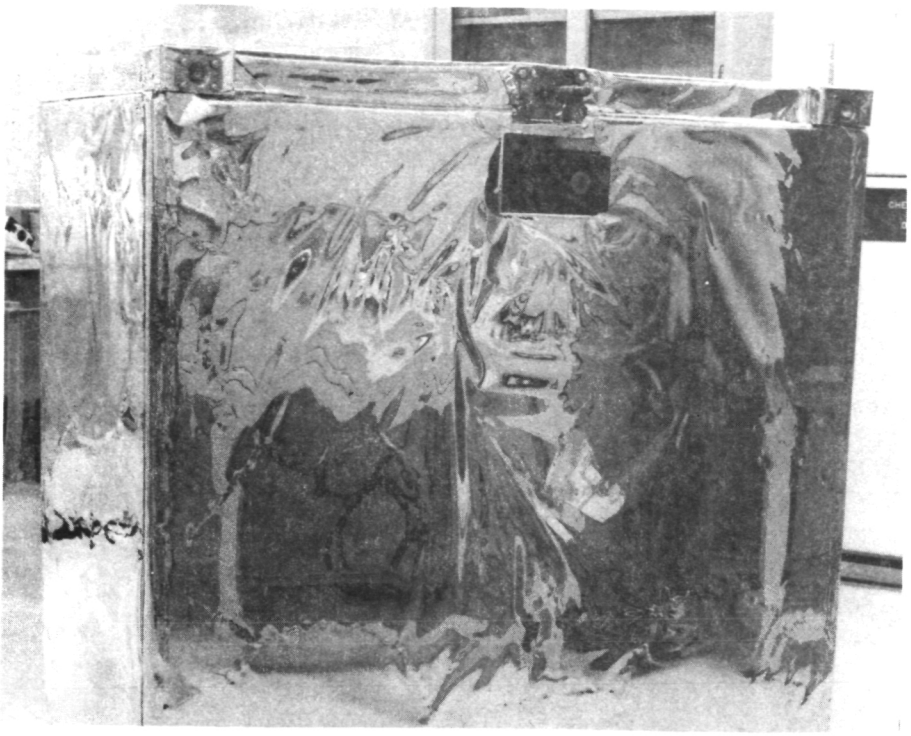

Figure 8-52 MMS Module Mockup, Partial Back View

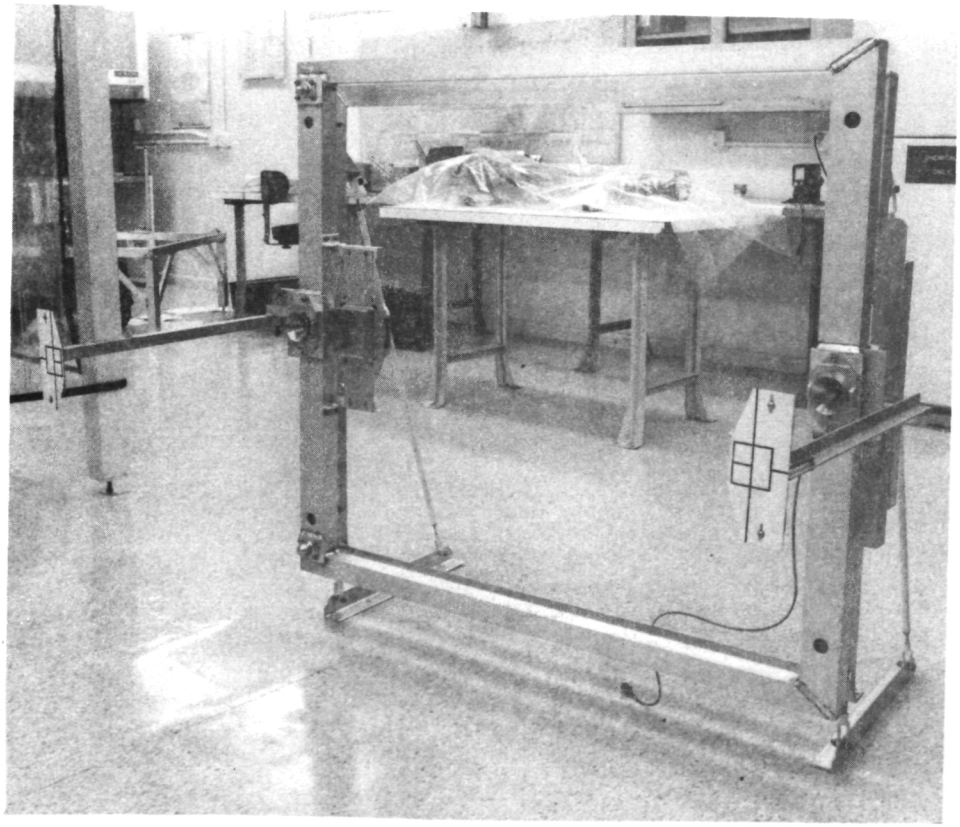

Figure 8-53 MMS Spacecraft Mockup Assembly

The MMS module support for the stowage rack mockup is shown in Figure 8-54. The same tubular interface frame that was used on the spacecraft mockup is shown in this figure, fitted with four adjustable legs. Similar arrangement of the floating nut units, constraint balls, electrical receptacle mockup, and targets are shown. The sensor units, behind the floating nut units, are also visible. The assembly shown is for the "good" module location. The "temporary" one is similar, only the electrical receptacle mockup was omitted. The MMS module assembled on the stowage rack support is shown in Figure 8-55.

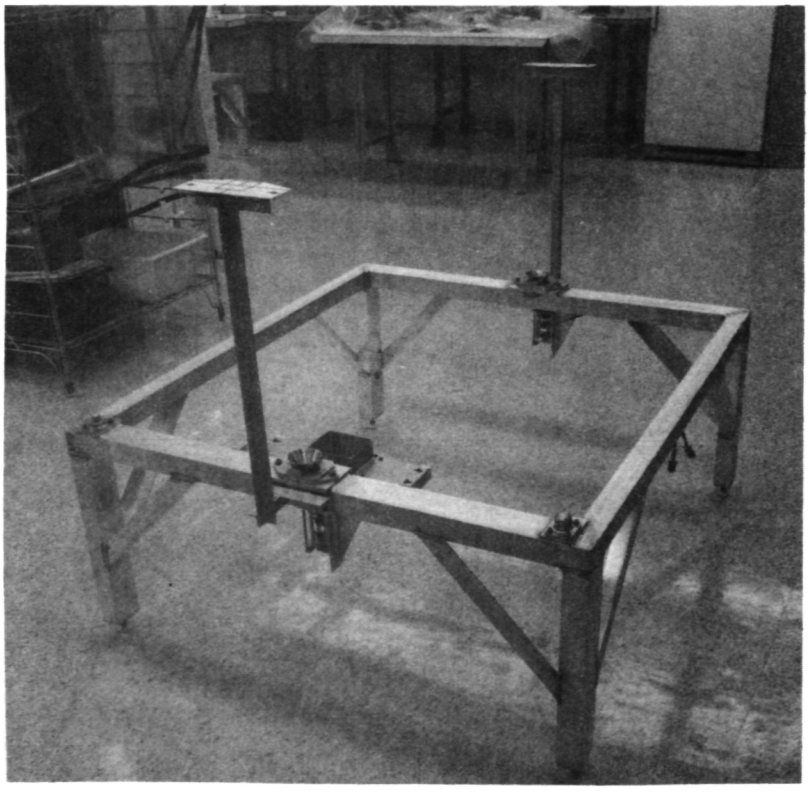

Figure 8-54 MMS Module Support for Stowage Rack

ORIGINAL PAGE IS
OF POOR QUALITY

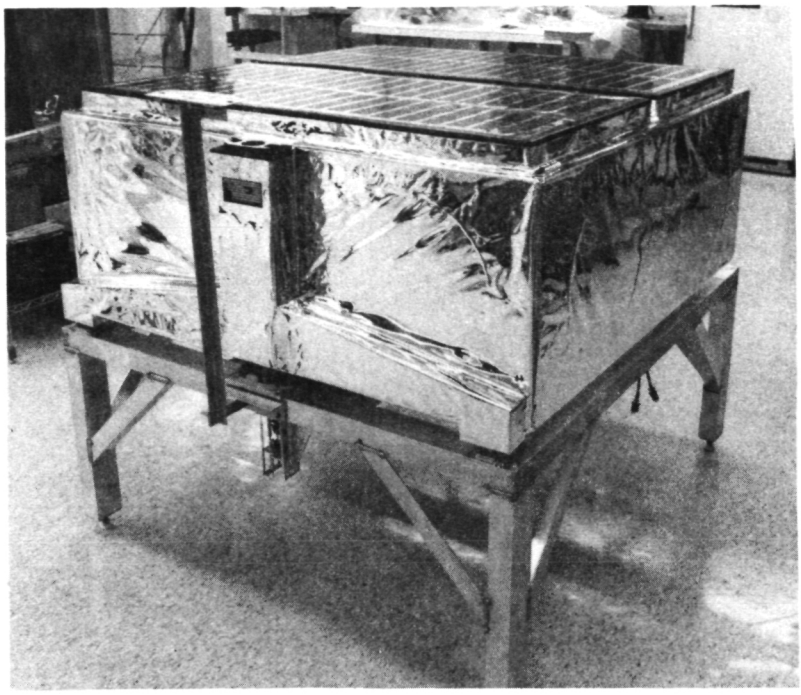

Figure 8-55 MMS Module Mockup on Stowage Rack Support

Figure 8-56 shows the connector positioner mechanism in its fully extended position. Details of the housing, eccentric actuated link, connector, and linear ball slide are visible.

The connector positioner mechanism was tested using a special stand and completely wired connector. It performed smoothly. Actuation time at 22 Vdc is approximately 3 sec. The microswitches were adjusted. No operating problems were encountered, connector alignment was satisfactory, and connector engagement was proper.

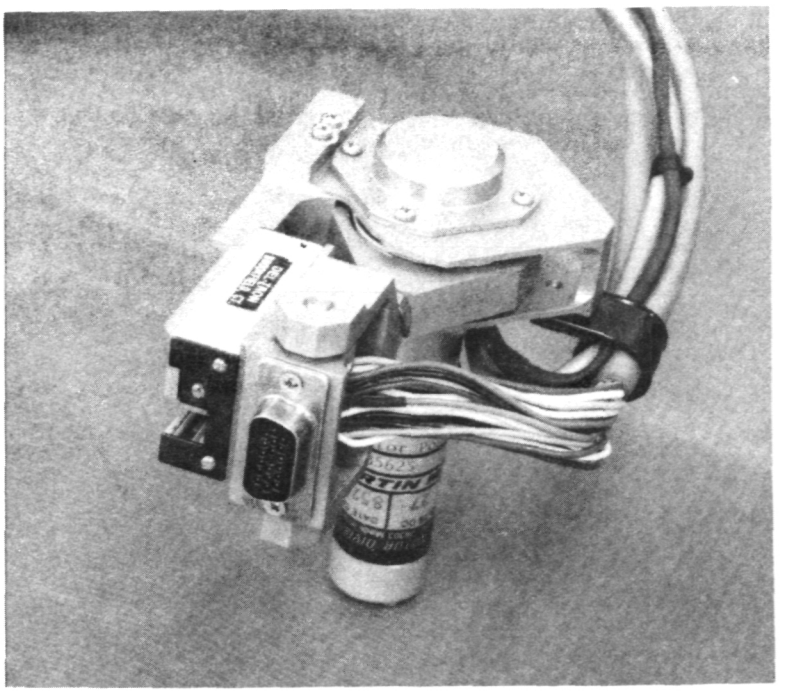

Figure 8-56 Connector Positioner Mechanism

8.4 CONCLUSIONS

The MST modifications for 1-g MMS module exchange demonstrations using the ETU were analyzed. A set of subsystem requirements for the ground demonstrations was established, including major design constraints such as the allowable weight, maximum wrench torque, c.g. location, relative position of the servicer and module latch interfaces and the required sensors. Because of the need for a drastic weight reduction and compact design for 1-g demontrations, using the flight MST hardware is not feasible. However, for 0-g demonstrations the existing flight qualified hardware can be used with relatively few modifications. The interfaces of the MST with the end effector and the MMS module were defined. The connector positioner mechanism was located on the ETU end effector.

The servicer configuration selection for the 1-g demonstrations was completed. The requirements were analyzed and defined. A simple, straightforward configuration was selected for the spacecraft mockup, that emphasizes the MSS module rather than the general MMS appearance while providing realistic MMS servicing trajectories and preserving the existing basic module exchange capability. The MMS module mockup configuration and structural concept were selected. A development version of a partial mockup was designed and built to validate the main design characteristics. The loads on the ETU drives during the ground demonstration of MMS module exchange were checked and found to be within the existing design capability. The stowage rack configuration and module arrangement were selected based on requirements. The recommended configuration features minimal modification of the existing stowage rack mockup and minimum MMS servicing demonstration time while allowing the existing basic module exchange to be demonstrated without system reconfiguration.

A detailed schedule for the servicer/MMS 1-g demonstration equipment design and fabrication and a cost estimate were prepared.

The design effort of Change Order 3 included further refinement of the preliminary design, drawing preparation and checking, stress analysis, selection and procurement of components and materials, as well as MST interface coordination and design coordination. The main design features of the servicer/MMS 1-g demonstration equipment were presented, followed by a description of the fabrication process and testing. All the design requirements were met. The electrical connector positioner mechanism performed smoothly during tests, within the required accuracy, time of actuation, and current level. The weight of the MMS module mockup is 10.0 lbs, compared to the maximum design limit of 12.5 lbs. All the Change Order 3 equipment was delivered to MSFC on schedule.

9.0 SERVICER CONTROL SOFTWARE - BASIC MODULES

The objective of the 1-g servicer software development is to modify the existing ETU control software for smoother operation and additional control modes. Smoother operation is partly dependent on the use of a good set of geometrical relationships. The servicer arm configuration was selected for the servicing operation and is different from that of a general purpose manipulator. This means that equations specific to the servicer, rather than a general set, must be used. Additionally, there are a number of subtleties in the arrangement that must be properly included. The basic module servicer control software development was recorded in three documents: 1) MCR-85-1310, Servicer Simulation Software Requirements (Basic Modules), Martin Marietta Aerospace, Denver, CO, May 1985; 2) MCR-85-1311, Basic Servicer Control Software User's Manual, Martin Marietta Aerospace, Denver, CO, July 1985; and 3) MCR-85-1312, Manual-Augmented Trajectory Sequences (Basic Modules), Martin Marietta Aerospace, Denver, CO, August 1985.

The three control modes to be implemented in software are:

1) Supervisory without operator assistance;

2) Supervisory with operator assistance;

3) Manual-Augmented.

The fourth control mode -- Manual-Direct -- is implemented totally within the servicer electronics and control panel hardware. This mode is desired as a backup control, where each joint is driven independently without the computer. Both Supervisory modes incorporate a trajectory hierarchy in the software so that the software will generate the correct trajectory after being told its general form (axial or radial) and the pertinent module location coordinates. After setting up the initial conditions, in the unassisted Supervisory mode,

the operator need only watch and provide inputs at a few safety related points. Significantly more operator inputs are required during the assisted Supervisory mode.

The Manual-Augmented mode is more of a piloted operation where the operator inputs control signals via hand controllers and uses a TV picture as the basic feedback information. The computer solves equations so that hand controller inputs cause servicer end effector motions that are parallel to the TV monitor coordinates.

The software program is used in conjunction with the satellite servicing 1-g demonstration system, Engineering Test Unit (ETU) servicing mechanism, control system servo drive electronics and on-orbit vehicle mockups in order to accomplish satellite servicing demonstrations at the Robotics Laboratory of the Marshall Space Flight Center. The computer is a PDP-11/34 and an RCA APT 4801 terminal is used. The software provides the sequencing functions and rate commands for control of the ETU.

The software discussed in this section is for the demonstration of the exchange of basic modules. Basic modules are approximately 24 in. cubes and are fastened into the spacecraft or spare module stowage rack with a side interface mechanism that requires only one drive action. The side interface mechanism can be loosely thought of as being a one-bolt attachment system. Section 10 of this report describes the software for MMS module exchange where the attachment is via two bolts.

The approach used to develop software for the basic 1-g servicer demonstration is shown in Figure 9-1. MSFC had been using a set of software to demonstrate module exchange and this software was reviewed to identify approaches and useful code. The Martin Marietta software used for the Design Acceptance Review was also examined to identify useful code. Some of the Martin Marietta code was in assembly language and it was decided not to use that code.

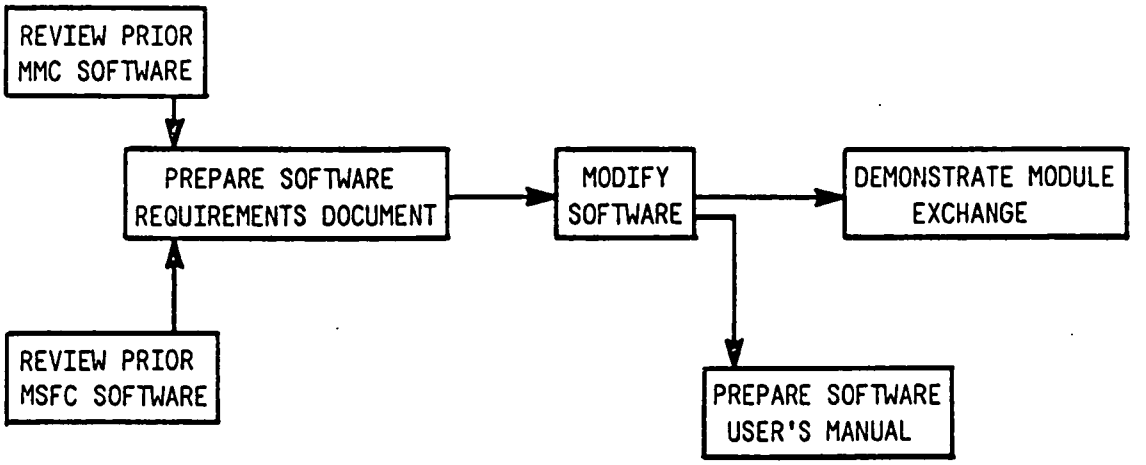

Figure 9-1 Software Development Approach

The preparation of software requirements was found to be more extensive than originally planned because the early work had only involved a few simple trajectories. The new requirements involve 20 trajectories of complexity similar to the prior work. The equations and control laws from the prior work could be carried over directly. The concept of a trajectory hierarchy was developed and used. This hierarchy is used to establish trajectories and to present displays.

A PDP-11/34 computer was available at Martin Marietta for use in developing the software. An earlier version of the computer operating system and compiler were used for the Martin Marietta machine as compared to the versions available on the MSFC machine. It was not possible to use similar terminals so there were some differences in the development displays.

A Software User's Manual was prepared and sent in draft form to MSFC before the module exchange demonstrations. It was updated after the demonstrations. The module exchange demonstrations included all three control modes. The basic module Software User's Manual is discussed in Section 9.2.2 and the basic module demonstrations are discussed in Section 11.1.

The major elements and areas involved in the servicing demonstrations are shown in Figure 9-2. To the right of the figure are the mockup elements, the servicer mechanism (ETU), and the TV camera used in the Manual-Augmented control mode. On the lower left hand side are the elements in the MSFC control station. The control station at the MSFC Robotics Laboratory was to be located across the hall from the mockup area, but it was left adjacent to the ETU for this development work. The Servicer Control Panel (SCP) is shown in the control station, but it can also be installed in the Servicer Servo Drive Console (SSDC). The SCP has knobs, switches, meters, and indicator lamps for Manual-Direct control modes and it contains a Servo Power switch that can be used to shut down the servicer mechanism in an emergency.

The PDP-11/34 computer, interface electronics and the Servicer Servo Drive Console are located adjacent to the mockups. The SSDC is the interface between the servicer mechanism and the rest of the system and incorporates the servo electronics, switching logic, power supplies, and a digital voltmeter to be used for trouble shooting.

The PDP-11/34 computer performs the functions indicated. It is controlled from the RCA APT 4801 terminal and interfaces with the hardware via the A/D and D/A converters. The shaded area shows those signals that flow through an MSFC prepared breakout box. The breakout box permits monitoring signals and contains relay logic for control of the end effector jaw, interface mechanism, connector positioner, MST latch, and MST bolt drives.

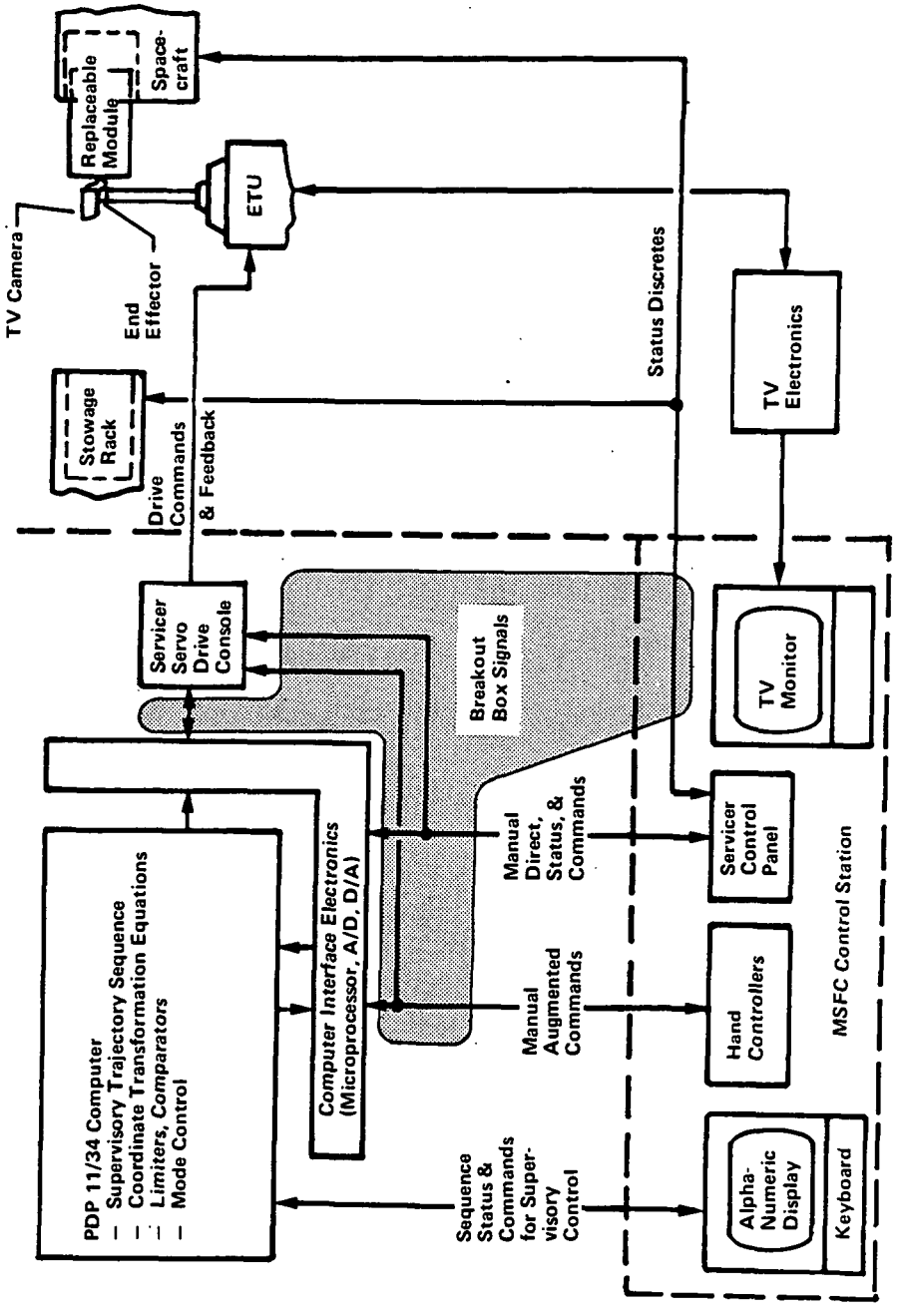

Figure 9-2

Figure 9-2 Demonstration System Block Diagram

9.1 SOFTWARE REQUIREMENTS

The software contains the components, or functions, listed in Table 9.1-1. Coordinate transformations are required both ways between the cylindrical and joint coordinate systems and to transform the cylindrical coordinate rates into joint angle rates as joint angle rates are the inputs to the ETU control loops. The six outer control loops are closed (error junction) in the cylindrical coordinate system. The trajectory end points are generated in cylindrical coordinates and compared with a transformation of the joint angles to obtain error signals in cylindrical coordinates. The rate command signals are limited so that the servos can follow the limited rates with low errors.

Table 9.1-1 Software Components

Coordinate Transformations
Six Control Loops
Supervisory Trajectory Hierarchy
Display Generation
Manual-Augmented Transformations
Hardware Simulation
Operator Warnings
Module Location Data Collection
Associated Functions

The Supervisory mode trajectory hierarchy consists of four levels with higher levels calling the lower levels much in the manner of calling subroutines. Also called are rules that generate the appropriate trajectory end points from the stored module location data. The displays are generated in the same process and show the specific trajectory data and where in the trajectory the servicer is at each instant of time. A hardware simulation function (integration of joint rates to obtain joint angles) is included in the software to assist in software development. The joint angle integration occurs at a rate determined by how fast the calculations can be performed so it is not easily relatable to real time. Subroutines and procedures are included

to collect and store module location data in cylindrical coordinates. The approach used avoids the need for the operator to explicitly make readings and do calculations. Rather, the software does it for the operator.

The various coordinate systems used in the software and the functions expressed in each of the coordinate systems are listed in Table 9.1-2. Cylindrical coordinates were chosen as they fit the system geometry very well. The servicer working volume is a cylinder with its axis along the docking post. Also, the initial pivoting arm form of servicer used a translation drive along the docking post direction. The module exchange directions (axial and radial) also parallel specific cylindrical coordinates. Thus, module movement in the side interface mechanism guides only involves changing one cylindrical coordinate. This approach makes for a very simple trajectory definition.

Table 9.1-2 Geometrical Approach

Cylindrical Coordinates
- Module location storage - Trajectories - Computer displays - Control Loops - Modules move along one cylindrical coordinate at a time
Joint Coordinates
- Hardware servo loops for each joint - Hardware commands are joint rates - Hardware feedbacks are joint angles and rates
TV Coordinates
- Used for Manual-Augmented control mode - Hand controller motions parallel TV coordinates

The ETU hardware operates in terms of joint angles and joint rates. The inner control loops are rate loops based on joint tachometers and the loops are closed in the SSDC electronics. The Manual-Direct control mode also is based on joint angles with the commanded values being set in on angle set potentiometers and the electronics develops the angle errors for display on the angle error meters. The TV coordinates are used for the Manual-Augmented control mode. The hand controller is mounted so that its motion directions parallel the TV screen coordinates. The computer transforms the hand controller signals into joint rate commands so that apparent TV camera motion parallels the hand controller motion. When in the Hawk mode, hand controller motion corresponds to radial and tangential motion.

The transformation and control loop elements expressed in software for the Supervisory and Manual-Augmented control loops are:

1) Joint Angle to Cylindrical;

2) Cylindrical to Joint Angle;

3) Cylindrical to Joint Rate;

4) Display Term;

5) Error Computation;

6) Rate Generation;

7) Limiters;

8) Commanded Rate Limiters;

9) Display to Cylindrical Rate;

10) Error Meter Drive Signals.

The specific equations used for the above control loop elements were derived during the IOSS study and verified during this study. Analytical block diagrams showing the equations and their relationships were developed for the Supervisory modes and for the Manual-Augmented mode and are included in the software requirements document. To simplify the equations and to obtain explicit solution forms the geometry was divided into three separate cases. These are:

1) Axial with module towards the spacecraft;

2) Axial with module towards the stowage rack;

3) Radial.

For each of these three cases, only four degrees of freedom are required, the other two joint angles are kept fixed. During transitions between one case and another only one joint is allowed to move while the other joints have zero commanded joint rates. In this way the singularities that would result when going from one case to the other are avoided. The rate generators in the Supervisory motion are simple multiplications of the respective cylindrical coordinate error signals by constants. The inverse of each constant is a first order estimate of the control loop time constant. By selecting these time constants to lie between 0.3 and 1 seconds, the control loops filter out high frequency components and the servicer mechanism moves smoothly. The time constants are low enough to keep the position errors within acceptable limits.

The purpose of the trajectory hierarchy for the Supervisory mode is to provide a logical way of combining trajectory elements so that a variety of trajectories can be formed from the elements in a systematic way. The hierarchy is used for conducting module exchange, developing displays, and for computer generation of trajectories. The hierarchy uses some of the concepts of structured software development and thus fits very well into a digital computer program. The four levels in the hierarchy for the basic module exchanges are:

1) Total trajectories (4);

2) Trajectories (20);

3) Steps (9);

4) Actions (8).

Each level is constructed from elements in the levels below with the actions being the most basic level. A total trajectory is used for a demonstration and an example is to start with the ETU at the rest position, pick up a failed module from the spacecraft, put the failed module in a temporary location in the stowage rack, move a good module from the stowage rack to the spacecraft, move the failed module from the temporary stowage rack location to the original good module location in the stowage rack, and return to the rest position. A trajectory is the path of motion and processes associated with moving from one module location to another. An example is to move a module from the stowage rack to the spacecraft. Steps are sequences of actions that are used in different trajectories much as subroutines are used in software programs. An example step is flipping a module upside down so it may be readily inserted into an axial spacecraft location. The actions are the basic elements and each is associated with a degree of freedom. Three of the actions are the basic cylindrical coordinates of the end effector, three are the attitudes of the end effector, and the other two are the end effector jaw motion and the interface mechanism drive motion. Every total trajectory is made up of a sequence of actions. The other two levels were introduced to simplify the construction process.

While the Supervisory control mode incorporates the trajectories into the software, for the Manual-Augmented mode, the trajectories take the form of printed lists. The same general format and trajectory sequences are used for both modes. However, the Manual-Augmented trajectory sequences have different forms of actions and explicitly state the requirements for completing an action. Comments are also provided to assist the operator in following the trajectory sequence.

A full description is provided in MCR-85-1312, Manual-Augmented Trajectory Sequences (Basic Modules), Martin Marietta Aerospace, Denver, CO, 80201, August 1985.

In addition to the functions described above, the associated functions listed in Table 9.1-3 are provided to make the system easy to use. The basic approach for selecting specifics is the use of numbered menus. A selection is made by typing in the appropriate number and a carriage return. Certain menus also provide instructions for the operator to do things away from the keyboard, such as turn on servo power. Procedures for trajectory initialization, start-up, and shut-down are provided in the Software Requirements Manual.

The software also provides for interrogation of the A to D converters for bringing hardware information into the program. Signals are sent to the D to A converters to cause the hardware to move. Scale factors and other geometrical data can be readily changed by accessing the appropriate menu and changing the data. Recompiling is not necessary. Module location data in the computer can be verified by calling up the appropriate menu that will display the joint error signals. When the end effector is moved to the appropriate location, then the displayed joint error signals should go to zero. When the program is put into hold, a menu appears that allows the operator to select a variety of data groups for display. The operator can also elect to continue or to abort, which will return the program to the mode selection menu.

Table 9.1-3 Associated Functions

Menus for Making Selections
Transferring Signals To and From Hardware
Trajectory Initialization
Start-up Procedure
Shut-down Procedure
Computer Hold
Demonstration Abort
Module Location Calibration
Data Display
Data Printout

9.1.1 System Requirements

A general block diagram of the Servicer Servo Drive Console and its interface with the computer is shown in Figure 9.1-1. The software requirements that pertain to the overall system operation and capabilities are defined in the paragraphs below.

9.1.1.1 Mode Control - The mode control requirements are:

1) Computer modes shall be primarily controlled from the computer terminal. The computer modes are operate and hold. It shall be possible to start a run from the computer terminal as well as temporarily "hold" the run, to continue the run after a "hold" and to abort the run;

2) The run "hold" may be initiated by depressing the space bar on the computer terminal or by operating the Computer Mode switch on the Servicer Control Panel to the HOLD position;

3) The control modes are: 1) Supervisory with operator assistance; 2) Supervisory without operator assistance; 3) Manual-Augmented; and 4) Manual-Direct. It shall be possible to select any one of these four modes from a menu. When operating in any one mode, it shall be possible to enter the "hold" computer mode to end operations in one control mode and then revert to the Mode Selection Menu. When the hardware is being used, the computer shall check that the Servicer Control Panel MODE SELECT switch is in the proper position. If the Servicer Control Panel MODE SELECT switch is not in the correct position, then the computer shall remind the operator, with an appropriate display, to put the switch in the proper position;

4) The computer shall accept transferring from the Supervisory mode to the Manual-Augmented mode and back;

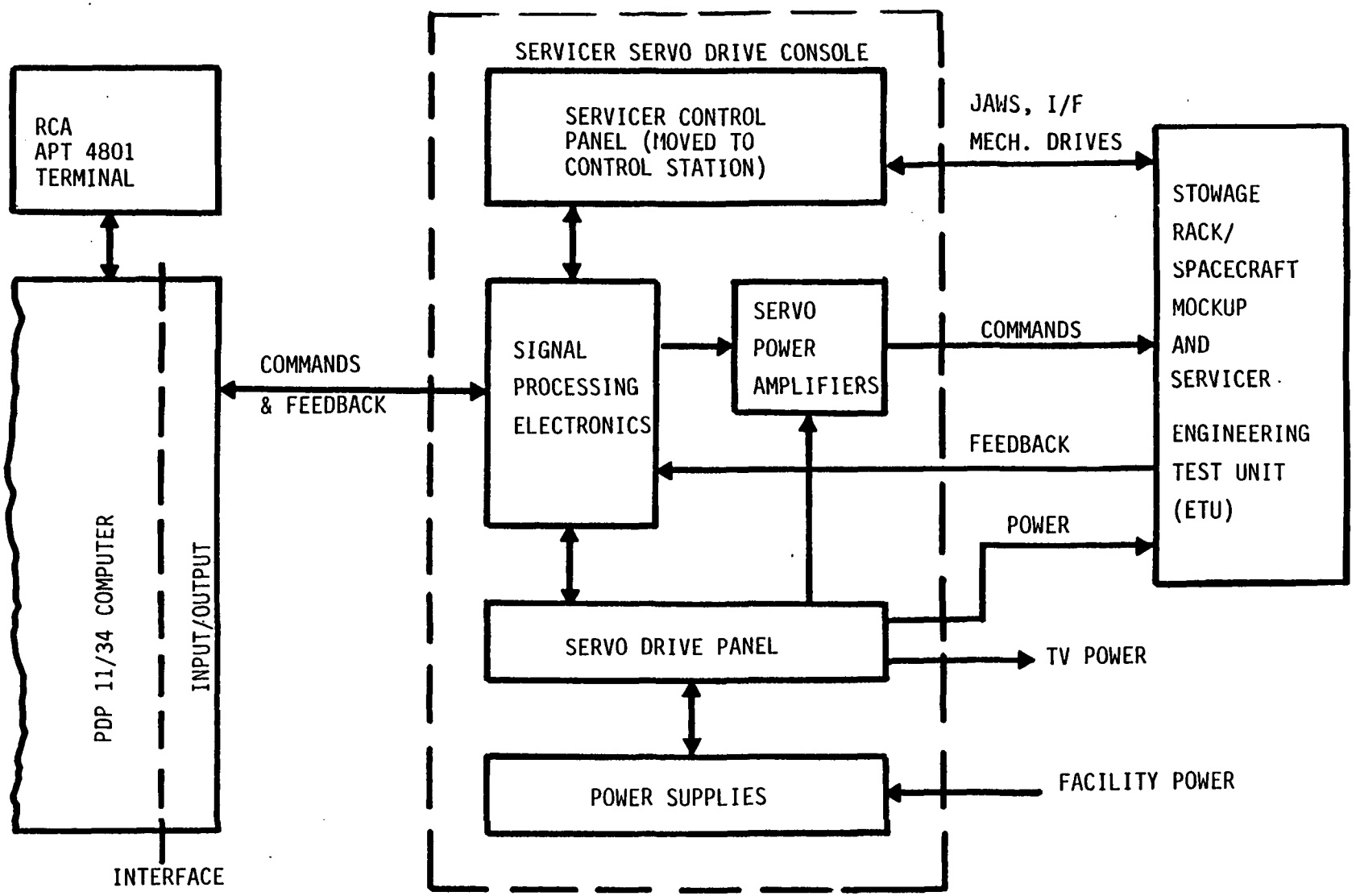

Figure 9.1-1 Servicer Servo Drive Console Interfaces

5) The end effector jaw and interface mechanism drive functions will be computer controlled and displayed as an action in the Supervisory mode, but will be manually controlled from the Servicer Control Panel in the Manual-Augmented mode.

9.1.1.2 Sequencing - The sequencing requirements are:

1) The computer program shall be capable of providing a program "hold" that suspends any action in progress until released. The hold will be implemented to occur only at the end of a computation cycle;

2) Whenever the control mode has been changed from Supervisory, Manual-Augmented, or Manual-Direct and then returned to the Supervisory mode, the computer will check all joint positions for agreement with the rest position. If they do not agree, the computer will indicate this and prevent starting a trajectory sequence until agreement is reached either by restarting the program when hardware is not present or by repositioning the ETU when hardware is present;

3) When hardware is not present, the joint angle integrators shall be reset to the rest position whenever the IOSS computer program is inititated.

9.1.1.3 Timing - A goal for the sampling or recycle frequency of the basic program when hardware is present shall be 15 samples/sec. It is pertinent to note that a single command in the coordinate reference system used will result in multiple joints being commanded in a single cycle of the computer program. When hardware is not present, a fast integration alternative shall be used. The integration speed need not be relateable to real time, but may be paced by the computer solution speed.

9.1.1.4 General - The software shall be developed using structured programming techniques. It shall be formatted so that it is not

necessary to recompile after changing constants, scale factors, or trajectory end points. The software shall contain a file of all scale factors.

Where the operator is requested to respond to a CO? or PR?, the computer shall accept any of CO, PR, or Y and continue. Any other response by the operator shall initiate a "hold".

9.1.1.5 Computer Operations - The software has been generated so that the operator can select the specific items he is interested in. The selection is performed using a set of hierarchical menus. The first menu (IOSS Main Menu) appears when the IOSS program has been selected. It takes the following form:

IOSS MAIN MENU

1. Run Setup Menu
2. Mode Selection Menu
3. Module Data Collection Menu
4. Hardware Calibration Menu
5. Exit to MCR

The operator selects a menu by typing in a number and a carriage return. The number 5 will end use of the IOSS program and return the operator to the operating system for computer shutdown or selection of another program.

The Run Setup Menu takes the following form:

1. Operator's Name - allows entry of up to 25 characters.
2. Run Title - allows entry of up to 50 characters to describe the run to be made.
3. Run Number - allows entry of up to 10 characters.
4. Hardware Present? - allows the operator to enter a Y or N (yes or no) to answer the question. The default value can be selected.

5. Save Constants to Disk? - allows the operator to select if he wants to save changes in constants that are made, or just use the changed values for one run.
6. Geometry Constants Menu - allows the operator to verify or change the geometrical constants of the servicer mechanism as used in the software. The configuration cannot be changed.
7. Limit Constants Menu - allows the operator to check or change 16 limit values used in the program.
8. A/D Scale Factors Menu - allows the operator to check or change 7 analog to digital scale factors.
9. D/A Scale Factors Menu - allows the operator to check or change 11 digital to analog scale factors.
10. Joint Position Threshold Menu - allows the operator to check or change 12 joint error threshold values.
11. Simulated Hardware Characteristics Menu - allows the operator to check or change 14 characteristics of the simulated hardware. Examples are: time to latch, interface mechanism ready, and specific initial values of the mechanism cylindrical coordinates.

The Mode Selection Menu contains the following items:

1. Unassisted Supervisory Mode
2. Assisted Supervisory Mode
3. Manual-Augmented Mode
4. Manual-Direct Mode
5. Return to IOSS Main Menu

The Module Data Collection Menu includes the following items:

1. Read a Spacecraft Location
2. Read a Stowage Rack Location
3. Read REST Position
4. Read Spacecraft Flip Location
5. Read Stowage Rack Iflip Location
6. Read Spacecraft Transition Location
7. Read Stowage Rack Inverse Transition Location
8. Return to IOSS Main Menu

For each of the specific locations, a designator is assigned (Numerical and Set), mechanism joint angle data is collected and transformed to cylindrical coordinates, and the data is filed for use in the trajectory generation process. The cylindrical coordinate data is also displayed for the operator.

The Hardware Calibration Menu includes the following items:

1. Check Spacecraft Location
2. Check Stowage Rack Location
3. Return to IOSS Main Menu

For each of the items 1 and 2, the operator enters the appropriate designator (Numerical and Set). The computer displays the designator, the corresponding cylindrical coordinates, and the differences between desired and actual joint angles.

9.1.2 Coordinate System Definition

The following paragraphs present a definition of the coordinate systems used for the two modes - Supervisory and Manual-Augmented. A number of terms, some variables, and some constants are used in describing the requirements, specifically the equations. These terms are defined in Section 11.0 of the Software Requirements Document. The physical configuration of the ETU and accompanying mockups is shown in Figure 9.1-2 to aid in the discussion. The six joints and their alphabetical designations are shown on the figure.

There are six degrees of freedom of the servicer mechanism. These six can be combined into two groups of three each. One relates to the position of the end effector, thinking of the end effector as a single point. The second group relates to the attitude of the end effector, now thinking of the end effector as a movable hand capable of rotating about three different independent axes. These movements are

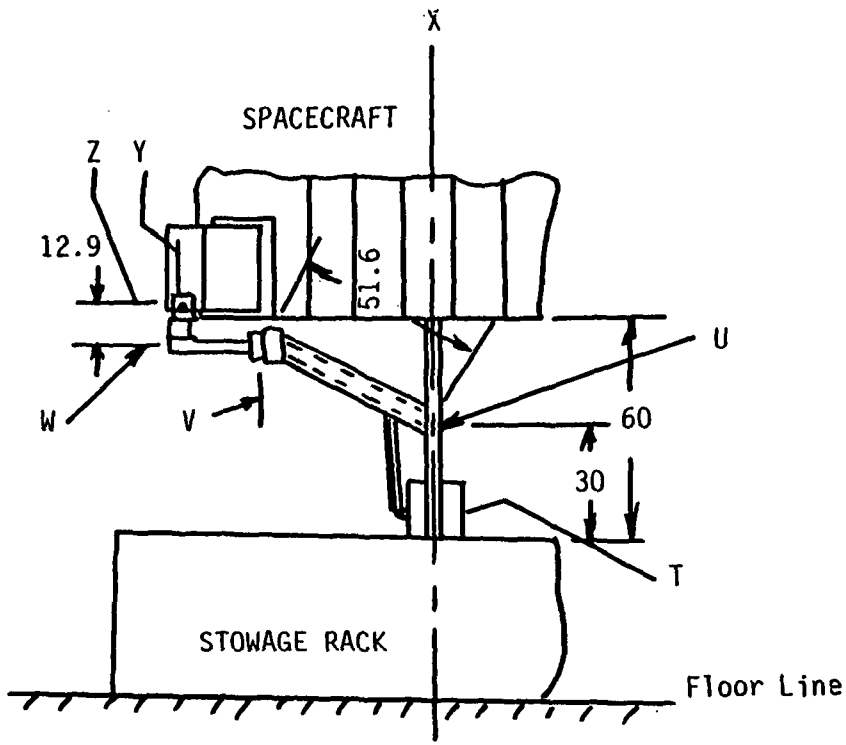

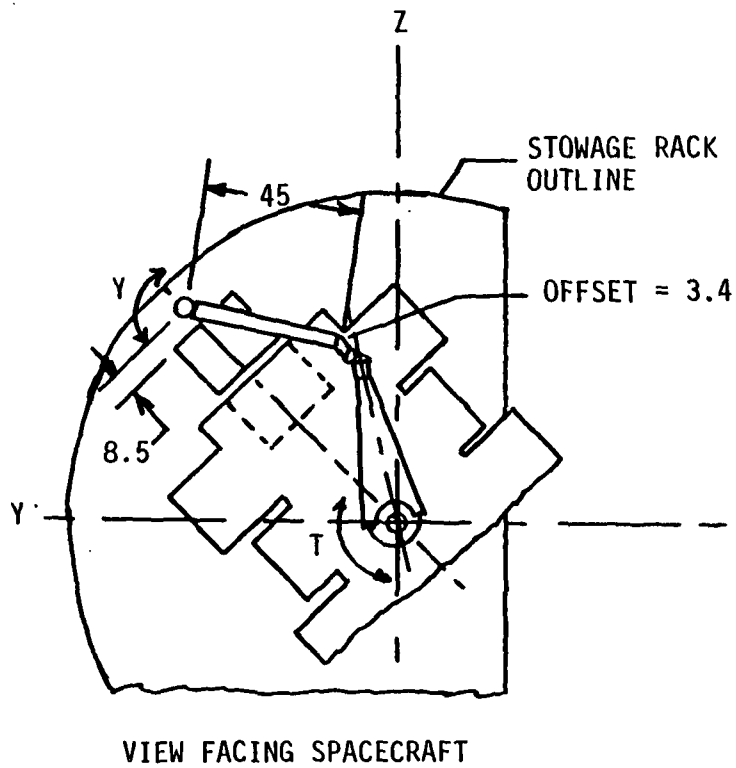

Figure 9.1-2 Mockup Configuration Layout

independent of the position of the end effector, which may or may not change at all while the attitude of the end effector is changed. The definitions treat end effector "position" and "attitude" separately. Also treated separately are the cylindrical coordinates from the specific joint and arm coordinates of the ETU. This latter set is referred to as ETU joint or gimbal coordinates

A right-handed cartesian reference coordinate system was defined with respect to the stowage rack and spacecraft mockups. A cylindrical coordinate system was defined with respect to the servicer mechanism and its parameters are shown in Figure 9.1-3. The three positional cylindrical coordinates are x (out of paper), r (radius), and Theta (central angle). The three cylindrical coordinate attitude angles - Psi, Phi, and Omega - are also shown on the figure. While the figure appears to indicate that Psi and Omega are redundant, this is not actually the case. For all operating siutations either Psi or Phi will be 90 deg from the position shown and the redundancy is avoided.

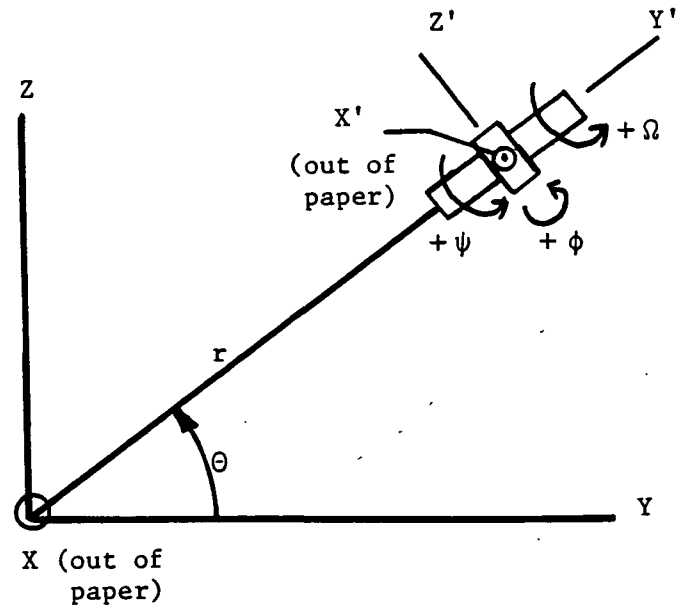

Figure 9.1-3 Cylindrical Coordinates

The decision to emphasize axial and radial motion results in significant simplification of the geometrical equations. For axial motions, Psi is fixed at 0 deg and Phi is fixed at ±90 deg, depending upon whether the servicer end effector is pointing towards the

spacecraft or towards the stowage rack. This means that relationships only need be established for the remaining four degrees of freedom. Similarly for radial motion, Psi is fixed at 90 deg and Omega is fixed at -90 deg. Again geometric relationships for only four degrees of freedom needed to be established. The equations for the full six degrees of freedom have been derived, but they are much more complex. This is especially true for the rate transformations. Also it is necessary to use a more complex method, such as quaternions, for keeping track of the solution quadrants for several of the angles.

Figure 9.1-4 shows the relationship for the "translation" gimbal, or joint, angles of the servicer mechanism. These angles are:

1) Shoulder roll - T;

2) Shoulder pitch - U;

3) Elbow roll - V.

The servicer mechanism end effector joint angles are shown in Figure 9.1-2.

The servicer mechanism is designed so that the shoulder pitch joint drives a parallelogram linkage that keeps the mechanism forearm (l_2 of Figure 9.1-4) always parallel to the front face of the stowage rack. This simplifies the geometrical transformations. However, the geometrical transformations are complicated by the fact that the elbow roll drive axis does not intersect the second parallelogram axis (l_5 and l_6 on Figure 9.1-4). Another parameter used is the angle Delta, which defines the relationship between the radius vector and the TV camera reference axes. Delta is called the display term.

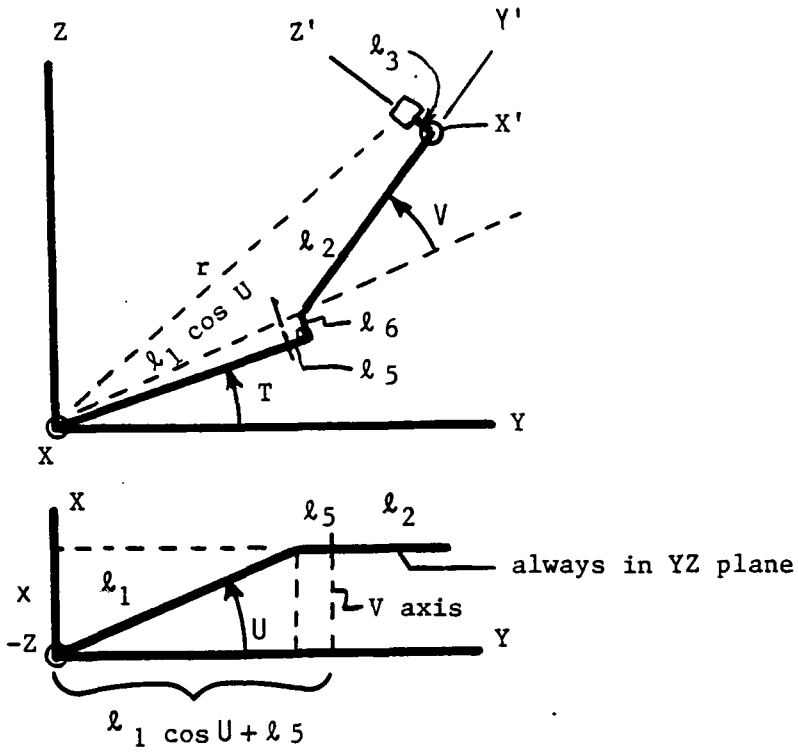

Figure 9.1-4 Servicer Mechanism Gimbal Coordinates

A constraint on system configuration is that the end effector wrist segment (1_3 of Figure 9.1-4) must always be directed inboard towards the docking axis so that the end effector can reach in close towards the docking axis. The transfer between axial motion facing the stowage rack and axial motion facing the spacecraft is called a module flip. An analysis was conducted to identify the best location for the flip. It is located in the +Y, -Z quadrant (see Figure 9.1-2). The transfer between axial and radial motion is called a transition. An analysis was conducted to identify the best sequence of actions and location for the transition. The transition is conducted in front of the short end of the spacecraft mockup (the +Y, +Z quadrant of Figure 9.1-2).

9.1.3 Supervisory Mode

The Supervisory mode of control is proposed as the normal mode of operation. All servicer mechanism motions and trajectories are determined beforehand. The trajectories are converted to sequences of

commands that are fed into the control laws. This results in the ETU following the trajectory defined by the sequence of commands. A combination of the trajectories being stored explicitly in the computer and rules for constructing trajectories and specific step end point data being stored in the computer were used in developing the software.

There are two forms of the Supervisory control mode -- with operator assistance and without operator assistance. A similar approach is used for both forms in terms of trajectory definition and display format. The unassisted mode is essentially automatic, while the operator must input "GO" instructions before each action when in the assisted Supervisory mode. The operator actions are explicitly requested by the program through the terminal display. In the unassisted mode the operator is only required to provide inputs during trajectory initialization and system shutdown and to set some Servicer Control Panel switches that involve safety.

The unassisted mode does provide short pauses at certain points in each trajectory to provide the operator time to make certain checks. An audio tone sounds at the beginning of the pauses. The operator must take an action to hold or abort the trajectory sequence.

In both the assisted and unassisted modes, the computer controls the end effector and interface mechanism drives. The computer allows the drive to operate until an end-of-travel signal is received. If a pre-specified time expires before the end-of-travel signal is received, the computer will hold the sequence and notify the operator. The operator can initiate or remove a hold by operating the COMPUTER MODE switch on the Servicer Control Panel or by computer terminal keyboard operations.

The totality of the trajectory mode software is composed of two major parts. One is the higher frequency computation of rate commands necessary to drive an ETU joint or joints to a predefined position. The other is a trajectory sequencing routine that establishes the

desired position the joints must be driven to. It does this in a preestablished order of cylindrical coordinate motions to accomplish an entire module exchange. The operation of the end effector and interface mechanism drives are integrated into the sequence.

The trajectory sequence is based on the hierarchy described in Section 9.1.4. The hierarchy is a logical way of defining and combining trajectory elements so that a variety of trajectories can be formed from the elements in a systematic way. The hierarchy is used for conducting module exchanges, developing displays, and for computer generation of trajectories. The four levels in the basic module exchange hierarchy are:

1) Total trajectories - 4 items;

2) Trajectories - 20 items;

3) Steps - 9 items;

4) Actions - 8 items.

Operations and displays for the two Supervisory control modes are discussed in Section 9.1.5. The sequence of activities necessary to perform a module exchange is described along with the specifics necessary for generating the displays. Two representative displays and the rules and guidelines for trajectory and display formatting are presented in Section 9.1.6. The displays provide the operator with an overview of the total trajectory and allow him to quickly identify where he is, what is going on, what is next, and what activities remain. By using the terminal's reverse video feature for element highlighting, the operator is not burdened with excessive detail. The only display differences between the assisted and unassisted modes are that the assisted mode displays will include the terms CO? and PR? at those places where operator assistance is required.

The generation of trajectory displays is addressed in Section 9.0 of the Software Requirements Document. That section discusses how the mockup equipment and the ETU are set up for collection of module location data, the way in which trajectories are made specific, the logic for generating trajectories and displays, and a method for verifying that a module attach point location has not changed.

The software functions required to implement the Supervisory mode are shown in block diagram form in Figure 9.1-5 with emphasis on computation of the high frequency rate commands to drive the ETU joints. This diagram does not represent the total software for servicer control. A similar figure for the Manual-Augmented mode is also necessary to show all modes. Some elements are, of course, common between these two modes.

Computer control of the servicer can generally be thought of as two relatively independent software activities. One is the higher frequency computation of rate commands necessary to drive a joint or joints to a predefined position. The other is a trajectory sequencing routine that establishes the desired position the joints must be driven to. It does this in a preestablished order of cylindrical coordinate motions to accomplish an entire module exchange. That routine is shown as block 2 on the figure. This order and the associated displays on a CRT terminal make up the bulk of the trajectory sequencing routine. The basis for these desired sequences and displays are discussed in more detail in Sections 7.0, 8.0 and 9.0 of the Software Requirements Manual. The majority of Figure 9.1-5 is related to the joint drive functions and shows the interrelationships of the sub-elements of joint control.

9.1.4 Supervisory Trajectory Hierarchy

The purpose of the trajectory hierarchy for the Supervisory mode is to provide a logical way of combining trajectory elements so that a variety of trajectories can be formed from the elements in a systematic way. The hierarchy is used for conducting module exchange, developing

ORIGINAL PAGE IS
OF POOR QUALITY

ORIGINAL PAGE IS
OF POOR QUALITY

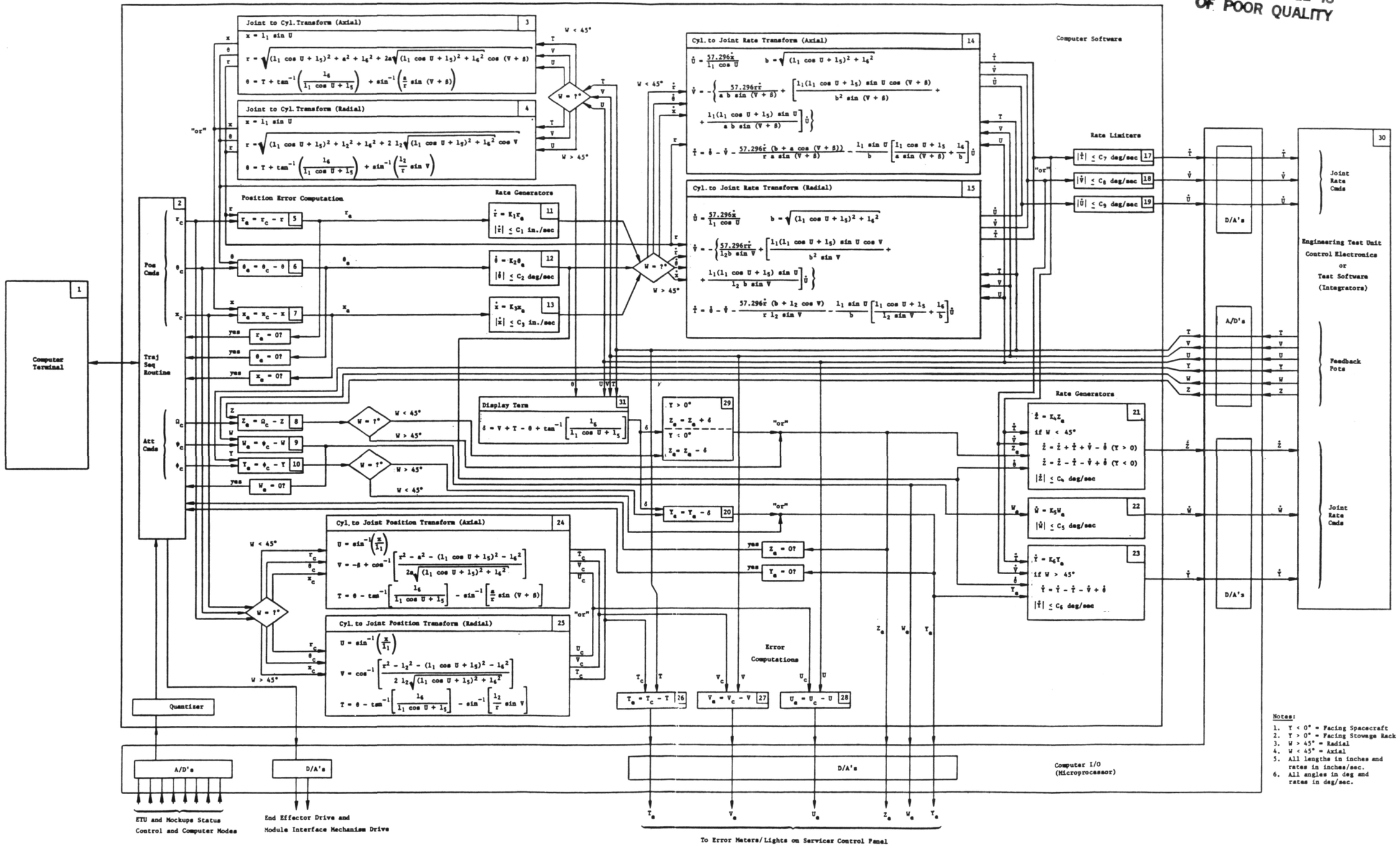

Figure 9.1-5 Analytical Block Diagram - Supervisory Mode

FOLDOUT FRAME

FOLDOUT FRAME

displays, and for computer generation of trajectories. The hierarchy uses some of the concepts of structured software development and thus fits very well into a digital computer program. The four levels in the basic module exchange hierarchy are:

1) Total trajectories (4);

2) Trajectories (20);

3) Steps (9);

4) Actions (8).

Each level is constructed from elements in the level below with the action being the most basic level. A total trajectory is used for a demonstration and an example is to start with the ETU at the rest position, pick up a failed module from the spacecraft, put the failed module in a temporary location in the stowage rack, move a good module from the stowage rack to the spacecraft, move the failed module from the temporary stowage rack location to the original good module location in the stowage rack, and return to the rest position. A trajectory is a portion of a total trajectory. An example is to move a module from the stowage rack to the spacecraft. Steps are sequences of actions that are used in different trajectories much as subroutines are used in software programs. An example step is flipping a module upside down so it may be readily inserted into an axial spacecraft location. The actions are the basic elements and each is associated with a degree of freedom. Three of the actions are the basic cylindrical coordinates of the end effector, three are the attitudes of the end effector, and the other two are the end effector jaw motion and the interface mechanism drive motion. Every total trajectory is made up of a sequence of actions. The other two levels were introduced to simplify the construction process.

The same hierarchy is used for both the unassisted and operator assisted forms of the Supervisory control mode. Trajectories are

expressed in cylindrical coordinates (see Section 9.1.2). In most steps more than one action will be performed concurrently. The steps have been defined so that at the end of most steps the end effector jaws are open and there is at least three in. of separation distance between the jaws and an interface mechanism or the interface mechanism is free of its baseplate. This is so that if the trajectory is stopped at the end of a step, a redundant load path will generally not exist. If there is an unplanned motion while there is a load path, then baseplate receptacles can be moved out of position and they would need to be realigned before further demonstrations could be conducted.

The four levels of the hierarchy will be discussed from the bottom up so that the method of conducting the higher levels is more meaningful.

9.1.4.1 Actions - Actions are the basic elements and each is associated with a degree of freedom. Three of the actions are the basic cylindrical coordinates of the end effector, three are the attitudes of the end effector, and the other two are the end effector jaw motion and the interface mechanism drive motion. Actions are the first level elements and are used to form steps.

The following types of actions are used:

1) Drive x (distance along docking axis) to x command;

2) Drive r (distance from docking axis) to r command;

3) Drive Theta (central angle) to Theta command;

4) Drive Psi (end effector attitude angle about r vector) to Psi command;

5) Drive Phi (end effector attitude angle about an axis perpendicular to r and x, for axial configuration) to Phi command;

6) Drive Omega (end effector attitude angle about x axis, for axial configuration) to Omega command;

7) Operate end effector jaw drive to open or close;

8) Operate interface mechanism drive to latch or unlatch.

Other operations that are used, but that are not actions are:

1) Set commands--is used to establish the values that functions should have at the end of an action;

2) Set derivative to zero--is used to avoid driving one degree of freedom (DOF) while another DOF goes through a range where the first DOF equations change; e.g., in going from axial to radial;

3) Set derivative to normal--is used after the need for setting a derivative to zero has passed;

4) Pause--is used to provide the operator with time to verify something;

5) Operator instruction--is used to tell the operator to perform certain functions such as setting a switch on the Servicer Control Panel.

An action is complete when the error (difference between actual DOF and DOF command) becomes less than a threshold. The angle thresholds are $\pm$0.2 deg and the distance thresholds are $\pm$0.2 in. It is then permissible to go to the next step.

Situations were identified where more than one action must be performed at the same time, where it is permissible to combine actions, and where constraints on combined actions should be applied. Each of these situations have been defined and documented.

9.1.4.2 Steps - Steps are sequences of actions that are used in different trajectories much as subroutines are used in software programs. An example step is flipping a module upside down so it may be readily inserted into an axial spacecraft location. Steps are constructed of actions and are used to form trajectories.

The following types of steps are used:

1) PANDO - Position and orient end effector for next step or to rest location;

2) ATTACH - Move in and attach end effector to module;

3) RELEAS - Release end effector from module and move back;

4) LATCH - Insert and latch module;

5) UNLAT - Unlatch and withdraw module;

6) FLIP - Flip module from stowage rack side to spacecraft side;

7) IFLIP - Flip module from spacecraft side to stowage rack side;

8) TRANS - Transition module from axial motion with module facing stowage rack to radial motion with module facing spacecraft;

9) ITRANS - Transition module from radial motion with module facing spacecraft to axial motion with module facing stowage rack.

The process of constructing each step type from the list of actions has been defined. Also the initial and final conditions of each step were defined so the need for intermediate steps could be identified when steps were formed into trajectories.

An example of a step is the step ATTACH. Step ATTACH involves attaching the end effector to the interface mechanism. The ATTACH step starts with the end effector 3.0 in. away from the latch position in an radial or axial direction with the other cylindrical coordinates equal to the module location coordinates. For axial motions, the Omega command is Z $\pm$ Delta and for radial motion, the Phi command is Y + Delta where Y and Z are module latched gimbal angles. The other attitude angles are derived from the module latched coordinates. The end effector jaws are open.

The following sequence of actions is used during the ATTACH steps:

1) Set commands

x	= final value
r	= final value
Theta	= final value
Psi	= final value
Phi	= final value
Omega	= final value;

2) Drive x, r, Theta, Psi, Phi, and Omega until errors are inside threshold;

3) Verify end effector READY signal is present and jaws CLOSED signal is not present;

4) Notify operator that end effector is ready, or is not ready, for attach (display and audio);

5) Pause for 4 sec;

6) Operate end effector jaw drive until end effector jaw CLOSED signal is present or for 15 sec (check that jaw CLOSED signal is present for two successive computation cycles before accepting presence of signal);

7) If CLOSED signal is not received after 15 sec, stop sequence and notify operator.

At the completion of the ATTACH step, the end effector cylindrical coordinates are equal to the module location coordinates, except that:

x = module location coordinte +0.5 in. for spacecraft axial location;

x = module location coordinate -0.5 in. for stowage rack axial location;

r = module location coordinate -0.5 in. for spacecraft radial location.

For axial motions, Omega command will be Z $\pm$ Delta and for radial motion, Phi command will be Y + Delta where Y and Z are module latched gimbal angles. The other attitude angles will be per the module latched coordinates. The end effector jaws will be closed.

9.1.4.3 Trajectories - Trajectories are portions of total trajectories. An example is to move a module from the stowage rack to the spacecraft. Trajectories are constructed from steps and the actions of PANDO and are used to construct total trajectories.

Each trajectory has a specific name. The names are constructed from the following rules:

1) Each trajectory name will be made up of 5 characters;

2) The first character denotes whether a module is present or not. E for no module, M for a module present;

3) The second and third characters define the starting point for the trajectory:

RE for rest position
SX for spacecraft axial location
SR for spacecraft radial location
CK for stowage rack (always axial);

4) The fourth and fifth characters define the end point for the trajectory using the same definitions as for the starting point.

Twenty trajectory types were identified to fully define the possibilities. However, only fifteen are used for constructing the total trajectories. The following types of trajectories are used:

1) ERESX - End effector only from rest position to spacecraft axial offset location;

2) ERESR - End effector only from rest position to spacecraft radial offset position;

3) ERECK - End effector only from rest position to stowage rack axial offset location;

4) ESXRE - End effector only from spacecraft axial offset location to rest position;

5) ESXSR - End effector only from spacecraft axial offset location to spacecraft radial offset location;

6) ESXCK - End effector only from spacecraft axial offset location to stowage rack axial offset location;

7) ESRRE - End effector only from spacecraft radial offset location to rest position;

8) ESRSX - End effector only from spacecraft radial offset location to spacecraft axial offset location;

9) ESRCK - End effector only from spacecraft radial offset location to stowage rack axial offset location;

10) ECKRE - End effector only from stowage rack axial offset location to rest position;

11) ECKSX - End effector only from stowage rack axial offset location to spacecraft axial offset location;

12) ECKSR - End effector only from stowage rack axial offset location to spacecraft radial offset location;

13) ECKCK - End effector only from one stowage rack axial offset location to a second stowage rack axial offset location;

14) MSXSR - Move in from standoff location, attach end effector to module at spacecraft axial location, unlatch and withdraw module, move module to spacecraft radial location, insert and latch module, release end effector, and move back to standoff location;

15) MSXCK - Move in from standoff location, attach end effector to module at spacecraft axial location, unlatch and withdraw module, move module to stowage rack axial location, insert and latch module, release end effector, and move back to standoff location;

16) MSRSX - Move in from standoff location, attach end effector to module at spacecraft radial location, unlatch and withdraw module, move module to spacecraft axial location, insert and latch module, release end effector, and move back to standoff location;

17) MSRCK - Move in from standoff location, attach end effector to module at spacecraft radial location, unlatch and withdraw module, move module to stowage rack axial location, insert and latch module, release end effector, and move back to standoff location;

18) MCKSX - Move in from standoff location, attach end effector to module at stowage rack axial location, unlatch and withdraw module, move module to spacecraft axial location, insert and latch module, release end effector, and move back to standoff location;

19) MCKSR - Move in from standoff location, attach end effector to module at stowage rack axial location, unlatch and withdraw module, move module to spacecraft radial location, insert and latch module, release end effector, and move back to standoff location;

20) MCKCK - Move in from standoff location, attach end effector to module at stowage rack axial location, unlatch and withdraw module, move module to second stowage rack axial location, insert and latch module, release end effector, and move back to standoff location.

One of the simpler trajectories is used as an example. The MSXCK trajectory involves moving a module from its spacecraft axial offset location to the stowage rack axial offset location. The trajectory initial conditions are the spacecraft axial offset location with the end effector jaws open. The following sequence of steps was used:

1) ATTACH;

2) UNLAT;

3) PANDO to inverse flip initial conditions

- Set commands

x	=	-10 in.
r	=	82 in.
Theta	=	+45 deg
Psi	=	0 deg
Phi	=	-90 deg
Omega	=	-78.3 deg

- Drive x, r, Theta, Psi, Phi, and Omega until errors are inside threshold;

4) IFLIP;

5) PANDO to latch initial conditions

- Set commands

x	=	latched module location + 30 in.
r	=	latched module location
Theta	=	latched module location
Psi	=	latched module location
Phi	=	latched module location
Omega	=	Z - Delta

- Drive x, r, Theta, Psi, Phi, and Omega until errors are inside threshold;

6) LATCH;

7) RELEAS.

The MSXCK trajectory final conditions are the stowage rack axial offset location with the end effector jaws open.

9.1.4.4 Total Trajectories - Total trajectories are used for demonstrations. An example is to start with the ETU at the rest position, pick up a failed module from the spacecraft, put the failed module in a temporary location in the stowage rack, move a good module from the stowage rack to the spacecraft, move the failed module from the temporary stowage rack location to the original good module location in the stowage rack, and return to the rest position. Total trajectories are constructed from trajectories. The following types of total trajectories are used:

1) Axial total trajectory;

2) Radial total trajectory;

3) Special total trajectory - axial to radial;

4) Special total trajectory - radial to axial.

The process of constructing total trajectories from trajectories was defined. The process was particularly easy because of the manner used to define trajectories. It is not necessary to define specific initial and final conditions as all total trajectories start and end at the rest position.

The axial total trajectory involves the replacement of a failed module that is initially in a spacecraft axial location. The sequence of trajectories is:

ERESX - MSXCK - ECKCK - MCKSX - ESXCK - MCKCK - ECKRE.

The radial total trajectory involves the replacement of a failed module that is initially in a spacecraft radial location. The sequence of trajectories is:

ERESR- MSRCK - ECKCK - MCKSR - ESRCK - MCKCK - ECKRE.

Note that three trajectories are common between the axial and radial total trajectories.

The special total trajectory - axial to radial - is used to move a module from an axial spacecraft location to a radial spacecraft location so that the radial rather than the axial total trajectory can be demonstrated. The axial to radial special total trajectory is the following sequence of trajectories:

ERESX - MSXSR - ESRRE.

The special total trajectory - radial to axial - is used to move a module in the spacecraft mockup from the radial to the axial location so that the axial rather than the radial total trajectory can be demonstrated. The radial to axial special total trajectory is the following sequence of trajectories:

ERESR - MSRSX - ESXRE.

The following supplemental trajectories were not used in the total trajectories listed above: ERECK, ESXSR, ESRSX, ECKSX, and ECKSR. These trajectories were included so that a complete set are available for use in potential future additions to the total trajectory list.

9.1.5 Supervisory Operations and Displays

The purpose of this section is to describe the sequence of activities necessary to perform a module exchange so that the application of the software requirements can be better understood and to describe the specifics of the displays to be used during the unassisted and assisted Supervisory modes. The sequence of activities is similar for both modes except that the operator must make certain keyboard actions before and after each action in the operator assisted mode.

The general order of performing a module exchange demonstration is:

1) Initialize the simulation;

2) Initialize the selected total trajectory;

3) *Exchange the modules;*

4) Shut the simulation down.

9.1.5.1 Simulation Initialization - The process of simulation initialization is outlined in Table 9.1-4. It assumes that the system is completely off to start with and this activity ends with the demonstration system ready for initializing a total trajectory.

Table 9.1-4 Simulation Initialization

Step No.	Action
1.	Turn on computer and establish initial display
2.	Request the IOSS program
3.	Select Run Setup Menu if any run characteristics are to be changed and enter specific data
4.	Select Mode Selection Menu
5.	Computer checks that Servicer Control Panel Mode Select Switch is in the SUPERVISORY position
6.	*Start SSDC/ETU per Procedure II-1 of MCR-78-531* (One-G Servicer System Operating Procedures)
7.	Configure Servicer Control Panel (SCP) switches for specific run to be made
8.	Position ETU to rest position
9.	Adjust TV camera
10.	Initiate computer program start

The particulars for performing steps 1 through 4 were developed by the programmer and are described in the Software User's Manual. Step 5. involves the computer verifying that the Servicer Control Panel Mode Select switch is in the SUPERVISORY position. If the proper signal is

not received, a display notifies the operator to reset the switch. The program will not continue until the signal is received. Step 6. follows the noted procedure and ends with power to the SSDC and camera but with the servos off. For step 7. the Servicer Control Panel switches should be set to a standby condition for the specific run to be made (this is the rest position and Supervisory Mode). The SCP switch positions are:

1) SHOULDER ROLL ANGLE SET pot - 468;

2) SHOULDER PITCH ANGLE SET pot - 500;

3) ELBOW ROLL ANGLE SET pot - 560;

4) WRIST YAW ANGLE SET pot - 497;

5) WRIST PITCH ANGLE SET pot - 730;

6) WRIST ROLL ANGLE SET pot - 169;

7) SHOULDER ROLL RATE LEVEL switch - MED;

8) SHOULDER PITCH RATE LEVEL switch - MED;

9) ELBOW ROLL RATE LEVEL switch - MED;

10) WRIST YAW RATE LEVEL switch - MED;

11) WRIST PITCH RATE LEVEL switch - MED;

12) WRIST ROLL RATE LEVEL switch - MED;

13) MODE SELECT switch - SUPERVISORY;

14) HAWK MODE switch - OFF;

15) COMPUTER MODE switch - HOLD;

16) MODULE LOCATION switch - S/C A;

17) INTERFACE MECH switch - OFF;

18) END EFFECTOR switch - OFF;

19) SERVO POWER switch - OFF (in).

The ETU is positioned to the rest position (step 8.) by pushing both the SDP and SCP SERVO POWER switches to ON. Next the SCP DIRECT CONTROL rocker switches are operated as necessary until the JOINT ERROR lamps are OUT. The SCP SERVO POWER switch is pressed to OFF. The TV focus should be adjusted in step 9. so that a black-on-white target stays in focus from four ft to one ft distance from the TV camera lens. In step 10. the computer program can be initiated using procedures developed by the programmer and documented in the Software User's Manual.

9.1.5.2 Total Trajectory Initialization - The process of total trajectory initialization is outlined in Table 9.1-5. This activity starts with the first menu displayed on the terminal screen and ends with the trajectory being started in either the assisted or unassisted Supervisory mode. This portion of the activity is totally computer menu driven. The operator needs only to follow the prompts given and to make selections appropriate to the demonstration he wants to conduct. The computer also checks that certain initial conditions are proper and notifies the operator if they are not suitable for the selected operations.

Table 9.1-5 Total Trajectory Initialization

Step No.	Action
1.	Select Unassisted or Assisted Supervisory Mode
2.	The computer will display the Supervisory Mode Menu
3.	Select the numerical and set designators for S/C A, S/C B, S/R A, and S/R B
4.	Use of the Module Placement Verification Sequence and its associated menu will permit the operator to verify that the module receptacle electrical connections are properly made
5.	Turn servo power ON
6.	Place SCP Computer Mode switch to OPERATE
7.	Select total trajectory from four available
8.	Computer checks that ETU is in rest position
9.	Computer checks that modules are in proper position and that the stowage rack temporary location is empty
10.	Computer asks operator to verify the computer terminal type in use
11.	Computer starts trajectory sequence

There are two menu types of display to be used in the program. One has the following format:

TITLE

1. Option 1
2. Option 2
3. Option 3

.
.
.

Enter Item Number:

To select a particular option, the number corresponding to it is typed in and followed by a carriage return. The other main type of menu display has the form.

TITLE

1. Text 1 Value 1
2. Text 2 Value 2
3. Text 3 Value 3
.
.
.

Enter Item Number:

This display format is used to display the current value of various parameters and allows the user to change them if desired. To change a particular item, the operator enters the appropriate line number on the keyboard followed by a carriage return. A new line of text will then appear telling the operator to enter the new data. The operator enters the new numbers and presses the carriage return key. The data on the appropriate line will then change. To continue on from this type of display the line number associated with "Return to Prior Menu" plus a carriage return is entered.

9.1.5.3 Shut-Down Procedure - This procedure can be entered at any time. It should be used after an abort. The procedure is outlined in Table 9.1-6.

Table 9.1-6 Shut-Down Procedure

Step No.	Action
1.	End module exchange by operating SCP Computer Mode switch to HOLD or by operating space bar on computer terminal
2.	Computer will cause a small auxiliary display to appear
3.	Operator types in a 10 and carriage return to return to Mode Selection Menu
4.	Operator types in a 4 on Mode Selection Menu to put computer in Manual-Direct mode
5.	Select Manual-Direct mode on SCP

Table 9.1-6 Shut-Down Procedure (Cont.)

Step No.	Action
6.	Verify that ETU is in rest position
7.	Configure Servo Drive Panel switches for shut down
8.	Turn servo power off
9.	Turn master power off
10.	Operate space bar to end Manual-Direct mode on computer
11.	Operate carriage return to return to Mode Selection Menu
12.	Operate key 5 and carriage return to return to IOSS Main Menu
13.	Operate key 5 and carriage return to exit from IOSS program
14.	Log off by entering BYE and carriage return
15.	Turn computer off

The small auxiliary display associated with the HOLD mode appears on the right hand side of the main display. The format of this display is as follows:

Display Parameters

1. Cyl. Cmd.
2. Jnt. Rate
3. Err. Mtr.
4. Jnt. Pos.
5. Cyl. Pos.
6. Cyl. Err.
7. Cyl. Rate
8. Jnt. Cmd.
9. Continue
10. Abort

This display can be used to call up the specific displays of interest or it can be used to follow the shut-down procedure.

The hold function is provided as a method of stopping a module exchange and then allowing it to continue later. A hold can be initiated by the operator pressing the COMPUTER MODE switch on the Servicer Control Panel to HOLD or by operating the space bar on the computer terminal.

It is possible to continue the program. This is effected by use of the auxiliary menu described above by typing in a 9 and a carriage return. The program will not continue until the Computer Mode switch on the Servicer Control Panel is returned to OPERATE. The operator is notified of a failure to return the Computer Mode switch to OPERATE.

An abort procedure should only be used in an emergency, when there is a danger to personnel or equipment. Otherwise the hold and normal shut down procedures should be used. An abort is initiated only by operating either of the two SERVO POWER switches to OFF; one on the Servicer Control Panel and one on the Servo Drive Panel. Operation of the SERVO POWER switches to OFF causes a rapid discharge of the servo compensation network capacitors that reduces the amplifier output to zero very quickly and allows the brakes to engage. Use of any other abort method may result in slow decay of the compensation network capacitors and continuation of joint motion. This is particularly hazardous if an unbalanced module is being supported by a backdrivable wrist drive servo.

9.1.6 Trajectory Display Construction

A single display format is used. The details of the display depend on total trajectory, step, etc. The approach is based on the use of the hierarchy discussed in Section 9.1.4. The first line of the display is the title of the total trajectory. The second line is a list of the trajectories that make up the total trajectory where the current trajectory is highlighted. The third line is a definition of the current trajectory. The fourth line is a list of the steps in the current trajectory with the current step highlighted. The fifth line is a definition of the current step. Lines six through 24 are a list of the actions and specific data involved in the current step with the current action highlighted.

The displays for the assisted and unassisted modes are similar except that the assisted mode will use the terms CO? and PR? to prompt the operator's assistance. The examples used below are for the assisted mode. For the unassisted mode, the CO? and PR? terms are deleted.

For the computer terminal displays at MSFC the current operation highlighting takes the form of reverse video. The main text is green on black and the reverse video will be black on green. One blank space before and one after is used to further emphasize the reverse video. For this document, leading and trailing astericks are used to denote highlighting. The display is limited to 80 characters in width and 24 lines.

9.1.6.1 Radial Total Trajectory Example - An example of a display for one step of a radial total trajectory is shown in Table 9.1-7. The first five lines are as discussed above, but the fourth line is abbreviated as there is only one step in this trajectory. Note that the ESRCK trajectory is highlighted in the second line and the PANDO step is highlighted in the fourth line. Similarly the third action, set commands and the specific commands, is highlighted. The actions are numbered to make them stand out better.

Table 9.1-7 Example Radial Total Trajectory Display

```
RADIAL TOTAL TRAJECTORY
ERESR    MSRCK     ECKCK     MCKSR    *ESRCK*    MCKCK    ECKRE
MOVE END EFFECTOR FROM SPACECRAFT RADIAL (S/C B) TO STOWAGE RACK (S/R B)
*PANDO*
PANDO TO STOWAGE RACK OFFSET LOCATION
     1)   SET COMMANDS                    CO?
             R      =      70 IN.
             PHI    =     140.1 DEG.
     2)   DRIVE TO COMMANDS               PR?
    *3)   SET COMMANDS                    CO?
             X      =     -19 IN.
             PSI    =       0 DEG.*
     4)   DRIVE TO COMMANDS               PR?
     5)   SET COMMANDS                    CO?
             R      =      71 IN.
             THETA  =     +86 DEG.
             PHI    =     +90 DEG.
             OMEGA  =     +86 DEG.
     6)   DRIVE TO COMMANDS               PR?
```

When all of the actions on a display are complete, the computer steps to the next display. For the last trajectory display, where the end effector has been returned to the rest position, the computer returns to the Supervisory Mode Menu. The operator then has a choice of rerunning the same total trajectory, selecting a new total trajectory, redesignating the modules to be moved, or returning to the Mode Selection Menu or to higher level menus and shut down of the operations.

Certain additional features are used in the operator assisted mode. When the new step is displayed, the 1) Set commands CO?, and the specific commands are highlighted. When the operator has typed in CO and carriage return, then 2) Drive to commands PR? is highlighted. When the operator has typed in PR and carriage return, then the computer commands the ETU to drive to the commanded coordinates. When the actual and commanded coordinates are within the threshold, then the next step is highlighted. Only one action is highlighted at a time. The computer accepts CO, PR, or Y as valid responses to CO? or PR?. Any other response puts the system in hold and notifies the operator by a text line near the bottom of the screen.

9.1.6.2 Axial Total Trajectory Example - An example of a display of one step of an axial total trajectory is shown in Table 9.1-8. The first five lines are as discussed above. Note that the MSXCK trajectory is highlighted in the second line and the LATCH step is highlighted in the fourth line. Similarly the third action, Drive to Commands, is highlighted. When the operator has typed in PR and carriage return, the computer causes the ETU to drive to the commanded coordinates. When the actual and commanded coordinates are within the threshold and when the computer has checked to see that a READY signal is available and the LATCHED signal is not present for the stowage rack B location, then the next step is highlighted. If these check conditions are not satisfied, then the operator will be notified and the sequence put in the hold mode.

Table 9.1-8 Example Axial Total Trajectory Display

```
AXIAL TOTAL TRAJECTORY
ERESX     *MSXCK*     ECKCK     MCKSX     ESXCK     MCKCK     ECKRE
MOVE MODULE FROM SPACECRAFT AXIAL (S/C A) TO STOWAGE RACK (S/R B)
ATTACH     UNLAT     PANDO     IFLIP     PANDO     *LATCH*     RELEAS
LATCH MODULE IN STOWAGE RACK
    1)   OPERATOR SET SCP MODULE LOCATION SWITCH TO S/C B          CO?
    2)   SET COMMANDS                                             CO?
           X      =     -20.3 IN.
           R      =      71.0 IN.
           THETA  =     + 4 DEG
           PSI    =       0 DEG
           PHI    =     +90 DEG
           OMEGA  =     -86 DEG
   *3)   DRIVE TO COMMANDS                                        PR?*
    4)   INTERFACE MECHANISM IS READY                             CO?
    5)   PAUSE                                                    PR?
    6)   SET COMMANDS                                             CO?
           X      =     -22 IN.
    7)   LATCH INTERFACE MECHANISM AND DRIVE X                    PR?
    8)   INTERFACE MECHANISM IS LATCHED                           CO?
```

In action 1) the operator is requested to set the Servicer Control Panel MODULE LOCATION switch to the S/R B position. The module is to be placed in that location. The SCP switch is used in a set of computer-independent logic associated with warning the operator of inadvertent end effector jaw operation. This action is required for both the assisted and unassisted modes. The MODULE LOCATION switch should be repositioned before every latching step so that it is properly positioned for the next step, which is RELEAS. If the switch is not properly set, then the buzzer will sound unnecessarily.

The pause of step 5) is not needed for the operator assisted mode, but is included to maintain similarity with the unassisted mode where it is needed. Step 8) is included to tell the operator that the LATCH signal

is present. For the operator unassisted mode, each action is highlighted for at least 1 sec before moving on so that the operator has time to read the highlighted lines.

9.1.7 Manual-Augmented Control Mode

The Manual-Augmented control mode has the operator doing most of the mechanism control, as in the Manual-Direct mode, only using hand controllers instead of panel switches for some coordinates. In addition, the computer is in the loop to facilitate the direction of motion of the mechanism and to provide coordination of its motion with respect to the displays provided. The most useful role for this mode is to perform unscheduled motions to previously identified targets of opportunity.

The Manual-Augumented control mode uses written procedures to define the trajectory sequences so trajectory sequences are not a part of the software requirements. The Servicer Servo Drive Console incorporates a Hawk mode as part of the Manual-Augumented control mode. The Hawk mode switches the inputs to the Wrist Pitch and Wrist Roll error meters in the Servicer Control Panel to signals from the computer. Thus the computer must develop these signals. They basically combine the display term with the Wrist Pitch and Yaw error signals. In the axial mode this provides an easy way of lining the display coordinates up with the radial and tangential components of the cylindrical coordinates. In the radial mode the Hawk function can be used to position the Wrist Pitch joint and decouple the effect of Wrist Pitch motions from central angle, Theta, motions. The display term, Delta, is also used as part of the transformation between the display coordinates and the cylindrical coordinates.

The cylindrical and gimbal coordinate systems defined in Section 9.1.2 for the Supervisory mode are applicable for the Manual-Augmented mode as well. One additional coordinate system is required, however, and it relates to the visual display the man uses as a reference for commanding the mechanism. Both the hand controller motion and the TV

are coordinated to this one common reference, which is centered in the TV monitor and is parallel to the monitor face coordinates. The Manual-Augmented control mode is shown in block diagram form in Figure 9.1-6. While several of the blocks on Figure 9.1-6 are similar to those on the corresponding Supervisory mode diagram of Figure 9.1-5, most are unique to the Manual-Augmented control mode.

The Manual-Augmented start-up procedure is similar to that for the Supervisory mode as given in Section 9.1.5 and Table 9.1-4. The operator selects item 3 from the Mode Selection Menu by depressing key 3 and then the carriage return. The computer will check that the Servicer Control Panel Mode Select Switch is in the Manual-Augmented position and will notify the operator if it is not. A clock will be started and the Manual-Augmented display will be presented. The display states that the Manual-Augmented Mode was entered by ____ on ____ at ____. The operator can then move the hand controllers and cause the ETU mechanism to move.

The Manual-Augmented mode can be ended at any time by pressing the computer terminal space bar or by operating the Servicer Control Panel Computer Mode switch to HOLD. This will cause the Manual-Augmented Control Mode Hold Display to appear. The Hold Display shows various data groups for the operator's information. From the Hold Display the operator can choose to abort the sequence, which will cause the following display to appear:

Manual-Augmented Mode ending at _____
Elapsed time is ____ minutes.
Press RETURN for previous menu.

Operation of the carriage return key will return the program to the Mode Selection Menu. Operation of key 5 and carriage return will return the program to the IOSS Main Menu. Operation of key 5 and carriage return will return the program to the computer operating system. The computer can then be shut down. Shut down of the ETU can be effected by following steps 5, 6, 7, 8 and 9 of Table 9.1-6.

ORIGINAL PAGE IS
OF POOR QUALITY

ORIGINAL PAGE IS
OF POOR QUALITY

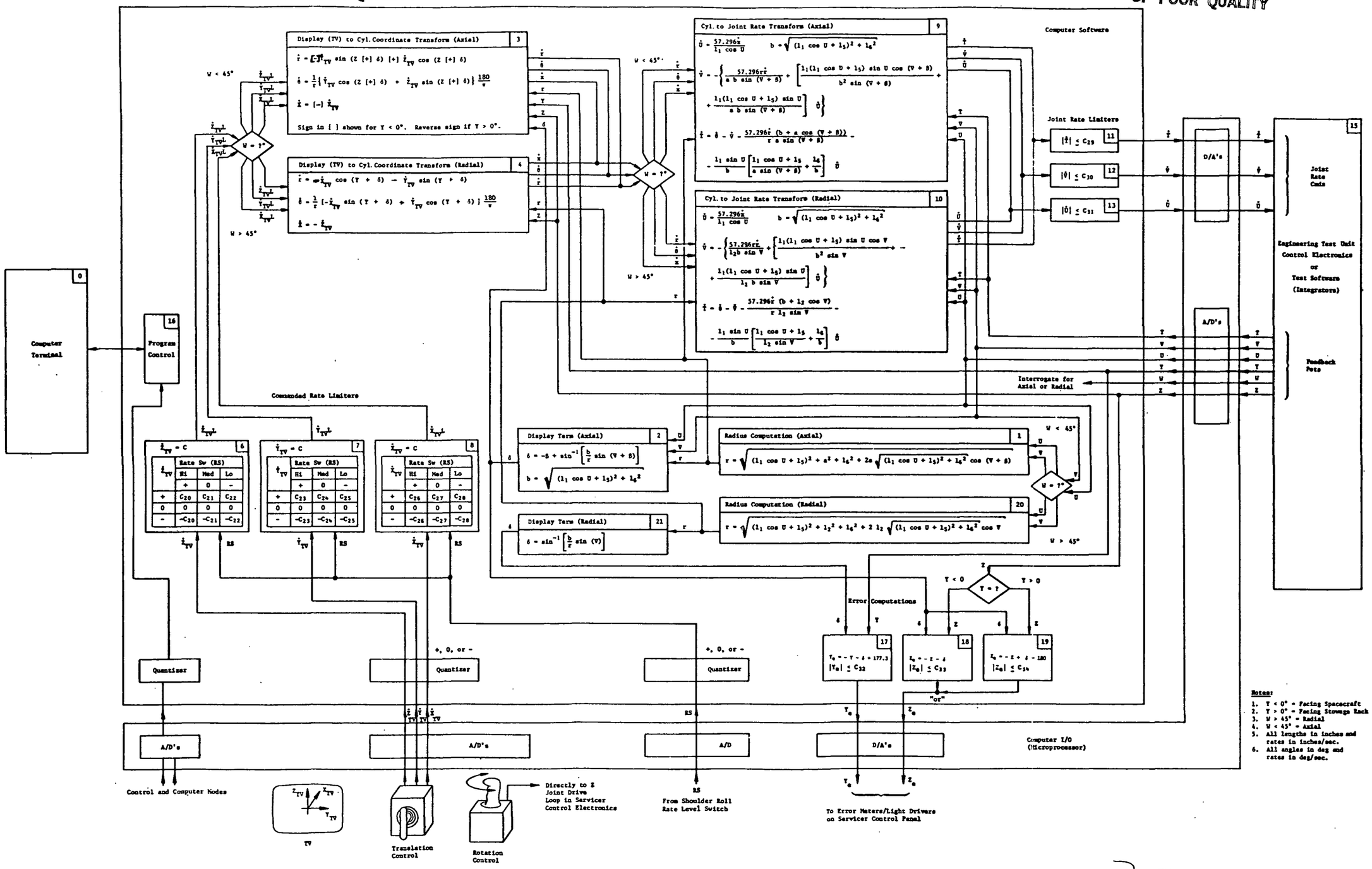

Notes:
1. Y < 0° = Facing Spacecraft
2. Y > 0° = Facing Stowage Rack
3. W > 45° = Radial
4. W < 45° = Axial
5. All lengths in inches and rates in inches/sec.
6. All angles in deg and rates in deg/sec.

Figure 9.1-6 Analytical Block Diagram - Manual-Augmented Mode

FOLDOUT FRAME

FOLDOUT FRAME

The Manual-Augmented mode can be put into "hold" at any time by operating the Computer Mode switch of the Servicer Control Panel to HOLD, or by operating the Mode Select Switch on the Servicer Control Panel to the MANUAL-DIRECT position. The following display will result:

Manual Augmented HOLD Display

Joint Rate	T = ___	U = ___	V = ___
Error Meter	Y = ___	Z = ___	Delta = ___
Joint Position	T = ___	U = ___	V = ___
	W = ___	Y = ___	Z = ___
Cylindrical Rates	X = ___	R = ___	
	Theta = ___		
Translation Control	XTV = ___	YTV = ___	
	ZTV = ___		
Radial Position = ___			

1) Continue
2) Return to Mode Selection Menu

Enter Item Number

The choices are indicated by the numbers. However, the program will not continue unless the Computer Mode switch of the Servicer Control Panel is in OPERATE. While the Manual-Augmented mode is in hold, all six joint derivatives will be set to zero.

9.1.8 Interface Definition

A complete definition of all signals between the computer and the Servicer Servo Drive Console of the Engineering Test Unit was made. A separate computer program, called TESTH, was written to assist in checking out these interfaces. TESTH provides the following functions:

1) An ability to select and send commands on each of the digital to analog channels;

2) An ability to read each status signal from the analog to digital converter. These signals are displayed in octal notation. Many of the signals are also converted to engineering units or true/false statements, as appropriate;

3) An ability to command the servicer mechanism to move along a single cylindrical coordinate at a time at a selectable rate. This function is very useful during system calibration and for positioning the end effector during module location data collection.

The signals from the computer that pass through the digital to analog converter are:

1) Joint rate commands (6);

2) Error meter commands (6);

3) End effector jaw drive commands;

4) Interface mechanism drive commands.

The signals to the computer that pass through the analog to digital converter are:

1) Joint position feedback (6);

2) Hand controller commands (3);

3) Rate level selection;

4) Computer mode selection;

5) Control mode selection;

6) Module receptacle status (4);

7) End effector jaw status.

9.2 SOFTWARE PREPARATION

The basic servicer control software was initially to be based on an early set of software developed on a PDP-11/45 computer. It developed that a significant part of the early software was in assembly language and thus could not be readily transferred to the PDP-11/34. Similarly the MSFC software used a set of standard Jacobeans for coordinate system transformation and these were not suitable for the unique servicer arm geometry with its offsets. The A/D and D/A addressing was transferred to the new software. The new software was developed to satisfy the requirements of the Software Requirements Document. Software for the basic modules is called the IOSS program.

9.2.1 Software Development

A PDP-11/34 computer was available at Martin Marietta and it was used for the software development to reduce the potential for error when transferring to the MSFC PDP-11/34 machine. The Martin Marietta machine used Version 3.2 of the RSX-11M operating system with a Version 4.0 Fortran 77 compiler. The MSFC machine initially had the same operating system, but it was later converted to Version 4.0 of the RSX-11M operating system and a Version 5.0 Fortran 77 compiler so that separate operating system and applications programs disks could be used. Any attempt to put all of the applications programs and the operating system on one disk would have resulted in excessive development time because of the small storage volume available. Additionally, the MMS programs would not have fit in with the basic programs. It was necessary to revise the software slightly so it would operate satisfactorily for both versions of operating system and compiler.

The software was written entirely in Fortran. The memory limtations of the PDP-11/34 required that an overlay system be developed and used. It uses almost all of the 32K of available random access memory. The program contains almost 6000 lines of executable code that reside in 93 routines. The routines fit into a hierarchical structure and they are completely cross referenced.

The first part of the software hierarchy involves setting up the computer and peripherals and reading certain data from the disk. The second part involves a series of menus that gives the operator the ability to change things such as the A/D scale factors. The third part provides for selection of a control mode and execution of that mode. Execution of the Supervisory control mode is the largest part of the program. It includes total trajectores, trajectories, steps, actions, Supervisory motion loop, and display generation. Display generation involves a larger amount of software than was originally expected. The Manual-Augmented control functions are also included in this part of the software.

The next two sections of the software include provisions for collection and storage of module location data and for verification of the module location data. The last section of the software has to do with program shutdown.

The software structure involves source files, object files, task files, command files, overlay descriptor files, data files, and the various commands needed to compile, link, and execute. The software is broken up into different source files because it is easier to edit small files and it is easier to move the different object file names within the task builder file to create useable overlays. There may be more than one routine inside a source file. But the file name will reflect the purpose of all the different routines. An example is SCRUTL.FTN. This file contains several routines that deal with SCReen UTiLities.

Compilation of software is done on a file by file basis. So for each source file, there will be one object file. A compilation can take many source files and create one object file, but we don't do this because of the overlay scheme. A simple compilation command such as "F77 SCRUTL=SCRUTL" will only create the object file SCRUTL.OBJ and any error messages will be listed to the terminal. A compilation command file F77.CMD allows the user to compile all the IOSS program source. It is invoked by typing F77@F77. It is stopped by entering control C and typing ABO F77.

Task building involves a task build command file (IOSS.TKB) and a task build overlay descriptor file (IOSS.ODL). The task build command file is rather simple. But the overlay descriptor file is complex. Significant rearranging was done to create working overlays and even now they are very large (almost to the 32K limit). Unfortunately, not much expansion is available. The task builder is started, using the command files, by issuing the MCR command TKB @IOSS. This approach assumes that the machine has a floating point processor.

The software was prepared in Denver using the available PDP-11/34. Provisions are included for simulating various hardware functions such as joint rate integration and hardware switch positions. Extensive checks of trajectories, displays, inhibit logic, equations, and auxiliary functions were made before the software was taken to MSFC. The software was put onto magnetic tape for transfer to MSFC. It was then read off the tape and put on a disk at MSFC. Various tests and calibrations of the hardware to software interfaces were made before any attempt was made to drive the hardware. See Section 11.1 for a discussion of the hardware demonstrations.

9.2.2 Software User's Manual

The Software User's Manual provides a means of understanding the structure of the IOSS software. It explains the installation procedure, how to run the software, and describes the software. The delivered software is over six thousand lines of executable code in 93 routines. The document has a hierarachical breakdown of these routines and they are completely cross-referenced.

The first chapter covers installation and execution of the IOSS software. The second chapter is a small one that describes the relationship between the different types of files. The third chapter presents the highest level of source description. The fourth chapter presents an intermediate level of source description in block diagram form. The fifth chapter presents the most detail in the form of listings of the individual subroutines.

9.2.2.1 Installation - This section covers the installation of the IOSS software. The software is shipped on 1/2 in. magnetic tape in a BRU (Backup and Restore Utility) format. The directory the software resides in is [100,1]. The software is restored first. Once the software is on the disk, it is compiled to create the object files (*.OBJ). After the compilation, the IOSS task is built. The task builder uses two files. The first is the command file, IOSS.CMD. The second file is IOSS.ODL and describes the overlay structure. Once the task build is complete, the presence of the IOSS.TSK and IOSS.MAP files is checked. The file IOSS.TSK is the executable load module and the file IOSS.MAP is a map of the load module.

9.2.2.2 Running the IOSS Software - The IOSS software can be run from any directory with one restriction. The software has to be executed where the data files exist. These data files all have suffixes that end in .DAT and are ASCII files that can be edited. It is not recommended that they be edited directly, rather there is a procedure described in the Software User's Manual that allows them to be updated in a simpler manner.

9.2.2.3 Starting the IOSS Program from MCR - The IOSS software is run from the directory containing the data files. If the data files are not present, errors will result and the program will exit smoothly to a higher level. The IOSS program is started from the UFD [100,1], by issuing the following MCR command:

```
RUN IOSS
```

The IOSS program then asks the following question:

```
Terminal Type (VT52, RCA, Simple):
```

The user responds with the type of terminal he is working with. The default is selected by simply pressing RETURN and is currently the RCA terminal type. The simple terminal is used only for creating hardcopies of the various menus and is not capable of copying the

Supervisory or Manual displays. Then the mode of the terminal is changed to the slave mode. This change is normally invisible to the user. But if the program aborts before a normal completion, the computer will not respond to a terminal input. Next, the various constants are read from a disk file (CONSTS.DAT). The most recent version (the one with the highest version number) is read from disk. If this file does not exist in the current UFD, the program will abort. The name of the file is printed to the screen before it is read.

The final step in the initialization process is to read the module locations from the disk. Again, only the most recent versions are read and the files need to be in the current UFD. The data files are named SC1.DAT through SC6.DAT, SR1.DAT through SR9.DAT, REST.DAT, FLIP.DAT, IFLIP.DAT, TRANS.DAT, and ITRANS.DAT. Also the name of each data file is printed to the terminal before it is read. Once the data files are finished being read, the screen is cleared immediately and the IOSS Main Menu is displayed.

9.2.2.4 IOSS Main Menu - The IOSS Main Menu is the highest menu in the hierarchy of menus and it looks like the following:

IOSS MAIN MENU

1. Run Setup Menu
2. Mode Selection Menu
3. Module Data Collection Menu
4. Hardware Calibration Menu
5. Exit to MCR

Enter Item Number:

Selection of Item 5 returns the user to the operating system. This is done when the user is finished using the IOSS program.

9.2.2.5 Run Setup Menu - The Run Setup Menu is used primarily to set up a new run. It is also used to access the various constants. The menu looks like the following:

RUN SETUP MENU

1. Operator's Name John Doe
2. Run Title A Test Run
3. Run Number 1
4. Hardware Present? T
5. Save Constants to Disk
6. Geometry Contants Menu
7. Limit Constants Menu
8. A/D Scale Factors Menu
9. D/A Scale Factors Menu
10. Joint Position Threshold Menu
11. Simulated Hardware Characteristics Menu
12. Return to IOSS Main Menu

Enter Item Number:

The data in this menu or in the listed next level menus can be changed by following the prompts that are provided. When an item is changed, the screen is rewritten to show the new data.

9.2.2.6 Mode Selection Menu - This menu allows the user to select one of the four operating modes. The Mode Selection menu is:

MODE SELECTION MENU

1. Unassisted Supervisory Mode
2. Assisted Supervisory Mode
3. Manual-Augmented Mode
4. Manual-Direct Mode
5. Return to IOSS Main Menu

Enter Item Number:

Selection of Item 1 calls up the Supervisory mode menu. From this menu, a total trajectory will run unassisted, as explained in the Supervisory unassisted mode section. Selection of Item 2 calls up the

Assisted Supervisory mode menu. From this menu, a total trajectory will run only with assistance, as explained in the Assisted Supervisory mode section.

Selection of Item 3 starts the Manual-Augmented mode. Several items are displayed (operator's name, time, and date. and then the Manual-Augmented mode equations are executed in a 15 Hz loop. The operator can then drive the ETU using the hand controllers. The software also checks for a keypress or for the computer mode switch to leave the Manual-Augmented position. Once either of these actions happen, the computer will print a display of pertinent parameters and then give the user the option to continue or leave the Manual-Augmented mode.

Selection of Item 4 displays the operator's name, the time, and date. Then the software starts cycling in a 15 Hz loop waiting for a keypress or for the computer mode switch to leave the Manual-Direct position. Once either of these actions happen, the computer will print the ending and elapsed time and then exit. Selection of Item 5 returns the user to the previous menu.

9.2.2.7 Supervisory Mode - Selection of Item 1 from the Mode Selection Menu calls up the Supervisory mode menu for unassisted operation. The Unassisted Supervisory mode menu is:

UNASSISTED SUPERVISORY MODE MENU

1. S/C A is S/C 1, Set 1
2. S/C B is S/C 3, Set 1
3. S/R A is S/R 1, Set 1
4. S/R B is S/R 3, Set 1
5. Module Placement Verification Sequence
   Turn Servo Power On
   Put SCP Computer Mode Switch to Operate
6. Perform Axial Total Trajectory
7. Perform Radial Total Trajectory

8. Perform Axial to Radial Total Trajectory
9. Perform Radial to Axial Total Trajectory
10. Return to Mode Selection Menu
Enter Item Number:

The text between Items 5 and 6 informs the operator to turn the servo power on and set the computer mode switch to operate. If the computer mode switch is not in operate, an immediate hold will be generated when a total trajectory starts.

The Assisted Supervisory Mode menu looks and acts like the unassisted menu, except the title has assisted in it. The differences are very evident when a total trajectory is running.

Selection of Items 6, 7, 8, or 9 start a total trajectory. For a complete description of total trajectories, consult Chapters 7, 8, and 9 of the Servicer Simulation Software Requirements document. Various checks are performed at the very beginning of a total trajectory. These checks include one to make sure the arm is at rest and the others look for the various signals from module locations that insure their correct position.

If a total trajectory is being run assisted, then the operator has to tell the computer to perform the next step. The computer will pause at the beginning of each action and wait for a PR, a CO, or a Y to continue with the action. If the user responds with something other than PR, CO, or Y, the computer will generate a hold command with the effects described below. Hold commands are generated in both assisted and unassisted modes and can be generated by the operator in the following ways:

1) Doesn't answer with a CO, PR, or Y to an assisted mode prompt;

2) Presses a key while a movement action is executing;

3) Moves the computer mode switch to HOLD while a movement action is executing.

Hold commands can be generated by the computer in the following ways:

1) Jaw open or close exceeds 12 seconds;

2) Latch or unlatch exceeds 28 seconds;

3) Ready signals from latch mechanism and jaw not correct.

Once a hold command is generated, all joint rates are zeroed, the latch mechanism is stopped and jaw movement is stopped. Then a hold menu is displayed on the right side of the screen (leaving the Supervisory display untouched). This hold menu is:

(The Supervisory Display would appear here.)

Display Parameters

1. Cyl. Cmd.
2. Jnt. Rate
3. Err. Mtr.
4. Jnt. Pos.
5. Cyl. Pos.
6. Cyl. Err.
7. Cyl. Rate
8. Jnt. Cmd.
9. Continue
10. Abort

Item:

Hold Due to (A hold message would appear here.)

Selection of one of Items 1 through 8 will result in the display of different sets of parameters and their respective values. After displaying the different parameters and the respective values, the computer will prompt the user to press return to get back to the hold menu. Selection of Item 9 erases the hold display menu and continues the total trajectory from where it stopped. Selection of Item 10 will abort the total trajectory and leave the arm at its current position.

The operator will be returned to the Supervisory mode menu (the previous one) and from there he probably will go to a manual mode and drive the arm to the rest position.

9.2.2.8 Software Hierarchy List - A list of all the major software modules and how they relate with one another is given. The hierarchy list is interpreted as follows. Each new column to the right represents a lower level of subroutine calls. For example, IOSS is the highest level program, the main program. IOSS.FTN first calls TTYPE, then SLAVE and so on. IOSS calls MODLOC, which in turn calls RDLOC. Also, a short description of each module follows the module name. Not all the modules are listed here. Some of the lowest levels modules are used many times and would clutter the list. The IOSS software hierarchy list is:

IOSS	IOSS Main Program
TTYPE	Terminal Type Selection
SLAVE	Set Terminal as a Slave
RDCONS	Read the Constants from Disk
MODLOC	Get the Module Locations
RDLOC	Read a Module Location from Disk
SETUP	Run Setup Menu
WRCONS	Write Constants to the Disk
GEOMK	Geometry Constants Menu
LIMITK	Limit Constants Menu
ADSFK	A/D Scale Factors Menu
DASFK	D/A Scale Factors Menu
TOL	Threshold Menu
SIMHCH	Simulated Hardware Characteristics
MODSEL	Mode Selection Menu
SUPERV	Supervisory Control Menu
MPSEQ	Module Placement Sequence
TTRAJS	Total Trajectories

MANAUG	Manual-Augmented Menu
READH	Read the Hardware
TVCRAT	TV to Cylindrical Rates
CJRATE	Cylindrical to Joint Rates
MALIM	Manual-Augmented Limits
MADONE	Manual-Augmented Done Function
DRIVEH	Drive the Hardware
MAHOLD	Manual-Augmented Hold
MANDIR	Manual Direct Mode
HDCOL	Module Data Collection Menu
READH	Read the Hardware
WRLOC	Write a Module Location to Disk
CALIBR	Module Calibration Menu
CHRRDY	Character from Keyboard Ready
READH	Read the Hardware
JNTPOS	Calculate the Joint Position
ERROR	Calculate the Joint Errors
DRIVEH	Drive the Hardware
CALDSP	Calibrate Screen Display
NOSLAV	Set Terminal to Noslave Mode

The above hierarchy is four levels deep. However, TTRAJS has several levels beneath it. They are:

TTRAJS	4 Total Trajectories
TRAJS	20 Trajectories
STEPS	9 Steps
SUPMOT	Supervisory Motion Loop

SUPMOT also has several levels beneath it and they are listed below:

SUPMOT	Supervisory Motion Loop
CYLJNT	Cylindrical to Joint Positions
READH	Read the Hardware
JNTPOS	Calculate the Joint Positions

ERROR	Calculate the Joint Errors
CNTINU	Supervisory Continue Function
SWHOLD	Mode Switch Hold
CHRRDY	Character from Keyboard Ready
KEYHOLD	Keyboard Hold
CHKLAT	Check Latching Mechanism
CHKJAW	Check Jaw Mechanism
ZRORAT	Zero Rates
RATGEN	Rate Generation
CJRATE	Cylindrical to Joint Rates
DRIVEH	Drive the Hardware

10.0 SERVICER CONTROL SOFTWARE - MMS MODULES

The objective of this activity is to obtain a set of servicer control software for MMS modules that will allow the smooth demonstration of the exchange of MMS modules using the same three control modes as for basic module exchange. The MMS module servicer control software development was recorded in three documents: 1) MCR-85-1331; Servicer Simulation Software Requirements (MMS Modules), Martin Marietta Aerospace, Denver, CO, June 1985; 2) MCR-85-1360, MMS Module Servicer Control Software User's Manual, Martin Marietta Aerospace, Denver, CO, December 1985; and 3) MCR-85-1361, Manual-Augmented Trajectory Sequences (MMS Modules), Martin Marietta Aerospace, Denver, CO, January 1986.

There are many similarities between the two sets of software. They are implemented on the same computer, the same terminal is used, they work with the 1-g servicer demonstration system equipment, the same general trajectory hierarchy is used, and the same general approaches are used for software interfaces.

There are also differences between the basic and MMS software programs. The MMS software characteristics include:

1) One total trajectory is used. The MMS modules are only exchanged axially in the recommended approach. This reduces the number of total trajectories and trajectories required;

2) The MMS module is fastened with two bolts instead of one. This increases the number of steps involved and the number of module latch indicators;

3) A Module Servicing Tool is involved. This increases the complexity of some steps, increases the number of trajectories, increases the number of drive functions (actions) that must be commanded and also increases the number of status indicators required;

4) The number of stored sets of module location data has been reduced to one as the extra stored sets have not been used with the basic modules;

5) The module flip location was moved as discussed in Section 8.0;

6) No radial motions are required although all of the equations were carried over as that was easier and solution time is not a problem. However, the transition and inverse transition steps have been deleted;

7) A more inclusive number of checks are made before the trajectory is started to minimize errors;

8) A Module Servicing Tool storage location is needed. This increases the number of trajectories and status indicators.

The software discussed in this section is for the demonstration of the exchange of MMS type modules. MMS modules are approximately 48 in. square and 20.5 in. deep and are fastened into the spacecraft or spare module with two bolts. These bolts are driven by a 1-g version of a Module Servicing Tool (see Section 3.2) that has been adapted to work with the servicer mechanism end effector. The arrangement of the MMS modules on the spacecraft mockup and in the stowage rack is discussed in Section 8.0. Section 9.0 describes the software used for basic module exchange and contains supplemental information that is necessary to understand the MMS software.

The approach used to develop the MMS software was to copy the basic software to a new disk, delete the routines that are not needed, revise basic routines as necessary, and add routines specific to the MMS modules. A software requirements document for the MMS module exchange was prepared first using the delete, revise, and add process. The software was then developed according to the stated requirements. This

approach was very effective in reducing development time and made the resulting program easier to use because of its similarity with the basic module program.

A Software User's Manual was prepared and sent in draft form to MSFC before the module exchange demonstrations. The module exchange demonstrations included all three control modes. The MMS module Software User's Manual is discussed in Section 10.2.2 and the MMS module demonstrations are discussed in Section 11.2.

The major elements and areas involved in the MMS servicing demonstrations are similar to those shown in Figure 9-2 except that the MST, a set of MST controls, a Connector Positioner, and the MST storage rack have been added. These elements are described in Chapter 8.0.

10.1 SOFTWARE REQUIREMENTS

The software components, or functions, for MMS module exchange are similar to those for basic module exchange as listed in Table 9.1-1. The same geometrical approach is used for MMS and basic module exchange as listed in Table 9.1-2. It was originally thought that MMS module exchange could be effected by changing one cylindrical coordinate at a time because of the way the MMS spacecraft is configured with respect to the servicer by use of the docking adapter orientation joint (see Setion 3.0), and that the MST could be inserted into, or withdrawn from, the module by a purely axial motion. These statements are true when both bolts are loose or tight. However, when the top bolt is tight and the bottom bolt is loose, then the MMS module is tipped enough that pure axial motion is not adequate. The solution to this problem is addressed in Section 11.2.3. The same coordinate transfer motions and control loop elements are used for the basic and MMS software.

The Supervisory control mode trajectory hierarchy has the same purpose and rationale for both MMS and basic module exchanges. However, the four levels of the hierarchy are different in detail and are as follows:

1) Total trajectories (1);

2) Trajectories (9);

3) Steps (13);

4) Actions (10).

Definitions for each level are given in Section 9.1 along with how the hierarchy is used in the Manual-Augmented control mode operations. The MMS software involves only one total trajectory as no radial module location is used. The number of trajectories has been reduced because of the fewer total trajectories even though some new trajectories were added. Four new steps have been added because of the two bolts per module situation. Two actions have been added to operate the Connector Positioner and the MST bolt drive.

The associated functions listed in Table 9.1-3 for the basic modules are also used for the MMS modules. The amount of checking performed before certain actions, especially the start from rest, has been increased to reduce the number of potential trajectory interruptions. The same form of display construction is used for both MMS and basic module exchanges to ease the operator work load when transferring between module types.

The coordinate system defined for the basic modules in Section 9.1.2 is also used for the MMS modules. However, the MMS module flip location is off the short end of the spacecraft mockup as discussed in Section 8.0.

The Supervisory control mode is similar for both of the two forms of module exchange except that for MMS modules the computer controls the connector positioner, and the MST latch and bolt drives along with the end effector. The interface mechanism drive is not used during MMS module exchanges. Also the trajectory hierarchy is different between the two modes as explained above. The equations and transformations shown in Figure 9.1-5 are also used for both module forms.

Trajectory display construction is the same for both types of modules. The specific displays are different because of the different trajectories involved, but this does not affect the display construction methodology. The MMS displays do require the use of two lines to list all of the steps for those trajectories involving module transport.

The same Manual-Augmented control mode software is used for both module forms. The written trajectory sequences that the operator follows during a demonstration are different. Also the operator will control the Connector Positioner and the Module Servicing Tool directly from their control panels.

10.1.1 System Requirements

A general block diagram of the Servicer Servo Drive Console and its interface with the computer is shown in Figure 9.1-1. The software requirements that pertain to the overall system operation and capabilities are defined in the paragraphs below.

10.1.1.1 Mode Control - The mode control requirements are:

1) Computer modes shall be primarily controlled from the computer terminal. The computer modes are operate and hold. It shall be possible to start a run from the computer terminal as well as temporarily "hold" the run, to continue the run after a "hold" and to abort the run;

2) The run "hold" may be initiated by depressing the space bar on the computer terminal or by operating the Computer Mode switch on the Servicer Control Panel to the HOLD position;

3) The control modes are: (1) Supervisory with operator assistance, (2) Supervisory without operator assistance, (3) Manual-Augmented, and (4) Manual-Direct. It shall be possible to select any one of these four modes from a menu. When operating in any one mode, it

shall be possible to enter the "hold" computer mode to end operations in that control mode and then revert to the Mode Selection Menu. When the hardware is being used, the computer shall check that the Servicer Control Panel MODE SELECT switch is in the proper position. If the Servicer Control Panel MODE SELECT switch is not in the correct position, then the computer shall remind the operator, with an appropriate display, to put the switch in the proper position;

4) The computer shall accept transferring from the Supervisory mode to the Manual-Augmented mode and back;

5) The end effector jaw drive function will be computer controlled and displayed as an action in the Supervisory mode, but will be manually controlled from the Servicer Control Panel in the Manual-Augmented mode;

6) The Module Servicing Tool latch drive and bolt drive functions will be computer controlled and displayed as an action in the Supervisory mode, but will be manually controlled from the MST Control Panel in the Manual-Augmented mode;

7) The ETU Connector Positioner drive function will be computer controlled and displayed as an action in the Supervisory mode, but will be manually controlled from the Servicer Control Panel in the Manual-Augmented control mode.

10.1.1.2 Sequencing - The sequencing requirements are:

1) The computer program shall be capable of providing a program "hold" that suspends any action in progress until released. The hold will be implemented to occur only at the end of a computation cycle;

2) Whenever the control mode has been changed from Supervisory, Manual-Augmented, or Manual-Direct and then returned to the Supervisory mode, the computer will check all joint positions for

agreement with the rest position. If they do not agree, the computer will indicate this and prevent starting a trajectory sequence until agreement is reached either by restarting the program when hardware is not present or by repositioning the ETU when hardware is present;

3) When hardware is not present, the joint angle integrators shall be reset to the rest position whenever the IOSS computer program is inititated;

4) When the hardware is present, the digital to analog converter outputs will be commanded to zero by the computer before the Servicer Servo Drive Console is turned on.

10.1.1.3 Timing - A goal for the sampling or recycle frequency of the basic program when hardware is present shall be 15 samples/sec. It is pertinent to note that a single command in the coordinate reference system used will result in multiple joints being commanded in a single cycle of the computer program. When hardware is not present, a fast integration alternative shall be used. The integration speed need not be relateable to real time, but may be paced by the computer solution speed.

10.1.1.4 General - The software shall be developed using structured programming techniques. It shall be formatted so that it is not necessary to recompile after changing constants, scale factors, or trajectory end points. The software shall contain a file of all scale factors.

Where the operator is requested to respond to a CO? or PR?, the computer shall accept any of CO, PR, or Y and continue. Any other response by the operator shall initiate a "hold".

10.1.1.5 Computer Operations - When the IOSS-MMS program is selected from the PDP 11/34 operating system by typing RUN IOSSMM and then a carriage return, it will ask for the terminal type being used. The terminal type used at MSFC is the RCA APT 4801 and the operator should respond

by typing in RCA followed by a carriage return.

In order to properly run a MMS module exchange demonstration, the MMS module status indicators must be connected into the system. This is accomplished by connecting P2 to J2A on the MMS junction box. As the IOSSMM program is started, the following prequisite action appears:

Verify that P2 is connected to J2A on the MMS junction box.

Press RETURN when complete.

Because the MMS module exchange uses a different type of module, it has its own set of module status indicators. For proper operation, the prerequisite instructions shown must be followed.

The software has been generated so that the operator can select the specific items he is interested in. The selection is performed using a set of hierarchical menus. The first menu (IOSS Main Menu - MMS) appears when the IOSSMM program has been selected. It takes the following form:

IOSS MAIN MENU - MMS

1. Run Setup Menu
2. Mode Selection Menu
3. Module Data Collection Menu
4. Hardware Calibration Menu
5. Exit to MCR

The operator selects a menu by typing in a number and a carriage return. The number 5 ends use of the IOSSMM program and returns the operator to the operating system for computer shutdown or selection of another program. The codes used for selection of each of the four IOSS programs are different and easy to remember. The four IOSS programs are:

1) IOSS - Basic Modules;

2) TESTH - Basic Modules;

3) IOSSMM - MMS Modules;

4) TESTHM - MMS Modules.

The Run Setup Menu takes the following form:

1. Operator's Name - allows entry of up to 25 characters.
2. Run Title - allows entry of up to 50 characters to describe the run to be made.
3. Run Number - allows entry of up to 10 characters.
4. Hardware Present? - allows the operator to enter a T or F (true or false) to answer the question. The default value can be selected.
5. Save Constants to Disk? - allows the operator to select if he wants to save changes in constants that are made, or just use the changed values for one run.
6. Geometry Constants Menu - allows the operator to verify or change the geometrical constants of the servicer mechanism as used in the software. The configuration cannot be changed.
7. Limit Constants Menu - allows the operator to check or change 16 limit values used in the program.
8. A/D Scale Factors Menu - allows the operator to check or change 20 analog to digital scale factors.
9. D/A Scale Factors Menu - allows the operator to check or change 15 digital to analog scale factors.
10. Joint Position Threshold Menu - allows the operator to check or change 12 joint error threshold values.
11. Simulated Hardware Characteristics Menu - allows the operator to check or change 30 characteristics of the simulated hardware. Examples are: time to latch, interface mechanism ready, and specific initial values of the mechanism cylindrical coordinates. The data in this menu can be changed to verify the operability of certain checks being made by the software.

The Mode Selection Menu contains the following items:

1. Unassisted Supervisory Mode
2. Assisted Supervisory Mode
3. Manual-Augmented Mode
4. Manual-Direct Mode
5. Return to IOSS Main Menu - MMS

The Module Data Collection Menu includes the following items:

1. Read a Spacecraft Top Bolt Location
2. Read a Spacecraft Bottom Bolt Location
3. Read a Stowage Rack Top Bolt Location
4. Read a Stowage Rack Bottom Bolt Location
5. Read a Spacecraft Top Bolt Offset Location
6. Read a Spacecraft Bottom Bolt Offset Location
7. Read a Stowage Rack Top Bolt Offset Location
8. Read a Stowage Rack Bottom Bolt Offset Location
9. Read a MST Storage Location
10. Read REST Position
11. Read Spacecraft Flip Location
12. Read Stowage Rack Iflip Location
13. Return to IOSS Main Menu - MMS

For each of the specific locations, angle data is collected and transformed to cylindrical coordinates, and the data is filed for use in the trajectory generation process. The cylindrical coordinate data is also displayed for the operator. Items 1 through 4 of the Module Data Collection Menu represent module bolt locations corresponding to both module bolts tightened. Items 5 through 8 represent offset locations used in the pseudo-combined motion technique described in Section 11.2.2. These offset locations correspond to the module bottom bolt loose and the module top bolt tight, with the socket of the MST 1/4 in. into the guiding cone and tipped to match the guiding cone angle.

The Hardware Calibration Menu includes the following items:

1. Check Spacecraft Top Bolt Location
2. Check Spacecraft Bottom Bolt Location
3. Check Stowage Rack Top Bolt Location
4. Check Stowage Rack Bottom Bolt Location
5. Check MST Storage Location
6. Return to IOSS Main Menu - MMS

For each of the items 1 through 5, the computer displays the corresponding cylindrical coordinates, and the differences between desired and actual joint angles.

10.1.2 Supervisory Trajectory Hierarchy

The purpose of the trajectory hierarchy for the Supervisory mode is to provide a logical way of combining trajectory elements so that a variety of trajectories can be formed from the elements in a systematic way. The hierarchy is used for conducting module exchange, developing displays, and for computer generation of trajectories. The hierarchy uses some of the concepts of structured software development and thus fits very well into a digital computer program. The four levels in the hierarchy are:

1) Total trajectories (1);

2) Trajectories (9);

3) Steps (13);

4) Actions (10).

Each level is constructed from elements in the level below with the action being the most basic level. A total trajectory is used for a demonstration and an example is to start with the ETU at the rest position, pick up the MST, pick up a failed module from the spacecraft,

put the failed module in a temporary location in the stowage rack, move a good module from the stowage rack to the spacecraft, move the failed module from the temporary stowage rack location to the original good module location in the stowage rack, return the MST to its storage rack, and return to the rest position. A trajectory is a portion of a total trajectory. An example is to move a module from the stowage rack to the spacecraft. Steps are sequences of actions that are used in different trajectories much as subroutines are used in software programs. An example step is flipping a module upside down so it may be readily inserted into an axial spacecraft location. The actions are the basic elements and each is associated with a degree of freedom. Three of the actions are the basic cylindrical coordinates of the end effector, three are the attitudes of the end effector, and the other three are the end effector jaw motion and the MST latch and bolt drive motions. Every total trajectory is made up of a sequence of actions. The other two levels were introduced to simplify the construction process.

The same hierarchy is used for both the unassisted and operator assisted forms of the Supervisory control mode. Trajectories are expressed in cylindrical coordinates (see Section 9.1.2). In most steps more than one action will be performed concurrently. The trajectories have been defined so that at the end of most trajectories the end effector jaws are open and there is at least three in. of separation distance between the jaws and the MST attach fitting, the MST is free of the module, or the module is free of its baseplate. This is so that if the total trajectory is stopped at the end of a trajectory, a redundant load path will generally not exist. If there is an unplanned motion while there is a load path, then the baseplate receptacles could be moved out of position and they would need to be realigned before further demonstrations could be conducted.

The four levels of the hierarchy will be discussed from the bottom up so that the method of constructing the higher levels is more meaningful.

10.1.2.1 Actions - Actions are the basic elements and each is associated with

a degree of freedom. Three of the actions are the basic cylindrical coordinates of the end effector, three are the attitudes of the end effector, and the other four are the end effector jaw motion, the connector positioner motion, and the MST latch and bolt drive motions. Actions are the first level elements and are used to form steps.

The following types of actions are used:

1) Drive x (distance along docking axis) to x command;

2) Drive r (distance from docking axis) to r command;

3) Drive Theta (central angle) to Theta command;

4) Drive Psi (end effector attitude angle about r vector) to Psi command;

5) Drive Phi (end effector attitude angle about an axis perpendicular to r and x, for axial configuration) to Phi command;

6) Drive Omega (end effector attitude angle about x axis, for axial configuration) to Omega command;

7) Operate end effector jaw drive to open or close;

8) Operate MST latch drive to latch or unlatch;

9) Operate MST bolt drive to tighten or loosen;

10) Operate connector positioner to connect or disconnect.

Other operations that are used, but that are not actions are:

1) Set commands--is used to establish the values that functions should have at the end of an action;

2) Set derivative to zero—is used to avoid driving one degree of freedom (DOF) while another DOF goes through a range where the first DOF equations change; e.g., in going from axial facing the spacecraft to axial facing the stowage rack;

3) Set derivative to normal—is used after the need for setting a derivative to zero has passed;

4) Pause—is used to provide the operator with time to verify something;

5) Operator instruction—is used to tell the operator to perform certain functions such as setting a switch on the Servicer Control Panel.

An action is complete when the error (difference between actual DOF and DOF command) becomes less than a threshold. The angle thresholds are $\pm$0.2 deg and the distance thresholds are $\pm$0.2 in. It is then permissible to go to the next step.

Situations were defined where more than one action must be performed at the same time, where it is permissible to combine actions, and where constraints on combined actions should be applied. Each of these situations has been defined and documented.

10.1.2.2 Steps - Steps are sequences of actions that are used in different trajectories much as subroutines are used in software programs. An example step is flipping a module upside down so it may be readily inserted into an axial spacecraft location. Steps are constructed of actions and are used to form trajectories.

The following types of steps are used:

1) PANDO - Position and orient end effector for next step or to rest location;

2) ATTACH - Move in and attach end effector to MST;

3) RELEAS - Release end effector from MST and move back;

4) LATCH - Insert MST and latch MST to module;

5) UNLAT - Unlatch MST and withdraw it from module;

6) FLIP - Flip module or MST from stowage rack side to spacecraft side;

7) IFLIP - Flip module or MST from spacecraft side to stowage rack side;

8) FASTN - Use MST to tighten module bolt;

9) UNFAS - Use MST to loosen module bolt;

10) TOTBO - Transfer MST from module top bolt to module bottom bolt;

11) BOTTO - Transfer MST from module bottom bolt to module top bolt;

12) MOVIN - Move module in from standoff location to top bolt ready for tightening position;

13) MOVBK - Move module back from top bolt loose (unfastened) position to standoff location.

The process of constructing each step type from the list of actions has been defined. Also the initial and final conditions of each step were defined so the need for intermediate steps could be identified when steps were formed into trajectories. An example of a step is given in Section 9.1.4.2.

10.1.2.3 Trajectories - Trajectories are portions of total trajectories. An example is to move a module from the stowage rack to the spacecraft. Trajectories are constructed from steps and the actions of PANDO and are used to construct total trajectories.

Each trajectory has a specific name. The names are constructed from the following rules:

1) Each trajectory name will be made up of 5 characters;

2) The first character denotes whether a module or the MST is present or not. E for no module or MST, M for a module and MST present, and T for MST present;

3) The second and third characters define the starting point for the trajectory:

   RE for rest position
   SX for spacecraft axial location
   TS for MST storage location
   CK for stowage rack (always axial);

4) The fourth and fifth characters define the end point for the trajectory using the same definitions as for the starting point.

Twenty trajectory types were identified in the basic module exchange work to fully define the possibilities. However, only nine are used for constructing the total MMS trajectory and they are all different from the basic module exchange trajectories. The following types of trajectories (listed in alphabetical order) are used:

1) ERETS - Move end effector only from rest position to MST storage rack axial offset location;

2) ETSRE - Move end effector only from MST storage rack axial offset location to rest position;

3) MCKCK - Move MST in from standoff location, latch MST to module at stowage rack axial location, unfasten both bolts and move module back. Move module to second stowage rack axial location, move module in, fasten both bolts, unlatch MST, and move MST back to standoff location;

4) MCKSX - Move MST in from standoff location, latch MST to module at stowage rack axial location, unfasten both bolts, move module back, and flip. Move module to spacecraft axial location, move module in, fasten both bolts, unlatch MST, and move MST back to standoff location;

5) MSXCK - Move MST in from standoff location, latch MST to module at spacecraft axial location, unfasten both bolts, move module back, inverse flip MST and module, move module to stowage rack axial location, move module in, fasten both bolts, unlatch MST, and move MST back to standoff location;

6) TCKCK - Move MST from one stowage rack axial offset location to a second stowage rack axial offset location;

7) TCKTS - Move MST from stowage rack axial offset location to MST storage rack axial offset location;

8) TSXCK - Move MST from spacecraft axial offset location to stowage rack axial offset location;

9) TTSSX - Move MST from MST storage rack axial offset location to spacecraft axial offset location.

An example trajectory is given in Section 9.1.4.3.

10.1.2.4 Total Trajectories - Total trajectories are used for demonstrations. An example for a basic module is to start with the ETU at the rest position, pick up a failed module from the spacecraft, put the failed module in a temporary location in the stowage rack, move a good module from the stowage rack to the spacecraft, move the failed module from the temporary stowage rack location to the original good module location in the stowage rack, and return to the rest position. Total trajectories are constructed from trajectories. The following type of total trajectory is used for MMS module exchange:

1) Axial total trajectory.

The process of constructing total trajectories from trajectories was defined. The process is particularly easy because of the manner used to define trajectories. It is not necessary to define specific initial and final conditions as all total trajectories start and end at the rest position.

The MMS axial total trajectory involves the replacement of a failed module that is initially in a spacecraft axial location. The sequence of trajectories is:

ERETS - TTSSX - MSXCK - TCKCK - MCKSX - TSXCK - MCKCK - TCKTS - ETSRE.

10.1.3 Supervisory Operations and Displays

The Supervisory operations and displays for MMS module exchange follow the same pattern as for basic module exchange as described in Section 9.1.5. Detail differences are identified in this section.

The general order of performing a module exchange demonstration is:

1) Initialize the simulation;

2) Initialize the selected total trajectory;

3) Exchange the modules;

4) Shut the simulation down.

The MMS simulation initialization is similar to the basic module exchange initialization of Section 9.1.5.1. However, the IOSSMM program is called, the computer sets the D/A converter commands for zero output, and the MST initial conditions are also checked in the MMS procedure. The SCP panel switch positions are similar for both types of demonstrations.

It is necessary to check that the MST is ready for use. Checks are made for the MST being installed in its storage rack and that the SCP MST Storage Status PRESENT lamp is ON. For the MST Electronics Box, it is verified that:

1) POWER switch is ON;

2) POWER LAMP is ON;

3) 28V LAMP is ON;

4) 10V LAMP is ON;

5) 0-10V LAMP is ON;

6) 0-32V LAMP is ON.

For the MST Control Panel, it is verified that:

1) POWER switch is ON;

2) POWER LAMP is ON;

3) All eight LED's come ON when LAMP TEST button is pressed;

4) FUNCTION SELECT switch is OFF;

5) FUNCTION EXECUTE switch is OFF;

6) READY TO LATCH LED is ON;

7) UNLATCHED LED is OFF;

8) LATCHED LED is ON;

9) TURNS INDEX LED may be ON or OFF.

The process of total trajectory initialization is somewhat different for MMS module exchange and is outlined in Table 10.1-1. As with the basic module software, this part of the activity is computer menu driven. The operator needs only to follow the prompts given and to make selections appropriate to the demonstrations he wants to conduct. However, the MMS software makes a more extensive set of checks as indicated in Step 8. of the table.

Table 10.1-1 Total Trajectory Initialization

Step No.	Action
1.	Select Unassisted or Assisted Supervisory Mode
2.	The computer will display the Supervisory Mode Menu
3.	Use of the Module Location Switch Correspondence and its associated menu will permit the operator to remind himself of the correspondence between the SCP Module Location switch positions and the module bolt designations
4.	Turn servo power ON
5.	Place SCP Computer Mode switch to OPERATE
6.	Tell program to perform axial total trajectory
7.	Computer checks that ETU is in rest position
8.	Computer checks that modules are in their proper positions, that the stowage rack temporary location is empty, that the end effector jaws are open, that the connector positioner is in the disconnected position, that the MST latches are latched, and that the MST is in its storage rack
9.	Computer starts trajectory sequence

The shut-down procedure for an MMS module exchange demonstration is a little simpler than that for the basic module exchange and is shown in Table 10.1-2. The hold and abort processes are similar for both the basic and MMS module exchange demonstrations. These processes are described in Section 9.1.5.3.

Table 10.1-2 Shut-Down Procedure

Step No.	Action
1.	End module exchange by operating SCP Computer Mode switch to HOLD or by operating space bar on computer terminal
2.	Computer will cause a small auxiliary display to appear
3.	Operator types in a 10 and carriage return to return to Mode Selection Menu
4.	Select Manual-Direct mode on SCP
5.	Verify that ETU is in rest position and MST is latched in its storage rack
6.	Configure Servo Drive Panel switches for shut down
7.	Turn servo power off
8.	Turn master power off
9.	Operate key 5 and carriage return to return to IOSS Main Menu - MMS
10.	Operate key 5 and carriage return to exit from IOSSMM program
11.	Log off by entering BYE and carriage return
12.	Turn computer off

10.1.4 Interface Definition

A complete definition of all signals between the MMS software in the computer and the Servicer Servo Drive Console of the Engineering Test Unit was made. A separate computer program, called TESTHM, was written to assist in checking out these interfaces. TESTHM provides the following functions:

1) An ability to select and send commands on each of the digital to analog channels;

2) An ability to read each status signal from the analog to digital converter. These signals are displayed in octal notation. Most of the signals are also converted to engineering units or true/false statements, as appropriate;

3) An ability to command the servicer mechanism to move along one cylindrical coordinate at a time at a selectable rate. This function is very useful during system calibration and for positioning the end effector during module location data collection.

The signals from the computer that pass through the digital to analog converter are:

1) Joint rate commands (6);

2) Error meter commands (6);

3) End effector jaw drive commands;

4) Connector positioner drive commands;

5) MST latch motor drive commands;

6) MST bolt motor drive commands.

The signals to the computer that pass through the analog to digital converter are:

1) Joint position feedback (6);

2) Hand controller commands (3);

3) Rate level selection (1);

4) Computer mode selection;

5) Control mode selection;

6) Module receptacle status (6);

7) End effector jaw status;

8) Module servicing tool status;

9) Module servicing tool presence;

10) Connector positioner status.

10.2 SOFTWARE PREPARATION

The MMS module servicer control software was based initially on the basic module servicer control software and the servicer software requirements document for MMS module exchange. The basic module software (IOSS and TESTH) was first copied to a new disk. The inappropriate routines were stripped out, new routines were added, and other routines were modified. All of the new software was operated on the PDP 11/34 computer at Denver using the simulated hardware mode and was carefully checked against the software requirements to the extent possible. Software for MMS module exchange is identified as IOSSMM and the test software as TESTHM.

10.2.1 Software Development

The MMS module software was developed on the same machine at Martin Marietta as was used for basic module software development. The software can be used with Versions 3.2 or 4.0 of the RSX-11M operating system and Versions 4.0 or 5.0 of the Fortran F77 compiler. The software is written entirely in Fortran and involves almost 6000 lines of code in 87 routines. The software is organized in the same way for both programs (see Section 9.2.1).

The software structure involves source files, object files, task files, command files, overlay descriptor files, data files, and the various commands needed to compile, link, and execute. The software is broken up into different source files because it is easier to edit small files and it is easier to move the different object file names within the task builder file to create useable overlays. There may be more than one routine inside a source file. But the file name will reflect the

purpose of all the different routines. An example is SCRUTL.FTN. This file contains several routines that deal with SCReen UTiLities.

Compilation of software is done on a file by file basis. So for each source file, there will be one object file. A compilation can take many source files and create one object file, but we don't do this because of the overlay scheme. A simple compilation command such as 'F77 SCRUTL=SCRUTL' will only create the object file SCRUTL.OBJ and any error messages will be listed to the terminal. A compilation command file F77.CMD allows the user to compile all the IOSSMM program source. It is invoked by typing F77 @F77. It is stopped by typing ABO F77.

Task building involves a task build command file (IOSSMM.TKB) and a task build overlay descriptor file (IOSSMM.ODL). The task build command file is rather simple. But the overlay descriptor file is complex. Significant rearranging was done to create working overlays and even now they are very large (almost to the 32K limit). Unfortunately, not much expansion is available. The task builder is started, using the command files, by issuing the MCR command TKB @IOSSMM. This approach assumes that the machine has a floating point processor.

The software was prepared in Denver using the available PDP 11/34. Provisions are included for simulating various hardware functions such as joint rate integration and hardware switch positions. Extensive checks of trajectories, displays, inhibit logic, equations, and auxiliary functions were made before the software was taken to MSFC. The software was put onto magnetic tape for the transfer. It was then read off the tape and put on a disk at MSFC. Various tests and calibrations of the hardware to software interfaces were made before any attempt was made to drive the hardware. See Section 11.2 for a discussion of the hardware demonstrations.

10.2.2 Software User's Manual

The Software User's Manual provides a means of understanding the structure of the IOSS-MMS (referred to therein as IOSSMM) software.

Included is a complete description of the software, which represents over six thousand lines of executable code in 87 routines. The document has a hierarchical breakdown of these routines that are completely cross-referenced. The manual also explains the installation procedure and how to run the software.

The first chapter covers installation and execution of the IOSSMM software. The second chapter is a small one that describes the relationship between the different types of files. The third chapter presents the highest level of source description in the form of software module hierarchy. The fourth chapter presents an intermediate level of source description in block diagram form. The fifth chapter presents the most detail in the form of listings of the individual subroutines.

10.2.2.1 Installation - This section covers the installation of the IOSSMM software. The software was shipped from Martin Marietta Aerospace, Denver, CO on 1/2 inch magnetic tape in a BRU (Backup and Restore Utility) format. The IOSSMM software resides in directory [101,1]. The software is restored first. Once the software is on the disk, it is compiled to create the object files (*.OBJ). After the compilation, the IOSSMM task is built. The task builder uses two files. The first is the command file, IOSSMM.CMD. The second file is IOSSMM.ODL and describes the overlay structure. Once the task build is complete, the presence of the IOSSMM.TSK and IOSSMM.MAP files is checked. The file IOSSMM.TSK is the executable load module and the file IOSSMM.MAP is a map of the load module.

10.2.2.2 Running the IOSSMM Software - The IOSSMM software can be run from any directory with one restriction. The software has to be executed where the data files exist. These data files all have suffixes that end in .DAT and are ASCII files that can be edited. It is not recommended that they be edited directly, rather there is a procedure described in the Software User's Manual that allows them to be updated in a simpler manner.

10.2.2.3 Starting the IOSSMM Program from MCR - The IOSSMM software is run from the directory containing the data files. If the data files are not present, errors will result and the program will exit smoothly to a higher level. The IOSSMM program is started from the UFD [101,1] directory, by issuing the following MCR command:

RUN IOSSMM.

The IOSSMM program then asks the following question:

Terminal Type (VT52, RCA, Simple)?

The user responds with the type of terminal he is working with. The default is selected by simply pressing RETURN and is currently the RCA terminal type. The simple terminal is used only for creating hardcopies of the various menus and is not capable of copying the Supervisory or Manual displays. Then the mode of the terminal is changed to the slave mode. This change is normally invisible to the user. But if the program aborts before a normal completion, the computer will not respond to a terminal input. Next, the various constants are read from a disk file (CONSTS.DAT). The most recent version (the one with the highest version number) is read from disk. If this file does not exist in the current UFD, the program will abort.

The next step in the initialization process is to read the module locations from the disk. Again, only the most recent versions are read and the files need to be in the current UFD. The data files are named SC1.DAT, SC2.DAT, SC3.DAT, SC4.DAT, SR1.DAT, SR2.DAT, SR3.DAT, SR4.DAT, SR5.DAT, SR6.DAT, SR7.DAT, SR8.DAT, MS1.DAT, REST.DAT, FLIP.DAT, and IFLIP.DAT. The name of each data file is printed to the terminal before it is read. Once the data files are finished being read, the screen is cleared immediately and the following message appears:

Prerequisite to IOSS Main Menu - MMS;
Verify that P2 is connected to J2A on the MMS junction box;
Press RETURN when complete.

Once the operator has performed the verification and pressed the RETURN key, the IOSS Main Menu - MMS is displayed.

10.2.2.4 IOSS Main Menu - MMS - The IOSS Main Menu - MMS is the highest menu in the hierarchy of menus and it looks like the following:

```
IOSS MAIN MENU - MMS

1.  Run Setup Menu;
2.  Mode Selection Menu;
3.  Module Data Collection Menu;
4.  Hardware Calibration Menu;
5.  Exit to MCR.
Enter Item Number:
```

Selection of Item 5 returns the user to the operating system. This item is employed when the user is finished using the IOSSMM program.

10.2.2.5 Run Setup Menu - The Run Setup Menu is used primarily to set up a new run. It is also used to access the various constants. The menu looks like the following:

```
RUN SETUP MENU

1.  Operator's Name          John Doe
2.  Run Title                A Test Run
3.  Run Number               1
4.  Hardware Present?        T
5.  Save Constants to Disk
6.  Geometry Constants Menu
7.  Limit Constants Menu
8.  A/D Scale Factors Menu
9.  D/A Scale Factors Menu
10. Joint Position Threshold Menu
11. Simulated Hardware Characteristics Menu
12. Return to IOSS Main Menu - MMS
Enter Item Number:
```

The data in this menu or in the listed next level menus can be changed by following the prompts that are provided. When an item is changed, the screen is rewritten to show the new data. The MMS simulated hardware characteristics menu is more extensive than the related menu in the basic module software because of the larger number of statused elements and to simplify simulated hardware operations.

10.2.2.6 Mode Selection Menu - This menu allows the user to select one of the four operating modes. The Mode Selection menu is:

MODE SELECTION MENU

1. Unassisted Supervisory Mode;
2. Assisted Supervisory Mode;
3. Manual-Augmented Mode;
4. Manual-Direct Mode;
5. Return to IOSS Main Menu - MMS.

Enter Item Number:

Selection of Item 1 calls up the Unassisted Supervisory Mode menu. From this menu, the total trajectory will run unassisted, as explained in the Supervisory unassisted mode section. Selection of Item 2 calls up the Assisted Supervisory Mode menu. From this menu, a total trajectory will run only with assistance, as explained in the Assisted Supervisory mode section.

Selection of Item 3 starts the Manual-Augmented mode. Several items are displayed (operator's name, time, and date) and then the Manual-Augmented mode equations are executed in a 15 Hz loop. The operator can then drive the ETU using the hand controllers. The software also checks for a keypress or the computer mode switch to leave the Manual-Augmented position. Once either of these actions happen, the computer will print a display of pertinent parameters and then give the user the option to continue or leave the Manual-Augmented mode.

Selection of Item 4 displays the operator's name, the time, and date. Then the software starts cycling in a 15 Hz loop waiting for a key-press or the computer mode switch to leave the Manual-Direct position. Once either of these actions happen, the computer will print the ending and elapsed time and then exit. Selection of Item 5 returns the user to the previous menu.

10.2.2.7 Supervisory Mode - Selection of Item 1 from the mode selection menu calls up the Supervisory mode menu for unassisted operation. The Unassisted Supervisory mode menu is:

UNASSISTED SUPERVISORY MODE MENU

1. Module Location Switch Correspondence Menu
   Turn Servo Power On
   Put SCP Computer Mode Switch to Operate
2. Perform Axial Total Trajectory
3. Return to Mode Selection Menu

Enter Item Number:

The text between Items 1 and 2 informs the operator to turn the servo power on and set the computer mode switch to operate. If the computer mode switch is not in operate, an immediate hold will be generated when the total trajectory starts.

The Assisted Supervisory Mode menu looks and acts like the unassisted menu, except the title has "assisted" in it. The differences are very evident when a total trajectory is running.

Selection of Item 2 starts the total trajectory. For a complete description of the total trajectory, consult Chapters 7, 8, and 9 of the Servicer Simulation Software Requirements (MMS Modules) document. Various checks are performed at the very beginning of the total trajectory. These checks include the following: making sure the arm is at rest; checking that the mode switch is in operate; checking that the MMS modules are in their proper positions; and checking that the

MST Presence, Jaw Open, and Connector Positioner disconnected signals are present.

If the total trajectory is being run assisted, then the operator has to tell the computer to perform the next step. The computer will pause at the beginning of each action and wait for a PR, a CO, or a Y to continue with the action. If the user responds with something other than PR, CO, or Y, he will generate a hold command with the effects described below. Hold commands are generated in both assisted and unassisted modes and can be generated by the operator in the following ways:

1) Answers with other than a CO, PR, or Y to an assisted mode prompt;

2) Presses a key while a movement action is executing;

3) Moves the computer mode switch to HOLD while a movement action is executing.

Hold commands can be generated by the computer in the following ways:

1) Jaw open or close exceeds 15 seconds;

2) MST latch or unlatch exceeds 6 seconds;

3) CP connect or disconnect exceeds 4 seconds;

4) Bolt fasten or unfasten exceeds 28 seconds;

5) Ready signals from MST latch, jaw, CP, and MST bolt drive mechanisms not correct.

Once a hold command is generated, all joint rates are zeroed, the latch mechanism is stopped and jaw movement is stopped. Then a hold menu is displayed on the right side of the screen (leaving the Supervisory display untouched). This hold menu is:

Display Parameters

(The Supervisory display would appear here.)

1. Cyl. Cmd.
2. Jnt. Rate
3. Err. Mtr.
4. Jnt. Pos.
5. Cyl. Pos.
6. Cyl. Err.
7. Cyl. Rate
8. Jnt. Cmd.
9. Continue
10. Abort

Item:

Hold Due to (A hold message would appear here.)

Selection of one of Items 1 through 8 will result in the display of different sets of parameters and their respective values. After displaying the different parameters and the respective values, the computer will prompt the user to press return to get back to the hold menu. Selection of Item 9 erases the hold display menu and continues the total trajectory from where it stopped. Selection of Item 10 will abort the total trajectory and leave the arm at its current position. The operator will be returned to the Supervisory mode menu (the previous one) and from there he probably will go to a manual mode and drive the arm to the rest position.

10.2.2.8 Software Module Hierarchy - The MMS software module hierarchy is similar to the basic module software hierarchy except that MPSEQ is no longer needed and the routines under TTRAJS are different. The MMS software levels beneath TTRAJS are:

TTRAJS	1 Total Trajectory
TRAJS	9 Trajectories
STEPS	13 Steps
SUPMOT	Supervisory Motion Loop

11.0 SERVICER 1-g DEMONSTRATIONS

The objective of this activity was to demonstrate on the ground the capability to exchange failed modules from a spacecraft with good modules from a stowage rack. The exchange (at separate times) of both basic, 24 in. cube, modules and MMS, 48 in. square by 20.5 in. deep, modules were to be demonstrated. In addition, the ability to control the system in the Supervisory mode with operator inputs between actions, the Supervisory mode with minimal operator action, and the Manual-Augmented mode was to be demonstrated. The demonstrations were conducted in the Robotics Laboratory in Building 4619 at Marshall Space Flight Center and primarily used MSFC equipment. The MMS module exchange equipment was new, of which the MMS modules, the MMS spacecraft and storage rack modifications, the connector positioner, the optical targets, the MST storage rack and certain wiring were prepared by Martin Marietta, the 1-g Module Servicing Tool was provided by GSFC, and the MST electronics were prepared by Fairchild Space Company. MSFC developed the electrical interconnections between the A/D and D/A converters and the Servicer Servo Drive Console.

The servicer/MMS mockup equipment for Change Order 3, produced by Martin Marietta, was shipped to MSFC and was received in good condition. The existing spacecraft mockup at MSFC was reworked to accept the MMS mockup and was repaired and painted to improve its appearance. The MMS spacecraft mockup was installed and aligned. The existing stowage rack mockup equipment was rearranged and modified so that the MMS mockup equipment could be installed. Changes were made to the Engineering Test Unit (ETU) and Servicer Servo Drive Console (SSDC) electrical wiring to facilitate operation of the new MMS mockup equipment, the connector positioner, and the 1-g Module Servicing Tool.

All installation, integration and alignment activities for the new equipment were successfully accomplished. This effort included the integration of the 1-g Module Servicing Tool, delivered by GSFC and Fairchild Space Company, with the MMS mockup equipment, as well as the

ORIGINAL PAGE IS
OF POOR QUALITY

installation of the connector positioner mechanism on the ETU end effector and its alignment with the MST. The new ETU configuration for ground demonstration of basic and MMS module exchange is shown in Figure 11-1.

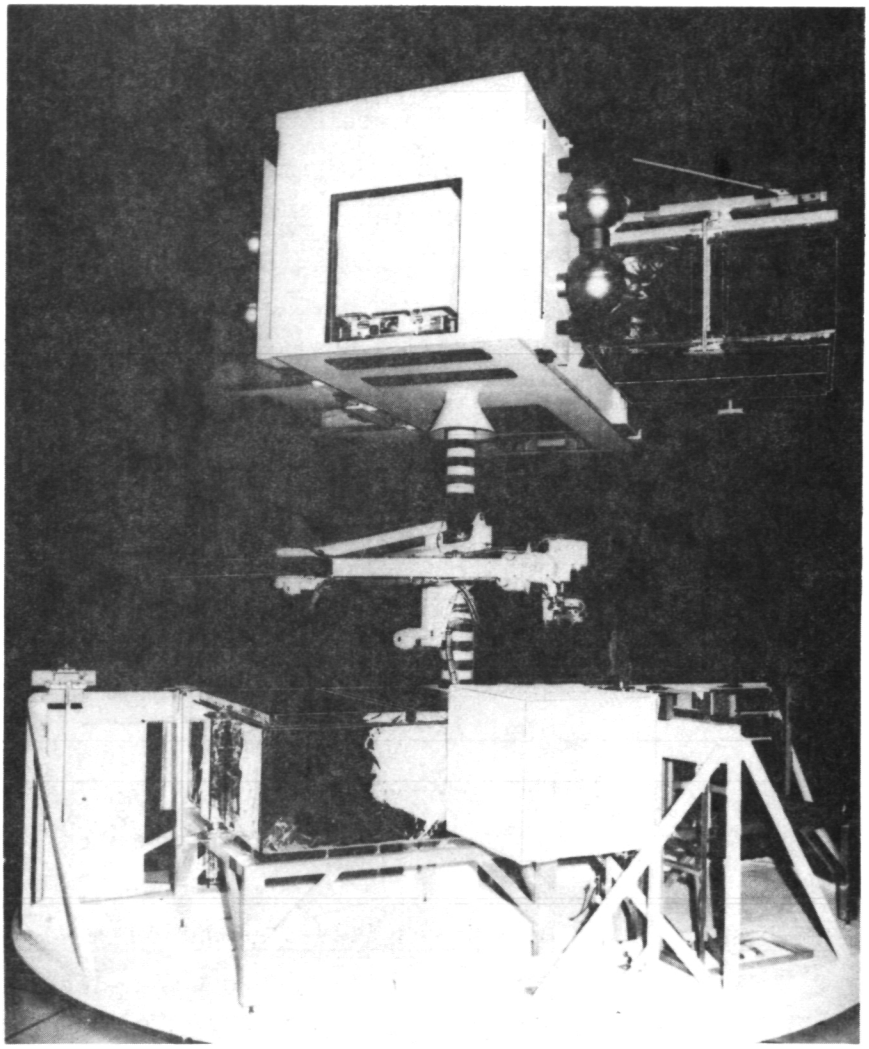

Figure 11-1 ETU Configuration for Demonstration of Basic and MMS Module Exchange

The cooperation and assistance of MSFC personnel, in particular the Contract Technical Manager, Mr. James Turner and Messrs. Tom Bryan and Don Scott of the Robotics Laboratory, in obtaining needed materials and performing the above work was very helpful and is greatly appreciated.

The general demonstration block diagram is shown in Figure 9-2 and is discussed in Section 9.0. The specifics for the MMS demonstration equipment design and fabrication are discussed in Section 8.0. All of the equipment was located in one room with the consoles being about 15 ft from the stowage rack mockup and arranged so that the operator had to turn his head away from the displays to see the mockup equipment. This arrangement was very convenient for the checkout activity. The operator's console was arranged as shown in Figure 11-2. The control and display equipment was arranged around the Servicer Servo Drive Console. No attempt was made to develop an optimum control equipment arrangement. The RCA APT 4801 computer terminal was placed on the desk shelf of the SSDC. The computer display was placed on top of the SSDC alongside the monitor for the servicer end effector TV camera. The hand controller was mounted on a stand and placed next to the SSDC. The MST control panel was mounted above the two CRTs and the MST electronics were mounted in a remotely located electronics rack. The resulting arrangement was satisfactory for the checkout and demonstration activities.

11.1 BASIC MODULE EXCHANGE DEMONSTRATION

The basic module exchange demonstration activity was accomplished in three phases: 1) the software was installed on the MSFC computer and checked that it would go through exchanges in the simulated hardware mode; 2) interfaces between the software and the SSDC were checked using the TESTH program, the ETU scale factors were established, and the module locations were measured and data stored in the computer; and 3) basic module exchanges were demonstrated. MSFC personnel were involved in each phase to enable them to become familiar with use of the software and to receive some hands-on training.

11.1.1 Basic Module Software Installation

The software was restored from a magnetic tape prepared at Martin Marietta to a disk at MSFC on the PDP-11/34 system in the computer room. The disk was then moved to the PDP-11/34 that is interfaced to

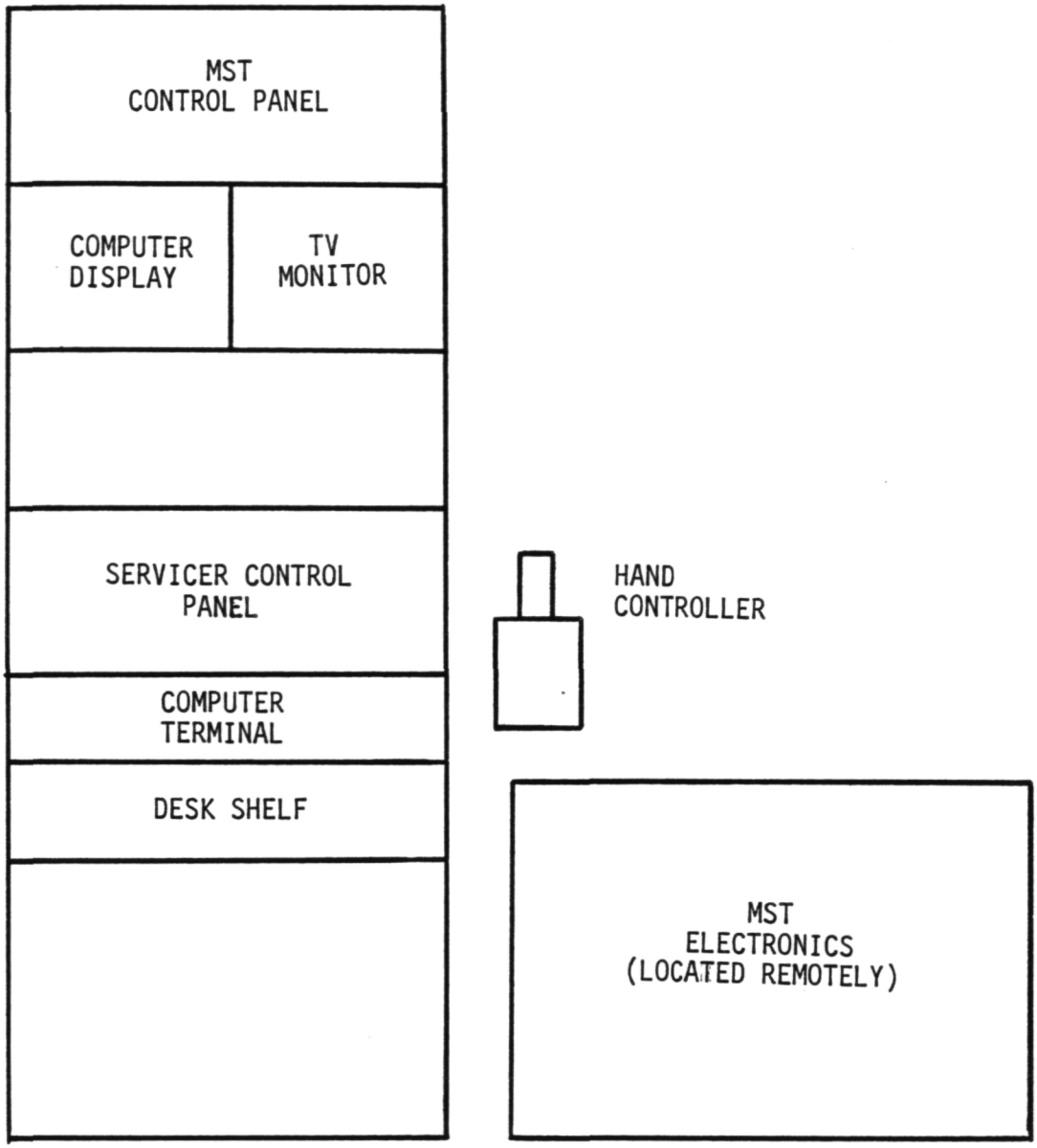

Figure 11-2 Operator's Console Arrangement

the ETU. Both the source and executable files were restored from the tape. This operation involved close cooperation between contractor and NASA personnel, and enabled MSFC personnel to become familiar with the delivered software.

The first attempts to install the software were unsuccessful because of a hidden privilege restriction. It was also decided that the program

was too large to be effectively checked out using one disk. This was particularly difficult when the range of applications programs were considered. Thus MSFC personnel arranged for a second disk and a version of the RSX-11M operating system that could handle one disk for the operating system and a separate disk for the applications programs. It was necessary to modify the software slightly so that it would run on the later versions of the operating system and F77 compiler.

11.1.2 Basic Module Control System Checkout

The basic module control system checkout involved checking and modifying equipment alignment to vertical, A/D and D/A functions, and ETU joint scale factors and zeros, setting module status indicators, collecting module location data, and improving software logic and Manual-Augmented control mode operations.

Hardware equipment alignment was checked using the direction of gravity, as indicated by an accurate level, as a reference direction. The verticality of the docking post, mechanism forearm perpendicular, and all four interface mechanisms was checked and adjusted where necessary. A 0.060 in. shim was installed between the end effector base and the interface mechanism alignment cone to increase the positional repeatability of this interface alignment.

The zeros and scale factors for each of the ETU joint feedback indicators were checked. The SSDC voltmeter reading to angle data was checked first and then the software to SSDC voltmeter calibration was checked. Errors were found and corrected. Variations in the precision $\pm$10 Vdc power supply were tracked and found to vary with room temperature. The variations were within allowances.

The module locations were set and marked with pencil so the modules could be easily returned to their desired locations.

The end effector TV camera lens was adjusted so that a good picture was available over the desired range of travel. It was found necessary to

increase the width of the lines making up the Manual-Augmented targets to 0.1 in., because of TV system degradation. New targets were made for each of the four module locations used during the demonstrations. These targets were aligned with respect to the interface mechanisms by a template.

Operation of the 12 module location switches and the three end effector switches was checked and switch operating points were reset. The electronic interface logic that converted status indications to voltages was reworked to provide better separation of the voltages for repeatable software conversion of the voltages to status indications in the computer.

All of the analog-to-digital and digital-to-analog functions were checked for agreement with the software requirements document.

The logic and circuitry that converted end effector and interface mechanism drive signals from the computer to polarized 28 Vdc power to the motors was revised to give priority to the control panel switch commands and to enable the computer generated commands only when the control mode switch was set to Supervisory. The objective of this revision was to decrease the likelihood of unexpected signals and to provide a method of overriding unexpected signals.

Data was collected for each of four module locations and was verified for the rest, flip initial and final, and transition initial and final positions. The flip location was moved a little to provide better clearance from the good module. This same type of data was collected for use in the Manual-Augmented trajectory sequences.

The system was operated in the assisted and unassisted Supervisory control mode to identify potential improvements. Some step end points were adjusted to provide smoother transfers between steps. The standoff distance at the end of each trajectory was increased to 3.0 in. from 2.0 in. to provide better clearance during the combined motions of some end effector only trajectories.

A new logic was developed for driving x and r during the interface mechanism latch and unlatch motions. The required x and r motions are very non-linear with time because of the cam shape. The variation in drive motor speed with load also increased the uncertainty. The interface mechanism linkages were disassembled, cleaned, greased, and reassembled to obtain more consistent operation. The newly developed logic worked very well.

The trajectories used when inserting a module in the radial location were revised to provide a higher command trajectory. This additional commanded height compensated for a twist in the servicer mechanism that allowed the tip of the interface mechanism to sag below the guide capture volume. The cardboard representation of one module was replaced by a space frame so that both modules would have the same appearance and weight. Removable fabric covers were made and were used during motion picture filming so the modules were more visible.

The above checkout activities were conducted before the MMS equipment was installed. Subsequent to the installation of the MMS equipment, two other changes were made. The flip location was moved again so there would be adequate clearance with the MMS temporary module location in the stowage rack. Also, the good and temporary stowage rack locations of the basic modules were moved as described in Section 8.0. Data were collected for all four basic module locations. This demonstrated the usefulness of the new module location data collection technique. The post-MMS installation locations of the basic modules in the stowage rack resulted in slightly shorter module exchange times (approximately 15 min) for the axial and radial total trajectories.

The system was operated in the Manual-Augmented control mode and a number of improvements and corrections were identified. The trajectory sequences were rewritten to incorporate the use of one hand controller instead of the two that had been expected and to reflect the use of a different ranging method.

It was determined that the size variation of the targets near the standoff, attach, and unlatched positions was such that stadiametric

ranging could be used. The initial plan was to set values on the shoulder pitch (or elbow roll for radial) angle set potentiometer and then use the error meter to indicate the proper range. This method was found to be cumbersome and distracted the operator from watching the TV monitor. The stadiametric ranging method put the range data directly on the TV monitor. A set of inner marks (at target width) was used to define the 3.0 in. standoff distance and a set of outer marks (at target width) was used to define the attached location. The unlatched position is half way between the two sets of marks. This approach worked quite well. The Manual-Augmented trajectory sequence documentation was revised to incorporate the stadiametric ranging approach.

The target motion directions, in end effector TV coordinates, were checked against hand controller motion directions for a variety of end effector attitudes. After switching polarity on two lines, all motion direction correspondences were correct.

The initial approach for the display to cylindrical coordinate transformation used in the Manual-Augmented control mode was to base this transformation on wrist roll angle variation for both axial and radial motions. However, it was found better to base the transformation on wrist roll for axial motions and on wrist pitch for radial motions. During radial motions wrist roll is kept constant and wrist pitch is varied. Thus, the new approach provided a more useful transformation.

The trajectory sequences were modified in some details to strengthen the philosophy of using the Hawk mode for large motions where the targets are not in the end effector camera field of view and using the video system when the target is in the field of view. Initial hand controller motion direction information was provided in the written trajectory sequences at the beginning of each large motion so the motion would start in the proper direction. These instructions were found to be very useful as it is difficult for the operator to visualize himself as being at the end effector camera when he can easily turn and look at the entire mockup.

A draft version of the Manual-Augmented Trajectory Sequences (Basic Modules) document was prepared for use during the preliminary checkout. It was modified as the preliminary runs were made and the changes discussed above were investigated. Also specific module location data was collected and refined for use in a set of representative trajectory sequence forms. These representative trajectory sequences could then be used by MSFC personnel for conducting demonstrations. The Manual-Augmented Trajectory Sequences document was then updated and distributed.

11.1.3 Basic Module Demonstrations

Demonstrations of basic module exchange in all three control modes and for radial and axial exchanges were successfully accomplished a number of times. The specific combinations of exchanges and control modes are shown in Table 11.1-1.

There was no need to perform the axial-to-radial or radial-to-axial total trajectories in the Manual-Augmented mode as these trajectories were only provided to simplify going between axial and radial demonstrations.

Table 11.1-1 Basic Module Demonstrations

Control Mode	Total Trajectory			
	Axial	Radial	Axial to Radial	Radial to Axial
Supervisory Assisted	X	X	X	X
Supervisory Unassisted	X	X	X	X
Manual-Augmented	X	X		

The trajectories of Table 11.1-1 were repeated a number of times with MSFC or Martin Marietta personnel at the controls. Each operator quickly learned to perform the trajectories with the two Supervisory control modes. These trajectories were very smooth. In many cases the interface mechanisms would not touch the guides until they were almost fully in place. An unassisted Supervisory mode axial or radial total trajectory takes approximately 15 minutes. Each operator felt that the form of display was very helpful in keeping track of where he was in what is a moderately complex activity.

The primary basic module demonstrations were conducted before rework of the mockups for integration of the MMS equipment. Subsequent to the mockup rework, data were collected on the revised basic module locations and all four trajectories were repeated in the Supervisory mode without operator assistance.

After less than one hour of training, each operator could easily do major motions in the Manual-Augmented mode and could insert and withdraw modules in the guides. However, more practice will be required for any operator to smoothly and efficiently perform module exchanges using the Manual-Augmented mode. The need for this practice had been expected.

A set of overall start-up and shut-down procedures were prepared for, and provided to, MSFC personnel. These procedures primarily related to the PDP-11/34 computer and its peripherals. The details of operating the software, Engineering Test Unit, and Servicer Servo Drive Console were provided in other documentation (see Introduction to Section 9.0).

11.2 MMS MODULE EXCHANGE DEMONSTRATION

The MMS module exchange demonstration activity started with the installation of the Change Order 3 MMS mockup equipment, the modification and refurbishment of the existing Engineering Test Unit, and the integration of the GSFC and Fairchild Space Company supplied MST equipment with the ETU. The software related activities were

performed in the same three phases used for the basic module exchange demonstrations - equipment and software installation, checkout of interfaces between software and hardware along with preliminary operations, and module exchange demonstrations. MSFC personnel were involved in each phase. The demonstration setup description for MMS module exchange is similar to that used for basic module exchange and is given in the introduction to this section (11.0) of the final report.

11.2.1 MMS Module Exchange Equipment Installation and Checkout

The servicer/MMS demonstration mechanical and electrical equipment for MMS module exchange (per Change Order 3) that was shipped to Marshall Space Flight Center by Martin Marietta is listed in Table 11.2-1.

Table 11.2-1 MMS Module Exchange Equipment

Item	Serial No.	Part Number	Quantity
- MMS Module Mockup	01 and 02	RES4100000-009	2 units
- MMS Spacecraft Mockup	01	RES4200000-009	1 unit
- MMS Stowage Rack Support with Receptacle	01	RES4300000-009	1 unit
- MMS Stowage Rack Support	02	RES4300000-029	1 unit
- MMS Target Assembly	--	RES4600000-009	6 units
- MMS Target Assembly for MST Rack	--	RES4600000-019	1 unit
- Connector Positioner	--	RES4400000-009	1 unit
- MST Rack	--	RES4500000-009	1 unit
- SCP Front Panel Mod.	--	RES3159485	1 unit
- MMS J-Box	--	RES3159950	1 unit
- Cable Assembly	--	RES4700210	1 unit
- Cable Assembly	--	RES4700220	1 unit
- Cable Assembly	--	RES4700310	1 unit
- Cable Assembly	--	RES4700320	1 unit
- Cable Assembly	--	RES4700330	1 unit
- Cable Assembly	--	RES4700340	1 unit
- Cable Assembly	--	RES4700400	1 unit
- Cable Assembly	--	RES4700500	1 unit
- Cable Assembly	--	RES4700820	1 unit
- ETU J-Box Mod. (J44, J45, J46)	--	--	1 unit

The electrical equipment consisted of the cables, junction box, and control panel kit required for the ETU and SSDC modification for MMS servicing demonstrations. Included in the shipment was a repair or maintenance kit comprised of materials and spares that might have been necessary had any damage occurred during transportation or installation. All the equipment arrived in good condition at MSFC.

The MMS demonstration mechanical and electrical equipment was installed and checked out at MSFC. The equipment was first unpacked and inspected in the Robotics Laboratory area of MSFC. Materials and tools were prepared for ETU modification and repair and for MMS demonstration equipment installation. The majority of the necessary tools and materials, other than those in our shipment, were provided by MSFC.

The stowage rack mockup was dismantled and removed to gain access to the spacecraft mockup, servicer arm, and control cables. The existing boxes on the front face of the spacecraft mockup as well as its front, bottom, and end panels were then removed. The spacecraft mockup structure was reinforced using 2 x 4 wooden beams and metal brackets.

The existing 1/8 in. thick panels of the spacecraft mockup, covering the front, bottom, and end (radial module location), were replaced by new panels made of 1/4 in. masonite. The new panels were painted white and the corners were covered with white aluminum angle. The MMS spacecraft mockup was then installed on the front panel and the module interface frame was adjusted and leveled (see Figure 11-3). Three non-functional module mockups were installed on the face of the ETU spacecraft mockup that received the MMS module interface. White stripes of vinyl tape were applied to the black docking post mockup so that the docking post would stand out better.

The MMS equipment status and control cables were installed on the spacecraft mockup and along the servicer arm. The MMS junction box was installed on top of the existing ETU junction box under a floor panel and the module bolt status cables were connected. Connection modifications on the existing ETU junction box and Servicer Servo Drive

ORIGINAL PAGE IS
OF POOR QUALITY

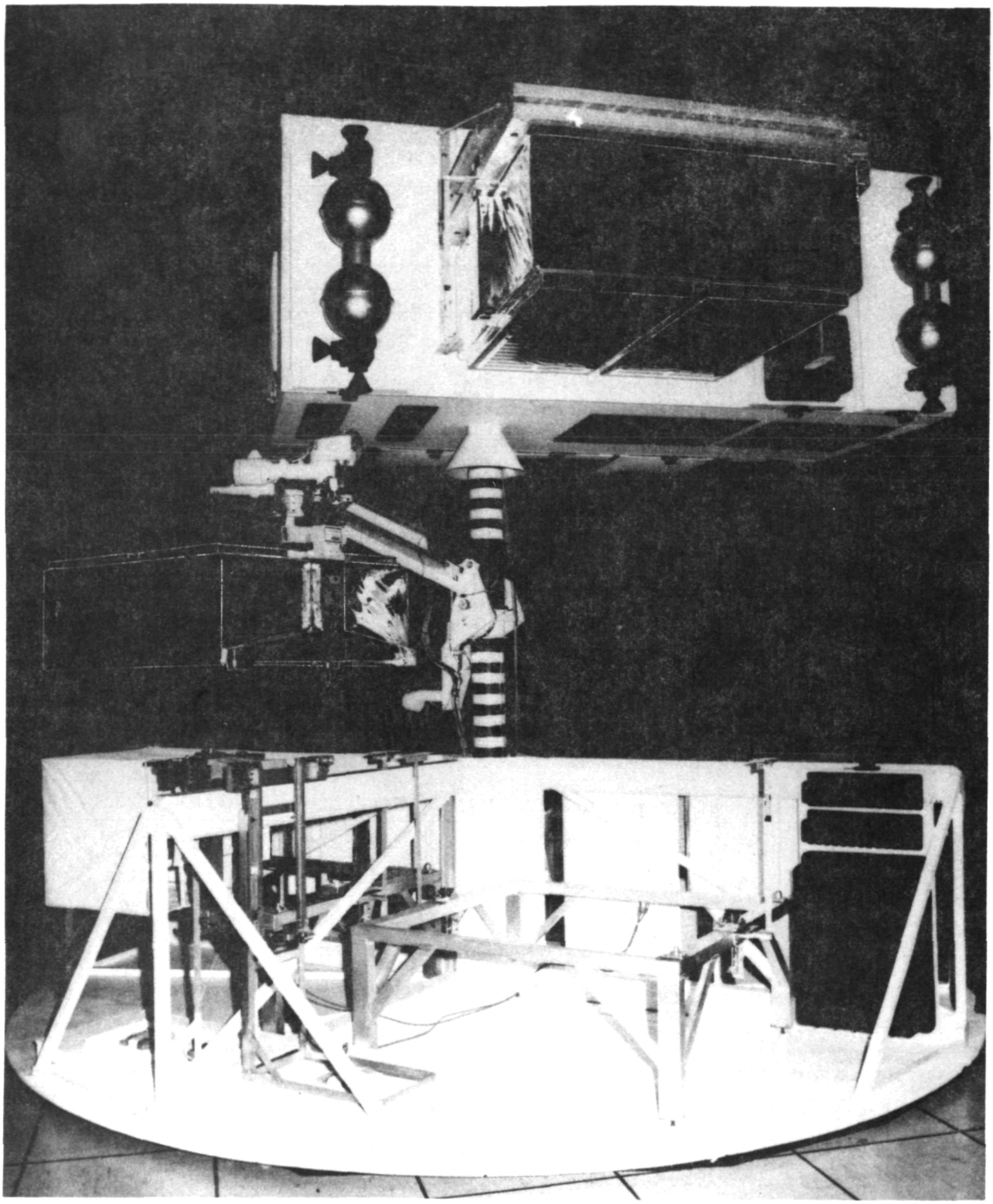

Figure 11-3 Engineering Test Unit Configuration for Ground Demonstrations of Basic or MMS Module Exchange

Console were also made. The connector positioner control panel adapter was installed on the existing Servicer Control Panel.

The stowage rack base was painted, reassembled and aligned. Installation of the stowage rack mockup was completed with the installation of the stowage rack beams, MMS module supports, MST storage rack, basic module supports and optical targets, as shown in Figure 11-4.

The two MMS module supports were positioned on the stowage rack and leveled at the proper height. Their correct position was marked on the stowage rack base. This marking took the form of disks cut from emery cloth and glued face up on the floor of the stowage rack. The emery cloth surface provided adequate friction so the nylon feet of the MMS module supports would not slide too easily. The two basic module receptacle units (for the side interface mechanism) were installed on the stowage rack. Their wooden bases were modified to eliminate interference with the stowage rack.

Figure 11-5 shows the arrangement of the MMS and the basic module mockup "good" locations and also the installation of the MST storage rack near the outer end of the left hand stowage rack beam.

The interface drawings produced by Martin Marietta as well as the interface coordination activity described in Section 8.2.9, were effective in assuring a smooth integration of the Module Servicing Tool (Figure 11-6) and its control equipment with the Engineering Test Unit.

The Goddard Space Flight Center and Fairchild Space Company delivered high quality equipment in time for its integration with the ETU. Their representatives cooperated with the Marshall Space Flight Center and Martin Marietta personnel for a successful integration. Only a few minor installation problems were identified and they were quickly corrected. A 0.19 in. shim was installed under the servicer attach fitting of the MST to allow proper clearance for the locating cone of the end effector. The slightly increased "B" distance, to 7.41 in., is acceptable due to the MST weight falling below the allowable weight.

ORIGINAL PAGE IS
OF POOR QUALITY

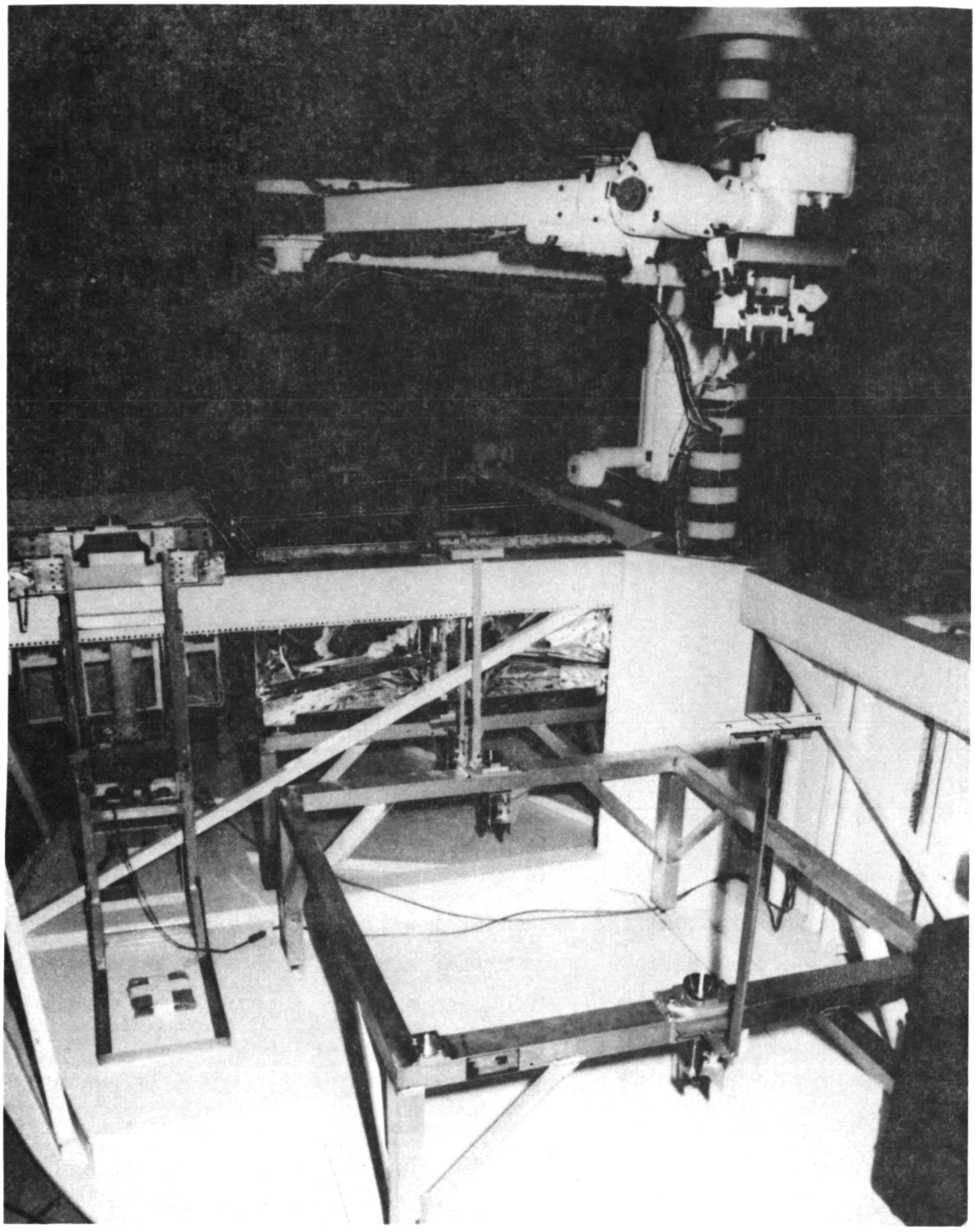

Figure 11-4 Stowage Rack Supports for "Temporary" Locations of Basic and MMS Modules

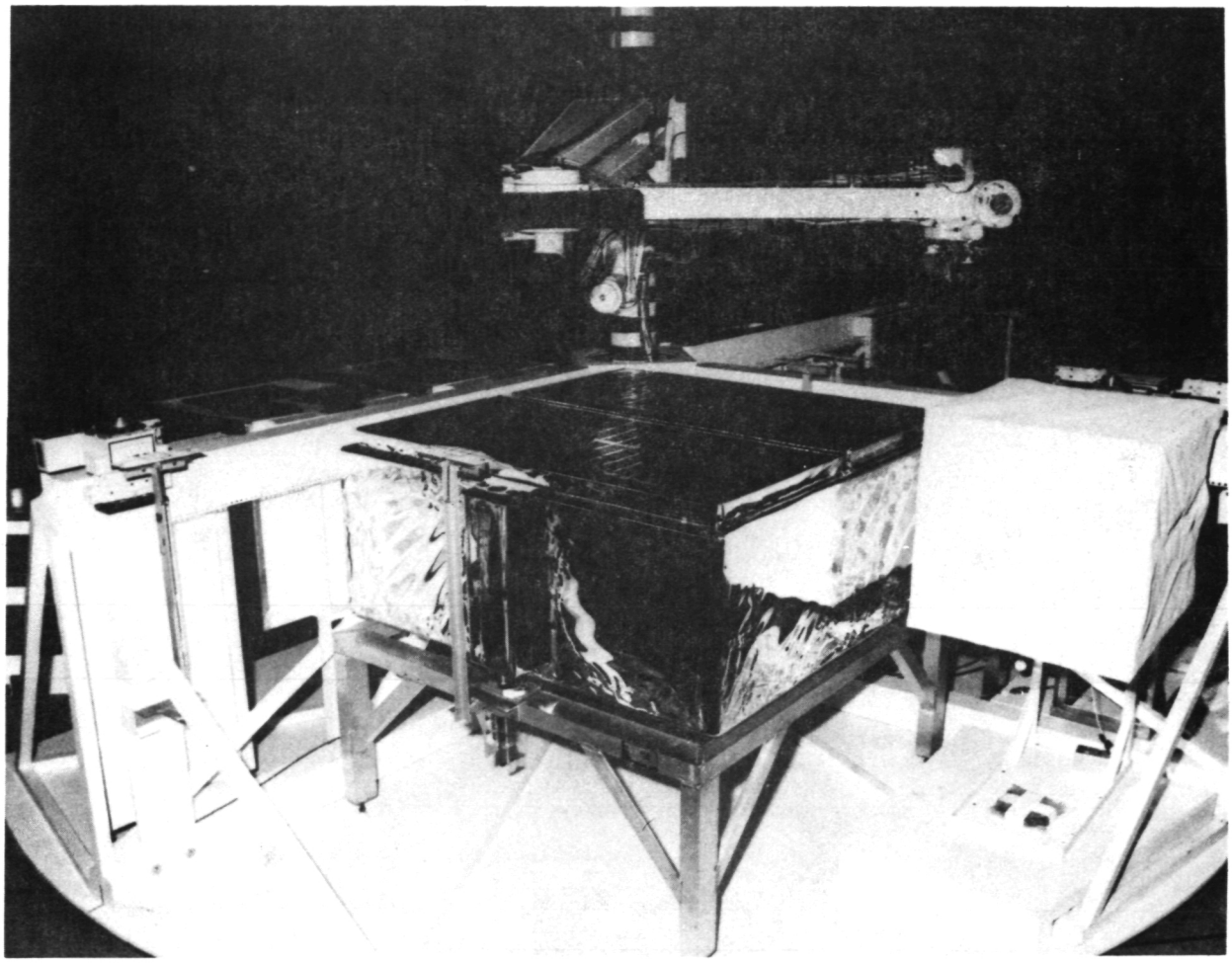

Figure 11-5 Stowage Rack "Good" Locations for Basic and MMS Modules

The ground demonstrations MST has a total weight of 13.5 lbs compared with the design goal of 15.0 lbs maximum. The ETU end effector interface includes the attach fitting, an electrical disconnect mounted to allow 0.030 in. of float, and a flat landing area for the "ready-to-attach" sensor of the end effector. The interface of the MST with the MMS module mockup includes two latches that mate with the latch interface plate of the module, two "ready-to-latch" sensors and a spring loaded 3/4 in. socket. The socket spring initially had an approximate 2.7 lb load at maximum compression and a load of 0.9 lbs at full extension.

ORIGINAL PAGE IS
OF POOR QUALITY

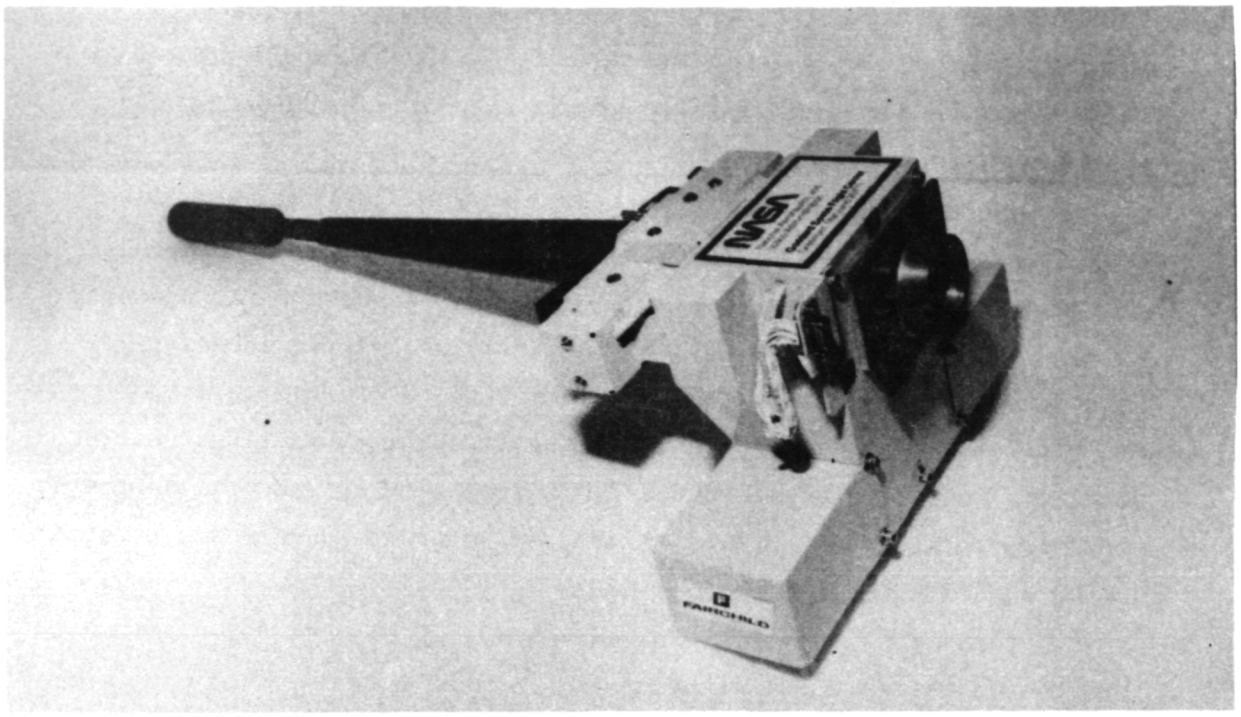

Figure 11-6 Module Servicing Tool for Ground Demonstrations

Correct mating of the tool with the MMS module, the ability to tighten and loosen the bolt, and latch operations were verified, using the MST power supply and control unit and a special test cable. These operations were successfully repeated later using the revised ETU and SSDC wiring. The tool interfaced correctly with the MMS module mockup retention system and operated the bolts when the modules were attached to the stowage rack supports. The MST bolt drive involves a worm gear so the mechanism will not backdrive. Thus when a bolt is tightened the torque causes the module structure to flex and a torque remains after the motor voltage is removed. The residual torque and related friction coefficients are high enough that it is difficult to remove the MST from the module unless a pulse of loosening torque is applied to relieve the torque loads. It was later found necessary to chamfer the MMS module bolt heads, to deburr the square socket drive of the MST and to adjust the MST socket spring force in order to obtain consistent engagement of the MST socket on the MMS bolt heads.

The correct mating of the MST with the ETU end effector was successfully verified prior to the installation of the connector positioner mechanism. Using the MST mated with the end effector as a reference, the connector positioner was then aligned and fastened to the ETU.

Upon completion of the installation of the electrical connector positioner mechanism on the ETU end effector, connector mating tests were successfully performed (see Figure 11-7). The connector positioner adjustable link length was set to obtain the desired connector pin engagement length and the microswitch settings were verfied. Connector engagement and disengagement was smooth and proper clearance between the MST and all end effector components was present during end effector engagement.

11.2.2 MMS Module Software Installation

The MMS software was restored from a magnetic tape prepared at Martin Marietta and transferred to the applications disk that contains the basic module exchange software. Thus both sets of software are on the same disk and reside in different directories. It is easy to transfer between the basic and MMS sets of software. The applications disk was installed in a disk drive connected to the PDP-11/34 that is interfaced to the ETU. The operating system is on a separate disk and disk drive connected to the same PDP-11/34 computer. Both the source and executable files were restored from the tape. This operation involved close cooperation between contractor and NASA personnel, and enabled MSFC personnel to become familiar with the delivered software.

The MMS software installation went smoothly because the techniques had been developed during the basic module exchange software installation.

11.2.3 MMS Module Control System Checkout

The MMS module control system checkout involved checking and modifying A/D and D/A functions, adjusting module status indicators, collecting

ORIGINAL PAGE IS
OF POOR QUALITY

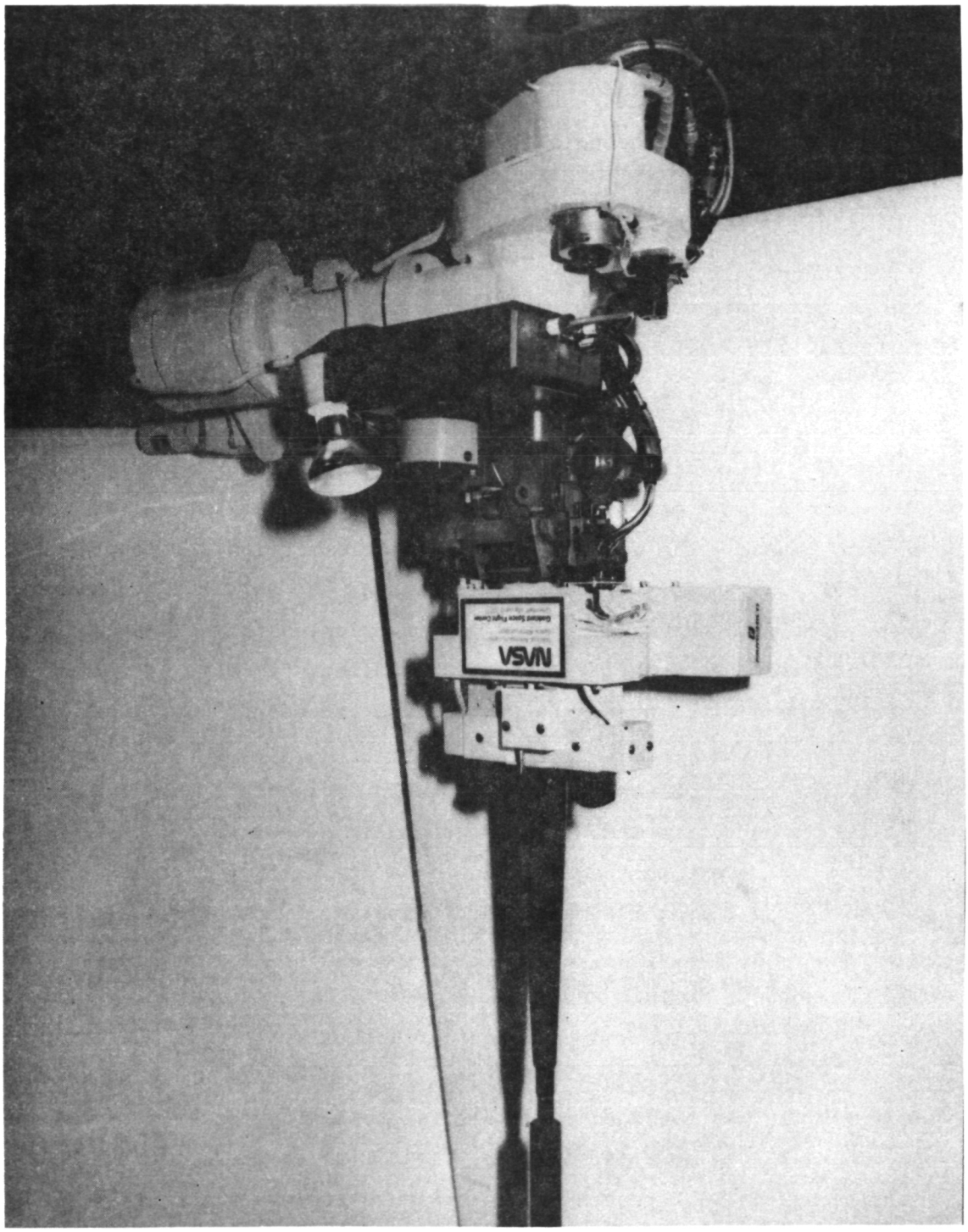

Figure 11-7 ETU End Effector and Its Connector Positioner Mated with the MST

module bolt location data, improvement of software logic, refinement of MST operations, addition of a pseudo-combined motion capability and the related module offset location data collection and storage, addition of a droop compensation system, and improvement of Manual-Augmented control mode operations. The following discussion is arranged by subject rather than chronologically.

MMS module control system checkout proved to be much more difficult than expected because of the MST operations refinements, the need for the pseudo-combined motion capability, the need for a droop compensation device, and computer, D/A, and A/D operating problems.

While the PDP-11/34 computer and the D/A and A/D equipment generally operated quite well, there were periods, starting in January, 1985, when it would not operate properly. The conditions were erratic and hard to repeat. The worst form of erratic operation was for the D/A to send out full voltage signals, which caused the servicer mechanism to move quickly in an unanticipated manner. Fortunately the operators were attentive and equipment damage was minor. Erratic operation occurred more often when room temperature exceeded $70^{o}F$.

In October two problems became repeatable enough that they could be identified and corrected by MSFC personnel. One problem caused the software to revert to the beginning of a trajectory. It was solved by replacing the computer's math board (floating point accelerator). Apparently the computer lost track of the numerical step it was on in the trajectory and then went back to zero. The second problem was more serious in that it caused the servicer mechanism to move quickly up and to the right. Servo power had to be shut off before anything was damaged. It was found that the digital to analog converters were putting out full negative signals. This problem was more difficult to solve, but the MSFC personnel were able to isolate the cause to two integrated circuits that were replaced. Fortunately, the software could be operated while this problem existed as long as the ETU servos were off.

The erratic operation of the computer was also evidenced on our last day of operation in December, 1985. The PDP-11/34 is not a new computer. It is recommended that the PDP-11/34 computer and the associated A/D and D/A converters be replaced with more reliable and less temperature sensitive equipment. Care should be taken in selection of new computer and peripheral hardware to minimize software compatibility problems.

Another cause of the extended development time was the length of an MMS module exchange (approximately 45 min). The software is such that it can only be started from the beginning. It cannot be started part way through a total trajectory because of the way the computer keeps track of where it is in a trajectory. This is not a problem during normal operation, but it results in a lot of unproductive time during checkout. This is particularly true if the problem area is near the end of the total trajectory. We were able to use the hold function to help overcome this characteristic. However, it is recommended that any new servicer software be designed so that operations can be started at a number of different places within the overall total trajectory. It is not necessary to be able to start <u>anywhere</u> in a total trajectory, rather it is desirable to limit the unproductive time to less than 3 to 5 minutes per run.

The other overall constraint was the limited time and resources available for problem solution. Generally a working solution was obtained for each problem. However, resources did not permit development of an understanding of each problem cause nor evolution of better solutions. Once a workable solution was found, that solution was used and the problem was set to one side. Little or no data was collected to develop rationale for problem solutions. For example, data on maximum and minimum forces for the selected MST socket return spring were not collected. Rather springs were installed until one worked and then we went on to the next problem.

11.2.3.1 <u>A/D and D/A Checkout</u> - Each of the analog-to-digital and digital-to-analog functions were checked for agreement with the MMS

software requirements document. A number of modifications were made to the breakout box to get consistency of operation and agreement with the software requirements document. A diode was added in the breakout box to correct for a sneak circuit that was causing the SSDC control mode relays to stay energized after the normal source power had been removed. A wire was added to the breakout box to provide a more consistent ground return for the Supervisory mode control signal in the breakout box.

MSFC personnel repaired one interface electronics board that is involved in the signal path that drives the connector positioner to the disconnect position. A method of interrogating the computer operating system to ascertain the operability of the D/A and A/D converters was tried. Unfortunately this caused an excessive wander in the ETU wrist roll drive and a flashing of the computer terminal cursor. This interrogation approach is no longer used.

11.2.3.2 Status Sensor Adjustments - The MMS module bolt status sensors were adjusted to provide status signals at the proper points. As the checkout operations continued, it was found necessary to reset these microswitches more accurately. Flat washers were added to the top of the indicator push rods to obtain more consistent contact with the rounded ends of the MMS attachment bolts.

11.2.3.3 Module Bolt Location Data Collection - Data for each of the six MMS module bolt locations and for the MST storage rack were collected and stored in MMS software. Repeat checks of this data were quite good with differences being less than the equivalent of 0.2 in. The TESTHM program with the cylindrical position command mode was found to be very useful for this data collection process. Complementary data was collected for the six MMS module bolt offset locations after the need for that data was established.

11.2.3.4 Software Logic Improvement - The large size and flexibility of the MMS modules, when combined with the small MST insertion capture volume and the MMS bolt and nut system capture volume resulted in the need for

a large number of software changes. One class of changes involved obtaining module location data, and increments to that data, more accurately than had been necessary in the past. Another class had to do with overdriving the vertical position to compensate for MST and module weight. A third class involved trimming trajectory mid points for smoother operation and to provide greater clearances between MMS modules and the mockups. Another class was MST operation oriented, such as the need to pulse each bolt in the loosening direction, after tightening, to release windup torques on the MST gears so the socket would come off the bolt heads. Another class was the deletion of redundant status checks to simplify status switch adjustments. Another class involved ensuring that all D/A commands would be zeroed out at program turn-on and if the function was not used in that program.

A number of MMS module exchanges were performed using the software in the unassisted Supervisory control mode. Lists of discrepancies were made for each module exchange activity, and then the discrepancies were corrected before the next total trajectory was run. This process was repeated a number of times until a complete trajectory had been run and the discrepancy list was reduced to zero.

The digital signal level to the D/A discrete signal channels was raised to obtain more consistent and positive discrete command signals. Discrete signals are used to drive various elements such as the connector positioner. The x direction motion rate was increased during the unfasten step to better match the module motion due to bolt loosening, and the amount of x travel was increased so the bolt thread would be clear of the nut. When the bolt turns as it is just unthreaded from the nut and the nut support springs are compressed, the nut makes a loud banging sound that is distracting. The changes in x travel and x rate minimized this noise.

The cylindrical and joint error tolerances used during the fasten and unfasten steps were increased to avoid unnecessarily initiating the hold mode. At times a MST latch signal was decoded by the computer when the MST latch signal was not present. The software was revised to

require that the latch signal be decoded for two successive computation cycles. This approach eliminated the erratic signal decoding.

11.2.3.5 MST Operation Refinements - It was found that the MST did not consistently drive the MMS module bolts due to a failure of the MST drive socket to drop onto the bolt heads. The problem was related to module distortion with one loose bolt, module distortion due to MST latch and unlatch action, and ETU positioning inaccuracies. The ETU positions were trimmed up and the problem was eased, but not eliminated. The MMS module bolt heads were chamfered strongly and greased well. The MST socket spring was strengthened. These actions further eased, but did not totally eliminate, the problem. It was then decided to chamfer the square corners of the MST drive shaft near the transition to the 1/4 in. diameter. Apparently there was an interference with the end of the square hole broached into the socket that caused the socket to stick. A number of different spring configurations were tried until a sufficiently high force, but not too high, was obtained. Too high a spring force resulted in an inconsistent MST ready signal. The MST ready signal switches were also adjusted. The result of these modifications is that consistent engagement of the MST and the MMS module attachment bolts was obtained.

The MST latches were reworked to eliminate an interference during the unlatch operation. The MST electronics contained an interlock that stopped the unlatch action when a microswitch giving the unlatched status operated. This microswitch could not be adjusted for consistent operation, so the interlock was disabled after obtaining Fairchild Space Company approval and directions. The software was then modified to drive the MST latch mechanism for an additional two seconds to assure that the latches were fully unlatched. It was also noted that when the MST is latching to or unlatching from the module that the module torque box is deflected significantly. The MST design is such that both latches rotate the same way. The torque box deflection can be eased by designing any new versions of the MST so that the two latches rotate in opposite, instead of similar, directions.

It was found that it was difficult to consistently withdraw the MST from the MMS module retention fitting. The module tended to hang up on the MST. This situation was traced to the way the bolt tightening torque and the non-backdriveable characteristic of the MST caused a windup of the MST drive shaft and of the MMS module torque box, which caused a high friction force between the MST and the module retention fitting. The result was that it required excessive force to withdraw the MST from the MMS. Attempts to ameliorate the problem by applying a loosening torque pulse to the MST from the MST control panel were successful, but this success could not be duplicated with loosening torque pulses controlled from the computer. The MST maximum current was reduced from 4.4 to 3.0 amperes. This eliminated the problem for some of the fittings. The settings of the latch microswitches were then adjusted so that the bolts would not be tightened as far in the stowage rack fittings. The result was consistently easy extraction of the MST from the MMS module retention fittings. It is recommended that future MSTs be designed with a backdriveable bolt drive mechanism.

The MST interface fitting configuration is such that the ETU end effector drive works harder when it is closing on the MST fitting than on any of the other interface fittings. An attempt to relieve the conical region did not reduce the excessive loads. It is desirable to identify the source of these loads and to reduce the loads before the ETU end effector jaw drive is damaged.

11.2.3.6 Pseudo-Combined Motion - The major software change was to adapt the control system to the MMS module ends not being vertical when one bolt was fastened and the other was unfastened. Each module end has a guide for the MST probe as the MST socket is moved towards or away from the MMS module bolt head. When the guides are not vertical, then the end effector must move along a path where more than one cylindrical coordinate changes. The basic and MMS software are not designed for motion in a direction that requires coordination of two or more cylindrical coordinates. The selected approach to overcome this problem is to break the motion up into a series of actions so that the relatively small lateral motions, for a given axial change, are

acceptable. This approach worked satisfactorily although it required extensive software modifications to the latch and unlatch subroutines, which affected 24 trajectory steps. An array of module bolt offset location data was established for the data corresponding to the tipped attitude. Data was collected for each tipped module/bolt location and stored in the new array. Logic was written so the computer would calculate end conditions for each of the steps along this pseudo-combined (radial, tangential and axial) motion trajectory. The resulting motion could be tailored for each bolt and was very satisfactory.

Equations were developed to allow calculation of the cylindrical coordinate attitude commands for the tipped condition. These attitude commands were entered into the computer and the ETU was driven to the commanded wrist attitude position. The MST probe angle was then visually checked against the module attitude.

11.2.3.7 Droop Compensation - When an MMS module is fastened to the spacecraft mockup by the top bolt and the bottom bolt is loose, the bottom bolt end of the module will droop down due to the module weight and the finite module stiffness. The bottom bolt also is held out of its nut by the Acme thread diameter. The sag is made worse as the MST is unlatched and withdrawn. System error variations can cause the MST to hang up on the module and pull the module end down even farther, which causes more binding. A droop at the bottom bolt causes a horizontal motion of the latch interface at the top bolt. The motion is like a rotation in a vertical plane about a point near the top bolt head. The horizontal motion of the top bolt latch interface can result in the MST probe not entering the corresponding hole. It was recommended that this 1-g situation be analyzed, a set of requirements be prepared, and a device made to control the module droop. The droop effect is due to 1-g effects, and the support device should not be needed in 0-g.

A droop compensation mechanism to support the bottom bolt end of the module was designed and parts were fabricated by MSFC. The design was

based on certain parts that were available. The parts were assembled and tested. The design approach is acceptable, but further effort is needed to obtain reliable operation. Separate microswitches should be installed near the bottom and top bolt status indicator cams. These microswitches should then be used to directly control the AC relay. This will eliminate the DC relays and their tendency to chatter and provide better margins on microswitch operation. The test and enable functions that were initially located near the mechanism should be moved to near the control console. Also, consideration should be given to replacing the AC solenoid with an AC motor and gear box of appropriate size and configuration as the AC solenoid may not have sufficient force available to properly lift the module for all droop distances.

11.2.3.8 MMS Module Manual-Augmented Control Checkout - The six degree-of-freedom hand controller was positioned adjacent to the control console and the three translational degrees-of-freedom were checked out using the TESTHM program. The Manual-Augmented control mode software was checked to show that ETU motions were correct for hand controller motions for a variety of end effector attitudes.

A set of reticles was taped to the TV monitor in a position corresponding to the location of a basic module target. The seven MMS targets were then aligned using the TV monitor reticle set. Figure 11-8 shows the ETU end effector approaching the MST that is secured in a MMS module latch interface location. The relative position of the Manual-Augmented target and the TV camera (just above the end effector jaws) can be seen.

Several partial exchanges were made to show that the MST could be moved and placed in the MMS module conical guides, that the MST could be latched and unlatched, that bolts could be fastened and unfastened, and that modules could be moved using the Manual-Augmented mode of control.

11.2.3.9 Miscellaneous - One of the two MMS module mockups was damaged during the test activity. It was deduced that the styrofoam structure had

ORIGINAL PAGE IS
OF POOR QUALITY

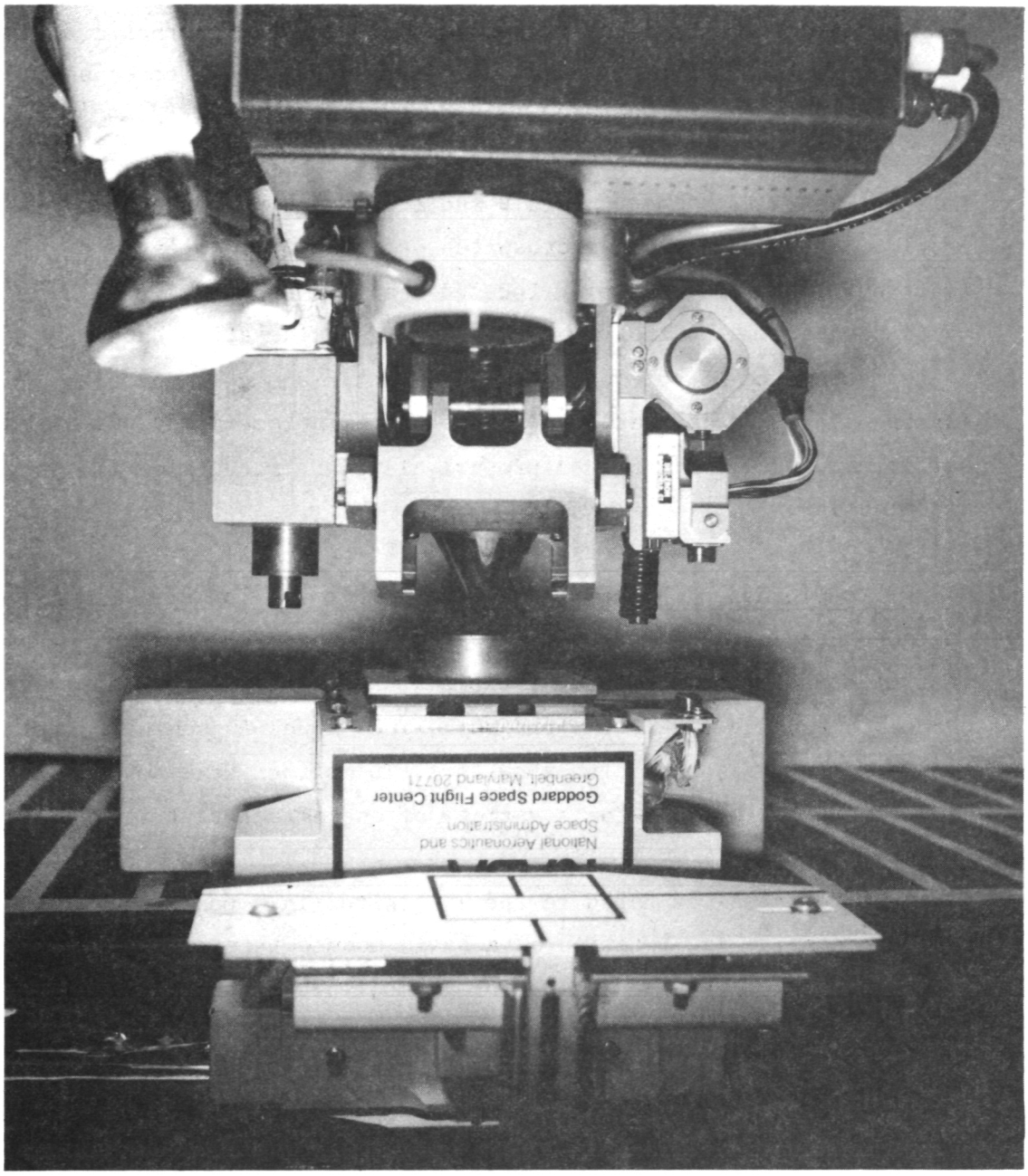

Figure 11-8 ETU End Effector Standing off from MST

failed near the top bolt attachment. Wooden blocks were fabricated, fitted, and glued in place. These glue blocks provided a better load path for the loads from the top bolt attachment to the basic module structure, which is a torque box. The repair eliminated the excessive droop that had occurred after the damage and before the repair.

A relay on a Wrist Pitch circuit board was replaced to overcome erratic operation. Two diodes on a Shoulder Pitch circuit board were replaced so that consistent movement from the Shoulder Pitch up and down limits could be obtained. The location of the temporary stowage rack top nut resulted in the Wrist Roll angle being at a limit switch point with no margin. The limit switch was moved to provide an adequate margin of travel.

The number of minor failures in the demonstration facility equipment indicates that an ongoing maintenance activity should be established.

11.2.4 MMS Module Demonstrations

Demonstrations of MMS module exchange in all three control modes were successfully accomplished. A number of MMS module exchanges were successfully demonstrated in the Supervisory control mode without operator assistance by MSFC and Martin Marietta operators. An exchange was also demonstrated using the operator assisted form of the Supervisory control mode.

A trajectory was also successfully demonstrated in the Manual-Augmented control mode. This control mode was easier to use than had been expected. The striping on the top of each module could be used for guidance during the bottom bolt to top bolt, and vice versa, steps. No other control clues were needed. The socket on the end of the MST probe can be seen well enough that it was easy to insert in and withdraw from the MMS module attach fittings. The targets were adequate for module alignment. Stadiametric ranging and the various status indicators were as useful as they were for basic module exchanges.

MSFC personnel videotaped most of two complete demonstrations.

Very little effort and time is required to switch back and forth between demonstration of MMS module and basic module exchanges. All that is required is to initialize the appropriate exchange on the

computer and to change one connector between the ETU and the MMS junction boxes. These operations can easily be accomplished in less than two minutes. The computer notifies the operator if the proper electrical connection is not made.

As with the basic module exchanges, it was very easy to learn how to conduct MMS module exchanges in the Supervisory modes. The trajectories were very smooth and repeatable. When the MMS module had both bolts tight, the MST would not touch the module guide until it was almost to the ready to latch position (see Figure 11-9). An unassisted Supervisory mode MMS axial total trajectory takes approximately 45 min. Each operator felt that the form of display was very helpful in keeping track of where he was in what is a moderately complex activity. Display of the total MMS trajectory, current trajectory, current steps, and current actions, along with the associated highlightings, was even more helpful than for basic module trajectories because of the larger number (two lines vs one) of steps involved during each module transport trajectory.

The extensive checkout activity led to the identification of different ways to operate the system when anomalies occurred. For example, the Acme thread on the MMS attachment bolts would sometimes hang up and not engage properly. The computer would continue until the bolt fasten timer timed out and then the computer would go to hold and notify the operator of the excessive time. The operator would then check that the indicator lamps on the Servicer Control Panel showed a ready but unlatched condition for the bolt. He would recognize the problem, put the SSDC and the MST control in the Manual-Direct mode, operate the MST controls to first loosen the bolt slightly to align the threads, then pulse the bolt in the tighten direction, monitor bolt drive current to see that the bolt was not hung up, switch back to the Supervisory control mode, and then tell the computer to continue the trajectory, which it would do. While this process seems long, it takes less time to do than to read about.

ORIGINAL PAGE IS
OF POOR QUALITY

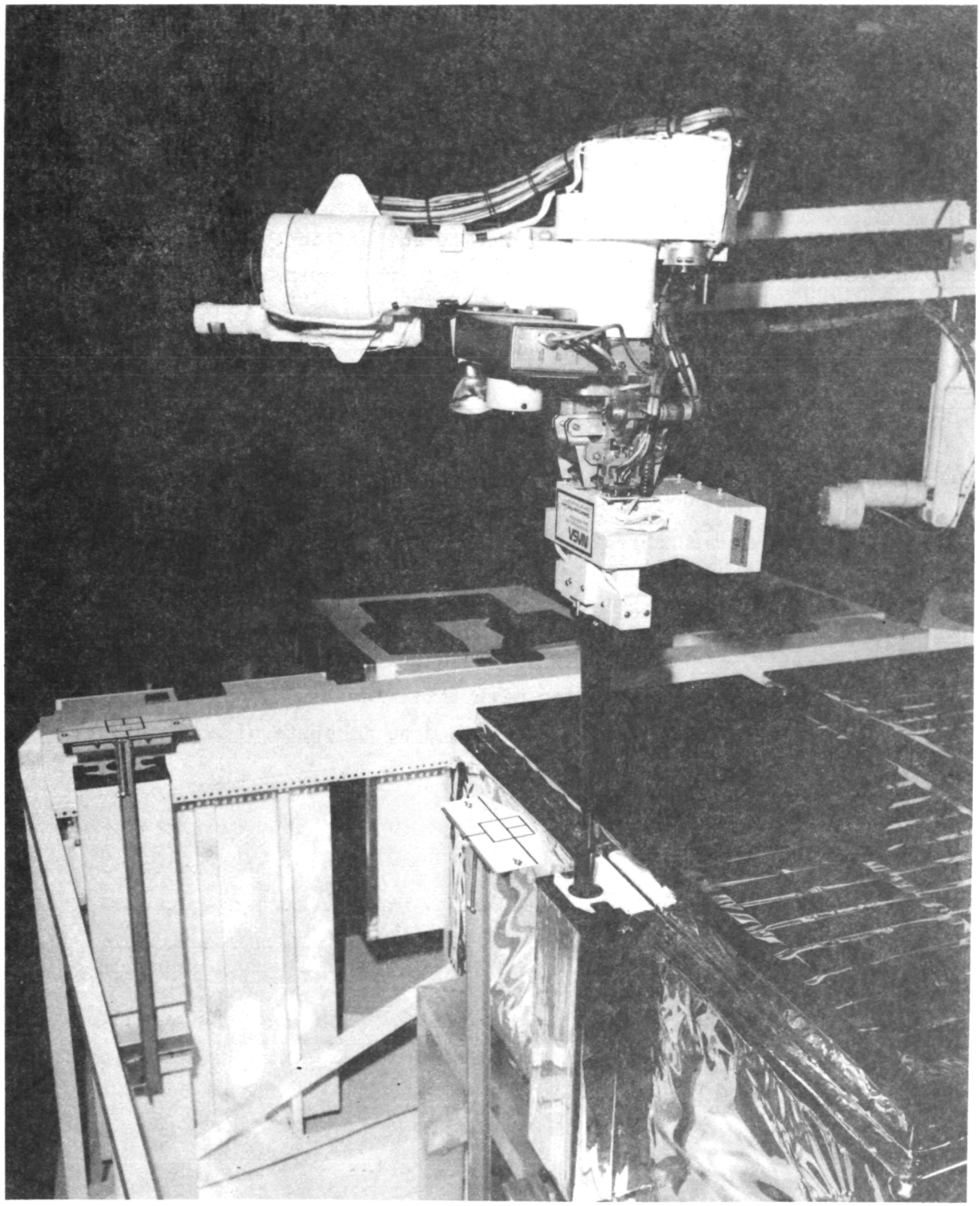

Figure 11-9 MST Probe Entering MMS Module Guide

A number of different ways were identified in which the operator could use the capabilities of the equipment and of the computer program to identify and overcome anomalies. The computer, and other displays, would provide the required information and the operator had the controls to effect a corrective action. System characteristics that help in performing these workarounds are:

1) The computer will stay in the hold mode for an indefinite time;

2) The SSDC and MST can be switched to any of the three control modes while the computer program remains in the Supervisory mode;

3) Servo power control is independent of computer operation;

4) Each ETU joint can be controlled independently;

5) The MST can be operated manually through the ETU wiring or through a separate test cable.

The effect of learning how to do these workarounds is that the system is <u>not</u> a pre-programmed entity that cannot continue past the first anomaly. Rather it is a system with three levels of control that can be used interchangeably to get the job done in spite of a variety of anomalies.

12.0 CONCLUSIONS AND RECOMMENDATIONS

The significant conclusions and recommendations from this Servicer System Demonstration Plan and Capability Development activity are presented below. Many secondary conclusions and recommendations are given in Sections 3.0 through 11.0. The conclusions and recommendations which span the study are given first.

12.1 ON-ORBIT SERVICING DEVELOPMENT

The following conclusions and recommendations apply to the overall on-orbit servicing development:

1) The recommended plan leads to the free-flight verification of an operational servicer suitable for use with the OMV and the Space Station;

2) The plan has three phases:

   - Ground demonstrations,
   - Cargo-bay demonstration,
   - Free-flight verification;

3) The free-flight verification can be completed by late 1992;

4) The total estimated cost is 45.3 million 1985 dollars;

5) The plan includes three servicer mechanism configurations:

   - The Engineering Test Unit currently in use at MSFC would be used for early ground demonstrations, procedures development, and training for the cargo-bay demonstration,
   - A proto-flight quality unit would be used for the demonstration flight in the Orbiter cargo bay and for procedures development and training related to the operational servicer,

- One fully operational unit that has been qualified and documented for use in the free-flight verification activity and in subsequent operations;

6) The plan is based on use of proven IOSS designs and test hardware;

7) Areas for application of the module exchange form of on-orbit servicing to the Space Station were identified;

8) A user's council should be formed to direct the implementation of an on-orbit servicing capability.

12.2 MULTI-MISSION MODULAR SPACECRAFT SERVICING

The following conclusions and recommendations apply to the involvement of MMS equipment in the demonstration plan and in subsequent operations:

1) Primary emphasis would be on demonstrating the exchange of MMS modules;

2) The MMS Module Servicing Tool should be adapted to work with the servicer end effector for the exchange of MMS modules;

3) A set of requirements for the MST adaptation was prepared;

4) A preliminary conceptual arrangement of the adapted MST for 1-g demonstrations was prepared;

5) Lightweight MMS module mockups with dimensionally correct standard MMS attachment fixtures and connector shells should be used for ground demonstrations;

6) On-orbit servicing of MMS modules should be effected by use of lateral docking with a straight docking probe adapter, tool adapter and modified stowage rack;

7) The approach to the exchange of basic and MMS modules was reviewed and a number of improvements, such as the deletion of a second docking system and the need for a servicer to failed spacecraft electrical interface were identified.

12.3 GROUND DEMONSTRATIONS

The following conclusions and recommendations were developed during the ground demonstration analyses:

1) The servicer system Engineering Test Unit should be used as the mechanism for early ground demonstrations;

2) Continue the ability to demonstrate separately the exchange of both basic and MMS modules;

3) The control system software of the MSFC servicing demonstration facility has been upgraded;

4) MMS module exchange under computer control has been demonstrated;

5) Control mode analysis and testing for exchange of both module types should be continued;

6) Approaches for the cargo-bay demonstration and for free-flight verification should be developed;

7) Fluid resupply hardware should be developed and the process demonstrated;

8) The exchange of batteries or other individual components should be demonstrated along with thermal blanket/access cover removal and replacement;

9) An automatic target recognition and error correction system should be developed and demonstrated;

10) The MSFC servicing demonstration facility should be made available for support of flight operations in terms of simulations, procedures development, training, and problem solving. The facility should also be made available as a laboratory development tool;

11) The exchange of other generic modules--AXAF and communications satellite--should be coordinated with the respective project offices and then demonstrated;

12) Additional development areas include:

- Demonstration of other servicing tasks specific to Space Station operations,
- Continuation of interface mechanism development,
- Continuation of adapter tool development as needs are identified,
- Special fluid resupply disconnects for cryogenics or high pressures, and self aligning electrical connectors,
- Development of in-line fluid couplings for replacement of tanks and other propulsion system components.

12.4 CARGO-BAY DEMONSTRATION

The following conclusions and recommendations were developed during the cargo-bay demonstration analyses:

1) A proto-flight quality servicer mechanism should be built for use in the single cargo-bay demonstration flight;

2) The MMS Flight Support System should be used to support the MMS spacecraft representation during the cargo-bay demonstration;

3) The Orbiter Remote Manipulator System end effector should be used for a docking system;

4) A specific arrangement of servicing demonstration elements in the Orbiter cargo bay was selected and recommended for use;

5) The servicer control station should be on the Orbiter aft flight deck;

6) The servicer should be exercised in the unassisted Supervisory control mode;

7) The characteristics of the recommended servicer cargo-bay demonstration are:

- MMS mockup dock and undock by RMS,
- Supply of power, attitude control, thermal control and communications by Orbiter,
- Servicer control station in Orbiter,
- Docking rigidization by servicer docking probe,
- Electrical connection between servicer and spacecraft via the docking mechanism,
- Use of MMS triangular module support structure,
- Module exchange demonstration,
- Fluid resupply demonstration,
- Servicing equipment performance demonstration,
- Unassisted Supervisory control mode,
- Man-machine interaction evaluations,
- Compliance with Orbiter system safety requirements,
- Servicer spare module stowage rack mounted in trunnions in Orbiter cargo bay,
- Use of representative servicing operational equipment,
- Operator training;

8) The hardware for the fluid resupply demonstrations should be obtained from the ongoing Johnson Space Center refueling demonstration flight program;

9) The recommended activities for the test flight are:

- The replacement of a Multi-Mission Modular Spacecraft type module using an MMS Module Servicing Tool, incorporating an electrical connector, and mounted so that the module moves axially,
- The replacement of a battery module on a light weight side interface mechanism using an electrical connector and with a near-radial module motion direction,
- The transfer of a fluid using a multiple line fluid resupply module including a fluid interface unit and a hose and cable management device mounted in a far-axial direction;

10) The cargo-bay demonstration servicer mechanism, after its flight use, should be used to replace the ETU for ground demonstrations, procedures development, and operator training.

12.5 FREE-FLIGHT VERIFICATION

The following conclusions and recommendations were developed during the free-flight verification analyses:

1) A fully operational servicer system that has been qualified and documented should be built for use in the free-flight verification activity;

2) The Orbital Maneuvering Vehicle should be the servicer carrier vechicle;

3) One servicer system should be built;

4) The unassisted Supervisory control mode should be used;

5) The servicer control station should be located on the ground;

6) A spacecraft bus, such as the SPAS-01, should be rented rather than a new spacecraft being built for this one-time application;

7) The characteristics of the recommended servicer free-flight verification are:

- One verification flight,
- Serviceable satellite mockup supported by a rented spacecraft bus,
- Supply of power, attitude control, communications, and thermal protection and control of the servicer from the OMV,
- Use of OMV for rendezvous and docking of servicer to the serviceable spacecraft mockup,
- Use of serviceable spacecraft mockup and modules from cargo-bay demonstration,
- Two way communication links to ground through TDRSS,
- Servicer control station at OMV ground control station,
- Docking rigidization by servicer docking probe,
- Deployment of stowed servicer mechanism and docking probe,
- MMS module exchange demonstration,
- Fluid resupply demonstration,
- Servicing equipment performance verification,
- Control mode verification,
- Operator training;

8) Demonstration of the mating of the servicer stowage rack to the OMV should be a part of the Space Station technology development missions;

9) The recommended flight verification activities are:

- Exchange of MMS module,
- Exchange of other representative modules,
- Fluid transfer.

12.6 SERVICER/MMS 1-g DEMONSTRATION PLAN

The following conclusions and recommendations were developed during the preparation of the servicer/MMS 1-g demonstration plan:

1) The servicer/MMS 1-g demonstration subsystem requirements were identified for the MMS module mockup, spacecraft mockup, stowage rack mockup, electrical connector positioner mechanism, and optical targets;

2) A preliminary system concept design was performed and the relative positions of the main components were established;

3) The location and orientation of the MMS module mockup during the FLIP sequence were selected, based on requirements;

4) An analysis of the unbalanced torques acting on the ETU drive motors during the ground demonstrations of MMS module exchange showed that all the loads are within the existing ETU configuration capability;

5) Several characteristics of the servicer/MMS demonstration equipment were selected:

   - MMS bolt tightening torque of 10 $\pm$ 1 ft-lbs and loosening torque of 20 $\pm$ 1 ft-lbs,
   - Maximum torque of 50 ft-lbs for the wrist pitch (Y) drive of ETU,
   - Maximum weight of 12.5 lbs for MMS module mockup,
   - Maximum distance of 7.25 in. between the end effector interface and module latch interface,
   - Maximum weight of 15 lbs for the modified MST;

6) A light weight configuration and a structural concept were selected for the MMS module mockup;

7) A partial mockup, representing one quarter of the MMS module, was designed and built as a development version to validate the concept;

8) A simple, straightforward configuration was selected for the spacecraft mockup, that emphasizes the MMS module while providing realistic MMS servicing trajectories and preserving the existing basic module exchange capability;

9) The arrangement of the MMS module mockups, basic module mockups and MST storage rack on the ETU stowage rack was selected based on:

- Minimum modification of the existing stowage rack,
- Minimum MMS servicing demonstration time,
- No system reconfiguration between MMS module and basic module exchange demonstrations.

12.7 SERVICER/MMS 1-g DEMONSTRATION EQUIPMENT

The following conclusions and recommendations were developed as part of the servicer/MMS demonstration equipment design and fabrication activities:

1) The drawings for the production of the Change Order 3 equipment were prepared at Form 4 level;

2) The design effort included:

- Drawing preparation,
- Coordination of MST integration,
- Design coordination,
- Materials and components procurement;

3) The MMS interface frame design is common for both spacecraft mockup and stowage rack supports;

4) The MST latch interface box design is the same for both MMS module fasteners and for the MST storage rack;

5) The connector positioner mechanism features:

- A compact, eccentric type mechanism,
- Accurate linear ball slide,
- 5/8 in. mating stroke,
- 20 lb connector mating/demating force,

- Adjustable position for end of stroke,
- Simple interface with ETU end effector;

6) The optical targets feature:

- Common design for all MMS fastener locations and for the MST storage rack,
- Compliant attachment to its support,
- Minimal resetting in case of accidental displacement;

7) The weight of the fabricated and assembled MMS module mockup is 10.0 lbs, compared to the 12.5 lbs maximum design limit;

8) The fabricated and assembled connector positioner mechanism:

- Was tested on a special bracket prior to shipment to MSFC,
- Smoothly mated and demated the electrical connector,
- The mating and demating times were within the design goals.

12.8 SERVICER CONTROL SOFTWARE - BASIC MODULES

The following conclusions and recommendations were identified during development of the servicer control software for the demonstration of basic module exchange:

1) Three control modes were implemented;

2) Geometrical equations specific to the ETU configuration were used;

3) Software can be used on PDP 11/34 computer with Version 3.2 or 4.0 of the RSX-11M operating system;

4) Software requirements were explicitly defined and documented;

5) All required interfaces between the computer and the electrical equipment were defined and documented;

6) The characterictics of the Supervisory control mode trajectory hierarchy for basic modules are:

- Four total trajectories,
- Twenty trajectories,
- Nine steps,
- Eight actions,
- Each hierarchy level is composed of elements below it in the hierarchy,
- Four types of coordinate transformations,
- Closed loop operation of ETU joints,
- Control of end effector and interface mechanism drives,
- Operator assisted and unassisted modes;

7) Software program is menu driven;

8) Procedures and trajectory sequences for the Manual-Augmented control mode were documented;

9) Manual-Augmented trajectory sequences use same approach as Supervisory trajectories;

10) Coordinate transformations and error meter drive signals were incorporated for Manual-Augmented control mode;

11) Procedures for all demonstration operations were provided;

12) Simulated hardware characteristics are included in software so program can be run independent of servicer hardware;

13) A test program for verifying the computer to servicer hardware interfaces was provided;

14) A separate Software User's Manual was prepared for the basic module software.

12.9 SERVICER CONTROL SOFTWARE - MMS MODULES

The following conclusions and recommendations were identified during development of the servicer control software for the demonstration of MMS module exchange:

1) The MMS module software follows the basic patterns and philosophy of the basic module software;

2) Three control modes were implemented;

3) Geometrical equations specific to the ETU configuration were used;

4) Software can be used on PDP 11/34 computer with Version 3.2 or 4.0 of the RSX-11M operating system;

5) Software requirements were explicitly defined and documented;

6) All required interfaces between the computer and the electrical equipment were defined and documented;

7) The characterictics of the Supervisory control mode trajectory hierarchy for MMS modules are:

   - One total trajectory,
   - Nine trajectories,
   - Thirteen steps,
   - Ten actions,
   - Each hierarchy level is composed of elements below it in the hierarchy,
   - Four types of coordinate transformations,
   - Closed loop operation of ETU joints,
   - Control of end effector, connector positioner drive, and MST latch and bolt drives,
   - Operator assisted and unassisted modes;

8) Software program is menu driven;

9) Procedures and trajectory sequences for the Manual-Augmented control mode were documented;

10) Manual-Augmented trajectory sequences use same approach as Supervisory trajectories;

11) Coordinate transformations and error meter drive signals were incorporated for Manual-Augmented control mode;

12) Procedures for all demonstration operations were provided;

13) Simulated hardware characteristics are included in software so program can be run independent of servicer hardware;

14) A test program for verifying the computer to servicer hardware interfaces was provided;

15) A separate Software User's Manual was prepared for the MMS module software.

12.10 SERVICER SOFTWARE DEMONSTRATIONS

The following conclusions and recommendations were identified during the conduct of the basic and MMS module exchange demonstrations using the two servicer software programs:

1) All of the demonstration equipment operated satisfactorily and was provided by:

- ETU and associated electronics by MSFC,
- PDP 11/34 computer with D/A's and A/D's by MSFC,
- MMS modules, spacecraft mockup, and stowage rack modifications by Martin Marietta,
- Connector positioner and wiring changes by Martin Marietta,

- 1-g Module Servicing Tool by GSFC,
- MST electronics by Fairchild Space Co;

2) The overall appearance of the revised spacecraft mockup was improved by a number of cosmetic changes;

3) The software could be readily installed and checked out on PDP 11/34 computer;

4) Scale factor and zero adjustments were made to obtain satisfactory pure axial and pure radial motions of the ETU;

5) A number of changes were made in the software logic and in the interface electronics to improve operations;

6) Specific module location data could be readily collected for use in the software program and in the Manual-Augmented trajectory sequences using the procedures that were developed;

7) Separate demonstrations of basic and MMS module exchange were successfully made in all three control modes;

8) Conduct of demonstrations in the Supervisory control mode in the operator assisted or unassisted modes was easy to learn. Operation in the Manual-Augmented control mode takes a little longer to learn, as was expected;

9) Motion of the ETU during module exchanges in either Supervisory mode was very smooth and precision was well within the basic module equipment capture volumes and just within the tighter MMS equipment capture volumes;

10) Integration of the MST was accomplished by operating philosophy revisions, software modifications, and hardware adjustments;

11) Non-orthogonality of the MMS module with respect to the docking

post (axial cylindrical coordinate) when the module top bolt is tight and the bottom bolt is loose was accommodated by the addition of a pseudo-combined motion capability where all six cylindrical coordinates are changed together in a step-wise fashion to approximate the desired path;

12) System operating techniques were identified for overcoming anomalies so that the system should not be thought of as a pre-programmed entity that cannot continue past the first anomaly. Rather it is a system with three levels of control that can be used interchangeably to get the job done in spite of a variety of anomalies.

A. CARGO-BAY DEMONSTRATION WORK BREAKDOWN STRUCTURE

This appendix presents a work breakdown structure (WBS) and associated dictionary for the cargo-bay demonstration activity. The WBS was prepared to give an outline of the organization and activities involved and to aid in the identification of cost sources. The selected WBS follows the pattern used in other NASA activities of this same general size.

Figure A-1 shows the WBS in graphical form. Level 1 is the project itself, while level 2 shows the other organizations with which the prime contractor must interface. Level 3 activities are shown for the prime contract and include the seven major activities arranged generally in a time sequence format with the earliest activities to the left. Each of the prime contract level 3 activities are expanded to level 4 and six of the level 4 activities are further expanded to level 5.

Each of the blocks on Figure A-1 are defined in the WBS dictionary that starts on page A-3. The paragraph number of the dictionary corresponds to the number in the block of Figure A-1.

ORIGINAL PAGE IS
OF POOR QUALITY

ORIGINAL PAGE IS
OF POOR QUALITY

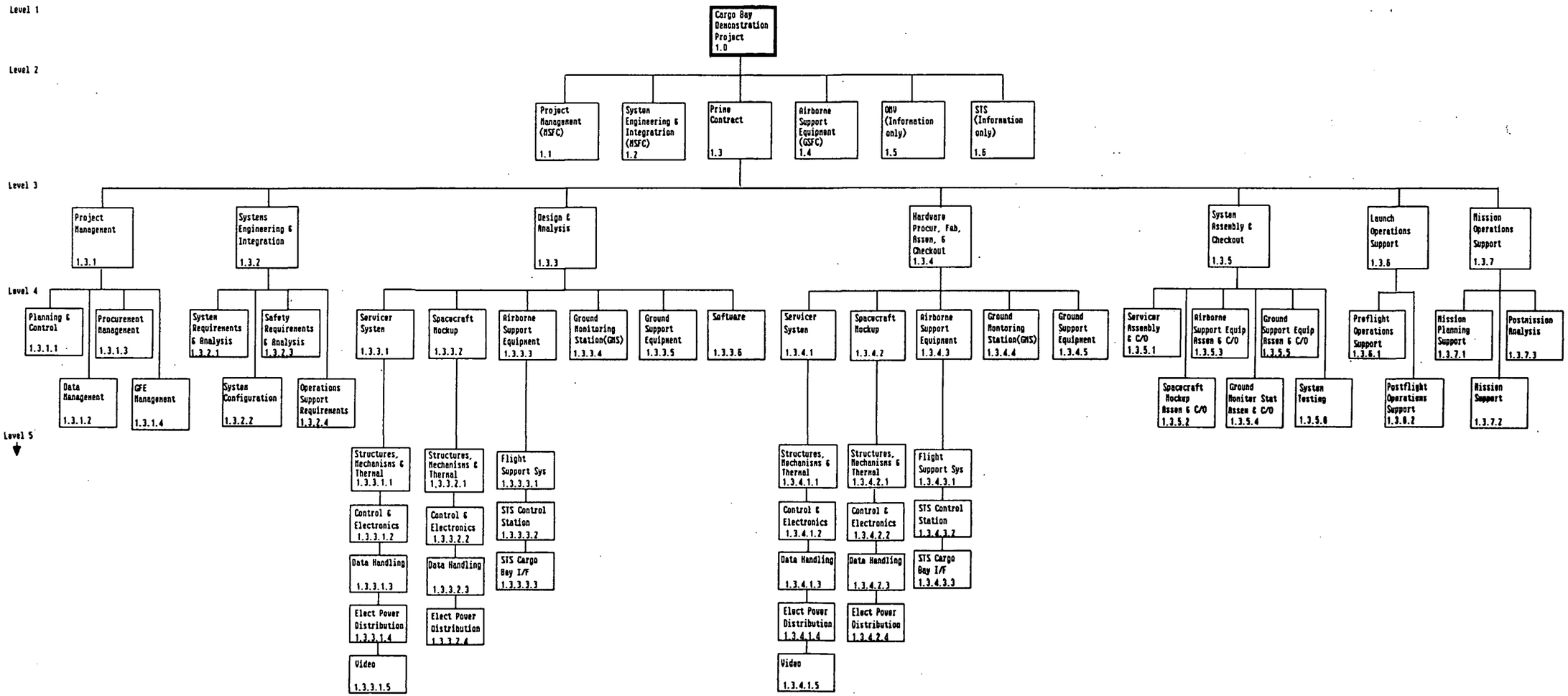

Figure A-1 Cargo-Bay Demonstration Work Breakdown Structure

FOLDOUT FRAME

FOLDOUT FRAME

SPACECRAFT SERVICER CARGO-BAY DEMONSTRATION

WBS DICTIONARY

1.0 SPACECRAFT SERVICER CARGO-BAY DEMONSTRATION PROJECT (Level 1)

This WBS element provides for all the necessary manpower, materials, tooling and equipment, hardware, facilities, and service required to design, develop, fabricate, assemble, test, checkout, integrate and support the Spacecraft Servicer Cargo-Bay Demonstration project. This includes all management, engineering, and scientific activities of the entire project both civil service and contractor.

1.1 PROJECT MANAGEMENT (Level 2)

This WBS element encompasses all project office (civil service) activities and responsibilities including overall NASA mission management of the entire Spacecraft Servicer Cargo-Bay Demonstration project, including, all servicer hardware development, integration, and operations.

1.2 SYSTEMS ENGINEERING AND INTEGRATION (Level 2)

This element includes all project office (civil service) manpower required to ensure overall servicer performance, including all servicer hardware and operational aspects of the project.

1.3 SPACECRAFT SERVICER CARGO-BAY DEMONSTRATION PRIME CONTRACTOR (LEVEL 2)

This element provides for the necessary manpower, materials, equipment, hardware, facilities and services required to design, develop, fabricate, assemble, test, checkout and provide operational support to the Spacecraft Servicer Cargo-Bay Demonstration project. Specifically, the development of the servicer along with the necessary flight support equipment, software, GMS, GSE, and overall system integration is included.

1.3.1 Project Management (Level 3)

This element encompasses the technical and business management activities required to plan, execute, control and report technical performance, schedules, and resources in a cost-effective manner.

1.3.1.1 Planning and Control (Level 4) - This element provides for the planning, authorizing and controlling of the contracted effort. The planning and control activity shall provide timely visibility into contract performance, cost, and schedule, and shall be keyed to the contractor organization and to the Work Breakdown Structure (WBS) and WBS Dictionary. Integrated project schedules for the servicer are included herein. The control function shall integrate cost, schedule, and performance and shall relate progress and variance from the initial planning.

1.3.1.2 Data Management (Level 4) - This element pertains to activities required to assure proper information control, compatibility, availability, and relevancy; and to prepare and deliver contractually required data to the Government. Included are activities to identify, control and monitor the preparation, reproduction, distribution and maintenance of internal and deliverable documentation under this contract. (See list of Contract Deliverable Items.)

1.3.1.3 Procurement Management (Level 4) - This element includes responsibility for all subcontract activities, procuring hardware as defined by procurement requirements, assuring that selected subcontractors and suppliers perform and deliver in accordance with approved requirements, providing the project with performance surveillance, cost control, technical direction, and status reporting on all subcontractors.

1.3.1.4 GFE Management (Level 4) - This element provides for all tasks required to maintain a Government Furnished Equipment (GFE) management for the Spacecraft Servicer Cargo-Bay Demonstration project. This system shall be in accordance with the contractor's existing standard operating procedures and in compliance with the NASA procurement regulations. The system includes identification of GFE items and required-delivery-dates planning, control and technical monitoring. See equipment list for GFE equipment.

1.3.2 Systems Engineering And Integration (Level 3)

This WBS element includes all labor, materials, and other resources necessary to perform all the systems engineering functions required to assure servicer performance. It includes the effort necessary to define the requirements and specifications needed to conduct the design and analysis of the servicer, airborne and ground support equipment and the ground monitoring station. Activities include analyses and trade studies of system, system configuration and operations support requirements. It also includes activities required to define interfaces between all of the elements of the demonstration.

1.3.2.1 System Requirements and Analysis (Level 4) - This element provides for the definition of technical requirements necessary to conduct the design and development of the servicer, airborne and ground support equipment, and the ground monitoring station. It also includes analyses and trade studies required to evaluate and define the detailed requirements of the integration with its external interfaces including the STS. This task will generate and maintain the Program Integration Plan (PIP).

1.3.2.2 System Configuration (Level 4) - This WBS element provides for the effort required to plan, implement, control, and coordinate the servicer configuration in accordance with the contractural requirements and specifications and provide the related documentation required to support the reviews.

1.3.2.3 Safety Requirements and Analysis (Level 4) - This WBS element provides for all effort required to perform analyses and preparation of the documentation for the Safety Review Process. A summary of the review process is provided in Table 1.3.2.3-1.

1.3.2.4 Operations Support Requirements (Level 4) - This element provides for the definition of detailed launch site and mission operations support requirements. It includes detailed functional analyses to identify both pre-flight and post-flight operations support as well as mission planning and post-mission support analysis.

1.3.3 Design and Analysis (Level 3)

This WBS element includes all labor, materials, and other resources required to perform the analyses, design, design trades, and development testing activities for the cargo bay demonstration.

Table 1.3.2.3-1 SUMMARY OF SAFETY REVIEW PROCESS

PHASE	TIMING	PAYLOAD ORGANIZATION'S SAFETY EFFORTS	PURPOSE OF REVIEW
0	Payload/GSE conceptual design established	1. Perform preliminary safety analysis. 2. Prepare a ground operations concept (KSC).	1. Identify potential hazards and applicable safety requirements.
I	Payload/GSE preliminary design established	1. Define and expand safety analysis to reflect the preliminary design: a. Define hazards. b. Define hazard causes. c. Evaluate actions for reducing or controlling hazards. d. Identify approach for safety verification. 2. Prepare a mission (or ground operations) scenario. 3. Determine compliance with NHB 1700.7 and KHB 1700.7.	1. Assess the preliminary design against NHB 1700.7 and KHB 1700.7. 2. Evaluate preliminary hazard controls and safety verification methods.
II	Payload/GSE final design established	1. Refine and expand safety analysis. a. Evaluate interfaces and mission (or ground operations) procedures, plans and timelines. b. Update hazard descriptions, causes, and controls. c. Finalize test plans, analysis procedures, or inspections for safety verification. 2. Finalize description of ground operations flow. 3. Determine compliance with NHB 1700.7 and KHB 1700.7.	1. Assess final design against NHB 1700.7 and and KHB 1700.7. 2. Concur on specific hazard controls and safety verification methods.
III	Payload/GSE fabrication and testing complete	1. Complete safety analysis. 2. Prepare safety assessment report. 3. Complete all safety verification tests, analyses, and/or inspections. 4. Prepare safety compliance data package.	1. Approval of safety assessment report. 2. Review of safety compliance data package. 3. Identify open safety items.

The hardware is divided into the servicer system, spacecraft mockup, airborne support equipment, ground monitoring station and ground support equipment. The preparation of design drawings, parts lists, material analyses, wiring diagrams, and the testing of critical components and subsystems is included in this element.

1.3.3.1 Servicer System (Level 4) - This element includes all labor, materials, and other resources required to perform the analyses, design, design trades, development and qualification testing activities for the servicer system. The servicer system consists of the servicer unit, stowage rack, docking probe and the video equipment. Although the modules reside at both the stowage rack and the spacecraft, they are contained within the spacecraft element. The fluid resupply equipment is divided between the servicer system and the spacecraft mockup.

1.3.3.1.1 Structures, Mechanisms and Thermal Control (Level 5) - This element provides for the design and development of the servicer system structural and mechanical subsystem. The specific tasks include:

a) Structural Analysis - The servicer system will be overdesigned such that the safety requirements for the operating load, emergency landing loads, and the cycle life can be verified through the structural analysis. The analysis must be of such detail as to fulfill this requirement. The analyses will be performed for the case of servicer arm locked in the stowed configuration as would be the case in either the launch or landing. Analyses will be performed for other cases identified in the safety analyses.

C-6

b) Mechanisms - The mechanisms of the servicer system will be verified through reviews of the design, inspection and acceptance testing. Analyses will support the design reviews and inspection portion of the verification process. The modified module servicing tool (MST) will be supplied by GSFC, who will perform any necessary development or qualification testing.

c) Thermal Analysis - A thermal analysis will be performed to determine the operating temperatures and size the heaters. Detailed temperature profiles and time histories are not required. Analyses will be performed for several steady state cases including the expected extreme conditions, in order to bound the problem. Models with a limited number of nodes will be used and transient simulations will not be performed.

d) Fluid Resupply System - Analyses and testing will be used to verify the fluid system of the fluid resupply system. Qualification testing will be used to verify containment adequacy at the operating pressure. Analyses will be used for the capacity, operating pressure, proof pressure, burst pressure and cycle life.

1.3.3.1.2 Control and Electronics (Level 5) - The design analyses of the servicers instrumentation, controls and electronics shall support verification through reviews of the design and acceptance testing. The interface between the servicer system and the STS will be made through a NASA supplied Standard Umbilical Release/Retract/Retention System (SURS), which has been previously flight qualified.

1.3.3.1.3 Data Handling (Level 5) - This element provides for the design and development of the servicer system data handling subsystem excluding the design and development of the software.

1.3.3.1.4 Electrical Power Distribution (Level 5) - This element provides for the design and development of the servicer system electrical power and distribution subsystem, including provision for the electrical power interface to the flight support system. The STS interface will consist of a NASA supplied SURS which is flight qualified.

1.3.3.1.5 Video (Level 5) - This element provides for the design and development of the servicer system video and alignment sensor subsystems. Efforts will be made to use a previously flight qualified camera. The alignment sensor will be developed as part of this program.

Analyses and development testing will be required for verification.

1.3.3.2 Spacecraft Mockup (Level 4) - This element includes all labor, materials, and other resources required to perform the analyses, design, design trades, and development testing activities for the Spacecraft Mockup. The spacecraft mockup consists of a Multi-Mission Modular Spacecraft (MMS) structure, MMS module, a fluid resupply module, battery module and grapple fixtures. The MMS structure and modules are flight qualified and will be supplied by GSFC. Fully developed fluid resupply interfaces will be obtained from either within Martin Marietta or NASA. The hardware to be built within this element consists of the battery module, the fluid resupply module (storage tanks, supply lines and supply system) and the necessary integration hardware.

1.3.3.2.1 Structures, Mechanisms and Thermal Control (Level 5)- This element provides for the design and development of the spacecraft mockup structural and mechanical subsystem. The specific tasks include:

a) Battery Module Structural Analysis - The structural analysis of the battery module will be used to verify the operating loads, emergency landing loads and cycle life. The module will be tested for random vibration as part of the servicer system.

b) Fluid Resupply Module Structural Analysis - The structural analysis of the fluid resupply modules will be used to verify the operating loads, emergency landing loads and cycle life. The module will be tested for random vibration as part of the servicer system.

c) Fluid Resupply Module Fluid System - Analyses and testing will be used to verify the fluid system of the fluid resupply module. Qualification testing will be used to verify containment adequacy at the operating pressure. Analyses will be used for the capacity, operating pressure, proof pressure, burst pressure and cycle life.

1.3.3.2.2 Control and Electronics (Level 5) - The design analyses of the spacecraft mockup instrumentation, controls and electronics shall support verification through reviews of the design and acceptance testing.

1.3.3.2.3 Data Handling (Level 5) - This element provides for the design and development of the spacecraft mockup data handling subsystem excluding the design and development of the software.

1.3.3.2.4 Electrical Power Distribution (Level 5) - This element provides for the design and development of the spacecraft mockup electrical power and distribution subsystem including provision for the electrical power requirements and the electrical power interface to the servicer system.

1.3.3.3 Airborne Support Equipment (Level 4) - This element includes all labor, materials, and other resources required to perform the analyses, design, design trades, and development testing activities for the servicer airborne support equipment. The airborne support equipment consists of the flight support system, STS control station and the STS cargo bay interface.

1.3.3.3.1 Flight Support System (Level 5) - This element provides for the analysis of the existing Multi-Mission Modular Spacecraft Flight Support System (FSS) and establishes the interfaces between it and the servicer system, the spacecraft mockup, and the STS cargo bay. The MMS flight support system is flight qualified and will be supplied by GSFC.

1.3.3.3.2 STS Control Station (Level 5) - This element provides for the definition of the STS control and display station interfaces. The control station will consist of a control computer (equivalent to a militarized AT personal computer), a safety shield to prevent damage should the CRT explode and a control panel. The computer and control panel will require only analysis, while development testing will verify the safety shield.

1.3.3.3.3 STS Cargo Bay Interface (Level 5) - This element provides the definition of the equipment needed to interface the servicer and the flight support system into the STS cargo bay. NASA supplied interfaces will be used.

1.3.3.4 Servicer Ground Monitoring Station (GMS) (Level 4) - This element includes all labor, materials, and other resources required to perform the analyses, and trades studies for the servicer ground monitoring station.

1.3.3.5 Servicer Ground Support Equipment (Level 4) - This element provides for the effort required to design, develop, and test the ground support equipment required for the servicer launch site integration activities. Included are transportation and handling equipment, assembly equipment, mock-ups, and other non-flight miscellaneous hardware.

1.3.3.6 Software (Level 4) - This element provides for the design development, checkout and maintenance of the flight and ground software required for the servicer. The flight software includes all on-board software required for in-flight command control and data handling for the servicer. Ground software includes the software required to support the development and ground checkout of the servicer and to support launch and mission operations. Development testing will be used to verify the software.

1.3.4 Hardware Procurement, Fabrication, Assembly & Checkout (Level 3)

This WBS element includes all labor, materials, and other resources necessary to procure, fabricate, assemble and check out subsystems, excluding software. Included is the design and development of all shop drawings, the procurement of purchased parts and materials, and the handling and staging of material and purchased parts. This element includes all effort associated with the manufacture and procurement of test hardware.

1.3.4.1 Servicer System (Level 4) - This element includes all labor, materials, and other resources necessary to procure, fabricate, assemble and check out the servicer system.

1.3.4.1.1 Structures, Mechanisms and Thermal Control (Level 5)- This element provides for the effort necessary to procure, fabricate, assemble, and check out the structural and mechanical subsystems. Qualification tests will be performed for random vibrations of the servicer system. Included in the system to be tested are the servicer system, MMS module, fluid resupply module, and battery module. The servicer arm will be in the stowed position.

1.3.4.1.2 Control and Electronics (Level 5) - This element provides for the effort necessary to procure, fabricate, assemble, and check out the control interfaces and electronic components.

1.3.4.1.3 Data Handling (Level 5) - This element provides for the effort necessary to procure, fabricate, assemble, and check out the data handling subsystem.

1.3.4.1.4 Electrical Power Distribution (Level 5) - This element provides for the effort necessary to procure, fabricate, assemble and check out the electrical power distribution subsystem.

1.3.4.1.5 Video (Level 5) - This element provides for the effort necessary to procure, fabricate, assemble, and check out the video and alignment sensor subsystems.

1.3.4.2 Spacecraft Mockup (Level 4) - This element includes all labor materials, and other resources necessary to procure, fabricate, assemble and check out the spacecraft mockup subsystems.

1.3.4.2.1 Structures, Mechanisms and Thermal Control (Level 5)- This element provides for the effort necessary to procure, fabricate, assemble, and check out the structural and mechanical subsystem of the spacecraft mockup.

1.3.4.2.2 Control and Electronics (Level 5) - This element provides for the effort necessary to procure, fabricate, assemble and checkout the control interfaces and electronic components of the spacecraft mockup.

1.3.4.2.3 Data Handling (Level 5) - This element provides for the effort necessary to procure, fabricate, assemble, and check out the data handling subsystem of the spacecraft mockup.

1.3.4.2.4 Electrical Power Distribution (Level 5) - This element provides for the effort necessary to procure, fabricate, assemble and check out the electrical power distribution subsystem of the spacecraft mockup.

1.3.4.3 Airborne Support Equipment (Level 4) - This element provides for the effort necessary to procure, fabricate, assemble and check out the servicer airborne support equipment subsystems.

1.3.4.3.1 Flight Support System (Level 5) - This element provides for the effort necessary to interface with GSFC and check out the flight support system and its interfaces to the spacecraft mockup, servicer unit and STS cargo bay.

1.3.4.3.2 STS Control and Display Station (Level 5) - This element provides for the effort necessary to procure, fabricate, interface and checkout the servicer STS control and display subsystem. Development testing of a CRT safety shield will be performed as part of the element.

1.3.4.3.3 STS Cargo Bay Interface (Level 5) - This element provides for the effort necessary to assemble, integrate and check out the STS cargo bay interface subsystem provided by NASA.

1.3.4.4 Servicer Ground Monitoring Station (GMS) (Level 4) - This element provides for the effort necessary to interface and check out the servicer ground monitoring station subsystems.

1.3.4.5 Ground Support Equipment (Level 4) - This element provides for the effort necessary to procure, fabricate, assemble, and check out the servicer ground support equipment subsystems.

1.3.5 System Assembly and Check out (Level 3)

This element includes all labor, materials and other resources required to assemble the servicer and related equipment and then conduct system level acceptance testing.

1.3.5.1 Servicer System Assembly and Check Out (Level 4) - This system element provides for the resources to assemble the servicer system and conduct check out tests.

1.3.5.2 Spacecraft Mockup Assembly and Checkout (Level 4) - This element provides the resources to assemble the spacecraft mockup and conduct checkout tests.

1.3.5.3 Airborne Support Equipment Assembly and Check Out (Level 4) - This element provides for the resources to assemble the airborne support equipment and to conduct check out tests.

1.3.5.4 Servicer Ground Monitoring Station Assembly and Check Out (Level 4) - This element provides for the resources to assemble and check out the servicer ground monitoring station.

1.3.5.5 Servicer Ground Support Equipment Assembly and Check Out (Level 4) - This element provides for the resources to assemble the servicer ground support equipment and to conduct check out tests.

1.3.5.6 System Testing (Level 4) - This element provides for the planning, documentation, materials and services required to accomplish all system-level final acceptance testing of the servicer system, spacecraft mockup and the flight support system.

1.3.6 Launch Operations Support (Level 3)

This element provides for the support required to plan, develop and execute pre-flight and post-flight ground operations support of the servicer. This activity shall include any training, operations, integration activities and documentation support for the servicer off-line activities as well as procedure development and implementation support to the launch site for on-line activities for the servicer checkout and integration.

1.3.6.1 Pre-Flight Operations Support (Level 4) - This WBS element includes all labor, materials and other resources required to support the pre-flight operations activity. Included is all effort required to plan, organize, and execute the pre-flight integration, checkout and handling of the servicer and support equipment.

1.3.6.2 Post-Flight Operations Support (Level 4) - This element includes all labor, materials, and other resources required to support the post-flight operations activity. This task includes all post-flight "safing" of the servicer hardware, removal from the STS, inspection and checkout, preparation for shipment (if applicable), and analysis and documentation of support activities.

1.3.7 Mission Operations Support (Level 3)

This element includes all labor, materials, and other resources required to support the mission operations activity. Included is the support to mission planning, on-orbit mission operations, ground control and flight crew training support and post-mission analysis.

1.3.7.1 Mission Planning Support (Level 4) - This element includes all labor, materials, and other resources required to develop the sequencing of flight events necessary to complete the prescribed mission. It also includes contingency planning to respond to unprogrammed mission events.

1.3.7.2 Mission Support (Level 4) - This element includes all labor, materials, and other resources required to support ground command, telemetry, tracking and communications during the mission. Also included is the development of flight procedures for activation, operation, and deactivation of the servicer as well as procedures for trouble shooting of anomalies and failures. In addition, all mission support contractor crew training is included in this WBS element.

1.3.7.3 Post-Mission Analysis (Level 4) - This element includes all labor, materials, and other resources required to analyze and document the data generated during the mission relative to the engineering instrumentation flown on the mission.

1.4 AIRBORNE SUPPORT EQUIPMENT (Level 2)

GSFC shall provide the Airborne Support System, MMS structure, and MMS modules.

1.5 OMV (Level 2)

This element is to provide/obtain information only.

1.6 STS (Level 2)

This element is to provide/obtain information only.