NASA Technical Memorandum 101628

ROTATION OF IMAGES BY SCAN MIRRORS

Stephen J. Katzberg

June 1989

(NASA-TM-101628) ROTATION OF IMAGES BY SCAN MIRRORS (NASA. Langley Research Center) 11 p CSCL 20F

N89-27504

Unclas

G3/74 0222713

National Aeronautics and
Space Administration

Langley Research Center
Hampton, Virginia 23665

ERRATA

NASA Technical Memorandum 101628

Stephen J. Katzberg

ROTATION OF IMAGES BY SCAN MIRRORS

June 1989

Pages 4-5. - Text should read as follows:

Looking at the case alluded to in the introduction, the following conditions defined the problem: With a spacecraft at 824 km altitude, the imager was to look at the Earth's limb from 50 km to 550 km above the tangent point, both directly ahead (positive "X" axis) and 90 degrees to the side of the spacecraft direction of travel (i.e. along "Y" axis). To accomplish this imaging geometry, the imager optical axis was aimed to the rearward direction and down. A scan mirror redirected the optical axis towards the direction of travel, or to the right or left under command. The downward tilt with respect to the spacecraft mounting plane was 24 degrees. Rotation of the scan mirror was to be about a line in the plane of the front surface of the redirecting mirror (approximately along the "Z" axis).

Page 5. - Last Paragraph should read:

When the mirror is rotated to move the optical axis to the side of the spacecraft, as illustrated in Figure 4b, the condition is different. In this case, scanning the mirror normal upward in addition to its side rotation will yield an image rotation. The initial movement of the mirror in the plane perpendicular to the spacecraft Z axis would simply retain the depression, but would also rotate horizontal lines in the imager so that their projection would be nearly parallel to the horizon. Now scanning the mirror normal to have a Z axis component also causes a Z axis component in the projected horizontal lines as well as the vertical ones. The amount of the rotation of the horizontal line (which starts with some vertical projection) can be developed from the following: Let $\vec{n}$ be the vector normal to the reflector surface and have the form:

Page 6. - There are two missing equations:

$$\vec{i}_z \bullet \vec{O}' = -\vec{i}_z \bullet \vec{O} + 2(\vec{n} \bullet \vec{O})\vec{i}_z \bullet \vec{n}$$

$$\text{Cos } \Omega_z = 2\text{Sin } \phi \text{ Sin } \alpha \text{ Cos } \phi$$

Page 6. - The equations for tangent of the rotation angle should read:

$$\tan \Omega x = \frac{\text{Sin } \Omega x}{\text{Cos } \Omega x}; \quad \Omega x = \frac{\pi}{2} - \Omega z$$

$$= \frac{\text{Cos } \phi \text{ Sin } \alpha \text{ Sin } \phi}{\text{Sin } \phi \text{ Sin } \phi \text{ Cos } \alpha \text{ Sin } \alpha}$$

$$= \frac{\text{Cot } \phi}{\text{Cos } \alpha}$$

$$\tan \Omega x = \frac{2}{\sqrt{2}} \text{Cot } \phi$$

$$= \sqrt{2} \text{Cot } \phi$$

$$\Omega x \approx \sqrt{2}\left(\frac{\pi}{2} - \phi\right)$$

Issued January 1990

ROTATION OF IMAGES BY SCAN MIRRORS

by

Stephen J. Katzberg
NASA Langley Research Center
Hampton, Virginia 23665

Introduction

During the evaluation of proposals submitted in response to the Announcement of Opportunity for EOS, a question arose as to image rotation effects caused by scan mirrors. In particular, one instrument proposal described the intention of using a pointing mirror to redirect a rearward pointing optical axis to the forward direction and to two acute angles on either side of forward. In the technical discussions related to this proposal, it was believed that any such redirection would cause a major, and uncompensated, rotation of the image.

It is the purpose of this document to examine the general problem of image rotation in electro-optical imagers, to develop the necessary analysis to quantify the rotation, and to relate the results to the above mentioned example.

Theory

The fundamental principle involved here is what is commonly referred to as "the angle of incidence equals the angle of reflection." The origin of this relationship comes from historical practical observation, quantified in modern electro-magnetic field theory.

In electro-magnectic field terms, the requirement for a wave impinging on a reflector is for the electric field to match the boundary condition of "no tangential or normal electric fields penetrating the (perfect) reflector" along the interface between the two. Such a requirement implies that there must be another wave, the reflected wave, traveling outward, as illustrated in Figure 1. Otherwise, there will be no hope of everywhere meeting the boundary condition of no electric field penetrating the (perfect) reflector. Since there are no other sources of propagating waves, the reflected wave must have the following characteristics: The part of the incident propagation vector normal to the surface must change sign to become an outward directed wave. The tangential component of the propagation vector will be matched by an equal one from the reflected wave to match the boundary conditions at the reflector. Moreover, since the material constants for each propagation vector are the same, then the magnitude of the two vectors are the same.

In vector terms, this effect can be written:

$$\vec{k}_p = (\vec{n}\bullet\vec{k})\vec{n};\ \vec{k}_n = \vec{k} - (\vec{n}\bullet\vec{k})\vec{n}$$

$$\vec{k}' = \vec{k} - 2(\vec{n}\bullet\vec{k})\vec{n}$$

Where $\vec{k}_p$ is the parallel component of the propagation vector, $\vec{k}_n$ is the normal component, and $\vec{n}$ is the normal to the reflector surface.

Note that since the incident wave and the reflected wave are in the same medium, then the magnitude of the two propagation vectors must match.

$$\vec{k}'\bullet\vec{k}' = \{\vec{k} - 2(\vec{n}\bullet\vec{k})\ \vec{n}\} \bullet \{\vec{k} - 2(\vec{n}\bullet\vec{k})\ \vec{n}\}$$
$$= \vec{k}\bullet\vec{k} - 4(\vec{n}\bullet\vec{k})(\vec{n}\bullet\vec{k}) + 4(\vec{n}\bullet\vec{k})^2$$
$$= \vec{k} \bullet \vec{k}$$

If now the dot product of the reflected wave propagation vector is taken against the normal to the reflector surface, $\vec{n}$, the following results:

$$\vec{n}\bullet\vec{k}' = \vec{n}\bullet\vec{k} - 2(\vec{n}\bullet\vec{k})\vec{n}\bullet\vec{n}$$
$$= -2\vec{n}\bullet\vec{k}$$
$$= -|\vec{k}|\cos\theta'$$

Where θ' is the angle between the propagation vector and the normal $\vec{n}$. And, if the dot product of the incident wave is taken against the normal vector, $\vec{n}$, then it is seen that the cosines of the two angles θ' and θ are opposite in sign.

$$\vec{n}\bullet\vec{k} = |\vec{k}|\cos\theta$$

That is, they are 180 degrees from one another and of the same maginitude, demonstrating that the "angle of incidence equals the angle of reflectance". The process just described in generating the reflected wave propagation vector is linear in the sense that two waves each produce a component from the reflector normal proportional to the dot product between the two. Thus, given two waves with propogation vectors $\vec{A}$ and $\vec{B}$ the effect of the mirror reflection on a third propagation vector $\vec{C}$, which is the difference between them is evidently:

$$\vec{A}' = \vec{A} - 2(\vec{n}\bullet\vec{A})\vec{n}$$
$$\vec{B}' = \vec{B} - 2(\vec{n}\bullet\vec{B})\vec{n}$$

$$\vec{C}' = \vec{A}'-\vec{B}' = (\vec{A}-\vec{B}) - 2(\vec{n}\bullet\vec{A})\vec{n} + 2(\vec{n}\bullet\vec{B})\vec{n}$$
$$= \vec{C} - 2(\vec{n}\bullet\vec{C})\vec{n};\ \vec{C} = \vec{A}-\vec{B}$$

Therefore, the effect of reflection from a mirror surface can be conveniently described by this vector equation. Some obvious implications can be noted. First, if there is no component of the source vector in the direction of the normal to the reflector, then there is no effect of the mirror on the source vector. Second, the normal vector can contribute to affect the source vector in all dimensions of the normal, just so long as the source and normal are not orthogonal. Third, even though the normal can affect the source vector, the angles among a group of source vectors are

retained. This can be seen by forming the dot product between any two source vectors and their reflected versions:

$$\vec{A}'\bullet\vec{B}' = [\vec{A} - 2(\vec{n}\bullet\vec{A})\vec{n}]\bullet[\vec{B} - 2(\vec{n}\bullet\vec{B})\vec{n}]$$
$$= \vec{A}\bullet\vec{B} - 4(\vec{n}\bullet\vec{A})(\vec{n}\bullet\vec{B}) + 4(\vec{n}\bullet\vec{A})(\vec{n}\bullet\vec{B})\vec{n}\bullet\vec{n}$$
$$= \vec{A}\bullet\vec{B}$$

Fourth, the magnitude of the reflected vector (a source vector, the propagation vector, etc.) is unchanged, which follows from the above equation with B chosen the same as A. Fifth, the rotation of the reflected source vector is twice the angle between the incoming source vector and the reflected source vector:

$$\vec{A}'\bullet\vec{A} = |\vec{A}|^2 - 2(\vec{n}\bullet\vec{A})(\vec{n}\bullet\vec{A})$$
$$|\vec{A}'|^2\mathrm{Cos}\Phi' = |\vec{A}|^2(1-2\mathrm{Cos}^2\Phi n)$$
$$\mathrm{Cos}\Phi' = \mathrm{Cos}2\Phi n$$

Where Φ' is the angle between the reflected vector and the source vector and Φ is the angle between the reflector normal vector, $\vec{n}$, and the source vector.

Effect in an Imaging System

To determine the effect of an external scan mirror in an imaging system, three things are important to understand. First, imaging systems have some sort of image forming element, lens, pinhole, focussing mirror, etc., and that element has the property of more or less maintaining geometric relationships between elements in the object and the image generated. Second, in the focal area of the imaging system is some sort of scanning aperture or detector array whose geometry, in conjunction with the optical axis, sets the geometric orientation of the imaging system. Third, there is an inversion in travelling through the imaging system, left-for-right, top-for-bottom, which causes the image vector to be the negative of what impinges on the external scan mirror. In all that follows, note the appearance of a sign reversal in the vector equations to account for the fact that vectors are assumed to originate in the image side of the optical device.

The question, in simplest terms, of whether and how an image is rotated is one of picking a vector in the image plane and determining how that vector projects against the scene of interest. It is of interest that image rotation is not always a bad thing, and sometimes is essential for proper system performance. For example, an imager on a spacecraft may be desired to look forward and sideways at the horizon. Pointed in the direction of travel, the imager would see vertical lines along an Earth radius vector at the tangent point, and horizontal lines perpendicular to the radius vector and approximately) perpendicular to the optical axis to the target. Looking to the side of the spacecraft, the vertical lines would be again along the radius vector at that tangent point, and the "cross-lines" would again be

perpendicular to both optical axis and radius vector. However, these "cross-lines" will also be perpendicular to the "cross-lines" in front of the spacecraft, having "rotated" from across the spacecraft track to along it. In this case, the rotation of the image is desirable and, in fact, the imaging scan system must provide the rotation of the imaging coordinates for proper operation.

Undesirable rotation occurs when there is rotation between the optical system axes in the image plan and the orientation of the targets of interest, referred to the image plane.

Some Examples

The simplest case is a mirror set to rotate about one single axis in order to scan some field of view. Two cases will be examined: A mirror rotating about an axis perpendicular to the optical axis of an imager and a mirror rotating about the same axis as the optical axis. In the first case illustrated in Figure 2, the mirror normal is perpendicular to one set of parallel lines and in line with, but with varying projection against, the orthogonal set in the optical image plane. From the above considerations, the set of constantly orthogonal lines will project completely unaltered except for the left-to-right, top-to-bottom inversion:

$$\vec{A}' = -\vec{A} + 2(\vec{n}\bullet\vec{A})\vec{n}$$

$$= -\vec{A};\ n\ \vec{A}$$

The other set has a component from the normal which sweeps around in orientation from completely in line to completely orthogonal (in the line of the optical axis) to this set:

$$\vec{B}' = -\vec{B} + 2\ |\vec{B}|\vec{n}\mathrm{Cos}\Omega$$

$$= (-B + B\mathrm{Cos}^2\Omega)\vec{1}_x + (B\mathrm{Cos}\Omega\mathrm{Sin}\Omega)\vec{1}_y$$

$$= B(\mathrm{Cos}2\Omega\vec{1}_x + \mathrm{Sin}2\Omega\vec{1}_y)$$

Thus, the "in-line" set of lines in the image plane form a projected set (inverted) which rotate around with the normal vector, but twice as fast.

In the case of a mirror rotating about an axis parallel to the optical axis, as illustrated in Figure 3, the normal has components at various points in the rotation which overlap and then become orthogonal to all sets of straight lines in the image plane. Thus, a projected image will rotate round and round as the normal progresses, but without the "two-times" relationship in the former case. With a mirror set at a 45-degree angle to the optical axis (still rotating about the optical axis) then the image will project at a 90-degree angle. With the mirror deflecting the image straight down, say, horizontal lines will still be anti-parallel in object and image. But if the mirror rotates 90 degrees, the lines will be orthogonal, those in projection being "front-to-back" to their "side-to-side" source in the image plane (vector B and B' in Figure 3).

Looking at the case alluded to in the introduction, the following conditions defined the problem: With a spacecraft at 824 km altitude, the

imager was to look at the Earth's limb from 50 km to 550 km above the tangent point, both directly ahead and 90 degrees to the side of the spacecraft direction of travel. To accomplish this imaging geometry, the imager optical axis was aimed to the rearward direction and down. A scan mirror redirected the optical axis towards the direction of travel, or to the right or left under command. The downward tilt with respect to the spacecraft mounting plane was of 24 degrees. Rotation of the scan mirror was to be in the plane of the front surface of the redirecting mirror.

Given these parameters, a few relationships can be pointed out. First, the Earth's tangent point from 824 km is out at approximately 3342 km and represents a depression angle of 27 degrees. If the external plane mirror has its normal parallel to the plane of the spacecraft/optical imager, then a rear pointing depression of 27 degrees yields a forward reflected depression of the required 27 degrees. In the case here, a mirror scan of a few degrees was planned to cover the range from 27 degrees depression to about 18.

The scan from a point 50 km above the Earth's limb to 550 km above the limb represents a start at about 0.9 degrees above the tangent point, continuing to about 9.3 above the tangent point. Thus, the depression angle must change and a certain amount of image rotation may occur. In terms of what has already been presented, the amount of image rotation can be calculated by assuming that the scan mirror normal is given a Z axis tilt in an opposite direction to the backward tilt of the optical axis and just enough to rotate the line to the tangent point upward to start at 50 km and end at 550 km. In the forward looking case, a horizontal line in the image plane would have no dot product with the mirror normal at any tilt, while a vertical line would, yielding a fore and aft tilt in its projection at the tangent, as illustrated in Figure 4a.

When the mirror is rotated to move the optical axis to the side of the spacecraft, as illustrated in Figure 4b, the condition is different. In this case, scanning the mirror normal upward in addition to its side rotation will yield a rotation. The initial movement of the mirror in the plane perpendicular to the spacecraft Z axis simply retained the depression, but also rotated horizontal lines in the imager so that their projection was still parallel to the horizon. Now rotating the normal to have a Z axis component also causes a Z axis component in the projected horizontal lines as well as the vertical ones. The amount of the rotation of the horizontal line (which starts with no vertical projection) can be developed from the following: Let $\vec{n}$ be the vector normal to the reflector surface and have the form:

$$\vec{n} = \mathrm{Sin}\phi\mathrm{Cos}\alpha\vec{1}_x + \mathrm{Sin}\phi\mathrm{Sin}\alpha\vec{1}_y + \mathrm{Cos}\phi\vec{1}_z$$

Where the normalization of the direction cosines has been used to express the new unit vector components in terms of the previous ones. In the case here, the mirror normal started at a 45-degree angle with respect to the spacecraft tangential velocity vector, so the angles can be evaluated easily. Let the source vector be a vector $\vec{o}$ that is perpendicular to the spacecraft velocity and zenith-nadir axis vectors (a vector in Yaw.)

$$\vec{o} = \vec{1}_y$$

Then, it remains to determine the X and Z components of the vector o when the mirror is pointed out at 45 degrees (remembering the double angle rotation to 90 degrees to the spacecraft track in order to look to the side horizon). Once the components are found, then taking the arctangent will yield the amount of rotation. The Z component can be found by taking the dot product of $\vec{o}$ with a unit vector in the Z direction:
While the X component can be found in a similar way:

$$\vec{i}_x \bullet \vec{o}' = -\vec{i}_x \bullet \vec{o} + 2(\vec{n} \bullet \vec{o})\vec{i}_x \bullet \vec{n}$$

$$\vec{i}_x \bullet \vec{o}' = |\vec{o}| \mathrm{Cos}\Omega x$$

$$\vec{i}_x \bullet \vec{o}' = 2\mathrm{Sin}\phi\mathrm{Sin}\alpha\mathrm{Sin}\phi\mathrm{Cos}\alpha$$

The tangent of the angle Ωx is then found to be:

$$\tan\Omega x = \frac{\mathrm{Sin}\Omega x}{\mathrm{Cos}\Omega x}; \quad \Omega x = \frac{\pi}{2} - \Omega z$$

$$= 2\,\frac{\mathrm{Cos}\phi\mathrm{Sin}\alpha\mathrm{Sin}\phi}{\mathrm{Sin}\phi\mathrm{Sin}\phi}$$

$$= 2\,\mathrm{Cot}\phi\mathrm{Sin}\alpha$$

For the case here in which α is 45 degrees the approximation to the tangent and cotangent can be used, remembering that ϕ is close to 90 degrees:

$$\tan\Omega x = \frac{2}{2}\,\mathrm{Cot}\phi$$

$$= 2\,\mathrm{Cot}\,\phi$$

$$\Omega \approx 2\,\frac{\pi}{2} - \phi$$

Using the values here for the change in depression angle from 27 degrees down to about 18 degrees in scanning from 50 km up to 550 km at the tangent height, the amount of rotation is thus seen to be approximately 12.0 degrees.

Conclusion

An analysis of the commonly encountered question of the effects of scan mirrors on scene orientation or rotation for image forming systems has been presented. Some simple vector relationships have been presented, which when combined with the anticipated application conditions, make it possible to easily assess image orientation effects resulting from scan mirrors. The analysis has been applied to some examples for illustration and to one example of current interest. In the latter example, the degree of image shift has been presented; and in the process, the danger of falling into simple misconceptions has been highlighted.

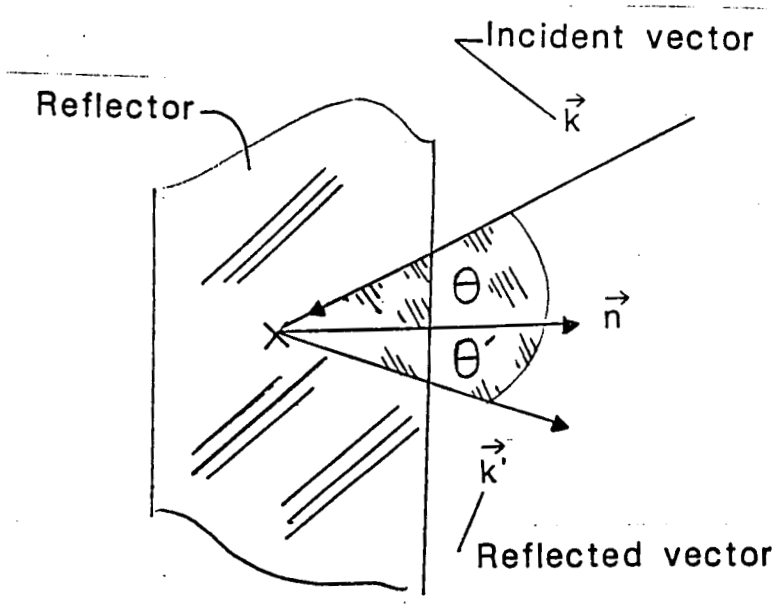

Figure 1. Illustration of geometry of reflection of a plane wave.

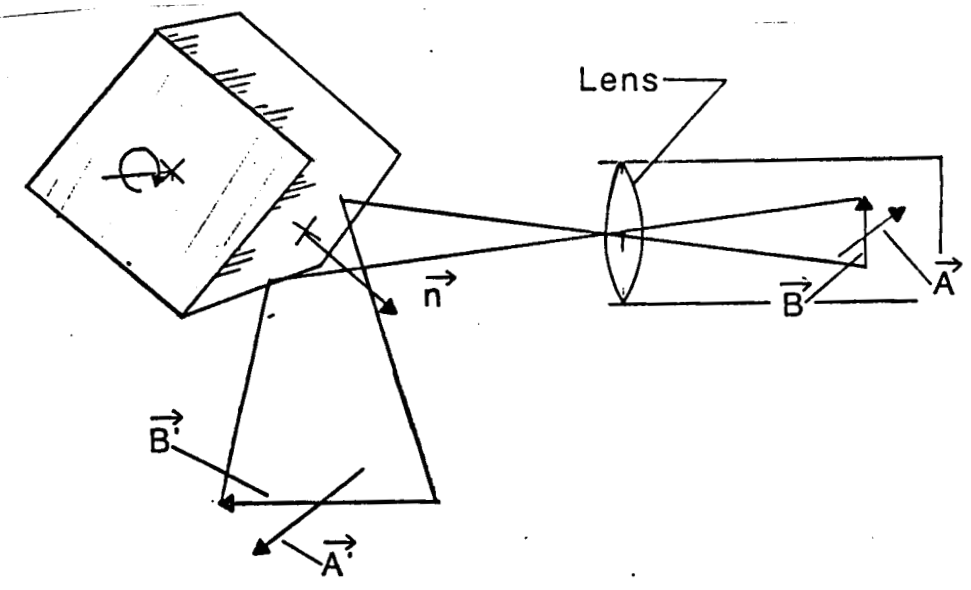

Figure 2. Case of a scan mirror rotating about an axis perpendicular to the optical axis.

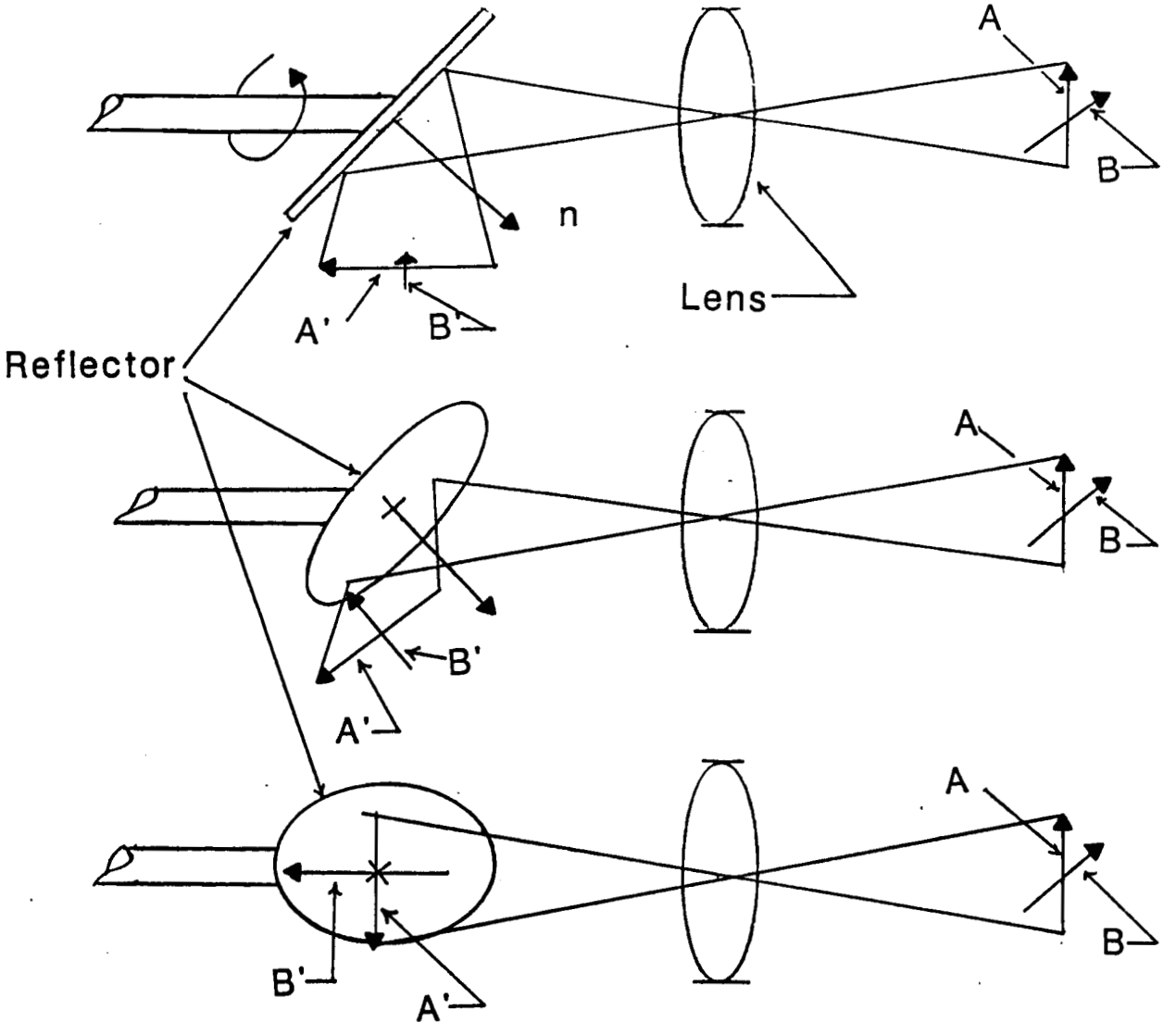

Figure 3. Case of a scan mirror rotating about an axis parallel to the optical axis.

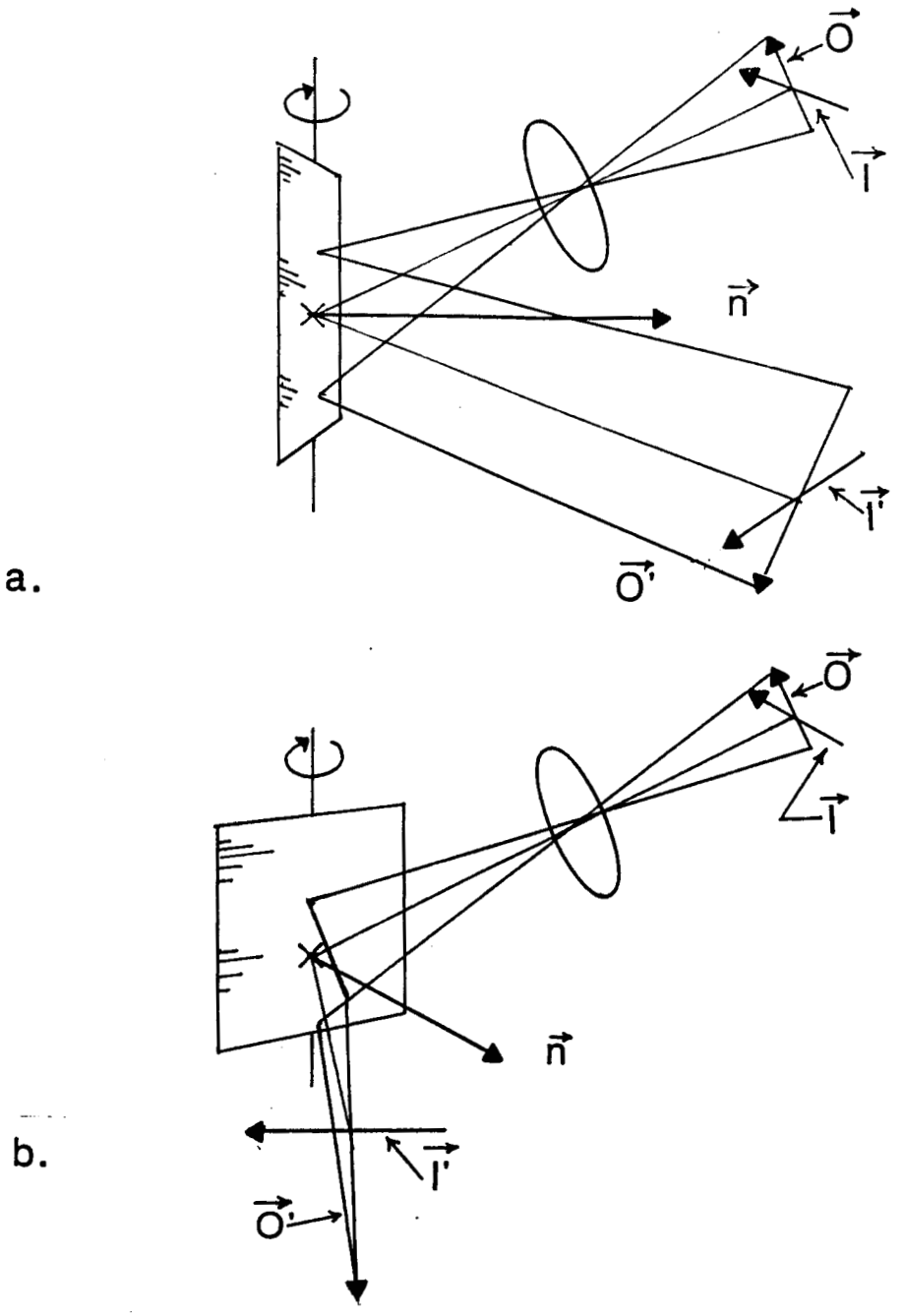

Figure 4. Case of a scan mirror designed to move the target point to the horizon from a spacecraft mounted backward pointing imager.

NASA
National Aeronautics and Space Administration

Report Documentation Page

1. Report No. NASA TM-101628	2. Government Accession No.	3. Recipient's Catalog No.
4. Title and Subtitle ROTATION OF IMAGES BY SCAN MIRRORS		5. Report Date June 1989
		6. Performing Organization Code
7. Author(s) Stephen J. Katzberg		8. Performing Organization Report No.
		10. Work Unit No. 488-80-07-01
9. Performing Organization Name and Address NASA Langley Research Center Hampton, VA 23665		11. Contract or Grant No.
		13. Type of Report and Period Covered Technical Memorandum
12. Sponsoring Agency Name and Address National Aeronautics and Space Administration Washington, DC 20546		14. Sponsoring Agency Code

15. Supplementary Notes

16. Abstract

An analysis is presented of the effect of scan mirrors on image rotation in imaging systems. Examples are cited to demonstrate application of the analysis.

17. Key Words (Suggested by Author(s)) Imaging Systems, Image Rotation	18. Distribution Statement Unclassified - Unlimited Subject Category 74

19. Security Classif. (of this report) Unclassified	20. Security Classif. (of this page) Unclassified	21. No. of pages 10	22. Price A02

NASA FORM 1626 OCT 86