Public Works DIGEST

Volume XXII, No.3,
May/June 2010

Spc. Dean Kalogris, Headquarters and Headquarters Company, Fort Bliss, Texas, charges the electric car he uses to drive post Command Sgt. Maj. David Davenport. Photo by Maj. Deanna Bague, Fort Bliss Public Affairs

This Issue:
Environment and Sustainability

Management 3

Awards 20

Successes 30

Professional Development 44

Who's Who 46

IMCOM
U.S. ARMY INSTALLATION MANAGEMENT COMMAND

Public Works DIGEST

Volume XXII, No.3,
May/June 2010

U.S. Army Installation
Management Command
2511 Jefferson Davis Highway
Arlington, Virginia 22202-3926

Public Works Digest is an unofficial publication of the U.S. Army Installation Management Command, under AR 360-1, The Army Public Affairs Program. Method of reproduction: photo-offset; press run: 1,600; estimated readership: 40,000. Editorial views and opinions expressed are not necessarily those of the Department of the Army. Mention of specific vendors does not constitute endorsement by the Department of the Army or any element thereof.

Address mail to:
U.S. Army Installation Management Command
2511 Jefferson Davis Highway
Arlington, VA 22202-3926
Attn: Editor, *Public Works Digest*
Telephone: 202-761-0022 DSN 763
FAX: 202-761-4169
e-mail:
mary.b.thompson@usace.army.mil

Donald G. LaRocque
Public Works Program Manager
Installation Management Command

Mary Beth Thompson
Managing Editor
U.S. Army Corps of Engineers

Printed on recycled paper.

Environment and Sustainability Management

3 Corps adapting to embed sustainability in all it does, *by James B. Balocki*
4 Developing the Army Sustainability Campaign Plan, *by Col. Greg Wright*
6 Operationalizing sustainability within OACSIM, *by Kathleen Marin*
8 Operationalizing sustainability within IMCOM, *by Matt Barden, Damon Cardenas and S. Lynn Odom*
10 15 ways garrisons can achieve a more sustainable installation, *by Douglas A. Warnock*
12 Forecasting technology impacts on installation management, *by Ilker Adiguzel*
13 Guidance updates requirements for oil spill prevention plans, *by Donna J. Schell*
14 Bulletin recaps study of wastewater reuse at Fort Bragg, *by Gary Gerdes*
15 Consider landscape irrigation with nonpotable water, *by William F. Fifty*
16 Composting system demonstrated at two Army sites, *by Gary Gerdes*
17 Free water, almost, *by Richard Scholze*
18 In development: using urea to produce energy, *by Carl Feickert*
19 Lessons learned: 404, 401 permitting on military training lands, *by Heidi R. Howard*

Environment and Sustainability Awards

20 Army recognizes environmental, sustainability best practices, *by Jennifer Gaskil*
21 Camp Guernsey recognized for cultural resources management, *by Nick Karoglou*
22 At Fort Stewart, early bird gets to protect the worm's environment, *by Cathy Kropp*
23 One man can make a difference, *by Cathy Kropp*
24 Camp Withycombe's green cleanup saves $5 million, *by Jennifer Gaskill*
25 Corps team efficiently investigates Aleutian Islands sites, *by Cathy Kropp*
26 Fort Custer Training Center preserves, restores natural resources, *by Nick Karoglou*
27 At Fort Bragg, birds, Soldiers declare peace, *by Cathy Kropp*
28 Aviation and Missile Command's sustainment approach reduces pollution, *by James Law*
29 Letterkenny Army Depot ensures industrial sustainability, *by Nick Karoglou*

Environment and Sustainability Successes

30 Camp Bullis finds innovative solutions to encroachment, *by Maj. Gen. Russell J. Czerw and Jim Cannizzo*
31 Recirculation system for treated production water, *by Keith Miller*
32 Army National Guard launches sustainability initiatives, *by Lt. Col. Joseph Knott*
34 Greening of Army families, *by Ann M. Choo Wharton*
35 In Europe, Corps constructs housing for avian tenants, *by Carol E. Davis*
36 Army Medicine sustainability survey finds successes, *by Mary M. Strickert*
38 Camp Ripley's buffer program success founded on local support, *by Marty Skoglund and Lisa Delmonico*
39 Joint Munitions Command's environmental processes are Soldier-ready, *by Rebecca Montgomery*
40 Fort Polk DMPBAC holds close to environmental regulations, *by Bryan Gatchell*
41 Fort Irwin part of collaborative management of federal desert lands, *by Clarence A. Everly*
42 Fort Polk organizes group to promote environmental awareness, *by A. Sara Thames*
43 Fort Carson protects tribal sites, *by Rick Emert*

Professional Development

44 CP-18 Annual Training Workshop, *by Lt. Gen Robert L. Van Antwerp*
45 Career Program 18 recognizes 4 with awards, *by Robert E. Slockbower*

Who's Who

46 Hirata heads installation support community, *by Mary Beth Thompson*

Corps adapting to embed sustainability in all it does

by James B. Balocki

Caring for the environment is a major mission for the U.S. Army Corps of Engineers. As the nation's environmental engineer, we provide solutions to environmental issues covering a full range of programs and initiatives.

Sustainability, climate change, ecosystem restoration, renewable energy and green remediation are a few of those demanding challenges that we are facing. We are committed to addressing these challenges and opportunities by working in close collaboration and partnership with others within the military, government, academia, nongovernmental entities — and anyone interested in caring for the future of our planet.

Since that first Earth Day in 1970, we have been endeavoring to minimize the environmental impacts of our work. Twenty years later, the 48th chief of Engineers, Lt. Gen. Henry J. Hatch, laid out an eloquent vision for taking care of the environment, stating that environmental ethics and values must be a "bone-deep part of our way of doing business." In 2002, we unveiled our Environmental Operating Principles, which call for sustainability and controlling our mission activities to protect and enhance the environment.

Students from Warren Electrical Trades Institute, working with the Leadership Development Class of the U.S. Army Corps of Engineers' Pittsburgh District, install the solar panel component of the new solar tracking system at Shenango Lake, outside Pittsburgh. The power generated by the new system will offset use at the lake's ranger station. U.S. Army Corps of Engineers photo

James B. Balocki
Photo by F.T. Eyre

And now, less than a decade later, the work continues.

"We've been adapting to changing needs, practices and priorities to achieve sustainability in everything we do," said the current chief of Engineers, Lt. Gen. Robert L. Van Antwerp.

With the military's and federal government's increased focus on sustainability, we are building on that momentum. At our headquarters, we now have two sustainability programs managers who are spearheading our sustainability initiatives, most notably focusing on developing a *Strategic Sustainability Performance Plan* to provide a systems approach to sustainability. It's one step in meeting the goals and targets established in Executive Order 13514, *Federal Leadership in Environmental, Energy and Economic Performance.* The Oct. 5 executive order is changing how we procure, own, operate and dispose of infrastructure — with sustainability as the overarching umbrella. It's about finding long-term sustainable solutions.

The *Strategic Sustainability Performance Plan* will identify milestones and resources needed for implementation, measure performance and be reviewed annually for continual improvement.

The diversity of USACE missions — spanning Civil Works, Military Programs and Research and Development — poses unique challenges and opportunities, such as finding fuel and energy efficiencies in our management of the Military Construction Program and operating a vessel fleet, including dredges, charged with maintaining access to our nation's rivers and harbors.

Acronyms and Abbreviations	
LEED	Leadership in Energy and Environmental Design

As a first step, we set a greenhouse gas emission target that calls for reducing our emissions by 23 percent by 2020. Also by 2020, we will reduce petroleum consumption by 30 percent and potable water consumption by 26 percent. By 2015, we will reduce energy consumption by 30 percent, and by 2013, we expect renewable sources to provide 7.5 percent of our electricity.

One project expected to help in achieving our goals is the Solar Tracker Green Energy Project at Shenango Lake, outside Pittsburgh. A Pittsburgh District Leadership Development class led the effort to acquire and install a solar tracker, with nine solar panels, near the lake's ranger station. The tracker, a state-of-the-art device that pivots and rotates to follow the sun throughout the day to enable maximum power generation will reduce electricity costs at the ranger station, and the rangers will use it as an interpretive tool to educate visitors about solar energy.

This solar tracking technology shows great promise for adaptation to a wider array of projects in remote areas or to achieve energy reduction targets. In Fallujah, Iraq, as part of our infrastructure work there, we completed a major project to install solar-powered street lights, and on the outskirts of Kabul, Afghanistan, at an observation post, we installed solar panels to not only keep spotlights on but to provide heat and air conditioning for ➤

Developing the Army Sustainability Campaign Plan

by Col. Greg Wright

Organizations across the Army have been employing sustainable practices, and installations have been setting sustainability goals since 2000, but the Army lacked a cohesive plan that synchronized those efforts across similar functions. In December 2008, Gen. Peter W. Chiarelli, the vice chief of staff of the Army, addressed that gap by tasking the assistant chief of staff for installation management to develop a sustainability campaign plan. The vice chief's intent: to "operationalize" sustainability throughout the Army enterprise.

Intent

Gen. Chiarelli recognized that sustainability is a mission enabler and that adopting more sustainable practices would reduce the Army's logistics tail. For example, more energy-efficient operations at home reduce fuel and utilities bills, making more funds available for direct mission support.

More energy-efficient contingency operations use less fuel, which reduces the number of fuel convoys. The vice chief also wanted to prevent situations in contingency operations that could result in adverse health impacts to Soldiers or in long-term liabilities as base camps are closed.

Col. Greg Wright
Photo by Lisa Smith

The vice chief chose a campaign plan format to present sustainability in terms of the mission, rather than as a green initiative. His intent with this sustainability campaign plan was to:

- institutionalize sustainability in doctrine, policy, training, operations and acquisitions;
- move from individual initiatives to enterprisewide approaches; and
- instill a sustainability ethic and personal commitment.

Acronyms and Abbreviations	
ASCP	Army Sustainability Campaign Plan
FY	fiscal year
IPT	integrated planning eam
ISE	Installation Services Directorate, Environmental Division
OACSIM	Office of the Assistant Chief of Staff for Installation Management

Development

The OACSIM's Environmental Division stood up an integrated planning team in January 2009 to draft the *Army Sustainability Campaign Plan.* Why an IPT? We recognized that key Army staff- and secretariat-level organizations, i.e., the Army's functional leads for planning, training, equipping and operations, had to be actively involved from the onset to ensure buy-in for the ASCP. The IPT developed the draft plan and was instrumental in identifying key opportunities for and challenges to operationalizing sustainability within their own organizations.

Operational design

The draft ASCP is designed along four lines of operation, consistent with the Army's four core enterprises: materiel, readiness, human capital, and services

(continued from previous page)

the Afghan National Army soldiers.

Through our seven-year, almost $80 billion Military Construction effort, we have been supporting the Army to achieve Leadership in Energy and Environmental Design Silver certification in all our new construction. In fiscal year 2009, we built 1,000 facilities to LEED Silver standards.

The new Cascade School Age Center, a child development center at Fort Lewis, Wash., not only achieved LEED Sliver certification, but the students there composted food materials for the soil in the playground adjacent to the center. The 4th Infantry 1st Brigade and Battalion Headquarters building, Fort Carson, Colo., was the first Army facility to receive a LEED for New Construction Gold rating with its native plants, natural daylight, an interior courtyard and reflective, energy-efficient, blast-resistant windows. A fire station under construction at Fort Bragg, N.C., is being built to attain LEED Platinum certification.

An Alaska District field office at the Chena Flood Control Project near Fairbanks is undergoing a major renovation. From radiant floor heat to upgraded windows, doors and garage doors to a masonry heater, motion-activated LEDs to reduce electricity consumption for lighting and the use of green materials such as stone floors, recycled barn siding and local alluvial rock for all masonry, the material are much more sustainable and energy efficient.

These examples represent a broad array of actions, both large and small, the Corps is undertaking to embed sustainability into all we do. Through these actions and other programs, it's quite apparent we are tackling sustainability challenges and embracing the opportunities. We will continue to serve as a leader for the nation as its environmental engineer and ensure we're taking care of the environment and promoting the sustainability ethic.

James B. Balocki is the chief, Environmental Community of Practice, Headquarters, U.S. Army Corps of Engineers.

(continued from previous page)

and infrastructure. The plan also identifies key areas for coordination and execution: energy; water; planning and conservation; waste; air; interagency, intergovernmental, public and private cooperation; contingency operations; and acquisition and procurement. Energy and water are designated as priority areas.

Each area will be addressed *within* each line of operation and also collectively *across* all lines. This enterprisewide approach increases cross-functional awareness and cooperation, and enables the Army to assess risks and impacts across all operations. It also enables the Army to leverage successful initiatives and exercise its collective throw-weight to maximize efficiencies.

Command and control

Direction and oversight for implementation of the ASCP will be provided by the under secretary of the Army, Dr. Joseph Westphal, who was designated as the Army's senior sustainability official in December. The plan will use existing governance, such as the Army Enterprise Board and other forums, and existing reporting mechanisms rather than create new governance structures.

Strategic tasks

The draft ASCP is a Headquarters, Department of the Army-level plan that identifies 28 strategic tasks. Each task has assigned offices of primary responsibility and coordinating responsibility, and milestones. Each office of primary responsibility will develop specific action plans for its assigned tasks. Progress will be reported to the under secretary and the Army Enterprise Board.

Several strategic tasks cross all four lines of operation, while others are unique to a single line. In some cases, the strategic tasks leverage successful existing programs or initiatives. The implementation of the Army Energy Security Implementation Strategy is an example of a strategic task that leverages an existing effort and crosses all lines of operation.

Other strategic tasks include:

- Develop fiscal policy that gives incentives for sustainability investments.
- Incorporate sustainability language into appropriate Army regulations, pamphlets and field manuals.
- Incorporate sustainability into appropriate professional military and civilian training.
- Establish and leverage partnerships with academia and surrounding communities to support a sustainable workforce.
- Revise acquisition policy and establish a key performance parameter for sustainability; use the key performance parameter and life-cycle costing in all acquisition and procurement decisions.
- Develop and fully implement green procurement policies that enable the purchase of sustainable products and services.
- Implement the Army's *Toxic and Hazardous Chemical Reduction Plan.*
- Fully implement the *Army Cleanup Strategy,* focusing on green remediation wherever cost effective.
- Achieve the Executive Order 13423 and 13514 water conservation goals.
- Incorporate sustainability into installation strategic plans and other installation plans as they are updated.

While some of these tasks can be accomplished, or at least initiated, in fiscal year 2010, others require resourcing that must be identified through the Program Objective Memorandum for FYs 2012 to 2017.

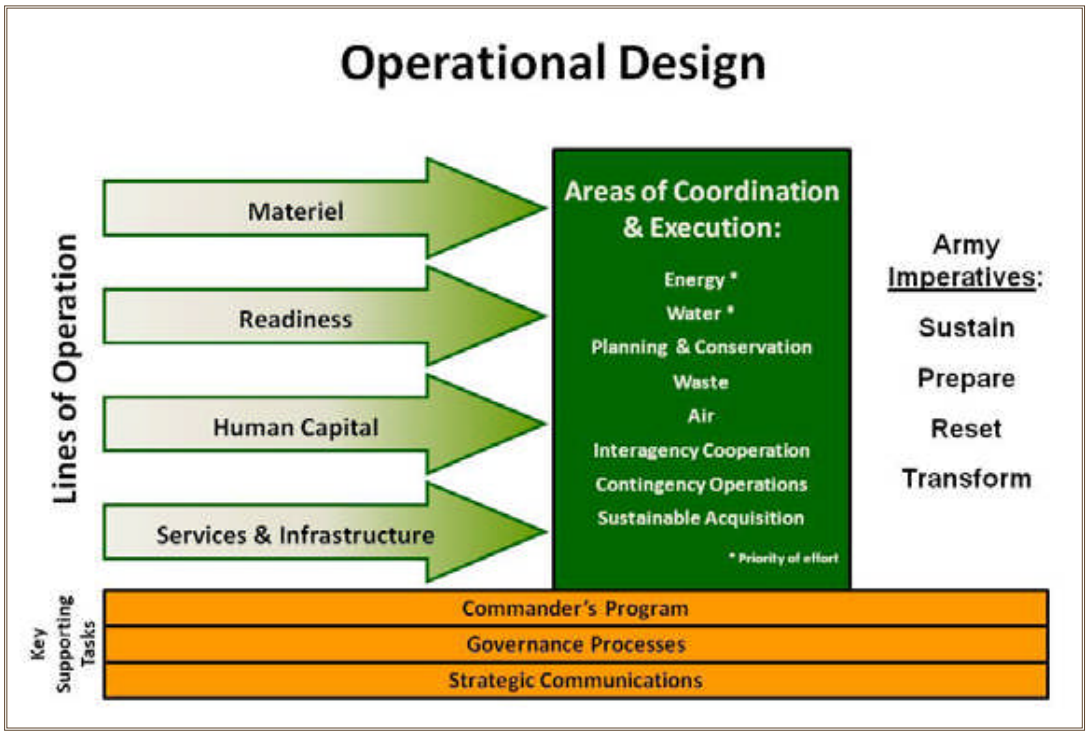

Chart courtesy of ISE

Operationalizing sustainability within OACSIM

by Kathleen Marin

The Office of the Assistant Chief of Staff for Installation Management has accelerated its efforts to "operationalize" sustainability. OACSIM is taking a holistic approach — through planning, procurement, operations and partnerships — to deliver sustainable facilities and services to ensure current and future installation capabilities.

Planning

Sustainability planning efforts range from leading the development of an Armywide sustainability plan to updating the guidance for installation-level planning, Army Regulation 210-20, *Real Property Master Planning for Army Installations.*

AR 210-20 established requirements to integrate sustainable design and development principles, sustainable range planning and the installation's *Integrated Natural Resources Management Plan* and *Integrated Cultural Resources Management Plan* with the installation master planning process. OACSIM's Plans Division is updating AR 210-20 to place greater emphasis on sustainability, including town centers and walkable communities. The update will also emphasize the incorporation of the U.S. Green Building Council's Leadership in Energy and Environmental Design principles in the siting and orientation of new facilities.

Early in fiscal year 2009, the vice chief of staff of the Army recognized the lack of an Armywide sustainability effort and challenged OACSIM to develop a campaign plan for operationalizing

Kathleen Marin
U.S. Army photo

sustainability throughout the Army enterprise. OACSIM's Environmental Division led an integrated planning team, with representatives from secretariat- and Army staff-level organizations, to draft the *Army Sustainability Campaign Plan.* The team delivered the draft plan to the Army's senior leadership in January and anticipates its publication in May.

OACSIM's Installation Services and Operations directorates are providing input to the *Department of Defense Strategic Sustainability Performance Plan* and a DoD sustainable installations policy. The DoD-level plan, due to the Office of Management and Budget for approval in June, will drive future updates to Army plans and policies.

Procurement

OACSIM is implementing green procurement principles in its policies and operations, from furnishings to the nontactical fleet. Green procurement helps lower life-cycle costs and reduces environmental impacts.

On the procurement policy front, OACSIM is helping the Office of the Assistant Secretary of the Army for Acquisition, Technology and Logistics to update the Army's green procurement policy. It is also incorporating sustainability considerations into the policy for administrative furniture replacement.

Putting policies into action, the Logistics Division met the *Army Energy Security Implementation Strategy* goal of acquiring 800 low-speed electric vehicles for installations by March and is working to acquire an additional 1,600 all-electric vehicles in both FYs 2010 and 2011. These General Services Administration-leased vehicles will replace fossil-fueled vehicles on a one-for-one swap. Logistics also worked with GSA to leverage American Reinvestment and Recovery Act ➤

Acronyms and Abbreviations	
ACUB	Army Compatible Use Buffer
AR	Army Regulation
ASA-I&E	Assistant Secretary of the Army for Installations and Environment
DoD	Department of Defense
FY	Fiscal Year
IMCOM	Installation Management Command
LEED	Leadership in Energy and Environmental Design
OACSIM	Office of the Assistant Chief of Staff for Installation Management
RCI	Residential Communities Initiative
SDD	Sustainable Design and Development
USACE	U.S. Army Corps of Engineers

(continued from previous page)

Next steps

After the under secretary and the vice chief of staff of the Army sign the ASCP, it will be rolled out with a strategic communications plan. The communications plan will include Armywide and enterprise-specific themes, along with key events where the ASCP can be highlighted.

After the ASCP is issued, commands and activities will develop their own operation-specific plans, with supporting goals, objectives and metrics to measure performance and drive resource decisions.

ISE is working to incorporate the ASCP into the *Army Campaign Plan.* Initially the ASCP will be an annex, but the ultimate goal is to imbed sustainability throughout the *Army Campaign Plan*, eliminating the need for a separate sustainability plan. In the interim, ASCP updates will be accomplished via updates to the strategic tasks.

POC is Col. Greg Wright, 703-601-1990, george.gregory.wright@us.army.milwanda.johnsen@us.army.mil.

Col. Greg Wright is chief, ISE, OACSIM.

(continued from previous page)
funding to acquire 1,782 hybrid vehicles to replace the aging nontactical fleet.

The Housing Division is also moving out on green procurement. It is working with the U.S. Army Engineering and Support Center, Huntsville, Ala., on lifecycle analysis in Army Central Furnishings Program purchases. For example, mattress procurement focuses on comfort and longevity, but it also looks for mattresses with recycled content or even refurbished mattresses. This practice minimizes solid waste disposal volume and cost, and can also lower the mattresses' purchase price.

The Housing Division is purchasing Energy Star-rated appliances in categories in which the rating has been established, e.g., refrigerators and washers. Energy Star appliances have lower operating costs and reduce energy and water demands.

Operations

OACSIM's focus is to design, construct, update and rehabilitate Army infrastructure so that it is sustainable, agile and supports current and future senior commander requirements. In 2006, the assistant secretary of the Army for installations and environment issued a policy that requires new vertical construction to meet the LEED Silver rating and major renovations to incorporate sustainable design features, where life-cycle cost effective, to meet the LEED Certified level.

LEED design features commonly adopted in Army facilities include energy-efficient heating, ventilation and air conditioning equipment; renewable energy items like solar panels and ground-source heat pumps; day-lighting; water-efficient plumbing equipment and landscaping; "cool" roofs and green building materials; and proximity to public transportation or on-post bus routes. Incorporating these features in new construction and major renovations reduces energy and water demand, lowering the building's life-cycle operating costs, and creates facilities that provide safe and productive working and living environments.

Fort Carson, Colo.,'s solar array generates renewable energy. Photo courtesy of Fort Carson

Housing is a key component of the Army's sustainable facilities portfolio, and quality affordable housing retains and recruits Soldiers and families. Privatization significantly improved the condition of the Army's residential housing. To date, 44 locations and more than 88,000 homes have been privatized using the Residential Communities Initiative. The RCI partners are also adopting LEED sustainable design features, and several RCI developments have won industry awards for sustainability and energy efficiency.

Adoption of LEED for barracks modernization is providing more efficient buildings with more comfortable living space for unaccompanied personnel. Recent Whole Barracks Renewal projects have reported water use reductions up to 30 percent and energy efficiency improvements of 30 to 35 percent over industry heating and air-conditioning standards.

To focus attention on the importance of meeting LEED standards, the OACSIM Facilities Policy Division established a Sustainable Design and Development Validation Committee. The SDD validation team includes staff from the Facilities, Environmental, Housing, Construction and Base Realignment and Closure divisions, as well as the Installation Management Command and the U.S. Army Corps of Engineers. The team reviews 10 to 12 newly constructed facilities each year, identifying and communicating design and construction best practices and lessons learned.

OACSIM is assisting the ASA-I&E in developing additional policies related to sustainable facilities and operations, including low-impact development, operation and maintenance of newly-constructed LEED-rated facilities and upgrading existing infrastructure to LEED standards. With IMCOM, OACSIM is evaluating sustainability criteria for installation services, such as green dry cleaning and janitorial services, mechanisms to train installation personnel in sustainable practices, the application of LEED, and the operation and maintenance of new facility operating systems. OACSIM is also working with USACE to include electric vehicle outlets in facility standards to accommodate its electric vehicle fleet.

In addition, OACSIM is assisting the ASA-I&E with implementing the *Army Energy Security Implementation Strategy.* Energy efficiency and security are key elements in supporting Army readiness and can also help the Army meet its sustainability goals. Installation energy programs are the largest single cost in the Base Operation Services account and have doubled over the last five years. Energy reduction efforts to date have addressed the easy fixes, so the biggest challenges lie ahead. Meeting the mandate of 30 percent reduction by 2015 will require significant investment and, more importantly, changes in Soldier practices and behaviors. ➤

Operationalizing sustainability within IMCOM

by Matt Barden, Damon Cardenas and S. Lynn Odom

Mission excellence, environmental stewardship and community relations are interdependent. They come together in sustainability, which is efficiently managing resources — workforce, infrastructure, funds, information, natural resources, energy, technology — so they are available when needed to support current and future mission requirements.

How will the Installation Management Command manage its resources today to ensure they will be available in the future? By "operationalizing" sustainability.

The Installation Management Campaign Plan emphasizes the need for installations to become sustainable:

"Sustainability is a major facet of installation readiness. … (that) will yield multiple benefits for the Army. We will collaborate with industry and other Army commands … (and) our community partners as we pursue sustainability in our long range goals, address encroachment issues and reaffirm our installations as valued neighbors. And we will build healthy, inviting communities that allow Soldiers and Families to thrive."

Sustainability principles

To operationalize sustainability, IMCOM must integrate sustainability principles into its day-to-day activities. To ensure stewardship of resources, leaders will apply the following five IMCOM principles of sustainability to all IMCOM enterprise operation:

1. **Mission excellence** – proficiently managing resources necessary for the Army to achieve its mission.
2. **Community collaboration** – proficiently ensuring the long-term viability of its installations through active ➤

Matt Barden
Photos courtesy of IMCOM Strategic Planning Division

(continued from previous page)

The Army Energy Security Implementation Strategy recognizes this challenge and addresses the expansion of renewable energy. Efforts such as the 500-megawatt solar power project at Fort Irwin, Calif., use of ground-source heat pumps at Fort Knox, Ky., and the 30-megawatt geothermal plant at Hawthorne Army Depot, Nev., will help meet that challenge. The Army also invested $700 million of FY 2009 Recovery Act funds to improve energy efficiency at Army installations.

Several additional tools help installations improve energy efficiency and security. Energy Savings Performance Contracts leverage industry expertise and investments to improve energy efficiency and reduce energy use and costs. Enhanced Use Leases allow the Army to lease land to private investors to establish energy projects like Fort Irwin's solar power project. Power Purchase Agreements are long-term agreements to buy power — frequently, renewable energy — at a set rate.

To further support energy efficiency and security efforts, the OACSIM Operations Directorate recently stood up a Military Construction energy integrated planning team and is evaluating the establishment of a category line in the DD 1391 development for identifying renewable energy investment projects. OACSIM is also working with the Defense Energy Support Center and the Army and Air Force Exchange Service to offer alternative fuels at more locations.

Partnerships

In addition to RCI partnerships and several energy initiatives with sister agencies already highlighted, the Army leverages public and private partnerships to achieve sustainability goals in other areas. For example, the Army Family Covenant and Army Community Covenant leverage partnerships to support the sustainability of Soldiers and families. To date, more than 460 communities have signed covenants.

The Army Compatible Use Buffer Program leverages partnerships with other government agencies and nongovernmental organizations to establish conservation easements along installation boundaries. These easements serve as buffers that preserve high-value habitat and limit incompatible development near installations, enabling the Army to maximize essential military training on installation lands and minimize the need for habitat restrictions. By FY 2009 end, more than 127,000 acres of private land in the vicinity of Army installations were protected through the ACUB program.

The Army has already accomplished a great deal, but greater challenges lie ahead. To meet its long-term sustainability goals and federal sustainability mandates, the Army will continue to examine every aspect of its operations and apply sustainable practices. In doing so, the Army will lower life-cycle costs, reduce impacts and ensure its operational capabilities now and into the future.

POC is Wanda Johnsen, 703-601-1512, wanda.johnsen@us.army.mil.

Kathleen Marin is the director, Installation Services, OACSIM. Wanda Johnsen, Environmental Division, OACSIM, contributed to this article.

(continued from previous page)

Damon Cardenas

S. Lynn Odom

local and regional partnerships supporting mutually beneficial goals.

3. **Environmental stewardship** – proficiently meeting mission requirements through prudent life-cycle use of resources, active environmental management and replenishable conservation.
4. **Economic impact** – proficiently realizing cost savings, cost avoidance and expanding services through cross-functional planning and cooperative resourcing.
5. **Systems thinking** – proficiently identifying and exploiting interrelationships within and between lines of effort and operations that optimize resource allocation and process performance.

Command priority

Historically, installations were provided the opportunity to host facilitated Integrated Strategic and Sustainability Planning workshops from the U.S. Army Forces Command. Workshop oversight transitioned to the Office of the Assistant Chief of Staff for Installation Management and then to U.S. Army Environmental Command.

Due to the cross-functional nature of developing and implementing a 25-year sustainability strategy that results in resource-efficient initiatives and effective communitywide partnerships, the installations requested that sustainability oversight be moved outside the narrow scope of the environmental office. USAEC and IMCOM agreed there was a need for an IMCOM-wide integrator.

At a Fort Detrick, Md., child development center, Army Chief of Staff Gen. George W. Casey Jr. enjoys the company of children, whose future is the point of the Army's strategic practices. Photo by Myles Cullen

To assume this responsibility, in February 2009, Headquarters, IMCOM, chartered the Center for Future Installation Strategies, Sustainability and Emerging Technologies Branch, which is now known as the G5 Plans' Strategic Planning Division. From IMCOM's perspective, strategic sustainability planning is a command priority.

Acronyms and Abbreviations	
IMCOM	Installation Management Command
ISSP	Integrated Strategic and Sustainability Planning
OACSIM	Office of the Assistant Chief of Staff for Installation Management
SPD	Strategic Planning Division
USAEC	U.S. Army Environmental Command

The SPD is responsible for integrating sustainability throughout the IMCOM enterprise, including but not limited to:

- integrating sustainability into the IMCOM campaign plan;
- developing command policy and guidance;
- centrally managing and supporting installation 25-year strategic planning efforts through the ISSP process;
- ensuring action planning in support of the IMCOM campaign plan is accomplished through a sustainability lens;
- building IMCOM future planning capabilities;
- investigating emerging technologies and promoting enterprise solutions;
- contributing to strategic communications efforts; working with the IMCOM/OACSIM StratComm cell;
- developing a resourcing strategy;
- establishing governance; and
- facilitating installation collaboration and knowledge sharing.

Operationalizing sustainability

As the SPD anticipates the release of the *Army Sustainability Campaign Plan* described in the 2010 *Army Posture Statement Sustainability Information Paper,* it has begun developing and ➤

15 ways garrisons can achieve a more sustainable installation

by Douglas A. Warnock

What is *sustainability*, and how does an installation become sustainable? To Installation Management Command garrisons, sustainability means managing all resources — workforce, infrastructure, funds, information, natural resources, energy and systems — so that they have the resources needed to best support current and future mission requirements. Effective strategic planning is a key enabler to managing these resources.

Creating sustainable installations means examining and changing the way IMCOM garrisons plan, invest and operate. It means identifying approaches, technologies and systems that will best support the mission, improve the quality of life in military communities, protect resources and reduce operational costs.

Why sustainability, why now?

The world is in an unsustainable state. As the population grows, use of resources like land, bandwidth, water, airspace, energy, petroleum and timber is also growing exponentially. It is simple math — like what would happen to a bank account if money is withdrawn at a greater rate than money is deposited. Eventually, the account will be overdrawn. The bank account, in this analogy, is in an unsustainable state.

Douglas A. Warnock
U.S. Army War College photo

For IMCOM, sustainability is even more complex than dwindling resources. Installations rely on resources to run — water for human consumption and operations; land for living and training; energy to operate and preserve quality of life; and construction materials to maintain and build new infrastructure.

In addition, the workforce is aging, and IMCOM will lose an irreplaceable amount of expertise over the next 10 years. Military communities are under stress because of the high operational tempo and the need for better and more varied services. Surrounding communities are growing to the fence lines, making land use for training more difficult and in some cases impossible. Such encroachment is complicated further by new weapon systems that will require more land area to provide realistic training.

What do we do?

Sustainability crosses all functional areas in the installation management ➤

(continued from previous page)

staffing IMCOM execution guidance to operationalize sustainability. The effort will be instituted at the headquarters, regional and garrison levels. IMCOM guidance will be delivered through a sustainability command policy memo, operational order, Netcall and the *ISSP Process Implementer's Guide.*

IMCOM will assume a sustainability mindset in all aspects of its operations. Simply put, it will examine and change or improve the way it plans for, invests in and operates installations. As an enterprise, IMCOM will identify approaches, technologies and systems that will best support the mission, improve the quality of life in military communities, protect resources and reduce operational costs.

USAEC, as one of the sustainability program legacy partners, and the Family and Morale, Welfare and Recreation Command will help integrate sustainability throughout the IMCOM enterprise. Each IMCOM Headquarter's functional area will be responsible for collaboratively integrating sustainability concepts and principles into its guidance, objectives, targets and measures through a cross-functional and multidisciplinary approach. In addition, functional experts will initiate and continue to provide technical assistance at the garrison level.

Examples of contributors in operationalizing sustainability are the Army Community of Excellence Program, Army Family Covenant, Baldridge criteria, International Organization for Standardization 14001 Management System requirements, Lean Six Sigma, succession planning, Sustainable Range Program, Army Compatible Use Buffer Program, Green Procurement Program, sustainable life-cycle materiel management, resiliency training and leadership development.

Culture change

Operationalizing sustainability is about creating a culture that integrates interdisciplinary sustainability principles into daily operations in much the same way that safety has become an integral part of our day-to-day activities. Sustainability drives innovation, reduces life cycle costs, enhances natural resources, creates community partnerships and enables installations to support the Army mission now and into the future.

POCs are S. Lynn Odom, 210-424-8368, lynn.odomo@us.army.mil; Matt Barden, 210-424-8068, matthew.d.barden@us.army.mil; and Damon Cardenas, 210-424-8064, damon.cardenas@us.army.mil.

Matt Barden, Damon Cardenas and S. Lynn Odom, Ph.D., are program analysts, Strategic Planning Division, IMCOM G5 Plans .

(continued from previous page)

community; it is everyone's business. Everyone has a role; everyone has to think, plan and support creation of a sustainable Army housed at sustainable installations.

Ways to achieve a more sustainable installation:

1. **Installation and garrison commanders** can be sustainability advocates. They can encourage their staffs to explore and embrace new systems, approaches to resolving problems and technologies that will result in sustainable installations. Garrison commanders should consider using their strategic plans as a means for capturing the garrison systemwide plan for transforming into a sustainable installation.
2. **Plans, Analysis and Integration Offices** can orchestrate all garrison directorates to integrate 25-year sustainability goals into the strategic plan and monitor progress in moving towards these goals. Goal development and progress monitoring should support Army Community of Excellence efforts and submissions.
3. **Energy managers** can acquire energy from sustainable, renewable sources, like solar, wind or biomass.
4. **Procurement managers** can purchase sustainable products and use vendors with take-back programs. Examples are furniture and paper from sustainable forests, non-volatile-organic-compound paints, locally produced goods, fair-trade products, remanufactured product trades, 100 percent recycled products and organic products.
5. **Contracting officers** can identify appropriate sustainable services and products sources and integrate language into contracts that results in sustainable purchases.
6. **Logistics managers** can lease and procure energy-efficient vehicles, specify green products, plan for reuse and recycling of spare and repair parts, and maximize the use of electronic manuals.
7. **Master planners** can design sustainable communities that offer mass transportation, bike and walking paths, and housing within walking distance of work. The master plan should reflect and be an integral part of the garrison strategic plan for sustainability.
8. **Public Works engineers** can design sustainable closed-loop wastewater systems, e.g., using gray water for irrigation, green roofs, solar cells on roofs, permeable hard surfaces to allow rainwater to soak through and replenish groundwater, waterless urinals, water-efficient fixtures and low energy-consuming appliances and lights.
9. **Garrisons** can partner with communities to share commonalities. Examples are connecting mass transit systems and sharing recycling programs for cost effectiveness and efficiencies.
10. **Personnel offices** can develop succession plans that provide for the recruitment, retention and development of staff, and address retirement issues to ensure a continued workforce with the required skills to meet current and future mission demands.
11. **Training land managers** can ensure ranges employ emerging technologies and sustainable land management techniques identified by the Sustainable Range Program.
12. **Environmental managers** can plan Earth Day events with sustainability themes and support other installation functions that promote understanding and using sustainable technology alternatives, systems, management and approaches.
13. **Public Affairs Offices** can include a sustainability message in the garrison strategic communication plan and outreach efforts, including participation in regional sustainability initiatives.
14. **Tenant organizations** should be engaged in strategic planning to ensure their participation in garrison strategic sustainable goal development and implementation.
15. **Everyone** can review and file documents electronically, versus in hard copy; use duplex when printing; conserve energy; recycle; carpool; use mass transit; bike or walk.

Acronyms and Abbreviations	
IMCOM	Installation Management Command

POC is Douglas A. Warnock, 703-602-3648, douglas.warnock@us.army.mil.

Douglas A. Warnock is a program analyst, G3/5/7 Operations, Plans and Training, Headquarters, IMCOM.

U.S. Army Garrison Detroit Arsenal employees Melissa Lynch and Steve Ball receive an orientation from Dave Hutton, a technician for Columbia ParCar Corp. Leasing or buying energy-efficient vehicles is one way to help installations become more sustainable. Photo by Lori Grein, U.S. Army Garrison Detroit Arsenal

Forecasting technology impacts on installation management

by Ilker Adiguzel

The Center for the Advancement of Sustainability Innovations last year began a series of studies to identify emerging challenges and opportunities for installations as new technologies are implemented. Funded by the Installation Management Command's Center for Future Installation Strategy, this effort identifies IMCOM drivers, assesses possible technology solutions and forecasts potential impacts on military facilities and lands.

The pace of change is constantly accelerating — in part because of the remarkable advances in technology and the opportunities and unforeseen consequences of adopting them. Advancing information, medical, energy, transportation, material and other technologies not only have direct impacts on how military installations do business, but also change the circumstances of the surrounding communities. Moreover, in the wrong hands, new technologies can pose new threats to installations.

Technology forecasting

How many foresaw the game-changing impact of the Internet in 1969, when it was developed by the Advanced Research Projects Agency, and of the Worldwide Web in 1989-90, when Sir Tim Berners-Lee developed the first web client and server? History is replete with examples of disruptive technologies and innovations: teletypes, telephones, paper, elevators, steamships, aircraft, rifled gun barrels, semiconductors and overnight delivery, to name a few.

The Army is purchasing large numbers of nontactical electric vehicles like this one for use on installations to stimulate growth of the alternative fuels automobile industry. U.S. Army photo.

Ilker Adiguzel
Photo by Sandy Bantz, ERDC-CERL

In retrospect, the importance of these advances is obvious. When planning for the future, the proposition becomes more difficult. New technologies often solve today's problems but may also create new challenges that assume overwhelming importance.

CASI's first approach to installation technology futures forecasting makes use of a process called "Strategy Under Uncertainty," reported in the Harvard Business Review, November-December 1997.

Shapers, adapters, reservers

The approach identifies three strategic postures that an organization can adopt in dealing with uncertainty: *shaping, adapting* and *reserving the right to play.* A shaping posture drives a technology toward a form that is most useful to the shaper; this is often a goal of government policy — to influence technology development to serve the agency's or the nation's interests.

An adapting posture allows a technology to take its own course, but the adapter seeks to be in a position to take advantage of the technology at the right time. Reserving the right to play is similar to adapting but uses small, early investments to enable the opportunity to use the technology at a later time.

Acronyms and Abbreviations	
CASI	Center for the Advancement of Sustainability Innovations
CERL	Construction Engineering Research Laboratory
ERDC	Engineer Research and Development Center
IMCOM	Installation Management Command

The forecasting method also describes three types of actions: *big bets, options* and *no-regrets moves.* Shaping often involves a big bet move, such as a large acquisition to promote a technology advancement or investing in research and development. For example, the Army announced in 2009 that it would lease more than 4,000 neighborhood electric vehicles for use on installations. This shaping effort is explicitly intended to help spur a commercial market for electric cars in the United States.

Options may be used to adapt or reserve the right to play. Technology pilot tests, such as those conducted by the Technology Standardization Group's Installation Technology Transfer Program, are a form of option. A small investment is made to try out a technology before a major acquisition or policy decision is made.

No-regrets moves are those that will result in some beneficial outcome regardless of the technology's success or failure. Upgrading infrastructure to support a possible future technology may pay off even if the technology is never acquired, such as upgrading electrical service in motor pools in anticipation of requirements for electrical vehicles.

New vehicles, renewable energy

CASI first applied the forecasting approach to an installation's potential investment in alternative nontactical vehicles: hybrid, electric and hydrogen fuel cell types. The drivers to adopt this technology include several national priorities, such as the Energy Independence and Security Act of 2007 and Executive Order 13423. ➤

Guidance updates requirements for oil spill prevention plans

by Donna J. Schell

The Code of Federal Regulations requires installations with substantial oil storage and use to file a spill prevention, control and countermeasure plan with the Environmental Protection Agency. A Corps of Engineers Public Works Technical Bulletin provides new guidance for environmental managers based on EPA's final rule dated July 17, 2002.

PWTB 200-1-67, *Guidance for Complying with the Oil Pollution Prevention Regulation,* is available on the Whole Building Design Guide website, *http://www.wbdg.org/ccb/browse_cat.php?o=31&c=215*. This document updates the earlier PWTB 200-1-38.

All U.S. Army facilities with an aggregate above-ground storage capacity for petroleum of 1,320 U.S. gallons or more stored in containers of 55 gallons or larger must have an SPCC plan in place. The regulations have two sets of requirements: the SPCC Plan rule, which calls for an oil spill prevention program; and the Facility Response Plan rule, which requires an oil spill response program. Guidance in the PWTB is meant to help installation personnel develop an appropriate SPCC plan.

The amended 2002 EPA ruling includes subparts outlining the requirements for various classes of oil, revises the regulation's applicability, changes the way in which SPCC plans are completed and makes other modifications. These changes affect military installations and may require significant changes to current SPCC plans.

An SPCC requirement is to periodically inspect oil-using equipment, like this generator, for possible wear, leaks or seepage. Photo by Dana Finney

Acronyms and Abbreviations	
PWTB	Public Works Technical Bulletin
SPCC	spill prevention, control and countermeasure

POC is Donna Schell, 217-373-5841, donna.j.schell@usace.army.mil.

Donna Schell is a researcher, Construction Engineering Research Laboratory, U.S. Army Engineer Research and Development Center, Champaign, Ill.

(continued from previous page)

CASI analyzed each vehicle type in terms of projected market share, power, pros and cons, and production examples. By being able to forecast the availability of these vehicles, IMCOM headquarters can incorporate changes into its funding processes, and installations can begin planning for infrastructure changes to accommodate them.

The next topic studied was energy security. CASI examined the planning and training needs for energy security managers, their access to critical infrastructure evaluations and the recommendations of a 2009 Defense Science Board study. In addition, several energy security measures were evaluated. Forecasts predicted when technologies such as microgrids, fuel cells, emerging battery options and renewable energy options would be available to installations.

In making decisions about these technologies, IMCOM managers need to address the potential impacts these new energy infrastructures will have on the installation operations, training requirements, cost and benefit, and value to the military missions. Through strategic planning and energy modeling and simulation, costly suboptimal decisions may be avoided.

A current study is evaluating the application of Building Information Model technology, now a standard for Military Construction design, through the full building life cycle.

About CASI

The U.S. Army Engineer Research and Development Center established CASI at its Construction Engineering Research Laboratory in 2006 to focus the value of ERDC expertise, technologies and partnerships toward helping the Corps of Engineers, the Army and the Department of Defense achieve more sustainable facilities and operations. CASI aims to provide the military with capabilities that enhance national security through more effective use of limited resources and through improved coordination and partnerships with host communities and stakeholders in the United States and across the globe.

CASI welcomes all input and dialog related to sustainability. Visit the CASI web site at *https://casi.erdc.usace.army.mil.*

POC is William D. Goran, CASI director, 217-373-6735, William.D.Goran@usace.army.mil.

Dr. Ilker Adiguzel is the director, ERDC-CERL, Champaign, Ill.

Bulletin recaps study of wastewater reuse at Fort Bragg

by Gary Gerdes

A Corps of Engineers Public Works Technical Bulletin reports on a study at Fort Bragg, N.C., to determine the feasibility of recycling wastewater effluent in reducing potable water demand. PWTB 200-1-64, *Wastewater Effluent Reuse at Fort Bragg – Feasibility Study,* is available at *http://www.wbdg.org/ccb/ARMYCOE/PWTB/pwtb_200_1_64.pdf.*

To achieve the goals of the 2004 *Strategy for the Environment* and ensure a sustainable future, Fort Bragg has developed its own objectives, one of which is to reduce potable water use by 90 percent before 2025. The fort wanted to explore potential reuse of treated wastewater for purposes that do not require potable water, such as irrigation.

The Engineer Research and Development Center used funding from the assistant secretary of the Army for installations and environment to study the use of recycled wastewater to irrigate Fort Bragg's golf courses, parade field and polo court. The study results are specific to Fort Bragg, but other installations could benefit from knowing the engineering approach that was used. This approach and the study results could influence decisions to conduct other site-specific studies for the same purpose.

A major concern of using treated wastewater effluent to irrigate was that the total volume had to be adequate to meet the total demand. At the time of the study, the wastewater treatment plant had an average discharge of roughly 5.8 million gallons per day. The maximum discharge was about 6.4 mgd, and the minimum discharge was 5.2 mgd. The estimated total water volume consumed by the adjacent Pope Air Force Base's Willow Lake Golf Course, and the Fort Bragg parade grounds, polo field, and Ryder and Stryker golf courses combined was nearly 1.75 mgd. Therefore, on the basis of daily discharge volume, there was enough water to meet the needs of all five users, with additional irrigation water available for future uses.

Although total volume was sufficient for irrigation purposes, irrigation timing was an issue. The instantaneous discharge flow rate from the wastewater treatment plant must satisfy the instantaneous irrigation requirement of all users upstream.

Another concern with reusing treated wastewater effluent was water quality. The effluent quality at Fort Bragg must meet North Carolina reuse standards. The study concluded that those issues would be resolved by simple updates to the wastewater treatment plant system and operation.

Acronyms and Abbreviations	
ERDC	Engineer Research and Development Center
mgd	million gallons per day
PWTB	Public Works Technical Bulletin

Fort Bragg and Pope Air Force Base are situated such that all potential users can be serviced by one pipeline from the wastewater treatment plant. The alternative reuse scenarios were determined by the length of that pipeline. Those alternatives are:

- Alternative A – Pope Willow Lake Golf Course
- Alternative B – Pope Willow Lake Golf Course plus the parade grounds and polo field
- Alternative C – Pope Willow Lake Golf Course, the parade grounds, the polo field and Ryder Golf Course
- Alternative D – Pope Willow Lake Golf Course, the parade grounds, the polo field, Ryder Golf Course and Stryker Golf Course
- Alternative E – Pope Willow Lake Golf Course, the parade grounds and the polo field, Ryder Golf Course and Stryker Golf Course with increased effluent carrying capacity for future use.

The projected cost and payback of each is shown in the table. In addition to savings achieved by reducing purchases of potable water, the wastewater can be expected to contain more nutrients than potable supplies, which would lower or eliminate the cost of fertilizers.

				Estimated Annual Cost Savings		
Scenario	Capital Cost	Annual Electricity Cost	Water Volume (gpd)	Water Savings [1]	Fertilizer Savings	Payback years
Alternative A	$704,000	$23,100	402,000	$138,000	$9,500	5.7
Alternative B	$1,451,000	$24,800	517,000	$178,000	$17,300	8.5
Alternative C	$1,580,000	$14,800	1,040,000	$356,000	$29,300	4.3
Alternative D	$1,820,000	$13,800	1,750,000	$600,000	$45,300	2.9
Alternative E	$5,830,000	$13,800	1,750,000	$600,000	$45,300	9.2

[1]Assumes an 8-month watering period

This chart shows the costs and paybacks for wastewater effluent reuse scenarios assuming the value of all reclaimed effluent is $1.43 per 1,000 gallons. Chart courtesy of ERDC

POC is Gary Gerdes, 217-373-5831, Gary.L.Gerdes@usace.army.mil.

Gary Gerdes is a researcher, ERDC's Construction Engineering Research Laboratory, Champaign, Ill.

Consider landscape irrigation with nonpotable water

by William F. Fifty

Historically, the Army has used potable water, i.e., drinking water, for all of its water needs. This made sense, for Army installations were similar to small municipalities producing and distributing their own potable water. At the time, source water was plentiful, and the cost of production was relatively cheap. In addition, a single potable water supply negated the need for multiple storage and distribution systems and practically eliminated the possibility of people getting sick from mistakenly drinking nonpotable water.

However, times have changed. Water is becoming less plentiful, and if it has to be purchased from a municipal water utility or privatized water company, it can be expensive.

One solution to this problem is to minimize the use of potable water for nonpotable applications. A candidate to consider is landscape irrigation. Economic analysis tends to support the switch from potable to nonpotable water when large volumes are being routinely applied in a localized area. Golf courses present an excellent opportunity for the Army.

Three source waters are available for replacing potable water: groundwater, surface water and treated wastewater.

A groundwater source requires the drilling of wells to supply the water and a manmade pond or storage tank to hold a sufficient quantity for irrigation. Because potable water quality is not required, even ground water pumped from relatively shallow wells can be used if it can be produced in sufficient quantity.

For example, following the privatization of its water system in 2000, Aberdeen Proving Ground, Md., was faced with purchasing more expensive potable water from the city of Aberdeen, Md., to irrigate its 18-hole golf course. Instead, it opted to switch to a groundwater source that included two wells that feed a holding pond, which was designed into the golf course as a water hazard along the 11th fairway, and two distribution pumps that feed the irrigation system.

This water hazard on the Aberdeen Providing Ground golf course is part of the nonpotable water irrigation system that serves the course. Photo by Tom Kahoe, U.S. Army Public Health Command

Perennial surface waters such as ponds, lakes and rivers can also be used as a source of irrigation. The basic requirements are that the surface water be fairly clean, located relatively close to the application site and, most importantly, available year-round, even under drought conditions. When this last condition cannot be guaranteed, the surface source water is augmented with either groundwater or potable water.

An example of this option at Fort Belvoir, Va., involves a surface water pond on the golf course that is used as the primary source water for irrigation. Groundwater and potable water are also available for backup.

The third alternative is treated wastewater. In certain parts of the country, surface water and groundwater are not readily available, and in other areas, such as California, regulatory authorities have forbidden the use of surface and groundwater when treated wastewater is available for the irrigation of commercial landscape or agricultural fields.

The problem with wastewater reuse is primarily availability. Either the reclaimed water has to be pumped from an off-site treatment works or reclamation facility, or it has to be produced locally on the installation. Most Army wastewater treatment facilities are designed for secondary treatment and would require certain upgrades, e.g., multimedia filtration and disinfection, to produce quality reclaimed water.

At Fort Meade, Md., for example, tertiary treated wastewater is pumped directly from the installation's wastewater treatment plant to the golf course irrigation system during the early morning hours.

Opportunities for landscape irrigation with nonpotable water need to be investigated. Not only are there potential cost savings, but also it would help the Army to improve its water-use efficiency. The Army's current goal, per Executive Order 13514, is to reduce potable water consumption by 2 percent annually for a 26 percent reduction by the end of fiscal year 2020.

POC is William F. Fifty, 410-436-3816, william.fifty@us.army.mil.

William F. Fifty is program manager, Surface Water and Wastewater, U.S. Army Public Health Command, Aberdeen Proving Ground, Md.

Composting system demonstrated at two Army sites

by Gary Gerdes

The results of demonstrating an innovative commercial system to compost solid waste are reported in a new Public Works Technical Bulletin. PWTB 200-1-69, *Demonstration of the EcoPod Composting System at Fort Lewis and Fort Hood,* is available at *http://www.wbdg.org/ccb/ARMYCOE/PWTB/pwtb_200_1_69.pdf.*

Composting advantages

Army installations, like municipalities, generate a great deal and variety of waste materials. Composting diverts large portions of this waste stream from landfills and creates a valuable product that can reduce the facility's costs for fertilizer, mulch and other landscaping materials. Composting is the decomposition of organic waste, such as food scraps and yard trimmings, with microorganisms — mainly bacteria and fungi — to produce a nutrient-rich material known as "compost."

Many of the waste streams currently being landfilled at installations are suitable for composting. These include yard and landscape waste; food waste; fiber waste such as paper, wood and cardboard; and sewage sludge. Composting solid waste is one way for installations to meet their sustainability goals.

EcoPod compared

The U.S. Army Engineer Research and Development Center's Construction Engineering Research Laboratory demonstrated the EcoPod composting system at Forts Hood, Texas, and Lewis, Wash. EcoPod is an in-vessel, static, aerated-pile composting system. The technology uses plastic sleeves as composting containers with aeration supplied by perforated pipes running the length of the pods.

The objective was to compare the EcoPod system to other generally accepted means of composting. At Fort Hood, the EcoPod system was compared to conventional static windrows that were exposed to the surrounding environment. At Fort Lewis, EcoPod was compared to an aerated, static pile composting method supplied by O2 Composting Inc.

Acronyms and Abbreviations	
CERL	Construction Engineering Research Laboratory
PWTB	Public Works Technical Bulletin

Workers prepare an EcoPod, a composting method that CERL studied at two installations, to receive material. Photos courtesy of AgBag Systems, U.K.

A worker oversees the placing of material into the EcoPod.

Compost feedstock recipes were developed for the demonstration at each location. These recipes used components unique to each particular facility. Both sites had access to horse manure and substantial quantities of landscaping debris, including wood chips, leaves and branches. Treated grease trap sludge, a small amount of food waste and urea were used at Fort Hood. Petroleum-contaminated soil and biosolids were incorporated at Fort Lewis. The PWTB contains a detailed account of the demonstration setup.

Mixed results

The outcome of the two demonstrations included these observations:

- The compost produced by the EcoPod system at Fort Hood was roughly equal in quality to that produced in the static windrows.
- The Fort Hood EcoPod containing grease trap sludge reached temperatures high enough to meet regulatory standards.
- Neither system at Fort Lewis attained ➤

Free water, almost

by Richard Scholze

In years past, it was common to harvest rainwater, usually as a necessity to augment other supplies. With the advent of municipal water plants and storm-water systems to channel water off site, rainwater harvesting fell by the wayside. Today, with global demands and increasing competition for water supplies, rainwater collection and reuse — a sustainable, freely available resource — merit renewed attention.

The Corps of Engineers released a Public Works Technical Bulletin addressing rainwater harvesting. PWTB 200-1-75, *Rainwater Harvesting for Army Installations* is available at *http://www.wbdg.org/ccb/browse_cat.php?o=31&c=215.* This document describes the rainwater harvesting pros and cons, system types, how to determine whether a system is appropriate, components and equipment, economics, operation and maintenance, local requirements examples, lessons learned and scenarios for acceptable uses.

Water conservation and reuse can help the Army achieve its sustainability goals and comply with various mandates such as the Energy Policy Act and Executive Order 13423, which require that installations reduce potable water use by 2 percent annually. Several Department of Defense and Army strategies and policies also promote efficient water use and encourage rainwater harvesting as an option.

A rainwater collection and storage system can be put in place at relatively low cost. The objective is to capture water that would normally be discarded in a local storm-water management system and use it for irrigation, toilet flushing, boiler makeup, vehicle washing, laundry and many other nonpotable needs.

Benefits include:

- energy savings,
- local control of the water supply,
- reliability of supply,
- reduced erosion and flooding,
- less stress on the storm-water collection system, and
- augmentation of local supplies.

In some cases, rainwater, especially that harvested from building rooftops, can be treated for potable consumption. In theory, one inch of rainfall on 1,000 square feet of roof surface translates to 620 gallons of water. A water budget can be developed for a specific location balancing local rainfall with the intended end use of the harvested water.

The best time to include a rainwater harvesting system is at the planning and design phases of new construction. The rainwater harvesting requirement must be spelled out in the request for proposal and enforced during design, especially in the case of design-build projects. Specifying rainwater harvesting for a new building can help in achieving Leadership in Environmental and Energy Design points.

POC is Richard Scholze, 217-398-5590, richard.j.scholze@usace.army.mil.

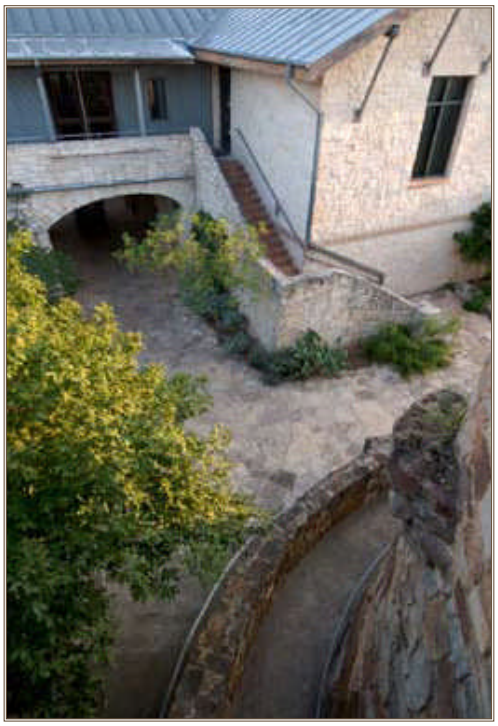

This roof and guttering are an example of a rainwater harvesting system. Photo courtesy of Lady Bird Johnson Wildflower Center, University of Texas at Austin.

Acronyms and Abbreviations	
PWTB	Public Works Technical Bulletin

Richard Scholze is a researcher, Construction Engineering Research Laboratory, Engineer Research and Development Center, Champaign, Ill.

(continued from previous page)

temperatures sufficient for regulatory compliance.

- Maintaining a good, evenly distributed moisture content was problematic at both EcoPod locations.
- There were significant temperature gradients between the inner and outer material in the EcoPods.

CERL concluded that the EcoPod composting system holds some promise in specific applications, particularly where extreme weather conditions exist, waste food attracts vermin and composting odors need to be controlled. Insulating the membrane, while not tried in this study, may mitigate some of the temperature-moisture problems. Longer term testing with these systems would be advantageous to work out some of the operational problems experienced at Hood and Lewis and to determine the cost effectiveness of the EcoPod system.

POC is Gary Gerdes, 217-383-5831, gary.l.gerdes@usace.army.mil.

Gary Gerdes is a researcher, CERL, Champaign, Ill.

In development: using urea to produce energy

by Carl Feickert

Research at the U.S. Army Engineer Research and Development Center is developing a process to harness the properties of a free, plentiful, naturally occurring substance — urine — and convert it to hydrogen that can power a fuel cell.

ERDC's Construction Engineering Research Laboratory has joined with a research team at Ohio University, Athens, Ohio, to develop this pioneering solution for providing hydrogen fuel as part of the Army's goal to drastically reduce carbon-based energy fuels and their associated greenhouse gases. In addition, the process could potentially be used at forward operating bases to generate electricity with a locally available resource.

A Department of Defense program to study stationary fuel cells is based at CERL, which has conducted numerous technology demonstrations at sites around the world. Hydrogen gas is the fuel of choice for fuel cells as it is nonpolluting and has no direct greenhouse gas footprint. The research is attempting to minimize the total energy production requirements and thus economically produce hydrogen gas through the electrical transformation of liquid urea into hydrogen.

This process involves the removal and use of the common pollutants ammonia (NH3) and urea from the local environment through their recovery from the waste streams of waterless urinals and their direct electrochemical decomposition into fuel-cell-quality hydrogen gas for use in nonpolluting electrical production. The process starts with ammonia and urea, common waste products found in the excretions of all higher order vertebrates, and proceeds through the use of specially designed catalytic materials and geometries for use in a specially designed electrolyses cell. The pathways for the electro-decomposition of these chemicals are well understood and make for the electrochemical reduction of urea into hydrogen, nitrogen and water using renewable energy sources and the low energy process embodied in this research.

Acronyms and Abbreviations	
CERL	Construction Engineering Research Laboratory
ERDC	Engineer Research and Development Center

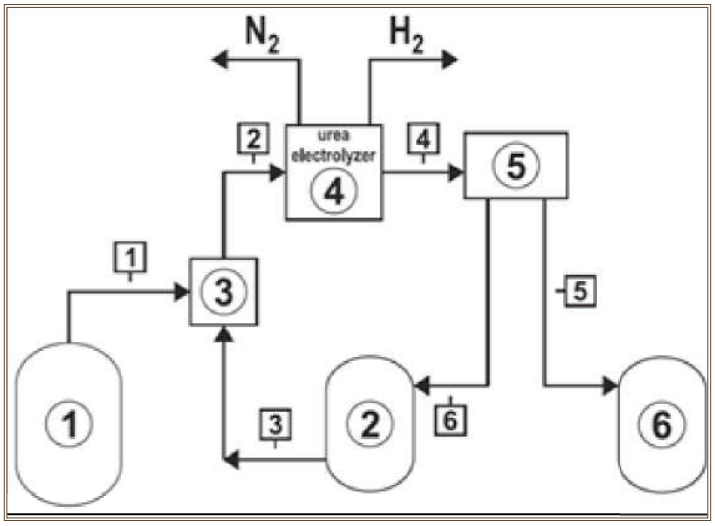

The system under investigation is depicted in the diagram. Collected urea and/or urine (stream 1) is adjusted to a pH of 11 by using potassium hydroxide (stream 3). The adjusted influent (stream 2) enters the urea electrolyzer, producing pure N2 and pure H2. The water leaving the electrolyzer (stream 4) contains some of the electrolyte, which is recovered through reverse osmosis and sent back into the electrolyte recovery tank (stream 6). The effluent leaving unit 5 is clean and is stored to enable the research team to evaluate uses for the reclaimed water. Graphics courtesy of Ohio University

The current version of urine electrolyzer has been demonstrated at 10 watts of power consumption and has further been shown to be linearly scalable. The hydrogen produced from the urine electrolyzer has been used in a proton exchange membrane fuel cell and provided stable performance.

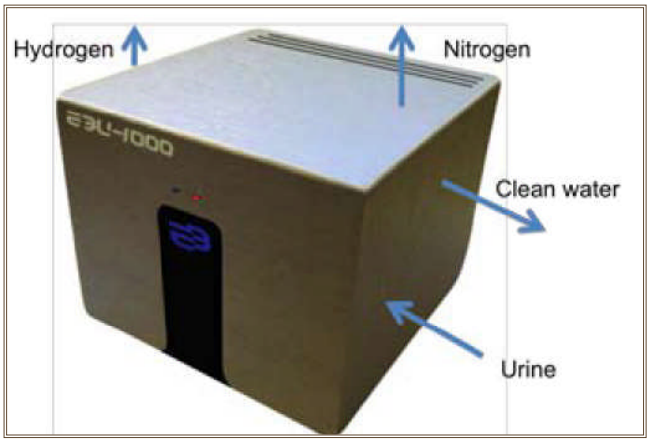

This conceptual design of the 10-watt electrolyzer is dubbed the GreenBox.

The next test will involve the design and fabrication of a 1-kilowatt unit capable of prolonged operation to determine continuity of flow rates and cell longevity when integrated with a traditional proton exchange membrane fuel cell. Waterless urinals are a successfully demonstrated commercial technology. And since the energy input from the urea has no costs to the system, laboratory experience indicates that the combined system can deliver about 50 percent more net electrical power than what is required to perform the electrical decomposition of the urea.

This technology could have a number of direct benefits for the Army. It could be used to supply backup power for training facilities and for base camps under the Silent Camp initiative in which power is supplied via low-noise, low-impact, green methods instead of noisy ➤

Lessons learned: 404, 401 permitting on military training lands

by Heidi R. Howard

When an installation project requires a Clean Water Act permit, the process can be daunting. A new Public Works Technical Bulletin can help demystify the steps involved and provide a primer for those new to obtaining permits. PWTB 200-1-70, *Lessons Learned: 404/401 Permitting on Military Training Lands,* can be found at *http://www.wbdg.org/ccb/ARMYCOE/PWTB/pwtb_200_1_71.pdf.*

Changes to military lands such as expansion and development of ranges often are land-disturbing and can potentially lead to negative streams or wetlands impacts. These activities require permits or notification under Sections 404 and 401 of the CWA.

Stream systems, bodies of water and areas that meet wetland criteria are considered "waters of the United States" until otherwise determined by the U.S. Army Corps of Engineers. CWA permitting programs are intended to uphold water quality standards and to preserve the natural systems of the waters of the United States.

Section 404 of the CWA authorizes the secretary of the Army, acting through USACE, to issue these federal permits. Whenever a Section 404 permit is required, a Section 401 water quality certification typically must also be obtained from the state environmental agency with jurisdiction.

Acronyms and Abbreviations	
CWA	Clean Water Act
PWTB	Public Works Technical Bulletin
USACE	Engineer Research and Development Center

This PWTB offers a quick overview of the basic permitting process. Interviews with environmental managers and USACE regional regulators revealed that it would be advantageous to set up preliminary planning sessions or pre-application meetings. USACE regional regulators have a good understanding of nationwide permits and can quickly determine if the proposed project might fall within an existing permit. In addition, they can provide guidance and assistance with the federal side of permitting and, in most instances, can walk applicants through any necessary state requirements as well.

Activities such as a proposed range construction project in areas like this wetland at Fort Hood, Texas, require a federal permit. Photo courtesy of Engineer Research and Development Center

The PWTB includes:

- steps for obtaining 404 and 401 permits;
- suggested steps to follow when applying for permits;
- an overview of Section 401 and Section 404 of the CWA showing when and where permits may be required;
- contact information for USACE districts by installation and individual contacts for each state; and
- examples of documents that may be required in the permit application process.

POC is Heidi R. Howard, 217-373-5865, Heidi.R.Howard@usace.army.mil.

Heidi R. Howard is a researcher, Construction Engineering Research Laboratory, Champaign, Ill.

(continued from previous page)

and inefficient diesel generators. The hydrogen produced through the processes can be combined with a fuel cell to provide power, offering a safe, convenient alternative to generators.

It also has potential for nonmilitary applications, e.g., agricultural and municipal wastewater.

Other advantages of this electro-decomposition process include:

- The fuel cell does not require hydrogen storage but is capable of providing a continuous hydrogen flow stream.
- Ammonia and urea are less flammable and safer to transport than hydrogen.
- The use of liquid ammonia or urea significantly reduces the volume of storage when compared to ammonia in the gas phase and is more energetically favored over water hydrolyses.
- Only environmental friendly byproducts are generated in the decomposition.
- The cell operates silently at a relatively low temperature — maximum 70 C — with corresponding reduced sonic and thermal signatures.

POC is Carl Feickert, 217-373-7473, carl.a.feickert@usace.army.mil.

Dr. Carl Feickert is a researcher, Energy Branch, ERDC-CERL, Champaign, Ill.

Army recognizes environmental, sustainability best practices

by Jennifer Gaskil

Five installations, three teams and one individual were recognized with secretary of the Army awards for their environmental and sustainability program achievements during fiscal 2009. These achievements demonstrate exemplary efforts in implementing innovative technologies, green remediation, endangered species protection, historic preservation, environmental restoration and sustainability.

This year's winning accomplishments include green remediation technologies that efficiently used natural resources and energy to reduce negative environmental impacts, preservation of Oregon Trail historic sites, a partnership with local communities for water conservation, Korea's first wetland conservation project, the regionwide recovery of the red-cockaded woodpecker and new technologies, such as the ultraviolet optical screening tool, that rapidly identify subsurface petroleum contamination.

The Secretary of the Army Environmental Awards represent the highest honor in environmental science and sustainability conferred by the Army. The winners of the FY 2009 awards are:

Camp Guernsey, Wyoming Army National Guard – *Cultural Resources Management, Installation.* Camp Guernsey's cultural resources management program completed a cultural site protection study, increased preservation of Oregon Trail historic sites, and started a Native American ethnographic study and a traditional cultural properties survey.

Fort Stewart and Hunter Army Airfield, Ga. – *Environmental Quality, Nonindustrial Installation.* Fort Stewart and Hunter Army Airfield's Qualified Recycling Program, which reduces waste, generated $10 million in cost avoidance in FY 2009.

Robert J. Chartier, U.S. Army Garrison Daegu, Korea – *Environmental Quality, Individual.* Chartier helped the command meet its fleet vehicle management goal by replacing gasoline-fueled nontactical vehicles with zero-air-pollution electric trucks. He also saved the garrison $1.2 million with Lean Six Sigma Just-Do-It projects involving underground heating-oil storage tanks.

Acronyms and Abbreviations	
FY	fiscal year

Camp Withycombe, Oregon Army National Guard – *Environmental Restoration, Installation.* Camp Withycombe showed innovative thinking, comprehensive planning, green remediation solutions and successful partnering with its stakeholders, including regulatory agencies, the Oregon Department of Transportation, installation personnel and the community of Clackamas, Ore.

Tanaga and Ogliuga Islands Formerly Used Defense Sites Team, U.S. Army Corps of Engineers, Alaska District – *Environmental Restoration, Team.* This team concurrently executed three remedial investigations on two remote islands in the Western Aleutians — two hazardous, toxic and radioactive waste projects and one Military Munitions Response Program project. Joint project execution saved $5.2 million in mobilization and demobilization costs.

Fort Custer Training Center, Michigan Army National Guard – *Natural Resources Conservation, Small Installation.* The training center updated its planning-level survey in FY 2009, documenting that 80 percent of Michigan flora and fauna is present at the installation, including 14 new species.

Fort Bragg, N.C., Natural Resources Team – *Natural Resources Conservation, Team.* In the past two years, Fort Bragg surpassed its red-cockaded woodpecker recovery goal of more than 350 potential breeding groups, allowing the installation to remove restrictions on 3,100 acres of training land.

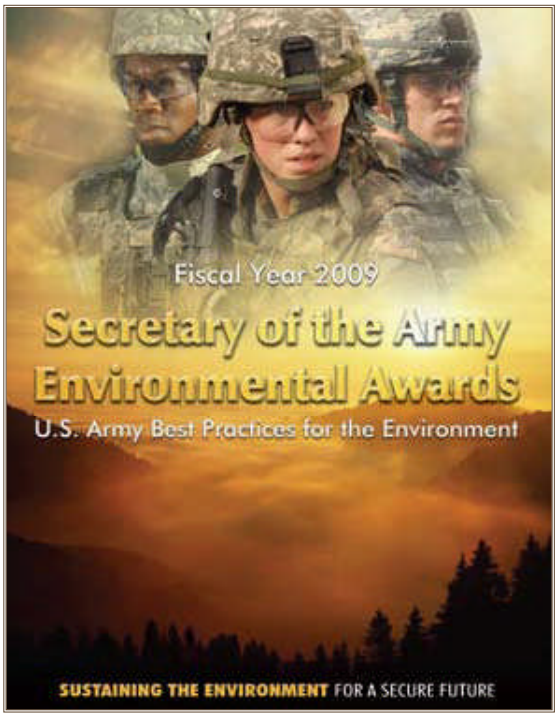

The Secretary of the Army Environmental Awards program supports the Army's mission to sustain the environment for a secure future. Graphic courtesy of the U.S. Army Environmental Command

G-4 Environmental Team, U.S. Army Aviation and Missile Command – *Environmental Excellence in Weapon Acquisition.* The team applies a cradle-to-grave approach in its assessments, considering not only sustainment but also, ultimately, demilitarization and disposal.

Letterkenny Army Depot, Pa., –*Sustainability, Industrial Installation.* Under the Letterkenny Army Depot's Sustainability Plan, by the year 2033, the depot will subsist solely on renewable energy and self-sustaining water and other natural resources with no waste discharge into the local landfill.

Runners-up for FY 2009 awards are: **Fort A.P. Hill, Va.,** *Cultural Resources Management, Installation*; **Fort**

Camp Guernsey recognized for cultural resources management

by Nick Karoglou

The Wyoming Army National Guard's Camp Guernsey won both the fiscal year 2009 *Secretary of the Army* and *Secretary of Defense environmental awards* for *Cultural Resources Management on an Installation.*

Camp Guernsey was recognized for its efforts in researching, preserving and collecting data from historic sites. The installation's primary mission is as a field artillery training center, and the camp is an ideal training site for U.S. military services, as its terrain is similar to Afghanistan's.

Camp Guernsey has made stewardship and preservation of its numerous cultural and historical resources a main focus during the last two years. Because multiple units in all branches of U.S. military services rely on the installation for training, conservation and protection of the installation's cultural resources is viewed as mission critical.

"Wyoming Army National Guard does an excellent job informing the troops that train at Camp Guernsey of cultural resources concerns and responsibilities," said Sarah Killinger, liaison to the Army for the Advisory Council on Historic Preservation.

Acronyms and Abbreviations	
DoD	Department of Defense

One of the principal accomplishments of Camp Guernsey's Cultural Resources Management Office was the documentation of procedures to mitigate the effects of wildfire incidents on Native American cultural sites. To complete this initiative, the cultural resources management staff obtained $44,000 in Department of Defense Legacy Program funding, and the study was completed in late 2008.

Building 301, constructed with locally quarried sandstone as a Works Progress Administration project, is an excellent example of Camp Guernsey's unique historic stonework. Photo courtesy of Mary Humstone, University of Wyoming American Studies Program

The DoD Legacy Program assists in protecting and enhancing resources while supporting military readiness. A legacy project involves regional ecosystem management initiatives, habitat preservation efforts, archaeological investigations, invasive species control, Native American consultations or monitoring and predicting migratory patterns of birds and animals.

> "Protecting traditional cultural sites prior to and during fires and assessing post-fire damage are issues that will continue to increase …"

The cultural resources management staff followed a six-step process for this project. The first step was to collect and synthesize existing data on fire and fire impacts. Next, it organized a symposium at which Native Americans knowledgeable ➤

(continued from previous page)

Indiantown Gap Training Center, Pennsylvania Army National Guard, *Environmental Quality, Nonindustrial Installation*; **Team Recycle, Fort Hood, Texas,** *Environmental Quality, Team/Individual;* **Lake City Army Ammunition Plant, Mo.,** *Environmental Restoration, Installation;* **Fort Eustis, Va.,** and **Volunteer Training Site, Catoosa, Tennessee Army National Guard,** *Natural Resources Conservation, Small Installation;* **Natural Resources Team, Fort Drum, N.Y.,** *Natural Resources Conservation, Team/Individual;* and **Tobyhanna Army Depot, Pa.,** *Sustainability, Industrial Installation.*

"The Army recognizes successes that demonstrate mission-driven solutions that protect the environment at installations here and overseas," said Tad Davis, deputy assistant secretary of the Army for environment, safety and occupational health. "Whatever we do needs to revolve around supporting the mission, taking care of our Soldiers, civilians and families. In simplistic terms, the Army — our Army, your Army — is building green, buying green and going green. These winning environmental programs make the Army sustainable, thereby impacting generations to come."

The winners of this year's awards demonstrate that environmental stewardship and sustainability play a crucial role in the Army's mission readiness. Investments in environmental programs and sustainability initiatives pay dividends in sustaining realistic training and testing capabilities both now and in the future.

To read the award-winning nominations, visit the U.S. Army Environmental Command's web site, *http://aec.army.mil/usaec/newsroom/awards01.html.*

POC is Jennifer Gaskill, 410-297-2509, gaskill_jennifer@bah.com.

Jennifer Gaskill is an associate with Booz Allen Hamilton, Public Affairs Office, U.S. Army Environmental Command.

At Fort Stewart, early bird gets to protect the worm's environment

by Cathy Kropp

Fort Stewart, Ga., attributes its environmental stewardship success to early planning, early coordination and involvement of stakeholders. That success was recognized this year as Fort Stewart and Hunter Army Airfield was named as the nonindustrial installation winner of the *Secretary of the Army Environmental Quality Award.*

Becoming fully integrated into every aspect of the installation's decision-making process including strategic planning, has allowed Fort Stewart's Environmental Division to be proactive in its planning and analysis.

A partnership between an installation cross-functional team and the Army Corps of Engineers' Wetlands Regulatory Division helped identify environmental impacts and potential mitigation efforts for a number of proposed range-related projects. Public input is an important part of this process, and with six counties outside the installation's borders, it is a large task to keep them all updated.

Fort Stewart's environmental team makes it a priority to inform and educate the community both inside and outside the gates. Over the last two years, it has released more than 100 articles and sponsored or participated in about 100 community events with an outreach to about 15,000.

A Fort Stewart biologist applies leg bands to one of the endangered red-cockaded woodpeckers living within the installation boundaries. Photo by Larry Carlile, Fort Stewart Fish and Wildlife Branch

The extensive training program for the installations' Soldiers and civilians increases awareness and promotes the highest standards of environmental quality. Hundreds of environmental and recycling compliance courses have been taught.

> "Fort Stewart's environmental team makes it a priority to inform and educate the community both inside and outside the gates."

With learning comes doing. The installation provides cash incentive awards, along with a plaque and command recognition, to those units who do well with their recycling programs. The recycling program generates revenue to offset management costs, and it saves the installation money by diverting recyclable material from the landfill, allowing landfills to remain viable for longer periods.

"Fort Stewart and Hunter Army Air Field have demonstrated that, by educating and involving every Soldier and civilian, a facility can reduce its environmental impact to a level that allows its mission ➤

(continued from previous page)

in traditional cultural properties worked with archaeologists and land managers to determine proper damage assessment methods.

The data gleaned from the symposium was then synthesized into a draft standard operating procedure. The fourth step included review of the draft standard operating procedure by symposium participants. The fifth step was to revise the standard operating procedure based on their input. The last step was the creation and distribution of the final document to the Legacy Program, tribal members and participating land management agencies.

Protecting traditional cultural sites prior to and during fires and assessing post-fire damage are issues that will continue to increase as more of these traditional cultural properties are recorded on federal lands and as arid conditions persist across parts of the country. This project created procedures that can be used across military services by any installation that has traditional cultural properties under its jurisdiction and by the Forest Service, the National Park Service and the Bureau of Land Management.

Camp Guernsey also completed a Native American ethnographic study and cultural property survey in 2008. The study incorporated contributions from archaeologists, historians and tribes. The final report captures the archaeological and ethnographic history of the region, accounts of treaties and tribal life, and background on traditional-use areas and resources, including plants, animals, minerals and water. Emphasis was placed on specific sites and features identified as important to the tribes.

The Cultural Resources Management Office provided tribal representatives the opportunity to give specific recommendations for management of traditional sites, review documents and offer approval on proposed activities. A tribal monitoring program is in place for ground-disturbing projects, and tribes visit on a rotating basis to participate in fieldwork and surveys.

POC is Nick Karoglou, 410-297-2567, karoglou_nicholas@bah.com.

Nick Karoglou is a Booz Allen Hamilton consultant, Public Affairs Office, U.S. Army Environmental Command.

One man can make a difference

by Cathy Kropp

Robert Chartier, former Environmental Division chief at the U.S. Army Garrison, Daegu, Korea, captured the individual award in the *Environmental Quality* category of the fiscal year 2009 *Secretary of the Army Environmental Awards.* Chartier was recognized for his superb management of all environmental program areas for the Daegu garrison.

"It's always an honor to be recognized, especially at this level; however, many of these achievements would never have been possible had it not been for the outstanding support I received from my entire environmental staff and the Daegu garrison leadership who supported my vision for the direction of the environmental program," Chartier said.

> "He has shown through his example how one person can make a difference and how an installation can maximize cost savings through innovation, collaborative solutions, and continuous learning and sharing."

From recycling to wetland restoration to electric vehicles, Chartier's vision was felt throughout the garrison and even outside the gates.

His efforts to inform and involve the community through environmental awareness events, such as the Earth Day 5K run, a Chilgok County and Waegwan City tree planting, Arbor Day mass tree planting in Daegu city and environmental displays at the Armed Forces Day open house, helped advance the installation's environmental goals and enhance the partnership between the community and the U.S. military.

Development of the first International Organization for Standardization 14001 environmental management system for an overseas garrison is attributed to Chartier. He envisioned and put into practice a cross-functional team to ensure the environmental management system supported the mission of the Daegu-stationed units.

Acronyms and Abbreviations	
USAG	U.S. Army Garrison
ZAP	zero air pollution

Robert Chartier prepares a new ZAP electric truck, one of five on Daegu, for a test drive. Photo by Mark Gettel, USAG Daegu Environmental Division

Working with the local Public Works Contract Management Office, Chartier combined the solid waste and recycling ➤

(continued from previous page)

to be sustained for the long term," said Tom Easterly, the commissioner of the Indiana Department of Environmental Management and an awards judge "This is the future of environmental protection — moving from preventing harm to operating in harmony with the natural environment."

The installation has done such a great job operating in harmony with the red-cockaded woodpecker that it is able to contribute more than 30 birds a year to help the efforts of growing woodpecker populations in other areas, such as the Talladega National Forest, the Avon Park Air Force Range and the Disney Wilderness Preserve.

The installation's partnerships with stakeholders to purchase a conservation easements on lands adjacent to the facility have provided a buffer to protect the woodpecker and other threatened and endangered species. In addition, the buffer ensures incompatible development doesn't impact the warfighters' mission at Fort Stewart and Hunter Army Airfield.

A partnership with the city of Hinesville, Ga., has been a win-win. The city constructed a reuse facility to reduce its demand on the existing wastewater treatment plant. Fort Stewart is planning to use this water for irrigation of its golf course, which also reduces demand on the aquifer that is the main drinking water source in the region.

During fiscal 2009, the installation drilled a lower floridan aquifer well, which will help conserve water, something of great concern to the state and the region. The lessons learned during the construction of this well have been shared with the state in another partnering effort.

The partnerships established and nourished both within and outside the gates, early integration of environmental experts in planning initiatives and proactive initiatives to sustain and improve environmental quality have helped the Fort Stewart and Hunter Army Airfield Environmental Division stand out. An early bird mentality allows it to protect, preserve, conserve and sustain the environment where Soldiers live, work and train.

POC is Cathy Kropp, 410-436-1655, cathy.kropp@us.army.mil.

Cathy Kropp is a public affairs specialist, U.S. Army Environmental Command.

Camp Withycombe's green cleanup saves $5 million

by Jennifer Gaskill

The use of green remediation technologies at Oregon Army National Guard's largest restoration project earned it recognition in the Army's environmental awards program. The Oregon Army National Guard's Camp Withycombe won the fiscal year 2009 *Secretary of the Army Award for Environmental Restoration on an Installation.*

Camp Withycombe completed the remediation of six former training ranges in preparation for a major Oregon Department of Transportation highway development project. To make way for freeway construction in 2012, Camp Withycombe is working to clean up the highway corridor and transfer the land to the state. The area to be transferred includes six former training ranges that, though closed for live-fire training in the 1990s, accumulated lead bullets during their roughly 100 years of use.

The Oregon Army National Guard designed a sustainable cleanup for completion by 2011 that would use green remediation technologies. If Camp Withycombe had used a traditional approach to site cleanup, more than 30,000 tons of contaminated soil would have been excavated and hauled by dump trucks to a hazardous waste landfill 120 miles from the site on highways that pass through a national scenic area.

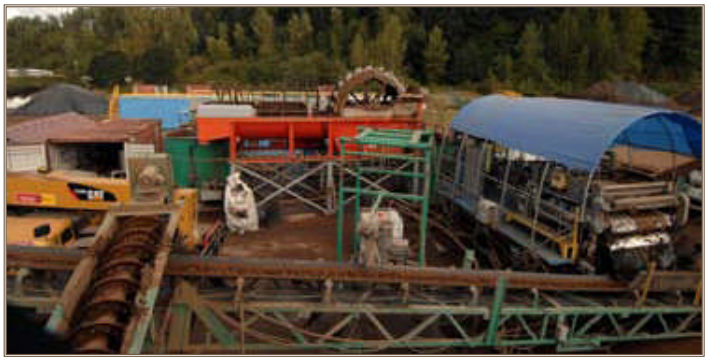

This equipment uses a multi-stage process to treat contaminated soil from the Camp Withycombe cleanup. Photo courtesy of the Oregon Military Department Public Affairs Office

This solution would have cost about $11 million for excavation, disposal and transport, and would have produced high levels of emissions. By contrast, the green remediation soil treatment system cost $5.9 million, a cost avoidance of more than $5 million.

> "This green treatment system remediated the soil by employing dry particle separation and a wet gravity separation process to remove bullets and fragments using gold mining equipment."

This green treatment system remediated the soil by employing dry particle separation and a wet gravity separation process to remove bullets and fragments using gold mining equipment. The contaminated soil was delivered by conveyor belt to a wet screening machine, where the soil was separated through sifting into various sizes. Inside the machine, the soil was sprayed with a high pressure blast of water to break down the soil clods. Soil was then treated and reclaimed. More than 50 percent of the soil was cleaned and ready to be used in reforestation to refill a mountain.

Nearly 300 tons, or about ➤

(continued from previous page)

contracts to increase profits, help reduce solid waste generation and increase the solid waste diversion rate.

A program rewarding units for participation in the recycling program sparked renewed interest at the unit level. USAG Daegu's qualitative recycling program continues to be recognized as the best program in Korea.

Two other noteworthy projects started under Chartier's leadership are the zero-air-pollution, or ZAP, electrical trucks and the wetland restoration project at Camp Carroll.

The alternative fueled vehicles and neighborhood electric vehicles used at U.S. installations are not available in Korea. Chartier researched options and discovered ZAP vehicles, which the installation purchased to help meet its fleet vehicle management goal.

His vision for Camp Carroll included a nature park with educational venues, walking trails and viewing platforms for those who live and work there. Chartier designed this project as a watershed protection buffer and attenuation zone for the natural runoff and monsoonal storm water flowing through the installation. The goal was to re-establish the hydrologic and vegetative community of a historic wetland habitat on Camp Carroll. A number of aquatic invertebrates, raccoons and other small mammals have already established footholds in the wetlands and future increases in faunal biodiversity are expected. This goal will surely be met.

Chartier understands the connection and need for balance between the environment, the community and the mission. He has shown through his example how one person can make a difference and how an installation can maximize cost savings through innovation, collaborative solutions, and continuous learning and sharing.

POC is Cathy Kropp, 410-436-1655, cathy.kropp@us.army.mil.

Cathy Kropp is a public affairs specialist, U.S. Army Environmental Command.

Corps team efficiently investigates Aleutian Islands sites

by Cathy Kropp

Innovative technologies and inventive cost-saving processes used at environmental restoration projects on Tanaga Island and Ogliuga Island Formerly Used Defense Sites in Alaska's Aleutian Islands combined to help a U.S. Army Corps of Engineers team save millions of dollars and win the *Environmental Restoration* category in the fiscal year 2009 *Secretary of the Army Environmental Awards Program.*

The Tanaga project included 13 different investigation areas; Ogliuga had three areas of concern. Both sites required the Corps' Alaska District FUDS team to identify the presence of environmental contaminants, unexploded ordnance and buried munitions from World War II.

Completing the remedial investigation and feasibility study required three separate projects. Projects to identify and investigate hazardous, toxic and radioactive waste were needed on both islands, and another project to identify and investigate munitions and explosives of concern and munitions constituents was required on Tanaga Island. The innovative processes used mean the HTRW projects will be completed three to five years ahead of schedule, and the munitions project is expected to finish 10 years early, with significant cost savings, too.

For efficiency and to save money, the projects were scheduled so only one mobilization to the islands was needed.

On Tanaga Island, a helicopter sling-loads a utility vehicle that was used for site access several miles over a debris field, one of the site conditions that made access difficult. Photo by Mike Macmillan, USACE Alaska District

Acronyms and Abbreviations	
FUDS	Formerly Used Defense Sites
HTRW	hazardous, toxic, and radioactive waste

This plan required building a unified team that included multiple contractors, developing common work plans, sharing resources and extensively coordinating the sequence of work.

Simultaneously executing the projects saved more than $5.2 million in mobilization costs and allowed more data to be collected in less time. It also saved more than 400,000 gallons of diesel fuel. Combining the remedial action phases of these sites in future could avoid another $5 to $15 million.

> "These extremely remote, uninhabited sites posed special challenges the team had to overcome and resulted in new standards and processes for similar future projects."

Innovative technologies, such as an ultraviolet optical screening tool, portable X-ray fluorescence analysis and mass spectrometer were used at Tanaga. The ultraviolet optical screening tool delineates petroleum contamination; the X-ray fluorescence identifies lead or other metal contamination in the subsurface; ➤

(continued from previous page)

25,205,000 bullets, were sifted out and reclaimed for recycling. Revenue generated by lead recycling was reinvested into restoration.

The soil treatment used a closed-loop water system that filtered and recycled its own water, reducing demand and preventing the discharge of contaminated water. The system also collected and directed storm water into the closed loop system as process water. Upon completion of soil washing, the system treated the process water so it could be recycled for irrigation during natural resources restoration.

"The Oregon Army National Guard has successfully blended an efficient and innovative environmental restoration program with a concurrent emphasis on principles of sustainability, green remediation and mission support," said Ray Fatz, president and CEO, Plexus Scientific Corp and Secretary of the Army Awards judge. "The techniques used are of particular value to the Army and Department of Defense environmental restoration programs in that they are simple in approach and directly transferable to other sites undergoing range cleanup of small arms ammunition."

POC is Jennifer Gaskill, 410-297-2509, gaskill_jennifer@bah.com.

Jennifer Gaskill is a Booz Allen Hamilton associate, Public Affairs Office, U.S. Army Environmental Command.

Fort Custer Training Center preserves, restores natural resources

by Nick Karoglou

Fort Custer's commitment to maintaining the balance between environmental management requirements and Michigan Army National Guard mission support has earned the fiscal year 2009 *Secretary of the Army* and *Secretary of Defense* awards for *Natural Resources Conservation on a Small Installation.*

Michigan ARNG's Fort Custer Training Center is a 7,500-acre installation that provides trained and ready forces in support of state, local and regional emergencies. The center has a number of significant natural features nested in a matrix of woodlands, wetlands and remnant prairies. Several rare and at-risk communities — prairie fens, oak savanna, oak forests, southern wet meadows, southern hardwood swamps, dry sand prairies and mesic prairies — provide habitat for threatened and endangered species and support many plant alliances

"I was very impressed with the way the Michigan ARNG balanced the work of managing a diverse natural resource program with excellent coordination with their partners," said Laura Henze, National Sikes Act coordinator for the U.S. Fish and Wildlife Service. "I liked the emphasis on cost savings and focus on accomplishing work with the installation mission in mind.

For example, Fort Custer's Integrated Training Area Management Revegetation Program collects native plant seeds from installation flora to maintain vegetation genotypes native and true to the region. By managing its own native seed propagation program, Fort Custer saves tens of thousands of dollars annually on revegetation costs.

Seeds collected from Fort Custer's native plants are propagated to maintain vegetation genotypes, reducing the cost of revegetation. Photo by Michele Richards, Fort Custer Training Center

> "By managing its own native seed propagation program, Fort Custer saves tens of thousands of dollars annually on revegetation costs."

Fort Custer's Natural Resources Management program improves the quality of life for training center personnel and members of the surrounding community by creating a green space that is a haven for flora and fauna, including unique ecological areas and recreation opportunities.

"They have developed an innovative program that includes an emphasis on restoring endangered species, preserving migratory birds, reaching out to ➤

Acronyms and Abbreviations	
ARNG	Army National Guard

(continued from previous page)

and the mass spectrometer screens for polycyclic aromatic hydrocarbons and polychlorinated biphenyls in sediments, soft soils and beaches. Using these tools saved time and transportation costs and minimized subsurface surprises and data gaps.

The team identified potential logistical issues and planned contingency actions to overcome challenges at these remote Alaskan sites. Adjusting travel and work schedules because of adverse weather conditions proved challenging, requiring continual contract changes, especially for transport vendors.

Because there were no local services such as roads, emergency response, lodging and food, the team established and maintained a remote field camp for five weeks. This required using a helicopter, crab boat, and tug and barge to transport the necessary supplies, equipment and fuel 1,350 miles to the camp. Travel from Anchorage involved a four-hour flight to Adak, followed by a one-hour helicopter ride or 12-hour boat ride. Travel between the islands took about 40 minutes by helicopter.

The Tanaga Island site was established in July 1943 as an auxiliary naval station to the Adak Naval Operating Base and closed only a couple years later. The Ogliuga site was an emergency landing field from 1943 to 1945. When remediation is complete, these sites will become part of the U.S. Fish and Wildlife Service's Alaska Maritime National Wildlife Refuge.

These extremely remote, uninhabited sites posed special challenges the team had to overcome and resulted in new standards and processes for similar future projects. More than 20 other Aleutian Island sites remain to be addressed by the Alaska District, but future environmental restoration teams will be able to employ the lessons learned from these projects.

POC is Cathy Kropp, 410-436-1655, cathy.kropp@us.army.mil.

Cathy Kropp is a public affairs specialist, U.S. Army Environmental Command.

At Fort Bragg, birds, Soldiers declare peace

by Cathy Kropp

Any Soldier who's been stationed at Fort Bragg, N.C., is familiar with the red-cockaded woodpecker. This year, the installation won the *Secretary of the Army Environmental Award* for *Natural Resources Conservation* in part because of the way it protects this little bird.

In January 2009, more than 3,100 acres of previously restricted land became available for maneuver training due to the recovery, monitoring and management plan established at Fort Bragg years ago to protect the red-cockaded woodpecker.

The U.S. Fish and Wildlife Service had restricted activities there in 1990 to protect the woodpecker, whose number had dwindled in the region to only a few hundred breeding groups. In response, Fort Bragg established a cross-functional team comprising environmental, public works and training range staff, who balance the requirements of the installation's mission with its natural resources stewardship. Fifteen years later, Fort Bragg and its partners met the recovery goal for potential breeding groups.

The team continues to execute a rigorous program of habitat management, species monitoring and community education, and the red-cockaded woodpecker continues to thrive as an environmental success story.

Aggressive management is important, because if the population continues to thrive, restrictions should be reduced further, said Jackie Britcher, chief of the Fort Bragg Endangered Species Branch. It is also important to continue intensive monitoring of the population's health and document population trends.

"Artificial cavities are woodpecker-specific, but other habitat management is ecological at landscape level and valuable to other endangered, threatened, rare and native species," Britcher said. "A healthy ecosystem is critical for supporting quality training lands."

Fort Bragg transferred the lessons it learned to other military installations the red-cockaded woodpecker calls home. Fort Bragg's success means it is also able to physically transfer birds to other installations to help the regionwide recovery without hurting its own population recovery efforts.

> " … Fort Bragg established a cross-functional team comprising environmental, public works and training range staff, who balance the requirements of the installation's mission with its natural resources stewardship."

Several teams working in concert brought about the bird's population increases and the installation's ability to host meaningful, realistic training at Fort Bragg. The installation's Endangered Species Branch monitors, surveys and protects the woodpecker population.

A Fort Bragg employee removes a sign that designated the area as restricted red-cockaded woodpecker habitat in January 2009, when 3,100 acres were returned to training lands. Photo courtesy of Fort Bragg Public Affairs Office

The Forestry Branch restores the woodpecker's habitat through prescribed burns during the growing season, timber stand improvement, replanting with native species, controlled burning and hardwood midstory removal. The Wildlife Branch enforces the applicable regulations. ➤

(continued from previous page)

the community and providing outdoor recreation opportunities to the disabled," Henze said.

The installation's wetlands and prairie fens are unique and valuable ecological communities that are not well represented elsewhere in the state, offering educational opportunities for visitors and students that would not otherwise exist. The natural resources staff includes the public and students from surrounding communities in the installation's natural resource activities, and it works with a variety of local environmental organizations and academic institutions to share knowledge, advance research and increase regional biodiversity.

Fort Custer's Environmental Office demonstrates its capabilities in every aspect of program management, from rare ecosystem restoration and community involvement to fiscal responsibility. The natural resources staff conserves Fort Custer Training Center's natural resources and works to increase these resources by introducing endangered species onto the installation, creating wetlands mitigation banks, sharing management costs with partner organizations and transferring its expertise to students, the general public and other National Guard installations.

POC is Nick Karoglou, 410-297-2567, karoglou_nicholas@bah.com.

Nick Karoglou is a Booz Allen Hamilton consultant, Public Affairs Office, U.S. Army Environmental Command.

Aviation and Missile Command's sustainment approach reduces pollution

by James Law

The U.S. Army Aviation and Missile Command G-4 Environmental Team provided support to more than 30 weapon system product managers and was critically involved in more than 20 Army System Acquisition Review Council reviews, earning them the fiscal year 2009 *Secretary of the Army Award for Environmental Excellence in Weapon System Acquisition*

For the last two years, the G-4 E-Team was a single focal point for the AMCOM to address environment, safety and occupational health issues in aviation and missile programs, providing acquisition and engineering sustainment guidance and expertise to multiple stakeholders. Part of the team's mission is to serve as AMCOM's point of contact and subject matter expert for weapon system environmental support throughout the entire acquisition life cycle, from development and fielding to disposal.

The G-4 E-Team functions as an element of the program executive office's or project manager's staff and provides technical assistance and system documentation reviews to identify the environmental requirements and issues for aspects of weapon system acquisition in the United States and abroad.

"The team's single focus has been to ensure AMCOM systems and equipment are manufactured, maintained and repaired in the safest and most environmentally sound manner" said David Branham, G-4 E-Team chief. "This approach increases system affordability and maintainability, and improves warfighter readiness."

A G-4 E-Team member completes the recertification of a tactical missile system at the Letterkenny Munitions Center, Penn. Photo courtesy of the U.S. Army

> "[The G-4 E-Team] applied a cradle-to-grave approach, considering not only sustainment but also demilitarization and disposal."

Pollution factors such as effluents, emissions, discharges and noise were incorporated in life-cycle, programmatic or site-specific environmental assessments performed by the G-4 E-Team. It applied a cradle-to-grave approach, considering not only sustainment but also demilitarization and disposal.

This approach led to significant pollution prevention and hazardous material reduction throughout the Army. It includes:

- requiring standard statement of work language in more than 150 Army contracts to ensure hazardous materials and suitable replacement materials, either in end-items or used in the manufacturing process, are identified;
- facilitating successful testing, evaluation and approval for transition to a non-hexavalent chromium coating system for Army aviation systems and equipment;
- identifying opportunities, including the use of laser and other environmentally safe paint stripping, media blast ➤

Acronyms and Abbreviations	
AMCOM	U.S. Army Aviation and Missile Command
E-Team	environmental team

(continued from previous page)

The Master Planning Division and Environmental Management Branch collaborate to ensure environmental and operational impacts are minimized or avoided. Those responsible for military readiness are directly involved in the decisions.

Biologists, trainers and range officers ensure Soldiers adhere to the range regulation restrictions, and the environmental management staff coordinates with the U.S. Fish and Wildlife Service and prepares biological assessments, reports and briefings to ensure compliance.

Monthly classes educate incoming military and civilian personnel. Participation in local community activities — such as nature fairs, field days and children's festivals — help keep the installation's neighbors informed.

The community, mission and environment are all connected. Everyone has a stake and is committed to protecting the red-cockaded woodpecker.

If the woodpecker population trends continue prior to the 2012 breeding season, protective markings and training restrictions can be removed from the vast majority of habitat on Fort Bragg, Britcher said.

Teams working in partnership, community outreach and stakeholder involvement have been the key to Fort Bragg's success ensuring birds can live and Soldiers can train in harmony.

POC is Cathy Kropp, 410-436-1655, cathy.kropp@us.army.mil.

Cathy Kropp is a public affairs specialist, U.S. Army Environmental Command.

Letterkenny Army Depot ensures industrial sustainability

by Nick Karoglou

The Letterkenny Army Depot, Penn., Sustainability Plan is an integral part of the commander's strategic objective to become the Army's premier sustainable green depot and is part of the reason LEAD won the fiscal year 2009 *Secretary of the Army Award for Industrial Sustainability on an Installation.*

As the center of industrial and technical excellence for air defense and tactical missile systems, LEAD's primary mission is to provide the Army and other services with worldwide, reliable, responsive and cost-effective depot-level maintenance. In addition, LEAD provides field support, systems integration and product support integration for weapon systems, components and supplementary equipment to ensure the readiness, sustainability and safety in the full spectrum of operational environments.

LEAD's sustainability plan guides the depot's environmental goals for the next 25 years and beyond. LEAD's plan consists of three overarching goals: water conservation, energy conservation and solid waste reduction. Under the plan, by the year 2033, the depot will subsist solely on renewable energy and self-sustaining water and other natural resources with no waste discharge into the local landfill.

To achieve its sustainability goals, the depot must uncover and track hidden energy and water use and their associated costs. The depot has had metered water use at all of its buildings since the 1990s, and all new construction has also been metered. The depot installed an additional 26 electric meters and five gas meters in 12 buildings with a monitoring system to track and shift the demand for electricity to off-peak, lower-cost hours.

A LEAD employee cleans a vehicle with a high-pressure closed-looped system, which conserves water and minimizes discharge to the industrial wastewater plant. Photo by Todd L. Johnson, LEAD Environmental Office

The advanced metering system tracks 75 percent of electricity use at the depot. As of September, the depot had 88 meters tracking 90 percent of electric costs. It is on track to meet the Army's goal of having all buildings metered by the end of September 2013.

> "LEAD's plan consists of three overarching goals: water conservation, energy conservation and solid waste reduction."

The depot continuously feeds its pipeline of long-term sustainability projects. For example, in the last two years, the depot has initiated steps toward installing passive solar and geothermal heating and cooling using Energy Conservation Investment Program funding. The depot has also partnered with the National Defense Center for Energy and Environment to demonstrate emerging technologies in waste-to-energy conversion and methane gas recovery.

"Letterkenny developed the most comprehensive sustainability program in the Army by installing meters to monitor electricity consumption, driving electric vehicles, adding solar panels and geothermal heating, replacing inefficient boilers and making a host of other improvements," said Tom Lillie, the consulting fellow of the Army Environmental Policy Institute. "Letterkenny is a model for sustainability."

POC is Nick Karoglou, 410-297-2567, karoglou_nicholas@bah.com.

Nick Karoglou is a Booz Allen Hamilton consultant, Public Affairs Office, U.S. Army Environmental Command.

Acronyms and Abbreviations	
LEAD	Letterkenny Army Depot

(continued from previous page)

technologies, high-pressure water jet power washers, rivet removal tools, vacuum-assisted shrouded tooling and centralized cell-mounted vacuum systems;

- initiating a test program to evaluate hexavalent chromium-free coating systems for missile system primers and pretreatments; and
- coordinating a field demonstration of cadmium plating alternatives on high-strength steel fasteners.

POC is James Law, 410-436-1655, james.law4@us.army.mil.

James Law is a strategic communications specialist, Public Affairs Office, U.S. Army Environmental Command.

Camp Bullis finds innovative solutions to encroachment

by Maj. Gen. Russell J. Czerw and Jim Cannizzo

Camp Bullis, Texas, a peninsula of nonurbanized land projecting into urbanized areas of San Antonio, faces severe encroachment issues that could jeopardize its viability. The lesson learned at Camp Bullis is that seemingly monumental encroachment problems can be addressed through cooperative efforts and innovative solutions.

The 28,000-acre Army installation on the north side of the city is the only field training location for Fort Sam Houston. Fort Sam Houston is an urbanized 3,000-acre post in the heart of San Antonio that is home to Army medic training and soon to all Department of Defense medic training. Camp Bullis's field training capability is a critical asset to Base Realignment and Closure 2005, which will move more than 12,000 personnel to Fort Sam Houston by 2011.

Until the 1990s, Camp Bullis was on the outskirts of San Antonio with few developments around it. Now, San Antonio is the seventh largest and third fastest growing large city in the United States, and Camp Bullis is surrounded on all but its northern boundary.

Warbler

Endangered species protection has been the most controversial encroachment issue. Light pollution was largely addressed when surrounding jurisdictions issued ordinances and orders regulating night lighting in 2008 and 2009. Golden-cheeked Warblers now create the biggest challenges.

Surveys of Warblers, a federally listed endangered species, have shown a 45 percent increase on Camp Bullis over the past five years. Populations of singing adult males have increased 200 percent since 1991 when the camp conducted its first annual survey. A June 2009 joint land use study cited U.S. Fish and Wildlife Service, Texas Parks and Wildlife Department and Camp Bullis biologists who stated that these increases were caused by the large-scale clear-cutting of oak and juniper trees bordering Camp Bullis.

Acronyms and Abbreviations	
ACUB	Army Compatible Use Buffer program
TPWD	Texas Parks and Wildlife Department
USFWS	U.S. Fish and Wildlife Service

A cedar eater clears mitigated land on Camp Bullis. Photo by Liz McKinney, integrated training area manager, Camp Bullis

Increased Warbler populations on Camp Bullis expand occupied habitat areas and trigger further restrictions on military training. The most significant restriction is the inability to thin vegetation in habitat areas. After nearly 20 years under Warbler restrictions, much of Camp Bullis contains extremely dense canopy, making it very difficult to use for field training.

There are also seasonal restrictions for occupied habitat, including 100-meter buffers during the March-to-August timeframe, the Warbler's migratory nesting season in Texas. These restrictions prohibit light, pyrotechnics and gunfire noise, and vehicles.

About 10,000 acres of the camp's 28,000 acres are potential habitat, and 3,500 acres are currently occupied. Occupied habitat has increased rapidly — by 13 percent, 7 percent and 8 percent in the last three years respectively.

Compliance

Due to their higher compliance requirements with the Endangered Species Act, federal lands often become islands of refuge for endangered species. Federal agencies must protect unoccupied potential habitat, whereas most federal courts have held that nonfederal parties must only protect occupied habitat. Also, federal agencies have an affirmative duty to consult with USFWS, which includes sending species surveys to USFWS every year.

Both federal and nonfederal entities are prohibited from harming or harassing endangered species, but it is difficult for USFWS to enforce this requirement on nonfederal parties because it lacks surveys. State trespass laws and limited manpower make it hard for USFWS to enter private lands to gather such data.

Moreover, unlike the Environmental Protection Agency and state environmental departments, USFWS does not have civil administrative enforcement authority. USFWS must go to the U.S. attorney for criminal enforcement, and the standard of proof is "beyond a reasonable doubt" instead of the civil standard of "more likely than not." Such prosecutions are difficult and rare.

Solutions

Last August, the city of San Antonio introduced an endangered species ordinance that changed the compliance dynamic. The ordinance requires developers filing planning documents to have a USFWS permitted biologist conduct endangered species surveys in accordance with standard protocols and submit the surveys to USFWS, or to certify that no species are impacted and provide the USFWS survey permit number and the name of the biologist who reached that conclusion. This is a cutting-edge approach that has been tried in only one other location, Pima County, Ariz.

Another potential remedy is a mitigation credit system to exchange habitat on ➤

Recirculation system for treated production water

by Keith Miller

The year is 2015, and the Iowa National Pollutant Discharge Elimination System permit for the Iowa Army Ammunition Plant is up for renewal. A draft of the permit arrives at the IAAAP for review and comment, and its requirements state that the allowable discharge limit for explosives in water from carbon filter column facilities into the installation stream system is reduced by 75 percent.

Acronyms and Abbreviations	
IAAAP	Iowa Army Ammunition Plant
NPDES	National Pollutant Discharge Elimination System

How can IAAAP ensure that the roughly 1.6 million gallons of water generated annually by explosives-loading operations on a major production line are going to meet the new limit? If the new limit cannot be consistently met, how can IAAAP continue to meet production requirements?

Fortunately, the above scenario should not ➤

The recirculation system at IAAAP includes several holding tanks with secondary containment, pumps and an alarm system. Photo by Keith Miller

(continued from previous page)

Camp Bullis in return for conserving habitat off the installation. In September, USFWS issued a biological opinion authorizing a five-year program during which up to 5,000 acres on Camp Bullis can be thinned in return for permanently conserving corresponding acreage off the installation.

The city of San Antonio jump-started this effort by transferring 3,000 acres near Government Canyon State Natural Area to TPWD with a permanent conservation easement requiring that the land be managed as Golden-cheeked Warbler habitat. The city acquired this land several years ago for $15 million under a watershed protection program. The new easement prohibits the cutting of trees, and transferring the acreage helps the city avoid long-term management costs. The public gains because TPWD will open much of this land to public access as a natural area.

The Army is paying $300,000 to TPWD to manage the land and for transaction costs. The city authorized Camp Bullis to use the mitigation credits this transfer generated. The Army received 1,100 mitigation credit acres and will use them to thin 762 acres of juniper on Camp Bullis.

The credits are less than 1:1 because some of the mitigation land on the camp "costs" more than one credit since the land was occupied. At least 85 percent of land to be mitigated on the camp will be unoccupied habitat.

Results

The thinning has already dramatically resolved several training dilemmas. Camp Bullis had been unable to have staging areas near the Combat Assault Landing Strip and at the Combined Arms Collective Training Facility because the adjacent areas were potential Warbler habitat. Now, these areas are available.

This mitigation method is much more cost effective than expanding Camp Bullis would be. There is no affordable land available to the south, east and west of Camp Bullis, and the land to the north crosses Cibolo Creek, which is impassable during rains. Moreover, land north of Cibolo Creek would cost $10,000 to $40,000 per acre. The mitigation effort will pay only $400 per acre in Army Compatible Use Buffer funding for the 762 acres currently being thinned on Camp Bullis. Under current estimates, the Army could acquire additional conservation easements on its own for about $3,000 to $4,000 per acre.

The thinning effort costs about $1,000 per acre. Hence, it costs much less per acre for mitigation versus fee simple acquisition of additional training lands and is much faster than the military land acquisition process. Also, the land is more usable because it is closer to existing training areas.

Mitigation allows Camp Bullis to seek exchange land anywhere in Bexar and Comal counties and parts of six other counties. The expensive land along Camp Bullis' borders can be bypassed for much more cost effective conservation easement acquisitions in outlying rural areas. Camp Bullis has entered into cooperative agreements with TPWD and The Nature Conservancy to pursue more mitigation land using ACUB funding.

Through proactive cooperation with the cities and counties surrounding Camp Bullis — and with USFWS, TPWD and The Nature Conservancy assisting on mitigation efforts — much progress is being made to address Camp Bullis's encroachment problems.

POC is Jim Cannizzo, 210-295-9830, DSN 421-9830, james.cannizzo@us.army.mil.

Maj. Gen. Russell J. Czerw is the commanding general, Fort Sam Houston and Army Medical Department Center and School; and Jim Cannizzo is an environmental attorney advisor, Camp Stanley, Fort Sam Houston and Camp Bullis.

Army National Guard launches sustainability initiatives

by Lt. Col. Joseph Knott

The Army National Guard's future readiness relies on the actions it takes today to use resources efficiently, preserve accessibility, capability and capacity for its training areas and improve coordination across multiple lines of operation — to become sustainable! At the headquarters level, the ARNG is developing initiatives to guide the states toward sustainable actions. Meanwhile, state ARNGs are launching sustainability initiatives and practices of their own.

Acronyms and Abbreviations	
ARNG	Army National Guard
DEMA	Department of Emergency and Military Affairs
LEED	Leadership in Energy and Environmental Design

Often, state ARNGs have adopted sustainable processes to address an immediate need: remedy an expensive and inefficient waste disposal method, monitor heating equipment to find and fix hidden energy leaks or invest in renewable energy generation to improve energy security. They have found that sustainability initiatives support overall mission requirements while reducing and avoiding costs, eliminating waste, stabilizing the energy supply and promoting energy efficiency.

The ARNG — as well as the Army and Department of Defense — is working sustainability into all aspects of operations. This effort follows the October signing of Executive Order 13514, *Federal Leadership in Environmental, Energy, and Economic Performance,* which calls on federal agencies to develop methods to become sustainable. A future ARNG policy may formalize the requirement that all members adopt a sustainability philosophy for every aspect of planning, training, equipping and operations.

Solar in Nevada

The Nevada National Guard broke ground in November on its $17 million Super Solar project, designed specifically to help stabilize the energy supply for its training sites and readiness centers. The project will produce 2 megawatts of solar power for the Nevada Joint Force ➤

(continued from previous page)

occur. Forward thinking and action at the IAAAP has resulted in the installation of treated water recycling facilities and implementation of practices that significantly reduce the quantity of treated water requiring discharge into the installation stream system subject to the permit.

American Ordnance LLC, the operator of the IAAAP under a facilities contract, designed and installed, with Army funding, a treated wastewater recirculation system on a major production line. The recirculation system allows wastewater to be reused in the production process after the water has been treated in a carbon filter column facility to reduce the explosive content to an acceptable level. The system consists of several holding tanks with secondary containment, pumps and an alarm system. After the water is treated in carbon filter columns, it is placed in the recirculation system.

In addition to the wastewater recirculation system, American Ordnance added other internal procedures that increased the reuse of water and reduced the discharge. As a result, water that would have been previously discharged from the system into the installation stream system was reused in another production building.

In 2001, before the recirculation system was placed in operation, more than 1.6 million gallons of treated water was discharged into the installation stream system in compliance with the existing permit. Starting in 2002, the innovative recirculation system reduced treated water discharge as follows while maintaining production at comparable levels:

2002 – reduced to about 300,000 gallons, an 81 percent reduction;

2003 – reduced to about 290,000 gallons;

2004 – reduced to about 154,000 gallons;

2005 – reduced to about 96,000 gallons;

2006 – reduced to about 50,000 gallons;

2007– reduced to about 2,000 gallons;

2008 – reduced to about 1,000 gallons;

2009 – increased to 3,700 gallons, due to a temporary equipment failure;

2010 – expected to be 1,000 gallons or less.

As a built-in precautionary measure, when treated water requiring discharge is generated at a low quantity, the water is very manageable. This water is held in a tank until it is analyzed and determined to be in compliance with the permit parameters before being discharged into the installation stream system. Should a batch of water exceed the permit limits, which occurs very infrequently, the water can be recirculated to a carbon filter column facility for additional treatment to further reduce its explosive content.

This system also significantly reduces potable water demand. In addition, a treated water recirculation system is available on another production line at the IAAAP and, although inactive at this time, can be reactivated as needed.

The recirculation system can be readily adapted for use at other Army installations where large quantities of water containing explosives are generated by explosives-loading operations and tighter future NPDES permit limits may adversely affect production capability.

POC is John Carroll, environmental manager, American Ordnance LLC, IAAAP, 319-753-7295, jcarrol@aollc.biz (Note, only one l in name.)

Keith Miller is an environmental scientist, American Ordnance LLC, IAAAP.

(continued from previous page)

National Guard Headquarters in Carson City and more than 1 megawatt combined for two other sites in Las Vegas.

The solar photovoltaic cell project is being built with no state or federal money. Instead, a power purchase agreement between the Nevada National Guard and a public-private energy partnership enables the Guard to purchase energy for 20 years at a level price of about 14 cents per kilowatt-hour — similar to what it pays now for energy. Under the agreement, the solar equipment is financed, built, owned, operated and maintained by Sierra Nevada Corp. in partnership with NV Energy.

"We buy power from them, and they own the renewable energy credits," explained Chief Warrant Officer 3 Thomas McElroy, the Nevada Joint Force Headquarters project manager.

The abundant Nevada sun is expected to help the solar project produce more power than the facilities can use during the day, enabling the sale of the excess to NV Energy. McElroy expects the Nevada Guard will save $2.3 million in power costs over the 20-year life of the agreement.

The project presents an economically viable way to energize facilities without using fossil fuels, McElroy said.

The Super Solar project had enough support from local, state and federal officials that it was conceived, contracted and began construction in 15 months. It is expected to be operational in the second half of 2010.

Sludge disposal in Pennsylvania

State ARNGs also realize cost savings simply by rethinking their mundane processes. Hauling away the heavy sewage sludge that remains in settling tanks after chemical treatment was a costly exercise for the Pennsylvania ARNG Training Center at Fort Indiantown Gap. The training center's Bureau of Environmental Management was paying up to $88,000 each year to have the sludge removed, sent to a dewatering facility nearly 20 miles away and then trucked to a landfill.

With the investment of a sewage press, the Bureau of Environmental Management found it can press the water from its sludge reducing the material to a much lighter substance, load it into a 24-cubic-foot roll-off dumpster and landfill it as solid waste using its own equipment and staff.

The Pennsylvania ARNG expects to save $40,000 a year and have a much more efficient and sustainable way of handling its own waste stream. It is also considering eventually land-applying the sludges to help provide materials for land recovery."

Energy efficiency in Oregon

State ARNGs are realizing maximum energy efficiency and related cost savings by building new and retrofitting older administrative, maintenance and training facilities. Construction of new Guard facilities is mandated by Army regulation to be built to Silver certification standards under the U.S. Green Building Council's Leadership in Energy and Environmental Design rating system. Several Oregon ARNG facilities are in various stages of LEED Silver certification.

"We're trying to develop zero-cost armories," said Jim Willeford, Installation Division chief of major construction for the Oregon ARNG. A ground source heat pump at its Ontario Readiness Center, for instance, is 261 percent efficient.

"That means that for every megawatt of energy we've used or bought, we get 2.6 megawatts of heat," Willeford said. The energy savings exceed payment on the system. A conventional heating system, by comparison, might be 98 percent efficient.

The Arizona DEMA's new field maintenance shop is on track to become LEED Gold certified. Photo courtesy of Arizona DEMA

LEED Gold in Arizona

The Arizona Department of Emergency and Military Affairs' new field maintenance shop at Florence Military Reservation was designed as a LEED Silver building. But the field maintenance shop is now on track to become LEED Gold certified, according to Dorenda Coleman, Environmental Management System program manager with the department's Environmental Division.

The 20,249-square-foot administrative office building and maintenance shop was completed in January after about a year of construction. It was developed with minimal site disturbance to protect natural areas. Stored native desert topsoil was used to restore construction damaged areas, and native plants preserve the natural site character and conserve water. Rainwater and gray water is collected for supplemental irrigation.

The roofing system is a combination of built-up membrane and standing seam metal for durability, energy efficiency and heat island reduction. Skylights and day-lighting were used in both administrative and maintenance areas. Local building sources provided materials composed of recycled content and wood from sustainably certified forests.

Greening of Army families

by Ann M. Choo Wharton

The privatization of military residential developments by the Department of Defense helped spawn a fast-growing, nationwide initiative to build and maintain sustainable military communities. Despite many successes, like the Army's partnership with developer Actus Lend Lease, even the most talented teams find themselves continually challenged to create greener, build greener and just be better.

Kermit the Frog from "Sesame Street" said it best, "It's not easy being green."

At Army Hawaii Family Housing, leaders from U.S. Army Garrison Hawaii and Actus can easily put themselves in Kermit's shoes.

"AHFH has made mistakes along the way," said Claire Ridding-Johnston, project director, AHFH. "Its size, scale and unique environmental characteristics make it conducive to trying new innovations and approaches. Not every idea is a great one; some are and just need adjustment. What has brought our partnership success is our ability to be proactive in correcting mistakes, moving on, taking to heart the lessons learned and sharing them with others in the business."

Acronyms and Abbreviations	
AHFH	Army Hawaii Family Housing
DoD	Department of Defense
SYNERGY	Saving Your Nation's Energy
USAG	U.S. Army Garrison

In 2015, AHFH will be among the largest solar-powered communities in the world — a great achievement, but the partnership continues to ask, "How can we be better?" To find the answer, the partnership looks to the nearly 8,000 families that make AHFH their home.

Family housing residents learn about sustainable practices through programs such as SYNERGY. Photo by Mark Brown, AHFH

Designing and building sustainably is only part of the picture. Equally important is ensuring that people who live in AHFH know what their homes are intended to do and how to use them efficiently and effectively. This responsibility can range from providing instruction on the use of low-flow shower heads or controlling temperatures to maximize air conditioning efficiency, to providing kids' programs on composting.

The best energy-reduction efforts of the development and design phases can be erased by residents who do not know how or do not have the right tools to make the small changes that lead to more sustainable living.

The Saving Your Nation's Energy program is a strategic approach to resident education that concentrates on energy conservation by increasing awareness of how to create tangible outcomes. SYNERGY and like programs will become even more beneficial to families when AHFH launches DoD's mock utility billing program in July.

Operationally focused initiatives also contribute to the sustainability effort, including weekly curbside pickup of green waste — glass, paper, cardboard, aluminum and cans; an approach to maintenance that repairs first, then replaces; and a community fund that provides additional educational activities for residents.

Families are benefiting in both direct and indirect ways. Directly, residents are learning how to live more ➤

(continued from previous page)

Plumbing systems use low-flow fixtures and separate piping to on-site gray-water storage. A solar thermal system generates hot water. High efficiency ballasts and T-8 lamps provide interior lighting in administrative areas, while fluorescent fixtures light maintenance bay areas. Individual lighting controls and occupancy sensors are used throughout the facility.

The field maintenance shop uses BACnet, a data communication protocol for building automation and control networks, to monitor and adjust cooling, heating, and lighting, Coleman said. They've used BACnet in all their buildings since 2002 and credit it with saving more than$1.5 million in costs and maintenance.

Part of the mission

The sustainability initiatives and projects at these and other state ARNGs exemplify the ARNG's commitment to improved energy efficiency and security, streamlined systems, cost-saving technology and sustainable design. The impetus for sustainability comes not only from ARNG Headquarters but also from newly recruited members.

"The National Guard is leading in sustainability because our military members are coming from the community," said Valerie Stein of the Texas Military Forces. "Automatically, that is an advantage because they are already knowledgeable of sustainability and they are building it into our systems and everything we do."

POC is Lt. Col. Joseph Knott, 703-607-7990, joseph.knott@us.army.mil.

Lt. Col. Joseph Knott is the Sustainability Team leader, Army Environmental Programs, National Guard Bureau.

In Europe, Corps constructs housing for avian tenants

by Carol E. Davis

McCully Barracks, Germany, has gone to the birds … literally. When a U.S. Army Garrison Wiesbaden facility practically closed its gates a few years ago, the German Schleiereule, or Common Barn Owl, moved in.

"A lot of species use old buildings as a location they can hibernate or raise their young in," said Alexander Sabais, a natural conservation media manager with CDM Consult GmbH. "This particular bird is a bird of prey, and all birds of prey are protected by Germany law."

Because the 1st Armored Division, 5th Signal Command, its support units and others will relocate over the next few years to Wiesbaden, McCully Barracks is getting a $3.3 million overhaul.

"With the number of Soldiers expected to increase in the Wiesbaden area, vehicle storage, warehouses, office and administration spaces are in high demand," said Tammie Stouter, a regional program manager with the U.S. Army Corps of Engineers, which is managing the renovations.

The project currently includes renovation of three 1916-era hangar buildings and two warehouse facilities on McCully to make room for 5th Signal tenants.

"The garrison is looking for the highest capacity and the best use of the space," said Phillip Cohen, planning section chief for the Corps' Europe District. "Ultimately, other industrial operational facilities are going to be closed and relocated to McCully, and McCully Barracks will transform into McCully Support Center."

But while the Army slowly moves back into McCully, the bird tenants that had settled in will be transferred to new homes.

"Before any construction or renovation project can start, there are a number of environmental surveys run," said Sibylle Ballnath, a district project manager. "Anytime an animal is found nesting or roosting, it must be studied for one life cycle. This will determine whether the animal is in good condition and whether it's breeding to determine what steps to take next."

Since the late 1990s, the Schleiereule has been on the endangered species list, so plans now include funding to relocate the owls, said Ballnath.

"New measurements or accommodations must be in place for the Schleiereule before work begins," she said.

The Schleiereule is large with a distinctive heart-shaped face and is sometimes called the "monkey-faced owl." It is about the size of a small cat, weighs only one pound and has a wingspan of 43 to 47 inches.

Those new accommodations are large, owl-friendly shelters on poles about 20 feet above ground. If the owls accept their new habitat, there will be no need to relocate them off McCully Barracks, said biologist Mark Mann, a district project manager.

When it comes to relocating animal inhabitants, especially endangered or protected species, biologists must be consulted about any proposals, said Mann.

"It's our obligation to relocate these owls," he said. "In fact, U.S. regulations ➤

The endangered German Schleiereule, or Common Barn Owl, will be relocated to large, owl-friendly shelters due to the $3.3 million McCully Barracks overhaul. Photo courtesy of the Ontario Ministry of Natural Resources

The House Martin, a relative of the swallow, makes its closed, cup-like home on the outside of man-made structures like the stairwell housing at Wetzel Kaserne. Photo by Claus Ableiter, courtesy of Wikipedia

(continued from previous page)

sustainably. Indirectly, they are learning about changes as a result of privatized housing.

Residents do have to adapt to increased responsibilities in the care of their homes and participation in their communities. Through regular, interactive, educational programs for adults and children, AHFH works to change its residents' outlook on living sustainably, ultimately having them adopt sustainable habits.

With success, AHFH community members could change the tone of Kermit's declaration to, "It is easy being green."

POCs are Ann M. Choo Wharton, 808-275-3177, ann.wharton@actuslendlease.com; and Aiko Brum, chief, Internal Communication, Public Affairs, USAG Hawaii, 808-656-3155, Aiko.Brum@us.army.mil.

Ann M. Choo Wharton is the regional communications director, AHFH.

Army Medicine sustainability survey finds successes

by Mary M. Strickert

The medical profession has pledged, "First, do no harm," since the time of Hippocrates. Today, this philosophy extends beyond patient treatment to the ways hospitals are designed and operated. In addition to promoting responsible environmental stewardship and reducing ownership and operation costs, sustainable hospitals have also been shown to improve patient outcomes and staff retention.

Traditional healthcare has a heavy resource consumption footprint. Although healthcare facilities comprise only 4 percent of national square footage, they consume 8 percent of America's energy. They also typically consume the most water in a community and generate more than 5 million tons of solid waste annually.

Sustainability strategy

The U.S. Army Medical Command's mission is to deliver leading-edge health services to our nation's warriors and their families. MEDCOM has an obligation to ensure that Soldiers of today — and Soldiers of the future — have the land, water and air resources they need to train and a healthy environment in which to live.

Acronyms and Abbreviations	
MEDCOM	U.S. Army Medical Command

Operating sustainable medical treatment facilities is key to fulfilling this obligation. Sustainable practices — such as environmentally preferable purchasing, recycling, energy conservation or waste reduction — will help MEDCOM deliver leading edge healthcare into the future.

A chiller unit at Madigan Army Medical Center uses nonpotable water that is later reused for irrigation. Photos by Bob Cody, Madigan Army Medical Center

MEDCOM is finalizing a strategy to advance sustainable practices in the delivery of Army healthcare. To develop this strategy, MEDCOM conducted a survey to establish the baseline condition of current sustainability practices at Army treatment facilities. Many sustainability achievements came to light. Two examples are at Madigan Army Medical Center, Joint Base Lewis McChord, Wash., and Evans Army Community Hospital, Fort Carson, Colo.

Creative water conservation

Madigan Army Medical Center developed an innovative, holistic solution to water conservation that is integrated into the hospital landscape. Nonpotable well water is used by the chillers and ➤

(continued from previous page)

for endangered species are very similar to German ones, meaning we have to accommodate these owls rather than forcing the owl to adapt to our presence."

"If successful, it is a win-win situation for the owl and McCully Barracks," said Edwards. "The Barn Owls get new, safe and structurally sound homes, and McCully Barracks gets natural, environmentally-safe rodent control."

The Schleiereule is not the only bird being relocated to a new nest. During the environmental surveys for the $18 million townhouse project at Wetzel Kaserne in Baumholder, Germany, the House Martin, a protected migratory bird, was found making its home in the existing stairwell housing community. The bird, a relative of the swallow, is found across Europe and northern Asia, making its closed, cup-like home on the outside of man-made structures such as bridges and houses.

Unfortunately for the House Martin, the stairwell housing it's currently living in is scheduled to be replaced by 38 new townhouse-style units. More than 240 nests will have to be relocated. A new community of "houses" will be constructed to accommodate them.

"Construction of the new housing community is completely necessary to improve the quality of life for the families living in there, so building the swallow houses will serve as a compensation measure in which the birds can be relocated," said Nathan Edwards, a district environmental project manager. "The really awesome and unique thing about these houses, besides it being the first of its kind, is they will look exactly like the houses in the community except they will be on 30-foot poles."

The Schleiereule, the House Martin and all species relocated by construction projects will receive improved habitat, and the U.S. Army will be able to build and use facilities to meet its needs.

POC is Carol Davis, DSN 570-2650, carol.e.davis@usace.army.mil.

Carol E. Davis is a public affairs specialist, Europe District, U.S. Army Corps of Engineers.

(continued from previous page)

later reused for irrigation.

The water is pumped from the discharge of a groundwater pump-and-treat system at an Environmental Protection Agency National Priorities List site on the installation. This water is 55 F when it enters the equipment and is discharged at 85 F to an on-site detention pond.

Aerator fountains in the pond lower the temperature of the collected system discharge water. The detention pond ultimately discharges to a nearby creek. Algae growth, an ongoing maintenance issue caused by the temperature of the discharge water, has been mitigated by adding fish to the pond

This innovative approach is saving Madigan the cost of pumping potable water for use in the chillers.

Food service innovation

Poor nutrition is linked to diabetes, heart disease, stroke and cancer, all of which are leading causes of death in the United States. As places of healing, hospitals have a natural incentive to provide food that is healthy. From the way food is grown, to the way it is packaged, shipped, consumed and discarded, a hospital's food purchasing decisions plays an important role in both health and sustainability. Sustainable food services focus on purchasing and preparing locally sourced, fresher, less-processed foods.

Evans Army Community Hospital used numerous sustainability initiatives to reduce waste and improve customer satisfaction while realizing cost savings. Its kitchen prepares 90 percent of all food served in the hospital, in both patient rooms and the dining facility, from scratch. Switching from pre-packaged, processed food to made-from-scratch food has resulted in both cost savings and menu offerings that are lower in sodium and fat.

To decrease the amount of waste, plastic foam food containers have been replaced with biodegradable to-go containers that can withstand microwaving, and biodegradable hot beverage containers have been substituted for plastic foam cups. Used biodegradable food containers can be composted and diverted from the waste stream.

On weekends, the cafeteria offers only food that is made-to-order, which also cuts down on the amount of waste. In addition, kitchen wastes are tracked and used to train food service employees on appropriate food amounts to prepare. Plans are in the works to make frozen meals from unsold leftover food, which will further minimize waste.

Aerator fountains in Madigan's detention pond lower the temperature of water discharged from an on-site National Priorities List site.

Together with the Growing Green and Fit nutrition awareness classes taught by the hospital's Nutrition Services, the frozen meal initiative will extend the healthy eating program onto the installation and into the homes of Soldiers and their families. As the next step in the program, Nutrition Services plans to develop on-site vegetable gardens to teach Soldiers and their families how to grow their own vegetables.

The sustainable initiatives employed by Nutrition Services at Evans are benefitting patient, employee and Soldier health while reducing waste and realizing cost savings.

Bringing value

The MEDCOM survey revealed sustainability practices at every medical treatment facility, running the gamut from formal programs to grassroots initiatives. To transition to a unified, cohesive, organized sustainability program, MEDCOM is developing metric-based sustainability goals, targets and initiatives.

Ultimately, a sustainable MEDCOM will help maintain military readiness, improve quality of life for patients and staff, strengthen community relationships and reduce the total cost of ownership and operation of Army medical facilities.

POC is Gregg Chislett, executive director, Facilities Office, MEDCOM, 210-221-6933, Gregg.Chislett@us.army.mil.

Mary M. Strickert, Weston Solutions Inc., is a contract employee, Facilities Office, MEDCOM.

Camp Ripley's buffer program success founded on local support

by Marty Skoglund and Lisa Delmonico

Encroachment negatively affects military installations across the country. It not only threatens the military mission but also the installation's ecological integrity. Many installations are reacting to these impacts but not yet engaging local governments and resource management agencies to ensure that comprehensive land-use planning reflects their military missions.

The Minnesota Army National Guard has been proactive in this regard, adopting for Camp Ripley the land use initiative known as the Army Compatible Use Buffer program. The Camp Ripley ACUB was approved in 2004, the second in the nation to be approved by the Army.

The ACUB program protects Camp Ripley from the negative impacts of neighboring development by purchasing land from willing landowners outside the boundary through partnerships with conservation-minded state government agencies, which protect the land from development in perpetuity. Camp Ripley's ACUB program success is predicated on two key elements — landowners who are willing to enroll their property in the program and partners who are committed to Camp Ripley and willing to assume long-term management responsibilities.

To date, 278 landowners have volunteered to participate in ACUB, and Camp Ripley has two partners who have accepted the role of applying ACUB on Camp Ripley's behalf. The partners, both state agencies, are the Department of Natural Resources and the Board of Water and Soil Resources.

The partnership is also a financial one. The state agencies ensure a 50 percent minimum match on each easement purchased within the ACUB boundary. This arrangement allows National Guard, Army and Department of Defense dollars to be stretched farther to protect the camp's training mission.

Acronyms and Abbreviations	
ACUB	Army Compatible Use Buffer program
ARNG	Army National Guard

Partners in the Nokasippi ACUB area near Camp Ripley pose at the sign marking the project. Photo by Minnesota ARNG Public Affairs

Of the 278 landowners, 62 landowners with about 10,700 acres have been enrolled in the ACUB easement program at Camp Ripley. These enrollments were made possible with $8.2 million from the National Guard Bureau and $5.6 million from the Office of the Secretary of Defense Readiness and Environmental Protection Initiative fund. This investment of federal funds has resulted in leveraging about $47 million in other funds and has secured more than 35,000 acres of compatible land within the ACUB area.

The three counties that surround Camp Ripley have also contributed greatly to the ACUB effort. For example, Cass and Crow Wing counties dedicated about 17,000 acres of tax-forfeited land to ACUB. All three counties have instituted land-use control measures in their comprehensive plans and zoning ordinances to complement the ACUB program. They did so realizing that ACUB is only one of many tools to accomplish land-use compatibility.

Most recently, the state legislature approved $843,000 in state funds through the newly created Lessard-Sams Outdoor Heritage Fund. These funds will assist in completing a 780-acre wildlife management area that was made possible initially through ACUB. When combined with an adjacent memorial forest that was dedicated by Crow Wing County, the total land area that will forever be available for public access is 2,400 acres.

All ACUB easements are protected in perpetuity. This land is not for training. Rather, it is a buffer for training inside the Camp Ripley boundaries.

Because the Minnesota ARNG has a stake in these holdings but is not the deed holder, Camp Ripley enters each easement into the ARNG real property database, Planning Resources for Infrastructure Development and Evaluation, to maintain a record for future tracking and accountability.

The overwhelming response from landowners, partners and the local units of government reflects the importance of ACUB to the area and its value in sustaining the mission of Camp Ripley.

POCs are Marty Skoglund, 320-616-2618, Marty.skoglund@us.amry.mil; and Lisa Delmonico, Lisa.delmonico@us.army.mil.

Marty Skoglund is the Environmental Program manager, Minnesota ARNG; and Lisa Delmonico is the natural resources manager, National Guard Bureau.

Joint Munitions Command's environmental processes are Soldier-ready

by Rebecca Montgomery

The Joint Munitions Command's five-year journey to reach its Environmental Management System goals means kudos to its installations, because they took an active role in getting there. JMC, headquartered at Rock Island Arsenal, Ill., supplies America's warfighters with ammunition through its 15 installations.

The JMC's installations met the International Organization for Standardization 14001:2004 requirement by the December deadline in accordance with Executive Order 13423 and Army policy. The ISO standard provides guidance on a management system that minimizes harmful effects on the environment.

With the help of Corrpro, the contractor that tracked metrics for each installation and provided EMS training and guidance, the JMC met all of the EMS elements and can now declare conformance to the ISO 14001:2004 standard.

"Initially we did a gap analysis and compared what the standard requires with what the installations were doing," said Sally Gaines of Corrpro. "The installations had to train their employees, so they would understand what was required by the ISO 14001."

The JMC's help in improving installations' environmental practices has been well received, according to Kevin Tiemeier, general environmental engineer in JMC's Installation Support Directorate.

"Even though the installation commanders have this certification, they don't want this to end. They want us back to continue to sustain and educate," Tiemeier said. "The bottom line is, we're here to help sustain pollution prevention and environmental methods. We want to collaborate with the installations, and we're here to support them."

Acronyms and Abbreviations	
CARC	chemical agent resistant coating
EMS	Environmental Management System
ISO	International Organization for Standardization
JMC	Joint Munitions Command

What's being emitted to the air and what's being discharged to the rivers and soil can affect the environment, Tiemeier noted, so environmental regulations are important.

"We know if a spill goes into an aquifer, there are risk factors," he said. "Therefore, we have to take action to control the situation with the best preventative practices we can."

Blue Grass Army Depot instructor Chris Adams shows employee Tim Hampton through a virtual-reality training simulator the correct thickness to apply CARC, which will help Blue Grass generate less waste and save paint. Photo by Mark Henry, Blue Grass Army Depot

Gaines emphasized the importance of avoiding complacency and of stopping old harmful practices. Every individual at the installations has to understand that each has an environmental responsibility, she said.

"We continue to work on being able to dispose of things a different way or put them through a new process to be able to reuse them," Gaines said.

Tiemeier emphasized the importance of integrating practices throughout the installations.

"EMS has to include everybody who comes through the gate, including tenants," he said. "Everything has to adhere to environmental prevention."

Tiemeier is especially proud of the way Blue Grass Army Depot, Ky., improved its environmental practices by switching to chemical agent resistant coating, or CARC, for painting. The installation's workers were not following a standard operating procedure and were not adequately trained in painting techniques. This situation caused them to use extra paint and generate more waste.

"We identified a liability, provided training and got the correct equipment." said Tiemeier. "The installation, through its leadership, turned this around in less than a year.

"Here's something that was an issue, but now they're a center of excellence," he said.

Environmental regulators have primacy over the JMC's environmental processes and have the authority to shut down facilities that are not environmentally compliant, he explained.

"Regulators know about the 14001 system, so they've got a comfort level that we're going above and beyond minimum requirements. Regulators endorse and believe in the process," Gaines said.

The installations are trained in EMS, so they understand they're all part of the process and can help figure out problems, Tiemeier said. He is confident the JMC's environmental gains can be sustained.

"We're making processes that are not just environmentally compliant but Soldier-ready," he said. "There is no way we can provide ammo to the troops and be Soldier-ready without that."

POC is Rebecca Montgomery, 309-782-4825, DSN 793-4825, rebecca.montgomery1@us.army.mil.

Rebecca Montgomery is a public affairs specialist, JMC.

Fort Polk DMPBAC holds close to environmental regulations

by Bryan Gatchell

North of Fort Polk, La., in Peason Ridge is the Digital Multi-Purpose Battle Action Complex, a 240-acre, one-of-a-kind, battle simulation training area. Every mobile target is battery operated, and everything is remote-controlled at the site.

The facility deals with aerosols, paints, petroleum oils and lubricants. Despite a number of possibly hazardous materials on hand at the operations center, DMPBAC and Siegfried Milerski, an electronics technician there, earned recognition for full environmental compliance from Fort Polk's Environment and Natural Resources Management Division Feb. 19.

Since Milerski joined Oak Grove, the Raytheon subcontractor that runs the facility, three years ago, DMPBAC has seen no reportable environmental accidents. In addition to his normal duties, changing batteries on targets and resetting sites throughout the forested complex, he serves as the environmental compliance officer for DMPBAC.

"It's basically an extra duty within my job," said Milerski. "When I first came here, there wasn't an environmental program, so I had to manage the requirements for us to be in compliance. I just took it from there. When inspection time came around, they noticed that we're doing some good things. They're basic, fundamental things, but we were doing them, and we didn't have any deficiencies."

The job includes maintaining environmental files correctly for easy reference during ENRMD inspections, proper storage of potentially hazardous materials and keeping the crew ready for environmental spills by maintaining a spill kit and performing regular practice spills using water to simulate harmful chemicals.

Every harmful liquid requires primary and secondary containment. In case primary containment fails, secondary containment ensures that the spill will not affect the ground around it.

Though DMPBAC performs little automotive maintenance, used oil and bad diesel are stored in drums sitting atop a grid above a tub. If the drums leak, the tubs catch the overflow.

Beside the drums are a set of lockers that hold unused and partially used environmentally harmful liquids and flammable liquids. Each locker has a lip at the bottom in case one of the containers leaks. The DMPBAC team even took the initiative to construct a wooden platform for the lockers to sit on to prevent them from resting unevenly on the ground.

DMPBAC's battery recharge facility, where the car batteries that run the moving targets are recharged, is also rigorously maintained to prevent environmental contamination. The potential harm to workers and the environment necessitates certain controls.

"The batteries put off a gas when they're heated," said Milerski. "It's not much, but when you have 400 batteries charging, it can put off some. When you're putting the clamps on and taking them off, the lead shavings fall off, and you have small particles that can get in the dust and mud, and when you mix all that up, it gets in the air."

To combat harmful gas and lead particles in the air, large vents above the battery charging tables remove air from the area. As a failsafe, the batteries will not charge unless the vents are on. For the lead shavings that reach the ground, grates have been placed in the floor between every table. Every day, the floor is wet-mopped so that the poisonous dust will drain out into a large tank sitting inside a trash roller. When collected there in large supply, the DMPBAC team tests the water's pH balance.

When the water has a neutral pH, it is poured into a nearby retention pond. If the water was either acidic or basic, and it has yet to be either during Milerski's tenure, they would call ENRMD to handle the situation.

Siegfried Milerski inspects the locker of used flammable materials at the DMPBAC at Fort Polk. Photo by Bryan Gatchell

"He worked at the Fort Polk Environmental Office before he came here, so he was the man for the job, a subject matter expert," said Jeff Lindley, Milerski's supervisor. "He's taken it and ran with it."

"I worked for ENRMD for four years, and then I went to Iraq and worked for a contractor there as an environmental coordinator," said Milerski. "When I got back, I came out here to the DMPBAC, and I felt I could make the environmental program more efficient because I already knew about the regulations and the requirements. It was second nature to me."

Milerski does not credit himself solely for the success of the environmental program at the DMPBAC, though.

"Everyone does their part," said Milerski.

Acronyms and Abbreviations	
DMPBAC	Digital Multi-Purpose Battle Action Complex
ENRMD	Environment and Natural Resources Management Division

POC is Kim Reischling, Public Affairs Office, Fort Polk, 337-531-1392, Kimberly.reischling@us.army.mil.

Bryan Gatchell is a public affairs specialist, Fort Polk. This article was adapted from a Fort Polk Guardian *article.*

Fort Irwin part of collaborative management of federal desert lands

by Clarence A. Everly

The California deserts are vast, seemingly harsh, yet fragile lands within a day's drive of 40 million people. About 80 percent of the desert, or 20 million acres, is publicly owned and includes three national parks, six military bases, 72 wilderness areas, 15 state parks and extensive public lands managed by the Bureau of Land Management.

To manage at an ecosystem level, federal, state and county land managers formed the California Desert Managers Group, a collaborative forum for government agencies to work together to protect and restore the California desert's natural and cultural resources.

Participants include Fort Irwin, Edwards Air Force Base, China Lake Naval Air Weapons Station, Marine Corps Air Ground Combat Center Twentynine Palms, the National Park Service, the U.S. Fish and Wildlife Service, the Bureau of Land Management, the California Department of Fish and Game, the California Department of Parks and Recreation and three counties.

California desert land managers are faced with multiple challenges. Expanding economic and population development is causing an alarming increase in pressure on natural resources in the region, and the public is increasingly demanding objective and effective management strategies that balance multiple demands on fragile, exhaustible resources.

Competition for Mojave Desert resources has increased dramatically over the last several years, as diverse groups seek to achieve conflicting goals. These goals include establishing and expanding national parks, creating wilderness areas, protecting threatened and endangered plants and animals, developing recreational areas, conducting military training, testing to meet the nation's national defense needs and expanding economic development.

Given projections that the region's population will triple over the next 20 years, competition among these interests will increase, resulting in fragmented conservation and development efforts.

Land managers must develop programs that evaluate, monitor and predict system change including that caused by human impact. The task becomes one of more fully understanding the concepts of natural system processes, integrity and sustainability, so that their goals and objectives promote true system management and strengthen the ties between the research, habitat management and conservation efforts of all land management agencies.

California desert land managers from more than a dozen agencies meet to develop collaborative ways to conserve and restore desert resources. Photo by Doug Zeliff, webmaster, Mojave Desert Ecosystem Program

At the same time, installation natural resource managers must promote, maintain and restore natural ecological processes to achieve installation missions. They must advocate for the sustainable use of natural systems while ensuring the integrity of these systems.

The Desert Managers Group's focus is on working collaboratively to:

- develop coordinated and complementary management guidelines, practices and programs;
- coordinate and integrate efforts to conserve and restore desert resources;
- provide high quality recreation, public education and visitor services;
- provide for the safety of desert users;
- develop and integrate databases and the scientific studies needed for effective resource planning and management; and
- promote compatibility in the application of each agency's mission.

Fort Irwin has been involved in the Desert Managers Group since its inception, playing an integral role in developing the group's goals, objectives and accomplishments. Under the group's multi-agency management umbrella, collaboration is occurring, duplication of effort is eliminated, resources are shared, data are collected in a uniform manner, comprehensive and holistic regional analyses are conducted, and more compatible and complementary management policies are developed.

The California Desert Managers Group has been a success by all measures. The program directly supports military readiness in the region by providing a framework for determining collaborative research strategies and mitigation measures to protect natural and cultural resources in the desert, and designing cutting-edge, long-term resource planning to ensure sustainability of ongoing activities, including military training, testing research and development.

POC is Clarence A. Everly, 760-380-3740, clarence.everly@us.army.mil.

Clarence A. Everly, is the Natural Resources Program manager, Fort Irwin.

Fort Polk organizes group to promote environmental awareness

by A. Sara Thames

The Directorate of Public Works Environmental Resources Management Division at Fort Polk, La., established the Children's Environmental Awareness and Health Initiative in August 2003 to help protect children from environmental health risks. The CEAHI is based on the belief that changing the future begins with children, because they are the future.

The CEAHI team consists of personnel from the environmental, occupational health, environmental health, public affairs and housing fields who meet monthly to discuss and plan events. CEAHI's goal is to create strategic alliances to promote environmental health and awareness through education and community outreach.

The team's motto is, "The key to protection is prevention," and its objectives are to:

- reduce children's exposure to environmental hazards;
- educate the Fort Polk community on the environment and environmental health issues; and
- elevate awareness of the benefits of environmental stewardship.

The team publishes articles, distributes informative brochures, teaches lessons at local schools and participates in installation activities to promote awareness of both environmental and children's health issues. It also strives to create an appreciation for the natural environment and promote health by providing positive outdoor experiences.

Curious kids investigate a booth sponsored by the DPW Environmental Resource Management Division at Fort Polk's CajunFest celebration. Photo courtesy of Fort Polk Public Affairs

Initially, the CEAHI team published articles and announcements in the installation newspaper, on a variety of topics including recycling, litter, household chemicals and water quality. Each article discussed its topic as related to children's environmental health. Many included precautionary actions to prevent environmental health risks or children's activities with word puzzles related to the topic.

Establishing an educational program was also a key element. Team members work closely with South Polk Elementary School, often speak there and conduct environmental field trips with the students.

CEAHI also holds summer camps at the Youth Activities Center at which discussions include endangered species, pollution prevention and recycling. Installation Boy and Girl Scout groups partner with CEAHI professionals on projects throughout the year to earn badges.

Many activities that were initially developed by CEAHI have become annual events, and other installation entities now partner with the CEAHI to support them. The annual Earth Day poster contest and the annual South Polk Elementary endangered species field trip are co-sponsored by CEAHI and Picerne Military Housing. Other projects, like the annual Christmas tree recycling in which Girl Scout troops participate, are co-sponsored by multiple installationwide contracting companies.

In addition, the CEAHI team educates adults in the community with the expectation that instilling knowledge in the adults will allow them to reinforce what the children are taught and be more aware of environmental health risks.

Acronyms and Abbreviations	
CEAHI	Children's Environmental Awareness and Health Initiative
DPW	Directorate of Public Works

CEAHI's location on a military installation enables it to reach a vast number of adults and children due to the high turnover rate of residents, which increases the exposed population. The multiple resources and activities available to service members and their families are highly valued by CEAHI. Another benefit of being located on an installation is the partnership of CEAHI and the installation Public Affairs Office, which increases the visibility of the program.

Its success can first be measured in the faces of the children, whose eyes light up when a CEAHI team member visits the school. The second measure of success is that more professionals want to be part of the CEAHI. The team began with only a handful of individuals but now includes about 40 members from multiple disciplines. The final measure of success is that the frequency and number of outreach requests continue to increase.

CEAHI has the potential to be expanded into the local communities and school systems as well as to be replicated at other military installations.

The team plans to continue its work and to employ new ideas, like creating a children's environmental newsletter for the school and an interactive webpage with information on local environmental topics and events.

CEAHI has a solid foundation built with a great group of dedicated professionals who are committed to continuing and expanding the initiative.

POC is A. Sara Thames, 337-531-1653, sara.thames@us.army.mil.

A. Sara Thames is an ecologist, Environmental Resources Management Division, DPW, Fort Polk.

Fort Carson protects tribal sites

by Rick Emert

The recent increase in construction on Fort Carson, Colo., keeps a Directorate of Public Works program busy ensuring that tribal cultural or sacred sites are not impacted.

Section 106 of the National Historic Preservation Act of 1966 requires that all federal agencies protect historic or cultural sites. A 2001 amendment requires the inclusion of sites of interest to Native American tribes. But Fort Carson's protection of such areas began back in the 1980s, said Pamela Miller, Cultural Resources Management Program manager in the DPW's Environmental Division.

There are 13 tribes with cultural affiliations to Fort Carson and Piñon Canyon Maneuver Site lands. The program's staff coordinates with tribal representatives whenever construction or training may impact the tribal sites, Miller said.

"We have to go through a process of consultation with the ... tribes to determine that our action is not going to have an adverse effect on something that is significant or eligible for the National Register of Historic Places," she said.

The program's staff also gives a block of instruction in the environmental protection officer's course for Fort Carson units to explain how protecting the sites can affect their training.

"We work with the trainers and with the troops to let them know various places that they cannot go," Miller said. "If there is some type of training that needs to occur, then we will go through the consultation process to make sure that we are avoiding those or mitigating for any adverse effects to the site.

"The only things restricted 100 percent to training — no training whatsoever — are the sacred sites. In our other [protected] sites, dismounted training is allowed. So, there is very, very, very little that is 100-percent restricted due to cultural resources."

Acronyms and Abbreviations	
DoD	Department of Defense
DPW	Directorate of Public Works
NAGPRA	Native American Graves Protection and Repatriation Act

Protection of the cultural and sacred sites has never stopped training or construction on Fort Carson, Miller noted.

Nearly 85 percent of Fort Carson and 88 percent of Piñon have been surveyed, a requirement before any of the land can be used for construction or training. With 335,000 acres on the two installations, having that percentage surveyed is quite a feat, Miller said.

"Fort Carson has taken a very proactive approach over the years to survey [the land]," she said.

The cultural resources staff has a standing operating procedure for the inadvertent discovery of cultural artifacts or graves that are covered under the Native American Graves Protection and Repatriation Act.

"The last time we had a NAGPRA, we had to initiate was at Piñon Canyon in 2004," Miller said. "Two burials were discovered ... during archeological excavation. They were buried in the same rock shelter but ... about 500 years apart."

Because of Fort Carson's NAGPRA standing operating procedure and the agreement it has with the tribes there was no further excavation or study of the bones, she explained. When it's feasible — when the site is not eroded or inaccessible — the remains are reburied in place, and the tribes are brought in to do burial ceremonies.

The tribes can also arrange to visit cultural or sacred sites when they like, depending on training and weather, Miller said.

"They just need to ... tell me when they want to come and what they want to come for, and then we work with the trainers or work around the training," she said.

The cultural resources staff held a special Department of Defense consult Feb. 22-26 with tribal representatives. The American Indian Communications Course and Government-to-Government Consultation included visits from the DoD and Army representatives, and a reception at the home of 4th Infantry Division and Fort Carson commanding general, Maj. Gen. David G. Perkins, and his wife, Ginger.

Tribal representatives examine a petroglyph, one of several Native American artifacts on Fort Carson. Photo courtesy of Fort Carson

The event consisted of training, a workshop, a tribal meeting and discussions on how to improve the consultation process — something that doesn't seem to be an issue between Fort Carson and the tribes affiliated with it.

"We've got a very positive relationship with our tribes," Miller said.

POC is Susan Galentine, 719-526-3420, susan.galentine@us.army.mil.

Rick Emert is a public affairs specialist, Fort Carson. This article was adapted from Fort Carson Mountaineer.

CP-18 Annual Training Workshop

by Lt. Gen Robert L. Van Antwerp

Often we get so involved in the mission that we overlook taking the time to have conversations, ask questions and learn from each other. It's critical that we devote sufficient time to focus on our career program efforts to recruit, develop and retain the workforce necessary to serve the vital needs of the Army and the nation, which is why I was so glad to have a chance to meet with many of you at this year's Career Program 18 Annual Training Workshop.

The workshop, held in San Antonio from March 30 through April 1, brought a wide diversity of leaders and practitioners within the career program together to learn, share best business practices and chart the path to GREATNESS.

More than 220 senior leaders, training coordinators, activity career program managers, supervisors, interns, human resource personnel and workforce development specialists attended what was one of the most successful CP-18 workshops to date. I was especially pleased to note that we had several attendees from Installation Management Command, the Army Network Enterprise Technology Command, the Army Medical Command, the Office of the Assistant Chief of Staff for Installation Management and representatives from career programs 16 and 34 join us this year.

I was honored to present the fiscal year 2010 *CP-18 Annual Awards* to three very deserving candidates as well as several Certificates of Appreciation for individual and team contributions to the goals and mission of the career program. **Ron Maj** of the USACE North Atlantic Division was the *CP-18 ACPM of the Year*. Our other two award recipients were **Khallid Maali** of the Lakes and Rivers Division and **Waylon Bowers** from the Northwest Division. In addition, we had one *Lifetime Achievement Award* that was presented to **Bill Sorrentino** of NAD for his 15 years of support and participation in the career program.

Acronyms and Abbreviations	
ACPM	Activity Career Program Manager
CP-18	Career Program 18, Engineers and Scientists – Resources and Construction
FY	fiscal year
NAD	North Atlantic Division
USACE	U.S. Army Corps of Engineers

Toward the end of the conference, several of the interns from the Southwest Division, who had served as support staff for the workshop, provided their key "take-aways" from all the sessions. I love that we were hearing firsthand what the future leaders of this career program were getting out of the event.

Another highlight that I just want to brag about is when Chadi Wahby, an intern from the South Pacific Division, gave an overview of a unique opportunity he had during his internship. The Los Angeles district commander, Col. Thomas Magness, and several of his staff took a road trip with all of the area interns to several job sites.

During the trip, interns practiced briefing skills on the bus in between visits to several of the varied project sites within the district. They participated in team-building exercises as well as taking the time to learn more about each other and the leaders in their district.

This is without a doubt one of the most distinctive efforts I have heard of that demonstrates the commitment of leadership to the growth and development of our interns. They are the future, and we need to get them ready!

Ron Maj provided detailed information on the intern orientation and best business practices that NAD has in place. He has been instrumental in designing a top-notch program that can be used by all of our ACPMs as a benchmark for their own district and division programs. It was clear from his presentation why Ron was recognized as the ACPM of the year.

Lt. Gen. Robert L. Van Antwerp speaks at the CP-18 Annual Training Workshop in San Antonio. Photo by Mary Beth Thompson

This year, we have seen tremendous growth in all areas of the career program. The annual training workshop serves as the catalyst to bring all the various participants together to ensure that we work collectively. I thank the attendees, the senior leaders, the briefers and the staff who made the workshop such a resounding success.

You've probably heard the saying, "It takes a village to raise a child." Well, it takes a team of passionate and dedicated individuals like you working together to move us forward on our journey to GREAT!

BUILDING STRONG through collaboration, communication and teamwork!

Lt. Gen. Robert L. Van Antwerp is chief of engineers, commanding general of the U.S. Army Corps of Engineers and the functional chief of CP-18.

Career Program 18 recognizes 4 with awards

by Robert E. Slockbower

Career Program 18 presented its 2010 awards March 30 at its Annual Training Workshop in San Antonio. The awards recognize the outstanding achievements of CP-18 careerists Armywide in three categories.

Nominations for the awards came from Installation Management Command regions and U.S. Army Corps of Engineers divisions. Each region and division solicited nominations and paneled the applicants to select its finalist. The finalists were reviewed by another panel and ranked by their contributions to CP-18 mission and goals, their advocacy of CP-18 programs and their demonstrated mentoring.

Waylon T. Bowers, Portland District, USACE, received the *Journeyman of the Year* award. Bowers contributes routinely to USACE's recruitment efforts at local universities, and he also reaches out to middle and high school students through Engineers Day activities. Bowers has organized and attended numerous recruiting fairs at Oregon State University and regional schools. Through these efforts, he expands recruitment opportunities, helps obtain top students and maintains a focus on diversity.

As a supervisor, Bowers leads his staff by clarifying work assignments, matching workload to on-the-job-training developmental assignments and mentoring Electrical Branch employees. He regularly challenges his team members to expand their technical competence and seek new and challenging assignments.

Khallid Maali, Chicago District, USACE, earned the *Senior Journeyman of the Year* award. Maali recruited top students in science, technology, engineering and mathematics, expanded recruitment opportunities and supported efforts to boost STEM enrollment in middle and high schools.

Maali helped recruit a diverse journeyman workforce from the public and private sectors. He played a significant role in interviewing and recruiting 31 summer hires, and he recruited all 24 interns hired by Chicago District in the last two years, moving the district from red to green in this area. He synchronized CP-18 initiatives with training gaps, working with the district training committee to recommend focusing regional classes in districts with the highest required class attendance.

He consistently supports lifetime learning and technical competency initiatives, and he routinely recognizes excellence among careerists.

Ronald J. Maj, Baltimore District, USACE, was named the *ACPM of the Year.* Maj consistently provides effective leadership and mentoring to 650 professional and technical CP-18 careerists, more than 200 of whom are under his direct supervision.

Maj encourages employees to participate in middle and high school mentoring programs such as Easy as PI and Day with an Engineer. He serves as a judge at area school science fairs. ➤

Waylon T. Bowers
Photo by Andre' Mayeaux, Fort Worth District, USACE

Khallid Maali
Photo by Andre' Mayeaux, Fort Worth District, USACE

Ronald J. Maj
Courtesy photo

William (Bill) Sorrentino
Photo by Patrick Bloodgood

Acronyms and Abbreviations	
ACPM	Activity Career Program Manager
CP-18	Career Program 18, Engineers and Scientists – Resources and Construction
STEM	science, technology, engineering and mathematics
USACE	U.S. Army Corps of Engineers

Hirata heads installation support community

by Mary Beth Thompson

The last hobby you may think would belong to Stacey K. Hirata, retired Army officer and chief of two of the U.S. Army Corps of Engineers' senior executive service-level entities, is … cooking. But cooking all types of food is one of his favorite free-time activities. Well, cooking and enjoying the fruits of his labor.

"I am nowhere near being a gourmet chef," Hirata said. "Cooking for me is volume — lots of food. I say, 'Cooking is my hobby,' because my passion is eating," he laughed. "I like to eat."

Hirata, the chief of the Installation Support Community of Practice and of the Northwest Division Regional Integration Team at USACE headquarters, enjoys re-creating the dishes of his childhood. He grew up in Hawaii with its wonderful multi-cultural foods, many of which require ingredients and cooking methods not available in the national capital region where he now lives.

"I try to replicate foods that I grew up with … like kalua pig without sticking it in the ground," he said. In Hawaii, kalua pig is prepared by slowly roasting a whole pig covered with banana leaves in an *imu*, an underground oven, using hot volcanic rocks.

"I tried replicating *lau lau*, which I've had challenges with, because one of the key ingredients is the taro leaf. It's hard to replicate a taro leaf," Hirata said.

Stacey K. Hirata
Photo by F.T. Eyre

Re-creating traditional dishes in new ways is a challenge that actually suits Hirata, a self-described lifelong learner. Hirata graduated from the U.S. Military Academy at West Point, N.Y., in 1977, and his formal education did not stop there. He earned a master's degree in civil engineering from the University of Hawaii, and completed the University of Virginia's Darden School of Sustainability and the Harvard Senior Executive Fellow Course.

Hirata, a registered professional engineer in Virginia and Hawaii, is active in the Society of American Military Engineers and the Army Engineer Association and is a former member of the American Society of Civil Engineers and the American Concrete Institute.

Acronyms and Abbreviations	
DPW	Directorate of Public Works
USACE	U.S. Army Corps of Engineers

He views teaching, mentoring and sharing information as another aspect of lifelong learning.

"It's sharing experiences, hearing other people's experiences — the idea of sharing lessons learned, seeking and getting advice based on different situations," Hirata said.

While on active duty for 26 years, Hirata was an engineering officer. During the last 10 years, he served as the director of Public Works and the director of Community Activities in Hawaii, the director of Public Works and Logistics at Fort Belvoir, Va., the director of Environmental Programs in the Office of the Assistant Chief of Staff for Installation Management and the military deputy to the deputy under secretary of Defense for installations and environment.

After retiring in 2003, Hirata moved to Headquarters, USACE, as the Environmental Division's deputy chief. ➤

(continued from previous page)

He hosted an offsite conference for 90 interns from five districts and five career programs. Maj meets personally with each Baltimore District intern several times during the course of the intern's program, and he ensures that each is in compliance with the Master Intern Training Program.

Maj supports continued education for both interns and journeyman, emphasizing the importance of both technical and leadership training, and takes every opportunity to recognize interns and journeymen for excellent performance.

William (Bill) Sorrentino, Norfolk District, USACE, was presented with a *Lifetime Achievement Award.* In any given year, the functional chief representative may choose to confer an award in a special category of service. These discretionary awards are not competed and are based on involvement in the career program goals and objectives, impact on the workforce and enduring contributions.

For 15 years, Sorrentino has work steadfastly to improve intern programs and training, and been a proactive contributor to the overall success of the career program. He is without a doubt one of the most respected spokespersons for our program and serves as a model for other leaders within CP-18.

All of the awardees are to be congratulated for their outstanding efforts on behalf of the career program.

POC is Donna Crawford, director, CP-18 Proponency Office, 202-761-7493, donna.w.crawford@usace.army.mil.

Robert E. Slockbower is the director of Military Programs, USACE, and the functional chief representative, CP-18.

(continued from previous page)

He also served as the acting chief of that division and later as the acting chief of the Environmental Community of Practice and Southwestern Division Regional Integration Team. He started in his current dual positions in January.

As chief of the Installation Support Community of Practice, Hirata said his responsibilities cover three areas: the community at large, USACE's installation support programs and energy.

Community at large

"The community is bigger than just the Corps of Engineers — those involved in installation support," he said. "It's bigger than just the Army. It includes private industry, other services, academia — anybody and everybody who may have the technical expertise and could be involved in providing support to our installations."

His job is to nurture that community, putting the structures and systems in place so that the community's participants can communicate with one another and can identify where technical expertise resides so that people at installations who have specific challenges can connect with those with the technical expertise to offer solutions.

Programs

The USACE installation support programs he oversees are:

- Combat Readiness Support Team;
- Master Planning;
- Programming Administration and Execution system known as PAX;
- Public Works sector of the Defense Critical Infrastructure Program;
- USACE liaisons to Installation Management Command and the program managers-forward at select installations;
- Facilities Sustainment, Restoration and Maintenance portion of Recovery Act work; and the
- *Public Works Digest*.

"I describe these support programs as 'bookends' of the life cycle of a facility with the big middle being Military Construction," Hirata said. "My responsibilities are on both ends of Military Construction with responsibility for the design and construction of facilities residing with [USACE] Engineering and Construction, and the Programs Integration Division."

Installation support programs are engaged with the impact of organizational and operational changes on existing facilities that generate renovation or new construction requirements — the left book end, he explained.

When completed, buildings are turned over to the installation for operation. Then, members of the community of practice are again involved with the installation in finding solutions to maintenance and repair situations and eventually demolishing the facility at the end of the life cycle — the right book end.

Energy

Energy, the third area of his responsibilities, crosses the entire life cycle of facilities. Hirata leads the team that orchestrates USACE's support in all matters concerning energy.

"There are a lot of moving pieces — a lot of different internal organizations within USACE engaged in the energy arena, and part of my charter is to pull them all together so that everybody has a common operating picture of who's doing what to whom as we support the Army's energy strategy, synchronize initiatives and deliverables, and contribute to the Army's and the Department of Defense's energy programs," he said.

Five months into it, Hirata is nearing the end of his internal assessment of the USACE installation support programs and the services they provide. He is proud of the work being done but anticipates some adjustments to improve delivery of services and strengthen the community, he said.

"Our program is built to support the directors of Public Works and the communities that they serve," Hirata said. "Having worn the shoes of a DPW, I understand their planning horizon, their perspective. I see part of my charter as making sure the service we provide is in response to their needs, is timely, is of good quality and at a fair and reasonable price."

Hirata recognizes that the work that brings the greatest satisfaction is at the installations delivering quality facilities for Soldiers and families. What gives him satisfaction is being able to have a direct impact on that outcome by providing support to installations.

Lifelong learning continues for Hirata.

"Every week that goes by, I learn something new," he said.

He was talking about his professional life, but he could easily have been speaking of his cooking. Both are venues for applying technical expertise, overcoming challenges and learning.

Mary Beth Thompson is the managing editor of the Public Works Digest.

Call for ARTICLES

The July/August 2010 issue of the
Public Works Digest
will feature

Infrastructure

Deadline is June 15
Submit articles to
mary.b.thompson@usace.army.mil
202-761-0022

U.S. Army Installation Management Command
2511 Jefferson Davis Highway
Arlington, VA 22202-3926
www.imcom.army.mil

IMCOM

U.S. ARMY INSTALLATION MANAGEMENT COMMAND