-Noonan

AP-42
Supplement 9

SUPPLEMENT NO. 9
FOR

COMPILATION OF AIR POLLUTANT EMISSION FACTORS, THIRD EDITION (INCLUDING SUPPLEMENTS 1-7)

U.S. ENVIRONMENTAL PROTECTION AGENCY
Office of Air and Waste Management
Office of Air Quality Planning and Standards
Research Triangle Park, North Carolina 27711

July 1979

INSTRUCTIONS FOR INSERTING SUPPLEMENT 9

INTO

AP-42

New pages iii through v replace pp. v through xxii. New Table of Contents.

New pages 1 and 2 replace pp. 1 and 2. Editorial changes.

New pages 1.10-1 and 1.10-2 replace pp. 1.10-1 and 1.10-2. Editorial changes.

Add new pages 1.11-1 and 1.11-2. New Section.

New page 2.0-1 replaces p. 2-1. Editorial changes.

New pages 2.1-1 through 2.1-5 replace pp. 2.1-1 through 2.1-5. Editorial changes.

New page 3.0-1 replaces p. 3.0-1. Editorial changes.

New page 3.1-1 replaces p. 3.1.1-2. Editorial changes.

New pages 3.1.1-1 through 3.1.1-3 replace pp. 3.1.1-3 through 3.1.1-5. Editorial changes.

New pages 4.4-1 through 4.4-13 replace pp. 4.4-1 through 4.4-12. Minor revision.

Add new pages 4.5-1 through 4.5-4. New Section.

Add new pages 4.6-1 through 4.6-5. New Section.

New pages 5.2-1 through 5.2-3 replace pp. 5.2-1 and 5.2-2. Major revision.

New pages 5.3-1 through 5.3-8 replace pp. 5.3-1 through 5.3-5. Major revision.

New page 5.5-2 replaces p. 5.5-2. Editorial changes.

New pages 5.17-5 and 5.17-7 replace pp. 5.17-5 and 5.17-7. Minor revision.

Add new pages 5.22-1 and 5.22-2. New Section.

New page 6.9-4 replaces p. 6.9-4. Minor revision.

Add new page 6.13. New Section.

Add new pages 6.14-1 and 6.14-2. New Section.

Add new pages 6.15-1 through 6.15-3. New Section.

Add new pages 6.16-1 through 6.16-3. New Section.

Add new pages 7.3-7 and 7.3-8. New data for Section.

(over)

(continued)

New page 7.5-1 replaces p. 7.5-1. Editorial changes.

New page 7.6-1 replaces p. 7.6-1. Editorial changes.

New page 7.9-5 replaces 7.9-5. Editorial changes.

Add new pages 7.9-7 and 7.9-8. New data for Section.

New page 7.10-1 replaces p. 7.10-1. Editorial changes.

Add new pages 7.15-1 through 7.15-3. New Section.

Add new pages 7.16-1 through 7.16-3. New Section.

Add new pages 7.17-1 through 7.17-3. New Section.

Add new pages 7.18-1 and 7.18-2. New Section.

Add new page 8.10-3. New data for Section.

New pages 10.1-1, -3, -5, -7, -9 replace pages with same numbers. Editorial changes.

New pages 10.2-1 and 10.2-2 replace pp. 10.2-1 and 10.2-2. Editorial changes.

New pages 10.3-1 and 10.3-2 replace pp. 10.3-1 and 10.3-2. Editorial changes.

New page 10.4-1 replaces p. 10.4-1. Editorial changes.

Add new page 10.4-3. New data for Section.

New page 11.2.5-3 replaces p. 11.2.5-3. Minor revision.

New Appendix C, pages C-i through C- , replaces pp. C-1 through C-26. Major revision.

Add Appendix E, pages E-1 through E-9. New Appendix.

New page a-1 replaces p. E-1. Editorial changes.

NOTE:

Any AP-42 pages contained in this supplement but not listed above are reproduced only because they are the reverse side of a page that is listed. Such unlisted pages are not changed in any way.

CONTENTS

		Page
INTRODUCTION		1
1.	EXTERNAL COMBUSTION SOURCES	1.1-1
1.1	BITUMINOUS COAL COMBUSTION	1.1-1
1.2	ANTHRACITE COAL COMBUSTION	1.2-1
1.3	FUEL OIL COMBUSTION	1.3-1
1.4	NATURAL GAS COMBUSTION	1.4-1
1.5	LIQUIFIED PETROLEUM GAS COMBUSTION	1.5-1
1.6	WOOD WASTE COMBUSTION IN BOILERS	1.6-1
1.7	LIGNITE COMBUSTION	1.7-1
1.8	BAGASSE COMBUSTION IN SUGAR MILLS	1.8-1
1.9	RESIDENTIAL FIREPLACES	1.9-1
1.10	WOOD STOVES	1.10-1
1.11	WASTE OIL DISPOSAL	1.11-1
2.	SOLID WASTE DISPOSAL	2.0-1
2.1	REFUSE INCINERATION	2.1-1
2.2	AUTOMOBILE BODY INCINERATION	2.2-1
2.3	CONICAL BURNERS	2.3-1
2.4	OPEN BURNING	2.4-1
2.5	SEWAGE SLUDGE INCINERATION	2.5-1
3.	INTERNAL COMBUSTION ENGINE SOURCES	3.0-1
	GLOSSARY OF TERMS	3.0-1
3.1	HIGHWAY VEHICLES	3.1-1
3.2	OFF-HIGHWAY MOBILE SOURCES	3.2-1
3.3	OFF-HIGHWAY STATIONARY SOURCES	3.3-1
4.	EVAPORATION LOSS SOURCES	4.1-1
4.1	DRY CLEANING	4.1-1
4.2	SURFACE COATING	4.2-1
4.3	STORAGE OF PETROLEUM LIQUIDS	4.3-1
4.4	TRANSPORTATION AND MARKETING OF PETROLEUM LIQUIDS	4.4-1
4.5	CUTBACK ASPHALT, EMULSIFIED ASPHALT AND ASPHALT CEMENT	4.5-1
4.6	SOLVENT DEGREASING	4.6-1
5.	CHEMICAL PROCESS INDUSTRY	5.1-1
5.1	ADIPIC ACID	5.1-1
5.2	SYNTHETIC AMMONIA	5.2-1
5.3	CARBON BLACK	5.3-1
5.4	CHARCOAL	5.4-1
5.5	CHLOR-ALKALI	5.5-1
5.6	EXPLOSIVES	5.6-1
5.7	HYDROCHLORIC ACID	5.7-1
5.8	HYDROFLUORIC ACID	5.8-1
5.9	NITRIC ACID	5.9-1
5.10	PAINT AND VARNISH	5.10-1
5.11	PHOSPHORIC ACID	5.11-1
5.12	PHTHALIC ANHYDRIDE	5.12-1
5.13	PLASTICS	5.13-1
5.14	PRINTING INK	5.14-1
5.15	SOAP AND DETERGENTS	5.15-1
5.16	SODIUM CARBONATE	5.16-1
5.17	SULFURIC ACID	5.17-1
5.18	SULFUR	5.18-1
5.19	SYNTHETIC FIBERS	5.19-1
5.20	SYNTHETIC RUBBER	5.20-1
5.21	TEREPHTHALIC ACID	5.21-1
5.22	LEAD ALKYL	5.22-1

Page

6. FOOD AND AGRICULTURAL INDUSTRY 6.1-1
6.1 ALFALFA DEHYDRATING 6.1-1
6.2 COFFEE ROASTING 6.2-1
6.3 COTTON GINNING 6.3-1
6.4 FEED AND GRAIN MILLS AND ELEVATORS 6.4-1
6.5 FERMENTATION 6.5-1
6.6 FISH PROCESSING 6.6-1
6.7 MEAT SMOKEHOUSES 6.7-1
6.8 AMMONIUM NITRATE FERTILIZERS 6.8-1
6.9 ORCHARD HEATERS 6.9-1
6.10 PHOSPHATE FERTILIZERS 6.10-1
6.11 STARCH MANUFACTURING 6.11-1
6.12 SUGAR CANE PROCESSING 6.12-1
6.13 BREAD BAKING 6.13-1
6.14 UREA 6.14-1
6.15 BEEF CATTLE FEEDLOTS 6.15-1
6.16 DEFOLIATION AND HARVESTING OF COTTON 6.16-1
7. METALLURGICAL INDUSTRY 7.1-1
7.1 PRIMARY ALUMINUM PRODUCTION 7.1-1
7.2 METALLURGICAL COKE PRODUCTION 7.2-1
7.3 PRIMARY COPPER SMELTING 7.3-1
7.4 FERROALLOY PRODUCTION 7.4-1
7.5 IRON AND STEEL PRODUCTION 7.5-1
7.6 PRIMARY LEAD SMELTING 7.6-1
7.7 ZINC SMELTING 7.7-1
7.8 SECONDARY ALUMINUM OPERATIONS 7.8-1
7.9 SECONDARY COPPER SMELTING AND ALLOYING 7.9-1
7.10 GRAY IRON FOUNDRIES 7.10-1
7.11 SECONDARY LEAD SMELTING 7.11-1
7.12 SECONDARY MAGNESIUM SMELTING 7.12-1
7.13 STEEL FOUNDRIES 7.13-1
7.14 SECONDARY ZINC PROCESSING 7.14-1
7.15 STORAGE BATTERY PRODUCTION 7.15-1
7.16 LEAD OXIDE AND PIGMENT PRODUCTION 7.16-1
7.17 MISCELLANEOUS LEAD PRODUCTS 7.17-1
7.18 LEADBEARING ORE CRUSHING AND GRINDING 7.18-1
8. MINERAL PRODUCTS INDUSTRY 8.1-1
8.1 ASPHALTIC CONCRETE PLANTS 8.1-1
8.2 ASPHALT ROOFING 8.2-1
8.3 BRICKS AND RELATED CLAY PRODUCTS 8.3-1
8.4 CALCIUM CARBIDE MANUFACTURING 8.4-1
8.5 CASTABLE REFRACTORIES 8.5-1
8.6 PORTLAND CEMENT MANUFACTURING 8.6-1
8.7 CERAMIC CLAY MANUFACTURING 8.7-1
8.8 CLAY AND FLY ASH SINTERING 8.8-1
8.9 COAL CLEANING 8.9-1
8.10 CONCRETE BATCHING 8.10-1
8.11 FIBER GLASS MANUFACTURING 8.11-1
8.12 FRIT MANUFACTURING 8.12-1
8.13 GLASS MANUFACTURING 8.13-1
8.14 GYPSUM MANUFACTURING 8.14-1
8.15 LIME MANUFACTURING 8.15-1
8.16 MINERAL WOOL MANUFACTURING 8.16-1
8.17 PERLITE MANUFACTURING 8.17-1
8.18 PHOSPHATE ROCK PROCESSING 8.18-1
8.19 SAND AND GRAVEL PROCESSING 8.19-1
8.20 STONE QUARRYING AND PROCESSING 8.20-1
9. PETROLEUM INDUSTRY 9.1-1
9.1 PETROLEUM REFINING 9.1-1
9.2 NATURAL GAS PROCESSING 9.2-1

		Page
10.	WOOD PRODUCTS INDUSTRY	10.1-1
10.1	CHEMICAL WOOD PULPING	10.1-1
10.2	PULPBOARD	10.2-1
10.3	PLYWOOD VENEER AND LAYOUT OPERATIONS	10.3-1
10.4	WOODWORKING OPERATIONS	10.4-1
11.	MISCELLANEOUS SOURCES	11.1-1
11.1	FOREST WILDFIRES	11.1-1
11.2	FUGITIVE DUST SOURCES	11.2-1
APPENDIX A.	MISCELLANEOUS DATA	A-1
APPENDIX B.	EMISSION FACTORS AND NEW SOURCE PERFORMANCE STANDARDS FOR STATIONARY SOURCES	B-1
APPENDIX C.	NEDS SOURCE CLASSIFICATION CODES AND EMISSION FACTOR LISTING	C-1
APPENDIX D.	PROJECTED EMISSION FACTORS FOR HIGHWAY VEHICLES	D-1
APPENDIX E.	TABLE OF LEAD EMISSION FACTORS	E-1

COMPILATION OF AIR POLLUTION EMISSION FACTORS

INTRODUCTION

In the assessment of community air pollution, there is a critical need for accurate data on the quantity and characteristics of emissions from the numerous sources that contribute to the problem. The large number of individual sources and the diversity of source types make conducting field measurements of emissions on a source-by-source basis at the point of release impractical. The only feasible method of determining pollutant emissions for a given community is to make generalized estimates of typical emissions from each of the source types.

One of the most useful (and logical) tools for estimating typical emissions is the "emission factor", which is an estimate of the rate at which a pollutant is released to the atmosphere as a result of some activity, such as combustion or industrial production, *divided by* the level of that activity (also expressed in terms of a temporal rate). In other words, the emission factor relates the quantity of pollutants emitted to some indicator (activity level) such as production capacity, quantity of fuel burned, or vehicle miles traveled. In most cases, these factors are simply given as statistical or estimated averages. That is, no empirical information on the various process parameters (temperature, reactant concentrations, etc.) is considered in their calculation. However, for a few cases, such as in the estimation of hydrocarbon emissions from petroleum storage tanks, precise empirical formulas relating emissions to such variables as tank diameter, liquid storage temperature, and wind velocity have been developed. Because of their superior precision, emission factors based on empirical formulas are more desirable to obtain and can usually be given the highest accuracy rating. Factors derived from statistical averages, however, if based on an adequate number of field measurements ("source tests"), can also be both precise and accurate within practical and useful limits.

An example should illustrate how the factors are to be used:

Suppose a sulfuric acid plant, with a production rate of 200 tons/day of 100 percent acid, operates at an overall SO_2 to SO_3 conversion efficiency of 97 percent. Using the formula given as a footnote to Table 5.17-1 of this publication, the *uncontrolled* sulfur dioxide emissions can be calculated:

$$
\begin{aligned}
SO_2 \text{ emissions} &= [-13.65\ (\%\ \text{conversion efficiency}) + 1365] \times \text{production rate} \\
&= [-13.65\ (97\%) + 1365]\ \text{lb/ton acid} \times 200\ \text{tons acid/day} \\
&= 40\ \text{lb/ton acid} \times 200\ \text{tons acid/day} \\
&= 8000\ \text{lb/day}\ (3632\ \text{kg/day})
\end{aligned}
$$

The emission factors presented in this report have been estimated using a wide spectrum of techniques available for their determination. The preparation/revision of each factor section involves, first of all, locating and obtaining all the known written information on that source category from such sources as available literature, Environmental Protection Agency technical reports (including emission test reports), and the National Emissions Data System point source file. After these data are reviewed, organized, and analyzed, the process descriptions, process flowsheets, and other background portions of the section are prepared. Then, using the compiled information, representative emission factors are

developed for each pollutant emitted by each point source of the process category. As stated above, these factors are usually obtained by simply averaging the respective numerical data obtained. When feasible, the ranges in the factors are presented for further clarity. Occasionally, enough data exist to permit the development of either empirical or theoretical formulas (or graphs) relating emission factors to various process parameters such as stream temperature, sulfur content, or catalyst. In these cases, *representative* values of these process parameters are selected and substituted into the formulas or graphs to obtain representative emission factors, which are then tabulated. The pertinent formulas and graphical data are also included in the section to allow the estimation of emission factors when the process conditions differ from those selected as representative.

After the draft of a section is completed, it is circulated for technical review to various personnel routinely familiar with the emission aspects of the particular activity. After these review comments are obtained and evaluated, the final draft is written and submitted for editing and publication.

The limitations and applicability of emission factors must be understood. To give some notion of the accuracy of the factors for a specific process, each set of factors has been ranked according to the available data upon which it is based. Each rank is based on the weighting of the various information categories used to obtain the factor(s). These categories and associated numerical values are:

Measured emission data: 20 points maximum.
Process data: 10 points maximum.
Engineering analysis: 10 points maximum.

The emission data category rates the amount of measured (source test) data available for the development of the factor. The process data category involves such considerations as the variability of the process and its resultant effect on emissions, as well as the amount of available data on these variables. Finally, the engineering analysis category is concerned with the available data upon which a material balance or related calculation can be made.

Depending on which information categories were employed to develop it, each set of factors was assigned a numerical score, ranging from 5 to 40. For example, if the factors developed for a certain process were based on a large number of source tests, a moderate amount of process data, and no engineering analysis work, the assigned score would be 20 + 5 = 25.

Each numerical score was, in turn, converted to a letter rank as follows:

Numerical Rank	*Letter Rank*
5 or less	E (Poor)
6 to 15	D (Below average)
16 to 25	C (Average)
26 to 35	B (Above average)
36 to 40	A (Excellent)

These rankings are presented on the tables throughout this publication.

The reader must be cautioned not to use these emission factors indiscriminately. That is, the factors generally will not permit the calculation of accurate emissions measurements from an individual installation. Only an on-site source test can provide data sufficiently accurate and precise to use in such undertakings as design and purchase of control equipment or initiation of a legal action. Factors are more valid when applied to a large number of processes, as, for example, when emission inventories are conducted as part of community or areawide air pollution studies.

1.10 WOOD STOVES

1.10.1 General[1]

Small wood stoves are used primarily as domestic space heaters to supplement conventional heating systems, particularly in the Northeastern United States. The common availability of wood and the increased cost of conventional heating fuels has led to wider use of this type of residential heating unit. Wood combustion produces significant emissions of particulates and carbon monoxide and an array of chemicals, aerosols, and tar, depending upon the type of wood burned.

1.10.2 Process Description

Small wood stoves are usually box-shaped, made of cast iron, and have a flue that carries smoke from the room. An adjustable intake vent controls the quantity of air available for combustion. Exhaust gases are removed via the exhaust flue, which contains an adjustable damper. The rate of combustion is controlled by both the damper and the intake vent. Wood is supported on grates, and ashes collect below for easy removal. Figure 1.10-1 illustrates a typical small wood stove.

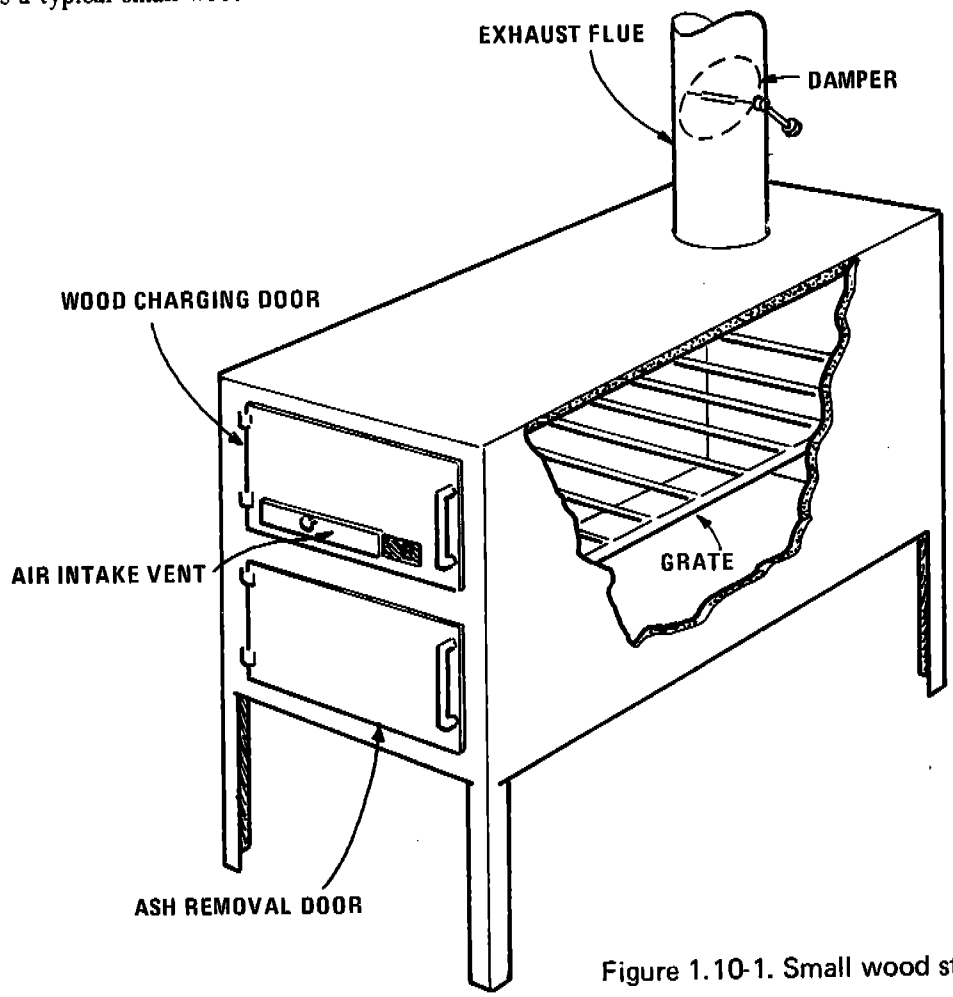

Figure 1.10-1. Small wood stove.

1.10.3 Emissions

Particulate emissions from wood are very sensitive to the amount of fuel added at one time, draft setting, fuel moisture, and type of stove. Emission factors for wood stoves are presented in Table 1.10-1.

Table 1.10-1. EMISSION FACTORS FOR SMALL WOOD STOVES[a]
EMISSION FACTOR RATING: D

Pollutant	Emission factors[b]	
	lb/ton	kg/MT
Particulate[c]	4-30	2-15
Carbon monoxide[d]	260	130

[a]Small wood stoves burning oak, pine, and birch wood.
[b]Emission factors expressed as pounds (kilograms) of pollutant per ton [metric ton (MT)] of wood burned. Wood tested ranged from 8 to 48% moisture content.
[c]Figures at the low end of this range are appropriate for small loads of dry wood with abundant air. Figures at the upper end of the range represent common firing practices. Based on References 1 and 3.
[d]Based on References 2 and 4.

References for Section 1.10

1. Butcher, S. S. and D. I. Buckley. A. Preliminary Study of Particulate Emissions from Small Wood Stoves. J. Air Pollut. Contr. Ass. *27*: 346-348, April 1977.

2. Shelton, J. W., T. Black, M. Chaffee, and M. Schwartz. Williams College, Williamstown, Ma. Wood Stove Testing Methods and Some Preliminary Experimental Results. (Presented at American Society of Heating, Refrigeration and Air Conditioning Engineers (ASHRAE) Symposium, Atlanta, Ga. January 1978.)

3. Butcher, S. S. Bowdoin College, Brunswick, Me. Private communication to Pacific Environmental Services, Santa Monica, Ca. December 9, 1977.

4. Shelton, J. W. Williams College, Williamstown, Ma. Private communication to Pacific Environmental Services, Santa Monica, Ca. December 8, 1977.

1.11 WASTE OIL COMBUSTION

by Jake Summers, EPA and Pacific Environmental Services

1.11.1 General

The largest source of waste oil is used automotive crankcase oil, originating mostly from automobile service stations, and usually being found with small amounts of other automotive fluids. Other sources of waste oil include metal working lubricants, heavy hydrocarbon fuels, animal and vegetable oils and fats, and industrial oil materials.

In 1975, 57 percent of waste crankcase oil was consumed as alternative fuel in conventional boiler equipment (Section 1.3). The remainder was refined (15 percent), blended into road oil or asphalt (15 percent), or used for other nonfuel purposes (13 percent).[1]

1.11.2 Emissions and Controls

Lead emissions from burning waste oil depend on the lead content of the oil and on operating conditions. Lead content may vary from 800 to 11,200 ppm.[2] Average concentrations have been suggested as 6,000[1] and as 10,000 ppm[3]. During normal operation, about 50 percent of the lead is emitted as particulate with flue gas.[2,4] Combustion of fuel containing 10 percent waste oil gives particulate ranging from 14 to 19 percent lead. Ash content from combustion of fuels containing waste oil is higher than that for distillate or residual fuel oil, ranging from 0.03 to 3.78 weight percent, and lead accounts for about 35 percent of the ash produced in such combustion.[2]

Currently, controls are not usually applied to oil fired combustion sources. An exception is utility boilers, especially in the northeastern United States. Pretreatment by vacuum distillation, solvent extraction, settling and/or centrifuging minimizes lead emissions but may make waste oil use uneconomical.[2] High efficiency particulate control by means of properly operated and maintained fabric filters is 99 percent effective for 0.5-1 μm diameter lead and other submicron-sized particulate, but such a degree of control is infrequently used.[2]

Table 1.11-1. WASTE OIL COMBUSTION EMISSION FACTORS
EMISSION FACTOR RATING: B

Pollutant	Emission factor (kg/m^3)	Emission factor ($lb/10^3$ gal)	References
Particulate[a]	9.0 (A)	75 (A)	6
Lead[b]	9.0 (P)	75 (P)	1,2,3,5

[a]The letter A is for weight % of ash in the waste oil. To calculate the particulate emission factor, multiply the ash in the oil by 9.0 to get kilograms of particulate emitted per m^3 waste oil burned. Example: ash of waste oil is 0.5% the emission factor is 0.5 x 9.0 = 4.5 kg particulate per m^3 waste oil burned.

[b]The letter P indicates that the percent lead in the waste oil being processed should be multiplied by the value given in the table in order to obtain the emission factor. Average P= 1.0% (10,000 ppm). Refer to Reference 6.

References for Section 1.11

1. S. Wyatt, *et al.*, *Preferred Standards Path Analysis on Lead Emissions from Stationary Sources*, Office of Air Quality Planning and Standards, U.S. Environmental Protection Agency, Research Triangle Park, NC, September 1974.

2. S. Chansky, *et al.*, *Waste Automotive Lubricating Oil Reuse as a Fuel*, EPA-600/5-74-032, U.S. Environmental Protection Agency, Washington, DC, September 1974.

3. *Final Report of the API Task Force on Oil Disposal*, American Petroleum Institute, New York, NY, May 1970.

4. *Background Information in Support of the Development of Performance Standards for the Lead Additive Industry*, EPA Contract No. 68-02-2085, PEDCo-Environmental Specialists, Inc., Cincinnati, OH, January 1976

5. *Control Techniques for Lead Air Emissions*, EPA-450/2-77-012, U.S. Environmental Protection Agency, Research Triangle Park, NC, December 1977.

2. SOLID WASTE DISPOSAL

Revised by Robert Rosensteel

As defined in the Solid Waste Disposal Act of 1965, the term "solid waste" means garbage, refuse, and other discarded solid materials, including solid waste materials resulting from industrial, commercial, and agricultural operations, and from community activities. It includes both combustibles and noncombustibles.

Solid wastes may be classified into four general categories: urban, industrial, mineral, and agricultural. Although urban wastes represent only a relatively small part of the total solid wastes produced, this category has a large potential for air pollution since in heavily populated areas solid waste is often burned to reduce the bulk of material requiring final disposal.[1] The following discussion will be limited to the urban and industrial waste categories.

An average of 5.5 pounds (2.5 kilograms) of urban refuse and garbage is collected per capita per day in the United States.[2] This figure does not include uncollected urban and industrial wastes that are disposed of by other means. Together, uncollected urban and industrial wastes contribute at least 4.5 pounds (2.0 kilograms) per capita per day. The total gives a conservative per capita generation rate of 10 pounds (4.5 kilograms) per day of urban and industrial wastes. Approximately 50 percent of all the urban and industrial waste generated in the United States is burned, using a wide variety of combustion methods with both enclosed and open burning.[3] Atmospheric emissions, both gaseous and particulate, result from refuse disposal operations that use combustion to reduce the quantity of refuse. Emissions from these combustion processes cover a wide range because of their dependence upon the refuse burned, the method of combustion or incineration, and other factors. Because of the large number of variables involved, it is not possible, in general, to delineate when a higher or lower emission factor, or an intermediate value should be used. For this reason, an average emission factor has been presented.

References

1. Solid Waste - It Will Not Go Away. League of Women Voters of the United States. Publication Number 675. April 1971.

2. Black, R.J., H.L. Hickman, Jr., A.J. Klee, A.J. Muchick, and R.D. Vaughan. The National Solid Waste Survey: An Interim Report. Public Health Service, Environmental Control Administration. Rockville, Md. 1968.

3. Nationwide Inventory of Air Pollutant Emissions, 1968. U.S. DHEW, PHS, EHS, National Air Pollution Control Administration. Raleigh, N.C. Publication Number AP-73. August 1970.

2.1 REFUSE INCINERATION

Revised by Robert Rosensteel

2.1.1 Process Description[1-4]

The most common types of incinerators consist of a refractory-lined chamber with a grate upon which refuse is burned. In some newer incinerators water-walled furnaces are used. Combustion products are formed by heating and burning of refuse on the grate. In most cases, since insufficient underfire (undergrate) air is provided to enable complete combustion, additional over-fire air is admitted above the burning waste to promote complete gas-phase combustion. In multiple-chamber incinerators, gases from the primary chamber flow to a small secondary mixing chamber where more air is admitted, and more complete oxidation occurs. As much as 300 percent excess air may be supplied in order to promote oxidation of combustibles. Auxiliary burners are sometimes installed in the mixing chamber to increase the combustion temperature. Many small-size incinerators are single-chamber units in which gases are vented from the primary combustion chamber directly into the exhaust stack. Single-chamber incinerators of this type do not meet modern air pollution codes.

2.1.2 Definitions of Incinerator Categories[1]

No exact definitions of incinerator size categories exist, but for this report the following general categories and descriptions have been selected:

1. *Municipal incinerators* – Multiple-chamber units often have capacities greater than 50 tons (45.3 MT) per day and are usually equipped with automatic charging mechanisms, temperature controls, and movable grate systems. Municipal incinerators are also usually equipped with some type of particulate control device, such as a spray chamber or electrostatic precipitator.

2. *Industrial/commercial incinerators* – The capacities of these units cover a wide range, generally between 50 and 4,000 pounds (22.7 and 1,800 kilograms) per hour. Of either single- or multiple-chamber design, these units are often manually charged and intermittently operated. Some industrial incinerators are similar to municipal incinerators in size and design. Better designed emission control systems include gas-fired afterburners or scrubbing, or both.

3. *Trench incinerators* – A trench incinerator is designed for the combustion of wastes having relatively high heat content and low ash content. The design of the unit is simple: a U-shaped combustion chamber is formed by the sides and bottom of the pit and air is supplied from nozzles along the top of the pit. The nozzles are directed at an angle below the horizontal to provide a curtain of air across the top of the pit and to provide air for combustion in the pit. The trench incinerator is not as efficient for burning wastes as the municipal multiple-chamber unit, except where careful precautions are taken to use it for disposal of low-ash, high-heat-content refuse, and where special attention is paid to proper operation. Low construction and operating costs have resulted in the use of this incinerator to dispose of materials other than those for which it was originally designed. Emission factors for trench incinerators used to burn three such materials[7] are included in Table 2.1-1.

4. *Domestic incinerators* – This category includes incinerators marketed for residential use. Fairly simple in design, they may have single or multiple chambers and usually are equipped with an auxiliary burner to aid combustion.

Table 2.1-1. EMISSION FACTORS FOR REFUSE INCINERATORS WITHOUT CONTROLS[a]
EMISSION FACTOR RATING: A

Incinerator type	Particulates		Sulfur oxides[b]		Carbon monoxide		Hydrocarbons[c]		Nitrogen oxides[d]	
	lb/ton	kg/MT	lb/ton	kg/MT	lb/ton	kg/MT	lb/ton	kg/MT	lb/ton	kg/MT
Municipal[e]										
Multiple chamber, uncontrolled	30	15	2.5	1.25	35	17.5	1.5	0.75	3	1.5
With settling chamber and water spray system[f]	14	7	2.5	1.25	35	17.5	1.5	0.75	3	1.5
Industrial/commercial										
Multiple chamber[g]	7	3.5	2.5[h]	1.25	10	5	3	1.5	3	1.5
Single chamber[i]	15	7.5	2.5[h]	1.25	20	10	15	7.5	2	1
Trench[j]										
Wood	13	6.5	0.1[k]	0.05	NA[l]	NA	NA	NA	4	2
Rubber tires	138	69	NA	NA	NA	NA	NA	NA	NA	NA
Municipal refuse	37	18.5	2.5[h]	1.25	NA	NA	NA	NA	NA	NA
Controlled air[m]	1.4	0.7	1.5	0.75	Neg	Neg	Neg	Neg	10	5
Flue-fed single chamber[n]	30	15	0.5	0.25	20	10	15	7.5	3	1.5
Flue-fed (modified)[o,p]	6	3	0.5	0.25	10	5	3	1.5	10	5
Domestic single chamber										
Without primary burner[q]	35	17.5	0.5	0.25	300	150	100	50	1	0.5
With primary burner[r]	7	3.5	0.5	0.25	Neg	Neg	2	1	2	1
Pathological[s]	8	4	Neg	Neg	Neg	Neg	Neg	Neg	3	1.5

[a]Average factors given based on EPA procedures for incinerator stack testing.
[b]Expressed as sulfur dioxide.
[c]Expressed as methane.
[d]Expressed as nitrogen dioxide.
[e]References 5 and 8 through 14.
[f]Most municipal incinerators are equipped with at least this much control: see Table 2.1-2 for appropriate efficiencies for other controls.
[g]References 3, 5, 10, 13, and 15.
[h]Based on municipal incinerator data.
[i]References 3, 5, 10, and 15.
[j]Reference 7.
[k]Based on data for wood combustion in conical burners.
[l]Not available.
[m]Reference 9.
[n]References 3, 10, 11, 13, 15, and 16.
[o]With afterburners and draft controls.
[p]References 3, 11, and 15.
[q]References 5 and 10.
[r]Reference 5.
[s]References 3 and 9.

5. *Flue-fed incinerators* – These units, commonly found in large apartment houses, are characterized by the charging method of dropping refuse down the incinerator flue and into the combustion chamber. Modified flue-fed incinerators utilize afterburners and draft controls to improve combustion efficiency and reduce emissions.

6. *Pathological incinerators* – These are incinerators used to dispose of animal remains and other organic material of high moisture content. Generally, these units are in a size range of 50 to 100 pounds (22.7 to 45.4 kilograms) per hour. Wastes are burned on a hearth in the combustion chamber. The units are equipped with combustion controls and afterburners to ensure good combustion and minimal emissions.

7. *Controlled air incinerators* – These units operate on a controlled combustion principle in which the waste is burned in the absence of sufficient oxygen for complete combustion in the main chamber. This process generates a highly combustible gas mixture that is then burned with excess air in a secondary chamber, resulting in efficient combustion. These units are usually equipped with automatic charging mechanisms and are characterized by the high effluent temperatures reached at the exit of the incinerators.

2.1.3 Emissions and Controls[1]

Operating conditions, refuse composition, and basic incinerator design have a pronounced effect on emissions. The manner in which air is supplied to the combustion chamber or chambers has, among all the parameters, the greatest effect on the quantity of particulate emissions. Air may be introduced from beneath the chamber, from the side, or from the top of the combustion area. As underfire air is increased, an increase in fly-ash emissions occurs. Erratic refuse charging causes a disruption of the combustion bed and a subsequent release of large quantities of particulates. Large quantities of uncombusted particulate matter and carbon monoxide are also emitted for an extended period after charging of batch-fed units because of interruptions in the combustion process. In continuously fed units, furnace particulate emissions are strongly dependent upon grate type. The use of rotary kiln and reciprocating grates results in higher particulate emissions than the use of rocking or traveling grates.[14] Emissions of oxides of sulfur are dependent on the sulfur content of the refuse. Carbon monoxide and unburned hydrocarbon emissions may be significant and are caused by poor combustion resulting from improper incinerator design or operating conditions. Nitrogen oxide emissions increase with an increase in the temperature of the combustion zone, an increase in the residence time in the combustion zone before quenching, and an increase in the excess air rates to the point where dilution cooling overcomes the effect of increased oxygen concentration.[14]

Table 2.1-2 lists the relative collection efficiencies of particulate control equipment used for municipal incinerators. This control equipment has little effect on gaseous emissions. Table 2.1-1 summarizes the uncontrolled emission factors for the various types of incinerators previously discussed.

Table 2.1-2. COLLECTION EFFICIENCIES FOR VARIOUS TYPES OF MUNICIPAL INCINERATION PARTICULATE CONTROL SYSTEMS[a]

Type of system	Efficiency, %
Settling chamber	0 to 30
Settling chamber and water spray	30 to 60
Wetted baffles	60
Mechanical collector	30 to 80
Scrubber	80 to 95
Electrostatic precipitator	90 to 96
Fabric filter	97 to 99

[a]References 3, 5, 6, and 17 through 21.

References for Section 2.1

1. Air Pollutant Emission Factors. Final Report. Resources Research Incorporated, Reston, Virginia. Prepared for National Air Pollution Control Administration, Durham, N.C., under Contract Number CPA-22-69-119. April 1970.

2. Control Techniques for Carbon Monoxide Emissions from Stationary Sources. U.S. DHEW, PHS, EHS, National Air Pollution Control Administration. Washington, D.C. Publication Number AP-65. March 1970.

3. Danielson, J.A. (ed.). Air Pollution Engineering Manual. U.S. DHEW, PHS National Center for Air Pollution Control. Cincinnati, Ohio. Publication Number 999-AP-40. 1967. p. 413-503.

4. De Marco, J. et al. Incinerator Guidelines 1969. U.S. DHEW, Public Health Service. Cincinnati, Ohio. SW-13TS. 1969. p. 176.

5. Kanter, C. V., R. G. Lunche, and A.P. Fururich. Techniques for Testing for Air Contaminants from Combustion Sources. J. Air Pol. Control Assoc. *6(4)*:191-199. February 1957.

6. Jens. W. and F.R. Rehm. Municipal Incineration and Air Pollution Control. 1966 National Incinerator Conference, American Society of Mechnical Engineers. New York, May 1966.

7. Burkle, J.O., J. A. Dorsey, and B. T. Riley. The Effects of Operating Variables and Refuse Types on Emissions from a Pilot-Scale Trench Incinerator. Proceedings of the 1968 Incinerator Conference, American Society of Mechanical Engineers. New York. May 1968. p. 34-41.

8. Fernandes, J. H. Incinerator Air Pollution Control. Proceedings of 1968 National Incinerator Conference, American Society of Mechanical Engineers. New York. May 1968. p. 111.

9. Unpublished data on incinerator testing. U.S. DHEW, PHS, EHS, National Air Pollution Control Administration. Durham, N.C. 1970.

10. Stear, J. L. Municipal Incineration: A Review of Literature. Environmental Protection Agency, Office of Air Programs. Research Triangle Park, N.C. OAP Publication Number AP-79. June 1971.

11. Kaiser, E.R. et al. Modifications to Reduce Emissions from a Flue-fed Incinerator. New York University. College of Engineering. Report Number 552.2. June 1959. p. 40 and 49.

12. Unpublished data on incinerator emissions. U.S. DHEW, PHS, Bureau of Solid Waste Management. Cincinnati, Ohio. 1969.

13. Kaiser, E.R. Refuse Reduction Processes in Proceedings of Surgeon General's Conference on Solid Waste Management. Public Health Service. Washington, D.C. PHS Report Number 1729. July 10-20, 1967.

14. Nissen, Walter R. Systems Study of Air Pollution from Municipal Incineration. Arthur D. Little, Inc. Cambridge, Mass. Prepared for National Air Pollution Control Administration, Durham, N.C., under Contract Number CPA-22-69-23. March 1970.

15. Unpublished source test data on incinerators. Resources Research, Incorporated. Reston, Virginia. 1966-1969.

16. Communication between Resources Research, Incorporated, Reston, Virginia, and Maryland State Department of Health, Division of Air Quality Control, Baltimore, Md. 1969.

17. Rehm, F.R. Incinerator Testing and Test Results. J. Air Pol. Control Assoc. *6:*199-204. February 1957.

18. Stenburg, R.L. et al. Field Evaluation of Combustion Air Effects on Atmospheric Emissions from Municipal Incinerations. J. Air Pol. Control Assoc. *12:*83-89. February 1962.

19. Smauder, E.E. Problems of Municipal Incineration. (Presented at First Meeting of Air Pollution Control Association, West Coast Section, Los Angeles, California. March 1957.)

20. Gerstle, R. W. Unpublished data: revision of emission factors based on recent stack tests. U.S. DHEW, PHS, National Center for Air Pollution Control. Cincinnati, Ohio. 1967.

21. A Field Study of Performance of Three Municipal Incinerators. University of California, Berkeley, Technical Bulletin. *6:*41, November 1957.

3. INTERNAL COMBUSTION ENGINE SOURCES

The internal combustion engine in both mobile and stationary applications is a major source of air pollutant emissions. Internal combustion engines were responsible for approximately 73 percent of the carbon monoxide, 56 percent of the hydrocarbons, and 50 percent of the nitrogen oxides (NO_X as NO_2) emitted during 1970 in the United States.[1] These sources, however, are relatively minor contributors of total particulate and sulfur oxides emissions. In 1970, nationwide, internal combustion sources accounted for only about 2.5 percent of the total particulate and 3.4 percent of the sulfur oxides.[1]

The three major uses for internal combustion engines are: to propel highway vehicles, to propel off-highway vehicles, and to provide power from a stationary position. Associated with each of these uses are engine duty cycles that have a profound effect on the resulting air pollutant emissions from the engine. The following sections describe the many applications of internal combustion engines, the engine duty cycles, and the resulting emissions.

GLOSSARY OF TERMS

Calendar year – A cycle in the Gregorian calendar of 365 or 366 days divided into 12 months beginning with January and ending with December.

Catalytic device – A piece of emission control equipment that is anticipated to be the major component used in post 1974 light-duty vehicles to meet the Federal emission standards.

Cold vehicle operation – The first 505 seconds of vehicle operation following a 4-hour engine-off period. (for catalyst vehicles a 1-hour engine-off period).

Composite emission factor (highway vehicle) – The emissions of a vehicle in gram/mi (g/km) that results from the product of the calendar year emission rate, the speed correction factor, the temperature correction factor, and the hot/cold weighting correction factor.

Crankcase emissions – Airborne substance emitted to the atmosphere from any portion of the crankcase ventilation or lubrication systems of a motor vehicle engine.

1975 Federal Test Procedure (FTP) – The Federal motor vehicle emission test as described in the *Federal Register*, Vol. 36, Number 128, July 2, 1971.

Fuel evaporative emissions – Vaporized fuel emitted into the atmosphere from the fuel system of a motor vehicle.

Heavy duty vehicle – A motor vehicle designated primarily for transportation of property and rated at more than 8500 pounds (3856 kilograms) gross vehicle weight (GVW) or designed primarily for transportation of persons and having a capacity of more than 12 persons.

High altitude emission factors – Substantial changes in emission factors from gasoline-powered vehicles occur as altitude increases. These changes are caused by fuel metering enrichment because of decreasing air density. No relationship between mass emissions and altitude has been developed. Tests have been conducted at near sea level and at approximately 5000 feet (1524 meters) above sea level, however. Because most major U.S. urban areas at high altitude are close to 5000 feet (1524 meters), an arbitrary value of 3500 ft (1067 m) and above is used to define high-altitude cities.

Horsepower-hours – A unit of work.

Hot/cold weighting correction factor – The ratio of pollutant exhaust emissions for a given percentage of cold operation (w) to pollutant exhaust emissions measured on the 1975 Federal Test Procedure (20 percent cold operation) at ambient temperature (t).

Light duty truck – Any motor vehicle designated primarily for transportation of property and rated at 8500 pounds (3856 kilograms) GVW or less. Although light-duty trucks have a load carrying capability that exceeds that of passenger cars, they are typically used primarily for personal transportation as passenger car substitutes.

Light duty vehicle (passenger car) – Any motor vehicle designated primarily for transportation of persons and having a capacity of 12 persons or less.

Modal emission model – A mathematical model that can be used to predict the warmed-up exhaust emissions for groups of light-duty vehicles over arbitrary driving sequences.

Model year – A motor vehicle manufacturer's annual production period. If a manufacturer has no annual production period, the term "model year" means a calendar year.

Model year mix – The distribution of vehicles registered by model year expressed as a fraction of the total vehicle population.

Nitrogen oxides – The sum of the nitric oxide and nitrogen dioxide contaminants in a gas sample expressed as if the nitric oxide were in the form of nitrogen dioxide. All nitrogen oxides values in this chapter are corrected for relative humidity.

Speed correction factor – The ratio of the pollutant (p) exhaust emission factor at speed "x" to the pollutant (p) exhaust emission factor as determined by the 1975 Federal Test Procedure at 19.6 miles per hour (31.6 kilometers per hour).

Temperature correction factor – The ratio of pollutant exhaust emissions measured over the 1975 Federal Test Procedure at ambient temperature (t) to pollutant exhaust emissions measured over the 1975 Federal Test Procedure at standard temperature conditions (68 to 86°F).

Reference

1. Cavender, J., D. S. Kircher, and J. R. Hammerle. Nationwide Air Pollutant Trends (1940-1970). U. S. Environmental Protection Agency, Office of Air and Water Programs. Research Triangle Park, N.C. Publication Number AP-115. April 1973.

3.1 HIGHWAY VEHICLES

Passenger cars, light trucks, heavy trucks, and motorcycles comprise the four main categories of highway vehicles. Within each of these categories, powerplant and fuel variations result in significantly different emission characteristics. For example, heavy trucks may be powered by gasoline or diesel fuel or operate on a gaseous fuel such as compressed natural gas (CNG).

It is important to note that highway vehicle emission factors change with time and, therefore, must be calculated for a specific time period, normally one calendar year. The major reason for this time dependence is the gradual replacement of vehicles without emission control equipment by vehicles with control equipment, as well as the gradual deterioration of vehicles with control equipment as they accumulate age and mileage. The emission factors presented in this chapter cover only calendar years 1971 and 1972 and are based on analyses of actual tests of existing sources and control systems. Projected emission factors for future calendar years are no longer presented in this chapter because projections are "best guesses" and are best presented independently of analytical results. The authors are aware of the necessity for forecasting emissions; therefore, projected emission factors are available in Appendix D of this document.

Highway vehicle emission factors are presented in two forms in this chapter. Section 3.1.1 contains average emission factors for calendar year 1972 for selected values of vehicle miles traveled by vehicle type (passenger cars, light trucks, and heavy trucks), ambient temperature, cold/hot weighting, and average vehicle speed. The section includes one case that represents the average national emission factors as well as thirteen other scenarios that can be used to assess the sensitivity of the composite emission factor to changing input conditions. All emission factors are given in grams of pollutant per kilometer traveled (and in grams of pollutant per mile traveled).

The emission factors given in sections 3.1.2 through 3.1.7 are for individual classes of highway vehicles and their application is encouraged if specific statistical data are available for the area under study. The statistical data required include vehicle registrations by model year and vehicle type, annual vehicle travel in miles or kilometers by vehicle type and age, average ambient temperature, percentage of cold-engine operation by vehicle type, and average vehicle speed. When regional inputs are not available, national values (which are discussed) may be applied.

3.1.1 Average Emission Factors for Highway Vehicles

revised by David S. Kircher and Marcia E. Williams

3.1.1.1 General--Emission factors presented in this section are intended to assist those individuals interested in compiling approximate mobile source emission estimates for large areas, such as an individual air quality region or the entire nation, for calendar year 1972. Projected mobile source emission factors for future years are no longer presented in this section. This change in presentation was made to assure consistency with the remainder of this publication, which contains emission factors based on actual test results on currently controlled sources and pollutants. Projected average emission factors for vehicles are available, however, in Appendix D of this publication.

The emission factor calculation techniques presented in sections 3.1.2 through 3.1.5 of this chapter are strongly recommended for the formulation of localized emission estimates required for air quality modeling or for the evaluation of air pollutant control strategies. Many factors, which vary with geographic location and estimation situation, can affect emission estimates considerably. The factors of concern include average vehicle speed, percentage of cold vehicle operation, percentage of travel by vehicle category (automobiles, light trucks, heavy trucks), and ambient temperature. Clearly, the infinite variations in these factors make it impossible to present composite mobile source emission factors for each application. An effort has been made, therefore, to present average emission factors for a range of conditions. The following conditions are considered for each of these cases:

Average vehicle speed – Two vehicle speeds are considered. The first is an average speed of 19.6 mi/hr (31.6 km/hr), which should be typical of a large percentage of urban vehicle operation. The second is an average speed of 45 mi/hr (72 km/hr), which should be typical of highway or rural operation.

Percentage of cold operation – Three percentages of cold operation are considered. The first (at 31.6 km/hr) assumes that 20 percent of the automobiles and light trucks are operating in a cold condition (representative of vehicle start-up after a long engine-off period) and that 80 percent of the automobiles and light trucks are operating in a hot condition (warmed-up vehicle operation). This condition can be expected to assess the engine temperature situation over a large area for an entire day. The second situation assumes that 100 percent of the automobiles and light trucks are operating in a hot condition (at 72 km/hr). This might be applicable to rural or highway operation. The third situation (at 31.6 km/hr) assumes that 100 percent of the automobiles and light trucks are operating in a cold condition. This might be a worst-case situation around an indirect source such as a sports stadium after an event lets out. In all three situations, heavy-duty vehicles are assumed to be operating in a hot condition.

Percentage of travel by vehicle type – Three situations are considered. The first (at both 31.6 km/hr and 72 km/hr) involves a nationwide mix of vehicle miles traveled by automobiles, light trucks, heavy gasoline trucks, and heavy diesel trucks. The specific numbers are 80.4, 11.8, 4.6, and 3.2 percent of total vehicle miles traveled, respectively.[1, 2] The second (at 31.6 km/hr) examines a mix of vehicle miles traveled that might be found in a central city area. The specific numbers are 63, 32, 2.5, and 2.5 percent, respectively. The third (31.6 km/hr) examines a mix of vehicles that might be found in a suburban location or near a localized indirect source where no heavy truck operation exist. The specific numbers are 88.2, 11.8, 0, and 0 percent, respectively.

Ambient temperature – Two situations at 31.6 km/hr are considered: an average ambient temperature of 24°C (75°F) and an average ambient temperature of 10°C (50°F).

Table 3.1.1-1 presents composite CO, HC, and NO_x factors for the 13 cases discussed above for calendar year 1972. Because particulate emissions and sulfur oxides emissions are not assumed to be functions of the factors discussed above, these emission factors are the same for all scenarios and are also presented in the table. The table entries were calculated using the techniques described and data presented in sections 3.1.2, 3.1.4, and 3.1.5 of this chapter. Examination of Table 3.1.1-1 can indicate the sensitivity of the composite emission factor to various

Table 3.1.1-1. AVERAGE EMISSION FACTORS FOR HIGHWAY VEHICLES, CALENDAR YEAR 1972
EMISSION FACTOR RATING: B

Conditions						Emission factors for highway vehicles									
Vehicle weight mix	Average route speed		Ambient temperature		Cold operation	Carbon monoxide		Hydrocarbons		Nitrogen oxides		Particulate		Sulfur oxides	
	mi/hr	km/hr	°F	°C	%	g/mi	g/km	g/mi	g/km	g/mi	g/km	g/mi	g/km	g/mi	g/km
National average	19.6	31.6	75	24	20	76.5	47.5	10.8	6.7	4.9	3.0	0.60	0.37	0.23	0.14
			50	10	20	97.1	60.3	13.0	8.1	5.4	3.4	0.60	0.37	0.23	0.14
			75	24	100	145	90.0	14.6	9.1	4.6	2.9	0.60	0.37	0.23	0.14
			50	10	100	228	142	22.4	13.9	4.6	2.9	0.60	0.37	0.23	0.14
No heavy-duty travel	19.6	31.6	75	24	20	70.6	43.8	9.6	6.0	4.2	2.6	0.54	0.34	0.13	0.08
			50	10	20	92.9	57.7	11.3	7.0	4.7	2.9	0.54	0.34	0.13	0.08
			75	24	100	146	90.7	13.8	8.6	3.8	2.4	0.54	0.34	0.13	0.08
			50	10	100	234	145	22.1	13.7	3.8	2.4	0.54	0.34	0.13	0.08
Central city	19.6	31.6	75	24	20	78.2	48.6	11.2	7.0	4.8	3.0	0.60	0.37	0.20	0.12
			50	10	20	101	62.7	13.7	8.5	5.3	3.3	0.60	0.37	0.20	0.12
			75	24	100	154	95.6	15.6	9.7	4.5	2.8	0.60	0.37	0.20	0.12
			50	10	100	245	152	24.5	15.2	4.5	2.8	0.60	0.37	0.20	0.12
National average	45	72.5	75	24	0	29.8	18.5	4.7	2.9	8.0	5.0	0.60	0.37	0.23	0.14

conditions. A user who has specific data on the input factors should calculate a composite factor to fit the exact scenario. When specific input factor data are not available, however, it is hoped that the range of values presented in the table will cover the majority of applications. The user should be sure, however, that the appropriate scenario is chosen to fit the situation under analysis. In many cases, it is not necessary to apply the various temperature, vehicle speed, and cold/hot operation correction factors because the basic emission factors (24°C, 31.6 km/hr, 20 percent cold operation, nationwide mix of travel by vehicle category) are reasonably accurate predictors of motor vehicle emissions on a regionwide (urban) basis.

References for Section 3.1.1

1. Highway Statistics 1971. U.S. Department of Transportation. Federal Highway Administration. Washington, D.C. 1972. p. 81.

2. 1972 Census of Transportation. Truck Inventory and Use Survey. U.S. Department of Commerce. Bureau of the Census. Washington, D.C. 1974.

4.4 TRANSPORTATION AND MARKETING OF PETROLEUM LIQUIDS[1]

Charles Masser and Audrey McBath

4.4.1 Process Description

As Figure 4.4.1 indicates, the transportation and marketing of petroleum liquids involves many distinct operations, each of which represents a potential source of hydrocarbon evaporation loss. Crude oil is transported from production operations to the refinery by tankers, barges, tank cars, tank trucks, and pipelines. In the same manner, refined petroleum products are conveyed to fuel marketing terminals and petrochemical industries by tankers, barges, tank cars, tank trucks, and pipelines. From the fuel marketing terminals, the fuels are delivered by tank trucks to service stations, commercial accounts, and local bulk storage plants. The final destination for gasoline is usually a motor vehicle gasoline tank. A similar distribution path may also be developed for fuel oils and other petroleum products.

4.4.2 Emissions and Controls

Evaporate hydrocarbon emissions from the transportation and marketing of petroleum liquids may be separated into four categories, depending on the storage equipment and mode of transportation used:

1. Large storage tanks: Breathing, working, and standing storage losses.

2. Marine vessels, tank cars, and tank trucks: Loading, transit, and ballasting losses.

3. Service stations: Bulk fuel drop losses and underground tank breathing losses.

4. Motor vehicle tanks: Refueling losses.

(In addition, evaporative and exhaust emissions are also associated with motor vehicle operation. These topics are discussed in Chapter 3.)

4.4.2.1 Large Storage Tanks – Losses from storage tanks are thoroughly discussed in Section 4.3.

4.4.2.2 Marine Vessels, Tank Cars, and Tank Trucks – Losses from marine vessels, tank cars, and tank trucks can be categorized into loading losses, transit losses, and ballasting losses.

Loading losses are the primary source of evaporative hydrocarbon emissions from marine vessel, tank car, and tank truck operations. Loading losses occur as hydrocarbon vapors residing in empty cargo tanks are displaced to the atmosphere by the liquid being loaded into the cargo tanks. The hydrocarbon vapors displaced from the cargo tanks are a composite of (1) hydrocarbon vapors formed in the empty tank by evaporation of residual product from previous hauls and (2) hydrocarbon vapors generated in the tank as the new product is being loaded. The quantity of hydrocarbon losses from loading operations is, therefore, a function of the following parameters.

- Physical and chemical characteristics of the previous cargo.
- Method of unloading the previous cargo.
- Operations during the transport of the empty carrier to the loading terminal.
- Method of loading the new cargo.
- Physical and chemical characteristics of the new cargo.

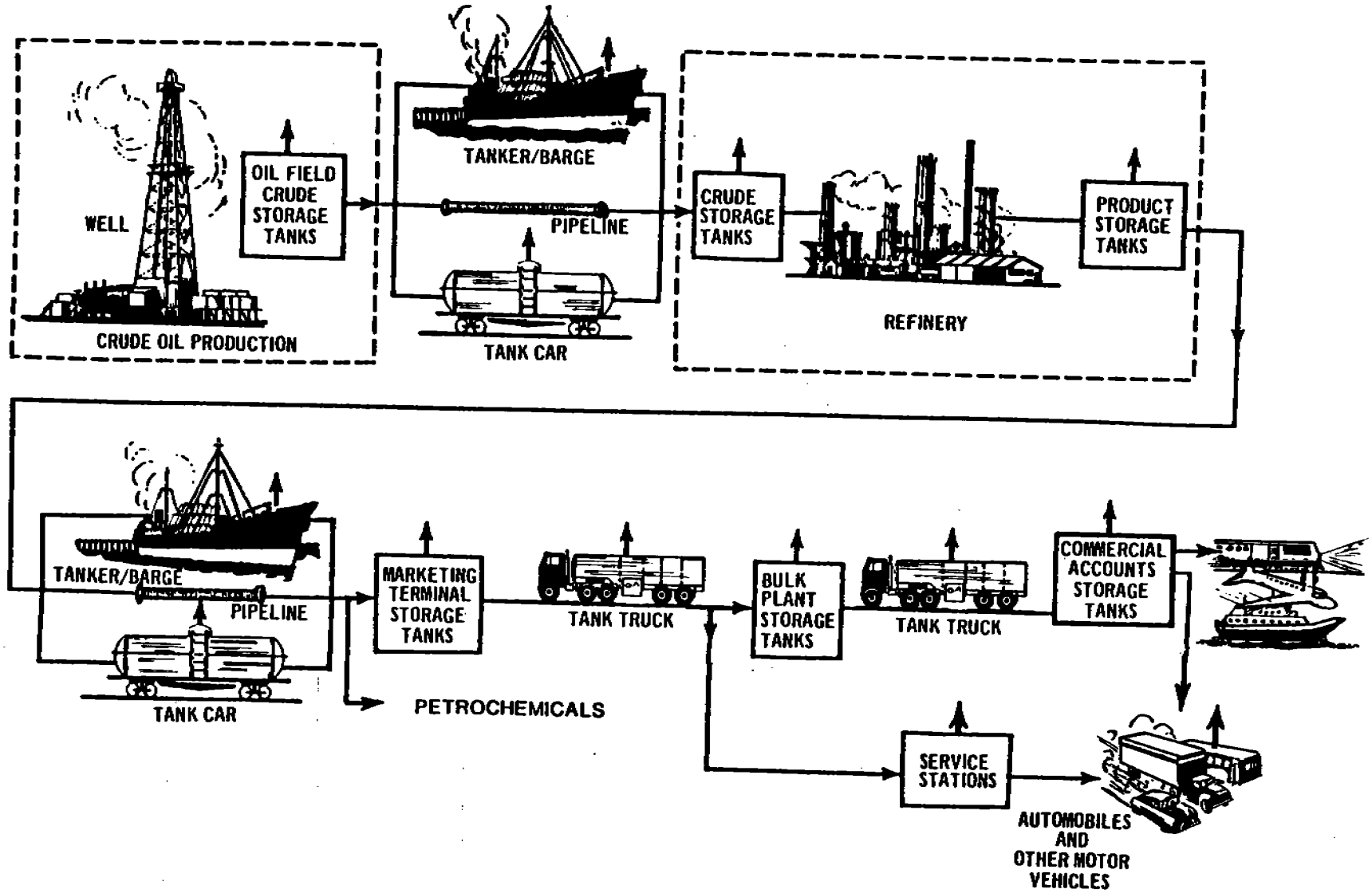

Figure 4.4-1. Flowsheet of petroleum production, refining, and distribution systems. (Sources of organic evaporative emissions are indicated by vertical arrows.)

The principal methods of loading cargo carriers are presented in Figures 4.4-2, 4.4-3 and 4.4-4. In the splash loading method, the fill pipe dispensing the cargo is only partially lowered into the cargo tank. Significant turbulence and vapor/liquid contact occur during the splash loading operation, resulting in high levels of vapor generation and loss. If the turbulence is high enough, liquid droplets will be entrained in the vented vapors.

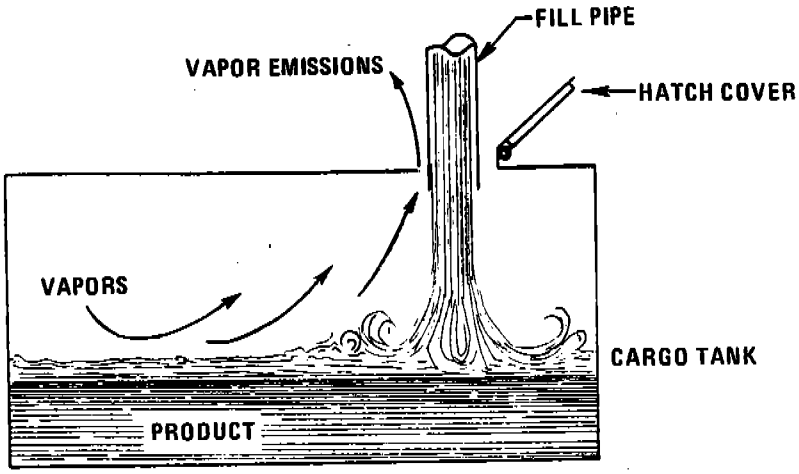

Figure 4.4-2. Splash loading method.

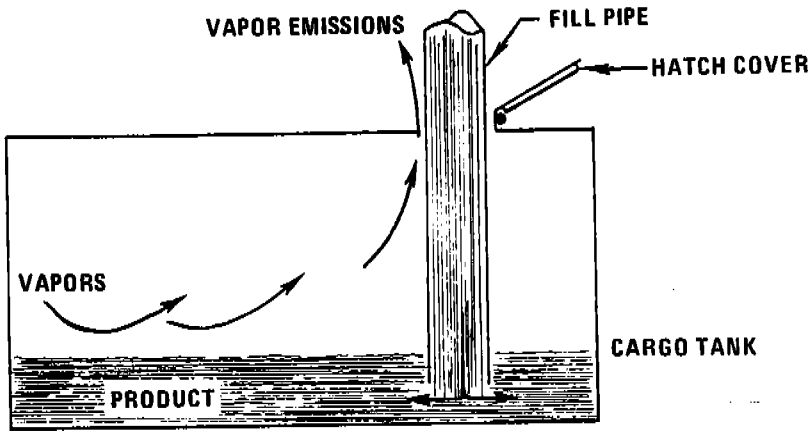

Figure 4.4-3. Submerged fill pipe.

A second method of loading is submerged loading. The two types of submerged loading are the submerged fill pipe method and the bottom loading method. In the submerged fill pipe method, the fill pipe descends almost to the bottom of the cargo tank. In the bottom loading method, the fill pipe enters the cargo tank from the bottom. During the major portion of both methods of submerged loading, the fill pipe opening is positioned below the liquid level. The submerged loading method significantly reduces liquid turbulence and vapor/liquid contact, thereby resulting in much lower hydrocarbon losses than encountered during splash loading methods.

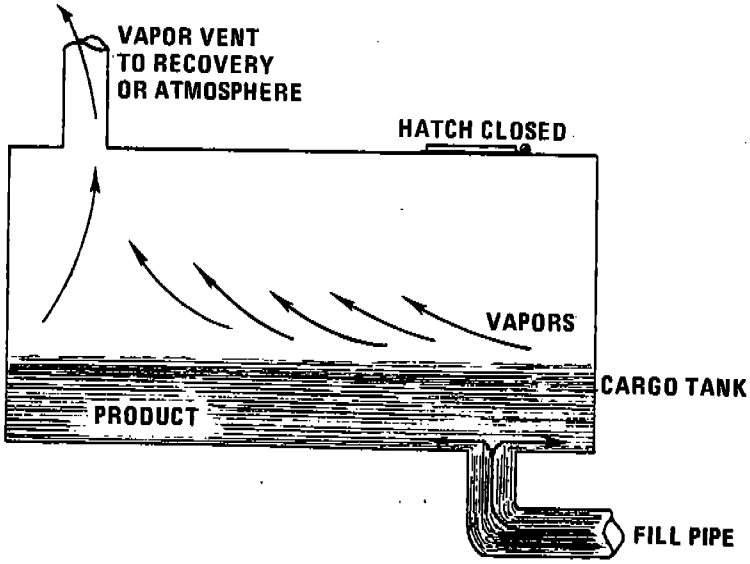

Figure 4.4-4. Bottom loading.

The history of a cargo carrier is just as important a factor in loading losses as the method of loading. If the carrier has just been cleaned or has carried a nonvolatile liquid such as fuel oil, it will be full of clean air immediately prior to loading. If it has just carried gasoline and has not been vented, the carrier will be full of air saturated with hydrocarbon vapor. In the latter case, the residual vapors are expelled along with newly generated vapors during the subsequent loading operation.

Some cargo carriers are designated to transport only one product. In this situation, tanks are not cleaned between trips and so return for loading containing air fully or partially saturated with vapor. The extent of this situation differs for marine vessels, tank cars, large and small tank trucks. It also varies with ownership of the carrier, petroleum liquid being transported, geographic location, season of the year, and control measure employed.

Gasoline tank trucks may be in "dedicated balance service", where the truck picks up the vapors displaced during unloading operations and transports them in the tank back to the loading terminal. Figure 4.4-5 shows a tank truck in dedicated vapor balance service unloading gasoline to an underground service station tank and filling up with displaced gasoline vapors to be returned to the truck loading terminal. The vapors in an "empty" gasoline tank truck in dedicated balance service are normally saturated with hydrocarbons. Dedicated balance service is not usually practiced with marine vessels.

Emissions from loading hydrocarbon liquid can be estimated (within 30 percent) using the following expression:

$$L_L = 12.46 \frac{SPM}{T} \qquad (1)$$

where: L_L = Loading loss, lb/10^3 gal of liquid loaded.
M = Molecular weight of vapors, lb/lb-mole (see Table 4.3-1).
P = True vapor pressure of liquid loading, psia (see Figures 4.3-8 and 4.3-9, and Table 4.3-1).
T = Bulk temperature of liquid loaded, °R.
S = A saturation factor (see Table 4.4-1).

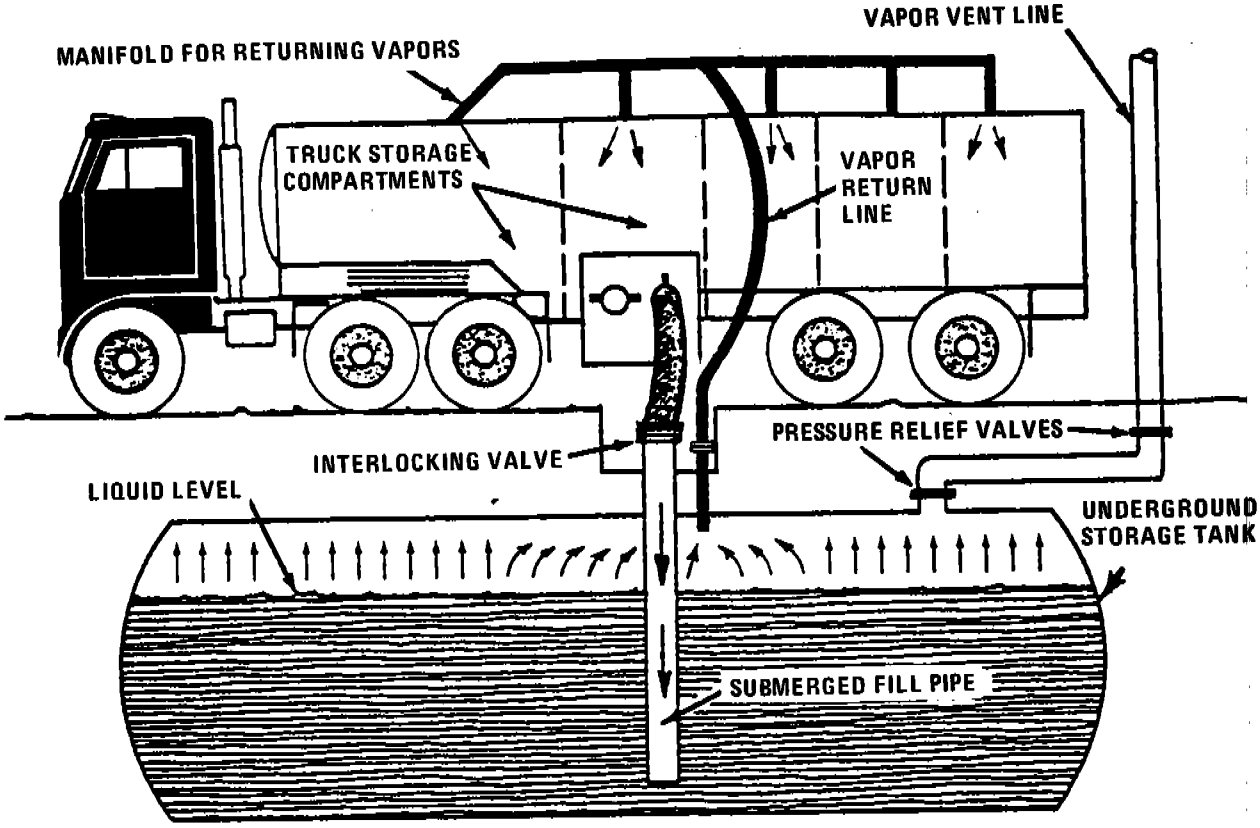

Figure 4.4-5. Tank truck unloading into an underground service station storage tank. Tank truck is practicing "vapor balance" form of vapor control.

The saturation factor (S) represents the expelled vapor's fractional approach to saturation, and it accounts for the variations observed in emission rates from the different unloading and loading methods. Table 4.4-1 lists suggested saturation factors (S).

Ballasting operations are a major source of hydrocarbon emissions associated with unloading petroleum liquids at marine terminals. It is common practice for large tankers to fill several cargo tanks with water after unloading their cargo. This water, termed ballast, improves the stability of the empty tanker on rough seas during the subsequent return voyage. Ballasting emissions occur as hydrocarbon laden air in the empty cargo tank is displaced to the atmosphere by ballast water being pumped into the empty cargo tank. Although ballasting practices vary quite a bit, individual cargo tanks are ballasted about 80 percent, and the total vessel is ballasted approximately 40 percent, of capacity. Ballasting emissions from gasoline and crude oil tankers are approximately 0.8 and 0.6 lb/10^3 gal., respectively, based on total tanker capacity. These estimates are for motor gasolines and medium volatility crudes (RVP ≈ 5 psia).[2] Upon arrival in port, this ballast water is pumped from the cargo tanks before loading the new cargo. The ballasting of cargo tanks reduces the quantity of vapor returning in the "empty" tanker, thereby reducing the quantity of vapors emitted during subsequent tanker loading operations.

Recent studies on gasoline loading losses from ships and barges have led to the development of more accurate emission factors for these specific loading operations. These factors are presented in Table 4.4-2 and should be used instead of Equation (1) for gasoline loading operations at marine terminals.[2]

Table 4.4-1. S FACTORS FOR CALCULATING PETROLEUM LOADING LOSSES

Cargo carrier	Mode of operation	S factor
Tank trucks and tank cars	Submerged loading of a clean cargo tank	0.50
	Splash loading of a clean cargo tank	1.45
	Submerged loading: normal dedicated service	0.60
	Splash loading: normal dedicated service	1.45
	Submerged loading: dedicated vapor balance service	1.00
	Splash loading: dedicated vapor balance service	1.00
Marine vessels[a]	Submerged loading:ships	0.2
	Submerged loading: barges	0.5

[a]To be used for products other than gasoline: use factors from Table 4.4-2 for marine loading of gasoline.

Sample Calculation - Loading losses from a gasoline tank in dedicated balance service and practicing vapor recovery would be calculated as follows, using Equation (1).

Design basis:

Tank truck volume is 8000 gallons
Gasoline RVP is 9 psia
Dispensing temperature is 80° F
Vapor recovery efficiency is 95%

Loading loss equation:

$$L_L = 12.46 \frac{SPM}{T}\left(1 - \frac{eff}{100}\right)$$

where: S = Saturation factor (see Table 4.4-1) = 1.0
P = True vapor pressure of gasoline (see Figure 4.3-8) = 6.6 psia
M = Molecular weight of gasoline vapors (see Table 4.3-1) ≈ 66

T = Temperature of gasoline = 540° R
eff = The control efficiency = 95%

$$L_L = 12.46 \frac{(1.0)(6.6)(66)}{540}\left(1 - \frac{95}{100}\right)$$
$$= 0.50 \text{ lb}/10^3 \text{ gal}$$

Total loading losses are
(0.50 lb/10^3 gal) (8.0 × 10^3 gal) = 4.0 lb of hydrocarbon

Table 4.4-2. HYDROCARBON EMISSION FACTORS FOR GASOLINE LOADING OPERATIONS

	Hydrocarbon emission factors					
	Ships		Ocean barges		Barges	
Vessel tank condition	Range	Average	Range	Average	Range	Average
Cleaned and vapor free						
lb/10^3 gal transferred	0 to 2.3	1.0	0 to 3	1.3	a	1.2
kg/10^3 liter transferred	0 to 0.28	0.12	0 to 0.36	0.16		0.14
Ballasted						
lb/10^3 gal transferred	0.4 to 3	1.6	0.5 to 3	2.1	b	b
kg/10^3 liter transferred	0.05 to 0.36	0.19	0.06 to 0.36	0.25		
Uncleaned - dedicated service						
lb/10^3 gal transferred	0.4 to 4	2.4	0.5 to 5	3.3	1.4 to 9	4.0
kg/10^3 liter transferred	0.05 to 0.48	0.29	0.06 to 0.60	0.40	0.17 to 1.08	0.48
Average cargo tank condition						
lb/10^3 gal transferred	a	1.4	a	a	a	4.0
kg/10^3 liter transferred		0.17				0.48

[a]These values are not available.
[b]Barges are not normally ballasted.

Control measures for reducing loading emissions include the application of alternate loading methods producing lower emissions and the application of vapor recovery equipment. Vapor recovery equipment captures hydrocarbon vapors displaced during loading and ballasting operations and recovers the hydrocarbon vapors by the use of refrigeration, absorption, adsorption, and/or compression. Figure 4.4-6 demonstrates the recovery of gasoline vapors from tank trucks during loading operation at bulk terminals. Control efficiencies range from 90 to 98 percent, depending on the nature of the vapors and on the type of recovery equipment employed.[4]

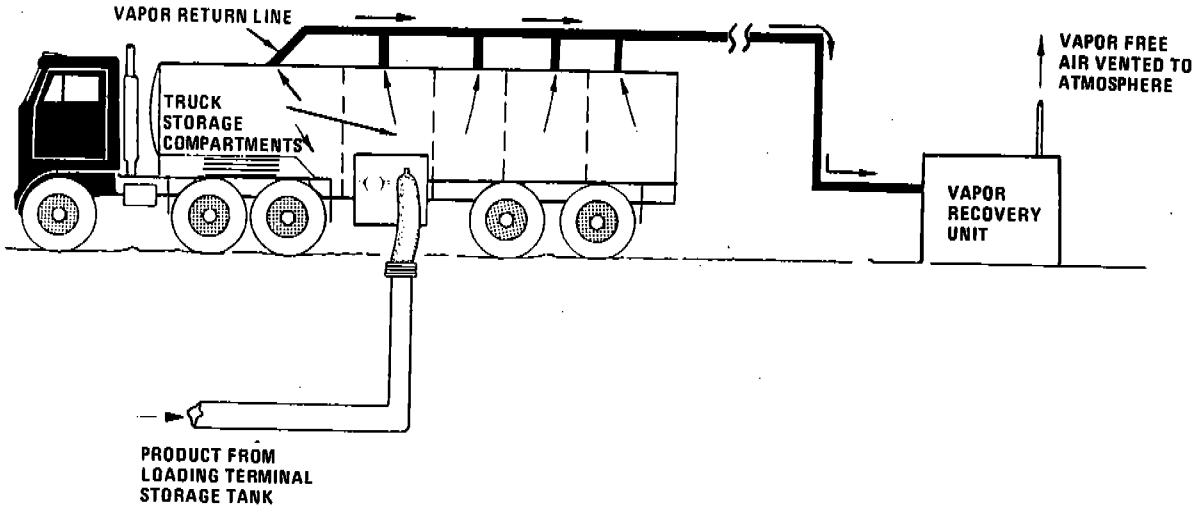

Figure 4.4-6. Tank truck loading with vapor recovery.

Emissions from controlled loading operations can be calculated by multiplying the uncontrolled emission rate calculated in Equations (1) and (2) by the control efficiency term:

$$\left[1 - \frac{\text{efficiency}}{100} \right]$$

In addition to loading and ballasting losses, losses occur while the cargo is in transit. Transit losses are similar in many ways to breathing losses associated with petroleum storage (refer to Section 4.3). Experimental tests on tankers and barges have indicated that transit losses can be calculated using Equation (2):[3]

$$L_T = 0.1\ PW \qquad (2)$$

where: L_T = Transit loss, lb/week-10^3 gal transported.
P = True vapor pressure of the transported liquid, psia (see Figures 4.3-8 and 4.3-9, and Table 4.3-1).
W = Density of the condensed vapors, lb/gal (see Table 4.3-1).

In the absence of specific inputs for Equations (1) and (2), typical evaporative hydrocarbon emissions from loading operations are presented in Table 4.4-3. It should be noted that, although the crude oil used to calculate the emission values presented in Table 4.4-3 has an RVP of 5, the RVP of crude oils can range from less than 1 to 10. In areas where loading and transportation sources are major factors affecting the air quality, it is advisable to obtain the necessary parameters and to calculate emission estimates from Equations (1) and (2).

Emissions from gasoline trucks have been studied by a combination of theoretical and experimental techniques, and typical emission values are presented in Table 4.4-3.[7,8] Emissions depend upon the extent of venting from the tank truck during transit, which in turn depends on the tightness of the truck, the pressure relief valve settings, the pressure in the tank at the start of the trip, the vapor pressure of the fuel being transported, and the degree of saturation (with fuel vapor) of the vapor space in the tank. The emissions are *not* directly proportional to the time spent in transit. As the leakage rate of the truck increases, emissions increase up to a point and then level off as other factors take over in determining the rate. Tank trucks in dedicated vapor balance service typically contain saturated vapors, and this leads to lower emissions during transit, because no additional fuel evaporates to raise the pressure in the tank to cause venting. Table 4.4-3 lists "typical" values for emissions and "extreme" values which could occur in the unlikely event that all determining factors combined to cause maximum emissions.

Table 4.4-3. HYDROCARBON EMISSION FACTORS FOR PETROLEUM LIQUID TRANSPORTATION AND MARKETING SOURCES

	Product emission factors[a]					
Emission source	Gasoline[b]	Crude oil[c]	Jet naphtha (JP-4)	Jet kerosene	Distillate oil No. 2	Residual oil No. 6
Tank cars/trucks						
Submerged loading - normal service						
lb/10^3 gal transferred	5	3	1.5	0.02	0.01	0.0001
kg/10^3 liters transferred	0.6	0.4	0.18	0.002	0.001	0.00001
Splash loading - normal service						
lb/10^3 gal transferred	12	7	4	0.04	0.03	0.0003
kg/10^3 liters transferred	1.4	0.8	0.5	0.005	0.004	0.00004
Submerged loading - balance service						
lb/10^3 gal transferred	8	5	2.5	d	d	d
kg/10^3 liters transferred	1.0	0.6	0.3			
Splash loading - balance service						
lb/10^3 gal transferred	8	5	2.5	d	d	d
kg/10^3 liters transferred	1.0	0.6	0.3			
Transit - loaded with fuel						
lb/10^3 gal transferred	0-0.1 typical	e	e	e	e	e
	0-0.08 extreme	e	e	e	e	e
kg/10^3 liters transferred	0-0.001 typical	e	e	e	e	e
	0-0.009 extreme	e	e	e	e	e

Table 4.4-3 (continued). HYDROCARBON EMISSION FACTORS FOR PETROLEUM LIQUID TRANSPORTATION AND MARKETING SOURCES

Emission source	Product emission factors[a]					
	Gasoline[b]	Crude oil[c]	Jet naphtha (JP-4)	Jet kerosene	Distillate oil No. 2	Residual oil No. 6
Transit - return with vapor						
lb/10^3 gal transferred	0-0.11 typical	e	e	e	e	e
	0-0.37 extreme	e	e	e	e	e
kg/10^3 liters transferred	0-0.013 typical	e	e	e	e	e
	0-0.44 extreme	e	e	e	e	e
Marine vessels						
Loading tankers						
lb/10^3 gal transferred	f	0.07	0.05	0.005	0.005	0.00004
kg/10^3 liters transferred		0.08	0.06	0.0006	0.0006	5×10^{-6}
Loading barges						
lb/10^3 gal transferred	f	1.7	1.2	0.0013	0.012	0.00009
kg/10^3 liters transferred	f	0.20	0.14	0.0016	0.0014	1.1×10^{-5}
Tanker ballasting						
lb/10^3 gal cargo capacity	0.8	0.6	e	e	e	e
kg/10^3 liters cargo capacity	0.10	0.07				
Transit						
lb/week - 10^3 gal transported	3	0	0.7	0.005	0.005	3×10^{-5}
kg/week - 10^3 liters transported	0.4	0.1	0.08	0.0006	0.0006	4×10^{-6}

[a]Emission factors are calculated for dispensed fuel temperature of 60°F.
[b]The example gasoline has an RVP of 10 psia.
[c]The example crude oil has an RVP of 5 psia.
[d]Not normally used.
[e]Not available.
[f]See Table 4.4-2 for these emission factors.

4.4.2.3 Service Stations - Another major source of evaporative hydrocarbon emissions is the filling of underground gasoline storage tanks at service stations. Normally, gasoline is delivered to service stations in large (8000 gallon) tank trucks. Emissions are generated when hydrocarbon vapors in the underground storage tank are displaced to the atmosphere by the gasoline being loaded into the tank. As with other

loading losses, the quantity of the service station tank loading loss depends on several variables, including the size and length of the fill pipe, the method of filling, the tank configuration and the gasoline temperature, vapor pressure, and composition. An average hydrocarbon emission rate for submerged filling is 7.3 lb/10^3 gallons of transferred gasoline, and the rate for splash filling is 11.5 lb/10^3 gallons of transferred gasoline (Table 4.4-4).[4]

Table 4.4-4. HYDROCARBON EMISSIONS FROM GASOLINE SERVICE STATION OPERATIONS

Emission source	Emission rate	
	lb/10^3 gal throughput	kg/10^3 liters throughput
Filling underground tank		
Submerged filling	7.3	0.88
Splash filling	11.5	1.38
Balanced submerged filling	0.3	0.04
Underground tank breathing and emptying[a]	1	0.12
Vehicle refueling operations		
Displacement losses (uncontrolled)	9	1.08
Displacement losses (controlled)	0.9	0.11
Spillage	0.7	0.084

[a]Emissions include any vapor loss from the underground tank to the gas pump.

Emissions from underground tank filling operations at service stations can be reduced by the use of the vapor balance system (Figure 4.4-5). The vapor balance system employs a vapor return hose which returns gasoline vapors displaced from the underground tank to the tank truck storage compartments being emptied. The control efficiency of the balance system ranges from 93 to 100 percent. Hydrocarbon emissions from underground tank filling operations at a service station employing the vapor balance system and submerged filling are not expected to exceed 0.3 lb/10^3 gallons of transferred gasoline.

A second source of hydrocarbon emissions from service stations is underground tank breathing. Breathing losses occur daily and are attributed to temperature changes, barometric pressure changes, and gasoline evaporation. The type of service station operation also has a large impact on breathing losses. An average breathing emission rate is 1 lb/10^3 gallons throughput.[5]

4.4.2.4 Motor Vehicle Refueling - An additional source of evaporative hydrocarbon emissions at service stations is vehicle refueling operations. Vehicle refueling emissions are attributable to vapors displaced from the automobile tank by dispensed gasoline and to spillage. The quantity of displaced vapors is dependent on gasoline temperature, auto tank temperature, gasoline RVP, and dispensing rates. Although several correlations have been developed to estimate losses due to displaced vapors, significant controversy exists concerning these correlations. It is estimated that the hydrocarbon emissions due to vapors displaced during vehicle refueling average 9 lb/10^3 gallons of dispensed gasoline.[4,5]

The quantity of spillage loss is a function of the type of service station, vehicle tank configuration, operator technique, and operation discomfort indices. An overall average spillage loss is 0.7 lb/10^3 gallons of dispensed gasoline.[6]

Control methods for vehicle refueling emissions are based on conveying the vapors displaced from the vehicle fuel tank to the underground storage tank vapor space through the use of a special hose and nozzle (Figure 4.4-7). In the "balance" vapor control system, the vapors are conveyed by natural pressure differentials established during refueling. In "vacuum assist" vapor control systems, the conveyance of vapors from the auto fuel tank to the underground fuel tank is assisted by a vacuum pump. The overall control efficiency of vapor control systems for vehicle refueling emissions is estimated to be 88 to 92 percent.[4]

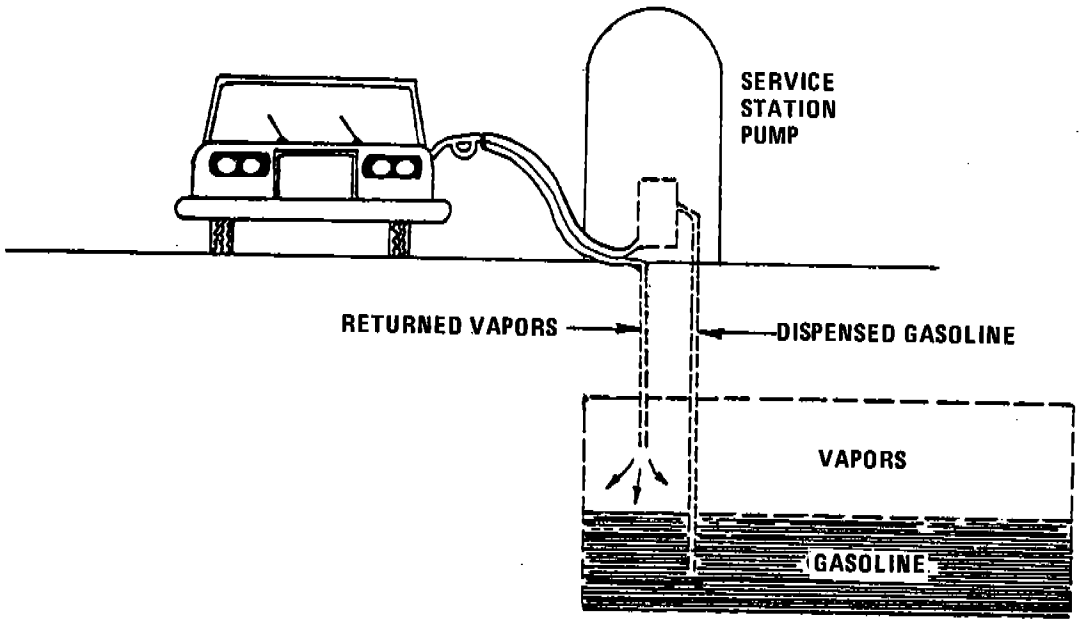

Figure 4.4-7. Automobile refueling vapor recovery system.

References for Section 4.4

1. C. E. Burklin and R. L. Honercamp, *Revision of Evaporative Hydrocarbon Emission Factors*, EPA-450/3-76-039, U.S. Environmental Protection Agency, Research Triangle Park, NC, August 1976.

2. C. E. Burklin, *et al.*, *Background Information on Hydrocarbon Emissions from Marine Terminal Operations*, 2 Vols., EPA-450/3-76-038a and -038b, U.S. Environmental Protection Agency, Research Triangle Park, NC, November 1976.

3. *Evaporation Loss from Tank Cars, Tank Trucks and Marine Vessels*, Bulletin No. 2514, American Petroleum Institute, Washington, DC, 1959.

4. C.E. Burklin, *et al.*, *A Study of Vapor Control Methods for Gasoline Marketing Operations*, 2 Vols., EPA-450-3-75-046A and -046B. U.S. Environmental Protection Agency, Research Triangle Park, NC, May 1975.

5. *Investigation of Passenger Car Refueling Losses: Final Report, 2nd year Program*, APTD-1453, U.S. Environmental Protection Agency, Research Triangle Park, NC, September 1972.

6. *Mathematical Expressions Relating Evaporative Emissions from Motor Vehicles to Gasoline Volatility*, Bulletin No. 4077, American Petroleum Institute, Plumsteadville, PA, March 1971.

7. R. A. Nichols, *Analytical Calculation of Fuel Transit Breathing Loss*, Chevron USA, Inc., San Francisco, CA, March 21, 1977.

8. R. A. Nichols, *Tank Truck Leakage Measurements*, Chevron USA, Inc., San Francisco, CA, June 7, 1977.

9. *Delivery Tank Field Results*, Staff Report 77-5-1, Attachment 2, California Air Resources Board, Sacramento, CA, March 15, 1977.

4.5 CUTBACK ASPHALT, EMULSIFIED ASPHALT AND ASPHALT CEMENT

Tom Lahre

4.5.1 General[1-3]

Asphalt surfaces and pavements are composed of compacted aggregate and an asphalt binder. Aggregate materials are produced from rock quarries as manufactured stone or are obtained from natural gravel or soil deposits. Metal ore refining processes produce artificial aggregates as a byproduct. In asphalt, the aggregate performs three functions. It transmits the load from the surface to the base course, takes the abrasive wear of traffic, and provides a nonskid surface. The asphalt binder holds the aggregate together, preventing displacement and loss of aggregate and providing a waterproof cover for the base.

Asphalt binders take the form of asphalt cement (the residue of the distillation of crude oils) and liquified asphalts. To be used for pavement, asphalt cement, which is semisolid, must be heated prior to mixing with aggregate. The resulting hot mix asphalt concrete is generally applied in thicknesses of from two to six inches. Liquified asphalts are (1) asphalt cutbacks (asphalt cement thinned or "cutback" with volatile petroleum distillates such as naptha, kerosene, etc.) and (2) asphalt emulsions (nonflammable liquids produced by combining asphalt and water with an emulsifying agent, such as soap). Liquified asphalts are used in tack and seal operations, in priming roadbeds for hot mix application, and for paving operations up to several inches thick.

Cutback asphalts fall into three broad categories: rapid cure (RC), medium cure (MC), and slow cure (SC) road oils. SC, MC and RC cutbacks are prepared by blending asphalt cement with heavy residual oils, kerosene-type solvents, or naptha and gasoline solvents, respectively. Depending on the viscosity desired, the proportions of solvent added generally range from 25 to 45 percent by volume.

Emulsified asphalts are of two basic types. One type relies on water evaporation to cure. The other type (cationic emulsions) relies on ionic bonding of the emulsion and the aggregate surface. Emulsified asphalt can substitute for cutback in almost any application. Emulsified asphalts are gaining in popularity, because of the energy and environmental problems associated with the use of cutback asphalts.

4.5.2 Emissions[1,2]

The primary pollutants of concern from asphalts and asphalt paving operations are volatile organic compounds (VOC). Of the three types of asphalts, the major source of VOC is cutback. Only minor amounts of VOC are emitted from emulsified asphalts and asphalt cement.

VOC emissions from cutback asphalts result from the evaporation of the petroleum distillate solvent, or diluent, used to liquify the asphalt cement. Emissions occur at both the job site and the mixing plant. At the job site, VOCs are emitted from the equipment used to apply the asphaltic product and from the road surface. At the mixing plant, VOCs are released during mixing and stockpiling. The largest source of emissions, however, is the road surface itself.

For any given amount of cutback asphalt, total emissions are believed to be the same, regardless of stockpiling, mixing and application times. The two major variables affecting both the quantity of VOC emitted and the time over which emissions occur are the type and the quantity of petroleum distillate used as a diluent. As an approximation, long term emissions from cutback asphalts can be estimated by assuming that 95 percent of the diluent evaporates from rapid cure (RC) cutback asphalts, 70 percent from medium cure (MC) cutbacks, and about 25 percent from slow cure (SC) asphalts, by weight percent. Some of the diluent appears to be retained permanently in the road surface after application. Limited test data suggest that, from rapid cure (RC) asphalt, 75 percent of the total diluent loss occurs on the first day after

application, 90 percent occurs within the first month, and 95 percent in three to four months. Evaporation takes place more slowly from medium cure (MC) asphalts, with roughly 20 percent of the diluent being emitted during the first day, 50 percent during the first week, and 70 percent after three to four months. No measured data are available for slow cure (SC) asphalts, although the quantity emitted is believed to be considerably less than with either rapid or medium cure asphalts, and the time during which emissions take place is expected to be considerably longer (Figure 4.5-1). An example calculation for determining VOC emissions from cutback asphalts is given below:

Example: Local records indicate that 10,000 kg of RC cutback asphalt (containing 45 percent diluent, by volume) was applied in a given area during the year. Calculate the mass of VOC emitted during the year from this application.

To determine VOC emissions, the volume of diluent present in the cutback asphalt must first be determined. Because of density of naptha (0.7 kg/l) differs from that of asphalt cement (1.1 kg/l), the following equations should be solved to determine the volume of diluent (x) and the volume of asphalt cement (y) in the cutback asphalt:

$$10{,}000 \text{ kg cutback asphalt} = (\text{x liter, diluent}) \cdot \left(\frac{0.7 \text{ kg}}{\text{liter}}\right) + (\text{y liter, asphalt cement}) \cdot \left(\frac{1.1 \text{ kg}}{\text{liter}}\right)$$

and

$x = 0.45$, (%, by volume, of diluent)
$y = 0.55$ (%, by volume of asphalt cement)

From these equations, the volume of diluent present in the cutback asphalt is determined to be about 4900 liters, or about 3400 kg. Assuming that 95 percent of this is evaporative VOC, emissions are then: 3400 kg x 0.95 = 3200 kg (i.e., 32%, by weight, of the cutback asphalt eventually evaporates).

These equations can be used for medium cure and slow cure asphalts by assuming typical diluent densities of 0.8 and 0.9 kg/liter, respectively. Of course, if actual density values are known from local records, they should be used in the above equations rather than typical values. Also, if different diluent contents are used, they should also be reflected in the above calculations. If actual diluent contents are not known, a typical value of 35 percent may be assumed for inventory purposes.

In lieu of solving the equations in the above example, Table 4.5-1 may be used to estimate long term emissions from cutback asphalts. Table 4.5-1 directly yields long term emissions as a function of the volume of diluent added to the cutback and of the density of the diluents and asphalt cement used in the cutback asphalt. If short term emissions are to be estimated, Figure 4.5-1 should be used in conjunction with Table 4.5-1.

No control devices are employed to reduce evaporative emissions from cutback asphalts. Asphalt emulsions are typically used in place of cutback asphalts to eliminate VOC emissions.

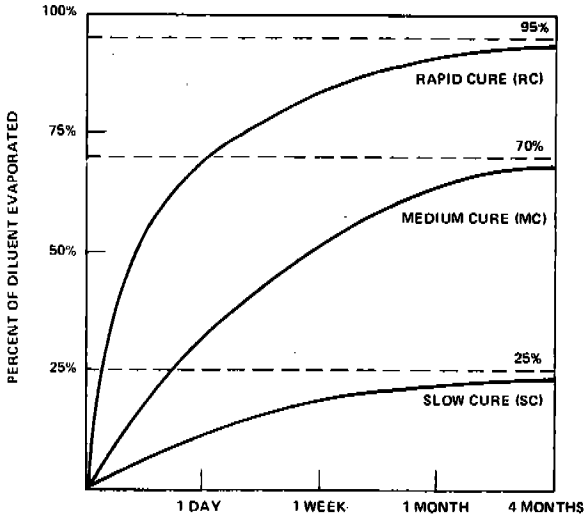

Figure 4.5-1. Percent of diluent evaporated from cutback asphalt over time.

TABLE 4.5-1. EVAPORATIVE VOC EMISSIONS FROM CUTBACK ASPHALTS AS A FUNCTION OF DILUENT CONTENT AND CUTBACK ASPHALT TYPE[a]

EMISSION FACTOR RATING: C

Type of Cutback[b]	Percent, by Volume, of Diluent in Cutback[c]		
	25%	35%	45%
Rapid cure	17	24	32
Medium cure	14	20	26
Slow cure	5	8	10

[a]These numbers represent the percent, by weight, of cutback asphalt evaporated. Factors are based on References 1 and 2.

[b]Typical densities assumed for diluents used in RC, MC and SC cutbacks are 0.7, 0.8 and 0.9 kg/liter, respectively.

[c]Diluent contents typically range between 24-45%, by volume. Emissions may be linearly interpolated for any given type of cutback between these values.

References for Section 4.5

1. R. Keller and R. Bohn, *Nonmethane Volatile Organic Emissions from Asphalt Cement and Liquified Asphalts*, EPA-450/3-78-124, U.S. Environmental Protection Agency, Research Triangle Park, NC, December 1978.

2. F. Kirwan and C. Maday, *Air Quality and Energy Conservation Benefits from Using Emulsions To Replace Asphalt Cutbacks in Certain Paving Operations*, EPA-450/2-78-004, U.S. Environmental Protection Agency, Research Triangle Park, NC, January 1978.

3. David W. Markwordt, *Control of Volatile Organic Compounds from Use of Cutback Asphalt*, EPA-450/2-77-037, U.S. Environmental Protection Agency, Research Triangle Park, NC, December 1977.

4.6 SOLVENT DEGREASING

Audrey McBath

4.6.1 Process Description[1,2]

Solvent degreasing (or solvent cleaning) is the physical process of using organic solvents to remove grease, fats, oils, wax or soil from various metal, glass or plastic items. The types of equipment used in this method are categorized as cold cleaners, open top vapor degreasers or conveyorized degreasers. Non-aqueous solvents such as petroleum distillates, chlorinated hydrocarbons, ketones and alcohols are used. Solvent selection is based on the solubility of the substance to be removed and on the toxicity, flammability, flash point, evaporation rate, boiling point, cost and several other properties of the solvent.

The metalworking industries are the major users of solvent degreasing, i.e., automotive, electronics, plumbing, aircraft, refrigeration and business machine industries. Solvent cleaning is also used in industries such as printing, chemicals, plastics, rubber, textiles, glass, paper and electric power. Most repair stations for transportation vehicles and electric tools utilize solvent cleaning at least part of the time. Many industries use water based alkaline wash systems for degreasing, and since these systems emit no solvent vapors to the atmosphere, they are not included in this discussion.

4.6.1.1 Cold Cleaners – The two basic types of cold cleaners are maintenance and manufacturing. Cold cleaners are batch loaded, nonboiling solvent degreasers, usually providing the simplest and least expensive method of metal cleaning. Maintenance cold cleaners are more numerous and smaller, generally using petroleum solvents such as mineral spirits (petroleum distillates and Stoddard solvents). Manufacturing cold cleaners use a wide variety of solvents, which perform higher quality cleaning, are more specialized, and have about twice the average emission rate of maintenance cold cleaners. Some cold cleaners can serve both purposes.

Cold cleaner operations include spraying, brushing, flushing and immersion. In a typical maintenance cleaner (Figure 4.6-1), dirty parts are cleaned manually by spraying and then soaking in the tank. After cleaning, the parts are either suspended over the tank to drain or are placed on an external rack that routes the drained solvent back into the cleaner. The cover is intended to be closed whenever parts are not being handled in the cleaner. Manufacturing cold cleaners vary widely in design, but there are two basic tank designs: the simple spray sink and the dip tank. Of these, the dip tank provides more thorough cleaning through immersion, and often is made to improve cleaning efficiency by agitation.

4.6.1.2 Open Top Vapor Systems – Open top vapor degreasers are batch loaded boiling degreasers that clean using condensation of hot solvent vapor on colder metal parts. Vapor degreasing uses halogenated solvents (usually perchloroethylene, trichloroethylene, or 1, 1, 1-trichloroethane), because they are not flammable, and their vapors are much heavier than air.

A typical vapor degreaser (Figure 4.6-1) is a sump containing a heater that boils the solvent to generate vapors. The upper level of these pure vapors is controlled by condenser coils and/or a water jacket encircling the device. Solvent and moisture condensed on the coils are directed to a water separator, where the heavier solvent is drawn off the bottom and is returned to the vapor degreaser. A "freeboard" extends above the top of the vapor zone to minimize vapor escape. Parts to be cleaned are immersed in the vapor zone, and condensation continues until they are heated to the vapor temperature. Residual liquid solvent on the parts rapidly evaporates as they are slowly removed from the vapor zone. Lip mounted exhaust systems capture solvent vapors and carry them away from operating personnel. Cleaning action is often increased by spraying the parts with solvent below the vapor level or by immersing them in the liquid solvent bath. Nearly all vapor degreasers are equipped with a water separator which allows the solvent to flow back into the degreaser.

Emission rates are usually estimated from solvent consumption data for the particular degreasing operation under consideration. Solvents are often purchased specifically for use in degreasing and are not used in

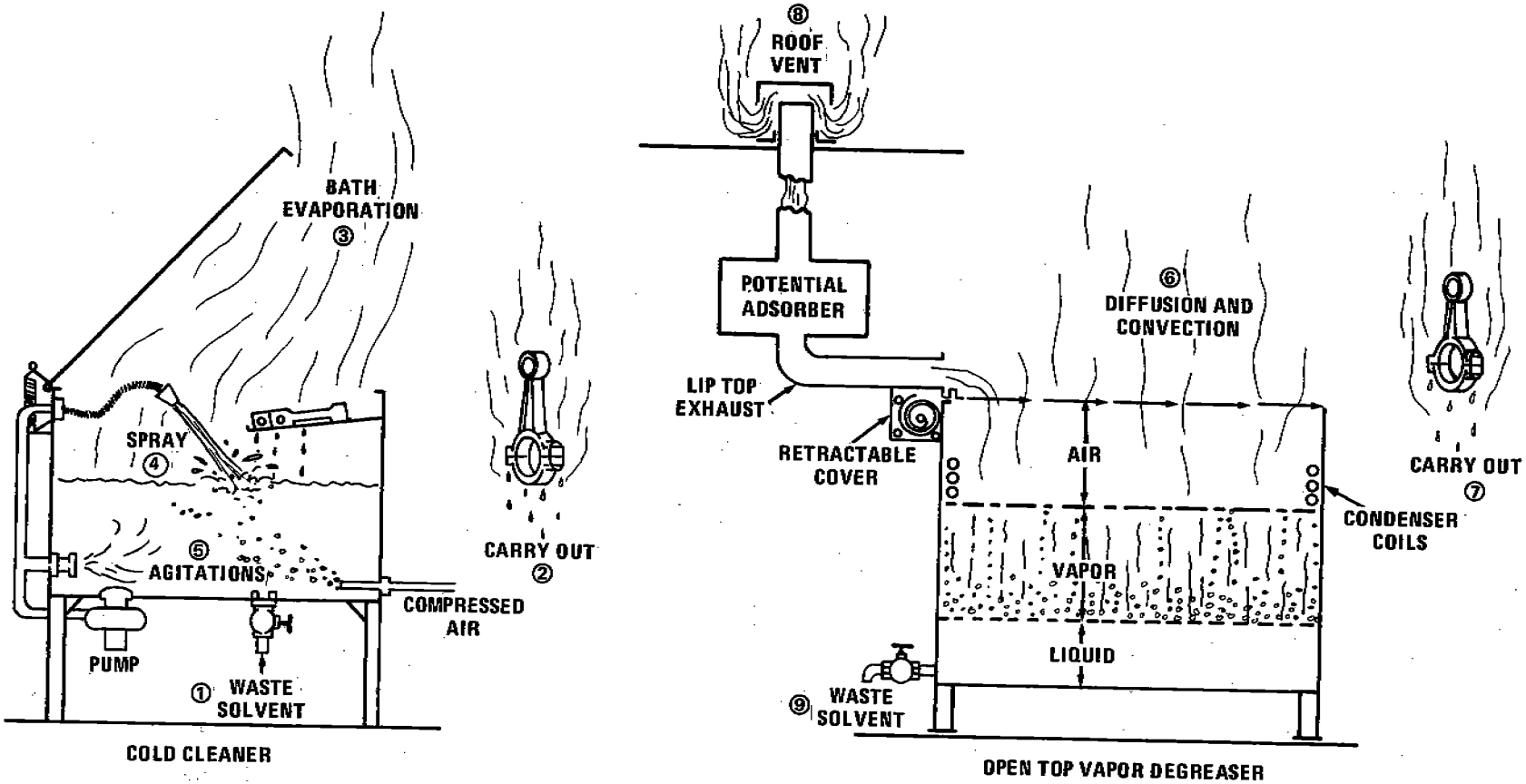

Figure 4.6-1. Degreaser emission points.

any other plant operations. In these cases, purchase records provide the necessary information, and an emission factor of 1,000 kg of volatile organic emissions per metric ton of solvent purchased can be applied (Table 4.6-1). This factor is based on the assumption that all solvent purchased is eventually emitted. When information on solvent consumption is not available, emission rates can be estimated if the number and type of degreasing units are known. The factors in Table 4.6-1 are based on the number of degreasers and emissions produced nationwide and may be considerably in error when applied to one particular unit.

The expected effectiveness of various control devices and procedures is listed in Table 4.6-2. As a first approximation, this efficiency can be applied without regard for the specific solvent being used. However, efficiencies are generally higher for more volatile solvents. These solvents also result in higher emission rates than those computed from the "average" factors listed in Table 4.6-1.

Table 4.6-1. SOLVENT LOSS EMISSION FACTORS FOR DEGREASING OPERATIONS
EMISSION FACTOR RATING: C

Type of degreasing	Activity measure	Uncontrolled organic emission factor[a]	
All[b]	Solvent consumed	2,000 lb/ton	1,000 kg/MT
Cold cleaner			
Entire unit[c]	Units in operation	0.33 tons/yr·unit	0.30 MT/yr·unit
Waste solvent loss		0.18 tons/yr·unit	0.165 MT/yr·unit
Solvent carryout		0.08 tons/yr·unit	0.075 MT/yr·unit
Bath and spray evaporation		0.07 tons/yr·unit	0.060 MT/yr·unit
Entire unit	Surface area and duty cycle[d]	0.08 lb/hr·ft^2	0.4 kg/hr·m^2
Open top vapor			
Entire unit	Units in operation	10.5 tons/yr·unit	9.5 MT/yr·unit
Entire unit	Surface area and duty cycle[e]	0.15 lb/hr·ft^2	0.7 kg/hr·m^2
Conveyorized, vapor			
Entire unit	Units in operation	26 tons/yr·unit	24 MT/yr·unit
Conveyorized, nonboiling			
Entire unit	Units in operation	52 tons/yr·unit	47 MT/yr·unit

[a]100% nonmethane hydrocarbons or volatile organic compounds.

[b]Solvent consumption data will provide much more accurate emission estimates than any of the other factors presented.

[c]Emissions would generally be higher for manufacturing units and lower for maintenance units.

[d]For trichloroethane degreaser. From Reference 3, Appendix C-6.

[e]For trichloroethane degreaser. Does not include waste solvent losses.

Table 4.6-2. PROJECTED EMISSION REDUCTION FACTORS FOR SOLVENT DEGREASING[a]

System	Cold cleaner		Vapor degreaser		Conveyorized degreaser	
	A	B	C	D	E	F
Control devices						
Cover or enclosed design	X	X	X	X	X	X
Drainage facility	X	X	X			X
Water cover, refrigerated chiller, carbon adsorption or high freeboard[b]		X		X		X
Solid, fluid spray stream[c]						
Safety switches and thermostats				X		X
Emission reduction from control devices (%)	13-38	NA[e]	20-40	30-60		40-60
Operating procedures						
Proper use of equipment	X	X	X	X	X	X
Use of high volatility solvent		X				
Waste solvent reclamation	X	X	X	X	X	X
Reduced exhaust ventilation			X	X	X	X
Reduced conveyor or entry speed			X	X	X	X
Emission reduction from operating procedures (%)	15-45	NA[e]	15-35	20-40	20-30	20-30
Total emission reduction (percentage)	28-83[d]	55-69[f]	30-60	45-75	20-30	50-70

[a]Reference 2. Ranges of emission reduction present poor to excellent compliance. X indicates devices or procedures which will effect the given reductions.

[b]Only one of these major control devices would be used in any degreasing system. System B could employ any of them; system D could employ any except water cover; system F could employ any except water cover and high freeboard.

[c]If agitation by spraying is used, the spray should not be a shower type.

[d]A manual or mechanically assisted cover would contribute 6-18% reduction; draining parts 15 seconds within the degreaser, 7-20%; and storing waste solvent in containers, an additional 15-45%.

[e]Breakout between control equipment and operating procedures is not available.

[f]Percentages represent average compliance.

4.6.1.3 Conveyorized Degreasers – Conveyorized degreasers may operate with either cold or vaporized solvent, but they merit separate consideration because they are continuously loaded and are almost always hooded or enclosed. About 85 percent are vapor types, and 15 percent are nonboiling.

4.6.2 Emissions and Controls[1,2,3]

Emissions from cold cleaners occur through (1) waste solvent evaporation, (2) solvent carry-out (evaporation from wet parts), (3) solvent bath evaporation, (4) spray evaporation, and (5) agitation (Figure 4.6-1). Waste solvent loss, cold cleaning's greatest emission source, can be minimized through distillation

and sending waste solvent to special incineration plants. Draining cleaned parts for at least 15 seconds reduces carry-out emissions. Bath evaporation can be controlled by regularly using a cover, allowing an adequate freeboard height and avoiding excessive drafts in the workshop. If the solvent used is insoluble in, and heavier than, water, a layer of water about two to four inches thick covering the halogenated solvent can also reduce bath evaporation. This is known as a "water cover". Spraying at low pressure helps to reduce solvent loss from this part of the process. Agitation emissions can be controlled by using a cover, agitating no longer than necessary, and avoiding the use of agitation with low volatility solvents. Emissions of low volatility solvents increase significantly with agitation. However, contrary to what one might expect, agitation causes only a small increase in emissions of high volatility solvents. Solvent type, particularly its volatility at the operating temperature, is the variable which most affects cold cleaner emission rates.

As with cold cleaning, open top vapor degreasing emissions relate heavily to proper operating methods. Most emissions are due to (6) diffusion and convection, which can be minimized by using an automated cover, regularly using a manual cover, spraying below the vapor level, optimizing work loads, or using a refrigerated freeboard chiller (for which a carbon adsorption unit would be substituted on larger units). Safety switches and thermostats that prevent emissions during malfunctions and abnormal operation also reduce diffusion and convection from the vaporized solvent. Additional sources are (7) solvent carry-out, (8) exhaust systems and (9) waste solvent evaporation (Figure 4.6-1). Carry-out is directly affected by the size and shape of the workload, racking of parts, and cleaning and drying time. Exhaust emissions can be nearly eliminated by a carbon adsorber that collects the solvent vapors for reuse. Waste solvent evaporation is not so much a problem with vapor degreasers as it is with cold cleaners, because the halogenated solvents used are often distilled and recycled by solvent recovery systems.

Because of their large workload capacity and the fact that they are usually enclosed, conveyorized degreasers emit less solvent per part cleaned than either of the other two types of degreaser. Compared to operating practices, design and adjustment are major factors affecting emissions, the main source of which is carry-out of vapor and liquid solvents.

References for Section 4.6

1. P.J. Marn, *et al.*, *Source Assessment: Solvent Evaporation - Degreasing*, EPA Contract No. 68-02-1874. Monsanto Research Corporation, Dayton, OH, January 1977.

2. Jeffrey Shumaker, *Control of Volatile Organic Emissions from Solvent Metal Cleaning*, EPA-450/2-77-022, U.S. Environmental Protection Agency, Research Triangle Park, NC, November 1977.

3. K.S. Suprenant and D.W. Richards, *Study To Support New Source Performance Standards for Solvent Metal Cleaning Operations*, EPA Contract No. 68-02-1329, Dow Chemical Company, Midland, MI, June 1976.

5.2 SYNTHETIC AMMONIA

Frank Noonan

5.2.1 General

Anhydrous ammonia is synthesized by reacting hydrogen with nitrogen at a molar ratio of 3:1, then compressing the gas and cooling it to −33°C. Nitrogen is obtained from the air, while hydrogen is obtained from either the catalytic steam reforming of natural gas (methane) or naphtha, or the electrolysis of brine at chlorine plants. In the United States, about 98 percent of synthetic ammonia is produced by catalytic steam reforming of natural gas (Figure 5.2-1).

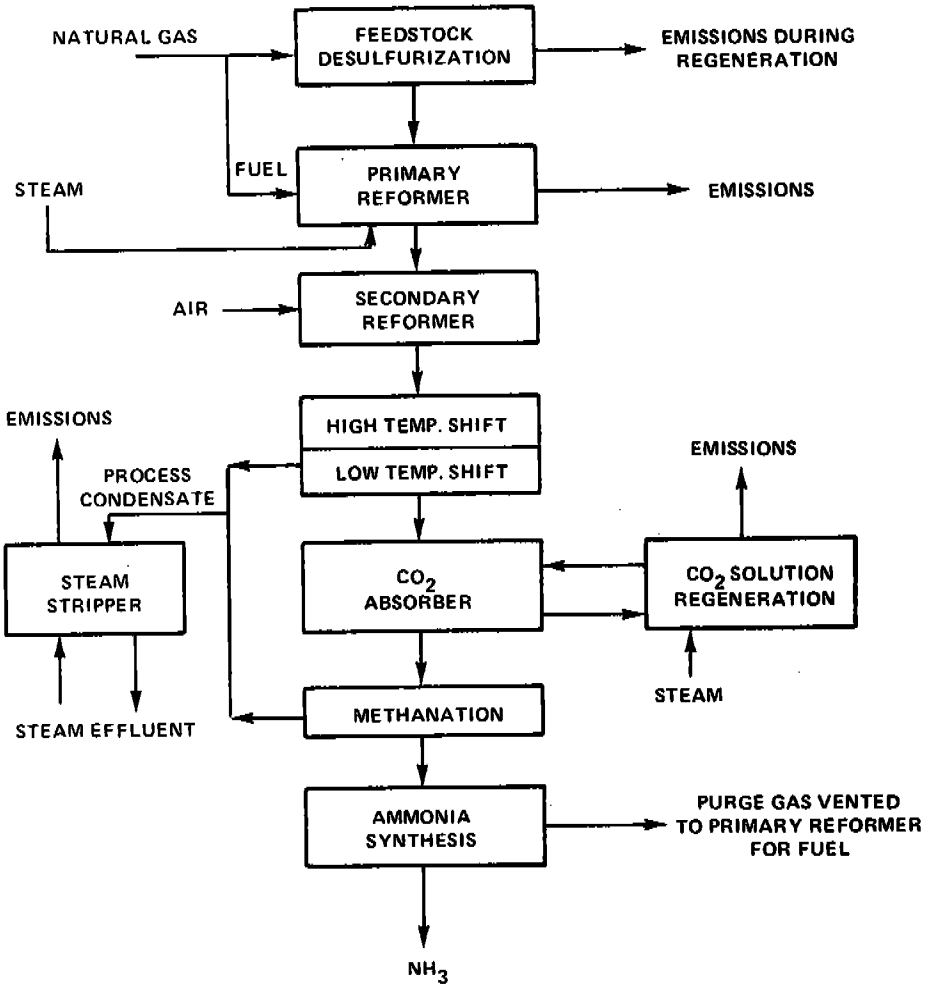

Figure 5.2-1. General process flow diagram of a typical ammonia plant.

Seven process steps are required to produce synthetic ammonia by the catalytic steam reforming method:

Natural gas desulfurization
Primary reforming with steam

Secondary reforming with air
Carbon monoxide shift
Carbon dioxide removal
Methanation
Ammonia synthesis

The first, fourth, fifth and sixth steps are to remove impurities such as sulfur, CO, CO_2 and water from the feedstock, hydrogen and synthesis gas streams. In the second step, hydrogen is manufactured, and in the third step, additional hydrogen is manufactured and nitrogen is introduced into the process. The seventh step produces anhydrous ammonia from the synthetic gas. While all ammonia plants use this basic process, details such as pressures, temperatures and quantities of feedstock will vary from plant to plant.

5.2.2 Emissions

Pollutants from the manufacture of synthetic anhydrous ammonia are emitted from four process steps:

Regeneration of the desulfurization bed
Heating of the primary reformer
Regeneration of carbon dioxide scrubbing solution
Steam stripping of process condensate

More than 95 percent of the ammonia plants in the U. S. use activated carbon fortified with metallic oxide additives for feedstock desulfurization. The desulfurization bed must be regenerated about once every 30 days for a 10 hour period. Vented regeneration steam contains sulfur oxides and/or hydrogen sulfide, depending on the amount of oxygen in the steam. Regeneration also emits hydrocarbons and carbon monoxide. The primary reformer, heated with natural gas or fuel oil, emits the combustion products NO_x, CO, SO_x, HC and particulates.

Carbon dioxide is removed from the synthesis gas by scrubbing with monoethanolamine or hot potassium carbonate solution. Regeneration of this CO_2 scrubbing solution with steam produces emissions of HC, NH_3, CO, CO_2 and monoethanolamine.

Cooling the synthesis gas after low temperature shift conversion forms a condensate containing quantities of NH_3, CO_2, methanol and trace metals. Condensate steam strippers are used to remove NH_3 and methanol from the water, and steam from this is vented to the atmosphere, emitting NH_3, CO_2 and methanol.

Table 5.2-1 presents emission factors for the typical ammonia plant. Control devices are not used at such plants, so the values in Table 5.2-1 represent uncontrolled emissions.

5.2.3 Controls

Add-on air pollution control devices are not used at synthetic ammonia plants, because their emissions are below state standards. Some processes have been modified to reduce emissions and to improve utility of raw materials and energy. Some plants are considering techniques to eliminate emissions from the condensate steam stripper, one such being the injection of the overheads into the reformer stack along with the combustion gases.

Table 5.2-1. UNCONTROLLED EMISSION FACTORS FOR TYPICAL AMMONIA PLANT

EMISSION FACTOR RATING: A

Emission point	Emission species	lb/ton	kg/MT
Desulfurization[a]	Total sulfur[b,c]	0.019	0.0096
	CO[c]	13.8	6.9
	HC[c]	7.2	3.6
Primary reformer			
Natural gas	NO_X	5.8	2.9
	SO_X	0.0048	0.0024
	CO	0.136	0.068
	TSP	0.144	0.072
	HC[d]	0.024	0.012
Fuel oil	NO_X	5.4	2.7
	SO_X	2.6	1.3
	CO	0.24	0.12
	TSP	0.90	0.45
	HC	0.30	0.15
Carbon dioxide regenerator	Ammonia	2.0	1.0
	CO	2.0	1.0
	CO_2	2440.0	1220.0
	HC	0.94	0.47
	Monoethanolamine	0.1	0.05
Condensate stripper	Ammonia	2.2	1.1
	CO_2	6.8	3.4
	Methanol	1.2	0.6

[a]Intermittent source, average 10 hours once every 30 days.

[b]Worst case assumption, that all sulfur entering tank is emitted during regeneration.

[c]Normalized to a 24 hour emission factor.

[d]Total HC in methane equivalents, species undetermined. Expected emissions are methane (Reference 1, p. 13).

Reference for Section 5.2

1. G. D. Rawlings and R. B. Reznik, *Source Assessment: Synthetic Ammonia Production*, EPA-600/2-77-107m, U. S. Environmental Protection Agency, Research Triangle Park, NC, November 1977.

5.3 CARBON BLACK

Audrey McBath

5.3.1 Process Description

Carbon black is produced by the reaction of a hydrocarbon fuel such as oil or gas with a limited supply of combustion air at temperatures of 2400 to 2800°F (1320 to 1540°C). The unburned carbon is collected as an extremely fine, black, fluffy particle, 10 to 500 nm diameter. The principal uses of carbon black are as a reinforcing agent in rubber compounds (especially tires) and as a black pigment in printing inks, surface coatings, paper and plastics. Two major processes are presently used in the United States to manufacture carbon black—the oil furnace process and the thermal process. The oil furnace process accounts for about 90 percent of production, and the thermal about 10 percent. Two others, the lamp process for production of lamp black and the cracking of acetylene to produce acetylene black, are each used at one plant in the U. S. However, these are small volume specialty black operations which constitute less than 1 percent of total production in this country. The gas furnace process is being phased out, and the last channel black plant in the U. S. was closed in 1976.

5.3.1.1 Oil Furnace Process – In the oil furnace process (Figure 5.3-1 and Table 5.3-1), an aromatic liquid hydrocarbon feedstock is preheated and injected continuously into the combustion zone of a natural gas fired furnace, where it is decomposed to form carbon black. Primary quench water cools the gases to 1000°F (540°C) to stop the cracking. The exhaust gases entraining the carbon particles are further cooled to about 450°F (230°C) by passage through heat exchangers and direct water sprays. The black is then separated from the gas stream, usually by a fabric filter. A cyclone for primary collection and particle agglomeration may precede the filter. A single collection system often serves several manifolded furnaces.

The recovered carbon black is finished to a marketable product by pulverizing and wet pelletizing to increase bulk density. Water from the wet pelletizer is driven off in a gas fired rotary dryer. Oil or process gas can be used. From 35 to 70 percent of the dryer combustion gas is charged directly to the interior of the dryer, and the remainder acts as an indirect heat source for the dryer. The dried pellets are then conveyed to bulk storage. Process yields range from 35 to 65 percent, depending on the feed composition and the grade of black produced. Furnace designs and operating conditions determine the particle size and the other physical and chemical properties of the black. Generally, yields are highest for large particle blacks and lowest for small particle blacks.

5.3.1.2 Thermal Process – The thermal process is a cyclic operation in which natural gas is thermally decomposed (cracked) into carbon particles, hydrogen and a mixture of other organics. Two furnaces are used in normal operation. The first cracks natural gas and makes carbon black and hydrogen. The effluent gas from the first reactor is cooled by water sprays to about 250°F (125°C), and the black is collected in a fabric filter. The filtered gas (90 percent hydrogen, 6 percent methane and 4 percent higher hydrocarbons) is used as a fuel to heat a second reactor. When the first reactor becomes too cool to crack the natural gas feed, the positions of the reactors are reversed, and the second reactor is used to crack the gas while the first is heated. Normally, more than enough hydrogen is produced to make the thermal black process self-sustaining, and the surplus hydrogen is used to fire boilers that supply process steam and electric power.

The collected thermal black is pulverized and pelletized to a final product in much the same manner as is furnace black. Thermal process yields are generally high (35 to 60 percent), but the relatively coarse particles produced, 180 to 470 nm, do not have the strong reinforcing properties required for rubber products.

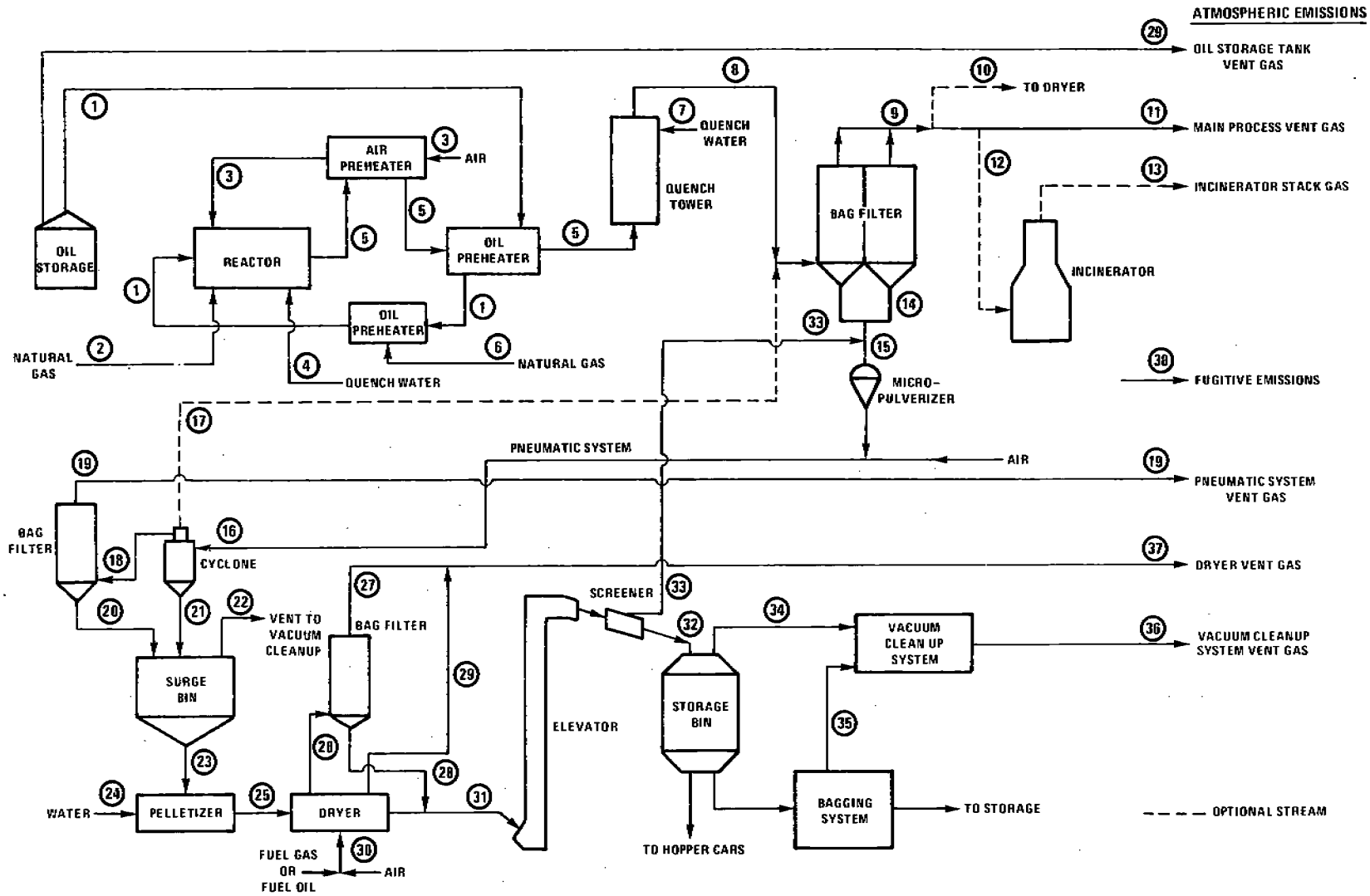

Figure 5.3-1. Flow diagram for the oil furnace carbon black process.

Table 5.3-1 STREAM CODE FOR THE OIL FURNACE PROCESS (Figure 5.3-1)

Stream	Identification
1	Oil feed
2	Natural gas feed
3	Air to reactor
4	Quench water
5	Reactor effluent
6	Gas to oil preheater
7	Water to quench tower
8	Quench tower effluent
9	Bag filter effluent
10	Vent gas purge for dryer fuel
11	Main process vent gas
12	Vent gas to incinerator
13	Incinerator stack gas
14	Recovered carbon black
15	Carbon black to micropulverizer
16	Pneumatic conveyor system
17	Cyclone vent gas recycle
18	Cyclone vent gas
19	Pneumatic system vent gas
20	Carbon black from bag filter
21	Carbon black from cyclone
22	Surge bin vent
23	Carbon black to pelletizer
24	Water to pelletizer
25	Pelletizer effluent
26	Dryer direct heat source vent
27	Dryer bag filter vent
28	Carbon black from dryer bag filter
29	Dryer indirect heat source vent
30	Hot gases to dryer
31	Dried carbon black
32	Screened carbon black
33	Carbon black recycle
34	Storage bin vent gas
35	Bagging system vent gas
36	Vacuum cleanup system vent gas
37	Dryer vent gas
38	Fugitive emissions
39	Oil storage tank vent gas

5.3.2 Emissions and Controls

5.3.2.1 Oil Furnace Process – Emissions from carbon black manufacture include particulate matter, carbon monoxide, organics, nitrogen oxides, sulfur compounds, polycyclic organic matter (POM) and trace elements.

The principal source of emissions in the oil furnace process is the main process vent. The vent stream consists of the reactor effluent and the quench water vapor vented from the carbon black recovery system. Gaseous emissions may vary considerably, according to the grade of carbon black being produced. Organic and CO emissions tend to be higher for small particle production, corresponding with the lower yields obtained. Sulfur compound emissions are a function of the feed sulfur content. Tables 5.3-2 and 5.3-3 show the normal emission ranges to be expected, with typical average values.

Particulates, sulfur oxides and nitrogen oxides are also emitted from the dryer vent. The oil feedstock storage tanks are a source of organic emissions. Carbon black emissions also occur from the pneumatic transport system vent, the plantwide vacuum cleanup system vent, and from cleaning, spills and leaks (fugitive emissions).

Gaseous emissions from the main process vent may be controlled with CO boilers, incinerators or flares. The pellet dryer combustion furnace, which is, in essence, a thermal incinerator, may also be employed in a control system. CO boilers, thermal incinerators or combinations of these devices can achieve essentially complete oxidation of organics and can oxidize sulfur compounds in the process flue gas. Combustion efficiencies of 99.6 percent for hydrogen sulfide and 99.8 percent for carbon monoxide have been measured for a flare on a carbon black plant. Particulate emissions may also be reduced by combustion of some of the carbon black particles, but emissions of sulfur dioxide and nitrogen oxides are thereby increased.

5.3.2.2 Thermal Process – A comparison between the thermal and oil furnace processes reveals that emissions from the former are less severe. Nitrogen oxides and particulates are emitted from the furnaces during the heating part of the cycle. Particulate matter is emitted when carbon black deposited on the furnace checkerbrick is released to the atmosphere in puffs, which occur when a furnace is switched from carbon black production to the heating part of the cycle.

Emissions from the dryer vent, the pneumatic transport system vent, the vacuum cleanup system vent, and fugitive sources are similar to those for the oil furnace process, since the operations which give rise to these emissions in the two processes are similar. There is no emission point in the thermal process which corresponds to the oil storage tank vents in the oil furnace process. Also in the thermal process, sulfur compounds, POM, trace elements and organic compound emissions are minimal, because low sulfur natural gas is used, and the process off-gas is burned as fuel.

Table 5.3-2. EMISSION FACTORS FOR CARBON BLACK MANUFACTURE
EMISSION FACTOR RATING: B [OIL FURNACE PROCESS]
C [THERMAL PROCESS]

Process	Particulate[a]		Carbon monoxide		Hydrocarbons[b]		Nitrogen oxides		Sulfur oxides		Hydrogen sulfide	
	lb/ton	kg/MT	lb/ton	kg/MT	lb/ton	kg/MT	lb/ton	kg/MT	lb/ton	kg/MT	lb/ton	kg/MT
Oil furnace process[c]												
Main process vent	6.53[d] (0.2-10)	3.27[d] (0.1-5)	2,800[e] (1,400-4,400)	1,400[e] (700-2,200)	100[e] (20-300)	50[e] (10-159)	0.56[e] (2-5.6)	0.28[e] (1-2.8)	0[e,f] (0-24)	0[e,f] (0-12)	60[e] 10S-26S	30[e] 5S-13S[g]
Flare[h]	2.70 (2.4-3)	1.35 (1.2-1.5)	245 (216-274)	122 (108-137)	3.7 (3.4-4)	1.85 (1.7-2)	NA[i]	NA	50 (44-56)	25 (21.9-28)	2	1
CO boiler and incinerator[d]	2.07	1.04	1.75	0.88	1.98	0.99	9.3	4.65	35.2	17.5	0.22	0.11
Dryer vent												
Uncontrolled[h]	0.45 (0.10-0.80)	0.23 (0.05-0.40)							0.10	0.05		
Bag filter[h]	0.24 (0.02-0.80)	0.12 (0.01-0.40)					0.73 (0.24-1.22)	0.36 (0.12-0.61)	0.52 (0.06-1.08)	0.26 (0.03-0.54)		
Scrubber[h]	0.71 (0.02-1.40)	0.36 (0.01-0.70)					2.20	1.10	0.40	0.20		
Pneumatic system vent[h]												
Bag filter	0.58 (0.12-1.40)	0.29 (0.06-0.70)										
Oil storage tank vent[j]												
Uncontrolled					1.44	0.72						
Vacuum cleanup system vent[h]												
Bag filter	0.06 (0.02-0.10)	0.03 (0.01-0.05)										
Fugitive emissions[h]	0.20	0.10										
Solid waste incinerator[k]	0.24	0.12	0.02	0.01	0.02	0.01	0.08	0.04	0.02	0.01		
Thermal process[l]	Neg	Neg	Neg	Neg	Neg	Neg	Unknown	Unknown	Neg	Neg	Neg	Neg

Table 5.3-2 (continued). EMISSION FACTORS FOR CARBON BLACK MANUFACTURE
EMISSION FACTOR RATING: B [OIL FURNACE PROCESS]
C [THERMAL PROCESS]

[a]The particulate matter is carbon black.

[b]Total nonmethane hydrocarbons. Individual organic species are included in Table 5.3-3.

[c]Blanks indicate no emissions. All plants use bag filters on all process trains for product recovery except solid waste incineration.

[d]Average values based on surveys of plants in References 4 and 5. Uncontrolled.

[e]Average values are based on results of six sampling runs conducted by Monsanto Research Corporation at a representative plant with the industry mean production rate of 5.1×10^4 MT/yr (5.6×10^4 ton/yr). The ranges of values are based on a survey of fifteen plants in Reference 4. Controlled by bag filter.

[f]Not detected at detection limit of 1 ppm.

[g]S is the weight percent sulfur in the feed.

[h]Average values and the corresponding ranges of values are based on a survey of plants in Reference 4 and on the public files of Louisiana Air Control Commission.

[i]Not available.

[j]Emission factor calculated using empirical correlations for petrochemical losses from storage tanks (vapor pressure = 0.7 kPa).

[k]Based on emission rates obtained from the National Emissions Data System. All plants do not use solid waste incineration. See Section 2.1.

[l]Emissions data are not available, but all emissions are believed to be negligible.

Table 5.3-3. EMISSION FACTORS FOR CHEMICAL SUBSTANCES FOR OIL FURNACE CARBON BLACK MANUFACTURE

Chemical substance	Main process vent gas[a]	
	lb/ton	kg/MT
Carbon disulfide	60	30
Carbonyl sulfide	20	10
Methane	50 (20–120)	25 (10–60)
Acetylene	90 (10–260)	45 (5-130)
Ethane	0[b]	0[b]
Ethylene	3.2	1.6
Propylene	0[b]	0[b]
Propane	0.46	0.23
Isobutane	0.20	0.10
n-Butane	0.54	0.27
n-Pentane	0[b]	0[b]
POM	0.004	0.002
Trace elements[c]	<0.50	<0.25

[a]These chemical substances are emitted only from the main process vent. Average values are based on six sampling runs made at a representative plant given in Reference 1. The ranges given in parentheses are based on results of a survey of operating plants given in Reference 4.

[b]Not detected at detection limit of 1 ppm.

[c]Included are beryllium, lead, and mercury, among several others.

References for Section 5.3

1. R. W. Serth and T. W. Hughes, *Source Assessment: Carbon Black Manufacture*, EPA-600/2-77-107k, U. S. Environmental Protection Agency, Research Triangle Park, NC, October 1977.

2. *Air Pollutant Emission Factors*, NAPCA Contract No. CPA-22-69-119, Resources Research, Inc., Reston, VA, April 1970.

3. I. Drogin, "Carbon Black", *Journal of the Air Pollution Control Association*, *18*:216-228, April 1968.

4. *Engineering and Cost Study of Air Pollution Control for the Petrochemical Industry, Vol. 1: Carbon Black Manufacture by the Furnace Process*, EPA-450/3-73-006a, U. S. Environmental Protection Agency, Research Triangle Park, NC, June 1974.

5. Kent C. Hustvedt and Leslie B. Evans, *Standards Support and Emission Impact Statement: An Investigation of the Best Systems of Emission Reduction for Furnace Process Carbon Black Plants in the Carbon Black Industry (Draft)*, U. S. Environmental Protection Agency, Research Triangle Park, NC, April 1976.

6. *Source Testing of a Waste Heat Boiler*, EPA-75-CBK-3, U. S. Environmental Protection Agency, Research Triangle Park, NC, January 1975.

5.5 CHLOR–ALKALI

5.5.1 Process Description[1]

Chlorine and caustic are produced concurrently by the electrolysis of brine in either the diaphragm or mercury cell. In the diaphragm cell, hydrogen is liberated at the cathode and a diaphragm is used to prevent contact of the chlorine produced at the anode with either the alkali hydroxide formed or the hydrogen. In the mercury cell, liquid mercury is used as the cathode and forms an amalgam with the alkali metal. The amalgam is removed from the cell and is allowed to react with water in a separate chamber, called a denuder, to form the alkali hydroxide and hydrogen.

Chlorine gas leaving the cells is saturated with water vapor and then cooled to condense some of the water. The gas is further dried by direct contact with strong sulfuric acid. The dry chlorine gas is then compressed for in-plant use or is cooled further by refrigeration to liquefy the chlorine.

Caustic as produced in a diaphragm-cell plant leaves the cell as a dilute solution along with unreacted brine. The solution is evaporated to increase the concentration to a range of 50 to 73 percent; evaporation also precipitates most of the residual salt, which is then removed by filtration. In mercury-cell plants, high-purity caustic can be produced in any desired strength and needs no concentration.

5.5.2 Emissions and Controls[1]

Emissions from diaphragm- and mercury-cell chlorine plants include chlorine gas, carbon dioxide, carbon monoxide, and hydrogen. Gaseous chlorine is present in the blow gas from liquefaction, from vents in tank cars and tank containers during loading and unloading, and from storage tanks and process transfer tanks. Other emissions include mercury vapor from mercury cathode cells and chlorine from compressor seals, header seals, and the air blowing of depleted brine in mercury-cell plants.

Chlorine emissions from chlor-alkali plants may be controlled by one of three general methods: (1) use of the gas in other plant processes, (2) neutralization in alkaline scrubbers, and (3) recovery of chlorine from effluent gas streams. The effect of specific control practices is shown to some extent in the table on emission factors (Table 5.5-1).

References for Section 5.5

1. Atmospheric Emissions from Chlor-Alkali Manufacture. U.S. EPA, Air Pollution Control Office. Research Triangle Park, N.C. Publication Number AP-80. January 1971.

2. Duprey, R.L. Compilation of Air Pollutant Emission Factors. U.S. DHEW, PHS. National Center for Air Pollution Control. Durham, N.C. PHS Publication Number 999-AP-42. 1968. p. 49.

Table 5.5-1. EMISSION FACTORS FOR CHLOR-ALKALI PLANTS[a]
EMISSION FACTOR RATING: B

Type of source	Chlorine gas	
	lb/100 tons	kg/100 MT
Liquefaction blow gases		
Diaphragm cell	2,000 to 10,000	1,000 to 5,000
Mercury cell[b]	4,000 to 16,000	2,000 to 8,000
Water absorber[c]	25 to 1,000	12.5 to 500
Caustic or lime scrubber[c]	1	0.5
Loading of chlorine		
Tank car vents	450	225
Storage tank vents	1,200	600
Air blowing of mercury cell brine	500	250

[a]References 1 and 2.
[b]Mercury cells lose about 1.5 pounds mercury per 100 tons (0.75 kg/100 MT) of chlorine liquefied.
[c]Control devices.

Table 5.17-1. EMISSION FACTORS FOR SULFURIC ACID PLANTS[a]
EMISSION FACTOR RATING: A

Conversion of SO_2 to SO_3, %	SO_2 emissions lb/ton of 100 % H_2SO_4	SO_2 emissions kg/MT of 100 % H_2SO_4
93	96	48.0
94	82	41.0
95	70	35.0
96	55	27.5
97	40	20.0
98	26	13.0
99	14	7.0
99.5	7	3.5
99.7	4	2.0
100	0	0.0

[a]Reference 1.
[b]The following linear interpolation formula can be used for calculating emission factors for conversion efficiencies between 93 and 100 percent: emission factor (lb/ton acid) = -13.65 (percent conversion efficiency) + 1365.

In the dual absorption process, the SO_3 gas formed in the primary converter stages is sent to a primary absorption tower where H_2SO_4 is formed. The remaining unconverted sulfur dioxide is forwarded to the final stages in the converter, from whence it is sent to the secondary absorber for final sulfur trioxide removal. The result is the conversion of a much higher fraction of SO_2 to SO_3 (a conversion of 99.7 percent or higher, on the average, which meets the performance standard). Furthermore, dual absorption permits higher converter inlet sulfur dioxide concentrations than are used in single absorption plants because the secondary conversion stages effectively remove any residual sulfur dioxide from the primary absorber.

Where dual absorption reduces sulfur dioxide emissions by increasing the overall conversion efficiency, the sodium sulfite-bisulfite scrubbing process removes sulfur dioxide directly from the absorber exit gases. In one version of this process, the sulfur dioxide in the waste gas is absorbed in a sodium sulfite solution, separated, and recycled to the plant. Test results from a 750 ton (680 MT) per day plant equipped with a sulfite scrubbing system indicated an average emission factor of 2.7 pounds per ton (1.35 kg/MT).

15.17.2.2 Acid Mist[1-3] - Nearly all the acid mist emitted from sulfuric acid manufacturing can be traced to the absorber exit gases. Acid mist is created when sulfur trioxide combines with water vapor at a temperature below the dew point of sulfur trioxide. Once formed within the process system, this mist is so stable that only a small quantity can be removed in the absorber.

In general, the quantity and particle size distribution of acid mist are dependent on the type of sulfur feedstock used, the strength of acid produced, and the conditions in the absorber. Because it contains virtually no water vapor, bright elemental sulfur produces little acid mist when burned; however, the hydrocarbon impurities in other feedstocks – dark sulfur, spent acid, and hydrogen sulfide – oxidize to water vapor during combustion. The water vapor, in turn, combines with sulfur trioxide as the gas cools in the system.

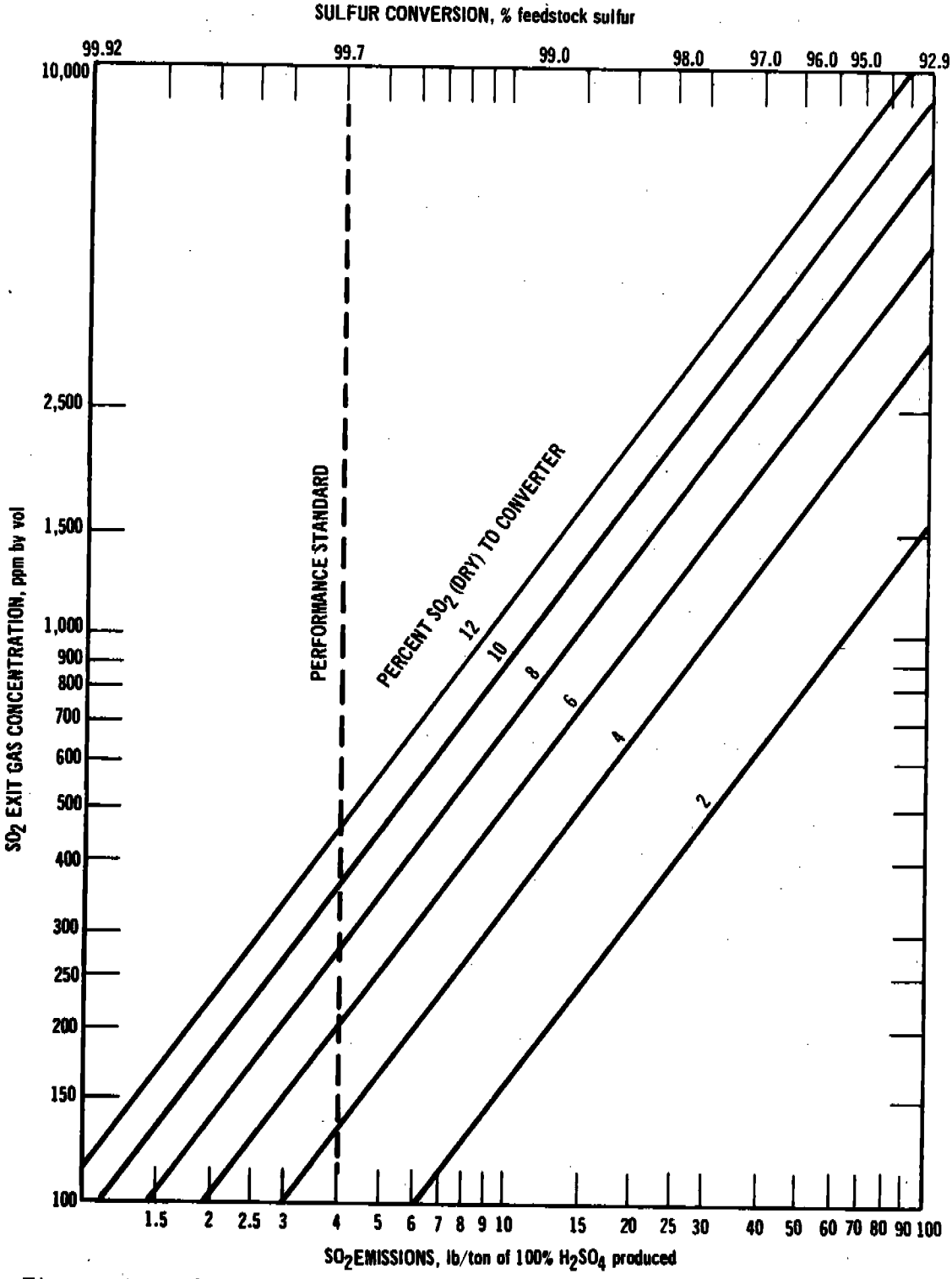

Figure 5.17-3. Sulfuric acid plant feedstock sulfur conversion versus volumetric and mass SO_2 emissions at various inlet SO_2 concentrations by volume.

The strength of acid produced—whether oleum or 99 percent sulfuric acid—also affects mist emissions. Oleum plants produce greater quantities of finer, more stable mist. For example, uncontrolled mist emissions from oleum plants burning spent acid range from 1.0 to 10.0 pounds per ton (0.5 to 5.0 kg/MT), while those from 98 percent acid plants burning elemental sulfur range from 0.4 to 4.0 pounds per ton (0.2 to 2.0 kg/MT). Furthermore, 85 to 95 weight percent of the mist particles from oleum plants are less than 2 microns in diameter, compared with only 30 weight percent that are less than 2 microns in diameter from 98 percent acid plants.

The operating temperature of the absorption column directly affects sulfur trioxide absorption and, accordingly, the quality of acid mist formed after exit gases leave the stack. The optimum absorber operating temperature is dependent on the strength of the acid produced, throughput rates, inlet sulfur trioxide concentrations, and other variables peculiar to each individual plant. Finally, it should be emphasized that the percentage conversion of sulfur dioxide to sulfur trioxide has no direct effect on acid mist emissions. In Table 5.17-2 uncontrolled acid mist emissions are presented for various sulfuric acid plants.

Two basic types of devices, electrostatic precipitators and fiber mist eliminators, effectively reduce the acid mist concentration from contact plants to less than the EPA new-source performance standard, which is 0.15 pound per ton (0.075 kg/MT) of acid. Precipitators, if properly maintained, are effective in collecting the mist particles at efficiencies up to 99 percent (see Table 5.17-3).

The three most commonly used fiber mist eliminators are the vertical tube, vertical panel, and horizontal dual-pad types. They differ from one another in the arrangement of the fiber elements, which are composed of either chemically resistant glass or fluorocarbon, and in the means employed to collect the trapped liquid. The operating characteristics of these three types are compared with electrostatic precipitators in Table 5.17-3.

Table 5.17-2. ACID MIST EMISSION FACTORS FOR SULFURIC ACID PLANTS WITHOUT CONTROLS[a]
EMISSION FACTOR RATING: B

Raw material	Oleum produced, % total output	Emissions[b] lb/ton acid	Emissions[b] kg/MT acid
Recovered sulfur	0 to 43	0.35 to 0.8	0.175 to 0.4
Bright virgin sulfur	0	1.7	0.85
Dark virgin sulfur	33 to 100	0.32 to 6.3	0.16 to 3.15
Sulfide ores	0 to 25	1.2 to 7.4	0.6 to 3.7
Spent acid	0 to 77	2.2 to 2.7	1.1 to 1.35

[a]Reference 1.
[b]Emissions are proportional to the percentage of oleum in the total product. Use the low end of ranges for low oleum percentage and high end of ranges for high oleum percentage.

Table 5.17-3. EMISSION COMPARISON AND COLLECTION EFFICIENCY OF TYPICAL ELECTROSTATIC PRECIPITATOR AND FIBER MIST ELIMINATORS[a]

Control device	Particle size collection efficiency, %		Acid mist emissions			
			98% acid plants[b]		oleum plants	
	>3 μm	≤3 μm	lb/ton	kg/MT	lb/ton	kg/MT
Electrostatic precipitator	99	100	0.10	0.05	0.12	0.06
Fiber mist eliminator						
Tubular	100	95 to 99	0.02	0.01	0.02	0.01
Panel	100	90 to 98	0.10	0.05	0.10	0.05
Dual pad	100	93 to 99	0.11	0.055	0.11	0.055

[a]Reference 2.
[b]Based on manufacturers' generally expected results; calculated for 8 percent sulfur dioxide concentration in gas converter.

References for Section 5.17

1. Atmospheric Emissions from Sulfuric Acid Manufacturing Processes. U.S. DHEW, PHS, National Air Pollution Control Administration. Washington, D.C. Publication Number 999-AP-13. 1966.

2. Unpublished report on control of air pollution from sulfuric acid plants. Environmental Protection Agency. Research Triangle Park, N.C. August 1971.

3. Standards of Performance for New Stationary Sources. Environmental Protection Agency. Washington, D.C. Federal Register. *36*(247): December 23, 1971.

5.22 LEAD ALKYL

by Jake Summers, EPA, and Pacific Environmental Services

5.22.1 Process Description[1]

Two alkyl lead compounds, tetraethyl lead (TEL) and tetramethyl lead (TML), are used as antiknock gasoline additives. Over 75 percent of the 1973 additive production was TEL, more than 90 percent of which was made by alkylation of sodium/lead alloy.

Lead alkyl is produced in autoclaves by the reaction of sodium/lead alloy with an excess of either ethyl (for TEL) or methyl (for TML) chloride in the presence of acetone catalyst. The reaction mass is distilled to separate the product, which is then purified, filtered and mixed with chloride/bromide additives. Residue is sluiced to a sludge pit, from which the bottoms are sent to an indirect steam dryer, and the dried sludge is fed to a reverberatory furnace to recover lead.

Gasoline additives are also manufactured by the electrolytic process, in which a solution of ethyl (or methyl) magnesium chloride and ethyl (or methyl) chloride is electrolyzed, with lead metal as the anode.

5.22.2 Emissions and Controls[1]

Lead emissions from the sodium/lead alloy process consist of particulate lead oxide from the recovery furnace (and, to a lesser extent, from the melting furnace and alloy reactor), alkyl lead vapor from process vents, and fugitive emissions from the sludge pit.

Emissions from the lead recovery furnace are controlled by fabric filters or wet scrubbers. Vapor streams rich in lead alkyl can either be incinerated and passed through a fabric filter or be scrubbed with water prior to incinerating.

Emissions from electrolytic process vents are controlled by using an elevated flare and a liquid incinerator, while a scrubber with toluene as the scrubbing medium controls emissions from the blending and tank car loading/unloading systems.

Table 5.22-1. LEAD ALKYL MANUFACTURE LEAD EMISSION FACTORS[a]
EMISSION FACTOR RATING: B

Process	Lead emission factor		References
	kg/10^3 kg produced	lb/ton produced	
Electrolytic process	0.5	1.0	1,2,3
Sodium/lead alloy process			
Recovery furnace	28	55	1,2,4
Process vents, TEL	2	4	1
Process vents, TML	75	150	1
Sludge pits	0.6	1.2	1

[a]No other pollutant factors available

Table 5.22-2. LEAD ALKYL MANUFACTURE CONTROL EFFICIENCIES[a]

Process	Control	Percent reduction
Sodium/lead alloy process	Fabric filter	99+
	Low energy wet scrubber	80-85
	High energy wet scrubber	95-99

[a]Reference 1

References for Section 5.22

1. *Background Information in Support of the Development of Performance Standards for the Lead Additive Industry*, EPA Contract No. 68-02-2085, PEDCo-Environmental Specialists, Inc., Cincinnati, OH, January 1976.

2. *Control Techniques for Lead Air Emissions*, EPA-450/2-77-012, U.S. Environmental Protection Agency, Research Triangle Park, NC, December 1977.

3. W.E. Davis, *Emissions Study of Industrial Sources of Lead Air Pollutants, 1970*, EPA Contract No. 68-02-0271, W.E. Davis and Associates, Leawood, KS, April 1973.

4. R.P. Betz, *et al.*, *Economics of Lead Removal in Selected Industries*, EPA Contract No. 68-02-0611, Battelle Columbus Laboratories, Columbus, OH, August 1973.

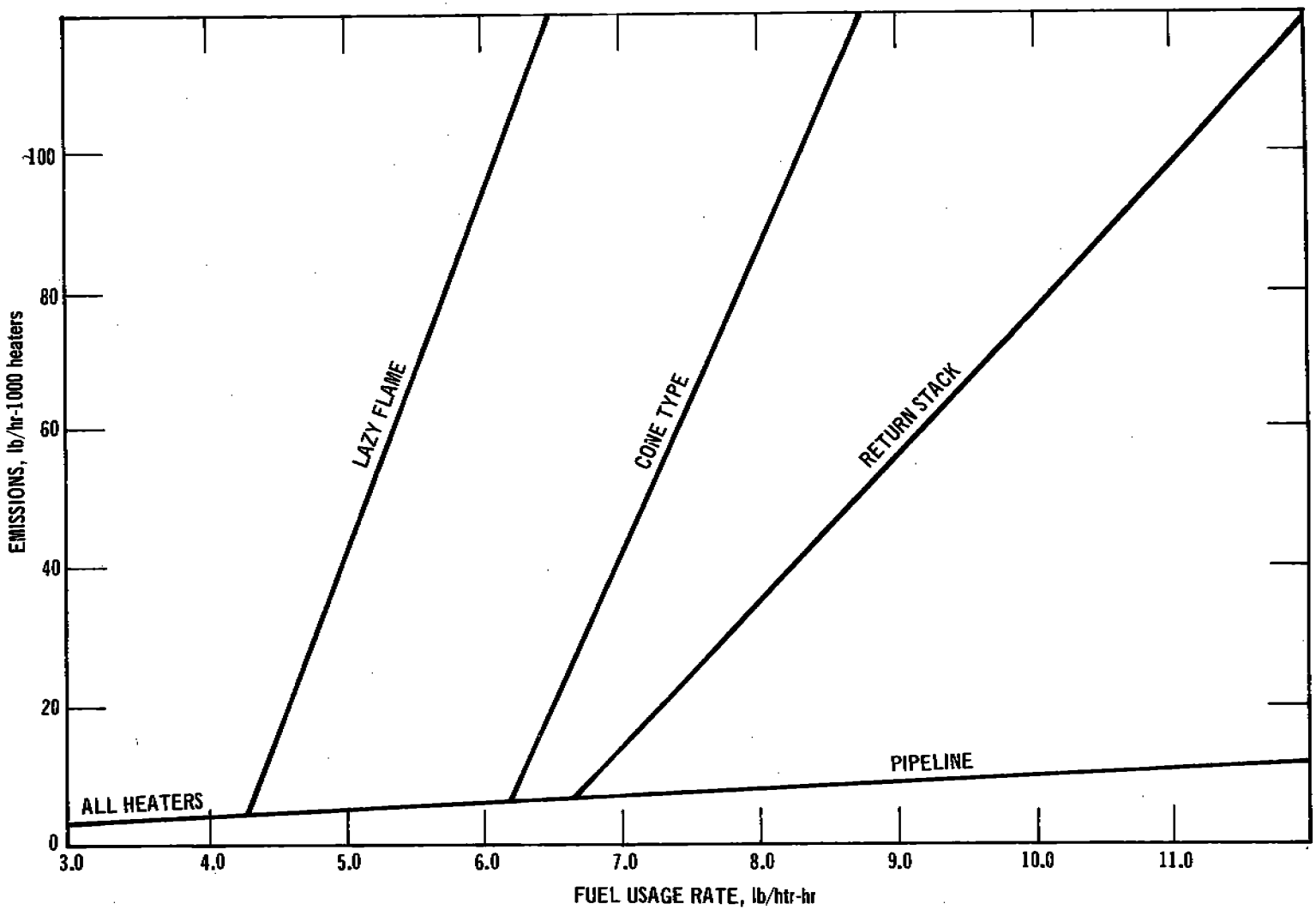

Figure 6.9-2. Particulate emissions from orchard heaters.[3,6]

Table 6.9-1. EMISSION FACTORS FOR ORCHARD HEATERS[a]
EMISSION FACTOR RATING: C

Pollutant	Type of heater				
	Pipeline	Lazy flame	Return stack	Cone	Solid fuel
Particulate					
lb/htr-hr	b	b	b	b	0.05
kg/htr-hr	b	b	b	b	0.023
Sulfur oxides[c]					
lb/htr-hr	0.13S[d]	0.11S	0.14S	0.14S	NA[e]
kg/htr-hr	0.06S	0.05S	0.06S	0.06S	NA
Carbon monoxide					
lb/htr-hr	6.2	NA	NA	NA	NA
kg/htr-hr	2.8	NA	NA	NA	NA
Hydrocarbons[f]					
lb/htr-yr	Neg[g]	16.0	16.0	16.0	Neg
kg/htr-yr	Neg	7.3	7.3	7.3	Neg
Nitrogen oxides[h]					
lb/htr-hr	Neg	Neg	Neg	Neg	Neg
kg/htr-hr	Neg	Neg	Neg	Neg	Neg

[a]References 1, 3, 4, and 6.
[b]Particulate emissions for pipeline, lazy flame, return stack, and cone heaters are shown in Figure 6.9-2.
[c]Based on emission factors for fuel oil combustion in Section 1.3.
[d]S=sulfur content.
[e]Not available.
[f]Reference 1. Evaporative losses only. Hydrocarbon emissions from combustion are considered negligible. Evaporative hydrocarbon losses for units that are part of a pipeline system are negligible.
[g]Negligible.
[h]Little nitrogen oxide is formed because of the relatively low combustion temperatures.

References for Section 6.9

1. Air Pollution in Ventura County. County of Ventura Health Department, Santa Paula, CA, June 1966.

2. Frost Protection in Citrus. Agricultural Extension Service, University of California, Ventura, CA, November 1967.

3. Personal communication with Mr. Wesley Snowden. Valentine, Fisher, and Tomlinson, Consulting Engineers, Seattle, WA, May 1971.

4. Communication with the Smith Energy Company, Los Angeles, CA, January 1968.

5. Communication with Agricultural Extension Service, University of California, Ventura, CA, October 1969.

6. Personal communication with Mr. Ted Wakai. Air Pollution Control District, County of Ventura, Ojai, CA, May 1972.

6.13 BREAD BAKING

Tom Lahre

6.13.1 General[1,2]

Bakery products generally can be divided into two groups—products leavened by yeast and products chemically leavened by baking powder. Other than yeast bread, which comprises the largest fraction of all yeast leavened baking production, leavened products include sweet rolls, crackers, pretzels, etc. Examples of chemically leavened baking products are cakes, cookies, cake doughnuts, corn bread and baking powder biscuits.

Bread is generally produced by either the straight-dough process or the sponge-dough process. In the straight-dough process, the ingredients are mixed, allowed to ferment, and then baked. In the sponge-dough process, only part of the ingredients are initially mixed and allowed to ferment, with the remainder added to the mix and fermented just prior to baking. The sponge-dough process is more often used by commercial bakeries.

In a commercial bakery, bread dough is fermented from two to four hours prior to baking at about 450°F (232°C). The temperature inside the bread does not exceed 212°F (100°C). The ovens used are predominately direct fired by natural gas. In such ovens, any vapors driven off the bread and any combustion product gases are removed through the same exhaust vent.

6.13.2 Emissions[1,2]

In the leavening process, yeast metabolizes the sugars and starches in the bread dough. During this fermentation stage, various chemical reactions take place, with the end products being primarily carbon dioxide (CO_2) and ethanol (C_2H_5OH). The carbon dioxide is necessary to leaven the dough, thereby increasing its volume. The byproduct ethanol, however, evaporates and leaves the dough. The rate of ethanol production depends on dough temperature, quantity of sweetner and type of yeast.

Laboratory experiments[1] and theoretical estimates[2] suggest that ethanol emissions from the sponge-dough process may range from 5 to 8 pounds per 1000 pounds of bread produced, whereas ethanol emissions from the straight-dough process are only 0.5 pounds per 1000 pounds produced. These factors include ethanol evaporation from all phases of bread production, although most of the emissions occur during baking. Negligible quantities of ethanol remain in the bread following baking. Several other nonmethane volatile organic compounds are also emitted from bread production, but in much smaller amounts. The reader should consult References 1 and 2 for details on how these emission factors are derived.

No controls or process modifications are employed to reduce ethanol emissions from bakeries. Some fraction of the ethanol emitted during baking could potentially be destroyed in the direct fired gas ovens, but since the ethanol does not come into contact with the flame zone, this fraction is thought to be insignificant.

References for Section 6.13

1. R.M. Keller, *Nonmethane Organic Emissions from Bread Producing Operations*, EPA-450/4-79-001, U.S. Environmental Protection Agency, Research Triangle Park, NC, December 1978.

2. D.C. Henderson, "Commercial Bakeries as a Major Source of Reactive Volatile Organic Gases", *Emission Inventory/Factor Workshop: Volume I*, EPA-450/3-78-042a, U.S. Environmental Protection Agency, Research Triangle Park, NC, August 1978.

6.14 UREA

Frank Noonan

6.14.1 General[1]

Urea ($CO[NH_2]_2$) is produced by reacting ammonia and carbon dioxide to form ammonium carbamate ($NH_2CO_2NH_4$), which is then dehydrated to form urea. There are over fifteen production methods which can carry out these reactions. While the basics of the processes are the same, variations occur in vessel design, operating conditions, and type and quantity of recycle of unreacted material. The aqueous solution produced by these processes contains approximately 70 percent urea, and the solution may be sold as is or in solid form.

In the solidification procedure, urea solution is first concentrated in crystallizer or evaporator and then solidified. If in a crystallizer, the crystals are melted and then formed into a solid. If an evaporator is used, it produces a concentrate which is then solidified. In either case, solid urea is formed by prilling or granulation. Additional granular strength and packing resistance are obtained by two methods. In the first, used by about 50 percent of the plants and involving about 9 percent of all solid urea produced, formaldehyde or a phosphate based additive is injected into the fluid material before solid formation. In the second, the sized solid particles are coated with a clay substance. The finished product is usually stored in bulk, shipped in railroad hoppers or trucks, or bagged in 20.4 kg or 36.3 kg sacks. In addition, some urea solution may be transported by pipeline, and some solid by river barge.

Figure 6.14-1 is a flow diagram of the solid urea production process.

6.14.2 Emissions[1]

Emissions from urea manufacture consist of ammonia and particles of solid urea. In solution production, they issue from the bulk loading of the product, and in solid production, they come from the evaporator, prilling tower, granulator, product finishing, bagging and loading, and bulk loading points. The prilling tower and granulator are both emission points, but are alternate, not sequential, steps in the process.

6.14.3 Controls[1]

Applied control technology for the urea industry varies from plant to plant. In the concentration section, emissions are controlled by condensing the evaporator overheads and sewering or selling the product, or by passing the stream through a scrubber. In the solid formation section, control technology depends on the formation process used. In granulation processes, scrubbers are used to control emissions and to recover entrained product. In prilling processes, about 50 percent of the industry uses some form of packed scrubber for control. The others exhaust emissions to the atmosphere. Further technology has not been widely proven. At least six companies are currently trying to develop or to test technology which will reduce prilling tower emissions effectively.

Table 6.14-1. EMISSION FACTORS FOR UREA PRODUCTION[a,b]
EMISSION FACTOR RATING: A

Emitting operation	Emission factor					
	Ammonia			Particulate		
	lb/ton		kg/MT	lb/ton		kg/MT
Solution concentration (controlled)	3.46	(±64%)	1.73	0.214	(±28%)	0.107
Prilling (uncontrolled)	0.80	(±84%)	0.40	3.20	(±17%)	1.60
Granulation	0.50	(±48%)	0.25	0.168 to 0.40	(±29%) (±25%)	0.084 to 0.20
Solid product finishing	–		–	<4.00		<2.00
Solution product bulk loading	0.24		0.12	–		–
Solid product bagging and bulk loading	–		–	<0.30		<0.15

[a]Dashes indicate no emissions from operation.
[b]Percentages represent 95% confidence interval.

Reference for Section 6.14

1. W. J. Search and R. B. Resnik, *Source Assessment: Urea Manufacture*, EPA-600/2-77-107l, U.S. Environmental Protection Agency, Research Triangle Park, NC, November 1977.

Tom Lahre

6.15 BEEF CATTLE FEEDLOTS

6.15.1 General[1]

A beef cattle feedlot is an area in which beef animals are confined for fattening prior to marketing. This fattening, or finish feeding, typically lasts four to five months, during which time the cattle are fed a high energy ration of feed grains and/or forage.

Cattle feedlots range in capacity from several head up to 100,000 cattle. Of the 146,000 beef cattle feedlots in the U.S. in 1973, 2,040 feedlots had a capacity of more than 1,000 head, marketing 65 percent of all finish fed beef cattle. Animal density in feedlots is generally in the range of 12,500 to 125,000 head/km^2.

During its stay in a feedlot, a beef animal will produce over 450 kg of manure (dry weight). Wet manure production is typically about 27 kg per day per head, usually deposited on less than 20 m^2 of surface. Because of the prodigious quantity of manure produced in a feedlot, periodic removal is necessary to prevent unacceptable accumulations. Most cattle manure is applied to nearby land as fertilizer for feed grain production, while some is lagooned, dumped on wastelands, or disposed of through incineration, liming, or pitting. Manure removal frequencies are dictated in part by climatic conditions, animal comfort, labor scheduling, and air and water pollution control potentials. Typically, manure removal is conducted from one to three times per year. When disposal is not immediately possible after removal, the manure may be stockpiled on a nearby open site.

The leading states in the industry are Texas, Nebraska, Iowa, Kansas, Colorado, California, and Illinois. These states contribute 75 percent of all feed cattle marketed and contain 72 percent of the feedlots greater than 1000 head capacity. Feedlots are generally located in low population density regions with access to major transportation routes.

6.15.2 Emissions and Controls[1]

Air pollution from feedlots originates from several points in a feedlot operation, including the holding pens, runoff holding ponds, and alleyways among pens. Major pollutants of concern include fugitive particulate, ammonia and various malodorous gases.

Fugitive particulate is generated several ways. Cattle movement within the holding pens is a primary source. Dust is also generated by wind acting on the dried surfaces and by vehicular traffic on alleyways among the pens. Fugitive particulate emissions from feedlots are composed largely of soil dust and dried manure. The potential for dust generation is greatly increased during prolonged dry periods (e.g., from late spring to midsummer in the Southwest), and when a loose, dry pad of soil and manure is allowed to build up in the pens.

Ammonia is the predominant gaseous pollutant emitted from feedlots. Ammonia is a result of anaerobic decomposition of feedlot surfaces as well as volatilization from urine. Ammonia emissions are generally increased when conditions favor anaerobic decay. For example, although 25 to 40 percent moisture levels are necessary on feedlot surfaces for aerobic decomposition (which is odorless), too much rain or watering, resulting in puddling and wet spots, can trigger increased ammonia production. Ammonia formation may also occur when anaerobic conditions exist in the manure stockpiles and runoff holding ponds. In general, higher ammonia emissions are associated with higher temperatures and humidity, overly wet conditions, and feedlot disturbances such as mounding or manure removal.

A number of extremely odorous compounds (amines, sulfides, mercaptans) may also result from anaerobic decomposition of solid manure beneath the feedlot surface as well as in the runoff holding ponds.

Generally, the same conditions that favor ammonia production will enhance the evolution of these other gases, as well.

No air pollutant control devices are applied to feedlots because of the fugitive nature of the emissions. The most effective controls involve various housekeeping measures designed to eliminate conditions that favor the generation of dust and odors. For example, measures that help to maintain sufficient moisture levels in the feedlot surface areas and manure stockpiles will reduce the generation of dust. One of the most effective dust control techniques is periodic application of water to the dry feedlot surface, by either permanent sprinkling systems or mobile tank trucks. However, care must be taken to avoid overwatering, which can cause wet spots conducive to anaerobic decay and subsequent malodors. Increasing the cattle density in the pens may also help maintain high enough moisture levels to limit particulate generation. In addition, some dust control is effected by minimizing the accumulation of dry and pulverized manure on the surfaces of the feedlots. A maximum depth of 2 to 8 cm of loose, dry manure is recommended for increasing the effectiveness of dust control procedures.

Odor and ammonia control are best effected by housekeeping measures that enhance aerobic rather than anaerobic decomposition of the cattle wastes. For example, besides reducing dust emissions, sprinkling provides moisture for aerobic biodegradation of the manure. Good drainage must be provided, however, and overwatering must be avoided. Deep accumulations of manure of slurry consistency can optimize anaerobic conditions. Hence, feedlot surfaces should be periodically scraped to remove such accumulations. Scraping should be done carefully, so that only the surface layer is disturbed. Manure stockpiles should not be allowed to get too large, too wet, or encrusted, and they should be disposed of within four or five days. If the stockpiles are composted, the manure should be piled in long narrow windrows to allow access for turning the piles to promote aerobic conditions and to enable rapid control of spontaneous combustion fires. Anaerobic conditions can be reduced in runoff holding ponds by removing solids from the runoff, by adding more water to the ponds to dilute the nutrient content, and by aeration of the surface. Runoff water also may be treated chemically to suppress the release of malodorous gases.

Emission factors for feedlot operations are shown in Table 6.15-1. These factors should be considered at best to be crude estimates of potential emissions from feedlots where no measures are employed to control dust or odors. The limitations of these factors are more fully discussed in the footnote to Table 6.15-1. The reader should consult Reference 1 for a detailed discussion of the emissions and control information available on beef cattle feedlots.

Table 6.15-1. EMISSION FACTORS FOR BEEF CATTLE FEEDLOTS[a]
EMISSION FACTOR RATING: E

Pollutant	Feedlot capacity basis	Feedlot throughput basis
	lb (kg) per day per 1000 head capacity	ton (metric ton) per 1000 head throughput
Particulate[b]	280 (130)	27 (25)
Ammonia[c]	11 (5)	1.1 (1)
Amines[c]	0.4 (0.2)	0.044 (0.04)
Total sulfur compounds[c]	1.7 (0.8)	0.15 (0.14)

[a]These factors represent general feedlot operations with no housekeeping measures for air pollution control. Because of the limited data available on emissions and the nature of the techniques utilized to develop emission factors, Table 6.15-1 should only be used to develop order-of-magnitude estimates of feedlot emissions. All factors are based on information compiled in Reference 1.

[b]These factors represent emissions during a dry season at a feedlot where watering as a dust control measure would not be a common practice. No data are available to estimate emission factors for feedlots during periods of abundant precipitation or where watering and other housekeeping measures are employed for dust control.

[c]These factors represent emission factors for feedlots that have not been chemically treated and where no special housekeeping measures are employed for odor control.

Reference for Section 6.15

1. J.A. Peters and T.R. Blackwood, *Source Assessment: Beef Cattle Feedlots*, EPA-600/2-77-107, U.S. Environmental Protection Agency, Research Triangle Park, NC, June 1977.

6.16 DEFOLIATION AND HARVESTING OF COTTON

Rob McConnell

6.16.1 General

Wherever it is grown in the U.S., cotton is defoliated or disiccated prior to harvest. Defoliants are used on the taller varieties of cotton which are machine picked for lint and seed cotton, while desiccants usually are used on short, stormproof cotton varieties of lower yield that are harvested by mechanical stripper equipment. More than 99 percent of the national cotton area is harvested mechanically. The two principal harvest methods are machine picking, with 70 percent of the harvest from 61 percent of the area, and machine stripping, with 29 percent of the harvest from 39 percent of the area. Picking is practiced throughout the cotton regions of the U.S., while stripping is limited chiefly to the dry plains of Texas and Oklahoma.

Defoliation may be defined as the process by which leaves are abscised from the plant. The process may be initiated by drought stress, low temperatures or disease, or it may be chemically induced by topically applied defoliant agents or by overfertilization. The process helps lodged plants to return to an erect position, removes the leaves which can clog the spindles of the picking machine and strain the fiber, accelerates the opening of mature bolls, and reduces boll rots. Desiccation by chemicals is the drying or rapid killing of the leaf blades and petioles, with the leaves remaining in a withered state on the plant. Harvest-aid chemicals are applied to cotton as water-based spray, either by aircraft or by a ground machine.

Mechanical cotton pickers, as the name implies, pick locks of seed cotton from open cotton bolls and leave the empty burs and unopened bolls on the plant. Requiring only one operator, typical modern pickers are self propelled and can simultaneously harvest two rows of cotton at a speed of 1.1 to 1.6 meters per second (2.5 - 3.6 mph). When the picker basket gets filled with seed cotton, the machine is driven to a cotton trailer at the edge of the field. As the basket is hydraulically raised and tilted, the top swings open, allowing the cotton to fall into the trailer. When the trailer is full, it is pulled from the field, usually by pick-up truck, and taken to a cotton gin.

Mechanical cotton strippers remove open and unopened bolls, along with burs, leaves and stems from cotton plants, leaving only bare branches. Tractor-mounted, tractor-pulled or self propelled, strippers require only one operator. They harvest from one to four rows of cotton at speeds of 1.8 to 2.7 m/s (4.0 - 6.0 mph). After the cotton is stripped, it enters a conveying system that carries it from the stripping unit to an elevator. Most conveyers utilize either augers or a series of rotating spike-toothed cylinders to move the cotton, accomplishing some cleaning by moving the cotton over perforated, slotted or wire mesh screen. Dry plant material (burs, stems and leaves) is crushed and dropped through openings to the ground. Blown air is sometimes used to assist cleaning.

6.16.2 Emissions and Controls

Emission factors for the drifting of major chemicals applied to cotton are compiled from literature and reported in Reference 1. In addition, drift losses from arsenic acid spraying were developed by field testing. Two off-target collection stations, with six air samplers each, were located downwind from the ground spraying operations. The measured concentration was applied to an infinite line source atmosphere diffusion model (in reverse) to calculate the drift emission rate. This was in turn used for the final emission factor calculation. The emissions occur from July to October, preceding by two weeks the period of harvest in each cotton producing region. The drift emission factor for arsenic acid is eight times lower than previously estimated, since Reference 1 used a ground rig rather than an airplane, and because of the low volatility of arsenic acid. Various methods of controlling drop size, proper timing of application, and modification of equipment are practices which can reduce drift hazards. Fluid additives have been used that increase the viscosity of the spray formulation, and thus decrease the number of fine droplets (<100 μm).

Spray nozzle design and orientation also control the droplet size spectrum. Drift emission factors for the defoliation of desiccation of cotton are listed in Table 6.16-1.

Table 6.16-1. EMISSION FACTORS FOR DEFOLIATION OR DESICCATION OF COTTON[a]

EMISSION FACTOR RATING: C

Pollutant	Emission factor[b]	
	lb/ton	g/kg
Sodium chlorate	20.0	10.0
DEF	20.0	10.0
Arsenic acid	12.2	6.1
Paraquat	20.0	10.0

[a]Reference 1
[b]Factor is in terms of quantity of drift per quantity applied.

Three unit operations are involved in mechanical harvesting of cotton: harvesting, trailer loading (basket dumping) and transport of trailers in the field. Emissions from these operations are in the form of solid particulates. Particulate emissions (<7 μm mean aerodynamic diameter) from these operations were developed in Reference 2. The particulates are composed mainly of raw cotton dust and solid dust, which contains free silica. Minor emissions include small quantities of pesticide, defoliant and desiccant residues that are present in the emitted particulates. Dust concentrations from harvesting were measured by following each harvesting machine through the field at a constant distance directly downwind from the machine, while staying in the visible plume centerline. The procedure for trailer loading was the same, but since the trailer is stationary while being loaded, it was necessary only to stand a fixed distance directly downwind from the trailer while the plume or puff passed over. Readings were taken upwind of all field activity to get background concentrations. Particulate emission factors for the principal types of cotton harvesting operations in the U.S. are shown in Table 6.16-2. The factors are based on average machine speed of 1.34 m/s (3.0 mph) for pickers and 2.25 m/s (5.03 mph) for strippers, on a basket capacity of 109 kg (240 lb), on a trailer capacity of 6 baskets, on a lint cotton yield of 63.0 metric tons/km^2 (1.17 bale/acre) for pickers and 41.2 metric tons/km^2 (.77 bale/acre) for strippers, and on a transport speed of 4.47 m/s (10.0 mph). Analysis of particulate samples showed average free silica content of 7.9 percent for mechanical cotton picking and 2.3 percent for mechanical cotton stripping. Estimated maximum percentages for pesticides, defoliants and desiccants from harvesting are also noted in Table 6.16-2. No current cotton harvesting equipment or practices provide for control of emissions. In fact, equipment design and operating practices tend to maximize emissions. Preharvest treatment (defoliation and desiccation) and harvest practices are timed to minimize moisture and trash content, so they also tend to maximize emissions. Soil dust emissions from field transport can be reduced by lowering vehicle speed.

Table 6.16-2. PARTICULATE EMISSION FACTORS FOR COTTON HARVESTING OPERATIONS[a]

EMISSION FACTOR RATING: C

Type of harvester	Harvesting		Trailer loading		Transport		Total	
	kg/km²	lb/mi²	kg/km²	lb/mi²	kg/km²	lb/mi²	kg/km²	lb/mi²
Picker[c]								
Two-row, with basket	.46	2.6	.070	.40	.43	2.5	.96	5.4
Stripper[d]								
Two-row, pulled trailer	7.4	42	–[b]	–	.28	1.6	7.7	44
Two-row, with basket	2.3	13	.092	.52	.28	1.6	2.7	15
Four-row, with basket	2.3	13	.092	.52	.28	1.6	2.7	15
Weighted average[e]	4.3	24	.056	.32	.28	1.6	4.6	26

[a]Emission factors are from Reference 2 for particulate of <7 μm mean aerodynamic diameter.

[b]Not applicable

[c]Free silica content is 7.9%; maximum content of pesticides and defoliants is 0.02%.

[d]Free silica content is 2.3%; maximum content of pesticides and desiccants is 0.2%.

[e]The weighted average stripping factors are based on estimates that 2% of all strippers are four-row models with baskets, and of the remainder, 40% are two-row models pulling trailers and 60% are two-row models with mounted baskets.

References for Section 6.16

1. J. A. Peters and T. R. Blackwood, *Source Assessment: Defoliation of Cotton–State of the Art*, EPA-600/2-77-107g, U.S. Environmental Protection Agency, Research Triangle Park, NC, July 1977.

2. J. W. Snyder and T. R. Blackwood, *Source Assessment: Mechanical Harvesting of Cotton–State of the Art*, EPA-600/2-77-107d, U. S. Environmental Protection Agency, Research Triangle Park, NC, July 1977.

7.3.3 Fugitive Emission Factors

Potential sources of fugitive particulate emissions in the copper industry are roasting, smelting, converting and fire refining. Table 7.3-3 shows the potential uncontrolled fugitive emission factors from these sources.

Fifteen percent of the particulate emissions from roasting are less than 10 μm, and 50 percent of those from reverberatory furnaces are less than 37 μm.[10,11] The mean particulate diameter of converter emissions is 44 μm. Sixteen percent of pouring and casting emissions are less than 10 μm, and 46 percent are less than 74 μm.[11]

Table 7.3-3. POTENTIAL FUGITIVE EMISSION FACTORS FOR UNCONTROLLED PRIMARY COPPER SMELTERS

EMISSION FACTOR RATING: E

Type of operation	Particulates[a]	
	lb/ton	kg/MT
Roasting[b]	23.00	11.50
Reverberatory smelting furnace[c]	8.50	4.25
Converter[b,d]	10.50	5.25
Fire refining furnace (anode furnace and casting)[d,e]	1.90	0.95

[a]Factors expressed as units per units of end product.

[b]Based on material balance, using same percentage estimated for SO_2 from Reference 12.

[c]Reference 13.

[d]Reference 14.

[e]Reference 15.

Additional References for Section 7.3

10. *Control Techniques for Lead Air Emissions*, EPA-450/2-77-012, U.S. Environmental Protection Agency, Research Triangle Park, NC, January 1978.

11. L.J. Shannon and P.G. Gorman, *Particulate Pollutant System Study, Vol. III: Emission Characteristics*, EPA Contract No. 22-69-104, Midwest Research Institute, Kansas City, MO, 1971.

12. *Evaluation of the Controllability of Copper Smelters in the United States*, EPA Contract No. 68-02-1354, Pacific Environmental Services, Inc., Santa Monica, CA, November 1974.

13. *A Study of Fugitive Emissions from Metallurgical Processes*, EPA Contract No. 68-02-2120, Midwest Research Institute, Kansas City, MO, November 1976.

14. *Evaluation of Sulfur Dioxide and Arsenic Control Techniques for ASARCO: Tacoma Copper Smelter*, EPA Contract No. 68-02-1321, PEDCo Environmental, Inc., Cincinnati, OH, September 1976.

15. Personal Communication from Herbert Z. Stuart, Phelps Dodge Corp., New York, NY, to Don R. Goodwin, Emission Standards and Engineering Division, Office of Air Quality Planning and Standards, U. S. Environmental Protection Agency, Research Triangle Park, NC, 21 January 1977.

7.5 IRON AND STEEL PRODUCTION

Revised by William M. Vatavuk and L.K. Felleisen

7.5.1 General[1]

Iron and steel manufacturing processes may be grouped into five distinct sequential operations: (1) coke production; (2) pig iron manufacture in blast furnaces; (3) steel-making processes using basic oxygen, electric arc, and open hearth furnaces; (4) rolling mill operations; and (5) finishing operations (see Figure 7.5-1). The first three of these operations encompass nearly all of the air pollution sources. Coke production is discussed in detail elsewhere in this publication.

7.5.1.1 Pig Iron Manufacture[2,3]—Pig iron is produced in blast furnaces, which are large refractory-lined chambers into which iron ore, coke, and limestone are charged and allowed to react with large amounts of hot air to produce molten iron. Slag and blast furnace gases are by-products of this operation. The production of 1 unit weight of pig iron requires an average charge of 1.55 unit weights of iron-bearing charge, 0.55 unit weight of coke, 0.20 unit weight of limestone, and 2.3 unit weight of air. Blast furnace by-products consist of 0.2 unit weight of slag, 0.02 unit weight of flue dust, and 2.5 unit weights of gas per unit of pig iron produced. Most of the coke used in the process is produced in by-product coke ovens. The flue dust and other iron ore fines from the process are converted into useful blast furnace charge via sintering operations.

Blast furnace combustion gas and the gases that escape from bleeder openings constitute the major sources of particulate emissions. The dust in the gas consists of 35 to 50 percent iron, 4 to 14 percent carbon, 8 to 13 percent silicon dioxide, and small amounts of aluminum oxide, manganese oxide, calcium oxide, and other materials. Because of its high carbon monoxide content, this gas has a low heating value (about 100 Btu/ft) and is utilized as a fuel within the steel plant. Before it can be efficiently oxidized, however, the gas must be cleaned of particulates. Initially, the gases pass through a settling chamber or dry cyclone, where about 60 percent of the dust is removed. Next, the gases undergo a one- or two-stage cleaning operation. The primary cleaner is normally a wet scrubber, which removes about 90 percent of the remaining particulates. The secondary cleaner is a high-energy wet scrubber (usually a venturi) or an electrostatic precipitator, either of which can remove up to 90 percent of the particulates that have passed through the primary cleaner. Taken together, these control devices provide an overall dust removal efficiency of approximately 96 percent.

All of the carbon monoxide generated in the gas is normally used for fuel. Conditions such as "slips," however, can cause instantaneous emissions of carbon monoxide. Improvements in techniques for handling blast furnace burden have greatly reduced the occurrence of slips. In Table 7.5-1 particulate and carbon monoxide emission factors are presented for blast furnaces.

7.5.1.2 Steel Making Processes -

7.5.1.2.1 Open Hearth Furnaces[2,3]—In the open hearth process, a mixture of scrap iron, steel, and pig iron is melted in a shallow rectangular basin, or "hearth," for which various liquid gaseous fuels provide the heat. Impurities are removed in a slag.

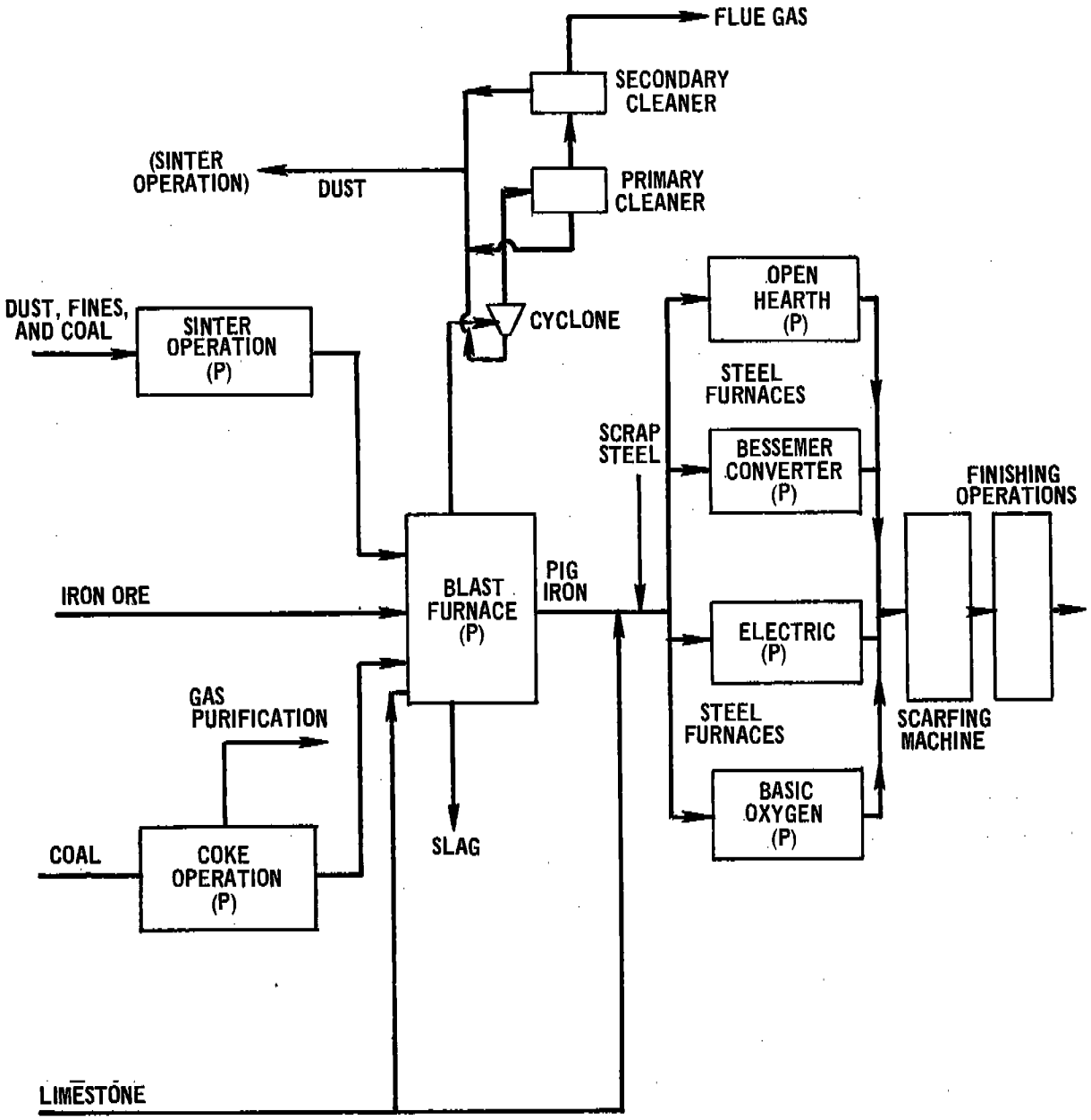

Figure 7.5-1. Basic flow diagram of iron and steel processes. "P" denotes a major source of particulate emissions.

7.6 PRIMARY LEAD SMELTING

Revised by William M. Vatavuk

7.6.1 Process Description [1-3]

Lead is usually found in nature as a sulfide ore containing small amounts of copper, iron, zinc, and other trace elements. It is normally concentrated at the mine from an ore of 3 to 8 percent lead to an ore concentrate of 55 to 70 percent lead, containing from 13 to 19 percent free and uncombined sulfur by weight.

Normal practice for the production of lead metal from this concentrate involves the following operations (see Figure 7.6-1):

1. Sintering, in which the concentrate lead and sulfur are oxidized to produce lead oxide and sulfur dioxide. (Simultaneously, the charge material, comprised of concentrates, recycle sinter, sand, and other inert materials, is agglomerated to form a dense, permeable material called sinter.)
2. Reducing the lead oxide contained in the sinter to produce molten lead bullion.
3. Refining the lead bullion to eliminate any impurities.

Sinter is produced by means of a sinter machine, a continuous steel-pallet conveyor belt moved by gears and sprockets. Each pallet consists of perforated or slotted grates, beneath which are situated windboxes connected to fans that provide a draft on the moving sinter charge. Depending on the direction of this draft, the sinter machine is either of the updraft or downdraft type. Except for the draft direction, however, all machines are similar in design, construction, and operation.

The sintering reaction is autogenous and occurs at a temperature of approximately 1000°C:

$$2\,PbS + 3\,O_2 \rightarrow 2\,PbO + 2\,SO_2 \qquad (1)$$

Operating experience has shown that system operation and product quality are optimum when the sulfur content of the sinter charge is between 5 and 7 percent by weight. To maintain this desired sulfur content, sulfide-free fluxes such as silica and limestone, plus large amounts of recycled sinter and smelter residues are added to the mix. The quality of the product sinter is usually determined by its hardness (Ritter Index), which is inversely proportional to the sulfur content. Hard quality sinter (low sulfur content) is preferred because it resists crushing during discharge from the sinter machine. Conversely, undersized sinter will usually result from insufficient desulfurization and is recycled for further processing.

Of the two kinds of sintering machines used, the updraft design is superior for many reasons. First, the sinter bed height is more permeable (and, hence, can be greater) with an updraft machine, thereby permitting a higher production rate than that of a downdraft machine of similar dimensions. Secondly, the small amounts of elemental lead that form during sintering will solidify at their point of formation with updraft machines; whereas, in downdraft operation, the metal tends to flow downward and collect on the grates or at the bottom of the sinter charge, thus causing increased pressure drop and attendant reduced blower capacity. In addition, the updraft system exhibits the capability of producing sinter of higher lead content and requires less maintenance than the downdraft machine. Finally, and most important from an air pollution control standpoint, updraft sintering can produce a single strong SO_2 effluent stream from the operation, by use of weak gas recirculation. This, in turn, permits the more efficient and economical use of such control methods as sulfuric acid recovery plants.

Lead reduction is carried out in a blast furnace, basically a water-jacketed shaft furnace supported by a refractory base. Tuyeres, through which combustion air is admitted under pressure, are located near the bottom and are evenly spaced on either side of the furnace.

The furnace is charged with a mixture of sinter (80 to 90 percent of charge), metallurgical coke (8 to 14 percent of the charge), and other materials, such as limestone, silica, litharge, slag-forming constituents, and various recycled and clean-up materials. In the furnace the sinter is reduced to lead bullion; most of the impurities are

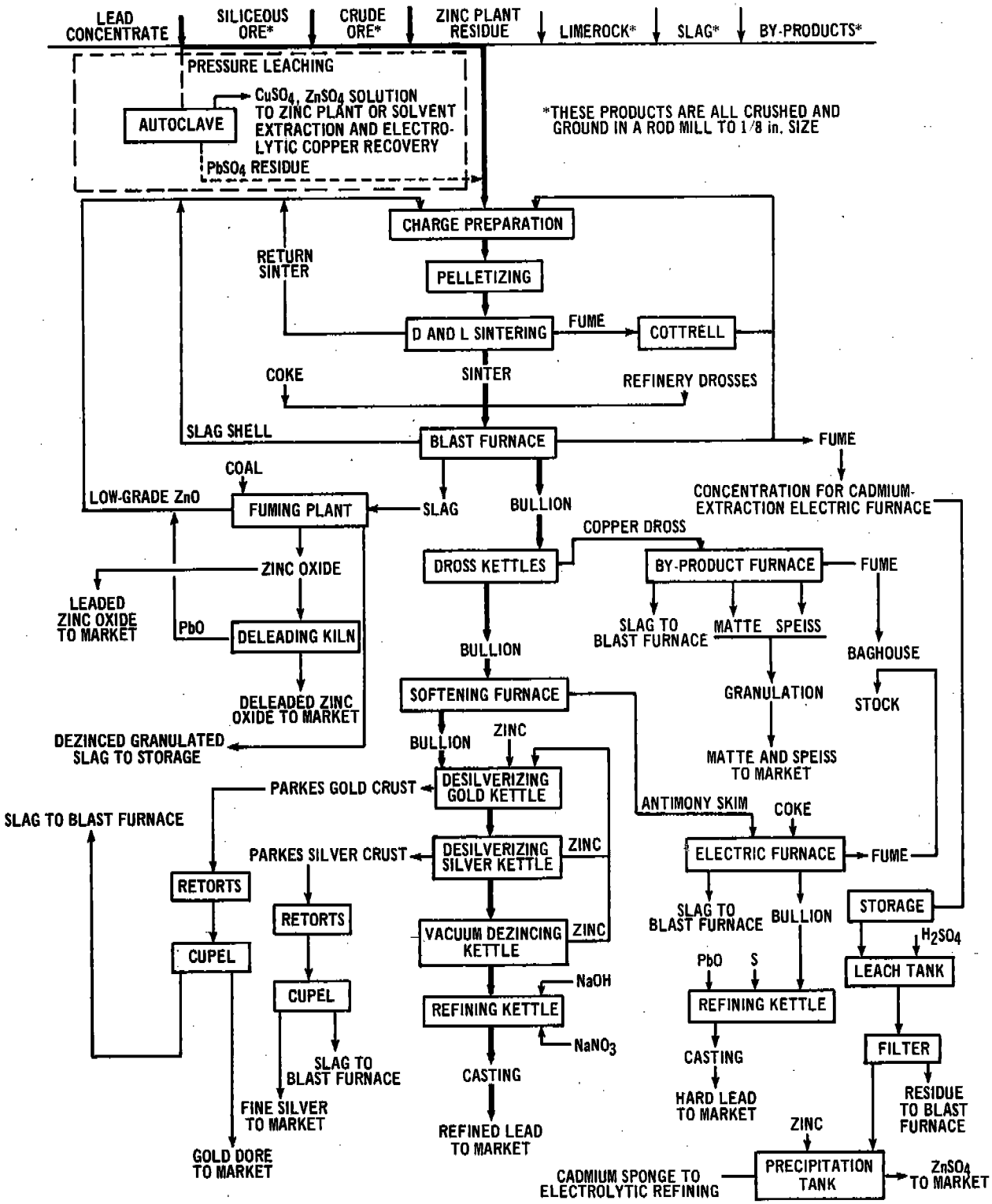

Figure 7.6-1. Typical flowsheet of pyrometallurgical lead smelting.[2]

Table 7.9-1. PARTICULATE EMISSION FACTORS FOR FURNACES USED IN SECONDARY COPPER SMELTING AND ALLOYING PROCESSES[a,b]
EMISSION FACTOR RATING: B

Furnace and charge type	Control equipment[c]	Emissions Avg kg/MT	Range kg/MT	Avg lb/ton	Range lb/ton
Cupola					
Scrap copper	0	0.002	-	0.003	-
Insulated copper wire	0	120	-	230	-
	1	5	-	10	-
Scrap copper and brass	0	35	30-40	70	60-80
	1	1.2	1.0-1.4	2.4	2.0-2.8
Reverberatory					
Copper	0	2.6	0.4-15	5.1	0.8-30
	2	0.2	0.1-0.3	0.4	0.3-0.6
Brass and bronze	0	18	0.3-35	36	0.6-70
	2	1.3	0.3-2.5	2.6	0.05-5
Rotary					
Brass and bronze	0	150	50-250	300	100-500
	1	7	3-10	13	6-19
Crucible and pot					
Brass and bronze	0	11	1-20	21	2-40
	1	0.5	0.1-1	1	0.1-2
Electric arc					
Copper	0	2.5	1-4	5	2-8
	2	0.5	0.02-1.0	1	0.04-2
Brass and bronze	0	5.5	2-9	11	4-18
	2	3	-	6	-
Electric induction					
Copper	0	3.5	-	7	-
	2	0.25	-	0.5	-
Brass and bronze	0	10	0.3-20	20	0.5-40
	2	0.35	0.01-0.65	0.7	0.01-1.3

[a] All factors given in terms of raw materials charged to unit.
[b] The information for Table 7.9-1 was based on unpublished data furnished by the following:
Philadelphia Air Management Services, Philadelphia, Pennsylvania.
New Jersey Department of Environmental Protection, Trenton, New Jersey.
New Jersey Department of Environmental Protection, Metro Field Office, Springfield, New Jersey.
New Jersey Department of Environmental Protection, Newark Field Office, Newark, New Jersey.
New York State Department of Environmental Conservation, New York, New York.
The City of New York Department of Air Resources, New York, New York.
Cook County Department of Environmental Control, Maywood, Illinois.
Wayne County Department of Health, Air Pollution Control Division, Detroit, Michigan.
City of Cleveland Department of Public Health and Welfare, Division of Air Pollution Control, Cleveland, Ohio.
State of Ohio Environmental Protection Agency, Columbus, Ohio.
City of Chicago Department of Environmental Control, Chicago, Illinois.
South Coast Air Quality Management District, Los Angeles, California.
[c] Control equipment: 0 signifies none operated
1 indicates electrostatic precipitator
2 indicates baghouse filter system

References for Section 7.9

1. Air Pollution Aspects of Brass and Bronze Smelting and Refining Industry. U.S. Department of Health, Education and Welfare, National Air Pollution Control Administration, Raleigh, N. C. Publication No. AP-58. November 1969.

2. Air Pollution Engineering Manual (2nd Ed.). John A. Danielson, Air Pollution Control District, County of Los Angeles (ed.). U.S. Environmental Protection Agency, Research Triangle Park, N.C. Publication No. AP-40. May 1973.

3. Emission Factors and Emission Source Information for Primary and Secondary Copper Smelters. U.S. Environmental Protection Agency, Research Triangle Park, N.C. Publication No. EPA-450/3-77-051. December 1977.

7.9.3 Fugitive Emission Factors

Potential sources of fugitive particulate emissions from secondary smelting and alloying operations are sweating, drying, insulation burning, smelting furnaces and casting. Table 7.9-2 shows these sources and their corresponding emission factors.

No data are presently available concerning size characteristics of the fugitive emissions.

Table 7.9-2. POTENTIAL FUGITIVE PARTICULATE EMISSION FACTORS FOR UNCONTROLLED COPPER SMELTING AND ALLOYING

EMISSION FACTOR RATING: E

Types of operation	Particulates[a]	
	lb/ton	kg/MT
Sweating furnace[b]	0.75	0.38
Rotary dryer[b]	13.75	6.88
Insulation burning[c]	13.75	6.88
Electric induction furnace[d]	0.14	0.07
Reverberatory furnace[e]	5.27	2.64
Rotary furnace[d]	4.43	2.22
Crucible furnace[e]	0.49	0.25
Cupola (blast) furnace[e]	3.66	1.83
Casting[b]	0.015	0.008

[a]Factors are expressed as units per volume of scrap processed, except casting, which is expressed as units per volume cast.
[b]Engineering judgement assuming that fugitive emissions are equal to 5% of stack emissions shown in Reference 4.
[c]Engineering judgement assuming that fugitive emissions are equal to 5% of stack emission factor shown in Reference 5.
[d]Engineering judgement assuming that fugitive emissions are equal to 5% of stack emission factor shown in Reference 1.
[e]Engineering judgement, average of two sets of data, assuming that fugitive emissions are equal to 5% of stack emission factors shown in References 1 and 5.

Additional References for Section 7.9

4. *Multimedia Environmental Assessment of the Secondary Nonferrous Metal Industry, Volume II: Industry Profile*, EPA Contract no. 68-02-1319, Radian Corporation, Austin, TX, June 1976.

5. *Particulate Pollutant System Study, Volume III: Handbook of Emission Properties*, EPA Contract No. 22-69-104, Midwest Research Institute, Kansas City, MO, May 1971.

7.10 GRAY IRON FOUNDRIES

7.10.1 Process Description[1]

Three types of furnaces are used to produce gray iron castings: cupolas, reverberatory furnaces, and electric induction furnaces. The cupola is the major source of molten iron for the production of castings. In operation, a bed of coke is placed over the sand bottom in the cupola. After the bed of coke has begun to burn properly, alternate layers of coke, flux, and metal are charged into the cupola. Combustion air is forced into the cupola, causing the coke to burn and melt the iron. The molten iron flows out through a taphole.

Electric furnaces are commonly used where special alloys are to be made. Pig iron and scrap iron are charged to the furnace and melted, and alloying elements and fluxes are added at specific intervals. Induction furnaces are used where high-quality, clean metal is available for charging.

7.10.2 Emissions[1]

Emissions from cupola furnaces include gases, dust, fumes, and smoke and oil vapors. Dust arises from dirt on the metal charge and from fines in the coke and limestone charge. Smoke and oil vapor arise primarily from the partial combustion and distillation of oil from greasy scrap charged to the furnace. Also, the effluent from the cupola furnace has a high carbon monoxide content that can be controlled by an afterburner. Emissions from reverberatory and electric induction furnaces consist primarily of metallurgical fumes and are relatively low. Table 7.10-1 presents emission factors for the manufacture of iron castings.

Table 7.10-1. EMISSION FACTORS FOR GRAY IRON FOUNDRIES[a,b,c]
EMISSION FACTOR RATING: B

Type of furnace	Particulates		Carbon monoxide	
	lb/ton	kg/MT	lb/ton	kg/MT
Cupola				
Uncontrolled	17	8.5	145[c,d]	72.5[c,d]
Wet cap	8	4	–	–
Impingement scrubber	5	2.5	–	–
High-energy scrubber	0.8	0.4	–	–
Electrostatic precipitator	0.6	0.3	–	–
Baghouse	0.2	0.1	–	–
Reverberatory	2	1	–	–
Electric induction	1.5	0.75	–	–

[a]References 2 through 5. Emission factors expressed as units per unit weight of metal charged.
[b]Approximately 85 percent of the total charge is metal. For every unit weight of coke in the charge, 7 unit weights of gray iron are produced.
[c]Reference 6.
[d]A well-designed afterburner can reduce emissions to 9 pounds per ton (4.5 kg/MT) of metal charged.[2]

References for Section 7.10

1. Hammond, W. F. and J. T. Nance. Iron Castings. In: Air Pollution Engineering Manual. Danielson, J. A. (ed.). U.S. DHEW, PHS, National Center for Air Pollution Control. Cincinnati, Ohio. Publication Number 999-AP-40. 1967. p. 258-268.

2. Hammond, W. F. and S. M. Weiss. Unpublished report on air contaminant from emissions metallurgical operations in Los Angeles County. Los Angeles County Air Pollution Control District. (Presented at Air Pollution Control Institute, July 1964).

3. Crabaugh, H. C. et al. Dust and Fumes from Gray Iron Foundries: How They Are Controlled in Los Angeles County. Air Repair. *4*(3): November 1954.

4. Hammond, W. F., and J. T. Nance. Iron Castings. In: Air Pollution Engineering Manual. Danielson, J. A. (ed.). U.S. DHEW, PHS. National Center for Air Pollution Control. Cincinnati, Ohio. Publication Number 999-AP-40. 1967. p. 260.

5. Kane, J. M. Equipment for Cupola Control. American Foundryman's Society Transactions. *64*:525-531. 1956.

6. Air Pollution Aspects of the Iron Foundry Industry. A. T. Kearney and Company. Prepared for Environmental Protection Agency, Research Triangle Park, N.C., under Contract Number CPA 22-69-106. February 1971.

7.15 STORAGE BATTERY PRODUCTION

by Jake Summers, EPA and Pacific Environmental Services

7.15.1 Process Description

Lead/acid storage batteries are produced from lead alloy ingots and lead oxide. The latter may or may not be manufactured at the same plant (Section 7.16).

Molten lead is pumped or flows directly from pot furnaces into the molds that form the battery grids. Batches of lead sulfate paste are blended by mixing lead oxide, water, sulfuric acid, an organic expander and other constituents. Pasting machines force the stiff mixture into the interstices of the grids (which are thereafter referred to as plates).

The plates are cured and stacked in an alternating positive and negative block formation, with insulators between them. They are then fastened together either by a burning operation (welding leads to the tabs of each pair of positive and negative plates) or by a "cast on strip" process (in which molten lead is poured around and between the plate tabs). Positive and negative terminals are then welded to each element, which can go to either the wet or dry battery assembly line. Pot furnaces are used for reclaiming defective lead parts.

7.15.2 Emissions and Controls[1]

Grid casting furnaces and machines, paste mixers, plate dryers, reclaim furnaces and parts casting machines can be controlled by low- to medium-energy impingement and entrainment scrubbers. "Three process" (element stacking, lead burning and battery casting) emissions can be controlled by pulse jet fabric filters. Waste material caught in control systems is recycled to recover the lead.

Table 7.15-1. STORAGE BATTERY PRODUCTION EMISSION FACTORS[a]

EMISSION FACTOR RATING: B

Process	Particulate emission factor		Lead emission factor	
	(kg/10^3 batteries)	(lb/10^3 batteries)	(kg/10^3 batteries)	(lb/10^3 batteries)
Grid casting	0.8	1.8	0.4	0.9
Paste mixing	1.0	2.2	0.5	1.1
Lead oxide mill (baghouse outlet)	0.10	0.24	0.05	0.12
Three-process operation[b]	13.2	29.2	6.6	14.6
Lead reclaim furnace	0.70	1.54	0.35	0.77
Small parts casting	0.09	0.19	0.05	0.77
Formation	14.0[c]	32.0[c]	N/A	N/A
Storage battery production (total)	29.9	67.2	8	17.6

[a]References 2-6
[b]Stacking, lead burning and battery assembly
[c]H_2SO_4

Table 7.15-2. STORAGE BATTERY PRODUCTION CONTROL EFFICIENCIES[a]

Process	Control	Percent reduction
Storage battery production (total)	Low- to medium-energy impingement and entrainment scrubbers	85 – 90+
	Pulse jet fabric filter	95 – 99+

[a]Reference 1

References for Section 7.15

1. *Background Information in Support of the Development of Performance Standards for the Lead Additive Industry*, EPA Contract No. 68-02-2085, PEDCo-Environmental Specialists, Inc., Cincinnati, OH, January 1976.

2. *Control Techniques for Lead Air Emissions*, EPA-450/2-77-012, U.S. Environmental Protection Agency, Research Triangle Park, NC, December 1977.

3. *Screening Study To Develop Background Information and To Determine the Significance of Emissions from the Lead/Acid Battery Industry*, EPA Contract No. 68-02-0299, Vulcan-Cincinnati, Inc., Cincinnati, OH, December 1972.

4. Confidential test data from a major battery manufacturer, July 1973.

5. *Particulate and Lead Emission Measurements from Lead Oxide Plants*, EPA Contract No. 68-02-0226, Monsanto Research Corp., Dayton, OH, August 1973.

6. *Background Information in Support of the Development of Performance Standards for the Lead/Acid Battery Industry*, Interim Report, EPA Contract No. 68-02-2085, PEDCo-Environmental Specialists, Inc., Cincinnati, OH, December 1975.

7.16 LEAD OXIDE AND PIGMENT PRODUCTION

by Jake Summers, EPA, and Pacific Environmental Services

7.16.1 General

Lead oxide is used in the manufacture of lead/acid storage batteries (Section 7.15) and as a pigment in paints. Black oxide, which is used exclusively in storage batteries, contains 60 to 80 percent litharge (PbO) the remainder being finely divided metallic lead.[1] The major lead pigment is red lead (Pb_3O_4), which is used principally in ferrous metal protective paints. Other lead pigments include white lead and lead chromates.

Most lead oxides and many lead pigments are derived from lead monoxide (PbO) in the form of litharge, which is produced by (1) partially oxidizing lead and milling it into a powder, which is then completely oxidized in a reverberatory furnace; (2) oxidizing and stirring pig lead in a reverberatory furnace or rotary kiln; (3) running molten lead into a cupelling furnace; or (4) atomizing molten lead in a flame. The product must be cooled quickly to below 300°C (572°F) to avoid formation of red lead.[2]

Black oxide is usually produced (in the same furnace in which the litharge is made) by either the ball mill or Barton process. Cyclones and fabric filters collect the product. Red lead is produced by oxidizing litharge in a reverberatory furnace. Basic carbonate white lead production is based on the reaction of litharge with acetic acid or acetate ions. White leads other than carbonates are made either by chemical or fuming processes. Chromate pigments are generally manufactured by precipitation or calcination.

7.16.2 Emissions and Controls

Automatic shaker type fabric filters, often preceded by cyclone mechanical collectors or settling chambers, are the almost universal choice for collecting lead oxides and pigments. Where fabric filters are not appropriate, scrubbers are used, resulting in higher emissions. The ball mill and Barton processes of black oxide manufacturing recover the lead product by these two means. Collection of dust and fumes from the production of red lead is likewise an economic necessity, since particulate emissions, although small, are about 90 percent lead. Data on emissions from the production of white lead pigments are not available, but they have been estimated because of health and safety regulations. The emissions from dryer exhaust scrubbers account for over 50 percent of the total lead emitted in lead chromate production.

Table 7.16-1. LEAD OXIDE AND PIGMENT PRODUCTION EMISSION FACTORS[a]

EMISSION FACTOR RATING: B

Process	Particulate		Lead emission factor		References
	lb/ton produced	kg/10³ kg produced	lb/ton produced	kg/10³ kg produced	
Lead oxide production:					
Barton pot[b]	0.43-0.85	0.21-0.43	0.44	0.22	4,6,7
Calcining furnace	c	c	14.0	7.0	6
Pigment production:					
Red lead[b]	1.0[d]	0.5[d]	0.9	0.5	4,5
White lead[b]	c	c	0.55	0.28	4,5
Chrome pigments:	c	c	0.13	0.065	4,5

[a]Reference 4, pp. 4-283 and 4-287.
[b]Measured at baghouse outlet. Baghouse is considered process equipment.
[c]Data not available.
[d]Only PbO and oxygen used in red lead production, so particulate emissions assumed to be about 90% lead.

Table 7.16-2. LEAD OXIDE AND PIGMENT PRODUCTION CONTROL EFFICIENCIES

Process	Control	Percent reduction
Lead oxide and pigment production	Mechanical shaker fabric filter (preceded by dry cyclone or settling chamber)	99[a]
	Scrubber	70-95[b]

[a]Reference 3.
[b]Reference 4.

References for Section 7.16

1. E. J. Ritchie, *Lead Oxides*, Independent Battery Manufacturers Association, Inc., Largo, FL, 1974.

2. W. E. Davis, *Emissions Study of Industrial Sources of Lead Air Pollutants, 1970*, EPA Contract No. 68-02-0271, W. E. Davis and Associates, Leawood, KS, April 1973.

3. *Background Information in Support of the Development of Performance Standards for the Lead Additive Industry*, EPA Contract No. 68-02-2085, PEDCo-Environmental Specialists, Inc., Cincinnati, OH, January 1976.

4. *Control Techniques for Lead Air Emissions*, EPA-450/2-77-012. U.S. Environmental Protection Agency, Research Triangle Park, NC, December 1977.

5. R. P. Betz, *et al.*, *Economics of Lead Removal in Selected Industries*, EPA Contract No. 68-02-0299, Battelle Columbus Laboratories, Columbus, OH, December 1972.

6. Emission Test No. 74-PB-0-1, Office of Air Quality Planning and Standards, U.S. Environmental Protection Agency, Research Triangle Park, NC, August 1973.

7.17 MISCELLANEOUS LEAD PRODUCTS

by Jake Summers, EPA, and Pacific Environmental Services

7.17.1 Type Metal Production

7.17.1.1 General – Lead type, used primarily in the letterpress segment of the printing industry, is cast from a molten lead alloy and remelted after use. Linotype and monotype processes produce a mold, while the stereotype process produces a plate for printing. All type metal is an alloy consisting of 60 to 85 percent recovered lead, with antimony, tin and a small amount of virgin metal.

7.17.1.2 Emissions and Controls – The melting pot is the major source of emissions, containing hydrocarbons as well as lead particulates. Pouring the molten metal into the molds involves surface oxidation of the metal, possibly producing oxidized fumes, while the trimming and finishing operations emit lead particles. It is estimated that 35 percent of the total emitted particulate is lead.[1]

Approximately half of the current lead type operations control lead emissions, by about 80 percent. The other operations are uncontrolled.[2] The most frequently controlled sources are the main melting pots and drossing areas. Linotype equipment does not require controls when operated properly. Devices in current use on monotype and stereotype lines include rotoclones, wet scrubbers, fabric filters, and electrostatic precipitators, all which can be used in various combinations.

7.17.2 Can Soldering

7.17.2.1 Process Description – Side seams of cans are soldered on a machine consisting of a solder-coated roll operating in a bath of molten solder, typically containing 98 percent lead. After soldering, excess is wiped away by a rotating cloth buffer, which creates some dust (Table 7.17-1).[3]

7.17.2.2 Emissions and Controls – Hoods, exhaust ducts and mechanical cyclones (Table 7.17-2) collect the large flakes generated at the wiping station, but some dust escapes in the form of particles 20 microns or smaller, with a lead content of 3 to 38 percent. Maintaining a good flux cover is the most effective means of controlling lead emissions from the solder batch. Low energy wet collectors or fabric filters can also control lead emissions from can soldering.

7.17.3 Cable Covering

7.17.3.1 Process Description – About 90 percent of the lead cable covering produced in the United States is lead cured jacketed cables, and 10 percent is on lead sheathed cables. In preparation of the former type, an unalloyed lead cover applied in the vulcanizing treatment during the manufacture of rubber-insulated cable must be stripped from the cable and remelted.

Lead coverings are applied to insulated cable by hydraulic extrusion of solid lead around the cable. Molten lead is continuously fed into an extruder or screw press, where it solidifies as it progresses. A melting kettle supplies lead to the press.

7.17.3.2 Emissions and Controls – The melting kettle is the only source of atmospheric lead emissions, and it is generally uncontrolled.[4] Average particle size is approximately 5 microns, with a lead content of about 70 to 80 percent.[3,5]

Cable covering processes do not usually include particulate collection devices, although fabric filters, rotoclone wet collectors and dry cyclone collectors can reduce lead emissions (Table 7.17-2). Lowering and controlling the melt temperature, enclosing the melting unit and using fluxes to provide a cover on the melt can also minimize emissions.

Table 7.17-1 EMISSION FACTORS FOR MISCELLANEOUS SOURCES[a]

EMISSION FACTOR RATING: C

Process	Particulate emission factor		Lead emission factor		References
	Metric	English	Metric	English	
Type metal production	0.4 kg/10^3 kg Pb proc[b]	0.7 lb/ton Pb proc[b]	0.13 kg/10^3 kg Pb proc	0.25 lb/ton Pb proc	2,7
Can soldering	0.8 × 10^6 baseboxes prod[c]	0.9 ton/10^6 baseboxes prod[c]	160 kg/10^6 baseboxes prod[f]	0.18 ton/10^6 baseboxes prod	7
Cable covering	0.3 kg/10^3 kg Pb proc[d]	0.6 lb/ton Pb proc[d]	0.25 kg/10^3 kg Pb proc	0.5 lb/ton Pb proc	3,5,7
Metallic lead products					
Ammunition	e	e	≤0.5 kg/10^6 kg Pb proc	1.0 lb/10^3 ton Pb proc	3,7
Bearing metals	e	e	negligible	negligible	3,7
Other sources of lead	e	e	0.8 kg/10^3 kg Pb proc	1.5 lb/ton Pb proc	3,7

[a]Proc = processed; prod = produced.
[b]Calculated on the basis of 35% of the total (Reference 1).
[c]Reference 7, pp. 4-297 and 4-298.
[d]Reference 7, p. 4-301.
[e]Data not available.
[f]Basebox = 20.23 m^2 (217.8 ft^2), standard tin plate sheet area.

Table 7.17-2. CAN SOLDERING AND CABLE COVERING CONTROL EFFICIENCIES

Process	Control	Percent reduction
Can soldering	Mechanical cyclone	75 +
Cable covering	Fabric filter	99.9
	Rotoclone wet collector	75-85
	Dry cyclone collector	45 +

[a]Reference 7

7.17.4 Metallic Lead Products

7.17.4.1 General – Lead is consumed and emitted in the manufacture of ammunition, bearing metals and other lead products. Lead used in the manufacture of ammunition is melted and alloyed before it is cast, sheared, extruded, swaged or mechanically worked. Some lead is also reacted to form lead azide, a detonating agent. Lead is used in bearing manufacture by alloying it with copper, bronze, antimony and tin.

Other lead products include terne metal (a plating alloy), weights and ballasts, caulking lead, plumbing supplies, roofing materials, casting metal foil, collapsible metal tubes and sheet lead. Lead is also used for galvanizing, annealing and plating. It is usually melted and cast prior to mechanical forming operations.

7.17.4.2 Emissions and Controls – Little or no air pollution control equipment is currently used by manufacturers of metallic lead products.[6] Emissions from bearing manufacture are negligible, even without controls.[3]

References for Section 7.17

1. N. J. Kulujian, *Inspection Manual for the Enforcement of New Source Performance Standards: Portland Cement Plants*, EPA Contract No. 68-02-1355, PEDCo-Environmental Specialists, Inc., Cincinnati, OH, January 1975.

2. *Atmospheric Emissions from Lead Typesetting Operation Screening Study*, EPA Contract No. 68-02-2085, PEDCo-Environmental Specialists, Inc., Cincinnati, OH, January 1976.

3. W. E. Davis, *Emissions Study of Industrial Sources of Lead Air Pollutants, 1970*, EPA Contract No. 68-02-0271, W. E. Davis Associates, Leawood, KS, April 1973.

4. R. P. Betz, *et al.*, *Economics of Lead Removal in Selected Industries*, EPA Contract No. 68-02-0611, Battelle Columbus Laboratories, Columbus, OH, August 1973.

5. E. P. Shea, *Emissions from Cable Covering Facility*, EPA Contract No. 68-02-0228, Midwest Research Institute, Kansas City, MO, June 1973.

6. *Mineral Industry Surveys: Lead Industry in May 1976*, Bureau of Mines, U.S. Department of the Interior, Washington, DC, August 1976.

7. *Control Techniques for Lead Air Emissions*, EPA-450/2-77-012, U.S. Environmental Protection Agency, Research Triangle Park, NC, December 1977.

7.18 LEADBEARING ORE CRUSHING AND GRINDING

by Jake Summers, EPA, and Pacific Environmental Services

7.18.1 Process Description

Lead and zinc ores are normally deep mined, whereas copper ores are open pit mined. Lead, zinc and copper are usually found together (in varying percentages) in combination with sulfur and/or oxygen.

In underground mines, the ore is disintegrated by percussive drilling machines, run through a primary crusher, and then conveyed to the surface. In open pit mines, ore and gangue are loosened and pulverized by explosives, scooped up by mechanical equipment, and transported to the concentrator.

Standard crushers, screens, and rod and ball mills classify and reduce the ore to powders in the 65 to 325 mesh range. The finely divided particles are separated from the gangue and are concentrated in a liquid medium by gravity and/or selective flotation, then cleaned, thickened and filtered. The concentrate is dried prior to shipment to the smelter.

7.18.2 Emissions and Controls

Lead emissions are basically fugitive, caused by drilling, blasting, loading, conveying, screening, unloading, crushing and grinding. The primary means of control are good mining techniques and equipment maintenance. These practices include enclosing the truck loading operation, wetting or covering truck loads and stored concentrates, paving the road from mine to concentrator, sprinkling the unloading area, and preventing leaks in the crushing and griding enclosures. Cyclones and fabric filters can be used in the milling operations.

Particulate and sulfur dioxide emission factors for lead ore crushing and materials handling operations are given in Table 7.18-1. Lead emissions from the mining and milling of copper ores are negligible.

Table 7.18-1. EMISSION FACTORS FOR ORE CRUSHING AND GRINDING

EMISSION FACTOR RATING: B

Type of ore	Particulate emission factor[a]		Lead emission factor[b]	
	lb/ton processed	kg/10^3 kg processed	lb/ton processed	kg/10^3 kg processed
Pb[c]	6.0	3.0	0.3	0.15
Zn	6.0	3.0	0.012	0.006
Cu	6.4	3.2	0.012	0.006
Pb-Zn	6.0	3.0	0.12	0.06
Cu-Pb	6.4	3.2	0.12	0.06
Cu-Zn	6.4	3.2	0.012	0.006
Cu-Pb-Zn	6.4	3.2	0.12	0.06

[a]Reference 1, pp. 4-39
[b]References 1-5
[c]Refer to Section 7.6

References for Section 7.18

1. *Control Techniques for Lead Air Emissions*, EPA-450/2-77-012, U. S. Environmental Protection Agency, Research Triangle Park, NC, December 1977.

2. W. E. Davis, *Emissions Study of Industrial Sources of Lead Air Pollutants, 1970*, EPA Contract No. 68-02-0271, W. E. Davis and Associates, Leawood, KS, April 1973.

3. *Environmental Assessment of the Domestic Primary Copper, Lead, and Zinc Industry*, EPA Contract No. 68-02-1321, PEDCO-Environmental Specialists, Inc., Cincinnati, OH, September 1976.

4. Communication with Mr. J. Patrick Ryan, Bureau of Mines, U. S. Department of the Interior, Washington, DC, September 9, 1976.

5. B. G. Wixson and J. C. Jennett, "The New Lead Belt in the Forested Ozarks of Missouri", *Environmental Science and Technology, 9(13)*:1128-1133, December 1975.

8.10.3 Fugitive Emission Factors

Potential sources of fugitive particulate emissions from concrete batching are shown in Table 8.10-2, along with the corresponding emission factors.

Particle size characteristics of the dust vary according to the grade of cement. A range of 10 to 20 percent by weight less than 5 μm is typical for the various grades of cement. The dust generated from dry concrete batching plants has characteristics similar to those of the cement dust discussed for wet concrete batching plants.

Table 8.10-2. POTENTIAL UNCONTROLLED FUGITIVE EMISSION FACTORS FROM CONCRETE BATCHING PROCESS

EMISSION FACTOR RATING: E

Type of operation	Particulates[a]	
	lb/ton	kg/MT
Transfer of sand and aggregate to elevated bins[b]	0.04	0.02
Cement unloading to elevated storage silos[c]	0.24	0.12
Weight hopper loading of cement, sand, aggregate[b]	0.02	0.01
Mixer loading of cement, sand, aggregate (central mix plant)[b]	0.04	0.02
Loading of transit mix truck[b]	0.02	0.01
Loading of dry-batch truck[b]	0.04	0.02

[a]Factors expressed in units per unit of material handled.

[b]Engineering judgement, based on observations and emission tests on similar controlled sources.

[c]Reference 5. From testing of mechanical unloading to hopper and subsequent transport of cement on enclosed bucket elevator to elevator bins with a fabric sock over the bin vent.

Additional Reference for Section 8.10

5. Personal communication from T. R. Blackwood, Monsanto Research Corporation, Dayton, OH, to John M. Zoller, PEDCo-Environmental, Inc., Cincinnati, OH, 18 October 1976.

10. WOOD PRODUCTS INDUSTRY

Wood processing involves the conversion of raw wood to either pulp, pulpboard, or one of several types of wallboard including plywood, particleboard, or hardboard. This section presents emissions data for chemical wood pulping, for pulpboard and plywood manufacturing, and for woodworking operations. The burning of wood waste in boilers and conical burners is not included as it is discussed in Chapters 1 and 2 of this publication.

10.1 CHEMICAL WOOD PULPING

Revised by Thomas Lahre

10.1.1 General[1]

Chemical wood pulping involves the extraction of cellulose from wood by dissolving the lignin that binds the cellulose fibers together. The principal processes used in chemical pulping are the kraft, sulfite, neutral sulfite semichemical (NSSC), dissolving, and soda; the first three of these display the greatest potential for causing air pollution. The kraft process accounts for about 65 percent of all pulp produced in the United States; the sulfite and NSSC processes, together, account for less than 20 percent of the total. The choice of pulping process is determined by the product being made, by the type of wood species available, and by economic considerations.

10.1.2 Kraft Pulping

10.1.2.1 Process Description[1,2]—The kraft process (see Figure 10.1.2-1) involves the cooking of wood chips under pressure in the presence of a cooking liquor in either a batch or a continuous digester. The cooking liquor, or "white liquor," consisting of an aqueous solution of sodium sulfide and sodium hydroxide, dissolves the lignin that binds the cellulose fibers together.

When cooking is completed, the contents of the digester are forced into the blow tank. Here the major portion of the spent cooking liquor, which contains the dissolved lignin, is drained, and the pulp enters the initial stage of washing. From the blow tank the pulp passes through the knotter where unreacted chunks of wood are removed. The pulp is then washed and, in some mills, bleached before being pressed and dried into the finished product.

It is economically necessary to recover both the inorganic cooking chemicals and the heat content of the spent "black liquor," which is separated from the cooked pulp. Recovery is accomplished by first concentrating the liquor to a level that will support combustion and then feeding it to a furnace where burning and chemical recovery take place.

Initial concentration of the weak black liquor, which contains about 15 percent solids, occurs in the multiple-effect evaporator. Here process steam is passed countercurrent to the liquor in a series of evaporator tubes that increase the solids content to 40 to 55 percent. Further concentration is then effected in the direct contact evaporator. This is generally a scrubbing device (a cyclonic or venturi scrubber or a cascade evaporator) in which hot combustion gases from the recovery furnace mix with the incoming black liquor to raise its solids content to 55 to 70 percent.

The black liquor concentrate is then sprayed into the recovery furnace where the organic content supports combustion. The inorganic compounds fall to the bottom of the furnace and are discharged to the smelt dissolving tank to form a solution called "green liquor." The green liquor is then conveyed to a causticizer where slaked lime (calcium hydroxide) is added to convert the solution back to white liquor, which can be reused in subsequent cooks. Residual lime sludge from the causticizer can be recycled after being dewatered and calcined in the hot lime kiln.

Many mills need more steam for process heating, for driving equipment, for providing electric power, etc., than can be provided by the recovery furnace alone. Thus, conventional industrial boilers that burn coal, oil, natural gas, and in some cases, bark and wood waste are commonly employed.

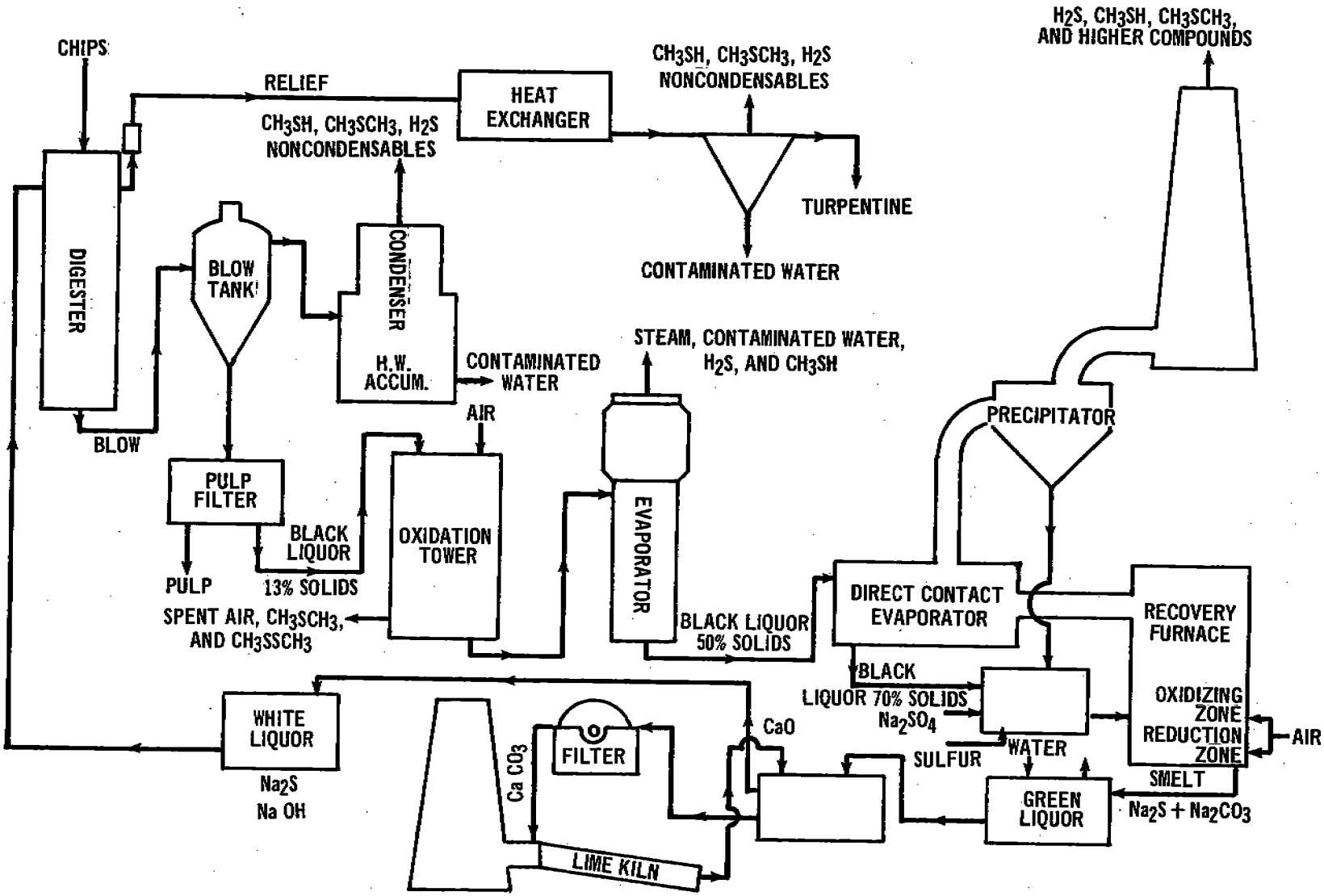

Figure 10.1.2-1. Typical kraft sulfate pulping and recovery process.

10.1.2.2. Emission and Controls[1-6]—Particulate emissions from the kraft process occur primarily from the recovery furnace, the lime kiln, and the smelt dissolving tank. These emissions consist mainly of sodium salts but include some calcium salts from the lime kiln. They are caused primarily by the carryover of solids plus the sublimation and condensation of the inorganic chemicals.

Particulate control is provided on recovery furnaces in a variety of ways. In mills where either a cyclonic scrubber or cascade evaporator serves as the direct contact evaporator, further control is necessary as these devices are generally only 20 to 50 percent efficient for particulates. Most often in these cases, an electrostatic precipitator is employed after the direct contact evaporator to provide an overall particulate control efficiency of 85 to ≥ 99 percent. In a few mills, however, a venturi scrubber is utilized as the direct contact evaporator and simultaneously provides 80 to 90 percent particulate control. In either case auxiliary scrubbers may be included after the precipitator or the venturi scrubber to provide additional control of particulates.

Particulate control on lime kilns is generally accomplished by scrubbers. Smelt dissolving tanks are commonly controlled by mesh pads but employ scrubbers when further control is needed.

The characteristic odor of the kraft mill is caused in large part by the emission of hydrogen sulfide. The major source is the direct contact evaporator in which the sodium sulfide in the black liquor reacts with the carbon dioxide in the furnace exhaust. The lime kiln can also be a potential source as a similar reaction occurs involving residual sodium sulfide in the lime mud. Lesser amounts of hydrogen sulfide are emitted with the noncondensible off-gasses from the digesters and multiple-effect evaporators.

The kraft-process odor also results from an assortment of organic sulfur compounds, all of which have extremely low odor thresholds. Methyl mercaptan and dimethyl sulfide are formed in reactions with the wood component lignin. Dimethyl disulfide is formed through the oxidation of mercaptan groups derived from the lignin. These compounds are emitted from many points within a mill; however, the main sources are the digester/blow tank systems and the direct contact evaporator.

Although odor control devices, per se, are not generally employed in kraft mills, control of reduced sulfur compounds can be accomplished by process modifications and by optimizing operating conditions. For example, black liquor oxidation systems, which oxidize sulfides into less reactive thiosulfates, can considerably reduce odorous sulfur emissions from the direct contact evaporator, although the vent gases from such systems become minor odor sources themselves. Noncondensible odorous gases vented from the digester/blow tank system and multiple-effect evaporators can be destroyed by thermal oxidation, usually by passing them through the lime kiln. Optimum operation of the recovery furnace, by avoiding overloading and by maintaining sufficient oxygen residual and turbulence, significantly reduces emissions of reduced sulfur compounds from this source. In addition, the use of fresh water instead of contaminated condensates in the scrubbers and pulp washers further reduces odorous emissions. The effect of any of these modifications on a given mill's emissions will vary considerably.

Several new mills have incorporated recovery systems that eliminate the conventional direct contact evaporators. In one system, preheated combustion air rather than flue gas provides direct contact evaporation. In the other, the multiple-effect evaporator system is extended to replace the direct contact evaporator altogether. In both of these systems, reduced sulfur emissions from the recovery furnace/direct contact evaporator reportedly can be reduced by more than 95 percent from conventional uncontrolled systems.

Sulfur dioxide emissions result mainly from oxidation of reduced sulfur compounds in the recovery furnace. It is reported that the direct contact evaporator absorbs 50 to 80 percent of these emissions; further scrubbing, if employed, can reduce them another 10 to 20 percent.

Potential sources of carbon monoxide emissions from the kraft process include the recovery furnace and lime kilns. The major cause of carbon monoxide emissions is furnace operation well above rated capacity, making it impossible to maintain oxidizing conditions.

Some nitrogen oxides are also emitted from the recovery furnace and lime kilns although the amounts are relatively small. Indications are that nitrogen oxides emissions from each of these sources are on the order of 1 pound per air-dried ton (0.5 kg/air-dried MT) of pulp produced.[5 6]

A major source of emissions in a kraft mill is the boiler for generating auxiliary steam and power. The fuels used are coal, oil, natural gas, or bark/wood waste. Emission factors for boilers are presented in Chapter 1.

Table 10.1.2-1 presents emission factors for a conventional kraft mill. The most widely used particulate controls devices are shown along with the odor reductions resulting from black liquor oxidation and incineration of noncondensible off-gases.

10.1.3 Acid Sulfite Pulping

by Tom Lahre

10.1.3.1 Process Description[14] - The production of acid sulfite pulp proceeds similarly to kraft pulping except that different chemicals are used in the cooking liquor. In place of the caustic solution used to dissolve the lignin in the wood, sulfurous acid is employed. To buffer the cooking solution, a bisulfite of sodium, magnesium, calcium, or ammonium is used. A simplified flow diagram of a magnesium-base process is shown in Figure 10.1.3-1.

Digestion is carried out under high pressure and high temperature in either batch-mode or continuous digesters in the presence of a sulfurous acid-bisulfite cooking liquor. When cooking is completed, the digester is either discharged at high pressure into a blow pit or its contents are pumped out at a lower pressure into a dump tank. The spent sulfite liquor (also called red liquor) then drains through the bottom of the tank and is either treated and disposed, incinerated, or sent to a plant for recovery of heat and chemicals. The pulp is then washed and processed through screens and centrifuges for removal of knots, bundles of fibers, and other materials. It subsequently may be bleached, pressed, and dried in paper-making operations.

Because of the variety of bases employed in the cooking liquor, numerous schemes for heat and/or chemical recovery have evolved. In calcium-base systems, which are used mostly in older mills, chemical recovery is not practical, and the spent liquor is usually discarded or incinerated. In ammonium-base operations, heat can be recovered from the spent liquor through combustion, but the ammonium base is consumed in the process. In sodium- or magnesium-base operations heat, sulfur, and base recovery are all feasible.

If recovery is practiced, the spent weak red liquor (which contains more than half of the raw materials as dissolved organic solids) is concentrated in a multiple-effect evaporator and direct contact evaporator to 55 to 60 percent solids. Strong liquor is sprayed into a furnace and burned, producing steam for the digesters, evaporators, etc., and to meet the mills power requirements.

When magnesium base liquor is burned, a flue gas is produced from which magnesium oxide is recovered in a multiple cyclone as fine white powder. The magnesium oxide is then water-slaked and used as circulating liquor in a series of venturi scrubbers which are designed to absorb sulfur dioxide from the flue gas and form a bisulfite solution for use in the cook cycle. When sodium-base liquor is burned, the inorganic compounds are recovered as a molten smelt containing sodium sulfide and sodium carbonate. This smelt may be processed further and used to absorb sulfur dioxide from the flue gas and sulfur burner. In some sodium-base mills, however, the smelt may be sold to a nearby kraft mill as raw material for producing green liquor.

Table 10.1.2-1. EMISSION FACTORS FOR SULFATE PULPING[a]
(unit weights of air-dried unbleached pulp)
EMISSION FACTOR RATING: A

Source	Type control	Particulates[b]		Sulfur dioxide (SO_2)[c]		Carbon monoxide[d]		Hydrogen sulfide($S^=$)[e]		RSH, RSR, RSSR($S^=$)[e,f]	
		lb/ton	kg/MT	lb/ton	kg/MT	lb/ton	kg/MT	lb/ton	kg/MT	lb/ton	kg/MT
Digester relief and blow tank	Untreated[g]	–	–	–	–	–	–	0.1	0.05	1.5	0.75
Brown stock washers	Untreated	–	–	0.01	0.005	–	–	0.02	0.01	0.2	0.1
Multiple effect evaporators	Untreated[g]	–	–	0.01	0.005	–	–	0.1	0.05	0.4	0.2
Recovery boiler and direct contact evaporator	Untreated[h]	150	75	5	2.5	2 - 60	1 - 30	12[i]	6[i]	1[i]	0.5[i]
	Venturi scrubber[j]	47	23.5	5	2.5	2 - 60	1 - 30	12[i]	6[i]	1[i]	0.5[i]
	Electrostatic precipitator	8	4	5	2.5	2 - 60	1 - 30	12[i]	6[i]	1[i]	0.5[i]
	Auxiliary scrubber	3 - 15[k]	1.5 - 7.5[k]	3	1.5	2 - 60	1 - 30	12[i]	6[i]	1[i]	0.5[i]
Smelt dissolving tank	Untreated	5	2.5	0.1	0.05	–	–	0.04	0.02	0.4	0.2
	Mesh pad	1	0.5	0.1	0.05	–	–	0.04	0.02	0.4	0.2
Lime kilns	Untreated	45	22.5	0.3	0.15	10	5	0.5	0.25	0.25	0.125
	Scrubber	3	1.5	0.2	0.1	10	5	0.5	0.25	0.25	0.125
Turpentine condenser	Untreated	–	–	–	–	–	–	0.01	0.005	0.5	0.25
Miscellaneous sources[l]	Untreated	–	–	–	–	–	–	–	–	0.5	0.25

[a]For more detailed data on specific types of mills, consult Reference 1.

[b]References 1, 7, 8.

[c]References 1, 7, 9, 10.

[d]References 6, 11. Use higher value for overloaded furnaces.

[e]References 1, 4, 7-10, 12, 13. These reduced sulfur compounds are usually expressed as sulfur.

[f]RSH-methyl mercaptan; RSR-dimethyl sulfide; RSSR-dimethyl disulfide.

[g]If the noncondensible gases from these sources are vented to the lime kiln, recovery furnace, or equivalent, the reduced sulfur compounds are destroyed..

[h]These factors apply when either a cyclonic scrubber or cascade evaporator is used for direct contact evaporation with no further controls.

[i]These reduced sulfur compounds (TRS) are typically reduced by 50 percent when black liquor oxidation is employed but can be cut by 90 to 99 percent when oxidation is complete and the recovery furnace is operated optimally.

[j]These factors apply when a venturi scrubber is used for direct contact evaporation with no further controls.

[k]Use 15(7.5) when the auxiliary scrubber follows a venturi scrubber and 3(1.5) when employed after an electrostatic precipitator.

[l]Includes knotter vents, brownstock seal tanks, etc. When black liquor oxidation is included, a factor of 0.6(0.3) should be used.

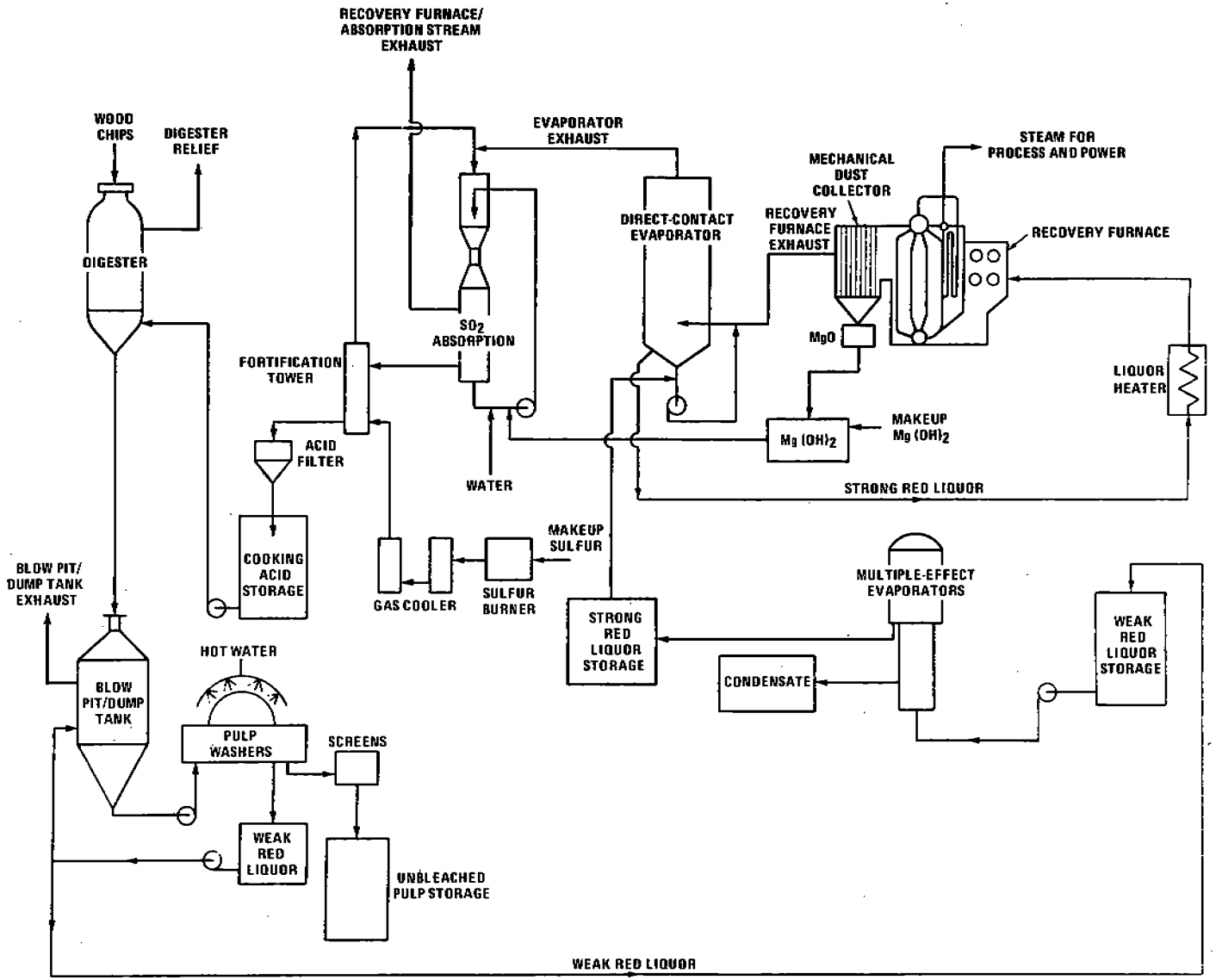

Figure 10.1.3-1. Simplified process flow diagram of magnesium-base process employing chemical and heat recovery.

If recovery is not practiced, an acid plant of sufficient capacity to fulfill the mill's total sulfite requirement is necessary. Normally, sulfur is burned in a rotary or spray burner. The gas produced is then cooled by heat exchangers plus a water spray and then absorbed in a variety of different scrubbers containing either limestone or a solution of the base chemical. Where recovery is practiced, fortification is accomplished similarly, although a much smaller amount of sulfur dioxide must be produced to make up for that lost in the process.

10.1.3.2 Emissions and Controls[14] - Sulfur dioxide is generally considered the major pollutant of concern from sulfite pulp mills. The characteristic "kraft" odor is not emitted because volatile reduced sulfur compounds are not products of the lignin-bisulfite reaction.

One of the major SO_2 sources is the digester and blow pit or dump tank system. Sulfur dioxide is present in the intermittent digester relief gases as well as in the gases given off at the end of the cook when the digester contents are discharged into the blow pit or dump tank. The quantity of sulfur oxide evolved and emitted to the atmosphere in these gas streams depends on the pH of the cooking liquor, the pressure at which the digester contents are discharged, and the effectiveness of the absorption systems employed for SO_2 recovery. Scrubbers can be installed that reduce SO_2 from this source by as much as 99 percent.

Another source of sulfur dioxide emissions is the recovery system. Since magnesium-, sodium-, and ammonium-base recovery systems all utilize absorption systems to recover SO_2 generated in the recovery furnace, acid fortification towers, multiple-effect evaporators, etc., the magnitude of SO_2 emissions depends on the desired efficiency of these systems. Generally, such absorption systems provide better than 95 percent sulfur recovery to minimize sulfur makeup needs.

The various pulp washing, screening, and cleaning operations are also potential sources of SO_2. These operations are numerous and may account for a significant fraction of a mill's SO_2 emissions if not controlled.

The only significant particulate source in the pulping and recovery process is the absorption system handling the recovery furnace exhaust. Less particulate is generated in ammonium-base systems than magnesium- or sodium-base systems as the combustion productions are mostly nitrogen, water vapor, and sulfur dioxide.

Other major sources of emissions in a sulfite pulp mill include the auxiliary power boilers. Emission factors for these boilers are presented in Chapter 1.

Emission factors for the various sulfite pulping operations are shown in Table 10.1.3-1.

10.1.4 Neutral Sulfite Semichemical (NSSC) Pulping

10.1.4.1 Process Description[1,7,15,16] - In this process, the wood chips are cooked in a neutral solution of sodium sulfite and sodium bicarbonate. The sulfite ion reacts with the lignin in the wood, and the sodium bicarbonate acts as a buffer to maintain a neutral solution. The major difference between this process (as well as all semichemical techniques) and the kraft and acid sulfite processes is that only a portion of the lignin is removed during the cook, after which the pulp is further reduced by mechanical disintegration. Because of this, yields as high as 60 to 80 percent can be achieved as opposed to 50 to 55 percent for other chemical processes.

Table 10.1.3-1. EMISSION FACTORS FOR SULFITE PULPING[a]

Source	Base	Control	Emission factor[b]				Emission factor rating
			Particulate		Sulfur Dioxide		
			lb/ADUT	kg/ADUMT	lb/ADUT	kg/ADUMT	
Digester/blow pit or dump tank[c]	All	None	Neg[d]	Neg	10-70	5-35	C
	MgO	Process change[e]	Neg	Neg	2-6	1-3	C
	MgO	Scrubber	Neg	Neg	1	0.5	B
	MgO	Process change and scrubber	Neg	Neg	0.2	0.1	B
	MgO	All exhaust vented through recovery system	Neg	Neg	0	0	A
	NH_3	Process change	Neg	Neg	25	12.5	D
	NH_3	Process change and scrubber	Neg	Neg	0.4	0.2	B
	Na	Process change and scrubber	Neg	Neg	2	1	C
	Ca	Unknown	Neg	Neg	67	33.5	C
Recovery system[f]	MgO	Multiclone and venturi scrubbers	2	1	9	4.5	A
	NH_3	Ammonia absorption and mist eliminator	0.7	0.35	7	3.5	B
	Na	Sodium carbonate scrubber	4	2	2	1	C
Acid plant[g]	NH_3	Scrubber	Neg	Neg	0.3	0.2	C
	Na	Unknown[h]	Neg	Neg	0.2	0.1	D
	Ca	Jenssen scrubber	Neg	Neg	8	4	C
Other sources[i]	All	None	Neg	Neg	12	6	D

[a]All emission factors represent long-term average emissions.

[b]Factors expressed in terms of lb (kg) of pollutant per air dried unbleached ton (MT) of pulp. All factors are based on data in Reference 14.

[c]These factors represent emissions that occur after the cook is completed and when the digester contents are discharged into the blow pit or dump tank. Some relief gases are vented from the digester during the cook cycle, but these are usually transferred to pressure accumulators, and the SO_2 therein is reabsorbed for use in the cooking liquor. These factors represent long-term average emissions; in some mills, the actual emissions will be intermittent and for short time periods.

[d]Negligible emissions.

[e]Process changes may include such measures as raising the pH of the cooking liquor, thereby lowering the free SO_2, relieving the pressure in the digester before the contents are discharged, and pumping out the digester contents instead of blowing them out.

[f]The recovery system at most mills is a closed system that includes the recovery furnace, direct contact evaporator, multiple-effect evaporator, acid fortification tower, and SO_2 absorption scrubbers. Generally, there will only be one emission point for the entire recovery system. These factors are long-term averages and include the high SO_2 emissions during the periodic purging of the recovery system.

[g]Acid plants are necessary in mills that have no or insufficient recovery systems.

[h]Control is practiced, but type of control is unknown.

[i]Includes miscellaneous pulping operations such as knotters, washers, screens, etc.

The NSSC process varies from mill to mill. Some mills dispose of their spent liquor, some mills recover the cooking chemicals, and some, which are operated in conjunction with kraft mills, mix their spent liquor with the kraft liquor as a source of makeup chemicals. When recovery is practiced, the steps involved parallel those of the sulfite process.

10.1.4.2 Emissions and Controls[1,7,15,16] – Particulate emissions are a potential problem only when recovery systems are employed. Mills that do practice recovery, but are not operated in conjunction with kraft operations often utilize fluidized bed reactors to burn their spent liquor. Because the flue gas contains sodium sulfate and sodium carbonate dust, efficient particulate collection may be included to facilitate chemical recovery.

A potential gaseous pollutant is sulfur dioxide. The absorbing towers, digester/blow tank system, and recovery furnace are the main sources of this pollutant with the amounts emitted dependent upon the capability of the scrubbing devices installed for control and recovery.

Hydrogen sulfide can also be emitted from NSSC mills using kraft-type recovery furnaces. The main potential source is the absorbing tower where a significant quantity of hydrogen sulfide is liberated as the cooking liquor is made. Other possible sources include the recovery furnace, depending on the operating conditions maintained, as well as the digester/blow tank system in mills where some green liquor is used in the cooking process. Where green liquor is used, it is also possible that significant quantities of mercaptans will be produced. Hydrogen sulfide emissions can be eliminated if burned to sulfur dioxide prior to entering the absorbing systems.

Because the NSSC process differs greatly from mill to mill, and because of the scarcity of adequate data, no emission factors are presented.

References for Section 10.1

1. Hendrickson, E. R. et al. Control of Atmospheric Emissions in the Wood Pulping Industry. Vol. I. U.S. Department of Health, Education and Welfare, PHS, National Air Pollution Control Administration, Washington, D.C. Final report under Contract No. CPA 22-69-18. March 15, 1970.

2. Britt, K. W. Handbook of Pulp and Paper Technology. New York, Reinhold Publishing Corporation, 1964. p. 166-200.

3. Hendrickson, E. R. et al. Control of Atmospheric Emissions in the Wood Pulping Industry. Vol. III. U.S. Department of Health, Education, and Welfare, PHS, National Air Pollution Control Administration, Washington, D.C. Final report under Contract No. CPA 22-69-18. March 15, 1970.

4. Walther, J. E. and H. R. Amberg. Odor Control in the Kraft Pulp Industry. Chem. Eng. Progress. *66*:73-80, March 1970.

5. Galeano, S. F. and K. M. Leopold. A Survey of Emissions of Nitrogen Oxides in the Pulp Mill. TAPPI. *56*(3):74-76, March 1973.

6. Source test data from the Office of Air Quality Planning and Standards, U.S. Environmental Protection Agency, Research Triangle Park, N.C. 1972.

7. Atmospheric Emissions from the Pulp and Paper Manufacturing Industry. U.S. Environmental Protection Agency, Research Triangle Park, N.C. Publication No. EPA-450/1-73-002. September 1973.

8. Blosser, R. O. and H. B. Cooper. Particulate Matter Reduction Trends in the Kraft Industry. NCASI paper, Corvallis, Oregon.

9. Padfield, D. H. Control of Odor from Recovery Units by Direct-Contact Evaporative Scrubbers with Oxidized Black-Liquor. TAPPI. *56*:83-86, January 1973.

10. Walther, J. E. and H. R. Amberg. Emission Control at the Kraft Recovery Furnaces. TAPPI. *55*(3):1185-1188, August 1972.

11. Control Techniques for Carbon Monoxide Emissions from Stationary Sources. U.S. Department of Health Education and Welfare, PHS, National Air Pollution Control Administration, Washington, D.C. Publication No. AP-65. March 1970. p. 4-24 and 4-25.

12. Blosser, R. O. et al. An Inventory of Miscellaneous Sources of Reduced Sulfur Emissions from the Kraft Pulping Process. (Presented at the 63rd APCA Meeting. St. Louis. June 14-18, 1970.)

13. Factors Affecting Emission of Odorous Reduced Sulfur Compounds from Miscellaneous Kraft Process Sources. NCASI Technical Bulletin No. 60. March 1972.

14. Background Document: Acid Sulfite Pulping. Prepared by Environmental Science and Engineering, Inc., Gainesville, Fla., for Environmental Protection Agency under Contract No. 68-02-1402, Task Order No. 14. Document No. EPA-450/3-77-005. Research Triangle Park, N.C. January 1977.

15. Benjamin, M. et al. A General Description of Commercial Wood Pulping and Bleaching Processes. J. Air Pollution Control Assoc. *19*(3):155-161, March 1969.

16. Galeano, S. F. and B. M. Dillard. Process Modifications for Air Pollution Control in Neutral Sulfite Semi-Chemical Mills. J. Air Pollution Control Assoc. *22*(3):195-199, March 1972.

10.2 PULPBOARD

10.2.1 General[1]

Pulpboard manufacturing involves the fabrication of fibrous boards from a pulp slurry. This includes two distinct types of product, paperboard and fiberboard. Paperboard is a general term that describes a sheet 0.012 inch (0.30 mm) or more in thickness made of fibrous material on a paper-forming machine.[2] Fiberboard, also referred to as particle board, is thicker than paperboard and is made somewhat differently.

There are two distinct phases in the conversion of wood to pulpboard: (1) the manufacture of pulp from raw wood and (2) the manufacture of pulpboard from the pulp. This section deals only with the latter as the former is covered under the section on the wood pulping industry.

10.2.2 Process Description[1]

In the manufacture of paperboard, the stock is sent through screens into the head box, from which it flows onto a moving screen. Approximately 15 percent of the water is removed by suction boxes located under the screen. Another 50 to 60 percent of the moisture content is removed in the drying section. The dried board then enters the calendar stack, which imparts the final surface to the product.

In the manufacture of fiberboard, the slurry that remains after pulping is washed and sent to the stock chests where sizing is added. The refined fiber from the stock chests is fed to the head box of the board machine. The stock is next fed onto the forming screens and sent to dryers, after which the dry product is finally cut and fabricated.

10.2.3 Emissions[1]

Emissions from the paperboard machine consist mainly of water vapor; little or no particulate matter is emitted from the dryers.[3-5] Particulates are emitted, however, from the fiberboard drying operation. Additional particulate emissions occur from the cutting and sanding operations. Emission factors for these operations are given in section 10.4. Emission factors for pulpboard manufacturing are shown in Table 10.2-1.

Table 10.2-1. PARTICULATE EMISSION FACTORS FOR PULPBOARD MANUFACTURING[a]
EMISSION FACTOR RATING: E

Type of product	Emissions	
	lb/ton	kg/MT
Paperboard	Neg	Neg
Fiberboard[b]	0.6	0.3

[a]Emission factors expressed as units per unit weight of finished product.
[b]Reference 1.

References for Section 10.2

1. Air Pollutant Emission Factors. Resources Research, Inc., Reston, Virginia. Prepared for National Air Pollution Control Administration, Washington, D.C. under Contract No. CPA-22-69-119. April 1970.

2. The Dictionary of Paper. New York, American Paper and Pulp Association, 1940.

3. Hough, G. W. and L. J. Gross. Air Emission Control in a Modern Pulp and Paper Mill. Amer. Paper Industry. *51*:36, February 1969.

4. Pollution Control Progress. J. Air Pollution Control Assoc. *17*:410, June 1967.

5. Private communication between I. Gellman and the National Council of the Paper Industry for Clean Air and Stream Improvement. New York, October 28, 1969.

10.3 PLYWOOD VENEER AND LAYOUT OPERATIONS

By Thomas Lahre

10.3.1 Process Description[1]

Plywood is a material made of several thin wood veneers bonded together with an adhesive. Its uses are many and include wall sidings, sheathing, roof-decking, concrete-formboards, floors, and containers.

During the manufacture of plywood, incoming logs are sawed to desired length, debarked, and then peeled into thin, continuous veneers of uniform thickness. (Veneer thicknesses of 1/45 to 1/5 inch are common.) These veneers are then transported to special dryers where they are subjected to high temperatures until dried to a desired moisture content. After drying, the veneers are sorted, patched, and assembled in layers with some type of thermosetting resin used as the adhesive. The veneer assembly is then transferred to a hot press where, under presssure and steam heat, the plywood product is formed. Subsequently, all that remains is trimming, sanding, and possibly some sort of finishing treatment to enhance the usefullness of the plywood.

10.3.2 Emissions[2,3]

The main sources of emissions from plywood manufacturing are the veneer drying and sanding operations. A third source is the pressing operation although these emissions are considered minor.

The major pollutants emitted from veneer dryers are organics. These consist of two discernable fractions: (1) condensibles, consisting of wood resins, resin acids, and wood sugars, which form a blue haze upon cooling in the atmosphere, and (2) volatiles, which are comprised of terpines and unburned methane—the latter occurring when gas-fired dryers are employed. The amounts of these compounds produced depends on the wood species dried, the drying time, and the nature and operation of the dryer itself. In addition, negligible amounts of fine wood fibers are also emitted during the drying process.

Sanding operations are a potential source of particulate emissions (see section 10.4). Emission factors for plywood veneer dryers without controls are given in Table 10.3-1.

Table 10.3-1. EMISSION FACTORS FOR PLYWOOD MANUFACTURING
EMISSION FACTOR RATING: B

Source	Organic compound[a,b]			
	Condensible		Volatile	
	lb/10^4 ft^2	kg/10^3 m^2	lb/10^4 ft^2	kg/10^3 m^2
Veneer dryers	3.6	1.9	2.1	1.1

[a]Emission factors expressed in pounds of pollutant per 10,000 square feet of 3/8-in. plywood produced (kilograms per 1,000 square meters on a 1-cm basis).

[b]References 2 and 3.

References for Section 10.3

1. Hemming, C. B. Encyclopedia of Chemical Technology. 2nd Ed. Vol. 15. New York, John Wiley and Sons, 1968. p.896-907.

2. Monroe, F. L. et al. Investigation of Emissions from Plywood Veneer Dryers. Final Report. Washington State University, Pullman, Washington. Prepared for the Plywood Research Foundation and the U.S. Environmental Protection Agency, Research Triangle Park, N.C. Publication No. APTD-1144. February 1972.

3. Mick, Allen and Dean McCargar. Air Pollution Problems in Plywood, Particleboard, and Hardboard Mills in the Mid-Willamette Valley. Mid-Willamette Valley Air Pollution Authority, Salem Oregon. March 24, 1969.

10.4 WOODWORKING OPERATIONS

by Tom Lahre

10.4.1 General [1-5]

"Woodworking," as defined in this section, includes any operation that involves the generation of small wood waste particles (shavings, sanderdust, sawdust, etc.) by any kind of mechanical manipulation of wood, bark, or wood byproducts. Common woodworking operations include sawing, planing, chipping, shaping, moulding, hogging, latheing, and sanding. Woodworking operations are found in numerous industries such as sawmills; plywood, particleboard, and hardboard plants; and furniture manufacturing plants.

Most plants engaged in woodworking employ pneumatic transfer systems to remove the generated wood waste from the immediate proximity of each woodworking operation. These systems are necessary as a housekeeping measure to eliminate the vast quantity of waste material that would otherwise accumulate. They are also a convenient means of transporting the waste material to common collection points for ultimate disposal. Large diameter cyclones have historically been the primary means of separating the waste material from the airstreams in the pneumatic transfer systems, although baghouses have recently been installed in some plants for this purpose.

The waste material collected in the cyclones or baghouses may be burned in wood waste boilers, utilized in the manufacture of other products (such as pulp or particleboard), or incinerated in conical (teepee/wigwam) burners. The latter practice is declining with the advent of more stringent air pollution control regulations and because of the economic attractiveness of utilizing wood waste as a resource.

10.4.2 Emissions [1-6]

The only pollutant of concern in woodworking operations is particulate matter. The major emission points are the cyclones utilized in the pneumatic transfer systems. The quantity of particulate emissions from a given cyclone will depend on the dimensions of the cyclone, the velocity of the airstream, and the nature of the operation generating the waste. Typical large-diameter cyclones found in the industry will only effectively collect particles greater than 40 micrometers in diameter. Baghouses, when employed, collect essentially all of the waste material in the airstream.

It is difficult to describe a typical woodworking operation and the emissions resulting therefrom because of the many types of operations that may be required to produce a given type of product and because of the many variations that may exist in the pneumatic transfer and collection systems. For example, the waste from numerous pieces of equipment often feed into the same cyclone, and it is common for the material collected in one or several cyclones to be conveyed to another cyclone. It is also possible for portions of the waste generated by a single operation to be directed to different cyclones.

Because of this complexity, it is useful when evaluating emissions from a given facility to consider the waste handling cyclones as air pollution sources instead of the various woodworking operations that actually generate the particulate matter. Emission factors for typical large-diameter cyclones utilized for waste collection in woodworking operations are given in Table 10.4-1.

Emission factors for wood waste boilers, conical burners, and various drying operations—often found in facilities employing woodworking operations—are given in Sections 1.6, 2.3, 10.2, and 10.3.

Table 10.4.1. PARTICULATE EMISSION FACTORS FOR LARGE DIAMETER CYCLONES[a] IN WOODWORKING INDUSTRY

Types of waste handled	Particulate emissions[b]			
	gr/scf	g/Nm^3	lb/hr	kg/hr
Sanderdust[c]	0.055[d]	0.126[d]	5[e]	2.3[e]
Other[f]	0.03[g]	0.07[g]	2[h]	0.91[h]

[a]Typical waste collection cyclones range from 4 to 16 feet (1.2 to 4.9 meters) in diameter and employ airflows ranging from 2,000 to 26,000 standard cubic feet (57 to 740 normal cubic meters) per minute. Note: if baghouses are used for waste collection, particulate emissions will be negligible.

[b]Based on information in References 1 through 3.

[c]These factors should be used whenever waste from sanding operations is fed directly into the cyclone in question.

[d]These factors represent the median of all values observed. The observed values range from 0.005 to 0.16 gr/scf (0.0114 to 0.37 g/Nm^3).

[e]These factors represent the median of all values observed. The observed values range from 0.2 to 30 lb/hr (0.09 to 13.6 kg/hr).

[f]These factors should be used for cyclones handling waste from all operations other than sanding. This includes cyclones that handle waste (including sanderdust) already collected by another cyclone.

[g]These factors represent the median of all values observed. The observed values range from 0.001 to 0.16 gr/scf (0.002 to 0.37 g/Nm^3).

[h]These factors represent the median of all values observed. The observed values range from 0.03 to 24 lb/hr (0.014 to 10.9 kg/hr).

References for Section 10.4

1. Source test data supplied by Robert Harris of the Oregon Department of Environmental Quality, Portland, Ore. September 1975.

2. Walton, J.W., et al. Air Pollution in the Woodworking Industry. (Presented at 68th Annual Meeting of the Air Pollution Control Association. Boston. Paper No. 75-34-1. June 15-20, 1975.)

3. Patton, J.D. and J.W. Walton. Applying the High Volume Stack Sampler to Measure Emissions From Cotton Gins, Woodworking Operations, and Feed and Grain Mills. (Presented at 3rd Annual Industrial Air Pollution Control Conference. Knoxville. March 29-30, 1973.)

4. Sexton, C.F. Control of Atmospheric Emissions from the Manufacturing of Furniture. (Presented at 2nd Annual Industrial Air Pollution Control Conference. Knoxville. April 20-21, 1972.)

5. Mick, A. and D. McCargar. Air Pollution Problems in Plywood, Particleboard, and Hardboard Mills in the Mid-Willamette Valley. Mid-Willamette Valley Air Pollution Authority, Salem, Ore. March 24, 1969.

6. Information supplied by the North Carolina Department of Natural and Economic Resources, Raleigh, N.C. December 1975.

10.4.3 Fugitive Emission Factors

Since most woodworking operations control emissions out of necessity, fugitive emissions are seldom a problem. However, the wood waste storage bins are a common source of fugitive emissions. Table 10.4-2 shows these emission sources and their corresponding emission factors.

Information concerning size characteristics is very limited. Data collected in a western red cedar furniture factory equipped with exhaust ventilation on most woodworking equipment showed most suspended particles in the working environment to be less than 2 μm in diameter.[7]

Table 10.4-2. POTENTIAL UNCONTROLLED FUGITIVE PARTICULATE EMISSION FACTORS FOR WOODWORKING OPERATIONS

EMISSION FACTOR RATING: C

Type of operation	Particulates[a]	
	lb/ton	kg/MT
Wood waste storage bin vent[b]	1.0	0.5
Wood waste storage bin loadout[b]	2.0	1.0

[a]Factors expressed as units per unit weight of wood waste handled.

[b]Engineering judgment based on plant visits.

Additional Reference for Section 10.4

7. Lester V. Cralley, *et al.*, *Industrial Enivronmental Health, the Worker and the Community*, Academic Press, New York and London, 1972.

Table 11.2.5-1. MEASURED EMISSION FACTORS FOR DUST ENTRAINMENT FROM PAVED ROADWAYS EMISSION FACTOR RATING: C

Study	Emission factors[a,b] (range and average)	
	g/vehicle km	lb/vehicle mile
Reference 3[c]	(2.8-5.6)4.3	(0.01-0.02)0.015
Reference 4[d]	(0.26-10.4)2.6	(0.0009-0.037)0.009
Average[e]	3.5	0.012

[a]Table 3.1.4-7 indicates 0.33 g/km of particulate emissions from exhaust and tire wear, which have not been excluded from the measured results given in Table 11.2.5-1. Average emissions of entrained dust, excluding exhaust and tire wear, would therefore be approximately 3.2 g/km.

[b]Emission factors reflect average "dry day" conditions. During periods of rainfall, reentrainment of dust should be negligible. However, after rain ends, emissions may be temporarily increased as a result of deposition of mud on street surfaces. When this material dries, it may become entrained by vehicle action.

[c]These measurements relate to the amount of material passing through a vertical plane located approximately 5 meters downwind from the near edge of the street. Thus, these measured results exclude any particles that settle within 5 meters from the edge of the street. In Reference 3, measured emission factors were also obtained for a case where streets were artificially loaded with very high (10,000 kg/km) amounts of dirt and gravel. Very high emissions were observed for a short period of time (up to 9.8 kg/vehicle km), but emission factors decreased rapidly as street loadings were decreased by vehicle traffic.

[d]These measurements were based on high volume sampler data taken 10 meters downwind from the street. Thus, particles settling within 10 meters of the edge of the street are excluded from the emission factor. Measurements were also taken 20 and 30 meters downwind. These measurements appear to show that emission rates decrease with increasing distance from the source, presumably by particle settling. On the average, the emission rate calculated 20 meters downwind was 86 percent of the 10 meter value, and the emission rate 30 meters downwind was 77 percent of the 10 meter value.

[e]Average determined from average results of References 3 and 4, with each study weighted equally.

References for Section 11.2.5

1. Dunbar, D. R. Resuspension of Particulate Matter. U.S. Environmental Protection Agency, Reasearch Triangle Park, N.C. March 1976.

2. Abel, M. P. The Impact of Refloatation on Chicago's Total Suspended Particulate Levels. Master's Thesis, Purdue University. August 1974.

3. Cowherd, C., Jr., C. M. Maxwell, and D. W. Nelson. Quantification of Dust Entrainment from Paved Roadways. Midwest Research Institute, Kansas City, Mo. Prepared for U.S. Environmental Protection Agency, Research Triangle Park, N.C., under Contract No. 68-02-1403, Task Order 25. Publication No. EPA-450/3-77-027. July 1977.

4. Axetell, K. and J. Zell. Control of Reentrained Dust from Paved Streets. PEDCo Environmental Specialists, Inc., Cincinnati, Oh. Prepared for U.S. Environmental Protection Agency, Region VII, Kansas City, Mo., under Contract No. 68-02-1375, Task Order No. 35. July 1977.

5. Cowherd, C., Jr., K. Axetell, Jr., C. M. Guenther, and G. A. Jutze. Development of Emission Factors for Fugitive Dust Sources. Midwest Research Institute, Kansas City, Mo. Prepared for U.S. Environmental Protection Agency, Research Triangle Park, N.C., under Contract No. 68-02-0619. Publication No. EPA-450/3-74-037. June 1974.

APPENDIX C

NEDS SOURCE CLASSIFICATION CODES AND EMISSION FACTOR LISTING

The Source Classification Codes (SCCs) presented herein comprise the "building blocks" upon which the National Emissions Data System (NEDS) is structured. Each SCC represents a process or function within a source category logically associated with a point of air pollution emissions. In NEDS any operation that causes air pollution can be represented by one or more of these SCCs. The SCC is the most critical NEDS data item since, without an appropriate SCC, the source cannot be properly identified for retrieval purposes, nor the source emissions properly calculated.

Also presented herein are emission factors for the five NEDS pollutants (particulates, sulfur oxides, nitrogen oxides, hydrocarbons, and carbon monoxide) that correspond to each SCC. These factors are used in NEDS to compute automatically estimates of air pollutant emissions associated with a process when a more accurate estimate is not supplied to the system. These factors are, for the most part, taken directly from AP-42. In certain cases, however, they may be derived from better information not yet incorporated into AP-42 or based merely on the similarity of one process to another for which emissions information does exist.

NOTE: This Source Classification Code and emission factor listing replaces the listing dated December 1975, which appeared in AP-42, Supplement 5. The new listing has been updated to include all emission factor changes through AP-42, Supplement 9. The listing has also been reformatted and rearranged to improve readability and to facilitate cross referencing with Standard Industrial Classification (SIC) codes. A number of new SCCs have been added to the listing. In addition, many of the SCCs that appeared in the December 1975 edition have been deleted. A videocassette tape describing the use of this revised listing has been prepared. To obtain the videocassette tape, or for any other comments regarding this listing, inquiries should be directed to:

Chief, Requests and Information Section
National Air Data Branch (MD-14)
U.S. Environmental Protection Agency
Research Triangle Park, NC 27711

Phone: (919) 541-5395 (FTS) 629-5395

TABLE OF CONTENTS

PART I

THESE SCC CATEGORIES ARE APPLICABLE TO A WIDE VARIETY OF PROCESSES AND THUS ARE GROUPED.

	Page
External Combustion Boilers - Electric Generation	C-3
External Combustion Boilers - Industrial	C-4
External Combustion Boilers - Commercial/Institutional	C-6
External Combustion - Space Heaters	C-8
Internal Combustion Engines	C-9
Solid Waste Disposal - Government	C-10
Solid Waste Disposal - Commercial/Institutional	C-10
Solid Waste Disposal - Industrial	C-11
In-process Fuel Use	C-12
Degreasing	C-13
Surface Coating	C-13
Thinning Solvents	C-13
Miscellaneous Hydrocarbon Evaporation	C-15

PART II

CODES FOR SPECIFIC INDUSTRIAL PROCESSES

	SIC	Page
Fugitive Emissions from Industrial Sources		C-19
Agricultural Services	Major Groups 02,07	C-20
Metal Mining	Major Group 10	C-21
Anthracite Mining and Bituminous Coal and Lignite Mining	Major Groups 11-12	C-22
Oil and Gas Extraction	Major Group 13	C-23
Mining and Quarrying of Nonmetallic Minerals, Except Fuels	Major Group 14	C-24
Food and Kindred Products	Major Group 20	C-27
Tobacco Manufacturers	Major Group 21	C-32
Textile Mill Products	Major Group 22	C-33
Lumber and Wood Products, Except Furniture	Major Group 24	C-34
Furniture and Fixtures	Major Group 25	C-35
Paper and Allied Products	Major Group 26	C-36
Printing, Publishing and Allied Industries	Major Group 27	C-38
Chemicals and Allied Products	Major Group 28	C-39
Industrial Inorganic Chemicals	Group 281	C-39
Plastic Materials and Synthetic Resins, Rubbers and Fibers	Group 282	C-40
Drugs	Group 283	C-41
Soap, Detergents and Cleaning Preparations, Etc.	Group 284	C-42
Paints, Varnishes, Lacquers, Enamels and Allied Products	Group 285	C-42
Industrial Organic Chemicals	Group 286	C-42
Agricultural Chemicals	Group 287	C-45
Miscellaneous Chemical Products	Group 289	C-47
Petroleum Refining and Related Industries	Major Group 29	C-49
Rubber and Miscellaneous Plastic Products	Major Group 30	C-54
Leather and Leather Products	Major Group 31	C-55
Stone, Clay, Glass and Concrete Products	Major Group 32	C-56
Flat Glass, Container Glass and Glassware Pressed or Blown	Groups 331-332	C-56
Cement Manufacturing	Group 324	C-57
Structural Clay Products	Group 325	C-58
Pottery and Related Products	Group 326	C-58
Concrete, Gypsum and Plaster Products	Group 327	C-58
Abrasive, Asbestos and Miscellaneous Nonmetallic Mineral Products	Group 329	C-59
Primary Metal Industries	Major Group 33	C-61
Blast Furnaces, Steelworks and Rolling and Finishing Mills	Group 331	C-61
Iron and Steel Foundries	Group 332	C-63
Primary Smelting and Refining of Nonferrous Metals	Group 333	C-64
Secondary Smelting and Refining of Nonferrous Metals	Group 334	C-66
Fabricated Metal Products, Except Machinery and Transportation Equipment	Major Group 34	C-69
Electrical and Electronic Machinery, Equipment and Supplies	Major Group 36	C-70
Wholesale Trade - Nondurable Goods	Major Group 51	C-71
Personal Services	Major Group 72	C-77

PART 1

SOURCE CLASSIFICATION CODES

FOR

GENERAL PROCESSES

NATIONAL EMISSION DATA SYSTEM

SOURCE CLASSIFICATION CODES AND EMISSION FACTOR LISTING

SCC	PROCESS	POUNDS EMITTED PER UNIT PART	SO_x	NO_x	HC	CO	UNITS
NOTE: A. Both boiler capacities and throughputs must be reported to NEDS for all boilers. B. Most SCC codes in the 99 categories have been deleted in this listing because specific boiler codes are available. C. Unless otherwise indicated, SCC's are defined to include all boiler sizes.							
EXTERNAL COMBUSTION BOILERS - ELECTRIC GENERATION - 4911							
Anthracite Coal							
1-01-001-01	Pulverized coal	17.0 A	38.0 S	18.0	0.00	1.00	Tons burned
1-01-001-02	Travelling grate stokers	1.00 A	38.0 S	10.0	0.00	1.00	Tons burned
Bituminous Coal							
1-01-002-01	Pulverized coal: wet bottom	13.0 A	38.0 S	30.0	0.30	1.00	Tons burned
1-01-002-02	Pulverized coal: dry bottom	17.0 A	38.0 S	18.0	0.30	1.00	Tons burned
1-01-002-03	Cyclone furnace	2.00 A	38.0 S	55.0	0.30	1.00	Tons burned
1-01-002-04	Spreader stoker	13.0 A	38.0 S	15.0	1.00	2.00	Tons burned
1-01-002-05	Travelling grate (overfeed) stoker	5.00 A	38.0 S	15.0	1.00	2.00	Tons burned
Lignite							
1-01-003-01	Pulverized coal	7.00 A	30.0 S	14.0	0.30	1.00	Tons burned
1-01-003-03	Cyclone furnace	6.00 A	30.0 S	17.0	0.30	1.00	Tons burned
1-01-003-04	Travelling grate (overfeed) stoker	3.00 A	30.0 S	6.0	1.00	2.00	Tons burned
1-01-003-06	Spreader stokers	7.00 A	30.0 S	6.0	1.00	2.00	Tons burned
Residual Oil							
1-01-004-01	Grade 6 oil: normal firing (Normal firing includes horizontally opposed and front wall firing)	13.0 S[1]	159.0 S	105.0	1.00	5.00	1000 gallons burned
1-01-004-04	Grade 6 oil: tangential firing	13.0 S[1]	159.0 S	50.0	1.00	5.00	1000 gallons burned
1-01-004-05	Grade 5 oil: normal firing	10.0	159.0 S	105.0	1.00	5.00	1000 gallons burned
1-01-004-06	Grade 5 oil: tangential firing	10.0	159.0 S	50.0	1.00	5.00	1000 gallons burned
Distillate Oil							
1-01-005-01	Grades 1 and 2 oil	2.00	144.0 S	105.0	1.00	5.00	1000 gallons burned
1-01-005-04	Grade 4 oil: normal firing	7.00	150.0 S	105.0	1.00	5.00	1000 gallons burned
1-01-005-05	Grade 4 oil: tangential firing	7.00	150.0 S	50.0	1.00	5.00	1000 gallons burned
Natural Gas							
1-01-006-01	Boilers over 100 MMBtu/hr, except for tangentially fired units	10.0	0.60	700.0	1.00	17.0	Million cubic feet burned
1-01-006-02	Boilers under 100 MMBtu/hr, except for tangentially fired units	10.0	0.60	180.0	1.00	17.0	Million cubic feet burned
1-01-006-04	Tangentially fired Boilers	10.0	0.60	300.0	1.00	17.0	Million cubic feet burned
Process Gas (Specify Gas In Comments)							
1-01-007-01	Boilers over 100 MMBtu	10.0	950.0 S	700.0	1.00	17.0	Million cubic feet burned
1-01-007-02	Boilers under 100 MMBtu	10.0	950.0 S	230.0	1.00	17.0	Million cubic feet burned
Coke							
1-01-008-01	All boiler sizes	17.0 A	38.0 S	18.0	0.03	1.00	Tons burned

'A' indicates the ash content of the fuel.

'S' indicates the sulfur content of the fuel on a percent-by-weight basis.

(1) Particulate emissions from residual oil combustion can be more accurately estimated from the equation lb/1000 gal = 10S + 3. See AP-42, page 1.3-2.

SCC	PROCESS	POUNDS EMITTED PER UNIT PART	SO_x	NO_x	HC	CO	UNITS
NOTE: A. Both boiler capacities and throughputs must be reported to NEDS for all boilers. B. Most SCC codes in the 99 categories have been deleted in this listing because specific boiler codes are available. C. Unless otherwise indicated, SCC's are defined to include all boiler sizes.							
EXTERNAL COMBUSTION BOILERS - ELECTRIC GENERATION (cont)							
Wood/Bark Waste							
1-01-009-01	Bark-fired boiler	75.0	1.50	10.0	2.00	2.00	Tons burned
1-01-009-02	Wood/bark-fired boilers	37.5	1.50	10.0	2.00	2.00	Tons burned
1-01-009-03	Wood-fired boiler	10.0	1.50	10.0	2.00	2.00	Tons burned
Bagasse							
1-01-011-01	All boiler sizes	16.0	0.00	1.20	2.00	2.00	Tons burned
Solid Waste							
1-01-012-01	Specify waste material in comment field						Tons burned
Liquid Waste							
1-01-013-01	Specify waste material in comment field						1000 gallons burned
1-01-013-02	Waste oil	19.0					1000 gallons burned
EXTERNAL COMBUSTION BOILERS - INDUSTRIAL							
Anthracite Coal							
1-02-001-01	Pulverized coal	17.0 A	38.0 S	18.0	0.00	1.00	Tons burned
1-02-001-04	Travelling grate (overfeed) stoker	1.00 A	38.0 S	10.0	0.00	1.00	Tons burned
1-02-001-07	Hand-fired	10.0	38.0 S	3.00	2.50	90.0	Tons burned
Bituminous Coal							
1-02-002-01	Pulverized coal: wet bottom	13.0 A	38.0 S	30.0	0.30	1.00	Tons burned
1-02-002-02	Pulverized coal: dry bottom	17.0 A	38.0 S	18.0	0.30	1.00	Tons burned
1-02-002-03	Cyclone furnace	2.00 A	38.0 S	55.0	0.30	1.00	Tons burned
1-02-002-04	Spreader stoker	13.0 A	38.0 S	15.0	1.00	2.00	Tons burned
1-02-002-05	Overfeed and underfeed stokers greater than 10 MMBtu/hr	5.00 A	38.0 S	15.0	1.00	2.00	Tons burned
1-02-002-10	Overfeed and underfeed stokers less than 10 MMBtu/hr	2.00 A	38.0 S	6.00	3.00	10.0	Tons burned
Lignite							
1-02-003-01	Pulverized coal	7.00 A	30.0 S	14.0	0.30	1.00	Tons burned
1-02-003-03	Cyclone furnace	6.00 A	30.0 S	17.0	0.30	1.00	Tons burned
1-02-003-04	Travelling grate (overfeed) stokes	3.00 A	30.0 S	6.00	1.00	2.00	Tons burned
1-02-003-06	Spreader stoker	7.00 A	30.0 S	6.00	1.00	2.00	Tons burned
Residual Oil							
1-02-004-01	Grade 6 oil	12.0 S[1]	159.0 S	60.0	1.00	5.00	1000 gallons burned
1-02-004-04	Grade 5 oil	10.0	159.0 S	60.0	1.00	5.00	1000 gallons burned

'A' indicates the ash content of the fuel.

'S' indicates the sulfur content of the fuel on a percent-by-weight basis.

[1]Particulate emissions from residual oil combustion can be more accurately estimated from the equation lb/1000 gal = 10S + 3. See AP-42, page 1.3-2.

NATIONAL EMISSION DATA SYSTEM

SOURCE CLASSIFICATION CODES AND EMISSION FACTOR LISTING

SCC	PROCESS	POUNDS EMITTED PER UNIT PART	SO_x	NO_x	HC	CO	UNITS
NOTE: A. Both boiler capacities and throughputs must be reported to NEDS for all boilers. B. Most SCC codes in the 99 categories have been deleted in this listing because specific boiler codes are available. C. Unless otherwise indicated, SCC's are defined to include all boiler sizes.							
EXTERNAL COMBUSTION BOILERS - INDUSTRIAL (Continued)							
Distillate Oil							
1-02-005-01	Grades 1 and 2 oil	2.00	144.0 S	22.0	1.00	5.00	1000 gallons burned
1-02-005-04	Grade 4 oil	7.00	150.0 S	22.0	1.00	5.00	1000 gallons burned
Natural Gas							
1-02-006-01	Over 100 MMBtu/hr	10.0	0.60	700.0	1.00	17.0	Million cubic feet burned
1-02-006-02	10-100 MMBtu/hr	10.0	0.60	180.0	3.00	17.0	Million cubic feet burned
1-02-006-03	Less than 10 MMBtu/hr	10.0	0.60	120.0	8.00	20.0	Million cubic feet burned
Process Gas							
Note: Sulfur content must be noted on NEDS form.							
1-02-007-01	Petroleum refinery		950.0 S				Million cubic feet burned
1-02-007-04	Blast furnace		950.0 S				Million cubic feet burned
1-02-007-07	Coke oven		950.0 S				Million cubic feet burned
1-02-007-99	Other/not classified (Specify in comments)		950.0 S				Million cubic feet burned
Coke							
1-02-008-02	All boiler sizes	1.00 A	38.0 S	10.0	0.00	1.00	Tons burned
Wood/Bark Waste							
1-02-009-01	Bark-fired boiler	75.0	1.50	10.0	2.00	2.00	Tons burned
1-02-009-02	Wood/bark-fired boiler	37.5	1.50	10.0	2.00	2.00	Tons burned
1-02-009-03	Wood-fired boiler	10.0	1.50	10.0	2.00	2.00	Tons burned
Liquid Petroleum Gas (LPG)							
1-02-010-02	All boiler sizes	1.75	86.5 S	11.5	0.30	1.55	1000 gallons burned
Bagasse							
1-02-011-01	All boiler sizes	16.0	0.00	1.20	2.00	2.00	Tons burned
Solid Waste							
1-02-012-01	Specify waste material in comment field						Tons burned
Liquid Waste							
Note: See 3-07-001-04 for recovery boilers in Kraft Pulp Mills.							
1-02-013-01	Specify waste material in comment field						1000 gallons burned
1-02-013-02	Waste oil	19.0					1000 gallons burned

'A' indicates the ash content of the fuel.

'S' indicates the sulfur content of the fuel on a percent-by-weight basis.

NATIONAL EMISSION DATA SYSTEM

SOURCE CLASSIFICATION CODES AND EMISSION FACTOR LISTING

SCC	PROCESS	POUNDS EMITTED PER UNIT										UNITS
		PART		SO_x		NO_x	HC	CO				
NOTE: A. Both boiler capacities and throughputs must be reported to NEDS for all boilers. B. Most SCC codes in the 99 categories have been deleted in this listing because specific boiler codes are available. C. Unless otherwise indicated, SCC's are defined to include all boiler sizes.												
EXTERNAL COMBUSTION BOILERS - COMMERCIAL/INSTITUTIONAL												
Anthracite Coal												
1-03-001-01	Pulverized coal	17.0	A	38.0	S	18.0	0.00	1.00				Tons burned
1-03-001-02	Travelling grate (overfeed) stoker	1.00	A	38.0	S	10.0	0.00	1.00				Tons burned
1-03-001-03	Hand-fired	10.0		38.0	S	3.00	2.50	90.0				Tons burned
Bituminous Coal												
1-03-002-05	Pulverized coal: wet bottom	13.0	A	38.0	S	30.0	0.30	1.00				Tons burned
1-03-002-06	Pulverized coal: dry bottom	17.0	A	38.0	S	18.0	0.30	1.00				Tons burned
1-03-002-07	Over and underfeed stokers greater than 10 MMBtu/hr	5.00	A	38.0	S	15.0	1.00	2.00				Tons burned
1-03-002-09	Spreader stoker	13.0	A	38.0	S	15.0	1.00	2.00				Tons burned
1-03-002-11	Over and underfeed stokers less than 10 MMBtu/hr	2.00	A	38.0	S	6.00	3.00	10.0				Tons burned
Lignite												
1-03-003-05	Pulverized coal	7.00	A	30.0	S	14.0	0.30	1.00				Tons burned
1-03-003-07	Travelling Grate (overfeed) stoker	3.00	A	30.0	S	6.00	1.00	2.00				Tons burned
1-03-003-09	Spreader stoker	7.00	A	30.0	S	6.00	1.00	2.00				Tons burned
Residual Oil												
1-03-004-01	Grade 6 oil	12.0	S[1]	159.0	S	60.0	1.00	5.00				1000 gallons burned
1-03-004-04	Grade 5 oil	10.0		159.0	S	60.0	1.00	5.00				1000 gallons burned
Distillate Oil												
1-03-005-01	Grades 1 and 2 oil	2.00		144.0	S	22.0	1.00	5.00				1000 gallons burned
1-03-005-04	Grade 4 oil	7.00		150.0	S	22.0	1.00	5.00				1000 gallons burned
Natural Gas												
1-03-006-01	Over 100 MMBtu/hr	10.0		0.60		700.0	1.00	17.0				Million cubic feet burned
1-03-006-02	10-100 MMBtu/hr	10.0		0.60		180.0	3.00	17.0				Million cubic feet burned
1-03-006-03	Less than 10 MMBtu/hr	10.0		0.60		120.0	8.00	20.0				Million cubic feet burned
Process Gas												
1-03-007-01	Sewage gas											Million cubic feet burned
1-03-007-99	Other/not classified (specify fuel in comment field)											Million cubic feet burned

'A' indicates the ash content of the fuel.

'S' indicates the sulfur content of the fuel on a percent-by-weight basis.

[1]Particulate emissions from residual oil combustion can be more accurately estimated from the equation lb/1000 gal = 10S + 3. See AP-42, page 1.3-2.

NATIONAL EMISSION DATA SYSTEM

SOURCE CLASSIFICATION CODES AND EMISSION FACTOR LISTING

SCC	PROCESS	POUNDS EMITTED PER UNIT					UNITS
		PART	SO_x	NO_x	HC	CO	
NOTE: A. Both boiler capacities and throughputs must be reported to NFDS for all boilers. B. Most SCC codes in the 99 categories have been deleted in this listing because specific boiler codes are available. C. Unless otherwise indicated, SCC's are defined to include all boiler sizes.							
EXTERNAL COMBUSTION BOILERS - COMMERCIAL/INSTITUTIONAL							
Wood/Bark Waste							
1-03-009-01	Bark boiler	75.0	1.50	10.0	2.00	2.00	Tons burned
1-03-009-02	Wood/bark boiler	37.5	1.50	10.0	2.00	2.00	Tons burned
1-03-009-03	Wood boiler	10.0	1.50	10.0	2.00	2.00	Tons burned
Liquified Petroleum Gas (LPG)							
1-03-010-02	All boiler sizes	1.85	86.5 S	11.5	0.75	1.95	1000 gallons burned
Solid Waste							
1-03-012-01	Specify waste material in comment field						Tons burned
Liquid Waste							
1-03-013-01	Specify waste material in comment field						1000 gallons burned
1-03-013-02	Waste oil	19.0					1000 gallons burned

'S' indicates the sulfur content of the fuel on a percent-by-weight basis.

NATIONAL EMISSION DATA SYSTEM

SOURCE CLASSIFICATION CODES AND EMISSION FACTOR LISTING

SCC	PROCESS	POUNDS EMITTED PER UNIT					UNITS
		PART	SO_x	NO_x	HC	CO	
NOTE: Most SCC codes in the 99 categories have been deleted in this listing because specific boiler codes are available.							
EXTERNAL COMBUSTION: SPACE HEATERS							
Industrial Space Heaters							
1-05-001-05	Distillate oil	2.50	144. S	18.0	1.00	5.00	1000 gallons burned
1-05-001-06	Natural gas	10.0	0.6	100.	8.00	20.0	Million cubic feet burned
1-05-001-10	Liquified petroleum gas (LPG)	1.85	86.5 S	7.50	0.75	1.95	1000 gallons burned
Commercial Space Heaters							
1-05-002-05	Distillate oil	2.50	144. S	18.0	1.00	5.00	1000 gallons burned
1-05-002-06	Natural gas	10.0	0.60	100.	8.00	20.0	Million cubic feet burned
1-05-002-10	Liquified petroleum gas (LPG)	1.85	86.5 S	7.50	0.75	1.95	1000 gallons burned

'S' indicates the sulfur content of the fuel on a percent-by-weight basis.

NATIONAL EMISSION DATA SYSTEM

SOURCE CLASSIFICATION CODES AND EMISSION FACTOR LISTING

SCC	PROCESS	POUNDS EMITTED PER UNIT					UNITS
		PART	SO_x	NO_x	HC	CO	
INTERNAL COMBUSTION ENGINES							
Internal Combustion - Electrical Generation - 4911							
2-01-001-01	Distillate oil (diesel): turbine	5.00	140.0 S	67.8	5.57	15.4	1000 gallons burned
2-01-001-02	Distillate oil (diesel): reciprocating	33.5	31.2	469.0	37.5	102.0	1000 gallons burned
2-01-002-01	Natural gas: turbine	14.0	940.0 S	413.0	42.0	115.0	Million cubic feet burned
2-01-002-02	Natural gas: reciprocating	0.00	0.60	3400.	1400.	430.0	Million cubic feet burned
2-01-009-01	Kerosene/naptha (jet fuel): turbine	5.00	6.20	67.8	5.57	15.4	1000 gallons burned
2-01-009-02	Kerosene/naptha (jet fuel): reciprocating	33.5	6.20	469.0	37.5	102.0	1000 gallons burned
Internal Combustion - Industrial							
2-02-001-01	Distillate oil (diesel): turbine	5.00	140.0 S	67.8	5.57	15.4	1000 gallons burned
2-02-001-02	Distillate oil (diesel): reciprocating	33.5	31.2	469.0	37.5	102.0	1000 gallons burned
2-02-002-01	Natural gas: turbine	0.00	0.60	300.0	23.0	120.0	Million cubic feet burned
2-02-002-02	Natural gas: reciprocating	0.00	0.60	3400.	1400.	430.0	Million cubic feet burned
2-02-003-01	Gasoline: reciprocating	6.47	5.31	102.0	161.0	3990.	1000 gallons burned
2-02-009-01	Kerosene/naptha (jet fuel): turbine	5.00	6.20	67.8	5.57	15.4	1000 gallons burned
2-02-009-02	Kerosene/naptha (jet fuel): reciprocating	33.5	6.20	469.0	37.5	102.0	1000 gallons burned
Internal Combustion - Commercial/Institutional							
2-03-001-01	Distillate oil (diesel): reciprocating	33.5	31.2	469.0	37.5	102.0	1000 gallons burned
2-03-002-01	Natural gas: reciprocating	0.00	0.6	3400.	1400.	430.0	Million cubic feet burned
2-03-003-01	Gasoline: reciprocating	6.47	5.31	102.0	161.0	3990.	1000 gallons burned
Engine Testing							
2-04-001-01	Aircraft turbojet testing	11.8	13.0	14.6	46.0	32.7	1000 gallons burned

NATIONAL EMISSION DATA SYSTEM

SOURCE CLASSIFICATION CODES AND EMISSION FACTOR LISTING

SCC	PROCESS	POUNDS EMITTED PER UNIT					UNITS
		PART	SO_x	NO_x	HC	CO	
SOLID WASTE DISPOSAL: GOVERNMENT							
Municipal Incineration - 4953							
5-01-001-01	Multiple chamber	30.0	2.50	3.00	1.50	35.0	Tons burned
5-01-001-02	Single chamber	15.0	2.50	2.00	15.0	20.0	Tons burned
5-01-005-07	Conical design (tee-pee): Municipal refuse	20.0	2.00	5.00	20.0	60.0	Tons burned
Open Burning Dump							
5-01-002-01	General refuse	16.0	1.00	6.00	30.0	85.0	Tons burned
5-01-002-02	Vegetation only	17.0	0.00	4.00	24.0	140.0	Tons burned
Other Incineration							
5-01-005-05	Pathological	8.00	0.00	3.00	0.00	0.00	Tons burned
5-01-005-06	Sludge	100.0	1.00	5.00	1.00	0.00	Tons dry sludge
5-01-005-08	Conical design (tee-pee): Wood refuse	7.00	0.10	1.00	11.0	130.0	Tons burned
Auxiliary Fuel/No Emissions							
5-01-900-05	Distillate oil	0.00	0.00	0.00	0.00	0.00	1000 gallons burned
5-01-900-06	Natural gas	0.00	0.00	0.00	0.00	0.00	Million cubic feet burned
5-01-900-10	Liquified petroleum gas (LPG)	0.00	0.00	0.00	0.00	0.00	1000 gallons burned
SOLID WASTE DISPOSAL: COMMERCIAL/INSTITUTIONAL							
Incineration (General)							
5-02-001-01	Multiple chamber	7.00	2.50	3.00	3.00	10.0	Tons burned
5-02-001-02	Single chamber	15.0	2.50	2.00	15.0	20.0	Tons burned
5-02-001-03	Controlled air	1.40	1.50	10.0	0.00	0.00	Tons burned
5-02-001-04	Conical design: Municipal refuse	20.0	2.00	5.00	20.0	60.0	Tons burned
5-02-001-05	Conical design: Wood refuse	7.00	0.10	1.00	11.0	130.	Tons burned
Open Burning							
5-02-002-01	Wood	17.0	0.00	4.00	24.0	140.0	Tons burned
5-02-002-02	Refuse	16.0	1.00	6.00	30.0	85.0	Tons burned
Apartment Incineration							
5-02-003-01	Flue fed	30.0	0.50	3.00	15.0	20.0	Tons burned
5-02-003-02	Flue fed (with afterburner and draft controls)	6.00	0.50	10.0	3.00	10.0	Tons burned
Incineration (Special Purpose)							
5-02-005-05	Pathological waste	8.00	0.00	3.00	0.00	0.00	Tons burned
5-02-005-06	Sludge	100.0	1.00	5.00	1.00	0.00	Tons dry sludge
Auxiliary Fuel/No Emissions							
5-02-900-05	Distillate oil	0.00	0.00	0.00	0.00	0.00	1000 gallons burned
5-02-900-06	Natural gas	0.00	0.00	0.00	0.00	0.00	Million cubic feet burned
5-02-900-10	Liquified petroleum gas (LPG)	0.00	0.00	0.00	0.00	0.00	1000 gallons burned

NATIONAL EMISSION DATA SYSTEM

SOURCE CLASSIFICATION CODES AND EMISSION FACTOR LISTING

		POUNDS EMITTED PER UNIT					
		PART	SO_x	NO_x	HC	CO	UNITS
SOLID WASTE DISPOSAL: INDUSTRIAL							
Incineration							
5-03-001-01	Multiple chamber	7.00	2.50	3.00	3.00	10.0	Tons burned
5-03-001-02	Single chamber	15.0	2.50	2.00	15.0	20.0	Tons burned
5-03-001-03	Controlled air	1.40	1.50	10.0	0.00	0.00	Tons burned
5-03-001-04	Conical design: refuse	20.0	2.00	5.00	20.0	60.0	Tons burned
5-03-001-05	Conical design: wood refuse	7.00	0.10	1.00	11.0	130.0	Tons burned
5-03-001-06	Open pit	13.0	0.10	4.00	0.00	0.00	Tons of waste
5-03-001-08	Auto body components	2.00	0.00	0.10	0.91	2.50	Car burned
5-03-005-06	Sludge	100.0	1.00	5.00	1.00	0.00	Tons of dry sludge
Open Burning							
5-03-002-01	Wood/vegetation/leaves	17.0	0.00	4.00	24.0	140.0	Tons burned
5-03-002-02	Refuse	16.0	1.00	6.00	30.0	85.0	Tons burned
5-03-002-03	Auto body components	100.0	0.00	4.00	30.0	125.0	Tons burned
5-03-002-04	Coal refuse piles	0.90	1.10	0.10	0.50	2.50	Cubic yards of pile
Auxiliary Fuel/No Emissions							
5-03-900-05	Distillate oil	0.00	0.00	0.00	0.00	0.00	1000 gallons burned
5-03-900-06	Natural gas	0.00	0.00	0.00	0.00	0.00	Million cubic feet burned
5-03-900-10	Liquified petroleum gas (LPG)	0.00	0.00	0.00	0.00	0.00	1000 gallons burned

NATIONAL EMISSION DATA SYSTEM

SOURCE CLASSIFICATION CODES AND EMISSION FACTOR LISTING

SCC	PROCESS	POUNDS EMITTED PER UNIT					UNITS
		PART	SO_x	NO_x	HC	CO	
IN-PROCESS FUEL USE[1,2]							
In-Process Fuel							
Note: The process gas codes below ending in 97, 98, and 99 can be used to record up to three different process gases used in each point source. If only one process gas is used, any of these three SCC codes is suitable.							
3-90-001-99	Anthracite coal	0.00	0.00	0.00	0.00	0.00	Tons burned
3-90-002-99	Bituminous coal	0.00	0.00	0.00	0.00	0.00	Tons burned
3-90-003-99	Lignite	0.00	0.00	0.00	0.00	0.00	Tons burned
3-90-004-99	Residual oil	0.00	0.00	0.00	0.00	0.00	1000 gallons burned
3-90-005-99	Distillate oil	0.00	0.00	0.00	0.00	0.00	1000 gallons burned
3-90-006-99	Natural gas	0.00	0.00	0.00	0.00	0.00	Million cubic feet burned
3-90-007-01	Process gas (CO or blast furnace)	0.00	0.00	0.00	0.00	0.00	Million cubic feet burned
3-90-007-02	Process gas (coke ovens)	0.00	0.00	0.00	0.00	0.00	Million cubic feet burned
3-90-007-97	Process gas (general) - specify in comments field	0.00	0.00	0.00	0.00	0.00	Million cubic feet burned
3-90-007-98	Process gas (general) - specify in comments field	0.00	0.00	0.00	0.00	0.00	Million cubic feet burned
3-90-007-99	Process gas (general) - specify in comments field	0.00	0.00	0.00	0.00	0.00	Million cubic feet burned
3-90-008-99	Coke	0.00	0.00	0.00	0.00	0.00	Tons burned
3-90-009-99	Wood	0.00	0.00	0.00	0.00	0.00	Tons burned
3-90-010-99	Liquified petroleum gas (LPG)	0.00	0.00	0.00	0.00	0.00	1000 gallons burned
3-90-012-99	Solid waste fuel - specify in comments field	0.00	0.00	0.00	0.00	0.00	Tons burned
3-90-013-99	Liquid waste fuel - specify in comments field	0.00	0.00	0.00	0.00	0.00	1000 gallons burned

[1]See Part II, SIC 3241 for specific in-process fuel codes for cement manufacturing.

[2]These in-process fuel codes must always be used in conjunction with the appropriate process code.

SCC	PROCESS	POUNDS EMITTED PER UNIT PART	SO_x	NO_x	HC	CO	UNITS
DEGREASING							
4-01-002-01	Stoddard	0.00	0.00	0.00	2000.	0.00	Tons solvent used[1]
4-01-002-02	1,1,1-Trichlorethane (Methylchloroform)	0.00	0.00	0.00	2000.	0.00	Tons solvent used[1]
4-01-002-03	Perchloroethylene	0.00	0.00	0.00	2000.	0.00	Tons solvent used[1]
4-01-002-04	Methylene Chloride	0.00	0.00	0.00	2000.	0.00	Tons solvent used[1]
4-01-002-05	Trichloroethylene	0.00	0.00	0.00	2000.	0.00	Tons solvent used[1]
4-01-002-06	Toluene	0.00	0.00	0.00	2000.	0.00	Tons solvent used[1]
4-01-002-07	Trichlorotrifluoroethane	0.00	0.00	0.00	2000.	0.00	Tons solvent used[1]
4-01-002-99	Other/not classified (Specify in comments)	0.00	0.00	0.00	2000.	0.00	Tons solvent used[1]
SURFACE COATING							
Coating							
4-02-001-01	Paint, general	0.00	0.00	0.00	1120.	0.00	Tons coating
4-02-003-01	Varnish/shellac, general	0.00	0.00	0.00	1000.	0.00	Tons coating
4-02-004-01	Lacquer, general	0.00	0.00	0.00	1540.	0.00	Tons coating
4-02-005-01	Enamel, general	0.00	0.00	0.00	840.0	0.00	Tons coating
4-02-006-01	Primer, general	0.00	0.00	0.00	1320.	0.00	Tons coating
4-02-007-01	Adhesive, general	0.00	0.00	0.00		0.00	Tons coating
Coating Oven							
4-02-008-01	General	0.00	0.00	0.00		0.00	Tons coating
Oven Heater							
4-02-010-01	Natural gas						Million cubic feet burned
4-02-010-02	Distillate oil						1000 gallons burned
4-02-010-03	Residual oil						1000 gallons burned
THINNING SOLVENTS							
NOTE: These solvents are used to thin coatings and thus should be coded with one of the coating codes above.							
4-02-009-01	General - specify in comments field	0.00	0.00	0.00	2000.	0.00	Tons solvent
4-02-009-02	Acetone	0.00	0.00	0.00	2000.	0.00	Tons solvent
4-02-009-03	Butyl acetate	0.00	0.00	0.00	2000.	0.00	Tons solvent
4-02-009-04	Butyl alcohol	0.00	0.00	0.00	2000.	0.00	Tons solvent
4-02-009-05	Carbitol	0.00	0.00	0.00	2000.	0.00	Tons solvent
4-02-009-06	Cellosolve	0.00	0.00	0.00	2000.	0.00	Tons solvent
4-02-009-07	Cellosolve acetate	0.00	0.00	0.00	2000.	0.00	Tons solvent
4-02-009-08	Dimethylformamide	0.00	0.00	0.00	2000.	0.00	Tons solvent
4-02-009-09	Ethyl acetate	0.00	0.00	0.00	2000.	0.00	Tons solvent
4-02-009-10	Ethyl alcohol	0.00	0.00	0.00	2000.	0.00	Tons solvent
4-02-009-11	Gasoline	0.00	0.00	0.00	2000.	0.00	Tons solvent
4-02-009-12	Isopropyl alcohol	0.00	0.00	0.00	2000.	0.00	Tons solvent
4-02-009-13	Isopropyl acetate	0.00	0.00	0.00	2000.	0.00	Tons solvent
4-02-009-14	Kerosene	0.00	0.00	0.00	2000.	0.00	Tons solvent
4-02-009-15	Lactol spirits	0.00	0.00	0.00	2000.	0.00	Tons solvent
4-02-009-16	Methyl acetate	0.00	0.00	0.00	2000.	0.00	Tons solvent
4-02-009-17	Methyl alcohol	0.00	0.00	0.00	2000.	0.00	Tons solvent

[1]These units refer to the quantity of make-up solvent used; not the quantity charged to the sump tank.

NATIONAL EMISSION DATA SYSTEM

SOURCE CLASSIFICATION CODES AND EMISSION FACTOR LISTING

SCC	PROCESS	POUNDS EMITTED PER UNIT					UNITS
		PART	SO_x	NO_x	HC	CO	
THINNING SOLVENTS (Continued)							
NOTE: These solvents are used to thin coatings and thus should be coded with one of the coating codes above.							
4-02-009-18	MEK	0.00	0.00	0.00	2000.	0.00	Tons solvent
4-02-009-19	MIBK	0.00	0.00	0.00	2000.	0.00	Tons solvent
4-02-009-20	Mineral spirits	0.00	0.00	0.00	2000.	0.00	Tons solvent
4-02-009-21	Naphtha	0.00	0.00	0.00	2000.	0.00	Tons solvent
4-02-009-22	Toluene	0.00	0.00	0.00	2000.	0.00	Tons solvent
4-02-009-23	Varsol	0.00	0.00	0.00	2000.	0.00	Tons solvent
4-02-009-24	Xylene	0.00	0.00	0.00	2000.	0.00	Tons solvent
4-02-009-25	Benzene	0.00	0.00	0.00	2000.	0.00	Tons solvent
4-02-009-26	Turpentine	0.00	0.00	0.00	2000.	0.00	Tons solvent

NATIONAL EMISSION DATA SYSTEM

SOURCE CLASSIFICATION CODES AND EMISSION FACTOR LISTING

SCC	PROCESS	POUNDS EMITTED PER UNIT					UNITS
		PART	SO_x	NO_x	HC	CO	
MISCELLANEOUS HYDROCARBON EVAPORATION							
4-90-999-99	Identify the Process and the Solvent in comments	0.00	0.00	0.00	2000.	0.00	Tons of solvent consumed

PART 2

SOURCE CLASSIFICATION CODES

FOR

SPECIFIC INDUSTRIES

NATIONAL EMISSION DATA SYSTEM

SOURCE CLASSIFICATION CODES AND EMISSION FACTOR LISTING

SCC	PROCESS	POUNDS EMITTED PER UNIT					UNITS
		PART	SO_x	NO_x	HC	CO	
FUGITIVE EMISSIONS FROM INDUSTRIAL SOURCES							
NOTE: Fugitive emissions occur from numerous locations within industrial facilities but, as of 1978, most of these sources have not been fully characterized. To allow these fugitive sources to be represented in NEDS, common SCC codes have been developed and are tabulated below. These codes should be used in addition to the main process SCC codes associated with the facility. Specific fugitive emissions that have been characterized are also contained in the text.							
Chemical							
3-01-888-01	Specify in the comments field						Tons product
Food							
3-02-888-01	Specify in the comments field						Tons product
Primary Metal							
3-03-888-01	Specify in the comments field						Tons product
Secondary Metal							
3-04-888-01	Specify in the comments field						Tons product
Mineral Products							
3-05-888-01	Specify in the comments field						Tons product
Petroleum Industry							
3-06-888-01	Specify in the comments field						1000 bbls. refinery feed
Oil and Gas Extraction							
3-10-888-01	Specify in the comments field						100 barrels feed produced
Wood Products							
3-07-888-01	Specify in the comments field						Tons product
Metal Fabrications							
3-09-888-01	Specify in the comments field						Tons product
Textile Manufacturing							
3-30-888-01	Specify in the comments field						Tons product
Cleaning Solvent							
4-01-888-01	Specify in the comments field						Tons product
Surface Coating							
4-02-888-01	Specify in the comments field						Tons product
Petroleum Storage							
4-03-888-01	Specify in the comment field						1000 gallons storage capacity
Printing Press							
4-05-888-01	Specify in the comment field						Tons product
Petroleum Marketing & Transportation							
4-06-888-01	Specify in the comment field						1000 gallons throughput

SCC	PROCESS	POUNDS EMITTED PER UNIT					UNITS
		PART	SO_x	NO_x	HC	CO	
MAJOR GROUP 02 - AGRICULTURAL PRODUCTION							
Beef Cattle Feed lots - 0211							
3-02-020-01	Feed lots - General	102.2					Head of cattle capacity
3-02-020-02	Feed lots - General	54.0					Head of cattle throughput
MAJOR GROUP 07 - AGRICULTURAL SERVICES							
Cotton Ginning - 0724, 0131							
3-02-004-01	Unloading Fan	5.00	0.00	0.00	0.00	0.00	Bales of cotton
3-02-004-02	Seed Cotton Cleaning System	0.30	0.00	0.00	0.00	0.00	Bales of cotton
3-02-004-03	Stick/Burr Machine	0.20	0.00	0.00	0.00	0.00	Bales of cotton
3-02-004-04	Miscellaneous (Lint Cleaner/ Battery Condensers; Master Trash/Overflow/Mote Fans)	1.50	0.00	0.00	0.00	0.00	Bales of cotton
3-02-004-10	General (Entire process, alternative to above)	7.00	0.00	0.00	0.00	0.00	Bales of cotton

NATIONAL EMISSION DATA SYSTEM

SOURCE CLASSIFICATION CODES AND EMISSION FACTOR LISTING

SCC	PROCESS	POUNDS EMITTED PER UNIT					UNITS
		PART	SO_x	NO_x	HC	CO	
MAJOR GROUP 10 - METAL MINING[1]							
Gold - 1041							
3-03-013-01	Mining/Processing		0.00	0.00	0.00	0.00	Hundreds of tons of ore
Aluminum Ore - Bauxite 1051							
3-03-000-01	Crushing/Handling	600.00	0.00	0.00	0.00	0.00	Hundreds of tons of ore processed
3-03-000-02	Drying Oven						Hundreds of tons of ore processed
Molybedenum Ore Mining - 1061							
3-03-011-01	Mining - General		0.00	0.00	0.00	0.00	Hundreds of tons mined
3-03-011-02	Milling - General		0.00	0.00	0.00	0.00	Hundreds of tons produced
3-03-011-99	Processing (Specify in Comments)						Hundreds of tons produced
Mining - Specify Material - 1011-1099							
3-05-040-01	Open Pit Blasting		0.00	0.00	0.00	0.00	Hundreds of tons of material
3-05-040-02	Open Pit Drilling		0.00	0.00	0.00	0.00	Hundreds of tons of material
3-05-040-03	Open Pit Cobbing		0.00	0.00	0.00	0.00	Hundreds of tons of material
3-05-040-10	Underground Ventilation		0.00	0.00	0.00	0.00	Hundreds of tons of material
3-05-040-20	Loading		0.00	0.00	0.00	0.00	Hundreds of tons of material
3-05-040-21	Convey/Haul Material		0.00	0.00	0.00	0.00	Hundreds of tons of material
3-05-040-22	Convey/Haul Waste		0.00	0.00	0.00	0.00	Hundreds of tons of material
3-05-040-23	Unloading		0.00	0.00	0.00	0.00	Hundreds of tons of material
3-05-040-24	Stripping		0.00	0.00	0.00	0.00	Hundreds of tons of material
3-05-040-25	Stockpile		0.00	0.00	0.00	0.00	Hundreds of tons of material
3-05-040-30	Primary Crusher		0.00	0.00	0.00	0.00	Hundreds of tons of material
3-05-040-31	Secondary Crusher		0.00	0.00	0.00	0.00	Hundreds of tons of material
3-05-040-32	Ore Concentrator		0.00	0.00	0.00	0.00	Hundreds of tons of material
3-05-040-33	Ore Dryer		0.00	0.00	0.00	0.00	Hundreds of tons of material
3-05-040-34	Screening		0.00	0.00	0.00	0.00	Hundreds of tons of material
3-05-040-36	Tailing Piles		0.00	0.00	0.00	0.00	Hundreds of tons of material
3-05-040-99	Other/Not Classified (Specify in Comments)		0.00	0.00	0.00	0.00	Hundreds of tons of material

[1] For barium ore processing, see Part II, SIC 3295.

NATIONAL EMISSION DATA SYSTEM

SOURCE CLASSIFICATION CODES AND EMISSION FACTOR LISTING

SCC	PROCESS	POUNDS EMITTED PER UNIT					UNITS
		PART	SO_x	NO_x	HC	CO	
MAJOR GROUPS 11 and 12 - ANTHRACITE MINING, AND BITUMINOUS COAL AND LIGNITE MINING							
Coal Cleaning[1] - 1111,1211							
Thermal Dryer							
3-05-010-01	Fluidized Bed	20.0					Tons coal dried
3-05-010-02	Flash or Suspension	16.0					Tons coal dried
3-05-010-03	Multilouvered	25.0					Tons coal dried
3-05-010-04	Rotary						Tons coal dried
3-05-010-05	Cascade						Tons coal dried
3-05-010-06	Continuous Carrier						Tons coal dried
3-05-010-07	Screen						Tons coal dried
Material Handling							
3-05-010-08	Unloading		0.00	0.00	0.00	0.00	Tons shipped
3-05-010-09	Raw Coal Storage		0.00	0.00	0.00	0.00	Tons shipped
3-05-010-10	Crushing		0.00	0.00	0.00	0.00	Tons shipped
3-05-010-11	Coal Transfer		0.00	0.00	0.00	0.00	Tons shipped
3-05-010-12	Screening		0.00	0.00	0.00	0.00	Tons shipped
3-05-010-13	Air Tables		0.00	0.00	0.00	0.00	Tons shipped
3-05-010-14	Cleaned Coal Storage		0.00	0.00	0.00	0.00	Tons shipped
3-05-010-15	Loading		0.00	0.00	0.00	0.00	Tons shipped
3-05-010-99	Other/Not Classified (Specify in Comments)		0.00	0.00	0.00	0.00	Tons shipped

[1] These codes are also applicable to Coal Cleaning Operations located at power plants.

NATIONAL EMISSION DATA SYSTEM

SOURCE CLASSIFICATION CODES AND EMISSION FACTOR LISTING

SCC	PROCESS	POUNDS EMITTED PER UNIT					UNITS
		PART	SO_x	NO_x	HC	CO	
MAJOR GROUP 13 - OIL AND GAS EXTRACTION							
For Internal Combustion Engines, See Part I, SCC 2-02-XXX-XX For Petroleum Storage Tanks, See Major Group 29 For Sulfur Recovery Plants, See Major Group 28							
Crude Oil Production- 1311							
3-10-001-99	Not Classified (Specify in Comments)						1,000 Barrels Produced
Natural Gas Production - 1311							
3-10-002-01	Gas Sweetening (Amine Process) (Smokeless Flares/Tail Gas Incinerators)	0.00	$1685.S_m$	0.00	0.00	0.00	Million Cubic Feet of Sour Gas Processed
3-10-002-02	Gas Stripping Operations						Million Cubic Feet of Gas Processed
3-10-002-99	Other/Not Classified (Specify in Comments)						Million Cubic Feet of Gas Processed

'S_m' indicates the sulfur content of the fuel as H_2S on a mole percent basis.

NATIONAL EMISSION DATA SYSTEM

SOURCE CLASSIFICATION CODES AND EMISSION FACTOR LISTING

SCC	PROCESS	POUNDS EMITTED PER UNIT PART	SO_x	NO_x	HC	CO	UNITS
MAJOR GROUP 14 - MINING AND QUARRYING OF NONMETALLIC MINERAL, EXCEPT FUELS							
Mining - Specify Material - 1400-1499							
3-05-040-01	Open Pit Blasting		0.00	0.00	0.00	0.00	Hundreds of tons of material
3-05-040-02	Open Pit Drilling		0.00	0.00	0.00	0.00	Hundreds of tons of material
3-05-040-03	Open Pit Cobbing		0.00	0.00	0.00	0.00	Hundreds of tons of material
3-05-040-10	Underground Ventilation		0.00	0.00	0.00	0.00	Hundreds of tons of material
3-05-040-20	Loading		0.00	0.00	0.00	0.00	Hundreds of tons of material
3-05-040-21	Convey/Haul Material		0.00	0.00	0.00	0.00	Hundreds of tons of material
3-05-040-22	Convey/Haul Waste		0.00	0.00	0.00	0.00	Hundreds of tons of material
3-05-040-23	Unloading		0.00	0.00	0.00	0.00	Hundreds of tons of material
3-05-040-24	Stripping		0.00	0.00	0.00	0.00	Hundreds of tons of material
3-05-040-25	Stockpile		0.00	0.00	0.00	0.00	Hundreds of tons of material
3-05-040-30	Primary Crusher		0.00	0.00	0.00	0.00	Hundreds of tons of material
3-05-040-31	Secondary Crusher		0.00	0.00	0.00	0.00	Hundreds of tons of material
3-05-040-32	Ore Concentrator		0.00	0.00	0.00	0.00	Hundreds of tons of material
3-05-040-33	Ore Dryer		0.00	0.00	0.00	0.00	Hundreds of tons of material
3-05-040-34	Screening		0.00	0.00	0.00	0.00	Hundreds of tons of material
3-05-040-36	Tailing Piles		0.00	0.00	0.00	0.00	Hundreds of tons of material
3-05-040-99	Other/Not Classified (Specify in Comments)		0.00	0.00	0.00	0.00	Hundreds of tons of material
Stone Quarrying/Processing - 1411, 1422, 1423, 1429, 1499							
3-05-020-01	Primary Crushing	0.10	0.00	0.00	0.00	0.00	Tons raw material
3-05-020-02	Sec. Crush/Screen	0.60	0.00	0.00	0.00	0.00	Tons raw material
3-05-020-03	Tert. Crush/Screen	3.60	0.00	0.00	0.00	0.00	Tons raw material
3-05-020-04	Pecrush/Screening	2.50	0.00	0.00	0.00	0.00	Tons processed
3-05-020-05	Fines Mill	4.50	0.00	0.00	0.00	0.00	Tons processed
3-05-020-06	Miscellaneous Operation-Screening/Conveying & Handling	2.00	0.00	0.00	0.00	0.00	Tons raw material
3-05-020-07	Open Storage	0.33[1]	0.00	0.00	0.00	0.00	Tons product stored
3-05-020-08	Cut Stone - General		0.00	0.00	0.00	0.00	Tons processed
3-05-020-09	Blasting - General		0.00	0.00	0.00	0.00	Tons raw material
3-05-020-10	Drilling		0.00	0.00	0.00	0.00	Tons raw material
3-05-020-11	Hauling		0.00	0.00	0.00	0.00	Vehicle miles
3-05-020-12	Drying						Tons stone dryed

[1] Does not correct for the PE Index, See AP-42, Section 11.2.3.

NATIONAL EMISSION DATA SYSTEM

SOURCE CLASSIFICATION CODES AND EMISSION FACTOR LISTING

SCC	PROCESS	POUNDS EMITTED PER UNIT					UNITS
		PART	SO_x	NO_x	HC	CO	
MAJOR GROUP 14 - MINING AND QUARRYING OF NONMETALLIC MINERAL, EXCEPT FUELS (Continued)							
Sand/Gravel - 1442, 1446							
3-05-025-01	Crushing/Screen	0.10	0.00	0.00	0.00	0.00	Tons product
3-05-025-02	Aggregate Storage		0.00	0.00	0.00	0.00	Tons product
3-05-025-03	Material Transfer & Conveying		0.00	0.00	0.00	0.00	Tons product
3-05-025-04	Hauling		0.00	0.00	0.00	0.00	Vehicle miles
Magnesium Carbonate - 1459							
3-05-024-01	Mine/Process		0.00	0.00	0.00	0.00	Tons product
3-05-024-99	Other/Not Classified (Specify in Comments)						Tons processed
Potash Production - 1474							
3-05-022-01	Mine - Grind/Dry		0.00	0.00	0.00	0.00	Tons ore
3-05-022-99	Other/Not Classified (Specify in Comments)						Tons processed

NATIONAL EMISSION DATA SYSTEM

SOURCE CLASSIFICATION CODES AND EMISSION FACTOR LISTING

SCC	PROCESS	POUNDS EMITTED PER UNIT PART	SO_x	NO_x	HC	CO	UNITS
MAJOR GROUP 14 - MINING AND QUARRYING OF NONMETALLIC MINERAL, EXCEPT FUELS (CONTINUED)							
Phosphate Rock - 1475							
3-05-019-01	Drying	15.0					Tons phosphate rock
3-05-019-02	Grinding	20.0	0.00	0.00	0.00	0.00	Tons phosphate rock
3-05-019-03	Transfer/Storage	2.00	0.00	0.00	0.00	0.00	Tons phosphate rock
3-05-019-04	Open Storage	40.0	0.00	0.00	0.00	0.00	Tons phosphate rock
3-05-019-99	Other/Not Classified (Specify in Comments)						Tons processed
Salt Mining - 1476							
3-05-021-01	Not Classified (Specify in Comments)		0.00	0.00	0.00	0.00	Tons mined
Diatomacous Earth - 1499, 3295							
3-05-026-01	Handling		0.00	0.00	0.00	0.00	Tons product
3-05-026-99	Other/Not Classified (Specify in Comments)						Tons processed
Asbestos Mining - 1499							
3-05-031-01	Surface Blasting		0.00	0.00	0.00	0.00	Tons of ore
3-05-031-02	Surface Drilling		0.00	0.00	0.00	0.00	Tons of ore
3-05-031-03	Cobbing		0.00	0.00	0.00	0.00	Tons of ore
3-05-031-04	Loading		0.00	0.00	0.00	0.00	Tons of ore
3-05-031-05	Convey/Haul Asbestos		0.00	0.00	0.00	0.00	Tons of ore
3-05-031-06	Convey/Haul Waste		0.00	0.00	0.00	0.00	Tons of ore
3-05-031-07	Unloading		0.00	0.00	0.00	0.00	Tons of ore
3-05-031-08	Overburden Stripping		0.00	0.00	0.00	0.00	Tons removed
3-05-031-09	Ventilation of Process Operations		0.00	0.00	0.00	0.00	Tons of ore
3-05-031-10	Stockpiling		0.00	0.00	0.00	0.00	Tons of ore
3-05-031-11	Tailing Piles		0.00	0.00	0.00	0.00	Tons of material
3-05-031-99	Other/Not Classified (Specify in Comments)						Tons processed
Asbestos Milling - 1499							
3-05-032-01	Crushing		0.00	0.00	0.00	0.00	Tons processed
3-05-032-02	Drying		0.00	0.00	0.00	0.00	Tons processed
3-05-032-03	Recrushing		0.00	0.00	0.00	0.00	Tons processed
3-05-032-04	Screening		0.00	0.00	0.00	0.00	Tons processed
3-05-032-05	Fiberizing		0.00	0.00	0.00	0.00	Tons processed
3-05-032-06	Bagging		0.00	0.00	0.00	0.00	Tons Processed
3-05-032-99	Other/Not Classified (Specify in Comments)						Tons Processed
Vermiculite - 1499							
3-05-033-01	Not Classified (Specify in Comments)						Tons Product

NATIONAL EMISSION DATA SYSTEM

SOURCE CLASSIFICATION CODES AND EMISSION FACTOR LISTING

SCC	PROCESS	POUNDS EMITTED PER UNIT PART	SO_x	NO_x	HC	CO	UNITS
MAJOR GROUP 20 - FOOD AND KINDRED PRODUCTS[1]							
Meat Smokehouses - 2012, 2013							
3-02-013-01	Combined Operations	0.30			0.07	0.60	Tons meat smoked
Dairy Products - 2021, 2022, 2023, 2024, 2026							
3-02-030-01	Milk Spray-Dryer		0.00				Tons product
3-02-030-99	Other/Not Classified (Specify in Comments)						Tons product
Barley Milling - 2041							
3-02-007-03	Barley Cleaning	0.20	0.00	0.00	0.00	0.00	Tons grain processed
3-02-007-05	Barley Flour Mill	3.00	0.00	0.00	0.00	0.00	Tons grain processed
Milo Milling - 2041							
3-02-007-04	Milo Cleaning	0.40	0.00	0.00	0.00	0.00	Tons grain processed
Durum Mills - 2041							
3-02-007-11	Grain Receiving	1.00	0.00	0.00	0.00	0.00	Tons grain received
3-02-007-12	Precleaning/Handling	5.00	0.00	0.00	0.00	0.00	Tons grain received
3-02-007-13	Cleaning House		0.00	0.00	0.00	0.00	Tons grain received
3-02-007-14	Millhouse		0.00	0.00	0.00	0.00	Tons grain received
Rye Milling - 2041							
3-02-007-21	Grain Receiving	1.00	0.00	0.00	0.00	0.00	Tons grain received
3-02-007-22	Precleaning/Handling	5.00	0.00	0.00	0.00	0.00	Tons grain received
3-02-007-23	Cleaning House		0.00	0.00	0.00	0.00	Tons grain received
3-02-007-24	Millhouse[2]	70.0	0.00	0.00	0.00	0.00	Tons grain received
Wheat Mills - 2041							
3-02-007-31	Grain Receiving	1.00	0.00	0.00	0.00	0.00	Tons grain received
3-02-007-32	Precleaning/Handling	5.00	0.00	0.00	0.00	0.00	Tons grain received
3-02-007-33	Cleaning House		0.00	0.00	0.00	0.00	Tons grain received
3-02-007-34	Millhouse[2]	70.0	0.00	0.00	0.00	0.00	Tons grain received
Dry Corn Milling - 2041							
3-02-007-41	Grain Receiving	1.00	0.00	0.00	0.00	0.00	Tons grain received
3-02-007-42	Grain Drying	0.50	0.00	0.00	0.00	0.00	Tons grain received
3-02-007-43	Precleaning/Handling	5.00	0.00	0.00	0.00	0.00	Tons grain received
3-02-007-44	Cleaning House	6.00	0.00	0.00	0.00	0.00	Tons grain received
3-02-007-45	Degerming and Milling		0.00	0.00	0.00	0.00	Tons grain received

[1] Grain processing and milling are included in SIC's 2041, 2044, 2046, and 2075. For grain elevators, see Part II, SIC 5153.

[2] The particulate emission factor is on emissions at the inlet to the baghouse or other control device. Indicate the control device and efficiency to properly estimate the actual emissions.

NATIONAL EMISSION DATA SYSTEM

SOURCE CLASSIFICATION CODES AND EMISSION FACTOR LISTING

SCC	PROCESS	POUNDS EMITTED PER UNIT PART	SO_x	NO_x	HC	CO	UNITS
MAJOR GROUP 20 - FOOD AND KINDRED PRODUCTS (CONTINUED)							
Oat Milling - 2041							
3-02-007-60	General		0.00	0.00	0.00	0.00	Tons grain received
Rice Milling - 2044							
3-02-007-71	Grain Receiving	0.64	0.00	0.00	0.00	0.00	Tons grain received
3-02-007-72	Handling and Precleaning	5.00	0.00	0.00	0.00	0.00	Tons grain received
3-02-007-73	Drying		0.00	0.00	0.00	0.00	Tons grain received
3-02-007-74	Cleaning and Millhouse		0.00	0.00	0.00	0.00	Tons grain received
Vegetable Oil Processing - 2046, 2074, 2076, 2079							
3-02-019-01	Corn Oil-General (2046)						Tons refined oil produced
3-02-019-02	Cottonseed Oil-General (2074)						Tons refined oil produced
3-02-019-03	Soybean Oil-General (2075)						Tons refined oil produced
3-02-019-04	Coconut Oil-General (2076)						Tons refined oil produced
3-02-019-05	Peanut Oil-General (2076)						Tons refined oil produced
3-02-019-99	Other/Not Classified (2076, 2079) (Specify in Comments)						Tons refined oil produced
Starch Manufacturing - 2046							
3-02-014-01	Combined Operations	8.00					Tons starch produced
Corn Wet Milling - 2046							
3-02-007-51	Grain Receiving	1.00	0.00	0.00	0.00	0.00	Tons grain received
3-02-007-52	Grain Handling	5.00	0.00	0.00	0.00	0.00	Tons grain received
3-02-007-53	Grain Cleaning	6.00	0.00	0.00	0.00	0.00	Tons grain received
3-02-007-54	Dryers		0.00	0.00	0.00	0.00	Tons grain received
3-02-007-55	Bulk Loading		0.00	0.00	0.00	0.00	Tons grain received
3-02-007-56	Milling		0.00	0.00	0.00	0.00	Tons grain received
Alfalfa Dehydrating - 2048							
3-02-001-02	Primary Cyclone and Dryer	10.0	0.00	0.00	0.00	0.00	Tons product
3-02-001-03	Meal Collector Cyclone	2.60	0.00	0.00	0.00	0.00	Tons product
3-02-001-04	Pellet Cooler Cyclone	3.00	0.00	0.00	0.00	0.00	Tons product

NATIONAL EMISSION DATA SYSTEM

SOURCE CLASSIFICATION CODES AND EMISSION FACTOR LISTING

SCC	PROCESS	POUNDS EMITTED PER UNIT					UNITS
		PART	SO_x	NO_x	HC	CO	
MAJOR GROUP 20 - FOOD AND KINDRED PRODUCTS (Continued)							
Feed Manufacture - 2048							
3-02-008-02	Grain Receiving	1.30	0.00	0.00	0.00	0.00	Tons grain received
3-02-008-03	Shipping	0.50	0.00	0.00	0.00	0.00	Tons grain received
3-02-008-04	Handling	3.00	0.00	0.00	0.00	0.00	Tons grain received
3-02-008-05	Grinding		0.00	0.00	0.00	0.00	Tons grain received
3-02-008-06	Pellet Coolers		0.00	0.00	0.00	0.00	Tons grain received
Bakeries - 2051, 2052							
3-02-032-01	Bread Baking (Sponge-Dough Process)	0.00	0.00	0.00	13.00	0.00	Tons of bread baked
3-02-032-02	Bread Baking (Straight-Dough Process)	0.00	0.00	0.00	1.00	0.00	Tons of bread baked
3-02-032-99	Not Classified (Specify in Comments)						Tons product
Sugar Cane Processing - 2061, 2062							
3-02-015-99	Not Classified (Specify in Comments)						Tons sugar produced

NATIONAL EMISSION DATA SYSTEM

SOURCE CLASSIFICATION CODES AND EMISSION FACTOR LISTING

SCC	PROCESS	POUNDS EMITTED PER UNIT PART	SO_x	NO_x	HC	CO	UNITS
MAJOR GROUP 20 - FOOD AND KINDRED PRODUCTS (CONTINUED)							
Sugar Beet Processing - 2063							
3-02-016-01	Dryer						Tons raw beets
3-02-016-99	Other/Not Classified (Specify in Comments)						Tons raw beets
Candy Manufacturing - 2065, 2066							
3-02-018-99	Not Classified (Specify in Comments)						Tons product
Soybean Mills - 2075, 2041							
3-02-007-81	Grain Receiving	1.60	0.00	0.00	0.00	0.00	Tons grain received
3-02-007-82	Grain Handling	5.00	0.00	0.00	0.00	0.00	Tons grain received
3-02-007-83	Grain Cleaning		0.00	0.00	0.00	0.00	Tons grain received
3-02-007-84	Drying	7.20	0.00	0.00	0.00	0.00	Tons grain received
3-02-007-85	Cracking and Dehulling	3.30	0.00	0.00	0.00	0.00	Tons grain received
3-02-007-86	Hull Grinding	2.00	0.00	0.00	0.00	0.00	Tons grain received
3-02-007-87	Bean Conditioning	0.10	0.00	0.00	0.00	0.00	Tons grain received
3-02-007-88	Flaking	0.57	0.00	0.00	0.00	0.00	Tons grain received
3-02-007-89	Meal Dryer	1.50	0.00	0.00	0.00	0.00	Tons grain received
3-02-007-90	Meal Cooler	1.80	0.00	0.00	0.00	0.00	Tons grain received
3-02-007-91	Bulk Loading	0.27	0.00	0.00	0.00	0.00	Tons grain received
Peanut Processing - 2076, 2079, 2099							
3-02-017-99	Not Classified (Specify in Comments)						Tons processed
Fish Processing - 2077, 2091							
3-02-012-01	Cookers-Fresh Fish Scrap	0.00			0.03		Tons fish processed
3-02-012-02	Cookers-Stale Fish Scrap	0.00			3.50		Tons fish processed
3-02-012-03	Dryers	0.10					Tons fish processed
3-02-012-04	Canning Cookers	0.00					Tons fish processed
Beer Production - 2082							
3-02-009-01	Grain Handling	3.00	0.00	0.00	0.00	0.00	Tons grain processed
3-02-009-02	Drying Spent Grains	5.00					Tons grain processed
3-02-009-03	Brewing						1000 gallons
Wines, Brandy, and Brandy Spirits - 2084							
3-02-011-99	Not Classified (Specify in Comments)	0.00			0.00		Gallons produced
Whiskey Fermentation - 2085							
3-02-010-01	Grain Handling	3.00	0.00	0.00	0.00	0.00	Tons grain processed
3-02-010-02	Drying Spent Grains	5.00					Tons grain processed
3-02-010-03	Aging	0.00	0.00	0.00	10.00	0.00	Barrel-year of stored whiskey

NATIONAL EMISSION DATA SYSTEM

SOURCE CLASSIFICATION CODES AND EMISSION FACTOR LISTING

SCC	PROCESS	POUNDS EMITTED PER UNIT					UNITS
		PART	SO_x	NO_x	HC	CO	
MAJOR GROUP 20 - FOOD AND KINDRED PRODUCTS (CONTINUED)							
Coffee Roasting - 2095							
3-02-002-01	Direct Fired Roaster	7.60		0.10			Tons green beans
3-02-002-02	Indirect Fired Roaster	4.20		0.10			Tons green beans
3-02-002-03	Stoner/Cooler	1.40		0.00			Tons green beans
3-02-002-99	Other/Not Classified (Specify in Comments)						Tons product
Instant Coffee Products - 2095							
3-02-003-01	Spray Dryer	1.40					Tons green beans
Other/Not Classified - 2099							
3-02-999-98	Specify in Comments						Tons processed (input)
3-02-999-99	Specify in Comments						Tons produced (finished)

NATIONAL EMISSION DATA SYSTEM

SOURCE CLASSIFICATION CODES AND EMISSION FACTOR LISTING

SCC	PROCESS	POUNDS EMITTED PER UNIT					UNITS
		PART	SO_x	NO_x	HC	CO	
MAJOR GROUP 21 - TOBACCO MANUFACTURERS							
Tobacco Processing - 2111, 2121, 2131, 2141							
3-02-033-99	Not Classified (Specify in Comments)						Tons product

NATIONAL EMISSION DATA SYSTEM

SOURCE CLASSIFICATION CODES AND EMISSION FACTOR LISTING

SCC	PROCESS	POUNDS EMITTED PER UNIT					UNITS
		PART	SO_x	NO_x	HC	CO	
MAJOR GROUP 22 - TEXTILE MILL PRODUCTS							
General Fabrics - 2261, 2262, 2284, 2297, 2299, 2281, 2282, 2283, 2291, 2294							Tons processed
3-30-001-01	Yarn Prep/Bleach						Tons processed
3-30-001-02	Printing (Specific Process SCC's are found in Major Group 27)						Tons processed
3-30-001-03	Polyester Thread Production						Tons processed
3-30-001-04	Tenter Frames (Heat Setting)						Tons processed
3-30-001-05	Carding						Tons processed
3-30-001-99	Other/Not Classified (Specify in Comments)						
Carpet Operations - 2271, 2272, 2279							Tons processed
3-30-003-99	Not Classified (Specify in Comments)						

NATIONAL EMISSION DATA SYSTEM

SOURCE CLASSIFICATION CODES AND EMISSION FACTOR LISTING

SCC	PROCESS	POUNDS EMITTED PER UNIT					UNITS
		PART	SO_X	NO_X	HC	CO	
MAJOR GROUP 24 - LUMBER AND WOOD PRODUCTS, EXCEPT FURNITURE[1]							
Sawmill Operations - 2421, 2426, 2429							
3-07-008-99	Not Classified (Specify in Comments)						Tons processed
Plywood/Particle Board - 2435, 2436, 2492							
3-07-007-01	Veneer Dryers	0.00	0.00		2.10	0.00	10,000 sq. ft. of 3/8 in. plywood produced
3-07-007-02	Sand Operations		0.00	0.00	0.00	0.00	Tons processed
3-07-007-03	Particle-Board Drying Operation	0.60	0.00	0.00	0.00	0.00	Tons of finished product
3-07-007-99	Other/Not Classified (Specify in Comments)						Tons processed
Wood Pressure Treating - 2491							
3-07-005-01	Creosote						Tons wood treated
3-07-005-99	Other/Not Classified (Specify in Comments)						Tons wood treated
Miscellaneous Woodworking Operations - 2421, 2426, 2429, 2431, 2434, 2439							
3-07-030-01	Wood Waste Storage Bin Vent	1.00	0.00	0.00	0.00	0.00	Tons wood waste
3-07-030-02	Wood Waste Storage Bin Loadout	2.00	0.00	0.00	0.00	0.00	Tons wood waste
3-07-030-99	Sanding/Planning Operations (Specify in Comments)						Tons processed

[1] For Surface Coating Operations, see Part I, page C-13.

NATIONAL EMISSION DATA SYSTEM

SOURCE CLASSIFICATION CODES AND EMISSION FACTOR LISTING

SCC	PROCESS	POUNDS EMITTED PER UNIT					UNITS
		PART	SO_x	NO_x	HC	CO	
MAJOR GROUP 25 - FURNITURE AND FIXTURES							
Furniture Manufacturing - 2500-2599[1]							
3-07-030-99	Sanding/Planing Operations (Specify in Comments)						Tons processed
3-07-020-99	Other/Not Classified (Specify in Comments)						Tons processed

[1] For Surface Coating Operations, see Part I, page C-13.

NATIONAL EMISSION DATA SYSTEM

SOURCE CLASSIFICATION CODES AND EMISSION FACTOR LISTING

SCC	PROCESS	POUNDS EMITTED PER UNIT					UNITS
		PART	SO_x	NO_x	HC	CO	
MAJOR GROUP 26 - PAPER AND ALLIED PRODUCTS							
Sulfate (Kraft) Pulping - 2611, 2621, 2631 (For Bark Boilers, see Part I)							
3-07-001-01	Digester Relief and Blow Tank	0.00	0.00			0.00	Air-dry tons unbleached pulp
3-07-001-02	Washers/Screens	0.00	0.01			0.00	Air-dry tons unbleached pulp
3-07-001-03	Multi-Effect Evaporator	0.00	0.01			0.00	Air-dry tons unbleached pulp
3-07-001-04	Recovery Furnace/Direct-Contact Evaporator	150.0	5.00	1.00		31.0	Air-dry tons unbleached pulp
3-07-001-05	Smelt Dissolving Tank	5.00	0.10			0.00	Air-dry tons unbleached pulp
3-07-001-06	Lime Kiln	45.0	0.30	1.00		10.0	Air-dry tons unbleached pulp
3-07-001-07	Turpentine Condenser	0.00	0.00	0.00		0.00	Air-dry tons unbleached pulp
3-07-001-08	Fluid Bed Calciner	72.0					Air-dry tons unbleached pulp
3-07-001-09	Liquor Oxidation Tower						Air-dry tons unbleached pulp
3-07-001-99	Other/Not Classified (Specify in Comments)						Air-dry tons unbleached pulp
Sulfite Pulping - 2611, 2621, 2631							
3-07-002-03	Digester/Blow Pit/Dump Tank (All bases except Ca)	0.00	40.0				Air-dry tons unbleached pulp
3-07-002-11	Digester/Blow Pit/Dump Tank (Ca)	0.00	67.0				Air-dry tons unbleached pulp
3-07-002-12	Digester/Blow Pit/Dump Tank (MgO with Recovery System)	0.00	0.00				Air-dry tons unbleached pulp
3-07-002-13	Digester/Blow Pit/Dump Tank (MgO w/Process Change and Scrubber)[1]	0.00	0.20				Air-dry tons unbleached pulp
3-07-002-14	Digester/Blow Pit/Dump Tank (NH_3 w/Process Change and Scrubber)[1]	0.00	0.40				Air-dry tons unbleached pulp
3-07-002-15	Digester/Blow Pit/Dump Tank (Na w/Process Change and Scrubber)[1]	0.00	2.00				Air-dry tons unbleached pulp
3-07-002-21	Recovery System (MgO)						Air-dry tons unbleached pulp
3-07-002-22	Recovery System (NH_3)						Air-dry tons unbleached pulp
3-07-002-23	Recovery System (Na)						Air-dry tons unbleached pulp
3-07-002-31	Acid Plant (NH_3)						Air-dry tons unbleached pulp
3-07-002-32	Acid Plant (Na)						Air-dry tons unbleached pulp
3-07-002-33	Acid Plant (Ca)						Air-dry tons unbleached pulp
3-07-002-34	Other Misc. Sources - Knotters/Washers/Screens, etc.	0.00	12.0				Air-dry tons unbleached pulp

[1] Process changes may include such measures as raising the pH of the cooking liquor, thereby lowering the free SO_2, relieving the pressure in the digester before the contents are discharged, and pumping out the digester contents instead of blowing them out.

NATIONAL EMISSION DATA SYSTEM

SOURCE CLASSIFICATION CODES AND EMISSION FACTOR LISTING

SCC	PROCESS	POUNDS EMITTED PER UNIT					UNITS
		PART	SO_x	NO_x	HC	CO	
MAJOR GROUP 26 - PAPER AND ALLIED PRODUCTS (Continued)							
Neutral Sulfite Semichemical Pulping - 2611, 2621, 2531 (Bark Boilers Contained Elsewhere)							
3-07-003-01	Digester/Dump Tank/Blow Pit						Air-dry tons unbleached pulp
3-07-003-02	Evaporator						Air-dry tons unbleached pulp
3-07-003-03	Fluid Bed Reactor						Air-dry tons unbleached pulp
3-07-003-04	Sulfur Burner/Absorbers						Air-dry tons unbleached pulp
Pulpboard Manufacture - 2631, 2661							
3-07-004-01	Paperboard - General	0.00					Tons finished product
3-07-004-02	Fiberboard - General	0.60					Tons finished product

NATIONAL EMISSION DATA SYSTEM

SOURCE CLASSIFICATION CODES AND EMISSION FACTOR LISTING

SCC	PROCESS	POUNDS EMITTED PER UNIT PART	SO_x	NO_x	HC	CO	UNITS
MAJOR GROUP 27 - PRINTING, PUBLISHING, AND ALLIED INDUSTRIES							
Dryers - 2711 thru 2782							
4-05-001-01	Dryer	0.00	0.00	0.00		0.00	
Printing - 2751, 2752, 2754							
4-05-002-01	Letter Press-2751	0.00	0.00	0.00	700.0	0.00	Tons Ink
4-05-003-01	Flexographic-2751	0.00	0.00	0.00	1300.0	0.00	Tons Ink
4-05-004-01	Lithographic-2752	0.00	0.00	0.00	700.0	0.00	Tons Ink
4-05-005-01	Gravure-2754	0.00	0.00	0.00	1300.	0.00	Tons Ink
Ink Thinning Solvents - These solvents are often added by the user to the inks used in the printing processes above. Thus, the solvent SCC's should not be used alone, but rather in conjunction with one of the printing process SCC's above.							
4-05-003-02	Carbitol	0.00	0.00	0.00	2000.	0.00	Tons Solvent Added
4-05-003-03	Cellosolve	0.00	0.00	0.00	2000.	0.00	Tons Solvent Added
4-05-005-02	Dimethylformamide	0.00	0.00	0.00	2000.	0.00	Tons Solvent Added
4-05-005-03	Ethyl Acetate	0.00	0.00	0.00	2000.	0.00	Tons Solvent Added
4-05-003-04	Ethyl Alcohol	0.00	0.00	0.00	2000.	0.00	Tons Solvent Added
4-05-003-05	Isopropyl Alcohol	0.00	0.00	0.00	2000.	0.00	Tons Solvent Added
4-05-002-02	Kerosene	0.00	0.00	0.00	2000.	0.00	Tons Solvent Added
4-05-005-06	Methyl Ethyl Ketone	0.00	0.00	0.00	2000.	0.00	Tons Solvent Added
4-05-005-07	Methyl Isobutyl Ketone	0.00	0.00	0.00	2000.	0.00	Tons Solvent Added
4-05-002-03	Mineral Spirits	0.00	0.00	0.00	2000.	0.00	Tons Solvent Added
4-05-003-07	Naphtha	0.00	0.00	0.00	2000.	0.00	Tons Solvent Added
4-05-003-06	N-Propyl Alcohol	0.00	0.00	0.00	2000.	0.00	Tons Solvent Added
4-05-005-10	Toluene	0.00	0.00	0.00	2000.	0.00	Tons Solvent Added
4-05-005-99	Other/Not Classified (Specify in Comments)	0.00	0.00	0.00	2000.	0.00	Tons Solvent Added
Typesetting (Lead Remelting) - 2791							
3-60-001-01	Remelting (Lead Emissions Only)	0.7					Tons Melted

NATIONAL EMISSION DATA SYSTEM

SOURCE CLASSIFICATION CODES AND EMISSION FACTOR LISTING

SCC	PROCESS	POUNDS EMITTED PER UNIT PART	SO_x	NO_x	HC	CO	UNITS
MAJOR GROUP 28 - CHEMICALS AND ALLIED PRODUCTS							
GROUP 281 - INDUSTRIAL INORGANIC CHEMICALS[1]							
Chloro-Alkali Production - 2812							
3-01-008-01	Liquefaction (Diaphram Cell Process)		0.00				100 tons chlorine liquified
3-01-008-02	Liquefaction (Mercury Cell Process)		0.00				100 tons chlorine liquified
3-01-008-03	Chlorine Loading: Tank Car Vents	0.00	0.00	0.00	0.00	0.00	100 tons chlorine liquified
3-01-008-04	Chlorine Loading: Storage Tank Vents	0.00	0.00	0.00	0.00	0.00	100 tons chlorine liquified
3-01-008-05	Air Blowing of Mercury Cell Brine	0.00	0.00	0.00	0.00	0.00	100 tons chlorine liquified
Sodium Carbonate - 2812							
3-01-021-01	Solvay Process - NH_3 Recovery	0.00					Tons produced
3-01-021-02	Solvay - Handling	6.00					Tons produced
3-01-021-10	Trona Process: Calcining						Tons produced
3-01-021-11	Trona Process: Drying						Tons produced
3-01-021-20	Brine Evaporation						Tons produced
3-01-021-99	Other/Not Classified (Specify in Comments)						Tons produced
Inorganic Pigments - 2816							
3-01-035-01	Calcination of Titanium Dioxide						Tons produced
3-01-035-06	Lead Oxide-Barton Pot	0.64					Tons produced
3-01-035-07	Lead Oxide-Calcining Furnace	15.00					Tons produced
3-01-035-10	Red Lead	1.00					Tons produced
3-01-035-15	White Lead	0.69					Tons produced
3-01-035-20	Lead Chromate	0.20					Tons produced
3-01-035-99	Other/Not Classified (Specify in Comments)						Tons produced
Calcium Carbide - 2819							
3-05-004-01	Electric Furnace (Hoods & Main Stack)	38.0	3.00				Tons produced
3-05-004-02	Coke Dryer	2.00	3.00				Tons produced
3-05-004-03	Furnace Room Vents	26.0					Tons produced
Hydrochloric Acid - 2819							
3-01-011-01	By-Product Process (Without Final Scrubber)		0.00				Tons final acid
Hydrofluoric Acid - 2819							
3-01-012-02	Rotary Kiln	0.00					Tons acid
3-01-012-03	Fluorspar Grinding and Drying (Controlled)	20.0					Tons flourspar

[1] Agricultural chemicals may be found in Part II, SIC Group 287.

NATIONAL EMISSION DATA SYSTEM

SOURCE CLASSIFICATION CODES AND EMISSION FACTOR LISTING

SCC	PROCESS	POUNDS EMITTED PER UNIT PART	SO_x	NO_x	HC	CO	UNITS
MAJOR GROUP 28 - CHEMICALS AND ALLIED PRODUCTS (Continued)							
GROUP 281 - INDUSTRIAL INORGANIC CHEMICALS							
Elemental Sulfur Production - 2819[1]							
3-01-032-01	Mod. Clause-2-Stage w/o Control (92-95% Removal)		280.0				Tons 100% sulfur
3-01-032-02	Mod. Clause-3-Stage w/o Control (95-96% Removal)		189.0				Tons 100% sulfur
3-01-032-03	Mod. Clause-4-Stage w/o Control (96-97% Removal)		145.0				Tons 100% sulfur
3-01-032-04	Sulfur Removal Process (99.9% Removal)		4.00				Tons 100% sulfur
Sulfuric Acid, Chamber Process - 2819							
3-01-022-01	General				0.00		Tons of pure acid produced
Sulfuric Acid - Contact Process - 2819							
3-01-023-01	Absorber/@ 99.9% Conversion	2.50	4.00				Tons 100% H_2SO_4
3-01-023-04	Absorber/@ 99.5% Conversion	2.50	7.00				Tons 100% H_2SO_4
3-01-023-06	Absorber/@ 99.0% Conversion	2.50	14.0				Tons 100% H_2SO_4
3-01-023-08	Absorber/@ 98.0% Conversion	2.50	27.0				Tons 100% H_2SO_4
3-01-023-10	Absorber/@ 97.0% Conversion	2.50	40.0				Tons 100% H_2SO_4
3-01-023-12	Absorber/@ 96.0% Conversion	2.00	55.0				Tons 100% H_2SO_4
3-01-023-14	Absorber/@ 95.0% Conversion	2.50	70.0				Tons 100% H_2SO_4
3-01-023-16	Absorber/@ 94.0% Conversion	2.50	82.0				Tons 100% H_2SO_4
3-01-023-18	Absorber/@ 93.0% Conversion	2.50	96.0				Tons 100% H_2SO_4
3-01-023-19	Concentrator						Tons 100% H_2SO_4
3-01-023-20	Tank Car and Truck Loading						Tons 100% H_2SO_4 loaded
3-01-023-21	Storage Tank Vents						Tons 100% H_2SO_4 stored
3-01-023-22	Leaks in Process Equipment						Tons 100% H_2SO_4
GROUP 282 - PLASTIC MATERIALS AND SYNTHETIC RESINS, RUBBERS, AND FIBERS							
Plastics Production (Manufacturing Only) - 2821							
3-01-018-01	Polyvinyl Chlorides and Copolymers	35.0			17.0		Tons product
3-01-018-02	Polypropylene & Copolymers	3.00			0.70		Tons product
3-01-018-03	Ethylene-Propylene Copolymers						Tons product
3-01-018-05	Phenolic Resins						Tons product
3-01-018-07	Polyethylene (high density)						Tons product
3-01-018-12	Polyethylene (low density)						Tons product
3-01-018-17	Polystyrene						Tons product
3-01-018-22	Acrylic Resins						Tons product
3-01-018-27	Polyamide Resins						Tons product
3-01-018-32	Urea Formaldehyde Resins						Tons product
3-01-018-37	Polyester Resins						Tons product
3-01-018-42	Melamine Resins						Tons product
3-01-018-47	Epoxy Resins						Tons product
3-01-018-52	Polyfluorocarbons						Tons product
3-01-018-99	Other/Not Classified (Specify in Comments)						Tons product

[1] Also applies to sulfur recovery plant at petroleum refineries and natural gas production fields.

NATIONAL EMISSION DATA SYSTEM

SOURCE CLASSIFICATION CODES AND EMISSION FACTOR LISTING

SCC	PROCESS	POUNDS EMITTED PER UNIT PART	SO_x	NO_x	HC	CO	UNITS
MAJOR GROUP 28 - CHEMICALS AND ALLIED PRODUCTS (Continued)							
GROUP 282 - PLASTIC MATERIAL AND SYNTHETIC RESINS, RUBBERS, AND FIBERS							
Synthetic Rubber (Manufacturing Only) - 2822							
3-01-026-01	Butadiene				40.00		Tons product
3-01-026-02	Methyl Propene (IsoButylene)				15.0		Tons product
3-01-026-08	Acrylonitrile				17.0		Tons product
3-01-026-15	Isoprene						Tons product
3-01-026-25	Chloroprene						Tons product
3-01-026-30	Silicone Rubber						Tons product
3-01-026-99	Other/Not Classified (Specify in Comments)						Tons product
Cellulosic Fiber Production - 2823							
3-01-025-01	Viscose (e.g., Rayon)				0.00		Tons fiber
3-01-025-05	Acetate						Tons produced
Synthetic Organic Fiber Production (Manufacturing Only) - 2824							
3-01-024-01	Polyamide (e.g., Nylon)				7.00		Tons fiber
3-01-024-02	Polyesters (e.g., Dacron)				0.00		Tons fiber
3-01-024-05	Polyfluorocarbons (e.g., Teflon)						Tons product
3-01-024-10	Acrylics (e.g., Orlon)						Tons product
3-01-024-14	Polyolefins (e.g., Polypropylene)						Tons product
3-01-024-15	Vinyls (e.g., Saran)						Tons product
GROUP 283 - DRUGS							
Pharmaceutical Preparations - 2834							
3-01-060-99	Not Classified (Specify in Comments)						Hundreds of pounds produced

NATIONAL EMISSION DATA SYSTEM

SOURCE CLASSIFICATION CODES AND EMISSION FACTOR LISTING

SCC	PROCESS	POUNDS EMITTED PER UNIT PART	SO_x	NO_x	HC	CO	UNITS
MAJOR GROUP 28 - CHEMICAL AND ALLIED PRODUCTS (CONTINUED)							
GROUP 284 - SOAP, DETERGENTS AND CLEANING PREPARATIONS, ETC.							
Cleaning Chemicals - 2841, 2842							
3-01-009-01	Spray Drying: Soaps and Detergents	90.0					Tons produced
3-01-009-02	Specialty Cleaners						Tons product
3-01-009-99	Other/Not Classified						Tons produced
GROUP 285 - PAINTS, VARNISHES, LACQUERS, ENAMELS AND ALLIED PRODUCTS							
Paint Manufacture - 2851[1]							
3-01-014-01	General Mixing and Handling	2.00			30.0		Tons produced
3-01-014-99	Other/Not Classified (Specify in Comments)						Tons product
Varnish Manufacture - 2851							
3-01-015-01	Bodying Oil				40.0		Tons produced
3-01-015-02	Oleoresinous				150.0		Tons produced
3-01-015-03	Alkyd				160.0		Tons produced
3-01-015-05	Acrylic				20.0		Tons produced
3-01-015-99	Other/Not Classified (Specify in Comments)						Tons produced
GROUP 286 - INDUSTRIAL ORGANIC CHEMICALS							
Charcoal Manufacture - 2861							
3-01-006-01	Charcoal Manufacture w/o Chemical Recovery	400.0			484.0	320.0	Tons produced
3-01-006-02	Charcoal Manufacture w/ Chemical Recovery				100.0	320.0	Tons produced
Phthalic Anhydride - 2865							
3-01-019-01	O-xylene Oxidation: Main Process Stream (Reactor Condensers)	138.0	9.40	0.00	0.00	301.0	Tons produced
3-01-019-02	O-xylene Oxidation: Pre-treatment	13.0	0.00	0.00	0.00	0.00	Tons produced
3-01-019-04	O-xylene Oxidation: Distillation	89.0	0.00	0.00	2.40	0.00	Tons produced
3-01-019-05	Naphthalene Oxidation: Main Process Stream (Reactor/ Condensers)	56.0	0.00	0.00	0.00	100.0	Tons produced
3-01-019-06	Naphthalene Oxidation: Pre-Treatment	5.00	0.00	0.00	0.00	0.00	Tons produced
3-01-019-07	Naphthalene Oxidation: Distillation	38.0	0.00	0.00	10.0	0.00	Tons produced

[1] Manufacture of inorganic pigments is classified under Group 2816.

NATIONAL EMISSION DATA SYSTEM

SOURCE CLASSIFICATION CODES AND EMISSION FACTOR LISTING

SCC	PROCESS	POUNDS EMITTED PER UNIT PART	SO_x	NO_x	HC	CO	UNITS
MAJOR GROUP 28 - CHEMICAL AND ALLIED PRODUCTS (CONTINUED)							
GROUP 286 - INDUSTRIAL ORGANIC CHEMICALS							
Adipic Acid - 2869							
3-01-001-01	Entire Adipic Acid Facility (Available as a Simplified Alternative to Codes 02-06 Below)	0.80	0.00	53.6	42.7	115.0	Tons of product
3-01-001-02	Raw Material Storage	0.00	0.00	0.00	2.2	0.00	Tons of product
3-01-001-03	Cyclohexane Oxidation	0.00	0.00	0.00	40.0	115.0	Tons of product
3-01-001-04	Nitric Acid Reaction	0.00	0.00	53.0	0.00	0.00	Tons of product
3-01-001-05	Adipic Acid Refining	0.10	0.00	0.60	0.50	0.00	Tons of product
3-01-001-06	Adipic Acid Drying/Loading and Storage	0.80	0.00	0.00	0.00	0.00	Tons of product
Terepthalic Acid Production - 2869							
3-01-031-01	HNO3- Paraxylene - General				13.0		Tons produced
3-01-031-99	Other/Not Classified (Specify in Comments)						Tons produced
Amines/Amides Production - 2869							
3-01-034-99	Not Classified (Specify in Comments)						Tons produced
Lead Alkyl Manufacture - (Sodium/Lead Alloy Process) - 2869							
3-01-042-01	Recovery Furnace	63.50					Tons produced
3-01-042-02	Process Vents (Tetraethyl Lead)	6.25					Tons produced
3-01-042-03	Process Vents (Tetramethyl Lead)	193.50					Tons produced
3-01-042-04	Sludge Pits	1.90					Tons produced
Lead Alkyl Manufacture - (Electrolytic Process) - 2869							
3-01-043-01	General	1.40					Tons produced
Ketones Production - 2869							
3-01-091-01	Acetone						Tons produced
3-01-091-05	Methyl Ethyl Ketone						Tons produced
3-01-091-10	Methyl Isobutyl Ketone						Tons produced
3-01-091-99	Other/Not Classified (Specify in Comments)						Tons produced
Maleic Anhydride Production - 2869							
3-01-100-99	Not Classified (Specify in Comments)						Tons produced
Aldehydes Production - 2869							
3-01-120-01	Formaldehyde - Silver Catalyst						Tons produced
3-01-120-02	Formaldehyde - Mixed Oxide Catalyst						Tons produced
3-01-120-99	Other/Not Classified (Specify in Comments)						Tons produced
Organo Halogens Production - 2869							
3-01-125-01	Ethylene Dichloride via Oxychlorination						Tons produced
3-01-125-02	Ethylene Dichloride via Direct Chlorination						Tons produced
3-01-125-99	Other/Not Classified (Specify in Comments)						Tons produced

NATIONAL EMISSION DATA SYSTEM

SOURCE CLASSIFICATION CODES AND EMISSION FACTOR LISTING

SCC	PROCESS	POUNDS EMITTED PER UNIT					UNITS
		PART	SO_x	NO_x	HC	CO	
MAJOR GROUP 28 - CHEMICAL AND ALLIED PRODUCTS (Continued)							
GROUP 286 - INDUSTRIAL ORGANIC CHEMICALS (Continued)							
Organic Acids Production - 2869							
3-01-132-01	Acetic Acid via Methanol						Tons produced
3-01-132-05	Acetic Acid via Butane						Tons produced
3-01-132-10	Acetic Acid via Acetaldehyde						Tons produced
3-01-132-99	Other/Not Classified (Specify in Comments)						Tons produced
Esters Production							
3-01-137-99	Acrylates - Not Classified (Specify in Comments)						Tons produced
3-01-167-99	Acetates - Not Classified (Specify in Comments)						Tons produced
Olefins Production - 2869							
3-01-197-01	Ethylene						Tons produced
3-01-197-05	Propylene						Tons produced
3-01-197-10	Butylene						Tons produced
3-01-197-99	Other/Not Classified (Specify in Comments)						Tons produced
Alcohols Production - 2869							
3-01-250-01	Methanol						Tons produced
3-01-250-99	Other/Not Classified (Specify in Comments)						Tons produced
Nitriles Production - 2869							
3-01-254-01	Acetonitrile						Tons produced
3-01-254-05	Acrylonitrile						Tons produced
3-01-254-10	Adiponitrile via Adipic Acid						Tons produced
3-01-254-15	Adiponitrile via Butadiene						Tons produced
3-01-254-99	Other/Not Classified (Specify in Comments)						Tons produced
Aromatics Production - 2869							
3-01-258-01	Benzene						Tons produced
3-01-258-05	Toluene						Tons produced
3-01-258-10	p-Xylene						Tons produced
3-01-258-15	Mixed Xylenes						Tons produced
3-01-258-99	Other/Not Classified (Specify in Comments)						Tons produced

NATIONAL EMISSION DATA SYSTEM

SOURCE CLASSIFICATION CODES AND EMISSION FACTOR LISTING

SCC	PROCESS	POUNDS EMITTED PER UNIT PART	SO_x	NO_x	HC	CO	UNITS
MAJOR GROUP 28 - CHEMICAL AND ALLIED PRODUCTS (Continued)							
GROUP 287 - AGRICULTURAL CHEMICALS							
Ammonia Production-2873							
3-01-003-05	Foodstock Desulfurization		0.01		7.20	13.80	Tons produced
3-01-003-06	Primary Reformer-Natural Gas Fired	0.144	0.0048	5.80	0.024	0.136	Tons produced
3-01-003-07	Primary Reformer-Oil Fired	0.90	2.60	5.40	0.30	0.24	Tons produced
3-01-003-08	Carbon Dioxide Regenerator	0.00	0.00	0.00	1.04	2.00	Tons produced
3-01-003-09	Condensate Stripper	0.00	0.00	0.00	1.20		Tons produced
Nitric Acid - 2873							
3-01-013-01	Absorber Tail Gas (Pre-1970 Facilities)			52.5			Tons pure acid produced
3-01-013-02	Absorber Tail Gas (Post-1970 Facilities)			7.50			Tons pure acid produced
3-01-013-03	Nitric Acid Concentration (Pre-1970 Facilities)			5.00			Tons pure acid produced
3-01-013-04	Nitric Acid Concentration (Post-1970 Facilities)			0.20			Tons pure acid produced
Ammonium Nitrate Production (With Granulator) - 2873							
3-01-027-04	Neutralizer						Tons produced
3-01-027-05	Granulator	0.40		0.90			Tons produced
3-01-027-06	Dryers and Coolers	7.00		3.00			Tons produced
Ammonium Nitrate Production (With Prilling Tower) - 2873							
3-01-027-09	Bulk Loading (General)	0.02					Tons produced
3-01-027-11	Neutralizer (High Density)	3.30					Tons produced
3-01-027-12	Prilling Tower (High Density)	2.70					Tons produced
3-01-027-13	Dryers and Coolers (High Density)	0.10					Tons produced
3-01-027-17	Evaporator/Concentrator (High Density)	0.94					Tons produced
3-01-027-18	Coating (High Density)	4.00					Tons produced
3-01-027-21	Neutralizer (Low Density)	0.08					Tons produced
3-01-027-22	Prilling Tower (Low Density)	1.00					Tons produced
3-01-027-23	Dryers and Coolers (Low Density)	0.08					Tons produced
3-01-027-27	Evaporator/Concentrator (Low Density)	0.18					Tons produced
3-01-027-28	Coating (Low Density)	6.00					Tons produced
Urea Production - 2873							
3-01-040-02	Solution Concentration (Controlled)	0.214					Tons produced
3-01-040-03	Prilling	3.20					Tons produced
3-01-040-04	Granulation	0.284					Tons produced
3-01-040-05	Solid Product Finishing	2.00					Tons produced
3-01-040-06	Solid Product Bagging/Loading	0.15					Tons produced

NATIONAL EMISSION DATA SYSTEM

SOURCE CLASSIFICATION CODES AND EMISSION FACTOR LISTING

SCC	PROCESS	POUNDS EMITTED PER UNIT PART	SO_x	NO_x	HC	CO	UNITS
MAJOR GROUP 28 - CHEMICAL AND ALLIED PRODUCTS (CONTINUED)							
GROUP 287 - AGRICULTURAL CHEMICALS							
Normal Superphosphate Production - 2874							
3-01-028-01	Grinding and Drying	9.00					Tons produced
3-01-028-02	Main Stack						Tons produced
Triple Superphosphate Production - 2874 (Also Called Double or Concentrated Superphosphate)							
3-01-029-01	"Run-of-Pile" (ROP) Product						Tons produced
3-01-029-02	Granular Product						Tons produced
Diamonium Phosphate Production - 2874							
3-01-030-01	Dryers and Coolers	80.0					Tons produced
3-01-030-02	Ammoniator/Granulator	2.00					Tons produced
Monammonium Phosphate Production - 2874							
3-01-044-01	Ammoniator/Granulator						Tons produced
3-01-044-02	Dryers and Coolers						Tons produced
Phosphoric Acid: Wet Process - 2874							
3-01-016-01	Reactor	0.00					Tons phosphate rock
3-01-016-02	Gypsum Pond	0.00					Tons phosphate rock
3-01-016-03	Condensor	0.00					Tons phosphate rock
Phosphoric Acid: Thermal Process - 2874							
3-01-017-02	Absorber						Tons phosphorous burned
Pesticides - 2879							
3-01-033-01	Malathion						Gallons of product
3-01-033-99	Other/Not Classified (Specify in Comments)						Tons produced

NATIONAL EMISSION DATA SYSTEM

SOURCE CLASSIFICATION CODES AND EMISSION FACTOR LISTING

SCC	PROCESS	POUNDS EMITTED PER UNIT PART	SO_x	NO_x	HC	CO	UNITS
MAJOR GROUP 28 - CHEMICAL AND ALLIED PRODUCTS (Continued)							
GROUP 289 - MISCELLANEOUS CHEMICAL PRODUCTS							
Explosives - Trinitro Toluene - 2892							
3-01-010-11	Batch Process - Nitration Reactors Fume Recovery			25.0			Tons produced
3-01-010-12	Batch Process - Nitration Reactors Acid Recovery			55.0			Tons produced
3-01-010-13	Batch Process - Nitric Acid Concentrators			37.0			Tons produced
3-01-010-14	Batch Process - Sulfuric Acid Concentrators - Electrostatic Precipitators (Exit)		14.0	40.0			Tons produced
3-01-010-15	Batch Process - Red Water Incinerator	25.0	2.00	26.0			Tons produced
3-01-010-21	Continuous Process - Nitration Reactors - (Fume Recovery)			8.00			Tons produced
3-01-010-22	Continuous Process - Nitration Reactors (Acid Recovery)			3.00			Tons produced
3-01-010-23	Continuous Process - Red Water Incinerator	0.25	0.24	7.00			Tons produced
Nitrocellulose - 2892							
3-01-041-01	Nitration Reactors	0.00	1.40	14.0	0.00	0.00	Tons produced
3-01-041-02	Sulfuric Acid Concentrator	0.00	68.0	0.00	0.00	0.00	Tons produced
3-01-041-03	Boiling Tubs	0.00	0.00	2.00	0.00	0.00	Tons produced
3-01-041-04	Nitric Acid Concentrator	0.00	0.00	14.0	0.00	0.00	Tons produced
Printing Ink Manufacture - 2893							
3-01-020-01	Vehicle Cooking: General	0.00			120.0		Tons produced
3-01-020-02	Vehicle Cooking: Oils	0.00			40.0		Tons produced
3-01-020-03	Vehicle Cooking: Oleoresin	0.00			150.0		Tons produced
3-01-020-04	Vehicle Cooking: Alkyds	0.00			160.0		Tons produced
3-01-020-05	Pigment Mixing	2.00					Tons produced
Carbon Black Production - 2895							
3-01-005-01	Channel Process	2,300.	0.00	0.00	11,500.	33,500.	Tons produced
3-01-005-02	Thermal Process	0.00	0.00	0.00	0.00	0.00	Tons produced
3-01-005-03	Gas Furnace Process (Main Process Vent)	10.0	0.00		1,800.	5,300.	Tons produced
3-01-005-04	Oil Furnace Process (Main Process Vent)	6.53	0.00	0.56	144.4	2,800.0	Tons produced
3-01-005-06	Transport Air Vent	0.58	0.00	0.00	0.00	0.00	Tons produced
3-01-005-07	Pellet Dryer	0.45	0.10	0.73			Tons produced
3-01-005-08	Bagging/Loading	0.06	0.00	0.00	0.00	0.00	Tons produced
3-01-005-09	Furnace Process Fugitive Emissions	0.20	0.00	0.00	0.00	0.00	Tons produced
Frit Manufacture - 2899							
3-05-013-01	Rotary Furnace	16.0					Tons charged
3-05-013-99	Other/Not Classified (Specify in Comments)						Tons charged

NATIONAL EMISSION DATA SYSTEM

SOURCE CLASSIFICATION CODES AND EMISSION FACTOR LISTING

SCC	PROCESS	POUNDS EMITTED PER UNIT					UNITS
		PART	SO_x	NO_x	HC	CO	
MAJOR GROUP 28 - CHEMICAL AND ALLIED PRODUCTS (CONTINUED)							
GROUP 289 - MISCELLANEOUS CHEMICAL PRODUCTS							
Waste Gas Flares							
3-01-900-99	Not Classified (Specify in Comments)						Million cubic feet burned
Chemical and Allied Products - Not Classified							
3-01-999-99	Not Classified (Specify in Comments)						Tons produced

NATIONAL EMISSION DATA SYSTEM

SOURCE CLASSIFICATION CODES AND EMISSION FACTOR LISTING

SCC	PROCESS	POUNDS EMITTED PER UNIT PART	SO_x	NO_x	HC	CO	UNITS
MAJOR GROUP 29 - PETROLEUM REFINING AND RELATED INDUSTRIES[1]							
Process Heaters - 2911							
3-06-001-03	Oil Fired	20.0	159.0 S	69.0	1.00	5.00	1000 gallons oil burned
3-06-001-04	Gas Fired	20.0	830.0 S	230.0	3.00	20.0	Million cubic feet gas burned
Fluid Catalytic Cracking Units (FCC) - 2911							
3-06-002-01	Fluid Catalytic Cracking Unit	242.0	493.0	71.0	220.0[2]	13700.[2]	1000 bbls fresh feed
Moving Bed Catalytic Cracking Units (TCC) - 2911							
3-06-003-01	Thermal Catalytic Cracking Unit	17.0	60.0	5.00	87.0[2]	3800.	1000 bbls fresh feed
Blowdown Systems - 2911							
3-06-004-01	Blowdown System with Vapor Recovery System and Flaring	0.00	26.9	18.90	0.80	4.30	1000 bbls refinery feed
3-06-004-02	Blowdown System without Controls	0.00	0.00	0.00	580.0	0.00	1000 bbls refinery feed
Asphalt Blowing - 2911							
3-06-011-01	Asphalt Blowing		0.00	0.00	60.0	0.00	Tons of asphalt produced
Vacuum Distillation Column Condensors - 2911							
3-06-006-02	Vacuum Distillation Column Condensor	0.00	0.00	0.00	50.0	0.00	1000 bbls vacuum feed
3-06-006-03	Vacuum Distillation Column Condensor	0.00	0.00	0.00	18.0	0.00	1000 bbls refinery feed
Cooling Towers - 2911							
3-06-007-01	Cooling Towers	0.00	0.00	0.00	6.0	0.00	Million gallons cooling water
3-06-007-02	Cooling Towers	0.00	0.00	0.00	10.0	0.00	1000 bbls refinery feed
Fluid Coking Units - 2911							
3-06-012-01	Fluid Coking Units	523.0					1000 bbls fresh feed
Fugitive Hydrocarbon Emissions from Petroleum Refining - 2911							
3-06-005-03	Process Drains and Waste Water Separators	0.00	0.00	0.00	5.00	0.00	1000 gallons waste water
3-06-005-04	Process Drains and Waste Water Separators	0.00	0.00	0.00	200.0	0.00	1000 bbls refinery feed

'S' indicates the sulfur content of the fuel on a percent-by-weight basis.

[1] Several processes that routinely occur in Major Group 29 can be found under other Major Groups. Specifically, note the following:

- o waste or process gas and/or liquid fired boilers - Part I, page C-5.
- o internal combustion compressor engines - Part I, page C-9.
- o amine sweetening process - Part II, SIC 1311.
- o sulfur recovery process - Part II, SIC 2819.
- o sulfuric acid plant - Part II, SIC 2819.

[2] Represents total CO and HC generated. Report control device as 022 if CO boiler is present to properly account for actual emissions.

SCC	PROCESS	POUNDS EMITTED PER UNIT PART	SO_x	NO_x	HC	CO	UNITS
MAJOR GROUP 29 - PETROLEUM REFINING AND RELATED INDUSTRIES (CONTINUED)							
Fugitive Hydrocarbon Emissions from Petroleum Refining - 2911							
3-06-005-05	Waste Water Treatment Plant Excluding Separator	0.00	0.00	0.00		0.00	1000 gallons waste water
3-06-005-06	Waste Water Treatment Plant Excluding Separator	0.00	0.00	0.00		0.00	1000 bbls refinery feed
3-06-008-01	Pipeline Valves and Flanges	0.00	0.00	0.00	28.0	0.00	1000 bbls refinery feed
3-06-008-02	Vessel Relief Valves	0.00	0.00	0.00	11.0	0.00	1000 bbls refinery feed
3-06-008-03	Pump Seals w/o Control	0.00	0.00	0.00	17.0	0.00	1000 bbls refinery feed
3-06-008-06	Pump Seals w/Control	0.00	0.00	0.00	10.0	0.00	1000 bbls refinery feed
3-06-008-04	Compressor Seals	0.00	0.00	0.00	5.00	0.00	1000 bbls refinery feed
3-06-008-05	Miscellaneous: Sampling/Non-Asphalt Blowing, Purging, etc.	0.00	0.00	0.00	10.0	0.00	1000 bbls refinery feed
3-06-008-07	Blind Changing	0.00	0.00	0.00	0.30	0.00	1000 bbls refinery feed
Storage of Petroleum Products (Refineries Oil and Gas Fields Only) - 2911, 2992, 1311, 1321[1]							
Fixed Roof[2]							
4-03-010-01	Gasoline RVP13[3]: Breathing Loss (67,000 bbl. Tank Size)	0.00	0.00	0.00	109.5	0.00	1000 gallons storage capacity
4-03-010-02	Gasoline RVP10: Breathing Loss (67,000 bbl. Tank Size)	0.00	0.00	0.00	84.0	0.00	1000 gallons storage capacity
4-03-010-03	Gasoline RVP7: Breathing Loss (67,000 bbl. Tank Size)	0.00	0.00	0.00	58.4	0.00	1000 gallons storage capacity
4-03-010-04	Gasoline RVP13: Breathing Loss (250,000 bbl. Tank Size)	0.00	0.00	0.00	80.3	0.00	1000 gallons storage capacity
4-03-010-05	Gasoline RVP10: Breathing Loss (250,000 bbl. Tank Size)	0.00	0.00	0.00	62.1	0.00	1000 gallons storage capacity
4-03-010-06	Gasoline RVP7: Breathing Loss (250,000 bbl. Tank Size)	0.00	0.00	0.00	43.8	0.00	1000 gallons storage capacity
4-03-010-07	Gasoline RVP13: Working Loss (Independent of Tank Diameter)	0.00	0.00	0.00	10.0	0.00	1000 gallons throughput
4-03-010-08	Gasoline RVP10: Working Loss (Independent of Tank Diameter)	0.00	0.00	0.00	8.20	0.00	1000 gallons throughput
4-03-010-09	Gasoline RVP7: Working Loss (Independent of Tank Diameter)	0.00	0.00	0.00	5.70	0.00	1000 gallons throughput
4-03-010-10	Crude Oil RVP5: Breathing Loss (67,000 bbl. Tank Size)	0.00	0.00	0.00	23.4	0.00	1000 gallons storage capacity
4-03-010-11	Crude Oil RVP5: Breathing Loss (250,000 bbl. Tank Size)	0.00	0.00	0.00	16.8	0.00	1000 gallons storage capacity
4-03-010-12	Crude Oil RVP5: Working Loss	0.00	0.00	0.00	2.80	0.00	1000 gallons throughput

[1] The tank sizes of 67,000 and 250,000 bbl's specified below represent approximate size ranges. The emission factors may be applied to tanks of approximately the same size. See AP-42, Section 4.3.3.

[2] Emission factors for the fixed roof storage tanks breathing loss are for 'new' tank conditions only, i.e., Paint Factor = 1.0. For 'old' tank conditions the emission factor is increased by approximately 13%.

[3] RVP = Reid vapor pressure is the absolute pressure of gasoline at 100°F in psia as determined by ASTM method D323-72.

NATIONAL EMISSION DATA SYSTEM

SOURCE CLASSIFICATION CODES AND EMISSION FACTOR LISTING

SCC	PROCESS	POUNDS EMITTED PER UNIT PART	SO_x	NO_x	HC	CO	UNITS
MAJOR GROUP 29 - PETROLEUM REFINING AND RELATED INDUSTRIES (CONTINUED)							
Storage of Petroleum Products (Refineries and Oil and Gas Fields Only) 2911, 2992, 1311, 1321							
Fixed Roof[1]							
4-03-010-13	Jet Naphtha (JP-4): Breathing Loss (67,000 bbl. Tank Size)	0.00	0.00	0.00	31.4	0.00	1000 gallons storage capacity
4-03-010-14	Jet Naphtha (JP-4): Breathing Loss (250,000 bbl. Tank Size)	0.00	0.00	0.00	22.6	0.00	1000 gallons storage capacity
4-03-010-15	Jet Naphtha (JP-4): Working Loss	0.00	0.00	0.00	2.50	0.00	1000 gallons throughput
4-03-010-16	Jet Kerosene: Breathing Loss (67,000 bbl. Tank Size)	0.00	0.00	0.00	1.60	0.00	1000 gallons storage capacity
4-03-010-17	Jet Kerosene: Breathing Loss (250,000 bbl. Tank Size)	0.00	0.00	0.00	1.10	0.00	1000 gallons storage capacity
4-03-010-18	Jet Kerosene: Working Loss	0.00	0.00	0.00	0.03	0.00	1000 gallons throughput
4-03-010-19	Distillate Fuel No. 2: Breathing Loss (67,000 bbl. Tank Size)	0.00	0.00	0.00	1.40	0.00	1000 gallons storage capacity
4-03-010-20	Distillate Fuel No. 2: Breathing Loss (250,000 bbl. Tank Size)	0.00	0.00	0.00	1.02	0.00	1000 gallons storage capacity
4-03-010-21	Distillate Fuel No. 2: Working Loss	0.00	0.00	0.00	0.023	0.00	1000 gallons throughput
4-03-010-97	Specify Liquid: Breathing Loss (67,000 bbl. Tank Size)	0.00	0.00	0.00		0.00	1000 gallons storage capacity
4-03-010-98	Specify Liquid: Breathing Loss (250,000 bbl. Tank Size)	0.00	0.00	0.00		0.00	1000 gallons storage capacity
4-03-010-99	Specify Liquid: Working Loss	0.00	0.00	0.00		0.00	1000 gallons throughput
Floating Roof Tanks[2]							
4-03-011-01	Gasoline RVP13: Standing Loss (67,000 bbl. Tank Size)	0.00	0.00	0.00	16.1	0.00	1000 gallons storage capacity
4-03-011-02	Gasoline RVP10: Standing Loss (67,000 bbl. Tank Size)	0.00	0.00	0.00	12.0	0.00	1000 gallons storage capacity
4-03-011-03	Gasoline RVP7: Standing Loss (67,000 bbl. Tank Size)	0.00	0.00	0.00	8.40	0.00	1000 gallons storage capacity
4-03-011-04	Gasoline RVP13: Standing Loss (250,000 bbl. Tank Size)	0.00	0.00	0.00	9.10	0.00	1000 gallons storage capacity
4-03-011-05	Gasoline RVP 10: Standing Loss (250,000 bbl. Tank Size)	0.00	0.00	0.00	6.90	0.00	1000 gallons storage capacity
4-03-011-06	Gasoline RVP7: Standing Loss (250,000 bbl. Tank Size)	0.00	0.00	0.00	4.70	0.00	1000 gallons storage capacity
4-03-011-07	Gasoline RVP13: Withdrawal Loss (67,000 bbl. Tank Size)	0.00	0.00	0.00	0.023	0.00	1000 gallons throughput
4-03-011-08	Gasoline RVP13/RVP10/RVP7: Withdrawal Loss (250,000 bbl. Tank Size)	0.00	0.00	0.00	0.013	0.00	1000 gallons throughput

[1] Emission factors for the fixed roof storage tank breathing loss are for 'new' tank conditions only, i.e., Paint Factor= 1.0. For 'old' tank conditions the emission factor is increased by approximately 13%.

[2] Emission factors for the floating roof storage tanks standing loss are for 'new' tank conditions only. For 'old' tank conditions the emission factor is increased by approximately 229%.

NATIONAL EMISSION DATA SYSTEM

SOURCE CLASSIFICATION CODES AND EMISSION FACTOR LISTING

SCC	PROCESS	POUNDS EMITTED PER UNIT					UNITS
		PART	SO_x	NO_x	HC	CO	
MAJOR GROUP 29 - PETROLEUM REFINING AND RELATED INDUSTRIES (CONTINUED)							
Floating Roof Tanks[1]							
4-03-011-09	Crude Oil RVP5: Standing Loss (67,000 bbl. Tank Size)	0.00	0.00	0.00	4.38	0.00	1000 gallons storage capacity
4-03-011-10	Crude Oil RVP5: Standing Loss (250,000 bbl. Tank Size)	0.00	0.00	0.00	2.81	0.00	1000 gallons storage capacity
4-03-011-11	Jet Naphtha (JP-4): Standing Loss (67,000 bbl. Tank Size)	0.00	0.00	0.00	4.38	0.00	1000 gallons storage capacity
4-03-011-12	Jet Naphtha (JP-4): Standing Loss (250,000 bbl. Tank Size)	0.00	0.00	0.00	2.48	0.00	1000 gallons storage capacity
4-03-011-13	Jet Kerosene: Standing Loss (67,000 bbl. Tank Size)	0.00	0.00	0.00	0.20	0.00	1000 gallons storage capacity
4-03-011-14	Jet Kerosene: Standing Loss (250,000 bbl. Tank Size)	0.00	0.00	0.00	0.11	0.00	1000 gallons storage capacity
4-03-011-15	Distillate Fuel No. 2: Standing Loss (67,000 bbl. Tank Size)	0.00	0.00	0.00	0.18	0.00	1000 gallons storage capacity
4-03-011-16	Distillate Fuel No. 2: Standing Loss (250,000 bbl. Tank Size)	0.00	0.00	0.00	0.10	0.00	1000 gallons storage capacity
4-03-011-98	Specify Liquid: Standing Loss (67,000 bbl. Tank Size)	0.00	0.00	0.00		0.00	1000 gallons storage capacity
4-03-011-99	Specify Liquid: Standing Loss (250,000 bbl. Tank Size)	0.00	0.00	0.00		0.00	1000 gallons storage capacity
Variable Vapor Space Tanks - (10,500 bbl. Tank Size)							
4-03-012-01	Gasoline RVP13: Filling Loss	0.00	0.00	0.00	9.60	0.00	1000 gallons throughput
4-03-012-02	Gasoline RVP10: Filling Loss	0.00	0.00	0.00	7.70	0.00	1000 gallons throughput
4-03-012-03	Gasoline RVP7: Filling Loss	0.00	0.00	0.00	5.40	0.00	1000 gallons throughput
4-03-012-04	Jet Naphtha (JP-4): Filling Loss	0.00	0.00	0.00	2.30	0.00	1000 gallons throughput
4-03-012-05	Jet Kerosene: Filling Loss	0.00	0.00	0.00	0.025	0.00	1000 gallons throughput
4-03-012-06	Distillate Fuel No. 2: Filling Loss	0.00	0.00	0.00	0.022	0.00	1000 gallons throughput
4-03-012-99	Specify Liquid: Filling Loss	0.00	0.00	0.00		0.00	1000 gallons throughput

[1] Emission factors for the floating roof storage tanks standing loss are for 'new' tank conditions only. For 'old' tank conditions the emission factor is increased by approximately 229%.

NATIONAL EMISSION DATA SYSTEM

SOURCE CLASSIFICATION CODES AND EMISSION FACTOR LISTING

SCC	PROCESS	POUNDS EMITTED PER UNIT					UNITS
		PART	SO_x	NO_x	HC	CO	
MAJOR GROUP 29 - PETROLEUM REFINING AND RELATED INDUSTRIES (CONTINUED)							
Asphaltic Concrete - 2951							
3-05-002-01	Rotary Dryer, Conventional Plant	45.0					Tons produced
3-05-002-02	Hot Elevators, Screens, Bins & Mixer						Tons produced
3-05-002-03	Storage Piles						Tons processed
3-05-002-04	Cold Aggregate Handling						Tons processed
3-05-002-05	Drum, Dryer Hot Asphalt Plants	4.90	0.00	0.00	0.00	0.00	Tons of asphalt produced
3-05-002-06	Asphalt Heater (Natural Gas)						Million cubic feet of gas burned
3-05-002-07	Asphalt Heater (Residual Oil)						1000 gallons of oil burned
3-05-002-08	Asphalt Heater (Distillate Oil)						1000 Gallons of oil burned
Asphalt Roofing Manufacture - 2952							
3-05-001-01	Blowing Operations	7.30	0.00	0.00	1.19	0.27	Tons of asphalt produced
3-05-001-05	Felt Saturation Operations	6.30	0.00	0.00	0.48	2.90	Tons saturated felt produced

NATIONAL EMISSION DATA SYSTEM

SOURCE CLASSIFICATION CODES AND EMISSION FACTOR LISTING

SCC	PROCESS	POUNDS EMITTED PER UNIT					UNITS
		PART	SO_x	NO_x	HC	CO	
MAJOR GROUP 30 - RUBBER AND MISCELLANEOUS PLASTIC PRODUCTS							
Rubberized Fabric - 3069, 2241							
3-30-002-01	Impregnation						Tons processed
3-30-002-02	Wet Coating						Tons processed
3-30-002-03	Hot Melt Coating						Tons processed
3-30-002-99	Other/Not Classified (Specify in Comments)						Tons processed
Tire Manufacturing - 3011							
3-08-001-99	Not Classified (Specify in Comments)						Tons product
Other Fabricated Rubber Products - 3021, 3031, 3041, 3069							
3-08-006-99	Not Classified (Specify in Comments)						Tons product
Fabricated Plastic Products - 3079							
3-08-007-99	Not Classified (Specify in Comments)						Tons product

NATIONAL EMISSION DATA SYSTEM

SOURCE CLASSIFICATION CODES AND EMISSION FACTOR LISTING

SCC	PROCESS	POUNDS EMITTED PER UNIT					UNITS
		PART	SO_x	NO_x	HC	CO	
MAJOR GROUP 31 - LEATHER AND LEATHER PRODUCTS							
Leather and Leather Products - 3111 through 3199							
3-20-999-99	Not Classified (Specify in Comments)						Tons processed

NATIONAL EMISSION DATA SYSTEM

SOURCE CLASSIFICATION CODES AND EMISSION FACTOR LISTING

SCC	PROCESS	POUNDS EMITTED PER UNIT					UNITS
		PART	SO_x	NO_x	HC	CO	
MAJOR GROUP 32 - STONE, CLAY, GLASS, AND CONCRETE PRODUCTS							
GROUP 321 - 322: FLAT GLASS, CONTAINER GLASS, AND GLASSWARE PRESSED OR BLOWN							
Glass Manufacture - 3211, 3221, 3229							
3-05-014-02	Container Glass: Melting Furnace	1.40	3.40	6.20	0.20	0.20	Ton of glass produced
3-05-014-03	Flat Glass: Melting Furnace	2.00	1.00	8.00	0.10	0.10	Ton of glass produced
3-05-014-04	Pressed and Blown Glass: Melting Furnace	17.4	8.70	8.50	0.30	0.20	Ton of glass produced
3-05-014-06	Container Glass: Forming & Finishing		0.00	0.00	8.70	0.00	Ton of glass produced
3-05-014-07	Flat Glass: Forming & Finishing		0.00	0.00		0.00	Ton of glass produced
3-05-014-08	Pressed and Blown Glass: Forming & Finishing		0.00	0.00	9.00	0.00	Ton of glass produced
3-05-014-10	Raw Materials Handling (All Types of Glass)		0.00	0.00	0.00	0.00	Ton of glass produced
Fiberglass (Manufacturing) - 3229, 3296							
3-05-012-01	Wool-Type Glass Fiber Regenerative Glass Furnace	21.5	10.0	5.00	0.00	0.25	Ton of material processed
3-05-012-02	Wool-Type Glass Fiber Recuperative Glass Furnace	28.3	9.50	1.70	0.00	0.25	Ton of material processed
3-05-012-03	Wool-Type Glass Fiber Electric Glass Furnace	0.60	0.04	0.27	0.00	0.05	Ton of material processed
3-05-012-04	Wool-Type Glass Fiber Forming Process	57.6			0.00		Ton of material processed
3-05-012-05	Wool-Type Glass Fiber Curing Oven Process	3.50		1.10	0.00	1.70	Ton of material processed
3-05-012-06	Wool-Type Glass Fiber Cooling Process	1.30		0.20	0.00	0.20	Ton of material processed
3-05-012-11	Textile-Type Glass Fiber Regenerative Glass Furnace	16.4	29.6	9.20	0.00	1.10	Ton of material processed
3-05-012-12	Textile-Type Glass Fiber Recuperative Glass Furnace	27.8	2.70	29.2	0.00	0.90	Ton of material processed
3-05-012-13	Textile-Type Glass Fiber Electric Glass Furnace				0.00		Ton of material processed
3-05-012-14	Textile-Type Glass Fiber Forming Operation	1.60			0.00		Ton of material processed
3-05-012-15	Textile-Type Glass Fiber Curing Oven Process	1.20		2.60	0.00	1.50	Ton of material processed
3-05-012-99	Other/Not Classified (Specify in Comments)						Ton of material processed

NATIONAL EMISSION DATA SYSTEM

SOURCE CLASSIFICATION CODES AND EMISSION FACTOR LISTING

SCC	PROCESS	POUNDS EMITTED PER UNIT PART	SO_x	NO_x	HC	CO	UNITS
MAJOR GROUP 32 - STONE, CLAY, GLASS, AND CONCRETE PRODUCTS (CONTINUED)							
GROUP 324 - CEMENT MANUFACTURING							
Dry Process - 3241							
3-05-006-06	Kilns[1]	245.0	10.2	2.60			Tons of Cement produced
3-90-002-01	Bituminous Coal Used in Kilns	0.00	26.0 S	0.00	0.00	0.00	Tons burned
3-90-004-02	Residual Oil Used in Kilns	0.00	108.0 S	0.00	0.00	0.00	1000 gallons burned
3-90-005-02	Distillate Oil Used in Kilns	0.00	98.0 S	0.00	0.00	0.00	1000 gallons burned
3-90-006-02	Natural Gas Used in Kilns	0.00	0.00	0.00	0.00	0.00	Million cubic feet of gas burned
3-05-006-07	Raw Material Unloading		0.00	0.00	0.00	0.00	Tons of material unloaded
3-05-006-08	Raw Material Piles						Tons in piles
3-05-006-09	Primary Crushing		0.00	0.00	0.00	0.00	Tons processed
3-05-006-10	Secondary Crushing		0.00	0.00	0.00	0.00	Tons processed
3-05-006-11	Screening		0.00	0.00	0.00	0.00	Tons processed
3-05-006-12	Raw Material Transfer		0.00	0.00	0.00	0.00	Tons handled
3-05-006-13	Raw Material Grinding and Drying		0.00	0.00	0.00	0.00	Tons cement produced
3-05-006-14	Clinker Cooler		0.00	0.00	0.00	0.00	Tons cement produced
3-05-006-15	Clinker Piles		0.00	0.00	0.00	0.00	Tons cement produced
3-05-006-16	Clinker Transfer		0.00	0.00	0.00	0.00	Tons cement produced
3-05-006-17	Clinker Grinding		0.00	0.00	0.00	0.00	Tons cement produced
3-05-006-18	Cement Silos		0.00	0.00	0.00	0.00	Tons cement produced
3-05-006-19	Cement Load Out		0.00	0.00	0.00	0.00	Tons cement produced
Wet Process - 3241							
3-05-007-06	Kilns[1]	228.0	10.2	2.60	0.00	0.00	Tons cement produced
3-90-002-01	Bituminous Coal Used in Kilns	0.00	26.0 S	0.00	0.00	0.00	Tons burned
3-90-004-02	Residual Oil Used in Kilns	0.00	108.0 S	0.00	0.00	0.00	1000 gallons burned
3-90-005-02	Distillate Oil Used in Kilns	0.00	98.0 S	0.00	0.00	0.00	1000 gallons burned
3-90-006-02	Natural Gas Used in Kilns	0.00	0.00	0.00	0.00	0.00	Million cubic feet of gas burned
3-05-007-07	Raw Material Unloading		0.00	0.00	0.00	0.00	Tons of material unloaded
3-05-007-08	Raw Material Piles		0.00	0.00	0.00	0.00	Tons in piles
3-05-007-09	Primary Crushing		0.00	0.00	0.00	0.00	Tons processed
3-05-007-10	Secondary Crushing		0.00	0.00	0.00	0.00	Tons processed
3-05-007-11	Screening		0.00	0.00	0.00	0.00	Tons processed
3-05-007-12	Raw Material Transfer		0.00	0.00	0.00	0.00	Tons handled
3-05-007-14	Clinker Cooler		0.00	0.00	0.00	0.00	Tons cement produced
3-05-007-15	Clinker Piles		0.00	0.00	0.00	0.00	Tons cement produced
3-05-007-16	Clinker Transfer		0.00	0.00	0.00	0.00	Tons cement produced
3-05-007-17	Clinker Grinding		0.00	0.00	0.00	0.00	Tons cement produced
3-05-007-18	Cement Silo		0.00	0.00	0.00	0.00	Tons cement produced
3-05-007-19	Cement Loadout		0.00	0.00	0.00	0.00	Tons cement produced

'S' is the weight percent sulfur in the fuel.

[1] Use kiln code and appropriate 3-90 code for fuel used in kilns to properly account for all SO_x emissions.

NATIONAL EMISSION DATA SYSTEM

SOURCE CLASSIFICATION CODES AND EMISSION FACTOR LISTING

SCC	PROCESS	POUNDS EMITTED PER UNIT PART	SO_x	NO_x	HC	CO	UNITS
MAJOR GROUP 32 - STONE, CLAY, GLASS, AND CONCRETE PRODUCTS (Continued)							
GROUP 325 - STRUCTURAL CLAY PRODUCTS							
Brick Manufacturing - 3251							
3-05-003-01	Raw Material Drying	70.0					Tons raw material
3-05-003-02	Raw Material Grinding	76.0	0.00				Tons raw material
3-05-003-03	Storage of Raw Materials	34.0	0.00	0.00	0.00	0.00	Tons of material stored
3-05-003-07	Process Calcining						Tons raw material
3-05-003-08	Screening		0.00	0.00	0.00	0.00	Tons raw material
3-05-003-09	Process Blending and Mixing		0.00	0.00	0.00	0.00	Tons raw material
3-05-003-11	Curing and Firing: Gas-Fired Tunnel Kilns	0.05	0.00	0.15	0.02	0.04	Tons produced
3-05-003-12	Curing and Firing: Oil-Fired Tunnel Kilns	0.60	4.00 S	1.10	0.10	0.00	Tons brick produced
3-05-003-13	Curing and Firing: Coal-Fired Tunnel Kilns	1.00 A	7.20 S	0.90	0.60	1.90	Tons produced
3-05-003-14	Curing and Firing: Gas-Fired Periodic Kilns	0.11	0.00	0.47	0.04	0.11	Tons produced
3-05-003-15	Curing and Firing: Oil-Fired Periodic Kilns	0.90	5.90 S	1.70	0.10	0.00	Tons produced
3-05-003-16	Curing and Firing: Coal-Fired Periodic Kilns	1.60 A	12.0 S	1.40	0.90	3.20	Tons produced
Castable Refractory - 3255							
3-05-005-01	Raw Material Dryer	30.0					Tons feed material
3-05-005-02	Raw Material Crushing/ Processing	120.0	0.00	0.00	0.00	0.00	Tons feed material
3-05-005-03	Electric Arc Melt	50.0					Tons feed material
3-05-005-04	Curing Oven	0.20					Tons feed material
3-05-005-05	Molding and Shakeout	25.0					Tons feed material
3-05-005-99	Other/Not Classified (Specify in Comments)						Tons feed material
GROUP 326 - POTTERY AND RELATED PRODUCTS							
Ceramic Clay Manufacturing - 3261							
3-05-008-01	Drying	70.0					Tons input to process
3-05-008-02	Grinding	76.0					Tons input to process
3-05-009-03	Storage	34.0					Tons input to process
3-05-009-99	Other/Not Classified (Specify in Comments)						Tons produced
Ceramic Electric Parts - 3264							
3-05-030-99	Not Classified (Specify in Comments)						Tons processed

'A' indicates the ash content of the fuel.
'S' is the weight percent sulfur in the fuel.

NATIONAL EMISSION DATA SYSTEM

SOURCE CLASSIFICATION CODES AND EMISSION FACTOR LISTING

SCC	PROCESS	POUNDS EMITTED PER UNIT PART	SO_x	NO_x	HC	CO	UNITS
MAJOR GROUP 32 - STONE, CLAY, GLASS, AND CONCRETE PRODUCTS (Continued)							
GROUP 327 - CONCRETE, GYPSUM AND PLASTER PRODUCTS							
Concrete Batching - 3271, 3272, 3273, 3275, 1771, 3292							
3-05-011-01	General (Non-fugitive)	0.20					Cubic yards concrete produced
Fugitive Emissions							
3-05-011-06	Transfer of sand and aggregate to elevated bins	0.04	0.00	0.00	0.00	0.00	Tons produced
3-05-011-07	Cement unloading to storage silos	0.23	0.00	0.00	0.00	0.00	Tons produced
3-05-011-08	Weight hopper loading of cement, sand and aggregate	0.23	0.00	0.00	0.00	0.00	Tons produced
3-05-011-09	Mixer loading of cement, sand, and aggregate	0.02	0.00	0.00	0.00	0.00	Tons produced
3-05-011-10	Loading of transit mix truck	0.02	0.00	0.00	0.00	0.00	Tons produced
3-05-011-11	Loading of dry-batch truck	0.04	0.00	0.00	0.00	0.00	Tons produced
3-05-011-20	Asbest./Cement Pdts.	0.20	0.00	0.00	0.00	0.00	Tons produced
3-05-011-99	Other/Not Classified (Specify in Comments)						Tons produced
Lime Manufacture - 3274							
3-05-016-01	Primary Crushing	0.50	0.00	0.00	0.00	0.00	Tons processed
3-05-016-02	Secondary Crushing/Screening	1.50	0.00	0.00	0.00	0.00	Tons processed
3-05-016-03	Calcining - Vertical Kiln	8.00					Tons processed
3-05-016-04	Calcining - Rotary Kiln	340.0		3.00		2.00	Tons processed
3-05-016-05	Calcimatic Kiln	50.0		0.20			Tons processed
3-05-016-06	Fluidized Bed Kiln						Tons processed
3-05-016-07	Raw Material Transfer and Conveying		0.00	0.00	0.00	0.00	Tons processed
3-05-016-08	Raw Material Unloading		0.00	0.00	0.00	0.00	Tons processed
3-05-016-09	Hydrator (Atmospheric)	0.10	0.00	0.00	0.00	0.00	Tons hydrated lime produced
3-05-016-10	Raw Material Storage Piles		0.00	0.00	0.00	0.00	Tons processed
3-05-016-11	Product Cooler		0.00	0.00	0.00	0.00	Tons processed
3-05-016-12	Pressure Hydrator	2.00	0.00	0.00	0.00	0.00	Tons processed
3-06-016-13	Lime Silos		0.00	0.00	0.00	0.00	Tons processed
3-06-016-14	Packing/Shipping		0.00	0.00	0.00	0.00	Tons processed
3-06-016-15	Product Transfer and Conveying		0.00	0.00	0.00	0.00	Tons processed
3-06-016-16	Primary Screening		0.00	0.00	0.00	0.00	Tons processed
Gypsum Manufacture - 3275							
3-05-015-01	Raw Material Dryer	40.0					Tons throughput
3-05-015-02	Primary Grinder	1.00					Tons throughput
3-05-015-03	Calciner	90.0					Tons throughput
3-05-015-04	Conveying	0.70					Tons throughput

NATIONAL EMISSION DATA SYSTEM

SOURCE CLASSIFICATION CODES AND EMISSION FACTOR LISTING

SCC	PROCESS	POUNDS EMITTED PER UNIT PART	SO_x	NO_x	HC	CO	UNITS
MAJOR GROUP 32 - STONE, CLAY, GLASS, AND CONCRETE PRODUCTS (Continued)							
GROUP 329 - ABRASIVE, ASBESTOS, AND MISCELLANEOUS NONMETALLIC MINERAL PRODUCTS							
Clay and Fly Ash Sintering (Low Density Aggregate Manufacture) - 3295							
3-05-009-01	Flyash	110.0					Tons finished product
3-05-009-02	Clay/Coke	55.0					Tons finished product
3-05-009-03	Natural Clay	24.0					Tons finished product
3-05-009-99	Other/Not Classified (Specify in Comments)						Tons finished product
Perlite Manufacture - 3295							
3-05-018-01	Vertical Furnace	21.0					Tons charged
3-05-018-99	Other/Not Classified (Specify in Comments)						Tons processed
Barium Ore Processing - 3295							
3-03-014-01	Ore Grinding			0.00			Tons processed
3-03-014-02	Reduction Kiln						Tons processed
3-03-014-03	Dryers/Calciners						Tons processed
3-03-014-99	Other/Not Classified (Specify in Comments)						Tons processed
Mineral Wool - 3296							
3-05-017-01	Cupola	22.0	0.02				Tons charged
3-05-017-02	Reverb Furnace	5.00	0.00				Tons charged
3-05-017-03	Blow Chamber	17.0	0.00				Tons charged
3-05-017-04	Curing Oven	4.00	0.00				Tons charged
3-05-017-05	Cooler	2.00	0.00				Tons charged
3-05-017-99	Other/Not Classified (Specify in Comments)						Tons processed
Other/Not Classified							
3-05-999-99	Specify in Comments						Tons products

NATIONAL EMISSION DATA SYSTEM

SOURCE CLASSIFICATION CODES AND EMISSION FACTOR LISTING

SCC	PROCESS	POUNDS EMITTED PER UNIT PART	SO_x	NO_x	HC	CO	UNITS
MAJOR GROUP 33 - PRIMARY METAL INDUSTRIES							
GROUP 331 - BLAST FURNACES, STEELWORKS, AND ROLLING AND FINISHING MILLS							
Coke Manufacturing - 3312							
3-03-003-02	Oven Charging	1.50	0.02	0.03	2.50	0.60	Tons coal charged
3-03-003-03	Oven Pushing	0.60			0.20	0.07	Tons coal charged
3-03-003-04	Quenching	0.90					Tons coal charged
3-03-003-05	Coal Unloading	0.40					Tons coal charged
3-03-003-06	Oven Underfiring		4.00				Tons coal charged
3-03-003-07	Coal Crushing/Handling[1]						Tons coal charged
3-03-003-08	Oven/Door Leaks	0.10		0.01	1.50	0.60	Tons coal charged
3-03-003-09	Coal Conveying			0.00	0.00	0.00	Tons processed
3-03-003-10	Coal Crushing			0.00	0.00	0.00	Tons processed
3-03-003-11	Coal Screening			0.00	0.00	0.00	Tons processed
3-03-003-12	Coke Crushing/Screening/Handling			0.00	0.00	0.00	Tons processed
Coke Manufacture: Beehives - 3312							
3-03-004-01	General	200.0			8.00	1.00	Tons coal charged
Iron Production - 3312							
3-03-008-01	Blast Furnace: Ore Charge	110.0	0.00	0.00	0.00	1,750.[2]	Tons iron produced
3-03-008-02	Blast Furnace: Agglomerates Charge	40.0	0.00	0.00	0.00	1,750.[2]	Tons iron produced
3-03-008-21	Unloading Ore, Pellets, Limestone Into Blast Furnace						Tons processed
3-03-008-22	Blast Furnace Raw Materials Stockpiles: Ore, Pellets, Limestone, Coke, Sinter						Tons processed
3-03-008-23	Blast Furnace Charge Materials Transfer/Handling						Tons processed
3-03-008-24	Blast Heating Stoves						Tons processed
3-03-008-25	Cast House						Tons processed
Blast Furnace Slag							
3-03-008-08	Slag Crushing and Sizing						Tons processed
3-03-008-09	Slag Removal and Dumping						Tons processed
Sintering							
3-03-008-11	Raw Materials Stockpiles, Coke Breeze, Limestone, Ore Fines						Tons produced
3-03-008-12	Raw Materials Transfer/Handling						Tons produced
3-03-008-13	Windbox	20.0				44.0	Tons produced
3-03-008-14	Sinter Discharge End	22.0					
3-03-008-15	Sinter Breaker						Tons produced
3-03-008-16	Sinter Hot Screening						Tons produced
3-03-008-17	Sinter Cooler						Tons produced
3-03-008-18	Sinter Cold Screening						Tons produced
3-03-008-19	Sinter Processing (Combined Code Includes 15, 16, 17, and 18)						Tons produced

[1] Codes 3-03-003-09, -10, and -11 represent individual operations within this source.

[2] Represents total CO generated, report control equipment as 022 for CO Boiler or 060 for Process Gas Recovery to properly account for actual emissions.

NATIONAL EMISSION DATA SYSTEM

SOURCE CLASSIFICATION CODES AND EMISSION FACTOR LISTING

SCC	PROCESS	POUNDS EMITTED PER UNIT					UNITS
		PART	SO_x	NO_x	HC	CO	
MAJOR GROUP 33 - PRIMARY METAL INDUSTRIES (Continued)							
GROUP 331 - BLAST FURNACES, STEELWORKS, AND ROLLING AND FINISHING MILLS							
Steel Production - 3312							
3-03-009-01	Open Hearth Furnace with Oxygen Lance	17.4					Tons produced
3-03-009-02	Open Hearth Furnace with No Oxygen Lance	8.30					Tons produced
3-03-009-04	Electric Arc Furnace with Oxygen Lance	11.0				18.0	Tons produced
3-03-009-05	Electric Arc Furnace with No Oxygen Lance	9.20				18.0	Tons produced
3-03-009-13	Basic Oxygen Furnace-Open Hood	51.0				139.0[1]	Tons produced
3-03-009-14	Basic Oxygen Furnace-Closed Hood	51.0				139.0[1]	Tons produced
3-03-009-15	Hot Metal (Iron) Transfer to Basic Oxygen Furnace (BOF)						Tons produced
3-03-009-16	Charging BOF						Tons produced
3-03-009-17	Tapping BOF						Tons produced
3-03-009-21	Teeming						Tons produced
3-03-009-22	Continuous Casting						Tons produced
3-03-009-23	Steel Furnace Slag Tapping and Dumping						Tons produced
3-03-009-24	Steel Furnace Slag Processing, Crushing/Sizing						Tons produced
Steel Rolling/Finishing							
3-03-009-11	Soaking Pits						Tons produced
3-03-009-31	Hot Rolling						Tons produced
3-03-009-12	Grinding						Tons produced
3-03-009-32	Scarfing	1.00					Tons produced
3-03-009-33	Reheat Furnaces						Tons produced
3-03-009-34	Heat Treating Furnaces, Annealing						Tons produced
3-03-009-10	Pickling						Tons produced
3-03-009-35	Cold Rolling						Tons produced
3-03-009-36	Coating (Tin, Zinc, Etc.)						Tons produced
3-03-009-99	Other/Not Classified (Specify in Comments)						Tons produced

[1] Represents total CO generated, report control device as 022 for CO Boiler or 023 for flaring to properly account for actual emissions.

NATIONAL EMISSION DATA SYSTEM

SOURCE CLASSIFICATION CODES AND EMISSION FACTOR LISTING

SCC	PROCESS	POUNDS EMITTED PER UNIT PART	SO_x	NO_x	HC	CO	UNITS
MAJOR GROUP 33 - PRIMARY METAL INDUSTRIES (Continued)							
GROUP 331 - BLAST FURNACES, STEELWORKS, AND ROLLING AND FINISHING MILLS							
Ferroalloy (Open Furnace) - 3313[1]							
3-03-006-01	50% FeSi - Electric Smelting Furnaces	200.0					Tons produced
3-03-006-02	75% FeSi - Electric Smelting Furnaces	315.0					Tons produced
3-03-006-03	90% FeSi - Electric Smelting Furnaces	565.0					Tons produced
3-03-006-04	Silicon Metal - Electric Smelting Furnaces	625.0					Tons produced
3-03-006-05	Siliconmanganese - Electric Smelting Furnaces	195.0					Tons produced
3-03-006-10	Ore Screening						Tons processed
3-03-006-11	Ore Dryer						Tons processed
3-03-006-13	Raw Materials Storage						Tons processed
3-03-006-14	Raw Materials Transfer						Tons processed
3-03-006-15	Ferromanganese - Blast Furnace						Tons produced
3-03-006-16	Ferrosilicon - Blast Furnace						Tons produced
3-03-006-17	Cast House						Tons produced
3-03-006-99	Other/Not Classified (Specify in Comments)						Tons produced
Ferroalloy (Semicovered Furnace) - 3313							
3-03-007-01	Ferromanganese - Electric Arc Furnace	45.0					Tons produced
3-03-007-02	Electric Arc Furnace (Other Alloys Specify in Comments)						Tons produced
3-03-007-03	Ferrochromium - Electric Arc Furnace						Tons produced
3-03-007-04	Ferrochromium Silicon - Electric Arc Furnace						Tons produced
GROUP 332 - IRON AND STEEL FOUNDRIES							
Gray Iron Foundries - 3321							
3-04-003-01	Cupola	17.0				145.0	Tons metal charged
3-04-003-02	Reverberatory Furnace	2.00				0.00	Tons metal charged
3-04-003-03	Electric Induction Furnace	1.50				0.00	Tons metal charged
3-04-003-04	Electric Arc Furnace					0.00	Tons metal charged
3-04-003-05	Annealing Operation						Tons processed
3-04-003-20	Pouring/Casting						Tons processed
3-04-003-31	Casting Shakeout						Tons processed
3-04-003-40	Grinding/Cleaning		0.00	0.00	0.00	0.00	Tons processed
3-04-003-50	Sand Grinding/Handling in Mold and Core Making						Tons handled
3-04-003-51	Core Ovens						Tons handled
3-04-003-60	Castings Finishing						Tons handled
3-04-003-99	Other/Not Classified (Specify in Comments)						Tons metal charged

[1] The sequence of the 3-03-006 SCC's is not intended to imply that the collateral activities (ore screening, ore dryer, raw materials storage, raw materials handling, and cast house) apply to specific furnace types.

NATIONAL EMISSION DATA SYSTEM

SOURCE CLASSIFICATION CODES AND EMISSION FACTOR LISTING

SCC	PROCESS	POUNDS EMITTED PER UNIT PART	SO_x	NO_x	HC	CO	UNITS
MAJOR GROUP 33 - PRIMARY METAL INDUSTRIES (Continued)							
GROUP 332 - IRON AND STEEL FOUNDRIES							
Malleable Iron - 3322							
3-04-009-01	Annealing						Tons metal charged
3-04-009-99	Other/Not Classified (Specify in Comments)						Tons metal charged
Steel Foundry - 3324, 3325							
3-04-007-01	Electric Arc Furnace	13.0		0.20			Tons processed
3-04-007-02	Open Hearth Furnace	11.0		0.01			Tons processed
3-04-007-03	Open Hearth Furnace with Oxygen Lance	10.0		0.00			Tons processed
3-04-007-04	Heat-Treating Furnace						Tons processed
3-04-007-05	Electric Induction Furnace	0.10	0.00	0.00	0.00	0.00	Tons processed
3-04-007-06	Sand Grinding/Handling in Mold and Core Making						Tons handled
3-04-007-07	Core Ovens						Tons processed
3-04-007-08	Pouring and Casting						Tons processed
3-04-007-09	Casting Shakeout						Tons processed
3-04-007-11	Cleaning						Tons processed
3-04-007-15	Finishing (Describe in Comments)						Tons processed
3-04-007-99	Other/Not Classified (Specify in Comments)						Tons processed
GROUP 333 - PRIMARY SMELTING AND REFINING OF NONFERROUS METALS							
Aluminum Ore: Electro-Reduction - 3334							
3-03-001-01	Prebaked Reduction Cell	81.3					Tons of molten aluminum produced
3-03-001-02	Horizontal Stud Soderberg Cell	98.4					Tons of molten aluminum produced
3-03-001-03	Vertical Stud Soderberg Cell	78.4					Tons of molten aluminum produced
3-03-001-04	Materials Handling	10.0					Tons of molten aluminum produced
3-03-001-05	Anode Baking Furnace	3.00					Tons of molten aluminum produced
3-03-001-06	Degassing		0.00	0.00	0.00	0.00	Tons of molten aluminum produced
3-03-001-07	Roof Vents						Tons of molten aluminum produced
Aluminum Hydroxide Calcining - 3334							
3-03-002-01	Overall Process	200.0					Tons of alumina produced

NATIONAL EMISSION DATA SYSTEM

SOURCE CLASSIFICATION CODES AND EMISSION FACTOR LISTING

SCC	PROCESS	POUNDS EMITTED PER UNIT PART	SO_x	NO_x	HC	CO	UNITS
MAJOR GROUP 33 - PRIMARY METAL INDUSTRIES (Continued)							
GROUP 333 - PRIMARY SMELTING AND REFINING OF NONFERROUS METALS							
Primary Copper Smelters - 3331							
3-03-005-02	Multiple Hearth Roaster	45.0	410.0				Tons concentrated ore processed
3-03-005-03	Reverberatory Smelting Furnace		450.				Tons concentrated ore processed
3-03-005-04	Converter	42.0	540.0				Tons concentrated ore processed
3-03-005-05	Fire (Furnace) Refining	10.0	0.00				Tons concentrated ore processed
3-03-005-06	Ore Concentrate Dryer						Tons concentrated ore processed
3-03-005-07	Reverberatory Smelting Furnace with Ore Charging (w/o Roasting)	36.0	390.0	0.09			Tons concentrated ore processed
3-03-005-08	Refined Metal Finishing Operations						Tons concentrated ore processed
3-03-005-09	Fluidized-Bed Roaster	55.0	540.0				Tons concentrated ore processed
3-03-005-10	Electric Smelting Furnace		131.0				Tons concentrated ore processed
3-03-005-11	Electrolytic Refining						Tons concentrated ore processed
3-03-005-12	Flash Smelting						Tons concentrated ore processed
3-03-005-13	Roasting-Fugitive Emissions	5.75					Tons concentrated ore processed
3-03-005-14	Reverberatory Furnace-Fugitive Emissions	2.125					Tons concentrated ore processed
3-03-005-15	Converter-Fugitive Emissions	2.625					Tons concentrated ore processed
3-03-005-16	Fire Refining-Fugitive Emissions	0.475					Tons concentrated ore processed
Lead Smelters - 3332							
3-03-010-11	Raw Material Unloading						Tons of lead product
3-03-010-12	Raw Material Storage Files						Tons of lead product
3-03-010-13	Raw Material Transfer						Tons of lead product
3-03-010-04	Ore Crushing	6.00					Tons of ore crushed
3-03-010-14	Sintering Charge Mixing						Tons of lead product
3-03-010-05	Materials Handling (Includes 11, 12, 13, 04, 14)	5.00					Tons of lead product
3-03-010-01	Sintering, Single Stream						Tons of concentrated ore
3-03-010-06	Sintering, Feed End						Tons of concentrated ore
3-03-010-07	Sintering, Discharge End						Tons of concentrated ore
3-03-010-15	Sinter Crushing/Screening						Tons of lead product
3-03-010-16	Sinter Transfer						Tons of lead product
3-03-010-17	Sinter Fines Return Handling						Tons of lead product
3-03-010-18	Blast Furnace Charging						Tons of lead product
3-03-010-02	Blast Furnace Operation	361.0	45.0				Tons of concentrated ore
3-03-010-19	Blast Furnace Tapping (Metal and Slag)						Tons of lead product
3-03-010-20	Blast Furnace Lead Pouring						Tons of lead product
3-03-010-21	Blast Furnace Slag Pouring						Tons of lead product

NATIONAL EMISSION DATA SYSTEM

SOURCE CLASSIFICATION CODES AND EMISSION FACTOR LISTING

SCC	PROCESS	POUNDS EMITTED PER UNIT PART	SO_x	NO_x	HC	CO	UNITS
MAJOR GROUP 33 - PRIMARY METAL INDUSTRIES (Continued)							
GROUP 333 - PRIMARY SMELTING AND REFINING OF NONFERROUS METALS							
Lead Smelters - 3332 (Continued)							
3-03-010-08	Slag Fuming Furnace						Tons of lead product
3-03-010-09	Lead Drossing						Tons of lead product
3-03-010-24	Reverberatory or Kettle Softening						Tons of lead product
3-03-010-22	Lead Refining/Specify Operation in Comment						Tons of lead product
3-03-010-23	Lead Casting						Tons of lead product
3-03-010-03	Dross Reverberatory Furnace	20.0					Tons of concentrated ore
Zinc Smelting - 3333							
3-03-030-02	Multiple Hearth Roaster	120.0	1,100.		0.00		Tons processed
3-03-030-03	Sinter Strand	90.0					Tons processed
3-03-030-05	Vertical Retort/Electro-thermal Furnace	100.0					Tons processed
3-03-030-06	Electrolytic Processor	3.00					Tons processed
3-03-030-07	Flash Roaster						Tons processed
3-03-030-08	Fluid Bed Roaster						Tons processed
3-03-030-09	Raw Material Handling and Transfer		0.00	0.00	0.00	0.00	Tons processed
3-03-030-10	Sinter Breaking and Cooling		0.00	0.00	0.00	0.00	Tons processed
3-03-030-11	Zinc Casting		0.00	0.00	0.00	0.00	Tons processed
3-03-030-12	Raw Material Unloading		0.00	0.00	0.00	0.00	Tons processed
3-03-030-14	Crushing/Screening		0.00	0.00	0.00	0.00	Tons processed
3-03-030-15	Zinc Smelting		0.00	0.00	0.00	0.00	Tons processed
3-03-030-16	Alloying		0.00	0.00	0.00	0.00	Tons processed
Titanium Processing - 3339, 3369, 3356							
3-03-012-01	Chlorination		0.00	0.00	0.00		Tons product
3-03-012-99	Other/Not Classified (Specify in Comments)						Tons processed
Other Primary Metal Industries/Not Classified - 3339							
3-03-999-99	Not Classified (Specify in Comments)						Tons produced
GROUP 334 - SECONDARY SMELTING AND REFINING OF NONFERROUS METALS							
Secondary Aluminum - 3341, 3353, 3354, 3355, 3361, 3411, 3497							
3-04-001-01	Sweating Furnace	14.5					Tons produced
3-04-001-02	Smelting Furnace/Crucible	1.90					Tons metal produced
3-04-001-03	Smelting Furnace/Reverberatory	4.30					Tons metal produced
3-04-001-04	Fluxing (Chlorination)	1,000.	0.00	0.00	0.00	0.00	Tons of chlorine used
3-04-001-05	Fluxing (Flouridation)						Tons metal produced
3-04-001-06	Degassing		0.00	0.00	0.00	0.00	Tons metal produced
3-04-001-07	Hot Dross Processing		0.00	0.00	0.00	0.00	Tons metal produced
3-04-001-08	Crushing/Screening		0.00	0.00	0.00	0.00	Tons metal produced
3-04-001-09	Burning/Drying						Tons metal produced

NATIONAL EMISSION DATA SYSTEM

SOURCE CLASSIFICATION CODES AND EMISSION FACTOR LISTING

SCC	PROCESS	POUNDS EMITTED PER UNIT PART	SO_x	NO_x	HC	CO	UNITS
MAJOR GROUP 33 - PRIMARY METAL INDUSTRIES (CONTINUED)							
GROUP 334 - SECONDARY SMELTING AND REFINING OF NONFERROUS METALS							
Secondary Aluminum - 3341, 3353, 3354, 3355, 3361, 3411, 3497							
3-04-001-10	Foil Rolling					0.00	Tons produced
3-04-001-11	Foil Converting					0.00	Tons produced
3-04-001-20	Can Manufacture					0.00	Tons produced
3-04-001-50	Roll/Draw Extruding					0.00	Tons produced
Secondary Copper Smelting and Alloying (Brass/Bronze Melt) - 3341, 3362							
3-04-002-07	Scrap Dryer (Rotary)	275.0					Tons of charge
3-04-002-08	Wire Burning (Incinerator)	275.0					Tons of charge
3-04-002-09	Sweating Furnace	15.0					Tons of charge
Cupolas							
3-04-002-10	Charge w/Scrap Copper	0.0003					Tons of charge
3-04-002-11	Charge w/Insulated Copper Wire	230.0					Tons of charge
3-04-002-12	Charge w/Scrap Copper and Brass	70.0					Tons of charge
Reverberatory Furnace							
3-04-002-14	Charge w/Copper	5.10					Tons of charge
3-04-002-15	Charge w/Brass and Bronze	36.0					Tons of charge
Rotary Furnace							
3-04-002-17	Charge w/Brass and Bronze	300.0					Tons of charge
Crucible and Pot Furnaces							
3-04-002-19	Charge w/Brass and Bronze	21.0					Tons of charge
Electric Arc Furnace							
3-04-002-20	Charge w/Copper	5.00					Tons of charge
3-04-002-21	Charge w/Brass and Bronze	11.0					Tons of charge
Electric Induction Furnace							
3-04-002-23	Charge w/Copper	7.00					Tons of charge
3-04-002-24	Charge w/Brass and Bronze	20.00					Tons of charge
Fugitive Emissions							
3-04-002-30	Scrap Metal Pretreatment						Tons of charge
3-04-002-31	Scrap Dryer	13.75					Tons of charge
3-04-002-32	Wire Incinerator	13.75					Tons of charge
3-04-002-33	Sweating Furnace	0.75					Tons of charge
3-04-002-34	Cupola Furnace	3.66					Tons of charge
3-04-002-35	Reverberatory Furnace	5.27					Tons of charge
3-04-002-36	Rotary Furnace	4.43					Tons of charge
3-04-002-37	Crucible Furnace	0.49					Tons of charge
3-04-002-38	Electric Induction Furnace	0.14					Tons of charge
3-04-002-39	Casting Operations	0.015					Tons of castings produced

NATIONAL EMISSION DATA SYSTEM

SOURCE CLASSIFICATION CODES AND EMISSION FACTOR LISTING

SCC	PROCESS	POUNDS EMITTED PER UNIT PART	SO_x	NO_x	HC	CO	UNITS
MAJOR GROUP 33 - PRIMARY METAL INDUSTRIES (CONTINUED)							
GROUP 334 - SECONDARY SMELTING AND REFINING OF NONFERROUS METALS							
Secondary Zinc - 3341							
3-04-008-01	Retort Furnace	47.0					Tons produced
3-04-008-02	Horizontal Muffle Furnace	45.0					Tons produced
3-04-008-03	Pot Furnace	0.10					Tons produced
3-04-008-14	Kettle-Sweat Furnace (Clean Metallic Scrap)	0.00					Tons produced
3-04-008-24	Kettle-Sweat Furnace (General Metallic Scrap)	11.0					Tons produced
3-04-008-34	Kettle-Sweat Furnace (Residual Scrap)	25.0					Tons produced
3-04-008-05	Galvanizing Kettle	5.00					Tons produced
3-04-008-06	Calcining Kiln	89.0					Tons produced
3-04-008-07	Concentrate Dryer						Tons produced
3-04-008-18	Reverberatory Sweat Furnace (Clean Metallic Scrap)	0.00					Tons produced
3-04-008-28	Reverberatory Sweat Furnace (General Metallic Scrap)	13.0					Tons produced
3-04-008-38	Reverberatory Sweat Furnace (Residual Scrap)	32.0					Tons produced
3-04-008-99	Other/Not Classified (Specify in Comments)						Tons produced
Secondary Lead Smelting - 3341, 3369							
3-04-004-01	Pot Furnace	0.8	0.00	0.00	0.00	0.00	Tons metal charged
3-04-004-02	Reverberatory Furnace	147.0	80.0	0.00	0.00	0.00	Tons metal charged
3-04-004-03	Blast Furnace	193.0	53.0	0.00	0.00	0.00	Tons metal charged
3-04-004-04	Rotary Reverberatory Furnace	70.0	0.00	0.00	0.00	0.00	Tons metal charged
3-04-004-05	Sweating						Tons metal charged
3-04-004-06	Pot Furnace Heater: Dist. Oil						1000 gallons oil burned
3-04-004-07	Pot Furnace Heater: Natural Gas						Million cubic feet burned
3-04-004-08	Barton Process Reactor		0.00	0.00	0.00	0.00	Tons processed
3-04-004-09	Casting		0.00	0.00	0.00	0.00	Tons metal charged
3-04-004-99	Other/Not Classified (Specify in Comments)						Tons processed
Magnesium - 3341							
3-04-006-01	Pot Furnace w/o Control	4.00					Tons processed
3-04-006-99	Other/Not Classified (Specify in Comments)						Tons processed
Nickel - 3341							
3-04-010-01	Flux Furnace						Tons processed
3-04-010-99	Other/Not Classified (Specify in Comments)						Tons processed
Miscellaneous Casting and Fabrication							
3-04-050-01	Not Classified (Specify in Comments)						Tons produced
Other/Not Classified - Secondary Smelting and Ref. of Nonferrous Metals							
3-04-999-99	Not Classified (Specify in Comments)						Tons processed

NATIONAL EMISSION DATA SYSTEM

SOURCE CLASSIFICATION CODES AND EMISSION FACTOR LISTING

SCC	PROCESS	POUNDS EMITTED PER UNIT					UNITS
		PART	SO_x	NO_x	HC	CO	
MAJOR GROUP 34 - FABRICATED METAL PRODUCTS, EXCEPT MACHINERY AND TRANSPORTATION EQUIPMENT[1]							
Electroplating Operations - 3471							
3-09-010-01	General - Entire Process						Square feet of product plated
Metallic Coating - 3479							
3-09-040-01	Lead Cable Coating	0.6					Tons processed
Other/Not Classified - Fabricated Metal Products, Except Machinery and Transportation Equipment							
3-09-999-99	Not Classified (Specify in Comments)						Tons processed

[1] For surface coating and degreasing operations, see Part I, SCC 4-02-XXX-XX and 4-01-XXX-XX.

NATIONAL EMISSION DATA SYSTEM

SOURCE CLASSIFICATION CODES AND EMISSION FACTOR LISTING

SCC	PROCESS	POUNDS EMITTED PER UNIT					UNITS
		PART	SO_x	NO_x	HC	CO	
MAJOR GROUP 36 - ELECTRICAL AND ELECTRONIC MACHINERY, EQUIPMENT, AND SUPPLIES[1]							
Furnace Electrode Manufacture - 3624							
3-04-020-01	Calcination						Tons processed
3-04-020-02	Mixing		0.00	0.00	0.00	0.00	Tons processed
3-04-020-03	Pitch Treating		0.00	0.00			Tons processed
3-04-020-04	Bake Furnaces						Tons processed
3-04-020-99	Other/Not Classified (Specify in Comments)						Tons processed
Lead Battery Manufacture - 3691							
3-04-005-05	Overall Process	67.20	0.00	0.00	0.00	0.00	1000 batteries produced
3-04-005-06	Grid Casting	1.80	0.00	0.00	0.00	0.00	1000 batteries produced
3-04-005-07	Paste Mixing	2.20	0.00	0.00	0.00	0.00	1000 batteries produced
3-04-005-08	Lead Oxide Mill (Baghouse outlet)	0.24	0.00	0.00	0.00	0.00	1000 batteries produced
3-04-005-09	Three Process Operation	29.20	0.00	0.00	0.00	0.00	1000 batteries produced
3-04-005-10	Lead Reclaiming Furnace	1.54	0.00	0.00	0.00	0.00	1000 batteries produced
3-04-005-11	Small Parts Casting	0.19	0.00	0.00	0.00	0.00	1000 batteries produced
3-04-005-12	Formation	32.00	0.00	0.00	0.00	0.00	1000 batteries produced
3-04-005-99	Other/Not Classified (Specify in Comments)						Tons processed

[1] For surface coating and degreasing operations, see Part 1, SCC 4-02-XXX-XX and 4-01-XXX-XX.

NATIONAL EMISSION DATA SYSTEM

SOURCE CLASSIFICATION CODES AND EMISSION FACTOR LISTING

SCC	PROCESS	POUNDS EMITTED PER UNIT					UNITS
		PART	SO_x	NO_x	HC	CO	
MAJOR GROUP 51 - WHOLESALE TRADE-NONDURABLE GOODS							
Gasoline Storage at Bulk Terminals - 5171, 4226[a,d]							
4-04-001-01	Gasoline RVP[1]13: Fixed Roof Breathing Loss[b] (67,000 bbl. tank)	0.00	0.00	0.00	109.5	0.00	1000 gallons storage capacity
4-04-001-02	Gasoline RVP10: Fixed Roof Breathing Loss (67,000 bbl. tank)	0.00	0.00	0.00	84.0	0.00	1000 gallons storage capacity
4-04-001-03	Gasoline RVP7: Fixed Roof Breathing Loss (67,000 bbl. tank)	0.00	0.00	0.00	58.4	0.00	1000 gallons storage capacity
4-04-001-04	Gasoline RVP13: Fixed Roof Breathing Loss (250,000 bbl. tank)	0.00	0.00	0.00	80.3	0.00	1000 gallons storage capacity
4-04-001-05	Gasoline RVP10: Fixed Roof Breathing Loss (250,000 bbl. tank)	0.00	0.00	0.00	62.1	0.00	1000 gallons storage capacity
4-04-001-06	Gasoline RVP7: Fixed Roof Breathing Loss (250,000 bbl. tank)	0.00	0.00	0.00	43.8	0.00	1000 gallons storage capacity
4-04-001-07	Gasoline RVP13: Fixed Roof Working Loss	0.00	0.00	0.00	10.0	0.00	1000 gallons throughput
4-04-001-08	Gasoline RVP10: Fixed Roof Working Loss	0.00	0.00	0.00	8.20	0.00	1000 gallons throughput
4-04-001-09	Gasoline RVP7: Fixed Roof Working Loss	0.00	0.00	0.00	5.70	0.00	1000 gallons throughput
4-04-001-10	Gasoline RVP13: Floating Roof[c] Standing Loss (67,000 bbl. tank)	0.00	0.00	0.00	16.1	0.00	1000 gallons storage capacity
4-04-001-11	Gasoline RVP10: Floating Roof Standing Loss (67,000 bbl. tank)	0.00	0.00	0.00	12.0	0.00	1000 gallons storage capacity
4-04-001-12	Gasoline RVP7: Floating Roof Standing Loss (67,000 bbl. tank)	0.00	0.00	0.00	8.40	0.00	1000 gallons storage capacity
4-04-001-13	Gasoline RVP13: Floating Roof Standing Loss (250,000 bbl. tank)	0.00	0.00	0.00	9.10	0.00	1000 gallons storage capacity
4-04-001-14	Gasoline RVP10: Floating Roof Standing Loss (250,000 bbl. tank)	0.00	0.00	0.00	6.90	0.00	1000 gallons storage capacity
4-04-001-15	Gasoline RVP7: Floating Roof Standing Loss (250,000 bbl. tank)	0.00	0.00	0.00	4.70	0.00	1000 gallons storage capacity
4-04-001-16	Gasoline RVP13/10/7, Floating Roof Withdrawal Loss (67,000 bbl. tank)	0.00	0.00	0.00	0.023	0.00	1000 gallons throughput
4-04-001-17	Gasoline RVP13/10/7, Floating Roof Withdrawal Loss (250,000 bbl. tank)	0.00	0.00	0.00	0.013	0.00	1000 gallons throughput
4-04-001-18	Gasoline RVP13: Variable Vapor Space Filling Loss (10,500 bbl. tank)	0.00	0.00	0.00	9.60	0.00	1000 gallons throughput
4-04-001-19	Gasoline RVP10: Variable Vapor Space Filling Loss (10,500 bbl. tank)	0.00	0.00	0.00	7.70	0.00	1000 gallons throughput
4-04-001-20	Gasoline RVP7: Variable Vapor Space Filling Loss (10,500 bbl. tank)	0.00	0.00	0.00	5.40	0.00	1000 gallons throughput

[a] Emission factors for the storage of other fuels at Bulk Terminals and Bulk Plants are contained under SIC Major Group 29.

[b] Emission factors for the Fixed Roof Storage Tanks Breathing Loss are for "new" tank conditions only. For "old" tank conditions, E. F. is increased by 13%.

[c] Similarly E. F. for Floating Roof Storage Tanks Standing Loss are for the "new" tank conditions only. For "old" tank conditions, E. F. is increased by 127%.

[d] Bulk terminals are defined as facilities with daily throughputs of 20,000 gallons or more.

[1] RVP = Reid Vapor Pressure is the absolute pressure of gasoline at 1000°F in psia as determined by ASTM method D323-72.

NATIONAL EMISSION DATA SYSTEM

SOURCE CLASSIFICATION CODES AND EMISSION FACTOR LISTING

SCC	PROCESS	POUNDS EMITTED PER UNIT PART	SO_x	NO_x	HC	CO	UNITS
MAJOR GROUP 51 - WHOLESALE TRADE-NONDURABLE GOODS - CONTINUED							
Gasoline Storage at Bulk Plants - 5171, 4226[a,c]							
4-04-002-01	Gasoline RVP13: Fixed Roof Breathing Loss[b] (67,000 bbl. tank)	0.00	0.00	0.00	109.5	0.00	1000 gallons storage capacity
4-04-002-02	Gasoline RVP10: Fixed Roof Breathing Loss (67,000 bbl. tank)	0.00	0.00	0.00	84.0	0.00	1000 gallons storage capacity
4-04-002-03	Gasoline RVP7: Fixed Roof Breathing Loss (67,000 bbl. tank)	0.00	0.00	0.00	58.4	0.00	1000 gallons storage capacity
4-04-002-04	Gasoline RVP13: Fixed Roof Working Loss	0.00	0.00	0.00	10.0	0.00	1000 gallons throughput
4-04-002-05	Gasoline RVP10: Fixed Roof Working Loss	0.00	0.00	0.00	8.20	0.00	1000 gallons throughput
4-04-002-06	Gasoline RVP7: Fixed Roof Working Loss	0.00	0.00	0.00	5.70	0.00	1000 gallons throughput
4-04-002-07	Gasoline RVP13: Floating Roof[b] Standing Loss (67,000 bbl. tank)	0.00	0.00	0.00	16.1	0.00	1000 gallons storage capacity
4-04-002-08	Gasoline RVP10: Floating Roof Standing Loss (67,000 bbl. tank)	0.00	0.00	0.00	12.0	0.00	1000 gallons storage capacity
4-04-002-09	Gasoline RVP7: Floating Roof Standing Loss (67,000 bbl. tank)	0.00	0.00	0.00	8.40	0.00	1000 gallons storage capacity
4-04-002-10	Gasoline RVP13/10/7: Floating Roof Withdrawal Loss (67,000 bbl. tank)	0.00	0.00	0.00	0.023	0.00	1000 gallons throughput
4-04-002-11	Gasoline RVP13: Variable Vapor Space Filling Loss (10,500 bbl. tank)	0.00	0.00	0.00	9.60	0.00	1000 gallons throughput
4-04-002-12	Gasoline RVP10: Variable Vapor Space Filling Loss (10,500 bbl. tank)	0.00	0.00	0.00	7.70	0.00	1000 gallons throughput
4-04-002-13	Gasoline RVP7: Variable Vapor Space Filling Loss (10,500 bbl. tank)	0.00	0.00	0.00	5.40	0.00	1000 gallons throughput

[a] Emission factors for the storage of other fuels at Bulk Terminals and Bulk Plants are contained under SIC Major Group 29.

[b] Emission factors for the Fixed Roof Storage Tanks Breathing Loss are for 'new' tank conditions only. For 'old' tank conditions, E. F. is increased by 13%.

[c] Bulk plants are defined as facilities with daily throughputs of 20,000 gallons or less.

NATIONAL EMISSION DATA SYSTEM

SOURCE CLASSIFICATION CODES AND EMISSION FACTOR LISTING

SCC	PROCESS	POUNDS EMITTED PER UNIT PART	SO_x	NO_x	HC	CO	UNITS
MAJOR GROUP 51 - WHOLESALE TRADE-NONDURABLE GOODS (CONTINUED)							
Transportation and Marketing of Petroleum Products							
Tank Cars and Trucks - 5161, 5171, 5172, 4582							
4-06-001-31	Gasoline-Submerged Loading-Normal Service	0.00	0.00	0.00	5.00	0.00	1000 gallons transferred
4-06-001-32	Crude Oil-Submerged Loading-Normal Service	0.00	0.00	0.00	3.00	0.00	1000 gallons transferred
4-06-001-33	Jet Naphtha (JP-4)-Submerged Loading-Normal Service	0.00	0.00	0.00	1.50	0.00	1000 gallons transferred
4-06-001-34	Jet Kerosene-Submerged Loading-Normal Service	0.00	0.00	0.00	0.02	0.00	1000 gallons transferred
4-06-001-35	Distillate Oil No. 2-Submerged Loading-Normal Service	0.00	0.00	0.00	0.01	0.00	1000 gallons transferred
4-06-001-36	Gasoline-Splash Loading-Normal Service	0.00	0.00	0.00	12.0	0.00	1000 gallons transferred
4-06-001-37	Crude oil-Splash Loading-Normal Service	0.00	0.00	0.00	7.00	0.00	1000 gallons transferred
4-06-001-38	Jet Naphtha-Splash Loading-Normal Service	0.00	0.00	0.00	4.00	0.00	1000 gallons transferred
4-06-001-39	Jet Kerosene-Splash Loading-Normal Service	0.00	0.00	0.00	0.04	0.00	1000 gallons transferred
4-06-001-40	Distillate oil No. 2-Splash Loading-Normal Service	0.00	0.00	0.00	0.03	0.00	1000 gallons transferred
4-06-001-41	Gasoline-Submerged Loading-Balance Service	0.00	0.00	0.00	8.00	0.00	1000 gallons transferred
4-06-001-42	Crude oil-Submerged Loading-Balance Service	0.00	0.00	0.00	5.00	0.00	1000 gallons transferred
4-06-001-43	Jet Naphtha-Submerged Loading-Balance	0.00	0.00	0.00	2.50	0.00	1000 gallons transferred
4-06-001-44	Gasoline-Splash Loading-Balance Service	0.00	0.00	0.00	8.00	0.00	1000 gallons transferred
4-06-001-45	Crude oil-Splash Loading-Balance Service	0.00	0.00	0.00	5.00	0.00	1000 gallons transferred
4-06-001-46	Jet Naphtha-Splash Loading Balance Service	0.00	0.00	0.00	2.50	0.00	1000 gallons transferred
4-06-001-47	Gasoline-Submerged Loading of a Clean Cargo Tank	0.00	0.00	0.00	4.00	0.00	1000 gallons transferred
4-06-001-48	Crude oil-Submerged Loading of a Clean Cargo Tank	0.00	0.00	0.00	2.50	0.00	1000 gallons transferred
4-06-001-49	Jet Naphtha (JP-4)-Submerged Loading of a Clean Cargo Tank	0.00	0.00	0.00	1.25	0.00	1000 gallons transferred
4-06-001-60	Jet Kerosene-Submerged Loading of a Clean Cargo Tank	0.00	0.00	0.00	0.02	0.00	1000 gallons transferred
4-06-001-61	Distillate Oil No. 2-Submerged Loading of a Clean Cargo Tank	0.00	0.00	0.00	0.008	0.00	1000 gallons transferred
4-06-001-62	Gasoline-Transit Loss-Loaded with Fuel	0.00	0.00	0.00	0.005	0.00	1000 gallons transferred
4-06-001-63	Gasoline-Transit Loss-Return with Vapor	0.00	0.00	0.00	0.055	0.00	1000 gallons transferred

NATIONAL EMISSION DATA SYSTEM

SOURCE CLASSIFICATION CODES AND EMISSION FACTOR LISTING

SCC	PROCESS	POUNDS EMITTED PER UNIT					UNITS
		PART	SO_x	NO_x	HC	CO	
MAJOR GROUP 51 - WHOLESALE TRADE-NONDURABLE GOODS - CONTINUED							
Marine Vessels - 4463							
4-06-002-31	Gasoline-Ship Loading-Cleaned and Vapor-free Tank	0.00	0.00	0.00	1.00	0.00	1000 gallons transferred
4-06-002-32	Gasoline-Ocean Barges Loading	0.00	0.00	0.00	1.30	0.00	1000 gallons transferred
4-06-002-33	Gasoline-Barges Loading-Cleaned and Vapor-free Tank	0.00	0.00	0.00	1.20	0.00	1000 gallons transferred
4-06-002-34	Gasoline-Ship Loading-Ballasted Tank	0.00	0.00	0.00	1.60	0.00	1000 gallons transferred
4-06-002-35	Gasoline-Ocean Barges Loading-Ballasted Tank	0.00	0.00	0.00	2.10	0.00	1000 gallons transferred
4-06-002-36	Gasoline-Ship Loading-Uncleaned Tank	0.00	0.00	0.00	2.40	0.00	1000 gallons transferred
4-06-002-37	Gasoline-Ocean Barges Loading-Uncleaned Tank	0.00	0.00	0.00	3.30	0.00	1000 gallons transferred
4-06-002-38	Gasoline-Barges Loading-Uncleaned Tank	0.00	0.00	0.00	4.00	0.00	1000 gallons transferred
4-06-002-39	Gasoline-Ship Loading-Average Tank Condition	0.00	0.00	0.00	1.40	0.00	1000 gallons transferred
4-06-002-40	Gasoline-Barges Loading-Average Tank Condition	0.00	0.00	0.00	4.00	0.00	1000 gallons transferred
4-06-002-41	Gasoline-Tanker-Ballasting	0.00	0.00	0.00	0.80	0.00	1000 gallons total cargo capacity
4-06-002-42	Gasoline-Transit	0.00	0.00	0.00	156.0[1]	0.00	1000 gallons transport
4-06-002-43	Crude Oil-Loading Tankers	0.00	0.00	0.00	0.70	0.00	1000 gallons transferred
4-06-002-44	Jet Fuel-Loading Tankers	0.00	0.00	0.00	0.50	0.00	1000 gallons transferred
4-06-002-45	Kerosene-Loading Tankers	0.00	0.00	0.00	0.005	0.00	1000 gallons transferred
4-06-002-46	Distillate Oil No. 2 Loading Tankers	0.00	0.00	0.00	0.005	0.00	1000 gallons transferred
4-06-002-48	Crude Oil-Loading Barges	0.00	0.00	0.00	1.70	0.00	1000 gallons transferred
4-06-002-49	Jet Fuel-Loading Barges	0.00	0.00	0.00	1.20	0.00	1000 gallons transferred
4-06-002-50	Kerosene-Loading Barges	0.00	0.00	0.00	0.013	0.00	1000 gallons transferred
4-06-002-51	Distillate Oil No. 2-Loading Tankers	0.00	0.00	0.00	0.012	0.00	1000 gallons transferred
4-06-002-53	Crude Oil-Tanker Ballasting	0.00	0.00	0.00	0.60	0.00	1000 gallons total cargo capacity
4-06-002-54	Crude Oil-Transit-Loss	0.00	0.00	0.00	52.0[1]	0.00	1000 gallons transported
4-06-002-55	Jet Fuel-Transit-Loss	0.00	0.00	0.00	36.4[1]	0.00	1000 gallons transported
4-06-002-56	Kerosene-Transit-Loss	0.00	0.00	0.00	0.26[1]	0.00	1000 gallons transported
4-06-002-57	Distillate Oil No. 2-Transit-Loss	0.00	0.00	0.00	0.26[1]	0.00	1000 gallons transported

[1] Expressed on annual basis (52 weeks/year).

NATIONAL EMISSION DATA SYSTEM

SOURCE CLASSIFICATION CODES AND EMISSION FACTOR LISTING

SCC	PROCESS	POUNDS EMITTED PER UNIT					UNITS
		PART	SO_x	NO_x	HC	CO	
MAJOR GROUP 51 - WHOLESALE TRADE-NONDURABLE GOODS (CONTINUED)							
Gasoline Retail Operations - 5541							
4-06-003-01	Splash Filling	0.00	0.00	0.00	11.5	0.00	1000 gallons throughput
4-06-003-02	Submerged Filling w/o Control	0.00	0.00	0.00	7.30	0.00	1000 gallons throughput
4-06-003-06	Balanced Submerged Filling	0.00	0.00	0.00	0.30	0.00	1000 gallons throughput
4-06-003-07	Underground Tank Breathing	0.00	0.00	0.00	1.00	0.00	1000 gallons throughput
Filling Vehicle Gas Tanks							
4-06-004-01	Vapor Loss: w/o Controls	0.00	0.00	0.00	9.00	0.00	1000 gallons transferred
4-06-004-02	Liquid Spill Loss: w/o Controls	0.00	0.00	0.00	0.70	0.00	1000 gallons transferred
4-06-004-03	Vapor Loss: w/Controls	0.00	0.00	0.00	0.90	0.00	1000 gallons transferred

NATIONAL EMISSION DATA SYSTEM

SOURCE CLASSIFICATION CODES AND EMISSION FACTOR LISTING

SCC	PROCESS	POUNDS EMITTED PER UNIT					UNITS
		PART	SO_x	NO_x	HC	CO	
MAJOR GROUP 51 - WHOLESALE TRADE-NONDURABLE GOODS (CONTINUED)							
Feed and Grain Terminal Elevators - 5153, 4221, 4463							
3-02-005-03	Cleaning	3.00	0.00	0.00	0.00	0.00	Tons grain processed[1]
3-02-005-04	Drying	1.10	0.00	0.00	0.00	0.00	Tons grain processed
3-02-005-05	Unloading (Receiving)	1.00	0.00	0.00	0.00	0.00	Tons grain processed
3-02-005-06	Loading (Shipping)	0.30	0.00	0.00	0.00	0.00	Tons grain processed
3-02-005-07	Removal From Bins (Tunnel Belt)	1.40	0.00	0.00	0.00	0.00	Tons grain processed
3-02-005-08	Elevator Legs (Headhouse)	1.50	0.00	0.00	0.00	0.00	Tons grain processed
3-02-005-09	Tripper (Gallery Belt)	1.00	0.00	0.00	0.00	0.00	Tons grain processed
Feed and Grain Country Elevators - 5153, 4221							
3-02-006-03	Cleaning	3.00	0.00	0.00	0.00	0.00	Tons grain processed
3-02-006-04	Drying	0.70	0.00	0.00	0.00	0.00	Tons grain processed
3-02-006-05	Unloading	0.60	0.00	0.00	0.00	0.00	Tons grain processed
3-02-006-06	Loading	0.30	0.00	0.00	0.00	0.00	Tons grain processed
3-02-006-07	Removal From Bins	1.00	0.00	0.00	0.00	0.00	Tons grain processed
3-02-006-08	Elevator Legs	1.50	0.00	0.00	0.00	0.00	Tons grain processed
Export Grain Elevators - 4463, 4221							
3-02-031-03	Cleaning	3.00	0.00	0.00	0.00	0.00	Tons grain processed
3-02-031-04	Drying	1.10	0.00	0.00	0.00	0.00	Tons grain processed
3-02-031-05	Unloading	1.00	0.00	0.00	0.00	0.00	Tons grain processed
3-02-031-06	Loading	1.00	0.00	0.00	0.00	0.00	Tons grain processed
3-02-031-07	Removal From Bins (Tunnel Belt)	1.40	0.00	0.00	0.00	0.00	Tons grain processed
3-02-031-08	Elevator Legs	1.50	0.00	0.00	0.00	0.00	Tons grain processed
3-02-031-09	Tripper (Gallery Belt)	1.00	0.00	0.00	0.00	0.00	Tons grain processed

[1] Units refer to amount of grain processed through each operation. If only the total amount of grain received or shipped is known, see AP-42, Table 6.4-2 for typical ratios of tons processed to tons shipped or received.

NATIONAL EMISSION DATA SYSTEM

SOURCE CLASSIFICATION CODES AND EMISSION FACTOR LISTING

SCC	PROCESS	POUNDS EMITTED PER UNIT					UNITS
		PART	SO_x	NO_x	HC	CO	
MAJOR GROUP 72 - PERSONAL SERVICES							
Dry Cleaning - 7216							
4-01-001-03	Perchloroethylene	0.00	0.00	0.00	2000.	0.00	Tons solvent consumed
4-01-001-04	Stoddard	0.00	0.00	0.00	2000.	0.00	Tons solvent consumed
4-01-001-05	Trichlorotrifluoroethane (Freon)	0.00	0.00	0.00	2000.	0.00	Tons solvent consumed

APPENDIX E

COMPILATION OF LEAD MISSION FACTORS

INTRODUCTION

Lead was not involved as a specific pollutant in the earlier editions and supplements of AP-42. Since a National Ambient Air Quality Standard for lead has been issued, it has become necessary to determine emission factors for lead, and these are given in Table E-1. The AP-42 Section number given in this table for each process corresponds to the pertinant section in the body of the document.

Lead emission factors for combustion and evaporation from mobile sources require a totally different treatment, and they are not included in this Appendix.

Table E-1. UNCONTROLLED LEAD EMISSION FACTORS

AP-42 Section	Process	Emission factor[a,b] Metric	Emission factor[a,b] English	References
1.1	Bituminous coal combustion (all furnace types)	0.8 (L) kg/10^6 kg	1.6 (1) lb/10^3 ton	1,4-6
		(Average L = 8.3 ppm)		
1.2	Anthracite coal combustion (all furnace types)	0.8 (L) kg/10^6 kg	1.6 (L) lb/10^3 ton	1,4-6
		(Average L = 8.1 ppm)		
1.3	Residual fuel oil combustion (all boiler types)	0.5 (L) kg/$10^3 m^3$	4.2 (L) lb/10^6 gal	1,7
		(Average L = 1.0 ppm)		
1.3	Distillate fuel oil combustion (all boiler types)	0.5 (L) kg/$10^3 m^3$	4.2 (L) lb/10^6 gal	1,7
		(Average L = 0.1 ppm)		
1.7	Lignite combustion (all boiler types)	5-6 kg/10^6 kg	10-11 lb/10^3 tons	2
1.11	Waste oil combustion	9 (P) kg/m^3	75 (P) lb/10^3 gal	18,51,52
		(Average P - 1.0 percent)		
2.1	Refuse incineration (municipal incinerator)	0.2 kg/MT chgd	0.4 lb/ton chgd	1,3,9-11
2.5	Sewage sludge incineration (wet scrubber controlled)			
	Multiple hearth	.01-.02 kg/MT chgd	.02-.03 lb/ton chgd	3,12
	Fluidized bed	.0005-.002 kg/MT chgd	.001-.003 lb/ton	3,12

Table E-1 (continued). UNCONTROLLED LEAD EMISSION FACTORS

AP-42 Section	Process	Emission factor[a,b] Metric	Emission factor[a,b] English	References
5.22	Lead alkyl production			
	Electrolytic process	0.5 kg/MT prod	1.0 lb/ton prod	1,3,53
	Sodium-lead alloy process			
	Recovery furnace	28 kg/MT prod	55 lb/ton prod	1,53,54
	Process vents, TEL	2 kg/MT prod	4 lb/ton prod	1
	Process vents, TML	75 kg/MT prod	150 lb/ton prod	1
	Sludge pits	0.6 kg/MT prod	1.2 ton/ton prod	1
7.2	Metallurgical coke manufacturing	.00018 kg/MT coal chgd	.00035 lb/ton coal chgd	1,13,14
7.3	Primary copper smelting			
	Roasting	1.2 (P) kg/MT conc (Average P - 0.3 percent)	2.3 (P) lb/ton conc	1
	Smelting (reverberatory furnace)	0.8 kg/MT conc	1.7 lb/ton conc	1,15,17
	Converting	1.3 kg/MT conc	2.6 lb/ton conc	1,15,16,18
7.4	Ferroalloy production - electric arc furnace (open)			
	Ferrosilicon (50%); FeSi	0.15 kg/MT prod	0.29 lb/ton prod	20
	Silicon metal	0.0015 kg/MT prod	0.0031 lb/ton prod	1,19
	Silico-manganese	0.29 kg/MT prod	0.57 lb/ton prod	1,21
	Ferro-manganese (standard)	0.06 kg/MT prod	0.11 lb/ton prod	1,3
	Ferrochrome-silicon	0.04 kg/MT prod	0.08 lb/ton prod	20
	High carbon ferrochrome	0.17 kg/MT prod	0.34 lb/ton prod	20
7.4	Ferroalloy production - blast furnace	1.9 kg/MT prod	3.7 lb/ton prod	1,3
7.5	Iron and steel production			
	Sintering (windbox + vent discharges	0.0067 kg/MT sinter	0.013 lb/ton sinter	1,23,24
	Blast furnace for mixed charge)	0.062 kg/MT Fe	0.124 lb/ton Fe	1,23

Table E-1 (continued). UNCONTROLLED LEAD EMISSION FACTORS

AP-42 Section	Process	Emission factor[a,b] Metric	Emission factor[a,b] English	References
	Open hearth			
	Lancing	0.1 kg/MT steel	0.2 lb/ton steel	3,26,27
	No lancing	0.2 kg/MT steel	0.5 lb/ton steel	3,26,27
	Basic oxygen furnace (BOF)	0.1 kg/MT steel	0.2 lb/ton steel	1,23,25
	Electric arc furnace			
	Lancing	0.11 kg/MT steel	0.22 lb/ton steel	1,28
	No lancing	0.09 kg/MT steel	0.18 lb/ton steel	1
7.6	Primary lead smelting			
	Ore crushing and grinding	0.15 kg/MT ore	0.3 lb/ton ore	29
	Sintering	4.2-170 kg/MT Pb prod	8.4-340 lb/ton Pb prod	1,21,22, 30-33
	Blast furnace	8.7-50 kg/MT Pb prod	17.5-100 lb/ton Pb prod	1,30,32, 33,35,36
	Dross reverberatory furnace	1.3-3.5 kg/MT Pb prod	2.6-7.0 lb/ton Pb prod	1,18,30, 34,36
7.7	Zinc smelting			
	Ore unloading, storage, transfer	1-2.9 kg/MT ore	2.0-5.7 lb/ton ore	37
	Sintering	13.5-25 kg/MT ore	27-50 lb/ton ore	1,30,38
	Horizontal retorts	1.2 kg/MT ore	2.4 lb/ton ore	1,30,38
	Vertical retorts	2-2.5 kg/MT ore	4-5 lb/ton ore	1,30,38
7.9	Secondary copper smelting and alloying			
	Reverberatory furnace (high lead alloy 58% Pb)	25 kg/MT prod	50 lb/ton prod	1,26,39-41
	Red and yellow brass (15% Pb)	6.6 kg/MT prod	13.2 lb/ton prod	1,26,39-41
	Other alloys (7% Pb)	2.5 kg/MT prod	5 lb/ton prod	1,26,39-41
7.10	Gray iron foundries			
	Cupola	0.05-0.6 kg/MT prod	0.1-1.1 lb/ton prod	1,3,26, 42,43

Table E-1 (continued). UNCONTROLLED LEAD EMISSION FACTORS

AP-42 Section	Process	Emission factor[a,b] Metric	Emission factor[a,b] English	References
	Reverberatory furnace	0.006-0.7 kg/MT prod	0.012-0.14 lb/ton prod	1
	Electric induction furnace	0.005-.05 kg/MT prod	0.009-0.1 lb/ton prod	1
7.11	Secondary lead smelting			
	Reverberatory furnace	27 kg/MT Pb prod	53 lb/ton Pb prod	1,38,42-46
	Blast cupola furnace	28 kg/MT Pb prod	56 lb/ton Pb prod	38,42-46
	Refining kettles	0.1 kg/MT Pb prod	0.21 lb/ton Pb prod	46
7.15	Storage battery production (total)	8 kg/10^3 batteries	17.7 lb/10^3 batteries	1,55-58
	Grid casting	0.4 kg/10^3 batteries	0.9 lb/10^3 batteries	1,55-58
	Lead oxide mill (baghouse outlet)	0.05 kg/10^3 batteries	0.12 lb/10^3 batteries	1,55-58
	Three-process operations[c]	6.6 kg/10^3 batteries	14.6 lb/10^3 batteries	1,55-58
	Lead reclaim furnace	0.35 kg/10^3 batteries	0.77 lb/10^3 batteries	1,55-58
	Small parts casting	0.05 kg/10^3 batteries	0.10 lb/10^3 batteries	1,55-58
7.16	Lead oxide and pigment production			
	Barton pot (baghouse outlet)	0.22 kg/MT prod	0.44 lb/ton prod	1,61,62
	Calcining furnace	7 kg/MT prod	14 lb/ton prod	61
	Red lead (baghouse outlet)	0.5 kg/MT prod	0.9 lb/ton prod	1,54
	White lead (baghouse outlet)	0.28 kg/MT prod	0.55 lb/ton prod	1,54
	Chrome pigments	0.065 kg/MT prod	0.13 lb/ton prod	1,54
7.17	Miscellaneous lead products			
	Type metal production	0.13 kg/MT Pb proc	0.25 lb/ton Pb proc	1,63
	Can soldering	160 kg/10^6 baseboxes[d] prod	0.18 ton/10^6 base-boxes prod	1
	Cable covering	0.25 kg/MT proc	0.5 lb/ton Pb proc	1,3,64

Table E-1 (continued). UNCONTROLLED LEAD EMISSION FACTORS

AP-42 Section	Process	Emission factor[a,b] Metric	Emission factor[a,b] English	References
	Metallic lead products			
	Ammunition	0.5 kg/10^6 kg Pb proc	1.0 lb/10^3 ton Pb proc	1,3
	Bearing metals	negligible	negligible	1,3
	Other sources of lead	0.8 kg/MT Pb proc	1.5 lb/ton Pb proc	1,3
7.18	Leadbearing ore crushing and grinding			
	Lead ores (Section 7.6)	0.15 kg/MT proc	0.3 lb/ton proc.	1,3,29, 59,60
	Zn, Cu-Zn, Cu ores	0.006 kg/MT proc	0.012 lb/ton proc	1,3,29, 59,60
	Pb-Zn, Pb-Cu, Cu-Pb-Zn ores	0.06 kg/MT proc	0.12 lb/ton proc	1,3,29, 59,60
8.6	Portland cement manufacturing			
	Dry process (total)	0.08 kg/MT prod	0.15 lb/ton prod	1,47,48
	Kiln/cooler	0.06 kg/MT prod	0.11 lb/ton prod	1,47,48
	Dryer/grinder	0.02 kg/MT prod	0.04 lb/ton prod	1,47,48
	Wet process (total)	0.06 kg/MT prod	0.12 lb/ton prod	1,47,48
	Kiln/cooler	0.05 kg/MT prod	0.10 lb/ton prod	1,47,48
	Dryer/grinder	0.01 kg/MT prod	0.02 lb/ton prod	1,47,48
8.13	Glass manufacturing (Lead glass; 23% Pb in particulate)	2.5 kg/MT glass prod	5 lb/ton glass prod	1,49
11.2	Fugitive dust sources (Re-entrained from paved roadway)	0.02 g/vehicle km	0.00007 lb/ vehicle mi	50

[a]The letter L indicates that the ppm lead in the coal or fuel oil should be multiplied by the value given in order to obtain the emission factor for the fuel. The letter P similarly indicates that the percent lead in the ore being processed should be multiplied by the value given in the table in order to obtain the emission factor.

[b]Abbreviations: chgd = charged
conc = concentrate
prod = produced
proc = processed

[c]Stacking, lead burning, and battery assembly.

[d]Basebox = 20.3 m^2 (217.8 $ft.^2$), standard tin plate sheet area.

References for Table E-1

1. *Control Techniques for Lead Air Emissions*, EPA-450/2-77-012, U.S. Environmental Protection Agency, Research Triangle Park, NC, December 1977.

2. *Development of HATREMS Data Base and Emission Inventory Evaluation*, EPA-450/3-77-011, U.S. Environmental Protection Agency, Research Triangle Park, NC, April 1977.

3. W.E. Davis, *Emissions Study of Industrial Sources of Lead Air Pollutants, 1970*, EPA Contract No. 68-02-0278, W.E. Davis and Associates, Leawood, KS, April 1973.

4. R.L. Davidson, *et al.*, "Trace Elements in Fly Ash", *Environmental Science and Technology, 11*: 1107-1113, 1974.

5. F.G. McSich, *et al.*, *Coal Fired Power Plant Trace Element Study*, EPA Contract No. 68-01-2663, Radian Corp., Austin, TX, September 1975.

6. N.E. Bolton, *et al.*, *Trace Element Measurements at the Coal-fired Allen Stern Plant, February 1973-July 1973*, Contract No. W-7405-Eng.-26, Atomic Energy Commission, National Laboratory, Oak Ridge, TN, June 1974.

7. A. Levy, *et al.*, *Field Investigation of Emission from Fuel Oil Combustion for Space Heating*, Battelle Columbus Laboratories, Columbus, OH, for presentation to American Petroleum Institute (API) Committee on Air and Water Conservation, Columbus, OH, November 1, 1971.

8. Emission Tests Nos. 71-CI-08, and 71-CI-09, Office of Air Quality Planning and Standards, U.S. Environmental Protection Agency, Research Triangle Park, NC, April 1971.

9. Emission Tests Nos. 71-CI-05 and 71-CI-11, Office of Air Quality Planning and Standards, U.S. Environmental Protection Agency, Research Triangle Park, NC, September 1971.

10. K.J. Yost, *The Environmental Flow of Cadmium and Other Trace Metals: Progress Report for July 1, 1973 to June 30, 1974*, Purdue University, West Lafayette, IN.

11. F.L. Closs, *et al.*, "Metal and Particulate Emissions from Incinerators Burning Sewage Sludge", Proceedings of the 1970 National Incinerator Conference of ASME, 1970.

12. *Sewage Sludge Incineration*, EPA-R2-72-040, U.S. Environmental Protection Agency, Research Triangle Park, NC, August 1972.

13. R.B. Jacko, *et al.*, *By-product Coke Oven Pushing Operation: Total and Trace Metal Particulate Emissions*, Purdue University, West Lafayette, IN, June 27, 1976.

14. *Mineral Industry Surveys: Weekly Coal Report No. 3056*, Bureau of Mines, U.S. Department of the Interior, Washington, DC, undated.

15. P.L. Taylor, "Characterization of Copper Smelter Flue Dust", Presented at the 69th Annual Meeting of the Air Pollution Control Association, Portland, OR, June 1976.

16. I.J. Weisenburg and J.C. Serne, *Compilation and Analysis of Design and Operating Parameters of the Phelps Dodge Corporation, New Cornelia Branch Smelter, Aja, Arizona*, EPA Contract No. 68-02-1405, Pacific Environmental Services, Inc., Santa Monica, CA, January 1975.

17. K.T. Semrau, "Control of Sulfur Oxide Emissions from Primary Copper, Lead, and Zinc Smelters: A Critical Review", *Journal of Air Pollution Control Association, 21(4)*:185-194, April 1979.

18. S. Wyatt, *et al.*, *Preferred Standards Path Analysis on Lead Emissions from Stationary Sources*, Office of Air Quality Planning and Standards, Research Triangle Park, NC, September 1974.

19. R.A. Pearson, "Control of Emissions from Ferroalloy Furnace Processing", Presented at the 27th Electric Furnace Conference, Detroit, MI, December 1969.

20. J.O. Dealy and A.M. Killin, *Air Pollution Control Engineering and Cost Study of the Ferroalloy Industry*, EPA-450/2-74-008, U.S. Environmental Protection Agency, Research Triangle Park, NC, May 1974.

21. A.E. Vandergrift, *et al.*, *Particulate Pollutant System Study - Mass Emissions*, PB-203-128, PB-203-522 and PB-203-521, U.S. Environmental Protection Agency, Research Triangle Park, NC, May 1971.

22. V.S. Katari, *et al.*, *Trace Pollutant Emissions from the Processing of Metallic Ores*, EPA-650/2-74-115, U.S. Environmental Protection Agency, Research Triangle Park, NC, October 1974.

23. K.J. Yost, *et al.*, *Flow of Cadmium and Trace Metals, Volume I*, Purdue University, West Lafayette, IN, June 1973.

24. V.S. Katari and R.W. Gerstle, *Iron and Steel Industry*, EPA Contract No. 68-02-1321, PEDCo-Environmental Specialists, Inc., Cincinnati, OH, December 1975.

25. P.E. Barnard, *et al.*, *Recycling of Steelmaking Dusts*, Solid Waste Program Technical Progress Report No. 52, Bureau of Mines, U.S. Department of the Interior, Washington, DC, February 1972.

26. J.A. Danielson, ed., *Air Pollution Engineering Manual*, AP-40, U.S. Environmental Protection Agency, Research Triangle Park, NC, May 1973.

27. R.D. Jacko, "Industrial Source Sampling for Trace Metals", Proceedings of First Annual National Science Foundation Contaminants Conference, Oak Ridge, TN, August 1973.

28. R.E. Lee, *et al.*, "Concentration and Size of Trace Metal Emissions from a Power Plant, a Steel Plant, and a Cotton Gin", *Environmental Science and Technology*, *9(7)*:643-647, July 1975.

29. *Environmental Assessment of the Domestic Primary Copper, Lead, and Zinc Industry*, EPA Contract No. 68-02-1321, PEDCo-Environmental Specialists, Inc., Cincinnati, OH, September 1976.

30. H.R. Jones, *Pollution Control in the Nonferrous Metals Industry*, Noyes Data Corporation, Park Ridge, NJ, 1972.

31. L.J. Duncan and E.L. Keitz, "Hazardous Particulate Pollution from Typical Operations in the Primary Nonferrous Smelting Industry", Presented at the 67th Annual Meeting of the Air Pollution Control Association, Denver, CO, June 1974.

32. E.P. Shea, *Source Sampling Report: Emissions from Lead Smelters*, EPA Contract No. 68-02-0228, Midwest Research Institute, Kansas City, MO, 1973.

33. R.C. Hussy, *Source Testing: Emissions from a Primary Lead Smelter*, EPA Contract No. 68-02-0228, Midwest Research Institute, Kansas City, MO, 1973.

34. Emission Test No. 73-PLD-1, Office of Air Quality Planning and Standards, U.S. Environmental Protection Agency, Research Triangle Park, NC, October 1973.

35. *Interim Report on Control Techniques for Lead Air Emissions, Development of Lead Emission Factors, and 1975 National Lead Emission Inventory*, EPA Contract No. 68-02-1375, PEDCo-Environmental Specialists, Inc., Cincinnati, OH, June 1976.

36. *Systems Study for Control of Emissions: Primary Nonferrous Smelting Industry*, U.S. Department of Health, Education and Welfare, Washington, DC, June 1969.

37. *Control Program Guideline for Industrial Process Fugitive Particulate Emissions*, EPA Contract No. 68-02-1375, PEDCo-Environmental Specialists, Inc., Cincinnati, OH, December 1976.

38. G.B. Carne, *Control Techniques for Leak Emissions*, Draft Report, U.S. Environmental Protection Agency, Research Triangle Park, NC, February 1971.

39. *Air Pollution Aspects of Brass and Bronze Smelting and Refining Industry*, AP-58, U.S. Department of Health, Education and Welfare, National Air Pollution Control Administration, Raleigh, NC, November 1969.

40. H.H. Fukubayashi, *et al.*, *Recovery of Zinc and Lead from Brass Smelter Dust*, Report of Investigation No. 7880, Bureau of Mines, U.S. Department of the Interior, Washington, DC, 1974.

41. "Air Pollution Control in the Secondary Metal Industry", Presented at the First Annual National Association of Secondary Materials Industries Air Pollution Control Workshop, Pittsburgh, PA, June 1967.

42. Emission Test No. 71-CI-27, Office of Air Quality Planning and Standards, U.S. Environmental Protection Agency, Research Triangle Park, NC, February 1972.

43. Emission Test No. 71-CI-30, Office of Air Quality Planning and Standards, U.S. Environmental Protection Agency, Research Triangle Park, NC, March 1972.

44. Emission Test No. 71-CI-76, Office of Air Quality Planning and Standards, U.S. Environmental Protection Agency, Research Triangle Park, NC, March 1972.

45. Emission Test No. 74-SLD-1, Office of Air Quality Planning and Standards, U.S. Environmental Protection Agency, Research Triangle Park, NC, August 1972.

46. Emission Tests Nos. 72-CI-7, 72-CI-8, 72-CI-29 and 72-CI-33, Office of Air Quality Planning and Standards, U.S. Environmental Protection Agency, Research Triangle Park, NC, August 1972.

47. T.E. Kreichelt, *et al.*, *Atmospheric Emissions from the Manufacture of Portland Cement*, AP-17, U.S. Department of Health, Education and Welfare, Washington, DC, 1967.

48. Emission Tests Nos. 71-MM-02, 71-MM-03 and 71-MM-05, Office of Air Quality Planning and Standards, Research Triangle Park, NC, March-April 1972.

49. Confidential test data, PEDCo-Environmental Specialists, Inc., Cincinnati, OH.

50. C.M. Maxwell and D.W. Nelson, *A Lead Emission Factor for Reentrained Dust from a Paved Roadway*, EPA-450/3-78-021, U.S. Environmental Protection Agency, Research Triangle Park, NC, April 1978.

51. S. Chansky, *et al.*, *Waste Automotive Lubricating Oil Reuse as a Fuel*, EPA-600/5-74-032, U.S. Environmental Protection Agency, Washington, DC, September 1974.

52. *Final Report of the API Task Force on Used Oil Disposal*, American Petroleum Institute Committee on Air and Water Conservation, New York, NY, May 1970.

53. *Background Information in Support of the Development of Performance Standards for the Lead Additive Industry*, EPA Contract No. 68-02-2085, PEDCo-Environmental Specialists, Inc., Cincinnati, OH, January 1976.

54. R.P. Betz, *et al.*, *Economics of Lead Removal in Selected Industries*, EPA Contract No. 68-02-0611, Battelle Columbus Laboratories, Columbus, OH, August 1973.

55. *Screening Study To Develop Background Information and To Determine the Significance of Emissions from the Lead/Acid Battery Industry*, EPA Contract No. 68-02-0299, Vulcan-Cincinnati, Inc., Cincinnati, OH, December 1972.

56. Confidential test data from a major battery manufacturer, July 1973.

57. *Particulate and Lead Emission Measurements from Lead Oxide Plants*, EPA Contract No. 68-02-0226, Monsanto Research Corp., Dayton, OH, August 1973.

58. *Background Information in Support of the Development of Performance Standards for the Lead/Acid Battery Industry*, EPA Contract No. 68-02-2085, PEDCo-Environmental Specialists, Inc., Cincinnati, OH, December 1976.

59. Communication with Mr. J. Patrick Ryan, Lead-Zinc Branch, Bureau of Mines, U.S. Department of the Interior, Washington, DC, September 1976.

60. B.G. Wixson and J.C. Jennett, "The New Lead Belt in the Forested Ozarks of Missouri", *Environmental Science and Technology, 9(13)*:1128-1133, December 1975.

61. Emission Test No. 74-PBO-1, Office of Air Quality Planning and Standards, U.S. Environmental Protection Agency, Research Triangle Park, NC, August 1973.

62. Private communication with Bureau of Mines, U.S. Department of the Interior, Washington, DC, 1975.

63. *Atmospheric Emissions from Lead Typesetting Operations — Screening Study*, EPA Contract No. 68-02-2085, PEDCo-Environmental Specialists, Inc., Cincinnati, OH, January 1976.

64. E.P. Shea, *Emissions from Cable Covering Facility*, EPA Contract No. 68-02-0228, Midwest Research Institute, Kansas City, MO, June 1973.

TECHNICAL REPORT DATA
(Please read Instructions on the reverse before completing)

1. REPORT NO. AP-42	2.	3. RECIPIENT'S ACCESSION NO.
4. TITLE AND SUBTITLE Compilation of Air Pollutant Emission Factors, Third Edition (Including Supplements 1-7)		5. REPORT DATE August 1977
		6. PERFORMING ORGANIZATION CODE
7. AUTHOR(S) Monitoring and Data Analysis Division		8. PERFORMING ORGANIZATION REPORT NO.
9. PERFORMING ORGANIZATION NAME AND ADDRESS U.S. Environmental Protection Agency Office of Air and Waste Management Office of Air Quality Planning and Standards Research Triangle Park, N.C. 27711		10. PROGRAM ELEMENT NO.
		11. CONTRACT/GRANT NO.
12. SPONSORING AGENCY NAME AND ADDRESS		13. TYPE OF REPORT AND PERIOD COVERED
		14. SPONSORING AGENCY CODE 200/04

15. SUPPLEMENTARY NOTES

16. ABSTRACT

Emission data obtained from source tests, material balance studies, engineering estimates, etc., have been compiled for use by individuals and groups responsible for conducting air pollution emission inventories. Emission factors given in this document, the result of the expansion and continuation of earlier work, cover most of the common emission categories: fuel combustion by stationary and mobile sources; combustion of solid wastes; evaporation of fuels, solvents, and other volatile substances; various industrial processes; and miscellaneous sources. When no specific source-test data are available, these factors can be used to estimate the quantities of primary pollutants (particulates, carbon monoxide, sulfur dioxide, oxides of nitrogen, and hydrocarbons) being released from a source or source group.

17. KEY WORDS AND DOCUMENT ANALYSIS

a. DESCRIPTORS	b. IDENTIFIERS/OPEN ENDED TERMS	c. COSATI Field/Group
Fuel combustion Emissions Emission factors Mobile sources Stationary sources		

18. DISTRIBUTION STATEMENT Release unlimited	19. SECURITY CLASS *(This Report)* Unclassified	21. NO. OF PAGES 477
	20. SECURITY CLASS *(This page)* Unclassified	22. PRICE

EPA Form 2220-1 (9-73)

TECHNICAL REPORT DATA
(Please read Instructions on the reverse before completing)

1. REPORT NO. AP-42, Supplement 9	2.	3. RECIPIENT'S ACCESSION NO.
4. TITLE AND SUBTITLE Supplement No. 9 for Compilation of Air Pollutant Emission Factors, Third Edition, AP-42		5. REPORT DATE July 1979
		6. PERFORMING ORGANIZATION CODE
7. AUTHOR(S) Monitoring and Data Analysis Division		8. PERFORMING ORGANIZATION REPORT NO.
9. PERFORMING ORGANIZATION NAME AND ADDRESS U. S. Environmental Protection Agency Office of Air and Waste Management Office of Air Quality Planning and Standards Research Triangle Park, NC 27711		10. PROGRAM ELEMENT NO.
		11. CONTRACT/GRANT NO.
12. SPONSORING AGENCY NAME AND ADDRESS		13. TYPE OF REPORT AND PERIOD COVERED Supplement
		14. SPONSORING AGENCY CODE

15. SUPPLEMENTARY NOTES

16. ABSTRACT

In this Supplement for Compilation of Air Pollutant Emission Factors, AP-42, revised and updated emissions data are presented for waste oil disposal; transportation and marketing of petroleum liquids; cutback asphalt, emulsified asphalt and asphalt cement; solvent degreasing; synthetic ammonia; carbon black; lead alkyl; bread baking; urea; beef cattle feedlots; defoliation and harvesting of cotton; primary copper smelting; secondary copper smelting and alloying; storage battery production; lead oxide and pigment production; miscellaneous lead products; leadbearing ore crushing and grinding; concrete batching; and woodworking operations. There is also an updated NEDS Source Classification Code listing, and a Table of Lead Emission Factors is included.

17. KEY WORDS AND DOCUMENT ANALYSIS

a. DESCRIPTORS	b. IDENTIFIERS/OPEN ENDED TERMS	c. COSATI Field/Group
Fuel combustion Emissions Emission factors Stationary sources Lead emissions		

18. DISTRIBUTION STATEMENT Unlimited	19. SECURITY CLASS *(This Report)* Unclassified	21. NO. OF PAGES 228
	20. SECURITY CLASS *(This page)* Unclassified	22. PRICE

EPA Form 2220-1 (9-73)

*U.S. GOVERNMENT PRINTING OFFICE: 1979--635-089/1001