COMPILATION

OF

AIR POLLUTANT EMISSION FACTORS

Second Edition

(Second Printing with Supplements 1-4)

U.S. ENVIRONMENTAL PROTECTION AGENCY
Office of Air and Waste Management
Office of Air Quality Planning and Standards
Research Triangle Park, North Carolina

March 1975

This report is published by the Environmental Protection Agency to report information of general interest in the field of air pollution. Copies are available free of charge to Federal employees, current contractors and grantees, and nonprofit organizations - as supplies permit - from the Air Pollution Technical Information Center, Environmental Protection Agency, Research Triangle Park, North Carolina 27711. This document is also available to the public for sale through the Superintendent of Documents, U.S. Government Printing Office, Washington, D.C.

Publication No. AP-42

PREFACE

This document reports data available on those atmospheric emissions for which sufficient information exists to establish realistic emission factors. The information contained herein is based on Public Health Service Publication 999-AP-42, *Compilation of Air Pollutant Emission Factors,* by R.L. Duprey, and on two revised and expanded editions of *Compilation of Air Pollutant Emission Factors* that were published by the Environmental Protection Agency in February 1972 and April 1973, respectively. This document is a reprint of the second edition and includes the supplements issued in July 1973, September 1973, July 1974, and January 1975 (See page iv). It contains no new information not already presented in the previous issuances.

Chapters and sections of this document have been arranged in a format that permits easy and convenient replacement of material as information reflecting more accurate and refined emission factors is published and distributed. To speed dissemination of emission information, chapters or sections that contain new data will be issued—separate from the parent report—whenever they are revised.

To facilitate the addition of future materials, the punched, loose-leaf format was selected. This approach permits the document to be placed in a three-ring binder or to be secured by rings, rivets, or other fasteners; future supplements or revisions can then be easily inserted. The lower left- or right-hand corner of each page of the document bears a notation that indicates the date the information was issued.

The availability of future supplements to *Compilation of Air Pollutant Emission Factors* will be announced in the publication *Air Pollution Technical Publications of the Environmental Protection Agency,* which is available from the Air Pollution Technical Information Center, Research Triangle Park, N.C. 27711 (Telephone: 919–549-8411 ext. 2753). This listing of publications, normally issued in January and July, contains instructions for obtaining the desired supplements.

Comments and suggestions regarding this document should be directed to the attention of Director, Monitoring and Data Analysis Division, Office of Air Quality Planning and Standards, Environmental Protection Agency, Research Triangle Park, N.C. 27711.

ACKNOWLEDGMENTS

Because this document is a product of the efforts of many individuals, it is impossible to acknowledge each person who has contributed. Special recognition is given to Environmental Protection Agency employees in the Technical Development Section, National Air Data Branch, Monitoring and Data Analysis Division, for their efforts in the production of this work. Bylines identify the contributions of individual authors who revised specific sections and chapters.

Issuance	Release Date
Compilation of Air Pollutant Emission Factors (second edition)	4/73
Supplement No. 1	7/73
Section 4.3 Storage of Petroleum Products	
Section 4.4 Marketing and Transportation of Petroleum Products	
Supplement No. 2	
Introduction	9/73
Section 3.1.1 Average Emission Factors for Highway Vehicles	
Section 3.1.2 Light-Duty, Gasoline-Powered Vehicles	
Supplement No. 3	7/74
Introduction	
Section 1.4 Natural Gas Combustion	
Section 1.5 Liquified Petroleum Gas Consumption	
Section 1.6 Wood/Bark Waste Combustion in Boilers	
Section 2.5 Sewage Sludge Incineration	
Section 7.6 Lead Smelting	
Section 7.11 Secondary Lead Smelting	
Section 10.1 Chemical Wood Pulping	
Section 10.2 Pulpboard	
Section 10.3 Plywood Veneer and Layout Operations	
Supplement No. 4	1/75
Section 3.2.3 Inboard-Powered Vessels	
Section 3.2.5 Small, General Utility Engines	
Section 3.2.6 Agricultural Equipment	
Section 3.2.7 Heavy-Duty Construction Equipment	
Section 3.2.8 Snowmobiles	
Section 3.3.1 Stationary Gas Turbines for Electric Utility Power Plants	
Section 3.3.3 Gasoline and Diesel Industrial Engines	
Chapter 11 Miscellaneous Sources	
Appendix B Emission Factors and New Source Performance Standards	
Appendix C NEDS Source Classification Codes and Emission Factor Listing	

CONTENTS

	Page
LIST OF FIGURES	xiii
LIST OF TABLES	xiii
ABSTRACT	xvii
INTRODUCTION	1
1. EXTERNAL COMBUSTION SOURCES	1.1-1
1.1 BITUMINOUS COAL COMBUSTION	1.1-1
1.1.1 General	1.1-1
1.1.2 Emissions and Controls	1.1-1
References for Section 1.1	1.1-4
1.2 ANTHRACITE COAL COMBUSTION	1.2-1
1.2.1 General	1.2-1
1.2.2 Emissions and Controls	1.2-1
References for Section 1.2	1.2-3
1.3 FUEL OIL COMBUSTION	1.3-1
1.3.1 General	1.3-1
1.3.2 Emissions	1.3-1
References for Section 1.3	1.3-3
1.4 NATURAL GAS COMBUSTION	1.4-1
1.4.1 General	1.4-1
1.4.2 Emissions and Controls	1.4-1
References for Section 1.4	1.4-3
1.5 LIQUEFIED PETROLEUM GAS CONSUMPTION	1.5-1
1.5.1 General	1.5-1
1.5.2 Emissions	1.5-1
References for Section 1.5	1.5-1
1.6 WOOD WASTE COMBUSTION IN BOILERS	1.6-1
1.6.1 General	1.6-1
1.6.2 Firing Practices	1.6-1
1.6.3 Emissions	1.6-1
References for Section 1.6	1.6-2
2. SOLID WASTE DISPOSAL	2.1-1
2.1 REFUSE INCINERATION	2.1-2
2.1.1 Process Description	2.1-2
2.1.2 Definitions of Incinerator Categories	2.1-2
2.1.3 Emissions and Controls	2.1-4
References for Section 2.1	2.1-5
2.2 AUTOMOBILE BODY INCINERATION	2.2-1
2.2.1 Process Description	2.2-1
2.2.2 Emissions and Controls	2.2-1
References for Section 2.2	2.2-2
2.3 CONICAL BURNERS	2.3-1
2.3.1 Process Description	2.3-1
2.3.2 Emissions and Controls	2.3-1
References for Section 2.3	2.3-3

CONTENTS–(Continued)

	Page
2.4 OPEN BURNING	2.4-1
2.4.1 General	2.4-1
2.4.2 Emissions	2.4-1
References for Section 2.4	2.4-1
2.5 SEWAGE SLUDGE INCINERATION	2.4-2
2.5.1 Process Description	2.5-1
2.5.2 Emissions and Controls	2.5-1
References for Section 2.5	2.5-1
3. INTERNAL COMBUSTION ENGINE SOURCES	2.5-2
DEFINITIONS USED IN CHAPTER 3	3.1.1-1
3.1 HIGHWAY VEHICLES	3.1.1-1
3.1.1 Average Emission Factors for Highway Vehicles	3.1.1-3
3.1.2 Light-Duty, Gasoline-Powered Vehicles	3.1.1-5
3.1.3 Light-Duty, Diesel-Powered Vehicles	3.1.2-1
3.1.4 Heavy-Duty, Gasoline-Powered Vehicles	3.1.3-1
3.1.5 Heavy-Duty, Diesel-Powered Vehicles	3.1.4-1
3.1.6 Gaseous-Fueled Vehicles	3.1.5-1
3.1.7 Motorcycles	3.1.6-1
3.2 OFF-HIGHWAY, MOBILE SOURCES	3.1.7-1
3.2.1 Aircraft	3.2.1-1
3.2.2 Locomotives	3.2.1-1
3.2.3 Inboard-Powered Vessels	3.2.2-1
3.2.4 Outboard-Powered Vessels	3.2.3-1
3.2.5 Small, General Utility Engines	3.2.4-1
3.2.6 Agricultural Equipment	3.2.5-1
3.2.7 Heavy-Duty Construction Equipment	3.2.6-1
3.2.8 Snowmobiles	3.2.7-1
3.3 OFF-HIGHWAY STATIONARY SOURCES	3.2.8-1
3.3.1 Stationary Gas Turbines for Electric Utility Power Plants	3.3.1-1
3.3.2 Heavy-Duty, General Utility, Gaseous-Fueled Engines	3.3.1-1
3.3.3 Gasoline and Diesel Industrial Engines	3.3.2-1
4. EVAPORATION LOSS SOURCES	3.3.3-1
4.1 DRY CLEANING	4.1-1
4.1.1 General	4.1-1
4.1.2 Emissions and Controls	4.1-1
References for Section 4.1	4.1-1
4.2 SURFACE COATING	4.1-2
4.2.1 Process Description	4.2-1
4.2.2 Emissions and Controls	4.2-1
References for Section 4.2	4.2-1
4.3 PETROLEUM STORAGE	4.2-2
4.3.1 General	4.3-1
4.3.2 Emissions	4.3-1
References for Section 4.3	4.3-1
4.4 GASOLINE MARKETING	4.3-1
4.4.1 General	4.4-1
4.4.2 Emissions and Controls	4.4-1
References for Section 4.4	4.4-1
5. CHEMICAL PROCESS INDUSTRY	4.4-2
5.1 ADIPIC ACID	5.1-1
5.1.1 Process Description	5.1-1
5.1.2 Emissions	5.1-1
References for Section 5.1	5.1-1
	5.1-2

CONTENTS—(Continued)

		Page
		5.2-1
5.2	AMMONIA	5.2-1
	5.2.1 Process Description	5.2-1
	5.2.2 Emissions and Controls	5.2-2
	References for Section 5.2	5.3-1
5.3	CARBON BLACK	5.3-1
	5.3.1 Channel Black Process	5.3-1
	5.3.2 Furnace Process	5.3-1
	5.3.3 Thermal Black Process	5.3-2
	References for Section 5.3	5.4-1
5.4	CHARCOAL	5.4-1
	5.4.1 Process Description	5.4-1
	5.4.2 Emissions and Controls	5.4-1
	References for Section 5.4	5.5-1
5.5	CHLOR-ALKALI	5.5-1
	5.5.1 Process Description	5.5-1
	5.5.2 Emissions and Controls	5.5-1
	References for Section 5.5	5.6-1
5.6	EXPLOSIVES	5.6-1
	5.6.1 General	5.6-1
	5.6.2 TNT Production	5.6-1
	5.6.3 Nitrocellulose Production	5.6-1
	5.6.4 Emissions	5.6-2
	References for Section 5.6	5.7-1
5.7	HYDROCHLORIC ACID	5.7-1
	5.7.1 Process Description	5.7-1
	5.7.2 Emissions	5.7-1
	References for Section 5.7	5.8-1
5.8	HYDROFLUORIC ACID	5.8-1
	5.8.1 Process Description	5.8-1
	5.8.2 Emissions and Controls	5.8-2
	References for Section 5.8	5.9-1
5.9	NITRIC ACID	5.9-1
	5.9.1 Process Description	5.9-1
	5.9.1.1 Weak Acid Production	5.9-1
	5.9.1.2 High-Strength Acid Production	5.9-3
	5.9.2 Emissions and Controls	5.9-4
	References for Section 5.9	5.10-1
5.10	PAINT AND VARNISH	5.10-1
	5.10.1 Paint Manufacturing	5.10-1
	5.10.2 Varnish Manufacturing	5.10-2
	References for Section 5.10	5.10-2
5.11	PHOSPHORIC ACID	5.11-1
	5.11.1 Wet Process	5.11-1
	5.11.2 Thermal Process	5.11-2
	References for Section 5.11	5.12-1
5.12	PHTHALIC ANHYDRIDE	5.12-1
	5.12.1 Process Description	5.12-1
	5.12.2 Emissions and Controls	5.12-1
	References for Section 5.12	5.13-1
5.13	PLASTICS	5.13-1
	5.13.1 Process Description	5.13-1
	5.13.2 Emissions and Controls	5.13-2
	References for Section 5.13	

CONTENTS--(Continued)

		Page
5.14	PRINTING INK	5.14-1
	5.14.1 Process Description	5.14-1
	5.14.2 Emissions and Controls	5.14-2
	References for Section 5.14	5.14-2
5.15	SOAP AND DETERGENTS	5.15-1
	5.15.1 Soap Manufacture	5.15-1
	5.15.2 Detergent Manufacture	5.15-1
	References for Section 5.15	5.15-2
5.16	SODIUM CARBONATE	5.16-1
	5.16.1 Process Description	5.16-1
	5.16.2 Emissions	5.16-1
	References for Section 5.16	5.16-2
5.17	SULFURIC ACID	5.17-1
	5.17.1 Process Description	5.17-1
	5.17.1.1 Elemental Sulfur-Burning Plants	5.17-1
	5.17.1.2 Spent-Acid and Hydrogen Sulfide Burning Plants	5.17-4
	5.17.1.3 Sulfide Ores and Smelter Gas Plants	5.17-4
	5.17.2 Emissions and Controls	5.17-4
	5.17.2.1 Sulfur Dioxide	5.17-4
	5.17.2.2 Acid Mist	5.17-5
	References for Section 5.17	5.17-8
5.18	SULFUR	5.18-1
	5.18.1 Process Description	5.18-1
	5.18.2 Emissions and Controls	5.18-1
	References for Section 5.18	5.18-2
5.19	SYNTHETIC FIBERS	5.19-1
	5.19.1 Process Description	5.19-1
	5.19.2 Emissions and Controls	5.19-1
	References for Section 5.19	5.19-2
5.20	SYNTHETIC RUBBER	5.20-1
	5.20.1 Process Description	5.20-1
	5.20.2 Emissions and Controls	5.20-1
	References for Section 5.20	5.20-2
5.21	TEREPHTHALIC ACID	5.21-1
	5.21.1 Process Description	5.21-1
	5.21.2 Emissions	5.21-1
	References for Sections 5.21	5.21-1
6.	FOOD AND AGRICULTURAL INDUSTRY	6.1-1
6.1	ALFALFA DEHYDRATING	6.1-1
	6.1.1 General	6.1-1
	6.1.2 Emissions and Controls	6.1-1
	References for Section 6.1	6.1-2
6.2	COFFEE ROASTING	6.2-1
	6.2.1 Process Description	6.2-1
	6.2.2 Emissions	6.2-1
	References for Section 6.2	6.2-2
6.3	COTTON GINNING	6.3-1
	6.3.1 General	6.3-1
	6.3.2 Emissions and Controls	6.3-1
	References for Section 6.3	6.3-1
6.4	FEED AND GRAIN MILLS AND ELEVATORS	6.4-1
	6.4.1 General	6.4-1
	6.4.2 Emissions	6.4-1
	References for Section 6.4	6.4-1

CONTENTS—(Continued)

		Page
6.5	FERMENTATION	6.5-1
	6.5.1 Process Description	6.5-1
	6.5.2 Emissions	6.5-1
	References for Section 6.5	6.5-2
6.6	FISH PROCESSING	6.6-1
	6.6.1 Process Description	6.6-1
	6.6.2 Emissions and Controls	6.6-1
	References for Section 6.6	6.6-2
6.7	MEAT SMOKEHOUSES	6.7-1
	6.7.1 Process Description	6.7-1
	6.7.2 Emissions and Controls	6.7-1
	References for Section 6.7	6.7-2
6.8	NITRATE FERTILIZERS	6.8-1
	6.8.1 General	6.8-1
	6.8.2 Emissions and Controls	6.8-1
	References for Section 6.8	6.8-2
6.9	ORCHARD HEATERS	6.9-1
	6.9.1 General	6.9-1
	6.9.2 Emissions	6.9-1
	References for Section 6.9	6.9-4
6.10	PHOSPHATE FERTILIZERS	6.10-1
	6.10.1 Normal Superphosphate	6.10-1
	6.10.1.1 General	6.10-1
	6.10.1.2 Emissions	6.10-2
	6.10.2 Triple Superphosphate	6.10-2
	6.10.2.1 General	6.10-2
	6.10.2.2 Emissions	6.10-2
	6.10.3 Ammonium Phosphate	6.10-2
	6.10.3.1 General	6.10-2
	6.10.3.2 Emissions	6.10-3
	References for Section 6.10	6.10-3
6.11	STARCH MANUFACTURING	6.11-1
	6.11.1 Process Description	6.11-1
	6.11.2 Emissions	6.11-1
	References for Section 6.11	6.11-1
6.12	SUGAR CANE PROCESSING	6.12-1
	6.12.1 General	6.12-1
	6.12.2 Emissions	6.12-1
	References for Section 6.12	6.12-2
7.	METALLURGICAL INDUSTRY	7.1-1
7.1	PRIMARY ALUMINUM PRODUCTION	7.1-1
	7.1.1 Process Description	7.1-1
	7.1.2 Emissions and Controls	7.1-2
	References for Section 7.1	7.1-8
7.2	METALLURGICAL COKE MANUFACTURING	7.2-1
	7.2.1 Process Description	7.2-1
	7.2.2 Emissions	7.2-1
	References for Section 7.2	7.2-3
7.3	COPPER SMELTERS	7.3-1
	7.3.1 Process Description	7.3-1
	7.3.2 Emissions and Controls	7.3-1
	References for Section 7.3	7.3-2
7.4	FERROALLOY PRODUCTION	7.4-1
	7.4.1 Process Description	7.4-1

CONTENTS–(Continued)

		Page
	7.4.2 Emissions	7.4-1
	References for Section 7.4	7.4-2
7.5	IRON AND STEEL MILLS	7.5-1
	7.5.1 General	7.5-1
	7.5.1.1 Pig Iron Manufacture	7.5-1
	7.5.1.2 Steel-Making Processes	7.5-1
	7.5.1.3 Scarfing	7.5-1
	References for Section 7.5	7.5-6
7.6	LEAD SMELTING	7.6-1
	7.6.1 Process Description	7.6-1
	7.6.2 Emissions and Controls	7.6-3
	References for Section 7.6	7.6-5
7.7	ZINC SMELTING	7.7-1
	7.7.1 Process Description	7.7-1
	7.7.2 Emissions and Controls	7.7-1
	References for Section 7.7	7.7-2
7.8	SECONDARY ALUMINUM OPERATIONS	7.8-1
	7.8.1 Process Description	7.8-1
	7.8.2 Emissions	7.8-1
	References for Section 7.8	7.8-2
7.9	BRASS AND BRONZE INGOTS	7.9-1
	7.9.1 Process Description	7.9-1
	7.9.2 Emissions and Controls	7.9-1
	References for Section 7.9	7.9-2
7.10	GRAY IRON FOUNDRY	7.10-1
	7.10.1 Process Description	7.10-1
	7.10.2 Emissions	7.10-1
	References for Section 7.10	7.10-2
7.11	SECONDARY LEAD SMELTING	7.11-1
	7.11.1 Process Description	7.11-1
	7.11.2 Emissions and Controls	7.11-1
	References for Section 7.11	7.11-1
7.12	SECONDARY MAGNESIUM SMELTING	7.12-1
	7.12.1 Process Description	7.12-1
	7.12.2 Emissions	7.12-1
	References for Section 7.12	7.12-2
7.13	STEEL FOUNDRIES	7.13-1
	7.13.1 Process Description	7.13-1
	7.13.2 Emissions	7.13-1
	References for Section 7.13	7.13-3
7.14	SECONDARY ZINC PROCESSING	7.14-1
	7.14.1 Process Description	7.14-1
	7.14.2 Emissions	7.14-1
	References for Section 7.14	7.14-2
8.	MINERAL PRODUCTS INDUSTRY	8.1-1
8.1	ASPHALTIC CONCRETE PLANTS	8.1-1
	8.1.1 Process Description	8.1-1
	8.1.2 Emissions and Controls	8.1-4
	References for Section 8.1	8.1-5
8.2	ASPHALT ROOFING	8.2-1
	8.2.1 Process Description	8.2-1
	8.2.2 Emissions and Controls	8.2-1
	References for Section 8.2	8.2-2

CONTENTS--(Continued)

		Page
8.3	BRICKS AND RELATED CLAY PRODUCTS	8.3-1
	8.3.1 Process Description	8.3-1
	8.3.2 Emissions and Controls	8.3-1
	References for Section 8.3	8.3-4
8.4	CALCIUM CARBIDE MANUFACTURING	8.4-1
	8.4.1 Process Description	8.4-1
	8.4.2 Emissions and Controls	8.4-1
	References for Section 8.4	8.4-2
8.5	CASTABLE REFRACTORIES	8.5-1
	8.5.1 Process Description	8.5-1
	8.5.2 Emissions and Controls	8.5-1
	References for Section 8.5	8.5-2
8.6	PORTLAND CEMENT MANUFACTURING	8.6-1
	8.6.1 Process Description	8.6-1
	8.6.2 Emissions and Controls	8.6-1
	References for Section 8.6	8.6-2
8.7	CERAMIC CLAY MANUFACTURING	8.7-1
	8.7.1 Process Description	8.7-1
	8.7.2 Emissions and Controls	8.7-1
	References for Section 8.7	8.7-2
8.8	CLAY AND FLY-ASH SINTERING	8.8-1
	8.8.1 Process Description	8.8-1
	8.8.2 Emissions and Controls	8.8-1
	References for Section 8.8	8.8-2
8.9	COAL CLEANING	8.9-1
	8.9.1 Process Description	8.9-1
	8.9.2 Emissions and Controls	8.9-1
	References for Section 8.9	8.9-2
8.10	CONCRETE BATCHING	8.10-1
	8.10.1 Process Description	8.10-1
	8.10.2 Emissions and Controls	8.10-1
	References for Section 8.10	8.10-2
8.11	FIBER GLASS MANUFACTURING	8.11-1
	8.11.1 Process Description	8.11-1
	8.11.1.1 Textile Products	8.11-1
	8.11.1.2 Wool Products	8.11-1
	8.11.2 Emissions and Controls	8.11-1
	References for Section 8.11	8.11-4
8.12	FRIT MANUFACTURING	8.12-1
	8.12.1 Process Description	8.12-1
	8.12.2 Emissions and Controls	8.12-1
	References for Section 8.12	8.12-2
8.13	GLASS MANUFACTURING	8.13-1
	8.13.1 Process Description	8.13-1
	8.13.2 Emissions and Controls	8.13-1
	References for Section 8.13	8.13-2
8.14	GYPSUM MANUFACTURING	8.14-1
	8.14.1 Process Description	8.14-1
	8.14.2 Emissions	8.14-1
	References for Section 8.14	8.14-2
8.15	LIME MANUFACTURING	8.15-1
	8.15.1 General	8.15-1
	8.15.2 Emissions and Controls	8.15-1
	References for Section 8.15	8.15-2

CONTENTS–(Continued)

Page

8.16 MINERAL WOOL MANUFACTURING 8.16-1
8.16.1 Process Description 8.16-1
8.16.2 Emissions and Controls 8.16-1
References for Section 8.16 . . . . . 8.16-2
8.17 PERLITE MANUFACTURING 8.17-1
8.17.1 Process Description 8.17-1
8.17.2 Emissions and Controls 8.17-1
References for Section 8.17 . . . . . 8.17-2
8.18 PHOSPHATE ROCK PROCESSING 8.18-1
8.18.1 Process Description 8.18-1
8.18.2 Emissions and Controls 8.18-1
References for Section 8.18 . . . . . 8.18-2
8.19 SAND AND GRAVEL PROCESSING 8.19-1
8.19.1 Process Description 8.19-1
8.19.2 Emissions 8.19-1
References for Section 8.19 . . . . . 8.19-1
8.20 STONE QUARRYING AND PROCESSING 8.20-1
8.20.1 Process Description 8.20-1
8.20.2 Emissions 8.20-1
References for Section 8.20 . . . . . 8.20-2
9. PETROLEUM INDUSTRY 9.1-1
9.1 PETROLEUM REFINING 9.1-1
9.1.1 General 9.1-1
9.1.2 Crude Oil Distillation 9.1-1
9.1.2.1 Emissions 9.1-1
9.1.3 Converting 9.1-6
9.1.3.1 Catalytic Cracking 9.1-6
9.1.3.2 Hydrocracking 9.1-6
9.1.3.3 Catalytic Reforming 9.1-6
9.1.3.4 Polymerization, Alkylation, and Isomerization 9.1-6
9.1.3.5 Emissions 9.1-7
9.1.4 Treating 9.1-7
9.1.4.1 Hydrogen Treating 9.1-7
9.1.4.2 Chemical Treating 9.1-7
9.1.4.3 Physical Treating 9.1-8
9.1.4.4 Emissions 9.1-8
9.1.5 Blending 9.1-8
9.1.5.1 Emissions 9.1-8
9.1.6 Miscellaneous Operations 9.1-8
References for Chapter 9 . . . . . 9.1-8
10. WOOD PROCESSING 10.1-1
10.1 CHEMICAL WOOD PULPING 10.1-1
10.1.1 General 10.1-1
10.1.2 Kraft Pulping 10.1-1
10.1.3 Acid Sulfite Pulping 10.1-4
10.1.4 Neutral Sulfite Semichemical (NSSC) Pulping 10.1-4
References for Section 10.1 . . . . . 10.1-6
10.2 PULPBOARD 10.2-1
10.2.1 General 10.2-1
10.2.2 Process Description 10.2-1
10.2.3 Emissions 10.2-1
References for Section 10.2 . . . . . 10.2-1

Page

10.3 PLYWOOD VENEER AND LAYOUT OPERATIONS 10.3-1
10.3.1 Process Descriptions 10.3-1
10.3.2 Emissions 10.3-2
References for Section 10.3 . . . . . 10.3-2
11. MISCELLANEOUS SOURCES 11.1-1
11.1 FOREST WILDFIRES 11.1-1
11.1.1 General 11.1-1
11.1.2 Emissions and Controls 11.1-2
APPENDIX A. MISCELLANEOUS DATA A-1
APPENDIX B. EMISSION FACTORS AND NEW SOURCE PERFORMANCE STANDARDS FOR STATIONARY SOURCES B-1
APPENDIX C. NEDS SOURCE CLASSIFICATION CODES AND EMISSION FACTOR LISTING C-1

LIST OF FIGURES

Figure		Page
1.4-1	Lead Reduction Coefficient as Function of Boiler Load	1.4-2
3.1.1-1	Average Speed Correction Factors for All Model Years	3.1.1-7
3.3.2-1	Nitrogen Oxide Emissions from Stationary Internal Combustion Engines	3.3.2-2
4.3-1	Fixed Roof Storage Tank	4.3-1
4.3-2	Double-deck Floating Roof Storage Tank	4.3-2
4.3-3	Variable Vapor Storage Tank	4.3-3
4.3-4	Adjustment Factor for Small-diameter Fixed Roof Tanks	4.3-5
4.4-1	Flowsheet of Petroleum Production, Refining, and Distribution Systems	4.4-3
4.4-2	Underground Storage Tank Vapor-recovery System	4.4-5
5.9-1	Flow Diagram of Typical Nitric Acid Plant Using Pressure Process	5.9-2
5.17-1	Basic Flow Diagram of Contact-Process Sulfuric Acid Plant Burning Elemental Sulfur	5.17-2
5.17-2	Basic Flow Diagram of Contact-Process Sulfuric Acid Plant Burning Spent Acid	5.17-3
5.17-3	Sulfuric Acid Plant Feedstock Sulfur Conversion Versus Volumetric and Mass SO_2 Emissions at Various Inlet SO_2 Concentrations by Volume	5.17-6
5.18-1	Basic Flow Diagram of Modified Claus Process with Two Converter Stages Used in Manufacturing Sulfur	5.18-2
6.9-1	Types of Orchard Heaters	6.9-2
6.9-2	Particulate Emissions from Orchard Heaters	6.9-3
7.1-1	Schematic Diagram of Primary Aluminum Production Process	7.1-3
7.5-1	Basic Flow Diagram of Iron and Steel Processes	7.5-2
7.6-1	Typical Flowsheet of Pyrometallurgical Lead Smelting	7.6-2
7.11-1	Secondary Lead Smelter Processes	7.11-2
8.1-1	Batch Hot-Mix Asphalt Plant	8.1-2
8.1-2	Continuous Hot-Mix Asphalt Plant	8.1-3
8.3-1	Basic Flow Diagram of Brick Manufacturing Process	8.3-2
8.6-1	Basic Flow Diagram of Portland Cement Manufacturing Process	8.6-2
8.11-1	Typical Flow Diagram of Textile-Type Glass Fiber Production Process	8.11-2
8.11-2	Typical Flow Diagram of Wool-Type Glass Fiber Production Process	8.11-2
9.1-1	Basic Flow Diagram of Petroleum Refinery	9.1-2
10.1.2-1	Typical Kraft Sulfate Pulping and Recovery Process	10.1-2
11.1-1	Forest Areas and U.S. Forest Service Regions	11.1-3

LIST OF TABLES

Table		Page
1.1-1	Range of Collection Efficiencies for Common Types of Fly-Ash Control Equipment	1.1-2
1.1-2	Emission Factors for Bituminous Coal Combustion without Control Equipment	1.1-3
1.2-1	Emissions from Anthracite Coal Combustion without Control Equipment	1.2-2
1.3-1	Emission Factors for Fuel Oil Combustion	1.3-2
1.4-1	Emission Factors for Natural-Gas Combustion	1.4-2
1.5-1	Emission Factors for LPG Combustion	1.5-2

LIST OF TABLES–(Continued)

Table		Page
1.6-1	Emission Factors for Wood and Bark Combustion in Boilers with No Reinjection	1.6-2
2.1-1	Emission Factors for Refuse Incinerators without Controls	2.1-3
2.1-2	Collection Efficiencies for Various Types of Municipal Incineration Particulate Control Systems	2.1-4
2.2-1	Emission Factors for Auto Body Incineration	2.2-1
2.3-1	Emission Factors for Waste Incineration in Conical Burners without Controls	2.3-2
2.4-1	Emission Factors for Open Burning	2.4-1
2.5-1	Emission Factors for Sewage Sludge Incinerators	2.5-2
3.1.1-1	Average Emission Factors for Highway Vehicles Based on Nationwide Statistics	3.1.1-6
3.1.2-1	Carbon Monoxide, Hydrocarbon, and Nitrogen Oxide Emission Factors for Light-Duty Vehicles at Low and High Altitude	3.1.2-2
3.1.2-2	Carbon Monoxide, Hydrocarbon, and Nitrogen Oxide Emission Factors for Light-Duty Vehicles, State of California only	3.1.2-3
3.1.2-3	Light-Duty Vehicle Crankcase and Evaporative Hydrocarbon Emissions by Model Year for All Areas Except California	3.1.2-4
3.1.2-4	Light-Duty Vehicle Crankcase and Evaporative Hydrocarbon Emissions by Model Year for California	3.1.2-4
3.1.2-5	Carbon Monoxide, Exhaust Hydrocarbon, and Nitrogen Oxide Deterioration Factors for Light-Duty, Gasoline-Powered Vehicles in All Areas Except California	3.1.2-6
3.1.2-6	Carbon Monoxide, Exhaust Hydrocarbon, and Nitrogen Oxide Deterioration Factors for Light-Duty, Gasoline-Powered Vehicles in California	3.1.2-7
3.1.2-7	Sample Calculation of Weighted Light-Duty Vehicle Annual Travel	3.1.2-8
3.1.2-8	Particulate and Sulfur Oxide Emission Factors for Light-Duty, Gasoline-Powered Vehicles	3.1.2-8
3.1.3-1	Emission Factors for Light-Duty, Diesel-Powered Vehicles	3.1.3-2
3.1.4-1	Heavy-Duty, Gasoline-Powered Vehicle Exhaust Emission Factors for Carbon Monoxide, Hydrocarbons, and Nitrogen Oxides	3.1.4-3
3.1.4-2	Exhaust Emission Deterioration Factors for Heavy-Duty, Gasoline-Powered Vehicles (California only), 1975 and Later Models	3.1.4-4
3.1.4-3	Sample Calculation of Weighted Heavy-Duty Vehicle Annual Travel	3.1.4-5
3.1.4-4	Sulfur Oxide and Particulate Emission Factors for Heavy-Duty, Gasoline-Powered Vehicles	3.1.4-5
3.1.5-1	Emission Factors for Heavy-Duty, Diesel-Powered Vehicles	3.1.5-2
3.1.6-1	Emission Factors by Model Year for Light-Duty Vehicles Using LPG, LPG/Dual Fuel, or CNG/Dual Fuel	3.1.6-2
3.1.6-2	Emission Factors for Heavy-Duty Vehicles Using LPG or CNG/Duel Fuel	3.1.6-2
3.1.7-1	Emission Factors for Motorcycles	3.1.7-2
3.2.1-1	Aircraft Classification	3.2.1-2
3.2.1-2	Typical Time in Mode for Landing-Takeoff Cycle	3.2.1-3
3.2.1-3	Emission Factors per Aircraft Landing-Takeoff Cycle	3.2.1-4
3.2.1-4	Modal Emission Factors	3.2.1-6
3.2.2-1	Average Locomotive Emission Factors Based on Nationwide Statistics	3.2.2-1
3.2.2-2	Emission Factors by Locomotive Engine Category	3.2.2-2
3.2.3-1	Average Emission Factors for Commercial Motorships by Waterway Classification	3.2.3-2
3.2.3-2	Emission Factors for Commercial Steamships--All Geographic Areas	3.2.3-3
3.2.3-3	Diesel Vessel Emission Factors by Operating Mode	3.2.3-4
3.2.3-4	Average Emission Factors for Diesel-Powered Electrical Generators in Vessels	3.2.3-5
3.2.3-5	Average Emission Factors for Inboard Pleasure Craft	3.2.3-6
3.2.4-1	Average Emission Factors for Outboard Motors	3.2.4-1
3.2.5-1	Emission Factors for Small, General Utility Engines	3.2.5-2
3.2.6-1	Service Characteristics of Farm Equipment (Other than Tractors)	3.2.6-1
3.2.6-2	Emission Factors for Wheeled Farm Tractors and Non-Tractor Agricultural Equipment	3.2.6-2
3.2.7-1	Emission Factors for Heavy-Duty, Diesel-Powered Construction Equipment	3.2.7-2
3.2.7-2	Emission Factors for Heavy-Duty, Gasoline-Powered Construction Equipment	3.2.7-4
3.2.8-1	Emission Factors for Snowmobiles	3.2.8-2
3.3.1-1	Typical Operating Cycle for Electric Utility Turbines	3.3.1-2
3.3.1-2	Composite Emission Factors for 1971 Population of Electric Utility Turbines	3.3.1-2
3.3.2-1	Emission Factors for Heavy-Duty, General Utility, Stationary Engines Using Gaseous Fuels	3.3.2-1

LIST OF TABLES—(Continued)

Table		Page
3.3.3-1	Emission Factors for Gasoline- and Diesel-Powered Industrial Equipment	3.3.3-1
4.1-1	Hydrocarbon Emission Factors for Dry-Cleaning Operations	4.1-2
4.2-1	Gaseous Hydrocarbon Emission Factors for Surface-Coating Applications	4.2-1
4.3-1	Hydrocarbon Emission Factors for Evaporation Losses from the Storage of Petroleum Products	4.3-2
4.4-1	Emission Factors for Evaporation Losses from Gasoline Marketing	4.4-2
5.1-1	Emission Factors for an Adipic Acid Plant without Control Equipment	5.1-1
5.2-1	Emission Factors for Ammonia Manufacturing without Control Equipment	5.2-2
5.3-1	Emission Factors for Carbon Black Manufacturing	5.3-2
5.4-1	Emission Factors for Charcoal Manufacturing	5.4-1
5.5-1	Emission Factors for Chlor-Alkali Plants	5.5-2
5.6-1	Emission Factors for Explosives Manufacturing without Control Equipment	5.6-2
5.7-1	Emission Factors for Hydrochloric Acid Manufacturing	5.7-1
5.8-1	Emission Factors for Hydrofluoric Acid Manufacturing	5.8-1
5.9-1	Nitrogen Oxide Emissions from Nitric Acid Plants	5.9-3
5.10-1	Emission Factors for Paint and Varnish Manufacturing without Control Equipment	5.10-2
5.11-1	Emission Factors for Phosphoric Acid Production	5.11-2
5.12-1	Emission Factors for Phthalic Anhydride Plants	5.12-1
5.13-1	Emission Factors for Plastics Manufacturing without Controls	5.13-1
5.14-1	Emission Factors for Printing Ink Manufacturing	5.14-2
5.15-1	Particulate Emission Factors for Spray-Drying Detergents	5.15-1
5.16-1	Emission Factors for Soda-Ash Plants without Control	5.16-1
5.17-1	Emission Factors for Sulfuric Acid Plants	5.17-5
5.17-2	Acid Mist Emission Factors for Sulfuric Acid Plants without Controls	5.17-7
5.17-3	Collection Efficiency and Emissions Comparison of Typical Electrostatic Precipitator and Fiber Mist Eliminator	5.17-8
5.18-1	Emission Factors for Modified Claus Sulfur Plants	5.18-2
5.19-1	Emission Factors for Synthetic Fibers Manufacturing	5.19-1
5.20-1	Emission Factors for Synthetic Rubber Plants: Butadiene-Acrylonitrile and Butadiene-Styrene	5.20-1
5.21-1	Nitrogen Oxides Emission Factors for Terephthalic Acid Plants	5.21-1
6.1-1	Particulate Emission Factors for Alfalfa Dehydration	6.1-1
6.2-1	Emission Factors for Coffee Roasting Processes without Controls	6.2-1
6.3-1	Emission Factors for Cotton Ginning Operations without Controls	6.3-1
6.4-1	Particulate Emission Factors for Grain Handling and Processing	6.4-2
6.5-1	Emission Factors for Fermentation Processes	6.5-2
6.6-1	Emission Factors for Fish Meal Processing	6.6-1
6.7-1	Emission Factors for Meat Smoking	6.7-1
6.8-1	Emission Factors for Nitrate Fertilizer Manufacturing without Controls	6.8-2
6.9-1	Emission Factors for Orchard Heaters	6.9-4
6.10-1	Emission Factors for Production of Phosphate Fertilizers	6.10-1
6.11-1	Emission Factors for Starch Manufacturing	6.11-1
6.12-1	Emission Factors for Sugar Cane Processing	6.12-1
7.1-1	Raw Material and Energy Requirements for Aluminum Production	7.1-2
7.1-2	Representative Particle Size Distributions of Uncontrolled Effluents from Prebake and Horizontal-Stud Soderberg Cells	7.1-4
7.1-3	Emission Factors for Primary Aluminum Production Processes	7.1-5
7.2-1	Emission Factors for Metallurgical Coke Manufacture without Controls	7.2-2
7.3-1	Emission Factors for Primary Copper Smelters without Controls	7.3-2
7.4-1	Emission Factors for Ferroalloy Production in Electric Smelting Furnaces	7.4-2
7.5-1	Emission Factors for Iron and Steel Mills	7.5-4
7.6-1	Emission Factors for Primary Lead Smelting Processes without Controls	7.6-4
7.6-2	Efficiencies of Representative Control Devices Used with Primary Lead Smelting Operations	7.6-5
7.7-1	Emission Factors for Primary Zinc Smelting without Controls	7.7-1
7.8-1	Particulate Emission Factors for Secondary Aluminum Operations	7.8-1
7.9-1	Particulate Emission Factors for Brass and Bronze Melting Furnaces without Controls	7.9-2
7.10-1	Emission Factors for Gray Iron Foundries	7.10-1
7.11-1	Emission Factors for Secondary Lead Smelting Furnaces without Controls	7.11-2

LIST OF TABLES–(Continued)

Table		Page
7.11-2	Efficiencies of Particulate Control Equipment Associated with Secondary Lead Smelting Furnaces	7.11-3
7.11-3	Representative Particle Size Distribution from Combined Blast and Reverberatory Furnace Gas Stream	7.11-3
7.12-1	Emission Factors for Magnesium Smelting	7.12-1
7.13-1	Emission Factors for Steel Foundries	7.13-2
7.14-1	Particulate Emission Factors for Secondary Zinc Smelting	7.14-2
8.1-1	Particulate Emission Factors for Asphaltic Concrete Plants	8.1-4
8.2-1	Emission Factors for Asphalt Roofing Manufacturing without Controls	8.2-1
8.3-1	Emission Factors for Brick Manufacturing without Controls	8.3-3
8.4-1	Emission Factors for Calcium Carbide Plants	8.4-1
8.5-1	Particulate Emission Factors for Castable Refractories Manufacturing	8.5-1
8.6-1	Emission Factors for Cement Manufacturing without Controls	8.6-3
8.6-2	Size Distribution of Dust Emitted from Kiln Operations without Controls	8.6-4
8.7-1	Particulate Emission Factors for Ceramic Clay Manufacturing	8.7-1
8.8-1	Particulate Emission Factors for Sintering Operations	8.8-2
8.9-1	Particulate Emission Factors for Thermal Coal Dryers	8.9-1
8.10-1	Particulate Emission Factors for Concrete Batching	8.10-1
8.11-1	Emission Factors for Fiber Glass Manufacturing without Controls	8.11-3
8.12-1	Emission Factors for Frit Smelters without Controls	8.12-2
8.13-1	Emission Factors for Glass Melting	8.13-1
8.14-1	Particulate Emission Factors for Gypsum Processing	8.14-1
8.15-1	Particulate Emission Factors for Lime Manufacturing without Controls	8.15-1
8.16-1	Emission Factors for Mineral Wool Processing without Controls	8.16-2
8.17-1	Particulate Emission Factors for Perlite Expansion Furnaces without Controls	8.17-1
8.18-1	Particulate Emission Factors for Phosphate Rock Processing without Controls	8.18-1
8.20-1	Particulate Emission Factors for Rock-Handling Processes	8.20-1
9.1-1	Emission Factors for Petroleum Refineries	9.1-3
10.1.2-1	Emission Factors for Sulfate Pulping	10.1-5
10.2-1	Particulate Emission Factors for Pulpboard Manufacturing	10.2-1
10.3-1	Emission Factors for Plywood Manufacturing	10.3-1
11.1-1	Summary of Estimated Fuel Consumed by Forest Fires	11.1-2
11.1-2	Summary of Emissions and Emission Factors for Forest Wildfires	11.1-4
A-1	Nationwide Emissions for 1971	A-2
A-2	Distribution by Particle Size of Average Collection Efficiencies for Various Particulate Control Equipment	A-3
A-3	Thermal Equivalents for Various Fuels	A-4
A-4	Weights of Selected Substances	A-4
A-5	General Conversion Factors	A-5
B-1	Promulgated New Source Performance Standards–Group I Sources	B-2
B-2	Promulgated New Source Performance Standards–Group II Sources	B-4

ABSTRACT

Emission data obtained from source tests, material balance studies, engineering estimates, etc., have been compiled for use by individuals and groups responsible for conducting air pollution emission inventories. Emission factors given in this document, the result of the expansion and continuation of earlier work, cover most of the common emission categories: fuel combustion by stationary and mobile sources; combustion of solid wastes; evaporation of fuels, solvents, and other volatile substances; various industrial processes; and miscellaneous sources. When no source-test data are available, these factors can be used to estimate the quantities of primary pollutants (particulates, CO, SO_2, NO_x, and hydrocarbons) being released from a source or source group.

Key words: fuel combustion, stationary sources, mobile sources, industrial processes, evaporative losses, emissions, emission data, emission inventories, primary pollutants, emission factors.

COMPILATION OF AIR POLLUTANT EMISSION FACTORS

INTRODUCTION

In the assessment of community air pollution, there is a critical need for accurate data on the quantity and characteristics of emissions from the numerous sources that contribute to the problem. The large number of individual sources and the diversity of source types make conducting field measurements of emissions on a source-by-source basis at the point of release impractical. The only feasible method of determining pollutant emissions for a given community is to make generalized estimates of typical emissions from each of the source types.

One of the most useful (and logical) tools for estimating typical emissions is the "emission factor," which is an estimate of the rate at which a pollutant is released to the atmosphere as a result of some activity, such as combustion or industrial production, *divided by* the level of that activity (also expressed in terms of a temporal rate). In other words, the emission factor relates the quantity of pollutants emitted to some indicator (activity level) such as production capacity, quantity of fuel burned, or vehicle miles traveled. In most cases, these factors are simply given as statistical or estimated averages; that is, no empirical information on the various process parameters (temperature, reactant concentrations, etc.) is considered in their calculation. However, for a few cases, such as in the estimation of hydrocarbon emissions from petroleum storage tanks, precise empirical formulas relating emissions to such variables as tank diameter, liquid storage temperature, and wind velocity have been developed. Because of their superior precision, emission factors based on empirical formulas are more desirable to obtain and can usually be given the highest accuracy rating. Factors derived from statistical averages, however, if based on an adequate number of field measurements ("source tests"), can also be both precise and accurate within practical and useful limits.

An example should illustrate how the factors are to be used:

Suppose a sulfuric acid plant, with a production rate of 200 tons/day of 100 percent acid, operates at an overall SO_2 to SO_3 conversion efficiency of 97 percent. Using the formula given as a footnote to Table 5.17-1 on page 5.17-5 of this publication, the *uncontrolled* sulfur dioxide emissions can be calculated :

$$
\begin{aligned}
SO_2 \text{ emissions} &= [\,-13.65\ (\%\ \text{conversion efficiency}) + 1365\,] \times \text{production rate} \\
&= [\,-13.65\ (97\%) + 1365\,]\ \text{lb/ton acid} \times 200\ \text{tons acid/day} \\
&= 40\ \text{lb/ton acid} \times 200\ \text{tons acid/day} \\
&= 8000\ \text{lb/day}\ (3632\ \text{kg/day})
\end{aligned}
$$

The emission factors presented in this report have been estimated using a wide spectrum of techniques available for their determination. The preparation/revision of each factor section involves, first of all, the search for and obtainment of all the known written information on that source category from such sources as the Air Pollution Technical Information Center literature, Environmental Protection Agency technical reports (including emission test reports), and the National Emissions Data System point source file. After these data are reviewed,

organized, and analyzed, the process descriptions, process flowsheets, and other background portions of the section are prepared. Then, using the compiled information, representative emission factors are developed for each pollutant emitted by each point source of the process category. As stated above, these factors are usually obtained by simply averaging the respective numerical data obtained. When feasible, the ranges in the factors are presented for further clarity. Occasionally, enough data exist to permit the development of either empirical or theoretical formulas (or graphs) relating emissions factors to various process parameters such as stream temperature, sulfur content, or catalyst. In these cases, *representative* values of these process parameters are selected and substituted into the formulas or graphs that, in turn, yield representative emission factors which are then tabulated within. The pertinent formulas and graphical data are also included in the section to allow the estimation of emission factors when the process conditions differ from those selected by the author(s).

After the draft of a section is completed, it is circulated for technical review to various personnel routinely familiar with the emission aspects of the particular activity. After these review comments are obtained and evaluated, the final draft is written and submitted for editing and publication.

The limitations and applicability of emission factors must be understood. To give some notion of the accuracy of the factors for a specific process, each set of factors has been ranked according to the available data upon which it was based. Each rank was based on the weighting of the various information categories used to obtain the factor(s). These categories and associated numerical values were:

Measured emission data: 20 points; maximum.
Process data: 10 points; maximum.
Engineering analysis: 10 points; maximum.

The emission data category rated the amount of measured (source test) data available for the development of the factor. The process data category involved such considerations as the variability of the process and its resultant effect on emissions, as well as the amount of data available on these variables. Finally, the engineering analysis category was concerned with the data available upon which a material balance or related calculation could be made.

Depending on which information categories were employed to develop it, each set of factors was assigned a numerical score, ranging from 5 to 40. For example, if the factors developed for a certain process were based on a large number of source tests, a moderate amount of process data, and no engineering analysis work, the assigned score would be 20 + 5 = 25.

Each numerical score was, in turn, converted to a letter rank as follows:

Numerical Rank	*Letter Rank*
5 or less	E (Poor)
6 to 15	D (Below average)
16 to 25	C (Average)
26 to 35	B (Above average)
36 to 40	A (Excellent)

These rankings are presented below the table titles throughout this publication.

The reader must be herein cautioned not to use these emission factors indiscriminately. That is, the factors generally will not permit the calculation of accurate emissions measurements from an individual installation. Only an on-site source test can provide data sufficiently accurate and precise to use in such undertakings as the design and purchase of control equipment or the initiation of a legal action. Factors are more valid when applied to a large number of processes, as, for example, when emission inventories are conducted as part of community or nationwide air pollution studies.

1. EXTERNAL COMBUSTION SOURCES

External combustion sources include steam-electric generating plants, industrial boilers, commercial and institutional boilers, and commercial and domestic combustion units. Coal, fuel oil, and natural gas are the major fossil fuels used by these sources. Other fuels used in relatively small quantities are liquefied petroleum gas, wood, coke, refinery gas, blast furnace gas, and other waste- or by-product fuels. Coal, oil, and natural gas currently supply about 95 percent of the total thermal energy consumed in the United States. In 1970 over 500 million tons (454×10^6 MT) of coal, 623 million barrels (99×10^9 liters) of distillate fuel oil, 715 million barrels (114×10^9 liters) of residual fuel oil, and 22 trillion cubic feet (623×10^{12} liters) of natural gas were consumed in the United States.[1]

Power generation, process heating, and space heating are some of the largest fuel-combustion sources of sulfur oxides, nitrogen oxides, and particulate emissions. The following sections present emission factor data for the major fossil fuels – coal, fuel oil, and natural gas – as well as for liquefied petroleum gas and wood waste combustion in boilers.

REFERENCE

1. Ackerson, D.H. Nationwide Inventory of Air Pollutant Emissions. Unpublished report. Office of Air and Water Programs, Environmental Protection Agency, Research Triangle Park, N.C. May 1971.

1.1 BITUMINOUS COAL COMBUSTION

Revised by Robert Rosensteel and Thomas Lahre

1.1.1 General

Coal, the most abundant fossil fuel in the United States, is burned in a wide variety of furnaces to produce heat and steam. Coal-fired furnaces range in size from small handfired units with capacities of 10 to 20 pounds (4.5 to 9 kilograms) of coal per hour to large pulverized-coal-fired units, which may burn 300 to 400 tons (275 to 360 MT) of coal per hour.

Although predominantly carbon, coal contains many compounds in varying amounts. The exact nature and quantity of these compounds are determined by the location of the mine producing the coal and will usually affect the final use of the coal.

1.1.2 Emissions and Controls

1.1.2.1 Particulates[1] - Particulates emitted from coal combustion consist primarily of carbon, silica, alumina, and iron oxide in the fly-ash. The quantity of atmospheric particulate emissions is dependent upon the type of combustion unit in which the coal is burned, the ash content of the coal, and the type of control equipment used.

Table 1.1-1 gives the range of collection efficiencies for common types of fly-ash control equipment. Particulate emission factors expressed as pounds of particulate per ton of coal burned are presented in Table 1.1-2.

1.1.2.2 Sulfur Oxides[11] - Factors for uncontrolled sulfur oxides emission are shown in Table 1-2 along with factors for other gases emitted. The emission factor for sulfur oxides indicates a conversion of 95 percent of the available sulfur to sulfur oxide. The balance of the sulfur is emitted in the fly-ash or combines with the slag or ash in the furnace and is removed with them.[1] Increased attention has been given to the control of sulfur oxide emissions from the combustion of coal. The use of low-sulfur coal has been recommended in many areas; where low-sulfur coal is not available, other methods in which the focus is on the removal of sulfur oxide from the flue gas before it enters the atmosphere must be given consideration.

A number of flue-gas desulfurization processes have been evaluated; effective methods are undergoing full-scale operation. Processes included in this category are: limestone-dolomite injection, limestone wet scrubbing, catalytic oxidation, magnesium oxide scrubbing, and the Wellman-Lord process. Detailed discussion of various flue-gas desulfurization processes may be found in the literature.[12,13]

1.1.2.3. Nitrogen Oxides[1,5] - Emissions of oxides of nitrogen result not only from the high temperature reaction of atmospheric nitrogen and oxygen in the combustion zone, but also from the partial combustion of nitrogenous compounds contained in the fuel. The important factors that affect NO_x production are: flame and furnace temperature, residence time of combustion gases at the flame temperature, rate of cooling of the gases, and amount of excess air present in the flame. Discussions of the mechanisms involved are contained in the indicated references.

1.1.2.4 Other Gases - The efficiency of combustion primarily determines the carbon monoxide and hydrocarbon content of the gases emitted from bituminous coal combustion. Successful combustion that results in a low level of carbon monoxide and organic emissions requires a high degree of turbulence, a high temperature, and sufficient time for the combustion reaction to take place. Thus, careful control of excess air rates, the use of high combustion temperature, and provision for intimate fuel-air contact will minimize these emissions.

Factors for these gaseous emissions are also presented in Table 1.1-2. The size range in Btu per hour for the various types of furnaces as shown in Table 1.1-2 is only provided as a guide in selecting the proper factor and is not meant to distinguish clearly between furnace applications.

TABLE 1.1-1. RANGE OF COLLECTION EFFICIENCIES FOR COMMON TYPES OF FLY-ASH CONTROL EQUIPMENT[a]

Type of furnace	Range of collection efficiencies, %			
	Electrostatic precipitator	High-efficiency cyclone	Low-resistance cyclone	Settling chamber expanded chimney bases
Cyclone furnace	65 to 99.5[b]	30 to 40	20 to 30	10[b]
Pulverized unit	80 to 99.5[b]	65 to 75	40 to 60	20[b]
Spreader stoker	99.5[b]	85 to 90	70 to 80	20 to 30
Other stokers	99.5[b]	90 to 95	75 to 85	25 to 50

[a]References 1 and 2.
[b]The maximum efficiency to be expected for this collection device applied to this type source.

Table 1.1-2. EMISSION FACTORS FOR BITUMINOUS COAL COMBUSTION WITHOUT CONTROL EQUIPMENT
EMISSION FACTOR RATING: A

Furnace size, 10^6 Btu/hr heat input[a]	Particulates[b]		Sulfur oxides[c]		Carbon monoxide		Hydro-carbons[d]		Nitrogen oxides		Aldehydes	
	lb/ton coal burned	kg/MT coal burned	lb/ton coal burned	kg/MT coal burned	lb/ton coal burned	kg/MT coal burned	lb/ton coal burned	kg/MT coal burned	lb/ton coal burned	kg/MT coal burned	lb/ton coal burned	kg/MT coal burned
Greater than 100[e] (Utility and large industrial boilers)												
Pulverized												
General	16A	8A	38S	19S	1	0.5	0.3	0.15	18	9	0.005	0.0025
Wet bottom	13A[f]	6.5A	38S	19S	1	0.5	0.3	0.15	30	15	0.005	0.0025
Dry bottom	17A	8.5A	38S	19S	1	0.5	0.3	0.15	18	9	0.005	0.0025
Cyclone	2A	1A	38S	19S	1	0.5	0.3	0.15	55	27.5	0.005	0.0025
10 to 100[g] (large commercial and general industrial boilers)												
Spreader stoker[h]	13A[i]	6.5A	38S	19S	2	1	1	0.5	15	7.5	0.005	0.0025
Less than 10[j] (commercial and domestic furnaces)												
Spreader stoker	2A	1A	38S	19S	10	5	3	1.5	6	3	0.005	0.0025
Hand-fired units	20	10	38S	19S	90	45	20	10	3	1.5	0.005	0.0025

[a] 1 Btu/hr = 0.252 kcal/hr.
[b] The letter A on all units other than hand-fired equipment indicates that the weight percentage of ash in the coal should be multiplied by the value given. Example: If the factor is 16 and the ash content is 10 percent, the particulate emissions before the control equipment would be 10 times 16, or 160 pounds of particulate per ton of coal (10 times 8, or 80 kg of particulates per MT of coal).
[c] S equals the sulfur content (see footnote b above).
[d] Expressed as methane.
[e] References 1 and 3 through 7.
[f] Without fly-ash reinjection.
[g] References 1, 4, and 7 through 9.
[h] For all other stokers use 5A for particulate emission factor.
[i] Without fly-ash reinjection. With fly-ash reinjection use 20 A. This value is not an emission factor but represents loading reaching the control equipment.
[j] References 7, 9, and 10.

References for Section 1.1

1. Smith, W. S. Atmospheric Emissions from Coal Combustion. U.S. DHEW, PHS, National Center for Air Pollution Control. Cincinnati, Ohio. PHS Publication Number 999-AP-24. April 1966.

2. Control Techniques for Particulate Air Pollutants. U.S. DHEW, PHS, EHS, National Air Pollution Control Administration. Washington, D.C. Publication Number AP-51. January 1969.

3. Perry, H. and J. H. Field. Air Pollution and the Coal Industry. Transactions of the Society of Mining Engineers. *238*:337-345, December 1967.

4. Heller, A. W. and D. F. Walters. Impact of Changing Patterns of Energy Use on Community Air Quality. J. Air Pol. Control Assoc. *15*:426, September 1965.

5. Cuffe, S. T. and R. W. Gerstle. Emissions from Coal-Fired Power Plants: A Comprehensive Summary. U.S. DHEW, PHS, National Air Pollution Control Administration. Raleigh, N. C. PHS Publication Number 999-AP-35. 1967. p. 15.

6. Austin, H. C. Atmospheric Pollution Problems of the Public Utility Industry. J. Air Pol. Control Assoc. *10*(4):292-294, August 1960.

7. Hangebrauck, R. P., D. S. Von Lehmden, and J. E. Meeker. Emissions of Polynuclear Hydrocarbons and Other Pollutants from Heat Generation and Incineration Processes. J. Air Pol. Control Assoc. *14*:267-278, July 1964.

8. Hovey, H. H., A. Risman, and J. F. Cunnan. The Development of Air Contaminant Emission Tables for Nonprocess Emissions. J. Air Pol. Control Assoc. *16*:362-366, July 1966.

9. Anderson, D. M., J. Lieben, and V. H. Sussman. Pure Air for Pennsylvania. Pennsylvania Department of Health. Harrisburg, Pa. November 1961. p. 91-95.

10. Communication with National Coal Association. Washington, D. C. September 1969.

11. Private communication with R.D. Stern, Control Systems Division, Environmental Protection Agency. Research Triangle Park, N.C. June 21, 1972.

12. Control Techniques for Sulfur Oxide Air Pollutants. U.S. DHEW, PHS, EHS, National Air Pollution Control Administration. Washington, D.C. Publication Number AP-52. January 1969. p. xviii and xxii.

13. Air Pollution Aspects of Emission Sources: Electric Power Production. Environmental Protection Agency, Office of Air Programs. Research Triangle Park, N.C. Publication Number AP-96. May 1971.

1.2 ANTHRACITE COAL COMBUSTION

Revised by Robert Rosensteel

1.2.1 General [1]

Because of its low volatile content and the nonclinkering characteristics of its ash, anthracite coal is used in medium-sized industrial and institutional boilers with stationary or traveling grates. Although it is not used in spreader stokers because of its low volatile content and relatively high ignition temperature, anthracite coal may be burned in pulverized-coal-fired units, but this practice is limited to only a few plants in Eastern Pennsylvania because of ignition difficulties. Anthracite coal has also been widely used in hand-fired furnaces.

1.2.2 Emissions and Controls[1]

Particulate emissions from anthracite coal combustion are greatly affected by the rate of firing and by the ash content of the fuel. Smoke emissions from anthracite coal combustion are rarely a problem. High grate loadings result in excessive emissions because of the underfire air required to burn the fuel. Large units equipped with forced-draft fans may also produce high rates of particulate emissions. Hand-fired furnaces and some small natural-draft units have fewer particulate emissions because underfire air is not usually supplied by mechanical means.

The quantity of sulfur dioxide emissions from coal combustion, as from other fuels, is directly related to the sulfur content of the coal. Nitrogen oxide and carbon monoxide emissions are similar to those found in bituminous-coal-fired units because excess air rates and combustion temperatures are similar. Because the volatile matter content of anthracite is lower than that of bituminous, hydrocarbon emissions from combustion of anthracite are somewhat lower than those from bituminous coal combustion.

The factors for uncontrolled emissions from anthracite coal combustion are presented in Table 1.2-1.

Table 1.2-1. EMISSIONS FROM ANTHRACITE COAL COMBUSTION WITHOUT CONTROL EQUIPMENT
EMISSION FACTOR RATING: B

Type of furnace	Particulate[a,b]		Sulfur dioxide[c]		Sulfur trioxide[c,d]		Hydrocarbons[e,f]		Carbon monoxide[g]		Nitrogen oxides[d,h]	
	lb/ton	kg/MT	lb/ton	kg/MT	lb/ton	kg/MT	lb/ton	kg/MT	lb/ton	kg/MT	lb/ton	kg/MT
Pulverized (dry bottom), no fly-ash reinjection	17A	8.5A	38S	19S	0.5S	0.25S	0.03	0.015	1	0.5	18	9
Overfeed stokers, no fly-ash reinjection[i]	2A	1A	38S	19S	0.5S	0.25S	0.2	0.1	(2 to 10)[j]	(1 to 5)	(6 to 15)[k]	(3 to 7.5)
Hand-fired units	10	5	36S	18S	0.8S	0.4S	2.5	1.25	90	45	3	1.5

[a]References 2 through 7.
[b]A is the ash content expressed as weight percent.
[c]S is the sulfur content expressed as weight percent.
[d]References 5, 7, and 8.
[e]Based on Reference 2 and bituminous coal combustion.
[f]Expressed as methane.
[g]Based on bituminous coal combustion.
[h]Emitted as NO, but calculated as NO_2.
[i]Based on data obtained from traveling-grate stokers in the 12 to 180 Btu/hr (3 to 45 kcal/hr) heat input range. Anthracite is not burned in spreader stokers.
[j]Use high side of range for smaller-sized units [less than 10×10^6 Btu/hr (2.5×10^6 kcal/hr) heat input].
[k]Use low side of range for smaller-sized units [less than 10×10^6 Btu/hr (2.5×10^6 kcal/hr) heat input].

NOTE: Approximate efficiencies of control devices used for anthracite are: cyclone, 75 to 85 percent, and electrostatic precipitator, 85 percent.

References for Section 1.2

1. Air Pollutant Emission Factors. Final Report. Resources Research, Inc. Reston, Va. Prepared for National Air Pollution Control Administration, Durham, N.C., under Contract Number CPA-22-69-119. April 1970.

2. Hovey, H.H., A. Risman, and J.F. Cunnan. The Development of Air Contaminant Emission Tables for Nonprocess Emissions. J. Air Pol. Control Assoc. *16*:362-366, July 1966.

3. Unpublished stack test data on emissions from athracite coal combustion. Pennsylvania Air Pollution Commission. Harrisburg, Pa. 1969.

4. Unpublished stack test data on emissions from anthracite coal combustion. New Jersey Air Pollution Control Program. Trenton, N.J. 1969.

5. Anderson, D.M., J. Lieben, and V.H. Sussman. Pure Air for Pennsylvania. Pennsylvania Department of Health. Harrisburg, Pa. November 1961. p.15.

6. Blackie, A. Atmospheric Pollution from Domestic Appliances. The Report of the Joint Conference of the Institute of Fuel and the National Smoke Abatement Society. London. February 23, 1945.

7. Smith, W.S. Atmospheric Emissions from Coal Combustion. U.S. DHEW, PHS, National Center for Air Pollution Control. Cincinnati, Ohio. PHS Publication Number 999-AP-24. April 1966. p.76.

8. Crumley, P.H. and A.W. Fletcher. The Formation of Sulphur Trioxide in Flue Gases. J. Inst. of Fuel Combustion. *30*:608-612, August 1957.

1.3 FUEL OIL COMBUSTION

Revised by Thomas Lahre

1.3.1 General[1]

Fuel oil is classified into two major types, residual and distillate. Distillate fuel oil is primarily a domestic fuel, but it is used in some commercial and industrial applications where a high-quality oil is required. Fuel oils are classified by grades: grades No. 1 and No. 2, distillate; No. 5 and No. 6, residual; and No. 3 and No. 4, blends. (Grade No. 3 has been practically discontinued.) The primary differences between residual oil and distillate oil are the higher ash and sulfur content of residual oil and the fact that it is much more viscous and therefore harder to burn properly. Residual fuel oils have a heating value of approximately 150,000 Btu/gallon (10,000 kcal/liter); the heating value for distillate oils is about 140,000 Btu/gallon (9,300 kcal/liter).

1.3.2 Emissions

Emissions from oil combustion are dependent on type and size of equipment, method of firing, and maintenance. Table 1.3-1 presents emission factors for fuel oil combustion. Note that the industrial and commercial category is split into residual and distillate because there is a significant difference in particulate emissions from the same equipment, depending on the fuel oil used. It should also be noted that power plants emit less particulate matter per quantity of oil consumed, reportedly because of better design and more precise operation of equipment.

In general, large sources produce more nitrogen oxides than small sources,[1] primarily because of the higher flame and boiler temperatures characteristic of large sources. Large sources, however, emit fewer aldehydes than smaller sources as a result of more complete combustion and higher flame temperatures. Hydrocarbon and carbon monoxide emissions can be kept minimal if proper operating practices are employed; however, as the data suggest, this control is more often accomplished in larger equipment.

Table 1.3-1. EMISSION FACTORS FOR FUEL OIL COMBUSTION
EMISSION FACTOR RATING: A

Pollutant	Type of unit: Industrial and commercial							
	Power plant		Residual		Distillate		Domestic	
	lb/10^3 gal	kg/10^3 liters	lb/10^3 gal	kg/10^3 liters	lb/10^3 gal	kg/10^3 liters	lb/10^3 gal	kg/10^3 liters
Particulate[a]	8	1	23	2.75	15	1.8	10	1.2
Sulfur dioxide[b,c]	157S	19S	157S	19S	142S	17S	142S	17S
Sulfur trioxide[b,c]	2S	0.25S	2S	0.25S	2S	0.25S	2S	0.25S
Carbon monoxide[d]	3	0.4	4	0.5	4	0.5	5	0.6
Hydrocarbons[e]	2	0.25	3	0.35	3	0.35	3	0.35
Nitrogen oxides (NO_2)[f]	105[g]	12.6[g]	(40 to 80)[h]	(4.8 to 9.6)[h]	(40 to 80)[h]	(4.8 to 9.6)[h]	12	1.5
Aldehydes (HCHO)[i]	1	0.12	1	0.12	2	0.25	2	0.25

[a]References 2 through 6.
[b]Reference 2.
[c]S equals percent by weight of sulfur in the oil.
[d]References 2, 7 through 10, 12, and 15.
[e]References 2, 6, and 9 through 12.
[f]References 2 through 6, 9, 10, 12, 13, 15, and 16.
[g]Use 50(6) for tangentially fired units.
[h]Use 40 (4.8) for tangentially fired units and 80 (9.6) for horizontally fired units.
[i]References 2, 9, 11, and 14.

References for Section 1.3

1. Unpublished stack test data on emissions from coal-fired boilers. Resources Research, Inc. Reston, Va. Prepared for the Office of Air Programs, Environmental Protection Agency, Research Triangle Park, N.C., under Contract Number 70-81. 1971.

2. Smith, W.S. Atmospheric Emissions from Fuel Oil Combustion: An Inventory Guide. U.S. DHEW, PHS, National Center for Air Pollution Control. Cincinnati, Ohio. PHS Publication Number 999-AP-2. 1962.

3. Weisburd, M.I. and S.S. Griswold (eds.). Air Pollution Control Field Operations Manual: A Guide for Inspection and Enforcement. U.S. DHEW, PHS, Division of Air Pollution. Washington, D.C. PHS Publication Number 937. 1962.

4. McGill, P.L. and R.W. Benoliel. Air Pollution in Los Angeles County: Contribution of Industrial Products. Ind. Eng. Chem. *44*:1347-1352, June 1952.

5. The Smog Problem in Los Angeles County. Menlo Park, Calif., Stanford Research Institute. Western Oil and Gas Assoc. 1954.

6. Taylor, F.R. et al. Emissions from Fuel Oil Combustion. Final Report. Prepared for American Petroleum Institute. Scott Research Laboratory. Parkasie, Pa. March 1963.

7. Unpublished data from San Francisco Bay Area Air Pollution Control District on emissions from fuel oil combustion. 1968.

8. Unpublished data from Los Angeles County Air Pollution Control District on fuel oil combustion. April 8, 1969.

9. Wasser, J.H., G. B. Martin, and R.P. Hangebrauck. Effects of Combustion Gas Residence Time on Air Pollutant Emissions from Oil-Fired Test Furnace. U.S. DHEW, PHS, National Air Pollution Control Administration. Cincinnati, Ohio. September 1968.

10. Howekamp, D.P. and M.K. Hooper. Effects of Combustion-Improving Devices on Air Pollutant Emissions from Residential Oil-Fired Furnaces. U.S. DHEW, PHS, National Air Pollution Control Administration. Cincinnati, Ohio. June 1970.

11. MacPhee, R.D., J.R. Taylor, and R.L. Chaney. Some Data on Particulates from Fuel Oil Burning. Los Angeles County Air Pollution Control District. (Presented at APCA Semiannual Technical Conference, San Francisco, Calif. November 1957.)

12. Levy, A. et al. A Field Investigation of Emissions from Fuel Oil Combustion for Space Heating. API Publication 4099. Battelle Columbus Laboratories. Columbus, Ohio. November 1971.

13. Barrett, R.E., S.E. Miller, and D.W. Locklin. Investigation of the Effect of Combustion Parameters on Emissions from Residential and Commercial Heating Equipment, 5th Monthly Report. Battelle Columbus Laboratories. Columbus, Ohio. Prepared for Environmental Protection Agency, Research Triangle Park, N.C., under Contract Number 68-02-0251. April 27, 1972.

14. Chass, R.L. and R.E. George. Contaminant Emissions from Combustion of Fuels. J. Air Pol. Control Assoc. *10*:34-43, February 1960.

15. Bartok, W. et al. Systematic Field Study of NO_x Emission Control Methods for Utility Boilers. ESSO Research and Engineering Co. Prepared for Environmental Protection Agency, Research Triangle Park, N.C., under Contract Number CPA-70-90. December 31, 1971.

16. Blakeslee, C.E. and H.E. Burbach. Controlling NO_x Emissions from Steam Generators. J. Air Pol. Control Assoc. *23*:37-42, January 1973.

1.4 NATURAL GAS COMBUSTION

Revised by Thomas Lahre

1.4.1 General [1,2]

Natural gas has become one of the major fuels used throughout the country. It is used mainly for power generation, for industrial process steam and heat production, and for domestic and commercial space heating. The primary component of natural gas is methane, although varying amounts of ethane and smaller amounts of nitrogen, helium, and carbon dioxide are also present. The average gross heating value of natural gas is approximately 1050 Btu/stdft^3 (9350 kcal/Nm^3), varying generally between 1000 and 1100 Btu/stdft^3 (8900 to 9800 kcal/Nm^3).

Because natural gas in its original state is a gaseous, homogenous fluid, its combustion is simple and can be precisely controlled. Common excess air rates range from 10 to 15 percent; however, some large units operate at excess air rates as low as 5 percent to maximize efficiency and minimize nitrogen oxide (NO_x) emissions.

1.4.2 Emissions and Controls [3-16]

Even though natural gas is considered to be a relatively clean fuel, some emissions can occur from the combustion reaction. For example, improper operating conditions, including poor mixing, insufficient air, etc., may cause large amounts of smoke, carbon monoxide, and hydrocarbons to be produced. Moreover, because a sulfur-containing mercaptan is added to natural gas for detection purposes, small amounts of sulfur oxides will also be produced in the combustion process.

Nitrogen oxides are the major pollutants of concern when burning natural gas. Nitrogen oxide emissions are a function of the temperature in the combustion chamber and the rate of cooling of the combustion products. Emission levels generally vary considerably with the type and size of unit and are also a function of loading.

In some large boilers, several operating modifications have been employed for NO_x control. Staged combustion, for example, including off-stoichiometric firing and/or two-stage combustion, can reduce NO_x emissions by 30 to 70 percent. In off-stoichiometric firing, also called "biased firing," some burners are operated fuel-rich, some fuel-lean, while others may supply air only. In two-staged combustion, the burners are operated fuel-rich (by introducing only 80 to 95 percent stoichiometric air) with combustion being completed by air injected above the flame zone through second-stage "NO-ports." In staged combustion, NO_x emissions are reduced because the bulk of combustion occurs under fuel-rich, reducing conditions.

Other NO_x-reducing modifications include low excess air firing and flue gas recirculation. In low excess air firing, excess air levels are kept as low as possible without producing unacceptable levels of unburned combustibles (carbon monoxide, hydrocarbons, and smoke) and/or other operational problems. This technique can reduce NO_x emissions by 10 to 30 percent primarily because of the lack of availability of oxygen during combustion. Flue gas recirculation into the primary combustion zone, because the flue gas is relatively cool and oxygen deficient, can also lower NO_x emissions by 20 to 60 percent depending on the amount of gas recirculated. At present only a few systems have this capability, however.

Combinations of the above combustion modifications may also be employed to further reduce NO_x emissions. In some boilers, for instance, NO_x reductions as high as 70 to 90 percent have been produced as a result of employing several of these techniques simultaneously. In general, however, because the net effect of any of these combinations varies greatly, it is difficult to predict what the overall reductions will be in any given unit.

Emission factors for natural gas combustion are presented in Table 1.4-1. Flue gas cleaning equipment has not been utilized to control emissions from natural gas combustion equipment.

Table 1.4-1. EMISSION FACTORS FOR NATURAL-GAS COMBUSTION
EMISSION FACTOR RATING: A

Pollutant	Type of unit: Power plant		Industrial process boiler		Domestic and commercial heating	
	lb/10^6 ft^3	kg/10^6 m^3	lb/10^6 ft^3	kg/10^6 m^3	lb/10^6 ft^3	kg/10^6 m^3
Particulates[a]	5-15	80-240	5-15	80-240	5-15	80-240
Sulfur oxides (SO_2)[b]	0.6	9.6	0.6	9.6	0.6	9.6
Carbon monoxide[c]	17	272	17	272	20	320
Hydrocarbons (as CH_4)[d]	1	16	3	48	8	128
Nitrogen oxides (NO_2)[e]	700[f-h]	11,200[f-h]	(120-230)[i]	(1920-3680)[i]	(80-120)[j]	(1280-1920)[j]

[a]References 4,7,8,12.
[b]Reference 4 (based on an average sulfur content of natural gas of 2000 gr/10^6 stdft^3 (4600 g/10^6 $\underline{N}m^3$).
[c]References 5, 8-12.
[d]References 8, 9, 12.
[e]References 3-9, 12-16.
[f] Use 300 lb/10^6 stdft^3 (4800 kg/10^6 $\underline{N}m^3$) for tangentially fired units.
[g]At reduced loads, multiply this factor by the load reduction coefficient given in Figure 1.4-1.
[h]See text for potential NO_x reductions due to combustion modifications. Note that the NO_x reduction from these modifications will also occur at reduced load conditions.
[i] This represents a typical range for many industrial boilers. For large industrial units (> 100 MMBtu/hr) use the NO_x factors presented for power plants.
[j] Use 80 (1280) for domestic heating units and 120 (1920) for commercial units.

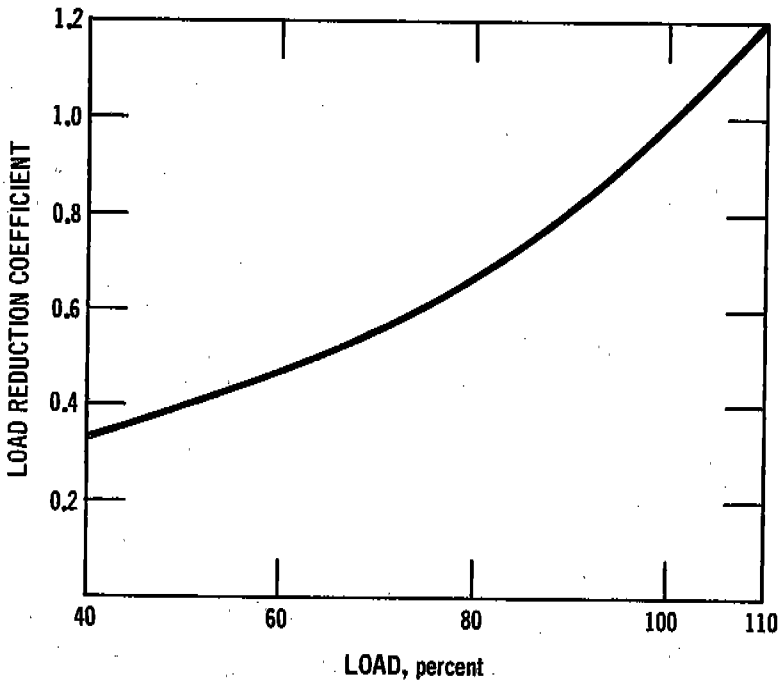

Figure 1.4-1. Load reduction coefficient as function of boiler load. (Used to determine NO_x reductions at reduced loads in large boilers.)

References for Section 1.4

1. High, D. M. et al. Exhaust Gases from Combustion and Industrial Processes. Engineering Science, Inc. Washington, D.C. Prepared for U.S. Environmental Protection Agency, Research Triangle Park, N.C. under Contract No. EHSD 71-36, October 2, 1971.

2. Perry, J. H. (ed.). Chemical Engineer's Handbook. 4th Ed. New York, McGraw-Hill Book Co., 1963. p. 9-8.

3. Hall, E. L. What is the Role of the Gas Industry in Air Pollution? In: Proceedings of the 2nd National Air Pollution Symposium. Pasadena, California, 1952. p.54-58.

4. Hovey, H. H., A. Risman, and J. F. Cunnan. The Development of Air Contaminant Emission Tables for Non-process Emissions. New York State Department of Health. Albany, New York. 1965.

5. Bartok, W. et al. Systematic Field Study of NO_x Emission Control Methods for Utility Boilers. Esso Research and Engineering Co., Linden, N. J. Prepared for U. S. Environmental Protection Agency, Research Triangle Park, N.C. under Contract No. CPA 70-90, December 31, 1971.

6. Bagwell, F. A. et al. Oxides of Nitrogen Emission Reduction Program for Oil and Gas Fired Utility Boilers. Proceedings of the American Power Conference. Vol. 32. 1970. p.683-693.

7. Chass, R. L. and R. E. George. Contaminant Emissions from the Combustion of Fuels, J. Air Pollution Control Assoc. *10*:34-43, February 1960.

8. Hangebrauck, R. P., D. S. Von Lehmden, and J. E. Meeker. Emissions of Polynuclear Hydrocarbons and other Pollutants from Heat Generation and Incineration Processes. J. Air Pollution Control Assoc. *14*:271, July 1964.

9. Dietzmann, H. E. A Study of Power Plant Boiler Emissions. Southwest Research Institute, San Antonio, Texas. Final Report No. AR-837. August 1972.

10. Private communication with the American Gas Association Laboratories. Cleveland, Ohio. May 1970.

11. Unpublished data on domestic gas-fired units. U.S. Dept. of Health, Education, and Welfare, National Air Pollution Control Administration, Cincinnati, Ohio. 1970.

12. Barrett, R. E. et al. Field Investigation of Emissions from Combustion Equipment for Space Heating. Battelle-Columbus Laboratories, Columbus, Ohio. Prepared for U.S. Environmental Protection Agency, Research Triangle Park, N.C. under Contract No. 68-02-0251. Publication No. EPA-R2-73-084. June 1973.

13. Blakeslee, C. E. and H. E. Burbock. Controlling NO_x Emissions from Steam Generators. J. Air Pollution Control Assoc. *23*:37-42, January 1973.

14. Jain, L. K. et al. "State of the Art" for Controlling NO_x Emissions. Part 1. Utility Boilers. Catalytic, Inc., Charlotte, N. C. Prepared for U.S. Environmental Protection Agency under Contract No. 68-02-0241 (Task No. 2). September 1972.

15. Bradstreet, J. W. and R. J. Fortman. Status of Control Techniques for Achieving Compliance with Air Pollution Regulations by the Electric Utility Industry. (Presented at the 3rd Annual Industrial Air Pollution Control Conference. Knoxville, Tennessee. March 29-30, 1973.)

16. Study of Emissions of NO_x from Natural Gas-Fired Steam Electric Power Plants in Texas. Phase II. Vol. 2. Radian Corporation, Austin, Texas. Prepared for the Electric Reliability Council of Texas. May 8, 1972.

1.5 LIQUEFIED PETROLEUM GAS CONSUMPTION

Revised by Thomas Lahre

1.5.1 General[1]

Liquefied petroleum gas, commonly referred to as LPG, consists mainly of butane, propane, or a mixture of the two, and of trace amounts of propylene and butylene. This gas, obtained from oil or gas wells as a by-product of gasoline refining, is sold as a liquid in metal cylinders under pressure and, therefore, is often called bottled gas. LPG is graded according to maximum vapor pressure with Grade A being predominantly butane, Grade F being predominantly propane, and Grades B through E consisting of varying mixtures of butane and propane. The heating value of LPG ranges from 97,400 Btu/gallon (6,480 kcal/liter) for Grade A to 90,500 Btu/gallon (6,030 kcal/liter) for Grade F. The largest market for LPG is the domestic-commercial market, followed by the chemical industry and the internal combustion engine.

1.5.2 Emissions[1]

LPG is considered a "clean" fuel because it does not produce visible emissions. Gaseous pollutants such as carbon monoxide, hydrocarbons, and nitrogen oxides do occur, however. The most significant factors affecting these emissions are the burner design, adjustment, and venting.[2] Improper design, blocking and clogging of the flue vent, and lack of combustion air result in improper combustion that causes the emission of aldehydes, carbon monoxide, hydrocarbons, and other organics. Nitrogen oxide emissions are a function of a number of variables including temperature, excess air, and residence time in the combustion zone. The amount of sulfur dioxide emitted is directly proportional to the amount of sulfur in the fuel. Emission factors for LPG combustion are presented in Table 1.5-1.

References for Section 1.5

1. Air Pollutant Emission Factors. Final Report. Resources Research, Inc. Reston, Va. Prepared for National Air Pollution Control Administration, Durham, N.C., under Contract Number CPA-22-69-119. April 1970.

2. Clifford, E.A. A Practical Guide to Liquified Petroleum Gas Utilization. New York, Moore Publishing Co. 1962.

Table 1.5-1. EMISSION FACTORS FOR LPG COMBUSTION[a]
EMISSION FACTOR RATING: C

Pollutant	Industrial process furnaces				Domestic and commercial furnaces			
	Butane		Propane		Butane		Propane	
	lb/10^3 gal	kg/10^3 liters	lb/10^3 gal	kg/10^3 liters	lb/10^3 gal	kg/10^3 liters	lb/10^3 gal	kg/10^3 liters
Particulates	1.8	0.22	1.7	0.20	1.9	0.23	1.8	0.22
Sulfur oxides[b]	0.09S	0.01S	0.09S	0.01S	0.09S	0.01S	0.09S	0.01S
Carbon monoxide	1.6	0.19	1.5	0.18	2.0	0.24	1.9	0.23
Hydrocarbons	0.3	0.036	0.3	0.036	0.8	0.096	0.7	0.084
Nitrogen oxides[c]	12.1	1.45	11.2	1.35	(8 to 12)[d]	(1.0 to 1.5)[d]	(7 to 11)[d]	(0.8 to 1.3)[d]

[a]LPG emission factors calculated assuming emissions (excluding sulfur oxides) are the same, on a heat input basis, as for natural gas combustion.
[b]S equals sulfur content expressed in grains per 100 ft^3 gas vapor; e.g., if the sulfur content is 0.16 grain per 100 ft^3 (0.366 g/100 m^3) vapor, the SO_2 emission factor would be 0.09 x 0.16 or 0.014 lb SO_2 per 1000 gallons (0.01 x 0.366 or 0.0018 kg $SO_2/10^3$ liters) butane burned.
[c]Expressed as NO_2.
[d]Use lower value for domestic units and higher value for commercial units.

1.6 WOOD/BARK WASTE COMBUSTION IN BOILERS

Revised by Thomas Lahre

1.6.1 General [1-3]

Today, the burning of wood/bark waste in boilers is largely confined to those industries where it is available as a by-product. It is burned both to recover heat energy and to alleviate a potential solid waste disposal problem. Wood/bark waste may include large pieces such as slabs, logs, and bark strips as well as smaller pieces such as ends, shavings, and sawdust. Heating values for this waste range from 8000 to 9000 Btu/lb, on a dry basis; however, because of typical moisture contents of 40 to 75 percent, the as-fired heating values for many wood/bark waste materials range as low as 4000 to 6000 Btu/lb. Generally, bark is the major type of waste burned in pulp mills; whereas, a variable mixture of wood and bark waste, or wood waste alone, is most frequently burned in the lumber, furniture, and plywood industries.

1.6.2 Firing Practices [1-3]

A variety of boiler firing configurations are utilized for burning wood/bark waste. One common type in smaller operations is the Dutch Oven, or extension type of furnace with a flat grate. In this unit the fuel is fed through the furnace roof and burned in a cone-shaped pile on the grate. In many other, generally larger, operations, more conventional boilers have been modified to burn wood/bark waste. These units may include spreader stokers with traveling grates, vibrating grate stokers, etc., as well as tangentially fired or cyclone fired boilers. Generally, an auxiliary fuel is burned in these units to maintain constant steam when the waste fuel supply fluctuates and/or to provide more steam than is possible from the waste supply alone.

1.6.3 Emissions [1,2,4-8]

The major pollutant of concern from wood/bark boilers is particulate matter although other pollutants, particularly carbon monoxide, may be emitted in significant amounts under poor operating conditions. These emissions depend on a number of variables including (1) the composition of the waste fuel burned, (2) the degree of fly-ash reinjection employed, and (3) furnace design and operating conditions.

The composition of wood/bark waste depends largely on the industry from whence it originates. Pulping operations, for instance, produce great quantities of bark that may contain more than 70 percent moisture (by weight) as well as high levels of sand and other noncombustibles. Because of this, bark boilers in pulp mills may emit considerable amounts of particulate matter to the atmosphere unless they are well controlled. On the other hand, some operations such as furniture manufacture, produce a clean, dry (5 to 50 percent moisture) wood waste that results in relatively few particulate emissions when properly burned. Still other operations, such as sawmills, burn a variable mixture of bark and wood waste that results in particulate emissions somewhere in between these two extremes.

Fly-ash reinjection, which is commonly employed in many larger boilers to improve fuel-use efficiency, has a considerable effect on particulate emissions. Because a fraction of the collected fly-ash is reinjected into the boiler, the dust loading from the furnace, and consequently from the collection device, increases significantly per ton of wood waste burned. It is reported that full reinjection can cause a 10-fold increase in the dust loadings of some systems although increases of 1.2 to 2 times are more typical for boilers employing 50 to 100 percent reinjection. A major factor affecting this dust loading increase is the extent to which the sand and other non-combustibles can be successfully separated from the fly-ash before reinjection to the furnace.

Furnace design and operating conditions are particularly important when burning wood and bark waste. For example, because of the high moisture content in this waste, a larger area of refractory surface should be provided to dry the fuel prior to combustion. In addition, sufficient secondary air must be supplied over the fuel bed to burn the volatiles that account for most of the combustible material in the waste. When proper drying conditions

do not exist, or when sufficient secondary air is not available, the combustion temperature is lowered, incomplete combustion occurs, and increased particulate, carbon monoxide, and hydrocarbon emissions will result.

Emission factors for wood waste boilers are presented in Table 1.6-1. For boilers where fly-ash reinjection is employed, two factors are shown: the first represents the dust loading reaching the control equipment; the value in parenthesis represents the dust loading after controls assuming about 80 percent control efficiency. All other factors represent uncontrolled emissions.

Table 1.6-1. EMISSION FACTORS FOR WOOD AND BARK WASTE COMBUSTION IN BOILERS
EMISSION FACTOR RATING: B

Pollutant	Emissions	
	lb/ton	kg/MT
Particulates[a]		
Bark[b,c]		
With fly-ash reinjection[d]	75 (15)	37.5 (7.5)
Without fly-ash reinjection	50	25
Wood/bark mixture[b,e]		
With fly-ash reinjection[d]	45 (9)	22.5 (4.5)
Without fly-ash reinjection	30	15
Wood[f,g]	5-15	2.5-7.5
Sulfur oxides (SO_2)[h,i]	1.5	0.75
Carbon monoxide[j]	2-60	1-30
Hydrocarbons[k]	2-70	1-35
Nitrogen oxides (NO_2)[l]	10	5

[a]These emission factors were determined for boilers burning gas or oil as an auxiliary fuel, and it was assumed all particulates resulted from the waste fuel alone. When coal is burned as an auxiliary fuel, the appropriate emission factor from Table 1.1-2 should be used in addition to the above factor.
[b]These factors based on an as-fired moisture content of 50 percent.
[c]References 2, 4, 9.
[d]This factor represents a typical dust loading reaching the control equipment for boilers employing fly-ash reinjection. The value in parenthesis represents emissions after the control equipment assuming an average efficiency of 80 percent.
[e]References 7, 10.
[f]This waste includes clean, dry (5 to 50 percent moisture) sawdust, shavings, ends, etc., and no bark. For well designed and operated boilers use lower value and higher values for others. This factor is expressed on an as-fired moisture content basis assuming no fly-ash reinjection.
[g]References 11-13.
[h]This factor is calculated by material balance assuming a maximum sulfur content of 0.1 percent in the waste. When auxiliary fuels are burned, the appropriate factors from Tables 1.1-2, 1.3-1, or 1.4-1 should be used in addition to determine sulfur oxide emissions.
[i]References 1, 5, 7.
[j]This factor is based on engineering judgment and limited data from references 11 through 13. Use lower values for well designed and operated boilers.
[k]This factor is based on limited data from references 13 through 15. Use lower values for well designed and operated boilers.
[l]Reference 16.

References for Section 1.6

1. Steam, Its Generation and Use, 37th Ed. New York, Babcock and Wilcox Co., 1963. p. 19-7 to 19-10 and 3-A4.

2. Atmospheric Emissions from the Pulp and Paper Manufacturing Industry. U.S. Environmental Protection Agency, Research Triangle Park, N.C. Publication No. EPA-450/1-73-002. September 1973.

3. C-E Bark Burning Boilers. Combustion Engineering, Inc., Windsor, Connecticut. 1973.

4. Barron, Jr., Alvah. Studies on the Collection of Bark Char Throughout the Industry. TAPPI. *53*(8):1441-1448, August 1970.

5. Kreisinger, Henry. Combustion of Wood-Waste Fuels. Mechanical Engineering. *61*:115-120, February 1939.

6. Magill, P. L. et al. (eds.). Air Pollution Handbook. New York, McGraw-Hill Book Co., 1956. p. 1-15 and 1-16.

7. Air Pollutant Emission Factors. Final Report. Resources Research, Inc., Reston, Virginia. Prepared for U.S. Environmental Protection Agency, Durham, N.C. under Contract No. CPA-22-69-119. April 1970. p. 2-47 to 2-55.

8. Mullen, J. F. A Method for Determining Combustible Loss, Dust Emissions, and Recirculated Refuse for a Solid Fuel Burning System. Combustion Engineering, Inc., Windsor, Connecticut.

9. Source test data from Alan Lindsey, Region IV, U.S. Environmental Protection Agency, Atlanta, Georgia. May 1973.

10. Effenberger, H. K. et al. Control of Hogged-Fuel Boiler Emissions: A Case History. TAPPI. *56*(2):111-115, February 1973.

11. Source test data from the Oregon Department of Environmental Quality, Portland, Oregon. May 1973.

12. Source test data from the Illinois Environmental Protection Agency, Springfield, Illinois. June 1973.

13. Danielson, J. A. (ed.). Air Pollution Engineering Manual. U.S. Department of Health, Education, and Welfare, PHS, National Center for Air Pollution Control, Cincinnati, Ohio. Publication No. 999-AP-40. 1967. p. 436-439.

14. Droege, H. and G. Lee. The Use of Gas Sampling and Analysis for the Evaluation of Teepee Burners. Bureau of Air Sanitation, California Department of Public Health. (Presented at the 7th Conference on Methods in Air Pollution Studies, Los Angeles. January 1967.)

15. Junge, D. C. and R. Kwan. An Investigation of the Chemically Reactive Constituents of Atmospheric Emissions from Hog-Fuel Boilers in Oregon. PNWIS-APCA Paper No. 73-AP-21. November 1973.

16. Galeano, S. F. and K. M. Leopold. A Survey of Emissions of Nitrogen Oxides in the Pulp Mill. TAPPI. *56*(3):74-76, March 1973.

2. SOLID WASTE DISPOSAL

Revised by Robert Rosensteel

As defined in the Solid Waste Disposal Act of 1965, the term "solid waste" means garbage, refuse, and other discarded solid materials, including solid-waste materials resulting from industrial, commercial, and agricultural operations, and from community activities. It includes both combustibles and noncombustibles.

Solid wastes may be classified into four general categories: urban, industrial, mineral, and agricultural. Although urban wastes represent only a relatively small part of the total solid wastes produced, this category has a large potential for air pollution since in heavily populated areas solid waste is often burned to reduce the bulk of material requiring final disposal.[1] The following discussion will be limited to the urban and industrial waste categories.

An average of 5.5 pounds (2.5 kilograms) of urban refuse and garbage is collected per capita per day in the United States.[2] This figure does not include uncollected urban and industrial wastes that are disposed of by other means. Together, uncollected urban and industrial wastes contribute at least 4.5 pounds (2.0 kilograms) per capita per day. The total gives a conservative per capita generation rate of 10 pounds (4.5 kilograms) per day of urban and industrial wastes. Approximately 50 percent of all the urban and industrial waste generated in the United States is burned, using a wide variety of combustion methods with both enclosed and open burning[3]. Atmospheric emissions, both gaseous and particulate, result from refuse disposal operations that use combustion to reduce the quantity of refuse. Emissions from these combustion processes cover a wide range because of their dependence upon the refuse burned, the method of combustion or incineration, and other factors. Because of the large number of variables involved, it is not possible, in general, to delineate when a higher or lower emission factor, or an intermediate value should be used. For this reason, an average emission factor has been presented.

References

1. Solid Waste - It Will Not Go Away. League of Women Voters of the United States. Publication Number 675. April 1971.

2. Black, R.J., H.L. Hickman, Jr., A.J. Klee, A.J. Muchick, and R.D. Vaughan. The National Solid Waste Survey: An Interim Report. Public Health Service, Environmental Control Administration. Rockville, Md. 1968.

3. Nationwide Inventory of Air Pollutant Emissions, 1968. U.S. DHEW, PHS, EHS, National Air Pollution Control Administration. Raleigh, N.C. Publication Number AP-73. August 1970.

2.1 REFUSE INCINERATION

Revised by Robert Rosensteel

2.1.1 Process Description[1-4]

The most common types of incinerators consist of a refractory-lined chamber with a grate upon which refuse is burned. In some newer incinerators water-walled furnaces are used. Combustion products are formed by heating and burning of refuse on the grate. In most cases, since insufficient underfire (undergrate) air is provided to enable complete combustion, additional over-fire air is admitted above the burning waste to promote complete gas-phase combustion. In multiple-chamber incinerators, gases from the primary chamber flow to a small secondary mixing chamber where more air is admitted, and more complete oxidation occurs. As much as 300 percent excess air may be supplied in order to promote oxidation of combustibles. Auxiliary burners are sometimes installed in the mixing chamber to increase the combustion temperature. Many small-size incinerators are single-chamber units in which gases are vented from the primary combustion chamber directly into the exhaust stack. Single-chamber incinerators of this type do not meet modern air pollution codes.

2.1.2 Definitions of Incinerator Categories[1]

No exact definitions of incinerator size categories exist, but for this report the following general categories and descriptions have been selected:

1. *Municipal incinerators* – Multiple-chamber units often have capacities greater than 50 tons (45.3 MT) per day and are usually equipped with automatic charging mechanisms, temperature controls, and movable grate systems. Municipal incinerators are also usually equipped with some type of particulate control device, such as a spray chamber or electrostatic precipitator.

2. *Industrial/commercial incinerators* – The capacities of these units cover a wide range, generally between 50 and 4,000 pounds (22.7 and 1,800 kilograms) per hour. Of either single- or multiple-chamber design, these units are often manually charged and intermittently operated. Some industrial incinerators are similar to municipal incinerators in size and design. Better designed emission control systems include gas-fired afterburners or scrubbing, or both.

3. *Trench Incinerators* – A trench incinerator is designed for the combustion of wastes having relatively high heat content and low ash content. The design of the unit is simple: a U-shaped combustion chamber is formed by the sides and bottom of the pit and air is supplied from nozzles along the top of the pit. The nozzles are directed at an angle below the horizontal to provide a curtain of air across the top of the pit and to provide air for combustion in the pit. The trench incinerator is not as efficient for burning wastes as the municipal multiple-chamber unit, except where careful precautions are taken to use it for disposal of low-ash, high-heat-content refuse, and where special attention is paid to proper operation. Low construction and operating costs have resulted in the use of this incinerator to dispose of materials other than those for which it was originally designed. Emission factors for trench incinerators used to burn three such materials[7] are included in Table 2.1-1.

4. *Domestic incinerators* – This category includes incinerators marketed for residential use. Fairly simple in design, they may have single or multiple chambers and usually are equipped with an auxiliary burner to aid combustion.

Table 2.1-1. EMISSION FACTORS FOR REFUSE INCINERATORS WITHOUT CONTROLS[a]
EMISSION FACTOR RATING: A

Incinerator type	Particulates		Sulfur oxides[b]		Carbon monoxide		Hydrocarbons[c]		Nitrogen oxides[d]	
	lb/ton	kg/MT	lb/ton	kg/MT	lb/ton	kg/MT	lb/ton	kg/MT	lb/ton	kg/MT
Municipal[e]										
Multiple chamber, uncontrolled	30	15	2.5	1.25	35	17.5	1.5	0.75	3	1.5
With settling chamber and water spray system[f]	14	7	2.5	1.25	35	17.5	1.5	0.75	3	1.5
Industrial/commercial										
Multiple chamber[g]	7	3.5	2.5[h]	1.25	10	5	3	1.5	3	1.5
Single chamber[i]	15	7.5	2.5[h]	1.25	20	10	15	7.5	2	1
Trench[j]										
Wood	13	6.5	0.1[k]	0.05	NA[l]	NA	NA	NA	4	2
Rubber tires	138	69	NA	NA	NA	NA	NA	NA	NA	NA
Municipal refuse	37	18.5	2.5[h]	1.25	NA	NA	NA	NA	NA	NA
Controlled air[m]	1.4	0.7	1.5	0.75	Neg	Neg	Neg	Neg	10	5
Flue-fed single chamber[n]	30	15	0.5	0.25	20	10	15	7.5	3	1.5
Flue-fed (modified)[o,p]	6	3	0.5	0.25	10	5	3	1.5	10	5
Domestic single chamber										
Without primary burner[q]	35	17.5	0.5	0.25	300	150	100	50	1	0.5
With primary burner[r]	7	3.5	0.5	0.25	Neg	Neg	2	1	2	1
Pathological[s]	8	4	Neg	Neg	Neg	Neg	Neg	Neg	3	1.5

[a]Average factors given based on EPA procedures for incinerator stack testing.
[b]Expressed as sulfur dioxide.
[c]Expressed as methane.
[d]Expressed as nitrogen dioxide.
[e]References 5 and 8 through 14.
[f]Most municipal incinerators are equipped with at least this much control: see Table 2.1-2 for appropriate efficiencies for other controls.
[g]References 3, 5, 10, 13, and 15.
[h]Based on municipal incinerator data.
[i] References 3, 5, 10, and 15.
[j] Reference 7.
[k]Based on data for wood combustion in conical burners.
[l] Not available.
[m]Reference 9.
[n]References 3, 10, 11, 13, 15, and 16.
[o]With afterburners and draft controls.
[p]References 3, 11, and 15.
[q]References 5 and 10.
[r] Reference 5.
[s] References 3 and 9.

5. *Flue-fed incinerators* – These units, commonly found in large apartment houses, are characterized by the charging method of dropping refuse down the incinerator flue and into the combustion chamber. Modified flue-fed incinerators utilize afterburners and draft controls to improve combustion efficiency and reduce emissions.

6. *Pathological incinerators* – These are incinerators used to dispose of animal remains and other organic material of high moisture content. Generally, these units are in a size range of 50 to 100 pounds (22.7 to 45.4 kilograms) per hour. Wastes are burned on a hearth in the combustion chamber. The units are equipped with combustion controls and afterburners to ensure good combustion and minimal emissions.

7. *Controlled air incinerators* – These units operate on a controlled combustion principle in which the waste is burned in the absence of sufficient oxygen for complete combustion in the main chamber. This process generates a highly combustible gas mixture that is then burned with excess air in a secondary chamber, resulting in efficient combustion. These units are usually equipped with automatic charging mechanisms and are characterized by the high effluent temperatures reached at the exit of the incinerators.

2.1.3 Emissions and Controls[1]

Operating conditions, refuse composition, and basic incinerator design have a pronounced effect on emissions. The manner in which air is supplied to the combustion chamber or chambers has, among all the parameters, the greatest effect on the quantity of particulate emissions. Air may be introduced from beneath the chamber, from the side, or from the top of the combustion area. As underfire air is increased, an increase in fly-ash emissions occurs. Erratic refuse charging causes a disruption of the combustion bed and a subsequent release of large quantities of particulates. Large quantities of uncombusted particulate matter and carbon monoxide are also emitted for an extended period after charging of batch-fed units because of interruptions in the combustion process. In continuously fed units, furnace particulate emissions are strongly dependent upon grate type. The use of rotary kiln and reciprocating grates results in higher particulate emissions than the use of rocking or traveling grates.[14] Emissions of oxides of sulfur are dependent on the sulfur content of the refuse. Carbon monoxide and unburned hydrocarbon emissions may be significant and are caused by poor combustion resulting from improper incinerator design or operating conditions. Nitrogen oxide emissions increase with an increase in the temperature of the combustion zone, an increase in the residence time in the combustion zone before quenching, and an increase in the excess air rates to the point where dilution cooling overcomes the effect of increased oxygen concentration.[14]

Table 2.1-2 lists the relative collection efficiencies of particulate control equipment used for municipal incinerators. This control equipment has little effect on gaseous emissions. Table 2.1-1 summarizes the uncontrolled emission factors for the various types of incinerators previously discussed.

Table 2.1-2. COLLECTION EFFICIENCIES FOR VARIOUS TYPES OF MUNICIPAL INCINERATION PARTICULATE CONTROL SYSTEMS[a]

Type of system	Efficiency, %
Settling chamber	0 to 30
Settling chamber and water spray	30 to 60
Wetted baffles	60
Mechanical collector	30 to 80
Scrubber	80 to 95
Electrostatic precipitator	90 to 96
Fabric filter	97 to 99

[a]References 3, 5, 6, and 17 through 21.

References for Section 2.1

1. Air Pollutant Emission Factors. Final Report. Resources Research Incorporated, Reston, Virginia. Prepared for National Air Pollution Control Administration, Durham, N.C., under Contract Number CPA-22-69-119. April 1970.

2. Control Techniques for Carbon Monoxide Emissions from Stationary Sources. U.S. DHEW, PHS, EHS, National Air Pollution Control Administration. Washington, D.C. Publication Number AP-65. March 1970.

3. Danielson, J.A. (ed.). Air Pollution Engineering Manual. U.S. DHEW, PHS National Center for Air Pollution Control. Cincinnati, Ohio. Publication Number 999-AP-40. 1967. p. 413-503.

4. De Marco, J. et al. Incinerator Guidelines 1969. U.S. DHEW, Public Health Service. Cincinnati, Ohio. SW-13TS. 1969. p. 176.

5. Kanter, C. V., R. G. Lunche, and A.P. Fururich. Techniques for Testing for Air Contaminants from Combustion Sources. J. Air Pol. Control Assoc. *6(4)*:191-199. February 1957.

6. Jens. W. and F.R. Rehm. Municipal Incineration and Air Pollution Control. 1966 National Incinerator Conference, American Society of Mechnical Engineers. New York, May 1966.

7. Burkle, J.O., J. A. Dorsey, and B. T. Riley. The Effects of Operating Variables and Refuse Types on Emissions from a Pilot-Scale Trench Incinerator. Proceedings of the 1968 Incinerator Conference, American Society of Mechanical Engineers. New York. May 1968. p. 34-41.

8. Fernandes, J. H. Incinerator Air Pollution Control. Proceedings of 1968 National Incinerator Conference, American Society of Mechanical Engineers. New York. May 1968. p. 111.

9. Unpublished data on incinerator testing. U.S. DHEW, PHS, EHS, National Air Pollution Control Administration. Durham, N.C. 1970.

10. Stear, J. L. Municipal Incineration: A Review of Literature. Environmental Protection Agency, Office of Air Programs. Research Triangle Park, N.C. OAP Publication Number AP-79. June 1971.

11. Kaiser, E.R. et al. Modifications to Reduce Emissions from a Flue-fed Incinerator. New York University. College of Engineering. Report Number 552.2. June 1959. p. 40 and 49.

12. Unpublished data on incinerator emissions. U.S. DHEW, PHS, Bureau of Solid Waste Management. Cincinnati, Ohio. 1969.

13. Kaiser, E.R. Refuse Reduction Processes in Proceedings of Surgeon General's Conference on Solid Waste Management. Public Health Service. Washington, D.C. PHS Report Number 1729. July 10-20, 1967.

14. Nissen, Walter R. Systems Study of Air Pollution from Municipal Incineration. Arthur D. Little, Inc. Cambridge, Mass. Prepared for National Air Pollution Control Administration, Durham, N.C., under Contract Number CPA-22-69-23. March 1970.

15. Unpublished source test data on incinerators. Resources Research, Incorporated. Reston, Virginia. 1966-1969.

16. Communication between Resources Research, Incorporated, Reston, Virginia, and Maryland State Department of Health, Division of Air Quality Control, Baltimore, Md. 1969.

17. Rehm, F.R. Incinerator Testing and Test Results. J. Air Pol. Control Assoc. *6:*199-204. February 1957.

18. Stenburg, R.L. et al. Field Evaluation of Combustion Air Effects on Atmospheric Emissions from Municipal Incinerations. J. Air Pol. Control Assoc. *12:*83-89. February 1962.

19. Smauder, E.E. Problems of Municipal Incineration. (Presented at First Meeting of Air Pollution Control Association, West Coast Section, Los Angeles, California. March 1957.)

20. Gerstle, R. W. Unpublished data: revision of emission factors based on recent stack tests. U.S. DHEW, PHS, National Center for Air Pollution Control. Cincinnati, Ohio. 1967.

21. A Field Study of Performance of Three Municipal Incinerators. University of California, Berkeley, Technical Bulletin. *6*:41, November 1957.

2.2 AUTOMOBILE BODY INCINERATION

Revised by Robert Rosensteel

2.2.1 Process Description

Auto incinerators consist of a single primary combustion chamber in which one or several partially stripped cars are burned. (Tires are removed.) Approximately 30 to 40 minutes is required to burn two bodies simultaneously.[2] As many as 50 cars per day can be burned in this batch-type operation, depending on the capacity of the incinerator. Continuous operations in which cars are placed on a conveyor belt and passed through a tunnel-type incinerator have capacities of more than 50 cars per 8-hour day.

2.2.2 Emissions and Controls[1]

Both the degree of combustion as determined by the incinerator design and the amount of combustible material left on the car greatly affect emissions. Temperatures on the order of 1200°F (650°C) are reached during auto body incineration.[2] This relatively low combustion temperature is a result of the large incinerator volume needed to contain the bodies as compared with the small quantity of combustible material. The use of overfire air jets in the primary combustion chamber increases combustion efficiency by providing air and increased turbulence.

In an attempt to reduce the various air pollutants produced by this method of burning, some auto incinerators are equipped with emission control devices. Afterburners and low-voltage electrostatic precipitators have been used to reduce particulate emissions; the former also reduces some of the gaseous emissions.[3,4] When afterburners are used to control emissions, the temperature in the secondary combustion chamber should be at least 1500°F (815°C). Lower temperatures result in higher emissions. Emission factors for auto body incinerators are presented in Table 2.2-1.

Table 2.2-1. EMISSION FACTORS FOR AUTO BODY INCINERATION[a]
EMISSION FACTOR RATING: B

Pollutants	Uncontrolled		With afterburner	
	lb/car	kg/car	lb/car	kg/car
Particulates[b]	2	0.9	1.5	0.68
Carbon monoxide[c]	2.5	1.1	Neg	Neg
Hydrocarbons (CH_4)[c]	0.5	0.23	Neg	Neg
Nitrogen oxides (NO_2)[d]	0.1	0.05	0.02	0.01
Aldehydes (HCOH)[d]	0.2	0.09	0.06	0.03
Organic acids (acetic)[d]	0.21	0.10	0.07	0.03

[a]Based on 250 lb (113 kg) of combustible material on stripped car body.
[b]References 2 and 4.
[c]Based on data for open burning and References 2 and 5.
[d]Reference 3.

References for Section 2.2

1. Air Pollutant Emission Factors. Final Report. Resources Research Inc. Reston, Va. Prepared for National Air Pollution Control Administration, Durham, N.C., under Contract Number CPA-22-69-119. April 1970.

2. Kaiser, E.R. and J. Tolcias. Smokeless Burning of Automobile Bodies. J. Air Pol. Control Assoc. *12*:64-73, February 1962.

3. Alpiser, F.M. Air Pollution from Disposal of Junked Autos. Air Engineering. *10*:18-22, November 1968.

4. Private communication with D.F. Walters, U.S. DHEW, PHS, Division of Air Pollution. Cincinnati, Ohio. July 19, 1963.

5. Gerstle, R.W. and D.A. Kemnitz. Atmospheric Emissions from Open Burning. J. Air Pol. Control Assoc. *17*:324-327. May 1967.

2.3 CONICAL BURNERS

2.3.1 Process Description[1]

Conical burners are generally a truncated metal cone with a screened top vent. The charge is placed on a raised grate by either conveyor or bulldozer; however, the use of a conveyor results in more efficient burning. No supplemental fuel is used, but combustion air is often supplemented by underfire air blown into the chamber below the grate and by overfire air introduced through peripheral openings in the shell.

2.3.2 Emissions and Controls

The quantities and types of pollutants released from conical burners are dependent on the composition and moisture content of the charged material, control of combustion air, type of charging system used, and the condition in which the incinerator is maintained. The most critical of these factors seems to be the level of maintenance on the incinerators. It is not uncommon for conical burners to have missing doors and numerous holes in the shell, resulting in excessive combustion air, low temperatures, and, therefore, high emission rates of combustible pollutants.[2]

Particulate control systems have been adapted to conical burners with some success. These control systems include water curtains (wet caps) and water scrubbers. Emission factors for conical burners are shown in Table 2.3-1.

Table 2.3-1. EMISSION FACTORS FOR WASTE INCINERATION IN CONICAL BURNERS WITHOUT CONTROLS[a]
EMISSION FACTOR RATING: B

Type of waste	Particulates		Sulfur oxides		Carbon monoxide		Hydrocarbons		Nitrogen oxides	
	lb/ton	kg/MT	lb/ton	kg/MT	lb/ton	kg/MT	lb/ton	kg/MT	lb/ton	kg/MT
Municipal refuse[b]	20(10 to 60)[c,d]	10	2	1	60	30	20	10	5	2.5
Wood refuse[e]	1[f] 7[g] 20[h]	0.5 3.5 10	0.1	0.05	130	65	11	5.5	1	0.5

[a]Moisture content as fired is approximately 50 percent for wood waste.
[b]Except for particulates, factors are based on comparison with other waste disposal practices.
[c]Use high side of range for intermittent operations charged with a bulldozer.
[d]Based on Reference 3.
[e]References 4 through 9.
[f]Satisfactory operation: properly maintained burner with adjustable underfire air supply and adjustable, tangential overfire air inlets, approximately 500 percent excess air and 700°F (370°C) exit gas temperature.
[g]Unsatisfactory operation: properly maintained burner with radial overfire air supply near bottom of shell, approximately 1200 percent excess air and 400°F (204°C) exit gas temperature.
[h]Very unsatisfactory operation: improperly maintained burner with radial overfire air supply near bottom of shell and many gaping holes in shell, approximately 1500 percent excess air and 400°F (204°C) exit gas temperature.

References for Section 2.3

1. Air Pollutant Emission Factors. Final Report. Resources Research Inc. Reston, Va. Prepared for National Air Pollution Control Administration, Durham, N.C., under Contract Number CPA-22-69-119. April 1970.

2. Kreichelt, T.E. Air Pollution Aspects of Teepee Burners. U.S. DHEW, PHS, Division of Air Pollution. Cincinnati, Ohio. PHS Publication Number 999-AP-28. September 1966.

3. Magill, P.L. and R.W. Benoliel. Air Pollution in Los Angeles County: Contribution of Industrial Products. Ind. Eng. Chem. *44*:1347-1352, June 1952.

4. Private communication with Public Health Service, Bureau of Solid Waste Management, Cincinnati, Ohio. October 31, 1969.

5. Anderson, D.M., J. Lieben, and V.H. Sussman. Pure Air for Pennsylvania. Pennsylvania State Department of Health, Harrisburg. November 1961. p.98.

6. Boubel, R.W. et al. Wood Waste Disposal and Utilization. Engineering Experiment Station, Oregon State University, Corvallis. Bulletin Number 39. June 1958. p.57.

7. Netzley, A.B. and J.E. Williamson. Multiple Chamber Incinerators for Burning Wood Waste. In: Air Pollution Engineering Manual, Danielson, J.A. (ed.). U.S. DHEW, PHS, National Center for Air Pollution Control. Cincinnati, Ohio. PHS Publication Number 999-AP-40. 1967. p.436-445.

8. Droege, H. and G. Lee. The Use of Gas Sampling and Analysis for the Evaluation of Teepee Burners. Bureau of Air Sanitation, California Department of Public Health. (Presented at the 7th Conference on Methods in Air Pollution Studies, Los Angeles. January 1965.)

9. Boubel R.W. Particulate Emissions from Sawmill Waste Burners. Engineering Experiment Station, Oregon State University, Corvallis. Bulletin Number 42. August 1968. p.7,8.

2.4 OPEN BURNING

2.4.1 General[1]

Open burning can be done in open drums or baskets and in large-scale open dumps or pits. Materials commonly disposed of in this manner are municipal waste, auto body components, landscape refuse, agricultural field refuse, wood refuse, and bulky industrial refuse.

2.4.2 Emissions

Ground-level open burning is affected by many variables including wind, ambient temperature, composition and moisture content of the debris burned, size and shape of the debris burned, and compactness of the pile. In general, the relatively low temperatures associated with open burning increase the emission of particulates, carbon monoxide, and hydrocarbons and suppress the emission of nitrogen oxides. Sulfur oxide emissions are a direct function of the sulfur content of the refuse. Emission factors are presented in Table 2.4-1 for the open burning of three broad categories of waste: municipal refuse, automobile components, and horticultural refuse.

Table 2.4-1. EMISSION FACTORS FOR OPEN BURNING
EMISSION FACTOR RATING: B

Pollutant	Municipal refuse[a]	Automobile components[b,c]	Agricultural field burning[d]	Landscape refuse and pruning[d]	Wood[d] refuse
Particulates					
lb/ton	16	100	17	17	17
kg/MT	8	50	8.5	8.5	8.5
Sulfur oxides					
lb/ton	1	Neg	Neg	Neg	Neg
kg/MT	0.5	Neg	Neg	Neg	Neg
Carbon monoxide					
lb/ton	85	125	100	60	50
kg/MT	42.5	62.5	50	30	25
Hydrocarbons (CH_4)					
lb/ton	30	30	20	20	4
kg/MT	15	15	10	10	2
Nitrogen oxides					
lb/ton	6	4	2	2	2
kg/MT	3	2	1	1	1

[a]References 2 through 6.
[b]Upholstery, belts, hoses, and tires burned in common.
[c]Reference 2.
[d]References 2, 5, and 7 through 9.

References for Section 2.4

1. Air Pollutant Emission Factors. Final Report. Resources Research Inc., Reston, Va. Prepared for National Air Pollution Control Administration, Durham, N.C., under Contract Number CPA-22-69-119. April 1970.

2. Gerstle, R.W. and D.A. Kemnitz. Atmospheric Emissions from Open Burning. J. Air Pol. Control Assoc. *12*:324-327. May 1967.

3. Burkle, J.O., J.A. Dorsey, and B.T. Riley. The Effects of Operating Variables and Refuse Types on Emissions from a Pilot-Scale Trench Incinerator. Proceedings of 1968 Incinerator Conference, American Society of Mechanical Engineers. New York. May 1968. p.34-41.

4. Weisburd, M.I. and S.S. Griswold (eds.). Air Pollution Control Field Operations Guide: A Guide for Inspection and Control. U.S. DHEW, PHS, Division of Air Pollution. Washington, D.C. PHS Publication Number 937. 1962.

5. Unpublished data on estimated major air contaminant emissions. State of New York Department of Health. Albany. April 1, 1968.

6. Darley, E.F. et al. Contribution of Burning of Agricultural Wastes to Photochemical Air Pollution. J. Air Pol. Control Assoc. *16*:685-690, December 1966.

7. Feldstein, M. et al. The Contribution of the Open Burning of Land Clearing Debris to Air Pollution. J. Air Pol. Control Assoc. *13*:542-545, November 1963.

8. Boubel, R.W., E.F. Darley, and E.A. Schuck. Emissions from Burning Grass Stubble and Straw. J. Air Pol. Control Assoc. *19*:497-500, July 1969.

9. Waste Problems of Agriculture and Forestry. Environ. Sci. and Tech. *2*:498, July 1968.

2.5 SEWAGE SLUDGE INCINERATION

By Thomas Lahre

2.5.1 Process Description [1-3]

Incineration is becoming an important means of disposal for the increasing amounts of sludge being produced in sewage treatment plants. Incineration has the advantages of both destroying the organic matter present in sludge, leaving only an odorless, sterile ash, as well as reducing the solid mass by about 90 percent. Disadvantages include the remaining, but reduced, waste disposal problem and the potential for air pollution. Sludge incineration systems usually include a sludge pretreatment stage to thicken and dewater the incoming sludge, an incinerator, and some type of air pollution control equipment (commonly wet scrubbers).

The most prevalent types of incinerators are multiple hearth and fluidized bed units. In multiple hearth units the sludge enters the top of the furnace where it is first dried by contact with the hot, rising, combustion gases, and then burned as it moves slowly down through the lower hearths. At the bottom hearth any residual ash is then removed. In fluidized bed reactors, the combustion takes place in a hot, suspended bed of sand with much of the ash residue being swept out with the flue gas. Temperatures in a multiple hearth furnace are 600°F (320°C) in the lower, ash cooling hearth; 1400 to 2000°F (760 to 1100°C) in the central combustion hearths, and 1000 to 1200°F (540 to 650°C) in the upper, drying hearths. Temperatures in a fluidized bed reactor are fairly uniform, from 1250 to 1500°F (680 to 820°C). In both types of furnace an auxiliary fuel may be required either during startup or when the moisture content of the sludge is too high to support combustion.

2.5.2 Emissions and Controls [1,2,4-7]

Because of the violent upwards movement of combustion gases with respect to the burning sludge, particulates are the major emissions problem in both multiple hearth and fluidized bed incinerators. Wet scrubbers are commonly employed for particulate control and can achieve efficiencies ranging from 95 to 99+ percent.

Although dry sludge may contain from 1 to 2 percent sulfur by weight, sulfur oxides are not emitted in significant amounts when sludge burning is compared with many other combustion processes. Similarly, nitrogen oxides, because temperatures during incineration do not exceed 1500°F (820°C) in fluidized bed reactors or 1600 to 2000°F (870 to 1100°C) in multiple hearth units, are not formed in great amounts.

Odors can be a problem in multiple hearth systems as unburned volatiles are given off in the upper, drying hearths, but are readily removed when afterburners are employed. Odors are not generally a problem in fluidized bed units as temperatures are uniformly high enough to provide complete oxidation of the volatile compounds. Odors can also emanate from the pretreatment stages unless the operations are properly enclosed.

Emission factors for sludge incinerators are shown in Table 2.5-1. It should be noted that most sludge incinerators operating today employ some type of scrubber.

Table 2.5-1. EMISSION FACTORS FOR SEWAGE SLUDGE INCINERATORS
EMISSION FACTOR RATING: B

Pollutant	Emissions[a]			
	Uncontrolled[b]		After scrubber	
	lb/ton	kg/MT	lb/ton	kg/MT
Particulate[c]	100	50	3	1.5
Sulfur dioxide[d]	1	0.5	0.8	0.4
Carbon monoxide[e]	Neg	Neg	Neg	Neg
Nitrogen oxides[d] (as NO_2)	6	3	5	2.5
Hydrocarbons[d]	1.5	0.75	1	0.5
Hydrogen chloride gas[d]	1.5	0.75	0.3	0.15

[a]Unit weights in terms of dried sludge.
[b]Estimated from emission factors after scrubbers.
[c]References 6-9.
[d]Reference 8.
[e]References 6, 8.

References for Section 2.5

1. Calaceto, R. R. Advances in Fly Ash Removal with Gas-Scrubbing Devices. Filtration Engineering. *1*(7):12-15, March 1970.

2. Balakrishnam, S. et al. State of the Art Review on Sludge Incineration Practices. U.S. Department of the Interior, Federal Water Quality Administration, Washington, D.C. FWQA-WPC Research Series.

3. Canada's Largest Sludge Incinerators Fired Up and Running. Water and Pollution Control. *107*(1):20-21, 24, January 1969.

4. Calaceto, R. R. Sludge Incinerator Fly Ash Controlled by Cyclonic Scrubber. Public Works. *94*(2):113-114, February 1963.

5. Schuraytz, I. M. et al. Stainless Steel Use in Sludge Incinerator Gas Scrubbers. Public Works. *103*(2):55-57, February 1972.

6. Liao, P. Design Method for Fluidized Bed Sewage Sludge Incinerators. PhD. Thesis. University of Washington, Seattle, Washington, 1972.

7. Source test data supplied by the Detroit Metropolitan Water Department, Detroit, Michigan. 1973.

8. Source test data from Office of Air Quality Planning and Standards, U.S. Environmental Protection Agency, Research Triangle Park, N.C. 1972.

9. Source test data from Dorr-Oliver, Inc., Stamford, Connecticut. 1973.

3. INTERNAL COMBUSTION ENGINE SOURCES

The internal combustion engine in both mobile and stationary applications is a major source of air pollutant emissions. Internal combustion engines were responsible for approximately 73 percent of the carbon monoxide, 56 percent of the hydrocarbons, and 50 percent of the nitrogen oxides (NO_x as NO_2) emitted during 1970 in the United States.[1] These sources, however, are relatively minor contributors of total particulate and sulfur oxides emissions. In 1970, nationwide, internal combustion sources accounted for only about 2.5 percent of the total particulate and 3.4 percent of the sulfur oxides.[1]

The three major uses for internal combustion engines are: to propel highway vehicles, to propel off-highway vehicles, and to provide power from a stationary position. Associated with each of these uses are engine duty cycles that have a profound effect on the resulting air pollutant emissions from the engine. The following sections describe the many applications of internal combustion engines, the engine duty cycles, and the resulting emissions.

DEFINITIONS USED IN CHAPTER 3

Calendar year – a cycle in the Gregorian calendar of 365 or 366 days divided into 12 months beginning with January and ending with December.

Catalytic device – a piece of emission control equipment that is anticipated to be the major component used in post 1974 light-duty vehicles to meet the Federal emission standards.

Crankcase emissions – airborne substance emitted to the atmosphere from any portion of the crankcase ventilation or lubrication systems of a motor vehicle engine.

Deterioration factor – the ratio of the pollutant (p) exhaust emission rate at "x" miles to the pollutant (p) exhaust emission rate at 4000 miles.

Emission factor (highway vehicle) – the emissions of a vehicle (in grams/mile) that result from the product of the low mileage emission rate, the deterioration factor, and the speed adjustment factor.

Emission rate (highway vehicle) – the results (in grams/mile) of an emissions test on the 1975 Federal Test Procedure.

1975 Federal Test Procedure – the Federal motor vehicle emission test as described in the *Federal Register*, Vol. 36, Number 128, July 2, 1971.

Fuel evaporative emissions – vaporized fuel emitted into the atmosphere from the fuel system of a motor vehicle.

Heavy-duty vehicle – a motor vehicle either designated primarily for transportation of property and rated at more than 6000 pounds gross vehicle weight (GVW) or designed primarily for transportation of persons and having a capacity of more than 12 persons.

High-altitude emission rates – substantial changes in emission rates from gasoline-powered vehicles occur as altitude increases. These changes are caused by fuel metering enrichment because of decreasing density. No relationship between mass emissions and altitude has been developed. Tests have been conducted at near sea level and at approximately 5000 feet above sea level, however. Because most major U.S. urban areas at high altitude are close to 5000 feet, an arbitrary value of 3500 and above is used to define high-altitude cities.

Horsepower-hours – a unit of work.

Light-duty vehicle – any motor vehicle either designated primarily for transportation of property and rated at 6000 GVW or less or designated primarily for transportation of persons and having a capacity of 12 persons or less.

Model year – a motor vehicle manufacturer's annual production period. If a manufacturer has no annual production period, the term "model year" means a calendar year.

Model year mix – the distribution of vehicles registered by model year expresses as a fraction of the total vehicle population.

Nitrogen oxides – the sum of the nitric oxide and nitrogen dioxide contaminants in a gas sample expressed as if the nitric oxide were in the form of nitrogen dioxide. All nitrogen oxides values in this chapter are corrected for relative humidity.

Speed adjustment factor – the ratio of the pollutant (p) exhaust emission factor at speed "x" to the pollutant (p) exhaust emission factor as determined by the 1975 Federal Test Procedure (19.6 miles per hour).

Reference

1. Cavender, J., D.S. Kircher, and J.R. Hammerle. Nationwide Air Pollutant Trends (1940-1970). U.S. Environmental Protection Agency, Office of Air and Water Programs. Research Triangle Park, N.C. Publication Number AP-115. April 1973.

3.1 HIGHWAY VEHICLES

by David S. Kircher

Passenger cars and light trucks, heavy-duty trucks, and motorcycles comprise the three main categories of highway vehicles. Within each of these categories, powerplant and fuel variations result in significantly different emission characteristics. For example, passenger cars may be powered by gasoline or diesel fuel or operate on a gaseous fuel such as compressed natural gas (CNG). Similarly, a motorcycle may have either a four-stroke or a two-stroke engine.

Highway vehicle emission factors are presented in two forms in this chapter. Section 3.1.1 contains average emission factors based on statistical information for all major types of highway vehicles combined (i.e. light- and heavy-duty, gasoline-powered vehicles and heavy-duty, diesel-powered vehicles). These values are presented in grams of pollutant per mile traveled (and in grams of pollutant per kilometer). The emission factors given in sections 3.1.2 through 3.1.7 are for individual classes of highway vehicles and their application may require the acquisition of statistical data specific to the area for which emission factors are desired. These additional data may include vehicle registrations by model year and annual vehicle travel in miles or kilometers by vehicle class (e.g. heavy-duty diesels, two-stroke motorcycles, light-duty CNG-powered vehicles, etc.)

It is important to note that highway vehicle emission factors change with time and, therefore, must be calculated for a specific time period, normally 1 calendar year. The major reason for this time dependence is the gradual replacement of vehicles without emission control equipment by vehicles with control equipment.

3.1.1 Average Emission Factors for Highway Vehicles

by David S. Kircher and Charles C. Masser

3.1.1.1 General – Emission factors in this section update emission factors for gasoline-powered motor vehicles presented in the February 1972 *Compilation of Air Pollutant Emission Factors.*[1] These new factors are based on nationwide statistical data for light-duty, gasoline-powered vehicles; heavy-duty, gasoline-powered vehicles; and heavy-duty, diesel-powered vehicles. Average emission factors are intended to assist those individuals interested in compiling approximate emission estimates for large areas, such as an individual state or the nation. The emission factor calculation techniques presented in sections 3.1.2 through 3.1.7 of this chapter are strongly recommended for the formulation of localized emission estimates required for air quality modeling or for the evaluation of air pollutant control strategies.

3.1.1.2 Emissions – Average emission factors by calendar year based on statistical data for the United States are presented in Table 3.1.1-1. These factors were calculated using the techniques described in sections 3.1.2, 3.1.4, and 3.1.5 of this chapter. Because the majority of highway vehicle emissions are produced (on a nationwide basis) by gasoline-powered light-duty vehicles and heavy-duty, gasoline- and diesel-powered vehicles, these are the only vehicles considered in Table 3.1.1-1. The emission contribution from diesel-powered, light-duty vehicles, from gaseous-fuel-powered vehicles, and from motorcycles is assumed to be insignificant for the purpose of developing these approximate factors.

The exhaust emission values presented in Table 3.1.1-1 for carbon monoxide, hydrocarbons, and nitrogen oxides are for an average speed of approximately 19.6 mi/hr (31.5 km/hr). These values can be modified to make them representative of the area for which emission estimates are being prepared, by using the average speed adjustment factors contained in Figure 3.1.1-1. For example, if carbon monoxide emissions in 1970 are to be estimated for a state where the average speed is 35 mi/hr, the appropriate emission factor would be 0.6 times 78 or 47 grams per mile. This value would then be multiplied by the total vehicle miles of travel (VMT) to arrive at a carbon monoxide emission estimate.

Crankcase and evaporative hydrocarbons, particulate, and sulfur oxide emission factors are average values that can be considered independent of speed. Emission estimates for these pollutants are calculated by simply multiplying the VMT by the emission factor.

Note: The emission factor data presented for highway vehicles in this chapter are based on a generalized test cycle that involves operation typical of every-day driving patterns. Because this driving cycle is intended to represent typical driving, it cannot apply in specific instances, i.e. to a particular segment of a particular roadway at a particular time. In order to estimate vehicular emissions under a specific set of conditions, "modal" emission factor data are required. Driving modes include: idle, constant speed, acceleration, and deceleration. Because all driving patterns can be divided into one of these four modes, emissions can be determined by summing the modal emissions for a particular driving pattern.

The Environmental Protection Agency is currently evaluating the use of modal emission data. Emission data for idle, various constant speeds, and various initial and final speeds (accelerations and decelerations) are being collected and analyzed. It is anticipated that these data will be published in Sections 3.1.2 and 3.1.4 in subsequent revisions of this publication. Modal data for light-duty vehicles (Section 3.1.2) will be published during 1973, and data for heavy-duty gasoline vehicles will be published at a later date.

Table 3.1.1-1. AVERAGE EMISSION FACTORS FOR HIGHWAY VEHICLES BASED ON NATIONWIDE STATISTICS[a]

Year	Carbon monoxide		Hydrocarbons				Nitrogen oxides (NO_x as NO_2)		Particulates				Sulfur oxides (SO_2)	
			Exhaust		Crankcase and evaporation				Exhaust		Tire wear			
	g/mi	g/km	g/mi	g/km	g/mi	g/km	g/mi	g/km	g/mi	g/km	g/mi	g/km	g/mi	g/km
1965	89	55	9.2	5.7	5.8	3.6	4.8	3.0	0.38	0.24	0.20	0.12	0.20	0.12
1970	78	48	7.8	4.8	3.9	2.4	5.3	3.3	0.38	0.24	0.20	0.12	0.20	0.12
1971	74	46	7.2	4.5	3.5	2.2	5.4	3.4	0.38	0.24	0.20	0.12	0.20	0.12
1972	68	42	6.6	4.1	2.9	1.8	5.4	3.4	0.38	0.24	0.20	0.12	0.20	0.12
1973	62	39	6.1	3.8	2.4	1.5	5.4	3.4	0.38	0.24	0.20	0.12	0.20	0.12
1974	56	35	5.5	3.4	2.0	1.2	5.2	3.2	0.38	0.24	0.20	0.12	0.20	0.12
1975	50	31	5.0	3.1	1.5	0.93	5.0	3.1	0.38	0.24	0.20	0.12	0.20	0.12
1976	44	27	4.3	2.7	1.3	0.81	4.8	3.0	0.38	0.24	0.20	0.12	0.20	0.12
1977	37	23	3.7	2.3	1.0	0.62	4.3	2.7	0.38	0.24	0.20	0.12	0.20	0.12
1978	31	19	3.2	2.0	0.83	0.52	3.8	2.4	0.38	0.24	0.20	0.12	0.20	0.12
1979	27	17	2.7	1.7	0.67	0.42	3.4	2.1	0.38	0.24	0.20	0.12	0.20	0.12
1980	23	14	2.4	1.5	0.53	0.33	3.1	1.9	0.38	0.24	0.20	0.12	0.20	0.12
1990	12	7.5	1.3	0.81	0.38	0.24	1.8	1.1	0.38	0.24	0.20	0.12	0.20	0.12

[a]Based on sections 3.1.2, 3.1.4, and 3.1.5 and on References 2 through 4.

NOTE: This table reflects interim standards promulgated by the EPA Administrator on April 11, 1973, and in July 1973.

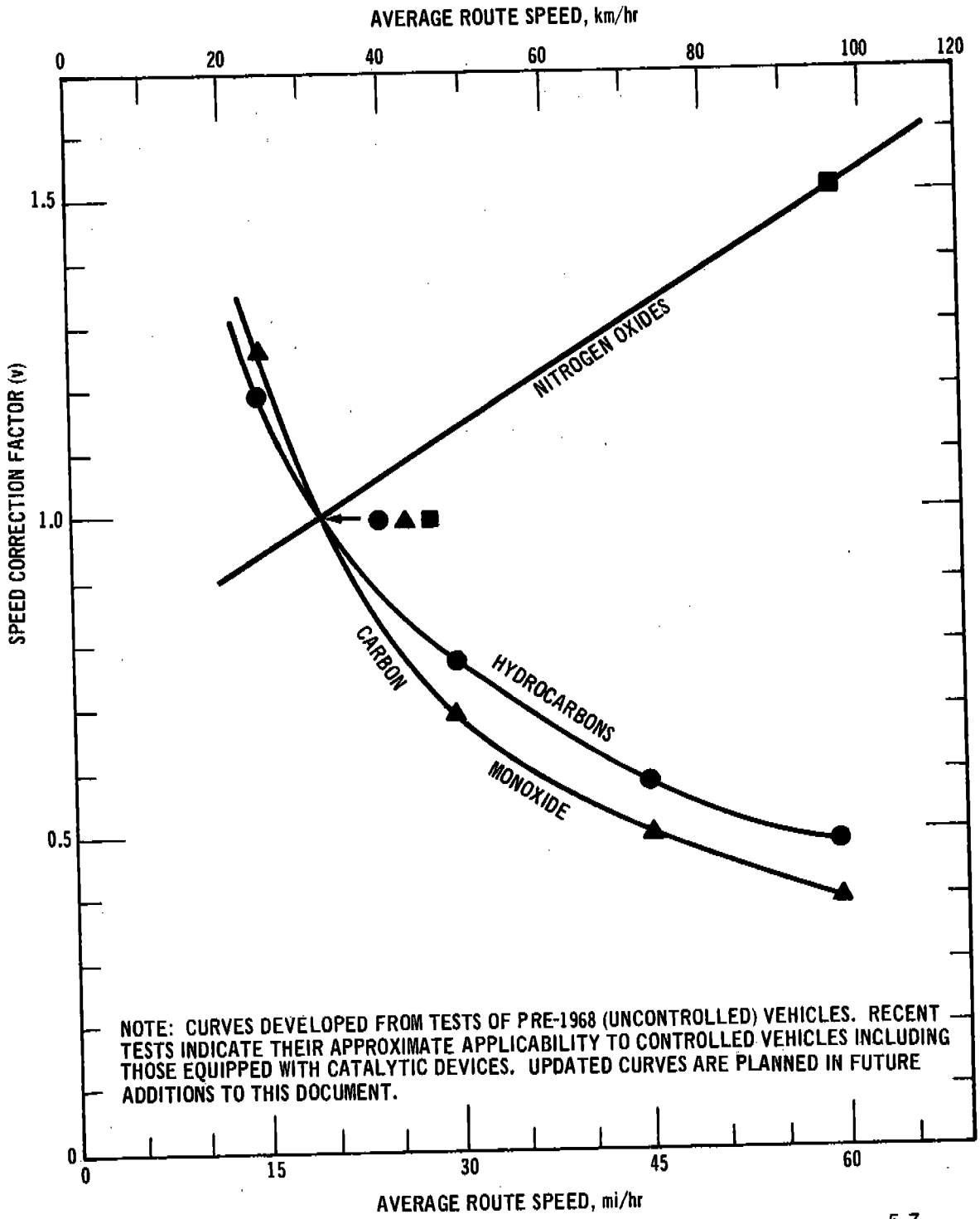

Figure 3.1.1-1. Average speed correction factors for all model years.[5-7]

References for Section 3.1.1

1. Compilation of Air Pollutant Emission Factors. U.S. Environmental Protection Agency, Office of Air Programs. Research Triangle Park, N.C. Publication Number AP-42. February 1972.

2. Highway Statistics 1970. U.S. Department of Transportation, Federal Highway Administration. Washington, D.C. 1971.

3. Census of Transportation – Truck Inventory and Use Survey. U.S. Department of Commerce, Bureau of the Census. Washington, D.C. July 1970.

4. Automotive Facts and Figures. Automobile Manufacturers Association. Washington, D.C. July 1970.

5. McMichael, W.F. and A.H. Rose, Jr. A Comparison of Emissions from Automobiles in Cities at Two Different Altitudes. U.S. Department of Health, Education and Welfare, Public Health Service. Cincinnati, Ohio. July 1965.

6. Study of Emissions from Light-Duty Vehicles in Six Cities. Automotive Environmental Systems Inc. San Bernardino, Calif. Prepared for the Environmental Protection Agency, Research Triangle Park, N.C., under Contract Number 68-04-0042. June 1972.

7. Walsh, M.P., Unpublished data on emissions from a catalyst-equipped light duty vehicle. The City of New York Department of Air Resources, Bureau of Motor Vehicle Pollution Control. New York, N.Y. November 1972.

3.1.2 Light-Duty, Gasoline-Powered Vehicles

by David S. Kircher and Charles C. Masser

3.1.2.1 General – Because of their widespread use, light-duty, gasoline-powered highway vehicles are responsible for a large percentage of the total emissions from highway vehicles on a nationwide as well as on a regionwide basis. The information contained in this section permits the calculation of emission factors for this class of highway vehicles operated in a specific geographic area under study. Section 3.1.1 provided generalized emission factors for all highway vehicles combined; this section provides the information necessary to *calculate* emission factors for one class of vehicles by using the technique outlined below.

3.1.2.2 Carbon Monoxide, Hydrocarbon, and Nitrogen Oxide Emissions The calculation of light-duty vehicle exhaust emission factors for carbon monoxide, hydrocarbons, and nitrogen oxides can be expressed mathematically as:

$$e_{np} = \sum_{i=n-12}^{n+1} c_i \, d_i \, m_i \, s_i \qquad (1)$$

where: e_{np} = Emission factor in grams per vehicle mile for calendar year (n), and pollutant (p)

c_i = The 1975 Federal test procedure emission rate for pollutant (p) in g/mi for the ith model year at low mileage [1,2]

d_i = The controlled vehicle pollutant (p) emission deterioration factor for the ith model year at calendar year (n)

m_i = The weighted annual travel of the ith model year during calendar year (n). The determination of this variable involves the use of the vehicle model year distribution

s_i = The weighted speed adjustment factor for the ith model year vehicles

In addition to exhaust emission factors, the calculation of hydrocarbon emissions from gasoline motor vehicles involves evaporative and crankcase hydrocarbon emission rates. Evaporation and crankcase emissions can be determined using:

$$f_n = \sum_{i=n-12}^{n+1} h_i \, m_i \qquad (2)$$

where: f_n = The combined evaporative and crankcase hydrocarbon emission factor for calendar year (n)

h_i = The combined evaporative and crankcase emission rate for the ith model year

m_i = The weighted annual travel of the ith model year during calendar year (n)

A brief discussion of each of the variables presented in the above equations is necessary to help clarify their formulation and use. These discussions amplify the definitions at the beginning of the chapter.

Test cycle emission rates (c and h). A recent study of light-duty vehicle exhaust emission rates in six cities resulted in the data for 1971 and earlier model years that are presented in Tables 3.1.2-1 and 3.1.2-2.[3] Emission

Table 3.1.2-1. CARBON MONOXIDE, HYDROCARBON, AND NITROGEN OXIDE EMISSION FACTORS FOR LIGHT-DUTY VEHICLES AT LOW AND HIGH ALTITUDE[a]

EMISSION FACTOR RATING: A

Location and pollutant	Exhaust emission factors at low mileage per model year[b]									
	Pre 1968	1968	1969	1970	1971	1972[c]	1973 through 1974[c]	1975[d]	1976[e]	Post 1976[e]
Low altitude (excluding Calif.)										
Carbon monoxide										
g/mi	87	46	39	36	34	19	19	12.5	1.8	1.8
g/km	54	29	24	22	21	12	12	7.8	1.1	1.1
Exhaust hydrocarbons										
g/mi	8.8	4.5	4.4	3.6	2.9	2.7	2.7	1.3	0.23	0.23
g/km	5.5	2.8	2.7	2.2	1.8	1.7	1.7	0.81	0.14	0.14
Nitrogen oxides										
g/mi	3.6	4.3	5.5	5.1	4.8	4.8	2.3	2.2	1.6	0.31
g/km	2.2	2.7	3.4	3.2	3.0	3.0	1.4	1.4	1.0	0.19
High altitude (excluding Calif.)										
Carbon monoxide										
g/mi	130	74	48	72	75	42	42	20	1.8	1.8
g/km	81	46	30	45	47	26	26	12	1.1	1.1
Exhaust hydrocarbons										
g/mi	10	6.0	5.4	6.1	5.3	4.9	4.9	1.8	0.23	0.23
g/km	6.2	3.7	3.4	3.8	3.3	3.0	3.0	1.1	0.14	0.14
Nitrogen oxides										
g/mi	1.9	2.2	2.6	2.8	3.1	3.1	1.4	1.4	1.3	0.31
g/km	1.2	1.4	1.6	1.7	1.9	1.9	0.87	0.87	0.81	0.19

[a] References 2 through 6.
[b] Pre-1968 results are not at low mileage but are arithmetic means of tests of a random sample of vehicles. There is no reason to present low mileage emission rates for pre-1968 vehicles because they are not subject to exhaust control device deterioration.
[c] Estimates based on the relationship of low mileage emissions to standards for 1971 and earlier controlled vehicles.
[d] Based on estimates for the interim emissions standards.
[e] Based on estimates in Reference 6.

NOTE: This table has been revised to reflect interim light duty vehicle standards promulgated by the EPA Administrator.

Table 3.1.2-2. CARBON MONOXIDE, HYDROCARBON, AND NITROGEN OXIDES EMISSION FACTORS FOR LIGHT-DUTY VEHICLES, STATE OF CALIFORNIA ONLY[a]

EMISSION FACTOR RATING: A

Pollutant	Exhaust emission factors at low mileage per model year[b]											
	Pre 1966	1966	1967	1968	1969	1970	1971	1972[c]	1973 through 1974[c]	1975[d]	1976[e]	Post 1976[e]
Carbon monoxide												
g/mi	87	51	50	46	39	36	34	19	19	2.8	1.8	1.8
g/km	54	32	31	29	24	22	21	12	12	1.7	1.1	1.1
Exhaust hydrocarbons												
g/mi	8.8	6.0	4.6	4.5	4.4	3.6	2.9	2.7	2.7	0.33	0.23	0.23
g/km	5.5	3.7	2.9	2.8	2.7	2.2	1.8	1.7	1.7	0.21	0.14	0.14
Nitrogen oxides												
g/mi	3.6	3.4	3.4	4.3	5.5	5.1	3.5	3.5	2.3	1.1	1.1	0.31
g/km	2.2	2.1	2.1	2.7	3.4	3.2	2.2	2.2	1.4	0.68	0.68	0.19

[a] References 2 through 6.
[b] Pre-1968 results are not at low mileage but are arithmetic means of tests of a random sample of vehicles. There is no reason to present low mileage emission rates for pre-1968 vehicles because they are not subject to exhaust control device deterioration.
[c] Estimates based on the relationship of low mileage emissions to standards for 1971 and earlier controlled vehicles.
[d] Based on estimates for the interim emissions standards.
[e] Based on estimates in Reference 5. These are not test results.

NOTE: This table has been revised to reflect interim light duty vehicle standards promulgated by the EPA Administrator.

Table 3.1.2-3. LIGHT-DUTY VEHICLE CRANKCASE AND EVAPORATIVE HYDROCARBON EMISSIONS BY MODEL YEAR FOR ALL AREAS EXCEPT CALIFORNIA[a]
EMISSION FACTOR RATING: C

Model year	Hydrocarbons	
	g/mi	g/km
Pre-1963	7.1	4.4
1963 through 1967	3.8	2.4
1968 through 1970	3.0	1.9
1971	0.5	0.3
1972	0.2	0.1
Post-1972	0.2	0.1

[a] Reference 7.

Table 3.1.2-4. LIGHT-DUTY VEHICLE CRANKCASE AND EVAPORATIVE HYDROCARBON EMISSIONS BY MODEL YEAR FOR CALIFORNIA[a]
EMISSION FACTOR RATING: C

Model year	Hydrocarbons	
	g/mi	g/km
Pre-1961	7.1	4.4
1961 through 1963	3.8	2.4
1964 through 1967	3.0	1.9
1968 through 1969	3.0	1.9
1970 through 1971	0.5	0.3
1972	0.2	0.1
Post- 1972	0.2	0.1

[a] Reference 7.

rates for 1972 and later vehicles in these tables are based primarily on the applicable California and Federal emission standards. These standards were modified to reflect low-mileage emission rates using information provided in the references.[4,5] Reference 4 also provided the information necessary to modify the 1971 and earlier test results to low-mileage emission rates. Evaporative and crankcase hydrocarbon emission values are shown in Tables 3.1.2-3 and 3.1.2-4. Test cycle emission rates are presented for both low and high altitudes (exhaust emissions) and for California and all areas except California (exhaust, evaporative, and crankcase emissions). High-altitude areas are considered separately because of the significant impact altitude has on carbon monoxide, hydrocarbon, and nitrogen oxide exhaust emissions. California is considered separately because emission control standards were implemented there on a different and somewhat more accelerated schedule than were the Federal emission standards.

Deterioration factors (d). Exhaust deterioration factors for emission controlled vehicles by model year and pollutant are presented in Tables 3.1.2-5 and 3.1.2-6. Deterioration factors enable the modification of low mileage emission rates to account for the ageing or deterioration of exhaust emission control devices. The deterioration rates presented were derived primarily from testing done by the California Air Resources Board.[4]

Weighted annual mileage (m). The determination of the weighted annual mileage is best illustrated by the example in Table 3.1.2-7. In this example, the model year distribution as of July 1 (in this case nationwide) is combined with nationwide annual travel by model year, unless localized annual mileages by model year are available. In the calculation of city-specific emission factors, the model year distribution for the area under consideration should be obtained from registration statistics and combined with the annual mileages as in Table 3.1.2-7.

Weighted speed adjustment factor (s). The weighted speed adjustment factor enables the calculation of a region-wide emission factor that takes into account variation in average route speed. This variable is calculated using:

$$s_i = \sum_{j=1}^{n} f_j v_j \qquad (3)$$

where: s_i = The weighted speed adjustment factor for the ith model year

f_j = The fraction of total annual vehicle miles traveled at speed (j)

v_j = The vehicular average speed correction factor for average speed (j)

The values for the vehicular speed adjustment factor (v) are contained in Figure 3.1.1-1.

3.1.2.3 Particulate and Sulfur Oxide Emissions – Light-duty, gasoline-powered vehicles emit relatively small quantities of particulate and sulfur oxides in comparison with the three pollutants discussed above. For this reason, average rather than calculated emission factors should be sufficiently accurate for approximating particulate and sulfur oxide emissions from light-duty, gasoline-powered vehicles. Average emission factors for these pollutants are presented in Table 3.1.2-8. No Federal standards for these two pollutants are presently in effect, although many areas do have opacity (antismoke) regulations applicable to motor vehicles.

Table 3.1.2-5. CARBON MONOXIDE, EXHAUST HYDROCARBON, AND NITROGEN OXIDES DETERIORATION FACTORS (d) FOR LIGHT-DUTY, GASOLINE-POWERED VEHICLES IN ALL AREAS EXCEPT CALIFORNIA[a]

Pollutant and model year	Vehicle age, years									
	0	1	2	3	4	5	6	7	8	≥9
Carbon monoxide										
Pre-1968[b]	1.00	1.00	1.00	1.00	1.00	1.00	1.00	1.00	1.00	1.00
1968	1.00	1.24	1.35	1.41	1.47	1.53	1.58	1.63	1.67	1.72
1969	1.00	1.42	1.53	1.59	1.63	1.68	1.71	1.75	1.79	1.82
1970 through 1974[c]	1.00	1.18	1.32	1.38	1.40	1.44	1.47	1.50	1.51	1.56
1975[d]	1.00	1.04	1.30	1.36	1.43	1.44	1.49	1.56	1.63	1.69
Post-1975[d]	1.00	1.16	1.34	1.50	1.62	1.75	1.88	2.00	2.10	2.22
Exhaust hydrocarbon										
Pre-1968[b]	1.00	1.00	1.00	1.00	1.00	1.00	1.00	1.00	1.00	1.00
1968	1.00	1.12	1.18	1.21	1.23	1.26	1.28	1.30	1.32	1.35
1969	1.00	1.10	1.16	1.18	1.21	1.23	1.25	1.28	1.29	1.31
1970 through 1974[c]	1.00	1.05	1.10	1.13	1.15	1.17	1.20	1.22	1.24	1.26
1975[d]	1.00	1.00	1.13	1.22	1.29	1.37	1.43	1.50	1.56	1.63
Post-1975[d]	1.00	1.14	1.30	1.44	1.55	1.67	1.77	1.88	1.96	2.07
Nitrogen oxides										
Pre-1973[b]	1.00	1.00	1.00	1.00	1.00	1.00	1.00	1.00	1.00	1.00
1973 through 1974[e]	1.00	1.11	1.18	1.20	1.21	1.22	1.23	1.24	1.25	1.26
1975[d]	1.00	1.00	1.18	1.23	1.23	1.41	1.45	1.45	1.45	1.45
1976[d]	1.00	1.03	1.07	1.10	1.13	1.17	1.19	1.21	1.24	1.26
Post-1976[d]	1.00	1.17	1.37	1.53	1.67	1.82	1.94	2.06	2.17	2.32

[a]References 4 and 5.

[b] Values of unity are given for Pre-1968 vehicles because they were not equipped with exhaust control devices and, therefore, are not subject to exhaust control device deterioration. Deterioration in the emission performance of pre-1968 vehicles because of poor maintenance, age, etc., is taken into account by their emission factors, which are based on a random sample of vehicles.

[c] Based on test results for 1970 model year vehicles.

[d]Based on Reference 5 and on unpublished EPA test data. Deterioration factors based on tests of prototype 1976-1977 model year vehicles.

[e] Based on test results for 1971 (California) model year vehicles.

Table 3.1.2-6. CARBON MONOXIDE, EXHAUST HYDROCARBON, AND NITROGEN OXIDES DETERIORATION FACTORS (d) FOR LIGHT-DUTY, GASOLINE-POWERED VEHICLES IN CALIFORNIA[a]

Pollutant and model year	Vehicle age, years									
	0	1	2	3	4	5	6	7	8	≥9
Carbon monoxide										
Pre-1966[b]	1.00	1.00	1.00	1.00	1.00	1.00	1.00	1.00	1.00	1.00
1966	1.00	1.13	1.21	1.24	1.25	1.28	1.29	1.31	1.32	1.34
1967	1.00	1.11	1.18	1.23	1.29	1.35	1.40	1.46	1.50	1.56
1968	1.00	1.24	1.35	1.41	1.47	1.53	1.58	1.63	1.67	1.72
1969	1.00	1.42	1.53	1.59	1.63	1.68	1.71	1.75	1.79	1.82
1970 through 1974[c]	1.00	1.18	1.32	1.38	1.40	1.44	1.47	1.50	1.51	1.56
Post-1974[d]	1.00	1.16	1.34	1.50	1.62	1.75	1.88	2.00	2.10	2.22
Hydrocarbon										
Pre-1966[b]	1.00	1.00	1.00	1.00	1.00	1.00	1.00	1.00	1.00	1.00
1966	1.00	1.14	1.22	1.25	1.27	1.29	1.30	1.32	1.35	1.35
1967	1.00	1.07	1.10	1.12	1.14	1.15	1.17	1.18	1.20	1.21
1968	1.00	1.12	1.18	1.21	1.23	1.26	1.28	1.30	1.32	1.35
1969	1.00	1.10	1.16	1.18	1.21	1.23	1.25	1.28	1.29	1.31
1970 through 1974[c]	1.00	1.05	1.10	1.13	1.15	1.17	1.20	1.22	1.24	1.26
Post-1974[a]	1.00	1.14	1.30	1.44	1.55	1.67	1.77	1.88	1.96	2.07
Nitrogen oxides										
Pre-1970[b]	1.00	1.00	1.00	1.00	1.00	1.00	1.00	1.00	1.00	1.00
1971 through 1974[e]	1.00	1.11	1.18	1.20	1.21	1.22	1.23	1.24	1.25	1.26
1975[d]	1.00	1.03	1.07	1.10	1.13	1.17	1.19	1.21	1.24	1.26
1976d	1.00	1.03	1.07	1.10	1.13	1.17	1.19	1.21	1.24	1.26
Post-1976[d]	1.00	1.17	1.37	1.53	1.67	1.82	1.94	2.06	2.17	2.32

[a] References 4 and 5.

[b] Values of unity are given for these model years because the vehicles were not equipped with exhaust control devices and, therefore, are not subject to exhaust control device deterioration. Deterioration in the emission performance of these vehicles because of poor maintenance, age, etc., is taken into account by their emission factors, which are based on a random sample of vehicles.

[c] Based on test results for 1970 model year vehicles.

[d] Based on Reference 5 and on unpublished EPA test data. Deterioration factors based on tests of prototype 1975-1976 model year vehicles.

[e] Based on test results for 1971 (California) model year vehicles.

Table 3.1.2-7. SAMPLE CALCULATION OF WEIGHTED LIGHT-DUTY VEHICLE ANNUAL TRAVEL[a]

Age, years	Fraction of total vehicles in use nationwide (a)[b]	Average annual miles driven (b)[c]	a x b	Annual travel (m)[d]
0[e]	0.000	15,900	0	0.000
1	0.078	15,900	1,240	0.107
2	0.116	15,000	1,740	0.151
3	0.110	14,000	1,540	0.133
4	0.098	13,100	1,284	0.111
5	0.106	12,200	1,293	0.112
6	0.106	11,300	1,198	0.104
7	0.088	10,300	906	0.078
8	0.078	9,400	733	0.063
9	0.063	8,500	536	0.046
10	0.041	7,600	312	0.027
11	0.035	6,700	235	0.020
12	0.021	6,700	141	0.012
≥13	0.060	6,700	402	0.036

[a]References 8 and 9.
[b]These data are for July 1, 1970, from Reference 8 and represent the U.S. population of light-duty vehicles by model year.
[c]Mileage values are the results of at least squares analysis of data in Reference 9.
[d] $m = \frac{ab}{\Sigma ab}$.
[e]Refers to "next" year's models introduced in the fall.

Table 3.1.2-8. PARTICULATE AND SULFUR OXIDES EMISSION FACTORS FOR LIGHT-DUTY, GASOLINE-POWERED VEHICLES
EMISSION FACTOR RATING: C

Pollutant	Emissions	
	g/mi	g/km
Particulate[a]		
Exhaust	0.34	0.21
Tire wear	0.20	0.12
Sulfur oxides[b] (SO_x as SO_2)	0.13	0.08

[a]References 10, 11, and 12.
[b]Based on an average fuel consumption of 13.6 mi/gal (5.8 km/liter) from Reference 8 and on the use of a fuel with a 0.032 percent sulfur content from References 13 through 15, and a density of 6.1 lb/gal (0.73 kg/liter) from References 13 and 14

References for Section 3.1.2

1. Control of Air Pollution from New Motor Vehicles and New Motor Vehicle Engines. Federal Register. Part II. *35*(219):17288-17313, November 10, 1970.

2. Exhaust Emission Standards and Test Procedures. Federal Register. Part II. *36*(128):12652-12664. July 2, 1971.

3. Study of Emissions from Light-Duty Vehicles in Six Cities. Automotive Environmental Systems, Inc. San Bernardino, Calif. Prepared for the Environmental Protection Agency, Research Triangle Park, N. C., under Contract Number 68-04-0042. June 1972.

4. Hocker, A.J. Exhaust Emissions from Privately Owned 1966-70 California Automobiles - A Statistical Evaluation of Surveillance Data. California Air Resources Laboratory. Los Angeles, Calif. July 1971.

5. Semiannual Report by the Committee on Motor Vehicle Emissions of the National Academy of Sciences to the Environmental Protection Agency. National Academy of Sciences. Washington, D.C. January 1972.

6. McMichael, W.F. and A.H. Rose, Jr. A Comparison of Emissions from Automobiles in Cities at Two Different Altitudes. U.S. Department of Health, Education and Welfare, Public Health Service. Cincinnati, Ohio. July 1965.

7. Sigworth, H.W., Jr. Estimates of Motor Vehicle Emission Rates. Internal document Environmental Protection Agency, Research Triangle Park, N.C. March 1971.

8. Automobile Facts and Figures. Automobile Manufacturers Association. Washington, D.C. 1971.

9. Strate, H.E. Nationwide Personal Transportation Study - Annual Miles of Automobile Travel. Report Number 2. U.S. Department of Transportation, Federal Highway Administration. Washington, D.C. April 1972.

10. Control Techniques for Particulate Air Pollutants. U.S. Department of Health, Education and Welfare. National Air Pollution Control Administration. Washington, D.C. Publication Number AP-51, January 1969.

11. Ter Haar, G.L., D.L. Lenare, J.N. Hu, and M. Brandt. Composition, Size and Control of Automotive Exhaust Particulates. J. Air Pol. Control Assoc. *22*:39-46, January 1972.

12. Subramani, J.P. Particulate Air Pollution from Automobile Tire Tread Wear. Ph.D. Dissertation. University of Cincinnati. Cincinnati, Ohio. May 1971.

13. Shelton, E.M. and C.M. McKinney. Motor Gasolines, Winter 1970-1971. U.S. Department of the Interior, Bureau of Mines. Bartlesville, Okla. June 1971.

14. Shelton, E.M. Motor Gasolines, Summer 1971. U.S. Department of the Interior, Bureau of Mines. Bartlesville, Okla. January 1972.

15. Automotive Fuels and Air Pollution. U.S. Department of Commerce Report of the Panel on Automotive Fuels and Air Pollution. Washington, D.C. March 1971.

3.1.3 Light-Duty, Diesel-Powered Vehicles

by David S. Kircher

3.1.3.1 General – In comparison with the conventional, "uncontrolled," gasoline-powered, spark-ignited, automotive engine, the uncontrolled diesel automotive engine is a low pollution powerplant. In its uncontrolled form, the diesel engine emits (in grams per mile) considerably less carbon monoxide and hydrocarbons and somewhat less nitrogen oxides than a comparable uncontrolled gasoline engine. A relatively small number of light-duty diesels are in use in the United States.

3.1.3.2 Emissions – Carbon monoxide, hydrocarbons, and nitrogen oxides emission factors for the light-duty, diesel-powered vehicle are shown in Table 3.1.3-1. These factors are based on tests of several Mercedes 220D automobiles using a slightly modified version of the Federal light-duty vehicle test procedure.[1,2] Available automotive diesel test data are limited to these results. No data are available on emissions versus average speed nor are data available for deterioration of 1976 and later controlled diesels. Emissions from light-duty diesel vehicles during a calendar year (n) and for a pollutant (p) can be approximately calculated using:

$$e_{np} = \sum_{i=n-12}^{n+1} c_i f_i \qquad (1)$$

where: e_{np} = Emission factor in grams per vehicle mile for calendar year (n) and pollutant (p)

c_i = The 1975 Federal test procedure emission rate for pollutant (p) in grams/mile for the ith model year at calendar year (n) (Table 3.1.3-1)

f_i = The fraction of total light-duty diesel vehicle miles driven by the ith model year diesel light-duty vehicles

Details of this calculation technique are discussed in section 3.1.2.

The emission factors in Table 3.1.3-1 for particulates and sulfur oxides were developed using an average sulfur content fuel in the case of sulfur oxides and the Dow Measuring Procedure on the 1975 Federal test cycle for particulate.[1,6]

Table 3.1.3-1. EMISSION FACTORS FOR LIGHT-DUTY, DIESEL-POWERED VEHICLES
EMISSION FACTOR RATING: B

Pollutant	Model years			
	≤ 1975		≥ 1976	
	g/mi	g/km	g/mi	g/km
Carbon monoxide[a]	1.7	1.1	1.7	1.1
Exhaust hydrocarbons	0.45	0.28	0.45	0.28
Nitrogen oxides[a,b] (NO_x as NO_2)	1.6	0.99	0.40	0.25
Particulate[c]	0.73	0.45	0.73	0.45
Sulfur oxides[d]	0.63	0.39	0.63	0.39

[a] Estimates are arithmetic mean of tests of vehicles, References 3 through 5.
[b] Nitrogen oxides estimate for 1976 based on emission standard, Reference 2.
[c] Reference 4.
[d] Calculated using the fuel consumption rate reported in Reference 6 and assuming the use of a diesel fuel containing 0.20 percent sulfur.

References for Section 3.1.3

1. Exhaust Emission Standards and Test Procedures. Federal Register. Part II. *36*(128): 12652-12664, July 2, 1971.

2. Control of Air Pollution from Light Duty Diesel Motor Vehicles. Federal Register. Part II. *37*(193): 20914-20923, October 4, 1972.

3. Springer, K.J. Emissions from a Gasoline - and Diesel-Powered Mercedes 220 Passenger Car. Southwest Research Institute. San Antonio, Texas. Prepared for the Environmental Protection Agency, Research Triangle Park, N.C., under Contract Number CPA 70-44. June 1971.

4. Ashby, H.A. Final Report: Exhaust Emissions from a Mercedes-Benz Diesel Sedan. Environmental Protection Agency. Ann Arbor, Mich. July 1972.

5. Test Results from the Last 9 Months – MB220D. Mercedes-Benz of North America. Fort Lee, New Jersey. Report E1 0472. March 1972.

6. Hare, C.T. and K.J. Springer. Evaluation of the Federal Clean Car Incentive Program Vehicle Test Plan. Southwest Research Institute. San Antonio, Texas. Prepared for Weiner Associates, Incorporated., Cockeysville, Md. October 1971.

3.1.4 Heavy-Duty, Gasoline-Powered Vehicles

by David S. Kircher

3.1.4.1 General – Heavy-duty, gasoline-powered highway vehicles, are, because of their lesser numbers, not as great an air pollutant source as light-duty gasoline-powered highway vehicles. Heavy-duty vehicles are driven on the same roadways as light-duty vehicles; therefore, their emission characteristics are somewhat similar. The information provided in this section allows the separate calculation of an emission factor for this weight class of highway vehicles. The quantities presented in section 3.1.1 are for all major highway vehicles based on nationwide statistics including this category.

3.1.4.2 Carbon Monoxide, Hydrocarbon, and Nitrogen Oxides Emissions – The calculation of heavy-duty, gasoline-powered exhaust emission factors can be accomplished using:

$$e_{np} = \sum_{i=n-12}^{n+1} c_i \, d_i \, m_i \, s_i \qquad (1)$$

where: e_{np} = Emission factor in grams per vehicle mile (g/km) for calendar year (n) and pollutant (p)

c_i = The test procedure emission rate (Table 3.1.4-1) for pollutant (p) in g/mi for the ith model year, at low mileage

d_i = The controlled vehicle pollutant (p) emission deterioration factor for the ith model year at calendar year (n)

m_i = The weighted annual travel of the ith model year vehicles during calendar year (n). The determination of this variable involves the use of the vehicle year distribution

s_i = The weighted speed adjustment factors for the ith model year vehicles

In addition to exhaust emission factors, the calculation of evaporative and crankcase hydrocarbon emissions are determined using:

$$f_n = \sum_{i=n-12}^{n+1} h_i \, m_i \qquad (2)$$

where: f_n = The combined evaporative and crankcase hydrocarbon emission factor for calendar year (n)

h_i = The combined evaporative and crankcase hydrocarbon emission rate for the ith model year. Emission factors for this source are: pre 1968, 8.2 g/mi (5.1 g/km); and 1968 and later vehicles, 3.0 g/mi (1.9 g/km). In California: 1964-1972, 3.0 g/mi (1.9 g/km); post-1972, 0.2 g/mi (0.1 g/km).

m_i = The weighted annual travel of the ith model year vehicle during calendar year (n)

A brief discussion of the variables presented in the above equations is necessary to help clarify their formulation and use. The following paragraphs further describe the variables c_i, d_i, m_i, s_i, and h_i, as they apply to heavy-duty gasoline vehicles.

Test procedure emission rate (c). The emission rates listed in Table 3.1.4-1 for all areas except high altitude and California are based on dynamometer test results, on-the-road emission sampling, and emission standards.[1] Mass emission results based on a dynamometer test cycle that simulates on-the-road operation were used to obtain the emission rates for pre 1970 vehicles. Vehicles covered by the 1970 emission standards for heavy-duty gasoline vehicles[8] were tested using both an on-the-road and a dynamometer test procedure. The results of these tests were combined to give the emission rates reported for 1970 through 1973 heavy-duty vehicles. Mass emission rates for 1974 and later heavy-duty vehicles are based on the applicable Federal emission standards.[5] High altitude emission rates (Table 3.1.4-1) were calculated from the values for all areas except high altitude listed in Table 3.1.4-1 using the relationship between high- and low-altitude light-duty vehicle emission rates.[9] California emission rates also shown in Table 3.1.4-1 were calculated from California State emission standards.

Deterioration factors (d). Because of the lack of actual heavy-duty deterioration information, light-duty deterioration data must be used for controlled heavy-duty vehicles. Actual mass emission reductions on vehicles meeting the 1970 emission standards have generally proven to be very small. For this reason deterioration factors on these vehicles seem unnecessary. It is anticipated that this will also be the case for 1974 and later non-California vehicles. The emission reduction on 1975 and later, heavy-duty vehicles in California is more substantial; therefore, the heavy-duty vehicle emission deterioration factors (Table 3.1.4-2) should be used.

Weighted annual mileage (m). The determination of this variable is illustrated in Table 3.1.4-3. For purposes of this illustration, nationwide statistics have been used. Localized data should be substituted when calculating the variable (m) for a specific area under study.

Weighted speed adjustment factor (s). Again, as with deterioration information, data based on tests of heavy-duty emissions versus average speed are unavailable. The variable (s) is calculated using:

$$s_i = \sum_{j=1}^{n} f_j v_j \qquad (3)$$

where: s_i = The weighted speed adjustment factor for the ith model year from Figure 3.1.1-1

f_j = The fraction of the total annual vehicle miles traveled at speed (j)

v_j = The vehicular average speed correction factor for average speed (j)

3.1.4.3 Sulfur Oxide and Particulate Emissions – Sulfur oxide and particulate emission factors for all model year heavy-duty vehicles are presented in Table 3.1.4-4. Sulfur oxides factors are based on fuel sulfur content and fuel consumption. Tire-wear particulate factors are based on automobile test results, a premise necessary because of the lack of data. Truck tire wear is likely to result in greater particulate emission than automobiles because of larger tires, heavier loads on tires, and more tires per vehicle.

Table 3.1.4-1. HEAVY-DUTY, GASOLINE-POWERED VEHICLE EXHAUST EMISSION FACTORS FOR CARBON MONOXIDE, HYDROCARBONS, AND NITROGEN OXIDES
EMISSION FACTOR RATING: B

Location	Model year	Carbon monoxide		Exhaust hydrocarbons		Nitrogen oxides	
		g/mi	g/km	g/mi	g/km	g/mi	g/km
All areas except high altitude and California	Pre-1970[a]	140	87	17	11	9.4	5.8
	1970 through 1973[b]	130	81	16	9.9	9.2	5.7
	Post-1973[c]	130	81	13	8.1	9.2	5.7
High altitude only[d]	Pre-1970[a]	210	130	19	12	5.0	3.1
	1970 through 1973[b]	190	120	18	11	4.9	3.0
	Post-1973[c]	190	120	15	9.3	4.9	3.0
California only	Pre-1970[a]	140	87	17	11	9.4	5.8
	1970 through 1971[b]	130	81	16	9.9	9.2	5.7
	1972[e]	130	81	13	8.1	9.2	5.7
	1973 through 1974[c]	130	81	13	8.1	9.2	5.7
	1975[e]	81	50	4.1	2.5	2.8	1.7

[a]Data from References 1 through 3.
[b]Data from References 1 through 7.
[c]References 5 and 7.
[d]Based on light-duty emissions at high altitude compared with light-duty emissions at low altitude.
[e]Based on applicable emission standards and Reference 7. These are low mileage emission rates.

Table 3.1.4-2. EXHAUST EMISSION DETERIORATION FACTORS FOR HEAVY-DUTY, GASOLINE-POWERED VEHICLES (CALIFORNIA ONLY), 1975 AND LATER MODELS[a]

Pollutant	Vehicle age, years									
	0	1	2	3	4	5	6	7	8	≥9
Carbon monoxide	1.00	1.24	1.35	1.43	1.50	1.57	1.63	1.69	1.73	1.77
Hydrocarbon	1.00	1.12	1.18	1.22	1.25	1.28	1.30	1.33	1.36	1.38
Nitrogen oxides (NO_x as NO_2)	1.00	1.11	1.18	1.20	1.22	1.23	1.24	1.25	1.27	1.28

[a]Reference 10. The deterioration factor for all non-California and pre-1975 California heavy-duty vehicles is 1.00 regardless of age. These values apply to all 1975 and later California heavy-duty vehicles.

Table 3.1.4-3. SAMPLE CALCULATION OF WEIGHTED HEAVY-DUTY VEHICLE ANNUAL TRAVEL

Age, years	Fraction of total vehicles in use nationwide (a)[a]	Average annual miles driven (b)[b]	a x b	Annual travel (m)[c]
0	0.000	17,200	0	0.000
1	0.071	17,200	1,221	0.107
2	0.106	17,200	1,823	0.159
3	0.087	15,800	1,375	0.120
4	0.081	15,800	1,280	0.112
5	0.084	13,000	1,090	0.095
6	0.076	13,000	988	0.086
7	0.065	11,000	715	0.062
8	0.055	11,000	605	0.052
9	0.047	9,000	423	0.037
10	0.035	9,000	315	0.028
11	0.037	5,500	204	0.018
12	0.033	5,500	182	0.016
≥13	0.223	5,500	1,226	0.108

[a] Vehicles in use by model year as of July 1, 1970 (Reference 11).
[b] Reference 12.

[c] $m = \frac{ab}{\Sigma ab}$.

Table 3.1.4-4. SULFUR OXIDES AND PARTICULATE EMISSION FACTORS FOR HEAVY-DUTY, GASOLINE-POWERED VEHICLES EMISSION FACTOR RATING: B

Pollutant	Emissions g/mi	Emissions g/km
Particulate		
Exhaust[a]	0.65	0.40
Tire wear[b]	0.20	0.12
Sulfur oxides[c] (SO_x as SO_2)	0.26	0.16

[a] Calculated from the Reference 13 value of 12 lb/10^3 gal (1.46 g/liter) gasoline. An 8.4 mi/gal (3.6 km/liter) value from Reference 11 was used to convert to a per mile emission factor.
[b] Reference 14. The data from this reference are for passenger cars. In the absence of specific data for heavy-duty vehicles, they are assumed to be representative of truck-tire-wear particulate.
[c] Based on an average fuel consumption of 8.4 mi/gal (3.6 km/liter) from Reference 11 on a 0.04 percent sulfur content from References 15 and 16, and on a density of 6.1 lb/gal (0.73 kg/liter) from References 15 and 16.

References for Section 3.1.4

1. Exhaust Emission Analysis and Mode Cycle Development for Gasoline-Powered Trucks. Ethyl Corporation. Ferndale, Mich. Prepared for the U.S. Public Health Service, Washington, D.C., under Contract Number PH 86-66-150. September 1967.

2. Springer, K.J. An Investigation of Emissions from Trucks above 6,000 lb GVW Powered by Spark-Ignited Engines. Southwest Research Institute. San Antonio, Texas. Prepared for the U.S. Public Health Service, Washington, D.C., under Contract Number PH 86-67-72. March 1969.

3. In-House Surveillance Program of Heavy Duty Gasoline Vehicles between 6,000-lb GVW and 10,000-lb GVW. U.S. Environmental Protection Agency. Ann Arbor, Mich. November 1972.

4. Ingalls, M.N. and K.J. Springer. Monthly Progress Report Number 28-Surveillance Study of Control Equipped Heavy-Duty Gasoline-Powered Vehicles. Southwestern Research Institute. San Antonio, Texas. Prepared for the Environmental Protection Agency, Research Triangle Park, N.C., under Contract Number EHA 70-113. November 1972.

5. Control of Air Pollution from New Motor Vehicles and Engines. Heavy Duty Engines. Federal Register. Part II. *37*(175): 18262-18270, September, 8, 1972.

6. Springer, K.J. and M.N. Ingalls. Mass Emissions from Trucks above 6,000-lb GVW-Gasoline Fueled. Southwest Research Institute. San Antonio, Texas. Prepared for the Environmental Protection Agency, Research Triangle Park, N.C., under Contract Number EHS 70-113. August 1972.

7. Sigworth, H.W., Jr. Estimates of Motor Vehicle Emission Rates. Internal document U.S. Environmental Protection Agency. Research Triangle Park, N.C. March 1971.

8. Control of Air Pollution from New Motor Vehicles and New Motor Vehicle Engines. Federal Register. Part II. *33*(108):8304-8324, June 4, 1968.

9. Study of Emissions from Light-Duty Vehicles in Six Cities. Automotive Environmental Systems, Inc. San Bernardino, Calif. Prepared for the Environmental Protection Agency, Research Triangle Park, N. C., under Contract Number 68-04-0042. June 1972.

10. Hocker, A.J. Exhaust Emission from Privately Owned 1966-1970 California Automobiles – A Statistical Evaluation of Surveillance Data. California Air Resources Laboratory. Los Angeles, Calif. July 1971.

11. 1971 Motor Truck Facts. Automobile Manufacturers Association. Washington, D.C. 1972.

12. 1967 Census of Transportation. Truck Inventory and Use Survey. U.S. Department of Commerce, Bureau of the Census. Washington, D.C. July 1970.

13. Control Techniques for Particulate Air Pollutants. U.S. DHEW, National Air Pollution Control Administration. Washington, D.C. Publication Number AP-51. January 1969.

14. Subramani, J.P. Particulate Air Pollution form Automobile Tire Tread Wear. Ph.D. Dissertation. University of Cincinnati, Cincinnati. Ohio. May 1971.

15. Shelton, E.M. and C.M. McKinney. Motor Gasolines, Winter 1970-1971. U.S. Department of the Interior, Bureau of Mines. Bartlesville, Okla. June 1971.

16. Shelton, E.M. Motor Gasolines, Summer 1971. U.S. Department of the Interior, Bureau of Mines. Bartlesville, Okla. January 1972.

3.1.5 Heavy-Duty, Diesel-Powered Vehicles

Revised by Michael J. McGraw and David S. Kircher

3.1.5.1 General[1,2] – On the highway, heavy-duty diesel engines are primarily used in trucks and buses. Diesel engines in any application demonstrate operating principles that are significantly different from those of the gasoline engine.

3.1.5.2 Emissions – Diesel trucks and buses emit pollutants from the same sources as gasoline-powered vehicles: exhaust, crankcase blow-by, and fuel evaporation. Blow-by is practically eliminated in the diesel because only air is in the cylinder during the compression stroke. The low volatility of diesel fuel along with the use of closed injection systems essentially eliminates evaporation losses in diesel systems.

Exhaust emissions from diesel engines have the same general characteristics of auto exhausts. Concentrations of some of the pollutants, however, may vary considerably. Emissions of sulfur dioxide are a direct function of the fuel composition. Thus, because of the higher average sulfur content of diesel fuel (0.20 percent S) as compared with gasoline (0.035 percent S), sulfur dioxide emissions are relatively higher from diesel exhausts.[3,4]

Because diesel engines allow more complete combustion and use less volatile fuels than spark-ignited engines, their hydrocarbon and carbon monoxide emissions are relatively low. Because hydrocarbons in diesel exhaust are largely unburned diesel fuel, their emissions are related to the volume of fuel sprayed into the combustion chamber. New, improved needle valve injectors that reduce the amount of fuel that can be burned can reduce hydrocarbon emissions by as much as 50 percent.[5] Both the high temperatures and the large excesses of oxygen involved in diesel combustion are conducive to high nitrogen oxide emission, however.[6]

Particulates from diesel exhaust are in two major forms – black smoke and white smoke. White smoke is emitted when the fuel droplets are kept cool in an environment abundant in oxygen (cold starts). Black smoke is emitted when the fuel droplets are subjected to high temperatures in an environment lacking in oxygen (road conditions). A hot diesel engine properly adjusted and operated under design loads should emit no visible "smoke."

Emission factors for heavy-duty, diesel-powered vehicles are shown in Table 3.1.5-1.

Table 3.1.5-1. EMISSION FACTORS FOR HEAVY-DUTY, DIESEL-POWERED VEHICLES[a,b]
EMISSION FACTOR RATING: B

Pollutant	Emissions			
	$lb/10^3$ gal	$kg/10^3$ liter	g/mi	g/km
Particulate	13	1.6	1.2	0.75
Sulfur oxides[c] (SO_x as SO_2)	27	3.2	2.4	1.5
Carbon monoxide	225	27.0	20.4	12.7
Hydrocarbons	37	4.4	3.4	2.1
Nitrogen oxides (NO_x as NO_2)	370	44.0	34	21
Aldehydes (as HCHO)	3	0.4	0.3	0.2
Organic acids	3	0.4	0.3	0.2

[a] Data are based on weighting factors applied to actual tests conducted at various load and idle conditions with an average gross vehicle weight of 30 tons (27.2 MT) and fuel consumption of 5.0 mi/gal (2.2 km/liter).
[b] Reference 7.
[c] Data based on fuel with average sulfur content of 0.2 percent.

References for Section 3.1.5

1. The Automobile and Air Pollution: A Program for Progress. Part II. U.S. Department of Commerce. Washington, D.C. December 1967. p. 34.

2. Control Techniques for Carbon Monoxide, Nitrogen Oxides, and Hydrocarbons from Mobile Sources. U.S. DHEW, PHS, EHS, National Air Pollution Control Administration. Washington, D.C. Publication Number AP-66. March 1970. p. 2-9 through 2-11.

3. McConnel, G. and H.E. Howels. Diesel Fuel Properties and Exhaust Gas-Distant Relations? Society of Automotive Engineers. New York, N.Y. Publication Number 670091. January 1967.

4. Motor Gasolines, Summer 1969. Mineral Industry Surveys, U.S. Department of the Interior, Bureau of Mines. Washington, D.C. Petroleum Products Survey Number 63. 1970. p. 5.

5. Merrion, D.F. Diesel and Turbine Driven Vehicles and Air Pollution. (Presented at University of Missouri Air Pollution Conference, Columbia, Mo. November 18, 1969.)

6. Hurn, R.W. The Diesel Fuel Involvement in Air Pollution. (Presented at the National Fuels and Lubricants Meeting, New York, N.Y. September 17-18, 1969.)

7. Young T.C. Unpublished emission factor data on diesel engines. Engine Manufacturers Association Emission Standards Committee. Chicago, Ill. May 18, 1971.

3.1.6 Gaseous-Fueled Vehicles

by David S. Kircher

3.1.6.1 General – Conversion of vehicles to gaseous fuels has been practiced for many years. In the past the principal motivation for the conversion has been the economic advantage of gaseous fuels over gasoline rather than lower air pollutant emission levels that result from their use. Recently, however, conversions have been made for air pollution control as well as for lower operating cost. Liquified petroleum gas (LPG), the most common form of gaseous fuel for vehicles, is currently used to power approximately 300,000 vehicles in the United States. Natural gas, in the form of compressed natural gas (CNG) or liquified natural gas (LNG), is being used nationally to power about 4,000 vehicles.[1] Of the two natural gas fuels, CNG is the most common. Natural gas conversions are usually dual fuel systems that permit operation on either gaseous fuel (CNG or LNG) or gasoline.

3.1.6.2 Emissions – Tables 3.1.6-1 and 3.1.6-2 contain emission factors for light- and heavy-duty vehicles converted for either gaseous fuel or dual fuel operation. The test data used to determine the average light duty emission factors were based on both the 1972 Federal test procedure and the earlier seven-mode method.[7,8] These test data were converted to the current Federal test procedure[9] using conversion factors determined empirically.[10,11] This conversion was necessary to make the emission factors for these vehicles consistent with emission factors reported in previous sections of this chapter.

Heavy-duty vehicle emission factors (Table 3.1.6-2) are based on tests of vehicles on an experimental dynamometer test cycle[6] and on the Federal test procedure. Emissions data for heavy-duty vehicles are limited to tests of only a few vehicles. For this reason the factors listed in table 3.1.6-2 are only approximate indicators of emissions from these vehicles.

Emission data on gaseous-powered vehicles are limited to dynamometer test results. Deterioration factors and speed correction factors are not available. The data contained in the tables, therefore, are emission factors for in-use vehicles at various mileages rather than emission rates (as defined in section 3.1.2).

Emission factors for a particular population of gaseous-fueled vehicles can be determined using the relationship:

$$e_{npwc} = \sum_{i=n-12}^{n+1} c_i f_i \qquad (1)$$

where: e_{npwc} = Emission factor is grams per mile (or g/km) for calendar year (n), pollutant (p), vehicle weight (w) (light- or heavy-duty), and conversion fuel system (c) (e.g. LPG)

c_i = The test cycle emission factor (Tables 3.1.6-1 and 3.1.6-2) for pollutant (p) for the ith model year vehicles

f_i = The fraction of total miles driven by a population of gaseous-fueled vehicles that are driven by the ith model year vehicles

Carbon monoxide, hydrocarbon, and nitrogen oxides emission factors are listed in the tables. Particulates and sulfur oxides are not listed because of the lack of test data. Because stationary external combustion of gaseous fuel results in extremely low particulate and sulfur oxides, it is reasonable to assume that the emissions of these pollutants from gaseous-fueled vehicles are negligible.

Table 3.1.6-1. EMISSION FACTORS BY MODEL YEAR FOR LIGHT-DUTY VEHICLES USING LPG, LPG/DUAL FUEL, OR CNG/DUAL FUEL[a]
EMISSION FACTOR RATING: B

Fuel and model year	Carbon monoxide		Exhaust hydrocarbons		Nitrogen oxides (NO_x as NO_2)	
	g/mi	g/km	g/mi	g/km	g/mi	g/km
LPG						
Pre-1970[b]	11	6.8	1.8	1.1	3.2	2.0
1970 through 1972[c]	3.4	2.1	0.67	0.42	2.8	1.7
LPG/Dual fuel[d]						
Pre-1973	7.8	4.8	2.4	1.5	3.4	2.1
CNG/Dual fuel[e]						
Pre-1973	9.2	5.7	1.5	0.93	2.8	1.7

[a] References 1 through 5.
[b] Emission factors are based on tests of 1968 and 1969 model year vehicles. Sufficient data for earlier models are not available.
[c] Based on tests of 1970 model year vehicles. No attempt was made to predict the emissions resulting from the conversion of post 1974 model year vehicles to gaseous fuels. It is likely that 1973 and 1974 model year vehicles converted to gaseous fuels will emit pollutant quantities similar to those emitted by 1972 vehicles with the possible exception of nitrogen oxides.
[d] The dual fuel system represents certain compromises in emission performance to allow the flexibility of operation on gaseous or liquid (gasoline) fuels. For this reason their emission factors are listed separately from vehicles using LPG only.
[e] Based on tests of 1968 and 1969 model year vehicles. It is likely that 1973 and 1974 model year vehicles will emit similar pollutant quantities to those listed with the possible exception of nitrogen oxides. No attempt was made to estimate 1975 and later model year gaseous-fueled-vehicle emissions.

Table 3.1.6-2. EMISSION FACTORS FOR HEAVY-DUTY VEHICLES USING LPG OR CNG/DUAL FUEL
EMISSION FACTOR RATING: C

Pollutant	Emissions (all model years)[a]			
	LPG[b,c]		CNG/dual fuel[d]	
	g/mi	g/km	g/mi	g/km
Carbon monoxide	4.2	2.6	7.5	4.6
Exhaust hydrocarbons	2.4	1.5	2.2	1.4
Nitrogen oxides (NO_x as NO_2)	2.8	1.7	5.8	3.6

[a] Test results are for 1959 through 1970 model years. These results are assumed to apply to all future heavy-duty vehicles based on present and future emission standards.
[b] References 2 and 4.
[c] LPG values for heavy-duty vehicles are based on a limited number of tests of vehicles tuned for low emissions. Vehicles converted to LPG solely for economic reasons gave much higher emission values. For example, eleven vehicles (1950 through 1963) tested in Reference 6 demonstrated average emissions of 160 g/mi (99 g/km) of carbon monoxide, 8.5 g/mi (5.3 g/km) of hydrocarbons, and 4.2 g/mil (2.6 g/km) of nitrogen oxides.
[d] Reference 5.

References for Section 3.1.6

1. Conversion of Motor Vehicles to Gaseous Fuel to Reduce Air Pollution. U.S. Environmental Protection Agency, Office of Air Programs. Washington, D.C. April 1972.

2. Fleming, R.D. et al. Propane as an Engine Fuel for Clean Air Requirements. J. Air Pol. Control Assoc. *22*:451-458. June 1972.

3. Genslak, S.L. Evaluation of Gaseous Fuels for Automobiles. Society of Automotive Engineers, Inc. New York, N.Y. Publication Number 720125. January 1972.

4. Eshelman, R.H. LP Gas Conversion. Automotive Industries. Reprinted by Century LP-Gas Carburetion, Marvel–Schebler. Decatur, III.

5. Pollution Reduction with Cost Savings. General Services Administration. Washington, D.C. 1971.

6. Springer, K.J. An Investigation of Emissions from Trucks above, 6,000-lb GVW Powered by Spark-Ignited Engines. Southwest Research Institute. San Antonio, Texas. Prepared for the U.S. Public Health Service, Washington, D.C., under Contract Number PH 86-67-72. March 1969.

7. Control of Air Pollution from New Motor Vehicles and New Motor Vehicle Engines. Federal Register. Part II. *33*(219):17288-17313, November 10, 1970.

8. Control of Air Pollution from New Motor Vehicles and New Motor Vehicle Engines. Federal Register. Part II. *33*(219):17288-17313, November 10, 1970.

9. Exhaust Emission Standards and Test Procedures. Federal Register. Part II. *36*(128):12652-12663, July 2, 1971.

10. Sigworth, H.W., Jr. Unpublished estimates of motor vehicle emission rates. Environmental Protection Agency. Research Triangle Park, N.C. March 1971.

11. Study of Emissions from Light-Duty Vehicles in Six Cities. Automotive Environmental Systems, Inc. San Bernardino, Calif. Prepared for the Environmental Protection Agency, Research Triangle Park, N. C., under Contract Number 68-04-0042. June 1972.

3.1.7 Motorcycles

by David S. Kircher

3.1.7.1 General – Motorcycles, which are not, generally, considered an important source of air pollution, have become more popular and their numbers have been steadily increasing in the last few years. Sales grew at an annual rate of 20 percent from 1965 to 1971.[1] The majority of motorcycles are powered by either 2- or 4-stroke, air-cooled engines; however, water-cooled motorcycles and Wankel-powered motorcycles have recently been introduced. Until recently the predominant use of 4-stroke motorcycles was on-highway and the 2-stroke variety was off-highway. This difference in roles was primarily a reflection of significant weight and power variations between available 2- and 4-stroke vehicles. As light-weight 4-strokes and more powerful 2-strokes become available the relative number of motorcycles in each engine category may change. Currently the nationwide population of motorcycles is approximately 38 percent 2-stroke and 62 percent 4-stroke. Individual motorcycles travel, on the average, approximately 4000 miles per year.[1] These figures, along with registration statistics, enable the rough estimation of motorcycle miles by engine category and the computation of resulting emissions.

3.1.7.2 Emissions – The quantity of motorcycle emission data is rather limited in comparison with the data available on other highway vehicles. For instance, data on motorcycle average speed versus emission levels are not available. Average emission factors for motorcycles used on highways are reported in Table 3.1.7-1. These data, from several test vehicles, are based on the Federal light-duty vehicle test procedure.[2] The table illustrates differences in 2-stroke and 4-stroke engine emission rates. On a per mile basis, 2-stroke engines emit nearly five times more hydrocarbons than 4-stroke engines. Both engine categories emit somewhat similar quantities of carbon monoxide and both produce low levels of nitrogen oxides.

Table 3.1.7-1. EMISSION FACTORS FOR MOTORCYCLES[a]
EMISSION FACTOR RATING: B

Pollutant	Emissions			
	2-stroke engine		4-stroke engine	
	g/mi	g/km	g/mi	g/km
Carbon monoxide	27	17	33	20
Hydrocarbons				
Exhaust	16	9.9	2.9	1.8
Crankcase[b]	–	–	0.60	0.37
Evaporative[c]	0.36	0.22	0.36	0.22
Nitrogen oxides (NO_x as NO_2)	0.12	0.075	0.24	0.15
Particulates	0.33	0.21	0.046	0.029
Sulfur oxides[d] (SO_2)	0.038	0.024	0.022	0.014
Aldehydes (RCHO as HCHO)	0.11	0.068	0.047	0.029

[a] Reference 1.
[b] Most 2-stroke engines use crankcase induction and produce no crankcase losses.
[c] Evaporative emissions were calculated assuming that carburetor losses were negligible. Diurnal breathing of the fuel tank (a function of fuel vapor pressure, vapor space in the tank, and diurnal temperature variation) was assumed to account for all the evaporative losses associated with motorcycles. The value presented is based on average vapor pressure, vapor space, and temperature variation.
[d] Calculated using a 0.043 percent sulfur content (by weight) for regular fuel used in 2-stroke engines and 0.022 percent sulfur content (by weight) for premium fuel used in 4-stroke engines.

References for Section 3.1.7

1. Hare, C.T. and K.J. Springer. Exhaust Emissions from Uncontrolled Vehicles and Related Equipment Using Internal Combustion Engines. Part III, Motorcycles. Final Report. Southwest Research Institute. San Antonio, Texas. Prepared for the Environmental Protection Agency, Research Triangle Park, N.C., under Contract Number EHS 70-108. March 1973.

2. Exhaust Emission Standards and Test Procedures. Federal Register. *36*(128):12652-12663, July 2, 1971.

3.2 OFF-HIGHWAY, MOBILE SOURCES

The off-highway category of internal combustion engines embraces a wide range of mobile and semimobile sources. Emission data are reported in this section on the following sources: aircraft; locomotives; vessels (inboard and outboard); and small general utility engines, such as those used in lawnmowers and minibikes. Other sources that fall into this category, but for which emission data are not currently available, include: snowmobiles, all-terrain vehicles, and farm and construction equipment. Data on these sources will be added to this chapter in future revisions.

by Charles C. Masser

3.2.1 Aircraft

3.2.1.1 General – Aircraft engines are of two major categories; reciprocating (piston) and gas turbine.

The basic element in the aircraft piston engine is the combustion chamber, or cylinder, in which mixtures of fuel and air are burned and from which energy is extracted through a piston and crank mechanism that drives a propeller. The majority of aircraft piston engines have two or more cylinders and are generally classified according to their cylinder arrangement – either "opposed" or radial." Opposed engines are installed in most light or utility aircraft; radial engines are used mainly in large transport aircraft.

The gas turbine engine in general consists of a compressor, a combustion chamber, and a turbine. Air entering the forward end of the engine is compressed and then heated by burning fuel in the combustion chamber. The major portion of the energy in the heated air stream is used for aircraft propulsion. Part of the energy is expended in driving the turbine, which in turn drives the compressor. Turbofan and turboshaft engines use energy from the turbine for propulsion; turbojet engines use only the expanding exhaust stream for propulsion.

The aircraft classification system used is listed in Table 3.2.1-1. Both turbine aircraft and piston engine aircraft have been further divided into sub-classes depending on the size of the aircraft and the most commonly used engine for that class. Jumbo jets normally have approximately 40,000 pounds maximum thrust per engine, and medium-range jets have about 14,000 pounds maximum thrust per engine. For piston engines, this division is more pronounced. The large transport piston engines are in the 500 to 3,000 horsepower range, whereas the small piston engines develop less than 500 horsepower.

Table 3.2.1-1. AIRCRAFT CLASSIFICATION

Aircraft class	Representative aircraft	Engines per aircraft	Engine commonly used
Jumbo jet	Boeing 747	4	Pratt & Whitney JT-9D
	Lockheed L-1011	3	
	McDonald Douglas DC-10	3	
Long-range jet	Boeing 707	4	Pratt & Whitney JT-3D
	McDonald Douglas DC-8	4	
Medium-range jet	Boeing 727	3	Pratt & Whitney JT-8D
	Boeing 737	2	
	McDonald Douglas DC-9	2	
Air carrier turboprop	Convair 580	2	Allison 501-D13
	Electra L-188	4	
	Fairchild Hiller FH-227	2	
Business jet	Gates Learjet	2	General Electric CJ610
	Lockheed Jetstar	4	Pratt & Whitney JT-12A
General aviation turboprop	–	–	Pratt & Whitney PT-6A
General aviation piston	Cessna 210	1	Teledyne-Continental Ø-200
	Piper 32-300	1	Lycoming Ø-320
Piston transport	Douglas DC-6	4	Pratt & Whitney R-2800
Helicopter	Sikorsky S-61	2	General Electric CT-58
	Vertol 107	2	
Military transport			Allison T56A7
Military jet			General Electric J-79
			Continental J-69
Military piston			Curtiss-Wright R-1820

3.2.1.2 Landing and Takeoff Cycle – A landing-takeoff (LTO) cycle includes all normal operation modes performed by an aircraft between the time it descends through an altitude of 3,500 feet (1,100 meters) on its approach and the time it subsequently reaches the 3,500 foot (1,100 meters) altitude after take. It should be made clear that the term "operation" used by the Federal Aviation Administration to describe either a landing or a takeoff is not the same as the LTO cycle. Two operations are involved in one LTO cycle. The LTO cycle incorporates the ground operations of idle, taxi, landing run, and takeoff run and the flight operations of takeoff and climbout to 3,500 feet (1,100 meters) and approach from 3,500 feet (1,100 meters) to touchdown

Each class of aircraft has its own typical LTO cycle. In order to determine emissions, the LTO cycle is separated into five distinct modes: (1) taxi-idle, (2) takeoff, (3) climbout, (4) approach and landing, and (5) taxi-idle. Each of these modes has its share of time in the LTO cycle. Table 3.2.1-2 shows typical operating time in each mode for the various types of aircraft classes during periods of heavy activity at a large metropolitan airport. Emissions factors for the complete LTO cycle presented in Table 3.2.1-3 were determined using the typical times shown in Table 3.2.1-2.

Table 3.2.1-2. TYPICAL TIME IN MODE FOR LANDING TAKEOFF CYCLE AT A METROPOLITAN AIRPORT[a]

Aircraft	Time in mode, minutes				
	Taxi-idle	Takeoff	Climbout	Approach	Taxi-idle
Jumbo jet	19.00	0.70	2.20	4.00	7.00
Long range jet	19.00	0.70	2.20	4.00	7.00
Medium range jet	19.00	0.70	2.20	4.00	7.00
Air carrier turboprop	19.00	0.50	2.50	4.50	7.00
Business jet	6.50	0.40	0.50	1.60	6.50
General aviation turboprop	19.00	0.50	2.50	4.50	7.00
General aviation piston	12.00	0.30	4.98	6.00	4.00
Piston transport	6.50	0.60	5.00	4.60	6.50
Helicopter	3.50	0	6.50	6.50	3.50
Military transport	19.00	0.50	2.50	4.50	7.00
Military jet	6.50	0.40	0.50	1.60	6.50
Military piston	6.50	0.60	5.00	4.60	6.50

[a]References 1 and 2.

Table 3.2.1-3. EMISSION FACTORS PER AIRCRAFT LANDING-TAKEOFF CYCLE[a,b]
(lb/engine and kg/engine)
EMISSION FACTOR RATING: B

Aircarft	Solid particulates[a]		Sulfur oxides[d]		Carbon monoxide[e]		Hydrocarbons[e]		Nitrogen oxides[d] (NO_x as NO_2)	
	lb	kg	lb	kg	lb	kg	lb	kg	lb	kg
Jumbo jet	1.30	0.59	1.82	0.83	46.8	21.2	12.2	5.5	31.4	14.2
Long range jet	1.21	0.55	1.56	0.71	47.4	21.5	41.2	18.7	7.9	3.6
Medium range jet	0.41	0.19	1.01	0.46	17.0	7.71	4.9	2.2	10.2	4.6
Air carrier turboprop	1.1	0.49	0.40	0.18	6.6	3.0	2.9	1.3	2.5	1.1
Business jet	0.11	0.05	0.37	0.17	15.8	7.17	3.6	1.6	1.6	0.73
General aviation turboprop	0.20	0.09	0.18	0.08	3.1	1.4	1.1	0.5	1.2	0.54
General aviation piston	0.02	0.01	0.014	0.006	12.2	5.5	0.40	0.18	0.047	0.021
Piston transport	0.56	0.25	0.28	0.13	304.0	138.0	40.7	18.5	0.40	0.18
Helicopter	0.25	0.11	0.18	0.08	5.7	2.6	0.52	0.24	0.57	0.26
Military transport	1.1	0.49	0.41	0.19	5.7	2.6	2.7	1.2	2.2	1.0
Military jet	0.31	0.14	0.76	0.35	15.1	6.85	9.93	4.5	3.29	1.49
Military piston[f]	0.28	0.13	0.14	0.04	152.0	69.0	20.4	9.3	0.20	0.09

[a] References 1 through 5.
[b] Emission factors based on typical times in mode shown in Table 3.2.1-2.
[c] References 1 and 5.
[d] Based on 0.05 percent sulfur content fuel.
[e] References 1, 2, and 4.
[f] Engine emissions based on Pratt & Whitney R-2800 engine scaled down two times.

3.2.1.3 Modal Emission Factors – In Table 3.2.1-4 a set of modal emission factors by engine type are given for carbon monoxide, total hydrocarbons, nitrogen oxides, and solid particulates along with the fuel flow rate per engine for each LTO mode. With this data and knowledge of the time-in-mode, it is possible to construct any LTO cycle or mode and calculate a more accurate estimate of emissions for the situation that exists at a specific airport. This capability is especially important for estimating emissions during the taxi-idle mode when large amounts of carbon monoxide and hydrocarbons are emitted. At smaller commercial airports the taxi-idle time will be less than at the larger, more congested airports.

Table 3.2.1-4. MODAL EMISSION FACTORS[a]
EMISSION FACTOR RATING: B

Engine and mode	Fuel rate		Carbon monoxide		Hydrocarbons		Nitrogen oxides (NO_x as NO_2)		Solid particulates	
	lb/hr	kg/hr	lb/hr	kg/hr	lb/hr	kg/hr	lb/hr	kg/hr	lb/hr	kg/hr
Pratt & Whitney JT-9D (Jumbo jet)										
Taxi-idle	1,738	788	102.0	46.3	27.3	12.4	6.06	2.75	2.2	1.0
Takeoff	17,052	7,735	8.29	3.76	2.95	1.34	720.0	327.0	3.75	1.7
Climbout	14,317	6,494	11.7	5.31	2.65	1.20	459.0	208.0	4.0	1.8
Approach	5,204	2,361	32.6	14.8	3.00	1.36	54.1	24.5	2.3	1.0
General Electric CF6 (Jumbo jet)										
Taxi-idle	1,030	467	51.7	23.5	15.4	7.0	3.6	1.63	0.04	0.02
Takeoff	13,449	6,100	6.7	3.04	1.3	0.59	540.0	245.0	0.54	0.24
Climbout[b]	11,400	5,171	6.6	2.99	1.3	0.59	333.0	151.0	0.54	0.24
Approach	6,204	2,814	18.6	8.44	1.9	0.86	173.0	78.5	0.44	0.20
Pratt & Whitney JT-3D (Long range jet)										
Taxi-idle	872	396	109.0	49.4	98.6	44.7	1.43	0.649	0.45	0.20
Takeoff	10,835	4,915	12.3	5.60	4.65	2.11	148.0	67.1	8.25	3.7
Climbout	8,956	4,062	15.3	6.94	4.92	2.23	96.2	43.6	8.5	3.9
Approach	4,138	1,877	39.7	18.0	7.84	3.56	21.8	9.89	8.0	3.6
Pratt & Whitney JT-3C (Long range jet)										
Taxi-idle	1,198	543	92.6	42.0	92.2	41.8	2.49	1.13	0.40	0.18
Takeoff	10,183	4,619	9.04	4.10	0.855	0.388	119.0	54.0	6.50	2.9
Climbout	8,509	3,860	16.0	7.26	0.893	0.405	84.7	38.4	6.25	2.8
Approach	4,115	1,867	49.0	22.2	8.26	3.75	23.2	10.5	3.25	1.5
Pratt & Whitney JT-4A (Long range jet)										
Taxi-idle	1,389	630	62.8	28.5	64.8	29.4	2.71	1.23	1.2	0.54
Takeoff	15,511	7,036	18.8	8.53	0.674	0.306	236.0	107.0	21.0	9.5
Climbout	13,066	5,927	18.3	8.30	1.27	0.576	155.0	70.3	20.0	9.1
Approach	5,994	2,719	26.3	11.9	3.83	1.74	35.9	16.3	6.0	2.7

Table 3.2.1-4 (continued). MODAL EMISSION FACTORS[a]
EMISSION FACTOR RATING: B

Engine and mode	Fuel rate		Carbon monoxide		Hydrocarbons		Nitrogen oxides (NO_x as NO_2)		Solid particulates	
	lb/hr	kg/hr	lb/hr	kg/hr	lb/hr	Kg/hr	lb/hr	kg/hr	lb/hr	kg/hr
General Electric CJ805 (Long range jet)										
Taxi-idle	1,001	454	63.8	28.9	27.3	12.4	1.57	0.712	1.3	0.59
Takeoff	9,960	4,518	29.1	13.2	0.556	0.252	111.0	50.3	15.0	6.8
Climbout	8,290	3,760	28.9	13.1	0.583	0.264	74.0	33.6	15.0	6.8
Approach	3,777	1,713	42.8	19.4	2.43	1.10	17.8	8.07	5.0	2.3
Pratt & Whitney JT-8D[c] (Med. range jet)										
Taxi-idle	959	435	33.4	15.2	6.99	3.71	2.91	1.32	0.36	0.16
Takeoff	8,755	3,971	7.49	3.40	0.778	0.353	198.0	89.8	3.7	1.7
Climbout	7,337	3,328	8.89	4.03	0.921	0.418	131.0	59.4	2.6	1.2
Approach	3,409	1,546	18.2	8.26	1.75	0.794	30.9	14.0	1.5	0.68
Rolls Royce Sprey MK511 (Med. range jet)										
Taxi-idle	662	300	60.2	27.3	66.1	30.0	0.849	0.385	0.17	0.077
Takeoff	7,625	3,459	14.2	6.44	Neg	Neg	153.0	69.4	16.0	7.3
Climbout	6,355	2,883	15.3	6.94	0.242	0.110	115.0	52.2	10.0	4.5
Approach	3,052	1,384	39.1	17.7	4.22	1.91	30.4	13.8	1.5	0.68
Allison T56-A15 (Air carrier turboprop; mil. transport)										
Taxi-idle	493	224	8.74	3.96	7.39	3.35	1.23	0.560	1.6	0.73
Takeoff	2,393	1,085	3.77	1.71	0.440	0.200	27.9	12.7	3.7	1.7
Climbout	2,188	992	3.40	1.54	0.399	0.181	22.2	10.1	3.0	1.4
Approach	1,146	520	3.49	1.58	0.326	0.148	7.32	3.32	3.0	1.4
Allison T56-A7 (Air carrier turboprop; mil. transport)										
Taxi-idle	548	249	15.3	6.94	6.47	2.93	2.16	0.980	1.6	0.73
Takeoff	2,079	943	2.15	0.975	0.430	0.195	22.9	10.4	3.7	1.7
Climbout	1,908	865	3.01	1.37	0.476	0.216	21.2	9.62	3.0	1.4
Approach	1,053	478	3.67	1.66	0.517	0.235	7.78	3.53	3.0	1.4

Table 3.2.1-4 (continued). MODAL EMISSION FACTORS[a]
EMISSION FACTOR RATING: B

Engine and mode	Fuel rate		Carbon monoxide		Hydrocarbons		Nitrogen oxides (NO_x as NO_2)		Solid particulates	
	lb/hr	kg/hr	lb/hr	kg/hr	lb/hr	kg/hr	lb/hr	kg/hr	lb/hr	kg/hr
Airesearch TPE-331[d] (Gen. aviation turboprop)										
Taxi-idle	146	66.2	3.53	1.60	0.879	0.399	0.955	0.433	0.3	0.14
Takeoff	365	166.0	0.393	0.178	0.055	0.025	3.64	1.65	0.8	0.36
Climbout	339	154.0	0.568	0.258	0.053	0.024	3.31	1.50	0.6	0.27
Approach	206	93.4	2.58	1.17	0.240	0.109	1.69	0.767	0.6	0.27
Teledyne/Continental 0-200 (Gen. aviation piston)										
Taxi-idle	7.68	3.48	7.52	3.41	0.214	0.097	0.009	0.004	NA[e]	NA
Takeoff	48.4	22.0	54.6	24.8	0.720	0.327	0.259	0.117	NA	NA
Climbout	48.4	22.0	54.6	24.8	0.720	0.327	0.259	0.117	NA	NA
Approach	21.3	9.66	23.8	10.8	0.380	0.172	0.052	0.024	NA	NA
Lycoming 0-320 (Gen. aviation piston)										
Taxi-idle	13.0	5.90	11.1	5.03	0.355	0.161	0.013	0.006	NA	NA
Takeoff	65.7	29.8	70.9	32.2	1.49	0.676	0.214	0.097	NA	NA
Climbout	63.5	28.8	65.8	29.8	1.31	0.594	0.375	0.170	NA	NA
Approach	23.1	10.5	24.3	11.0	0.496	0.225	0.051	0.023	NA	NA

[a] References 4 and 5.
[b] Estimated and/or calculated.
[c] "Diluted smokeless" JT-8D. All air carriers scheduled for conversion of JT-8D engines to smokeless by January 1973.
[d] Similar to the PT-6A engine.
[e] NA—Not available.

References for Section 3.2.1

1. Nature and Control of Aircraft Engine Exhaust Emissions. Northern Research and Engineering Corporation, Cambridge, Mass. Prepared for National Air Pollution Control Administration, Durham, N.C., under Contract Number PH22-68-27. November 1968.

2. The Potential Impact of Aircraft Emissions upon Air Quality. Northern Research and Engineering Corporation, Cambridge, Mass. Prepared for the Environmental Protection Agency, Research Triangle Park, N.C., under Contract Number 68-02-0085. December 1971.

3. Assessment of Aircraft Emission Control Technology. Northern Research and Engineering Corporation, Cambridge, Mass. Prepared for the Environmental Protection Agency, Research Triangle Park, N.C., under Contract Number 68-04-0011. September 1971.

4. Analysis of Aircraft Exhaust Emission Measurements. Cornell Aeronautical Laboratory Inc. Buffalo, N.Y. Prepared for the Environmental Protection Agency, Research Triangle Park, N.C., under Contract Number 68-04-0040. October 1971.

5. Private communication with Dr. E. Karl Bastress. IKOR Incorporated. Burlington, Mass. November 1972.

3.2.2 Locomotives

by David S. Kircher

3.2.2.1 General – Railroad locomotives generally follow one of two use patterns: railyard switching or road-haul service. Locomotives can be classified on the basis of engine configuration and use pattern into five categories: 2-stroke switch locomotive (supercharged), 4-stroke switch locomotive, 2-stroke road service locomotive (supercharged), 2-stroke road service locomotive (turbocharged), and 4-stroke road service locomotive.

The engine duty cycle of locomotives is much simpler than many other applications involving diesel internal combustion engines because locomotives usually have only eight throttle positions in addition to idle and dynamic brake. Emission testing is made easier and the results are probably quite accurate because of the simplicity of the locomotive duty cycle.

3.2.2.2 Emissions – Emissions from railroad locomotives are presented two ways in this section. Table 3.2.2-1 contains average factors based on the nationwide locomotive population breakdown by category. Table 3.2.2-2 gives emission factors by locomotive category on the basis of fuel consumption and on the basis of work output (horsepower hour).

The calculation of emissions using fuel-based emission factors is straightforward. Emissions are simply the product of the fuel usage and the emission factor. In order to apply the work output emission factor, however, an

Table 3.2.2-1. AVERAGE LOCOMOTIVE EMISSION FACTORS BASED ON NATIONWIDE STATISTICS[a]

Pollutant	Average emissions[b]	
	lb/10^3 gal	kg/10^3 liter
Particulates[c]	25	3.0
Sulfur oxides[d] (SO_x as SO_2)	57	6.8
Carbon monoxide	130	16
Hydrocarbons	94	11
Nitrogen oxides (NO_x as NO_2)	370	44
Aldehydes (as HCHO)	5.5	0.66
Organic acids[c]	7	0.84

[a] Reference 1.
[b] Based on emission data contained in Table 3.2.2-2 and the breakdown of locomotive use by engine category in the United States in Reference 1.
[c] Data based on highway diesel data from Reference 2. No actual locomotive particulate test data are available.
[d] Based on a fuel sulfur content of 0.4 percent from Reference 3.

Table 3.2.2-2. EMISSION FACTORS BY LOCOMOTIVE ENGINE CATEGORY[a]
EMISSION FACTOR RATING: B

Pollutant	Engine category				
	2-Stroke supercharged switch	4-Stroke switch	2-Stroke supercharged road	2-Stroke turbocharged road	4-Stroke road
Carbon monoxide					
lb/10^3 gal	84	380	66	160	180
kg/10^3 liter	10	46	7.9	19	22
g/hphr	3.9	13	1.8	4.0	4.1
g/metric hphr	3.9	13	1.8	4.0	4.1
Hydrocarbon					
lb/10^3 gal	190	146	148	28	99
kg/10^3 liter	23	17	18	3.4	12
g/hphr	8.9	5.0	4.0	0.70	2.2
g/metric hphr	8.9	5.0	4.0	0.70	2.2
Nitrogen oxides (NO_x as NO_2)					
lb/10^3 gal	250	490	350	330	470
kg/10^3 liter	30	59	42	40	56
g/hphr	11	17	9.4	8.2	10
g/metric hphr	11	17	9.4	8.2	10

[a] Use average factors (Table 3.2.2-1) for pollutants not listed in this table.

additional calculation is necessary. Horsepower hours can be obtained using the following equation:

$$w = lph$$

where: w = Work output (horsepower hour)

l = Load factor (average power produced during operation divided by available power)

p = Available horsepower

h = Hours of usage at load factor (l)

After the work output has been determined, emissions are simply the product of the work output and the emission factor. An approximate load factor for a line-haul locomotive (road service) is 0.4; a typical switch engine load factor is approximately 0.06.[1]

References for Section 3.2.2

1. Hare, C.T. and K.J. Springer. Exhaust Emissions from Uncontrolled Vehicles and Related Equipment Using Internal Combustion Engines. Part 1. Locomotive Diesel Engines and Marine Counterparts. Final Report. Southwest Research Institute. San Antonio, Texas Prepared for the Environmental Protection Agency, Research Triangle Park, N.C., under Contract Number EHA 70-108. October 1972.

2. Young, T.C. Unpublished Data from the Engine Manufacturers Association. Chicago, Ill. May 1970.

3. Hanley, G.P. Exhaust Emission Information on Electro-Motive Railroad Locomotives and Diesel Engines. General Motors Corp. Warren, Mich. October 1971.

3.2.3 Inboard-Powered Vessels

Revised by David S. Kircher

3.2.3.1 General – Vessels classified on the basis of use will generally fall into one of three categories: commercial, pleasure, or military. Although usage and population data on vessels are, as a rule, relatively scarce, information on commercial and military vessels is more readily available than data on pleasure craft. Information on military vessels is available in several study reports,[1-5] but data on pleasure craft are limited to sales-related facts and figures.[6-10]

Commercial vessel population and usage data have been further subdivided by a number of industrial and governmental researchers into waterway classifications[11-16] (for example, Great Lakes vessels, river vessels, and coastal vessels). The vessels operating in each of these waterway classes have similar characteristics such as size, weight, speed, commodities transported, engine design (external or internal combustion), fuel used, and distance traveled. The wide variation between classes, however, necessitates the separate assessment of each of the waterway classes with respect to air pollution.

Information on military vessels is available from both the U.S. Navy and the U.S. Coast Guard as a result of studies completed recently. The U.S. Navy has released several reports that summarize its air pollution assessment work.[3-5] Emission data have been collected in addition to vessel population and usage information. Extensive study of the air pollutant emissions from U.S. Coast Guard watercraft has been completed by the U.S. Department of Transportation. The results of this study are summarized in two reports.[1-2] The first report takes an in-depth look at population/usage of Coast Guard vessels. The second report, dealing with emission test results, forms the basis for the emission factors presented in this section for Coast Guard vessels as well as for non-military diesel vessels.

Although a large portion of the pleasure craft in the U.S. are powered by gasoline outboard motors (see section 3.2.4 of this document), there are numerous larger pleasure craft that use inboard power either with or without "out-drive" (an outboard-like lower unit). Vessels falling into the inboard pleasure craft category utilize either Otto cycle (gasoline) or diesel cycle internal combustion engines. Engine horsepower varies appreciably from the small "auxiliary" engine used in sailboats to the larger diesels used in yachts.

3.2.3.2 Emissions

Commercial vessels. Commercial vessels may emit air pollutants under two major modes of operation: underway and at dockside (auxiliary power).

Emissions underway are influenced by a great variety of factors including power source (steam or diesel), engine size (in kilowatts or horsepower), fuel used (coal, residual oil, or diesel oil), and operating speed and load. Commercial vessels operating within or near the geographic boundaries of the United States fall into one of the three categories of use discussed above (Great Lakes, rivers, coastline). Tables 3.2.3-1 and 3.2.3-2 contain emission information on commercial vessels falling into these three categories. Table 3.2.3-3 presents emission factors for diesel marine engines at various operating modes on the basis of horsepower. These data are applicable to any vessel having a similar size engine, not just to commercial vessels.

Unless a ship receives auxiliary steam from dockside facilities, goes immediately into drydock, or is out of operation after arrival in port, she continues her emissions at dockside. Power must be made available for the ship's lighting, heating, pumps, refrigeration, ventilation, etc. A few steam ships use auxiliary engines (diesel) to supply power, but they generally operate one or more main boilers under reduced draft and lowered fuel rates–a very inefficient process. Motorships (ships powered by internal combustion engines) normally use diesel-powered generators to furnish auxiliary power.[17] Emissions from these diesel-powered generators may also be a source of underway emissions if they are used away from port. Emissions from auxiliary power systems, in terms of the

Table 3.2.3-1. AVERAGE EMISSION FACTORS FOR COMMERCIAL MOTORSHIPS BY WATERWAY CLASSIFICATION
EMISSION FACTOR RATING: C

Emissions[a]	Class[c]		
	River	Great Lakes	Coastal
Sulfur oxides[b] (SO_x as SO_2)			
kg/10^3 liter	3.2	3.2	3.2
lb/10^3 gal	27	27	27
Carbon monoxide			
kg/10^3 liter	12	13	13
lb/10^3 gal	100	110	110
Hydrocarbons			
kg/10^3 liter	6.0	7.0	6.0
lb/10^3 gal	50	59	50
Nitrogen oxides (NO_x as NO_2)			
kg/10^3 liter	33	31	32
lb/10^3 gal	280	260	270

[a]Expressed as function of fuel consumed (based on emission data from Reference 2 and population/usage data from References 11 through 16.

[b]Calculated, not measured. Based on 0.20 percent sulfur content fuel and density of 0.854 kg/liter (7.12 lb/gal) from Reference 17.

[c]Very approximate particulate emission factors from Reference 2 are 470 g/hr (1.04 lb/hr). The reference does not contain sufficient information to calculate fuel-based factors.

quantity of fuel consumed, are presented in Table 3.2.3-4. In some instances, fuel quantities used may not be available, so calculation of emissions based on kilowatt hours (kWh) produced may be necessary. For operating loads in excess of zero percent, the mass emissions (e_1) in kilograms per hour (pounds per hour) are given by:

$$e_1 = kle_f \qquad (1)$$

where: k = a constant that relates fuel consumption to kilowatt hours,[2]

that is, 3.63×10^{-4} 1000 liters fuel/kWh

or

9.59×10^{-5} 1000 gal fuel/kWh

l = the load, kW

e_f = the fuel-specific emission factor from Table 3.2.3-4, kg/10^3 liter (lb/10^3 gal)

Table 3.2.3-2. EMISSION FACTORS FOR COMMERCIAL STEAMSHIPS—ALL GEOGRAPHIC AREAS
EMISSION FACTOR RATING: D

Pollutant	Fuel and operating mode[a]											
	Residual oil[b]						Distillate oil[b]					
	Hoteling		Cruise		Full		Hoteling		Cruise		Full	
	$kg/10^3$ liter	$lb/10^3$ gal	$kg/10^3$ liter	$lb/10^3$ gal	$kg/10^3$ liter	$lb/10^3$ gal	$kg/10^3$ liter	$lb/10^3$ gal	$kg/10^3$ liter	$lb/10^3$ gal	$kg/10^3$ liter	$lb/10^3$ gal
Particulates[c]	1.20[d]	10.0[d]	2.40	20.0	6.78	56.5	1.8	15	1.78	15	1.78	15
Sulfur oxides (SO_x as SO_2)[e]	19.1S	159S	19.1S	159S	19.1S	159S	17.0S	142S	17.0S	142S	17.0S	142S
Carbon monoxide[c]	Neg[d]	Neg[d]	0.414	3.45	0.872	7.27	0.5	4	0.5	4	0.5	4
Hydrocarbons[c]	0.38[d]	3.2[d]	0.082	0.682	0.206	1.72	0.4	3	0.4	3	0.4	3
Nitrogen oxides (NO_x as NO_2)	4.37	36.4	6.70	55.8	7.63	63.6	2.66	22.2	2.83	23.6	5.34	44.5

[a]The operating modes are based on the percentage of maximum available power: "hoteling" is 10 to 11 percent of available power, "full" is 100 percent of available power, and "cruise" is an intermediate power (35 to 75 percent, depending on the test organization and vessel tested).
[b]Test organizations used "Navy Special" fuel oil, which is not a true residual oil. No vessel test data were available for residual oil combustion. "Residual" oil results are from References 2, 3, and 5. "Distillate" oil results are from References 3 and 5 only. Exceptions are noted. "Navy Distillate" was used as distillate test fuel.
[c]Particulate, carbon monoxide, and hydrocarbon emission factors for distillate oil combustion are based on stationary boilers (see Section 1.3 of this document).
[d]Reference 18 indicates that carbon monoxide emitted during hoteling is small enough to be considered negligible. This reference also places hydrocarbons at 0.38 $kg/10^3$ liter (3.2 $lb/10^3$ gal) and particulate at 1.20 $kg/10^3$ liter (10.0 $lb/10^3$ gal). These data are included for completeness only and are not necessarily comparable with other tabulated data.
[e]Emission factors listed are theoretical in that they are based on all the sulfur in the fuel converting to sulfur dioxide. Actual test data from References 3 and 5 confirm the validity of these theoretical factors. "S" is fuel sulfur content in percent.

Table 3.2.3-3. DIESEL VESSEL EMISSION FACTORS BY OPERATING MODE[a]
EMISSION FACTOR RATING: C

Horsepower	Mode	Emissions[b]					
		Carbon monoxide		Hydrocarbons		Nitrogen oxides (NO_x as NO_2)	
		lb/10^3 gal	kg/10^3 liter	lb/10^3 gal	kg/10^3 liter	lb/10^3 gal	kg/10^3 liter
200	Idle	210.3	25.2	391.2	46.9	6.4	0.8
	Slow	145.4	17.4	103.2	12.4	207.8	25.0
	Cruise	126.3	15.1	170.2	20.4	422.9	50.7
	Full	142.1	17.0	60.0	7.2	255.0	30.6
300	Slow	59.0	7.1	56.7	6.8	337.5	40.4
	Cruise	47.3	5.7	51.1	6.1	389.3	46.7
	Full	58.5	7.0	21.0	2.5	275.1	33.0
500	Idle	282.5	33.8	118.1	14.1	99.4	11.9
	Cruise	99.7	11.9	44.5	5.3	338.6	40.6
	Full	84.2	10.1	22.8	2.7	269.2	32.3
600	Idle	171.7	20.6	68.0	8.2	307.1	36.8
	Slow	50.8	6.1	16.6	2.0	251.5	30.1
	Cruise	77.6	9.3	24.1	2.9	349.2	41.8
700	Idle	293.2	35.1	95.8	11.5	246.0	29.5
	Cruise	36.0	4.3	8.8	1.1	452.8	54.2
900	Idle	223.7	26.8	249.1	29.8	107.5	12.9
	2/3	62.2	7.5	16.8	2.0	167.2	20.0
	Cruise	80.9	9.7	17.1	2.1	360.0	43.1
1550	Idle	12.2	1.5	–	–	39.9	4.8
	Cruise	3.3	0.4	0.64	0.1	36.2	4.3
	Full	7.0	0.8	1.64	0.2	37.4	4.5
1580	Slow	122.4	14.7	–	–	371.3	44.5
	Cruise	44.6	5.3	–	–	623.1	74.6
	Full	237.7	28.5	16.8	2.0	472.0	5.7
2500	Slow	59.8	7.2	22.6	2.7	419.6	50.3
	2/3	126.5	15.2	14.7	1.8	326.2	39.1
	Cruise	78.3	9.4	16.8	2.0	391.7	46.9
	Full	95.9	11.5	21.3	2.6	399.6	47.9
3600	Slow	148.5	17.8	60.0	7.2	367.0	44.0
	2/3	28.1	3.4	25.4	3.0	358.6	43.0
	Cruise	41.4	5.0	32.8	4.0	339.6	40.7
	Full	62.4	7.5	29.5	3.5	307.0	36.8

[a]Reference 2.
[b]Particulate and sulfur oxides data are not available.

Table 3.2.3-4. AVERAGE EMISSION FACTORS FOR DIESEL-POWERED ELECTRICAL GENERATORS IN VESSELS[a]
EMISSION FACTOR RATING: C

Rated output,[b] kW	Load,[c] % rated output	Emissions							
		Sulfur oxides (SO_x as SO_2)[d]		Carbon monoxide		Hydro-carbons		Nitrogen oxides (NO_x as NO_2)	
		lb/10^3 gal	kg/10^3 liter	lb/10^3 gal	kg/10^3 liter	lb/10^3 gal	kg/10^3 liter	lb/10^3 gal	kg/10^3 liter
20	0	27	3.2	150	18.0	263	31.5	434	52.0
	25	27	3.2	79.7	9.55	204	24.4	444	53.2
	50	27	3.2	53.4	6.40	144	17.3	477	57.2
	75	27	3.2	28.5	3.42	84.7	10.2	495	59.3
40	0	27	3.2	153	18.3	584	70.0	214	25.6
	25	27	3.2	89.0	10.7	370	44.3	219	26.2
	50	27	3.2	67.6	8.10	285	34.2	226	27.1
	75	27	3.2	64.1	7.68	231	27.7	233	27.9
200	0	27	3.2	134	16.1	135	16.2	142	17.0
	25	27	3.2	97.9	11.7	33.5	4.01	141	16.9
	50	27	3.2	62.3	7.47	17.8	2.13	140	16.8
	75	27	3.2	26.7	3.20	17.5	2.10	137	16.4
500	0	27	3.2	58.4	7.00	209	25.0	153	18.3
	25	27	3.2	53.4	6.40	109	13.0	222	26.6
	50	27	3.2	48.1	5.76	81.9	9.8.	293	35.1
	75	27	3.2	43.7	5.24	59.1	7.08	364	43.6

[a]Reference 2.

[b]Maximum rated output of the diesel-powered generator.

[c]Generator electrical output (for example, a 20 kW generator at 50 percent load equals 10 kW output).

[d]Calculated, not measured, based on 0.20 percent fuel sulfur content and density of 0.854 kg/liter (7.12 lb/gal) from Reference 17.

At zero load conditions, mass emission rates (e_l) may be approximated in terms of kg/hr (lb/hr) using the following relationship:

$$e_l = k l_{rated} e_f \qquad (2)$$

where: k = a constant that relates rated output and fuel consumption,

that is, 6.93×10^{-5} 1000 liters fuel/kW

or

1.83×10^{-5} 1000 gal fuel/kW

l_{rated} = the rated output, kW

e_f = the fuel-specific emission factor from Table 3.2.3-4, kg/10^3 liter (lb/10^3 gal)

Pleasure craft. Many of the engine designs used in inboard pleasure craft are also used either in military vessels (diesel) or in highway vehicles (gasoline). Out of a total of 700,000 inboard pleasure craft registered in the United States in 1972, nearly 300,000 were inboard/outdrive. According to sales data, 60 to 70 percent of these

inboard/outdrive craft used gasoline-powered automotive engines rated at more than 130 horsepower.[6] The remaining 400,000 pleasure craft used conventional inboard drives that were powered by a variety of powerplants, both gasoline and diesel. Because emission data are not available for pleasure craft, Coast Guard and automotive data[2,19] are used to characterize emission factors for this class of vessels in Table 3.2.3-5.

Military vessels. Military vessels are powered by a wide variety of both diesel and steam power plants. Many of the emission data used in this section are the result of emission testing programs conducted by the U.S. Navy and the U.S. Coast Guard.[1-3,5] A separate table containing data on military vessels is not provided here, but the included tables should be sufficient to calculate approximate military vessel emissions.

TABLE 3.2.3.-5. AVERAGE EMISSION FACTORS FOR INBOARD PLEASURE CRAFT[a]

EMISSION FACTOR RATING: D

	Based on fuel consumption				Based on operating time			
	Diesel engine[b]		Gasoline engine[c]		Diesel engine[b]		Gasoline engine[c]	
Pollutant	$kg/10^3$ liter	$lb/10^3$ gal	$kg/10^3$ liter	$lb/10^3$ gal	kg/hr	lb/hr	kg/hr	lb/hr
Sulfur oxides[d] (SO_x as SO_2)	3.2	27	0.77	6.4	–	–	0.008	0.019
Carbon monoxide	17	140	149	1240	–	–	1.69	3.73
Hydrocarbons	22	180	10.3	86	–	–	0.117	0.258
Nitrogen oxides (NO_x as NO_2)	41	340	15.7	131	–	–	0.179	0.394

[a]Average emission factors are based on the duty cycle developed for large outboards ($\geq$ 48 kilowatts or $\geq$ 65 horsepower) from Reference 7. The above factors take into account the impact of water scrubbing of underwater gasoline engine exhaust, also from Reference 7. All values given are for single engine craft and must be modified for multiple engine vessels.

[b]Based on tests of diesel engines in Coast Guard vessels, Reference 2.

[c]Based on tests of automotive engines, Reference 19. Fuel consumption of 11.4 liter/hr (3 gal/hr) assumed. The resulting factors are only *rough* estimates.

[d]Based on fuel sulfur content of 0.20 percent for diesel fuel and 0.043 percent for gasoline from References 7 and 17. Calculated using fuel density of 0.740 kg/liter (6.17 lb/gal) for gasoline and 0.854 kg/liter (7.12 lb/gal) for diesel fuel.

References for Section 3.2.3

1. Walter, R. A., A. J. Broderick, J. C. Sturm, and E. C. Klaubert. USCG Pollution Abatement Program: A Preliminary Study of Vessel and Boat Exhaust Emissions. U.S. Department of Transportation, Transportation Systems Center. Cambridge, Mass. Prepared for the United States Coast Guard, Washington, D.C. Report No. DOT-TSC-USCG-72-3. November 1971. 119 p.

2. Souza, A. F. A Study of Emissions from Coast Guard Cutters. Final Report. Scott Research Laboratories, Inc. Plumsteadville, Pa. Prepared for the Department of Transportation, Transportation Systems Center, Cambridge, Mass., under Contract No. DOT-TSC-429. February 1973.

3. Wallace, B. L. Evaluation of Developed Methodology for Shipboard Steam Generator Systems. Department of the Navy. Naval Ship Research and Development Center. Materials Department. Annapolis, Md. Report No. 28-463. March 1973. 18 p.

4. Waldron, A. L. Sampling of Emission Products from Ships' Boiler Stacks. Department of the Navy. Naval Ship Research and Development Center. Annapolis, Md. Report No. 28-169. April 1972. 7 p.

5. Foernsler, R. O. Naval Ship Systems Air Contamination Control and Environmental Data Base Programs; Progress Report. Department of the Navy. Naval Ship Research and Development Center. Annapolis, Md. Report No. 28-443. February 1973. 9 p.

6. The Boating Business 1972. The Boating Industry Magazine. Chicago, Ill. 1973.

7. Hare, C. T. and K. J. Springer. Exhaust Emissions from Uncontrolled Vehicles and Related Equipment Using Internal Combustion Engines. Final Report Part 2. Outboard Motors. Southwest Research Institute. San Antonio, Tex. Prepared for the Environmental Protection Agency, Research Triangle Park, N.C., under Contract No. EHS 70-108. January 1973. 57 p.

8. Hurst, J. W. 1974 Chrysler Gasoline Marine Engines. Chrysler Corporation. Detroit, Mich.

9. Mercruiser Sterndrives/ Inboards 73. Mercury Marine, Division of the Brunswick Corporation. Fond du Lac, Wisc. 1972.

10. Boating 1972. Marex. Chicago, Illinois, and the National Association of Engine and Boat Manufacturers. Greenwich, Conn. 1972. 8 p.

11. Transportation Lines on the Great Lakes System 1970. Transportation Series 3. Corps of Engineers, United States Army, Waterborne Commerce Statistics Center. New Orleans, La. 1970. 26 p.

12. Transportation Lines on the Mississippi and the Gulf Intracoastal Waterway 1970. Transportation Series 4. Corps of Engineers, United States Army, Waterborne Commerce Statistics Center. New Orleans, La. 1970. 232 p.

13. Transportation Lines on the Atlantic, Gulf and Pacific Coasts 1970. Transportation Series 5. Corps of Engineers. United States Army. Waterborne Commerce Statistics Center. New Orleans, La. 1970. 201 p.

14. Schueneman, J. J. Some Aspects of Marine Air Pollution Problems on the Great Lakes. J. Air Pol. Control Assoc. *14*:23-29, September 1964.

15. 1971 Inland Waterborne Commerce Statistics. The American Waterways Operations, Inc. Washington, D.C. October 1972. 38 p.

16. Horsepower on the Inland Waterways. List No. 23. The Waterways Journal. St. Louis, Mo. 1972. 2 p.

17. Hare, C. T. and K. J. Springer. Exhaust Emissions from Uncontrolled Vehicles and Related Equipment Using Internal Combustion Engines. Part 1. Locomotive Diesel Engines and Marine Counterparts. Southwest Research Institute. San Antonio, Tex. Prepared for the Environmental Protection Agency, Research Triangle Park, N.C., under Contract No. EHS 70-108. October 1972. 39 p.

18. Pearson, J. R. Ships as Sources of Emissions. Puget Sound Air Pollution Control Agency. Seattle, Wash. (Presented at the Annual Meeting of the Pacific Northwest International Section of the Air Pollution Control Association. Portland, Ore. November 1969.)

19. Study of Emissions from Light-Duty Vehicles in Six Cities. Automotive Environmental Systems, Inc. San Bernardino, Calif. Prepared for the Environmental Protection Agency, Research Triangle Park, N.C., under Contract No. 68-04-0042. June 1971.

by David S. Kircher

3.2.4 Outboard-Powered Vessels

3.2.4.1 General – Most of the approximately 7 million outboard motors in use in the United States are 2-stroke engines with an average available horsepower of about 25. Because of the predominately leisure-time use of outboard motors, emissions related to their operation occur primarily during nonworking hours, in rural areas, and during the three summer months. Nearly 40 percent of the outboards are operated in the states of New York, Texas, Florida, Michigan, California, and Minnesota. This distribution results in the concentration of a large portion of total nationwide outboard emissions in these states.[1]

3.2.4.2 Emissions – Because the vast majority of outboards have underwater exhaust, emission measurement is very difficult. The values presented in Table 3.2.4-1 are the approximate atmospheric emissions from outboards. These data are based on tests of four outboard motors ranging from 4 to 65 horsepower.[1] The emission results from these motors are a composite based on the nationwide breakdown of outboards by horsepower. Emission factors are presented two ways in this section: in terms of fuel use and in terms of work output (horsepower hour). The selection of the factor used depends on the source inventory data available. Work output factors are used when the number of outboards in use is available. Fuel-specific emission factors are used when fuel consumption data are obtainable.

Table 3.2.4-1. AVERAGE EMISSION FACTORS FOR OUTBOARD MOTORS[a]
EMISSION FACTOR RATING: B

	Based on fuel consumption		Based on work output[c]	
Pollutant[b]	lb/10^3 gal	kg/10^3 liter	g/hphr	g/metric hphr
Sulfur oxides[d] (SO_x as SO_2)	6.4	0.77	0.49	0.49
Carbon monoxide	3300	400	250	250
Hydrocarbons[e]	1100	130	85	85
Nitrogen oxides (NO_x as NO_2)	6.6	0.79	0.50	0.50

[a] Reference 1. Data in this table are emissions to the atmosphere. A portion of the exhaust remains behind in the water.
[b] Particulate emission factors are not available because of the problems involved with measurement from an underwater exhaust system but are considered negligible.
[c] Horsepower hours are calculated by multiplying the average power produced during the hours of usage by the population of outboards in a given area. In the absence of data specific to a given geographic area, the hphr value can be estimated using average nationwide values from Reference 1. Reference 1 reports the average power produced (not the available power) as 9.1 hp and the average annual usage per engine as 50 hours. Thus, hphr = (number of outboards) (9.1 hp) (50 hours/outboard-year). Metric hphr = 0.9863 hphr.
[d] Based on fuel sulfur content of 0.043 percent from Reference 2 and on a density of 6.17 lb/gal.
[e] Includes exhaust hydrocarbons only. No crankcase emissions occur because the majority of outboards are 2-stroke engines that use crankcase induction. Evaporative emissions are limited by the widespread use of unvented tanks.

References for sections 3.2.4

1. Hare, C.T. and K.J. Springer. Exhaust Emissions from Uncontrolled Vehicles and Related Equipment Using Internal Combustion Engines. Part II, Outboard Motors. Final Report. Southwest Research Institute. San Antonio, Texas. Prepared for the Environmental Protection Agency, Research Triangle Park, N.C., under Contract Number EHS 70-108. January 1973.

2. Hare, C.T. and K.J. Springer. Study of Exhaust Emissions from Uncontrolled Vehicles and Related Equipment Using Internal Combustion Engines. Emission Factors and Impact Estimates for Light-Duty Air-Cooled Utility Engines and Motorcycles. Southwest Research Institute. San Antonio, Texas. Prepared for the Environmental Protection Agency, Research Triangle Park, N.C., under Contract Number EHS 70-108. January 1972.

3.2.5 Small, General Utility Engines

Revised by Charles C. Masser

3.2.5.1 General—This category of engines comprises small 2-stroke and 4-stroke, air-cooled, gasoline-powered motors. Examples of the uses of these engines are: lawnmowers, small electric generators, compressors, pumps, minibikes, snowthrowers, and garden tractors. This category does *not* include motorcycles, outboard motors, chain saws, and snowmobiles, which are either included in other parts of this chapter or are not included because of the lack of emission data.

Approximately 89 percent of the more than 44 million engines of this category in service in the United States are used in lawn and garden applications.[1]

3.2.5.2 Emissions—Emissions from these engines are reported in Table 3.2.5-1. For the purpose of emission estimation, engines in this category have been divided into lawn and garden (2-stroke), lawn and garden (4-stroke), and miscellaneous (4-stroke). Emission factors are presented in terms of horsepower hours, annual usage, and fuel consumption.

References for Section 3.2.5

1. Donohue, J. A., G. C. Hardwick, H. K. Newhall, K. S. Sanvordenker, and N. C. Woelffer. Small Engine Exhaust Emissions and Air Quality in the United States. (Presented at the Automotive Engineering Congress, Society of Automotive Engineers, Detroit. January 1972.)

2. Hare, C. T. and K. J. Springer. Study of Exhaust Emissions from Uncontrolled Vehicles and Related Equipment Using Internal Combustion Engines. Part IV, Small Air-Cooled Spark Ignition Utility Engines. Final Report. Southwest Research Institute. San Antonio, Tex. Prepared for the Environmental Protection Agency, Research Triangle Park, N.C., under Contract No. EHS 70-108. May 1973.

Table 3.2.5-1. EMISSION FACTORS FOR SMALL, GENERAL UTILITY ENGINES[a,b]
EMISSION FACTOR RATING: B

Engine	Sulfur oxides[c] (SO_x as SO_2)	Particulate	Carbon monoxide	Hydrocarbons		Nitrogen oxides (NO_x as NO_2)	Aldehydes (HCHO)
				Exhaust	Evaporative[d]		
2-Stroke, lawn and garden							
g/hphr	0.54	7.1	486	214	–	1.58	2.04
g/metric hphr	0.54	7.1	486	214	–	1.58	2.04
g/gal of fuel	1.80	23.6	1,618	713	–	5.26	6.79
g/unit-year	38	470	33,400	14,700	113	108	140
4-Stroke, lawn and garden							
g/hphr	0.37	0.44	279	23.2	–	3.17	0.49
g/metric hphr	0.37	0.44	279	23.2	–	3.17	0.49
g/gal of fuel	2.37	2.82	1,790	149	–	20.3	3.14
g/unit-year	26	31	19,100	1,590	113	217	34
4-Stroke miscellaneous							
g/hphr	0.39	0.44	250	15.2	–	4.97	0.47
g/metric hphr	0.39	0.44	250	15.2	–	4.97	0.47
g/gal of fuel	2.45	2.77	1,571	95.5	–	31.2	2.95
g/unit-year	30	34	19,300	1,170	290	384	36

[a]Reference 2.

[b]Values for g/unit-year were calculated assuming an annual usage of 50 hours and a 40 percent load factor. Factors for g/hphr can be used in instances where annual usages, load factors, and rated horsepower are known. Horsepower hours are the product of the usage in hours, the load factor, and the rated horsepower.

[c]Values calculated, not measured, based on the use of 0.043 percent sulfur content fuel.

[d]Values calculated from annual fuel consumption. Evaporative losses from storage and filling operations are not included (see Chapter 4).

3.2.6 Agricultural Equipment

by David S. Kircher

3.2.6.1 General – Farm equipment can be separated into two major categories: wheeled tractors and other farm machinery. In 1972, the wheeled tractor population on farms consisted of 4.5 million units with an average power of approximately 34 kilowatts (45 horsepower). Approximately 30 percent of the total population of these tractors is powered by diesel engines. The average diesel tractor is more powerful than the average gasoline tractor, that is, 52 kW (70 hp) versus 27 kW (36 hp).[1] A considerable amount of population and usage data is available for farm tractors. For example, the Census of Agriculture reports the number of tractors in use for each county in the U.S.[2] Few data are available on the usage and numbers of non-tractor farm equipment, however. Self-propelled combines, forage harvesters, irrigation pumps, and auxiliary engines on pull-type combines and balers are examples of non-tractor agricultural uses of internal combustion engines. Table 3.2.6-1 presents data on this equipment for the U.S.

3.2.6.2 Emissions – Emission factors for wheeled tractors and other farm machinery are presented in Table 3.2.6-2. Estimating emissions from the time-based emission factors–grams per hour (g/hr) and pounds per hour (lb/hr)–requires an average usage value in hours. An approximate figure of 550 hours per year may be used or, on the basis of power, the relationship, usage in hours = 450 + 5.24 (kW - 37.2) or usage in hours = 450 + 3.89 (hp - 50) may be employed.[1]

The best emissions estimates result from the use of "brake specific" emission factors (g/kWh or g/hphr). Emissions are the product of the brake specific emission factor, the usage in hours, the power available, and the load factor (power used divided by power available). Emissions are also reported in terms of fuel consumed.

Table 3.2.6-1. SERVICE CHARACTERISTICS OF FARM EQUIPMENT (OTHER THAN TRACTORS)[a]

Machine	Units in service, $\times 10^3$	Typical size	Typical power		Percent gasoline	Percent diesel
			kW	hp		
Combine, self-propelled	434	4.3 m (14 ft)	82	110	50	50
Combine, pull type	289	2.4 m (8 ft)	19	25	100	0
Corn pickers and picker-shellers	687	2-row	–[b]	–	–	–
Pick-up balers	655	5400 kg/hr (6 ton/hr)	30	40	100	0
Forage harvesters	295	3.7 m (12 ft) or 3-row	104	140	0	100
Miscellaneous	1205	–	22	30	50	50

[a]Reference 1.
[b]Unpowered.

Table 3.2.6-2. EMISSION FACTORS FOR WHEELED FARM TRACTORS AND NON-TRACTOR AGRICULTURAL EQUIPMENT[a]
EMISSION FACTOR RATING: C

Pollutant	Diesel farm tractor	Gasoline farm tractor	Diesel farm equipment (non-tractor)	Gasoline farm equipment (non-tractor)
Carbon monoxide				
g/hr	161	3,380	95.2	4,360
lb/hr	0.355	7.46	0.210	9.62
g/kWh	4.48	192	5.47	292
g/hphr	3.34	143	4.08	218
kg/10^3 liter	14.3	391	16.7	492
lb/10^3 gal	119	3,260	139	4,100
Exhaust hydrocarbons				
g/hr	77.8	128	38.6	143
lb/hr	0.172	0.282	0.085	0.315
g/kWh	2.28	7.36	2.25	9.63
g/hphr	1.70	5.49	1.68	7.18
kg/10^3 liter	7.28	15.0	6.85	16.2
lb/10^3 gal	60.7	125	57.1	135
Crankcase hydrocarbons[b]				
g/hr	–	26.0	–	28.6
lb/hr	–	0.057	–	0.063
g/kWh	–	1.47	–	1.93
g/hphr	–	1.10	–	1.44
kg/10^3 liter	–	3.01	–	3.25
lb/10^3 gal	–	25.1	–	27.1
Evaporative hydrocarbons[b]				
g/unit-year	–	15,600	–	1,600
lb/unit-year	–	34.4	–	3.53
Nitrogen oxides (NO_x as NO_2)				
g/hr	452	157	210	105
lb/hr	0.996	0.346	0.463	0.231
g/kWh	12.6	8.88	12.11	7.03
g/hphr	9.39	6.62	9.03	5.24
kg/10^3 liter	40.2	18.1	36.8	11.8
lb/10^3 gal	335	151	307	98.5
Aldehydes (RCHO as HCHO)				
g/hr	16.3	7.07	7.23	4.76
lb/hr	0.036	0.016	0.016	0.010
g/kWh	0.456	0.402	0.402	0.295
g/hphr	0.340	0.300	0.30	0.220
kg/10^3 liter	1.45	0.821	1.22	0.497
lb/10^3 gal	12.1	6.84	10.2	4.14
Sulfur oxides[c] (SO_x as SO_2)				
g/hr	42.2	5.56	21.7	6.34
lb/hr	0.093	0.012	0.048	0.014

Table 3.2.6-2. (continued). EMISSION FACTORS FOR WHEELED FARM TRACTORS AND NON-TRACTOR AGRICULTURAL EQUIPMENT[a]
EMISSION FACTOR RATING: C

Pollutant	Diesel farm tractor	Gasoline farm tractor	Diesel farm equipment (non-tractor)	Gasoline farm equipment (non-tractor)
g/kWh	1.17	0.312	1.23	0.377
g/hphr	0.874	0.233	0.916	0.281
kg/10^3 liter	3.74	0.637	3.73	0.634
lb/10^3 gal	31.2	5.31	31.1	5.28
Particulate				
g/hr	61.8	8.33	34.9	7.94
lb/hr	0.136	0.018	0.077	0.017
g/kWh	1.72	0.471	2.02	0.489
g/hphr	1.28	0.361	1.51	0.365
kg/10^3 liter	5.48	0.960	6.16	0.823
lb/10^3 gal	45.7	8.00	51.3	6.86

[a]Reference 1.

[b]Crankcase and evaporative emissions from diesel engines are considered negligible.

[c]Not measured. Calculated from fuel sulfur content of 0.043 percent and 0.22 percent for gasoline-powered and diesel-powered equipment, respectively.

References for Section 3.2.6

1. Hare, C. T. and K. J. Springer. Exhaust Emissions from Uncontrolled Vehicles and Related Equipment Using Internal Combustion Engines. Final Report. Part 5: Heavy-Duty Farm, Construction and Industrial Engines. Southwest Research Institute, San Antonio, Tex. Prepared for Environmental Protection Agency, Research Triangle Park, N.C., under Contract No. EHS 70-108. August 1973. 97 p.

2. County Farm Reports. U.S. Census of Agriculture. U.S. Department of Agriculture. Washington, D.C.

3.2.7 Heavy-Duty Construction Equipment

by David S. Kircher

3.2.7.1 General – Because few sales, population, or usage data are available for construction equipment, a number of assumptions were necessary in formulating the emission factors presented in this section.[1] The useful life of construction equipment is fairly short because of the frequent and severe usage it must endure. The annual usage of the various categories of equipment considered here ranges from 740 hours (wheeled tractors and rollers) to 2000 hours (scrapers and off-highway trucks). This high level of use results in average vehicle lifetimes of only 6 to 16 years. The equipment categories in this section include: tracklaying tractors, tracklaying shovel loaders, motor graders, scrapers, off-highway trucks, wheeled loaders, wheeled tractors, rollers, wheeled dozers, and miscellaneous machines. The latter category contains a vast array of less numerous mobile and semi-mobile machines used in construction, such as, belt loaders, cranes, pumps, mixers, and generators. With the exception of rollers, the majority of the equipment within each category is diesel-powered.

3.2.7.2 Emissions – Emission factors for heavy-duty construction equipment are reported in Table 3.2.7-1 for diesel engines and in Table 3.2.7-2 for gasoline engines. The factors are reported in three different forms–on the basis of running time, fuel consumed, and power consumed. In order to estimate emissions from time-based emission factors, annual equipment usage in hours must be estimated. The following estimates of use for the equipment listed in the tables should permit reasonable emission calculations.

Category	Annual operation, hours/year
Tracklaying tractors	1050
Tracklaying shovel loaders	1100
Motor graders	830
Scrapers	2000
Off-highway trucks	2000
Wheeled loaders	1140
Wheeled tractors	740
Rollers	740
Wheeled dozers	2000
Miscellaneous	1000

The best method for calculating emissions, however, is on the basis of "brake specific" emission factors (g/kWh or g/hphr). Emissions are calculated by taking the product of the brake specific emission factor, the usage in hours, the power available (that is, rated power), and the load factor (the power actually used divided by the power available).

References for Section 3.2.7

1. Hare, C. T. and K. J. Springer. Exhaust Emissions from Uncontrolled Vehicles and Related Equipment Using Internal Combustion Engines – Final Report. Part 5: Heavy-Duty Farm, Construction, and Industrial Engines. Southwest Research Institute, San Antonio, Tex. Prepared for Environmental Protection Agency, Research Triangle Park, N.C., under Contract No. EHS 70-108. October 1973. 105 p.

2. Hare, C. T. Letter to C. C. Masser of Environmental Protection Agency, Research Triangle Park, N.C., concerning fuel-based emission rates for farm, construction, and industrial engines. San Antonio, Tex. January 14, 1974. 4 p.

Table 3.2.7-1. EMISSION FACTORS FOR HEAVY-DUTY, DIESEL-POWERED CONSTRUCTION EQUIPMENT[a]
EMISSION FACTOR RATING: C

Pollutant	Tracklaying tractor	Wheeled tractor	Wheeled dozer	Scraper	Motor grader
Carbon monoxide					
g/hr	175.	973.	335.	660.	97.7
lb/hr	0.386	2.15	0.739	1.46	0.215
g/kWh	3.21	5.90	2.45	3.81	2.94
g/hphr	2.39	4.40	1.83	2.84	2.19
kg/10^3 liter	10.5	19.3	7.90	11.8	9.35
lb/10^3 gal	87.5	161.	65.9	98.3	78.0
Exhaust hydrocarbons					
g/hr	50.1	67.2	106.	284.	24.7
lb/hr	0.110	0.148	0.234	0.626	0.054
g/kWh	0.919	1.86	0.772	1.64	0.656
g/hphr	0.685	1.39	0.576	1.22	0.489
kg/10^3 liter	3.01	6.10	2.48	5.06	2.09
lb/10^3 gal	25.1	50.9	20.7	42.2	17.4
Nitrogen oxides (NO_x as NO_2)					
g/hr	665.	451.	2290.	2820.	478.
lb/hr	1.47	0.994	5.05	6.22	1.05
g/kWh	12.2	12.5	16.8	16.2	14.1
g/hphr	9.08	9.35	12.5	12.1	10.5
kg/10^3 liter	39.8	41.0	53.9	50.2	44.8
lb/10^3 gal	332.	342.	450.	419.	374.
Aldehydes (RCHO as HCHO)					
g/hr	12.4	13.5	29.5	65.	5.54
lb/hr	0.027	0.030	0.065	0.143	0.012
g/kWh	0.228	0.378	0.215	0.375	0.162
g/hphr	0.170	0.282	0.160	0.280	0.121
kg/10^3 liter	0.745	1.23	0.690	1.16	0.517
lb/10^3 gal	6.22	10.3	5.76	9.69	4.31
Sulfur oxides (SO_x as SO_2)					
g/hr	62.3	40.9	158.	210.	39.0
lb/hr	0.137	0.090	0.348	0.463	0.086
g/kWh	1.14	1.14	1.16	1.21	1.17
g/hphr	0.851	0.851	0.867	0.901	0.874
kg/10^3 liter	3.73	3.73	3.74	3.74	3.73
lb/10^3 gal	31.1	31.1	31.2	31.2	31.1
Particulate					
g/hr	50.7	61.5	75.	184.	27.7
lb/hr	0.112	0.136	0.165	0.406	0.061
g/kWh	0.928	1.70	0.551	1.06	0.838
g/hphr	0.692	1.27	0.411	0.789	0.625
kg/10^3 liter	3.03	5.57	1.77	3.27	2.66
lb/10^3 gal	25.3	46.5	14.8	27.3	22.2

[a]References 1 and 2.

Table 3.2.7-1 (continued). EMISSION FACTORS FOR HEAVY-DUTY, DIESEL-POWERED CONSTRUCTION EQUIPMENT[a]
EMISSION FACTOR RATING: C

Pollutant	Wheeled loader	Tracklaying loader	Off-Highway truck	Roller	Miscel-laneous
Carbon monoxide					
g/hr	251.	72.5	610.	83.5	188.
lb/hr	0.553	0.160	1.34	0.184	0.414
g/kWh	3.51	2.41	3.51	4.89	3.78
g/hphr	2.62	1.80	2.62	3.65	2.82
kg/10^3 liter	11.4	7.90	11.0	13.7	11.3
lb/10^3 gal	95.4	65.9	92.2	114.	94.2
Exhaust hydrocarbons					
g/hr	84.7	14.5	198.	24.7	71.4
lb/hr	0.187	0.032	0.437	0.054	0.157
g/kWh	1.19	0.485	1.14	1.05	1.39
g/hphr	0.888	0.362	0.853	0.781	1.04
kg/10^3 liter	3.87	1.58	3.60	2.91	4.16
lb/10^3 gal	32.3	13.2	30.0	24.3	34.7
Nitrogen oxides (NO_x as NO_2)					
g/hr	1090.	265.	3460.	474.	1030.
lb/hr	2.40	0.584	7.63	1.04	2.27
g/kWh	15.0	8.80	20.0	21.1	19.8
g/hphr	11.2	6.56	14.9	15.7	14.8
kg/10^3 liter	48.9	28.8	62.8	58.5	59.2
lb/10^3 gal	408.	240.	524.	488.	494.
Aldehydes (RCHO as HCHO)					
g/hr	18.8	4.00	51.0	7.43	13.9
lb/hr	0.041	0.009	0.112	0.016	0.031
g/kWh	0.264	0.134	0.295	0.263	0.272
g/hphr	0.197	0.100	0.220	0.196	0.203
kg/10^3 liter	0.859	0.439	0.928	0.731	0.813
lb/10^3 gal	7.17	3.66	7.74	6.10	6.78
Sulfur oxides (SO_x as SO_2)					
g/hr	82.5	34.4	206.	30.5	64.7
lb/hr	0.182	0.076	0.454	0.067	0.143
g/kWh	1.15	1.14	1.19	1.34	1.25
g/hphr	0.857	0.853	0.887	1.00	0.932
kg/10^3 liter	3.74	3.74	3.74	3.73	3.73
lb/10^3 gal	31.2	31.2	31.2	31.1	31.1
Particulate					
g/hr	77.9	26.4	116.	22.7	63.2
lb/hr	0.172	0.058	0.256	0.050	0.139
g/kWh	1.08	0.878	0.673	1.04	1.21
g/hphr	0.805	0.655	0.502	0.778	0.902
kg/10^3 liter	3.51	2.88	2.12	2.90	3.61
lb/10^3 gal	29.3	24.0	17.7	24.2	30.1

[a]References 1 and 2.

Table 3.2.7-2. EMISSION FACTORS FOR HEAVY-DUTY GASOLINE-POWERED CONSTRUCTION EQUIPMENT[a]
EMISSION FACTOR RATING: C

Pollutant	Wheeled tractor	Motor grader	Wheeled loader	Roller	Miscel-laneous
Carbon monoxide					
g/hr	4320.	5490.	7060.	6080.	7720.
lb/hr	9.52	12.1	15.6	13.4	17.0
g/kWh	190.	251.	219.	271.	266.
g/hphr	142.	187.	163.	202.	198.
kg/10^3 liter	389.	469.	435.	460.	475.
lb/10^3 gal	3250.	3910.	3630.	3840.	3960.
Exhaust hydrocarbons					
g/hr	164.	186.	241.	277.	254.
lb/hr	0.362	0.410	0.531	0.611	0.560
g/kWh	7.16	8.48	7.46	12.40	8.70
g/hphr	5.34	6.32	5.56	9.25	6.49
kg/10^3 liter	14.6	15.8	14.9	21.1	15.6
lb/10^3 gal	122.	132.	124.	176.	130.
Evaporative hydrocarbons[b]					
g/hr	30.9	30.0	29.7	28.2	25.4
lb/hr	0.0681	0.0661	0.0655	0.0622	0.0560
Crankcase hydrocarbons[b]					
g/hr	32.6	37.1	48.2	55.5	50.7
lb/hr	0.0719	0.0818	0.106	0.122	0.112
Nitrogen oxides (NO_x as NO_2)					
g/hr	195.	145.	235.	164.	187.
lb/hr	0.430	0.320	0.518	0.362	0.412
g/kWh	8.54	6.57	7.27	7.08	6.42
g/hphr	6.37	4.90	5.42	5.28	4.79
kg/10^3 liter	17.5	12.2	14.5	12.0	11.5
lb/10^3 gal	146.	102.	121.	100.	95.8
Aldehydes (RCHO as HCHO)					
g/hr	7.97	8.80	9.65	7.57	9.00
lb/hr	0.0176	0.0194	0.0213	0.0167	0.0198
g/kWh	0.341	0.386	0.298	0.343	0.298
g/hphr	0.254	0.288	0.222	0.256	0.222
kg/10^3 liter	0.697	0.721	0.593	0.582	0.532
lb/10^3 gal	5.82	6.02	4.95	4.86	4.44
Sulfur oxides (SO_x as SO_2)					
g/hr	7.03	7.59	10.6	8.38	10.6
lb/hr	0.0155	0.0167	0.0234	0.0185	0.0234
g/kWh	0.304	0.341	0.319	0.373	0.354
g/hphr	0.227	0.254	0.238	0.278	0.264
kg/10^3 liter	0.623	0.636	0.636	0.633	0.633
lb/10^3 gal	5.20	5.31	5.31	5.28	5.28

Table 3.2.7-2. (continued). EMISSION FACTORS FOR HEAVY-DUTY GASOLINE-POWERED CONSTRUCTION EQUIPMENT[a]
EMISSION FACTOR RATING: C

Pollutant	Wheeled tractor	Motor grader	Wheeled loader	Roller	Miscel-laneous
Particulate					
g/hr	10.9	9.40	13.5	11.8	11.7
lb/hr	0.0240	0.0207	0.0298	0.0260	0.0258
g/kWh	0.484	0.440	0.421	0.527	0.406
g/hphr	0.361	0.328	0.314	0.393	0.303
kg/10^3 liter	0.991	0.822	0.839	0.895	0.726
lb/10^3 gal	8.27	6.86	7.00	7.47	6.06

[a]References 1 and 2.

[b]Evaporative and crankcase hydrocarbons based on operating time only (Reference 1).

3.2.8 Snowmobiles

by Charles C. Masser

3.2.8.1 General – In order to develop emission factors for snowmobiles, mass emission rates must be known, and operating cycles representative of usage in the field must be either known or assumed. Extending the applicability of data from tests of a few vehicles to the total snowmobile population requires additional information on the composition of the vehicle population by engine size and type. In addition, data on annual usage and total machine population are necessary when the effect of this source on national emission levels is estimated.

An accurate determination of the number of snowmobiles in use is quite easily obtained because most states require registration of the vehicles. The most notable features of these registration data are that almost 1.5 million sleds are operated in the United States, that more than 70 percent of the snowmobiles are registered in just four states (Michigan, Minnesota, Wisconsin, and New York), and that only about 12 percent of all snowmobiles are found in areas outside the northeast and northern midwest.

3.2.8.2 Emissions – Operating data on snowmobiles are somewhat limited, but enough are available so that an attempt can be made to construct a representative operating cycle. The required end products of this effort are time-based weighting factors for the speed/load conditions at which the test engines were operated; use of these factors will permit computation of "cycle composite" mass emissions, power consumption, fuel consumption, and specific pollutant emissions.

Emission factors for snowmobiles were obtained through an EPA-contracted study[1] in which a variety of snowmobile engines were tested to obtain exhaust emissions data. These emissions data along with annual usage data were used by the contractor to estimate emission factors and the nationwide emission impact of this pollutant source.

To arrive at average emission factors for snowmobiles, a reasonable estimate of average engine size was necessary. Weighting the size of the engine to the degree to which each engine is assumed to be representative of the total population of engines in service resulted in an estimated average displacement of 362 cubic centimeters (cm^3).

The speed/load conditions at which the test engines were operated represented, as closely as possible, the normal operation of snowmobiles in the field. Calculations using the fuel consumption data obtained during the tests and the previously approximated average displacement of 362 cm^3 resulted in an estimated average fuel consumption of 0.94 gal/hr.

To compute snowmobile emission factors on a gram per unit year basis, it is necessary to know not only the emission factors but also the annual operating time. Estimates of this usage are discussed in Reference 1. On a national basis, however, average snowmobile usage can be assumed to be 60 hours per year. Emission factors for snowmobiles are presented in Table 3.2.8-1.

References for Section 3.2.8

1. Hare, C. T. and K. J. Springer. Study of Exhaust Emissions from Uncontrolled Vehicles and Related Equipment Using Internal Combustion Engines. Final Report. Part 7: Snowmobiles. Southwest Research Institute, San Antonio, Tex. Prepared for Environmental Protection Agency, Research Triangle Park, N.C., under Contract No. EHS 70-108. April 1974.

Table 3.2.8-1. EMISSION FACTORS FOR SNOWMOBILES
EMISSION FACTOR RATING: B

Pollutant	Emissions			
	g/unit-year[a]	g/gal[b]	g/liter[b]	g/hr[b]
Carbon monoxide	58,700	1,040.	275.	978.
Hydrocarbons	37,800	670.	177.	630.
Nitrogen oxides	600	10.6	2.8	10.0
Sulfur oxides[c]	51	0.90	0.24	0.85
Solid particulate	1,670	29.7	7.85	27.9
Aldehydes (RCHO)	552	9.8	2.6	9.2

[a]Based on 60 hours of operation per year and 362 cm^3 displacement.
[b]Based on 362 cm^3 displacement and average fuel consumption of 0.94 gal/hr.
[c]Based on sulfur content of 0.043 percent by weight.

3.3 OFF-HIGHWAY, STATIONARY SOURCES

by David S. Kircher and Charles C. Masser

In general, engines included in this category are internal combustion engines used in applications similar to those associated with external combustion sources (see Chapter 1). The major engines within this category are gas turbines and large, heavy-duty, general utility reciprocating engines. Emission data currently available for these engines are limited to gas turbines and natural-gas-fired, heavy-duty, general utility engines. Most stationary internal combustion engines are used to generate electric power, to pump gas or other fluids, or to compress air for pneumatic machinery.

3.3.1 Stationary Gas Turbines for Electric Utility Power Plants

3.3.1.1 General – Stationary gas turbines find application in electric power generators, in gas pipeline pump and compressor drives, and in various process industries. The majority of these engines are used in electrical generation for continuous, peaking, or standby power.[1] The primary fuels used are natural gas and No. 2 (distillate) fuel oil, although residual oil is used in a few applications.

3.3.1.2 Emissions – Data on gas turbines were gathered and summarized under an EPA contract.[2] The contractor found that several investigators had reported data on emissions from gas turbines used in electrical generation but that little agreement existed among the investigators regarding the terms in which the emissions were expressed. The efforts represented by this section include acquisition of the data and their conversion to uniform terms. Because many sets of measurements reported by the contractor were not complete, this conversion often involved assumptions on engine air flow or fuel flow rates (based on manufacturers' data). Another shortcoming of the available information was that relatively few data were obtained at loads below maximum rated (or base) load.

Available data on the population and usage of gas turbines in electric utility power plants are fairly extensive, and information from the various sources appears to be in substantial agreement. The source providing the most complete information is the Federal Power Commission, which requires major utilities (electric revenues of $1 million or more) to submit operating and financial data on an annual basis. Sawyer and Farmer[3] employed these data to develop statistics on the use of gas turbines for electric generation in 1971. Although their report involved only the major, publicly owned utilities (not the private or investor-owned companies), the statistics do appear to include about 87 percent of the gas turbine power used for electric generation in 1971.

Of the 253 generating stations listed by Sawyer and Farmer, 137 have more than one turbine-generator unit. From the available data, it is not possible to know how many hours *each* turbine was operated during 1971 for these multiple-turbine plants. The remaining 116 (single-turbine) units, however, were operated an average of 1196 hours during 1971 (or 13.7 percent of the time), and their average load factor (percent of rated load) during operation was 86.8 percent. This information alone is not adequate for determining a representative operating pattern for electric utility turbines, but it should help prevent serious errors.

Using 1196 hours of operation per year and 250 starts per year as normal, the resulting average operating day is about 4.8 hours long. One hour of no-load time per day would represent about 21 percent of operating time, which is considered somewhat excessive. For economy considerations, turbines are not run at off-design conditions any longer than necessary, so time spent at intermediate power points is probably minimal. The bulk of turbine operation must be at base or peak load to achieve the high load factor already mentioned.

If it is assumed that time spent at off-design conditions includes 15 percent at zero load and 2 percent each at 25 percent, 50 percent, and 75 percent load, then the percentages of operating time at rated load (100 percent) and peak load (assumed to be 125 percent of rated) can be calculated to produce an 86.8 percent load factor. These percentages turn out to be 19 percent at peak load and 60 percent at rated load; the postulated cycle based on this line of reasoning is summarized in Table 3.3.1-1.

Table 3.3.1-1. TYPICAL OPERATING CYCLE FOR ELECTRIC UTILITY TURBINES

Condition, % of rated power	Percent operating time spent at condition	Time at condition based on 4.8-hr day		Contribution to load factor at condition
		hours	minutes	
0	15	0.72	43	0.00 x 0.15 = 0.0
25	2	0.10	6	0.25 x 0.02 = 0.005
50	2	0.10	6	0.50 x 0.02 = 0.010
75	2	0.10	6	0.75 x 0.02 = 0.015
100 (base)	60	2.88	173	1.0 x 0.60 = 0.60
125 (peak)	19	0.91	55	1.25 x 0.19 = 0.238
		4.81	289	Load factor = 0.868

The operating cycle in Table 3.3.1-1 is used to compute emission factors, although it is only an estimate of actual operating patterns.

Table 3.3.1-2. COMPOSITE EMISSION FACTORS FOR 1971 POPULATION OF ELECTRIC UTILITY TURBINES
EMISSION FACTOR RATING: B

Time basis	Nitrogen oxides	Hydro-carbons	Carbon Monoxide	Partic-ulate	Sulfur oxides
Entire population					
lb/hr rated load[a]	8.84	0.79	2.18	0.52	0.33
kg/hr rated load	4.01	0.36	0.99	0.24	0.15
Gas-fired only					
lb/hr rated load	7.81	0.79	2.18	0.27	0.098
kg/hr rated load	3.54	0.36	0.99	0.12	0.044
Oil-fired only					
lb/hr rated load	9.60	0.79	2.18	0.71	0.50
kg/hr rated load	4.35	0.36	0.99	0.32	0.23
Fuel basis					
Gas-fired only					
lb/10^6 ft^3 gas	413.	42.	115.	14.	5.2
kg/10^6 m^3 gas	6615.	673.	1842.	224.	83.
Oil-fired only					
lb/10^3 gal oil	67.8	5.57	15.4	5.0	3.5
kg/10^3 liter oil	8.13	0.668	1.85	0.60	0.42

[a]Rated load expressed in megawatts.

Table 3.3.1-2 is the resultant composite emission factors based on the operating cycle of Table 3.3.1-1 and the 1971 population of electric utility turbines.

Different values for time at base and peak loads are obtained by changing the total time at lower loads (0 through 75 percent) or by changing the distribution of time spent at lower loads. The cycle given in Table 3.3.1-1 seems reasonable, however, considering the fixed load factor and the economies of turbine operation. Note that the cycle determines *only* the importance of each load condition in computing composite emission factors for each type of turbine, *not* overall operating hours.

The top portion of Table 3.3.1-2 gives separate factors for gas-fired and oil-fired units, and the bottom portion gives fuel-based factors that can be used to estimate emission rates when overall fuel consumption data are available. Fuel-based emission factors on a mode basis would also be useful but present fuel consumption data are not adequate for this purpose.

References for Section 3.3.1

1. O'Keefe, W. and R. G. Schwieger. Prime Movers. Power. *115*(11): 522-531. November 1971.

2. Hare, C. T. and K. J. Springer. Exhaust Emissions from Uncontrolled Vehicles and Related Equipment Using Internal Combustion Engines. Final Report. Part 6: Gas Turbine Electric Utility Power Plants. Southwest Research Institute, San Antonio, Tex. Prepared for Environmental Protection Agency, Research Triangle Park, N.C., under Contract No. EHS 70-108, February 1974.

3. Sawyer, V. W. and R. C. Farmer. Gas Turbines in U.S. Electric Utilities. Gas Turbine International. January – April 1973.

3.3.2 Heavy-Duty, General Utility, Gaseous-Fueled Engines

3.3.2.1 General – Engines in this category are used in the oil and gas industry for driving compressors in pipeline pressure boosting systems, in gas distribution systems, and in vapor recovery systems (at petroleum refineries). The engines burn either natural gas or refinery gas.

3.3.2.2 Emissions – Emissions from heavy-duty, gaseous-fueled internal combustion engines are reported in Table 3.3.2-1. Test data were available for nitrogen oxides and hydrocarbons only; sulfur oxides are calculated from fuel sulfur content. Nitrogen oxides have been found to be extremely dependent on an engine's work output; hence, Figure 3.3.2-1 presents the relationship between nitrogen oxide emissions and horsepower.

Table 3.3.2-1. EMISSION FACTORS FOR HEAVY-DUTY, GENERAL-UTILITY, STATIONARY ENGINES USING GASEOUS FUELS

EMISSION FACTOR RATING: C

Pollutant	Emissions[a]			
	$lb/10^6\ ft^3$	$kg/10^6\ m^3$	lb/hr	kg/hr
Sulfur oxides[b]	0.6	9.6	–	–
Nitrogen oxides[c]	–	–	–	–
Hydrocarbons[d]	1.2	19	4.2	1.9

[a] Reference 1. Values for $lb/10^6\ ft^3$ ($kg/10^6\ m^3$) based on 3.37 $10^6\ ft^3$/hr heat input.
[b] Based on an average natural gas sulfur content of 2000 $gr/10^6\ ft^3$ (4600 $g/10^6\ m^3$).
[c] See Figure 3.3.2-1.
[d] Values in Reference 1 were given as tons/day. In converting to lb/hr, 24-hour operation was assumed.

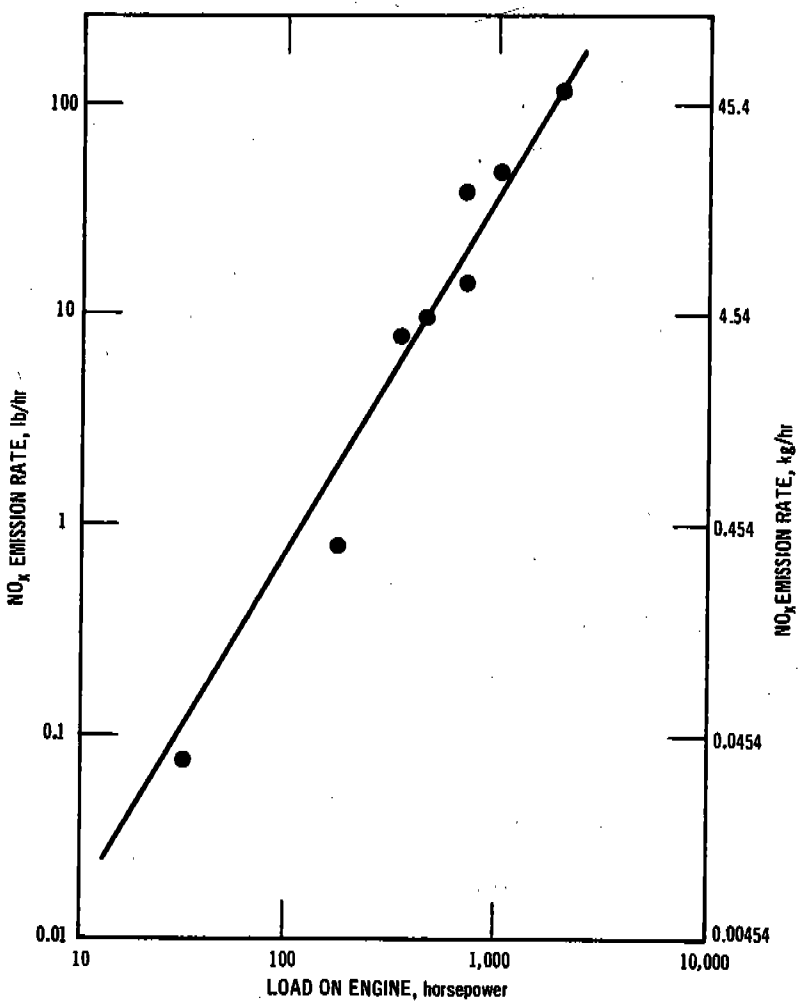

Figure 3.3.2-1. Nitrogen oxides emissions from stationary internal combustion engines.[2,3]

References for Section 3.3.2

1. Emissions to the Atmosphere from Eight Miscellaneous Sources in Petroleum Refineries. Los Angeles County Air Pollution Control District, Los Angeles, Calif., Report Number VIII. June 1958.

2. Bartok, W., A.R. Crawford, A.R. Cunningham, H.J. Hall, E.H. Manny, and A. Skopp. Systems Study of Nitrogen Oxide Control Methods for Stationary Sources. Final Report-Volume II. Esso Research and Engineering Company. Newark, N.J. Prepared for the National Air Pollution Control Administration, Durham, N.C., under Contract Number PH-22-68-55. November 1969.

3. Mills, J.A., K.D. Leudtke, P.F. Woolrich, and S.B. Perry. Emissions of Oxides of Nitrogen from Stationary Sources in Los Angeles County. Report Number 3. Los Angeles County Air Pollution Control District, Los Angeles, Calif. April 1961.

3.3.3 Gasoline and Diesel Industrial Engines

by David S. Kircher

3.3.3-1 General – This engine category covers a wide variety of industrial applications of both gasoline and diesel internal combustion power plants, such as fork lift trucks, mobile refrigeration units, generators, pumps, and portable well-drilling equipment. The rated power of these engines covers a rather substantial range–from less than 15 kW to 186 kW (20 to 250 hp) for gasoline engines and from 34 kW to 447 kW (45 to 600 hp) for diesel engines. Understandably, substantial differences in both annual usage (hours per year) and engine duty cycles also exist. It was necessary, therefore, to make reasonable assumptions concerning usage in order to formulate emission factors.[1]

3.3.3-2 Emissions – Once reasonable usage and duty cycles for this category were ascertained, emission values from each of the test engines [1] were aggregated (on the basis of nationwide engine population statistics) to arrive at the factors presented in Table 3.3.3-1. Because of their aggregate nature, data contained in this table must be applied to a population of industrial engines rather than to an individual power plant.

The best method for calculating emissions is on the basis of "brake specific" emission factors (g/kWh or lb/hphr). Emissions are calculated by taking the product of the brake specific emission factor, the usage in hours (that is, hours per year or hours per day), the power available (rated power), and the load factor (the power actually used divided by the power available).

Table 3.3.3-1. EMISSION FACTORS FOR GASOLINE- AND DIESEL-POWERED INDUSTRIAL EQUIPMENT
EMISSION FACTOR RATING: C

Pollutant[a]	Engine category[b]	
	Gasoline	Diesel
Carbon monoxide		
g/hr	5700.	197.
lb/hr	12.6	0.434
g/kWh	267.	4.06
g/hphr	199.	3.03
kg/10^3 liter	472.	12.2
lb/10^3 gal	3940.	102.
Exhaust hydrocarbons		
g/hr	191.	72.8
lb/hr	0.421	0.160
g/kWh	8.95	1.50
g/hphr	6.68	1.12
kg/10^3 liter	15.8	4.49
lb/10^3 gal	132.	37.5
Evaporative hydrocarbons		
g/hr	62.0	–
lb/hr	0.137	–
Crankcase hydrocarbons		
g/hr	38.3	–
lb/hr	0.084	–

Table 3.3.3-1. (continued). EMISSION FACTORS FOR GASOLINE- AND DIESEL-POWERED INDUSTRIAL EQUIPMENT
EMISSION FACTOR RATING: C

Pollutant[a]	Engine category[b]	
	Gasoline	Diesel
Nitrogen oxides		
g/hr	148.	910.
lb/hr	0.326	2.01
g/kWh	6.92	18.8
g/hphr	5.16	14.0
kg/10^3 liter	12.2	56.2
lb/10^3 gal	102.	469.
Aldehydes		
g/hr	6.33	13.7
lb/hr	0.014	0.030
g/kWh	0.30	0.28
g/hphr	0.22	0.21
kg/10^3 liter	0.522	0.84
lb/10^3 gal	4.36	7.04
Sulfur oxides		
g/hr	7.67	60.5
lb/hr	0.017	0.133
g/kWh	0.359	1.25
g/hphr	0.268	0.931
kg/10^3 liter	0.636	3.74
lb/10^3 gal	5.31	31.2
Particulate		
g/hr	9.33	65.0
lb/hr	0.021	0.143
g/kWh	0.439	1.34
g/hphr	0.327	1.00 - .0022 lb/hp-hr
kg/10^3 liter	0.775	4.01
lb/10^3 gal	6.47	33.5

[a]References 1 and 2.

[b]As discussed in the text, the engines used to determine the results in this table cover a wide range of uses and power. The listed values do not, however, necessarily apply to some very large stationary diesel engines.

References for Section 3.3.3

1. Hare, C. T. and K. J. Springer. Exhaust Emissions from Uncontrolled Vehicles and Related Equipment Using Internal Combustion Engines. Final Report. Part 5: Heavy-Duty Farm, Construction, and Industrial Engines. Southwest Research Institute. San Antonio, Texas. Prepared for Environmental Protection Agency, Research Triangle Park, N.C., under Contract No. EHS 70-108. October 1973. 105 p.

2. Hare, C. T. Letter to C. C. Masser of the Environmental Protection Agency concerning fuel-based emission rates for farm, construction, and industrial engines. San Antonio, Tex. January 14, 1974.

4. EVAPORATION LOSS SOURCES

Evaporation losses include the organic solvents emitted from dry-cleaning plants and surface-coating operations as well as the volatile matter in petroleum products. This chapter presents the hydrocarbon emissions from these sources, including petroleum storage and gasoline marketing. Where possible, the effect of controls to reduce the emissions of organic compounds has been shown.

4.1 DRY CLEANING

4.1.1 General[1]

Clothing and other textiles may be cleaned by treating them with organic solvents. This treatment process involves agitating the clothing in a solvent bath, rinsing with clean solvent, and drying with warm air.

There are basically two types of dry-cleaning installations: those using petroleum solvents [Stoddard and 140°F (60°C)] and those using chlorinated synthetic solvents (perchloroethylene). The trend in dry-cleaning operations today is toward smaller package operations located in shopping centers and suburban business districts that handle approximately 1500 pounds (675 kg) of clothes per week on the average. These plants almost exclusively use perchloroethylene, whereas the older, larger dry-cleaning plants use petroleum solvents. It has been estimated that perchloroethylene is used on 50 percent of the weight of clothes dry-cleaned in the United States today and that 70 percent of the dry-cleaning plants use perchloroethylene.[2]

4.1.2 Emissions and Controls[1]

The major source of hydrocarbon emissions in dry cleaning is the tumbler through which hot air is circulated to dry the clothes. Drying leads to vaporization of the solvent and consequent emissions to the atmosphere, unless control equipment is used. The primary control element in use in synthetic solvent plants is a water-cooled condenser that is an integral part of the closed cycle in a tumbler or drying system. Up to 95 percent of the solvent that is evaporated from the clothing is recovered here. About half of the remaining solvent is then recovered in an activated-carbon adsorber, giving an overall control efficiency of 97 to 98 percent. There are no commercially available control units for solvent recovery in petroleum-based plants because it is not economical to recover the vapors. Emission factors for dry-cleaning operations are shown in Table 4.1-1.

It has been estimated that about 18 pounds (8.2 kilograms) per capita per year of clothes are cleaned in moderate climates[3] and about 25 pounds (11.3 kilograms) per capita per year in colder areas.[4] Based on this information and the facts that 50 percent of all solvents used are petroleum-based[2] and 25 percent of the synthetic solvent plants are controlled,[5] emission factors can be determined on a pounds- (kilograms-) per-capita basis. Thus approximately 2 pounds (0.9 kilogram) per capita per year are emitted from dry-cleaning plants in moderate climates and 2.7 pounds (1.23 kilograms) per capita per year in colder areas.

Table 4.1-1. HYDROCARBON EMISSION FACTORS FOR DRY-CLEANING OPERATIONS
EMISSION FACTOR RATING: C

Control	Petroleum solvents		Synthetic solvents	
	lb/ton	kg/MT	lb/ton	kg/MT
Uncontrolled[a]	305	152.5	210	105
Average control[b]	–	–	95	47.5
Good control[c]	–	–	35	17.5

[a]References 2, 4, 6, and 7.
[b]Reference 6.
[c]Reference 8.

References for Section 4.1

1. Air Pollutant Emission Factors. Final Report. Resources Research, Incorporated. Prepared for National Air Pollution Control Administration, Durham, N.C., under Contract Number CPA-22-69-119. April 1970.

2. Communication with the National Institute of Dry Cleaning. 1969.

3. Duprey, R.L. Compilation of Air Pollutant Emission Factors. U.S. DHEW, PHS, National Center for Air Pollution Control, Durham, N. C. PHS Publication Number 999-AP-42. 1968. p. 46.

4. Dry Cleaning Plant Survey. Michigan Department of Health. Kent County, Michigan. 1965.

5. Communication on dry cleaning plants with S. Landon, Washer Machinery Corporation. June 1968.

6. Chass, R. L., C.V. Kanter, and J.H. Elliot. Contribution of Solvents to Air Pollution and Methods for Controlling Their Emissions. J. Air Pol. Control Assoc. *13*:64-72, February 1963.

7. Bi-State Study of Air Pollution in the Chicago Metropolitan Area. Ill. Dept. of Public Health, Ind. State Board of Health, and Purdue University. Chicago, Illinois. 1957-59.

8. Communication on emissions from dry cleaning plants with A. Netzley. Los Angeles County Air Pollution Control District. Los Angeles, California. July 1968.

4.2 SURFACE COATING

4.2.1 Process Description[1,2]

Surface-coating operations primarily involve the application of paint, varnish, lacquer, or paint primer for decorative or protective purposes. This is accomplished by brushing, rolling, spraying, flow coating, and dipping. Some of the industries involved in surface-coating operations are automobile assemblies, aircraft companies, container manufacturers, furniture manufacturers, appliance manufacturers, job enamelers, automobile repainters, and plastic products manufacturers.

4.2.2 Emissions and Controls[3]

Emissions of hydrocarbons occur in surface-coating operations because of the evaporation of the paint vehicles, thinners, and solvents used to facilitate the application of the coatings. The major factor affecting these emissions is the amount of volatile matter contained in the coating. The volatile portion of most common surface coatings averages approximately 50 percent, and most, if not all, of this is emitted during the application and drying of the coating. The compounds released include aliphatic and aromatic hydrocarbons, alcohols, ketones, esters, alkyl and aryl hydrocarbon solvents, and mineral spirits. Table 4.2-1 presents emission factors for surface-coating operations.

Control of the gaseous emissions can be accomplished by the use of adsorbers (activated carbon) or afterburners. The collection efficiency of activated carbon has been reported at 90 percent or greater. Water curtains or filler pads have little or no effect on escaping solvent vapors; they are widely used, however, to stop paint particulate emissions.

Table 4.2-1. GASEOUS HYDROCARBON EMISSION FACTORS FOR SURFACE-COATING APPLICATIONS[a]
EMISSION FACTOR RATING: B

Type of coating	Emissions[b]	
	lb/ton	kg/MT
Paint	1120	560
Varnish and shellac	1000	500
Lacquer	1540	770
Enamel	840	420
Primer (zinc chromate)	1320	660

[a]Reference 1.
[b]Reported as undefined hydrocarbons, usually organic solvents, both aryl and alkyl. Paints weigh 10 to 15 pounds per gallon (1.2 to 1.9 kilograms per liter); varnishes weigh about 7 pounds per gallon (0.84 kilogram per liter).

References for Section 4.2

1. Weiss, S.F. Surface Coating Operations. In: Air Pollution Engineering Manual, Danielson, J.A. (ed.). U.S. DHEW, PHS, National Center for Air Pollution Control. Cincinnati, Ohio. Publication Number 999-AP-40. p.387-390.

2. Control Techniques for Hydrocarbon and Organic Gases From Stationary Sources. U.S. DHEW, PHS, EHS, National Air Pollution Control Administration. Washington, D.C. Publication Number AP-68. October 1969. Chapter 7.6.

3. Air Pollutant Emission Factors. Final Report. Resources Research, Inc. Reston, Va. Prepared for National Air Pollution Control Administration, Durham, N.C., under Contract Number CPA-22-69-119. April 1970.

4.3 STORAGE OF PETROLEUM PRODUCTS

Revised by William M. Vatavuk and Richard K. Burr

Fundamentally, the petroleum industry consists of three operations (1) crude oil production, (2) petroleum refining, and (3) transportation and marketing of finished products. Associated with these operations are evaporative emissions of various organic compounds, either in pure form or as mixtures.

From an air pollution standpoint, the petroleum industry is defined in terms of two kinds of evaporative losses: (1) storage and (2) marketing and transportation. (See Figure 4.4-1 for schematic of the industry and its points of emission.)

4.3.1 Process Description[1-5]

Petroleum storage evaporation losses are associated with the containment of liquid organics in large vessels at oil fields, refineries, and product distribution terminals.

Six basic tank designs, are used for petroleum storage vessels: (1) fixed-roof (cone roof), (2) floating roof (single deck pontoon and double deck), (3) covered floating roof, (4) internal floating cover, (5) variable vapor space, and (6) pressure (low and high).

The fixed roof tank (Figure 4.3-1) is the least expensive vessel for storing certain hydrocarbons and other organics. This tank generally consists of a steel, cylindrical container with a conical roof and is equipped with a pressure/vacuum vent, designed to operate at slight deviations (0.021 Mg/m^2 maximum) from atmospheric pressure.

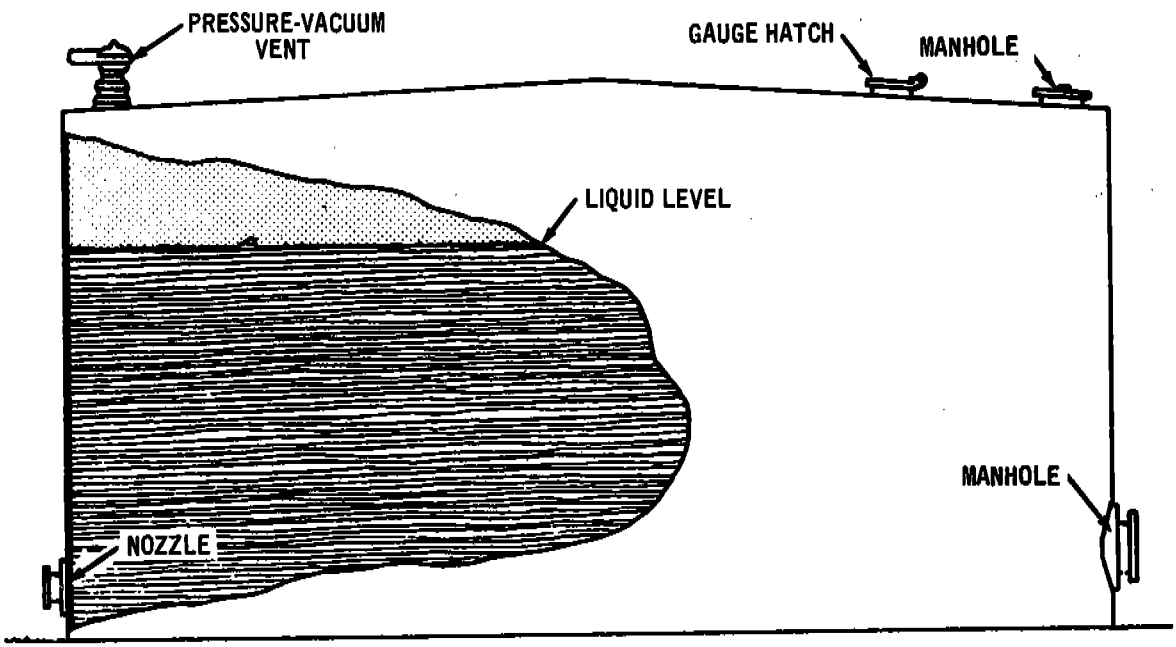

Figure 4.3-1. Fixed roof storage tank.

A floating roof tank is a welded or riveted circular vessel with an external float-type pan or pontoon roof (single- or double-deck) equipped with single or double mechanical seals (Figure 4.3-2).

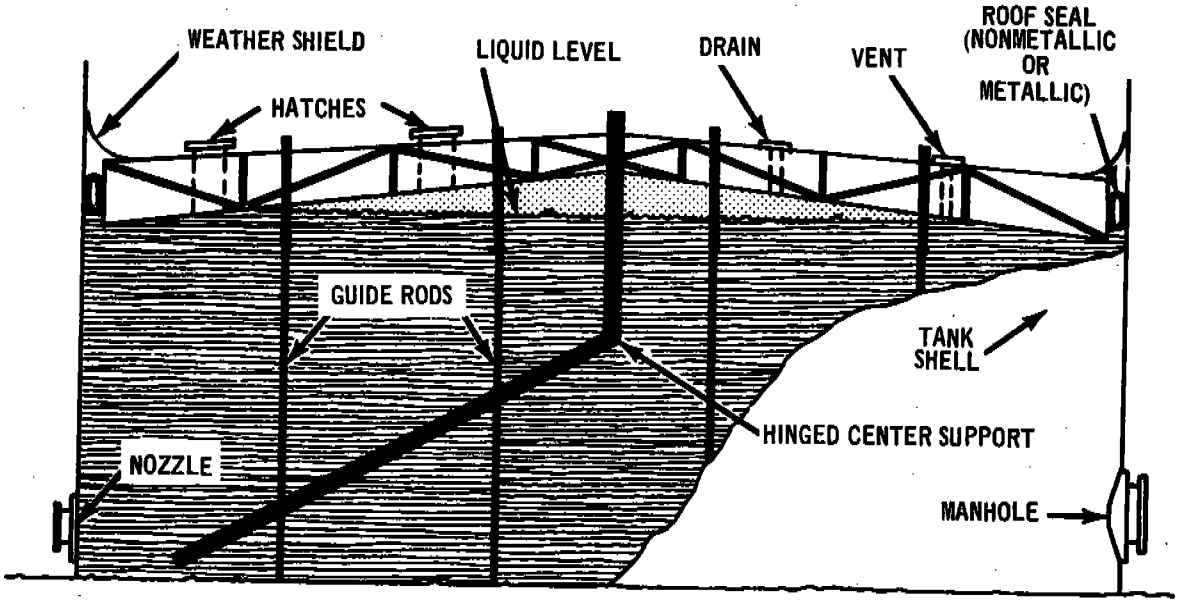

Figure 4.3-2. Double-deck floating roof storage tank (nonmetallic seal).

The floating roof prevents the formation of a volume of organic vapor above the liquid surface, which would otherwise be vented or displaced during filling and emptying. The seal, which is designed to close the annular space between the roof and vessel wall, consists of a relatively thin-gauge shoe ring supported against the tank shell around the roof.

The covered floating roof tank, simply a steel pan-type floating roof inside a fixed roof tank. is designed to reduce product losses and maintenance costs. Another type, the internal floating cover tank, contains a floating cover constructed of a material other than steel. Materials used include aluminum sheeting, glass-fiber-reinforced polyester sheeting, and rigid plastic foam panels.

The lifter and flexible diaphragm variable vapor space tanks are also used to reduce vapor losses (Figure 4.3-3). With the lifter tank, the roof is telescopic; i.e., it can move up or down as the vapor above the liquid surface expands or contracts. Flexible diaphragm tanks serve the same function through the expansion and contraction of a diaphragm.

Pressure tanks are especially designed for the storage of volatile organics under low (17 to 30 psia or 12 to 21 Mg/m^2) or high (up to 265 psia or 186 Mg/m^2) pressure and are constructed in many sizes and shapes, depending on the operating range. The most popular are the noded hemi-spheroid and the noded spheroid for low pressure and the spheroid for high pressure. Horizontal cylindrical forms are also commonly used for high pressure storage.

4.3.2 Emissions and Controls[1-3,5-7]

There are six sources of emissions from petroleum in storage.

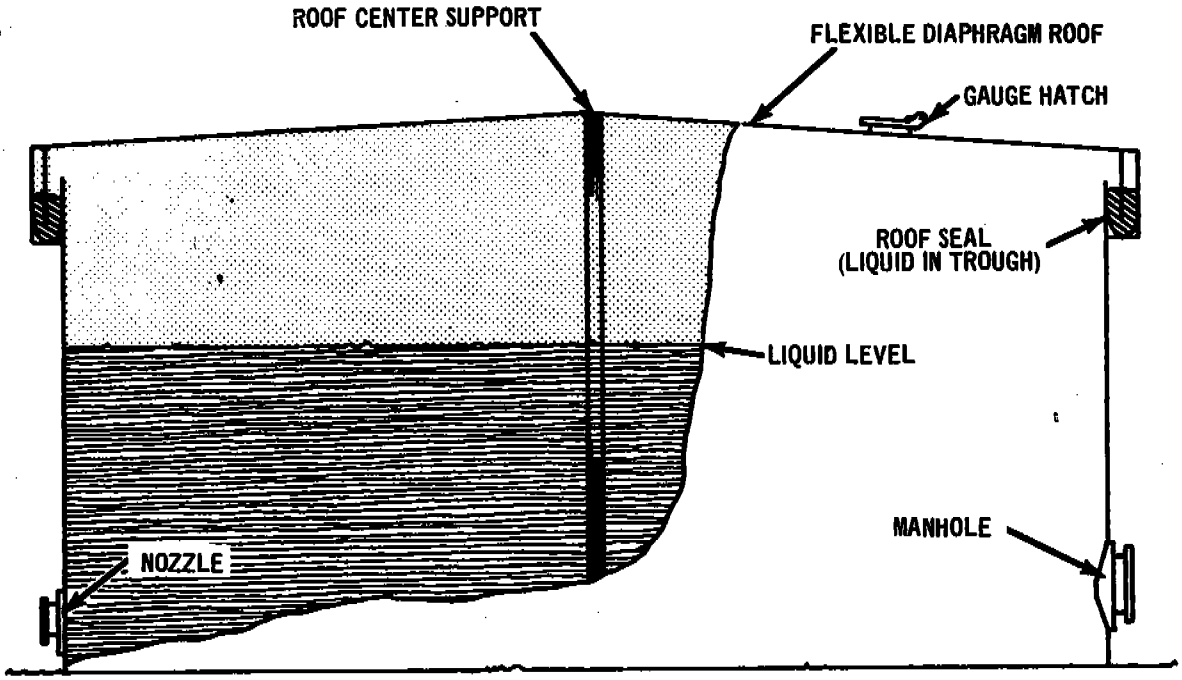

Figure 4.3-3. Variable vapor storage tank (wet-seal lifter type).

Breathing losses are associated with fixed roof tanks and consist of vapor expelled from the tank because of thermal expansion, barometric pressure changes, and added vaporization of the liquid.

Working losses consist of hydrocarbon vapor expelled from the vessel as a result of emptying or filling operations. Filling losses represent the amount of vapor (approximately equal to the volume of liquid input) that is vented to the atmosphere through displacement. After liquid is removed, emptying losses occur, because air drawn in during the operation results in growth of the vapor space. Both filling and emptying (together called "working") losses are associated primarily with fixed roof and variable vapor space tanks. Filling losses are also experienced from low pressure tankage, although to a lesser degree than from fixed roof tanks.

Primarily associated with floating roof tanks, standing storage losses result from the improper fit of the seal and shoe to the tank shell.

Wetting losses with floating roof vessels occur when a wetted tank wall is exposed to the atmosphere. These losses are negligible.

Finally, boiling loss is the vapor expelled when the temperature of the liquid in the tank reaches its boiling point and begins to vaporize.

The quantity of evaporation loss from storage tanks depends on several variables:

(1) True vapor pressure of the liquid stored,
(2) Diurnal temperature changes in the tank vapor space,

(3) Height of the vapor space (tank outage),
(4) Tank diameter,
(5) Schedule of tank fillings and emptyings,
(6) Mechanical condition of tank, and
(7) Type of paint applied to outer surface.

The American Petroleum Institute has developed empirical formulae, based on extensive testing, that correlate breathing, working, and standing storage losses with the above parameters for fixed roof, floating roof, and variable vapor space vessels.

Fixed roof breathing losses can be estimated from:

$$B = \frac{2.74\ WK}{V_c} \left(\frac{P}{14.7-P}\right)^{0.68} D^{1.73}\ H^{0.51}\ \Delta T^{0.50}\ F_p C \qquad (1)$$

where: B = Breathing loss, lb/day-10^3 gal capacity
P = True vapor pressure at bulk liquid temperature, psia
D = Tank diameter, feet
H = Average vapor space height, including correction for roof volume, feet
ΔT = Average daily ambient temperature change, °F
F_p = Paint factor, determined from field tests (see Table 4.3-1)
C = Adjustment factor for tanks smaller than 20 feet in diameter (see Figure 4.3-4)
V_c = Capacity of tank, barrels
K = Factor dependent on liquid stored:
= 0.014 for crude oil
= 0.024 for gasoline
= 0.023 for naphtha jet fuel (JP-4)
= 0.020 for kerosene
= 0.019 for distillate oil
W = Density of liquid at storage conditions, lb/gal

Table 4.3-1. PAINT FACTORS FOR FIXED ROOF TANKS[a]

Tank Color		Paint factor (F_p)	
		Paint condition	
Roof	Shell	Good	Poor
White	White	1.00	1.15
Aluminum (specular)	White	1.04	1.18
White	Aluminum (specular)	1.16	1.24
Aluminum (specular)	Aluminum (specular)	1.20	1.29
White	Aluminum (diffuse)	1.30	1.38
Aluminum (diffuse)	Aluminum (diffuse)	1.39	1.46
White	Gray	1.30	1.38
Light gray	Light gray	1.33	1.44[b]
Medium gray	Medium gray	1.46	1.58[b]

[a]Reference 2.
[b]Estimated from the ratios of the seven preceeding paint factors.

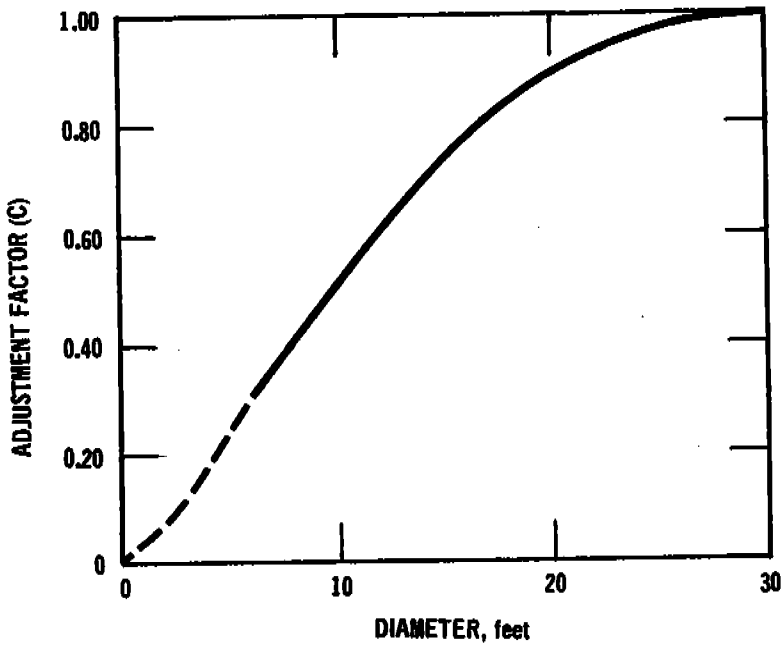

Figure 4.3-4. Adjustment factor for small-diameter fixed roof tanks.[2]

Breathing losses of petrochemicals from fixed roof tanks can be estimated from the respective gasoline loss factor, calculated at their storage temperature:

$$B_p = 0.08 \left(\frac{M_p}{W_G}\right) \left(\frac{P_p}{P_G}\right) B_G \qquad (2)$$

where: B_p, B_G, = Breathing losses of petrochemical (p) and gasoline (G), lb/day-10^3 gal

M_p = Molecular weight of petrochemical (p), lb/mole

W = Liquid density of gasoline, lb/gal

P_p, P_G = True vapor pressures of petrochemical (p) and gasoline (G) at their bulk storage temperature, psia

This same correlation can also be used to estimate petrochemical working loss, standing storage loss, or any other kind of loss from any storage tank.

A correlation for fixed roof tank working loss (combined emptying and filling) has also been developed:

$$F_f = 1000\, WmP \left(\frac{180 + N}{6N}\right) \qquad (3)$$

where: F_f = Working loss, lb/10^3 gal throughput

P = True vapor pressure at bulk liquid temperature, psia

N = Number of tank turnovers per year (ratio of annual throughput to tank capacity)

m = Factor dependent on liquid stored:

= 3×10^{-4} for gasoline

= 2.25×10^{-4} for crude oil

= 3.24×10^{-4} for naphtha jet fuel (JP-4)

= 2.95×10^{-4} for kerosene

= 2.76×10^{-4} for distillate oil

Standing storage losses from floating roof tanks can be calculated from:

$$S = \frac{2.74\, WK_t}{V_c} D^{1.5} \left(\frac{P}{14.7 - P}\right)^{0.7} V_w^{0.7} K_s K_c K_p \qquad (4)$$

where: S = Standing storage evaporation loss, lb/day-10^3 gal capacity

K_t = Factor dependent on tank construction:

= 0.045 for welded tank, pan/pontoon roof, single/double seal

= 0.11 for riveted tank, pontoon roof, double seal

= 0.13 for riveted tank, pontoon roof, single seal

= 0.13 for riveted tank, pan roof, double seal

= 0.14 for riveted tank, pan roof, single seal

D = Tank diameter, feet; for $D \geq 150$ feet (45.8 m) use "$D\sqrt{150}$" instead of "$D^{1.5}$"

V_w = Average wind velocity, mi/hr

K_s = Seal factor:

= 1.00 for tight-fitting, modern seals

= 1.33 for loose-fitting, older seals (typical of pre-1942 installation)

K_c = Factor dependent on liquid stored:

= 1.00 for gasoline

= 0.75 for crude oil

= 0.96 for naphtha jet fuel (JP-4)

= 0.83 for kerosene

= 0.79 for distillate oil

K_p = Paint factor for color of shell and roof:

= 1.00 for light gray or aluminum

= 0.90 for white

Finally, filling losses from variable vapor space systems can be estimated by:

$$F_v = \frac{1000\ WmP}{V_t} (V_t - 0.25V_eN) \qquad (5)$$

where: m = Factor dependent on liquid stored (same as equation 3)

F_v = Filling loss, lb/10^3 gal throughput

V_t = Volume of liquid throughput, bbl/year

V_e = Volume of expansion capacity, barrels

N = Number of turnovers per year

W = Density of liquid at storage conditions, lb/gal

Equations 1 through 5 can be used to calculate evaporative losses, provided the respective parameters are known. For those cases where such quantities are unknown or for quick loss estimates, however, Table 4.3-2 provides typical emission factors. Refinement of emission estimates by using these loss correlations may be desirable in areas where these sources contribute a substantial portion of the total evaporative emissions or are of major consequence in affecting the air quality.

The control methods most commonly used with fixed roof tanks are vapor recovery systems, which collect emissions from storage vessels and send them to gas recovery plants. The four recovery methods used are liquid absorption, vapor compression, vapor condensation, and adsorption in activated charcoal or silica gel.

Overall control efficiencies of vapor recovery systems vary from 90 to 95 percent, depending on the method used, the design of the unit, the organic compounds recovered, and the mechanical condition of the system.

In addition, water sprays, mechanical cooling, underground liquid storage, and optimum scheduling of tank turnovers are among the techniques used to minimize evaporative losses by reducing tank heat input.

Table 4.3-2. EVAPORATIVE EMISSION EMISSION FACTOR

Product	Vapor pressure ratio (P/P_G)	Mole wt (M) (lb/mole)	Floating roof, Standing storage loss, "New tank" conditions: lb/day-10^3 gal	kg/day-10^3 liter	"Old tank" conditions: lb/day-10^3 gal	kg/day-10^3 liter
Crude oil[c]		64.5	0.029	0.0034	0.071	0.0086
Gasoline[c]		56.8	0.033	0.0040	0.088	0.011
Naphtha jet fuel (JP-4)[c]		63.3	0.012	0.0014	0.029	0.0034
Kerosene[c]		72.7	0.0052	0.00063	0.012	0.0015
Distillate fuel[c]		72.7	0.0052	0.00063	0.012	0.0015
Acetone	0.543	58.1	0.014	0.0017	0.036	0.0043
Ammonium hydroxide (28.8 % solution)	1.53	35.1	0.023	0.0028	0.062	0.0074
Benzene[c]	0.2108	78.1	0.0074	0.00089	0.020	0.0023
Isobutyl alcohol	0.0263	74.1	0.00086	0.00010	0.0023	0.00028
Tertbutyl alcohol	0.0843	74.1	0.0029	0.00034	0.0074	0.00089
Carbon tetrachloride	0.264	153.8	0.018	0.0021	0.048	0.0057
Cyclohexane[c]	0.230	84.2	0.0083	0.0010	0.022	0.0027
Cyclopentane[c]	0.776	70.1	0.024	0.0028	0.062	0.0074
Ethyl acetate	0.210	88.1	0.0081	0.00097	0.021	0.0025
Ethyl alcohol	0.120	46.1	0.0024	0.00029	0.0064	0.00074
Freon II	2.01	137.4	0.12	0.014	0.32	0.038
$_n$Heptane[c]	0.103	100.2	0.0045	0.00054	0.012	0.0014
$_n$Hexane[c]	0.353	86.2	0.013	0.0016	0.036	0.0043
Hydrogen cyanide	1.42	27.0	0.017	0.0020	0.043	0.00051
Isooctane[c]	0.112	114.2	0.0055	0.00066	0.015	0.0018
Isopentane[c]	1.86	72.2	0.057	0.0069	0.15	0.018
Isopropyl alcohol	0.0933	60.1	0.0024	0.00029	0.0064	0.00077
Methyl alcohol	0.272	32.0	0.0038	0.00046	0.010	0.0012
$_n$Pentane[c]	1.26	72.2	0.038	0.0046	0.10	0.012
Toluene[c]	0.0594	92.1	0.0024	0.00029	0.0062	0.00074

[a]References 2, 3, 6, and 7.
[b]Factors based on following conditions:
Storage temperature: 63°F (17.2°C).
Daily ambient temperature change: 15°F (-9.5°C).
Wind velocity: 10 mi/hr (4.5 m/sec).

	Reid vapor pressure: psia	Mg/m²	True vapor pressure: psia	Mg/m²
Crude oil	7.0	4.9	4.6	3.2
Gasoline	10.5	7.4	5.8	4.1
Naphtha jet fuel (JP-4)	2.5	1.75	1.2	0.84
Kerosene	≤0.5	≤0.35	≤0.5	≤0.35
Distillate oil	≤0.5	≤0.35	≤0.5	≤0.35

Typical fixed- and floating-roof tanks
Diameter: 90 ft (27.4 m) for crude, JP-4, kerosene, and distillate; 110 ft (33.6 m) for gasoline and all petrochemicals.
Height: 44 ft (13.4 m) for crude, JP-4, kerosene, and distillate; 48 ft (14.6 m) for gasoline and all petrochemicals.
Capacity: 50,000 bbl (7.95 x 10^6 liter) for crude, JP-4, kerosene, and distillate; 67,000 bbl (10.65 x 10^6 liter) for gasoline and all petrochemicals.
Outage: 50 percent of tank height.
Turnovers per year: 30 for crude oil; 13 for all others.

[c]Indicates petroleum products whose evaporative emissions are exclusively hydrocarbons (i.e., compounds containing only the elements hydrogen and carbon).

FACTORS FOR STORAGE TANKS[a, b]
RATING: A

Fixed roof						Variable vapor space	
Breathing loss				Working loss		Working loss	
"New tank" conditions		"Old tank" conditions					
lb/day-10^3 gal	kg/day-10^3 liter	lb/day-10^3 gal	kg/day-10^3 liter	lb/10^3 gal throughput	kg/10^3 liter throughput	lb/10^3 gal throughput	kg/10^3 liter throughput
0.15	0.018	0.17	0.020	7.3	0.88	Not used	Not used
0.22	0.026	0.25	0.031	9.0	1.1	10.2	1.2
0.069	0.0033	0.079	0.0095	2.4	0.29	2.3	0.28
0.036	0.0043	0.041	0.0048	1.0	0.12	1.0	0.12
0.036	0.0043	0.041	0.0048	1.0	0.12	1.0	0.12
0.093	0.011	0.10	0.013	3.7	0.45	4.2	0.51
0.16	0.018	0.18	0.021	6.3	0.76	7.1	0.86
0.050	0.0057	0.057	0.0069	2.0	0.24	2.3	0.27
0.0057	0.00067	0.0064	0.0079	0.23	0.028	0.26	0.031
0.018	0.0021	0.021	0.0026	0.74	0.90	0.83	0.099
0.12	0.014	0.14	0.016	4.8	0.58	5.4	0.63
0.057	0.0067	0.064	0.0079	2.3	0.28	2.6	0.31
0.16	0.019	0.18	0.022	6.4	0.77	7.2	0.87
0.055	0.0062	0.062	0.0074	2.2	0.27	2.5	0.30
0.016	0.0019	0.018	0.0022	0.65	0.079	0.73	0.089
0.81	0.098	0.92	0.11	32.4	3.9	36.7	4.4
0.031	0.0036	0.033	0.0040	1.2	0.15	1.4	0.16
0.088	0.010	0.10	0.012	3.6	0.43	4.0	0.49
0.11	0.013	0.13	0.015	4.5	0.54	5.1	0.61
0.038	0.0043	0.043	0.0051	1.5	0.18	1.7	0.21
0.39	0.047	0.45	0.053	15.7	1.9	17.8	2.1
0.016	0.0019	0.019	0.0022	0.66	0.080	0.74	0.090
0.026	0.0031	0.029	0.0034	1.0	0.13	1.2	0.14
0.26	0.032	0.30	0.036	10.6	1.3	12.0	1.4
0.016	0.0019	0.018	0.022	0.64	0.077	0.73	0.087

Typical floating-roof tank
- Paint factor (K_p): New tank-white paint, 0.90; Old tank-white/aluminum paint, 0.95.
- Seal factor (K_s): New tank-modern seals, 1.00; Old tank-50 percent old seals, 1.14.
- Tank factor (K_t): New tank-welded, 0.045; Old tank-50 percent riveted, 0.088.

Typical fixed-roof tank
- Paint factor (F_p): New tank-white paint, 1.00; Old tank-white/aluminum paint, 1.14.

Typical variable vapor space tank
- Diameter: 50 ft (15.3 m).
- Height: 30 ft (9.2 m).
- Capacity: 10,500 bbl (1.67 x 10^6 liter).
- Turnovers per year: 6.

REFERENCES FOR SECTION 4.3

1. Control of Atmospheric Emissions from Petroleum Storage Tanks. Petroleum Committee, Air Pollution Control Association. J. Air Pol. Control Assoc. *21*(5):260-268, May 1971.

2. Evaporation Loss from Fixed Roof Tanks. American Petroleum Institute, New York, N.Y. API Bulletin Number 2518. June 1962.

3. Evaporation Loss from Floating Roof Tanks. American Petroleum Institute, New York, N.Y. API Bulletin Number 2517. February 1962.

4. Evaporation Loss in the Petroleum Industry – Causes and Control. American Petroleum Institute, New York, N.Y. API Bulletin Number 2513. February 1959.

5. Personal communication with personnel in Engineering Services Branch, Emission Standards and Engineering Division, Office of Air Quality Planning and Standards, Environmental Protection Agency, Research Triangle Park, N.C. November 1972.

5. Petrochemical Evaporation Loss from Storage Tanks. American Petroleum Institute, New York, N.Y. API Bulletin Number 2523. November 1969.

7. Use of Variable Vapor Space Systems to Reduce Evaporation Loss. American Petroleum Institute, New York, N.Y. API Bulletin Number 2520. September 1964.

4.4 MARKETING AND TRANSPORTATION OF PETROLEUM PRODUCTS

by William M. Vatavuk

4.4.1 Process Description[1]

As Figure 4.4-1 indicates, the marketing and transportation of petroleum products involves many distinct operations, each of which can represent a source of evaporation loss.

For example, after gasoline is refined, it is transported first via pipeline, rail, ship, or barge to intermediate storage and then to regional marketing terminals for temporary storage in large quantities. From here, the product is pumped into tank trucks that deliver it directly to service stations or to larger distributors at "bulk plants." From bulk plants, the product is delivered, again in trucks, to commercial accounts (e.g., trucking companies). The final destination for the gasoline is normally a motor vehicle gas tank. A similar distribution path may be developed for fuel oil and other petroleum products.

4.4.2 Emissions and Controls[2-5]

Losses from marketing and transportation fall into five categories, depending on the storage equipment or mode of conveyance used:

1. Large storage tanks: Breathing, working, and standing storage losses;
2. Railroad tank cars and tank trucks: Loading and unloading losses;
3. Marine vessels: Loading, unloading, and transit losses;
4. Service stations: Loading and unloading losses from tank trucks and underground tanks; and
5. Motor vehicle tanks: Refueling losses.

(In addition, evaporative (and exhaust) emissions are also associated with motor vehicle operation. These topics are discussed in Chapter 3.)

Losses from large storage tanks have been thoroughly discussed in section 4.3.

Unloading losses from tank cars and trucks consist of the amount of organic liquid that evaporates into the air that is drawn in during a complete withdrawal of the contents of a tank compartment. These losses can be estimated (within ± 10 percent) using the following expression derived from American Petroleum Institute correlations:

$$U_t = \frac{69{,}600\ YPW}{(690-4M)T} \qquad (1)$$

where: U_t = Unloading loss, lb/10^3 gal of liquid loaded

Y = Degree of saturation of organic in vapor space at time of unloading (estimated or measured)

T = Bulk absolute temperature of organic liquid, °R

P = True vapor pressure of liquid at temperature (T), psia

M = Molecular weight of liquid, lb/lb-mole

W = Density of hydrocarbon liquid at temperature (T), lb/gal

The quantity of loading losses is directly dependent on the filling method used. "Splash" loading, which usually results in extremely high emissions, occurs when the liquid is discharged into the upper part of a container through a short filler spout. This free fall of the liquid encourages both evaporation and entrainment loss caused by the formation and expulsion of liquid droplets. In "subsurface" or "submerged" loading, lower emissions are achieved because the liquid is delivered directly to the bottom of the tank through a tightly connected pipe/spout without splashing.

A submerged loading loss correlation (generally accurate within ± 25 percent) based on equation 1 has also been developed:

$$L_{sub} = \left(\frac{1.00-Y}{2}\right) \frac{69{,}600\ PW}{(690-4M)T} \qquad (2)$$

where: L_{sub} = Submerged loading loss, lb/10^3 gal of liquid loaded

Y = Saturation of the existent vapor in tank before loading.

This relationship assumes that the vapor formed during unloading (existent vapor) remains in the tank until the next loading. Then the additional liquid that evaporates during loading becomes the loading loss. (A more rapid method for calculating loading and unloading losses has been developed by the American Petroleum Institute.[6])

Variables affecting splash loading loss include the loading rate, the degree of saturation of existent vapor, and the elevation and angle of the loading spout. The following correlation was derived from the American Petroleum Institute empirical formula:

$$L_{sp} = \frac{(1.023 \times 10^6)W}{(690-4M)T} \left[\frac{14.7 - YP}{14.7 - (0.95)P} - 1\right] \qquad (3)$$

where: L_{sp} = Splash loading loss, lb/10^3 gal

In equation (3), the vapor displaced from the tank is assumed to be 95 percent saturated--quite reasonable in view of the high degree of saturation observed in vapors from splash-filling operations. The accuracy of this expression is found to be ± 10 percent, 90 percent of the time.

Finally, transit (breathing) losses from tank cars and trucks during product shipment is assumed to be negligible because the travel time is relatively short (2 days or less).

Emission correlations have also been developed for marine vessels.

For unloading losses:

$$U_s = 0.07PW \qquad (4)$$

where: U_s = Unloading loss, lb/10^3 gal of load

P = True vapor pressure of liquid at storage temperature, psia

W = Density of liquid at storage temperature, lb/gal

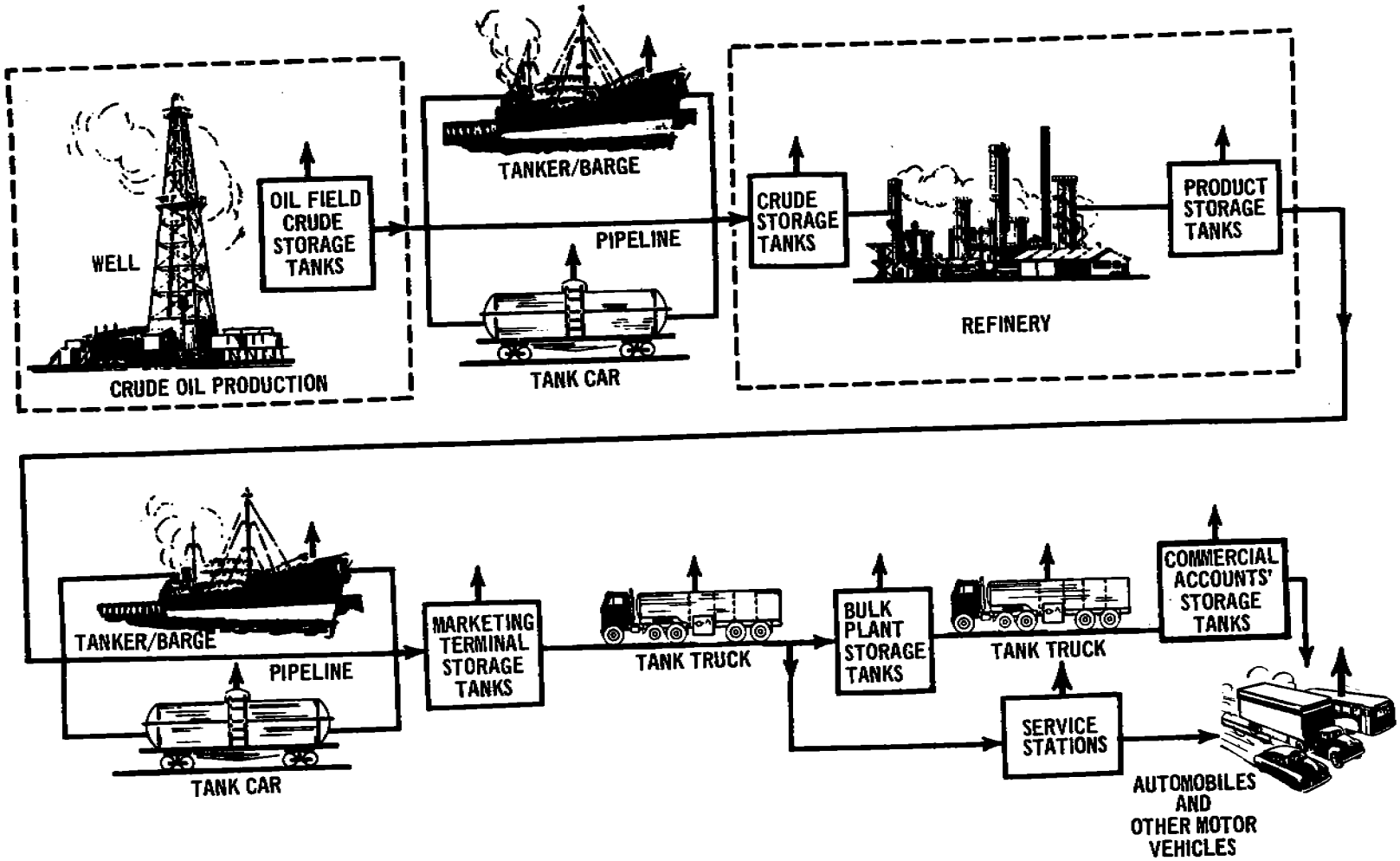

Figure 4.4-1. Flowsheet of petroleum production, refining, and distribution systems. (Sources of organic evaporative emissions are indicated by vertical arrows).

For loading:

$$L_S = 0.08PW \tag{5}$$

where: L_S = Loading loss, lb/10^3 gal of load

Since vessel shipments are transported for longer periods, transit losses can be substantial. These losses can be estimated by the following:

$$R_S = 0.1PW \tag{6}$$

where: R_S = Transit loss, lb/10^3 gal of load per week

For quick reference, selected petroleum product emission factors for transportation sources are provided in Table 4.4-1.

A fourth major source of evaporative emissions is the loading and unloading of underground gasoline storage tanks at service stations. As with the other categories, the quantity of the loading losses depends on several variables such as the size and length of the fill pipe; the method of filling; the tank configuration; as well as the gasoline temperature, vapor pressure, and composition. Depending on these parameters, and the control method used, loading losses can vary from 0 to 11.5 lb/10^3 gal (1.4 kg/10^3 liter) of gasoline pumped into the tank (see Table 4.4-1).

Unloading losses from underground tanks result from the inhalation of air and exhalation of a vapor-air mixture during normal pumping operations. Variables affecting the losses are the type of service station operation, the gasoline pumping rate and frequency, the ratio of liquid surface to vapor volume, the diffusion and mixing of gasoline vapors and air, as well as the other parameters mentioned previously (Table 4.4-1).

The final loss category to be considered is the splash filling of motor vehicle gasoline tanks. These losses consist of vapor displacement (94 percent of total loss) from the vehicle tank and liquid spillage (6 percent of total) as the gasoline is pumped.

Scott Research Inc., under an EPA contract, did extensive laboratory and field testing that resulted in the development of an empirical vapor displacement formula:[5]

$$L_D = 2.22 \exp(-0.02645 + 0.01155T_{DF} - 0.01226T_V + 0.00246T_V P_{RVP}) \tag{7}$$

where: L_D = Vapor displacement loss, lb/10^3 gal

T_{DF} = Average dispensed fuel temperature, °F

T_V = Average temperature of vehicle tank vapor displaced, °F

P_{RVP} = Reid vapor pressure of gasoline pumped, taken at storage temperature and composition, psia

exp = Base of natural logarithms = 2.71828

This expression provides good loss estimates (± 0.5 lb/10^3 gal or 0.06 kg/10^3 liter) within the experimental temperature interval of 30° to 90°F (-1.1° to 32.2 °C).

The quantity of spillage loss is a function of the type of service station, vehicle tank configuration, operator technique, and operation discomfort indices. An overall average of 0.67 lb/10^3 gal (0.081 kg/10^3 liter) has been estimated (Table 4.4-1).

Control methods for transportation and marketing sources are similar to those utilized with large storage tanks and generally consist of one or more types of vapor recovery systems located at transfer terminals. Depending on the system and the compounds recovered, the overall control efficiencies range from 90 to 95 percent.

For example, a technique used with some underground gasoline storage tanks consists of an arrangement by which vapors are recycled to the tank trucks during filling operations through the annular space of a specially designed "interlock valve" and into a side arm that is connected to the return manifold in the dome cap of the truck (see Figure 4.4-2). The control efficiency of this method ranges from 93 to 100 percent when compared with uncontrolled, splash-fill loading (see Table 4.4-1).

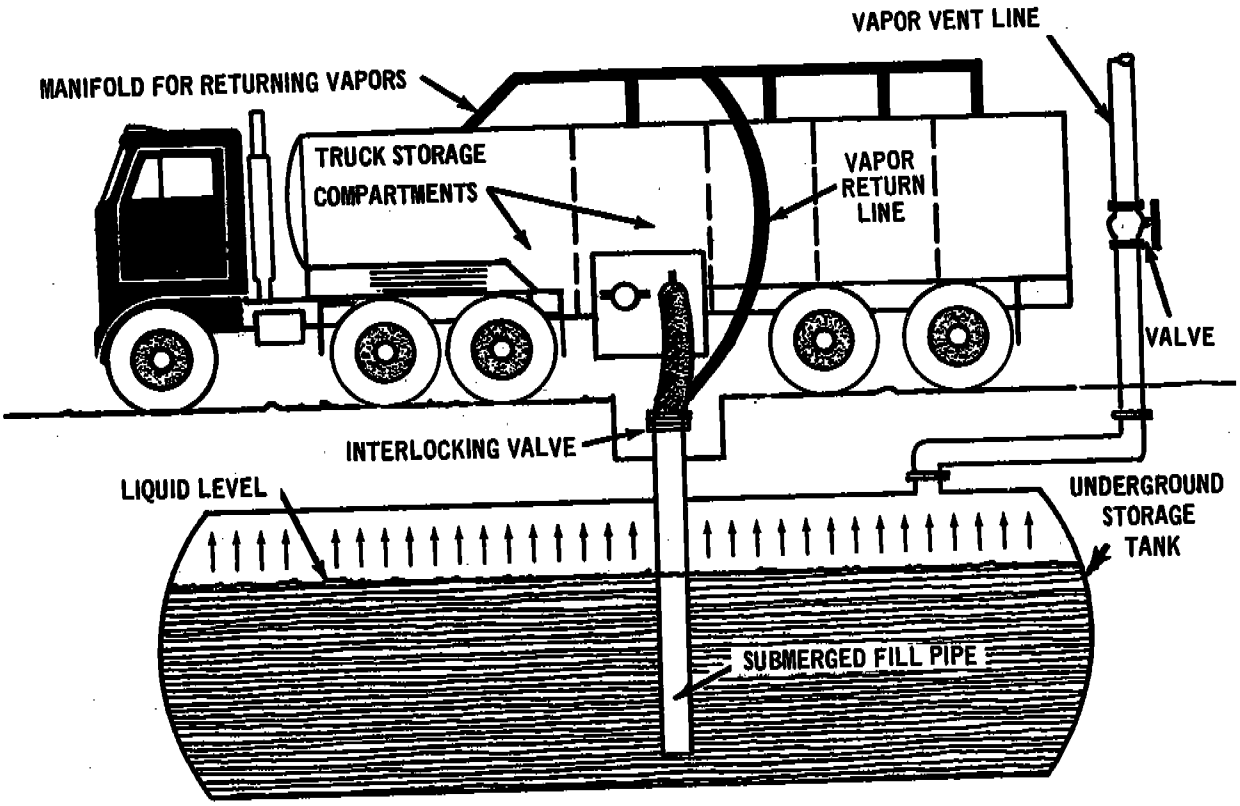

Figure 4.4-2. Underground storage tank vapor-recovery system[1].

Table 4.4-1. ORGANIC COMPOUND EVAPORATIVE EMISSION FACTORS FOR PETROLEUM TRANSPORTATION AND MARKETING SOURCES[a]
EMISSION FACTOR RATING: A

Emission source	Product				
	Gasoline	Crude oil	Naphtha jet fuel (JP-4)	Kerosene	Distillate oil
Tank cars/trucks[b]					
Splash loading					
lb/10^3 gal transferred	12.4	10.6	1.8	0.88	0.93
kg/10^3 liter transferred	1.5	1.3	0.22	0.11	0.11
Submerged loading					
lb/10^3 gal transferred	4.1	4.0	0.91	0.45	0.48
kg/10^3 liter transferred	0.49	0.48	0.11	0.054	0.058
Unloading					
lb/10^3 gal transferred	2.1	2.0	0.45	0.23	0.24
kg/10^3 liter transferred	0.25	0.24	0.054	0.028	0.029
Marine vessels[b]					
Loading					
lb/10^3 gal transferred	2.9	2.6	0.60	0.27	0.29
kg/10^3 liter transferred	0.35	0.31	0.072	0.032	0.035
Unloading					
lb/10^3 gal transferred	2.5	2.3	0.52	0.24	0.25
kg/10^3 liter transferred	0.30	0.28	0.062	0.029	0.030
Transit					
lb/wk-10^3 gal load	3.6	3.2	0.74	0.34	0.36
kg/wk-10^3 liter load	0.43	0.38	0.089	0.041	0.043
Underground gasoline storage tanks[c]					
Splash loading					
lb/10^3 gal transferred	11.5	NU[d]	NU	NU	NU
kg/10^3 liter transferred	1.4	NU	NU	NU	NU
Uncontrolled submerged loading					
lb/10^3 gal transferred	7.3	NU	NU	NU	NU
kg/10^3 liter transferred	0.38	NU	NU	NU	NU
Submerged loading with open vapor return system					
lb/10^3 gal transferred	0.80	NU	NU	NU	NU
kg/10^3 liter transferred	0.097	NU	NU	NU	NU
Submerged loading with closed vapor return system					
lb/10^3 gal transferred	Neg	NU	NU	NU	NU
kg/10^3 liter transferred	Neg	NU	NU	NU	NU

Table 4.4-1 (continued). ORGANIC COMPOUND EVAPORATIVE EMISSION FACTORS FOR PETROLEUM TRANSPORTATION AND MARKETING SOURCES
EMISSION FACTOR RATING: A

Emission source	Product				
	Gasoline	Crude oil	Naphtha jet fuel (JP-4)	Kerosene	Distillate Oil
Unloading					
lb/10^3 gal transferred	1.0	NU	NU	NU	NU
kg/10^3 liter transferred	0.12	NU	NU	NU	NU
Filling motor vehicle gasoline tanks[e]					
Vapor displacement loss					
lb/10^3 gal pumped	11.0	NU	NU	NU	NU
kg/10^3 liter pumped	1.3	NU	NU	NU	NU
Liquid spillage loss					
lb/10^3 gal pumped	0.67	NU	NU	NU	NU
kg/10^3 liter pumped	0.081	NU	NU	NU	NU

[a]References 1, 3, and 5.
[b]Data based on the following conditions:

Storage temperature: 63 °F (17.2 °C)
Saturation of tank existent vapors in loading and unloading tank trucks and cars: 20 percent

	Gasoline	Crude oil	Naphtha jet fuel (JP-4)	Kerosene	Distillate oil
Molecular weight of vapor, lb/lb-mole	56.8	64.5	63.3	72.7	72.7
Reid vapor pressure					
psia	10.5	7.0	2.5	0.5	0.5
Mg/m²	7.4	4.9	1.75	0.35	0.35
True vapor pressure					
psia	5.8	4.6	1.2	0.5	0.5
Mg/m²	4.1	3.2	0.84	0.35	0.35
Liquid density					
lb/gal	6.2	7.0	6.2	6.8	7.2
kg/liter	0.74	0.84	0.74	0.82	0.87

[c]Factors for underground gasoline storage tanks based on an organic compound vapor space concentration of 40 percent by volume, which corresponds to a saturation of nearly 100 percent.
[d]Not used.
[e]Motor vehicle gasoline tank vapor displacement factor based on an average dispensed fuel temperature of 63 °F (17.2 °C), an average displaced vapor temperature of 67 °F (19.4 °C), and a Reid vapor pressure of 10.5 psia (7.4 Mg/m²).

REFERENCES FOR SECTION 4.4

1. Nichols, Dr. Richard A. Control of Evaporation Losses in Gasoline Marketing Operation. (Presented at the Technical Conference on New Technology in the Solution of Practical Problems in Air and Water Pollution Control. Tokyo, Japan. December 1971).

2. Chass, R.L. et al. Emissions from Underground Gasoline Storage Tanks. J. Air Pol. Control Assoc. 13:524-530, November 1963.

3. Evaporation Loss from Tank Cars, Tank Trucks, and Marine Vessels. American Petroleum Institute, New York, N.Y. API Bulletin Number 2514. November 1959.

4. Petrochemical Evaporation Loss from Storage Tanks. American Petroleum Institute, New York, N.Y. API Bulletin Number 2523. November 1969.

5. Smith, Malcolm. Investigation of Passenger Car Refueling Losses. Scott Research Laboratories, Inc. San Bernadino, Calif. Prepared for Mobile Source Pollution Control Program, Office of Air and Water Programs, EPA, Ann Arbor, Mich. under Contract Number CPA 22-69-68. September 1972.

6. American Petroleum Institute, New York, N.Y. API Bulletin Number 4080. July 1971.

5. CHEMICAL PROCESS INDUSTRY

This section deals with emissions from the manufacture and use of chemicals or chemical products. Potential emissions from many of these processes are high, but because of the nature of the compounds they are usually recovered as an economic necessity. In other cases, the manufacturing operation is run as a closed system allowing little or no escape to the atmosphere.

In general, the emissions that reach the atmosphere from chemical processes are primarily gaseous and are controlled by incineration, adsorption, or absorption. In some cases, particulate emissions may also be a problem. The particulates emitted are generally extremely small and require very efficient treatment for removal. Emission data from chemical processes are sparse. It was therefore frequently necessary to make estimates of emission factors on the basis of material balances, yields, or similar processes.

5.1 ADIPIC ACID

5.1.1 Process Description[1]

Adipic acid, $COOH \cdot (CH_2)4 \cdot COOH$, is a dibasic acid used in the manufacture of synthetic fibers. The acid is made in a continuous two-step process. In the first step, cyclohexane is oxidized by air over a catalyst to a mixture of cyclohexanol and cyclohexanone. In the second step, adipic acid is made by the catalytic oxidation of the cyclohexanol-cyclohexanone mixture using 45 to 55 percent nitric acid. The final product is then purified by crystallization.[2]

5.1.2 Emissions

The only significant emissions from the manufacture of adipic acid are nitrogen oxides. In oxidizing the cyclohexanol/cyclohexanone, nitric acid is reduced to unrecoverable N_2O and potentially recoverable NO and NO_2. This NO and NO_2 can be emitted into the atmosphere. Table 5.1-1 shows typical emissions of NO and NO_2 from an adipic acid plant.

Table 5.1-1. EMISSION FACTORS FOR AN ADIPIC ACID PLANT WITHOUT CONTROL EQUIPMENT EMISSION FACTOR RATING: D

Source	Nitrogen oxides (NO,NO_2)	
	lb/ton	kg/MT
Oxidation of cyclohexanol/cyclohexanone[a]	12	6

[a]Reference 1.

References for Section 5.1

1. Control Techniques for Nitrogen Oxides from Stationary Sources. U.S. DHEW, PHS, EHS, National Air Pollution Control Administration. Washington, D.C. Publication Number AP-67. March 1970. p. 7-12, 7-13.

2. Goldbeck, M., Jr. and F.C. Johnson. Process for Separating Adipic Acid Precursors. E.I. DuPont De Nemours and Co. U.S. Patent No. 2, 703, 331. Official Gazette U.S. Patent Office. *692*(1): March 1, 1955.

5.2 AMMONIA

5.2.1 Process Description[1]

The manufacture of ammonia (NH_3) is accomplished primarily by the catalytic reaction of hydrogen and nitrogen at high temperatures and pressures. In a typical plant a hydrocarbon feed stream (usually natural gas) is desulfurized, mixed with steam, and catalytically reformed to carbon monoxide and hydrogen. Air is introduced into the secondary reformer to supply oxygen and provide a nitrogen to hydrogen ratio of 1 to 3. The gases then enter a two-stage shift converter that allows the carbon monoxide to react with water vapor to form carbon dioxide and hydrogen. The gas stream is next scrubbed to yield a gas containing less than 1 percent CO_2. A methanator may be used to convert quantities of unreacted CO to inert CH_4 before the gases, now largely nitrogen and hydrogen in a ratio of 1 to 3, are compressed and passed to the converter. Alternatively, the gases leaving the CO_2 scrubber may pass through a CO scrubber and then to the converter. The synthesis gases finally react in the converter to form ammonia.

5.2.2 Emissions and Controls[1]

When a carbon monoxide scrubber is used before sending the gas to the converter, the regenerator offgases contain significant amounts of carbon monoxide (73 percent) and ammonia (4 percent). This gas may be scrubbed to recover ammonia and then burned to utilize the CO fuel value.[2]

The converted ammonia gases are partially recycled, and the balance is cooled and compressed to liquefy the ammonia. The noncondensable portion of the gas stream, consisting of unreacted nitrogen, hydrogen, and traces of inerts such as methane, carbon monoxide, and argon, is largely recycled to the converter. To prevent the accumulation of these inerts, however, some of the noncondensable gases must be purged from the system.

The purge or bleed-off gas stream contains about 15 percent ammonia.[2] Another source of ammonia is the gases from the loading and storage operations. These gases may be scrubbed with water to reduce the atmospheric emissions. In addition, emissions of CO and ammonia can occur from plants equipped with CO-scrubbing systems. Emission factors are presented in Table 5.2-1.

Table 5.2-1. EMISSION FACTORS FOR AMMONIA MANUFACTURING WITHOUT CONTROL EQUIPMENT[a]
EMISSION FACTOR RATING: B

Type of source	Carbon monoxide		Hydrocarbons[b]		Ammonia	
	lb/ton	kg/MT	lb/ton	kg/MT	lb/ton	kg/MT
Plants with methanator						
Purge gas[c]	Neg	Neg	90	45	3	1.5
Storage and loading[c]	–	–	–	–	200	100
Plants with CO absorber and regeneration system						
Regenerator exit[d]	200	100	–	–	7	3.5
Purge gas[c]	Neg	Neg	90	45	3	1.5
Storage and loading[c]	–	–	–	–	200	100

[a]References 2 and 3.
[b]Expressed as methane.
[c]Ammonia emissions can be reduced by 99 percent by passing through three stages of a packed-tower water scrubber. Hydrocarbons are not reduced.
[d]A two-stage water scrubber and incineration system can reduce these emissions to a negligible amount.

References for Section 5.2

1. Air Pollutant Emission Factors. Final Report. Resources Research, Incorporated. Reston, Virginia. Prepared for National Air Pollution Control Administration, Durham, N.C., under Contract Number CPA-22-69-119. April 1970.

2. Burns, W.E. and R.R. McMullan. No Noxious Ammonia Odor Here. Oil and Gas Journal. p. 129-131, February 25, 1967.

3. Axelrod, L.C. and T.E. O'Hare. Production of Synthetic Ammonia. New York, M. W. Kellogg Company. 1964.

5.3 CARBON BLACK

Carbon black is produced by the reaction of hydrocarbon fuel such as oil or gas, or both, with a limited supply of air at temperatures of 2500 to 3000°F (1370 to 1650°C). Part of the fuel is burned to CO_2, CO, and water, thus generating heat for the combustion of fresh feed. The unburned carbon is collected as a black fluffy particle. The three basic processes for producing this compound are the furnace process, accounting for about 83 percent of production; the older channel process, which accounts for about 6 percent of production; and the thermal process.

5.3.1 Channel Black Process[1]

In the channel black process, natural gas is burned with a limited air supply in long, low buildings. The flame from this burning impinges on long steel channel sections that swing continuously over the flame. Carbon black is deposited on the channels, is scraped off, and falls into collecting hoppers. The combustion gases containing the solid carbon that is not collected on the channels, in addition to carbon monoxide and other combustion products, are then vented directly from the building. Approximately 1 to 1.5 pounds of carbon black is produced from the 32 pounds of carbon available in 1000 cubic feet of natural gas (16 to 24 kilograms carbon black from the 513 kilograms in 1000 cubic meters).[2-4] The balance is lost as CO, CO_2, hydrocarbons, and particulates.

5.3.2 Furnace Process[1]

The furnace process is subdivided into either the gas or oil process depending on the primary fuel used to produce the carbon black. In either case, the fuel—gas in the gas process or gas and oil in the oil process—is injected into a reactor with a limited supply of combustion air. The combustion gases containing the hot carbon are then rapidly cooled to a temperature of about 500°F (260°C) by water sprays and by radiant cooling.

The largest and most important portion of the furnace process consists of the particulate or carbon black removal equipment. While many combinations of control equipment exist, an electrostatic precipitator, a cyclone, and a fabric filter system in series are most commonly used to collect the carbon black. Gaseous emissions of carbon monoxide and hydrocarbons are not controlled in the United States.

5.3.3 Thermal Black Process[1]

In thermal black plants, natural gas is decomposed by heat in the absence of air or flame. In this cyclic operation, methane is pyrolyzed or decomposed by passing it over a heated brick checkerwork at a temperature of about 3000°F (1650°C). The decomposed gas is then cooled and the carbon black removed by a series of cyclones and fabric filters. The exit gas, consisting largely of hydrogen (85 percent), methane (5 percent), and nitrogen, is then either recycled to the process burners or used to generate steam in a boiler. Because of the recycling of the effluent gases, there are essentially no atmospheric emissions from this process, other than from product handling.

Table 5.3-1 presents the emission factors from the various carbon black processes. Nitrogen oxide emissions are not included but are believed to be low because of the lack of available oxygen in the reaction.

Table 5.3-1. EMISSION FACTORS FOR CARBON BLACK MANUFACTURING[a]
EMISSION FACTOR RATING: C

Type of process	Particulate		Carbon monoxide		Hydrogen sulfide		Hydrocarbons[b]	
	lb/ton	kg/MT	lb/ton	kg/MT	lb/ton	kg/MT	lb/ton	kg/MT
Channel	2,300	1,150	33,500	16,750	–	–	11,500	5,750
Thermal	Neg	Neg	Neg	Neg	Neg	Neg	Neg	Neg
Furnace								
Gas	c	c	5,300	2,650	–	–	1,800	900
Oil	c	c	4,500	2,250	38S[d]	19S[d]	400	200
Gas or oil	220[e]	110[e]						
	60[f]	30[f]						
	10[g]	5[g]						

[a]Based on data in References 2, 3, 5, and 6.
[b]As methane.
[c]Particulate emissions cannot be separated by type of furnace and are listed for either gas or oil furnaces.
[d]S is the weight percent sulfur in feed.
[e]Overall collection efficiency was 90 percent with no collection after cyclone.
[f]Overall collection efficiency was 97 percent with cyclones followed by scrubber.
[g]Overall collection efficiency was 99.5 percent with fabric filter system.

References for Section 5.3

1. Air Pollutant Emission Factors. Final Report. Resources Research, Incorporated. Reston, Virginia. Prepared for National Air Pollution Control Administration, Durham, N.C., under Contract Number CPA-22-69-119. April 1970.

2. Drogin, I. Carbon Black. J. Air Pol. Control Assoc. *18*:216-228, April 1968.

3. Cox, J.T. High Quality, High Yield Carbon Black. Chem. Eng. *57*:116-117, June 1950.

4. Shreve, R.N. Chemical Process Industries, 3rd Ed. New York, McGraw-Hill Book Company. 1967. p. 124-130.

5. Reinke, R.A. and T.A. Ruble. Oil Black. Ind. Eng. Chem. *44*:685-694, April 1952.

6. Allan, D. L. The Prevention of Atmospheric Pollution in the Carbon Black Industry. Chem. Ind. p. 1320-1324, October 15, 1955

5.4 CHARCOAL

5.4.1 Process Description[1]

Charcoal is generally manufactured by means of pyrolysis, or destructive distillation, of wood waste from members of the deciduous hardwood species. In this process, the wood is placed in a retort where it is externally heated for about 20 hours at 500 to 700°F (260 to 370°C). Although the retort has air intakes at the bottom, these are only used during start-up and thereafter are closed. The entire distillation cycle takes approximately 24 hours, the last 4 hours being an exothermic reaction. Four units of hardwood are required to produce one unit of charcoal.

5.4.2 Emissions and Controls[1]

In the pyrolysis of wood, all the gases, tars, oils, acids, and water are driven off, leaving virtually pure carbon. All of these except the gas, which contains methane, carbon monoxide, carbon dioxide, nitrogen oxides, and aldehydes, are useful by-products if recovered. Unfortunately, economics has rendered the recovery of the distillate by-products unprofitable, and they are generally permitted to be discharged to the atmosphere. If a recovery plant is utilized, the gas is passed through water-cooled condensers. The condensate is then refined while the remaining cool, noncondensable gas is discharged to the atmosphere. Gaseous emissions can be controlled by means of an afterburner because the unrecovered by-products are combustible. If the afterburner operates efficiently, no organic pollutants should escape into the atmosphere. Emission factors for the manufacture of charcoal are shown in Table 5.4-1.

Table 5.4-1. EMISSION FACTORS FOR CHARCOAL MANUFACTURING[a]
EMISSION FACTOR RATING: C

Pollutant	Type of operation			
	With chemical recovery plant		Without chemical recovery plant	
	lb/ton	kg/MT	lb/ton	kg/MT
Particulate (tar, oil)	–	–	400	200
Carbon monoxide	320[b]	160[b]	320[b]	160[b]
Hydrocarbons[c]	100[b]	50[b]	100[b]	50[b]
Crude methanol	–	–	152	76
Acetic acid	–	–	232	116
Other gases (HCHO, N_2 NO)	60	30	60[b]	30[b]

[a]Calculated values based on data in Reference 2.
[b]Emissions are negligible if afterburner is used.
[c]Expressed as methane.

References for Section 5.4

1. Air Pollutant Emission Factors. Final Report. Resources Research, Inc. Reston, Va. Prepared for National Air Pollution Control Administration, Durham, N.C., under Contract Number CPA-22-69-119. April 1970.

2. Shreve, R.N. Chemical Process Industries, 3rd Ed. New York, McGraw-Hill Book Company. 1967. p. 619.

5.5 CHLOR–ALKALI

5.5.1 Process Description[1]

Chlorine and caustic are produced concurrently by the electrolysis of brine in either the diaphragm or mercury cell. In the diaphragm cell, hydrogen is liberated at the cathode and a diaphragm is used to prevent contact of the chlorine produced at the anode with either the alkali hydroxide formed or the hydrogen. In the mercury cell, liquid mercury is used as the cathode and forms an amalgam with the alkali metal. The amalgam is removed from the cell and is allowed to react with water in a separate chamber, called a denuder, to form the alkali hydroxide and hydrogen.

Chlorine gas leaving the cells is saturated with water vapor and then cooled to condense some of the water. The gas is further dried by direct contact with strong sulfuric acid. The dry chlorine gas is then compressed for in-plant use or is cooled further by refrigeration to liquefy the chlorine.

Caustic as produced in a diaphragm-cell plant leaves the cell as a dilute solution along with unreacted brine. The solution is evaporated to increase the concentration to a range of 50 to 73 percent; evaporation also precipitates most of the residual salt, which is then removed by filtration. In mercury-cell plants, high-purity caustic can be produced in any desired strength and needs no concentration.

5.5.2 Emissions and Controls[1]

Emissions from diaphragm- and mercury-cell chlorine plants include chlorine gas, carbon dioxide, carbon monoxide, and hydrogen. Gaseous chlorine is present in the blow gas from liquefaction, from vents in tank cars and tank containers during loading and unloading, and from storage tanks and process transfer tanks. Other emissions include mercury vapor from mercury cathode cells and chlorine from compressor seals, header seals, and the air blowing of depleted brine in mercury-cell plants.

Chlorine emissions from chlor-alkali plants may be controlled by one of three general methods: (1) use of the gas in other plant processes, (2) neutralization in alkaline scrubbers, and (3) recovery of chlorine from effluent gas streams. The effect of specific control practices is shown to some extent in the table on emission factors (Table 5.5-1).

References for Section 5.5

1. Atmospheric Emissions from Chlor-Alkali Manufacture. U.S. EPA, Air Pollution Control Office. Research Triangle Park, N.C. Publication Number AP-80. January 1971.

2. Duprey, R.L. Compilation of Air Pollutant Emission Factors. U.S. DHEW, PHS, National Center for Air Pollution Control. Durham, N.C. PHS Publication Number 999-AP-42. 1968. p. 49.

Table 5.5-1. EMISSION FACTORS FOR CHLOR-ALKALI PLANTS[a]
EMISSION FACTOR RATING: B

Type of source	Chlorine gas	
	lb/100 tons	kg/100 MT
Liquefaction blow gases		
Diaphragm cell, uncontrolled	2,000 to 10,000	1,000 to 5,000
Mercury cell[b], uncontrolled	4,000 to 16,000	2,000 to 8,000
Water absorber	25 to 1,000	12.5 to 500
Caustic or lime scrubber	1	0.5
Loading of chlorine		
Tank car vents	450	225
Storage tank vents	1,200	600
Air-blowing of mercury-cell brine	500	250

[a]References 1 and 2.
[b]Mercury cells lose about 1.5 pounds mercury per 100 tons (0.75 kg/100 MT) of chlorine liquefied.

5.6 EXPLOSIVES

5.6.1 General

An explosive is a material that, under the influence of thermal or mechanical shock, decomposes rapidly and spontaneously with the evolution of large amounts of heat and gas.[1] Explosives fall into two major categories: high explosives and low explosives. Although a multitude of different types of explosives exists, this section will deal only with an example of each major category: TNT as the high explosive and nitrocellulose as the low explosive.

5.6.2 TNT Production[2]

TNT is usually prepared by a batch three-stage nitration process using toluene, nitric acid, and sulfuric acid as raw materials. A combination of nitric acid and fuming sulfuric acid (oleum) is used as the nitrating agent. Spent acid from the nitration vessels is fortified with make-up nitric acid before entering the next nitrator. The spent acid from the primary nitrator and the fumes from all the nitrators are sent to the acid-fume recovery system. This system supplies the make-up nitric acid needed in the process. After nitration, the undesired by-products are removed from the TNT by agitation with a solution of sodium sulfite and sodium hydrogen sulfite (Sellite process). The wash waste (commonly called red water) from this purification process is either discharged directly into a stream or is concentrated to a slurry and incinerated. The TNT is then solidified, granulated, and moved to the packing house for shipment or storage.

5.6.3 Nitrocellulose Production[2]

Nitrocellulose is prepared in the United States by the "mechanical dipper" process. This batch process involves dripping the cellulose into a reactor (niter pot) containing a mixture of concentrated nitric acid and a dehydrating agent such as sulfuric acid, phosphoric acid, or magnesium nitrate. When nitration is complete, the reaction mixtures are centrifuged to remove most of the spent acid. The centrifuged nitrocellulose is then "drowned" in water and pumped as a water slurry to the final purification area.

5.6.4 Emissions

Emissions of sulfur oxides and nitrogen oxides from processes that produce some of the raw materials for explosives production, such as nitric acid and sulfuric acid, can be considerable. Because all of the raw materials are not manufactured at the explosives plant, it is imperative to obtain detailed process information for each plant in order to estimate emissions. The emissions from the manufacture of nitric acid and sulfuric acid are not included in this section as they are discussed in other sections of this publication.

The major emissions from the manufacturing of explosives are nitrogen oxides. The nitration reactors for TNT production and the reactor pots and centrifuges for nitrocellulose represent the largest nitrogen oxide sources. Sulfuric acid regenerators or concentrators, considered an integral part of the process, are the major sources of sulfur oxide emissions. Emission factors for explosives manufacturing are presented in Table 5.6-1.

Table 5.6-1. EMISSION FACTORS FOR EXPLOSIVES MANUFACTURING WITHOUT CONTROL EQUIPMENT
EMISSION FACTOR RATING: C

Type of process	Particulate		Sulfur oxides (SO_2)		Nitrogen oxides (NO_2)	
	lb/ton	kg/MT	lb/ton	kg/MT	lb/ton	kg/MT
High explosives						
TNT						
Nitration reactors[a]	–	–	–	–	160	80
Nitric acid concentrators[b]	–	–	–	–	1	0.5
Sulfuric acid regenerators[c]	0.4	0.2	18	9	–	–
Red water incinerator[c,d]	36	18	13	6.5	6	3
Nitric acid manufacture	(See section on nitric acid)					
Low explosives						
Nitrocellulose[e]						
Reactor pots	–	–	–	–	12	6
Sulfuric acid concentrators	–	–	65	32.5	29	14.5

[a]With bubble cap absorption, system is 90 to 95 percent efficient.
[b]References 3 and 4.
[c]Reference 4.
[d]Not employed in manufacture of TNT for commercial use.[5]
[e]Reference 6.

References for Section 5.6

1. Shreve, R.N. Chemical Process Industries, 3rd Ed. New York, McGraw-Hill Book Company. 1967. p. 383-395.

2. Larson, T. and D. Sanchez. Unpublished report on nitrogen oxide emissions and controls from explosives manufacturing. National Air Pollution Control Administration, Office of Criteria and Standards. Durham, N. C. 1969.

3. Unpublished data on emissions from explosives manufacturing. National Air Pollution Control Administration, Federal Facilities Section. Washington, D.C.

4. Unpublished data on emissions from explosives manufacturing. National Air Pollution Control Administration, Office of Criteria and Standards. Durham, N. C. June 1970.

5. Control Techniques for Nitrogen Oxides from Stationary Sources. U.S. DHEW, PHS, EHS, National Air Pollution Control Administration. Washington, D.C. Publication Number AP-67. March 1970. p. 7-23.

6. Unpublished stack test data from an explosives manufacturing plant. Army Environmental Hygiene Agency. Baltimore, Maryland. December 1967.

5.7 HYDROCHLORIC ACID

Hydrochloric acid is manufactured by a number of different chemical processes. Approximately 80 percent of the hydrochloric acid, however, is produced by the by-product hydrogen chloride process, which will be the only process discussed in this section. The synthesis process and the Mannheim process are of secondary importance.

5.7.1 Process Description[1]

By-product hydrogen chloride is produced when chlorine is added to an organic compound such as benzene, toluene, and vinyl chloride. Hydrochloric acid is produced as a by-product of this reaction. An example of a process that generates hydrochloric acid as a by-product is the direct chlorination of benzene. In this process benzene, chlorine, hydrogen, air, and some trace catalysts are the raw materials that produce chlorobenzene. The gases from the reaction of benzene and chlorine consist of hydrogen chloride, benzene, chlorobenzenes, and air. These gases are first scrubbed in a packed tower with a chilled mixture of monochlorobenzene and dichlorobenzene to condense and recover any benzene or chlorobenzene. The hydrogen chloride is then absorbed in a falling film absorption plant.

5.7.2 Emissions

The recovery of the hydrogen chloride from the chlorination of an organic compound is the major source of hydrogen chloride emissions. The exit gas from the absorption or scrubbing system is the actual source of the hydrogen chloride emitted. Emission factors for hydrochloric acid produced as by-product hydrogen chloride are presented in Table 5.7-1.

Table 5.7-1. EMISSION FACTORS FOR HYDROCHLORIC ACID MANUFACTURING[a]
EMISSION FACTOR RATING: B

Type of process	Hydrogen chloride emissions	
	lb/ton	kg/MT
By-product hydrogen chloride		
With final scrubber	0.2	0.1
Without final scrubber	3	1.5

[a]Reference 1.

Reference for Section 5.7

1. Atmospheric Emissions from Hydrochloric Acid Manufacturing Processes. U.S. DHEW, PHS, CPEHS, National Air Pollution Control Administration. Durham, N.C. Publication Number AP-54. September 1969.

5.8 HYDROFLUORIC ACID

5.8.1 Process Description[1]

All hydrofluoric acid in the United States is currently produced by the reaction of acid-grade fluorspar with sulfuric acid for 30 to 60 minutes in externally fired rotary kilns at a temperature of 400° to 500°F (204° to 260°C).[2,3,4] The resulting gas is then cleaned, cooled, and absorbed in water and weak hydrofluoric acid to form a strong acid solution. Anhydrous hydrofluoric acid is formed by distilling 80 percent hydrofluoric acid and condensing the gaseous HF which is driven off.

5.8.2 Emissions and Controls[1]

Air pollutant emissions are minimized by the scrubbing and absorption systems used to purify and recover the HF. The initial scrubber utilizes concentrated sulfuric acid as a scrubbing medium and is designed to remove dust, SO_2, SO_3, sulfuric acid mist, and water vapor present in the gas stream leaving the primary dust collector. The exit gases from the final absorber contain small amounts of HF, silicon tetrafluoride (SiF_4), CO_2, and SO_2 and may be scrubbed with a caustic solution to reduce emissions further. A final water ejector, sometimes used to draw the gases through the absorption system, will reduce fluoride emissions. Dust emissions may also result from raw fluorspar grinding and drying operations. Table 5.8-1 lists the emission factors for the various operations.

Table 5.8-1. EMISSION FACTORS FOR HYDROFLUORIC ACID MANUFACTURING[a]
EMISSION FACTOR RATING: C

Type of operation	Fluorides		Particulates	
	lb/ton acid	kg/MT acid	lb/ton fluorspar	kg/MT fluorspar
Rotary kiln				
Uncontrolled	50	25	–	–
Water scrubber	0.2	0.1	–	–
Grinding and drying of fluorspar	–	–	20[b]	10[b]

[a]References 2 and 5.
[b]Factor given for well-controlled plant.

References for Section 5.8

1. Air Pollutant Emission Factors. Final Report. Resources Research Inc., Reston, Va. Prepared for National Air Pollution Control Administration, Durham, N.C., under Contract Number CPA-22-69-119. April 1970.

2. Rogers, W.E. and K. Muller. Hydrofluoric Acid Manufacture. Chem. Eng. Progr. *59*:85-88, May 1963.

3. Heller, A.N., S.T. Cuffe, and D.R. Goodwin. Inorganic Chemical Industry. In: Air Pollution Engineering Manual. Danielson, J.A. (ed.). U.S. DHEW, PHS, National Center for Air Pollution Control. Cincinnati, Ohio. Publication Number 999-AP-40. 1967. p. 197-198.

4. Hydrofluoric Acid. Kirk-Othmer Encyclopedia of Chemical Technology, Vol. 9. New York, John Wiley and Sons, Inc. 1964. p. 444-485.

5. Private Communication between Resources Research, Incorporated, and E.I. DuPont de Nemours and Company. Wilmington, Delaware. January 13, 1970.

5.9 NITRIC ACID

Revised by William Vatavuk

5.9.1 Process Description

5.9.1.1 Weak Acid Production[1] - Nearly all the nitric acid produced in the United States is manufactured by the high-pressure catalytic oxidation of ammonia (Figure 5.9-1). Typically, this process consists of three steps, each of which corresponds to a distinct chemical reaction. First, a 1:9 ammonia-air mixture is oxidized at high temperature and pressure (6.4 to 9.2 atmospheres), as it passes through a platinum-rhodium catalyst, according to the reaction:

$$\underset{\text{Ammonia}}{4NH_3} + \underset{\text{Oxygen}}{5O_2} \longrightarrow \underset{\text{Nitric oxide}}{4NO} + \underset{\text{Water}}{6H_2O} \qquad (1)$$

After the process stream is cooled to 100°F (38°C) or less by passage through a cooler-condenser, the nitric oxide reacts with residual oxygen:

$$2NO + O_2 \longrightarrow \underset{\text{Nitrogen dioxide}}{2NO_2} \rightleftharpoons \underset{\text{Nitrogen tetroxide}}{N_2O_4} \qquad (2)$$

Finally, the gases are introduced into a bubble-cap plate absorption column where they are contacted with a countercurrent stream of water. The exothermic reaction that occurs is:

$$3NO_2 + H_2O \longrightarrow \underset{\text{Nitric acid 50 to 70\% aqueous}}{2HNO_3} + NO \qquad (3)$$

The production of nitric oxide in reaction (3) necessitates the introduction of a secondary air stream into the column to effect its oxidation to nitrogen dioxide, thereby perpetuating the absorption operation.

The spent gas flows from the top of the absorption tower to an entrainment separator for acid mist removal, through the ammonia oxidation unit for energy absorption from the ammonia stream, through an expander for energy recovery, and finally to the stack. In most plants the stack gas is treated before release to the atmosphere by passage through either a catalytic combustor or, less frequently, an alkaline scrubber.

5.9.1.2 High-Strength Acid Production[1] - To meet requirements for high strength acid, the 50 to 70 percent acid produced by the pressure process is concentrated to 95 to 99 percent at approximately atmospheric pressure. The concentration process consists of feeding strong sulfuric acid and 60 percent nitric acid to the top of a packed column where it is contacted by an ascending stream of weak acid vapor, resulting in the dehydration of the latter. The concentrated acid vapor that leaves the column passes to a bleacher and countercurrent condenser system to effect condensation of the vapors and separation of the small amounts of nitric oxides and oxygen that form as dehydration by-products. These by-products then flow to an absorption column where the nitric oxide mixes with auxiliary air to form nitrogen dioxide, which is, in turn, recovered as weak nitric acid. Finally, unreacted gases are vented to the atmosphere from the top of the column.

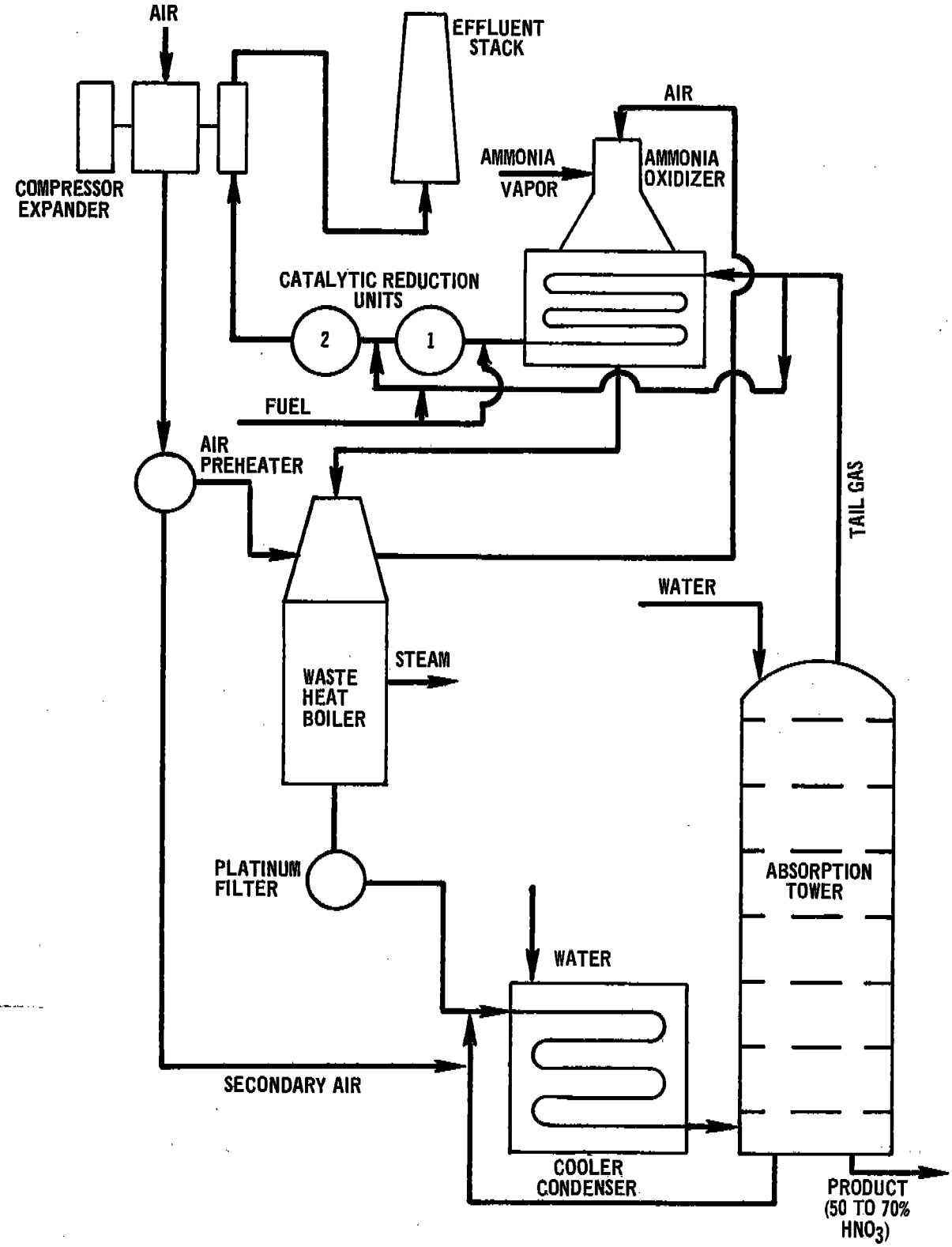

Figure 5.9-1. Flow diagram of typical nitric acid plant using pressure process.

5.9.2 Emissions and Controls[1-3]

The emissions derived from nitric acid manufacture consist primarily of nitric oxide, which accounts for visible emissions; nitrogen dioxide; and trace amounts of nitric acid mist. By far, the major source of nitrogen oxides is the tail gas from the acid absorption tower (Table 5.9-1). In general, the quantity of NO_x emissions is directly related to the kinetics of the nitric acid formation reaction.

The specific operating variables that increase tail gas NO_x emissions are: (1) insufficient air supply, which results in incomplete oxidation of NO; (2) low pressure in the absorber; (3) high temperature in the cooler-condenser and absorber; (4) production of an excessively high-strength acid; and (5) operation at high throughput rates, which results in decreased residence time in the absorber.

Aside from the adjustment of these variables, the most commonly used means for controlling emissions is the catalytic combustor. In this device, tail gases are heated to ignition temperature, mixed with fuel (natural gas, hydrogen, or a mixture of both), and passed over a catalyst. The reactions that occur result in the successive reduction of NO_2 to NO and, then, NO to N_2. The extent of reduction of NO_2 to N_2 in the combustor is, in turn, a function of plant design, type of fuel used, combustion temperature and pressure, space velocity through the combustor, type and amount of catalyst used, and reactant concentrations (Table 5.9-1).

Comparatively small amounts of nitrogen oxides are also lost from acid concentrating plants. These losses (mostly NO_2) occur from the condenser system, but the emissions are small enough to be easily controlled by the installation of inexpensive absorbers.

Table 5.9-1. NITROGEN OXIDE EMISSIONS FROM NITRIC ACID PLANTS[a]
EMISSION FACTOR RATING: B

Type of control	Control efficiency, %	Emissions (NO_2)[b]	
		lb/ton acid	kg/MT acid
Weak acid			
Uncontrolled	0	50 to 55[c]	25.0 to 27.5
Catalytic combustor (natural gas fired)	78 to 97	2 to 7[d]	1.0 to 3.5
Catalytic combustor (hydrogen fired)	97 to 99.8	0.0 to 1.5	0.0 to 0.75
Catalytic combustor (75% hydrogen, 25% natural gas fired)	98 to 98.5	0.8 to 1.1	0.4 to 0.55
High-strength acid	–	0.2 to 5.0	0.1 to 2.5

[a]References 1 and 2.
[b]Based on 100 percent acid production.
[c]Range of values taken from four plants measured at following process conditions: production rate, 120 tons (109 MT) per day (100 percent rated capacity); absorber exit temperature, 90° F (32° C); absorber exit pressure, 7.8 atmospheres; acid strength, 57 percent. Under different conditions, values can vary from 43 to 57 lb/ton (21.5 to 28.5 kg/MT).
[d]To present a more realistic picture, ranges of values were used instead of averages.

Acid mist emissions do not occur from a properly operated plant. The small amounts that may be present in the absorber exit gas stream are removed by a separator or collector prior to entering the catalytic combustor or expander.

Finally, small amounts of nitrogen dioxide are lost during the filling of storage tanks and tank cars.

Nitrogen oxide emissions (expressed as NO_2) are presented for weak nitric acid plants in table 5.9-1. The emission factors vary considerably with the type of control employed, as well as with process conditions. For comparison purposes, the Environmental Protection Agency (EPA) standard for both new and modified plants is 3.0 pounds per ton of 100 percent acid produced (1.5 kilograms per metric ton), maximum 2-hour average, expressed as NO_2.[4] Unless specifically indicated as 100 percent acid, production rates are generally given in terms of the total weight of product (water and acid). For example, a plant producing 500 tons (454 MT) per day of 55 weight percent nitric acid is really producing only 275 tons (250 MT) per day of 100 percent acid.

References for Section 5.9

1. Control of Air Pollution from Nitric Acid Plants. Unpublished Report. Environmental Protection Agency, Research Triangle Park, N.C.

2. Atmospheric Emissions from Nitric Acid Manufacturing Processes. U.S. DHEW, PHS, Division of Air Pollution. Cincinnati, Ohio. Publication Number 999-AP-27. 1966.

3. Unpublished emission data from a nitric acid plant. U.S. DHEW, PHS, EHS, National Air Pollution Control Administration, Office of Criteria and Standards. Durham, N.C. June 1970.

4. Standards of Performance for New Stationary Sources. Environmental Protection Agency, Washington, D.C. Federal Register. *36*(247): December 23, 1971.

5.10 PAINT AND VARNISH

5.10.1 Paint Manufacturing[1]

The manufacture of paint involves the dispersion of a colored oil or pigment in a vehicle, usually an oil or resin, followed by the addition of an organic solvent for viscosity adjustment. Only the physical processes of weighing, mixing, grinding, tinting, thinning, and packaging take place; no chemical reactions are involved.

These processes take place in large mixing tanks at approximately room temperature.

The primary factors affecting emissions from paint manufacture are care in handling dry pigments, types of solvents used, and mixing temperature.[2,3] About 1 or 2 percent of the solvents is lost even under well-controlled conditions. Particulate emissions amount to 0.5 to 1.0 percent of the pigment handled.[4]

5.10.2 Varnish Manufacturing[1-3]

The manufacture of varnish also involves the mixing and blending of various ingredients to produce a wide range of products. However, in this case chemical reactions are initiated by heating. Varnish is cooked in either open or enclosed gas-fired kettles for periods of 4 to 16 hours at temperatures of 200 to 650°F (93 to 340°C).

Varnish cooking emissions, largely in the form or organic compounds, depend on the cooking temperatures and times, the solvent used, the degree of tank enclosure, and the type of air pollution controls used. Emissions from varnish cooking range from 1 to 6 percent of the raw material.

To reduce hydrocarbons from the manufacture of paint and varnish, control techniques include condensers and/or adsorbers on solvent-handling operations, and scrubbers and afterburners on cooking operations. Emission factors for paint and varnish are shown in Table 5.10-1.

Table 5.10-1. EMISSION FACTORS FOR PAINT AND VARNISH MANUFACTURING WITHOUT CONTROL EQUIPMENT[a,b]
EMISSION FACTOR RATING: C

Type of product	Particulate		Hydrocarbons[c]	
	lb/ton pigment	kg/MT pigment	lb/ton of product	kg/MT pigment
Paint	2	1	30	15
Varnish				
Bodying oil	–	–	40	20
Oleoresinous	–	–	150	75
Alkyd	–	–	160	80
Acrylic	–	–	20	10

[a]References 2 and 4 through 8.
[b]Afterburners can reduce gaseous hydrocarbon emissions by 99 percent and particulates by about 90 percent. A water spray and oil filter system can reduce particulates by about 90 percent.[5]
[c]Expressed as undefined organic compounds whose composition depends upon the type of varnish or paint.

References for Section 5.10

1. Air Pollutant Emission Factors. Final Report. Resources Research, Inc. Reston, Va. Prepared for National Air Pollution Control Administration, Durham, N.C., under Contract Number CPA-22-69-119. April 1970.

2. Stenburg, R.L. Atmospheric Emissions from Paint and Varnish Operations. Paint Varn. Prod. p. 61-65 and 111-114, September 1959.

3. Private Communication between Resources Research, Incorporated, and National Paint, Varnish and Lacquer Association. September 1969.

4. Unpublished engineering estimates based on plant visits in Washington, D.C. Resources Research, Incorporated. Reston, Va. October 1969.

5. Chatfield, H.E. Varnish Cookers. In: Air Pollution Engineering Manual. Danielson, J. A. (ed.). U.S. DHEW, PHS, National Center for Air Pollution Control. Cincinnati, Ohio. Publication Number 999-AP-40. 1967. p. 688-695.

6. Lunche, E.G. et al. Distribution Survey of Products Emitting Organic Vapors in Los Angeles County. Chem. Eng. Progr. *53*. August 1957.

7. Communication on emissions from paint and varnish operations with G. Sallee, Midwest Research Institute. December 17, 1969.

8. Communication with Roger Higgins, Benjamin Moore Paint Company. June 25, 1968 .

5.11 PHOSPHORIC ACID

Phosphoric acid is produced by two principal methods, the wet process and the thermal process. The wet process is usually employed when the acid is to be used for fertilizer production. Thermal-process acid is normally of higher purity and is used in the manufacture of high-grade chemical and food products.

5.11.1 Wet Process[1,2]

In the wet process, finely ground phosphate rock is fed into a reactor with sulfuric acid to form phosphoric acid and gypsum. There is usually little market for the gypsum produced, and it is handled as waste material in gypsum ponds. The phosphoric acid is separated from the gypsum and other insolubles by vacuum filtration. The acid is then normally concentrated to about 50 to 55 percent P_2O_5. When superphosphoric acid is made, the acid is concentrated to between 70 and 85 percent P_2O_5.

Emissions of gaseous fluorides, consisting mostly of silicon tetrafluoride and hydrogen fluoride, are the major problems from wet-process acid. Table 5.11-1 summarizes the emission factors from both wet-process acid and thermal-process acid.

5.11.2 Thermal Process[1]

In the thermal process, phosphate rock, siliceous flux, and coke are heated in an electric furnace to produce elemental phosphorus. The gases containing the phosphorus vapors are passed through an electrical precipitator to remove entrained dust. In the "one-step" version of the process, the gases are next mixed with air to form P_2O_5 before passing to a water scrubber to form phosphoric acid. In the "two-step" version of the process, the phosphorus is condensed and pumped to a tower in which it is burned with air, and the P_2O_5 formed is hydrated by a water spray in the lower portion of the tower.

The principal emission from thermal-process acid is P_2O_5 acid mist from the absorber tail gas. Since all plants are equipped with some type of acid-mist collection system, the emission factors presented in Table 5.11-1 are based on the listed types of control.

Table 5.11-1. EMISSION FACTORS FOR PHOSPHORIC ACID PRODUCTION
EMISSION FACTOR RATING: B

Source	Particulates		Fluorides	
	lb/ton	kg/MT	lb/ton	kg/MT
Wet process (phosphate rock)				
Reactor, uncontrolled	–	–	18[a]	9[a]
Gypsum pond	–	–	1[b]	1.1[b]
Condenser, uncontrolled	–	–	20[a]	10[a]
Thermal process (phosphorus burned[c])				
Packed tower	4.6	2.3	–	–
Venturi scrubber	5.6	2.8	–	–
Glass-fiber mist eliminator	3.0	1.5	–	–
Wire-mesh mist eliminator	2.7	1.35	–	–
High-pressure-drop mist eliminator	0.2	0.1	–	–
Electrostatic precipitator	1.8	0.9	–	–

[a]References 2 and 3.

[b]Pounds per acre per day (kg/hectare-day); approximately 0.5 acre (0.213 hectare) is required to produce 1 ton of P_2O_5 daily.

[c]Reference 4.

References for Section 5.11

1. Duprey, R.L. Compilation of Air Pollutant Emission Factors. U.S. DHEW, PHS, National Center for Air Pollution Control. Durham, N.C. PHS Publication Number 999-AP-42. 1968. p. 16.

2. Atmospheric Emissions from Wet-Process Phosphoric Acid Manufacture. U.S. DHEW, PHS, EHS, National Air Pollution Control Administration. Raleigh, N.C. Publication Number AP-57. April 1970.

3. Control Techniques for Fluoride Emissions. Internal document. U.S. EPA, Office of Air Programs. Research Triangle Park, N.C. 1970.

4. Atmospheric Emissions from Thermal-Process Phosphoric Acid Manufacturing. Cooperative Study Project: Manufacturing Chemists' Association, Incorporated, and Public Health Service. U.S. DHEW, PHS, National Air Pollution Control Administration. Durham, N.C. Publication Number AP-48. October 1968.

5.12 PHTHALIC ANHYDRIDE

5.12.1 Process Description[1,2]

Phthalic anhydride is produced primarily by oxidizing naphthalene vapors with excess air over a catalyst, usually V_2O_5. *O*-xylene can be used instead of naphthalene, but it is not used as much. Following the oxidation of the naphthalene vapors, the gas stream is cooled to separate the phthalic vapor from the effluent. Phthalic anhydride crystallizes directly from this cooling without going through the liquid phase. The phthalic anhydride is then purified by a chemical soak in sulfuric acid, caustic, or alkali metal salt, followed by a heat soak. To produce 1 ton of phthalic anhydride, 2,500 pounds of naphthalene and 830,000 standard cubic feet (scf) of air are required (or 1,130 kilograms of naphthalene and 23,500 standard cubic meters of air to produce 1 MT of phthalic anhydride).

5.12.2 Emissions and Controls[1]

The excess air from the production of phthalic anhydride contains some uncondensed phthalic anhydride, maleic anhydride, quinones, and other organics. The venting of this stream to the atmosphere is the major source of organic emissions. These emissions can be controlled with catalytic combustion. Table 5.12-1 presents emission factor data from phthalic anhydride plants.

Table 5.12-1. EMISSION FACTORS FOR PHTHALIC ANHYDRIDE PLANTS[a]
EMISSION FACTOR RATING: E

Overall plant	Organics (as hexane)	
	lb/ton	kg/MT
Uncontrolled	32	16
Following catalytic combustion	11	5.5

[a]Reference 3.

References for Section 5.12

1. Duprey, R.L. Compilation of Air Pollutant Emission Factors. U.S. DHEW, PHS, National Center for Air Pollution Control. Durham, N.C. PHS Publication Number 999-AP-42. 1968. p. 17.

2. Phthalic Anhydride. Kirk-Othmer Encyclopedia of Chemical Technology, Vol. 15, 2nd Ed. New York, John Wiley and Sons, Inc. p. 444-485. 1968.

3. Bolduc, M.J. et al. Systematic Source Test Procedure for the Evaluation of Industrial Fume Converters. (Presented at 58th Annual Meeting of the Air Pollution Control Association, Toronto, Canada. June 1965).

5.13 PLASTICS

5.13.1 Process Description[1]

The manufacture of most resins or plastics begins with the polymerization or linking of the basic compound (monomer), usually a gas or liquid, into high molecular weight noncrystalline solids. The manufacture of the basic monomer is not considered part of the plastics industry and is usually accomplished at a chemical or petroleum plant.

The manufacture of most plastics involves an enclosed reaction or polymerization step, a drying step, and a final treating and forming step. These plastics are polymerized or otherwise combined in completely enclosed stainless steel or glass-lined vessels. Treatment of the resin after polmerization varies with the proposed use. Resins for moldings are dried and crushed or ground into molding powder. Resins such as the alkyd resins that are to be used for protective coatings are normally transferred to an agitated thinning tank, where they are thinned with some type of solvent and then stored in large steel tanks equipped with water-cooled condensers to prevent loss of solvent to the atmosphere. Still other resins are stored in latex form as they come from the kettle.

5.13.2 Emissions and Controls[1]

The major sources of air contamination in plastics manufacturing are the emissions of raw materials or monomers, emissions of solvents or other volatile liquids during the reaction, emissions of sublimed solids such as phthalic anhydride in alkyd production, and emissions of solvents during storage and handling of thinned resins. Emission factors for the manufacture of plastics are shown in Table 5.13-1.

Table 5.13-1. EMISSION FACTORS FOR PLASTICS MANUFACTURING WITHOUT CONTROLS[a]
EMISSION FACTOR RATING: E

Type of plastic	Particulate		Gases	
	lb/ton	kg/MT	lb/ton	kg/MT
Polyvinyl chloride	35[b]	17.5[b]	17[c]	8.5[c]
Polypropylene	3	1.5	0.7[d]	0.35[d]
General	5 to 10	2.5 to 5	–	–

[a]References 2 and 3.
[b]Usually controlled with a fabric filter efficiency of 98 to 99 percent.
[c]As vinyl chloride.
[d]As propylene.

Much of the control equipment used in this industry is a basic part of the system and serves to recover a reactant or product. These controls include floating roof tanks or vapor recovery systems on volatile material, storage units, vapor recovery systems (adsorption or condensers), purge lines that vent to a flare system, and recovery systems on vacuum exhaust lines.

References for Section 5.13

1. Air Pollutant Emission Factors. Final Report. Resources Research, Inc. Reston, Va. Prepared for National Air Pollution Control Administration, Durham, N.C., under Contract Number CPA-22-69-119. April 1970.

2. Unpublished data from industrial questionnaire. U.S. DHEW, PHS, National Air Pollution Control Administration, Division of Air Quality and Emissions Data. Durham, N.C. 1969.

3. Private Communication between Resources Research, Incorporated, and Maryland State Department of Health, Baltimore, Md. November 1969.

5.14 PRINTING INK

5.14.1 Process Description[1]

There are four major classes of printing ink: letterpress and lithographic inks, commonly called oil or paste inks; and flexographic and rotogravure inks, which are referred to as solvent inks. These inks vary considerably in physical appearance, composition, method of application, and drying mechanism. Flexographic and rotogravure inks have many elements in common with the paste inks but differ in that they are of very low viscosity, and they almost always dry by evaporation of highly volatile solvents.[2]

There are three general processes in the manufacture of printing inks: (1) cooking the vehicle and adding dyes, (2) grinding of a pigment into the vehicle using a roller mill, and (3) replacing water in the wet pigment pulp by an ink vehicle (commonly known as the flushing process).[3] The ink "varnish" or vehicle is generally cooked in large kettles at 200° to 600°F (93° to 315°C) for an average of 8 to 12 hours in much the same way that regular varnish is made. Mixing of the pigment and vehicle is done in dough mixers or in large agitated tanks. Grinding is most often carried out in three-roller or five-roller horizontal or vertical mills.

5.14.2 Emissions and Controls[1,4]

Varnish or vehicle preparation by heating is by far the largest source of ink manufacturing emissions. Cooling the varnish components – resins, drying oils, petroleum oils, and solvents – produces odorous emissions. At about 350°F (175°C) the products begin to decompose, resulting in the emission of decomposition products from the cooking vessel. Emissions continue throughout the cooking process with the maximum rate of emissions occuring just after the maximum temperature has been reached. Emissions from the cooking phase can be reduced by more than 90 percent with the use of scrubbers or condensers followed by afterburners.[4,5]

Compounds emitted from the cooking of oleoresinous varnish (resin plus varnish) include water vapor, fatty acids, glycerine, acrolein, phenols, aldehydes, ketones, terpene oils, terpenes, and carbon dioxide. Emissions of thinning solvents used in flexographic and rotogravure inks may also occur.

The quantity, composition, and rate of emissions from ink manufacturing depend upon the cooking temperature and time, the ingredients, the method of introducing additives, the degree of stirring, and the extent of air or inert gas blowing. Particulate emissions resulting from the addition of pigments to the vehicle are affected by the type of pigment and its particle size. Emission factors for the manufacture of printing ink are presented in Table 5.14-1.

Table 5.14-1. EMISSION FACTORS FOR PRINTING INK MANUFACTURING[a]
EMISSION FACTOR RATING: E

Type of process	Gaseous organic[b] lb/ton of product	Gaseous organic[b] kg/MT of product	Particulates lb/ton of pigment	Particulates kg/MT of pigment
Vehicle cooking				
General	120	60	–	–
Oils	40	20	–	–
Oleoresinous	150	75	–	–
Alkyds	160	80	–	–
Pigment mixing	–	–	2	1

[a]Based on data from section on paint and varnish.
[b]Emitted as gas, but rapidly condense as the effluent is cooled.

References for Section 5.14

1. Air Pollutant Emission Factors. Final Report. Resources Research Inc. Reston, Va. Prepared for National Air Pollution Control Administration, Durham, N.C., under Contract Number CPA-22-69-119. April 1970.

2. Shreve, R. N. Chemical Process Industries, 3rd Ed. New York, McGraw Hill Book Co. 1967. p. 454-455.

3. Larsen, L.M. Industrial Printing Inks. New York, Reinhold Publishing Company. 1962.

4. Chatfield, H.E. Varnish Cookers. In: Air Pollution Engineering Manual. Danielson, J.A. (ed.). U.S. DHEW, PHS, National Center for Air Pollution Control. Cincinnati, Ohio. Publication Number 999-AP-40. 1967. p. 688-695.

5. Private communication with Interchemical Corporation, Ink Division. Cincinnati, Ohio. November 10, 1969.

5.15 SOAP AND DETERGENTS

5.15.1 Soap Manufacture[1]

The manufacture of soap entails the catalytic hydrolysis of various fatty acids with sodium or potassium hydroxide to form a glycerol-soap mixture. This mixture is separated by distillation, then neutralized and blended to produce soap. The main atmospheric pollution problem in the manufacture of soap is odor, and, if a spray drier is used, a particulate emission problem may also occur. Vent lines, vacuum exhausts, product and raw material storage, and waste streams are all potential odor sources. Control of these odors may be achieved by scrubbing all exhaust fumes and, if necessary, incinerating the remaining compounds. Odors emanating from the spray drier may be controlled by scrubbing with an acid solution.

5.15.2 Detergent Manufacture[1]

The manufacture of detergents generally begins with the sulfuration by sulfuric acid of a fatty alcohol or linear alkylate. The sulfurated compound is then neutralized with caustic solution (NaOH), and various dyes, perfumes, and other compounds are added.[2,3] The resulting paste or slurry is then sprayed under pressure into a vertical drying tower where it is dried with a stream of hot air (400° to 500°F or 204° to 260°C). The dried detergent is then cooled and packaged. The main source of particulate emissions is the spray-drying tower. Odors may also be emitted from the spray-drying operation and from storage and mixing tanks. Particulate emissions from spray-drying operations are shown in Table 5.15-1.

Table 5.15-1. PARTICULATE EMISSION FACTORS FOR SPRAY-DRYING DETERGENTS[a]
EMISSION FACTOR RATING: B

Control device	Overall efficiency, %	Particulate emissions	
		lb/ton of product	kg/MT of product
Uncontrolled	–	90	45
Cyclone[b]	85	14	7
Cyclone followed by:			
Spray chamber	92	7	3.5
Packed scrubber	95	5	2.5
Venturi scrubber	97	3	1.5

[a]Based on analysis of data in References 2 through 6.
[b]Some type of primary collector, such as a cyclone, is considered an integral part of the spray-drying system.

References for Section 5.15

1. Air Pollutant Emission Factors. Final Report. Resources Research Inc. Reston, Va. Prepared for National Air Pollution Control Administration, Durham, N.C., under Contract Number CPA-22-69-119. April 1970.

2. Phelps, A.H. Air Pollution Aspects of Soap and Detergent Manufacture. J. Air Pol. Control Assoc. *17*(8):505-507, August 1967.

3. Shreve, R.N. Chemical Process Industries. 3rd Ed. New York, McGraw-Hill Book Company. 1967. p. 544-563.

4. Larsen, G.P., G.I. Fischer, and W.J. Hamming. Evaluating Sources of Air Pollution. Ind. Eng. Chem. *45*:1070-1074, May 1953.

5. McCormick, P.Y., R.L. Lucas, and D.R. Wells. Gas-Solid Systems. In: Chemical Engineer's Handbook. Perry, J.H. (ed.). New York, McGraw-Hill Book Company. 1963. p. 59.

6. Private communication with Maryland State Department of Health, Baltimore, Md. November 1969.

5.16 SODIUM CARBONATE (Soda Ash)

5.16.1 Process Description[1]

Soda ash is manufactured by three processes: (1) the natural or Lake Brine process, (2) the Solvay process (ammonia-soda), and (3) the electrolytic soda-ash process. Because the Solvay process accounts for over 80 percent of the total production of soda ash, it will be the only one discussed in this section.

In the Solvay process, the basic raw materials are ammonia, coke, limestone (calcium carbonate), and salt (sodium chloride). The salt, usually in the unpurified form of a brine, is first purified in a series of absorbers by precipitation of the heavy metal ions with ammonia and carbon dioxide. In this process sodium bicarbonate is formed. This bicarbonate coke is heated in a rotary kiln, and the resultant soda ash is cooled and conveyed to storage.

5.16.2 Emissions

The major source of emissions from the manufacture of soda ash is the release of ammonia. Small amounts of ammonia are emitted in the gases vented from the brine purification system. Intermittent losses of ammonia can also occur during the unloading of tank trucks into storage tanks. The major sources of dust emissions include rotary dryers, dry solids handling, and processing of lime. Dust emissions of fine soda ash also occur from conveyor transfer points and air classification systems, as well as during tank-car loading and packaging. Emission factors are summarized in Table 5.16-1.

Table 5.16-1. EMISSION FACTORS FOR SODA-ASH PLANTS WITHOUT CONTROLS
EMISSION FACTOR RATING: D

Type of source	Particulates		Ammonia	
	lb/ton	kg/MT	lb/ton	kg/MT
Ammonia recovery[a,b]	–	–	7	3.5
Conveying, transferring, loading, etc.[c]	6	3	–	–

[a]Reference 2.
[b]Represents ammonia loss following the recovery system.
[c]Based on data in References 3 through 5.

References for Section 5.16

1. Air Pollutant Emission Factors. Final Report. Resources Research, Inc. Reston, Va. Prepared for National Air Pollution Control Administration, Durham, N.C., under Contract Number CPA-22-69-119. April 1970.

2. Shreve, R.N. Chemical Process Industries, 3rd Ed. New York, McGraw-Hill Book Company. 1967. p. 225-230.

3. Facts and Figures for the Chemical Process Industries. Chem. Eng. News. *43*:51-118, September 6, 1965.

4. Faith, W.L., D.B. Keyes, and R.L. Clark. Industrial Chemicals, 3rd Ed. New York, John Wiley and Sons, Inc. 1965.

5. Kaylor, F.B. Air Pollution Abatement Program of a Chemical Processing Industry. J. Air Pol. Control Assoc. *15*:65-67, February 1965.

5.17 SULFURIC ACID

Revised by William Vatavuk and Donald Carey

5.17.1 Process Description

All sulfuric acid is made by either the lead chamber or the contact process. Because the contact process accounts for more than 97 percent of the total sulfuric acid production in the United States, it is the only process discussed in this section. Contact plants are generally classified according to the raw materials charged to them: (1) elemental sulfur burning, (2) spent acid and hydrogen sulfide burning, and (3) sulfide ores and smelter gas burning plants. The relative contributions from each type of plant to the total acid production are 68, 18.5, and 13.5 percent, respectively.

All contact processes incorporate three basic operations, each of which corresponds to a distinct chemical reaction. First, the sulfur in the feedstock is burned to sulfur dioxide:

$$\underset{\text{Sulfur}}{S} + \underset{\text{Oxygen}}{O_2} \rightarrow \underset{\text{Sulfur dioxide}}{SO_2}. \qquad (1)$$

Then, the sulfur dioxide is catalytically oxidized to sulfur trioxide:

$$\underset{\text{Sulfur dioxide}}{2SO_2} + \underset{\text{Oxygen}}{O_2} \rightarrow \underset{\text{Sulfur trioxide}}{2SO_3}. \qquad (2)$$

Finally, the sulfur trioxide is absorbed in a strong, aqueous solution of sulfuric acid:

$$\underset{\text{Sulfur trioxide}}{SO_3} + \underset{\text{Water}}{H_2O} \rightarrow \underset{\text{Sulfuric acid}}{H_2SO_4}. \qquad (3)$$

5.17.1.1 Elemental Sulfur-Burning Plants[1,2] - Elemental sulfur, such as Frasch-process sulfur from oil refineries, is melted, settled, or filtered to remove ash and is fed into a combustion chamber. The sulfur is burned in clean air that has been dried by scrubbing with 93 to 99 percent sulfuric acid. The gases from the combustion chamber are cooled and then enter the solid catalyst (vanadium pentoxide) converter. Usually, 95 to 98 percent of the sulfur dioxide from the combustion chamber is converted to sulfur trioxide, with an accompanying large evolution of heat. After being cooled, the converter exit gas enters an absorption tower where the sulfur trioxide is absorbed with 98 to 99 percent sulfuric acid. The sulfur trioxide combines with the water in the acid and forms more sulfuric acid.

If oleum, a solution of uncombined SO_3 in H_2SO_4, is produced, SO_3 from the converter is first passed to an oleum tower that is fed with 98 percent acid from the absorption system. The gases from the oleum tower are then pumped to the absorption column where the residual sulfur trioxide is removed.

A schematic diagram of a contact process sulfuric acid plant that burns elemental sulfur is shown in Figure 5.17-1.

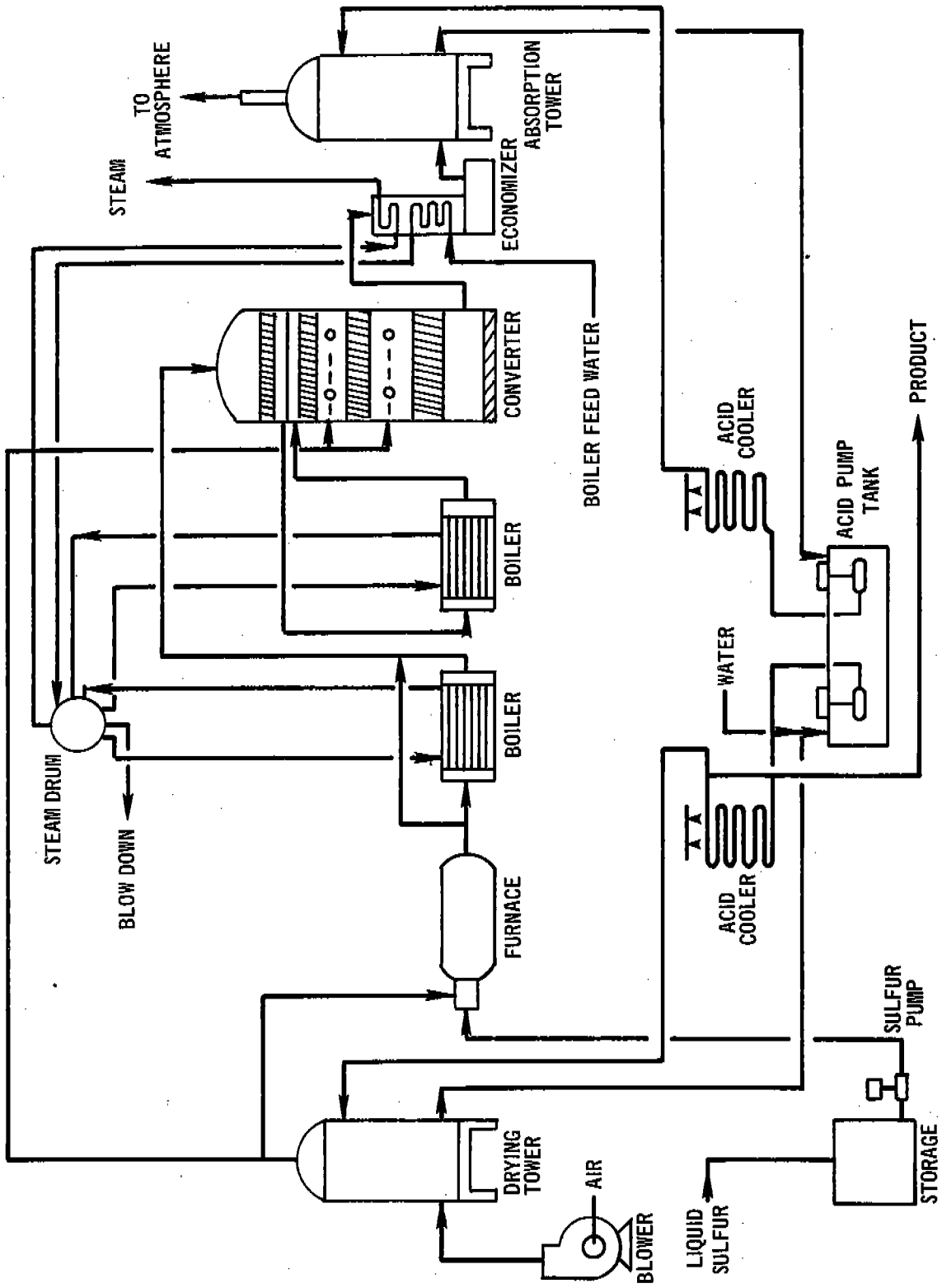

Figure 5.17-1. Basic flow diagram of contact-process sulfuric acid plant burning elemental sulfur.

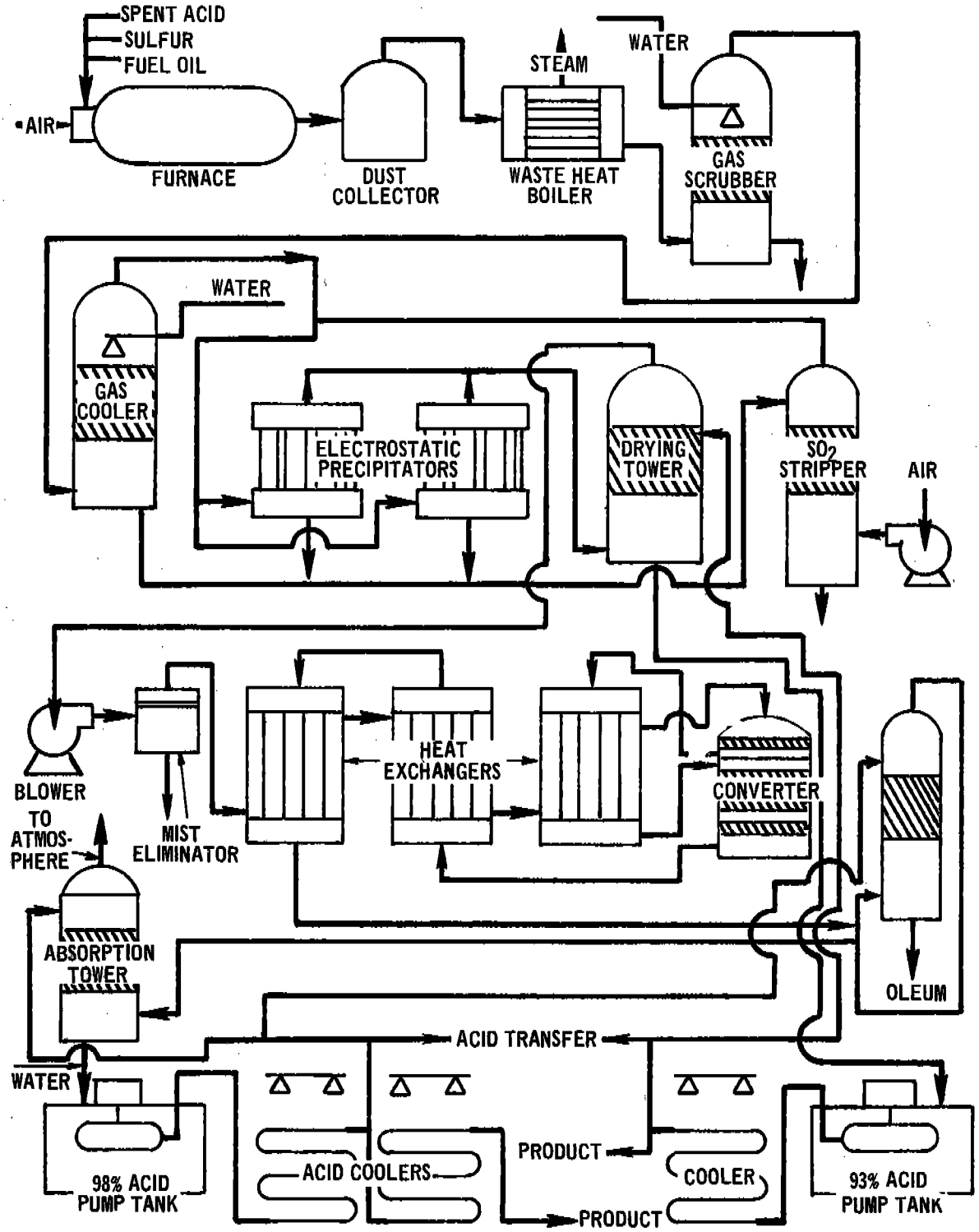

Figure 5.17-2. Basic flow diagram of contact-process sulfuric acid plant burning spent acid.

5.17.1.2 Spent Acid and Hydrogen Sulfide Burning Plants[1,2] - Two types of plants are used to process this type of sulfuric acid. In one the sulfur dioxide and other combustion products from the combustion of spent acid and/or hydrogen sulfide with undried atmospheric air are passed through gas-cleaning and mist-removal equipment. The gas stream next passes through a drying tower. A blower draws the gas from the drying tower and discharges the sulfur dioxide gas to the sulfur trioxide converter. A schematic diagram of a contact-process sulfuric acid plant that burns spent acid is shown in Figure 5.17-2.

In a "wet-gas plant," the wet gases from the combustion chamber are charged directly to the converter with no intermediate treatment. The gas from the converter flows to the absorber, through which 93 to 98 percent sulfuric acid is circulating.

5.17.1.3 Sulfide Ores and Smelter Gas Plants - The configuration of this type of plant is essentially the same as that of a spent-acid plant (Figure 5.17-2) with the primary exception that a roaster is used in place of the combustion furnace.

The feed used in these plants is smelter gas, available from such equipment as copper converters, reverberatory furnaces, roasters, and flash smelters. The sulfur dioxide in the gas is contaminated with dust, acid mist, and gaseous impurities. To remove the impurities the gases must be cooled to essentially atmospheric temperature and passed through purification equipment consisting of cyclone dust collectors, electrostatic dust and mist precipitators, and scrubbing and gas-cooling towers. After the gases are cleaned and the excess water vapor is removed, they are scrubbed with 98 percent acid in a drying tower. Beginning with the drying tower stage, these plants are nearly identical to the elemental sulfur plants shown in Figure 5.17-1.

5.17.2 Emissions and Controls

5.17.2.1 Sulfur Dioxide[1-3] - Nearly all sulfur dioxide emissions from sulfuric acid plants are found in the exit gases. Extensive testing has shown that the mass of these SO_2 emissions is an inverse function of the sulfur conversion efficiency (SO_2 oxidized to SO_3). This conversion is, in turn, affected by the number of stages in the catalytic converter, the amount of catalyst used, the temperature and pressure, and the concentrations of the reactants, sulfur dioxide and oxygen. For example, if the inlet SO_2 concentration to the converter were 8 percent by volume (a representative value), and the conversion temperature were 473°C, the conversion efficiency would be 96 percent. At this conversion, the uncontrolled emission factor for SO_2 would be 55 pounds per ton (27.5 kg/MT) of 100 percent sulfuric acid produced, as shown in Table 5.17-1. For purposes of comparison, note that the Environmental Protection Agency performance standard[3] for new and modified plants is 4 pounds per ton (2kg / MT) of 100 percent acid produced, maximum 2-hour average. As Table 5.17-1 and Figure 5.17-3 indicate, achieving this standard requires a conversion efficiency of 99.7 percent in an uncontrolled plant or the equivalent SO_2 collection mechanism in a controlled facility. Most single absorption plants have SO_2 conversion efficiencies ranging from 95 to 98 percent.

In addition to exit gases, small quantities of sulfur oxides are emitted from storage tank vents and tank car and tank truck vents during loading operations; from sulfuric acid concentrators; and through leaks in process equipment. Few data are available on emissions from these sources.

Of the many chemical and physical means for removing SO_2 from gas streams, only the dual absorption and the sodium sulfite-bisulfite scrubbing processes have been found to increase acid production without yielding unwanted by-products.

Table 5.17-1. EMISSION FACTORS FOR SULFURIC ACID PLANTS[a]
EMISSION FACTOR RATING: A

Conversion of SO_2 to SO_3, %	SO_2 emissions lb/ton of 100 % H_2SO_4	SO_2 emissions kg/MT of 100 % H_2SO_4
93	96	48.0
94	82	41.0
95	70	35.0
96	55	27.5
97	40	20.5
98	27	13.0
99	14	7.0
99.5	7	3.5
99.7	4	2.0
100	0	0.0

[a]Reference 1.
[b]The following linear interpolation formula can be used for calculating emission factors for conversion efficiencies between 93 and 100 percent: emission factor (lb/ton acid) = -13.65 (percent conversion efficiency) + 1365.

In the dual absorption process, the SO_3 gas formed in the primary converter stages is sent to a primary absorption tower where H_2SO_4 is formed. The remaining unconverted sulfur dioxide is forwarded to the final stages in the converter, from whence it is sent to the secondary absorber for final sulfur trioxide removal. The result is the conversion of a much higher fraction of SO_2 to SO_3 (a conversion of 99.7 percent or higher, on the average, which meets the performance standard). Furthermore, dual absorption permits higher converter inlet sulfur dioxide concentrations than are used in single absorption plants because the secondary conversion stages effectively remove any residual sulfur dioxide from the primary absorber.

Where dual absorption reduces sulfur dioxide emissions by increasing the overall conversion efficiency, the sodium sulfite-bisulfite scrubbing process removes sulfur dioxide directly from the absorber exit gases. In one version of this process, the sulfur dioxide in the waste gas is absorbed in a sodium sulfite solution, separated, and recycled to the plant. Test results from a 750 ton (680 MT) per day plant equipped with a sulfite scrubbing system indicated an average emission factor of 2.7 pounds per ton (1.35 kg/MT).

15.17.2.2 Acid Mist[1-3] - Nearly all the acid mist emitted from sulfuric acid manufacturing can be traced to the absorber exit gases. Acid mist is created when sulfur trioxide combines with water vapor at a temperature below the dew point of sulfur trioxide. Once formed within the process system, this mist is so stable that only a small quantity can be removed in the absorber.

In general, the quantity and particle size distribution of acid mist are dependent on the type of sulfur feedstock used, the strength of acid produced, and the conditions in the absorber. Because it contains virtually no water vapor, bright elemental sulfur produces little acid mist when burned; however, the hydrocarbon impurities in other feedstocks – dark sulfur, spent acid, and hydrogen sulfide – oxidize to water vapor during combustion. The water vapor, in turn, combines with sulfur trioxide as the gas cools in the system.

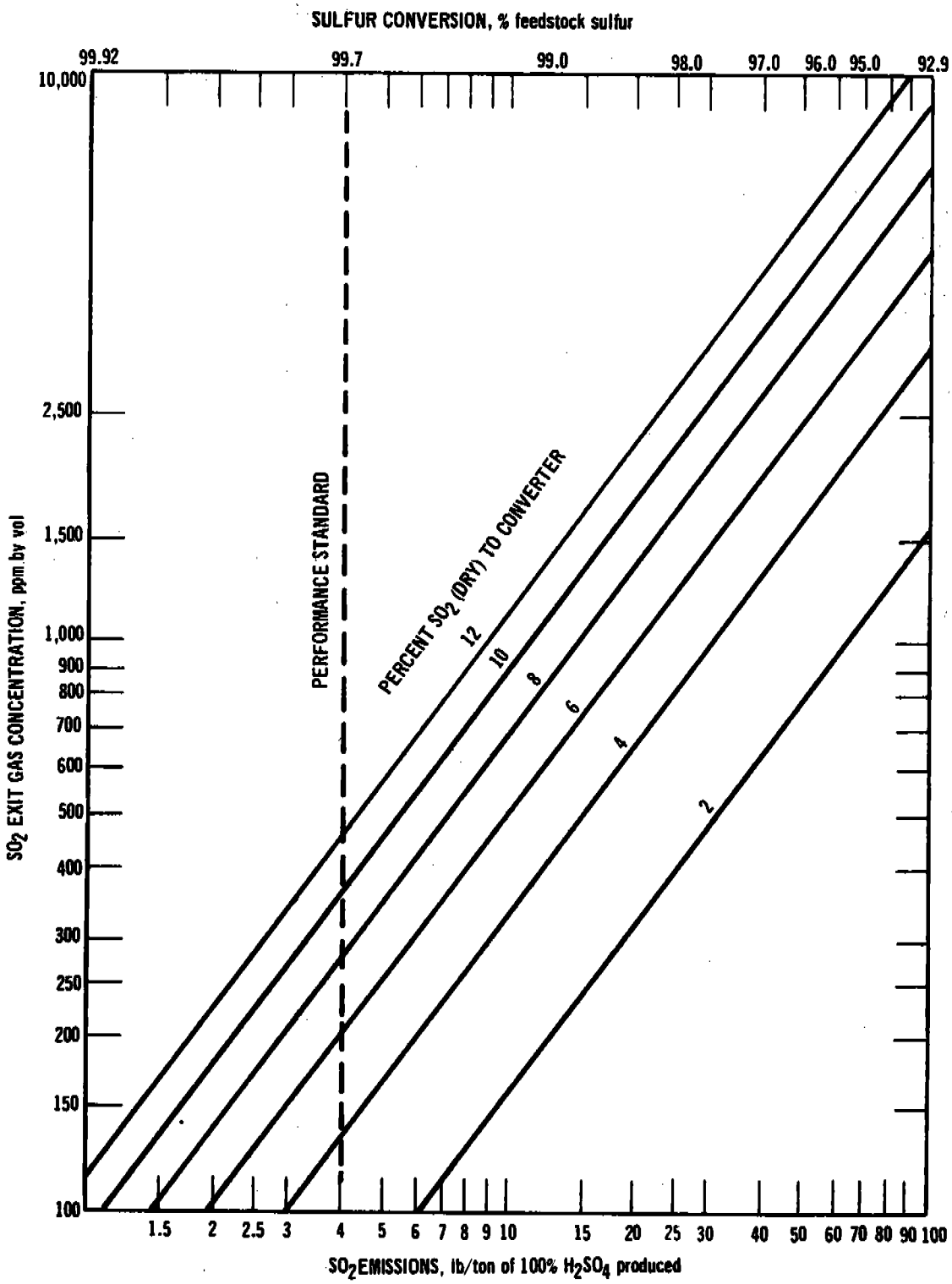

Figure 5.17-3. Sulfuric acid plant feedstock sulfur conversion versus volumetric and mass SO_2 emissions at various inlet SO_2 concentrations by volume.

The strength of acid produced—whether oleum or 99 percent sulfuric acid—also affects mist emissions. Oleum plants produce greater quantities of finer, more stable mist. For example, uncontrolled mist emissions from oleum plants burning spent acid range from 0.1 to 10.0 pounds per ton (0.05 to 5.0 kg/MT), while those from 98 percent acid plants burning elemental sulfur range from 0.4 to 4.0 pounds per ton (0.2 to 2.0 kg/MT). Furthermore, 85 to 95 weight percent of the mist particles from oleum plants are less than 2 microns in diameter, compared with only 30 weight percent that are less than 2 microns in diameter from 98 percent acid plants.

The operating temperature of the absorption column directly affects sulfur trioxide absorption and, accordingly, the quality of acid mist formed after exit gases leave the stack. The optimum absorber operating temperature is dependent on the strength of the acid produced, throughput rates, inlet sulfur trioxide concentrations, and other variables peculiar to each individual plant. Finally, it should be emphasized that the percentage conversion of sulfur dioxide to sulfur trioxide has no direct effect on acid mist emissions. In Table 5.17-2 uncontrolled acid mist emissions are presented for various sulfuric acid plants.

Two basic types of devices, electrostatic precipitators and fiber mist eliminators, effectively reduce the acid mist concentration from contact plants to less than the EPA new-source performance standard, which is 0.15 pound per ton (0.075 kg/MT) of acid. Precipitators, if properly maintained, are effective in collecting the mist particles at efficiencies up to 99 percent (see Table 5.17-3).

The three most commonly used fiber mist eliminators are the vertical tube, vertical panel, and horizontal dual-pad types. They differ from one another in the arrangement of the fiber elements, which are composed of either chemically resistant glass or fluorocarbon, and in the means employed to collect the trapped liquid. The operating characteristics of these three types are compared with electrostatic precipitators in Table 5.17-3.

Table 5.17-2. ACID MIST EMISSION FACTORS FOR SULFURIC ACID PLANTS WITHOUT CONTROLS[a]
EMISSION FACTOR RATING: B

Raw material	Oleum produced, % total output	Emissions[b] lb/ton acid	Emissions[b] kg/MT acid
Recovered sulfur	0 to 43	0.35 to 0.8	0.175 to 0.4
Bright virgin sulfur	0	1.7	0.85
Dark virgin sulfur	33 to 100	0.32 to 6.3	0.16 to 3.15
Sulfide ores	0 to 25	1.2 to 7.4	0.6 to 3.7
Spent acid	0 to 77	2.2 to 2.7	1.1 to 1.35

[a]Reference 1.
[b]Emissions are proportional to the percentage of oleum in the total product. Use the low end of ranges for low oleum percentage and high end of ranges for high oleum percentage.

Table 5.17-3. EMISSION COMPARISON AND COLLECTION EFFICIENCY OF TYPICAL ELECTROSTATIC PRECIPITATOR AND FIBER MIST ELIMINATORS[a]

Control device	Particle size collection efficiency, %		Acid mist emissions			
			98% acid plants[b]		oleum plants	
	>3 μm	≤3 μm	lb/ton	kg/MT	lb/ton	kg/MT
Electrostatic precipitator	99	100	0.10	0.05	0.12	0.06
Fiber mist eliminator						
Tubular	100	95 to 99	0.02	0.01	0.02	0.01
Panel	100	90 to 98	0.10	0.05	0.10	0.05
Dual pad	100	93 to 99	0.11	0.055	0.11	0.055

[a]Reference 2.
[b]Based on manufacturers' generally expected results; calculated for 8 percent sulfur dioxide concentration in gas converter.

References for Section 5.17

1. Atmospheric Emissions from Sulfuric Acid Manufacturing Processes. U.S. DHEW, PHS, National Air Pollution Control Administration. Washington, D.C. Publication Number 999-AP-13. 1966.

2. Unpublished report on control of air pollution from sulfuric acid plants. Environmental Protection Agency. Research Triangle Park, N.C. August 1971.

3. Standards of Performance for New Stationary Sources. Environmental Protection Agency. Washington, D.C. Federal Register. *36*(247): December 23, 1971.

5.18 SULFUR

By William Vatavuk

5.18.1 Process Description

Nearly all of the elemental sulfur produced from hydrogen sulfide is made by the modified Claus process. The process (Figure 5.18-1) consists of the multi-stage oxidation of hydrogen sulfide according to the following reaction:

$$\underset{\text{Hydrogen sulfide}}{2H_2S} + \underset{\text{Oxygen}}{O_2} \longrightarrow \underset{\text{Sulfur}}{2S} + \underset{\text{Water}}{2H_2O}$$

In the first step, approximately one-third of the hydrogen sulfide is reacted with air in a pressurized boiler (1.0 to 1.5 atmosphere) where most of the heat of reaction and some of the sulfur are removed. After removal of the water vapor and sulfur, the cooled gases are heated to between 400 and 500°F, and passed over a "Claus" catalyst bed composed of bauxite or alumina, where the reaction is completed. The degree of reaction conpletion is a function of the number of catalytic stages employed. Two stages can recover 92 to 95 percent of the potential sulfur; three stages, 95 to 96 percent; and four stages, 96 to 97 percent. The conversion to sulfur is ultimately limited by the reverse reaction in which water vapor recombines with sulfur to form gaseous hydrogen sulfide and sulfur dioxide. Additional amounts of sulfur are lost as vapor, entrained mist, or droplets and as carbonyl sulfide and carbon disulfide (0.25 to 2.5 percent of the sulfur fed). The latter two compounds are formed in the pressurized boiler at high temperature (1500 to 2500°F) in the presence of carbon compounds.

The plant tail gas, containing the above impurities in volume quantities of 1 to 3 percent, usually passes to an incinerator, where all of the sulfur is oxidized to sulfur dioxide at temperatures ranging from 1000 to 1200°F. The tail gas containing the sulfur dioxide then passes to the atmosphere via a stack.

5.18.2 Emissions and Controls[1,2]

Virtually all of the emissions from sulfur plants consist of sulfur dioxide, the main incineration product. The quantity of sulfur dioxide emitted is, in turn, a function of the number of conversion stages employed, the process temperature and pressure, and the amounts of carbon compounds present in the pressurized boiler.

The most commonly used control method involves two main steps – conversion of sulfur dioxide to hydrogen sulfide followed by the conversion of hydrogen sulfide to elemental sulfur. Conversion of sulfur dioxide to hydrogen sulfide occurs via catalytic hydrogenation or hydrolysis at temperatures from 600 to 700°F. The products are cooled to remove the water vapor and then reacted with a sodium carbonate solution to yield sodium hydrosulfide. The hydrosulfide is oxidized to sulfur in solution by sodium vanadate. Finely divided sulfur appears as a froth that is skimmed off, washed, dried by centrifugation, and added to the plant product. Overall recovery of sulfur approaches 100 percent if this process is employed. Table 5.18-1 lists emissions from controlled and uncontrolled sulfur plants.

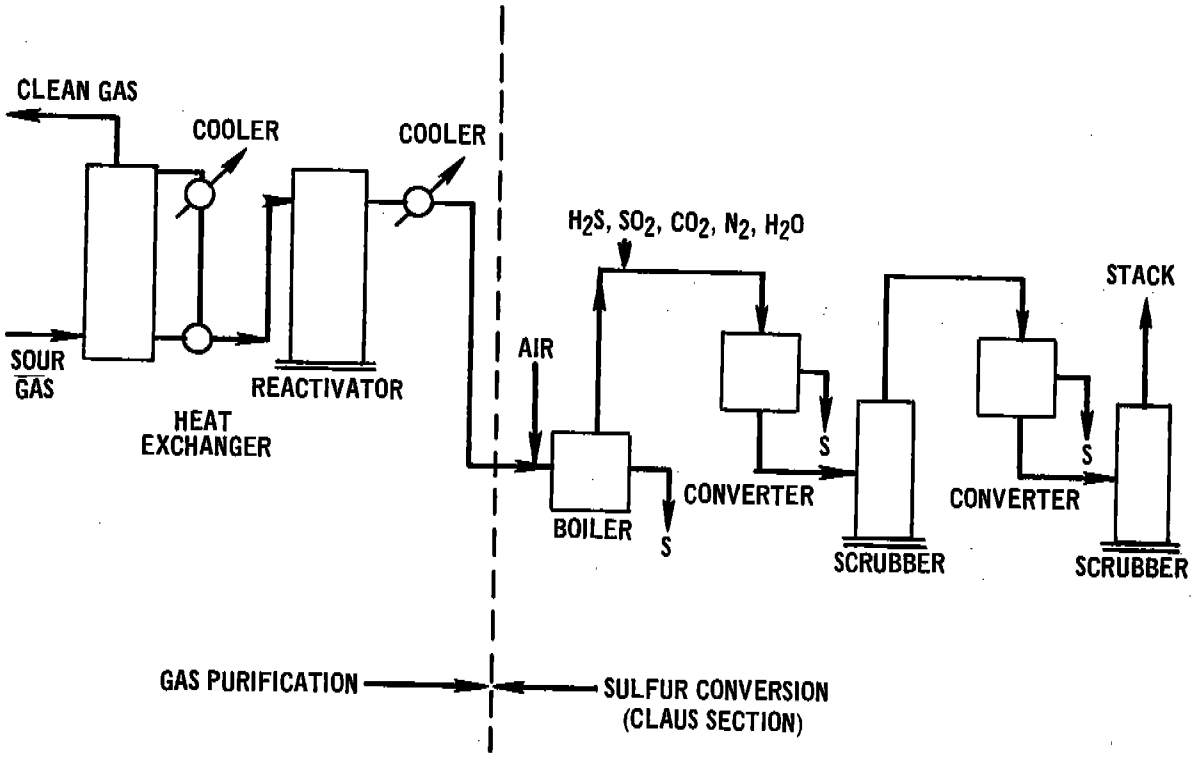

Figure 5.18-1. Basic flow diagram of modified Claus process with two converter stages used in manufacturing sulfur.

Table 5.18-1. EMISSION FACTORS FOR MODIFIED-CLAUS SULFUR PLANTS EMISSION FACTOR RATING: D

Number of catalytic stages	Recovery of of sulfur, %	SO_2 emissions[a] lb/ton 100% sulfur	SO_2 emissions[a] kg/MT 100% sulfur
Two, uncontrolled	92 to 95	211 to 348	106 to 162
Three, uncontrolled	95 to 96	167 to 211	84 to 106
Four, uncontrolled	96 to 97	124 to 167	62 to 84
Sulfur removal process	99.9	4.0	2.0

[a]The range in emission factors corresponds to the range in the percentage recovery of sulfur.

References for Section 5.18

1. Beavon, David K. Abating Sulfur Plant Tail Gases. Pollution Engineering. *4*(1):34-35, January 1972.

2. Kirk-Othmer Encyclopedia of Chemical Technology, Vol. 19. New York, John Wiley and Sons, Inc. 1969.

5.19 SYNTHETIC FIBERS

5.19.1 Process Description[1]

Synthetic fibers are classified into two major categories, semi-synthetic and "true" synthetic. Semi-synthetics, such as viscose rayon and acetate fibers, result when natural polymeric materials such as cellulose are brought into a dissolved or dispersed state and then spun into fine filaments. True synthetic polymers, such as Nylon, * Orlon, and Dacron, result from addition and other polymerization reactions that form long chain molecules.

True synthetic fibers begin with the preparation of extremely long, chain-like molecules. The polymer is spun in one of four ways:[2] (1) melt spinning, in which molten polymer is pumped through spinneret jets, the polymer solidifying as it strikes the cool air; (2) dry spinning, in which the polymer is dissolved in a suitable organic solvent, and the resulting solution is forced through spinnerets; (3) wet spinning, in which the solution is coagulated in a chemical as it emerges from the spinneret; and (4) core spinning, the newest method, in which a continuous filament yarn together with short-length "hard" fibers is introduced onto a spinning frame in such a way as to form a composite yarn.

5.19.2 Emissions and Controls[1]

In the manufacture of viscose rayon, carbon disulfide and hydrogen sulfide are the major gaseous emissions. Air pollution controls are not normally used to reduce these emissions, but adsorption in activated carbon at an efficiency of 80 to 95 percent, with subsequent recovery of the CS_2 can be accomplished.[3] Emissions of gaseous hydrocarbons may also occur from the drying of the finished fiber. Table 5.19-1 presents emission factors for semi-synthetic and true synthetic fibers.

Table 5.19-1. EMISSION FACTORS FOR SYNTHETIC FIBERS MANUFACTURING
EMISSION FACTOR RATING: E

Type of fiber	Hydrocarbons		Carbon disulfide		Hydrogen sulfide		Oil vapor or mist	
	lb/ton	kg/MT	lb/ton	kg/MT	lb/ton	kg/MT	lb/ton	kg/MT
Semi-synthetic								
Viscose rayon[a,b]	–	–	55	27.5	6	3	–	–
True synthetic[c]								
Nylon	7	3.5	–	–	–	–	15	7.5
Dacron	–	–	–	–	–	–	7	3.5

[a]Reference 4.
[b]May be reduced by 80 to 95 percent adsorption in activated charcoal.[3]
[c]Reference 5.

*Mention of company or product names does not constitute endorsement by the Environmental Protection Agency.

References for Section 5.19

1. Air Pollutant Emission Factors. Final Report. Resources Research, Inc. Reston, Va. Prepared for National Air Pollution Control Administration, Durham, N.C., under Contract Number CPA-22-69-119. April 1970.

2. Fibers, Man-Made. In: Kirk-Othmer Encyclopedia of Chemical Technology. New York, John Wiley and Sons, Inc. 1969.

3. Fluidized Recovery System Nabs Carbon Disulfide. Chem. Eng. *70*(8):92-94, April 15, 1963.

4. Private communication between Resources Research, Incorporated, and Rayon Manufacturing Plant. December 1969.

5. Private communication between Resources Research, Incorporated, and E.I. Dupont de Nemours and Company. January 13, 1970.

5.20 SYNTHETIC RUBBER

5.20.1 Process Description[1]

Copolymers of butadiene and styrene, commonly known as SBR, account for more than 70 percent of all synthetic rubber produced in the United States. In a typical SBR manufacturing process, the monomers of butadiene and styrene are mixed with additives such as soaps and mercaptans. The mixture is polymerized to a conversion point of approximately 60 percent. After being mixed with various ingredients such as oil and carbon black, the latex product is coagulated and precipitated from the latex emulsion. The rubber particles are then dried and baled.

5.20.2 Emissions and Controls[1]

Emissions from the synthetic rubber manufacturing process consist of organic compounds (largely the monomers used) emitted from the reactor and blow-down tanks, and particulate matter and odors from the drying operations.

Drying operations are frequently controlled with fabric filter systems to recover any particulate emissions, which represent a product loss. Potential gaseous emissions are largely controlled by recycling the gas stream back to the process. Emission factors from synthetic rubber plants are summarized in Table 5.20-1.

Table 5.20-1. EMISSION FACTORS FOR SYNTHETIC RUBBER PLANTS: BUTADIENE-ACRYLONITRILE AND BUTADIENE-STYRENE EMISSION FACTOR RATING: E

Compound	Emissions[a,b]	
	lb/ton	kg/MT
Alkenes		
Butadiene	40	20
Methyl propene	15	7.5
Butyne	3	1.5
Pentadiene	1	0.5
Alkanes		
Dimethylheptane	1	0.5
Pentane	2	1
Ethanenitrile	1	0.5
Carbonyls		
Acrylonitrile	17	8.5
Acrolein	3	1.5

[a]The butadiene emission is not continuous and is greatest right after a batch of partially polymerized latex enters the blow-down tank.
[b]References 2 and 3.

References for Section 5.20

1. Air Pollutant Emission Factors. Final Report. Resources Research Inc. Reston, Va. Prepared for National Air Pollution Control Administration, Durham, N.C., under Contract Number CPA-22-69-119. April 1970.

2. The Louisville Air Pollution Study. U.S. DHEW, PHS, Division of Air Pollution. Cincinnati, Ohio. 1961. p. 26-27 and 124.

3. Unpublished data from synthetic rubber plant. U.S. DHEW, PHS, EHS, National Air Pollution Control Administration, Division of Air Quality and Emissions Data. Durham, N.C. 1969.

5.21 TEREPHTHALIC ACID

5.21.1 Process Description[1,2]

The main use of terephthalic acid is to produce dimethylterephthalate, which is used for polyester fibers (like Dacron) and films. Terephthalic acid can be produced in various ways, one of which is the oxidation of *p*-xylene by nitric acid. In this process an oxygen-containing gas (usually air), *p*-xylene, and HNO_3 are all passed into a reactor where oxidation by the nitric acid takes place in two steps. The first step yields primarily N_2O; the second step yields mostly NO in the offgas. The terephthalic acid precipitated from the reactor effluent is recovered by conventional crystallization, separation, and drying operations.

5.21.2 Emissions

The NO in the offgas from the reactor is the major air contaminant from the manufacture of terephthalic acid. The amount of nitrogen oxides emitted is roughly estimated in Table 5.21-1.

Table 5.21-1. NITROGEN OXIDES EMISSION FACTORS FOR TEREPHTHALIC ACID PLANTS[a] EMISSION FACTOR RATING: D

Type of operation	Nitrogen oxides (NO)	
	lb/ton	kg/MT
Reactor	13	6.5

[a]Reference 2.

References for Section 5.21

1. Air Pollutant Emission Factors. Final Report. Resources Research, Inc. Reston, Va. Prepared for National Air Pollution Control Administration, Durham, N.C. under Contract Number CPA-22-69-119. April 1970.

2. Terephthalic Acid. In: Kirk-Othmer Encyclopedia of Chemical Technology, Vol. 9. New York, John Wiley and Sons, Inc. 1964.

6. FOOD AND AGRICULTURAL INDUSTRY

Before food and agricultural products are used by the consumer they undergo a number of processing steps, such as refinement, preservation, and product improvement, as well as storage and handling, packaging, and shipping. This section deals with the processing of food and agricultural products and the intermediate steps that present air pollution problems. Emission factors are presented for industries where data were available. The primary pollutant emitted from these processes is particulate matter.

6.1 ALFALFA DEHYDRATING

6.1.1 General[1,2]

An alfalfa dehydrating plant produces an animal feed from alfalfa. The dehydration and grinding of alfalfa that produces alfalfa meal is a dusty operation most commonly carried out in rural areas.

Wet, chopped alfalfa is fed into a direct-fired rotary drier. The dried alfalfa particles are conveyed to a primary cyclone and sometimes a secondary cyclone in series to settle out the product from air flow and products of combustion. The settled material is discharged to the grinding equipment, which is usually a hammer mill. The ground material is collected in an air-meal separator and is either conveyed directly to bagging or storage, or blended with other ingredients.

6.1.2 Emissions and Controls

Sources of dust emissions are the primary cyclone, the grinders, and the air-meal separator. Overall dust losses have been reported as high as 7 percent,[2] but average losses are around 3 percent by weight of the meal produced.[3] The use of a baghouse as a secondary collection system can greatly reduce emissions. Emission factors for alfalfa dehydration are presented in Table 6.1-1.

Table 6.1-1. PARTICULATE EMISSION FACTORS FOR ALFALFA DEHYDRATION[a]
EMISSION FACTOR RATING: E

Type of operation	Particulate emissions	
	lb/ton of meal produced	kg/MT of meal produced
Uncontrolled	60	30
Baghouse collector	3	1.5

[a]Reference 3.

References for Section 6.1

1. Duprey, R. L. Compilation of Air Pollutant Emission Factors. U.S. DHEW, PHS, National Center for Air Pollution Control. Durham, N.C. PHS Publication Number 999-AP-42. 1968. p. 19.

2. Stern, A. (ed.). Air Pollution, Volume III, Sources of Air Pollution and Their Control, 2nd. Ed. New York, Academic Press. 1968.

3. Process Flow Sheets and Air Pollution Controls. American Conference of Governmental Industrial Hygienists. Committee on Air Pollution. Cincinnati, Ohio. 1961.

6.2 COFFEE ROASTING

6.2.1 Process Description [1,2]

Coffee, which is imported in the form of green beans, must be cleaned, blended, roasted, and packaged before being sold. In a typical coffee roasting operation, the green coffee beans are freed of dust and chaff by dropping the beans into a current of air. The cleaned beans are then sent to a batch or continuous roaster. During the roasting, moisture is driven off, the beans swell, and chemical changes take place that give the roasted beans their typical color and aroma. When the beans have reached a certain color, they are quenched, cooled, and stoned.

6.2.2 Emissions [1,2]

Dust, chaff, coffee bean oils (as mists), smoke, and odors are the principal air contaminants emitted from coffee processing. The major source of particulate emissions and practically the only source of aldehydes, nitrogen oxides, and organic acids is the roasting process. In a direct-fired roaster, gases are vented without recirculation through the flame. In the indirect-fired roaster, however, a portion of the roaster gases are recirculated and particulate emissions are reduced. Emissions of both smoke and odors from the roasters can be almost completely removed by a properly designed afterburner.[1,2]

Particulate emissions also occur from the stoner and cooler. In the stoner, contaminating materials heavier than the roasted beans are separated from the beans by an air stream. In the cooler, quenching the hot roasted beans with water causes emissions of large quantities of steam and some particulate matter.[3] Table 6.2-1 summarizes emissions from the various operations involved in coffee processing.

Table 6.2-1. EMISSION FACTORS FOR ROASTING PROCESSES WITHOUT CONTROLS
EMISSION FACTOR RATING: B

Type of process	Pollutant							
	Particulates[a]		NO_x[b]		Aldehydes[b]		Organic acids[b]	
	lb/ton	kg/MT	lb/ton	kg/MT	lb/ton	kg/MT	lb/ton	kg/MT
Roaster								
Direct-fired	7.6	3.8	0.1	0.05	0.2	0.1	0.9	0.45
Indirect-fired	4.2	2.1	0.1	0.05	0.2	0.1	0.9	0.45
Stoner and cooler[c]	1.4	0.7	–	–	–	–	–	–
Instant coffee spray dryer	1.4[d]	0.7[d]	–	–	–	–	–	–

[a]Reference 3.
[b]Reference 1.
[c]If cyclone is used, emissions can be reduced by 70 percent.
[d]Cyclone plus wet scrubber always used, representing a controlled factor.

References for Section 6.2

1. Polglase, W.L., H.F. Dey, and R.T. Walsh. Coffee Processing. In: Air Pollution Engineering Manual. Danielson, J.A. (ed.). U.S. DHEW, PHS, National Center for Air Pollution Control. Cincinnati, Ohio. Publication Number 999-AP-40. 1967. p. 746-749.

2. Duprey, R.L. Compilation of Air Pollutant Emission Factors. U.S. DHEW, PHS, National Center for Air Pollution Control. Durham, N.C. PHS Publication Number 999-AP-42. 1968. p. 19-20.

3. Partee, F. Air Pollution in the Coffee Roasting Industry. Revised Ed. U.S. DHEW, PHS, Division of Air Pollution. Cincinnati, Ohio. Publication Number 999-AP-9. 1966.

6.3 COTTON GINNING

6.3.1 General[1]

The primary function of a cotton gin is to take raw seed cotton and separate the seed and the lint. A large amount of trash is found in the seed cotton, and it must also be removed. The problem of collecting and disposing of gin trash is two-fold. The first problem consists of collecting the coarse, heavier trash such as burrs, sticks, stems, leaves, sand, and dirt. The second problem consists of collecting the finer dust, small leaf particles, and fly lint that are discharged from the lint after the fibers are removed from the seed. From 1 ton (0.907 MT) of seed cotton, approximately one 500-pound (226-kilogram) bale of cotton can be made.

6.3.2 Emissions and Controls

The major sources of particulates from cotton ginning include the unloading fan, the cleaner, and the stick and burr machine. From the cleaner and stick and burr machine, a large percentage of the particles settle out in the plant, and an attempt has been made in Table 6.3-1 to present emission factors that take this into consideration. Where cyclone collectors are used, emissions have been reported to be about 90 percent less.[1]

Table 6.3-1. EMISSION FACTORS FOR COTTON GINNING OPERATIONS WITHOUT CONTROLS[a,b]
EMISSION FACTOR RATING: C

Process	Estimated total particulates		Particles > 100 μm settled out, %	Estimated emission factor (released to atmosphere)	
	lb/bale	kg/bale		lb/bale	kg/bale
Unloading fan	5	2.27	0	5.0	2.27
Cleaner	1	0.45	70	0.30	0.14
Stick and burr machine	3	1.36	95	0.20	0.09
Miscellaneous	3	1.36	50	1.5	0.68
Total	12	5.44	--	7.0	3.2

[a]References 1 and 2.
[b]One bale weighs 500 pounds (226 kilograms).

References for Section 6.3

1. Air-Borne Particulate Emissions from Cotton Ginning Operations. U.S. DHEW, PHS, Taft Sanitary Engineering Center. Cincinnati, Ohio. 1960.

2. Control and Disposal of Cotton Ginning Wastes. A Symposium Sponsored by National Center for Air Pollution Control and Agricultural Research Service, Dallas, Texas. May 1966.

6.4 FEED AND GRAIN MILLS AND ELEVATORS

6.4.1 General[1]

Grain elevators are primarily transfer and storage units and are classified as either the smaller, more numerous country elevators or the larger terminal elevators. At grain elevator locations the following operations can occur: receiving, transfer and storage, cleaning, drying, and milling or grinding. Many of the large terminal elevators also process grain at the same location. The grain processing may include wet and dry milling (cereals), flour milling, oil-seed crushing, and distilling. Feed manufacturing involves the receiving, conditioning (drying, sizing, cleaning), blending, and pelleting of the grains, and their subsequent bagging or bulk loading.

6.4.2 Emissions[1]

Emissions from feed and grain operations may be separated into those occurring at elevators and those occurring at grain processing operations or feed manufacturing operations. Emission factors for these operations are presented in Table 6.4-1. Because dust collection systems are generally applied to most phases of these operations to reduce product and component losses, the selection of the final emission factor should take into consideration the overall efficiency of these control systems.

Emissions from grain elevator operations are dependent on the type of grain, the moisture content of the grain (usually 10 to 30 percent), the amount of foreign material in the grain (usually 5 percent or less), the degree of enclosure at loading and unloading areas, the type of cleaning and conveying, and the amount and type of control used.

Factors affecting emissions from grain processing operations include the type of processing (wet or dry), the amount of grain processed, the amount of cleaning, the degree of drying or heating, the amount of grinding, the temperature of the process, and the degree of control applied to the particulates generated.

Factors affecting emissions from feed manufacturing operations include the type and amount of grain handled, the degree of drying, the amount of liquid blended into the feed, the type of handling (conveyor or pneumatic), and the degree of control.

References for Section 6.4

1. Air Pollutant Emission Factors. Final Report. Resources Research, Incorporated. Prepared for National Air Pollution Control Administration, Durham, N.C., under Contract Number CPA-22-69-119, April 1970. Reston, Virginia.

2. Thimsen, D.J. and P.W. Aften. A Proposed Design for Grain Elevator Dust Collector. J. Air Pol. Control Assoc. *18*(11):738-742, November 1968.

3. Private communication between H. L. Kiser, Grain and Feed Dealers National Association, and Resources Research, Inc., Washington, D.C. September 1969.

Table 6.4-1. PARTICULATE EMISSION FACTORS FOR GRAIN HANDLING AND PROCESSING
EMISSION FACTOR RATING: B

Type of source	Emissions	
	lb/ton	kg/MT
Terminal elevators[a]		
Shipping or receiving	1	0.5
Transferring, conveying, etc.	2	1
Screening and cleaning	5	2.5
Drying	6	3
Country elevators[b]		
Shipping or receiving	5	2.5
Transferring, conveying, etc.	3	1.5
Screening and cleaning	8	4
Drying	7	3.5
Grain processing		
Corn meal[c]	5	2.5
Soybean processing[b]	7	3.5
Barley or wheat cleaner[d]	0.2[e]	0.1[e]
Milo cleaner[f]	0.4[e]	0.2[e]
Barley flour milling[c]	3[e]	1.5[e]
Feed manufacturing		
Barley[f]	3[e]	1.5[e]

[a]References 2 and 3.
[b]Reference 3.
[c]References 3 and 4.
[d]References 5 and 6.
[e]At cyclone exit (only non-ether-soluble particulates).
[f]Reference 6.

Contribution of Power Plants and Other Sources to Suspended Particulate and Sulfur Dioxide Concentrations in Metropolis, Illinois. U.S. DHEW, PHS, National Air Pollution Control Administration. 1966.

5. Larson, G.P., G.I. Fischer, and W.J. Hamming. Evaluating Sources of Air Pollution. Ind. Eng. Chem. *45*:1070-1074. May 1953.

6. Donnelly, W.H. Feed and Grain Mills. In: Air Pollution Engineering Manual. Danielson, J.A. (ed.). U.S. DHEW, PHS, National Center for Air Pollution Control. Cincinnati, Ohio. Publication Number 999-AP-40. 1967. p. 359.

6.5 FERMENTATION

6.5.1 Process Description[1]

For the purpose of this report only the fermentation industries associated with food will be considered. This includes the production of beer, whiskey, and wine.

The manufacturing process for each of these is similar. The four main brewing production stages and their respective sub-stages are: (1) brewhouse operations, which include (a) malting of the barley, (b) addition of adjuncts (corn, grits, and rice) to barley mash, (c) conversion of starch in barley and adjuncts to maltose sugar by enzymatic processes, (d) separation of wort from grain by straining, and (e) hopping and boiling of the wort; (2) fermentation, which includes (a) cooling of the wort, (b) additional yeast cultures, (c) fermentation for 7 to 10 days, (d) removal of settled yeast, and (e) filtration and carbonation; (3) aging, which lasts from 1 to 2 months under refrigeration; and (4) packaging, which includes (a) bottling-pasteurization, and (b) racking draft beer.

The major differences between beer production and whiskey production are the purification and distillation necessary to obtain distilled liquors and the longer period of aging. The primary difference between wine making and beer making is that grapes are used as the initial raw material in wine rather than grains.

6.5.2 Emissions[1]

Emissions from fermentation processes are nearly all gases and primarily consist of carbon dioxide, hydrogen, oxygen, and water vapor, none of which present an air pollution problem. Emissions of particulates, however, can occur in the handling of the grain for the manufacture of beer and whiskey. Gaseous hydrocarbons are also emitted from the drying of spent grains and yeast in beer and from the whiskey-aging warehouses. No significant emissions have been reported for the production of wine. Emission factors for the various operations associated with beer, wine, and whiskey production are shown in Table 6.5-1.

Table 6.5-1. EMISSION FACTORS FOR FERMENTATION PROCESSES
EMISSION FACTOR RATING: E

Type of product	Particulates		Hydrocarbons	
	lb/ton	kg/MT	lb/ton	kg/MT
Beer				
Grain handling[a]	3	1.5	—	—
Drying spent grains, etc.[a]	5	2.5	NA[b]	NA
Whiskey				
Grain handling[a]	3	1.5	—	—
Drying spent grains, etc.[a]	5	2.5	NA	NA
Aging	—	—	10[c]	0.024[d]
Wine	Neg[e]	Neg	Neg[e]	Neg

[a]Based on section on grain processing.
[b]No emission factor available, but emissions do occur.
[c]Pounds per year per barrel of whiskey stored.[2]
[d]Kilograms per year per liter of whiskey stored.
[e]No significant emissions.

References for Section 6.5

1. Air Pollutant Emission Factors. Final Report. Resources Research, Inc. Reston, Va. Prepared for National Air Pollution Control Administration, Durham, N.C., under Contract Number CPA-22-69-119. April 1970.

2. Shreve, R.N. Chemical Process Industries, 3rd Ed. New York, McGraw-Hill Book Company. 1967. p. 591-608.

6.6 FISH PROCESSING

6.6.1 Process Description[1]

The canning, dehydration, and smoking of fish, and the manufacture of fish meal and fish oil are the important segments of fish processing. There are two types of fish-canning operations: the "wet-fish" method, in which the trimmed fish are cooked directly in the can, and the "pre-cooked" process, in which the whole fish is cooked and then hand-sorted before canning.

A large fraction of the fish received in a cannery is processed into by-products, the most important of which is fish meal. In the manufacture of fish meal, fish scrap from the canning lines is charged to continuous live-steam cookers. After the material leaves the cooker, it is pressed to remove oil and water. The pressed cake is then broken up, usually in a hammer mill, and dried in a direct-fired rotary drier or in a steam-tube rotary drier.

6.6.2 Emissions and Controls[1]

The biggest problem from fish processing is odorous emissions. The principal odorous gases generated during the cooking portion of fish-meal manufacturing are hydrogen sulfide and trimethylamine. Some of the methods used to control odors include adsorption by activated carbon, scrubbing with oxidizing solution, and incineration. The only significant sources of dust emissions in fish processing are the driers and grinders used to handle dried fish meal. Emission factors for fish meal manufacturing are shown in Table 6.6-1.

Table 6.6-1. EMISSION FACTORS FOR FISH MEAL PROCESSING
EMISSION FACTOR RATING: C

Emission source	Particulates		Trimethylamine $(CH_3)_3N$		Hydrogen sulfide (H_2S)	
	lb/ton	kg/MT	lb/ton	kg/MT	lb/ton	kg/MT
Cookers, lb/ton (kg/MT) of fish meal produced[a]						
Fresh fish	–	–	0.3	0.15	0.01	0.005
Stale fish	–	–	3.5	1.75	0.2	0.10
Driers, lb/ton (kg/MT) of fish scrap[b]	0.1	0.05	–	–	–	–

[a]Reference 2.
[b]Reference 1.

References for Section 6.6

1. Walsh, R.T., K.D. Luedtke, and L.K. Smith. Fish Canneries and Fish Reduction Plants. In: Air Pollution Engineering Manual. Danielson, J.A. (ed.). U.S. DHEW, PHS, National Center for Air Pollution Control. Cincinnati, Ohio. Publication Number 999-AP-40. 1967. p. 760-770.

2. Summer, W. Methods of Air Deodorization. New York, Elsevier Publishing Company. p. 284-286.

6.7 MEAT SMOKEHOUSES

6.7.1 Process Description[1]

Smoking is a diffusion process in which food products are exposed to an atmosphere of hardwood smoke, causing various organic compounds to be absorbed by the food. Smoke is produced commerically in the United States by three major methods: (1) by burning dampened sawdust (20 to 40 percent moisture), (2) by burning dry sawdust (5 to 9 percent moisture) continuously, and (3) by friction. Burning dampened sawdust and kiln-dried sawdust are the most widely used methods. Most large, modern, production meat smokehouses are the recirculating type, in which smoke is circulated at reasonably high temperatures throughout the smokehouse.

6.7.2 Emissions and Controls[1]

Emissions from smokehouses are generated from the burning hardwood rather than from the cooked product itself. Based on approximately 110 pounds of meat smoked per pound of wood burned (110 kilograms of meat per kilogram of wood burned), emission factors have been derived for meat smoking and are presented in Table 6.7-1.

Emissions from meat smoking are dependent on several factors, including the type of wood, the type of smoke generator, the moisture content of the wood, the air supply, and the amount of smoke recirculated. Both low-voltage electrostatic precipitators and direct-fired afterburners may be used to reduce particulate and organic emissions. These controlled emission factors have also been shown in Table 6.7-1.

Table 6.7-1. EMISSION FACTORS FOR MEAT SMOKING[a,b]
EMISSION FACTOR RATING: D

Pollutant	Uncontrolled		Controlled[c]	
	lb/ton of meat	kg/MT of meat	lb/ton of meat	kg/MT of meat
Particulates	0.3	0.15	0.1	0.05
Carbon monoxide	0.6	0.3	Neg[d]	Neg
Hydrocarbons (CH_4)	0.07	0.035	Neg	Neg
Aldehydes (HCHO)	0.08	0.04	0.05	0.025
Organic acids (acetic)	0.2	0.10	0.1	0.05

[a]Based on 110 pounds of meat smoked per pound of wood burned (110 kg meat/kg wood burned).
[b]References 2, 3, and section on charcoal production.
[c]Controls consist of either a wet collector and low-voltage precipitator in series or a direct-fired afterburner.
[d]With afterburner.

References for Section 6.7

1. Air Pollutant Emission Factors. Final Report. Resources Research, Inc. Reston, Va. Prepared for National Air Pollution Control Administration, Durham, N.C., under Contract Number CPA-22-69-119. April 1970.

2. Carter, E. Private communication between Maryland State Department of Health and Resources Research, Incorporated. November 21, 1969.

3. Polglase, W.L., H.F. Dey, and R.T. Walsh. Smokehouses. In: Air Pollution Engineering Manual. Danielson, J. A. (ed.). U.S. DHEW, PHS, National Center for Air Pollution Control. Cincinnati, Ohio. Publication Number 999-AP-40. 1967. p. 750-755.

6.8 NITRATE FERTILIZERS

6.8.1 General[1,2]

For this report, nitrate fertilizers are defined as the product resulting from the reaction of nitric acid and ammonia to form ammonium nitrate solutions or granules. Essentially three steps are involved in producing ammonium nitrate: neutralization, evaporation of the neutralized solution, and control of the particle size and characteristics of the dry product.

Anhydrous ammonia and nitric acid (57 to 65 percent HNO_3)[3,4] are brought together in the neutralizer to produce ammonium nitrate. An evaporator or concentrator is then used to increase the ammonium nitrate concentration. The resulting solutions may be formed into granules by the use of prilling towers or by ordinary granulators. Limestone may be added in either process in order to produce calcium ammonium nitrate.[5,6]

6.8.2 Emissions and Controls

The main emissions from the manufacture of nitrate fertilizers occur in the neutralization and drying operations. By keeping the neutralization process on the acidic side, losses of ammonia and nitric oxides are kept at a minimum. Nitrate dust or particulate matter is produced in the granulation or prilling operation. Particulate matter is also produced in the drying, cooling, coating, and material handling operations. Additional dust may escape from the bagging and shipping facilities.

Typical operations do not use collection devices on the prilling tower. Wet or dry cyclones, however, are used for various granulating, drying, or cooling operations in order to recover valuable products. Table 6.8-1 presents emission factors for the manufacture of nitrate fertilizers.

Table 6.8-1. EMISSION FACTORS FOR NITRATE FERTILIZER MANUFACTURING WITHOUT CONTROLS
EMISSION FACTOR RATING: B

Type of process[a]	Particulates		Nitrogen oxides (NO_3)		Ammonia	
	lb/ton	kg/MT	lb/ton	kg/MT	lb/ton	kg/MT
With prilling tower[b]						
Neutralizer[c,d]	–	–	–	–	2	1
Prilling tower	0.9	0.45	–	–	–	–
Dryers and coolers[e]	12	6	–	–	–	–
With granulator[b]						
Neutralizer[c,d]	–	–	–	–	2	1
Granulator[e]	0.4	0.2	0.9	0.45	0.5	0.25
Dryers and coolers[e,f]	7	3.5	3	1.5	1.3	0.65

[a]Plants will use either a prilling tower or a granulator but not both.
[b]Reference 7.
[c]Reference 8.
[d]Controlled factor based on 95 percent recovery in recycle scrubber.
[e]Use of wet cyclones can reduce emissions by 70 percent.
[f]Use of wet-screen scrubber following cyclone can reduce emissions by 95 to 97 percent.

References for Section 6.8

1. Air Pollutant Emission Factors. Final Report. Resources Research, Inc. Reston, Va. Prepared for National Air Pollution Control Administration, Durham, N.C., under Contract Number CPA-22-69-119. April 1970.

2. Stern, A. (ed.). Sources of Air Pollution and Their Control. In: Air Pollution Vol. III, 2nd Ed. New York, Academic Press. 1968. p. 231-234.

3. Sauchelli, V. Chemistry and Technology of Fertilizers. New York, Reinhold Publishing Company. 1960.

4. Falck-Muus, R. New Process Solves Nitrate Corrosion. Chem. Eng. *74*(14):108, July 3, 1967.

5. Ellwood, P. Nitrogen Fertilizer Plant Integrates Dutch and American Know-How. Chem. Eng. p. 136-138, May 11, 1964.

6. Chemico, Ammonium Nitrate Process Information Sheets.

7. Unpublished source sampling data. Resources Research, Incorporated. Reston, Virginia.

8. Private communication with personnel from Gulf Design Corporation. Lakeland, Florida.

6.9 ORCHARD HEATERS

by Dennis H. Ackerson

6.9.1 General[1-6]

Orchard heaters are commonly used in various areas of the United States to prevent frost damage to fruit and fruit trees. The five common types of orchard heaters—pipeline, lazy flame, return stack, cone, and solid fuel—are shown in Figure 6.9-1. The pipeline heater system is operated from a central control and fuel is distributed by a piping system from a centrally located tank. Lazy flame, return stack, and cone heaters contain integral fuel reservoirs, but can be converted to a pipeline system. Solid fuel heaters usually consist only of solid briquettes, which are placed on the ground and ignited.

The ambient temperature at which orchard heaters are required is determined primarily by the type of fruit and stage of maturity, by the daytime temperatures, and by the moisture content of the soil and air.

During a heavy thermal inversion, both convective and radiant heating methods are useful in preventing frost damage; there is little difference in the effectiveness of the various heaters. The temperature response for a given fuel rate is about the same for each type of heater as long as the heater is clean and does not leak. When there is little or no thermal inversion, radiant heat provided by pipeline, return stack, or cone heaters is the most effective method for preventing damage.

Proper location of the heaters is essential to the uniformity of the radiant heat distributed among the trees. Heaters are usually located in the center space between four trees and are staggered from one row to the next. Extra heaters are used on the borders of the orchard.

6.9.2 Emissions[1,6]

Emissions from orchard heaters are dependent on the fuel usage rate and the type of heater. Pipeline heaters have the lowest particulate emission rates of all orchard heaters. Hydrocarbon emissions are negligible in the pipeline heaters and in lazy flame, return stack, and cone heaters that have been converted to a pipeline system. Nearly all of the hydrocarbon losses are evaporative losses from fuel contained in the heater reservoir. Because of the low burning temperatures used, nitrogen oxide emissions are negligible.

Emission factors for the different types of orchard heaters are presented in Table 6.9-1 and Figure 6.9-2.

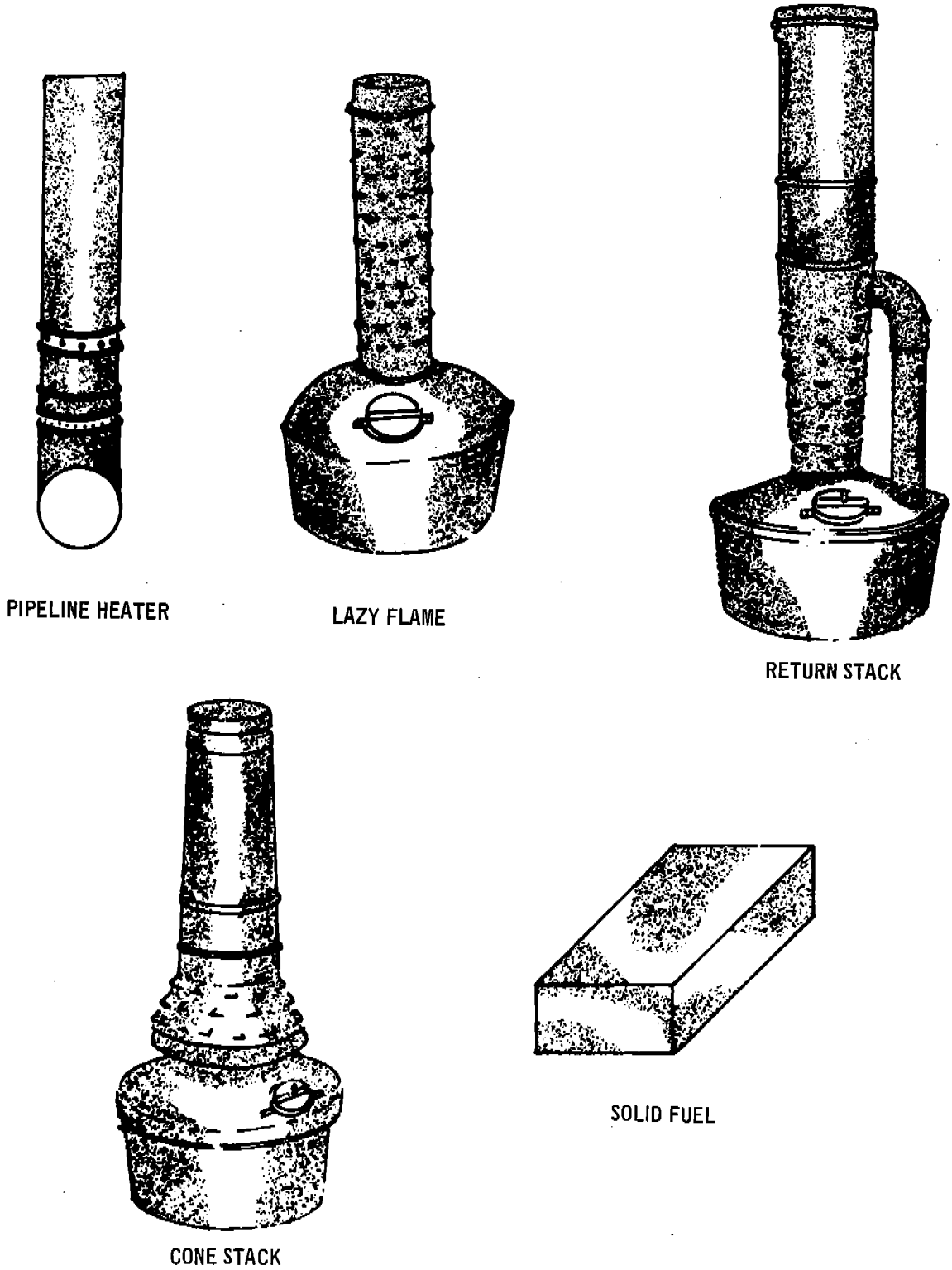

Figure 6.9-1. Types of orchard heaters.[6]

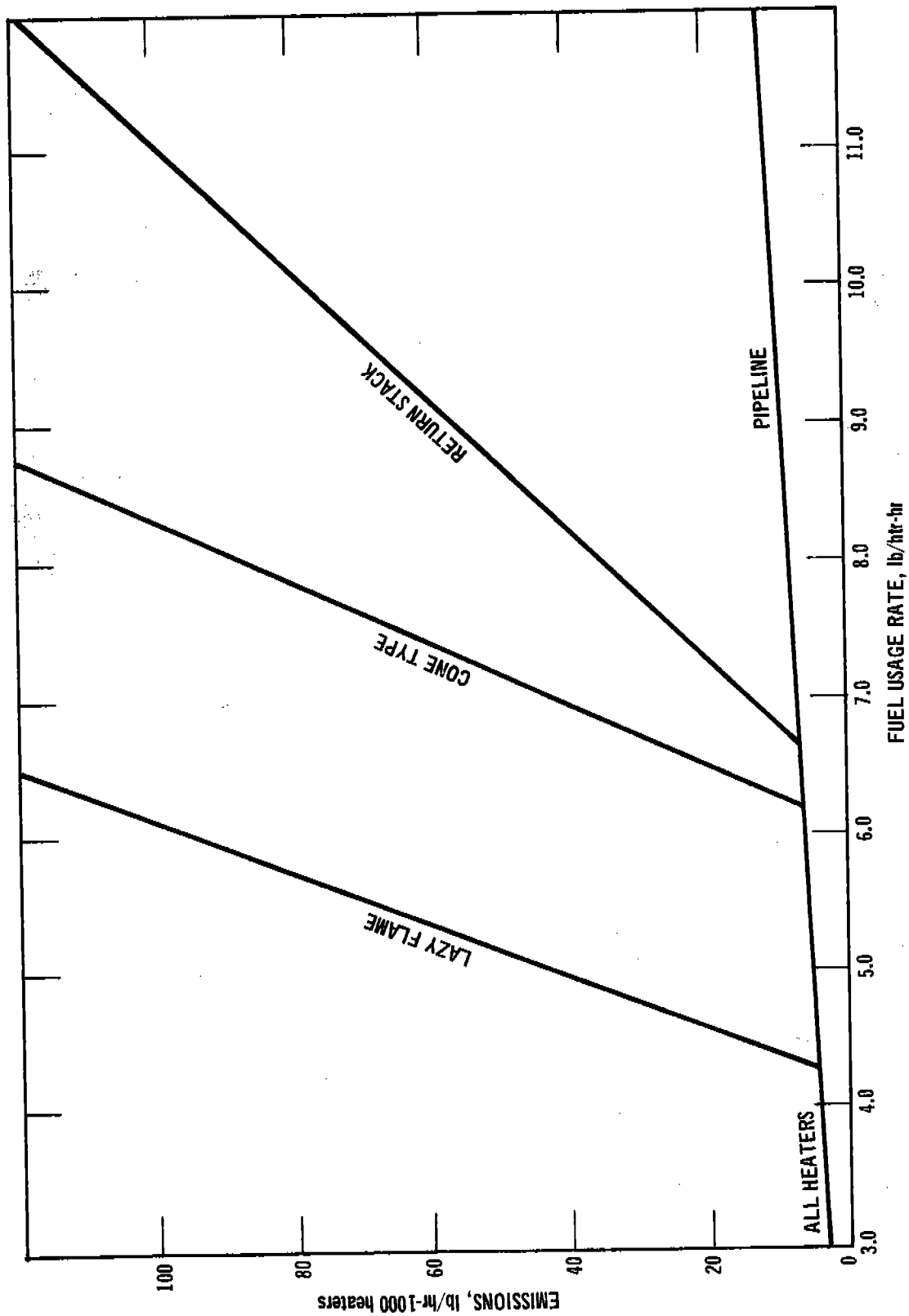

Figure 6.9-2. Particulate emissions from orchard heaters.[3,6]

Table 6.9-1. EMISSION FACTORS FOR ORCHARD HEATERS[a]
EMISSION FACTOR RATING: C

Pollutant	Type of heater				
	Pipeline	Lazy flame	Return stack	Cone	Solid fuel
Particulate					
lb/htr-hr	b	b	b	b	0.05
kg/htr-hr	b	b	b	b	0.023
Sulfur oxides[c]					
lb/htr-hr	0.13S[d]	0.11S	0.14S	0.14S	NA[e]
kg/htr-hr	0.06S	0.05S	0.06S	0.06S	NA
Carbon monoxide					
lb/htr-hr	6.2	NA	NA	NA	NA
kg/htr-hr	2.8	NA	NA	NA	NA
Hydrocarbons[f]					
lb/htr-hr	Neg[g]	16.0	16.0	16.0	Neg
kg/htr-hr	Neg	7.3	7.3	7.3	Neg
Nitrogen oxides[h]					
lb/htr-hr	Neg	Neg	Neg	Neg	Neg
kg/htr-hr	Neg	Neg	Neg	Neg	Neg

[a]References 1, 3, 4, and 6.
[b]Particulate emissions for pipeline, lazy flame, return stack, and cone heaters are shown in Figure 6.9-2.
[c]Based on emission factors for fuel oil combustion in Section 1.3.
[d]S=sulfur content.
[e]Not available.
[f]Based on emission factors for fuel oil combustion in Section 1.3. Evaporative losses only. Hydrocarbon emissions from combustion are considered negligible. Evaporative hydrocarbon losses for units that are part of a pipeline system are negligible.
[g]Negligible.
[h]Little nitrogen oxide is formed because of the relatively low combustion temperatures.

References for Section 6.9

1. Air Pollution in Ventura County. County of Ventura Health Department, Santa Paula, Calif. June 1966.

2. Frost Protection in Citrus. Agricultural Extension Service, University of California, Ventura. November 1967.

3. Personal communication with Mr. Wesley Snowden. Valentine, Fisher, and Tomlinson, Consulting Engineers, Seattle, Washington. May 1971.

4. Communication with the Smith Energy Company, Los Angeles, Calif. January 1968.

5. Communication with Agricultural Extension Service. University of California, Ventura, Calif. October 1969.

6. Personal communication with Mr. Ted Wakai. Air Pollution Control District, County of Ventura, Ojai, Calif. May 1972.

6.10 PHOSPHATE FERTILIZERS

Nearly all phosphatic fertilizers are made from naturally occurring, phosphorus-containing minerals such as phosphate rock. Because the phosphorus content of these minerals is not in a form that is readily available to growing plants, the minerals must be treated to convert the phosphorus to a plant-available form. This conversion can be done either by the process of acidulation or by a thermal process. The intermediate steps of the mining of phosphate rock and the manufacture of phosphoric acid are not included in this section as they are discussed in other sections of this publication; it should be kept in mind, however, that large integrated plants may have all of these operations taking place at one location.

In this section phosphate fertilizers have been divided into three categories: (1) normal superphosphate, (2) triple superphosphate, and (3) ammonium phosphate. Emission factors for the various processes involved are shown in Table 6.10-1.

Table 6.10-1. EMISSION FACTORS FOR THE PRODUCTION OF PHOSPHATE FERTILIZERS
EMISSION FACTOR RATING: C

Type of product	Particulates[a]	
	lb/ton	kg/MT
Normal superphosphate[b]		
Grinding, drying	9	4.5
Main stack	–	–
Triple superphosphate[b]		
Run-of-pile (ROP)	–	–
Granular	–	–
Diammonium phosphate[c]		
Dryer, cooler	80	40
Ammoniator-granulator	2	1

[a]Control efficiencies of 99 percent can be obtained with fabric filters.
[b]References 1 through 3.
[c]References 1, 4, and 5 through 8.

6.10.1 Normal Superphosphate

6.10.1.1 General[4,9]--Normal superphosphate (also called single or ordinary superphosphate) is the product resulting from the acidulation of phosphate rock with sulfuric acid. Normal superphosphate contains from 16 to 22 percent phosphoric anhydride (P_2O_5). The physical steps involved in making superphosphate are: (1) mixing rock and acid, (2) allowing the mix to assume a solid form (denning), and (3) storing (curing) the material to allow the acidulation reaction to be completed. After the curing period, the product can be ground and bagged for sale, the cured superphosphate can be sold directly as run-of-pile product, or the material can be granulated for sale as granulated superphosphate.

6.10.1.2 Emissions – The gases released from the acidulation of phosphate rock contain silicon tetrafluoride, carbon dioxide, steam, particulates, and sulfur oxides. The sulfur oxide emissions arise from the reaction of phosphate rock and sulfuric acid.[10]

If a granulated superphosphate is produced, the vent gases from the granulator-ammoniator may contain particulates, ammonia, silicon tetrafluoride, hydrofluoric acid, ammonium chloride, and fertilizer dust. Emissions from the final drying of the granulated product will include gaseous and particulate fluorides, ammonia, and fertilizer dust.

6.10.2 Triple Superphosphate

6.10.2.1 General[4,9]–Triple superphosphate (also called double or concentrated superphosphate) is the product resulting from the reaction between phosphate rock and phosphoric acid. The product generally contains 44 to 52 percent P_2O_5, which is about three times the P_2O_5 usually found in normal superphosphates.

Presently, there are three principal methods of manufacturing triple superphosphate. One of these uses a cone mixer to produce a pulverized product that is particularly suited to the manufacture of ammoniated fertilizers. This product can be sold as run-of-pile (ROP), or it can be granulated. The second method produces in a multi-step process a granulated product that is well suited for direct application as a phosphate fertilizer. The third method combines the features of quick drying and granulation in a single step.

6.10.2.2 Emissions–Most triple superphosphate is the nongranular type. The exit gases from a plant producing the nongranular product will contain considerable quantities of silicon tetrafluoride, some hydrogen fluoride, and a small amount of particulates. Plants of this type also emit fluorides from the curing buildings.

In the cases where ROP triple superphosphate is granulated, one of the greatest problems is the emission of dust and fumes from the dryer and cooler. Emissions from ROP granulation plants include silicon tetrafluoride, hydrogen fluoride, ammonia, particulate matter, and ammonium chloride.

In direct granulation plants, wet scrubbers are usually used to remove the silicon tetrafluoride and hydrogen fluoride generated from the initial contact between the phosphoric acid and the dried rock. Screening stations and bagging stations are a source of fertilizer dust emissions in this type of process.

6.10.3 AMMONIUM PHOSPHATE

6.10.3.1 General–The two general classes of ammonium phosphates are monammonium phosphate and diammonium phosphate. The production of these types of phosphate fertilizers is starting to displace the production of other phosphate fertilizers because the ammonium phosphates have a higher plant food content and a lower shipping cost per unit weight of P_2O_5.

There are various processes and process variations in use for manufacturing ammonium phosphates. In general, phosphoric acid, sulfuric acid, and anhydrous ammonia are allowed to react to produce the desired grade of ammonium phosphate. Potash salts are added, if desired, and the product is granulated, dried, cooled, screened, and stored.

6.10.3.2 Emissions–The major pollutants from ammonium phosphate production are fluoride, particulates, and ammonia. The largest sources of particulate emissions are the cage mills, where oversized products from the screens are ground before being recycled to the ammoniator. Vent gases from the ammoniator tanks are the major source of ammonia. This gas is usually scrubbed with acid, however, to recover the residual ammonia.

References for Section 6.10

1. Unpublished data on phosphate fertilizer plants. U.S. DHEW, PHS, National Air Pollution Control Administration, Division of Abatement. Durham, N.C. July 1970.

2. Jacob, K. O., H. L. Marshall, D. S. Reynolds, and T. H. Tremearne. Composition and Properties of Superphosphate. Ind. Eng. Chem. *34*(6):722-728. June 1942.

3. Slack, A. V. Phosphoric Acid, Vol. 1, Part II. New York, Marcel Dekker, Incorporated. 1968. p. 732.

4. Stearn, A. (ed.). Air Pollution, Sources of Air Pollution and Their Control, Vol. III, 2nd Ed. New York, Academic Press. 1968. p. 231-234.

5. Teller, A. J. Control of Gaseous Fluoride Emissions. Chem. Eng. Progr. *63*(3):75-79, March 1967.

6. Slack, A. V. Phosphoric Acid, Vol. I, Part II. New York, Marcel Dekker, Incorporated. 1968. p. 722.

7. Slack, A. V. Phosphoric Acid, Vol. 1, Part II. New York, Marcel Dekker, Incorporated. 1968. p. 760-762.

8. Salee, G. Unpublished data from industrial source. Midwest Research Institute. June 1970.

9. Bixby, D. W. Phosphatic Fertilizer's Properties and Processes. The Sulphur Institute. Washington, D.C. October 1966.

10. Sherwin, K. A. Transcript of Institute of Chemical Engineers, London. *32*: 172, 1954.

6.11 STARCH MANUFACTURING

6.11.1 Process Description[1]

The basic raw material in the manufacture of starch is dent corn, which contains starch. The starch in the corn is separated from the other components by "wet milling."

The shelled grain is prepared for milling in cleaners that remove both the light chaff and any heavier foreign material. The cleaned corn is then softened by soaking (steeping) it in warm water acidified with sulfur dioxide. The softened corn goes through attrition mills that tear the kernels apart, freeing the germ and loosening the hull. The remaining mixture of starch, gluten, and hulls is finely ground, and the coarser fiber particles are removed by screening. The mixture of starch and gluten is then separated by centrifuges, after which the starch is filtered and washed. At this point it is dried and packaged for market.

6.11.2 Emissions

The manufacture of starch from corn can result in significant dust emissions. The various cleaning, grinding, and screening operations are the major sources of dust emissions. Table 6.11-1 presents emission factors for starch manufacturing.

Table 6.11-1. EMISSION FACTORS FOR STARCH MANUFACTURING[a] EMISSION FACTOR RATING: D

Type of operation	Particulates	
	lb/ton	kg/MT
Uncontrolled	8	4
Controlled[b]	0.02	0.01

[a]Reference 2.
[b]Based on centrifugal gas scrubber.

References for Section 6.11

1. Starch Manufacturing. In: Kirk-Othmer Encyclopedia of Chemical Technology, Vol. IX. New York, John Wiley and Sons, Inc. 1964.

2. Storch, H. L. Product Losses Cut with a Centrifugal Gas Scrubber. Chem. Eng. Progr. *62*:51-54. April 1966.

6.12 SUGAR CANE PROCESSING

6.12.1 General[1]

The processing of sugar cane starts with the harvesting of the crops, either by hand or by mechanical means. If mechanical harvesting is used, much of the unwanted foliage is left, and it thus is standard practice to burn the cane before mechanical harvesting to remove the greater part of the foliage.

After being harvested, the cane goes through a series of processes to be converted to the final sugar product. It is washed to remove larger amounts of dirt and trash; then crushed and shredded to reduce the size of the stalks. The juice is next extracted by one of two methods, milling or diffusion. In milling the cane is pressed between heavy rollers to press out the juice, and in diffusion the sugar is leached out by water and thin juices. The raw sugar then goes through a series of operations including clarification, evaporation, and crystallization in order to produce the final product.

Most mills operate without supplemental fuel because of the sufficient bagasse (the fibrous residue of the extracted cane) that can be burned as fuel.

6.12.2 Emissions

The largest sources of emissions from sugar cane processing are the openfield burning in the harvesting of the crop and the burning of bagasse as fuel. In the various processes of crushing, evaporation, and crystallization, some particulates are emitted but in relatively small quantities. Emission factors for sugar cane processing are shown in Table 6.12-1.

Table 6.12-1. EMISSION FACTORS FOR SUGAR CANE PROCESSING
EMISSION FACTOR RATING: D

Type of process	Particulate	Carbon monoxide	Hydrocarbons	Nitrogen oxides
Field burning[a,b]				
lb/acre burned	225	1,500	300	30
kg/hectare burned	250	1,680	335	33.5
Bagasse burning[c]				
lb/ton bagasse	22	–	–	–
kg/MT bagasse	11	–	–	–

[a]Based on emission factors for open burning of agricultural waste.
[b]There are approximately 4 tons/acre (9,000 kg/hectare) of unwanted foliage on the cane and 11 tons/acre (25,000 kg/hectare) of grass and weed, all of which are combustible[2]
[c]Reference 2.

References for Section 6.12

1. Sugar Cane. In: Kirk-Othmer Encyclopedia of Chemical Technology, Vol. IX. New York, John Wiley and Sons, Inc. 1964.

2. Cooper, J. Unpublished data on emissions from the sugar cane industry. Air Pollution Control Agency, Palm Beach County, Florida. July 1969.

7. METALLURGICAL INDUSTRY

The metallurgical industries can be broadly divided into primary and secondary metal production operations. The term primary metals refers to production of the metal from ore. The secondary metals industry includes the recovery of metal from scrap and salvage and the production of alloys from ingot.

The primary metals industries discussed in Sections 7.1 through 7.7 include the nonferrous operations of primary aluminum production, copper smelters, lead smelters, and zinc smelters. These industries are characterized by the large quantities of sulfur oxides and particulates emitted. The primary metals industry also includes iron and steel mills, ferroalloy production, and metallurgical coke manufacture.

The secondary metallurgical industries discussed in Sections 7.8 through 7.14 are aluminum operations, brass and bronze ingots, gray iron foundries, lead smelting, magnesium smelting, steel foundries, and zinc processing. The major air contaminants from these operations are particulates in the forms of metallic fumes, smoke, and dust.

7.1 PRIMARY ALUMINUM PRODUCTION

7.1.1 Process Description[1]

Revised by William M. Vatavuk

Bauxite, a hydrated oxide of aluminum associated with silicon, titanium, and iron, is the base ore for aluminum production. Most bauxite ore is purified by the Bayer process in which the ore is dried, ground in ball mills, and mixed with sodium hydroxide. Iron oxide, silica, and other impurities are removed by settling, dilution, and filtration. The aluminum hydroxide is precipitated from this diluted, cooled solution and calcined to produce pure alumina, according to the reaction:

$$\underset{\text{Aluminium hydroxide}}{2Al(OH)_3} \longrightarrow \underset{\text{Water}}{3H_2O} + \underset{\text{Alumina}}{Al_2O_3} \qquad (1)$$

Aluminum metal is manufactured by the Hall-Heroult process, which involves the electrolytic reduction of alumina dissolved in a molten salt bath of cryolite (a complex of $NaF \cdot AlF_3$) and various salt additives:

$$\underset{\text{Alumina}}{2Al_2O_3} \xrightarrow{\text{Electrolysis}} \underset{\text{Aluminum}}{4Al} + \underset{\text{Oxygen}}{3O_2} \qquad (2)$$

The electrolysis is performed in a carbon crucible housed in a steel shell, known as a "pot." The electrolysis employs the carbon crucible as the cathode (negative pole) and a carbon mass as the anode (positive pole). The type of anode configuration used distinguishes the three types of pots: prebaked (PB), horizontal-stud Soderberg (HSS), and vertical-stud Soderberg (VSS).

The major portion of aluminum produced in the United States (61.9 percent of 1970 production) is processed in prebaked cells. In this type of pot, the anode consists of blocks that are formed from a carbon paste and baked

in an oven prior to their use in the cell. These blocks–typically 14 to 24 per cell–are attached to metal rods and serve as replaceable anodes. As the reduction proceeds, the carbon in these blocks is gradually consumed (at a rate of about 1 inch per day) by reaction with the oxygen by-product (see Table 7.1-1).

Table 7.1-1. RAW MATERIAL AND ENERGY REQUIREMENTS FOR ALUMINUM PRODUCTION

Parameter	Representative value
Cell operating temperature	~1740°F (~950°C)
Current through pot line	60,000 to 125,000 amp
Voltage drop per cell	4.3 to 5.2
Current efficiency	85 to 90%
Energy required	6.0 to 8.5 kwh/lb aluminum (13.2 to 18.7 kwh/kg aluminum)
Weight alumina consumed	1.89 to 1.92 lb AL_2O_3/lb aluminum (1.89 to 1.92 kg AL_2O_3/kg aluminum)
Weight electrolyte fluoride consumed	0.03 to 0.10 lb fluoride/lb aluminum (0.03 to 0.10 kg fluoride/kg aluminum)
Weight carbon electrode consumed	0.45 to 0.55 lb electrode/lb aluminum (0.45 to 0.55 kg electrode/kg aluminum)

The second most commonly used furnace (25.5 percent of 1970 production) is the horizontal-stud Soderberg. This type of cell uses a "continuous" carbon anode; that is, a mixture of pitch and carbon aggregate called "paste" is added at the top of the superstructure periodically, and the entire anode assembly is moved downward as the carbon burns away. The cell anode is contained by aluminum sheeting and perforated steel channels, through which electrode connections, called studs, are inserted into the anode paste. As the baking anode is lowered, the lower row of studs and the bottom channel are removed, and the flexible electrical connectors are moved to a higher row. One disadvantage of baking the paste in place is that heavy organic materials (tars) are added to the cell effluent stream. The heavy tars often cause plugging of the ducts, fans, and control equipment, an effect that seriously limits the choice of air cleaning equipment.

The vertical-stud Soderberg is similar to the horizontal-stud furnace, with the exception that the studs are mounted vertically in the cell. The studs must be raised and replaced periodically, but that is a relatively simple process. Representative raw material and energy requirements for aluminum reduction cells are presented in Table 7.1-1. A schematic representation of the reduction process is shown in Figure 7.1-1.

7.1.2 Emissions and Controls[1,2,3]

Emissions from aluminum reduction processes consist primarily of gaseous hydrogen fluoride and particulate fluorides, alumina, hydrocarbons or organics, sulfur dioxide from the reduction cells and the anode baking furnaces. Large amounts of particulates are also generated during the calcining of aluminum hydroxide, but the economic value of this dust is such that extensive controls have been employed to reduce emissions to relatively small quantities. Finally, small amounts of particulates are emitted from the bauxite grinding and materials handling processes.

The source of fluoride emissions from reduction cells is the fluoride electrolyte, which contains cryolite, aluminum fluoride (AlF_3), and fluorspar (CaF_2). For normal operation, the weight or "bath" ratio of sodium fluoride (NaF) to AlF_3 is maintained between 1.36 and 1.43 by the addition of Na_2CO_3, NaF, and AlF_3. Experience has shown that increasing this ratio has the effect of decreasing total fluoride effluents. Cell fluoride emissions are also decreased by lowering the operating temperature and increasing the alumina content in the bath. Specifically, the ratio of gaseous (mainly hydrogen fluoride) to particulate fluorides varies from 1.2 to 1.7 with PB and HSS cells, but attains a value of approximately 3.0 with VSS cells.

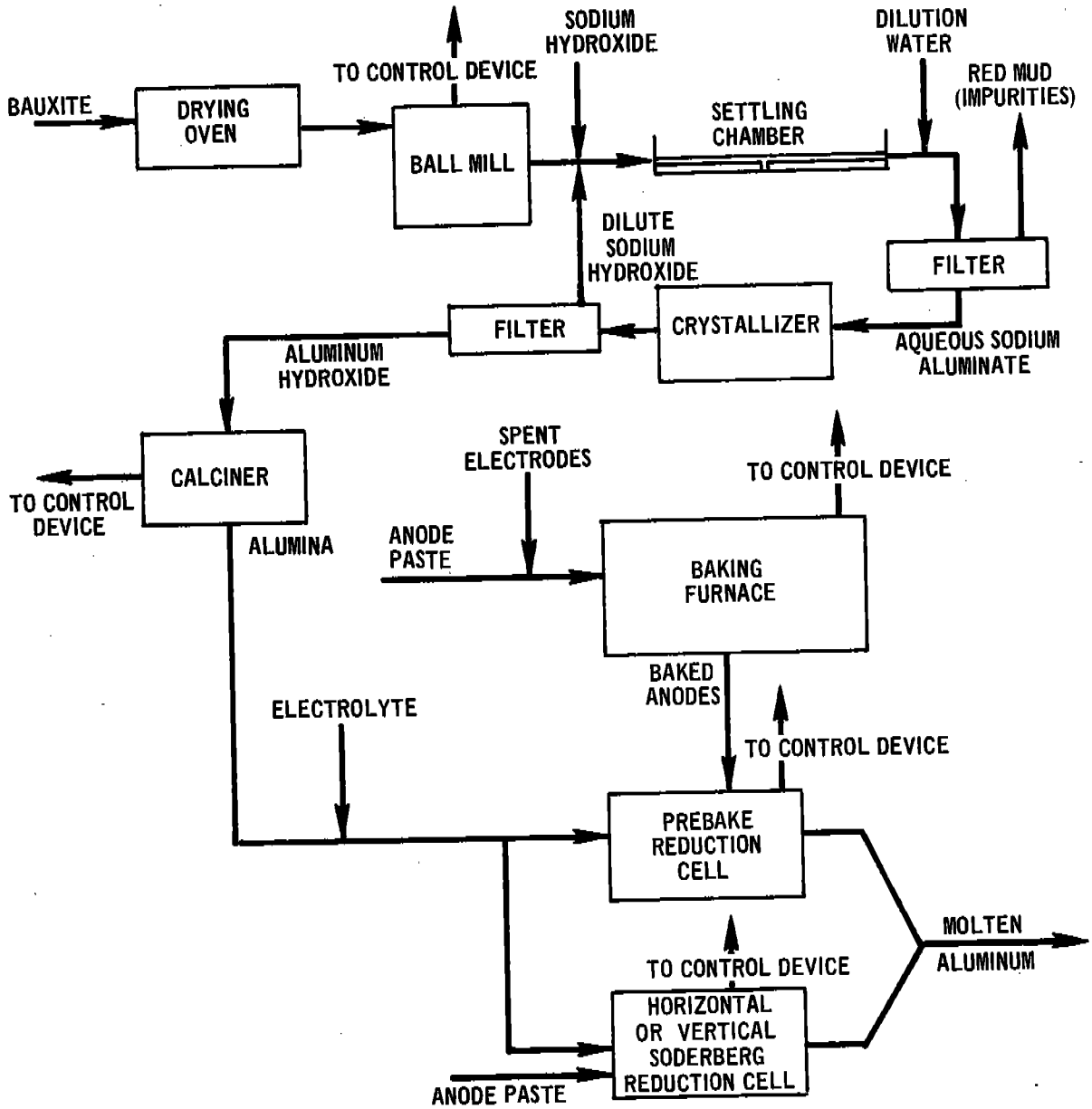

Figure 7.1-1. Schematic diagram of primary aluminum production process.

Table 7.1-2. REPRESENTATIVE PARTICLE SIZE DISTRIBUTIONS OF UNCONTROLLED EFFLUENTS FROM PREBAKED AND HORIZONTAL-STUD SODERBERG CELLS[1]

Size range, μm	Particles within size range, wt%	
	Prebaked	Horizontal-stud Soderberg
<1	35	44
1 to 5	25	26
5 to 10	8	8
10 to 20	5	6
20 to 44	5	4
>44	22	12

Particulate emissions from reduction cells consist of alumina and carbon from anode dusting, cryolite, aluminum fluoride, calcium fluoride, chiolite ($Na_5Al_3F_{14}$), and ferric oxide. Representative size distributions for PB and HSS particulate effluents are presented in Table 7.1-2. Particulates less than 1 micron in diameter represent the largest percentage (35 to 44 percent by weight) of uncontrolled effluents.

Moderate amounts of hydrocarbons derived from the anode paste are emitted from horizontal- and vertical-Soderberg pots. In vertical cells these compounds are removed by combustion via integral gas burners before the off-gases are released.

Because many different kinds of gases and particulates are emitted from reduction cells, many kinds of control devices have been employed. To abate both gaseous and particulate emissions, one or more types of wet scrubbers – spray tower and chambers, quench towers, floating beds, packed beds, venturis, and self-induced sprays – are used on all three cells and on anode baking furnaces. In addition, particulate control methods, such as electrostatic precipitators (wet and dry), multiple cyclones, and dry scrubbers (fluid-bed and coated-filter types), are employed with baking furnaces on PB and VSS cells. Dry alumina adsorption has been used at several PB and VSS installations in foreign countries. In this technique, both gaseous and particulate fluorides are controlled by passing the pot off-gases through the entering alumina feed, on which the fluorides are absorbed; the technique has an overall control efficiency of 98 percent.

In the aluminum hydroxide calcining, bauxite grinding, and materials handling operations, various dry dust collection devices–such as centrifugal collectors, multiple cyclones, or electrostatic precipitators–and wet scrubbers or both may be used. Controlled and uncontrolled emission factors for fluorides and total particulates are presented in Table 7.1.-3.

Table 7.1-3. EMISSION FACTORS FOR PRIMARY ALUMINUM PRODUCTION PROCESSES[a]
EMISSION FACTOR RATING: A

Type of operation	Total particulates[b]		Gaseous fluorides (HF)		Particulate fluorides (F)	
	lb/ton	kg/MT	lb/ton	kg/MT	lb/ton	kg/MT
Bauxite grinding[a,c]						
Uncontrolled	6.0	3.0	Neg	Neg	NA[d]	NA
Spray tower	1.8[e]	0.90	Neg	Neg	NA	NA
Floating-bed scrubber	1.7	0.85	Neg	Neg	NA	NA
Quench tower and spray screen	1.0	0.50	Neg	Neg	NA	NA
Electrostatic precipitator	0.12	0.060	Neg	Neg	NA	NA
Calcining of aluminum hydroxide[a,c]						
Uncontrolled	200.0	100.0	Neg	Neg	NA	NA
Spray tower	60.0	30.0	Neg	Neg	NA	NA
Floating-bed scrubber	56.0	28.0	Neg	Neg	NA	NA
Quench tower and spray screen	34.0	17.0	Neg	Neg	NA	NA
Electrostatic precipitator	4.0	2.0	Neg	Neg	NA	NA
Anode baking furnace[f]						
Uncontrolled	3.0 (1.0 to 5.0)[g]	1.5 (0.5 to 2.5)	0.93	0.47	Neg	Neg
Spray tower	NA	NA	0.0372	0.0186	Neg	Neg
Dry electrostatic precipitator	1.13	0.57	0.93	0.47	Neg	Neg
Self-induced spray	0.06	0.03	0.0372	0.0186	Neg	Neg
Prebaked reduction cell[h]						
Uncontrolled	81.3 (11.9 to 177.0)	40.65 (5.95 to 88.5)	24.7 (13.8 to 34.8)	12.35 (6.9 to 17.4)	20.4 (9.8 to 35.5)	10.2 (4.9 to 17.8)
Multiple cyclone	17.9	8.95	24.7	12.35	4.49	2.25
Fluid-bed dry scrubber system	2.02	1.01	0.247	0.124	0.507	0.253

Table 7.1-3 (continued). EMISSION FACTORS FOR PRIMARY ALUMINUN PRODUCTION PROCESSES[a]
EMISSION FACTOR RATING: A

Type of operation	Total particulates[b]		Gaseous fluorides (HF)		Particulate fluorides (F)	
	lb/ton	kg/MT	lb/ton	kg/MT	lb/ton	kg/MT
scrubber system						
Coated filter dry scrubber	1.62	0.81	1.98 to 5.93	0.99 to 2.97	0.408	0.204
Dry electrostatic precipitator	1.62 to 8.94	0.81 to 4.47	24.7	12.35	0.408 to 2.24	0.204 to 1.12
Spray tower	16.2	8.1	0.494 to 2.72	0.247 to 1.36	4.08	2.04
Floating-bed scrubber	16.2	8.1	0.494	0.247	4.08	2.04
Chamber scrubber	12.2	6.1	2.96	1.48	3.06	1.53
Vertical flow packed bed	12.2	6.1	8.4	4.2	3.06	1.53
Dry alumina adsorption	1.62	0.81	0.494	0.247	0.408	0.204
Horizontal-stud Soderberg cell[i]						
Uncontrolled	98.4 (93.6 to 104.0)	49.2 (46.8 to 52.0)	26.6 (25.2 to 28.8)	13.3 (12.6 to 14.4)	15.6 (14.4 to 16.2)	7.8 (7.2 to 8.1)
Spray tower	19.6 to 36.4	9.8 to 18.2	1.86 to 2.39	0.93 to 1.195	3.12 to 5.77	1.56 to 2.885
Floating-bed scrubber	21.6	10.8	0.532	0.266	0.343	0.1715
Wet electrostatic precipitator	7.10	3.55	26.6	13.3	1.13	0.563
Vertical-stud Soderberg cell[i]						
Uncontrolled	78.4	39.2	30.4 (20.0 to 35.0)	15.2 (10.0 to 17.5)	10.6 (5.6 to 55.3)	5.3 (2.8 to 27.7)
Spray tower	19.6	9.8	0.304	0.152	2.65	1.325
Self-induced spray	NA	NA	0.304	0.152	NA	NA
Venturi scrubber	3.14	1.57	0.304	0.152	0.424	0.212
Wet electrostatic precipitator	0.784 to 7.84	0.392 to 3.92	30.4	15.2	0.106 to 1.06	0.053 to 0.53
Multiple cyclones	3.92 to 4.7	1.96 to 2.35	30.4	15.2	5.30 to 6.36	2.65 to 3.18
Dry alumina adsorption	1.57	0.784	0.608	0.304	0.212	0.106
Materials handling[c]						
Uncontrolled	10.0	5.0	Neg	Neg	NA	NA
Spray tower	3.0	1.5	Neg	Neg	NA	NA

Table 7.1-3 (continued). EMISSION FACTORS FOR PRIMARY ALUMINUM PRODUCTION PROCESSES[a]
EMISSION FACTOR RATING: A

Type of operation	Total particulates[b]		Gaseous fluorides (HF)		Particulate fluorides (F)	
	lb/ton	kg/MT	lb/ton	kg/MT	lb/ton	kg/MT
Floating-bed scrubber	2.8	1.4	Neg	Neg	NA	NA
Quench tower and spray screen	1.7	0.85	Neg	Neg	NA	NA
Electrostatic precipitator	0.20	0.10	Neg	Neg	NA	NA

[a]Emission factors for bauxite grinding expressed as pounds per ton (kg/MT) of bauxite processed. Factors for calcining of aluminum hydroxide expressed as pounds per ton (kg/MT) of alumina produced. All other factors in terms of tons (MT) of molten aluminum produced.
[b]Includes particulate fluorides.
[c]References 1 and 3.
[d]No information available.
[e]Controlled emission factors are based on average uncontrolled factors and on average observed collection efficiencies.
[f]References 1,2, and 4 through 6.
[g]Numbers in parentheses are ranges of uncontrolled values observed.
[h]References 2 and 4 through 6.
[i]Reference 1.
[j]References 2 and 6.

References for Section 7.1

1. Engineering and Cost Effectiveness Study of Fluoride Emissions Control, Vol. I. TRW Systems and Resources Research Corp., Reston, Va. Prepared for Environmental Protection Agency, Office of Air Programs, Research Triangle Park, N.C., under Contract Number EHSD-71-14, January 1972.

2. Air Pollution Control in the Primary Aluminum Industry, Vol. I. Singmaster and Breyer, New York, N.Y. Prepared for Environmental Protection Agency, Office of Air Programs, Research Triangle Park, N.C., under Contract Number CPA-70-21. March 1972.

3. Particulate Pollutant System Study, Vol. I. Midwest Research Institute, Kansas City, Mo. Prepared for Environmental Protection Agency, Office of Air Programs, Research Triangle Park, N.C. May 1971.

4. Source Testing Report: Emissions from Wet Scrubbing System. York Research Corp., Stamford, Conn. Prepared for Environmental Protection Agency, Office of Air Programs, Research Triangle Park, N.C. Report Number Y-7730-E.

5. Source Testing Report: Emissions from Primary Aluminum Smelting Plant. York Research Corp., Stamford, Conn. Prepared for Environmental Protection Agency, Office of Air Programs, Research Triangle Park, N.C. Report Number Y-7730-B. June 1972.

6. Source Testing Report: Emissions from the Wet Scrubber System. York Research Corp., Stamford, Conn. Prepared for Environmental Protection Agency, Office of Air Programs, Research Triangle Park, N.C. Report Number Y-7730-F. June 1972.

7.2 METALLURGICAL COKE MANUFACTURING

7.2.1 Process Description[1]

Coking is the process of heating coal in an atmosphere of low oxygen content, i.e., destructive distillation. During this process, organic compounds in the coal break down to yield gases and a residue of relatively nonvolatile nature. Two processes are used for the manufacture of metallurgical coke, the beehive process and the by-product process; the by-product process accounts for more than 98 percent of the coke produced.

Beehive oven:[1] The beehive is a refractory-lined enclosure with a dome-shaped roof. The coal charge is deposited onto the floor of the beehive and leveled to give a uniform depth of material. Openings to the beehive oven are then restricted to control the amount of air reaching the coal. The carbonization process begins in the coal at the top of the pile and works down through it. The volatile matter being distilled escapes to the atmosphere through a hole in the roof. At the completion of the coking time, the coke is "watered out" or quenched.

By-product process:[1] The by-product process is oriented toward the recovery of the gases produced during the coking cycle. The rectangular coking ovens are grouped together in a series, alternately interspersed with heating flues, called a coke battery. Coal is charged to the ovens through ports in the top, which are then sealed. Heat is supplied to the ovens by burning some of the coke gas produced. Coking is largely accomplished at temperatures of 2000° to 2100° F (1100° to 1150° C) for a period of about 16 to 20 hours. At the end of the coking period, the coke is pushed from the oven by a ram and quenched with water.

7.2.2 Emissions[1]

Visible smoke, hydrocarbons, carbon monoxide, and other emissions originate from the following by-product coking operations: (1) charging of the coal into the incandescent ovens, (2) oven leakage during the coking period, (3) pushing the coke out of the ovens, and (4) quenching the hot coke. Virtually no attempts have been made to prevent gaseous emissions from beehive ovens. Gaseous emissions from the by-product ovens are drawn off to a collecting main and are subjected to various operations for separating ammonia, coke-oven gas, tar, phenol, light oil (benzene, toluene, xylene), and pyridine. These unit operations are potential sources of hydrocarbon emissions.

Oven-charging operations and leakage around poorly sealed coke-oven doors and lids are major sources of gaseous emissions from by-product ovens. Sulfur is present in the coke-oven gas in the form of hydrogen sulfide and carbon disulfide. If the gas is not desulfurized, the combustion process will emit sulfur dioxide.

Associated with both coking processes are the material-handling operations of unloading coal, storing coal, grinding and sizing of coal, screening and crushing coke, and storing and loading coke. All of these operations are potential particulate emission sources. In addition, the operations of oven charging, coke pushing and quenching produce particulate emissions. The emission factors for coking operations are summarized in Table 7.2-1.

Table 7.2-1. EMISSION FACTORS FOR METALLURGICAL COKE MANUFACTURE WITHOUT CONTROLS[a]
EMISSION FACTOR RATING: C

Type of operation	Particulates		Sulfur dioxide		Carbon monoxide		Hydrocarbons[b]		Nitrogen oxides (NO_2)		Ammonia	
	lb/ton	kg/MT	lb/ton	kg/MT	lb/ton	kg/MT	lb/ton	kg/MT	lb/ton	kg/MT	lb/ton	kg/MT
By-product coking[c]												
Unloading	0.4	0.2	–	–	–	–	–	–	–	–	–	–
Charging	1.5	0.75	0.02	0.01	0.6	0.3	2.5	1.25	0.03	0.015	0.02	0.01
Coking cycle	0.1	0.05	–	–	0.6	0.3	1.5	0.75	0.01	0.005	0.06	0.03
Discharging	0.6	0.3	–	–	0.07	0.035	0.2	0.1	–	–	0.1	0.05
Quenching	0.9	0.45	–	–	–	–	–	–	–	–	–	–
Underfiring[d]	–	–	4	2	–	–	–	–	–	–	–	–
Beehive ovens[e]	200	100	–	–	1	0.5	8	4	–	–	2	1

[a]Emission factors expressed as units per unit weight of coal charged.
[b]Expressed as methane.
[c]References 2 and 3.
[d]Reference 5. The sulfur dioxide factor is based on the following representative conditions: (1) sulfur content of coal charged to oven is 0.8 percent by weight; (2) about 33 percent by weight of total sulfur in the coal charged to oven is transferred to the coke-oven gas; (3) about 40 percent of coke-oven gas is burned during the underfiring operation and the remainder is used in other parts of the steel operation where the rest of the sulfur dioxide is discharged—about 6 lb/ton (3 kg/MT) of coal charged; and (4) gas used in underfiring has not been desulfurized.
[e]References 1 and 4.

References for Section 7.2

1. Air Pollutant Emission Factors, Final Report. Resources Research, Incorporated. Reston, Virginia. Prepared for National Pollution Control Administration, Durham, N.C., under Contract Number CPA-22-69-119. April 1970.

2. Air Pollution by Coking Plants. United Nations Report: Economic Commission for Europe, ST/ECE/Coal/26. 1968. p. 3-27.

3. Fullerton, R.W. Impingement Baffles to Reduce Emissions from Coke Quenching. J. Air Pol. Control Assoc. *17*:807-809. December 1967.

4. Sallee, G. Private Communication on Particulate Pollutant Study. Midwest Research Institute, Kansas City, Mo. Prepared for National Air Pollution Control Administration, Durham, N.C., under Contract Number 22-69-104. June 1970.

5. Varga, J. and H.W. Lownie, Jr. Final Technological Report on: A Systems Analysis Study of the Integrated Iron and Steel Industry. Battelle Memorial Institute, Columbus, Ohio. Prepared for U.S. DHEW, National Air Pollution Control Administration, Durham, N.C., under Contract Number PH 22-68-65. May 1969.

7.3 COPPER SMELTERS

7.3.1 Process Description[1,2]

Copper is produced primarily from low-grade sulfide ores, which are concentrated by gravity and flotation methods. Copper is recovered from the concentrate by four steps: roasting, smelting, converting, and refining. Copper sulfide concentrates are normally roasted in either multiple-hearth or fluidized-bed roasters to remove the sulfur and then calcined in preparation for smelting in a reverberatory furnace. For about half the smelters the roasting step is eliminated. Smelting removes other impurities as a slag with the aid of fluxes. The matter that results from smelting is blown with air to remove the sulfur as sulfur dioxide, and the end product is a crude metallic copper. A refining process further purifies the metal by insertion of green logs or natural gas. This is often followed by electrolytic refining.

7.3.2 Emissions and Controls[2]

The high temperatures attained in roasting, smelting, and converting cause volatilization of a number of the trace elements present in copper ores and concentrates. The raw waste gases from these processes contain not only these fumes but also dust and sulfur oxide. Carbon monoxide and nitrogen oxides may also be emitted, but no quantitative data have been reported in the literature.

The value of the volatilized elements dictates efficient collection of fumes and dusts. A combination of cyclones and electrostatic precipitators seems to be most often used. Table 7.3-1 summarizes the uncontrolled emissions of particulates and sulfur oxides from copper smelters.

Table 7.3-1. EMISSION FACTORS FOR PRIMARY COPPER SMELTERS WITHOUT CONTROLS[a]
EMISSION FACTOR RATING: C

Type of operation	Particulates[b,c]		Sulfur oxides[d]	
	lb/ton	kg/MT	lb/ton	kg/MT
Roasting	45	22.5	60	30
Smelting (reverberatory furnace)	20	10	320	160
Converting	60	30	870	435
Refining	10	5	—	—
Total uncontrolled	135	67.5	1250	625

[a]Approximately 4 unit weights of concentrate are required to produce 1 unit weight of copper metal. Emission factors expressed as units per unit weight of concentrated ore produced.
[b]References 2 through 4.
[c]Electrostatic precipitators have been reported to reduce emissions by 99.7 percent.
[d]Sulfur oxides can be reduced by about 90 percent by using a combination of sulfuric acid plants and lime slurry scrubbing.

References for Section 7.3

1. Duprey, R.L. Compilation of Air Pollutant Emission Factors. U. S. DHEW PHS, National Center for Air Pollution Control. Durham, N. C. PHS Publication No. 999-AP-42. 1968. p. 24.

2. Stern, A. (ed.). Sources of Air Pollution and Their Control. In: Air Pollution, Vol. III, 2nd Ed. New York, Academic Press. 1968. p. 173-179.

3. Sallee, G. Private communication on Particulate Pollutant Study, Midwest Research Institute, Kansas City, Mo. Prepared for National Air Pollution Control Administration under Contract Number 22-69-104. June 1970.

4. Systems Study for Control of Emissions in the Primary Nonferrous Smelting Industry. 3 Volumes. San Francisco, California, Arthur G. McKee and Company. June 1969.

7.4 FERROALLOY PRODUCTION

7.4.1 Process Description[1,2]

Ferroalloy is the generic term for alloys consisting of iron and one or more other metals. Ferroalloys are used in steel production as alloying elements and deoxidants. There are three basic types of ferroalloys: (1) silicon-based alloys, including ferrosilicon and calciumsilicon; (2) manganese-based alloys, including ferromanganese and silicomanganese; and (3) chromium-based alloys, including ferrochromium and ferrosilicochrome.

The four major procedures used to produce ferroalloy and high-purity metallic additives for steelmaking are: (1) blast furnace, (2) electrolytic deposition, (3) alumina silico-thermic process, and (4) electric smelting furnace. Because over 75 percent of the ferroalloys are produced in electric smelting furnaces, this section deals only with that type of furnace.

The oldest, simplest, and most widely used electric furnaces are the submerged-arc open type, although semi-covered furnaces are also used. The alloys are made in the electric furnaces by reduction of suitable oxides. For example, in making ferrochromium the charge may consist of chrome ore, limestone, quartz (silica), coal and wood chips, along with scrap iron.

7.4.2 Emissions[3]

The production of ferroalloys has many dust- or fume-producing steps. The dust resulting from raw material handling, mix delivery, and crushing and sizing of the solidified product can be handled by conventional techniques and is ordinarily not a pollution problem. By far the major pollution problem arises from the ferroalloy furnaces themselves. The conventional submerged-arc furnace utilizes carbon reduction of metallic oxides and continuously produces large quantities of carbon monoxide. This escaping gas carries large quantities of particulates of submicron size, making control difficult.

In an open furnace, essentially all of the carbon monoxide burns with induced air at the top of the charge, and CO emissions are small. Particulate emissions from the open furnace, however, can be quite large. In the semi-closed furnace, most or all of the CO is withdrawn from the furnace and burns with dilution air introduced into the system. The unburned CO goes through particulate control devices and can be used as boiler fuel or can be flared directly. Particulate emission factors for electric smelting furnaces are presented in Table 7.4-1. No carbon monoxide emission data have been reported in the literature.

Table 7.4-1. EMISSION FACTORS FOR FERROALLOY PRODUCTION IN ELECTRIC SMELTING FURNACES[a] EMISSION FACTOR RATING: C

Type of furance and product	Particulates	
	lb/ton	kg/MT
Open furnace		
50% FeSi[b]	200	100
75% FeSi[c]	315	157.5
90% FeSi[b]	565	282.5
Silicon metal[d]	625	312.5
Silicomanganese[e]	195	97.5
Semi-covered furnace		
Ferromanganese[e]	45	22.5

[a]Emission factors expressed as units per unit weight of specified product produced.
[b]Reference 4.
[c]References 5 and 6.
[d]References 4 and 7.
[e]Reference 6.

References for Section 7.4

1. Air Pollutant Emission Factors. Final Report. Resources Research, Inc., Reston, Va. Prepared for National Air Pollution Control Administration, Durham, N.C., under Contract Number CPA-22-69-119. April 1970.

2. Ferroalloys: Steel's All-purpose Additives. The Magazine of Metals Producing. February 1967.

3. Person, R. A. Control of Emissions from Ferroalloy Furnace Processing. Niagara Falls, New York. 1969.

4. Unpublished stack test results. Resources Research, Incorporated. Reston, Virginia.

5. Ferrari, R. Experiences in Developing an Effective Pollution Control System for a Submerged-Arc Ferroalloy Furnace Operation. J. Metals. p. 95-104, April 1968.

6. Fredriksen and Nestaas. Pollution Problems by Electric Furnace Ferroalloy Production. United Nations Economic Commission for Europe. September 1968.

7. Gerstle, R. W. and J. L. McGinnity. Plant Visit Memorandum. U. S. DHEW, PHS, National Center for Air Pollution Control, Cincinnati, Ohio. June 1967.

7.5 IRON AND STEEL MILLS

Revised by William M. Vatavuk and L.K. Felleisen

7.5.1 General[1]

Iron and steel manufacturing processes may be grouped into five distinct sequential operations: (1) coke production; (2) pig iron manufacture in blast furnaces; (3) steel-making processes using basic oxygen, electric arc, and open hearth furnaces; (4) rolling mill operations; and (5) finishing operations (see Figure 7.5-1). The first three of these operations encompass nearly all of the air pollution sources. Coke production is discussed in detail elsewhere in this publication.

7.5.1.1 Pig Iron Manufacture[2,3]—Pig iron is produced in blast furnaces, which are large refractory-lined chambers into which iron ore, coke, and limestone are charged and allowed to react with large amounts of hot air to produce molten iron. Slag and blast furnace gases are by-products of this operation. The production of 1 unit weight of pig iron requires an average charge of 1.55 unit weights of iron-bearing charge, 0.55 unit weight of coke, 0.20 unit weight of limestone, and 2.3 unit weight of air. Blast furnace by-products consist of 0.2 unit weight of slag, 0.02 unit weight of flue dust, and 2.5 unit weights of gas per unit of pig iron produced. Most of the coke used in the process is produced in by-product coke ovens. The flue dust and other iron ore fines from the process are converted into useful blast furnace charge via sintering operations.

Blast furnace combustion gas and the gases that escape from bleeder openings constitute the major sources of particulate emissions. The dust in the gas consists of 35 to 50 percent iron, 4 to 14 percent carbon, 8 to 13 percent silicon dioxide, and small amounts of aluminum oxide, manganese oxide, calcium oxide, and other materials. Because of its high carbon monoxide content, this gas has a low heating value (about 100 Btu/ft) and is utilized as a fuel within the steel plant. Before it can be efficiently oxidized, however, the gas must be cleaned of particulates. Initially, the gases pass through a settling chamber or dry cyclone, where about 60 percent of the dust is removed. Next, the gases undergo a one- or two-stage cleaning operation. The primary cleaner is normally a wet scrubber, which removes about 90 percent of the remaining particulates. The secondary cleaner is a high-energy wet scrubber (usually a venturi) or an electrostatic precipitator, either of which can remove up to 90 percent of the particulates that have passed through the primary cleaner. Taken together, these control devices provide an overall dust removal efficiency of approximately 96 percent.

All of the carbon monoxide generated in the gas is normally used for fuel. Conditions such as "slips," however, can cause instantaneous emissions of carbon monoxide. Improvements in techniques for handling blast furnace burden have greatly reduced the occurrence of slips. In Table 7.5-1 particulate and carbon monoxide emission factors are presented for blast furnaces.

7.5.1.2 Steel-Making Processes -

7.5.1.2.1 Open Hearth Furnaces[2,3]—In the open hearth process, a mixture of scrap iron, steel, and pig iron is melted in a shallow rectangular basin, or "hearth," for which various liquid gaseous fuels provide the heat. Impurities are removed in a slag.

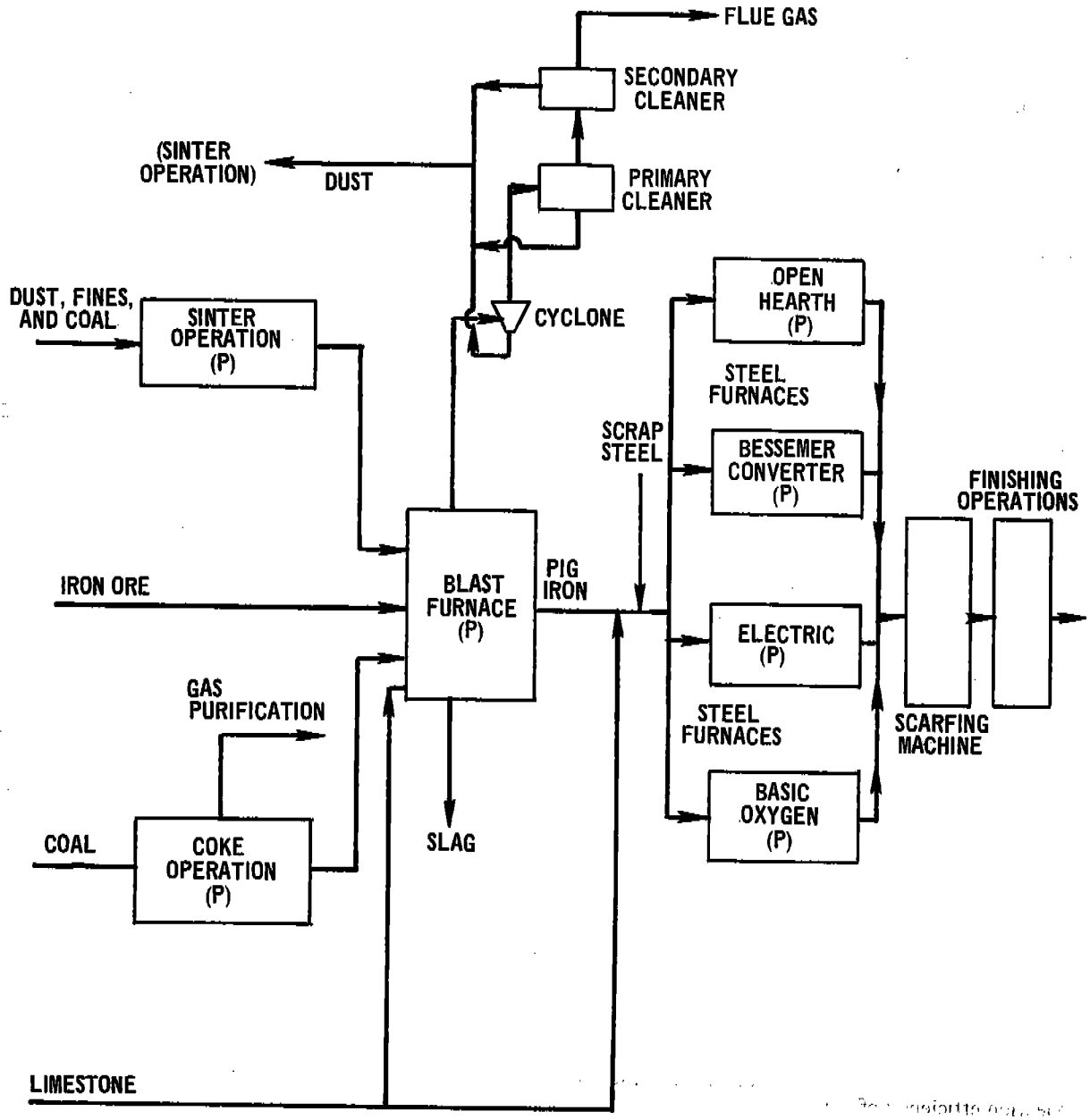

Figure 7.5-1. Basic flow diagram of iron and steel processes. "P" denotes a major source of particulate emissions.

Emissions from open hearths consist of particulates and small amounts of fluorides when fluoride-bearing ore, fluorspar, is used in the charge. The particulates are composed primarily of iron oxides, with a large portion (45 to 50 percent) in the 0 to 5 micrometer size range. The quantity of dust in the off-gas increases considerably when oxygen lancing is used (see Table 7.5-1).

The devices most commonly used to control the iron oxide and fluoride particulates are electrostatic precipitators and high-energy venturi scrubbers, both of which effectively remove about 98 percent of the particulates. The scrubbers also remove nearly 99 percent of the gaseous fluorides and 95 percent of the particulate fluorides.

7.5.1.2.2 Basic Oxygen Furnaces[2,3]—The basic oxygen process, also called the Linz-Donawitz (LD) process, is employed to produce steel from a furnace charge composed of approximately 70 percent molten blast-furnace metal and 30 percent scrap metal by use of a stream of commercially pure oxygen to oxidize the impurities, principally carbon and silicon.

The reaction that converts the molten iron into steel generates a considerable amount of particulate matter, largely in the form of iron oxide, although small amounts of fluorides may be present. Probably as the result of the tremendous agitation of the molten bath by the oxygen lancing, the dust loadings vary from 5 to 8 grains per standard cubic foot (11 to 18 grams/standard cubic meter) and high percentages of the particles are in the 0 to 5 micrometer size range.

In addition, tremendous amounts of carbon monoxide (140 lb/ton of steel and more) are generated by the reaction. Combustion in the hood, direct flaring, or some other means of ignition is used in the stack to reduce the actual carbon monoxide emissions to less than 3 lb/ton (1.5 kg/MT).

The particulate control devices used are venturi scrubbers and electrostatic precipitators, both of which have overall efficiencies of 99 percent. Furthermore, the scrubbers are 99 percent efficient in removing gaseous fluorides (see Table 7.5-1).

7.5.1.2.3 Electric Arc Furnaces[2,3]—Electric furnaces are used primarily to produce special alloy steels or to melt large amounts of scrap for reuse. Heat is furnished by direct-arc electrodes extending through the roof of the furnace. In recent years, oxygen has been used to increase the rate of uniformity of scrap-melt-down and to decrease power consumption.

The particulates, primarily oxides of iron, manganese, aluminum, and silicon, that evolve when steel is being processed in an electric furnace result from the exposure of molten steel to extremely high temperatures. The quantity of these emissions is a function of the cleanliness and composition of the scrap metal charge, the refining procedure used (with or without oxygen lancing), and the refining time. As with open hearths, many of the particulates (40 to 75 percent) are in the 0 to 5 micrometer range. Additionally, moderate amounts of carbon monoxide (15 to 20 lb/ton) are emitted.

Particulate control devices most widely used with electric furnaces are venturi scrubbers, which have a collection efficiency of approximately 98 percent, and bag filters, which have collection efficiencies of 99 percent or higher.

7.5.1.3 Scarfing[3]—Scarfing is a method of surface preparation of semi-finished steel. A scarfing machine removes surface defects from the steel billets and slabs, before they are shaped or rolled, by applying jets of oxygen to the surface of the steel, which is at orange heat, thus removing a thin upper layer of the metal by rapid oxidation.

Emissions from scarfing operations consist of iron oxide fumes. The rate at which particulates are emitted is dependent on the condition of the billets or slabs and the amount of metal removal required (Table 7.5-1). Emission control techniques for the removal of fine particles vary among steel producers, but one of the most commonly used devices is the electrostatic precipitator, which is approximately 94 percent efficient.

Table 7.5-1. EMISSION FACTORS FOR IRON AND STEEL MILLS[a,b]
EMISSION FACTOR RATINGS: A (PARTICULATES AND CARBON MONOXIDE)
C (FLUORIDES)

Type of operation	Total particulates		Carbon monoxide		Fluorides[c,d]			
					Gaseous (HF)		Particulates (CaF_2)	
	lb/ton	kg/MT	lb/ton	kg/MT	lb/ton	kg/MT	lb/ton	kg/MT
Pig iron production								
Blast furnaces[e]								
Ore charge, uncontrolled	110	55	1750 (1400 to 2100)	875 (700 to 1050)	–	–	–	–
Agglomerates charge, uncontrolled	40	20	–	–	–	–	–	–
Total, uncontrolled	150 (130 to 200)	75 (65 to 100)	1750 (1400 to 2100)	875 (700 to 1050)	–	–	–	–
Settling chamber or dry cyclone	60	30	–	–	–	–	–	–
Plus wet scrubber	15	7.5	–	–	–	–	–	–
Plus venturi or electrostatic precipitator	1.5	0.75	–	–	–	–	–	–
Sintering[f]								
Windbox, uncontrolled[g]	20	10	–	–	–	–	–	–
Dry cyclone	2.0	1.0	–	–	–	–	–	–
Dry cyclone plus electrostatic precipitator	1.0	0.5	–	–	–	–	–	–
Dry cyclone plus wet scrubber	0.04	0.02	–	–	–	–	–	–
Discharge, uncontrolled	22	11	44	22	–	–	–	–
Dry cyclone	2.2	1.1	44	22	–	–	–	–
Dry cyclone plus electrostatic precipitator	0.11	0.055	44	22	–	–	–	–
Steel production								
Open hearth[h]								
No oxygen lance, uncontrolled	8.3 (5.8 to 12.0)	4.15 (2.9 to 6.0)	–	–	0.100	0.05	0.030	0.015
Venturi scrubber	0.17	0.085	–	–	0.011	0.0055	0.0015	0.0008
Electrostatic precipitator	0.17	0.085	–	–	0.100	0.050	0.0006	0.0003
Oxygen lance, uncontrolled	17.4 (9.3 to 22.0)	8.7 (4.65 to 11.0)	–	–	0.100	0.050	0.030	0.015

Table 7.5-1 (continued). EMISSION FACTORS FOR IRON AND STEEL MILLS[a,b]
EMISSION FACTOR RATINGS: A (PARTICULATES AND CARBON MONOXIDE)
C (FLUORIDES)

Type of operation	Total particulates		Carbon monoxide		Fluorides[c,d]			
					Gaseous (HF)		Particulates (CaF_2)	
	lb/ton	kg/MT	lb/ton	kg/MT	lb/ton	kg/MT	lb/ton	kg/MT
Venturi scrubber	0.17	0.085	–	–	0.011	0.0055	0.0015	0.0008
Electrostatic precipitator	0.35	0.175	–	–	0.100	0.050	0.0006	0.0003
Basic oxygen, uncontrolled	51 (32 to 86)	25.5 (16 to 43)	139 (104 to 237)	69.5 (52.0 to 118.5)	Neg	Neg	0.200	0.100
Venturi scrubber	0.51	0.255	–	–	–	–	0.002	0.001
Electrostatic precipitator	0.51	0.255	–	–	–	–	0.002	0.001
Spray chamber	15.3	7.65	–	–	–	–	0.060	0.030
Electric arc[j]								
No oxygen lance[k], uncontrolled	9.2 (7.0 to 10.6)	4.6 (3.5 to 5.3)	18	9	0.012	0.006	0.238	0.119
Venturi scrubber	0.18 (0.28 to 0.74)	0.09 (0.14 to 0.37)	18	9	0.0018	0.0009	0.011	0.0055
Electrostatic precipitator			18	9	0.0018	0.0009	0.011	0.0055
Baghouse	0.09	0.045	18	9	0.012	0.006	0.011	0.0055
Oxygen lance[l], uncontrolled	11	5.5	18	9	0.012	0.006	0.0024	0.0012
Venturi scrubber	0.22 (0.33 to 0.88)	0.11 (0.165 to 0.44)	18	9	0.012	0.006	0.238	0.119
Electrostatic precipitator			18	9	0.0018	0.0009	0.011	0.0055
Baghouse	0.11	0.055	18	9	0.012	0.006	0.011	0.0055
Scarfing[m], uncontrolled	≤1	≤0.5	–	–	–	–	0.0024	0.0012
Electrostatic precipitator	≤0.06	≤0.03	–	–	–	–	–	–
Venturi scrubber	≤0.02	≤0.01	–	–	–	–	–	–

[a]Emission factors expressed as units per unit weight of metal produced.
[b]Numbers in parentheses after uncontrolled values are ranges. Controlled factors are calculated using average uncontrolled factors and observed equipment efficiencies.
[c]Reference 4.
[d]Value included in "Total Particulates" figure.
[e]References 2, 3, and 5.
[f]References 3.
[g]Approximately 3 pounds of sulfur dioxide per ton (1.5 kg/MT) of sinter is produced at windbox.
[h]References, 2, 3, 5, and 6.
[i]References 2 through 10.
[j]Values are for carbon type electric are furnaces. For alloy type furnaces, multiply given values by 2.80.
[k]References 2 through 5.
[l]References 3 and 4.
[m]Factors are based on operating experience and engineering judgment.

References for Section 7.5

1. Bramer, Henry C. Pollution Control in the Steel Industry. Environmental Science and Technology. p. 1004-1008, October 1971.

2. Celenza. C.J. Air Pollution Problems Faced by the Iron and Steel Industry. Plant Engineering. p. 60-63, April 30, 1970.

3. Compilation of Air Pollutant Emission Factors (Revised). Environmental Protection Agency, Office of Air Programs. Research Triangle Park, N.C. Publication Number AP-42. 1972.

4. Personal communication between Ernest Kirkendall, American Iron and Steel Institute, and John McGinnity, Environmental Protection Agency, Durham, N.C. September 1970.

5. Particulate Pollutant Systems Study, Vol. I. Midwest Research Institute, Kansas City, Mo. Prepared for Environmental Protection Agency, Office of Air Programs, Research Triangle Park, N.C., under Contract Number CPA 22-69-104. May 1971.

6. Walker, A.B. and R.F. Brown. Statistics on Utilization, Performance, and Economics of Electrostatic Precipitation for Control of Particulate Air Pollution. (Presented at 2nd International Clean Air Congress, International Union of Air Pollution Prevention Association, Washington, D.C. December 1970.)

7. Source Testing Report - EPA Task 2. Midwest Research Institute, Kansas City. Prepared for Environmental Protection Agency, Office of Air Program, Research Triangle Park, N.C., under Contract Number 68-02-0228. February 1972.

8. Source Testing Report - EPA Test 71-MM-24. Engineering Science, Inc., Washington, D.C. Prepared for Environmental Protection Agency, Office of Air Programs, Research Triangle Park, N.C., under Contract Number 68-02-0225. March 1972.

9. Source Testing Report - EPA Task 2. Rust Engineering Co., Birmingham, Ala. Prepared for Environmental Protection Agency, Office of Air Program, Research Triangle Park, N.C., under Contract Number CPA 70-132. April 1972.

10. Source Testing Report - EPA Task 4. Roy F. Weston, Inc., West Chester, Pa. Prepared for Environmental Protection Agency, Office of Air Programs, Research Triangle Park, N.C., under Contract Number 68-02-0231.

7.6 LEAD SMELTING

Revised by William M. Vatavuk

7.6.1 Process Description [1-3]

Lead is usually found in nature as a sulfide ore containing small amounts of copper, iron, zinc, and other trace elements. It is normally concentrated at the mine from an ore of 3 to 8 percent lead to an ore concentrate of 55 to 70 percent lead, containing from 13 to 19 percent free and uncombined sulfur by weight.

Normal practice for the production of lead metal from this concentrate involves the following operations (see Figure 7.6-1):

1. Sintering, in which the concentrate lead and sulfur are oxidized to produce lead oxide and sulfur dioxide. (Simultaneously, the charge material, comprised of concentrates, recycle sinter, sand, and other inert materials, is agglomerated to form a dense, permeable material called sinter.)
2. Reducing the lead oxide contained in the sinter to produce molten lead bullion.
3. Refining the lead bullion to eliminate any impurities.

Sinter is produced by means of a sinter machine, a continuous steel-pallet conveyor belt moved by gears and sprockets. Each pallet consists of perforated or slotted grates, beneath which are situated windboxes connected to fans that provide a draft on the moving sinter charge. Depending on the direction of this draft, the sinter machine is either of the updraft or downdraft type. Except for the draft direction, however, all machines are similar in design, construction, and operation.

The sintering reaction is autogenous and occurs at a temperature of approximately 1000°C:

$$2\,PbS + 3\,O_2 \rightarrow 2\,PbO + 2\,SO_2 \qquad (1)$$

Operating experience has shown that system operation and product quality are optimum when the sulfur content of the sinter charge is between 5 and 7 percent by weight. To maintain this desired sulfur content, sulfide-free fluxes such as silica and limestone, plus large amounts of recycled sinter and smelter residues are added to the mix. The quality of the product sinter is usually determined by its hardness (Ritter Index), which is inversely proportional to the sulfur content. Hard quality sinter (low sulfur content) is preferred because it resists crushing during discharge from the sinter machine. Conversely, undersized sinter will usually result from insufficient desulfurization and is recycled for further processing.

Of the two kinds of sintering machines used, the updraft design is superior for many reasons. First, the sinter bed height is more permeable (and, hence, can be greater) with an updraft machine, thereby permitting a higher production rate than that of a downdraft machine of similar dimensions. Secondly, the small amounts of elemental lead that form during sintering will solidify at their point of formation with updraft machines; whereas, in downdraft operation, the metal tends to flow downward and collect on the grates or at the bottom of the sinter charge, thus causing increased pressure drop and attendant reduced blower capacity. In addition, the updraft system exhibits the capability of producing sinter of higher lead content and requires less maintenance than the downdraft machine. Finally, and most important from an air pollution control standpoint, updraft sintering can produce a single strong SO_2 effluent stream from the operation, by use of weak gas recirculation. This, in turn, permits the more efficient and economical use of such control methods as sulfuric acid recovery plants.

Lead reduction is carried out in a blast furnace, basically a water-jacketed shaft furnace supported by a refractory base. Tuyeres, through which combustion air is admitted under pressure, are located near the bottom and are evenly spaced on either side of the furnace.

The furnace is charged with a mixture of sinter (80 to 90 percent of charge), metallurgical coke (8 to 14 percent of the charge), and other materials, such as limestone, silica, litharge, slag-forming constituents, and various recycled and clean-up materials. In the furnace the sinter is reduced to lead bullion; most of the impurities are

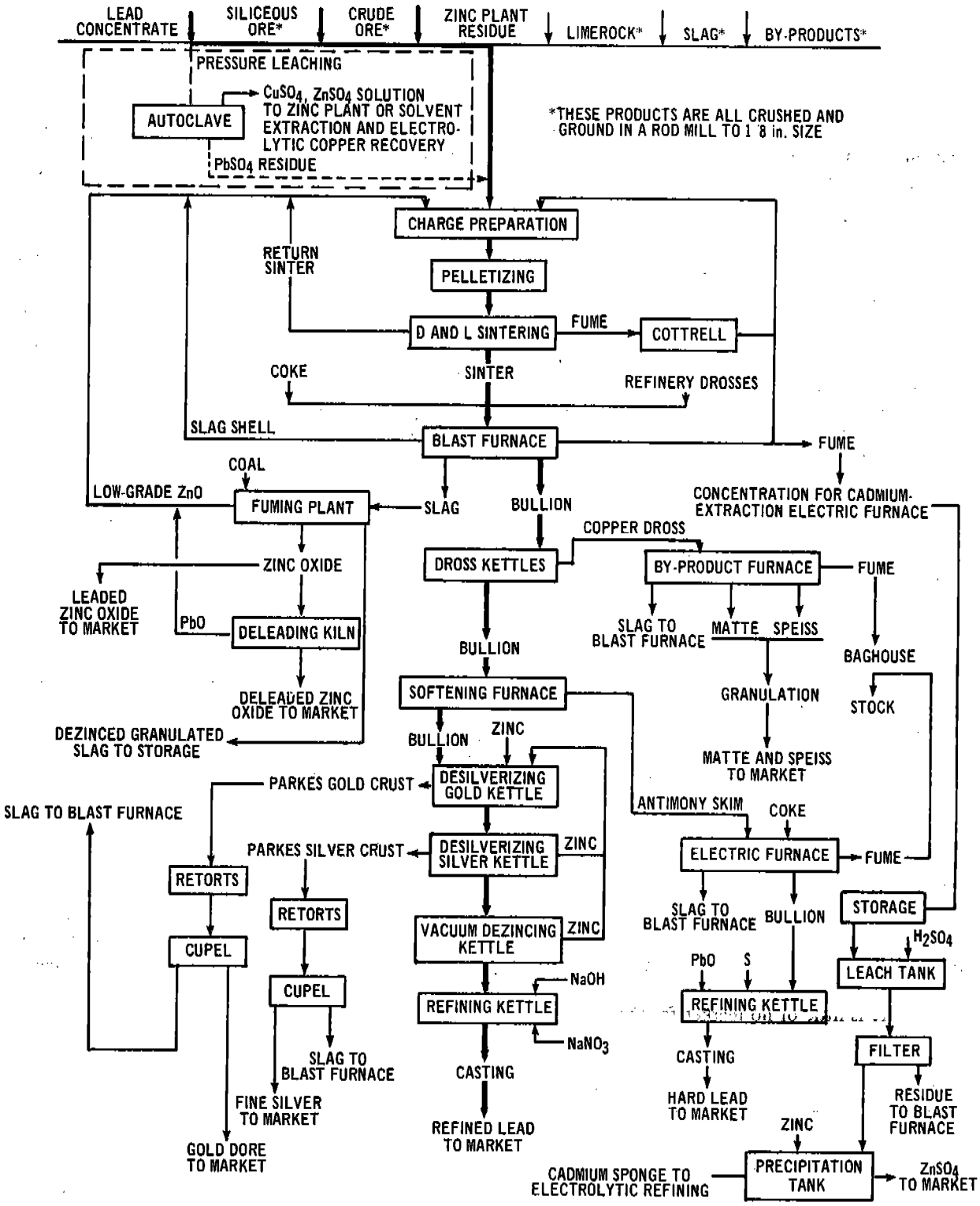

Figure 7.6-1. Typical flowsheet of pyrometallurgical lead smelting.[2]

eliminated in the slag. Solid products from the blast furnace generally separate into four layers: speiss (basically arsenic and antimony, the lightest material); matte (composed of copper sulfide and other metal sulfides); slag (primarily silicates); and lead bullion. The first three layers are combined as slag, which is continually collected from the furnace and either processed at the smelter for its metal content or shipped to treatment facilities.

A certain amount of SO_2 is also generated in blast furnaces due to the presence of small quantities of residual lead sulfide and lead sulfates in the sinter feed. The quantity of these emissions is a function of not only the residual sulfur content in the sinter, but of the amount of sulfur that is captured by copper and other impurities in the slag.

Rough lead bullion from the blast furnace usually requires preliminary treatment (drossing) in steel cast-iron kettles before undergoing refining operations. First, the bullion is cooled to 700 to 800°F; copper and small amounts of sulfur, arsenic, antimony, and nickel are removed from solution and collect on the surface as a dross. This dross, in turn, is treated in a reverberatory-type furnace where the copper and other metal impurities are further concentrated before being routed to copper smelters for their eventual recovery. Drossed lead bullion is further treated for copper removal by the addition of sulfur-bearing material and zinc and/or aluminum to lower the copper content to approximately 0.01 percent.

The final phase of smelting, the refining of the bullion is cast-iron kettles, occurs in five steps:

1. Removal of antimony, tin, and arsenic;
2. Removal of precious metals via the Parke's Process, in which zinc metal combines with gold and silver to form an insoluble intermetallic at operating temperatures;
3. Vacuum removal of zinc;
4. Bismuth removal using the Betterson Process, which involves the addition of calcium and magnesium, which in turn, form an insoluble compound with the bismuth that is skimmed from the kettle; and
5. Removal of remaining traces of metal impurities by addition of NaOH and $NaNO_3$.

The final refined lead, commonly of 99.99 to 99.999 percent purity, is then cast into 100-pound pigs before shipment.

7.6.2 Emissions and Controls [1,2]

Each of the three major lead smelting operations generates substantial quantities of particulates and/or sulfur dioxide.

Nearly 85 percent of the sulfur present in the lead ore concentrate is eliminated in the sintering operation. In handling these process offgases, either a single weak stream is taken from the machine hood at less than 2 percent SO_2 or two streams are taken—one weak stream (<0.5 percent SO_2) from the discharge end of the machine and one strong stream (5 to 7 percent SO_2) taken from the feed end. Single stream operation is generally used when there is little or no market for the recovered sulfur, so that the uncontrolled weak SO_2 stream is emitted to the atmosphere. Where there is a potential sulfur market, however, the strong stream is sent to a sulfuric acid plant, and the weak stream is vented after particulate removal.

When dual gas stream operation is used with updraft sinter machines, the weak gas stream can be recirculated through the bed to mix with the strong gas stream, resulting in a single stream with an SO_2 concentration of about 6 percent. This technique has the overall effect of decreasing machine production capacity, but does permit a more convenient and economical recovery of the SO_2 via sulfuric acid plants and other control methods.

Without weak gas recirculation, the latter portion of the sinter machine acts as a cooling zone for the sinter and consequently assists in the reduction of dust formation during product discharge and screening. However,

when recirculation is used, the sinter is usually discharged in a relatively hot state (400 to 500°C), with an attendant increase in particulate formation. Methods for reducing these dust quantities include recirculation of off-gases through the sinter bed, relying upon the filtering effect of the latter, or ducting the gases from the discharge through a particulate collection device directly to the atmosphere. Because reaction activity has ceased in the discharge area in these cases, these latter gases contain little SO_2.

The particulate emissions from sinter machines consist of from 5 to 20 percent of the concentrated ore feed. When expressed in terms of product weight, these emissions are an estimated 106.5 kg/MT (213 lb/ton) of lead produced. This value, along with other particulate and SO_2 factors, appears in Table 7.6-1.

Table 7.6-1. EMISSION FACTORS FOR PRIMARY LEAD SMELTING PROCESSES WITHOUT CONTROLS[a]
EMISSION FACTOR RATING: B

Process	Particulates		Sulfur dioxide	
	kg/MT	lb/ton	kg/MT	lb/ton
Ore crushing[b]	1.0	2.0	–	–
Sintering (updraft)[c]	106.5	213.0	275.0	550.0
Blast furnace[b]	180.5	361.0	22.5	45.0
Dross reverberatory furnace[b]	10.0	20.0	Neg	Neg
Materials handling[b]	2.5	5.0	–	–

[a]Ore crushing emission factors expressed as kg/MT (lb/ton) of crushed ore; all other emission factors expressed as kg/MT (lb/ton) of lead product.
[b]Reference 2.
[c]References 1, 4, 5, and 6.
[d]References 1, 2, and 7.

Typical material balances from domestic lead smelters indicate that about 10 to 20 percent of the sulfur in the ore concentrate fed to the sinter machine is eliminated in the blast furnace. However, only *half* of this amount (about 7 percent of the total) is emitted as SO_2; the remainder is captured by the slag. The concentration of this SO_2 stream can vary from 500 to 2500 ppm by volume, depending on the amount of dilution air injected to oxidize the carbon monoxide and cool the stream before baghouse treatment for particulate removal.

Particulate emissions from blast furnaces contain many different kinds of material, including a range of lead oxides, quartz, limestone, iron pyrites, iron-lime-silicate slag, arsenic, and other metals-containing compounds associated with lead ores. These particles readily agglomerate, are primarily submicron in size, difficult to wet, cohesive, and will bridge and arch in hoppers. On the average, this dust loading is quite substantial (see Table 7.6-1).

Virtually no sulfur dioxide emissions are associated with the various refining operations. However, a small amount of particulates is generated by the dross reverberatory furnace (10 kg/MT of lead).

Finally, minor quantities of particulates are generated by ore crushing and materials handling operations. These emission factors are also presented in Table 7.6-1.

Methods used to control emission from lead smelter operations fall into two broad categories—particulate and sulfur dioxide control techniques. The most commonly employed high-efficiency particulate control devices are fabric filters and electrostatic precipitators, which, in turn, often follow centrifugal collectors and tubular coolers (pseudogravity collectors). Three of the six lead smelters presently operating in the United States use single absorption sulfuric acid plants for control of sulfur dioxide emissions from sinter machines and, occasionally, blast furnaces. Other technically feasible SO_2 control methods are elemental sulfur recovery plants and

dimethylaniline (DMA) and ammonia absorption processes. These methods and their representative control efficiencies are listed in Table 7.6-2.

Table 7.6-2. EFFICIENCIES OF REPRESENTATIVE CONTROL DEVICES USED WITH PRIMARY LEAD SMELTING OPERATIONS

Control device or method	Control device efficiency range	
	Particulates	Sulfur dioxide
Centrifugal collector (e.g., cyclone)[a]	80 to 90	–
Electrostatic precipitator[a]	95 to 99	–
Fabric filter[a]	95 to 99	–
Tubular cooler (associated with waste heat boiler)[a]	70 to 80	–
Sulfuric acid plant (single contact)[b,c]	99.5 to 99.9	96 to 97
Elemental sulfur recovery plant[b,d]	–	90
Dimethylaniline (DMA) absorption process[b,e]	–	95 to 98.8
Ammonia absorption process[b,f]	–	92 to 95.2

[a]Reference 2.
[b]Reference 1.
[c]High particulate control efficiency due to action of acid plant gas precleaning system. Range of SO_2 efficiencies based on inlet and outlet concentrations of 5 to 7 percent and 2000 ppm, respectively.
[d]Collection efficiency for a two-stage, uncontrolled Claus-type plant. Refer to Section 5.18 for more information.
[e]Range of SO_2 efficiencies based on inlet and outlet concentrations of 4 to 6 percent and 500 to 3000 ppm, respectively.
[f]Range of SO_2 efficiencies based on inlet and outlet concentrations of 1.5 to 2.5 percent and 1200 ppm, respectively.

References for Section 7.6

1. Darvin, Charles and Frederick Porter. Background Information for Proposed New Source Performance Standards for Primary Copper, Zinc, and Lead Smelters. (Draft). Emission Standards and Engineering Division, U.S. Environmental Protection Agency, Research Triangle Park, N.C. 1973.

2. Handbook of Emissions, Effluents, and Control Practices for Stationary Particulate Pollution Sources. Midwest Research Institute, Kansas City, Missouri. Prepared for U.S. Environmental Protection Agency, Research Triangle Park, N.C. under Contract Number CPA 22-69-104. November 1970.

3. Worchester, A. and D. H. Beilstein. Lead–Progress and Prognosis: The State of the Art: Lead Recovery. (Presented at 10th Annual Meeting of Metallurgical Society of AIME. New York. Paper No. A71-87. March 1971.)

4. Trip report memorandum. T. J. Jacobs to Emission Standards and Engineering Division, Office of Air Quality Planning and Standards, U.S. Environmental Protection Agency, Research Triangle Park, N.C. Subject: Plant visit to St. Joe Minerals Corporation Lead Smelter at Herculaneum, Missouri. October 21, 1971.

5. Trip report memorandum. T. J. Jacobs to Emission Standards and Engineering Division, Office of Air Quality Planning and Standards, U.S. Environmental Protection Agency, Research Triangle Park, N.C. Subject: Plant visit to Amax Lead Company of Missouri Lead Smelter at Boss, Missouri. October 28, 1971.

6. Personal communication from R. B. Paul, Plant Manager, American Smelting and Refining Company Lead Smelter at Glover, Missouri, to Regional Administrator, EPA Region VII, Kansas City, Missouri. April 3, 1973.

7. Source Testing Report: Emissions from a Primary Lead Smelter Blast Furnace. Midwest Research Institute, Kansas City, Missouri. Prepared for Office of Air Quality Planning and Standards, U.S. Environmental Protection Agency, Research Triangle Park, N.C. Report No. 72-MM-14. May 1972.

7.7 ZINC SMELTING

7.7.1 Process Description[1,2]

As stated previously, most domestic zinc comes from zinc and lead ores. Another important source of raw material for zinc metal has been zinc oxide from fuming furnaces. For efficient recovery of zinc, sulfur must be removed from concentrates to a level of less than 2 percent. This is done by fluidized beds or multiple-hearth roasting occasionally followed by sintering. Metallic zinc can be produced from the roasted ore by the horizontal or vertical retort process or by the electrolytic process if a high-purity zinc is needed.

7.7.2 Emissions and Controls[1,2]

Dust, fumes, and sulfur dioxide are emitted from zinc concentrate roasting or sintering operations. Particulates may be removed by electrostatic precipitators or baghouses. Sulfur dioxide may be converted directly into sulfuric acid or vented. Emission factors for zinc smelting are presented in Table 7.7-1.

Table 7.7-1. EMISSION FACTORS FOR PRIMARY ZINC SMELTING WITHOUT CONTROLS[a]
EMISSION FACTOR RATING: B

Type of operation	Particulates		Sulfur oxides	
	lb/ton	kg/MT	lb/ton	kg/MT
Roasting (multiple-hearth)[b]	120	60	1100	550
Sintering[c]	90	45	d	d
Horizontal retorts[e]	8	4	–	–
Vertical retorts[e]	100	50	–	–
Electrolytic process	3	1.5	–	–

[a]Approximately 2 unit weights of concentrated ore are required to produce 1 unit weight of zinc metal. Emission factors expressed as units per unit weight of concentrated ore produced.
[b]References 3 and 4.
[c]References 2 and 3.
[d]Included in SO_2 losses from roasting.
[e]Reference 3.

References for Section 7.7

1. Duprey, R. L. Compilation of Air Pollutant Emission Factors. U.S. DHEW, PHS, National Center for Air Pollution Control. Durham, N.C. PHS Publication Number 999-AP-42. 1968. p. 26-28.

2. Stern, A. (ed.). Sources of Air Pollution and Their Control. In: Air Pollution, Vol. III, 2nd Ed. New York, Academic Press. 1968. p. 182-186.

3. Sallee, G. Private communication on Particulate Pollutant Study. Midwest Research Institute. Kansas City, Mo. Prepared for National Air Pollution Control Administration, Durham, N.C., under Contract Number 22-69-104. June 1970.

4. Systems Study for Control of Emissions in the Primary Nonferrous Smelting Industry. 3 Volumes, San Francisco, Arthur G. McKee and Company, June 1969.

7.8 SECONDARY ALUMINUM OPERATIONS

7.8.1 Process Description[1,2]

Secondary aluminum operations involve making lightweight metal alloys for industrial castings and ingots. Copper, magnesium, and silicon are the most common alloying constituents. Aluminum alloys for castings are melted in small crucible furnaces charged by hand with pigs and foundry returns. Larger melting operations use open-hearth reverberatory furnaces charged with the same type of materials but by mechanical means. Small operations sometimes use sweating furnaces to treat dirty scrap in preparation for smelting.

To produce a high-quality aluminum product, fluxing is practiced to some extent in all secondary aluminum melting. Aluminum fluxes are expected to remove dissolved gases and oxide particles from the molten bath. Sodium and various mixtures of potassium or sodium chloride with cryolite and chlorides of aluminum zinc are used as fluxes. Chlorine gas is usually lanced into the molten bath to reduce the magnesium content by reacting to form magnesium and aluminum chlorides.[3,4]

7.8.2 Emissions[2]

Emissions from secondary aluminum operations include fine particulate matter and gaseous chlorine. A large part of the material charged to a reverberatory furnace is low-grade scrap and chips. Paint, dirt, oil, grease, and other contaminants from this scrap cause large quantities of smoke and fumes to be discharged. Even if the scrap is clean, large surface-to-volume ratios require the use of more fluxes, which can cause serious air pollution problems. Table 7.8-1 presents particulate emission factors for secondary aluminum operations.

Table 7.8-1. PARTICULATE EMISSION FACTORS FOR SECONDARY ALUMINUM OPERATIONS[a]
EMISSION FACTOR RATING: B

Type of operation	Uncontrolled		Baghouse		Electrostatic precipitator	
	lb/ton	kg/MT	lb/ton	kg/MT	lb/ton	kg/MT
Sweating furnace	14.5	7.25	3.3	1.65	–	–
Smelting						
Crucible furnace	1.9	0.95	–	–	–	–
Reverberatory furnace	4.3	2.15	1.3	0.65	1.3	0.65
Chlorination station[b]	1000	500	50	25	–	–

[a]Reference 5. Emission factors expressed as units per unit weight of metal processed.
[b]Pounds per ton (kg/MT) of chlorine used.

References for Section 7.8

1. Duprey, R. L. Compilation of Air Pollutant Emission Factors. U. S. DHEW, PHS, National Center for Air Pollution Control. Durham, N. C. PHS Publication Number 999-AP-42. 1968. p. 29.

2. Hammond, W.F. and H. Simon. Secondary Aluminum-Melting Processes. In: Air Pollution Engineering Manual. Danielson, J. A. (ed.). U. S. DHEW, PHS, National Center for Air Pollution Control. Cincinnati, Ohio. Publication Number 999-AP-40. 1967. p. 284-290.

3. Technical Progress Report: Control of Stationary Sources. Los Angeles County Air Pollution Control District. *1*: April 1960.

4. Allen, G. L. et al. Control of Metallurgical and Mineral Dusts and Fumes in Los Angeles County. Bureau of Mines, Washington, D. C. Information Circular Number 7627. April 1952.

5. Hammond, W. F. and S. M. Weiss. Unpublished report on air contaminant emissions from metallurgical operations in Los Angeles County. Los Angeles County Air Pollution Control District. (Presented at Air Pollution Control Institute, July 1964.)

7.9 BRASS AND BRONZE INGOTS (COPPER ALLOYS)

7.9.1 Process Description[1]

Obsolete domestic and industrial copper-bearing scrap is the basic raw material of the brass and bronze ingot industry. The scrap frequently contains any number of metallic and nonmetallic impurities, which can be removed by such methods as hand sorting, magnetizing, heat methods such as sweating or burning, and gravity separation in a water medium.

Brass and bronze ingots are produced from a number of different furnaces through a combination of melting, smelting, refining, and alloying of the processed scrap material. Reverberatory, rotary, and crucible furnaces are the ones most widely used, and the choice depends on the size of the melt and the alloy desired. Both the reverberatory and the rotary furnaces are normally heated by direct firing, in which the flame and gases come into direct contact with the melt. Processing is essentially the same in any furnace except for the differences in the types of alloy being handled. Crucible furnaces are usually much smaller and are used principally for special-purpose alloys.

7.9.2 Emissions and Controls[1]

The principal source of emissions in the brass and bronze ingot industry is the refining furnace. The exit gas from the furnace may contain the normal combustion products such as fly ash, soot, and smoke. Appreciable amounts of zinc oxide are also present in this exit gas. Other sources of particulate emissions include the preparation of raw materials and the pouring of ingots.

The only air pollution control equipment that is generally accepted in the brass and bronze ingot industry is the baghouse filter, which can reduce emissions by as much as 99.9 percent. Table 7.9-1 summarizes uncontrolled emissions from various brass and bronze melting furnaces.

Table 7.9-1. PARTICULATE EMISSION FACTORS FOR BRASS AND BRONZE MELTING FURNACES WITHOUT CONTROLS[a]
EMISSION FACTOR RATING: A

Type of furnace	Uncontrolled emissions[b]	
	lb/ton	kg/MT
Blast[c]	18	9
Crucible	12	6
Cupola	73	36.5
Electric induction	2	1
Reverberatory	70	35
Rotary	60	30

[a]Reference 1. Emission factors expressed as units per unit weight of metal charged.
[b]The use of a baghouse can reduce emissions by 95 to 99.6 percent.
[c]Represents emissions following precleaner.

Reference for Section 7.9

1. Air Pollution Aspects of Brass and Bronze Smelting and Refining Industry. U. S. DHEW, PHS, EHS, National Air Pollution Control Administration. Raleigh, N. C. Publication Number AP-58. November 1969.

7.10 GRAY IRON FOUNDRY

7.10.1 Process Description[1]

Three types of furnaces are used to produce gray iron castings: cupolas, reverberatory furnaces, and electric induction furnaces. The cupola is the major source of molten iron for the production of castings. In operation, a bed of coke is placed over the sand bottom in the cupola. After the bed of coke has begun to burn properly, alternate layers of coke, flux, and metal are charged into the cupola. Combustion air is forced into the cupola, causing the coke to burn and melt the iron. The molten iron flows out through a taphole.

Electric furnaces are commonly used where special alloys are to be made. Pig iron and scrap iron are charged to the furnace and melted, and alloying elements and fluxes are added at specific intervals. Induction furnaces are used where high-quality, clean metal is available for charging.

7.10.2 Emissions[1]

Emissions from cupola furnaces include gases, dust, fumes, and smoke and oil vapors. Dust arises from dirt on the metal charge and from fines in the coke and limestone charge. Smoke and oil vapor arise primarily from the partial combustion and distillation of oil from greasy scrap charged to the furnace. Also, the effluent from the cupola furnace has a high carbon monoxide content that can be controlled by an afterburner. Emissions from reverberatory and electric induction furnaces consist primarily of metallurgical fumes and are relatively low. Table 7.10-1 presents emission factors for the manufacture of iron castings.

Table 7.10-1. EMISSION FACTORS FOR GRAY IRON FOUNDRIES[a,b,c]
EMISSION FACTOR RATING: B

Type of furnace	Particulates		Carbon monoxide	
	lb/ton	kg/MT	lb/ton	kg/MT
Cupola				
Uncontrolled	17	8.5	145[c,d]	72.5[c,d]
Wet cap	8	4	–	–
Impingement scrubber	5	2.5	–	–
High-energy scrubber	0.8	0.4	–	–
Electrostatic precipitator	0.6	0.3	–	–
Baghouse	0.2	0.1	–	–
Reverberatory	2	1	–	–
Electric induction	1.5	0.75	–	–

[a]References 2 through 5. Emission factors expressed as units per unit weight of metal charged.

[b]Approximately 85 percent of the total charge is metal. For every unit weight of coke in the charge, 7 unit weights of gray iron are produced.

[c]Reference 6.

[d]A well-designed afterburner can reduce emissions to 9 pounds per ton (4.5 kg/MT) of metal charged.[2]

References for Section 7.10

1. Hammond, W. F. and J. T. Nance. Iron Castings. In: Air Pollution Engineering Manual. Danielson, J. A. (ed.). U.S. DHEW, PHS, National Center for Air Pollution Control. Cincinnati, Ohio. Publication Number 999-AP-40. 1967. p. 258-268.

2. Hammond, W. F. and S. M. Weiss. Unpublished report on air contaminant from emissions metallurgical operations in Los Angeles County. Los Angeles County Air Pollution Control District. (Presented at Air Pollution Control Institute, July 1964).

3. Crabaugh, H. C. et al. Dust and Fumes from Gray Iron Foundries: How They Are Controlled in Los Angeles County. Air Repair. *4*(3): November 1954.

4. Hammond, W. F., and J. T. Nance. Iron Castings. In: Air Pollution Engineering Manual. Danielson, J. A. (ed.). U.S. DHEW, PHS. National Center for Air Pollution Control. Cincinnati, Ohio. Publication Number 999-AP-40. 1967. p. 260.

5. Kane, J. M. Equipment for Cupola Control. American Foundryman's Society Transactions. *64*:525-531. 1956.

6. Air Pollution Aspects of the Iron Foundry Industry. A. T. Kearney and Company. Prepared for Environmental Protection Agency, Research Triangle Park, N.C., under Contract Number CPA 22-69-106. February 1971.

7.11 SECONDARY LEAD SMELTING

Revised by William M. Vatavuk

7.11.1 Process Description [1-3]

In the secondary smelting, refining, and alloying of lead, the three types of furnace most commonly used are reverberatory, blast or cupola, and pot. The grade of metal to be produced—soft, semisoft, or hard—dictates the type of funace to be used.

Used for the production of semisoft lead, the reverberatory furnace reclaims this metal from a charge of lead scrap, battery plates, oxides, drosses, and lead residues. The furnace consists of an outer shell built in the shape of a rectangular box lined with refractory brick. To provide heat for melting, the charge gas or oil-fired burners are usually placed at one end of the furnace, and the material to be melted is charged through an opening in the shell.

The charge is placed in the furnace in such a manner as to keep a small mound of unmelted material on top of the bath. Continuously, as this mound becomes molten at the operating temperature (approximately 1250°C), more material is charged. Semisoft lead is tapped off periodically as the level of the metal rises in the furnace. The amount of metal recovered is about 50 to 60 kilograms per square meter of hearth area per hour.

A similar kind of furnace—the revolving (rotary) reverberatory—is used at several European installations for the recovery of lead from battery scrap and lead sulfate sludge. Its charge makeup and operating characteristics are identical to the reverberatories used in the United States, except that the furnace slowly revolves as the charge is heated.

The blast (cupola) furnace, used to produce "hard" lead, is normally charged with the following: rerun slag from previous runs (4.5 percent); cast-iron scrap (4.5 percent); limestone (3 percent); coke (5.5 percent); and drosses from pot furnace refining, oxides, and reverberatory slag (82.5 percent). Similar to an iron cupola, the furnace consists of a steel sheet lined with refractory material. Air, under high pressure, is introduced at the bottom through tuyeres to permit combustion of the coke, which provides the heat and a reducing atmosphere.

As the charge material melts, limestone and iron form an oxidation-retardant flux that floats to the top, and the molten lead flows from the furnace into a holding pot at a nearly continuous rate. The rest (30 percent) of the tapped molten material is slag, 5 percent of which is retained for later rerun. From the holding pot, the lead is usually cast into large ingots called "buttons" or "sows."

Pot-type furnaces are used for remelting, alloying, and refining processes. These furnaces are usually gas fired and range in size from 1 to 45 metric tons capacity. Their operation consists simply of charging ingots of lead or alloy material and firing the charge until the desired product quality is obtained.

Refining processes most commonly employed are those for the removal of copper and antimony to produce soft lead, and those for the removal of arsenic, copper, and nickel to produce hard lead.

Figure 7.11-1 illustrates these three secondary lead smelting processes.

7.11.2 Emissions and Controls [1,2]

The emissions and controls from secondary lead smelting processes may be conveniently considered according to the type of furnace employed.

With the reverberatory furnaces, the temperature maintained is high enough to oxidize the sulfides present in the charge to sulfur dioxide and sulfur trioxide, which, in turn, are emitted in the exit gas. Also emitted are such particulates (at concentrations of 16 to 50 grams per cubic meter) as oxides, sulfides, and sulfates of lead, tin,

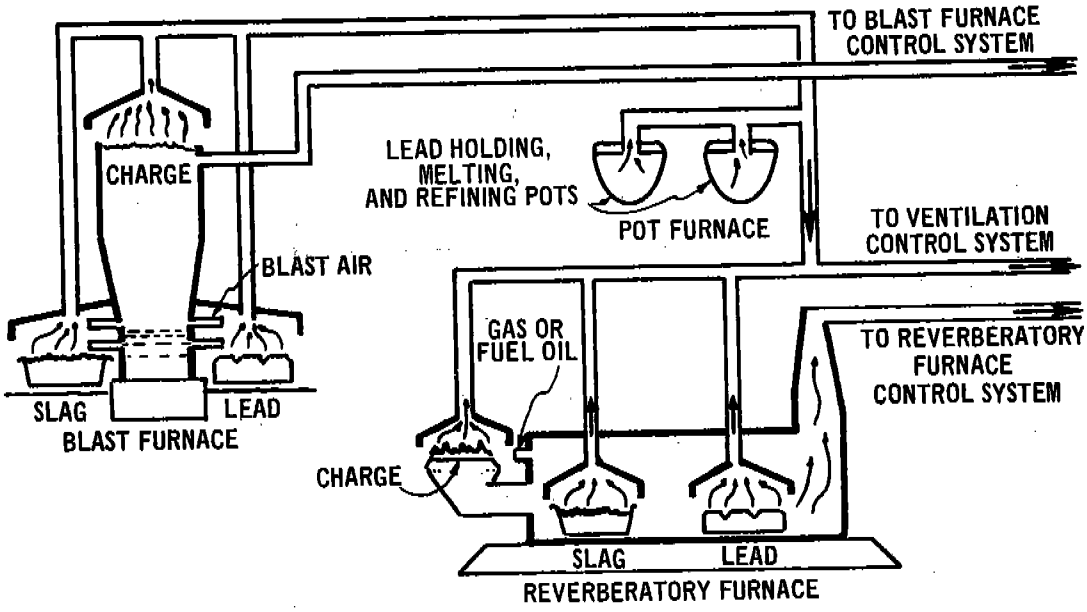

Figure 7.11-1. Secondary lead smelter processes.[4]

arsenic, copper, and antimony. The particles are nearly spherical and tend to agglomerate. Emission factors for reverberatory furnaces are presented in Table 7.11-1.

The most practical control system for a reverberatory furnace consists of a gas settling/cooling chamber and a fabric filter. This system effects a particulate removal of well in excess of 99 percent. Because of the potential presence of sparks and flammable material, a great deal of care is taken to control the temperature of the gas stream. In turn, the type of filter cloth selected depends upon stream temperature and such parameters as gas

Table 7.11-1. EMISSION FACTORS FOR SECONDARY LEAD SMELTING FURNACES WITHOUT CONTROLS[a]
EMISSION FACTOR RATING: B

Furnace type	Particulates		Sulfur dioxide	
	kg/MT	lb/ ton	kg/MT	lb/ton
Reverberatory[b]	73.5 (28.0 to 156.5)[c]	147 (56 to 313)	40.0 (35.5 to 44.0)	80 (71 to 88)
Blast (cupola)[d]	96.5 (10.5 to 190.5)	193 (21.0 to 381.0)	26.5 (9.0 to 55.0)	53.0 (18 to 110)
Pot[e]	0.4	0.8	Neg	Neg
Rotary reverberatory[f]	35.0	70.0	NA[g]	NA[g]

[a]All emission factors expressed in terms of kg/MT and lb/ton of metal charged to furnace.
[b]References 2, 5 through 7.
[c]Numbers in parentheses represent ranges of values obtained.
[d]References 2, 7 through 9.
[e]Reference 7.
[f]Reference 3.
[g]NA—no data available to make estimates.

stream corrosivity and the permeability and abrasion (or stress)-resisting characteristics of the cloth. In any case, the filtering velocity seldom exceeds 0.6 m/min. Table 7.11-2 offers a listing of control devices and their efficiencies.

Table 7.11-2. EFFICIENCIES OF PARTICULATE CONTROL EQUIPMENT ASSOCIATED WITH SECONDARY LEAD SMELTING FURNACES

Control device	Furnace type	Particulate control efficiency
Fabric filter[a]	Blast	98.4
	Reverberatory	99.2
Dry cyclone plus fabric filter[a]	Blast	99.0
Wet cyclone plus fabric filter[b]	Reverberatory	99.7
Settling chamber plus dry cyclone plus fabric filter[c]	Reverberatory	99.8
Venturi scrubber plus demister[d]	Blast	99.3

[a]Reference 2.
[b]Reference 5.
[c]Reference 6.
[d]Reference 8.

Combustion air from the tuyeres passing through the blast furnace charge conveys metal oxides, bits of coke, and other particulates present in the charge. The particulate is roughly 7 percent by weight of the total charge (up to 44 g/m^3). In addition to particulates, the stack gases also contain carbon monoxide. However, the carbon monoxide and any volatile hydrocarbons present are oxidized to carbon dioxide and water in the upper portion of the furnace, which effectively acts as an afterburner.

Fabric filters, preceded by radiant cooling columns, evaporative water coolers, or air dilution jets, are also used to control blast furnace particulates. Overall efficiencies exceeding 95 percent are common (see Table 7.11-2). Representative size distributions of particles in blast and reverberatory furnace streams are presented in Table 7.11-3.

Compared with the other furnace types, pot furnace emissions are low (see Table 7.11-1). However, to maintain a hygienic working environment, pot furnace off gases, usually along with emission streams from other furnaces, are directed to fabric filter systems.

Table 7.11-3. REPRESENTATIVE PARTICLE SIZE DISTRIBUTION FROM A COMBINED BLAST AND REVERBERATORY FURNACE GAS STREAM[a]

Size range, μm	Fabric filter catch, wt %
0 to 1	13.3
1 to 2	45.2
2 to 3	19.1
3 to 4	14.0
4 to 16	8.4

[a]Reference 1.
[b]These particles are distributed log-normally, according to the following frequency distribution:

$$f(D) = 1.56 \exp\left[\frac{-(\log D - 0.262)^2}{0.131}\right]$$

References for Section 7.11

1. Nance, J. T. and K. O. Luedtke. Lead Refining. In: Air Pollution Engineering Manual. 2nd Ed. Danielson, J. A. (ed.). Office of Air and Water Programs, U.S. Environmental Protection Agency, Research Triangle Park, N.C. Publication No. AP-42. May 1973. p. 299-304.

2. Williamson, John E., Joel F. Nenzell, and Wayne E. Zwiacher. A Study of Five Source Tests on Emissions from Secondary Lead Smelters. County of Los Angeles Air Pollution Control District. Environmental Protection Agency Order No. 2PO-68-02-3326. February 11, 1972.

3. Restricting Dust and Sulfur Dioxide Emissions from Lead Smelters (translated from German). Kommission Reinhaltung der Luft. Reproduced by U.S. DHEW, PHS. Washington, D.C. VDI Number 2285. September 1961.

4. Background Information for Proposed New Source Performance Standards: Secondary Lead Smelters and Refineries. Volume I, Main Text. Environmental Protection Agency, Office of Air and Water Programs, Office of Air Quality Planning and Standards. Research Triangle Park, N.C. June 1973.

5. Source Testing Report: Secondary Lead Plant Stack Emission Sampling. Batelle Columbus Laboratories, Columbus, Ohio. Prepared for Environmental Protection Agency, Office of Air and Water Programs, Research Triangle Park, N.C. Report Number 72-CI-8. July 1972.

6. Source Testing Report: Secondary Lead Plant Stack Emission Sampling. Battelle Columbus Laboratories, Columbus, Ohio. Prepared for Environmental Protection Agency, Office of Air and Water Programs, Research Triangle Park, N.C. Report Number 72-CI-7. August 1972.

7. Particulate Pollutant Systems Study, Vol. I. Midwest Research Institute, Kansas City, Mo. Prepared for Environmental Protection Agency, Office of Air and Water Programs, Research Triangle Park, N.C. May 1971.

8. Source Testing Report: Secondary Lead Plant Stack Emission Sampling. Battelle Columbus Laboratories, Columbus, Ohio. Prepared for Environmental Protection Agency, Office of Air and Water Programs, Research Triangle Park, N.C. Report Number 71-CI-33. August 1972.

9. Source Testing Report: Secondary Lead Plant Stack Emission Sampling. Battelle Columbus Laboratories, Columbus, Ohio. Prepared for Environmental Protection Agency, Office of Air and Water Programs, Research Triangle Park, N.C. Report Number 71-CI-34. July 1972.

7.12 SECONDARY MAGNESIUM SMELTING

7.12.1 Process Description[1]

Magnesium smelting is carried out in crucible or pot-type furnaces that are charged with magnesium scrap and fired by gas, oil, or electric heating. A flux is used to cover the surface of the molten metal because magnesium will burn in air at the pouring temperature (approximately 1500°F or 815°C). The molten magnesium, usually cast by pouring into molds, is annealed in ovens utilizing an atmosphere devoid of oxygen.

7.12.2 Emissions[1]

Emissions from magnesium smelting include particulate magnesium (MgO) from the melting, nitrogen oxides from the fixation of atmospheric nitrogen by the furnace temperatures, and sulfur dioxide losses from annealing oven atmospheres. Factors affecting emissions include the capacity of the furnace; the type of flux used on the molten material; the amount of lancing used; the amount of contamination of the scrap, including oil and other hydrocarbons; and the type and extent of control equipment used on the process. The emission factors for a pot furnace are shown in Table 7.12-1.

Table 7.12-1. EMISSION FACTORS FOR MAGNESIUM SMELTING EMISSION FACTOR RATING: C

Type of furnace	Particulates[a]	
	lb/ton	kg/MT
Pot furnace		
Uncontrolled	4	2
Controlled	0.4	0.2

[a]References 2 and 3. Emission factors expressed as units per unit weight of metal processed.

References for Section 7.12

1. Air Pollutant Emission Factors. Final Report. Resources Research, Inc. Reston, Va. Prepared for National Air Pollution Control Administration, Durham, N.C., under Contract Number CPA-22-69-119. April 1970.

2. Allen, G. L. et al. Control of Metallurgical and Mineral Dusts and Fumes in Los Angeles County. Department of the Interior, Bureau of Mines. Washington, D.C. Information Circular Number 7627. April 1952.

3. Hammond, W. F. Data on Non-Ferrous Metallurgical Operations. Los Angeles County Air Pollution Control District. November 1966.

7.13 STEEL FOUNDRIES

7.13.1 Process Description[1]

Steel foundries produce steel castings by melting steel metal and pouring it into molds. The melting of steel for castings is accomplished in one of five types of furnaces: direct electric-arc, electric induction, open-hearth, crucible, and pneumatic converter. The crucible and pneumatic converter are not in widespread use, so this section deals only with the remaining three types of furnaces. Raw materials supplied to the various melting furnaces include steel scrap of all types, pig iron, ferroalloys, and limestone. The basic melting process operations are furnace charging, melting, tapping the furnace into a ladle, and pouring the steel into molds. An integral part of the steel foundry operation is the preparation of casting molds, and the shakeout and cleaning of these castings. Some common materials used in molds and cores for hollow casting include sand, oil, clay, and resin. Shakeout is the operation by which the cool casting is separated from the mold. The castings are commonly cleaned by shot-blasting, and surface defects such as fins are removed by burning and grinding.

7.13.2 Emissions[1]

Particulate emissions from steel foundry operations include iron oxide fumes, sand fines, graphite, and metal dust. Gaseous emissions from foundry operations include oxides of nitrogen, oxides of sulfur, and hydrocarbons. Factors affecting emissions from the melting process include the quality and cleanliness of the scrap and the amount of oxygen lancing. The concentrations of oxides of nitrogen are dependent upon operating conditions in the melting unit, such as temperature and the rate of cooling of the exhaust gases. The concentration of carbon monoxide in the exhaust gases is dependent on the amount of draft on the melting furnace. Emissions from the shakeout and cleaning operations, mostly particulate matter, vary according to type and efficiency of dust collection. Gaseous emissions from the mold and baking operations are dependent upon the fuel used by the ovens and the temperature reached in these ovens. Table 7.13-1 summarizes the emission factors for steel foundries.

References for Section 7.13

1. Air Pollutant Emission Factors. Final Report. Resources Research, Inc. Reston, Va. Prepared for National Air Pollution Control Administration, Durham, N.C., under Contract Number CPA-22-69-119. April 1970.

2. Schueneman, J. J. et al. Air Pollution Aspects of the Iron and Steel Industry. National Center for Air Pollution Control. Cincinnati, Ohio. June 1963.

3. Foundry Air Pollution Control Manual, 2nd Ed. Des Plaines, Illinois, Foundry Air Pollution Control Committee. 1967. p. 8.

4. Coulter, R. S. Bethlehem Pacific Coast Steel Corporation, Personal communication (April 24, 1956). Cited in Cincinnati, Ohio. June 1963. Air Pollution Aspects of the Iron and Steel Industry. National Center for Air Pollution Control.

5. Coulter, R. S. Smoke, Dust, Fumes Closely Controlled in Electric Furnaces. Iron Age. *173*:107-110. January 14, 1954.

6. Los Angeles County Air Pollution Control District, Unpublished data as cited in Air Pollution Aspects of the Iron and Steel Industry. p. 109.

7. Kane, J. M. and R. V. Sloan. Fume-Control Electric Melting Furnaces. American Foundryman. *18*:33-35, November 1950.

Table 7.14-1. PARTICULATE EMISSION FACTORS FOR SECONDARY ZINC SMELTING[a]
EMISSION FACTOR RATING: C

Type of furnace	Emissions	
	lb/ton	kg/MT
Retort reduction	47	23.5
Horizontal muffle	45	22.5
Pot furnace	0.1	0.05
Kettle sweat furnace processing[b]		
Clean metallic scrap	Neg	Neg
General metallic scrap	11	5.5
Residual scrap	25	12.5
Reverberatory sweat furnace processing[b]		
Clean metallic scrap	Neg	Neg
General metallic scrap	13	6.5
Residual scrap	32	16
Galvanizing kettles	5	2.5
Calcining kiln	89	44.5

[a]References 2 through 4. Emission factors expressed as units per unit weight of metal produced.
[b]Reference 5.

References for Section 7.14

1. Air Pollutant Emission Factors. Final Report. Resources Research, Inc. Reston, Va. Prepared for National Air Pollution Control Administration, Durham, N.C., under Contract Number CPA-22-69-119. April 1970.

2. Allen, G. L. et al. Control of Metallurgical and Mineral Dusts and Fumes in Los Angeles County. U.S. Department of the Interior, Bureau of Mines. Washington, D.C. Information Circular Number 7627. April 1952.

3. Restricting Dust and Sulfur Dioxide Emissions from Lead Smelters (translated from German). Kommission Reinhaltung der Luft. Reproduced by U.S. DHEW, PHS. Washington, D.C. VDI Number 2285. September 1961.

4. Hammond, W. F. Data on Non-Ferrous Metallurgical Operations. Los Angeles County Air Pollution Control District. November 1966.

5. Herring, W. Secondary Zinc Industry Emission Control Problem Definition Study (Part I). Environmental Protection Agency, Office of Air Programs. Research Triangle Park, N.C. Publication Number APTD-0706. May 1971.

8. MINERAL PRODUCTS INDUSTRY

This section involves the processing and production of various minerals. Mineral processing is characterized by particulate emissions in the form of dust. Frequently, as in the case of crushing and screening, this dust is identical to the material being handled. Emissions also occur through handling and storing the finished product because this material is often dry and fine. Particulate emissions from some of the processes such as quarrying, yard storage, and dust from transport are difficult to control. Most of the emissions from the manufacturing processes discussed in this section, however, can be reduced by conventional particulate control equipment such as cyclones, scrubbers, and fabric filters. Because of the wide variety in processing equipment and final product, emissions cover a wide range; however, average emission factors have been presented for general use.

8.1 ASPHALTIC CONCRETE PLANTS

Revised by Dennis H. Ackerson and James H. Southerland

8.1.1 Process Description

Selecting and handling the raw material is the first step in the production of asphaltic concrete, a paving substance composed of a combination of aggregates uniformly mixed and coated with asphalt cement. Different applications of asphaltic concrete require different aggregate size distributions, so that the raw aggregates are crushed and screened at the quarries. The coarse aggregate usually consists of crushed stone and gravel, but waste materials, such as slag from steel mills or crushed glass, can be used as raw material.

Plants produce finished asphaltic concrete through either batch (Figure 8.1-1) or continuous (Figure 8.1-2) aggregate mixing operations. The raw aggregate is normally stock-piled near the plant at a location where the moisture content will stabilize between 3 and 5 percent by weight.

As processing for either type of operation begins, the aggregate is hauled from the storage piles and placed in the appropriate hoppers of the cold-feed unit. The material is metered from the hoppers onto a conveyor belt and is transported into a gas- or oil-fired rotary dryer. Because a substantial portion of the heat is transferred by radiation, dryers are equipped with flights that are designed to tumble the aggregate and promote drying.

As it leaves the dryer, the hot material drops into a bucket elevator and is transferred to a set of vibrating screens where it is classified by size into as many as four different grades. At this point it enters the mixing operation.

In a batch plant, the classified aggregate drops into one of four large bins. The operator controls the aggregate size distribution by opening individual bins and allowing the classified aggregate to drop into a weigh hopper until the desired weight is obtained. After all the material is weighed out, the sized aggregates are dropped into a mixer and mixed dry for about 30 seconds. The asphalt, which is a solid at ambient temperatures, is pumped from heated storage tanks, weighed, and then injected into the mixer. The hot, mixed batch is then dropped into a truck and hauled to the job site.

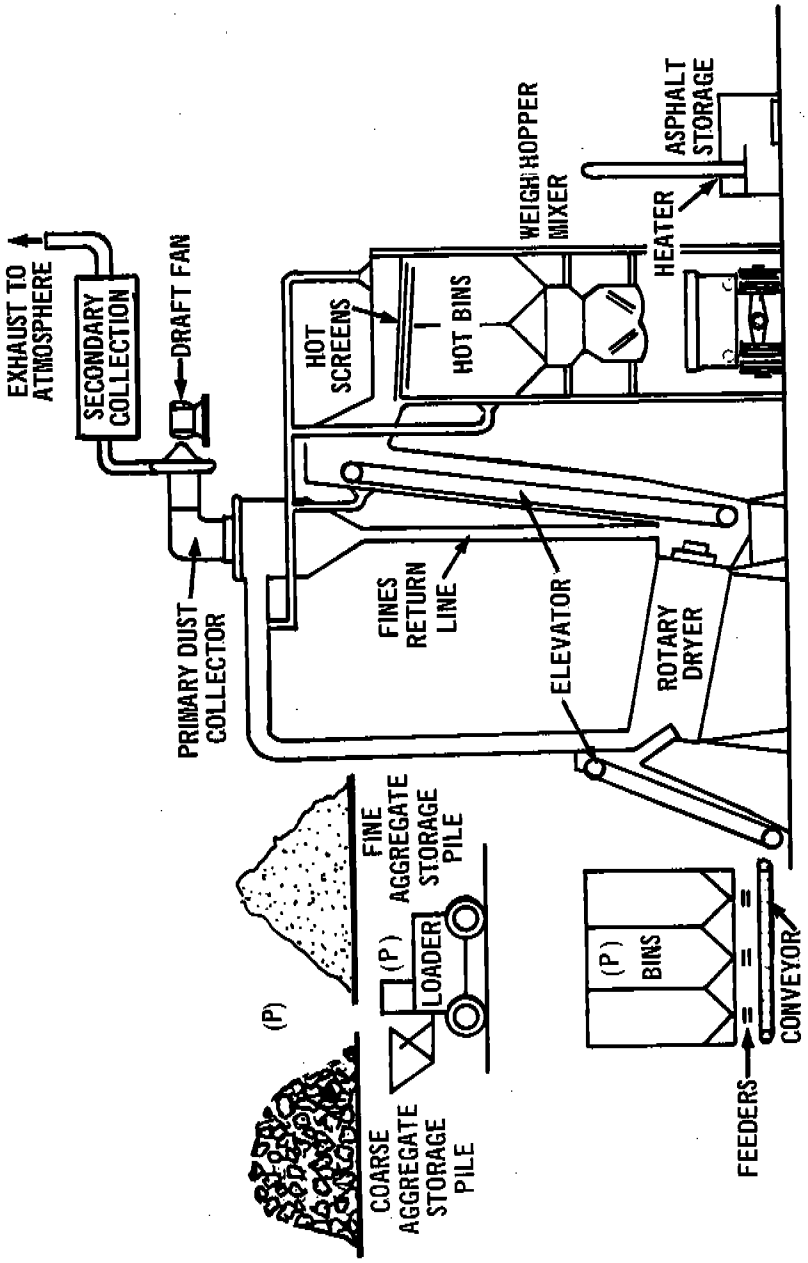

Figure 8.1-1. Batch hot-mix asphalt plant. "P" denotes particulate emission points.[1]

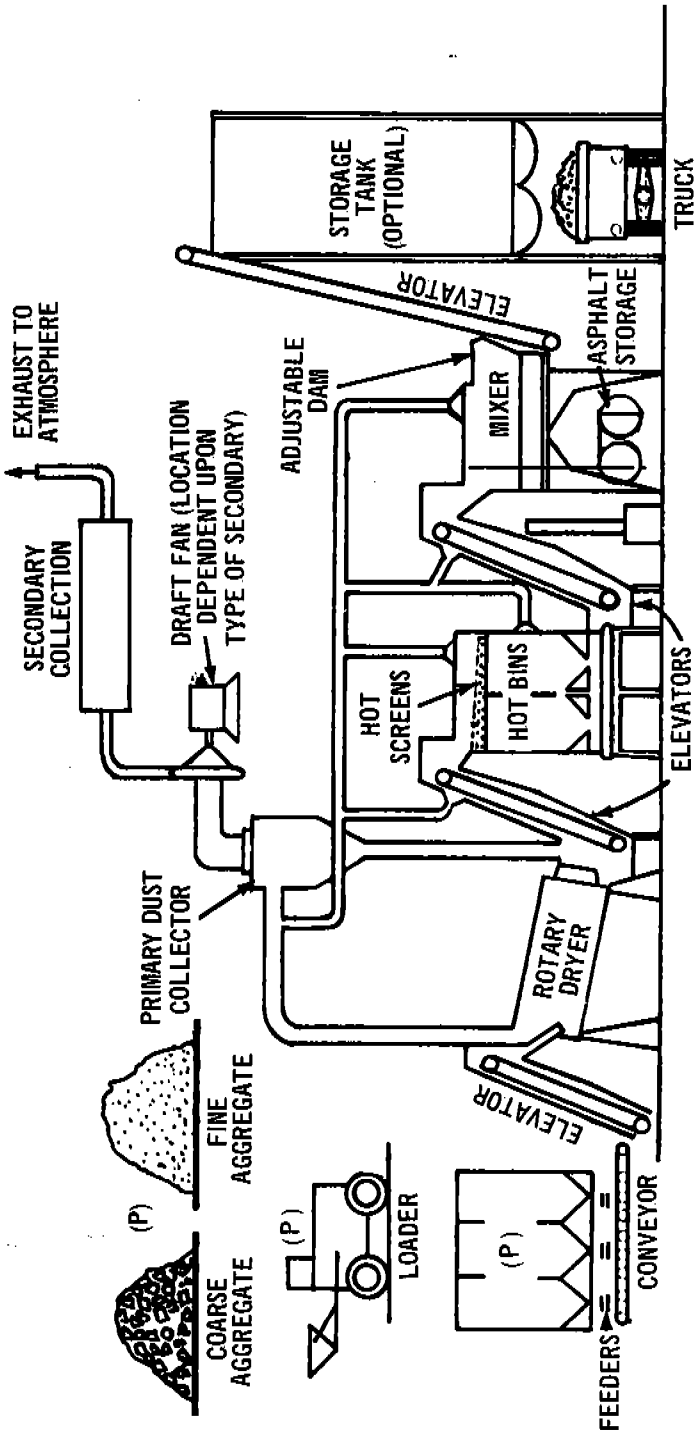

Figure 8.1-2. Continous hot-mix asphalt plant. "P" denotes particulate emission points.[1]

In a continuous plant, the classified aggregate drops into a set of small bins, which collect and meter the classified aggregate to the mixer. From the hot bins, the aggregate is metered through a set of feeder conveyors to another bucket elevator and into the mixer. Asphalt is metered into the inlet end of the mixer, and retention time is controlled by an adjustable dam at the end of the mixer. The mix flows out of the mixer into a hopper from which the trucks are loaded.

8.1.2 Emissions and Controls[3,4]

Dust sources are the rotary dryer; the hot aggregate elevators; the vibrating screens; and the hot-aggregate storage bins, weigh hoppers, mixers, and transfer points. The largest dust emission source is the rotary dryer. In some plants, the dust from the dryer is handled separately from emissions from the other sources. More commonly, however, the dryer, its vent lines, and other fugitive sources are treated in combination by a single collector and fan system.

The choice of applicable control equipment ranges from dry, mechanical collectors to scrubbers and fabric collectors; attempts to apply electrostatic precipitators have met with little success. Practically all plants use primary dust collection equipment, such as large diameter cyclone, skimmer, or settling chambers. These chambers are often used as classifiers with the collected materials being returned to the hot aggregate elevator to combine with the dryer aggregate load. The air discharge from the primary collector is seldom vented to the atmosphere because high emission levels would result. The primary collector effluent is therefore ducted to a secondary or even to a tertiary collection device.

Emission factors for asphaltic concrete plants are presented in Table 8.1-1. Particle size information has not been included because the particle size distribution varies with the aggregate being used, the mix being made, and the type of plant operation.

Table 8.1-1. PARTICULATE EMISSION FACTORS FOR ASPHALTIC CONCRETE PLANTS[a]
EMISSION FACTOR RATING: A

Type of control	Emissions	
	lb/ton	kg/MT
Uncontrolled[b]	45.0	22.5
Precleaner	15.0	7.5
High-efficiency cyclone	1.7	0.85
Spray tower	0.4	0.20
Multiple centrifugal scrubber	0.3	0.15
Baffle spray tower	0.3	0.15
Orifice-type scrubber	0.04	0.02
Baghouse[c]	0.1	0.05

[a]References 1, 2, and 5 through 10.
[b]Almost all plants have at least a precleaner following the rotary dryer.
[c]Emissions from a properly designed, installed, operated, and maintained collector can be as low as 0.005 to 0.020 lb/ton (0.0025 to 0.010 kg/MT).

References for Section 8.1

1. Asphaltic Concrete Plants Atmospheric Emissions Study. Valentine, Fisher, and Tomlinson, Consulting Engineers, Seattle, Washington. Prepared for Environmental Protection Agency, Research Triangle Park, N.C., under Contract Number 68-02-0076. November 1971.

2. Guide for Air Pollution Control of Hot Mix Asphalt Plants. National Asphalt Pavement Association, Riverdale, Md. Information Series 17.

3. Danielson, J. A. Control of Asphaltic Concrete Batching Plants in Los Angeles County. J. Air Pol. Control Assoc. *10*(2):29-33. 1960.

4. Friedrich, H. E. Air Pollution Control Practices and Criteria for Hot-Mix Asphalt Paving Batch Plants. American Precision Industries, Inc., Buffalo, N.Y. (Presented at the 62nd Annual Meeting of the Air Pollution Control Association.) APCA Paper Number 69-160.

5. Air Pollution Engineering Manual. Air Pollution Control District, County of Los Angeles. U.S. DHEW, Public Health Service. PHS Publication Number 999-AP-40. 1967.

6. Allen, G. L., F. H. Vicks, and L. C. McCabe. Control of Metallurgical and Mineral Dust and Fumes in Los Angeles County, California. U.S. Department of Interior, Bureau of Mines. Washington. Information Circular 7627. April 1952.

7. Kenline, P. A. Unpublished report on control of air pollutants from chemical process industries. Robert A. Taft Engineering Center. Cincinnati, Ohio. May 1959.

8. Sallee, G. Private communication on particulate pollutant study between Midwest Research Institute and National Air Pollution Control Administration, Durham, N.C. Prepared under Contract Number 22-69-104. June 1970.

9. Danielson, J. A. Unpublished test data from asphalt batching plants, Los Angeles County Air Pollution Control District. (Presented at Air Pollution Control Institute, University of Southern California, Los Angeles, November 1966.)

10. Fogel, M. E. et al. Comprehensive Economic Study of Air Pollution Control Costs for Selected Industries and Selected Regions. Research Triangle Institute, Research Triangle Park, N.C. Prepared for Environmental Protection Agency, Research Triangle Park, N.C., under Final Report Number R-OU-455. February 1970.

8.2 ASPHALT ROOFING

8.2.1 Process Description[1]

The manufacture of asphalt roofing felts and shingles involves saturating fiber media with asphalt by means of dipping and/or spraying. Although it is not always done at the same site, preparation of the asphalt saturant is an integral part of the operation. This preparation, called "blowing," consists of oxidizing the asphalt by bubbling air through the liquid asphalt for 8 to 16 hours. The saturant is then transported to the saturation tank or spray area. The saturation of the felts is accomplished by dipping, high-pressure sprays, or both. The final felts are made in various weights: 15, 30, and 55 pounds per 100 square feet (0.72, 1.5, and 2.7 kg/m^2). Regardless of the weight of the final product, the makeup is approximately 40 percent dry felt and 60 percent asphalt saturant.

8.2.2 Emissions and Controls[1]

The major sources of particulate emissions from asphalt roofing plants are the asphalt blowing operations and the felt saturation. Another minor source of particulates is the covering of the roofing material with roofing granules. Gaseous emissions from the saturation process have not been measured but are thought to be slight because of the initial driving off of contaminants during the blowing process.

A common method of control at asphalt saturating plants is the complete enclosure of the spray area and saturator with good ventilation through one or more collection devices, which include combinations of wet scrubbers and two-stage low-voltage electrical precipitators, or cyclones and fabric filters. Emission factors for asphalt roofing are presented in Table 8.2-1.

Table 8.2-1. EMISSION FACTORS FOR ASPHALT ROOFING MANUFACTURING WITHOUT CONTROLS[a]
EMISSION FACTOR RATING: D

Operation	Particulates[b]		Carbon monoxide		Hydrocarbons (CH_4)	
	lb/ton	kg/MT	lb/ton	kg/MT	lb/ton	kg/MT
Asphalt blowing[c]	2.5	1.25	0.9	0.45	1.5	0.75
Felt saturation[d]						
Dipping only	1	0.5	–	–	–	–
Spraying only	3	1.5	–	–	–	–
Dipping and spraying	2	1	–	–	–	–

[a]Approximately 0.65 unit of asphalt input is required to produce 1 unit of saturated felt. Emission factors expressed as units per unit weight of saturated felt produced.

[b]Low-voltage precipitators can reduce emissions by about 60 percent; when they are used in combination with a scrubber, overall efficiency is about 85 percent.

[c]Reference 2.

[d]References 3 and 4.

References for Section 8.2

1. Air Pollutant Emission Factors. Final report. Resources Research, Incorporated. Reston, Virginia. Prepared for National Air Pollution Control Administration, Durham, N.C., under Contract Number CPA-22-69-119. April 1970.

2. Von Lehmden, D. J., R. P. Hangebrauck, and J. E. Meeker. Polynuclear Hydrocarbon Emissions from Selected Industrial Processes. J. Air Pol. Control Assoc. *15*:306-312, July 1965.

3. Weiss, S. M. Asphalt Roofing Felt-Saturators. In: Air Pollution Engineering Manual. Danielson, J. A. (ed.). U. S. DHEW, PHS, National Center for Air Pollution Control. Cincinnati, Ohio. Publication Number 999-AP-40. 1967. p. 378-383.

4. Goldfield, J. and R. G. McAnlis. Low-Voltage Electrostatic Precipitators to Collect Oil Mists from Roofing-Felt Asphalt Saturators and Stills. J. Industrial Hygiene Assoc. July-August 1963.

8.3 BRICKS AND RELATED CLAY PRODUCTS

Revised by Dennis H. Ackerson

8.3.1 Process Description

The manufacture of brick and related products such as clay pipe, pottery, and some types of refractory brick involves the mining, grinding, screening, and blending of the raw materials, and the forming, cutting or shaping, drying or curing, and firing of the final product.

Surface clays and shales are mined in open pits; most fine clays are found underground. After mining, the material is crushed to remove stones and stirred before it passes onto screens that are used to segregate the particles by size.

At the start of the forming process, clay is mixed with water, usually in a pug mill. The three principal processes for forming brick are: stiff-mud, soft-mud, and dry-process. In the stiff-mud process, sufficient water is added to give the clay plasticity; bricks are then formed by forcing the clay through a die and using cutter wire to separate the bricks. All structural tile and most brick are formed by this process. The soft-mud process is usually used when the clay contains too much water for the stiff-mud process. The clay is mixed with water until the moisture content reaches 20 to 30 percent, and the bricks are formed in molds. In the dry-press process, clay is mixed with a small amount of water and formed in steel molds by applying a pressure of 500 to 1500 psi. The brick manufacturing process is shown in Figure 8.3-1.

Before firing, the wet clay units that have been formed are almost completely dried in driers that are usually heated by waste heat from the kilns. Many types of kilns are used for firing brick; however, the most common are the tunnel kiln and the periodic kiln. The downdraft periodic kiln is a permanent brick structure that has a number of fireholes where fuel is fired into the furnace. The hot gases from the fuel are drawn up over the bricks, down through them by underground flues, and out of the oven to the chimney. Although fuel efficiency is not as high as that of a tunnel kiln because of lower heat recovery, the uniform temperature distribution through the kiln leads to a good quality product. In most tunnel kilns, cars carrying about 1200 bricks each travel on rails through the kiln at the rate of one 6-foot car per hour. The fire zone is located near the middle of the kiln and remains stationary.

In all kilns, firing takes place in six steps: evaporation of free water, dehydration, oxidation, vitrification, flashing, and cooling. Normally, gas or residual oil is used for heating, but coal may be used. Total heating time varies with the type of product; for example, 9-inch refractory bricks usually require 50 to 100 hours of firing. Maximum temperatures of about 2000°F (1090°C) are used in firing common brick.

8.3.2 Emissions and Controls[1,3]

Particulate matter is the primary emission in the manufacture of bricks. The main source of dust is the materials handling procedure, which includes drying, grinding, screening, and storing the raw material. Combustion products are emitted from the fuel consumed in the curing, drying, and firing portion of the process. Fluorides, largely in gaseous form, are also emitted from brick manufacturing operations. Sulfur dioxide may be emitted from the bricks when temperatures reach 2500°F (1370°C) or greater; however, no data on such emissions are available.[4]

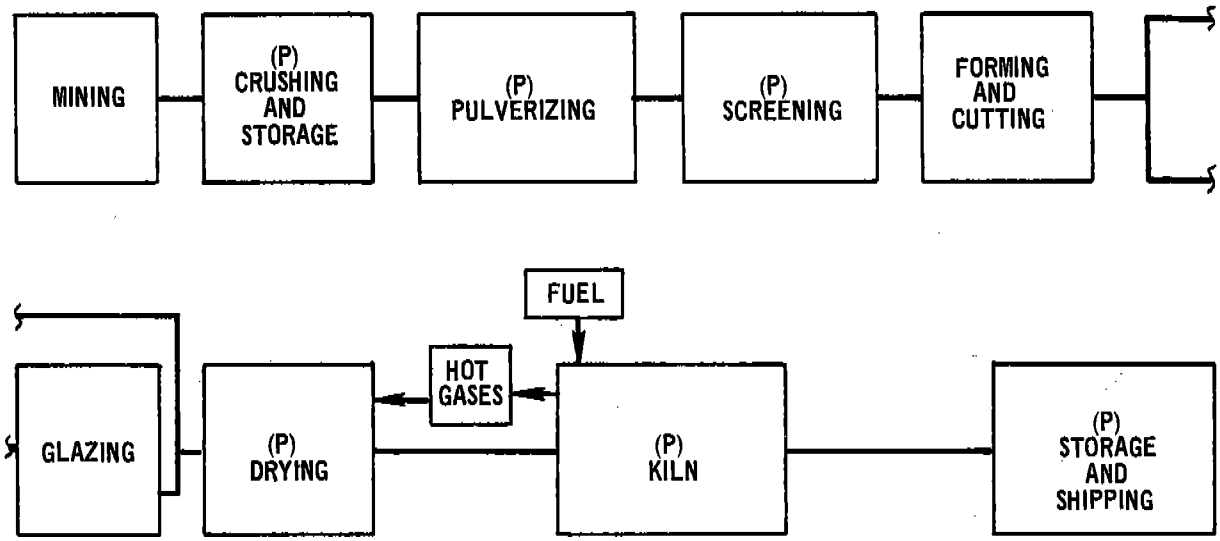

Figure 8.3-1. Basic flow diagram of brick manufacturing process. "P" denotes a major source of particulate emissions.

A variety of control systems may be used to reduce both particulate and gaseous emissions. Almost any type of particulate control system will reduce emissions from the material handling process, but good plant design and hooding are also required to keep emissions to a minimum.

The emissions of fluorides can be reduced by operating the kiln at temperatures below 2000°F (1090°C) and by choosing clays with low fluoride content. Satisfactory control can be achieved by scrubbing kiln gases with water; wet cyclonic scrubbers are available that can remove fluorides with an efficiency of 95 percent, or higher.

Emission factors for brick manufacturing are presented in Table 8.3-1. Insufficient data are available to present particle size information.

Table 8.3-1. EMISSION FACTORS FOR BRICK MANUFACTURING WITHOUT CONTROLS[a]
EMISSION FACTOR RATING: C

Type of process	Particulates		Sulfur oxides (SO_x)		Carbon monoxide (CO)		Hydrocarbons (HC)		Nitrogen oxides (NO_x)		Fluorides[b] (HF)	
	lb/ton	kg/MT	lb/ton	kg/MT	lb/ton	kg/MT	lb/ton	kg/MT	lb/ton	kg/MT	lb/ton	kg/MT
Raw material handling[c]												
Dryers, grinders, etc.	96	48	–	–	–	–	–	–	–	–	–	–
Storage	34	17	–	–	–	–	–	–	–	–	–	–
Curing and firing[d]												
Tunnel kilns												
Gas-fired	0.04	0.02	Neg[e]	Neg	0.04	0.02	0.02	0.01	0.15	0.08	1.0	0.5
Oil-fired	0.6	0.3	4.0S[f]	2.0S	Neg	Neg	0.1	0.05	1.1	0.55	1.0	0.5
Coal-fired	1.0A	0.5A[g]	7.2S	3.6S	1.9	0.95	0.6	0.3	0.9	0.45	1.0	0.5
Periodic kilns												
Gas-fired	0.11	0.05	Neg	Neg	0.11	0.05	0.04	0.02	0 42	0.21	1.0	0.5
Oil-fired	0.9	0.45	5.9S	2.95S	Neg	Neg	0.1	0.05	1.7	0.85	1.0	0.5
Coal-fired	1.6A	0.8A	12.0S	6.0S	3.2	1.6	0.9	0.45	1.4	0.70	1.0	0.5

[a]One brick weighs about 6.5 pounds (2.95 kg). Emission factors expressed as units per unit weight of brick produced.

[b]Based on data from References 3 and 6 through 10.

[c]Based on data from sections on ceramic clays and cement manufacturing in this publication. Because of process variation, some steps may be omitted. Storage losses apply only to that quantity of material stored.

[d]Based on data from References 1 and 5 and emission factors for fuel combustion.

[e]Negligible.

[f]S is the percent sulfur in the fuel.

[g]A is the percent ash in the coal.

References for Section 8.3

1. Air Pollutant Emission Factors. Final Report. Resources Research, Inc., Reston, Virginia. Prepared for National Air Pollution Control Administration, Durham, N.C., under Contract Number CPA-22-69-119. April 1970.

2. Technical Notes on Brick and Tile Construction. Structural Clay Products Institute. Washington, D.C. Pamphlet Number 9. September 1961.

3. Unpublished control techniques for fluoride emissions. Environmental Protection Agency, Office of Air Programs, Research Triangle Park, N.C.

4. Allen, M. H. Report on Air Pollution, Air Quality Act of 1967 and Methods of Controlling the Emission of Particulate and Sulfur Oxide Air Pollutants. Structural Clay Products Institute, Washington, D. C. September 1969.

5. Norton, F. H. Refractories, 3rd Ed. New York, McGraw-Hill Book Company. 1949.

6. Semran, K. T. Emissions of Fluorides from Industrial Processes: A Review. J. Air Pol. Control Assoc. *7*(2):92-108. August 1957.

7. Kirk-Othmer. Encyclopedia of Chemical Technology, Vol. V, 2nd Ed. New York, Interscience (John Wiley and Sons, Inc.), 1964. p. 561-567.

8. Wentzel, K. F. Fluoride Emissions in the Vicinity of Brickworks. Staub. *25*(3):45-50. March 1965.

9. Allen, G. L. et al. Control of Metallurgical and Mineral Dusts and Fumes in Los Angeles County. U. S. Department of Interior, Bureau of Mines. Washington, D.C. Information Circular Number 7627. April 1952.

10. Private communication between Resources Research, Inc. Reston, Va. and the State of New Jersey Air Pollution Control Program, Trenton. July 20, 1969.

8.4 CALCIUM CARBIDE MANUFACTURING

8.4.1 Process Description[1,2]

Calcium carbide is manufactured by heating a mixture of quicklime (CaO) and carbon in an electric-arc furnace, where the lime is reduced by the coke to calcium carbide and carbon monoxide. Metallurgical coke, petroleum coke, or anthracite coal is used as the source of carbon. About 1900 pounds (860 kg) of lime and 1300 pounds (600 kg) of coke yield 1 ton (1 MT) of calcium carbide. There are two basic types of carbide furnaces: (1) the open furnace, in which the carbon monoxide burns to carbon dioxide when it comes in contact with air above the charge; and (2) the closed furnace, in which the gas is collected from the furnace. The molten calcium carbide from the furnace is poured into chill cars or bucket conveyors and allowed to solidify. The finished calcium carbide is dumped into a jaw crusher and then into a cone crusher to form a product of the desired size.

8.4.2 Emissions and Controls

Particulates, acetylene, sulfur compounds, and some carbon monoxide are emitted from the calcium carbide plants. Table 8.4-1 contains emission factors based on one plant in which some particulate matter escapes from the hoods over each furnace and the remainder passes through wet-impingement-type scrubbers before being vented to the atmosphere through a stack. The coke dryers and the furnace-room vents are also sources of emissions.

Table 8.4-1. EMISSION FACTORS FOR CALCIUM CARBIDE PLANTS[a]
EMISSION FACTOR RATING: C

Type of source	Particulates		Sulfur oxides		Acetylene	
	lb/ton	kg/MT	lb/ton	kg/MT	lb/ton	kg/MT
Electric furnace						
Hoods	18	9	–	–	–	–
Main stack	20	10	3	1.5	–	–
Coke dryer	2	1	3	1.5	–	–
Furnace room vents	26	13	–	–	18	9

[a]Reference 3. Emission factors expressed as units per unit weight of calcium carbide produced.

References for Section 8.4

1. Duprey, R. L. Compilation of Air Pollutant Emission Factors. U. S. DHEW, PHS, National Center for Air Pollution Control. Durham, N. C. PHS Publication Number 999-AP-42. 1968. p. 34-35.

2. Carbide. In: Kirk-Othmer Encyclopedia of Chemical Technology. New York, John Wiley and Sons, Inc. 1964.

3. The Louisville Air Pollution Study. U. S. DHEW, PHS, Robert A. Taft Sanitary Engineering Center. Cincinnati, Ohio. 1961.

8.5 CASTABLE REFRACTORIES

8.5.1 Process Description[1-3]

Castable or fused-cast refractories are manufactured by carefully blending such components as alumina, zirconia, silica, chrome, and magnesia; melting the mixture in an electric-arc furnace at temperatures of 3200 to 4500°F (1760 to 2480°C); pouring it into molds; and slowly cooling it to the solid state. Fused refractories are less porous and more dense than kiln-fired refractories.

8.5.2 Emissions and Controls[1]

Particulate emissions occur during the drying, crushing, handling, and blending of the components; during the actual melting process; and in the molding phase. Fluorides, largely in the gaseous form, may also be emitted during the melting operations.

The general types of particulate controls may be used on the materials handling aspects of refractory manufacturing. Emissions from the electric-arc furnace, however, are largely condensed fumes and consist of very fine particles. Fluoride emissions can be effectively controlled with a scrubber. Emission factors for castable refractories manufacturing are presented in Table 8.5-1.

Table 8.5-1. PARTICULATE EMISSION FACTORS FOR CASTABLE REFRACTORIES MANUFACTURING[a]
EMISSION FACTOR RATING: C

Type of process	Type of control	Uncontrolled		Controlled	
		lb/ton	kg/MT	lb/ton	kg/MT
Raw material dryer[b]	Baghouse	30	15	0.3	0.15
Raw material crushing and processing[c]	Scrubber			7	3.5
	Cyclone	120	60	45	22.5
Electric-arc melting[d]	Baghouse	50	25	0.8	0.4
	Scrubber			10	5
Curing oven[e]	-	0.2	0.1	–	–
Molding and shakeout[b]	Baghouse	25	12.5	0.3	0.15

[a]Fluoride emissions from the melt average about 1.3 pounds of HF per ton of melt (0.65 kg HF/MT melt). Emission factors expressed as units per unit weight of feed material.
[b]Reference 4.
[c]References 4 and 5.
[d]References 4 through 6.
[e]Reference 5.

References for Section 8.5

1. Air Pollutant Emission Factors. Final Report. Resources Research, Inc. Reston, Va. Prepared for National Air Pollution Control Administration, Durham, N.C., under Contract Number CPA-22-69-119. April 1970.

2. Brown, R. W. and K. H. Sandmeyer. Applications of Fused-Cast Refractories. Chem. Eng. *76*:106-114, June 16, 1969.

3. Shreve, R.N. Chemical Process Industries, 3rd Ed. New York, McGraw-Hill Book Company. 1967. p. 158.

4. Unpublished data provided by a Corhart Refractory. Kentucky Department of Health, Air Pollution Control Commission. Frankfort, Kentucky. September 1969.

5. Unpublished stack test data on refractories. Resources Research, Incorporated. Reston, Virginia. 1969.

6. Unpublished stack test data on refractories. Resources Research, Incorporated. Reston, Virginia. 1967.

8.6 PORTLAND CEMENT MANUFACTURING

Revised by Dennis H. Ackerson

8.6.1 Process Description[1-3]

Portland cement manufacture accounts for about 98 percent of the cement production in the United States. The more than 30 raw materials used to make cement may be divided into four basic components: lime (calcareous), silica (siliceous), alumina (argillaceous), and iron (ferriferous). Approximately 3200 pounds of dry raw materials are required to produce 1 ton of cement. Approximately 35 percent of the raw material weight is removed as carbon dioxide and water vapor. As shown in Figure 8.6-1, the raw materials undergo separate crushing after the quarrying operation, and, when needed for processing, are proportioned, ground, and blended using either the wet or dry process.

In the dry process, the moisture content of the raw material is reduced to less than 1 percent either before or during the grinding operation. The dried materials are then pulverized into a powder and fed directly into a rotary kiln. Usually, the kiln is a long, horizontal, steel cylinder with a refractory brick lining. The kilns are slightly inclined and rotate about the longitudinal axis. The pulverized raw materials are fed into the upper end and travel slowly to the lower end. The kilns are fired from the lower end so that the hot gases pass upward and through the raw material. Drying, decarbonating, and calcining are accomplished as the material travels through the heated kiln, finally burning to incipient fusion and forming the clinker. The clinker is cooled, mixed with about 5 percent gypsum by weight, and ground to the final product fineness. The cement is then stored for later packaging and shipment.

With the wet process, a slurry is made by adding water to the initial grinding operation. Proportioning may take place before or after the grinding step. After the materials are mixed, the excess water is removed and final adjustments are made to obtain a desired composition. This final homogeneous mixture is fed to the kilns as a slurry of 30 to 40 percent moisture or as a wet filtrate of about 20 percent moisture. The burning, cooling, addition of gypsum, and storage are carried out as in the dry process.

8.6.2 Emissions and Controls[1,2,4]

Particulate matter is the primary emission in the manufacture of portland cement. Emissions also include the normal combustion products of the fuel used to supply heat for the kiln and drying operations, including oxides of nitrogen and small amounts of oxides of sulfur.

Sources of dust at cement plants include: (1) quarrying and crushing, (2) raw material storage, (3) grinding and blending (dry process only), (4) clinker production, (5) finish grinding, and (6) packaging. The largest source of emissions within cement plants is the kiln operation, which may be considered to have three units: the feed system, the fuel-firing system, and the clinker-cooling and handling system. The most desirable method of disposing of the collected dust is injection into the burning zone of the kiln and production of clinkers from the dust. If the alkali content of the raw materials is too high, however, some of the dust is discarded or leached before returning to the kiln. In many instances, the maximum allowable alkali content of 0.6 percent (calculated as sodium oxide) restricts the amount of dust that can be recycled. Additional sources of dust emissions are raw material storage piles, conveyors, storage silos, and loading/unloading facilities.

The complications of kiln burning and the large volumes of materials handled have led to the adoption of many control systems for dust collection. Depending upon the emission, the temperature of the effluents in the

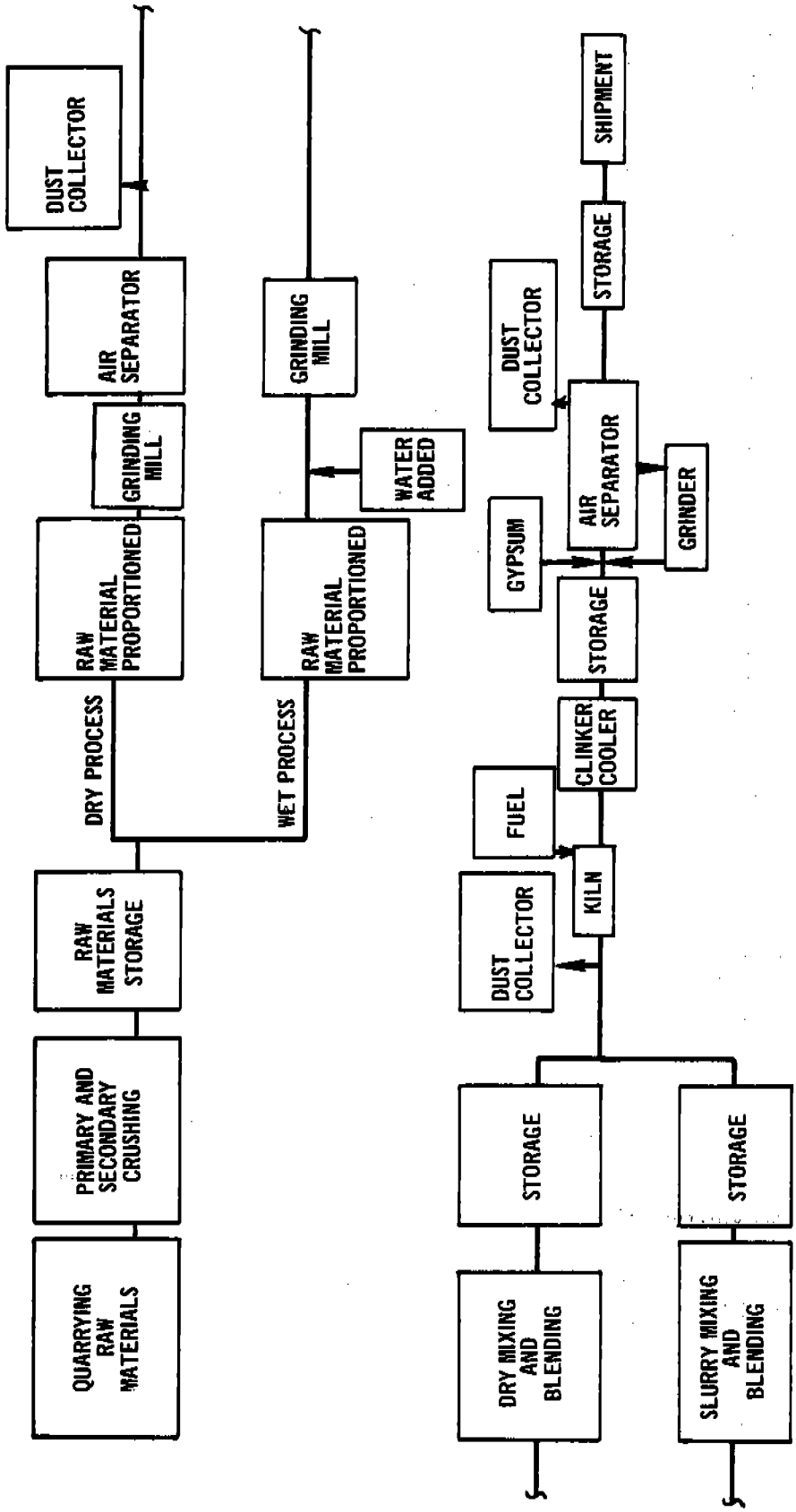

Figure 8.6-1. Basic flow diagram of portland cement manufacturing process.

plant in question, and the particulate emission standards in the community, the cement industry generally uses mechanical collectors, electrical precipitators, fabric filter (baghouse) collectors, or combinations of these devices to control emissions.

Table 8.6-1 summarizes emission factors for cement manufacturing and also includes typical control efficiencies of particulate emissions. Table 8.6-2 indicates the particle size distribution for particulate emissions from kilns and cement plants before control systems are applied.

Table 8.6-1. EMISSION FACTORS FOR CEMENT MANUFACTURING WITHOUT CONTROLS[a,b,c]
EMISSION FACTOR RATING: B

Pollutant	Dry Process		Wet process	
	Kilns	Dryers, grinders, etc.	Kilns	Dryers, grinders, etc.
Particulate[d]				
lb/ton	245.0	96.0	228.0	32.0
kg/MT	122.0	48.0	114.0	16.0
Sulfur dioxide[e]				
Mineral source[f]				
lb/ton	10.2	-	10.2	-
kg/MT	5.1	-	5.1	-
Gas combustion				
lb/ton	Neg[g]	-	Neg	-
kg/MT	Neg	-	Neg	-
Oil combustion				
lb/ton	4.2S[h]	-	4.2S	-
kg/MT	2.1S	-	2.1S	-
Coal combustion				
lb/ton	6.8S	-	6.8S	-
kg/MT	3.4S	-	3.4S	-
Nitrogen oxides				
lb/ton	2.6	-	2.6	-
kg/MT	1.3	-	1.3	-

[a]One barrel of cement weighs 376 pounds (171 kg).

[b]These emission factors include emissions from fuel combustion, which should not be calculated separately.

[c]References 1 and 2.

[d]Typical collection efficiencies for kilns, dryers, grinders, etc., are: multicyclones, 80 percent; electrostatic precipitators, 95 percent; electrostatic precipitators with multicyclones, 97.5 percent; and fabric filter units, 99.8 percent.

[e]The sulfur dioxide factors presented take into account the reactions with the alkaline dusts when no baghouses are used. With baghouses, approximately 50 percent more SO_2 is removed because of reactions with the alkaline particulate filter cake. Also note that the total SO_2 from the kiln is determined by summing emission contributions from the mineral source and the appropriate fuel.

[f]These emissions are the result of sulfur being present in the raw materials and are thus dependent upon source of the raw materials used. The 10.2 lb/ton (5.1 kg/MT) factors account for part of the available sulfur remaining behind in the product because of its alkaline nature and affinity for SO_2.

[g]Negligible.

[h]S is the percent sulfur in fuel.

Table 8.6-2. SIZE DISTRIBUTION OF DUST EMITTED FROM KILN OPERATIONS WITHOUT CONTROLS[1,5]

Particle size, μm	Kiln dust finer than corresponding particle size, %
60	93
50	90
40	84
30	74
20	58
10	38
5	23
1	3

Sulfur dioxide may be generated from the sulfur compounds in the ores as well as from combusion of fuel. The sulfur content of both ores and fuels will vary from plant to plant and with geographic location. The alkaline nature of the cement, however, provides for direct absorption of SO_2 into the product. The overall control inherent in the process is approximately 75 percent or greater of the available sulfur in ore and fuel if a baghouse that allows the SO_2 to come in contact with the cement dust is used. Control, of course, will vary according to the alkali and sulfur content of the raw materials and fuel.[6]

References for Section 8.6

1. Kreichelt, T. E., D. A. Kemnitz, and S. T. Cuffe. Atmospheric Emissions from the Manufacture of Portland Cement. U. S. DHEW, Public Health Service. Cincinnati, Ohio. PHS Publication Number 999-AP-17, 1967.

2. Unpublished standards of performance for new and substantially modified portland cement plants. Environmental Protection Agency, Bureau of Stationary Source Pollution Control, Research Triangle Park, N.C. August 1971.

3. A Study of the Cement Industry in the State of Missouri. Resources Research Inc., Reston, Va. Prepared for the Air Conservation Commission of the State of Missouri. December 1967.

4. Standards of Performance for New Stationary Sources. Environmental Protection Agency. Federal Register. *36*(247, Pt II): December 23, 1971.

5. Particulate Pollutant System Study. Midwest Research Institute, Kansas City, Mo. Prepared for Environmental Protection Agency, Air Pollution Control Office, Research Triangle Park, N.C., under Contract Number CPA-22-69-104. May 1971.

6. Restriction of Emissions from Portland Cement Works. VDI Richtlinien. Dusseldorf, Germany. February 1967.

8.7 CERAMIC CLAY MANUFACTURING

8.7.1 Process Description[1]

The manufacture of ceramic clay involves the conditioning of the basic ores by several methods. These include the separation and concentration of the minerals by screening, floating, wet and dry grinding, and blending of the desired ore varieties. The basic raw materials in ceramic clay manufacture are kaolinite ($Al_2O_3 \cdot 2SiO_2 \cdot 2H_2O$) and montmorillonite [(Mg, Ca) $O \cdot Al_2O_3 \cdot 5SiO_2 \cdot nH_2O$] clays. These clays are refined by separation and bleaching, blended, kiln-dried, and formed into such items as whiteware, heavy clay products (brick, etc.), various stoneware, and other products such as diatomaceous earth, which is used as a filter aid.

8.7.2 Emissions and Controls[1]

Emissions consist primarily of particulates, but some fluorides and acid gases are also emitted in the drying process. The high temperatures of the firing kilns are also conducive to the fixation of atmospheric nitrogen and the subsequent release of NO, but no published information has been found for gaseous emissions. Particulates are also emitted from the grinding process and from storage of the ground product.

Factors affecting emissions include the amount of material processed, the type of grinding (wet or dry), the temperature of the drying kilns, the gas velocities and flow direction in the kilns, and the amount of fluorine in the ores.

Common control techniques include settling chambers, cyclones, wet scrubbers, electrostatic precipitators, and bag filters. The most effective control is provided by cyclones for the coarser material, followed by wet scrubbers, bag filters, or electrostatic precipitators for dry dust. Emission factors for ceramic clay manufacturing are presented in Table 8.7-1.

Table 8.7-1. PARTICULATE EMISSION FACTORS FOR CERAMIC CLAY MANUFACTURING[a]
EMISSION FACTOR RATING: A

Type of process	Uncontrolled		Cyclone[b]		Multiple-unit cyclone and scrubber[c]	
	lb/ton	kg/MT	lb/ton	kg/MT	lb/ton	kg/MT
Drying[d]	70	35	18	9	7	3.5
Grinding[e]	76	38	19	9.5	–	–
Storage[d]	34	17	8	4	–	–

[a]Emission factors expressed as units per unit weight of input to process.
[b]Approximate collection efficiency: 75 percent.
[c]Approximate collection efficiency: 90 percent.
[d]References 2 through 5.
[e]Reference 2.

References for Section 8.7-1

1. Air Pollutant Emission Factors. Final Report. Resources Research, Inc. Reston, Va. Prepared for National Air Pollution Control Administration, Durham, N.C., under Contract Number CPA-22-69-119. April 1970.

2. Allen, G. L. et al. Control of Metallurgical and Mineral Dusts and Fumes in Los Angeles County. Department of Interior, Bureau of Mines. Washington, D.C. Information Circular Number 7627. April 1952.

3. Private Communication between Resources Research, Incorporated, Reston, Virginia, and the State of New Jersey Air Pollution Control Program, Trenton, New Jersey. July 20, 1969.

4. Henn, J. J. et al. Methods for Producing Alumina from Clay: An Evaluation of Two Lime Sinter Processes. Department of Interior, Bureau of Mines. Washington, D.C. Report of Investigations Number 7299. September 1969.

5. Peters, F. A. et al. Methods for Producing Alumina from Clay: An Evaluation of the Lime-Soda Sinter Process. Department of Interior, Bureau of Mines. Washington, D.C. Report of Investigation Number 6927. 1967.

8.8 CLAY AND FLY-ASH SINTERING

8.8.1 Process Description[1]

Although the processes for sintering fly ash and clay are similar, there are some distinctions that justify a separate discussion of each process. Fly-ash sintering plants are generally located near the source, with the fly ash delivered to a storage silo at the plant. The dry fly ash is moistened with a water solution of lignin and agglomerated into pellets or balls. This material goes to a traveling-grate sintering machine where direct contact with hot combustion gases sinters the individual particles of the pellet and completely burns off the residual carbon in the fly ash. The product is then crushed, screened, graded, and stored in yard piles.

Clay sintering involves the driving off of entrained volatile matter. It is desirable that the clay contain a sufficient amount of volatile matter so that the resultant aggregate will not be too heavy. It is thus sometimes necessary to mix the clay with finely pulverized coke (up to 10 percent coke by weight).[2,3] In the sintering process the clay is first mixed with pulverized coke, if necessary, and then pelletized. The clay is next sintered in a rotating kiln or on a traveling grate. The sintered pellets are then crushed, screened, and stored, in a procedure similar to that for fly ash pellets.

8.8.2 Emissions and Controls[1]

In fly-ash sintering, improper handling of the fly ash creates a dust problem. Adequate design features, including fly-ash wetting systems and particulate collection systems on all transfer points and on crushing and screening operations, would greatly reduce emissions. Normally, fabric filters are used to control emissions from the storage silo, and emissions are low. The absence of this dust collection system, however, would create a major emission problem. Moisture is added at the point of discharge from the silo to the agglomerator, and very few emissions occur there. Normally, there are few emissions from the sintering machine, but if the grate is not properly maintained, a dust problem is created. The consequent crushing, screening, handling, and storage of the sintered product also create dust problems.

In clay sintering, the addition of pulverized coke presents an emission problem because the sintering of coke-impregnated dry pellets produces more particulate emissions than the sintering of natural clay. The crushing, screening, handling, and storage of the sintered clay pellets creates dust problems similar to those encountered in fly-ash sintering. Emission factors for both clay and fly-ash sintering are shown in Table 8.8-1.

Table 8.8-1. PARTICULATE EMISSION FACTORS FOR SINTERING OPERATIONS[a]
EMISSION FACTOR RATING: C

Type of material	Sintering operation[b]		Crushing, screening, and yard storage[b,c]	
	lb/ton	kg/MT	lb/ton	kg/MT
Fly ash[d]	110	55	e	e
Clay mixed with coke[f,g]	40	20	15	7.5
Natural clay[h,i]	12	6	12	6

[a]Emission factors expressed as units per unit weight of finished product.
[b]Cyclones would reduce this emission by about 80 percent. Scrubbers would reduce this emission by about 90 percent.
[c]Based on data in section on stone quarrying and processing.
[d]Reference 1.
[e]Included in sintering losses.
[f]90 percent clay, 10 percent pulverized coke; traveling-grate, single-pass, up-draft sintering machine.
[g]References 3 through 5.
[h]Rotary dryer sinterer.
[i]Reference 2.

References for Section 8.8

1. Air Pollutant Emission Factors. Final Report. Resources Research, Inc. Reston, Va. Prepared for National Air Pollution Control Administration, Durham, N.C., under Contract Number CPA-22-69-119. April 1970.

2. Communication between Resources Research, Incorporated, Reston, Virginia, and a clay sintering firm. October 2, 1969.

3. Communication between Resources Research, Incorporated, Reston, Virginia, and an anonymous Air Pollution Control Agency. October 16, 1969.

4. Henn, J. J. et al. Methods for Producing Alumina from Clay: An Evaluation of Two Lime Sinter Processes. Department of the Interior, Bureau of Mines. Washington, D.C. Report of Investigation Number 7299. September 1969.

5. Peters, F. A. et al. Methods for Producing Alumina from Clay: An Evaluation of the Lime-Soda Sinter Process. Department of the Interior, Bureau of Mines. Washington, D.C. Report of Investigation Number 6927. 1967.

8.9 COAL CLEANING

8.9.1 Process Description[1]

Coal cleaning is the process by which undesirable materials are removed from bituminous and anthracite coal and lignite. The coal is screened, classified, washed, and dried at coal preparation plants. The major sources of air pollution from these plants are the thermal dryers. Seven types of thermal dryers are presently used: rotary, screen, cascade, continuous carrier, flash or suspension, multilouver, and fluidized bed. The three major types, however, are the flash, multilouver, and fluidized bed.

In the flash dryer, coal is fed into a stream of hot gases where instantaneous drying occurs. The dried coal and wet gases are drawn up a drying column and into the cyclone for separation. In the multilouver dryer, hot gases are passed through falling curtains of coal. The coal is raised by flights of a specially designed conveyor. In the fluidized bed the coal is suspended and dried above a perforated plate by rising hot gases.

8.9.2 Emissions and Controls[1]

Particulates in the form of coal dust constitute the major air pollution problem from coal cleaning plants. The crushing, screening, or sizing of coal are minor sources of dust emissions; the major sources are the thermal dryers. The range of concentration, quantity, and particle size of emissions depends upon the type of collection equipment used to reduce particulate emissions from the dryer stack. Emission factors for coal-cleaning plants are shown in Table 8.9-1. Footnote b of the table lists various types of control equipment and their possible efficiencies.

Table 8.9-1. PARTICULATE EMISSION FACTORS FOR THERMAL COAL DRYERS[a]
EMISSION FACTOR RATING: B

Type of dryer	Uncontrolled emissions[b]	
	lb/ton	kg/MT
Fluidized bed[c]	20	10
Flash[c]	16	8
Multilouvered[d]	25	12.5

[a]Emission factors expressed as units per unit weight of coal dried.
[b]Typical collection efficiencies are: cyclone collectors (product recovery), 70 percent; multiple cyclones (product recovery), 85 percent; water sprays following cyclones, 95 percent; and wet scrubber following cyclones, 99 to 99.9 percent.
[c]References 2 and 3.
[d]Reference 4.

References for Section 8.9

1. Air Pollutant Emission Factors. Final Report. Resources Research, Inc. Reston, Va. Prepared for National Air Pollution Control Administration, Durham, N.C., under Contract Number CPA-22-69-119. April 1970.

2. Unpublished stack test results on thermal coal dryers. Pennsylvania Department of Health, Bureau of Air Pollution Control. Harrisburg, Pa.

3. Amherst's Answer to Air Pollution Laws. Coal Mining and Processing. p. 26-29, February 1970.

4. Jones, D. W. Dust Collection at Moss. No. 3. Mining Congress Journal. *55*(7):53-56, July 1969.

8.10 CONCRETE BATCHING

8.10.1 Process Description[1-3]

Concrete batching involves the proportioning of sand, gravel, and cement by means of weigh hoppers and conveyors into a mixing receiver such as a transit mix truck. The required amount of water is also discharged into the receiver along with the dry materials. In some cases, the concrete is prepared for on-site building construction work or for the manufacture of concrete products such as pipes and prefabricated construction parts.

8.10.2 Emissions and Controls[1]

Particulate emissions consist primarily of cement dust, but some sand and aggregate gravel dust emissions do occur during batching operations. There is also a potential for dust emissions during the unloading and conveying of concrete and aggregates at these plants and during the loading of dry-batched concrete mix. Another source of dust emissions is the traffic of heavy equipment over unpaved or dusty surfaces in and around the concrete batching plant.

Control techniques include the enclosure of dumping and loading areas, the enclosure of conveyors and elevators, filters on storage bin vents, and the use of water sprays. Table 8.10-1 presents emission factors for concrete batch plants.

Table 8.10-1. PARTICULATE EMISSION FACTORS FOR CONCRETE BATCHING[a]
EMISSION FACTOR RATING: C

Concrete batching[b]	Emission	
	lb/yd^3 of concrete	kg/m^3 of concrete
Uncontrolled	0.2	0.12
Good control	0.02	0.012

[a]One cubic yard of concrete weighs 4000 pounds (1 m^3 = 2400 kg). The cement content varies with the type of concrete mixed, but 735 pounds of cement per yard (436 kg/m^3) may be used as a typical value.

[b]Reference 4.

References for Section 8.10

1. Air Pollutant Emission Factors. Final Report. Resources Research Inc. Reston, Va. Prepared for National Air Pollution Control Administration, Durham, N.C., under Contract Number CPA-22-69-119. April 1970.

2. Vincent, E. J. and J. L. McGinnity. Concrete Batching Plants. In: Air Pollution Engineering Manual. Danielson, J. A. (ed.). U.S. DHEW, PHS, National Center for Air Pollution Control. Cincinnati, Ohio. PHS Publication Number 999-AP-40. 1967. p. 334-335.

3. Communication between Resources Research, Incorporated, Reston, Virginia, and the National Ready-Mix Concrete Association. September 1969.

4. Allen, G. L. et al. Control of Metallurgical and Mineral Dusts and Fumes in Los Angeles County. Department of the Interior, Bureau of Mines. Washington, D.C. Information Circular Number 7627. April 1952.

8.11 FIBER GLASS MANUFACTURING

Revised by James H. Southerland

8.11.1 Process Description

Glass fiber products are manufactured by melting various raw materials to form glass (predominantly borosilicate), drawing the molten glass into fibers, and coating the fibers with an organic material. The two basic types of fiber glass products, textile and wool, are manufactured by different processes. Typical flow diagrams are shown in Figures 8.11-1 and 8.11-2.

8.11.1.1 Textile Products–In the manufacture of textiles, the glass is normally produced in the form of marbles after refining at about 2800°F (1540°C) in a regenerative, recuperative, or electric furnace. The marble-forming stage can be omitted with the molten glass passing directly to orifices to be formed or drawn into fiber filaments. The fiber filaments are collected on spools as continuous fibers and staple yarns, or in the form of a fiber glass mat on a flat, moving surface. An integral part of the textile process is treatment with organic binder materials followed by a curing step.

8.11.1.2 Wool Products--In the manufacture of wool products, which are generally used in the construction industry as insulation, ceiling panels, etc., the molten glass is most frequently fed directly into the forming line without going through a marble stage. Fiber formation is accomplished by air blowing, steam blowing, flame blowing, or centrifuge forming. The organic binder is sprayed onto the hot fibers as they fall from the forming device. The fibers are collected on a moving, flat surface and transported through a curing oven at a temperature of 400° to 600°F (200° to 315°C) where the binder sets. Depending upon the product, the wool may also be compressed as a part of this operation.

8.11.2 Emissions and Controls[1]

The major emissions from the fiber glass manufacturing processes are particulates from the glass-melting furnace, the forming line, the curing oven, and the product cooling line. In addition, gaseous organic emissions occur from the forming line and curing oven. Particulate emissions from the glass-melting furnace are affected by basic furnace design, type of fuel (oil, gas, or electricity), raw material size and composition, and type and volume of the furnace heat-recovery system. Organic and particulate emissions from the forming line are most affected by the composition and quality of the binder and by the spraying techniques used to coat the fibers; very fine spray and volatile binders increase emissions. Emissions from the curing ovens are affected by oven temperature and binder composition, but direct-fired afterburners with heat exchangers may be used to control these emissions. Emission factors for fiber glass manufacturing are summarized in Table 8.11-1.

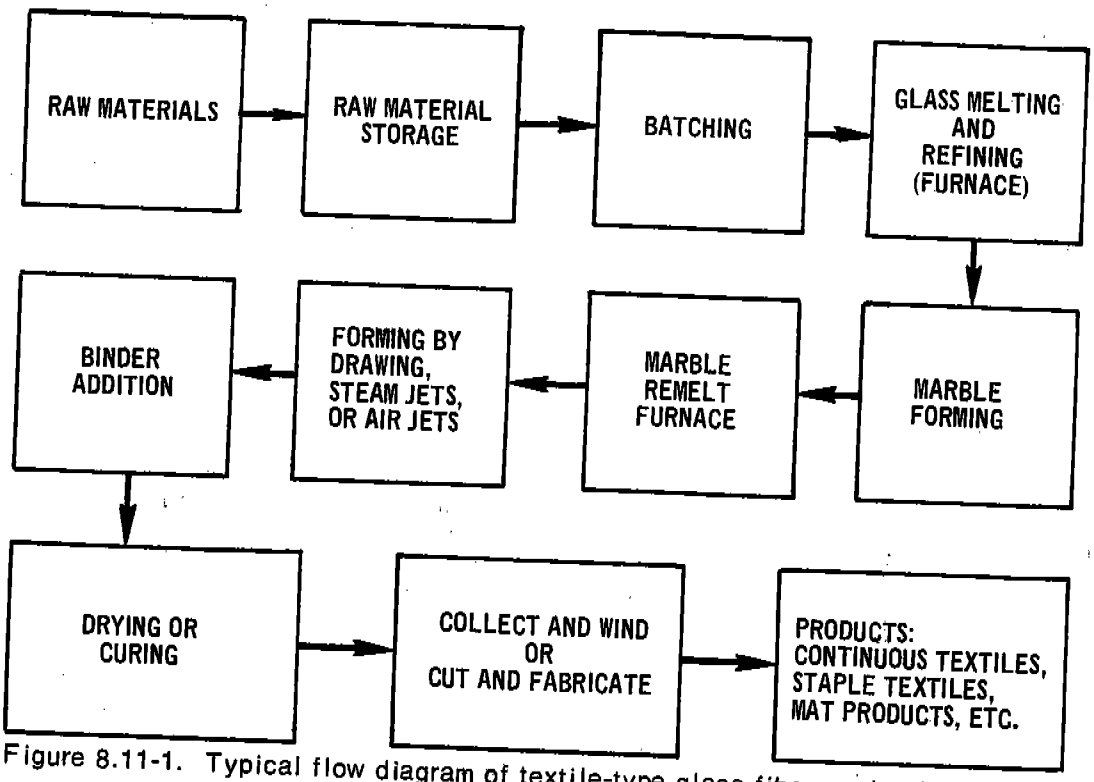

Figure 8.11-1. Typical flow diagram of textile-type glass fiber production process.

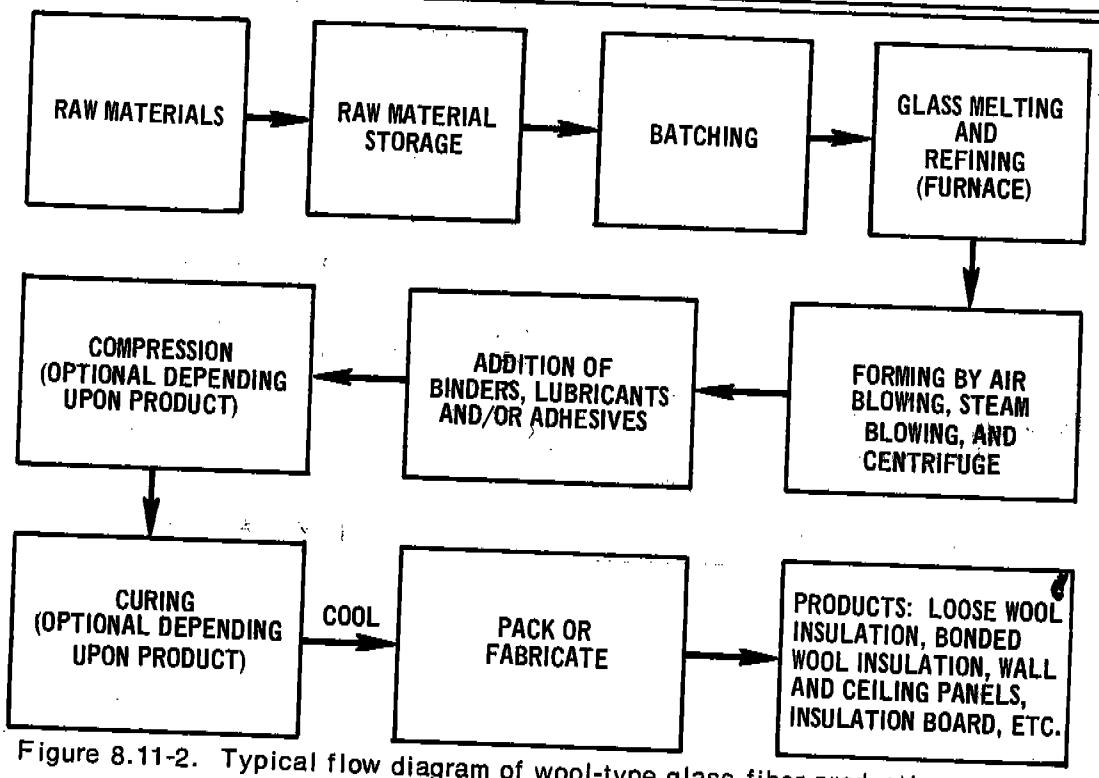

Figure 8.11-2. Typical flow diagram of wool-type glass fiber production process.

Table 8.11-1. EMISSION FACTORS FOR FIBER GLASS MANUFACTURING WITHOUT CONTROLS[a,b]
EMISSION FACTOR RATING: A

Type of process	Particulate		Sulfur oxides (SO_2)		Carbon monoxide		Nitrogen oxides (NO_2)		Fluorides	
	lb/ton	kg/MT	lb/ton	kg/MT	lb/ton	kg/MT	lb/ton	kg/MT	lb/ton	kg/MT
Textile products										
Glass furnace[c]										
Regenerative	16.4	8.2	29.6	14.8	1.1	0.6	9.2	4.6	3.8	1.9
Recuperative	27.8	13.9	2.7	1.4	0.9	0.5	29.2	14.6	12.5	6.3
Electric	ND[d]	–	–	–	–	–	–	–	–	–
Forming	1.6	0.8	–	–	–	–	–	–	–	–
Curing oven	1.2	0.6	–	–	1.5	0.8	2.6	1.3	–	–
Wool products[e]										
Glass furnace[c]										
Regenerative	21.5	10.8	10.0	5.0	0.25	0.13	5.0	2.5	0.12	0.06
Recuperative	28.3	14.2	9.5	4.8	0.25	0.13	1.70	0.9	0.11	0.06
Electric	0.6	0.3	0.04	0.02	0.05	0.03	0.27	0.14	0.02	0.01
Forming	57.6	28.8	–	–	–	–	–	–	–	–
Curing oven	3.5	1.8	ND	–	1.7	0.9	1.1	0.6	–	–
Cooling	1.3	0.7	–	–	0.2	0.1	0.2	0.1	–	–

[a] Emission factors expressed as units per unit weight of material processed.

[b] Reference 3.

[c] Only one process is generally used at any one plant.

[d] No data available.

[e] In addition, 0.09 lb/ton (0.05 kg/MT) phenol and 3.3 lb/ton (1.7 mg/MT) aldehyde are released from the wool curing and cooling operations.

References for Section 8.11

1. Air Pollutant Emission Factors. Final Report. Resources Research, Inc., Reston, Va. Prepared for National Air Pollution Control Administration, Durham, N.C., under Contract Number CPA-22-69-119. April 1970.

2. Kirk-Othmer. Encyclopedia of Chemical Technology, Vol. X. 2nd Ed. New York, Interscience (John Wiley and Sons, Inc.). 1966. p. 564-566.

3. Private correspondence from S. H. Thomas, Owens-Corning Fiberglas Corp., Toledo, Ohio including intra-company correspondence from R. J. Powels. Subject: Air Pollutant Emission Factors. April 26, 1972.

8.12 FRIT MANUFACTURING

8.12.1 Process Description[1,2]

Frit is used in enameling iron and steel and in glazing porcelain and pottery. In a typical plant, the raw materials consist of a combination of materials such as borax, feldspar, sodium fluoride or fluorspar, soda ash, zinc oxide, litharge, silica, boric acid, and zircon. Frit is prepared by fusing these various minerals in a smelter, and the molten material is then quenched with air or water. This quenching operation causes the melt to solidify rapidly and shatter into numerous small glass particles, called frit. After a drying process, the frit is finely ground in a ball mill where other materials are added.

8.12.2 Emissions and Controls[2]

Significant dust and fume emissions are created by the frit-smelting operation. These emissions consist primarily of condensed metallic oxide fumes that have volatilized from the molten charge. They also contain mineral dust carryover and sometimes hydrogen fluoride. Emissions can be reduced by not rotating the smelter too rapidly (to prevent excessive dust carry-over) and by not heating the batch too rapidly or too long (to prevent volatilizing the more fusible elements).

The two most feasible control devices for frit smelters are baghouses and venturi water scrubbers. Emission factors for frit smelters are shown in Table 8.12-1. Collection efficiencies obtainable for venturi scrubbers are also shown in the table.

Table 8.12-1. EMISSION FACTORS FOR FRIT SMELTERS WITHOUT CONTROLS[a]
EMISSION FACTOR RATING: C

Type of furnace	Particulates[b]		Fluorides[b]	
	lb/ton	kg/MT	lb/ton	kg/MT
Rotary	16	8	5	2.5

[a]Reference 2. Emission factors expressed as units per unit weight of charge.
[b]A venturi scrubber with a 21-inch (535-mm) water-gauge pressure drop can reduce particulate emissions by 67 percent and fluorides by 94 percent.

References for Section 8.12

1. Duprey, R. L. Compilation of Air Pollutant Emission Factors. U.S. DHEW, PHS, National Center for Air Pollution Control. Durham, N.C. PHS Publication Number 999-AP-42. 1968. p. 37-38.

2. Spinks, J. L. Frit Smelters. In: Air Pollution Engineering Manual. Danielson, J. A. (ed.), U.S. DHEW, PHS, National Center for Air Pollution Control. Cincinnati, Ohio. PHS Publication Number 999-AP-40. 1967. p. 738-744.

8.13 GLASS MANUFACTURING

8.13.1 Process Description[1,2]

Nearly all glass produced commercially is one of five basic types: soda-lime, lead, fused silica, borosilicate, and 96 percent silica. Of these, the modern soda-lime glass constitutes 90 percent of the total glass produced and will thus be the only type discussed in this section. Soda-lime glass is produced on a massive scale in large, direct-fired, continuous-melting furnaces in which the blended raw materials are melted at 2700°F (1480°C) to form glass.

8.13.2 Emissions and Controls[1,2]

Emissions from the glass-melting operation consist primarily of particulates and fluorides, if fluoride-containing fluxes are used in the process. Because the dust emissions contain particles that are only a few microns in diameter, cyclones and centrifugal scrubbers are not as effective as baghouses or filters in collecting particulate matter. Table 8.13-1 summarizes the emission factors for glass melting.

Table 8.13-1. EMISSION FACTORS FOR GLASS MELTING
EMISSION FACTOR RATING: D

Type of glass	Particulates[a]		Fluorides[b]	
	lb/ton	kg/MT	lb/ton	kg/MT
Soda-lime	2	1	4F[c]	2F[c]

[a] Reference 3. Emission factors expressed as units per unit weight of glass produced.
[b] Reference 4.
[c] F equals weight percent of fluoride in input to furnace; e.g., if fluoride content is 5 percent, the emission factor would be 4F or 20 (2F or 10).

References for Section 8.13

1. Netzley, A. B. and J. L. McGinnity. Glass Manufacture. In: Air Pollution Engineering Manual. Danielson, J.A. (ed.). U.S. DHEW, PHS, National Center for Air Pollution Control. Cincinnati, Ohio. PHS Publication Number 999-AP-40. 1967. p. 720-730.

2. Duprey, R. L. Compilation of Air Pollutant Emission Factors. U.S. DHEW, PHS, National Center for Air Pollution Control. Durham, N.C. PHS Publication Number 999-AP-42. 1968. p. 38.

3. Technical Progress Report: Control of Stationary Sources. Los Angeles County Air Pollution Control District. *1*: April 1960.

4. Semrau, K. T. Emissions of Fluorides from Industrial Processes: A Review. J. Air Pol. Control Assoc. *7(2)*:92-108, August 1957.

8.14 GYPSUM MANUFACTURING

8.14.1 Process Description[1]

Gypsum, or hydrated calcium sulfate, is a naturally occurring mineral that is an important building material. When heated gypsum loses its water of hydration, it becomes plaster of paris, or when blended with fillers it serves as wall plaster. In both cases the material hardens as water reacts with it to form the solid crystalline hydrate.[2,3]

The usual method of calcination of gypsum consists of grinding the mineral and placing it in large, externally heated calciners. Complete calcination of 1 ton (0.907 MT) of plaster takes about 3 hours and requires about 1.0 million Btu (0.25 million kcal).[4,5]

8.14.2 Emissions[1]

The process of calcining gypsum appears to be devoid of any air pollutants because it involves simply the relatively low-temperature removal of the water of hydration. However, the gases created by the release of the water of crystalization carry gypsum rock dust and partially calcined gypsum dust into the atmosphere.[6] In addition, dust emissions occur from the grinding of the gypsum before calcining and from the mixing of the calcined gypsum with filler. Table 8.14-1 presents emission factors for gypsum processing.

Table 8.14-1. PARTICULATE EMISSION FACTORS FOR GYPSUM PROCESSING[a]
EMISSION FACTOR RATING: C

Type of process	Uncontrolled emissions		With fabric filter		With cyclone and electrostatic precipitator	
	lb/ton	kg/MT	lb/ton	kg/MT	lb/ton	kg/MT
Raw-material dryer (if used)	40	20	0.2	0.1	0.4	0.2
Primary grinder	1	0.5	0.001	0.0005	–	–
Calciner	90	45	0.1	0.05	–	–
Conveying	0.7	0.35	0.001	0.0005	–	–

[a]Reference 7. Emission factors expressed as units per unit weight of process throughput.

References for Section 8.14

1. Air Pollutant Emission Factors. Final Report. Resources Research Inc. Reston, Va. Prepared for National Air Pollution Control Administration, Durham, N.C., under Contract Number CPA-22-69-119. April 1970.

2. Shreve, R. N. Chemical Process Industries, 3rd Ed. New York, McGraw-Hill Book Company. 1967. p. 180-182.

3. Havinghorst, R. A Quick Look at Gypsum Manufacture. Chem. Eng. *72*:52-54, January 4, 1965.

4. Work, L. T. and A. L. Stern. Size Reduction and Size Enlargement. In: Chemical Engineers Handbook, 4th Ed. New York, McGraw-Hill Book Company. 1963. p. 51.

5. Private communication on emissions from gypsum plants between M. M. Hambuik and the National Gypsum Association, Chicago, Illinois. January 1970.

6. Culhane, F. R. Chem. Eng. Progr. *64*:72, January 1, 1968.

7. Communication between Resources Research, Incorporated, Reston, Virginia, and the Maryland State Department of Health, Baltimore, Maryland. November 1969.

8.15 LIME MANUFACTURING

8.15.1 General[1]

Lime (CaO) is the high-temperature product of the calcination of limestone ($CaCO_3$). Lime is manufactured in vertical or rotary kilns fired by coal, oil, or natural gas.

8.15.2 Emissions and Controls[1]

Atmospheric emissions in the lime manufacturing industry include particulate emissions from the mining, handling, crushing, screening, and calcining of the limestone and combustion products from the kilns. The vertical kilns, because of a larger size of charge material, lower air velocities, and less agitation, have considerably fewer particulate emissions. Control of emissions from these vertical kilns is accomplished by sealing the exit of the kiln and exhausting the gases through control equipment.

Particulate emission problems are much greater on the rotary kilns because of the smaller size of the charge material, the higher rate of fuel consumption, and the greater air velocities through the rotary chamber. Methods of control on rotary-kiln plants include simple and multiple cyclones, wet scrubbers, baghouses, and electrostatic precipitators.[2] Emission factors for lime manufacturing are summarized in Table 8.15-1.

Table 8.15-1. PARTICULATE EMISSION FACTORS FOR LIME MANUFACTURING WITHOUT CONTROLS[a]
EMISSION FACTOR RATING: B

Operation	Emissions[b]	
	lb/ton	kg/MT
Crushing[c]		
Primary	31	15.5
Secondary	2	1
Calcining[d]		
Vertical kiln	8	4
Rotary kiln	200	100

[a]Emission factors expressed as units per unit weight of lime processed.

[b]Cyclones could reduce these factors by about 70 percent. Venturi scrubbers could reduce these factors by about 95 to 99 percent. Fabric filters could reduce these factors by about 99 percent.

[c]Reference 3.

[d]References 2, 4, and 5.

References for Section 8.15

1. Air Pollutant Emission Factors. Final Report. Resources Research, Inc. Reston, Va. Prepared for National Air Pollution Control Administration, Durham, N.C., under Contract Number CPA-22-69-119. April 1970.

2. Lewis, C. and B. Crocker. The Lime Industry's Problem of Airborne Dust. J. Air Pol. Control Assoc. *19*:31-39, January 1969.

3. State of Maryland Emission Inventory Data. Maryland State Department of Health, Baltimore, Maryland. 1969.

4. A Study of the Lime Industry in the State of Missouri for the Air Conservation Commission of the State of Missouri. Reston, Virginia, Resources Research, Incorporated. December 1967. p. 54.

5. Communication between Midwest Research Institute and a control device manufacturer. 1968.

8.16 MINERAL WOOL MANUFACTURING

8.16.1 Process Description[1,2]

The product mineral wool used to be divided into three categories: slag wool, rock wool, and glass wool. Today, however, straight slag wool and rock wool as such are no longer manufactured. A combination of slag and rock constitutes the charge material that now yields a product classified as a mineral wool, used mainly for thermal and acoustical insulation.

Mineral wool is made primarily in cupola furnaces charged with blast-furnace slag, silica rock, and coke. The charge is heated to a molten state at about 3000°F (1650°C) and then fed to a blow chamber, where steam atomizes the molten rock into globules that develop long fibrous tails as they are drawn to the other end of the chamber. The wool blanket formed is next conveyed to an oven to cure the binding agent and then to a cooler.

8.16.2 Emissions and Controls

The major source of emissions is the cupola or furnace stack. Its discharge consists primarily of condensed fumes that have volatilized from the molten charge and gases such as sulfur oxides and fluorides. Minor sources of particulate emissions include the blowchamber, curing oven, and cooler. Emission factors for various stages of mineral wool processing are shown in Table 8.16-1. The effect of control devices on emissions is shown in footnotes to the table.

Table 8.16-1. EMISSION FACTORS FOR MINERAL WOOL PROCESSING WITHOUT CONTROLS[a]
EMISSION FACTOR RATING: C

Type of process	Particulates		Sulfur oxides	
	lb/ton	kg/MT	lb/ton	kg/MT
Cupola	22	11	0.02	0.01
Reverberatory furnace	5	2.5	Neg[b]	Neg
Blow chamber[c]	17	8.5	Neg	Neg
Curing oven[d]	4	2	Neg	Neg
Cooler	2	1	Neg	Neg

[a]Reference 2. Emission factors expressed as units per unit weight of charge.
[b]Negligible.
[c]A centrifugal water scrubber can reduce particulate emissions by 60 percent.
[d]A direct-flame afterburner can reduce particulate emissions by 50 percent.

References for Section 8.16

1. Duprey, R. L. Compilation of Air Pollutant Emission Factors. U.S. DHEW, PHS, National Center for Air Pollution Control. Durham, N. C. PHS Publication Number 999-AP-42. 1968. p. 39-40.

2. Spinks, J. L. Mineral Wool Furnaces. In: Air Pollution Engineering Manual. Danielson, J. A. (ed.). U.S. DHEW, PHS, National Center for Air Pollution Control. Cincinnati, Ohio. PHS Publication Number 999-AP-40. 1967. p. 343-347.

8.17 PERLITE MANUFACTURING

8.17.1 Process Description[1,2]

Perlite is a glassy volcanic rock consisting of oxides of silicon and aluminum combined as a natural glass by water of hydration. By a process called exfoliation, the material is rapidly heated to release water of hydration and thus to expand the spherules into low-density particles used primarily as aggregate in plaster and concrete. A plant for the expansion of perlite consists of ore unloading and storage facilities, a furnace-feeding device, an expanding furnace, provisions for gas and product cooling, and product-classifying and product-collecting equipment. Vertical furnaces, horizontal stationary furnaces, and horizontal rotary furnaces are used for the exfoliation of perlite, although the vertical types are the most numerous. Cyclone separators are used to collect the product.

8.17.2 Emissions and Controls[2]

A fine dust is emitted from the outlet of the last product collector in a perlite expansion plant. The fineness of the dust varies from one plant to another, depending upon the desired product. In order to achieve complete control of these particulate emissions, a baghouse is needed. Simple cyclones and small multiple cyclones are not adequate for collecting the fine dust from perlite furnaces. Table 8.17-1 summarizes the emissions from perlite manufacturing.

Table 8.17-1. PARTICULATE EMISSION FACTORS FOR PERLITE EXPANSION FURNACES WITHOUT CONTROLS[a]
EMISSION FACTOR RATING: C

Type of furnace	Emissions[b]	
	lb/ton	kg/MT
Vertical	21	10.5

[a]Reference 3. Emission factors expressed as units per unit weight of charge.

[b]Primary cyclones will collect 80 percent of the particulates above 20 micrometers, and baghouses will collect 96 percent of the particles above 20 micrometers.[2]

References for Section 8.17

1. Duprey, R. L. Compilation of Air Pollutant Emission Factors. U.S. DHEW, PHS, National Center for Air Pollution Control. Durham, N.C. PHS Publication Number 999-AP-42. 1968. p. 39.

2. Vincent, E. J. Perlite-Expanding Furnaces. In: Air Pollution Engineering Manual. Danielson, J. A. (ed.). U.S. DHEW, PHS, National Center for Air Pollution Control. Cincinnati, Ohio. PHS Publication Number 999-AP-40. 1967. p. 350-352.

3. Unpublished data on perlite expansion furnace. National Center for Air Pollution Control. Cincinnati, Ohio. July 1967.

8.18 PHOSPHATE ROCK PROCESSING

8.18.1 Process Description[1]

Phosphate rock preparation involves beneficiation to remove impurities, drying to remove moisture, and grinding to improve reactivity. Usually, direct-fired rotary kilns are used to dry phosphate rock. These dryers burn natural gas or fuel oil and are fired counter-currently. The material from the dryers may be ground before storage in large storage silos. Air-swept ball mills are preferred for grinding phosphate rock.

8.18.2 Emissions and Controls[1]

Although there are no significant emissions from phosphate rock beneficiation plants, emissions in the form of fine rock dust may be expected from drying and grinding operations. Phosphate rock dryers are usually equipped with dry cyclones followed by wet scrubbers. Particulate emissions are usually higher when drying pebble rock than when drying concentrate because of the small adherent particles of clay and slime on the rock. Phosphate rock grinders can be a considerable source of particulates. Because of the extremely fine particle size, baghouse collectors are normally used to reduce emissions. Emission factors for phosphate rock processing are presented in Table 8.18-1.

Table 8.18-1. PARTICULATE EMISSION FACTORS FOR PHOSPHATE ROCK PROCESSING WITHOUT CONTROLS[a]
EMISSION FACTOR RATING: C

Type of source	Emissions	
	lb/ton	kg/MT
Drying[b,c]	15	7.5
Grinding[b,d]	20	10
Transfer and storage[d,e]	2	1
Open storage piles[e]	40	20

[a]Emission factors expressed as units per unit weight of phosphate rock.

[b]References 2 and 3.

[c]Dry cyclones followed by wet scrubbers can reduce emissions by 95 to 99 percent.

[d]Dry cyclones followed by fabric filters can reduce emissions by 99.5 to 99.9 percent.

[e]Reference 3.

References for Section 8.18

1. Stern, A. (ed.). In: Air Pollution, Vol. III, 2nd Ed. Sources of Air Pollution and Their Control. New York, Academic Press. 1968. p. 221-222.

2. Unpublished data from phosphate rock preparation plants in Florida. Midwest Research Institute. June 1970.

3. Control Techniques for Fluoride Emissions. Internal document. U.S. Environmental Protection Agency, Office of Air Programs, Durham, N.C. p. 4-46, 4-36, and 4-34.

8.19 SAND AND GRAVEL PROCESSING

By James H. Southerland

8.19.1 Process Description[1]

Deposits of sand and gravel, the consolidated granular materials resulting from the natural disintegration of rock or stone, are found in banks and pits and in subterranean and subaqueous beds.

Depending upon the location of the deposit, the materials are excavated using power shovels, draglines, cableways, suction dredge pumps, or other apparatus; light-charge blasting may be necessary to loosen the deposit. The materials are transported to the processing plant by suction pump, earth mover, barge, truck, or other means. The processing of sand and gravel for a specific market involves the use of different combinations of washers; screens and classifiers, which segregate particle sizes; crushers, which reduce oversize material; and storage and loading facilities.

8.19.2 Emissions[2,3]

Dust emissions occur during conveying, screening, crushing, and storing operations. Because these materials are generally moist when handled, emissions are much lower than in a similar crushed stone operation. Sizeable emissions may also occur as vehicles travel over unpaved roads and paved roads covered by dirt. Although little actual source testing has been done, an estimate has been made for particulate emissions from a plant using crushers:

Particulate emissions: 0.1 lb/ton (0.05 kg/MT) of product.[3]

References for Section 8.19

1. Walker, Stanton. Production of Sand and Gravel. National Sand and Gravel Association. Washington, D.C. Circular Number 57. 1954.

2. Schreibeis, William J. and H. H. Schrenk. Evaluation of Dust and Noise Conditions at Typical Sand and Gravel Plants. Study conducted under the auspices of the Committee on Public Relations, National Sand and Gravel Association, by the Industrial Hygiene Foundation of America, Inc. 1958.

3. Particulate Pollutant System Study, Vol. I, Mass Emissions. Midwest Research Institute, Kansas City, Mo. Prepared for the Environmental Protection Agency, Research Triangle Park, N.C., under Contract Number CPA 22-69-104. May 1971.

8.20 STONE QUARRYING AND PROCESSING

8.20.1 Process Description[1]

Rock and crushed stone products are loosened by drilling and blasting them from their deposit beds and are removed with the use of heavy earth-moving equipment. This mining of rock is done primarily in open pits. The use of pneumatic drilling and cutting, as well as blasting and transferring, causes considerable dust formation. Further processing includes crushing, regrinding, and removal of fines.[2] Dust emissions can occur from all of these operations, as well as from quarrying, transferring, loading, and storage operations. Drying operations, when used, can also be a source of dust emissions.

8.20.2 Emissions[1]

As enumerated above, dust emissions occur from many operations in stone quarrying and processing. Although a big portion of these emissions is heavy particles that settle out within the plant, an attempt has been made to estimate the suspended particulates. These emission factors are shown in Table 8.20-1. Factors affecting emissions include the amount of rock processed; the method of transfer of the rock; the moisture content of the raw material; the degree of enclosure of the transferring, processing, and storage areas; and the degree to which control equipment is used on the processes.

Table 8.20-1. PARTICULATE EMISSION FACTORS FOR ROCK-HANDLING PROCESSES
EMISSION FACTOR RATING: C

Type of process	Uncontrolled total[a]		Settled out in plant, %	Suspended emission	
	lb/ton	kg/MT		lb/ton	kg/MT
Dry crushing operations[b,c]					
Primary crushing	0.5	0.25	80	0.1	0.05
Secondary crushing and screening	1.5	0.75	60	0.6	0.3
Tertiary crushing and screening (if used)	6	3	40	3.6	1.8
Recrushing and screening	5	2.5	50	2.5	1.25
Fines mill	6	3	25	4.5	2.25
Miscellaneous operations[d]					
Screening, conveying, and handling[e]	2	1			
Storage pile losses[f]	10	5			

[a]Typical collection efficiencies: cyclone, 70 to 85 percent; fabric filter, 99 percent.

[b]All values are based on raw material entering primary crusher, except those for recrushing and screening, which are based on throughput for that operation.

[c]Reference 3.

[d]Based on units of stored product.

[e]Reference 4.

[f]The significance of storage pile losses is mentioned in Reference 5. The factor assigned here is the author's estimate for uncontrolled total emissions. Use of this factor should be tempered with knowledge about the size of materials stored, the local meteorological factors, the frequency with which the piles are disturbed, etc.

References for Section 8.20

1. Air Pollutant Emission Factors. Final Report. Resources Research, Inc. Reston, Va. Prepared for National Air Pollution Control Administration, Durham, N.C., under Contract Number CPA-22-69-119. April 1970.

2. Communication between Resources Research, Incorporated, Reston, Virginia, and the National Crushed Stone Association. September 1969.

3. Culver, P. Memorandum to files. U.S. DHEW, PHS, National Air Pollution Control Administration, Division of Abatement, Durham, N.C. January 6, 1968.

4. Unpublished data on storage and handling or rock products. U.S. DHEW, PHS, National Air Pollution Control Administration, Division of Abatement, Durham, N.C. May 1967.

5. Stern, A. (ed.) In: Air Pollution, Vol. III, 2nd Ed. Sources of Air Pollution and Their Control. New York, Academic Press. 1968. p. 123-127.

9. PETROLEUM INDUSTRY

9.1 PETROLEUM REFINING

Revised by William M. Vatavuk

9.1.1 General

Although a modern refinery is a complex system of many processes, the entire operation can be divided into four major steps: separating, converting, treating, and blending. The crude oil is first separated into selected fractions (e.g. gasoline, kerosene, fuel, oil, etc.). Because the relative volumes of each fraction produced by merely separating the crude may not conform to the market demands for each fraction, some of the less valuable products, such as heavy naptha, are converted to products with a greater sale value, such as gasoline. This conversion is accomplished by splitting (cracking), uniting (polymerization), or rearranging (reforming) the original molecules. The final step is the blending of the refined base stocks with each other and with various additives to meet final product specifications. The various unit operations involved at petroleum refineries will be briefly discussed in the following sections. A generalized petroleum refinery flow sheet is shown in Figure 9.1-1.

9.1.2 Crude Oil Distillation[1-6]

Crude oil is a mixture of many different hydrocarbons, some of them combined with small amounts of impurities. Crude oils vary considerably in composition and physical properties, but primarily consist of three families of hydrocarbons: paraffins, saturated hydrocarbons having the empirical formula C_nH_{2n+2}; napthenes, ring-structure saturated hydrocarbons with the formula C_nH_{2n}; and aromatics, characterized by a benzene ring, C_6H_6, in the molecular structure. In addition to carbon and hydrogen, significant amounts of sulfur, oxygen, and nitrogen can be present in crude petroleum.

Separation of these hydrocarbon constituents into their respective fractions is performed by simple distillation in crude topping or skimming units. Crude oil is heated in pipe stills and passed to fractionating towers or columns for vaporization and preparation. Heavy fractions of the crude oil, which do not vaporize in the topping operation, are separated by steam or vacuum distillation. The heavy residuum products are reduced to coke and more valuable volatile products via destructive distillation and coking. Depending on the boiling range of the stock and its stability with respect to heat and product specifications, solvent extraction and/or absorption techniques can also be used. The distillation fractions - "straight run products" - usually include refinery gas, gasoline, kerosene, light fuel oil, diesel oils, gas oil, lube distillate, and heavy bottoms, the amount of each being determined by the type and composition of the crude oil. Some of these products are treated to remove impurities and used as base stocks or sold as finished products; the remainder are used as feedstock for other refinery units.

9.1.2.1 Emissions—The main source of emissions from crude oil preparation processes is the barometric condenser on the vacuum distillation column. This condenser, while maintaining a vacuum on the tower, often allows noncondensable light hydrocarbons and hydrogen sulfide to pass through to the atmosphere. The quantity of these emissions is a function of the unit size, type of feedstock, and the cooling water temperature. Vapor recovery systems reduce these emissions to negligible amounts (see Table 9.1-1).

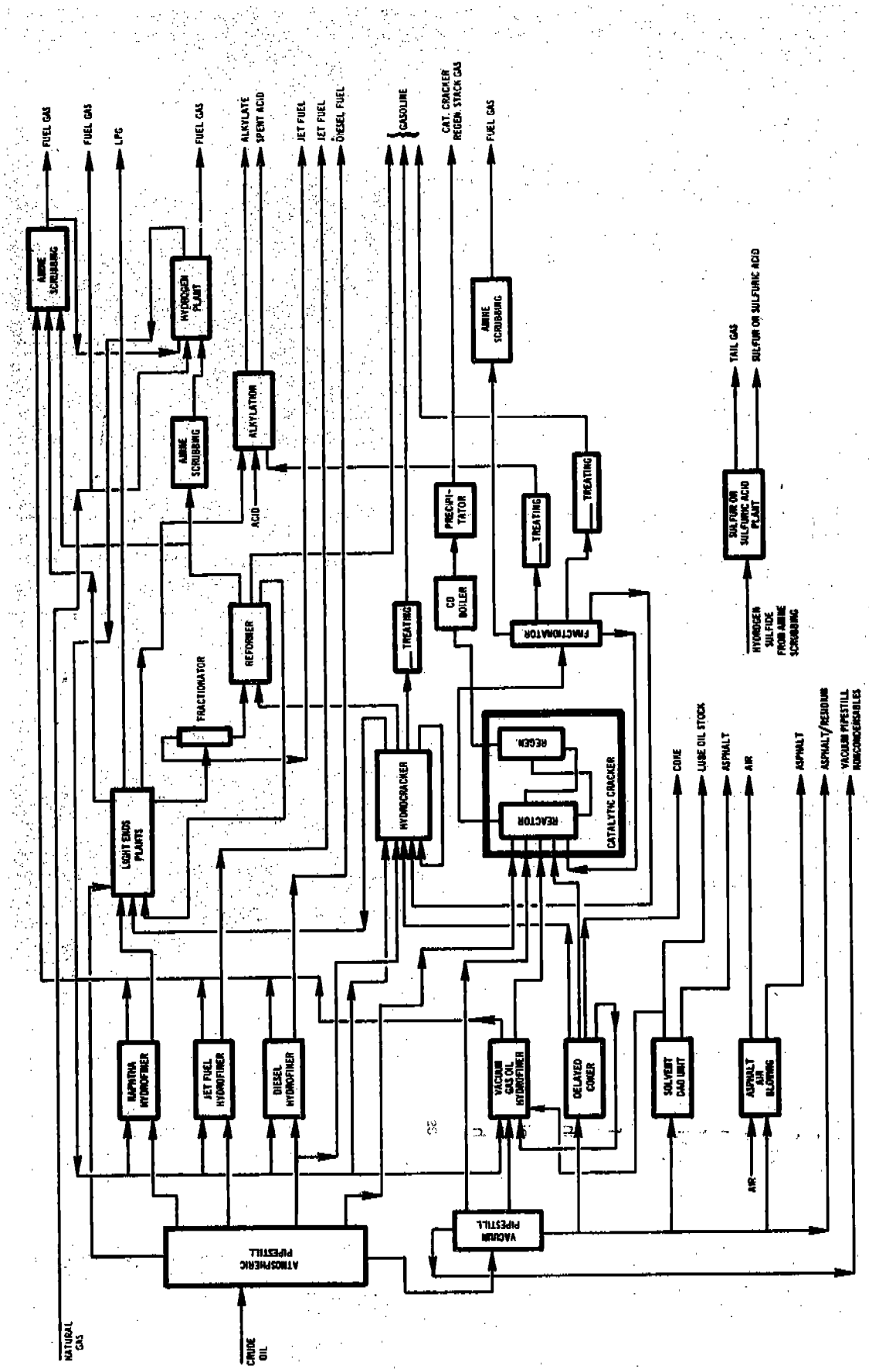

Figure 9.1-1. Basic flow diagram of petroleum refinery.

Table 9.1-1. EMISSION FACTORS FOR PETROLEUM REFINERIES
EMISSION FACTOR RATING: A

Type of process	Particulates	Sulfur oxides (SO_2)	Carbon monoxide	Hydro-carbons	Nitrogen oxides (NO_2)	Alde-hydes	Ammonia
Boilers and process heaters[a]							
lb/10^3 bbl oil burned	840	6,720S[b]	Neg[c]	140	2,900	25	Neg
kg/10^3 liters oil burned	2.4	19.2S	Neg	0.4	8.3	0.071	Neg
lb/10^3 ft^3 gas burned	0.02	2s[d]	Neg	0.03	0.23	0.003	Neg
kg/10^3 m^3 gas burned	0.32	32s	Neg	0.48	3.7	0.048	Neg
Fluid catalytic cracking units[e]							
Uncontrolled							
lb/10^3 bbl fresh feed	242 (93 to 340)[f]	493 (313 to 525)	13,700	220	71.0 (37.1 to 145.0)	19	54
kg/10^3 liters fresh feed	0.695 (0.267 to 0.976)	1.413 (0.898 to 1.505)	39.2	0.630	0.204 (0.107 to 0.416)	0.054	0.155
Electrostatic precipitator and CO boiler							
lb/10^3 bbl fresh feed	44.7 (12.5 to 61.0)	493 (313 to 525)	Neg	220	71.0 (37.1 to 145.0)	19	54
kg/10^3 liters fresh fresh feed	0.128 (0.036 to 0.175)	1.413 (0.898 to 1.505)	Neg	0.630	0.204 (0.107 to 0.416)	0.054	0.155
Moving-bed catalytic cracking units[a]							
lb/10^3 bbl fresh feed	17	60	3,800	87	5	12	6
kg/10^3 liters fresh feed	0.049	0.171	10.8	0.250	0.014	0.034	0.017
Fluid coking units[g]							
Uncontrolled							
lb/10^3 bbl fresh feed	523	NA[h]	Neg	Neg	Neg	Neg	Neg
kg/10^3 liters fresh feed	1.50	NA	Neg	Neg	Neg	Neg	Neg
Electrostatic precipitator							
lb/10^3 bbl fresh feed	6.85	NA	Neg	Neg	Neg	Neg	Neg
kg/10^3 liters fresh feed	0.0196	NA	Neg	Neg	Neg	Neg	Neg

Table 9.1-1. (continued). EMISSION FACTORS PETROLEUM REFINERIES
EMISSION FACTOR RATING: A

Type of process	Particulates	Sulfur oxides (SO_2)	Carbon monoxide	Hydrocarbons	Nitrogen oxides (NO_2)	Aldehydes	Ammonia
Compressor internal combustion engines[a]							
lb/10^3 ft^3 gas burned	Neg	2s	Neg	1.2	0.9	0.1	0.2
kg/10^3 m^3 gas burned	Neg	32s	Neg	19.3	14.4	1.61	3.2
Blowdown systems[a]							
Uncontrolled							
lb/10^3 bbl refinery capacity	Neg	Neg	Neg	300	Neg	Neg	Neg
kg/10^3 liters refinery capacity	Neg	Neg	Neg	0.860	Neg	Neg	Neg
Vapor recovery system or flaring							
lb/10^3 bbl refinery capacity	Neg	Neg	Neg	5	Neg	Neg	Neg
kg/10^3 liters refinery capacity	Neg	Neg	Neg	0.014	Neg	Neg	Neg
Process drains, Uncontrolled							
lb/10^3 bbl waste water	Neg	Neg	Neg	210	Neg	Neg	Neg
kg/10^3 liters waste water	Neg	Neg	Neg	0.600	Neg	Neg	Neg
Vapor recovery or separator covers							
lb/10^3 bbl waste water	Neg	Neg	Neg	8	Neg	Neg	Neg
kg/10^3 liters waste water	Neg	Neg	Neg	0.023	Neg	Neg	Neg
Vacuum jets[a]							
Uncontrolled							
lb/10^3 bbl vacuum distillate	Neg	Neg	Neg	130	Neg	Neg	Neg
kg/10^3 liters vacuum distillate	Neg	Neg	Neg	0.370	Neg	Neg	Neg
Fume burner or waste-heat boiler							
lb/10^3 bbl vacuum distillate	Neg	Neg	Neg	Neg	Neg	Neg	Neg

Table 9.1-1. (continued). EMISS. FACTORS FOR PETROLEUM REFINERIES
EMISSION FACTOR RATING: A

Type of process	Particulates	Sulfur oxides (SO_2)	Carbon monoxide	Hydro-carbons	Nitrogen oxides (NO_2)	Alde-hydes	Ammonia
kg/10^3 liters vacuum distillate	Neg	Neg	Neg	Neg	Neg	Neg	Neg
Cooling towers[a]							
lb/10^6 gal cooling water	Neg	Neg	Neg	6	Neg	Neg	Neg
kg/10^6 liters cooling water	Neg	Neg	Neg	0.72	Neg	Neg	Neg
Pipeline valves and flanges[a]							
lb/10^3 bbl refining capacity	Neg	Neg	Neg	28	Neg	Neg	Neg
kg/10^3 liter refining capacity	Neg	Neg	Neg	0.080	Neg	Neg	Neg
Vessel relief valves[a]							
lb/10^3 bbl refining capacity	Neg	Neg	Neg	11	Neg	Neg	Neg
kg/10^3 liter refining capacity	Neg	Neg	Neg	0.031	Neg	Neg	Neg
Pump seals[a]							
lb/10^3 bbl refining capacity	Neg	Neg	Neg	17	Neg	Neg	Neg
kg/10^3 liter refining capacity	Neg	Neg	Neg	0.049	Neg	Neg	Neg
Compressor seals[a]							
lb/10^3 bbl refining capacity	Neg	Neg	Neg	5	Neg	Neg	Neg
kg/10^3 liter refining capacity	Neg	Neg	Neg	0.014	Neg	Neg	Neg
Miscellaneous (air blowing, sampling, etc.)[a]							
lb/10^3 bbl refining capacity	Neg	Neg	Neg	10	Neg	Neg	Neg
kg/10^3 liter refining capacity	Neg	Neg	Neg	0.029	Neg	Neg	Neg

[a]Reference 1.
[b]S = Fuel oil sulfur content (weight percent): factors based on 100 percent combustion of sulfur to SO_2 and assumed density of 336 lb/bbl (0.96 kg/liter).
[c]Negligible emission.
[d]s = refinery gas sulfur content (lb/100 ft^3): factors based on 100 percent combustion of sulfur to SO_2.
[e]References 1 through 6.
[f]Numbers in parenthesis indicate range or values observed.
[g]Reference 3.

9.1.3 Converting

To meet quantity demands for certain types of petroleum products, it is often necessary to chemically convert the molecular structures of certain hydrocarbons via "cracking" and "reforming" to produce compounds of different structures.

9.1.3.1 Catalytic Cracking[1]—In the cracking operation, large molecules are decomposed by heat, pressure, and catalysis into smaller, lower-boiling molecules. Simultaneously, some of the molecules combine (polymerize) to form larger molecules. Products of cracking are gaseous hydrocarbons, gasoline, gas oil, fuel oil, and coke.

Most catalytic cracking operations in the U.S. today are performed by using four main methods: (1) fixed-bed, a batch operation; (2) moving-bed, typified by thermofor catalytic cracking (TCC) and Houdriflow units; (3) fluidized-bed (FCC); and (4) "once-through" units. The two most widely used units are the moving- and fluidized-bed types, with the latter most predominant.

In a moving-bed cracker, the charge (gas oil) is heated to 900°F under pressure and passed to the reactor where it passes cross-flow to a descending stream of molecular sieve-type catalyst in the form of beads or pellets. The cracked products then pass to a fractionating tower where the various compounds are tapped off. Meanwhile, the spent catalyst flows through a regeneration zone where coke deposits are burned off in a continuous process. The regenerated catalyst is then conveyed to storage bins atop the reactor vessel for reuse.

In fluidized systems, finely powdered catalyst is lifted into the reactor by the incoming heated oil charge, which vaporizes upon contact with the hot catalyst. Spent catalyst settles out in the reactor, is drawn off at a controlled rate, purged with steam, and lifted by an air stream into the regenerator where the deposited coke is burned off.

Emissions—Emissions from cracking unit regenerators consist of particulates (coke and catalyst fines), hydrocarbons, sulfur oxides, carbon monoxide, aldehydes, ammonia, and nitrogen oxides in the combusion gases. In addition, catalyst fines may be discharged by vents on the catalyst handling systems on both TCC and FCC units. Control measures commonly used on regenerators consist of cyclones and electrostatic precipitators to remove particulates and energy-recovery combustors to reduce carbon monoxide emissions. The latter recovers the heat of combustion of the CO to produce refinery process steam.

9.1.3.2 Hydrocracking[2]—The hydrocracker uses a fixed-bed catalytic reactor, wherein cracking occurs in the presence of hydrogen under substantial pressure. The principal functions of the hydrogen are to suppress the formation of heavy residual material and to increase the yield of gasoline by reacting with the cracked products. High-molecular-weight, sulfur-bearing hydrocarbons are also cracked, and the sulfur combines with the hydrogen to form hydrogen sulfide (H_2S). Therefore, waste gas from the hydrocracker contains large amounts of H_2S, which can be processed for removal of sulfur.

9.1.3.3 Catalytic Reforming[1]—In reforming processes, a feedstock of gasoline undergoes molecular rearrangement via catalysis (usually including hydrogen removal) to produce a gasoline of higher quality and octane number. In various fixed-bed and fluidized-bed processes, the catalyst is regenerated continously, in a manner similar to that used with cracking units.

There are essentially no emissions from reforming operations.

9.1.3.4 Polymerization, Alkylation, and Isomerization[1]—Polymerization and alkylation are processes used to produce gasoline from the gaseous hydrocarbons formed during cracking operations. Polymerization joins two or

more olefins (noncyclic unsaturated hydrocarbons with C=C double bonds), and alkylation unites an olefin and an iso-paraffin (noncyclic branched-chain hydrocarbon saturated with hydrogen). Isomerization is the process for altering the arrangement of atoms in a molecule without adding or removing anything from the original material, and is usually used in the oil industry to form branched-chain hydrocarbons. A number of catalysts such as phosphoric acid, sulfuric acid, platinum, aluminum chloride, and hydrofluoric acid are used to promote the combination or rearrangement of these light hydrocarbons.

9.1.3.5 Emissions--These three processes, including regeneration of any necessary catalysts, form essentially closed systems and have no unique, major source of atmospheric emissions. However, the highly volatile hydrocarbons handled, coupled with the high process pressures required, make valve stems and pump shafts difficult to seal, and a greater emission rate from these sources can generally be expected in these process areas than would be the average throughout the refinery. The best method for controlling these emissions is the effective maintenance, repair, and replacement of pump seals, valve caulking, and pipe-joint sealer.

9.1.4 Treating

"Hydrogen," "chemical," and "physical" treating are used in the refinery process to remove undesirable impurities such as sulfur, nitrogen, and oxygen to improve product quality.

9.1.4.1 Hydrogen Treating[1]—In this procedure hydrogen is reacted with impurities in compounds to produce removable hydrogen sulfide, ammonia, and water. In addition, the process converts diolefins (gum-forming hydrocarbons with the empirical formula R=C=R) into stable compounds while minimizing saturation of desirable aromatics.

Hydrogenation units are nearly all the fixed-bed type with catalyst replacement or regeneration (by combustion) done intermittently, the frequency of which is dependent upon operating conditions and the product being treated. The hydrogen sulfide produced is removed from the hydrogen stream via extraction and converted to elemental sulfur or sulfuric acid or, when present in small quantities, burned to SO_2 in a flare or boiler firebox.

9.1.4.2 Chemical Treating[1]—Chemical treating is generally classified into four groups: (1) acid treatment, (2) sweetening, (3) solvent extraction, and (4) additives. Acid treatment involves contacting hydrocarbons with sulfuric acid to partially remove sulfur and nitrogen compounds, to precipitate asphaltic or gum-like materials, and to improve color and odor. Spent acid sludges that result are usually converted to ammonium sulfate or sulfuric acid.

Sweetening processes oxidize mercaptans (formula: R-S-H) to disulfide (formula: R-S-S-R) without actual sulfur removal. In some processes, air and steam are used for agitation in mixing tanks and to reactivate chemical solutions.

Solvent extraction utilizes solvents that have affinities for the undesirable compounds and that can easily be removed from the product stream. Specifically, mercaptan compounds are usually extracted using a strong caustic solution; hydrogen sulfide is removed by a number of commercial processes.

Finally, additives or inhibitors are primarily materials added in small amounts to oxidize mercaptans to disulfide and to retard gum formation.

9.1.4.3 Physical Treating[1]—Some of the many physical methods used to remove impurities include electrical coalescence, filtration, absorption, and air blowing. Specific applications of physical methods are desalting crude oil, removing wax, decolorizing lube oils, and brightening diesel oil.

9.1.4.4 Emissions – Emissions from treating operations consist of SO_2, hydrocarbons, and visible plumes. Emission levels depend on the methods used in handling spent acid and acid sludges, as well as the means employed for recovery or disposal of hydrogen sulfide. Other potential sources of these emissions in treating include catalyst regeneration, air agitation in mixing tanks, and other air blowing operations. Trace amounts of malodorous substances may escape from numerous sources including settling tank vents, purge tanks, waste treatment units, waste-water drains, valves, and pump seals.

Control methods used include: covers for waste water separators; vapor recovery systems for settling and surge tanks; improved maintenance for pumps, valves, etc; and sulfur recovery plants.

9.1.5 Blending[1]

The final major operation in petroleum refining consists of blending the products in various proportions to meet certain specifications, such as vapor pressure, specific gravity, sulfur content, viscosity, octane number, initial boiling point, and pour point.

9.1.5.1 Emissions – Emissions associated with this operation are hydrocarbons that leak from storage vessels, valves, and pumps. Vapor recovery systems and specially built tanks minimize storage emissions; good housekeeping precludes pump and valve leakage.

9.1.6 Miscellaneous Operations[1]

In addition to the four refinery operations described above, there are many process operations connected with all four. These involve the use of cooling towers, blow-down systems, process heaters and boilers, compressors, and process drains. The emissions and controls associated with these operations are listed in Table 9.1-1.

References for Chapter 9

1. Atmospheric Emissions from Petroleum Refineries: A Guide for Measurement and Control. U.S. DHEW, Public Health Service. Washington, D.C. PHS Publication Number 763. 1960.

2. Impurities in Petroleum. In: Petreco Manual. Long Beach, Petrolite Corp. 1958. p.1.

3. Jones, Ben G. Refinery Improves Particulate Control. The Oil and Gas Journal. *69*(26):60-62. June 28, 1971.

4. Private communications with personnel in the Emission Testing Branch, Applied Technology Division, Environmental Protection Agency, Research Triangle Park, N.C., regarding source testing at a petroleum refinery preparatory to setting new source standards. June-August 1972.

5. Control Techniques for Sulfur Oxide in Air Pollutants. Environmental Protection Agency, Office of Air Programs, Research Triangle Park, N.C. Publication Number AP-52. January 1969.

6. Olson, H.N. and K.E. Hutchinson. How Feasible are Giant, One-Train Refineries? The Oil and Gas Journal. *70*(1):39-43. January 3, 1972.

10. WOOD PROCESSING

Wood processing involves the conversion of raw wood to either pulp, pulpboard, or one of several types of wallboard including plywood, particleboard, or hardboard. This section presents emissions data for chemical wood pulping as well as for pulpboard and plywood manufacturing. The burning of wood waste in boilers and conical burners is not included as it is discussed in Chapters 1 and 2 of this publication.

10.1 CHEMICAL WOOD PULPING

Revised by Thomas Lahre

10.1.1 General[1]

Chemical wood pulping involves the extraction of cellulose from wood by dissolving the lignin that binds the cellulose fibers together. The principal processes used in chemical pulping are the kraft, sulfite, neutral sulfite semichemical (NSSC), dissolving, and soda; the first three of these display the greatest potential for causing air pollution. The kraft process accounts for about 65 percent of all pulp produced in the United States; the sulfite and NSSC processes, together, account for less than 20 percent of the total. The choice of pulping process is determined by the product being made, by the type of wood species available, and by economic considerations.

10.1.2 Kraft Pulping

10.1.2.1 Process Description[1,2]—The kraft process (see Figure 10.1.2-1) involves the cooking of wood chips under pressure in the presence of a cooking liquor in either a batch or a continuous digester. The cooking liquor, or "white liquor," consisting of an aqueous solution of sodium sulfide and sodium hydroxide, dissolves the lignin that binds the cellulose fibers together.

When cooking is completed, the contents of the digester are forced into the blow tank. Here the major portion of the spent cooking liquor, which contains the dissolved lignin, is drained, and the pulp enters the initial stage of washing. From the blow tank the pulp passes through the knotter where unreacted chunks of wood are removed. The pulp is then washed and, in some mills, bleached before being pressed and dried into the finished product.

It is economically necessary to recover both the inorganic cooking chemicals and the heat content of the spent "black liquor," which is separated from the cooked pulp. Recovery is accomplished by first concentrating the liquor to a level that will support combustion and then feeding it to a furnace where burning and chemical recovery take place.

Initial concentration of the weak black liquor, which contains about 15 percent solids, occurs in the multiple-effect evaporator. Here process steam is passed countercurrent to the liquor in a series of evaporator tubes that increase the solids content to 40 to 55 percent. Further concentration is then effected in the direct contact evaporator. This is generally a scrubbing device (a cyclonic or venturi scrubber or a cascade evaporator) in which hot combustion gases from the recovery furnace mix with the incoming black liquor to raise its solids content to 55 to 70 percent.

The black liquor concentrate is then sprayed into the recovery furnace where the organic content supports combustion. The inorganic compounds fall to the bottom of the furnace and are discharged to the smelt dissolving tank to form a solution called "green liquor." The green liquor is then conveyed to a causticizer where slaked lime (calcium hydroxide) is added to convert the solution back to white liquor, which can be reused in subsequent cooks. Residual lime sludge from the causticizer can be recycled after being dewatered and calcined in the hot lime kiln.

Many mills need more steam for process heating, for driving equipment, for providing electric power, etc., than can be provided by the recovery furnace alone. Thus, conventional industrial boilers that burn coal, oil, natural gas, and in some cases, bark and wood waste are commonly employed.

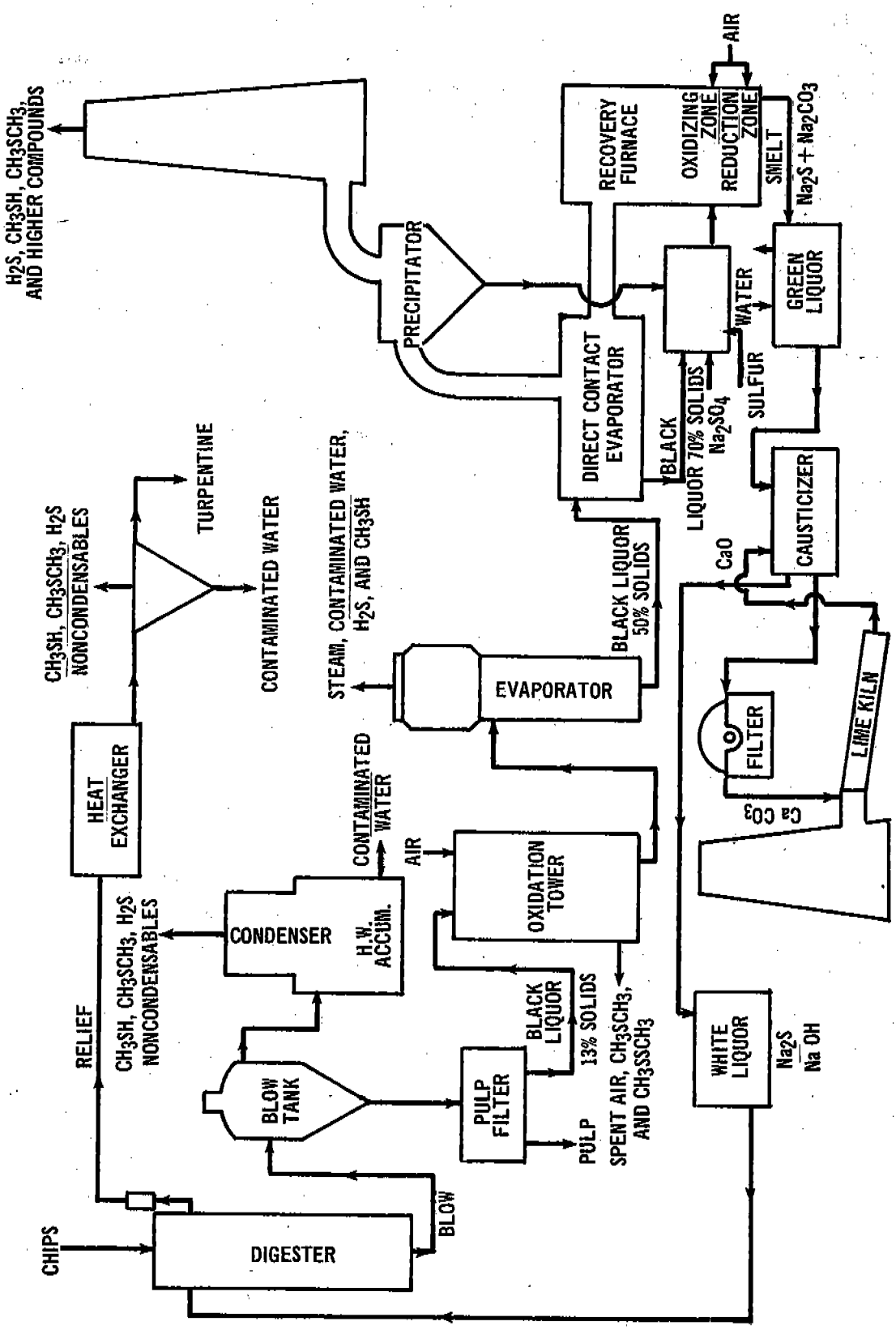

Figure 10.1.2-1. Typical kraft sulfate pulping and recovery process.

10.1.2.2. Emission and Controls[1-6]—Particulate emissions from the kraft process occur primarily from the recovery furnace, the lime kiln, and the smelt dissolving tank. These emissions consist mainly of sodium salts but include some calcium salts from the lime kiln. They are caused primarily by the carryover of solids plus the sublimation and condensation of the inorganic chemicals.

Particulate control is provided on recovery furnaces in a variety of ways. In mills where either a cyclonic scrubber or cascade evaporator serves as the direct contact evaporator, further control is necessary as these devices are generally only 20 to 50 percent efficient for particulates. Most often in these cases, an electrostatic precipitator is employed after the direct contact evaporator to provide an overall particulate control efficiency of 85 to ≥ 99 percent. In a few mills, however, a venturi scrubber is utilized as the direct contact evaporator and simultaneously provides 80 to 90 percent particulate control. In either case auxiliary scrubbers may be included after the precipitator or the venturi scrubber to provide additional control of particulates.

Particulate control on lime kilns is generally accomplished by scrubbers. Smelt dissolving tanks are commonly controlled by mesh pads but employ scrubbers when further control is needed.

The characteristic odor of the kraft mill is caused in large part by the emission of hydrogen sulfide. The major source is the direct contact evaporator in which the sodium sulfide in the black liquor reacts with the carbon dioxide in the furnace exhaust. The lime kiln can also be a potential source as a similar reaction occurs involving residual sodium sulfide in the lime mud. Lesser amounts of hydrogen sulfide are emitted with the noncondensible off-gasses from the digesters and multiple-effect evaporators.

The kraft-process odor also results from an assortment of organic sulfur compounds, all of which have extremely low odor thresholds. Methyl mercaptan and dimethyl sulfide are formed in reactions with the wood component lignin. Dimethyl disulfide is formed through the oxidation of mercaptan groups derived from the lignin. These compounds are emitted from many points within a mill; however, the main sources are the digester/blow tank systems and the direct contact evaporator.

Although odor control devices, per se, are not generally employed in kraft mills, control of reduced sulfur compounds can be accomplished by process modifications and by optimizing operating conditions. For example, black liquor oxidation systems, which oxidize sulfides into less reactive thiosulfates, can considerably reduce odorous sulfur emissions from the direct contact evaporator, although the vent gases from such systems become minor odor sources themselves. Noncondensible odorous gases vented from the digester/blow tank system and multiple-effect evaporators can be destroyed by thermal oxidation, usually by passing them through the lime kiln. Optimum operation of the recovery furnace, by avoiding overloading and by maintaining sufficient oxygen residual and turbulence, significantly reduces emissions of reduced sulfur compounds from this source. In addition, the use of fresh water instead of contaminated condensates in the scrubbers and pulp washers further reduces odorous emissions. The effect of any of these modifications on a given mill's emissions will vary considerably.

Several new mills have incorporated recovery systems that eliminate the conventional direct contact evaporators. In one system, preheated combustion air rather than flue gas provides direct contact evaporation. In the other, the multiple-effect evaporator system is extended to replace the direct contact evaporator altogether. In both of these systems, reduced sulfur emissions from the recovery furnace/direct contact evaporator reportedly can be reduced by more than 95 percent from conventional uncontrolled systems.

Sulfur dioxide emissions result mainly from oxidation of reduced sulfur compounds in the recovery furnace. It is reported that the direct contact evaporator absorbs 50 to 80 percent of these emissions; further scrubbing, if employed, can reduce them another 10 to 20 percent.

Potential sources of carbon monoxide emissions from the kraft process include the recovery furnace and lime kilns. The major cause of carbon monoxide emissions is furnace operation well above rated capacity, making it impossible to maintain oxidizing conditions.

Some nitrogen oxides are also emitted from the recovery furnace and lime kilns although the amounts are relatively small. Indications are that nitrogen oxides emissions from each of these sources are on the order of 1 pound per air-dried ton (0.5 kg/air-dried MT) of pulp produced.[5,6]

A major source of emissions in a kraft mill is the boiler for generating auxiliary steam and power. The fuels used are coal, oil, natural gas, or bark/wood waste. Emission factors for boilers are presented in Chapter 1.

Table 10.1.2-1 presents emission factors for a conventional kraft mill. The most widely used particulate controls devices are shown along with the odor reductions resulting from black liquor oxidation and incineration of noncondensible off-gases.

10.1.3 Acid Sulfite Pulping

10.1.3.1 Process Description[1,7,14-16]—The production of acid sulfite pulp proceeds similarly to kraft pulping except that different chemicals are used in the cooking liquor. In place of the caustic solution used to dissolve the lignin in the wood, a sulfurous-acid base is employed. To buffer the cooking solution, a bisulfite of sodium, magnesium, calcium, or ammonium is used.

Because of the variety of bases employed in the cooking liquor, numerous schemes for heat and/or chemical recovery have evolved. In calcium-base systems, which are used mostly in older mills, chemical recovery is not practical, and the spent liquor is usually discarded. In ammonium-base operations, heat can be recovered from the spent liquor through combustion, but the ammonium base is consumed in the process. In sodium- or magnesium-base operations (the latter being utilized most frequently in newer sulfite mills) heat, sulfur, and base recovery are all feasible.

When recovery is practiced, the spent liquor proceeds through a multiple-effect evaporator and recovery furnace arrangement similar to that found in the kraft process. The combustion gases from the furnace pass through absorbing (sulfiting) towers where sulfur dioxide is recovered (as bisulfite) for use in subsequent cooks. In magnesium- or sodium-base operations, moreover, the base can also be recovered by feeding the inorganic residue from the furnace (either as smelt or collected ash) into the absorbing tower to react with the sulfur dioxide.

10.1.3.2 Emission and Controls[1,3,7,14-16]—Significant quantities of particulate emissions will be generated only if sodium-, magnesium-, or calcium-base liquors are burned. When ammonium-base liquor is burned, few particulates will result because the combustion products are mostly nitrogen, water vapor, and sulfur dioxide. In magnesium-base recovery systems, high particulate control is necessary because most of the base is swept out of the furnace in the form of magnesium oxide fumes. No particulate emissions will result from these systems, of course, when the spent liquor is not combusted.

The major gaseous pollutant is sulfur dioxide. Major potential sources, in probable order of importance, include the digester/blow tank system, absorbing towers, and multiple-effect evaporators. Because the vented gases from these systems are either scrubbed or fed into the absorbing tower to minimize sulfur losses, actual emissions to the atmosphere will depend on the degree of efficiencies desired.

The characteristic "kraft" odor is not emitted from acid sulfite mills because volatile reduced sulfur compounds are not products of the lignin-bisulfite reaction.

No factors for sulfite pulping are presented because of the variety of pulping schemes employed and lack of adequate emissions data.

10.1.4 Neutral Sulfite Semichemical (NSSC) Pulping

10.1.4.1 Process Description[1,7,14,17]—In this process, the wood chips are cooked in a neutral solution of sodium sulfite and sodium bicarbonate. The sulfite ion reacts with the lignin in the wood, and the sodium bicarbonate

Table 10.1.2-1. EMISSION FACTORS FOR SULFATE PULPING[a]
(unit weights of air-dried unbleached pulp)
EMISSION FACTOR RATING: A

Source	Type control	Particulates[b]		Sulfur dioxide (SO_2)[c]		Carbon monoxide[d]		Hydrogen sulfide($S^=$)[e]		RSH, RSR, RSSR($S^=$)[e,f]	
		lb/ton	kg/MT	lb/ton	kg/MT	lb/ton	kg/MT	lb/ton	kg/MT	lb/ton	kg/MT
Digester relief and blow tank	Untreated[g]	–	–	–	–	–	–	0.1	0.05	1.5	0.75
Brown stock washers	Untreated	–	–	0.01	0.005	–	–	0.02	0.01	0.2	0.1
Multiple effect evaporators	Untreated[g]	–	–	0.01	0.005	–	–	0.1	0.05	0.4	0.2
Recovery boiler and direct contact evaporator	Untreated[h]	150	75	5	2.5	2 - 60	1 - 30	12[i]	6[i]	1[i]	0.5[i]
	Venturi scrubber[j]	47	23.5	5	2.5	2 - 60	1 - 30	12[i]	6[i]	1[i]	0.5[i]
	Electrostatic precipitator	8	4	5	2.5	2 - 60	1 - 30	12[i]	6[i]	1[i]	0.5[i]
	Auxiliary scrubber	3 - 15[k]	1.5-7.5[k]	3	1.5	2 - 60	1 - 30	12[i]	6[i]	1[i]	0.5[i]
Smelt dissolving tank	Untreated	5	2.5	0.1	0.05	–	–	0.04	0.02	0.4	0.2
	Mesh pad	1	0.5	0.1	0.05	–	–	0.04	0.02	0.4	0.2
Lime kilns	Untreated	45	22.5	0.3	0.15	10	5	0.5	0.25	0.25	0.125
	Scrubber	3	1.5	0.2	0.1	10	5	0.5	0.25	0.25	0.125
Turpentine condenser	Untreated	–	–	–	–	–	–	0.01	0.005	0.5	0.25
Miscellaneous sources[l]	Untreated	–	–	–	–	–	–	–	–	0.5	0.25

[a]For more detailed data on specific types of mills, consult Reference 1.

[b]References 1, 7, 8.

[c]References 1, 7, 9, 10.

[d]References 6, 11. Use higher value for overloaded furnaces.

[e]References 1, 4, 7-10, 12, 13. These reduced sulfur compounds are usually expressed as sulfur.

[f]RSH-methyl mercaptan; RSR-dimethyl sulfide; RSSR-dimethyl disulfide.

[g]If the noncondensible gases from these sources are vented to the lime kiln, recovery furnace, or equivalent, the reduced sulfur compounds are destroyed.

[h]These factors apply when either a cyclonic scrubber or cascade evaporator is used for direct contact evaporation with no further controls.

[i]These reduced sulfur compounds (TRS) are typically reduced by 50 percent when black liquor oxidation is employed but can be cut by 90 to 99 percent when oxidation is complete and the recovery furnace is operated optimally.

[j]These factors apply when a venturi scrubber is used for direct contact evaporation with no further controls.

[k]Use 15(7.5) when the auxiliary scrubber follows a venturi scrubber and 3(1.5) when employed after an electrostatic precipitator.

[l]Includes knotter vents, brownstock seal tanks, etc. When black liquor oxidation is included, a factor of 0.6(0.3) should be used.

acts as a buffer to maintain a neutral solution. The major difference between this process (as well as all semi-chemical techniques) and the kraft and acid sulfite processes is that only a portion of the lignin is removed during the cook, after which the pulp is further reduced by mechanical disintegration. Because of this, yields as high as 60 to 80 percent can be achieved as opposed to 50 to 55 percent for other chemical processes.

The NSSC process varies from mill to mill. Some mills dispose of their spent liquor, some mills recover the cooking chemicals, and some, which are operated in conjunction with kraft mills, mix their spent liquor with the kraft liquor as a source of makeup chemicals. When recovery is practiced, the steps involved parallel those of the sulfite process.

10.1.4.2 Emissions and Controls[1,7,14,17]—Particulate emissions are a potential problem only when recovery systems are employed. Mills that do practice recovery, but are not operated in conjunction with kraft operations often utilize fluidized bed reactors to burn their spent liquor. Because the flue gas contains sodium sulfate and sodium carbonate dust, efficient particulate collection may be included to facilitate chemical recovery.

A potential gaseous pollutant is sulfur dioxide. The absorbing towers, digester/blow tank system, and recovery furnace are the main sources of this pollutant with the amounts emitted dependent upon the capability of the scrubbing devices installed for control and recovery.

Hydrogen sulfide can also be emitted from NSSC mills using kraft-type recovery furnaces. The main potential source is the absorbing tower where a significant quantity of hydrogen sulfide is liberated as the cooking liquor is made. Other possible sources include the recovery furnace, depending on the operating conditions maintained, as well as the digester/blow tank system in mills where some green liquor is used in the cooking process. Where green liquor is used, it is also possible that significant quantities of mercaptans will be produced. Hydrogen sulfide emissions can be eliminated if burned to sulfur dioxide prior to entering the absorbing systems.

Because the NSSC process differs greatly from mill to mill, and because of the scarcity of adequate data, no emission factors are presented.

References for Section 10.1

1. Hendrickson, E. R. et al. Control of Atmospheric Emissions in the Wood Pulping Industry. Vol. I. U.S. Department of Health, Education and Welfare, PHS, National Air Pollution Control Administration, Washington, D.C. Final report under Contract No. CPA 22-69-18. March 15, 1970.

2. Britt, K. W. Handbook of Pulp and Paper Technology. New York, Reinhold Publishing Corporation, 1964. p. 166-200.

3. Hendrickson, E. R. et al. Control of Atmospheric Emissions in the Wood Pulping Industry. Vol. III. U.S. Department of Health, Education, and Welfare, PHS, National Air Pollution Control Administration, Washington, D.C. Final report under Contract No. CPA 22-69-18. March 15, 1970.

4. Walther, J. E. and H. R. Amberg. Odor Control in the Kraft Pulp Industry. Chem. Eng. Progress. *66*:73-80, March 1970.

5. Galeano, S. F. and K. M. Leopold. A Survey of Emissions of Nitrogen Oxides in the Pulp Mill. TAPPI. *56*(3):74-76, March 1973.

6. Source test data from the Office of Air Quality Planning and Standards, U.S. Environmental Protection Agency, Research Triangle Park, N.C. 1972.

7. Atmospheric Emissions from the Pulp and Paper Manufacturing Industry. U.S. Environmental Protection Agency, Research Triangle Park, N.C. Publication No. EPA-450/1-73-002. September 1973.

8. Blosser, R. O. and H. B. Cooper. Particulate Matter Reduction Trends in the Kraft Industry. NCASI paper, Corvallis, Oregon.

9. Padfield, D. H. Control of Odor from Recovery Units by Direct-Contact Evaporative Scrubbers with Oxidized Black-Liquor. TAPPI. *56*:83-86, January 1973.

10. Walther, J. E. and H. R. Amberg. Emission Control at the Kraft Recovery Furnaces. TAPPI. *55*(3):1185-1188, August 1972.

11. Control Techniques for Carbon Monoxide Emissions from Stationary Sources. U.S. Department of Health Education and Welfare, PHS, National Air Pollution Control Administration, Washington, D.C. Publication No. AP-65. March 1970. p. 4-24 and 4-25.

12. Blosser, R. O. et al. An Inventory of Miscellaneous Sources of Reduced Sulfur Emissions from the Kraft Pulping Process. (Presented at the 63rd APCA Meeting. St. Louis. June 14-18, 1970.)

13. Factors Affecting Emission of Odorous Reduced Sulfur Compounds from Miscellaneous Kraft Process Sources. NCASI Technical Bulletin No. 60. March 1972.

14. Benjamin, M. et al. A General Description of Commercial Wood Pulping and Bleaching Processes. J. Air Pollution Control Assoc. *19*(3):155-161, March 1969.

15. Whittle, D. J. Sulfite and Bisulfite Pulp Mill Recovery Systems. TAPPI. *54*(7):1074-1088, July 1971.

16. Clement, J. L. and W. L. Sage. Ammonia-Base Liquor Burning and Sulfur Dioxide Recovery. TAPPI. *52* (8):1449-1455, August 1969.

17. Galeano, S. F. and B. M. Dillard. Process Modifications for Air Pollution Control in Neutral Sulfite Semi-Chemical Mills. J. Air Pollution Control Assoc. *22*(3):195-199, March 1972.

10.2 PULPBOARD

10.2.1 General[1]

Pulpboard manufacturing involves the fabrication of fibrous boards from a pulp slurry. This includes two distinct types of product, paperboard and fiberboard. Paperboard is a general term that describes a sheet 0.012 inch (0.30 mm) or more in thickness made of fibrous material on a paper-forming machine.[2] Fiberboard, also referred to as particle board, is thicker than paperboard and is made somewhat differently.

There are two distinct phases in the conversion of wood to pulpboard: (1) the manufacture of pulp from raw wood and (2) the manufacture of pulpboard from the pulp. This section deals only with the latter as the former is covered under the section on the wood pulping industry.

10.2.2 Process Description[1]

In the manufacture of paperboard, the stock is sent through screens into the head box, from which it flows onto a moving screen. Approximately 15 percent of the water is removed by suction boxes located under the screen. Another 50 to 60 percent of the moisture content is removed in the drying section. The dried board then enters the calendar stack, which imparts the final surface to the product.

In the manufacture of fiberboard, the slurry that remains after pulping is washed and sent to the stock chests where sizing is added. The refined fiber from the stock chests is fed to the head box of the board machine. The stock is next fed onto the forming screens and sent to dryers, after which the dry product is finally cut and fabricated.

10.2.3 Emissions[1]

Emissions from the paperboard machine consist mainly of water vapor; little or no particulate matter is emitted from the dryers.[3-5] Particulates are emitted, however, from the fiberboard drying operation. Additional particulate emissions occur from the cutting and sanding operations, but no data are available to estimate these emissions. Emission factors for pulpboard manufacturing are shown in Table 10.2-1.

Table 10.2-1. PARTICULATE EMISSION FACTORS FOR PULPBOARD MANUFACTURING[a]
EMISSION FACTOR RATING: E

Type of product	Emissions	
	lb/ton	kg/MT
Paperboard	Neg	Neg
Fiberboard[b]	0.6	0.3

[a]Emission factors expressed as units per unit weight of finished product.
[b]Reference 1.

References for Section 10.2

1. Air Pollutant Emission Factors. Resources Research, Inc., Reston, Virginia. Prepared for National Air Pollution Control Administration, Washington, D.C. under Contract No. CPA-22-69-119. April 1970.

2. The Dictionary of Paper. New York, American Paper and Pulp Association, 1940.

3. Hough, G. W. and L. J. Gross. Air Emission Control in a Modern Pulp and Paper Mill. Amer. Paper Industry. *51*:36, February 1969.

4. Pollution Control Progress. J. Air Pollution Control Assoc. *17*:410, June 1967.

5. Private communication between I. Gellman and the National Council of the Paper Industry for Clean Air and Stream Improvement. New York, October 28, 1969.

10.3 PLYWOOD VENEER AND LAYOUT OPERATIONS

By Thomas Lahre

10.3.1 Process Description[1]

Plywood is a material made of several thin wood veneers bonded together with an adhesive. Its uses are many and include wall sidings, sheathing, roof-decking, concrete-formboards, floors, and containers.

During the manufacture of plywood, incoming logs are sawed to desired length, debarked, and then peeled into thin, continuous veneers of uniform thickness. (Veneer thicknesses of 1/45 to 1/5 inch are common.) These veneers are then transported to special dryers where they are subjected to high temperatures until dried to a desired moisture content. After drying, the veneers are sorted, patched, and assembled in layers with some type of thermosetting resin used as the adhesive. The veneer assembly is then transferred to a hot press where, under presssure and steam heat, the plywood product is formed. Subsequently, all that remains is trimming, sanding, and possibly some sort of finishing treatment to enhance the usefullness of the plywood.

10.3.2 Emissions[2,3]

The main sources of emissions from plywood manufacturing are the veneer drying and sanding operations. A third source is the pressing operation although these emissions are considered minor.

The major pollutants emitted from veneer dryers are organics. These consist of two discernable fractions: (1) condensibles, consisting of wood resins, resin acids, and wood sugars, which form a blue haze upon cooling in the atmosphere, and (2) volatiles, which are comprised of terpines and unburned methane—the latter occurring when gas-fired dryers are employed. The amounts of these compounds produced depends on the wood species dried, the drying time, and the nature and operation of the dryer itself. In addition, negligible amounts of fine wood fibers are also emitted during the drying process.

Sanding operations are a potential source of particulate emissions. It is estimated that about 1,000 pounds of sanderdust may result for every 10,000 square feet of plywood produced. Hence, even if only a fraction of this is discharged to the atmosphere, an air pollution problem may exist. Few data exist to determine the actual magnitude of these emissions although efficient cyclonic collectors reportedly remove large portions of this dust.

Emission factors for plywood veneer dryers without controls are given in Table 10.3-1.

Table 10.3-1. EMISSION FACTORS FOR PLYWOOD MANUFACTURING
EMISSION FACTOR RATING: B

Source	Organic compound[a,b]			
	Condensible		Volatile	
	$lb/10^4\ ft^2$	$kg/10^3\ m^2$	$lb/10^4\ ft^2$	$kg/10^3\ m^2$
Veneer dryers	3.6	1.9	2.1	1.1

[a]Emission factors expressed in pounds of pollutant per 10,000 square feet of 3/8-in. plywood produced (kilograms per 1,000 square meters on a 1-cm basis).

[b]References 2 and 3.

References for Section 10.3

1. Hemming, C. B. Encyclopedia of Chemical Technology. 2nd Ed. Vol. 15. New York, John Wiley and Sons, 1968. p.896-907.

2. Monroe, F. L. et al. Investigation of Emissions from Plywood Veneer Dryers. Final Report. Washington State University, Pullman, Washington. Prepared for the Plywood Research Foundation and the U.S. Environmental Protection Agency, Research Triangle Park, N.C. Publication No. APTD-1144. February 1972.

3. Mick, Allen and Dean McCargar. Air Pollution Problems in Plywood, Particleboard, and Hardboard Mills in the Mid-Willamette Valley. Mid-Willamette Valley Air Pollution Authority, Salem Oregon. March 24, 1969.

MISCELLANEOUS SOURCES

This chapter contains emission factor information on those source categories that differ substantially from—and hence cannot be grouped with—the other "stationary" sources discussed in this publication. These "miscellaneous" emitters (both natural and man-made) are almost exclusively "area sources", that is, their pollutant generating process(es) are dispersed over large land areas (for example, hundreds of acres, as in the case of forest wildfires), as opposed to sources emitting from one or more stacks with a total emitting area of only several square feet. Another characteristic these sources have in common is the nonapplicability, in most cases, of conventional control methods, such as wet/dry equipment, fuel switching, process changes, etc. Instead, control of these emissions, where possible at all, may include such techniques as modification of agricultural burning practices, paving with asphalt or concrete, or stabilization of dirt roads. Finally, miscellaneous sources generally emit pollutants intermittently, when compared with most stationary point sources. For example, a forest fire may emit large quantities of particulates and carbon monoxide for several hours or even days, but when measured against the emissions of a continuous emitter (such as a sulfuric acid plant) over a long period of time (1 year, for example), its emissions may seem relatively minor. Effects on air quality may also be of relatively short-term duration.

11.1 FOREST WILDFIRES

by William M. Vatavuk, EPA
and George Yamate, IIT (Consultant)

11.1.1 General[1]

A forest "wildfire" is a large-scale natural combustion process that consumes various ages, sizes, and types of botanical specimens growing outdoors in a defined geographical area. Consequently, wildfires are potential sources of large amounts of air pollutants that should be considered when trying to relate emissions to air quality.

The size and intensity (or even the occurrence) of a wildfire is directly dependent on such variables as the local meteorological conditions, the species of trees and their moisture content, and the weight of consumable fuel per acre (fuel loading). Once a fire begins, the dry combustible material (usually small undergrowth and forest floor litter) is consumed first, and if the energy release is large and of sufficient duration, the drying of green, live material occurs with subsequent burning of this material as well as the larger dry material. Under proper environmental and fuel conditions, this process may initiate a chain reaction that results in a widespread conflagration.

The complete combustion of a forest fuel will require a heat flux (temperature gradient), an adequate oxygen supply, and sufficient burning time. The size and quantity of forest fuels, the meteorological conditions, and the topographic features interact to modify and change the burning behavior as the fire spreads; thus, the wildfire will attain different degrees of combustion during its lifetime.

The importance of both fuel type and fuel loading on the fire process cannot be overemphasized. To meet the pressing need for this kind of information, the U.S. Forest Service is developing a country-wide fuel identification system (model) that will provide estimates of fuel loading by tree-size class, in tons per acre. Further, the environmental parameters of wind, slope, and expected moisture changes have been superimposed on this fuel model and incorporated into a National Fire Danger Rating System (NFDR). This system considers five classes of fuel (three dead and two living), the components of which are selected on the basis of combustibility, response to moisture (for the dead fuels), and whether the living fuels are herbaceous (plants) or ligneous (trees).

Most fuel loading figures are based on values for "available fuel" (combustible material that will be consumed in a wildfire under specific weather conditions). Available fuel values must not be confused with corresponding values for either "total fuel" (all the combustible material that would burn under the most severe weather and burning

conditions) or "potential fuel" (the larger woody material that remains even after an extremely high intensity wildfire). It must be emphasized, however, that the various methods of fuel identification are of value only when they are related to the existing fuel quantity, the quantity consumed by the fire, and the geographic area and conditions under which the fire occurs.

For the sake of conformity (and convenience), estimated fuel loadings were obtained for the vegetation in the National Forest Regions and the wildlife areas established by the U.S. Forest Service, and are presented in Table 11.1-1. Figure 11.1-1 illustrates these areas and regions.

Table 11.1-1. SUMMARY OF ESTIMATED FUEL CONSUMED BY FOREST FIRES[a]

Area and Region[b]		Estimated average fuel loading	
		MT/hectare	ton/acre
Rocky Mountain group		83	37
Region 1:	Northern	135	60
Region 2:	Rocky Mountain	67	30
Region 3:	Southwestern	22	10
Region 4:	Intermountain	40	8
Pacific group		43	19
Region 5:	California	40	18
Region 6:	Pacific Northwest	135	60
Region 10:	Alaska	36	16
	Coastal	135	60
	Interior	25	11
Southern group		20	9
Region 8:	Southern	20	9
Eastern group		25	11
North Central group		25	11
Region 9:	Conifers	22	10
	Hardwoods	27	12

[a]Reference 1.

[b]See Figure 11.1-1 for regional boundaries.

11.1.2 Emissions and Controls[1]

It has been hypothesized (but not *proven)* that the nature and amounts of air pollutant emissions are directly related to the intensity and direction (relative to the wind) of the wildfire, and indirectly related to the rate at which the fire spreads. The factors that affect the rate of spread are (1) weather (wind velocity, ambient temperature, and relative humidity), (2) fuels (fuel type, fuel bed array, moisture content, and fuel size), and (3) topography (slope and profile). However, logistical problems (such as size of the burning area) and difficulties in safely situating personnel and equipment close to the fire have prevented the collection of any reliable experimental emission data on actual wildfires, so that it is presently impossible to verify or disprove the above-stated hypothesis. Therefore, until such measurements are made, the only available information is that

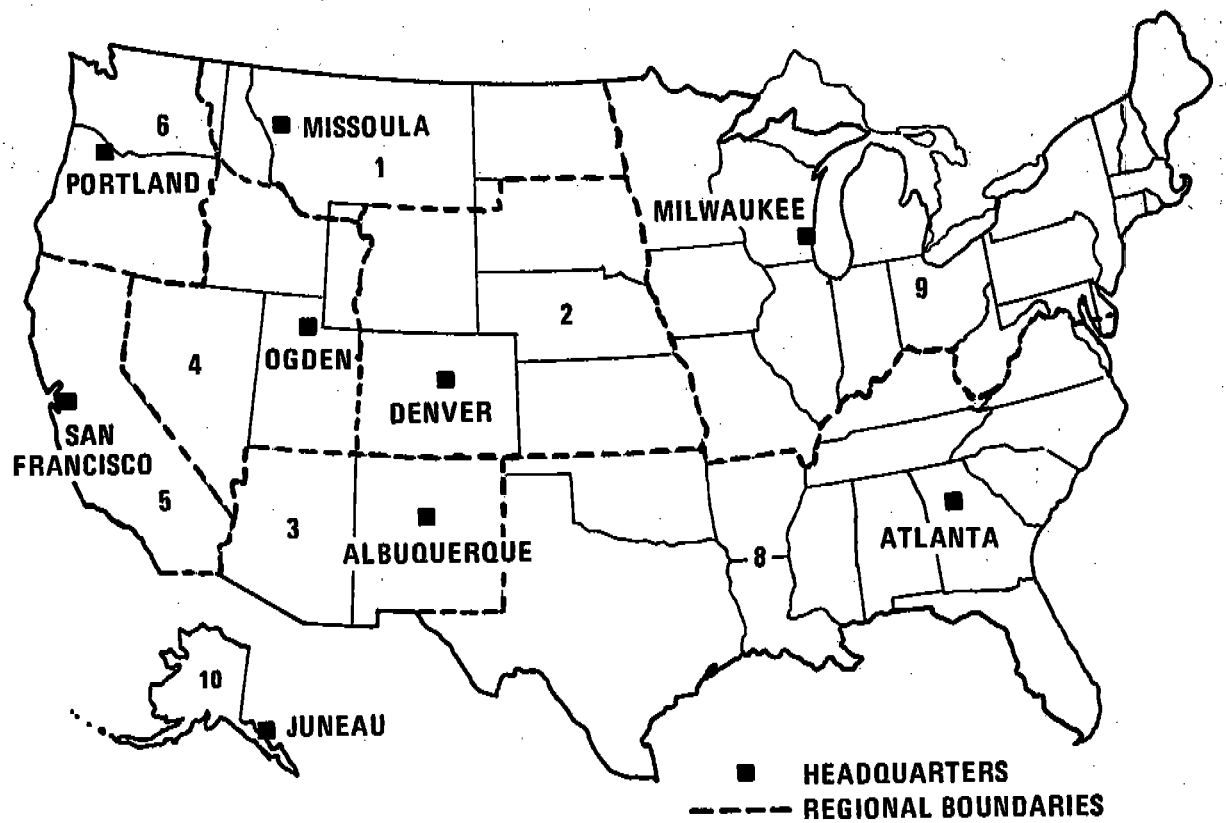

Figure 11.1-1. Forest areas and U.S. Forest Service Regions.

obtained from burning experiments in the laboratory. These data, in the forms of both emissions and emission factors, are contained in Table 11.1-2. It must be emphasized that the factors presented here are adequate for laboratory-scale emissions estimates, but that substantial errors may result if they are used to calculate actual wildfire emissions.

The emissions and emission factors displayed in Table 11.1-2 are calculated using the following formulas:

$$F_i = P_i L \tag{1}$$

$$E_i = F_i A = P_i L A \tag{2}$$

where: F_i = Emission factor (mass of pollutant/unit area of forest consumed)

P_i = Yield for pollutant "i" (mass of pollutant/unit mass of forest fuel consumed)

= 8.5 kg/MT (17 lb/ton) for total particulate

= 70 kg/MT (140 lb/ton) for carbon monoxide

= 12 kg/MT (24 lb/ton) for total hydrocarbon (as CH_4)

Table 11.1-2. SUMMARY OF EMISSIONS AND EMISSION FACTORS FOR FOREST WILDFIRES[a]
EMISSION FACTOR RATING: D

Geographic area[b]	Area consumed by wildfire, hectares	Wildfire fuel consumption, MT/hectare	Emission factors, kg/hectare				Emissions, MT			
			Particulate	Carbon monoxide	Hydrocarbons	Nitrogen oxides	Particulate	Carbon monoxide	Hydrocarbons	Nitrogen oxides
Rocky Mountain group	313,397	83	706	5,810	996	166	220,907	1,819,237	311,869	51,978
Northern, Region 1	142,276	135	1,144	9,420	1,620	269	162,628	1,339,283	229,592	38,265
Rocky Mountain, Region 2	65,882	67	572	4,710	808	135	37,654	310,086	53,157	8,860
Southwestern, Region 3	83,765	22	191	1,570	269	45	15,957	131,417	22,533	3,735
Intermountain, Region 4	21,475	40	153	1,260	215	36	3,273	26,953	4,620	770
Pacific group	469,906	43	362	2,980	512	85	170,090	1,400,738	240,126	40,021
California, Region 5	18,997	40	343	2,830	485	81	6,514	53,645	9,196	1,533
Alaska, Region 10	423,530	36	305	2,510	431	72	129,098	1,063,154	182,255	30,376
Pacific N.W. Region 6	27,380	135	1,144	9,420	1,620	269	31,296	257,738	44,183	7,363
Southern group	806,289	20	172	1,410	242	40	138,244	1,138,484	195,168	32,528
Southern, Region 8	806,289	20	172	1,410	242	40	138,244	1,138,484	195,168	32,528
North Central group	94,191	25	210	1,730	296	49	19,739	162,555	27,867	4,644
Eastern, Region 9 (Both groups are in Region 9)	141,238	25	210	1,730	296	49	29,598	243,746	41,785	6,964
Eastern group (With Region 9)	47,046	25	210	1,730	296	49	9,859	81,191	13,918	2,320
Total United States	1,730,830	38	324	2,670	458	76	560,552	4,616,317	791,369	131,895

[a]Areas consumed by wildfire and emissions are for 1971.
[b]Geographic areas are defined in Figure 11.1-1.
[c]Hydrocarbons expressed as methane.

= 2 kg/MT (4 lb/ton) for nitrogen oxides (NO_x)

= Negligible for sulfur oxides (SO_x)

L = Fuel loading consumed (mass of forest fuel/unit land area burned)

A = Land area burned

E_i = Total emissions of pollutant "i" (mass of pollutant)

For example, suppose that it is necessary to estimate the total particulate emissions from a 10,000 hectare wildfire in the Southern area (Region 8). From Table 11.1-1 it is seen that the average fuel loading is 20 MT/hectare (9 ton/acre). Further, the pollutant yield for particulates is 8.5 kg/MT (17 lb/ton). Therefore, the emissions are:

E = (8.5 kg/MT of fuel) (20 MT of fuel/hectare) (10,000 hectares)

E = 1,700,000 kg = 1,700 MT

The most effective method for controlling wildfire emissions is, of course, to prevent the occurrence of forest fires using various means at the forester's disposal. A frequently used technique for reducing wildfire occurrence is "prescribed" or "hazard reduction" burning. This type of managed burn involves combustion of litter and underbrush in order to prevent fuel buildup on the forest floor and thus reduce the danger of a wildfire. Although some air pollution is generated by this preventative burning, the net amount is believed to be a relatively smaller quantity than that produced under a wildfire situation.

Reference for Section 11.1

1. Development of Emission Factors for Estimating Atmospheric Emissions from Forest Fires. Final Report. IIT Research Institute, Chicago, Ill. Prepared for Office of Air Quality Planning and Standards, Environmental Protection Agency, Research Triangle Park, N.C., under Contract No. 68-02-0641, October 1973. (Publication No. EPA-450/3-73-009).

APPENDIX A

MISCELLANEOUS DATA

Note: Previous editions of *Compilation of Air Pollutant Emission Factors* presented a table entitled Percentage Distribution by Size of Particles from Selected Sources without Control Equipment. Many of the data have become obsolete with the development of new information. As soon as the new information is sufficiently refined, a new table, complete with references, will be published for addition to this document.

Table A-1. NATIONWIDE EMISSIONS FOR 1971 [a]

Pollutant	Stationary combustion		Solid waste disposal		Mobile combustion		Industrial processes		Miscellaneous		Total[b]	
	ton/yr	Mg/yr[c]	ton/yr	Mg/yr	ton/yr	Mg/yr	ton/yr	Mg/yr	ton/yr	Mg/yr	ton/yr	Mg/yr
Particulates	6,500,000	5,900,000	700,000	600,000	1,000,000	900,000	13,500,000	12,200,000	5,200,000	4,800,000	26,900,000	24,400,000
Sulfur oxides	26,300,000	23,900,000	100,000	100,000	1,000,000	1,000,000	5,100,000	4,600,000	100,000	100,000	32,600,000	29,700,000
Carbon monoxide	1,000,000	900,000	3,800,000	3,400,000	77,500,000	70,200,000	11,400,000	10,300,000	6,500,000	5,900,000	100,200,000	90,700,000
Hydrocarbons	300,000	300,000	1,000,000	900,000	14,700,000	13,300,000	5,600,000	5,100,000	5,000,000	4,500,000	26,600,000	24,100,000
Nitrogen oxides	10,200,000	9,300,000	200,000	200,000	11,200,000	10,200,000	200,000	200,000	200,000	200,000	22,000,000	20,100,000

[a]Reference 1.

[b]Some totals may be rounded to a convenient number of figures.

[c]Mg - megagrams.

Table A-2. DISTRIBUTION BY PARTICLE SIZE OF AVERAGE COLLECTION EFFICIENCIES FOR VARIOUS PARTICULATE CONTROL EQUIPMENT[a,b]

Type of collector	Efficiency, %					
		Particle size range, μm				
	Overall	0 to 5	5 to 10	10 to 20	20 to 44	>44
Baffled settling chamber	58.6	7.5	22	43	80	90
Simple cyclone	65.3	12	33	57	82	91
Long-cone cyclone	84.2	40	79	92	95	97
Multiple cyclone (12-in. diameter)	74.2	25	54	74	95	98
Multiple cyclone (6-in. diameter)	93.8	63	95	98	99.5	100
Irrigated long-cone cyclone	91.0	63	93	96	98.5	100
Electrostatic precipitator	97.0	72	94.5	97	99.5	100
Irrigated electrostatic precipitator	99.0	97	99	99.5	100	100
Spray tower	94.5	90	96	98	100	100
Self-induced spray scrubber	93.6	85	96	98	100	100
Disintegrator scrubber	98.5	93	98	99	100	100
Venturi scrubber	99.5	99	99.5	100	100	100
Wet-impingement scrubber	97.9	96	98.5	99	100	100
Baghouse	99.7	99.5	100	100	100	100

[a]References 2 and 3.
[b]Data based on standard silica dust with the following particle size and weight distribution:

Particle size range, μm	Percent by weight
0 to 5	20
5 to 10	10
10 to 20	15
20 to 44	20
> 44	35

Table A-3. THERMAL EQUIVALENTS FOR VARIOUS FUELS

Type of fuel	Btu (gross)	kcal
Solid fuels		
Bituminous coal	(21.0 to 28.0) x 10^6/ton	(5.8 to 7.8) x 10^6/MT
Anthracite coal	25.3 x 10^6/ton	7.03 x 10^6/MT
Lignite	16.0 x 10^6/ton	4.45 x 10^6/MT
Wood	21.0 x 10^6/cord	1.47 x 10^6/m^3
Liquid fuels		
Residual fuel oil	6.3 x 10^6/bbl	10 x 10^3/liter
Distillate fuel oil	5.9 x 10^6/bbl	9.35 x 10^3/liter
Gaseous fuels		
Natural gas	1,050/ft^3	9,350/m^3
Liquefied petroleum gas		
Butane	97,400/gal	6,480/liter
Propane	90,500/gal	6,030/liter

Table A-4. WEIGHTS OF SELECTED SUBSTANCES

Type of substance	lb/gal	g/liter
Asphalt	8.57	1030
Butane, liquid at 60° F	4.84	579
Crude oil	7.08	850
Distillate oil	7.05	845
Gasoline	6.17	739
Propane, liquid at 60° F	4.24	507
Residual oil	7.88	944
Water	8.4	1000

Table A-5. GENERAL CONVERSION FACTORS

Type of substance	Conversion factors
Fuel	
Oil	1 bbl = 42 gal = 159 liters
Natural gas	1 therm = 100,000 Btu = 95 ft^3
	1 therm = 25,000 kcal = 2.7 m^3
Agricultural products	
Corn	1 bu = 56 lb = 25.4 kg
Milo	1 bu = 56 lb = 25.4 kg
Oats	1 bu = 32 lb = 14.5 kg
Barley	1 bu = 48 lb = 21.8 kg
Wheat	1 bu = 60 lb = 27.2 kg
Cotton	1 bale = 500 lb = 226 kg
Mineral products	
Brick	1 brick = 6.5 lb = 2.95 kg
Cement	1 bbl = 375 lb = 170 kg
Cement	1 yd^3 = 2500 lb = 1130 kg
Concrete	1 yd^3 = 4000 lb = 1820 kg
Mobile sources	
Gasoline-powered motor vehicle	1.0 mi/gal = 0.426 km/liter
Diesel-powered motor vehicle	1.0 mi/gal = 0.426 km/liter
Steamship	1.0 gal/naut mi = 2.05 liters/km
Motorship	1.0 gal/naut mi = 2.05 liters/km
Other substances	
Paint	1 gal = 10 to 15 lb = 4.5 to 6.82 kg
Varnish	1 gal = 7 lb = 3.18 kg
Whiskey	1 bbl = 50 gal = 188 liters
Water	1 gal = 8.3 lb = 3.81 kg
Miscellaneous factors	1 lb = 7000 grains = 453.6 grams
	1 ft^3 = 7.48 gal = 28.32 liters
Metric system	1 ft = 0.3048 m
	1 mi = 1609 m
	1 lb = 453.6 g
	1 ton (short) = 907.2 kg
	1 ton (short) = 0.9072 MT (metric ton)

REFERENCES FOR APPENDIX

1. Unpublished data file of nationwide emissions for 1970. Environmental Protection Agency, Office of Air Programs, Research Triangle Park, N.C.

2. Stairmand, C.J. The Design and Performance of Modern Gas Cleaning Equipment. J. Inst. Fuel. *29*:58-80. 1956.

3. Stairmand, C.J. Removal of Grit, Dust, and Fume from Exhaust Gases from Chemical Engineering Processes. London. Chem. Eng. p. 310-326, December 1965.

APPENDIX B

EMISSION FACTORS AND NEW SOURCE PERFORMANCE STANDARDS FOR STATIONARY SOURCES

The New Source Performance Standards (NSPS) promulgated by the Environmental Protection Agency for various industrial categories and the page reference in this publication where uncontrolled emission factors for those sources are discussed are presented in Tables B-1 and B-2. Note that, in the case of steam-electric power plants, the NSPS encompass much broader source categories than the corresponding emission factors. In several instances, the NSPS were formulated on different bases than the emission factors (for example, grains per standard cubic foot versus pounds per ton). Finally, note that NSPS relating to opacity have been omitted because they cannot (at this time) be directly correlated with emission factors.

Table B-1. PROMULGATED NEW SOURCE PERFORMANCE STANDARDS —GROUP I SOURCES[a]

Source category and pollutant	New Source Performance Standard (maximum 2-hr average)	AP-42 page reference
Fossil-fuel-fired steam generators with >63 x 10^6 kcal/hr (250 x 10^6 Btu/hr) of heat input		
Coal-burning plants (excluding lignite)		
Pulverized wet bottom		
Particulates	0.18 g/10^6 cal heat input (0.10 lb/10^6 Btu)	1.1-3
Sulfur dioxide	2.2 g/10^6 cal heat input (1.2 lb/10^6 Btu)	1.1-3
Nitrogen oxides (as NO_2)	1.26 g/10^6 cal heat input (0.70 lb/10^6 Btu)	1.1-3
Pulverized dry bottom		
Particulates	0.18 g/10^6 cal heat input (0.10 lb/10^6 Btu)	1.1-3
Sulfur dioxide	2.2 g/10^6 cal heat input (1.2 lb/10^6 Btu)	1.1-3
Nitrogen oxides (as NO_2)	1.26 g/10^6 cal heat input (0.70 lb/10^6 Btu)	1.1-3
Pulverized cyclone		
Particulates	0.18 g/10^6 cal heat input (0.10 lb/10^6 Btu)	1.1-3
Sulfur dioxide	2.2 g/10^6 cal heat input (1.2 lb/10^6 Btu)	1.1-3
Nitrogen oxides (as NO_2)	1.26 g/10^6 cal heat input (0.70 lb/10^6 Btu)	1.1-3
Spreader stoker		
Particulates	0.18 g/10^6 cal heat input (0.10 lb/10^6 Btu)	1.1-3
Sulfur dioxide	2.2 g/10^6 cal heat input (1.2 lb/10^6 Btu)	1.1-3
Nitrogen oxides (as NO_2)	1.26 g/10^6 cal heat input (0.70 lb/10^6 Btu)	1.1-3
Residual-oil-burning plants		
Particulates	0.18 g/10^6 cal heat input (0.10 lb/10^6 Btu)	1.3-2
Sulfur dioxide	1.4 g/10^6 cal heat input (0.80 lb/10^6 Btu)	1.3-2
Nitrogen oxides (as NO_2)	0.54 g/10^6 cal heat input (0.30 lb/10^6 Btu)	1.3-2
Natural-gas-burning plants		
Particulates	0.18 g/10^6 cal heat input (0.10 lb/10^6 Btu)	1.4-2
Nitrogen oxides (as NO_2)	0.36 g/106 cal heat input (0.20 lb/10^6 Btu)	1.4-2
Municipal incinerators		
Particulates	0.18 g/Nm^3 (0.08 gr/scf) corrected to 12% CO_2	2.1-1
Portland cement plants		
Kiln–dry process		
Particulates	0.15 kg/MT (0.30 lb/ton) of feed to kiln	8.6-3

Table B-1. (continued). PROMULGATED NEW SOURCE PERFORMANCE STANDARDS —GROUP 1 SOURCES[a]

Source category and pollutant	New Source Performance Standard (maximum 2-hr average)	AP-42 page reference
Kiln—wet process Particulates	0.15 kg/MT (0.30 lb/ton) of feed to kiln	8.6-3
Clinker cooler Particulates	0.050 kg/MT (0.10 lb/ ton) of feed to kiln	8.6-4
Nitric acid plants Nitrogen oxides (as NO_2)	1.5 kg/MT (3.0 lb/ton) of 100% acid produced	5.9-3
Sulfuric acid plants Sulfur dioxide	2.0 kg/MT (4.0 lb/ton) of 100% acid produced	5.17-5
Sulfuric acid mist (as H_2SO_4)	0.075 kg/MT (0.15 lb/ ton) of 100% acid produced	5.17-7

[a]Title 40 — Protection of Environment. Part 60--Standards of Performance for New Stationary Sources. Federal Register. *36* (247):24876. December 23, 1971

Table B-2. PROMULGATED NEW SOURCE PERFORMANCE STANDARDS —GROUP II SOURCES[a]

Source category and pollutant	New Source Performance Standard	AP-42 page reference
Asphalt concrete plants		
Particulates	90 mg/Nm^3 (0.040 gr/dscf)	8.1-4
Petroleum refineries: Fluid catalytic cracking units		
Particulates	60 mg/Nm^3 (0.026 gr/dscf)[b]	9.1-3
Carbon monoxide	0.050% by volume	9.1-3
Storage vessels for petroleum liquids		
"Floating roof" storage tanks		
Hydrocarbons	If true vapor pressure under storage conditions exceeds 78 mm (1.52 psia) mercury but is no greater than 570 mm (11.1 psia) mercury, the vessel must be equipped with a floating roof or its equivalent.	4.3-8
Secondary lead smelters		
Blast (cupola) furnaces		
Particulates	50 mg/Nm^3 (0.022 gr/dscf)	7.11-2
Reverberatory furnaces		
Particulates	50 mg/Nm^3 (0.022 gr/dscf)	7.11-2
Secondary brass and bronze ingot production plants		
Reverberatory furnaces		
Particulates	50 mg/Nm^3 (0.022 gr/dscf)	7.9-2
Electric induction furnaces		
Particulates	50 mg/Nm^3 (0.022 gr/dscf)	7.9-2
Blast furnaces		
Particulates	50 mg/Nm^3 (0.022 gr/dscf)	7.9-2
Iron and steel plants		
Basic oxygen process furnaces		
Particulates	50 mg/Nm^3 (0.022 gr/dscf)	7.5-5
Sewage treatment plants		
Sewage sludge incinerators		
Particulates	0.65 g/kg (1.30 lb/ton) of dry sludge input	2.5-2

[a]Title 40—Protection of Environment. Part 60—Standards of Performance for New Stationary Sources: Additions and Miscellaneous Amendments. Federal Register. *39* (47). March 8, 1974.

[b]The actual NSPS reads "1.0 kg/1000 kg (1.0 lb/1000 lb) of coke burn-off in the catalyst regenerator," which is approximately equivalent to an exhaust gas concentration of 60 mg/Nm^3 (0.026 gr/dscf).

APPENDIX C
NEDS SOURCE CLASSIFICATION CODES AND EMISSION FACTOR LISTING

The Source Classification Codes (SCC's) presented herein comprise the basic "building blocks" upon which the National Emissions Data System (NEDS) is structured. Each SCC represents a process or function within a source category logically associated with a point of air pollution emissions. In NEDS, any operation that causes air pollution can be represented by one or more of these SCC's.

Also presented herein are emission factors for the five NEDS pollutants (particulates, sulfur oxides, nitrogen oxides, hydrocarbons, and carbon monoxide) that correspond to each SCC. These factors are utilized in NEDS to automatically compute estimates of air pollutant emissions associated with a process when a more accurate estimate is not supplied to the system. These factors are, for the most part, taken directly from AP-42. In certain cases, however, they may be derived from better information not yet incorporated into AP-42 or be based merely on the similarity of one process to another for which emissions information does exist.

Because these emission factors are merely single representative values taken, in many cases, from a broad range of possible values and because they do not reflect all of the variables affecting emissions that are described in detail in this document, the user is cautioned not to use the factors listed in Appendix C out of context to estimate the emissions from any given source. Instead, if emission factors must be used to estimate emissions, the appropriate section of this document should be consulted to obtain the most applicable factor for the source in question. The factors presented in Appendix C are reliable only when applied to numerous sources as they are in NEDS.

NOTE: The Source Classification Code and emission factor listing presented in Appendix C was created on June 20, 1974, to replace the listing dated August 28, 1973. The listing has been updated to include several new Source Classification Codes as well as several new or revised emission factors that are considered necessary for the improvement of NEDS. The listing will be updated periodically as better source and emission factor information becomes available. Any comments regarding this listing, especially those pertaining to the need for additional SCC's, should be directed to:

Chief, Technical Development Section
National Air Data Branch
Environmental Protection Agency
Research Triangle Park, N.C. 27711

FILE CREATED ON 20/06/75

NATIONAL EMISSION DATA SYSTEM
SOURCE CLASSIFICATION CODES

POUNDS EMITTED PER UNIT

EXTCOMB BOILER	-ELECTRIC GENERATN	PART		SOX		NOX	HC	CO	UNITS
ANTHRACITE COAL									
1-01-001-01	>100MMBTU PULVIZD	17.0	A	38.0	S	18.0	0.03	1.00	TONS BURNED
1-01-001-02	>100MMBTU STOKERS	2.00	A	38.0	S	10.5	0.20	6.00	TONS BURNED
1-01-001-03	10-100MMBTU PULVD	17.0	A	38.0	S	18.0	0.03	1.00	TONS BURNED
1-01-001-04	10-100MMBTU STOKR	2.00	A	38.0	S	10.5	0.20	6.00	TONS BURNED
1-01-001-05	<10MMBTU PULVIZED	17.0	A	38.0	S	18.0	0.03	1.00	TONS BURNED
1-01-001-06	<10MMBTU STOKER	2.00	A	38.0	S	6.00	0.20	10.0	TONS BURNED
1-01-001-99	OTHER/NOT CLASIFD	17.0	A	38.0	S	18.0	0.03	1.00	TONS BURNED
BITUMINOUS COAL									
1-01-002-01	>100MMBTU PULVWET	13.0	A	38.0	S	30.0	0.30	1.00	TONS BURNED
1-01-002-02	>100MMBTU PULVDRY	17.0	A	38.0	S	18.0	0.30	1.00	TONS BURNED
1-01-002-03	>100MMBTU CYCLONE	2.00	A	38.0	S	55.0	0.30	1.00	TONS BURNED
1-01-002-04	>100MMBTU SPDSTKR	13.0	A	38.0	S	15.0	1.00	2.00	TONS BURNED
1-01-002-05	>100MMBTU/HR OFSK	5.00	A	38.0	S	15.0	1.00	2.00	TONS BURNED
1-01-002-06	10-100MMBTU PULWT	13.0	A	38.0	S	30.0	0.30	1.00	TONS BURNED
1-01-002-07	10-100MMBTU PULDY	17.0	A	38.0	S	18.0	0.30	1.00	TONS BURNED
1-01-002-08	10-100MMBTU OFSTK	5.00	A	38.0	S	15.0	1.00	2.00	TONS BURNED
1-01-002-09	10-100MMBTU UFSTK	5.00	A	38.0	S	15.0	1.00	2.00	TONS BURNED
1-01-002-10	<10MMBTU OFSTOKER	2.00	A	38.0	S	6.00	3.00	10.0	TONS BURNED
1-01-002-11	<10MMBTU UFSTOKER	2.00	A	38.0	S	6.00	3.00	10.0	TONS BURNED
1-01-002-12	<10MMBTU PULV-DRY	17.0	A	38.0	S	18.0	0.30	1.00	TONS BURNED
1-01-002-99	OTHER/NOT CLASIFD	16.0	A	38.0	S	18.0	0.30	0.50	TONS BURNED
LIGNITE									
1-01-003-01	>100MMBTU PULVWET	6.50	A	30.0	S	13.0	0.30	1.00	TONS BURNED
1-01-003-02	>100MMBTU PULVDRY	6.50	A	30.0	S	13.0	0.30	1.00	TONS BURNED
1-01-003-03	>100MMBTU CYCLONE	6.50	A	30.0	S	17.0	0.30	1.00	TONS BURNED
1-01-003-04	>100MMBTU OF STKR	6.50	A	30.0	S	13.0	0.30	2.00	TONS BURNED
1-01-003-05	>100MMBTU UF STKR	6.50	A	30.0	S	13.0	0.30	2.00	TONS BURNED
1-01-003-06	>100MMBTU SPDSTKR	6.50	A	30.0	S	13.0	0.30	2.00	TONS BURNED
1-01-003-07	10-100MMBTU DYPUL	6.50	A	30.0	S	13.0	0.30	1.00	TONS BURNED
1-01-003-08	10-100MMBTU WTPUL	6.50	A	30.0	S	13.0	0.30	1.00	TONS BURNED
1-01-003-09	10-100MMBTU OFSTK	6.50	A	30.0	S	13.0	1.00	2.00	TONS BURNED
1-01-003-10	10-100MMBTU UFSTK	6.50	A	30.0	S	13.0	1.00	2.00	TONS BURNED
1-01-003-11	10-100MMBTUSPDSTK	6.50	A	30.0	S	13.0	1.00	2.00	TONS BURNED
1-01-003-12	<10MMBTU PULV DRY	6.50	A	30.0	S	13.0	3.00	10.0	TONS BURNED
1-01-003-13	<10MMBTU OF STOKR	6.50	A	30.0	S	13.0	3.00	10.0	TONS BURNED
1-01-003-14	<10MMBTU UF STOKR	6.50	A	30.0	S	13.0	3.00	10.0	TONS BURNED
1-01-003-15	<10MMBTU SPDSTCKR	6.50	A	30.0	S	13.0	3.00	10.0	TONS BURNED
RESIDUAL OIL									
1-01-004-01	>100MMBTU/HR GENL	8.00		157.	S	105.	2.00	3.00	1000GALLONS BURNED
1-01-004-02	10-100MMBTU/HRGNL	8.00		157.	S	105.	2.00	3.00	1000GALLONS BURNED
1-01-004-03	<10MMBTU/HR GENL	8.00		157.	S	105.	2.00	3.00	1000GALLONS BURNED
DISTILLATE OIL									
1-01-005-01	>100MMBTU/HR GENL	8.00		144.	S	105.	2.00	3.00	1000GALLONS BURNED
1-01-005-02	10-100MMBTU/HRGNL	8.00		144.	S	105.	2.00	3.00	1000GALLONS BURNED
1-01-005-03	<10MMBTU/HR GENL	8.00		144.	S	105.	2.00	3.00	1000GALLONS BURNED
NATURAL GAS									
1-01-006-01	>100MMBTU/HR	10.0		0.60		600.	1.00	17.0	MILLION CUBIC FEET BURNED
1-01-006-02	10-100MMBTU/HR	13.0		0.60		230.	1.00	17.0	MILLION CUBIC FEET BURNED
1-01-006-03	<10MMBTU/HR	10.0		0.60		120.	1.00	17.0	MILLION CUBIC FEET BURNED
PROCESS GAS									
1-01-007-01	>100MMBTU/HR	15.0		950.	S	600.	1.00	17.0	MILLION CUBIC FEET BURNED
1-01-007-02	10-100MMBTU/HR	15.0		950.	S	230.	1.00	17.0	MILLION CUBIC FEET BURNED
1-01-007-03	<10 MMBTU/HR	15.0		950.	S	120.	1.00	17.0	MILLION CUBIC FEET BURNED
COKE									
1-01-008-01	>100MMBTU/HR	17.0	A	38.0	S	18.0	0.03	1.00	TONS BURNED
WOOD/BARK WASTE									
1-01-009-01	BARK BOILER	75.0		1.50		10.0	2.00	2.00	TONS BURNED
1-01-009-02	WOOD/BARK BOILER	37.5		1.50		10.0	2.00	2.00	TONS BURNED
1-01-009-03	WOOD BOILER	10.0		1.50		10.0	5.00	10.0	TONS BURNED
BAGASSE									
1-01-011-01	>100MMBTU/HR	22.0		0.		2.00	2.00	2.00	TONS BURNED
1-01-011-02	10-100MMBTU/HR	22.0		0.		2.00	2.00	2.00	TONS BURNED
1-01-011-03	<10MMBTU/HR	22.0		0.		2.00	2.00	2.00	TONS BURNED
SLD WASTE-SPECIFY									
1-01-012-01	>100 MMBTU/HR								TONS BURNED
1-01-012-02	10-100 MMBTU/HR								TONS BURNED
1-01-012-03	<10 MMBTU/HR								TONS BURNED

'A' INDICATES ASH CONTENT AND 'S' INDICATES SULFUR CONTENT OF THE FUEL, ON A PERCENT BASIS (BY WEIGHT)

EXTCOMB BOILER -ELECTRIC GENERATN (CONTINUED)

		POUNDS EMITTED PER UNIT PART		SOX		NOX	HC	CO	UNITS
LIQ WASTE-SPECIFY									
1-01-013-01	>100 MMBTU/HR								1000 GALLONS BURNED
1-01-013-02	10-100 MMBTU/HR								1000 GALLONS BURNED
1-01-013-03	<10 MMBTU/HR								1000 GALLONS BURNED
OTHER/NOT CLASIFD									
1-01-999-97	SPECIFY IN REMARK								MILLION CUBIC FEET BURNED
1-01-999-98	SPECIFY IN REMARK								1000 GALLON (LIQUID) BURNED
1-01-999-99	SPECIFY IN REMARK								TONS BURNED (SOLID)

EXTCOMB BOILER -INDUSTRIAL

ANTHRACITE COAL									
1-02-001-01	>100MMBTU/HR PULV	17.0	A	38.0	S	18.0	0.03	1.00	TONS BURNED
1-02-001-02	>100MMBTU/HR STKR	2.00	A	38.0	S	10.5	0.20	6.00	TONS BURNED
1-02-001-03	10-100MMBTU PULVD	17.0	A	38.0	S	18.0	0.03	1.00	TONS BURNED
1-02-001-04	10-100MMBTU STKR	2.00	A	38.0	S	10.5	0.20	6.00	TONS BURNED
1-02-001-05	<10MMBTU/HR PULVD	17.0	A	38.0	S	18.0	0.03	1.00	TONS BURNED
1-02-001-06	<10MMBTU/HR STKR	2.00	A	38.0	S	6.00	0.20	10.0	TONS BURNED
1-02-001-07	<10MMBTU/HR HNDFR	10.0		36.0	S	3.00	2.50	90.0	TONS BURNED
1-02-001-99	OTHER/NOT CLASIFD	17.0	A	38.0	S	18.0	0.03	2.00	TONS BURNED
BITUMINOUS COAL									
1-02-002-01	>100MMBTU PULVWET	13.0	A	38.0	S	30.0	0.30	1.00	TONS BURNED
1-02-002-02	>100MMBTU PULVDRY	17.0	A	38.0	S	18.0	0.30	1.00	TONS BURNED
1-02-002-03	>100MMBTU CYCLONE	2.00	A	38.0	S	55.0	0.30	1.00	TONS BURNED
1-02-002-04	>100MMBTU SPDSTKR	13.0	A	38.0	S	15.0	1.00	2.00	TONS BURNED
1-02-002-05	10-100MMBTU OFSTK	5.00	A	38.0	S	15.0	1.00	2.00	TONS BURNED
1-02-002-06	10-100MMBTU UFSTK	5.00	A	38.0	S	15.0	1.00	2.00	TONS BURNED
1-02-002-07	10-100MMBTU PULWT	13.0	A	38.0	S	30.0	0.30	1.00	TONS BURNED
1-02-002-08	10-100MMBTU PULDY	17.0	A	38.0	S	18.0	0.30	1.00	TONS BURNED
1-02-002-09	10-100MMBTUSPDSTK	13.0	A	38.0	S	15.0	1.00	2.00	TONS BURNED
1-02-002-10	<10MMBTU OFD STKR	2.00	A	38.0	S	6.00	3.00	10.0	TONS BURNED
1-02-002-11	<10MMBTU UFD STKR	2.00	A	38.0	S	6.00	3.00	10.0	TONS BURNED
1-02-002-12	<10MMBTU PULV DRY	17.0	A	38.0	S	18.0	0.30	2.00	TONS BURNED
1-02-002-13	<10MMBTU SPD STKR	2.00	A	38.0	S	6.00	3.00	10.0	TONS BURNED
1-02-002-14	<10MMBTU HANDFIRE	20.0		38.0	S	3.00	20.0	90.0	TONS BURNED
1-02-002-99	OTHER/NOT CLASIFD	13.0	A	38.0	S	15.0	0.30	2.00	TONS BURNED
LIGNITE									
1-02-003-01	>100MMBTU PULVWET	6.50	A	30.0	S	13.0	0.30	1.00	TONS BURNED
1-02-003-02	>100MMBTU PULVDRY	6.50	A	30.0	S	13.0	0.30	1.00	TONS BURNED
1-02-003-03	>100MMBTU CYCLONE	6.50	A	30.0	S	17.0	0.30	1.00	TONS BURNED
1-02-003-04	>100MMBTU OFSTKR	6.50	A	30.0	S	13.0	1.00	2.00	TONS BURNED
1-02-003-05	>100MMBTU UFSTKR	6.50	A	30.0	S	13.0	1.00	2.00	TONS BURNED
1-02-003-06	>100MMBTU SPDSTKR	6.50	A	30.0	S	13.0	1.00	2.00	TONS BURNED
1-02-003-07	10-100MMBTU DYPUL	6.50	A	30.0	S	13.0	0.30	1.00	TONS BURNED
1-02-003-08	10-100MMBTU WTPUL	6.50	A	30.0	S	13.0	0.30	1.00	TONS BURNED
1-02-003-09	10-100MMBTU OFSTK	6.50	A	30.0	S	13.0	1.00	2.00	TONS BURNED
1-02-003-10	10-100MMBTU UFSTK	6.50	A	30.0	S	13.0	1.00	2.00	TONS BURNED
1-02-003-11	10-100MMBTUSPDSTK	6.50	A	30.0	S	13.0	1.00	2.00	TONS BURNED
1-02-003-12	<10MMBTU PULV DRY	6.50	A	30.0	S	13.0	3.00	10.0	TONS BURNED
1-02-003-13	<10MMBTU OFSTOKR	6.50	A	30.0	S	13.0	3.00	10.0	TONS BURNED
1-02-003-14	<10MMBTU UFSTOKR	6.50	A	30.0	S	13.0	3.00	10.0	TONS BURNED
1-02-003-15	<10MMBTU HANDFIRE	6.50	A	30.0	S	13.0	20.0	90.0	TONS BURNED
1-02-003-16	<10MMBTU SPDSTKR	6.50	A	30.0	S	13.0	3.00	10.0	TONS BURNED
RESIDUAL OIL									
1-02-004-01	>100MMBTU/HR	23.0		157.	S	60.0	3.00	4.00	1000 GALLONS BURNED
1-02-004-02	10-100MMBTU/HR	23.0		157.	S	60.0	3.00	4.00	1000 GALLONS BURNED
1-02-004-03	<10MMBTU/HR	23.0		157.	S	60.0	3.00	4.00	1000 GALLONS BURNED
DISTILLATE OIL									
1-02-005-01	>100MMBTU/HR	15.0		142.	S	60.0	3.00	4.00	1000 GALLONS BURNED
1-02-005-02	10-100MMBTU/HR	15.0		142.	S	60.0	3.00	4.00	1000 GALLONS BURNED
1-02-005-03	<10MMBTU/HR	15.0		142.	S	60.0	3.00	4.00	1000 GALLONS BURNED
NATURAL GAS									
1-02-006-01	>100MMBTU/HR	10.0		0.60		600.	3.00	17.0	MILLION CUBIC FEET BURNED
1-02-006-02	10-100MMBTU/HR	10.0		0.60		230.	3.00	17.0	MILLION CUBIC FEET BURNED
1-02-006-03	<10MMBTU/HR	10.0		0.60		120.	3.00	17.0	MILLION CUBIC FEET BURNED
PROCESS GAS									
1-02-007-01	REFINERY >100								MILLION CUBIC FEET BURNED
1-02-007-02	REFINERY 10-100								MILLION CUBIC FEET BURNED
1-02-007-03	REFINERY <10								MILLION CUBIC FEET BURNED
1-02-007-04	BLAST FNC >100								MILLION CUBIC FEET BURNED
1-02-007-05	BLAST FNC 10-100								MILLION CUBIC FEET BURNED
1-02-007-06	BLAST FNC <10								MILLION CUBIC FEET BURNED
1-02-007-07	COKE OVEN >100								MILLION CUBIC FEET BURNED
1-02-007-08	COKE OVEN 10-100								MILLION CUBIC FEET BURNED
1-02-007-09	COKE OVEN <10								MILLION CUBIC FEET BURNED
1-02-007-99	OTHER/NOT CLASIFD								MILLION CUBIC FEET BURNED

'A' INDICATES ASH CONTENT AND 'S' INDICATES SULFUR CONTENT OF THE FUEL, ON A PERCENT BASIS (BY WEIGHT)

EXTCOMB BOILER -INDUSTRIAL (CONTINUED) POUNDS EMITTED PER UNIT

		PART	SOX	NOX	HC	CO	UNITS
COKE							
1-02-008-02	10-100MMBTU/HR	2.00 A	38.0 S	15.0	0.20	2.00	TONS BURNED
1-02-008-03	<10MMBTU/HR	2.00 A	38.0 S	6.00	0.20	10.0	TONS BURNED
WOOD/BARK WASTE							
1-02-009-01	BARK BOILER	75.0	1.50	10.0	2.00	2.00	TONS BURNED
1-02-009-02	WOOD/BARK BOILER	37.5	1.50	10.0	2.00	2.00	TONS BURNED
1-02-009-03	WOOD BOILER	10.0	1.50	10.0	5.00	10.0	TONS BURNED
LIQ PETROLEUM GAS							
1-02-010-02	10-100MMBTU/HR	1.75	86.5 S	11.7	0.30	1.55	1000GALLONS BURNED
1-02-010-03	<10MMBTU/HR	1.75	86.5 S	11.7	0.30	1.55	1000GALLONS BURNED
BAGASSE							
1-02-011-01	>100 MMBTU/HR	22.0	0.	2.00	2.00	2.00	TONS BURNED
1-02-011-02	10-100MMBTU/HR	22.0	0.	2.00	2.00	2.00	TONS BURNED
1-02-011-03	<10MMBTU/HR	22.0	0.	2.00	2.00	2.00	TONS BURNED
SLD WASTE-SPECIFY							
1-02-012-01	>100 MMBTU/HR						TONS BURNED
1-02-012-02	100-100 MMBTU/HR						TONS BURNED
1-02-012-03	<10 MMBTU/HR						TONS BURNED
LIQ WASTE-SPECIFY							
1-02-013-01	>100 MMBTU/HR						1000 GALLONS BURNED
1-02-013-02	10-100 MMBTU/HR						1000 GALLONS BURNED
1-02-013-03	<10 MMBTU/HR						1000 GALLONS BURNED
OTHER/NOT CLASIFD							
1-02-999-97	SPECIFY IN REMARK						MILLION CUBIC FEET BURNED
1-02-999-98	SPECIFY IN REMARK						1000 GALLON BURNED (LIQUID)
1-02-999-99	SPECIFY IN REMARK						TONS BURNED (SOLID)

EXTCOMB BOILER -COMMERCL-INSTUTNL

ANTHRACITE COAL							
1-03-001-05	10-100MMBTU PULWT	13.0 A	38.0 S	30.0	0.03	1.00	TONS BURNED
1-03-001-06	10-100MMBTU PULDY	17.0 A	38.0 S	18.0	0.03	1.00	TONS BURNED
1-03-001-07	10-100MMBTUSPDSTK	13.0 A	38.0 S	15.0	1.00	2.00	TONS BURNED
1-03-001-08	<10MMBTU PULVIZED	17.0 A	38.0 S	18.0	0.03	1.00	TONS BURNED
1-03-001-09	<10MMBTU STOKER	2.00 A	38.0 S	6.00	0.20	10.0	TONS BURNED
1-03-001-10	<10MMBTU SPDSTOKR	2.00 A	38.0 S	15.0	1.00	10.0	TONS BURNED
1-03-001-99	OTHER/NOT CLASIFD	17.0 A	38.0 S	18.0	0.03	1.00	TONS BURNED
BITUMINOUS COAL							
1-03-002-05	10-100MMBTU PULWT	13.0 A	38.0 S	30.0	0.03	1.00	TONS BURNED
1-03-002-06	10-100MMBTU PULDY	17.0 A	38.0 S	18.0	0.03	1.00	TONS BURNED
1-03-002-07	10-100MMBTU OFSTK	5.00 A	38.0 S	15.0	1.00	2.00	TONS BURNED
1-03-002-08	10-100MMBTU UFSTK	5.00 A	38.0 S	15.0	1.00	2.00	TONS BURNED
1-03-002-09	10-100MMBTUSPDSTK	13.0 A	38.0 S	15.0	1.00	2.00	TONS BURNED
1-03-002-10	10-100MMBTU HANFR	20.0	38.0 S	3.00	20.0	90.0	TONS BURNED
1-03-002-11	<10MMBTU OFSTOKER	2.00 A	38.0 S	6.00	3.00	10.0	TONS BURNED
1-03-002-12	<10MMBTU UFSTOKER	2.00 A	38.0 S	6.00	3.00	10.0	TONS BURNED
1-03-002-13	<10MMBTU SPDSTOKR	2.00 A	38.0 S	6.00	3.00	10.0	TONS BURNED
1-03-002-14	<10MMBTU HANDFIRE	20.0	38.0 S	3.00	20.0	90.0	TONS BURNED
1-03-002-99	OTHER/NOT CLASIFD	13.0 A	38.0 S	15.0	0.30	2.00	TONS BURNED
LIGNITE							
1-03-003-05	10-100MMBTU PULWT	6.50 A	30.0 S	13.0	1.00	2.00	TONS BURNED
1-03-003-06	10-100MMBTU PULDY	6.50 A	30.0 S	13.0	1.00	2.00	TONS BURNED
1-03-003-07	10-100MMBTU OFSTK	6.50 A	30.0 S	13.0	1.00	2.00	TONS BURNED
1-03-003-08	10-100MMBTU UFSTK	6.50 A	30.0 S	13.0	1.00	2.00	TONS BURNED
1-03-003-09	10-100MMBTUSPDSTK	6.50 A	30.0 S	13.0	1.00	2.00	TONS BURNED
1-03-003-10	<10MMBTU PULV-DRY	6.50 A	30.0 S	13.0	1.00	10.0	TONS BURNED
1-03-003-11	<10MMBTU OFSTOKER	6.50 A	30.0 S	13.0	3.00	10.0	TONS BURNED
1-03-003-12	<10MMBTU UFSTOKER	6.50 A	30.0 S	13.0	3.00	10.0	TONS BURNED
1-03-003-13	<10MMBTU SPDSTOKR	6.50 A	30.0 S	13.0	3.00	10.0	TONS BURNED
1-03-003-14	<10MMBTU HANDFIRE	6.50 A	30.0 S	13.0	20.0	90.0	TONS BURNED
RESIDUAL OIL							
1-03-004-01	>100MMBTU/HR	23.0	157. S	60.0	3.00	4.00	1000 GALLONS BURNED
1-03-004-02	10-100MMBTU/HR	23.0	157. S	60.0	3.00	4.00	1000 GALLONS BURNED
1-03-004-03	<10MMBTU/HR	23.0	157. S	60.0	3.00	4.00	1000 GALLONS BURNED
DISTILLATE							
1-03-005-01	>100MMBTU/HR	15.0	142. S	60.0	3.00	4.00	1000 GALLONS BURNED
1-03-005-02	10-100MMBTU/HR	15.0	142. S	60.0	3.00	4.00	1000 GALLONS BURNED
1-03-005-03	<10MMBTU/HR	15.0	142. S	60.0	3.00	4.00	1000 GALLONS BURNED

'A' INDICATES ASH CONTENT AND 'S' INDICATES SULFUR CONTENT OF THE FUEL, ON A PERCENT BASIS (BY WEIGHT)

EXTCOMB BOILER -COMMERCL-INSTUTNL (CONTINUED)		POUNDS EMITTED PER UNIT					
		PART	SOX	NOX	HC	CO	UNITS
NATURAL GAS							
1-03-006-01	>100MMBTU/HR	10.0	0.60	230.	8.00	20.0	MILLION CUBIC FEET BURNED
1-03-006-02	10-100MMBTU/HR	10.0	0.60	120.	8.00	20.0	MILLION CUBIC FEET BURNED
1-03-006-03	<10MMBTU/HR	10.0	0.60	80.0	8.00	20.0	MILLION CUBIC FEET BURNED
PROCESS GAS							
1-03-007-01	SEWAGE>100MMBTUHR						MILLION CUBIC FEET BURNED
1-03-007-02	SEWAGE 10-100						MILLION CUBIC FEET BURNED
1-03-007-03	SEWAGE<10MMBTU/HR						MILLION CUBIC FEET BURNED
1-03-007-99	OTHER/NOT CLASIFD						MILLION CUBIC FEET BURNED
WOOD/BARK WASTE							
1-03-009-01	BARK BOILER	75.0	1.50	10.0	2.00	2.00	TONS BURNED
1-03-009-02	WOOD/BARK BOILER	37.5	1.50	10.0	2.00	2.00	TONS BURNED
1-03-009-03	WOOD BOILER	10.0	1.50	10.0	5.00	10.0	TONS BURNED
LIQ PETROLEUM GAS							
1-03-010-02	10-100MMBTU/HR	1.85	86.5 S	9.50	0.75	1.95	1000 GALLONS BURNED
1-03-010-03	<10MMBTU/HR	1.85	86.5 S	9.50	0.75	1.95	1000 GALLONS BURNED
SLD WASTE-SPECIFY							
1-03-012-01	>100 MMBTU/HR						TONS BURNED
1-03-012-02	10-100 MMBTU/HR						TONS BURNED
1-03-012-03	<10 MMBTU/HR						TONS BURNED
LIQ WASTE-SPECIFY							
1-03-013-01	>100 MMBTU/HR						1000 GALLONS BURNED
1-03-013-02	10-100 MMBTU/HR						1000 GALLONS BURNED
1-03-013-03	<10 MMBTU/HR						1000 GALLONS BURNED
OTHER/NOT CLASIFD							
1-03-999-97	SPECIFY IN REMARK						MILLION CUBIC FEET BURNED
1-03-999-98	SPECIFY IN REMARK						1000 GALLON BURNED (LIQUID)
1-03-999-99	SPECIFY IN REMARK						TONS BURNED (SOLID)
INTERNLCOMBUSTION -ELECTRIC GENERATN							
DISTILLATE OIL							
2-01-001-01	TURBINE	5.00	144. S	68.0	5.60	15.4	1000 GALLONS BURNED
2-01-001-02	RECIPROCATING		144. S				1000 GALLONS BURNED
NATURAL GAS							
2-01-002-01	TURBINE	14.0	0.60	413.	42.0	115.	MILLION CUBIC FEET
2-01-002-02	RECIPROCATING		0.60				MILLION CUBIC FEET
DIESEL							
2-01-003-01	RECIPROCATING	13.0	144. S	370.	37.0	225.	THOUSANDS OF GALLONS
2-01-003-02	TURBINE	5.00	144. S	68.0	5.60	15.4	1000 GALLONS BURNED
RESIDUAL OIL							
2-01-004-01	TURBINE		159. S				1000 GALLONS BURNED
JET FUEL							
2-01-005-01	TURBINE		6.20				1000 GALLONS BURNED
CRUDE OIL							
2-01-006-01	TURBINE		146. S				1000 GALLONS BURNED
PROCESS GAS							
2-01-007-01	TURBINE		950. S				MILLION CUBIC FEET
OTHER/NOT CLASIFD							
2-01-999-97	SPECIFY IN REMARK						MILLION CUBIC FEET BURNED
2-01-999-98	SPECIFY IN REMARK						1000 GALLONS BURNED
INTERNLCOMBUSTION -INDUSTRIAL							
DISTILLATE OIL							
2-02-001-01	TURBINE	16.8	144. S	118.			1000 GALLONS BURNED
2-02-001-02	RECIPROCATING	33.5	144. S	469.	37.5	102.	1000 GALLONS BURNED
NATURAL GAS							
2-02-002-01	TURBINE		0.60	598.			MILLION CUBIC FEET
2-02-002-02	RECIPROCATING		0.60	770.			MILLION CUBIC FEET
GASOLINE							
2-02-003-01	RECIPROCATING	6.50	5.30	102.	161.	3,940.	1000 GALLONS BURNED

'A' INDICATES ASH CONTENT AND 'S' INDICATES SULFUR CONTENT OF THE FUEL, ON A PERCENT BASIS (BY WEIGHT)

INTERNLCOMBUSTION -INDUSTRIAL (CONTINUED)		POUNDS EMITTED PER UNIT					
		PART	SOX	NOX	HC	CO	UNITS
DIESEL FUEL							
2-02-004-01	RECIPROCATING	33.5	144. S	469.	37.5	102.	1000 GALLONS BURNED
2-02-004-02	TURBINE	13.0	144. S	370.	37.0	225.	1000 GALLONS BURNED
RESIDUAL OIL							
2-02-005-01	TURBINE		159. S				1000 GALLONS BURNED
JET FUEL							
2-02-006-01	TURBINE		6.20				1000 GALLONS BURNED
CRUDE OIL							
2-02-007-01	TURBINE		146. S				1000 GALLONS BURNED
PROCESS GAS							
2-02-008-01	TURBINE		950. S				MILLION CUBIC FEET
2-02-008-02	RECIPROCATING		950. S				MILLION CUBIC FEET BURNED
OTHER/NOT CLASIFD							
2-02-999-97	SPECIFY IN REMARK						MILLION CUBIC FEET BURNED
2-02-999-98	SPECIFY IN REMARK						1000 GALLONS BURNED
INTERNLCOMBUSTION -COMMERCL-INSTUTNL							
DIESEL							
2-03-001-01	RECIPROCATING	33.5	144. S	469.	37.5	102.	THOUSANDS OF GALLONS
OTHER/NOT CLASIFD							
2-03-999-97	SPECIFY IN REMARK						MILLION CUBIC FEET BURNED
2-03-999-98	SPECIFY IN REMARK						1000 GALLONS BURNED
INTERNLCOMBUSTION -ENGINE TESTING							
AIRCRAFT							
2-04-001-01	TURBOJET	11.8	13.0	14.6	46.0	32.7	THOUSANDS OF GALLON/FUEL
ROCKET MOTOR							
2-04-002-01	SOLID PROPELLANT						TONS OF FUEL
OTHER/NOT CLASIFD							
2-04-999-97	SPECIFY IN REMARK						MILLION CUBIC FEET BURNED
2-04-999-98	SPECIFY IN REMARK						1000 GALLONS BURNED
2-04-999-99	SPECIFY IN REMARK						TONS BURNED
INDUSTRIAL PROCES -CHEMICAL MFG							
ADIPIC ACID PROD							
3-01-001-01	GENERAL-CYCLOHEX	0.	0.	12.0	0.	0.	TONS PRODUCED
3-01-001-99	OTHER/NOT CLASIFD						TONS PRODUCED
AMMONIA W/METHNTR							
3-01-002-01	PURGE GAS	0.	0.	0.	90.0	0.	TONS PRODUCED
3-01-002-02	STORAGE/LOADING	0.	0.	0.	0.	0.	TONS PRODUCED
AMMONIA W/COABSRB							
3-01-003-01	REGENERATOR EXIT	0.	0.	0.	0.	200.	TONS PRODUCED
3-01-003-02	PURGE GAS	0.	0.	0.	90.0	0.	TONS PRODUCED
3-01-003-03	STORAGE/LOADING	0.	0.	0.	0.	0.	TONS PRODUCED
3-01-003-99	OTHER/NOT CLASIFD						TONS PRODUCED
AMMONIUM NITRATE							
3-01-004-01	GENERAL		0.				TONS PRODUCED
3-01-004-99	OTHER/NOT CLASIFD						TONS PRODUCED
CARBON BLACK							
3-01-005-01	CHANNEL PROCESS	2,300.	0.	0.	11,500.	33,500.	TONS PRODUCED
3-01-005-02	THERMAL PROCESS	0.	0.	0.	0.	0.	TONS PRODUCED
3-01-005-03	FURNACE PROC GAS				1,800.	5,300.	TONS PRODUCED
3-01-005-04	FURNACE PROC OIL				400.	4,500.	TONS PRODUCED
3-01-005-05	FURNACE W/GAS/OIL	220.					TONS PRODUCED
3-01-005-99	OTHER/NOT CLASFD						TONS PRODUCT
CHARCOAL MFG							
3-01-006-01	PYROL/DISTIL/GENL	400.			100.	320.	TONS PRODUCED
3-01-006-99	OTHER/NOT CLASFD						TONS PRODUCT
CHLORINE							
3-01-007-01	GENERAL		0.				TONS PRODUCED
3-01-007-99	OTHER/NOT CLASIFD						TONS PRODUCED

'A' INDICATES ASH CONTENT AND 'S' INDICATES SULFUR CONTENT OF THE FUEL, ON A PERCENT BASIS (BY WEIGHT)

INDUSTRIAL PROCES'-CHEMICAL MFG (CONTINUED)		POUNDS EMITTED PER UNIT PART	SOX	NOX	HC	CO	UNITS
CHLOR-ALKALI							
3-01-008-01	LIQUIFTN-DIAPHRGM		0.				100 TONS CHLORINE LIQUEFIED
3-01-008-02	LIQUIFTN-MERC CEL		0.				100 TONS CHLORINE LIQUEFIED
3-01-008-03	LOADING TNKCARVNT	0.	0.	0.	0.	0.	100 TONS CHLORINE LIQUEFIED
3-01-008-04	LOADING STGTNKVNT	0.	0.	0.	0.	0.	100 TONS CHLORINE LIQUEFIED
3-01-008-05	AIR-BLOW MC BRINE	0.	0.	0.	0.	0.	100 TONS CHLORINE LIQUEFIED
3-01-008-99	OTHER/NOT CLASIFD						100 TONS CHLORINE LIQUEFIED
CLEANING CHEMICLS							
3-01-009-01	SOAP/DET SPRYDRYR	90.0					TONS PRODUCED
3-01-009-10	SPECIALTY CLEANRS		0.				TONS PRODUCT
3-01-009-99	OTHERS/NOT CLASFD						TONS PRODUCED
EXPLCSIVES-TNT							
3-01-010-01	NITRATION REACTRS	0.	0.	160.	0.	0.	TONS PRODUCED
3-01-010-02	HNO3 CONCTRTRS	0.	0.	4.00	0.	0.	TONS PRODUCED
3-01-010-03	H2SO4 REGENERATR	0.	15.0	2.00	0.	0.	TONS PRODUCED
3-01-010-04	RED WATER INCIN	32.0	2.00	38.0	0.	0.	TONS PRODUCED
3-01-010-05	OPEN WASTE BURN						TONS BURNED
3-01-010-06	SELLITE EXHAUST	0.	0.70	0.	0.	0.	TONS PRODUCED
3-01-010-99	OTHER/NOT CLASIFD						TONS PRODUCED
HYDROCHLORIC ACID							
3-01-011-01	BYPRODUCTW/OSCRUB		0.				TONS FINAL ACID
3-01-011-02	BYPRODUCT W/SCRUB		0.				TONS FINAL ACID
3-01-011-99	OTHER/NOT CLASIFD						TONS FINAL ACID
HYDROFLUORIC ACID							
3-01-012-01	ROTRYKILNW/SCRUBR	0.					TONS ACID
3-01-012-02	ROTRYKILNW/OSCRUB	0.					TONS ACID
3-01-012-03	GRIND/DRY FLUOSPR	200.					TONS FLUORSPAR
3-01-012-99	OTHER/NOT CLASIFD						TONS ACID
NITRIC ACID							
3-01-013-01	AMMONIAOXIDATNOLD			52.5			TONS PURE ACID PRODUCED
3-01-013-02	AMMONIAOXIDATNNEW			4.50			TONS PURE ACID PRODUCED
3-01-013-03	NITACD CONCTR OLD			5.00			TONS PURE ACID PRODUCED
3-01-013-04	NITACD CONCTR NEW			0.20			TONS PURE ACID PRODUCED
3-01-013-05	UNCONTROLLED						TONS PURE ACID PRODUCED
3-01-013-06	W/CATYL/COMBUSTEP						TONS PURE ACID PRODUCED
3-01-013-07	UNCONTROLLED						TONS PURE ACID PRODUCED
3-01-013-08	W/ABSORBERS						TONS PURE ACID PRODUCED
3-01-013-99	OTHER/NOT CLASIFD						TONS PURE ACID PRODUCED
PAINT MFG							
3-01-014-01	GENERAL	2.00			30.0		TONS PRODUCED
3-01-014-02	PIGMENT KILN						TONS PRODUCT
3-01-014-99	OTHER/NOT CLASFD						TONS PRODUCT
VARNISH MFG							
3-01-015-01	BODYING OIL GENL	0.			40.0		TONS PRODUCED
3-01-015-02	OLEORESINOUS GENL	0.			150.		TONS PRODUCED
3-01-015-03	ALKYD GENERAL	0.			160.		TONS PRODUCED
3-01-015-05	ACRYLIC GENERAL	0.			20.0		TONS PRODUCED
3-01-015-99	OTHER/NOT CLASFD						TONS PRODUCED
PHOS-ACID WETPROC							
3-01-016-01	REACTOR-UNCONTLD	0.					TONS PHOSPHATE ROCK
3-01-016-02	GYPSUM POND	0.					TONS PHOSPHATE ROCK
3-01-016-03	CONDENSR-UNCONTLD	0.					TONS PHOSPHATE ROCK
3-01-016-99	OTHER/NOT CLASFD						TONS PRODUCED
PHOS-ACID THERMAL							
3-01-017-01	GENERAL						TONS PHOSPHOROUS BURNED
3-01-017-99	OTHER/NOT CLASFD						TONS PRODUCED
PLASTICS							
3-01-018-01	PVC-GENERAL	35.0					TONS PRODUCED
3-01-018-02	POLYPROD-GENERAL	3.00					TONS PRODUCED
3-01-018-05	BAKELITE-GENERAL						TONS PRODUCT
3-01-018-99	OTHER/NOT CLASFD						TONS PRODUCED
PHTHALIC ANHYDRID							
3-01-019-03	UNCONTROLLED-GENL				32.0		TONS PRODUCED
PRINTING INK							
3-01-020-01	COOKING-GENERAL	0.			120.		TONS PRODUCED
3-01-020-02	COOKING-OILS	0.			40.0		TONS PRODUCED
3-01-020-03	COOKING-OLEORESIN	0.			150.		TONS PRODUCED
3-01-020-04	COOKING-ALKYDS	0.			160.		TONS PRODUCED
3-01-020-05	PIGMENT MIXINGGEN	2.00					TONS PIGMENT
3-01-020-99	OTHER/NOT CLASFD						TONS PRODUCED

INDUSTRIAL PROCES -CHEMICAL MFG (CONTINUED)

		POUNDS EMITTED PER UNIT					
		PART	SOX	NOX	HC	CO	UNITS
SODIUM CARBONATE							
3-01-021-01	AMMONIA RECOVERY	0.					TONS PRODUCED
3-01-021-02	HANDLING	6.00					TONS PRODUCED
3-01-021-99	OTHER/NOT CLASFD						TONS PRODUCED
H2SO4 -CHAMBER							
3-01-022-01	GENERAL				0.		TONS PURE ACID PRODUCED
H2SO4-CONTACT							
3-01-023-01	99.7 CONVERSION	2.50	4.00				TONS PURE ACID PRODUCED
3-01-023-04	99.5 CONVERSION	2.50	7.00				TONS PURE ACID PRODUCED
3-01-023-06	99.0 CONVERSION	2.50	14.0				TONS PURE ACID PRODUCED
3-01-023-08	98.0 CONVERSION	2.50	27.0				TONS PURE ACID PRODUCED
3-01-023-10	97.0 CONVERSION	2.50	40.0				TONS PURE ACID PRODUCED
3-01-023-12	96.0 CONVERSION	2.50	55.0				TONS PURE ACID PRODUCED
3-01-023-14	95.0 CONVERSION	2.50	70.0				TONS PURE ACID PRODUCED
3-01-023-16	94.0 CONVERSION	2.50	82.0				TONS PURE ACID PRODUCED
3-01-023-18	93.0 CONVERSION	2.50	96.0				TONS PURE ACID PRODUCED
3-01-023-99	OTHER/NOT CLASFD						TONS PRODUCED
SYNTHETIC FIBERS							
3-01-024-01	NYLON GENERAL				7.00		TONS FIBER
3-01-024-02	DACRON GENERAL				0.		TONS FIBER
3-01-024-03	ORLON						TONS PRODUCT
3-01-024-04	ELASTIC						TONS PRODUCT
3-01-024-05	TEFLON						TONS PRODUCT
3-01-024-06	POLYESTER						TONS PRODUCT
3-01-024-08	NOMEX						TONS PRODUCT
3-01-024-10	ACRYLIC						TONS PRODUCT
3-01-024-12	TYVEX						TONS PRODUCT
3-01-024-14	OLEFINS						TONS PRODUCT
3-01-024-99	OTHERS/NOT CLASFD						TONS PRODUCED
SEMISYNTHTICFIBR							
3-01-025-01	RAYON GENERAL				0.		TONS FIBER
3-01-025-05	ACETATE						TONS PRODUCED
3-01-025-10	VISCOSE						TONS PRODUCED
3-01-025-99	OTHERS/NOT CLASFD						TONS PRODUCED
SYNTHETIC RUBBER							
3-01-026-01	BUTADIENE-GENERAL						TONS PRODUCT
3-01-026-02	METHYLPROPENE-GAL						TONS PRODUCT
3-01-026-03	BUTYNE GENERAL						TONS PRODUCT
3-01-026-04	PENTADIENE-GENRL						TONS PRODUCT
3-01-026-05	DIMETHHEPTNE GENL						TONS PRODUCT
3-01-026-06	PENTANE-GENERAL						TONS PRODUCT
3-01-026-07	ETHANENITRILE-GEN						TONS PRODUCT
3-01-026-08	ACRYLONITRILE-GEN						TONS PRODUCT
3-01-026-09	ACROLEIN-GENERAL						TONS PRODUCT
3-01-026-20	AUTO TIRES GENERL						TONS PRODUCT
3-01-026-99	OTHER/NOT CLASFD						TONS PRODUCT
FERTILIZ AMONNITR							
3-01-027-01	PRILTWR-NEUTRLIZR	0.		0.			TONS PRODUCED
3-01-027-02	PRILLING TOWER	0.90		0.			TONS PRODUCED
3-01-027-03	PRILTWR-DRYCOOLRS	12.0		0.			TONS PRODUCED
3-01-027-04	GRANULAT-NEUTLIZR	0.		0.			TONS PRODUCED
3-01-027-05	GRANULATOR	0.40		0.45			TONS PRODUCED
3-01-027-06	GRANULAT-DRYCOOLR	7.00		3.00			TONS PRODUCED
FERTILIZ-NSUPPHOS							
3-01-028-01	GRIND-DRY	9.00					TONS PRODUCED
3-01-028-02	MAIN STACK	0.					TONS PRODUCED
FERTILIZ-TRPSPHOS							
3-01-029-01	RUN OF PILE	0.					TONS PRODUCED
3-01-029-02	GRANULAR	0.					TONS PRODUCED
FERTILIZ-DIAMPHOS							
3-01-030-01	DRYER-COOLERS	80.0					TONS PRODUCED
3-01-030-02	AMONIAT-GRANULATE	2.00					TONS PRODUCED
3-01-030-99	OTHER/NOT CLASIFD						TONS PRODUCED
TEREPTHALIC ACID							
3-01-031-01	HNO3+PARAXYLENGEN			13.0			TONS PRODUCED
3-01-031-99	OTHER/NOT CLASIFD						TONS PRODUCED
SULFUR(ELEMENTAL)							
3-01-032-01	MOD-CLAUS 2STAGE		280.				TONS PRODUCT
3-01-032-02	MOD-CLAUS 3STAGE		189.				TONS PRODUCT
3-01-032-03	MOD-CLALS 4STAGE		146.				TONS PRODUCT
3-01-032-99	OTHER/NOT CLASIFD						TONS PRODUCT

INDUSTRIAL PROCES -CHEMICAL MFG (CONTINUED)		POUNDS EMITTED PER UNIT PART	SOX	NOX	HC	CO	UNITS
PESTICIDES							
3-01-033-01	MALATHION						GALLONS OF PRODUCT
3-01-033-99	OTHER/NOT CLASIFD						TONS PRODUCED
AMINES/AMIDES							
3-01-034-01	GENERAL/OTHER						TONS PRODUCT
PIGMENT-INORGAN							
3-01-035-01	CALCINATION						TONS OF PRODUCT
3-01-035-99	OTHER/NOT CLASIFD						TONS OF PRODUCT
SODIUM SULFATE							
3-01-036-01	GENERAL/OTHER						TONS PRODUCT
3-01-036-02	KILNS						TONS PRODUCT
SODIUM SULFITE							
3-01-037-01	GENERAL/OTHER						TONS PRODUCT
3-01-037-02	KILNS						TONS PRODUCT
SODIUM BICARB							
3-01-038-01	GENERAL						TONS PRODUCT
LITHIUM HYDROXIDE							
3-01-039-01	GENERAL						TONS PRODUCT
FERTILIZER UREA							
3-01-040-01	GENERAL						TONS PRODUCT
NITROCELLULOSE							
3-01-041-01	REACTOR POTS	0.	1.30	21.0	0.	0.	TONS PRODUCED
3-01-041-02	H2SO4 CONCENTRTRS	0.	65.0	29.0	0.	0.	TONS PRODUCED
3-01-041-03	BOILING TUBS	0.	0.	2.00	0.	0.	TONS PRODUCED
3-01-041-99	OTHER/NOT CLASIFD				0.	0.	TONS PRODUCED
ADHESIVES							
3-01-050-01	GENL/COMPND UNKWN						TONS PRODUCT
ACETATE FLAKE							
3-01-050-99	OTHER/NOT CLASFD						TONS PRODUCT
ACETONE							
3-01-091-01	OTHER/NOT CLASFD						TONS PRODUCT
MALEIC ANHYDRIDE							
3-01-100-01	GENERAL/OTHER						TONS PRODUCT
POLYVINL PYRILIDON							
3-01-101-01	GENERAL/OTHER						TONS PRODUCT
SULFONIC ACID/ATS							
3-01-110-01	GENERAL/OTHER						TONS PRODUCT
ASBESTOS CHEMICAL							
3-01-111-01	CAULKING		0.	0.	0.	0.	TONS PRODUCT
3-01-111-02	SEALANTS		0.	0.	0.	0.	TONS PRODUCT
3-01-111-03	BRAKE LINE/GRIND		0.	0.	0.	0.	TONS PRODUCT
3-01-111-04	FIRE PROOF MFG		0.	0.	0.	0.	TONS PRODUCT
3-01-111-99	OTHERS/NOT CLASFD						TONS PRODUCT
WASTE GAS FLARES							
3-01-900-99	OTHER/NOT CLASIFD						MILLION CUBIC FEET BURNED
OTHER/NOT CLASIFD							
3-01-999-99	SPECIFY IN REMARK						TONS PRODUCT
INDUSTRIAL PROCES -FOOD/AGRICULTURAL							
ALFALFA DEHYDRATN							
3-02-001-01	GENERAL	60.0					TONS MEAL PRODUCED
3-02-001-99	OTHER/NOT CLASFD						TONS PRODUCT
COFFEE ROASTING							
3-02-002-01	DIRECTFIRE ROASTR	7.60		0.10			TONS GREEN BEANS
3-02-002-02	INDIRCTFIREROASTR	4.20		0.10			TONS GREEN BEANS
3-02-002-03	STONER/COOLER	1.40		0.			TONS GREEN BEANS
3-02-002-99	OTHER/NOT CLASFD						TONS PRODUCT

INDUSTRIAL PROCES -FOOD/AGRICULTURE (CONTINUED)		POUNDS EMITTED PER UNIT					
		PART	SOX	NOX	HC	CO	UNITS
COFFEE-INSTANT							
3-02-003-01	SPRAY DRIER	1.40		0.			TONS GREEN BEANS
COTTON GINNING							
3-02-004-01	UNLOADING FAN	5.00	0.	0.	0.	0.	BALES COTTON
3-02-004-02	CLEANER	1.00	0.	0.	0.	0.	BALES COTTON
3-02-004-03	STICK/BURR MACHNE	3.00	0.	0.	0.	0.	BALES COTTON
3-02-004-99	OTHER/NOT CLASFD						BALES COTTON
FEED/GRAIN TERMEL							
3-02-005-01	SHIPING/RECEIVING	1.00	0.	0.	0.	0.	TONS GRAIN PROCESSED
3-02-005-02	TRANSFER/CONVEYNG	2.00	0.	0.	0.	0.	TONS GRAIN PROCESSED
3-02-005-03	SCREENING/CLEANNG	5.00	0.	0.	0.	0.	TONS GRAIN PROCESSED
3-02-005-04	DRYING	6.00					TONS GRAIN PROCESSED
FEED/GRAIN CNTRYE							
3-02-006-01	SHIPNG/RECEIVNG	5.00	0.	0.	0.	0.	TONS GRAIN PROCESSED
3-02-006-02	TRANSFER/CONVEYNG	3.00	0.	0.	0.	0.	TONS GRAIN PROCESSED
3-02-006-03	SCREENING/CLEANNG	8.00	0.	0.	0.	0.	TONS GRAIN PROCESSED
3-02-006-04	DRYING	7.00					TONS GRAIN PROCESSED
3-02-006-99	OTHER/NOT CLASIFD						TONS GRAIN PROCESSED
GRAIN PROCESSING							
3-02-007-01	CORN MEAL	5.00					TONS GRAIN PROCESSED
3-02-007-02	SOY BEAN	7.00					TONS GRAIN PROCESSED
3-02-007-03	BARLEY/WHEATCLEAN	0.20					TONS GRAIN PROCESSED
3-02-007-04	MILD CLEANER	0.40					TONS GRAIN PROCESSED
3-02-007-05	BARLEYFLOUR MILL	3.00					TONS GRAIN PROCESSED
3-02-007-06	WET CORN MILLING		0.				TONS OF PRODUCT
3-02-007-30	WHEAT FLOUR MILL		0.				TONS PRODUCT
3-02-007-99	OTHER/NOT CLASFD						TONS PROCESSED
FEED MANUFACTURE							
3-02-008-01	BARLEY FEED-GENL	3.00					TONS GRAIN PROCESSED
3-02-008-99	OTHER/NOT CLASFD						TONS PROCESSED
FERMENTATN-BEER							
3-02-009-01	GRAIN HANDLING	3.00			0.		TONS GRAIN PROCESSED
3-02-009-02	DRYING SPNT GRAIN	5.00					TONS GRAIN PROCESSED
3-02-009-03	BREWING						THOUSANDS OF GALLONS
3-02-009-98	OTHER/NOT CLASFD						GALLONS PRODUCT
3-02-009-99	OTHER/NOT CLASFD						TONS GRAIN PROCESSED
FERMENTATN-WHISKY							
3-02-010-01	GRAIN HANDLING	3.00			0.		TONS GRAIN PROCESSED
3-02-010-02	DRYING SPNT GRAIN	5.00					TONS GRAIN PROCESSED
3-02-010-03	AGING	0.			10.[illegible]		BARRELS(50 GAL)
3-02-010-99	OTHER/NOT CLASFD						GALLONS PRODUCT
FERMENTATN-WINE							
3-02-011-01	GENERAL	0.			0.		GALLONS PRODUCT
FISH MEAL							
3-02-012-01	COOKERS-FRESHFISH	0.					TONS FISH MEAL PRODUCED
3-02-012-02	COOKERS-STALEFISH	0.					TONS FISH MEAL PRODUCED
3-02-012-03	DRIERS	0.10					TONS FISH SCRAP
3-02-012-99	OTHER/NOT CLASIFD						TONS PROCESSED
MEAT SMOKING							
3-02-013-01	GENERAL	0.30			0.07	0.60	TONS MEAT SMOKED
STARCH MFG							
3-02-014-01	GENERAL	8.00					TONS STARCH PRODUCED
SUGAR CANE PROCES							
3-02-015-01	GENERAL						TONS SUGAR PRODUCED
3-02-015-99	OTHER/NOT CLASIFD						TONS PROCESSED
SUGAR BEET PROCES							
3-02-016-01	DRYER ONLY						TONS RAW BEETS
3-02-016-99	OTHER/NOT CLASIFD						TONS RAW BEETS
PEANUT PROCESSING							
3-02-017-20	OIL/NOT CLASFD						TONS PRODUCT
3-02-017-99	OTHER/NOT CLASFD						TONS PROCESSED
CANDY/CONFECTNRY							
3-02-018-99	OTHER/NOT CLASFD						TONS PRODUCT
DAIRY PRODUCTS							
3-02-030-01	MILK SPRAY-DRYER		0.				TONS PRODUCT
3-02-030-99	OTHER/NOT CLASFD						TONS PRODUCT

INDUSTRIAL PROCES -FOOD/AGRICULTURE (CONTINUED)		POUNDS EMITTED PER UNIT					
		PART	SOX	NOX	HC	CO	UNITS
OTHER/NOT CLASIFD							
3-02-999-98	SPECIFY IN REMARK						TONS PROCESSED (INPUT)
3-02-999-99	SPECIFY IN REMARK						TONS PRODUCED (FINISHED)
INDUSTRIAL PROCES -PRIMARY METALS							
ALUMINUM ORE-BAUX							
3-03-000-01	CRUSHING/HANDLING	6.00					TONS OF ORE
AL ORE-ELECROREDN							
3-03-001-01	PREBAKE CELLS	81.3					TONS ALUMINUM PRODUCED
3-03-001-02	HORIZSTD SODERBRG	98.4					TONS ALUMINUM PRODUCED
3-03-001-03	VERTSTD SODERBERG	78.4					TONS ALUMINUM PRODUCED
3-03-001-04	MATERIALS HANDLNG	10.0					TONS ALUMINUM PRODUCED
3-03-001-05	ANODE BAKE FURNCE	3.00					TONS ALUMINUM PRODUCED
3-03-001-99	OTHER/NOT CLASFD						TONS ALUMINUM PRODUCED
AL ORE-CALC ALHYD							
3-03-002-01	GENERAL	200.					TONS ALUMINUM PRODUCED
COKE MET BYPRODUC							
3-03-003-01	GENERAL	3.50	4.00	0.04	4.20	1.27	TONS COAL CHARGED
3-03-003-02	OVEN CHARGING	1.50	0.02	0.03	2.50	0.60	TONS COAL CHARGED
3-03-003-03	OVEN PUSHING	0.60			0.20	0.07	TONS COAL CHARGED
3-03-003-04	QUENCHING	0.90					TONS COAL CHARGED
3-03-003-05	UNLOADING	0.40					TONS COAL CHARGED
3-03-003-06	UNDERFIRING		4.00				TONS COAL CHARGED
3-03-003-07	COAL CRUSH/HANDL						TONS COAL CHARGED
3-03-003-99	OTHER/NOT CLASFD						TONS COAL CHARGED
COKE MET-BEEHIVE							
3-03-004-01	GENERAL	200.	0.	0.	8.00	1.00	TONS COAL CHARGED
COPPER SMELTER							
3-03-005-01	TOTAL/GENERAL	135.	1,250.				TONS CONCENTRATED ORE
3-03-005-02	ROASTING	45.0	60.0				TONS CONCENTRATED ORE
3-03-005-03	SMELTING	20.0	320.				TONS CONCENTRATED ORE
3-03-005-04	CONVERTING	60.0	870.				TONS CONCENTRATED ORE
3-03-005-05	REFINING	10.0	0.				TONS CONCENTRATED ORE
3-03-005-06	ORE DRYER						TONS OF ORE
3-03-005-08	FINISH OPER-GENL						TONS PRODUCED
3-03-005-99	OTHER/NOT CLASFD						TONS CONCENTRATED ORE
FERALLOY OPEN FNC							
3-03-006-01	50% FESI	200.					TONS PRODUCED
3-03-006-02	75% FESI	315.					TONS PRODUCED
3-03-006-03	90% FESI	565.					TONS PRODUCED
3-03-006-04	SILICON METAL	625.					TONS PRODUCED
3-03-006-05	SILICOMANGANESE	195.					TONS PRODUCED
3-03-006-10	SCREENING			0.			TONS PROCESSED
3-03-006-11	ORE DRYER						TONS PROCESSED
3-03-006-12	LOWCARB CR-REACTR						TONS PROCESSED
3-03-006-99	OTHER/NOT CLASFD						TONS PRODUCED
FERALOY SEMCOVFNC							
3-03-007-01	FEROMANGANESE	45.0					TONS PRODUCED
3-03-007-02	GENERAL						TONS PRODUCED
IRON PRODUCTION							
3-03-008-01	BLAST FNC-ORECHG	121.	0.	0.	0.	1,750.	TONS PRODUCED
3-03-008-02	BLAST FNC-AGLCHG	44.0	0.	0.	0.	0.	TONS PRODUCED
3-03-008-03	SINTERING GENERAL	42.0				44.0	TONS PRODUCED
3-03-008-04	ORE-CRUSH/HANDLE			0.	0.		TONS OF ORE
3-03-008-05	SCARFING	1.00	0.	0.	0.	0.	TONS PROCESSED
3-03-008-06	SAND HANDLING OPN		0.				TONS HANDLED
3-03-008-07	MOLD OVENS						TONS SAND BAKED
3-03-008-08	SLAG CRUSH/HANDL						TONS HANDLED
3-03-008-99	OTHER/NOT CLASFD						TONS PRODUCED
STEEL PRODUCTION							
3-03-009-01	OPNHEARTH OXLANCE	17.4				0.	TONS PRODUCED
3-03-009-02	OPNHEARTH NOXLNCE	8.30				0.	TONS PRODUCED
3-03-009-03	BOF-GENERAL	51.0				139.	TONS PRODUCED
3-03-009-04	ELECT ARC W/LANCE	11.0				18.0	TONS PRODUCED
3-03-009-05	ELECT ARC NOLANCE	9.20				18.0	TONS PRODUCED
3-03-009-10	FINISH/PICKLING						TONS PRODUCED
3-03-009-11	FINISH/SOAK PITS						TONS PRODUCED
3-03-009-12	FINISH/GRIND,ETC						TONS PRODUCED
3-03-009-20	FINISH/OTHER						TONS PRODUCED
3-03-009-99	OTHER/NOT CLASFD						TONS PRODUCED
LEAD SMELTERS							
3-03-010-01	SINTERING	164.	423.	0.	0.	0.	TONS CONCENTRATED ORE
3-03-010-02	BLAST FURNACE	278.	34.9	0.	0.	0.	TONS CONCENTRATED ORE
3-03-010-03	REVERB FURNACE	15.4	0.	0.	0.	0.	TONS CONCENTRATED ORE
3-03-010-04	ORE CRUSHING	2.00	0.	0.	0.	0.	TONS OF ORE CRUSHED

LEAD SMELTERS (CONTINUED)		POUNDS EMITTED PER UNIT PART	SOX	NOX	HC	CO	UNITS
3-03-010-05	MATERIALS HANDLNG	5.00	0.	0.	0.	0.	TONS OF LEAD PRODUCT
3-03-010-99	OTHER/NOT CLASFD						TONS CONCENTRATED ORE
MOLYBDENUM							
3-03-011-01	MINING-GENERAL			0.			HUNDREDS OF TONS MINED
3-03-011-02	MILLING-GENERAL			0.			TONS PRODUCT
3-03-011-99	PROCESS-OTHER						TONS PROCESSED
TITANIUM PROCESS							
3-03-012-01	CHLORINATION STAT		0.	0.	0.		TONS PRODUCT
3-03-012-99	OTHER/NOT CLASIFD						TONS PROCESSED
GOLD							
3-03-013-01	MINING/PROCESSING				0.		TONS ORE
BARIUM							
3-03-014-01	ORE GRIND			0.			TONS PROCESSED
3-03-014-02	REDUCTN KILN						TONS PROCESSED
3-03-014-03	DRIERS/CALCINERS						TONS PROCESSED
3-03-014-99	OTHER/NOT CLASFD						TONS PROCESSED
BERYLLIUM ORE							
3-03-015-01	STORAGE		0.	0.	0.	0.	TONS OF ORE
3-03-015-02	CRUSHING		0.	0.	0.	0.	TONS PROCESSED
3-03-015-03	MELTING				0.		TONS PROCESSED
3-03-015-04	QUENCH/HEAT TREAT		0.	0.	0.	0.	TONS PROCESSED
3-03-015-05	GRINDING		0.	0.	0.	0.	TONS PROCESSED
3-03-015-06	SULFATION/DISSOLV			0.	0.	0.	TONS PROCESSED
3-03-015-07	SINTERING				0.		TONS PROCESSED
3-03-015-08	VENTILATION				0.		TONS PROCESSED
3-03-015-09	LEACH/FILTER		0.	0.	0.	0.	TONS PROCESSED
3-03-015-99	OTHER/NOT CLASFD				0.		TONS PROCESSED
MERCURY MINING							
3-03-025-01	SURFACE BLASTING		0.	0.	0.	0.	TONS OF ORE
3-03-025-02	SURFACE DRILLING		0.	0.	0.	0.	TONS OF ORE
3-03-025-03	SURFACE HANDLING		0.	0.	0.	0.	TONS OF ORE
3-03-025-04	NATURAL VAPOR	0.	0.	0.	0.	0.	TONS OF ORE
3-03-025-05	STRIPPING		0.	0.	0.	0.	TONS REMOVED
3-03-025-06	LOADING		0.	0.	0.	0.	TONS OF ORE
3-03-025-07	CONVEY/HAULING		0.	0.	0.	0.	TONS OF ORE
3-03-025-08	UNLOADING		0.	0.	0.	0.	TONS OF ORE
3-03-025-09	CONV/HAUL WASTE		0.	0.	0.	0.	TONS OF ORE
3-03-025-99	OTHER/NOT CLASFD						TONS OF ORE
MERCURY ORE PROCS							
3-03-026-01	CRUSHING		0.	0.	0.	0.	TONS PROCESSED
3-03-026-02	ROTARY FURNACE				0.		TONS PROCESSED
3-03-026-03	RETORT FURNACE				0.		TONS PROCESSED
3-03-026-04	CALCINE		0.	0.	0.	0.	TONS PROCESSED
3-03-026-05	BURNT ORE BIN		0.	0.	0.	0.	TONS PROCESSED
3-03-026-06	HOEING PROCESS		0.	0.	0.	0.	TONS PROCESSED
3-03-026-99	OTHER/NOT CLASFD						TONS PROCESSED
ZINC SMELTING							
3-03-030-01	GENERAL				0.		TONS PROCESSED
3-03-030-02	ROASTNG/MULT-HRTH	120.	1,100.				TONS PROCESSED
3-03-030-03	SINTERING	90.0					TONS PROCESSED
3-03-030-04	HORIZ RETORTS	8.00					TONS PROCESSED
3-03-030-05	VERT RETORTS	100.					TONS PROCESSED
3-03-030-06	ELECTROLYTIC PROC	3.00					TONS PROCESSED
3-03-030-99	OTHER/NOT CLASFD						TONS PROCESSED
OTHER/NOT CLASFD							
3-03-999-99	SPECIFY IN REMARK						TONS PRODUCED

INDUSTRIAL PROCES -SECONDARY METALS
********** **********

ALUMINUM OPERATN							
3-04-001-01	SWEATINGFURNACE	14.5					TONS PRODUCED
3-04-001-02	SMELT-CRUCIBLE	1.90					TONS METAL PRODUCED
3-04-001-03	SMELT-REVERB FNC	4.30					TONS METAL PRODUCED
3-04-001-04	CHLORINATN STATN	12.5	0.	0.	0.	0.	TONS METAL PRODUCED
3-04-001-10	FOIL ROLLING					0.	TONS PRODUCT
3-04-001-11	FOIL CONVERTING					0.	TONS PRODUCED
3-04-001-20	CAN MANUFACTURE					0.	TONS PRODUCED
3-04-001-50	ROLL-DRAW-EXTRUDE					0.	TONS PRODUCED
3-04-001-99	OTHER/NOT CLASFD						TONS PRODUCED
BRASS/BRONZ MELT							
3-04-002-01	BLAST FNC	18.0					TONS CHARGE
3-04-002-02	CRUCIBLE FNC	12.0					TONS CHARGE
3-04-002-03	CUPOLA FNC	73.0					TONS CHARGE
3-04-002-04	ELECT INDUCTION	2.00					TONS CHARGE

BRASS/BRONZ MELT (CONTINUED)		POUNDS EMITTED PER UNIT PART	SOX	NOX	HC	CO	UNITS
3-04-002-05	REVERB FNC	70.0					TONS CHARGE
3-04-002-06	ROTARY FNC	60.0					TONS CHARGE
3-04-002-99	OTHER/NOT CLASIFD						TONS PRODUCED
GRAY IRON							
3-04-003-01	CUPOLA	17.0				145.	TONS METAL CHARGE
3-04-003-02	REVERB FNC	2.00				0.	TONS METAL CHARGE
3-04-003-03	ELECT INDUCTION	1.50				0.	TONS METAL CHARGE
3-04-003-05	ANNEALING OPERATN						TONS METAL CHARGE
3-04-003-30	MISC CAST-FABCTN						TONS PROCESSED
3-04-003-40	GRINDING-CLEANING		0.	0.	0.	0.	TONS PROCESSED
3-04-003-50	SAND HANDL-GENL						TONS HANDLED
3-04-003-99	OTHER/NOT CLASIFD						TONS METAL CHARGE
LEAD SMELT SEC							
3-04-004-01	POT FURNACE	0.80	0.	0.	0.	0.	TONS METAL CHARGED
3-04-004-02	REVERB FNC	147.	80.0	0.	0.	0.	TONS METAL CHARGED
3-04-004-03	BLAST/CUPOLA FNC	193.	53.0	0.	0.	0.	TONS METAL CHARGED
3-04-004-04	ROTARY REVERB FNC	70.0	0.	0.	0.	0.	TONS METAL CHARGED
3-04-004-06	LEAD OXIDE MFG						TONS PRODCESSED
3-04-004-99	OTHER/NOT CLASIFD						TONS PROCESSED
LEAD BATTERY							
3-04-005-01	TOTAL-GENERAL	0.90	0.	0.	0.	0.	TONS OF BATTERIES PRODUCED
3-04-005-02	CASTING FURNACE	0.04	0.	0.	0.	0.	TONS OF BATTERIES PRODUCED
3-04-005-03	PASTE MIXER	0.21	0.	0.	0.	0.	TONS OF BATTERIES PRODUCED
3-04-005-04	THREE PROCES OPER	0.64	0.	0.	0.	0.	TONS OF BATTERIES PRODUCED
3-04-005-99	OTHER/NOT CLASIFD						TONS PROCESSED
MAGNESIUM SEC							
3-04-006-01	POT FURNACE	4.00					TONS PROCESSED
3-04-006-99	OTHER/NOT CLASIFD						TONS PROCESSED
STEEL FOUNDRY							
3-04-007-01	ELECTRIC ARC FNC	13.0		0.20			TONS PROCESSED
3-04-007-02	OPEN HEARTH FNC	11.0		0.01			TONS PROCESSED
3-04-007-03	OPEN HEARTH LANCD	10.0		0.			TONS PROCESSED
3-04-007-04	HEAT-TREAT FNC						TONS PROCESSED
3-04-007-05	INDUCTION FURNACE	0.10	0.	0.	0.	0.	TONS PROCESSED
3-04-007-06	SAND GRIND/HANDL						TONS HANDLED
3-04-007-10	FINISH/SOAK PITS						TONS PROCESSED
3-04-007-15	FINISH/NOT CLASFD						TONS PROCESSED
3-04-007-99	OTHER/NOT CLASIFD						TONS PROCESSED
ZINC SEC							
3-04-008-01	RETORT FNC	47.0					TONS PRODUCED
3-04-008-02	HORIZ MUFFLE FNC	45.0					TONS PRODUCED
3-04-008-03	POT FURNACE	0.10					TONS PRODUCED
3-04-008-04	KETTLE-SWEAT FNC	11.0					TONS PRODUCED
3-04-008-05	GALVANIZING KETTL	5.00					TONS PRODUCED
3-04-008-06	CALCINING KILN	89.0					TONS PRODUCED
3-04-008-07	CONCENTRATE DRYER						TONS PROCESSED
3-04-008-08	REVERB-SWEAT FNC	13.0					TONS PRODUCED
3-04-008-99	OTHER/NOT CLASIFD						TONS PROCESSED
MALLEABLE IRON							
3-04-009-01	ANNEALING OPERATN						TONS METAL CHARGE
3-04-009-99	OTHER/NOT CLASIFD						TONS METAL CHARGE
NICKEL							
3-04-010-01	FLUX FURNACE						TONS PROCESSED
3-04-010-99	OTHER/NOT CLASIFD						TONS PROCESSED
ZIRCONIUM							
3-04-011-01	OXIDE KILN						TONS PROCESSED
3-04-011-99	OTHER/NOT CLASIFD						TONS PROCESSED
FURNACE ELECTRODE							
3-04-020-01	CALCINATION						TONS PROCESSED
3-04-020-02	MIXING		0.	0.	0.	0.	TONS PROCESSED
3-04-020-03	PITCH TREATING		0.	0.			TONS PROCESSED
3-04-020-04	BAKE FURNACES						TONS PROCESSED
3-04-020-99	OTHER/NOT CLASIFD						TONS PROCESSED
MISC CAST&FABRCTN							
3-04-050-01	SPECIFY IN REMARK						TONS PRODUCED
OTHER/NOT CLASIFD							
3-04-999-99	SPECIFY IN REMARK						TONS PROCESSED

INDUSTRIAL PROCES -MINERAL PRODUCTS

		POUNDS EMITTED PER UNIT					
		PART	SOX	NOX	HC	CO	UNITS
ASPHALT ROOFING							
3-05-001-01	BLOWING OPERATION	2.50			1.50	0.90	TONS SATURATED FELT PRODUCED
3-05-001-02	DIPPING ONLY	1.00			0.	0.	TONS SATURATED FELT PRODUCED
3-05-001-03	SPRAYING ONLY	3.00			0.	0.	TONS SATURATED FELT PRODUCED
3-05-001-04	DIPPING/SPRAYING	2.00			0.	0.	TONS SATURATED FELT PRODUCED
3-05-001-99	OTHER/NOT CLASIFD						TONS SATURATED FELT PRODUCED
ASPHALTIC CONCRET							
3-05-002-01	ROTARY DRYER	35.0					TONS PRODUCED
3-05-002-02	OTHER SOURCES	10.0	0.	0.	0.	0.	TONS PRODUCED
3-05-002-99	OTHER/NOT CLASIFD						TONS PRODUCED
BRICK MANUFACTURE							
3-05-003-01	DRYING-RAW MTL	70.0		0.			TONS PRODUCED
3-05-003-02	GRINDING-RAW MTL	76.0		0.			TONS PRODUCED
3-05-003-03	STORAGE-RAW MTL	34.0		0.			TONS PRODUCED
3-05-003-04	CURING GAS FIRED	0.07	0.02	0.29	0.03	0.07	TONS PRODUCED
3-05-003-05	CURING OIL FIRED	0.07	5.00 S	1.40	0.10	0.	TONS PRODUCED
3-05-003-06	CURING COAL FIRED	1.30 A	9.60 S	1.10	0.70	2.60	TONS PRODUCED
3-05-003-99	OTHER/NOT CLASIFD						TONS PRODUCED
CALCIUM CARBIDE							
3-05-004-01	ELECTRIC FNC	38.0	3.00				TONS PRODUCED
3-05-004-02	COKE DRYER	2.00	3.00				TONS PRODUCED
3-05-004-03	FNC ROOM VENTS	26.0	0.				TONS PRODUCED
3-05-004-99	OTHER/NOT CLASIFD						TONS PROCESSED
CASTABLE REFRACTY							
3-05-005-01	RAWMATL DRYER	30.0					TONS FEED MATERIAL
3-05-005-02	RAWMATL CRUSH/PRC	120.					TONS FEED MATERIAL
3-05-005-03	ELECTRIC ARC MELT	50.0					TONS FEED MATERIAL
3-05-005-04	CURING OVEN	0.20					TONS FEED MATERIAL
3-05-005-05	MOLD/SHAKEOUT	25.0					TONS FEED MATERIAL
3-05-005-99	OTHER/NOT CLASIFD						TONS FEED MATERIAL
CEMENT MFG DRY							
3-05-006-01	KILNS	46.0	3.00	0.50			BARRELS CEMENT PRODUCED
3-05-006-02	DRYERS/GRINDERETC	18.0					BARRELS CEMENT PRODUCED
3-05-006-03	KILNS-OIL FIRED	245.	14.4	2.60	0.	0.	TONS CEMENT PRODUCED
3-05-006-04	KILNS-GAS FIRED	245.	10.2	2.60	0.	0.	TONS CEMENT PRODUCED
3-05-006-05	KILNS-COAL FIRED	245.	23.8	2.60	0.	0.	TONS CEMENT PRODUCED
3-05-006-99	OTHER/NOT CLASIFD						TONS CEMENT PRODUCED
CEMENT MFG WET							
3-05-007-01	KILNS	43.0	3.00	0.50	0.	0.	BARRELS CEMENT PRODUCED
3-05-007-02	DRYERS/GRINDERETC	6.00					BARRELS CEMENT PRODUCED
3-05-007-03	KILNS-OIL FIRED	228.	14.4	2.60	0.	0.	TONS CEMENT PRODUCED
3-05-007-04	KILNS GAS FIRED	228.	10.2	2.60	0.	0.	TONS CEMENT PRODUCED
3-05-007-05	KILNS-COAL FIRED	228.	23.8	2.60	0.	0.	TONS CEMENT PRODUCED
3-05-007-99	OTHER/NOT CLASIFD						TONS CEMENT PRODUCED
CERAMIC/CLAY MFG							
3-05-008-01	DRYING	70.0					TONS INPUT TO PROCESS
3-05-008-02	GRINDING	76.0					TONS INPUT TO PROCESS
3-05-008-03	STORAGE	34.0					TONS INPUT TO PROCESS
3-05-008-99	OTHER/NOT CLASIFD						TONS PRODUCED
CLAY/FLYASHSINTER							
3-05-009-01	FLYASH	110.					TONS FINISHED PRODUCT
3-05-009-02	CLAY/COKE	55.0					TONS FINISHED PRODUCT
3-05-009-03	NATURAL CLAY	24.0					TONS FINISHED PRODUCT
3-05-009-99	OTHER/NOT CLASIFD						TONS PRODUCED
COAL CLEANING							
3-05-010-01	THERM/FLUID BED	20.0					TONS COAL DRIED
3-05-010-02	THERM/FLASH	16.0					TONS COAL DRIED
3-05-010-03	THERM/MULTILOUVRD	25.0					TONS COAL DRIED
3-05-010-99	OTHER/NOT CLASIFD						TONS COAL CLEANED
CONCRETE BATCHING							
3-05-011-01	GENERAL	0.20					CUBIC YARDS CONCRETE PRODUCED
3-05-011-20	ASBEST/CEMNT PDTS	0.20	0.	0.	0.	0.	TONS PRODUCT
3-05-011-21	ROAD SURFACE		0.	0.	0.	0.	TONS PRODUCT
3-05-011-99	OTHER/NOT CLASFD						TONS PRODUCT
FIBERGLASS MFG							
3-05-012-01	REVERBFNC-REGENEX	3.00					TONS MATERIAL PROCESSED
3-05-012-02	REVERBFNC-RECUPEX	1.00					TONS MATERIAL PROCESSED

'A' INDICATES ASH CONTENT AND 'S' INDICATES SULFUR CONTENT OF THE FUEL, ON A PERCENT BASIS (BY WEIGHT)

FIBEROLASS MFG (CONTINUED)		POUNDS EMITTED PER UNIT PART	SOX	NOX	HC	CO	UNITS
3-05-012-03	ELECTRIC IND FNC	0.					TONS MATERIAL PROCESSED
3-05-012-04	FORMING LINE	50.0					TONS MATERIAL PROCESSED
3-05-012-05	CURING OVEN	7.00					TONS MATERIAL PROCESSED
3-05-012-99	OTHER/NOT CLASIFD						TONS PROCESSED
FRIT MFG							
3-05-013-01	ROTARY FNC GENL	16.0					TONS CHARGE
3-05-013-99	OTHER/NOT CLASIFD						TONS CHARGED
GLASS MFG							
3-05-014-01	SODALIME GENL FNC	2.00					TONS GLASS PRODUCED
3-05-014-10	RAW MAT REC/STORG						TONS PROCESSED
3-05-014-11	BATCHING/MIXING		0.	0.	0.	0.	TONS PROCESSED
3-05-014-12	MOLTEN HOLD TANKS		0.				TONS PROCESSED
3-05-014-99	OTHER/NOT CLASIFD						TONS PRODUCED
GYPSUM MFG							
3-05-015-01	RW MTL DRYER	40.0					TONS THROUGHPUT
3-05-015-02	PRIMARY GRINDER	1.00					TONS THROUGHPUT
3-05-015-03	CALCINER	90.0					TONS THROUGHPUT
3-05-015-04	CONVEYING	0.70					TONS THROUGHPUT
3-05-015-99	OTHER/NOT CLASIFD						TONS THROUGHPUT
LIME MFG							
3-05-016-01	PRIMARY CRUSHING	31.0	0.	0.	0.	0.	TONS PROCESSED
3-05-016-02	SECNDRY CRUSHING	2.00	0.	0.	0.	0.	TONS PROCESSED
3-05-016-03	CALCINNG-VERTKILN	8.00					TONS PROCESSED
3-05-016-04	CALCINNG-ROTYKILN	200.					TONS PROCESSED
3-05-016-99	OTHER/NOT CLASIFD						TONS PROCESSED
MINERAL WOOL							
3-05-017-01	CUPOLA	22.0	0.02				TONS CHARGE
3-05-017-02	REVERB FNC	5.00					TONS CHARGE
3-05-017-03	BLOW CHAMBER	17.0					TONS CHARGE
3-05-017-04	CURING OVEN	4.00					TONS CHARGE
3-05-017-05	COOLER	2.00					TONS CHARGE
3-05-017-99	OTHER/NOT CLASIFD						TONS PROCESSED
PERLITE MFG							
3-05-018-01	VERTICAL FNC GEN	21.0					TONS CHARGE
3-05-018-99	OTHER/NOT CLASIFD						TONS PROCESSED
PHOSPHATE ROCK							
3-05-019-01	DRYING	15.0					TONS PHOSPHATE ROCK
3-05-019-02	GRINDING	20.0					TONS PHOSPHATE ROCK
3-05-019-03	TRANSFER/STORAGE	2.00					TONS PHOSPHATE ROCK
3-05-019-04	OPEN STORAGE	40.0					TONS PHOSPHATE ROCK
3-05-019-99	OTHER/NOT CLASIFD						TONS PROCESSED
STONE QUARY/PROC							
3-05-020-01	PRIMARY CRUSHING	0.50	0.	0.	0.	0.	TONS RAW MATERIAL
3-05-020-02	SEC CRUSH/SCREEN	1.50	0.	0.	0.	0.	TONS RAW MATERIAL
3-05-020-03	TERT CRUSH/SCREEN	6.00	0.	0.	0.	0.	TONS RAW MATERIAL
3-05-020-04	RECRUSH/SCREENING	5.00	0.	0.	0.	0.	TONS RAW MATERIAL
3-05-020-05	FINES MILL	6.00	0.	0.	0.	0.	TONS RAW MATERIAL
3-05-020-06	SCREEN/CONVY/HNDL	2.00	0.	0.	0.	0.	TONS PRODUCT
3-05-020-07	OPEN STORAGE	10.0	0.	0.	0.	0.	TONS PRODUCT STORED
3-05-020-08	CUT STONE-GENERAL		0.	0.	0.	0.	TONS PROCESSED
3-05-020-09	BLASTING-GENERAL		0.	0.	0.	0.	TONS PROCESSED
3-05-020-99	OTHER/NOT CLASIFD						TONS PROCESSED
SALT MINING							
3-05-021-01	GENERAL		0.				TONS MINED
POTASH PRODUCTION							
3-05-022-01	MINE-GRIND/DRY		0.				TONS ORE
3-05-022-99	OTHER/NOT CLASIFD						TONS PROCESSED
CALCIUM BORATE							
3-05-023-01	MINING/PROCESSING				0.		TONS PRODUCT
3-05-023-99	OTHER/NOT CLASIFD						TONS PROCESSED
MG CARBONATE							
3-05-024-01	MINE/PROCESS				0.		TONS PRODUCT
3-05-024-99	OTHER/NOT CLASIFD						TONS PROCESSED
SAND/GRAVEL							
3-05-025-01	CRUSHING/SCREEN	0.10	0.	0.	0.	0.	TONS PRODUCT
3-05-025-99	OTHER/NOT CLASIFD						TONS PROCESSED
DIATOMACOUSERTH							
3-05-026-01	HANDLING		0.	0.	0.	0.	TONS PRODUCT
3-05-026-99	OTHER/NOT CLASIFD						TONS PROCESSED

INDUSTRIAL PROCES -MINERAL PRODUCTS (CONTINUED)		POUNDS EMITTED PER UNIT PART	SOX	NOX	HC	CO	UNITS
CERAMIC ELECT PTS							
3-05-030-99	OTHER/NOT CLASIFD						TONS PROCESSED
ASBESTOS MINING							
3-05-031-01	SURFACE BLASTING		0.	0.	0.	0.	TONS OF ORE
3-05-031-02	SURFACE DRILLING		0.	0.	0.	0.	TONS OF ORE
3-05-031-03	COBBING		0.	0.	0.	0.	TONS OF ORE
3-05-031-04	LOADING		0.	0.	0.	0.	TONS OF ORE
3-05-031-05	CONVEY/HAUL ASBES		0.	0.	0.	0.	TONS OF ORE
3-05-031-06	CONVEY/HAUL WASTE		0.	0.	0.	0.	TONS OF ORE
3-05-031-07	UNLOADING		0.	0.	0.	0.	TONS OF ORE
3-05-031-08	STRIPPING		0.	0.	0.	0.	TONS REMOVED
3-05-031-09	VENTILATION		0.	0.	0.	0.	TONS OF ORE
3-05-031-10	STOCKPILING		0.	0.	0.	0.	TONS OF ORE
3-05-031-11	TAILINGS		0.	0.	0.	0.	TINS OF MATERIAL
3-05-031-99	OTHER/NOT CLASFD						TONS PROCESSED
ASBESTOS MILLING							
3-05-032-01	CRUSHING		0.	0.	0.	0.	TONS PROCESSED
3-05-032-02	DRYING		0.	0.	0.	0.	TONS PROCESSED
3-05-032-03	RECRUSHING		0.	0.	0.	0.	TONS PROCESSED
3-05-032-04	SCREENING		0.	0.	0.	0.	TONS PROCESSED
3-05-032-05	FIBERIZING		0.	0.	0.	0.	TONS PROCESSED
3-05-032-06	BAGGING		0.	0.	0.	0.	TONS PROCESSED
3-05-032-99	OTHER/NOT CLASFD						TONS PROCESSED
MINING-SPEC MATL							
3-05-040-01	OPEN PIT-BLASTING		0.	0.	0.	0.	TONS OF MATERIAL
3-05-040-02	OPEN PIT-DRILLING		0.	0.	0.	0.	TONS OF MATERIAL
3-05-040-03	OPEN PIT-COBBING		0.	0.	0.	0.	TONS OF MATERIAL
3-05-040-10	UNDERGRD-VENTILAT		0.	0.	0.	0.	TONS OF MATERIAL
3-05-040-20	LOADING		0.	0.	0.	0.	TONS OF MATERIAL
3-05-040-21	CONVEY/HAUL MATL		0.	0.	0.	0.	TONS OF MATERIAL
3-05-040-22	CONVEY/HAUL WASTE		0.	0.	0.	0.	TONS OF MATERIAL
3-05-040-23	UNLOADING		0.	0.	0.	0.	TONS OF MATERIAL
3-05-040-24	STRIPPING		0.	0.	0.	0.	TONS OF MATERIAL
3-05-040-25	STOCKPILE		0.	0.	0.	0.	TONS OF MATERIAL
3-05-040-30	PRIMARY CRUSHER		0.	0.	0.	0.	TONS OF MATERIAL
3-05-040-31	SECONDARY CRUSHER		0.	0.	0.	0.	TONS OF MATERIAL
3-05-040-32	ORE CONCENTRATOR		0.	0.	0.	0.	TONS OF MATERIAL
3-05-040-33	ORE DRYER		0.	0.	0.	0.	TONS OF MATERIAL
3-05-040-34	SCREENING		0.	0.	0.	0.	TONS OF MATERIAL
3-05-040-36	TAILING PILES		0.	0.	0.	0.	TONS OF MATERIAL
3-05-040-99	OTHER/NOT CLASIFD						TONS OF MATERIAL
OTHER/NOT CLASIFD							
3-05-999-99	SPECIFY IN REMARK						TONS PRODUCT
INDUSTRIAL PROCES -PETROLEUM INDRY							
PROCESS HEATER							
3-06-001-01	OIL	840.	6,720. S	2,900.	140.	0.	1000 BARRELS OIL BURNED
3-06-001-02	GAS	0.02	0.83 S	0.23	0.03	0.	1000 CUBIC FEET GAS BURNED
3-06-001-03	OIL	20.0	160. S	69.0	3.34	0.	1000 GALLONS OIL BURNED
3-06-001-04	GAS	20.0	830. S	230.	30.0	0.	MILLION CUBIC FEET BURNED
FLUID CRACKERS							
3-06-002-01	GENERAL (FCC)	242.	493.	71.0	220.	13,700.	1000 BARRELS FRESH FEED
MOV-BED CAT-CRACK							
3-06-003-01	GENERAL (TCC)	17.0	60.0	5.00	87.0	3,800.	1000 BARRELS FRESH FEED
BLOW-DOWN SYSTM							
3-06-004-01	W/CONTROLS	0.	0.	0.	5.00	0.	1000 BARRELS REFINERY CAPACITY
3-06-004-02	W/O CONTROLS	0.	0.	0.	300.	0.	1000 BARRELS REFINERY CAPACITY
PROCESS DRAINS							
3-06-005-01	GEN W/CONTROL	0.	0.	0.	8.00	0.	1000 BARRELS WASTE WATER
3-06-005-02	GEN W/O CONTROL	0.	0.	0.	210.	0.	1000 BARRELS WASTE WATER
VACUUM JETS							
3-06-006-01	W/CONTROL	0.	0.	0.	0.	0.	1000 BARRELS VACUUM DISTILLATION
3-06-006-02	W/O CONTROL	0.	0.	0.	130.	0.	1000 BARRELS VACUUM DISTILLATION
COOLING TOWERS							
3-06-007-01		0.	0.	0.	6.00	0.	MILLION GALLONS COOLING WATER
MISCELLANEOUS							
3-06-008-01	PIPE/VALVE-FLANGE	0.	0.	0.	28.0	0.	1000 BARRELS REFINERY CAPACITY
3-06-008-02	VESL RELIEF VALUE	0.	0.	0.	11.0	0.	1000 BARRELS REFINERY CAPACITY
3-06-008-03	PUMP SEALS	0.	0.	0.	17.0	0.	1000 BARRELS REFINERY CAPACITY
3-06-008-04	COMPRESR SEALS	0.	0.	0.	5.00	0.	1000 BARRELS REFINERY CAPACITY
3-06-008-05	OTHER-GENL	0.	0.	0.	10.0	0.	1000 BARRELS REFINERY CAPACITY

'A' INDICATES ASH CONTENT AND 'S' INDICATES SULFUR CONTENT OF THE FUEL, ON A PERCENT BASIS (BY WEIGHT)

INDUSTRIAL PROCES -PETROLEUM INDRY (CONTINUED)		POUNDS EMITTED PER UNIT					
		PART	SOX	NOX	HC	CO	UNITS
FLARES							
3-06-009-01	NATURAL GAS			0.			MILLIONS OF CUBIC FEET
3-06-009-99	OTHER/NOT CLASIFD						MILLIONS OF CUBIC FEET
SLUDGE CONVERTER							
3-06-010-01	GENERAL						TONS PROCESSED
ASPHALT OXIDIZER							
3-06-011-01	GENERAL						TONS PROCESSED
3-06-011-99	OTHER/NOT CLASIFD						TONS PROCESSED
FLUID COKING							
3-06-012-01	GENERAL	523.					1000 BARRELS FRESH FEED
3-06-012-02	COOLING OPER						1000 BARRELS FRESH FEED
3-06-012-03	TRANSPORTATION						1000 BARRELS FRESH FEED
3-06-012-04	STORAGE						1000 BARRELS FRESH FEED
CATALYTIC REFORM							
3-06-013-01	GENERAL						1000 BARRELS FRESH FEED
OTHER/NOT CLASIFD							
3-06-999-98	SPECIFY IN REMARK						TONS PROCESSED
3-06-999-99	SPECIFY IN REMARK						BARRELS-PROCESSED
INDUSTRIAL PROCES -WOOD PRODUCTS							
SULFATE PULPNG							
3-07-001-01	BLOWTNK ACCUMULTR	0.	0.			0.	AIR-DRY TONS UNBLEACHED PULP
3-07-001-02	WASHRS/SCREENS	0.	0.			0.	AIR-DRY TONS UNBLEACHED PULP
3-07-001-03	MULT-EFFECT EVAP	0.	0.			0.	AIR-DRY TONS UNBLEACHED PULP
3-07-001-04	RECVY BOLR/DCEVAP	151.	5.00			60.0	AIR-DRY TONS UNBLEACHED PULP
3-07-001-05	SMELT DISSOLV TNK	2.00	0.			0.	AIR-DRY TONS UNBLEACHED PULP
3-07-001-06	LIME KILNS	45.0	0.			10.0	AIR-DRY TONS UNBLEACHED PULP
3-07-001-07	TURPENTINE CONDSR	0.	0.			0.	AIR-DRY TONS UNBLEACHED PULP
3-07-001-08	FLUIDBED CALCINER	72.0	0.			0.	AIR-DRY TONS UNBLEACHED PULP
3-07-001-09	LIQUOR OXION TOWR						AIR-DRY TONS UNBLEACHED PULP
3-07-001-99	OTHER/NOT CLASIFD						AIR-DRY TONS UNBLEACHED PULP
SULFITE PULPING							
3-07-002-01	LIQUOR RECOVERY						AIR-DRY TONS UNBLEACHED PULP
3-07-002-02	SULFITE TOWER						AIR-DRY TONS UNBLEACHED PULP
3-07-002-03	DIGESTER				0.		AIR-DRY TONS UNBLEACHED PULP
3-07-002-04	SMELT TANK				0.		AIR-DRY TONS UNBLEACHED PULP
3-07-002-05	EVAPORATORS				0.		AIR-DRY TONS UNBLEACHED PULP
3-07-002-06	PULP DIGESTER				0.		TONS AIR DRY PULP
3-07-002-99	OTHER/NOT CLASIFD						TONS AIR DRY PULP
PULPBOARD MFG							
3-07-004-01	PAPERBOARD-GEN	0.					TONS FINISHED PRODUCT
3-07-004-02	FIBERBOARD-GEN	0.60					TONS FINISHED PRODUCT
3-07-004-99	OTHER/NOT CLASIFD						TONS FINISHED PRODUCT
PRESSURE TREATING							
3-07-005-01	CREOSOTE						TONS OF WOOD TREATED
3-07-005-99	OTHER/NOT CLASIFD						TONS OF WOOD TREATED
TALLOIL/ROSIN							
3-07-006-01	GENERAL						TONS OF PRODUCT
PLYWOOD/PARTBOARD							
3-07-007-01	VENEER DRYER	0.	0.		1.23	0.	TONS PROCESSED
3-07-007-02	SANDING		0.	0.	0.	0.	TONS PROCESSED
3-07-007-99	OTHER/NOT CLASIFD						TONS PROCESSED
SAWMILL OPERATNS							
3-07-008-99	OTHER/NOT CLASIFD						TONS PROCESSED
EXCELSIOR MFG							
3-07-009-99	OTHER/NOT CLASIFD						TONS PROCESSED
CORK PROCESSING							
3-07-010-99	OTHER/NOT CLASIFD						TONS PROCESSED
FURNITURE MFG							
3-07-020-99	OTHER/NOT CLASIFD						TONS PROCESSED
OTHER/NOT CLASIFD							
3-07-999-99	SPECIFY IN REMARK						TONS PROCESSED

		POUNDS EMITTED PER UNIT					
INDUSTRIAL PROCES -METAL FABRICATION		PART	SOX	NOX	HC	CO	UNITS
IRON/STEEL							
3-09-001-01	MISC HARDWARE		0.	0.		0.	TONS OF PRODUCT
3-09-001-02	FARM MACHINERY		0.	0.			TONS OF PRODUCT
3-09-001-99	OTHER/NOT CLASIFD						TONS PROCESSED
PLATING OPERATONS							
3-09-010-99	OTHER/NOT CLASIFD						TONS PLATED
CAN MAKING OPRNS							
3-09-020-99	OTHER/NOT CLASIFD						TONS PRODUCT
MACHINING OPER							
3-09-030-01	DRILLING-SP MATL		0.	0.	0.	0.	TONS PROCESSED
3-09-030-02	MILLING-SP MATL		0.	0.	0.	0.	TONS PROCESSED
3-09-030-03	REAMING-SP MATL		0.	0.	0.	0.	TONS PROCESSED
3-09-030-04	GRINDING-SP MATL		0.	0.	0.	0.	TONS PROCESSED
3-09-030-05	SAWING-SP MATL		0.	0.	0.	0.	TONS PROCESSED
3-09-030-06	HONING-SP MATL		0.	0.	0.	0.	TONS PROCESSED
3-09-030-99	OTHER-SP MATL						TONS PROCESSED
OTHER/NOT CLASIFD							
3-09-999-99	SPECIFY IN REMARK						TONS PROCESSED
INDUSTRIAL PROCES -LEATHER PRODUCTS							
OTHER/NOT CLASIFD							
3-20-999-99	SPECIFY IN REMARK						TONS PROCESSED
INDUSTRIAL PROCES -TEXTILE MFG							
GENERAL FABRICS							
3-30-001-01	YARN PREP/BLEACH						TONS PROCESSED
3-30-001-99	OTHER/NOT SPECIFD						TONS PROCESSED
RUBERIZED FABRICS							
3-30-002-99	OTHER/NOT SPECIFD						TONS PROCESSED
CARPET OPERATNS							
3-30-003-99	OTHER/NOT SPECIFD						TONS PROCESSED
INDUSTRIAL PROCES -INPROCESS FUEL							
ANTHRACITE COAL							
3-90-001-99	OTHER/NOT CLASIFD	0.	0.	0.	0.	0.	TONS BURNED
BITUMINOUS COAL							
3-90-002-01	CEMENT KILN/DRYER	0.	0.	0.	0.	0.	TONS BURNED
3-90-002-03	LIME KILN	0.	0.	0.	0.	0.	TONS BURNED
3-90-002-04	KAOLIN KILN	0.	0.	0.	0.	0.	TONS BURNED
3-90-002-06	BRICK KILN/DRY	0.	0.	0.	0.	0.	TONS BURNED
3-90-002-07	GYPSUM KILN/ETC	0.	0.	0.	0.	0.	TONS BURNED
3-90-002-08	COAL DRYERS	0.	0.	0.	0.	0.	TONS BURNED
3-90-002-09	ROCK/GRAVEL DRYER	0.	0.	0.	0.	0.	TONS BURNED
3-90-002-99	OTHER/NOT CLASIFD	0.	0.	0.	0.	0.	TONS BURNED
RESIDUAL OIL							
3-90-004-01	ASPHALT DRYER	0.	0.	0.	0.	0.	1000 GALLONS BURNED
3-90-004-02	CEMENT KILN/DRYER	0.	0.	0.	0.	0.	1000 GALLONS BURNED
3-90-004-03	LIME KILN	0.	0.	0.	0.	0.	1000 GALLONS BURNED
3-90-004-04	KAOLIN KILN	0.	0.	0.	0.	0.	1000 GALLONS BURNED
3-90-004-05	METAL MELTING	0.	0.	0.	0.	0.	1000 GALLONS BURNED
3-90-004-06	BRICK KILN/DRY	0.	0.	0.	0.	0.	1000 GALLONS BURNED
3-90-004-07	GYPSUM KILN/ETC	0.	0.	0.	0.	0.	1000 GALLONS BURNED
3-90-004-08	GLASS FURNACE	0.	0.	0.	0.	0.	1000 GALLONS BURNED
3-90-004-09	ROCK/GRAVEL DRYER	0.	0.	0.	0.	0.	1000 GALLONS BURNED
3-90-004-10	FRIT SMELTER	0.	0.	0.	0.	0.	1000 GALLONS BURNED
3-90-004-11	PERLITE FURNACE	0.	0.	0.	0.	0.	1000 GALLONS BURNED
3-90-004-30	FEED/GRAIN DRYING	0.	0.	0.	0.	0.	1000 GALLONS BURNED
3-90-004-31	FOOD-DRY/COOK/ETC	0.	0.	0.	0.	0.	1000 GALLONS BURNED
3-90-004-32	FERTILIZER DRYING	0.	0.	0.	0.	0.	1000 GALLONS BURNED
3-90-004-50	PULPBOARD-DRYERS	0.	0.	0.	0.	0.	1000 GALLONS BURNED
3-90-004-51	PLYWOOD-DRYERS	0.	0.	0.	0.	0.	1000 GALLONS BURNED
3-90-004-52	PULP-RECOV BOILER	0.	0.	0.	0.	0.	1000 GALLONS BURNED
3-90-004-99	OTHER/NOT CLASIFD	0.	0.	0.	0.	0.	1000 GALLONS BURNED
DISTILLATE OIL							
3-90-005-01	ASPHALT DRYER	0.	0.	0.	0.	0.	1000 GALLONS BURNED
3-90-005-02	CEMENT KILN/DRYER	0.	0.	0.	0.	0.	1000 GALLONS BURNED
3-90-005-03	LIME KILN	0.	0.	0.	0.	0.	1000 GALLONS BURNED

		POUNDS EMITTED PER UNIT					
DISTILLATE OIL (CONTINUED)		PART	SOX	NOX	HC	CO	UNITS
3-90-005-04	KAOLIN KILN	0.	0.	0.	0.	0.	1000 GALLONS BURNED
3-90-005-05	METAL MELTING	0.	0.	0.	0.	0.	1000 GALLONS BURNED
3-90-005-06	BRICK KILN/DRY	0.	0.	0.	0.	0.	1000 GALLONS BURNED
3-90-005-07	GYPSUM KILN/ETC	0.	0.	0.	0.	0.	1000 GALLONS BURNED
3-90-005-08	GLASS FURNACE	0.	0.	0.	0.	0.	1000 GALLONS BURNED
3-90-005-09	ROCK/GRAVEL DRYER	0.	0.	0.	0.	0.	1000 GALLONS BURNED
3-90-005-10	FRIT SMELTER	0.	0.	0.	0.	0.	1000 GALLONS BURNED
3-90-005-11	PERLITE FURNACE	0.	0.	0.	0.	0.	1000 GALLONS BURNED
3-90-005-30	FEED/GRAIN DRYING	0.	0.	0.	0.	0.	1000 GALLONS BURNED
3-90-005-31	FOOD-DRY/COOK/ETC	0.	0.	0.	0.	0.	1000 GALLONS BURNED
3-90-005-32	FERTILIZER DRYING	0.	0.	0.	0.	0.	1000 GALLONS BURNED
3-90-005-50	PULPBOARD-DRYERS	0.	0.	0.	0.	0.	1000 GALLONS BURNED
3-90-005-51	PLYWOOD-DRYERS	0.	0.	0.	0.	0.	1000 GALLONS BURNED
3-90-005-52	PULP-RECOV BOILER	0.	0.	0.	0.	0.	1000 GALLONS BURNED
3-90-005-99	OTHER/NOT CLASIFD	0.	0.	0.	0.	0.	1000 GALLONS BURNED
NATURAL GAS							
3-90-006-01	ASPHALT DRYER	0.	0.	0.	0.	0.	MILLION CUBIC FEET BURNED
3-90-006-02	CEMENT KILN/DRYER	0.	0.	0.	0.	0.	MILLION CUBIC FEET BURNED
3-90-006-03	LIME KILN	0.	0.	0.	0.	0.	MILLION CUBIC FEET BURNED
3-90-006-04	KAOLIN KILN	0.	0.	0.	0.	0.	MILLION CUBIC FEET BURNED
3-90-006-05	METAL MELTING	0.	0.	0.	0.	0.	MILLION CUBIC FEET BURNED
3-90-006-06	BRICK KILN/DRYS	0.	0.	0.	0.	0.	MILLION CUBIC FEET BURNED
3-90-006-07	GYPSUM KILN ETC	0.	0.	0.	0.	0.	MILLION CUBIC FEET BURNED
3-90-006-08	GLASS FURNACE	0.	0.	0.	0.	0.	MILLION CUBIC FEET BURNED
3-90-006-09	ROCK/GRAVEL DRYER	0.	0.	0.	0.	0.	MILLION CUBIC FEET BURNED
3-90-006-10	FRIT SMELTER	0.	0.	0.	0.	0.	MILLION CUBIC FEET BURNED
3-90-006-11	PERLITE FURNACE	0.	0.	0.	0.	0.	MILLION CUBIC FEET BURNED
3-90-006-30	FEED/GRAIN DRYING	0.	0.	0.	0.	0.	MILLION CUBIC FEET BURNED
3-90-006-31	FOOD-DRY/COOK/ETC	0.	0.	0.	0.	0.	MILLION CUBIC FEET BURNED
3-90-006-32	FERTILIZER DRYING	0.	0.	0.	0.	0.	MILLION CUBIC FEET BURNED
3-90-006-50	PULPBOARD-DRYERS	0.	0.	0.	0.	0.	MILLION CUBIC FEET BURNED
3-90-006-51	PLYWOOD-DRYERS	0.	0.	0.	0.	0.	MILLION CUBIC FEET BURNED
3-90-006-52	PULP-RECOV BOILER	0.	0.	0.	0.	0.	MILLION CUBIC FEET BURNED
3-90-006-99	OTHER/NOT CLASIFD	0.	0.	0.	0.	0.	MILLION CUBIC FEET BURNED
PROCESS GAS							
3-90-007-01	CO/BLAST FURNACE	0.	0.	0.	0.	0.	MILLION CUBIC FEET BURNED
3-90-007-99	OTHER/NOT CLASIFD	0.	0.	0.	0.	0.	MILLION CUBIC FEET BURNED
COKE							
3-90-008-01	MINERAL WOOL FURN	0.	0.	0.	0.	0.	TONS BURNED
3-90-008-99	OTHER/NOT CLASIFD	0.	0.	0.	0.	0.	TONS
WOOD							
3-90-009-99	OTHER/NOT CLASIFD	0.	0.	0.	0.	0.	TONS BURNED
LIQ PET GAS (LPG)							
3-90-010-99	OTHER/NOT CLASIFD	0.	0.	0.	0.	0.	1000 GALLONS BURNED
OTHER/NOT CLASIFD							
3-90-999-97	SPECIFY IN REMARK	0.	0.	0.	0.	0.	MILLION CUBIC FEET BURNED
3-90-999-98	SPECIFY IN REMARK	0.	0.	0.	0.	0.	1000 GALLONS BURNED
3-90-999-99	SPECIFY IN REMARK	0.	0.	0.	0.	0.	TONS BURNED
INDUSTRIAL PROCES -OTHER/NOT CLASIFD							
**********	**********						
SPECIFY IN REMARK							
3-99-999-99							TONS PROCESSED
POINT SC EVAP -CLEANING SOLVENT							
**********	**********						
DRYCLEANING							
4-01-001-01	PERCHLORETHYLENE	0.	0.	0.	210.	0.	TONS CLOTHES CLEANED
4-01-001-02	STODDARD	0.	0.	0.	305.	0.	TONS CLOTHES CLEANED
DEGREASING							
4-01-002-01	STODDARD	0.	0.	0.		0.	TONS SOLVENT USED
4-01-002-02	TRICHLOROETHANE						TONS SOLVENT USED
4-01-002-03	PERCHLOROETHYLENE						TONS SOLVENT USED
4-01-002-04	METHYLENE CHLORDE						TONS SOLVENT USED
4-01-002-05	TRICHLOROETHYLENE						TONS SOLVENT USED
4-01-002-99	OTHER/NOT CLASIFD						TONS SOLVENT USED
OTHER/NOT CLASIFD							
4-01-999-99	SPECIFY IN REMARK						TONS SOLVENT USED
POINT SC EVAP -SURFACE COATING							
**********	**********						
PAINT							
4-02-001-01	GENERAL	0.	0.	0.	1,120.	0.	TONS COATING

POINT SC EVAP -SURFACE COATING (CONTINUED)		POUNDS EMITTED PER UNIT					
		PART	SOX	NOX	HC	CO	UNITS
VARNISH/SHELLAC							
4-02-003-01	GENERAL				1,000.		TONS COATING
LAQUER							
4-02-004-01	GENERAL				1,540.		TONS COATING
ENAMEL							
4-02-005-01	GENERAL	0.	0.	0.	840.	0.	TONS COATING
PRIMER							
4-02-006-01	GENERAL				1,320.		TONS COATING
COATING OVEN							
4-02-008-01	GENERAL						TONS COATING
SOLVENT							
4-02-009-01	GENERAL						TONS COATING
OTHER/NOT CLASIFD							
4-02-999-99	SPECIFY IN REMARK						TONS COATING
POINT SC EVAP	-PETROL PROD STG						
FIXED ROOF							
4-03-001-01	BREATH-GASOLINE	0.	0.	0.	80.3	0.	1000 GALLONS STORAGE CAPACITY
4-03-001-02	BREATH-CRUDE	0.	0.	0.	54.8	0.	1000 GALLONS STORAGE CAPACITY
4-03-001-03	WORKING-GASOLINE	0.	0.	0.	9.00	0.	1000 GALLONS THROUGHPUT
4-03-001-04	WORKING-CRUDE	0.	0.	0.	7.30	0.	1000 GALLONS THROUGHPUT
4-03-001-05	BREATH-JET FUEL	0.	0.	0.	25.2	0.	1000 GALLONS STORAGE CAPACITY
4-03-001-06	BREATH-KEROSENE	0.	0.	0.	13.1	0.	1000 GALLONS STORAGE CAPACITY
4-03-001-07	BREATH-DIST FUEL	0.	0.	0.	13.1	0.	1000 GALLONS STORAGE CAPACITY
4-03-001-08	BREATH-BENZENE	0.	0.	0.	18.3	0.	1000 GALLONS STORAGE CAPACITY
4-03-001-09	BREATH-CYCLOHEX	0.	0.	0.	20.8	0.	1000 GALLONS STORAGE CAPACITY
4-03-001-10	BREATH-CYCLOPENT	0.	0.	0.	58.4	0.	1000 GALLONS STORAGE CAPACITY
4-03-001-11	BREATH-HEPTANE	0.	0.	0.	11.3	0.	1000 GALLONS STORAGE CAPACITY
4-03-001-12	BREATH-HEXANE	0.	0.	0.	32.1	0.	1000 GALLONS STORAGE CAPACITY
4-03-001-13	BREATH-ISOOCTANE	0.	0.	0.	13.9	0.	1000 GALLONS STORAGE CAPACITY
4-03-001-14	BREATH-ISOPENTANE	0.	0.	0.	142.	0.	1000 GALLONS STORAGE CAPACITY
4-03-001-15	BREATH-PENTANE	0.	0.	0.	94.9	0.	1000 GALLONS STORAGE CAPACITY
4-03-001-16	BREATH-TOLUENE	0.	0.	0.	5.84	0.	1000 GALLONS STORAGE CAPACITY
4-03-001-50	WORKING-JET FUEL	0.	0.	0.	2.40	0.	1000 GALLONS THROUGHPUT
4-03-001-51	WORKING-KEROSENE	0.	0.	0.	1.00	0.	1000 GALLONS THROUGHPUT
4-03-001-52	WORKING-DIST FUEL	0.	0.	0.	1.00	0.	1000 GALLONS THROUGHPUT
4-03-001-53	WORKING-BENZENE	0.	0.	0.	2.00	0.	1000 GALLONS THROUGHPUT
4-03-001-54	WORKING-CYCLOHEX	0.	0.	0.	2.30	0.	1000 GALLONS THROUGHPUT
4-03-001-55	WORKING-CYCLOPENT	0.	0.	0.	6.40	0.	1000 GALLONS THROUGHPUT
4-03-001-56	WORKING-HEPTANE	0.	0.	0.	1.20	0.	1000 GALLONS THROUGHPUT
4-03-001-57	WORKING-HEXANE	0.	0.	0.	3.60	0.	1000 GALLONS THROUGHPUT
4-03-001-58	WORKING-ISOOCTANE	0.	0.	0.	1.50	0.	1000 GALLONS THROUGHPUT
4-03-001-59	WORKING-ISOPENT	0.	0.	0.	15.7	0.	1000 GALLONS THROUGHPUT
4-03-001-60	WORKING-PENTANE	0.	0.	0.	10.6	0.	1000 GALLONS THROUGHPUT
4-03-001-61	WORKING-TOLUENE	0.	0.	0.	0.64	0.	1000 GALLONS THROUGHPUT
FLOATING ROOF							
4-03-002-01	STAND STG-GASOLN	0.	0.	0.	12.0	0.	1000 GALLONS STORAGE CAPACITY
4-03-002-02	WORKING-PRODUCT				0.		1000 GALLONS THROUGHPUT
4-03-002-03	STAND STG-CRUDE	0.	0.	0.	10.6	0.	1000 GALLONS STORAGE CAPACITY
4-03-002-04	WORKING-CRUDE				0.		1000 GALLONS THROUGHPUT
4-03-002-05	STAND STG-JETFUEL	0.	0.	0.	4.38	0.	1000 GALLONS STORAGE CAPACITY
4-03-002-06	STAND STG-KEROSNE	0.	0.	0.	1.90	0.	1000 GALLONS STORAGE CAPACITY
4-03-002-07	STAND STG-DIST FL	0.	0.	0.	1.90	0.	1000 GALLONS STORAGE CAPACITY
4-03-002-08	STAND STG-BENZENE	0.	0.	0.	2.70	0.	1000 GALLONS STORAGE CAPACITY
4-03-002-09	STAND STG-CYCLHEX	0.	0.	0.	3.03	0.	1000 GALLONS STORAGE CAPACITY
4-03-002-10	STAND STG-CYCLPEN	0.	0.	0.	8.76	0.	1000 GALLONS STORAGE CAPACITY
4-03-002-11	STAND STG-HEPTANE	0.	0.	0.	1.64	0.	1000 GALLONS STORAGE CAPACITY
4-03-002-12	STAND STG-HEXANE	0.	0.	0.	4.75	0.	1000 GALLONS STORAGE CAPACITY
4-03-002-13	STAND STG-ISOOCTN	0.	0.	0.	2.01	0.	1000 GALLONS STORAGE CAPACITY
4-03-002-14	STAND STG-ISOPENT	0.	0.	0.	20.8	0.	1000 GALLONS STORAGE CAPACITY
4-03-002-15	STAND STG-PENTANE	0.	0.	0.	13.9	0.	1000 GALLONS STORAGE CAPACITY
4-03-002-16	STAND STG-TOLUENE	0.	0.	0.	0.88	0.	1000 GALLONS STORAGE CAPACITY
VAR-VAPOR SPACE							
4-03-003-02	WORKING-GASOLINE	0.	0.	0.	10.2	0.	1000 GALLONS THROUGHPUT
4-03-003-03	WORKING-JET FUEL	0.	0.	0.	2.30	0.	1000 GALLONS THROUGHPUT
4-03-003-04	WORKING-KEROSENE	0.	0.	0.	1.00	0.	1000 GALLONS THROUGHPUT
4-03-003-05	WORKING-DIST FUEL	0.	0.	0.	1.00	0.	1000 GALLONS THROUGHPUT
4-03-003-06	WORKING-BENZENE	0.	0.	0.	2.30	0.	1000 GALLONS THROUGHPUT
4-03-003-07	WORKING-CYCLOHEX	0.	0.	0.	2.60	0.	1000 GALLONS THROUGHPUT
4-03-003-08	WORKING-CYCLOPENT	0.	0.	0.	7.20	0.	1000 GALLONS THROUGHPUT
4-03-003-09	WORKING-HEPTANE	0.	0.	0.	1.40	0.	1000 GALLONS THROUGHPUT
4-03-003-10	WORKING-HEXANE	0.	0.	0.	4.00	0.	1000 GALLONS THROUGHPUT
4-03-003-11	WORKING-ISOOCTANE	0.	0.	0.	1.70	0.	1000 GALLONS THROUGHPUT
4-03-003-12	WORKING-ISOPENT	0.	0.	0.	17.8	0.	1000 GALLONS THROUGHPUT
4-03-003-13	WORKING-PENTANE	0.	0.	0.	12.0	0.	1000 GALLONS THROUGHPUT
4-03-003-14	WORKING-TOLUENE	0.	0.	0.	0.73	0.	1000 GALLONS THROUGHPUT
OTHER/NOT CLASIFD							
4-03-999-99	SPECIFY IN REMARK						1000 GAL STORED

		POUNDS EMITTED PER UNIT					
		PART	SOX	NOX	HC	CO	UNITS
POINT SC EVAP -MISC ORGANIC STOR							
OTHER/NOT CLASIFD							
4-04-001-99	SPECIFY IN REMARK						TONS STORED
POINT SC EVAP -PRINTING PRESS							
DRYERS							
4-05-001-01	GENERAL			0.			TONS SOLVENT
POINT SC EVAP -PETROL MRKT-TRANS							
TANK CARS/TRUCKS							
4-06-001-01	LOAD(SPLASH)-GASO	0.	0.	0.	12.4	0.	1000 GALLONS TRANSFERRED
4-06-001-02	LOAD(SPLASH)-CRUD	0.	0.	0.	10.6	0.	1000 GALLONS TRANSFERRED
4-06-001-03	LOAD(SPLASH)-JET	0.	0.	0.	1.84	0.	1000 GALLONS TRANSFERRED
4-06-001-04	LOAD(SPLASH)-KERO	0.	0.	0.	0.88	0.	1000 GALLONS TRANSFERRED
4-06-001-05	LOAD(SPLASH)-DIST	0.	0.	0.	0.93	0.	1000 GALLONS TRANSFERRED
4-06-001-26	LOAD(SUBM)-GASOLN	0.	0.	0.	4.10	0.	1000 GALLONS TRANSFERRED
4-06-001-27	LOAD(SUBM)-CRUDE	0.	0.	0.	3.80	0.	1000 GALLONS TRANSFERRED
4-06-001-28	LOAD(SUBM)-JET FL	0.	0.	0.	0.91	0.	1000 GALLONS TRANSFERRED
4-06-001-29	LOAD(SUBM)-KEROSN	0.	0.	0.	0.45	0.	1000 GALLONS TRANSFERRED
4-06-001-30	LOAD(SUBM)-DIST	0.	0.	0.	0.48	0.	1000 GALLONS TRANSFERRED
4-06-001-51	UNLOAD-GASOLINE	0.	0.	0.	2.10	0.	1000 GALLONS TRANSFERRED
4-06-001-52	UNLOAD-CRUDE OIL	0.	0.	0.	1.98	0.	1000 GALLONS TRANSFERRED
4-06-001-53	UNLOAD-JET FUEL	0.	0.	0.	0.45	0.	1000 GALLONS TRANSFERRED
4-06-001-54	UNLOAD-KEROSENE	0.	0.	0.	0.23	0.	1000 GALLONS TRANSFERRED
4-06-001-55	UNLOAD-DIST OIL	0.	0.	0.	0.24	0.	1000 GALLONS TRANSFERRED
MARINE VESSELS							
4-06-002-01	LOADING-GASOLINE	0.	0.	0.	2.88	0.	1000 GALLONS TRANSFERRED
4-06-002-02	LOADING-CRUDE OIL	0.	0.	0.	2.58	0.	1000 GALLONS TRANSFERRED
4-06-002-03	LOADING-JET FUEL	0.	0.	0.	0.60	0.	1000 GALLONS TRANSFERRED
4-06-002-04	LOADING-KEROSENE	0.	0.	0.	0.27	0.	1000 GALLONS TRANSFERRED
4-06-002-05	LOADING-DIST OIL	0.	0.	0.	0.29	0.	1000 GALLONS TRANSFERRED
4-06-002-26	UNLOAD-GASOLINE	0.	0.	0.	2.52	0.	1000 GALLONS TRANSFERRED
4-06-002-27	UNLOAD-CRUDE OIL	0.	0.	0.	2.25	0.	1000 GALLONS TRANSFERRED
4-06-002-28	UNLOAD-JET FUEL	0.	0.	0.	0.52	0.	1000 GALLONS TRANSFERRED
4-06-002-29	UNLOAD-KEROSENE	0.	0.	0.	0.24	0.	1000 GALLONS TRANSFERRED
4-06-002-30	UNLOAD-DIST OIL	0.	0.	0.	0.25	0.	1000 GALLONS TRANSFERRED
UNDERGRD GASO STG							
4-06-003-01	SPLASH LOADING	0.	0.	0.	11.5	0.	1000 GALLONS TRANSFERRED
4-06-003-02	SUB LOAD-UNCONT	0.	0.	0.	7.30	0.	1000 GALLONS TRANSFERRED
4-06-003-03	SUB LOAD-OPN SYS	0.	0.	0.	0.80	0.	1000 GALLONS TRANSFERRED
4-06-003-04	SUB LOAD-CLS SYS	0.	0.	0.	0.	0.	1000 GALLONS TRANSFERRED
4-06-003-05	UNLOADING	0.	0.	0.	1.00	0.	1000 GALLONS TRANSFERRED
FILL VEH GAS TANK							
4-06-004-01	VAP DISP LOSS	0.	0.	0.	11.0	0.	1000 GALLONS PUMPED
4-06-004-02	LIQ SPILL LOSS	0.	0.	0.	0.67	0.	1000 GALLONS PUMPED
POINT SC EVAP -MISC HC EVAP							
OTHER/NOT CLASIFD							
4-90-999-99	SPECIFY IN REMARK						TONS PROCESSED
SOLID WASTE -GOVERNMENT							
MUNICIPAL INCIN							
5-01-001-01	MULTIPLE CHAMBER	30.0	2.50	2.00	1.50	35.0	TONS BURNED
5-01-001-02	SINGLE CHAMBER	15.0	2.50	2.00	15.0	20.0	TONS BURNED
OPEN BURNING DUMP							
5-01-002-01	GENERAL	16.0	1.00	6.00	30.0	85.0	TONS BURNED
5-01-002-02	LANDSCAPE/PRUNING	17.0		2.00	20.0	60.0	TONS BURNED
5-01-002-03	JET FUEL						HUNDREDS OF GALLONS
INCINERATOR							
5-01-005-05	PATHOLOGICAL	8.00	0.	3.00	0.	0.	TONS BURNED
5-01-005-06	SLUDGE	100.	1.00	5.00	1.00	0.	TONS DRY SLUDGE
5-01-005-07	CONICAL	20.0	2.00	5.00	20.0	60.0	TONS BURNED
5-01-005-99	OTHER/NOT CLASIFD						TONS BURNED
ALX.FUEL/NO EMSNS							
5-01-900-04	RESIDUAL OIL	0.	0.	0.	0.	0.	1000 GALLONS
5-01-900-05	DISTILLATE OIL	0.	0.	0.	0.	0.	1000 GALLONS
5-01-900-06	NATURAL GAS	0.	0.	0.	0.	0.	MILLION CUBIC FEET
5-01-900-10	LPG	0.	0.	0.	0.	0.	1000 GALLONS

AUX.FUEL/NO EMSNS (CONTINUED)		POUNDS EMITTED PER UNIT PART	SOX	NOX	HC	CO	UNITS
5-01-900-97	OTHER/NOT CLASIFD	0.	0.	0.	0.	0.	MILLION CUBIC FEET
5-01-900-98	OTHER/NOT CLASIFD	0.	0.	0.	0.	0.	1000 GALLONS
5-01-900-99	OTHER/NOT CLASIFD	0.	0.	0.	0.	0.	TONS
SOLID WASTE -COMM-INST							
INCINERATOR GEN							
5-02-001-01	MULTIPLE CHAMBER	7.00	2.50	3.00	3.00	10.0	TONS BURNED
5-02-001-02	SINGLE CHAMBER	15.0	2.50	2.00	15.0	20.0	TONS BURNED
5-02-001-03	CONTROLLED AIR	1.40	1.50	10.0	0.	0.	TONS BURNED
5-02-001-04	CONICAL REFUSE	20.0	2.00	5.00	20.0	60.0	TONS BURNED
5-02-001-05	CONICAL WOOD	7.00	0.10	1.00	11.0	130.	TONS BURNED
OPEN BURNING							
5-02-002-01	WOOD	17.0		2.00	4.00	50.0	TONS BURNED
APARTMENT INCIN							
5-02-003-01	FLUE FED	30.0	0.50	3.00	15.0	20.0	TONS BURNED
5-02-003-02	FLUE FED-MODIFIED	6.00	0.50	10.0	3.00	10.0	TONS BURNED
INCINERATOR							
5-02-005-05	PATHOLOGICAL	8.00	0.	3.00	0.	0.	TONS BURNED
5-02-005-06	SLUDGE	100.	1.00	5.00	1.00	0.	TONS DRY SLUDGE
5-02-005-99	OTHER/NOT CLASIFD						TONS BURNED
AUX.FUEL/NO EMSNS							
5-02-900-04	RESIDUAL OIL	0.	0.	0.	0.	0.	1000 GALLONS
5-02-900-05	DISTILLATE OIL	0.	0.	0.	0.	0.	1000 GALLONS
5-02-900-06	NATURAL GAS	0.	0.	0.	0.	0.	MILLION CUBIC FEET
5-02-900-10	LPG	0.	0.	0.	0.	0.	1000 GALLONS
5-02-900-97	OTHER/NOT CLASIFD	0.	0.	0.	0.	0.	MILLION CUBIC FEET
5-02-900-98	OTHER/NOT CLASIFD	0.	0.	0.	0.	0.	1000 GALLONS
5-02-900-99	OTHER/NOT CLASIFD	0.	0.	0.	0.	0.	TONS
SOLID WASTE -INDUSTRIAL							
INCINERATOR							
5-03-001-01	MULTIPLE CHAMBER	7.00	2.50	3.00	3.00	10.0	TONS BURNED
5-03-001-02	SINGLE CHAMBER	15.0	2.50	2.00	15.0	20.0	TONS BURNED
5-03-001-03	CONTROLLED AIR	1.40	1.50	10.0	0.	0.	TONS BURNED
5-03-001-04	CONICAL REFUSE	20.0	2.00	5.00	20.0	60.0	TONS BURNED
5-03-001-05	CONICAL WOOD	7.00	0.10	1.00	11.0	130.	TONS BURNED
5-03-001-06	OPEN PIT	13.0	0.10	4.00	0.	0.	TONS OF WASTE
OPEN BURNING							
5-03-002-01	WOOD	17.0	0.	2.00	4.00	50.0	TONS BURNED
5-03-002-02	REFUSE	16.0	1.00	6.00	30.0	85.0	TONS BURNED
5-03-002-03	AUTO BODY COMPTS	100.	0.	4.00	30.0	125.	TONS BURNED
5-03-002-04	COAL REFUSE PILES	0.90	1.10	0.10	0.50	2.50	CUBIC YARDS OF PILE
AUTO BODY INCINAT							
5-03-003-01	W/O AFTERBURNER	2.00		0.10	0.50	2.50	AUTOS BURNED
5-03-003-02	W/ AFTERBURNER	1.50		0.02	0.	0.	AUTOS BURNED
RAIL CAR BURNING							
5-03-004-01	OPEN						CARS BURNED
INCINERATOR							
5-03-005-06	SLUDGE	100.	1.00	5.00	1.00	0.	TONS DRY SLUDGE
5-03-005-99	OTHER/NOT CLASIFD						TONS BURNED
AUX.FUEL/NO EMSNS							
5-03-900-04	RESIDUAL OIL	0.	0.	0.	0.	0.	1000 GALLONS
5-03-900-05	DISTILLATE OIL	0.	0.	0.	0.	0.	1000 GALLONS
5-03-900-06	NATURAL GAS	0.	0.	0.	0.	0.	MILLION CUBIC FEET
5-03-900-07	PROCESS GAS	0.	0.	0.	0.	0.	MILLION CUBIC FEET
5-03-900-10	L P G	0.	0.	0.	0.	0.	1000 GALLONS
5-03-900-97	OTHER/NOT CLASIFD	0.	0.	0.	0.	0.	MILLION CUBIC FEET
5-03-900-98	OTHER/NOT CLASIFD	0.	0.	0.	0.	0.	1000 GALLONS
5-03-900-99	OTHER/NOT CLASIFD	0.	0.	0.	0.	0.	TONS
MISCELLANEOUS -PEDAL NONEMITTERS							
OTHER/NOT CLASIFD							
6-01-999-98	SPECIFY IN REMARK						INSTALLATIONS (EACH)
6-01-999-99	SPECIFY IN REMARK						AREA/ACRES

TECHNICAL REPORT DATA
(Please read Instructions on the reverse before completing)

1. REPORT NO. AP-42	2.	3. RECIPIENT'S ACCESSION NO.
4. TITLE AND SUBTITLE Compilation of Air Pollutant Emission Factors Second Edition		5. REPORT DATE March 1975
		6. PERFORMING ORGANIZATION CODE
7. AUTHOR(S)		8. PERFORMING ORGANIZATION REPORT NO.
9. PERFORMING ORGANIZATION NAME AND ADDRESS U.S. Environmental Protection Agency Office of Air Quality Planning and Standards Research Triangle Park, N. C. 27711		10. PROGRAM ELEMENT NO.
		11. CONTRACT/GRANT NO.
12. SPONSORING AGENCY NAME AND ADDRESS		13. TYPE OF REPORT AND PERIOD COVERED Final
		14. SPONSORING AGENCY CODE
15. SUPPLEMENTARY NOTES		

16. ABSTRACT

Emission data obtained from source tests, material balance studies, engineering estimates, etc., have been compiled for use by individuals and groups responsible for conducting air pollution emission inventories. Emission factors given in this document, the result of the expansion and continuation of earlier work, cover most of the common emission categories: fuel combustion by stationary and mobile sources; combustion of solid wastes; evaporation of fuels, solvents, and other volatile substances; various industrial processes; and miscellaneous sources. When no source-test data are available, these factors can be used to estimate the quantities of primary pollutants (particulates, CO, SO_2, NO_x, and hydrocarbons) being released from a source or source group.

17. KEY WORDS AND DOCUMENT ANALYSIS

a. DESCRIPTORS	b. IDENTIFIERS/OPEN ENDED TERMS	c. COSATI Field/Group
Fuel combustion Emissions Emission factors Mobile sources Stationary sources		

18. DISTRIBUTION STATEMENT Unlimited	19. SECURITY CLASS *(This Report)* Unclassified	21. NO. OF PAGES 392
	20. SECURITY CLASS *(This page)* Unclassified	22. PRICE

EPA Form 2220-1 (9-73)

U.S. GOVERNMENT PRINTING OFFICE: 1975 - 640-882/665 - Region 4