PREFACE

This document reports data available on those atmospheric emissions for which sufficient information exists to establish realistic emission factors. The information contained herein is based on Public Health Service Publication 999-AP-42, *Compilation of Air Pollutant Emission Factors*, by R. L. Duprey, and on a revised and expanded version of *Compilation of Air Pollutant Emission Factors* that was published by the Environmental Protection Agency in February 1972. The scope of this second edition has been broadened to reflect expanding knowledge of emissions.

Chapters and sections of this document have been arranged in a format that permits easy and convenient replacement of material as information reflecting more accurate and refined emission factors is published and distributed. To speed dissemination of emission information, chapters or sections that contain new data will be issued – separate from the parent report – whenever they are revised.

To facilitate the addition of future materials, the punched, loose-leaf format was selected. This approach permits the document to be placed in a three-ring binder or to be secured by rings, rivets, or other fasteners; future supplements or revisions can then be easily inserted. The lower left- or right-hand corner of each page of the document bears a notation that indicates the date the information was issued.

Future supplements or revisions will be distributed in the same manner as this parent document. If your copy was obtained by purchase or through special order, you may obtain the updated chapters or sections as they are issued by completing and mailing the form below.

Comments and suggestions regarding this document should be directed to the attention of Director, Monitoring and Data Analysis Division, Office of Air Quality Planning and Standards, Environmental Protection Agency, Research Triangle Park, N.C. 27711.

Mailing Address

Air Pollution Technical Information Center
Environmental Protection Agency
Research Triangle Park, N.C. 27711

I would like to receive future supplements or revisions to AP-42 as they are issued. I do not receive EPA documents through the regular mailing lists.

Name . . . . . .

Address . . . . . .

ACKNOWLEDGMENTS

Because this document is a product of the efforts of many individuals, it is impossible to acknowledge each individual who has contributed. Special recognition is given, however, to Mr. Richard Gerstle and the staff of Resources Research, Inc., who provided a large part of the efforts that went into this document. Their complete effort is documented in their report for contract number CPA-22-69-119.

Environmental Protection Agency employees M. J. McGraw, A. J. Hoffman, J. H. Southerland, and R. L. Duprey are also acknowledged for their efforts in the production of this work. Bylines identify the contributions of individual authors who revised specific sections and chapters.

CONTENTS

	Page
LIST OF FIGURES	xiii
LIST OF TABLES	xiv
ABSTRACT	xvii
INTRODUCTION	1
1. EXTERNAL COMBUSTION SOURCES	1.1-1
1.1 BITUMINOUS COAL COMBUSTION	1.1-1
1.1.1 General	1.1-1
1.1.2 Emissions and Controls	1.1-1
1.1.2.1 Particulates	1.1-1
1.1.2.2 Sulfur Oxides	1.1-2
1.1.2.3 Nitrogen Oxides	1.1-2
1.1.2.4 Other Gases	1.1-2
References for Section 1.1	1.1-4
1.2 ANTHRACITE COAL COMBUSTION	1.2-1
1.2.1 General	1.2-1
1.2.2 Emissions and Controls	1.2-1
References for Section 1.2	1.2-3
1.3 FUEL OIL COMBUSTION	1.3-1
1.3.1 General	1.3-1
1.3.2 Emissions	1.3-1
References for Section 1.3	1.3-3
1.4 NATURAL GAS COMBUSTION	1.4-1
1.4.1 General	1.4-1
1.4.2 Emissions and Controls	1.4-1
References for Section 1.4	1.4-3
1.5 LIQUEFIED PETROLEUM GAS CONSUMPTION	1.5-1
1.5.1 General	1.5-1
1.5.2 Emissions	1.5-1
References for Section 1.5	1.5-1
1.6 WOOD WASTE COMBUSTION IN BOILERS	1.6-1
1.6.1 General	1.6-1
1.6.2 Firing Practices	1.6-1
1.6.3 Emissions	1.6-1
References for Section 1.6	1.6-2
2. SOLID WASTE DISPOSAL	2.1-1
2.1 REFUSE INCINERATION	2.1-2
2.1.1 Process Description	2.1-2
2.1.2 Definitions of Incinerator Categories	2.1-2
2.1.3 Emissions and Controls	2.1-5
References for Section 2.1	2.1-6
2.2 AUTOMOBILE BODY INCINERATION	2.2-1
2.2.1 Process Description	2.2-1
2.2.2 Emissions and Controls	2.2-1
References for Section 2.2	2.2-2

CONTENTS–(Continued)

Page

2.3 CONICAL BURNERS 2.3-1
2.3.1 Process Description 2.3-1
2.3.2 Emissions and Controls 2.3-1
References for Section 2.3 . . . . . 2.3-3
2.4 OPEN BURNING 2.4-1
2.4.1 General 2.4-1
2.4.2 Emissions 2.4-1
References for Section 2.4 . . . . . 2.4-2

3. INTERNAL COMBUSTION ENGINE SOURCES 3.1.1-1
DEFINITIONS USED IN CHAPTER 3 . . . . . 3.1.1-1
3.1 HIGHWAY VEHICLES 3.1.1-3
3.1.1 Average Emission Factors for Highway Vehicles 3.1.1-5
3.1.2 Light-Duty, Gasoline-Powered Vehicles 3.1.2-1
3.1.3 Light-Duty, Diesel-Powered Vehicles 3.1.3-1
3.1.4 Heavy-Duty, Gasoline-Powered Vehicles 3.1.4-1
3.1.5 Heavy-Duty, Diesel-Powered Vehicles 3.1.5-1
3.1.6 Gaseous-Fueled Vehicles 3.1.6-1
3.1.7 Motorcycles 3.1.7-1
3.2 OFF-HIGHWAY, MOBILE SOURCES 3.2.1-1
3.2.1 Aircraft 3.2.1-1
3.2.2 Locomotives 3.2.2-1
3.2.3 Inboard-Powered Vessels 3.2.3-1
3.2.4 Outboard-Powered Vessels 3.2.4-1
3.2.5 Small, General Utility Engines 3.2.5-1
3.3 OFF-HIGHWAY, STATIONARY SOURCES 3.3.1-1
3.3.1 Stationary Gas Turbines 3.3.1-1
3.3.2 Heavy-Duty, General Utility, Gaseous Fueled Engines 3.3.2-1

4. EVAPORATION LOSS SOURCES 4.1-1
4.1 DRY CLEANING 4.1-1
4.1.1 General 4.1-1
4.1.2 Emissions and Controls 4.1-1
References for Section 4.1 . . . . . 4.1-2
4.2 SURFACE COATING 4.2-1
4.2.1 Process Description 4.2-1
4.2.2 Emissions and Controls 4.2-1
References for Section 4.2 . . . . . 4.2-2
4.3 PETROLEUM STORAGE 4.3-1
4.3.1 General 4.3-1
4.3.2 Emissions 4.3-1
References for Section 4.3 . . . . . 4.3-1
4.4 GASOLINE MARKETING 4.4-1
4.4.1 General 4.4-1
4.4.2 Emissions and Controls 4.4-1
References for Section 4.4 . . . . . 4.4-2

5. CHEMICAL PROCESS INDUSTRY 5.1-1
5.1 ADIPIC ACID 5.1-1
5.1.1 Process Description 5.1-1
5.1.2 Emissions 5.1-1
References for Section 5.1 . . . . . 5.1-2

CONTENTS—(Continued)

		Page
5.2	AMMONIA	5.2-1
	5.2.1 Process Description	5.2-1
	5.2.2 Emissions and Controls	5.2-1
	References for Section 5.2	5.2-2
5.3	CARBON BLACK	5.3-1
	5.3.1 Channel Black Process	5.3-1
	5.3.2 Furnace Process	5.3-1
	5.3.3 Thermal Black Process	5.3-1
	References for Section 5.3	5.3-2
5.4	CHARCOAL	5.4-1
	5.4.1 Process Description	5.4-1
	5.4.2 Emissions and Controls	5.4-1
	References for Section 5.4	5.4-1
5.5	CHLOR-ALKALI	5.5-1
	5.5.1 Process Description	5.5-1
	5.5.2 Emissions and Controls	5.5-1
	References for Section 5.5	5.5-1
5.6	EXPLOSIVES	5.6-1
	5.6.1 General	5.6-1
	5.6.2 TNT Production	5.6-1
	5.6.3 Nitrocellulose Production	5.6-1
	5.6.4 Emissions	5.6-1
	References for Section 5.6	5.6-2
5.7	HYDROCHLORIC ACID	5.7-1
	5.7.1 Process Description	5.7-1
	5.7.2 Emissions	5.7-1
	References for Section 5.7	5.7-1
5.8	HYDROFLUORIC ACID	5.8-1
	5.8.1 Process Description	5.8-1
	5.8.2 Emissions and Controls	5.8-1
	References for Section 5.8	5.8-2
5.9	NITRIC ACID	5.9-1
	5.9.1 Process Description	5.9-1
	5.9.1.1 Weak Acid Production	5.9-1
	5.9.1.2 High-Strength Acid Production	5.9-1
	5.9.2 Emissions and Controls	5.9-3
	References for Section 5.9	5.9-4
5.10	PAINT AND VARNISH	5.10-1
	5.10.1 Paint Manufacturing	5.10-1
	5.10.2 Varnish Manufacturing	5.10-1
	References for Section 5.10	5.10-2
5.11	PHOSPHORIC ACID	5.10-2
	5.11.1 Wet Process	5.11-1
	5.11.2 Thermal Process	5.11-1
	References for Section 5.11	5.11-2
5.12	PHTHALIC ANHYDRIDE	5.12-1
	5.12.1 Process Description	5.12-1
	5.12.2 Emissions and Controls	5.12-1
	References for Section 5.12	5.12-1
5.13	PLASTICS	5.13-1
	5.13.1 Process Description	5.13-1
	5.13.2 Emissions and Controls	5.13-1
	References for Section 5.13	5.13-2

CONTENTS–(Continued)

		Page
5.14	PRINTING INK	5.14-1
	5.14.1 Process Description	5.14-1
	5.14.2 Emissions and Controls	5.14-2
	References for Section 5.14	5.14-2
5.15	SOAP AND DETERGENTS	5.15-1
	5.15.1 Soap Manufacture	5.15-1
	5.15.2 Detergent Manufacture	5.15-1
	References for Section 5.15	5.15-2
5.16	SODIUM CARBONATE	5.16-1
	5.16.1 Process Description	5.16-1
	5.16.2 Emissions	5.16-1
	References for Section 5.16	5.16-2
5.17	SULFURIC ACID	5.17-1
	5.17.1 Process Description	5.17-1
	5.17.1.1 Elemental Sulfur-Burning Plants	5.17-1
	5.17.1.2 Spent-Acid and Hydrogen Sulfide Burning Plants	5.17-4
	5.17.1.3 Sulfide Ores and Smelter Gas Plants	5.17-4
	5.17.2 Emissions and Controls	5.17-4
	5.17.2.1 Sulfur Dioxide	5.17-4
	5.17.2.2 Acid Mist	5.17-5
	References for Section 5.17	5.17-8
5.18	SULFUR	5.18-1
	5.18.1 Process Description	5.18-1
	5.18.2 Emissions and Controls	5.18-1
	References for Section 5.18	5.18-2
5.19	SYNTHETIC FIBERS	5.19-1
	5.19.1 Process Description	5.19-1
	5.19.2 Emissions and Controls	5.19-1
	References for Section 5.19	5.19-2
5.20	SYNTHETIC RUBBER	5.20-1
	5.20.1 Process Description	5.20-1
	5.20.2 Emissions and Controls	5.20-1
	References for Section 5.20	5.20-2
5.21	TEREPHTHALIC ACID	5.21-1
	5.21.1 Process Description	5.21-1
	5.21.2 Emissions	5.21-1
	References for Sections 5.21	5.21-1
6.	FOOD AND AGRICULTURAL INDUSTRY	6.1-1
6.1	ALFALFA DEHYDRATING	6.1-1
	6.1.1 General	6.1-1
	6.1.2 Emissions and Controls	6.1-1
	References for Section 6.1	6.1-2
6.2	COFFEE ROASTING	6.2-1
	6.2.1 Process Description	6.2-1
	6.2.2 Emissions	6.2-1
	References for Section 6.2	6.2-2
6.3	COTTON GINNING	6.3-1
	6.3.1 General	6.3-1
	6.3.2 Emissions and Controls	6.3-1
	References for Section 6.3	6.3-1
6.4	FEED AND GRAIN MILLS AND ELEVATORS	6.4-1
	6.4.1 General	6.4-1
	6.4.2 Emissions	6.4-1
	References for Section 6.4	6.4-1

CONTENTS–(Continued)

		Page
6.5	FERMENTATION	6.5-1
	6.5.1 Process Description	6.5-1
	6.5.2 Emissions	6.5-1
	References for Section 6.5	6.5-2
6.6	FISH PROCESSING	6.6-1
	6.6.1 Process Description	6.6-1
	6.6.2 Emissions and Controls	6.6-1
	References for Section 6.6	6.6-2
6.7	MEAT SMOKEHOUSES	6.7-1
	6.7.1 Process Description	6.7-1
	6.7.2 Emissions and Controls	6.7-1
	References for Section 6.7	6.7-2
6.8	NITRATE FERTILIZERS	6.8-1
	6.8.1 General	6.8-1
	6.8.2 Emissions and Controls	6.8-1
	References for Section 6.8	6.8-2
6.9	ORCHARD HEATERS	6.9-1
	6.9.1 General	6.9-1
	6.9.2 Emissions	6.9-1
	References for Section 6.9	6.9-4
6.10	PHOSPHATE FERTILIZERS	6.10-1
	6.10.1 Normal Superphosphate	6.10-1
	6.10.1.1 General	6.10-1
	6.10.1.2 Emissions	6.10-2
	6.10.2 Triple Superphosphate	6.10-2
	6.10.2.1 General	6.10-2
	6.10.2.2 Emissions	6.10-2
	6.10.3 Ammonium Phosphate	6.10-2
	6.10.3.1 General	6.10-2
	6.10.3.2 Emissions	6.10-3
	References for Section 6.10	6.10-3
6.11	STARCH MANUFACTURING	6.11-1
	6.11.1 Process Description	6.11-1
	6.11.2 Emissions	6.11-1
	References for Section 6.11	6.11-1
6.12	SUGAR CANE PROCESSING	6.12-1
	6.12.1 General	6.12-1
	6.12.2 Emissions	6.12-1
	References for Section 6.12	6.12-2
7.	METALLURGICAL INDUSTRY	7.1-1
7.1	PRIMARY ALUMINUM PRODUCTION	7.1-1
	7.1.1 Process Description	7.1-1
	7.1.2 Emissions and Controls	7.1-2
	References for Section 7.1	7.1-8
7.2	METALLURGICAL COKE MANUFACTURING	7.2-1
	7.2.1 Process Description	7.2-1
	7.2.2 Emissions	7.2-1
	References for Section 7.2	7.2-3
7.3	COPPER SMELTERS	7.3-1
	7.3.1 Process Description	7.3-1
	7.3.2 Emissions and Controls	7.3-1
	References for Section 7.3	7.3-2
7.4	FERROALLOY PRODUCTION	7.4-1
	7.4.1 Process Description	7.4-1

CONTENTS–(Continued)

		Page
	7.4.2 Emissions	
	References for Section 7.4	7.4-1
7.5	IRON AND STEEL MILLS	7.4-2
	7.5.1 General	7.5-1
	7.5.1.1 Pig Iron Manufacture	7.5-1
	7.5.1.2 Steel-Making Processes	7.5-1
	7.5.1.3 Scarfing	7.5-1
	References for Section 7.5	7.5-1
7.6	LEAD SMELTING	7.5-6
	7.6.1 Process Description	7.6-1
	7.6.2 Emissions and Controls	7.6-1
	References for Section 7.6	7.6-1
7.7	ZINC SMELTING	7.6-2
	7.7.1 Process Description	7.7-1
	7.7.2 Emissions and Controls	7.7-1
	References for Section 7.7	7.7-1
7.8	SECONDARY ALUMINUM OPERATIONS	7.7-2
	7.8.1 Process Description	7.8-1
	7.8.2 Emissions	7.8-1
	References for Section 7.8	7.8-1
7.9	BRASS AND BRONZE INGOTS	7.8-2
	7.9.1 Process Description	7.9-1
	7.9.2 Emissions and Controls	7.9-1
	References for Section 7.9	7.9-1
7.10	GRAY IRON FOUNDRY	7.9-2
	7.10.1 Process Description	7.10-1
	7.10.2 Emissions	7.10-1
	References for Section 7.10	7.10-1
7.11	SECONDARY LEAD SMELTING	7.10-2
	7.11.1 General	7.11-1
	7.11.2 Emissions and Controls	7.11-1
	References for Section 7.11	7.11-1
7.12	SECONDARY MAGNESIUM SMELTING	7.11-1
	7.12.1 Process Description	7.12-1
	7.12.2 Emissions	7.12-1
	References for Section 7.12	7.12-1
7.13	STEEL FOUNDRIES	7.12-2
	7.13.1 Process Description	7.13-1
	7.13.2 Emissions	7.13-1
	References for Section 7.13	7.13-1
7.14	SECONDARY ZINC PROCESSING	7.13-3
	7.14.1 Process Description	7.14-1
	7.14.2 Emissions	7.14-1
	References for Section 7.14	7.14-1
8.	MINERAL PRODUCTS INDUSTRY	7.14-2
8.1	ASPHALTIC CONCRETE PLANTS	8.1-1
	8.1.1 Process Description	8.1-1
	8.1.2 Emissions and Controls	8.1-1
	References for Section 8.1	8.1-4
8.2	ASPHALT ROOFING	8.1-5
	8.2.1 Process Description	8.2-1
	8.2.2 Emissions and Controls	8.2-1
	References for Section 8.2	8.2-1
		8.2-2

CONTENTS—(Continued)

		Page
8.3	BRICKS AND RELATED CLAY PRODUCTS	8.3-1
	8.3.1 Process Description	8.3-1
	8.3.2 Emissions and Controls	8.3-1
	References for Section 8.3	8.3-4
8.4	CALCIUM CARBIDE MANUFACTURING	8.4-1
	8.4.1 Process Description	8.4-1
	8.4.2 Emissions and Controls	8.4-1
	References for Section 8.4	8.4-2
8.5	CASTABLE REFRACTORIES	8.5-1
	8.5.1 Process Description	8.5-1
	8.5.2 Emissions and Controls	8.5-1
	References for Section 8.5	8.5-2
8.6	PORTLAND CEMENT MANUFACTURING	8.6-1
	8.6.1 Process Description	8.6-1
	8.6.2 Emissions and Controls	8.6-1
	References for Section 8.6	8.6-2
8.7	CERAMIC CLAY MANUFACTURING	8.7-1
	8.7.1 Process Description	8.7-1
	8.7.2 Emissions and Controls	8.7-1
	References for Section 8.7	8.7-2
8.8	CLAY AND FLY-ASH SINTERING	8.8-1
	8.8.1 Process Description	8.8-1
	8.8.2 Emissions and Controls	8.8-1
	References for Section 8.8	8.8-2
8.9	COAL CLEANING	8.9-1
	8.9.1 Process Description	8.9-1
	8.9.2 Emissions and Controls	8.9-1
	References for Section 8.9	8.9-2
8.10	CONCRETE BATCHING	8.10-1
	8.10.1 Process Description	8.10-1
	8.10.2 Emissions and Controls	8.10-1
	References for Section 8.10	8.10-2
8.11	FIBER GLASS MANUFACTURING	8.11-1
	8.11.1 Process Description	8.11-1
	8.11.1.1 Textile Products	8.11-1
	8.11.1.2 Wool Products	8.11-1
	8.11.2 Emissions and Controls	8.11-1
	References for Section 8.11	8.11-4
8.12	FRIT MANUFACTURING	8.12-1
	8.12.1 Process Description	8.12-1
	8.12.2 Emissions and Controls	8.12-1
	References for Section 8.12	8.12-2
8.13	GLASS MANUFACTURING	8.13-1
	8.13.1 Process Description	8.13-1
	8.13.2 Emissions and Controls	8.13-1
	References for Section 8.13	8.13-2
8.14	GYPSUM MANUFACTURING	8.14-1
	8.14.1 Process Description	8.14-1
	8.14.2 Emissions	8.14-1
	References for Section 8.14	8.14-2
8.15	LIME MANUFACTURING	8.15-1
	8.15.1 General	8.15-1
	8.15.2 Emissions and Controls	8.15-1
	References for Section 8.15	8.15-2

CONTENTS–(Continued)

Page

8.16 MINERAL WOOL MANUFACTURING . . . 8.16-1
8.16.1 Process Description . . . 8.16-1
8.16.2 Emissions and Controls . . . 8.16-1
References for Section 8.16 . . . 8.16-2
8.17 PERLITE MANUFACTURING . . . 8.17-1
8.17.1 Process Description . . . 8.17-1
8.17.2 Emissions and Controls . . . 8.17-1
References for Section 8.17 . . . 8.17-2
8.18 PHOSPHATE ROCK PROCESSING . . . 8.18-1
8.18.1 Process Description . . . 8.18-1
8.18.2 Emissions and Controls . . . 8.18-1
References for Section 8.18 . . . 8.18-2
8.19 SAND AND GRAVEL PROCESSING . . . 8.19-1
8.19.1 Process Description . . . 8.19-1
8.19.2 Emissions . . . 8.19-1
References for Section 8.19 . . . 8.19-1
8.20 STONE QUARRYING AND PROCESSING . . . 8.20-1
8.20.1 Process Description . . . 8.20-1
8.20.2 Emissions . . . 8.20-1
References for Section 8.20 . . . 8.20-2
9. PETROLEUM INDUSTRY . . . 9.1-1
9.1 PETROLEUM REFINING . . . 9.1-1
9.1.1 General . . . 9.1-1
9.1.2 Crude Oil Distillation . . . 9.1-1
9.1.2.1 Emissions . . . 9.1-1
9.1.3 Converting . . . 9.1-6
9.1.3.1 Catalytic Cracking . . . 9.1-6
9.1.3.2 Hydrocracking . . . 9.1-6
9.1.3.3 Catalytic Reforming . . . 9.1-6
9.1.3.4 Polymerization, Alkylation, and Isomerization . . . 9.1-6
9.1.3.5 Emissions . . . 9.1-7
9.1.4 Treating . . . 9.1-7
9.1.4.1 Hydrogen Treating . . . 9.1-7
9.1.4.2 Chemical Treating . . . 9.1-7
9.1.4.3 Physical Treating . . . 9.1-8
9.1.4.4 Emissions . . . 9.1-8
9.1.5 Blending . . . 9.1-8
9.1.5.1 Emissions . . . 9.1-8
9.1.6 Miscellaneous Operations . . . 9.1-8
References for Chapter 9 . . . 9.1-8
10. WOOD PROCESSING . . . 10.1-1
10.1 WOOD PULPING . . . 10.1-1
10.1.1 General . . . 10.1-1
10.1.2 Process Description . . . 10.1-1
10.1.3 Emissions and Controls . . . 10.1-2
References for Section 10.1 . . . 10.1-2
10.2 PULPBOARD . . . 10.2-1
10.2.1 General . . . 10.2-1
10.2.2 Process Description . . . 10.2-1
10.2.3 Emissions . . . 10.2-1
References for Section 10.2 . . . 10.2-2

APPENDIX . . . A-1
REFERENCES FOR APPENDIX . . . A-6

LIST OF FIGURES

Figure		Page
3.1.1-1	Average Speed Correction Factors for All Model Years	3.1.1-7
3.3.2-1	Nitrogen Oxide Emissions from Stationary Internal Combustion Engines	3.3.2-2
5.9-1	Flow Diagram of Typical Nitric Acid Plant Using Pressure Process	5.9-2
5.17-1	Basic Flow Diagram of Contact-Process Sulfuric Acid Plant Burning Elemental Sulfur	5.17-2
5.17-2	Basic Flow Diagram of Contact-Process Sulfuric Acid Plant Burning Spent Acid	5.17-3
5.17-3	Sulfuric Acid Plant Feedstock Sulfur Conversion Versus Volumetric and Mass SO_2 Emissions at Various Inlet SO_2 Concentrations by Volume	5.17-6
5.18-1	Basic Flow Diagram of Modified Claus Process with Two Converter Stages Used in Manufacturing Sulfur	5.18-2
6.9-1	Types of Orchard Heaters	6.9-2
6.9-2	Particulate Emissions from Orchard Heaters	6.9-3
7.1-1	Schematic Diagram of Primary Aluminum Production Process	7.1-3
7.5-1	Basic Flow Diagram of Iron and Steel Processes	7.5-2
8.1-1	Batch Hot-Mix Asphalt Plant	8.1-2
8.1-2	Continuous Hot-Mix Asphalt Plant	8.1-3
8.3-1	Basic Flow Diagram of Brick Manufacturing Process	8.3-2
8.6-1	Basic Flow Diagram of Portland Cement Manufacturing Process	8.6-4
8.11-1	Typical Flow Diagram of Textile-Type Glass Fiber Production Process	8.11-2
8.11-2	Typical Flow Diagram of Wool-Type Glass Fiber Production Process	8.11-2
9.1-1	Basic Flow Diagram of Petroleum Refinery	9.1-2

LIST OF TABLES

Table		Page
1.1-1	Range of Collection Efficiencies for Common Types of Fly-Ash Control Equipment	1.1-2
1.1-2	Emission Factors for Bituminous Coal Combustion without Control Equipment	1.1-3
1.2-1	Emissions from Anthracite Coal Combustion without Control Equipment	1.2-2
1.3-1	Emission Factors for Fuel Oil Combustion	1.3-2
1.4-1	Emission Factors for Natural-Gas Combustion	1.4-2
1.5-1	Emission Factors for LPG Combustion	1.5-2
1.6-1	Emission Factors for Wood and Bark Combustion in Boilers with No Reinjection	1.6-2
2.1-1	Emission Factors for Refuse Incinerators without Controls	2.1-4
2.1-2	Collection Efficiencies for Various Types of Municipal Incineration Particulate Control Systems	2.1-5
2.2-1	Emission Factors for Auto Body Incineration	2.2-1
2.3-1	Emission Factors for Waste Incineration in Conical Burners without Controls	2.3-2
2.4-1	Emission Factors for Open Burning	2.4-1
3.1.1-1	Average Emission Factors for Highway Vehicles Based on Nationwide Statistics	3.1.1-6
3.1.2-1	Carbon Monoxide, Hydrocarbon, and Nitrogen Oxide Emission Factors for Light-Duty Vehicles at Low and High Altitude	3.1.2-2
3.1.2-2	Carbon Monoxide, Hydrocarbon, and Nitrogen Oxide Emission Factors for Light-Duty Vehicles, State of California only	3.1.2-3
3.1.2-3	Light-Duty Vehicle Crankcase and Evaporative Hydrocarbon Emissions by Model Year for all Areas Except California	3.1.2-4
3.1.2-4	Light-Duty Vehicle Crankcase and Evaporative Hydrocarbon Emissions by Model Year for California	3.1.2-4
3.1.2-5	Carbon Monoxide, Exhaust Hydrocarbon, and Nitrogen Oxide Deterioration Factors for Light-Duty, Gasoline-Powered Vehicles in All Areas Except California	3.1.2-6
3.1.2-6	Carbon Monoxide, Exhaust Hydrocarbon, and Nitrogen Oxide Deterioration Factors for Light-Duty, Gasoline-Powered Vehicles in California	3.1.2-7
3.1.2-7	Sample Calculation of Weighted Light-Duty Vehicle Annual Travel	3.1.2-8
3.1.2-8	Particulate and Sulfur Oxide Emission Factors for Light-Duty, Gasoline-Powered Vehicles	3.1.2-8
3.1.3-1	Emission Factors for Light-Duty, Diesel-Powered Vehicles	3.1.3-2
3.1.4-1	Heavy-Duty, Gasoline-Powered Vehicle Exhaust Emission Factors for Carbon Monoxide, Hydrocarbons, and Nitrogen Oxides	3.1.4-3
3.1.4-2	Exhaust Emission Deterioration Factors for Heavy-Duty, Gasoline-Powered Vehicles (California only), 1975 and Later Models	3.1.4-4
3.1.4-3	Sample Calculation of Weighted Heavy-Duty Vehicle Annual Travel	3.1.4-5
3.1.4-4	Sulfur Oxide and Particulate Emission Factors for Heavy-Duty, Gasoline-Powered Vehicles	3.1.4-5
3.1.5-1	Emission Factors for Heavy-Duty, Diesel-Powered Vehicles	3.1.5-2
3.1.6-1	Emission Factors by Model Year for Light-Duty Vehicles Using LPG, LPG/Dual Fuel, or CNG/Dual Fuel	3.1.6-2
3.1.6-2	Emission Factors for Heavy-Duty Vehicles Using LPG or CNG/Dual Fuel	3.1.6-2
3.1.7-1	Emission Factors for Motorcycles	3.1.7-2
3.2.1-1	Aircraft Classification	3.2.1-2
3.2.1-2	Typical Time in Mode for Landing-Takeoff Cycle	3.2.1-3
3.2.1-3	Emission Factors per Aircraft Landing-Takeoff Cycle	3.2.1-4
3.2.1-4	Modal Emission Factors	3.2.1-6
3.2.2-1	Average Locomotive Emission Factors Based on Nationwide Statistics	3.2.2-1
3.2.2-2	Emission Factors by Locomotive Engine Category	3.2.2-2
3.2.3-1	Fuel Consumption Rates for Steamships and Motor Ships	3.2.3-1

LIST OF TABLES—(Continued)

Table		Page
3.2.3-2	Emission Factors for Inboard Vessels	3.2.3-2
3.2.4-1	Average Emission Factors for Outboard Motors	3.2.4-1
3.2.5-1	Emission Factors for Small, General-Utility Engines	3.2.5-1
3.3.1-1	Emission Factors for Gas Turbines Using Distillate Fuel Oil	3.3.1-1
3.3.1-2	Emission Factors for Gas Turbines Using Natural Gas	3.3.1-2
3.3.2-1	Emission Factors for Heavy-Duty, General-Utility, Stationary Engines Using Gaseous Fuels	3.3.2-1
4.1-1	Hydrocarbon Emission Factors for Dry-Cleaning Operations	4.1-2
4.2-1	Gaseous Hydrocarbon Emission Factors for Surface-Coating Applications	4.2-1
4.3-1	Hydrocarbon Emission Factors for Evaporation Losses from the Storage of Petroleum Products	4.3-2
4.4-1	Emission Factors for Evaporation Losses from Gasoline Marketing	4.4-2
5.1-1	Emission Factors for an Adipic Acid Plant without Control Equipment	5.1-1
5.2-1	Emission Factors for Ammonia Manufacturing without Control Equipment	5.2-2
5.3-1	Emission Factors for Carbon Black Manufacturing	5.3-2
5.4-1	Emission Factors for Charcoal Manufacturing	5.4-1
5.5-1	Emission Factors for Chlor-Alkali Plants	5.5-2
5.6-1	Emission Factors for Explosives Manufacturing without Control Equipment	5.6-2
5.7-1	Emission Factors for Hydrochloric Acid Manufacturing	5.7-1
5.8-1	Emission Factors for Hydrofluoric Acid Manufacturing	5.8-1
5.9-1	Nitrogen Oxide Emissions from Nitric Acid Plants	5.9-3
5.10-1	Emission Factors for Paint and Varnish Manufacturing without Control Equipment	5.10-2
5.11-1	Emission Factors for Phosphoric Acid Production	5.11-2
5.12-1	Emission Factors for Phthalic Anhydride Plants	5.12-1
5.13-1	Emission Factors for Plastics Manufacturing without Controls	5.13-1
5.14-1	Emission Factors for Printing Ink Manufacturing	5.14-2
5.15-1	Particulate Emission Factors for Spray-Drying Detergents	5.15-1
5.16-1	Emission Factors for Soda-Ash Plants without Control	5.16-1
5.17-1	Emission Factors for Sulfuric Acid Plants	5.17-5
5.17-2	Acid Mist Emission Factors for Sulfuric Acid Plants without Controls	5.17-7
5.17-3	Collection Efficiency and Emissions Comparison of Typical Electrostatic Precipitator and Fiber Mist Eliminator	5.17-8
5.18-1	Emission Factors for Modified Claus Sulfur Plants	5.18-2
5.19-1	Emission Factors for Synthetic Fibers Manufacturing	5.19-1
5.20-1	Emission Factors for Synthetic Rubber Plants: Butadiene-Acrylonitrile and Butadiene-Styrene	5.20-1
5.21-1	Nitrogen Oxides Emission Factors for Terephthalic Acid Plants	5.21-1
6.1-1	Particulate Emission Factors for Alfalfa Dehydration	6.1-1
6.2-1	Emission Factors for Coffee Roasting Processes without Controls	6.2-1
6.3-1	Emission Factors for Cotton Ginning Operations without Controls	6.3-1
6.4-1	Particulate Emission Factors for Grain Handling and Processing	6.4-2
6.5-1	Emission Factors for Fermentation Processes	6.5-2
6.6-1	Emission Factors for Fish Meal Processing	6.6-1
6.7-1	Emission Factors for Meat Smoking	6.7-1
6.8-1	Emission Factors for Nitrate Fertilizer Manufacturing without Controls	6.8-2
6.9-1	Emission Factors for Orchard Heaters	6.9-4
6.10-1	Emission Factors for Production of Phosphate Fertilizers	6.10-1
6.11-1	Emission Factors for Starch Manufacturing	6.11-1
6.12-1	Emission Factors for Sugar Cane Processing	6.12-1
7.1-1	Raw Material and Energy Requirements for Aluminum Production	7.1-2
7.1-2	Representative Particle Size Distributions of Uncontrolled Effluents from Prebake and Horizontal-Stud Soderberg Cells	7.1-4
7.1-3	Emission Factors for Primary Aluminum Production Processes	7.1-5
7.2-1	Emission Factors for Metallurgical Coke Manufacture without Controls	7.2-2
7.3-1	Emission Factors for Primary Copper Smelters without Controls	7.3-2
7.4-1	Emission Factors for Ferroalloy Production in Electric Smelting Furnaces	7.4-2
7.5-1	Emission Factors for Iron and Steel Mills	7.5-4

Table		Page
7.6-1	Emission Factors for Primary Lead Smelters	7.6-1
7.7-1	Emission Factors for Primary Zinc Smelting without Controls	7.7-1
7.8-1	Particulate Emission Factors for Secondary Aluminum Operations	7.8-1
7.9-1	Particulate Emission Factors for Brass and Bronze Melting Furnaces without Controls	7.9-2
7.10-1	Emission Factors for Gray Iron Foundries	7.10-1
7.11-1	Emission Factors for Secondary Lead Smelters	7.11-2
7.12-1	Emission Factors for Magnesium Smelting	7.12-1
7.13-1	Emission Factors for Steel Foundries	7.13-2
7.14-1	Particulate Emission Factors for Secondary Zinc Smelting	7.14-2
8.1-1	Particulate Emission Factors for Asphaltic Concrete Plants	8.1-4
8.2-1	Emission Factors for Asphalt Roofing Manufacturing without Controls	8.2-1
8.3-1	Emission Factors for Brick Manufacturing without Controls	8.3-3
8.4-1	Emission Factors for Calcium Carbide Plants	8.4-1
8.5-1	Particulate Emission Factors for Castable Refractories Manufacturing	8.5-1
8.6-1	Emission Factors for Cement Manufacturing without Controls	8.6-3
8.6-2	Size Distribution of Dust Emitted from Kiln Operations without Controls	8.6-3
8.7-1	Particulate Emission Factors for Ceramic Clay Manufacturing	8.7-1
8.8-1	Particulate Emission Factors for Sintering Operations	8.8-2
8.9-1	Particulate Emission Factors for Thermal Coal Dryers	8.9-1
8.10-1	Particulate Emission Factors for Concrete Batching	8.10-1
8.11-1	Emission Factors for Fiber Glass Manufacturing without Controls	8.11-3
8.12-1	Emission Factors for Frit Smelters without Controls	8.12-2
8.13-1	Emission Factors for Glass Melting	8.13-1
8.14-1	Particulate Emission Factors for Gypsum Processing	8.14-1
8.15-1	Particulate Emission Factors for Lime Manufacturing without Controls	8.15-1
8.16-1	Emission Factors for Mineral Wool Processing without Controls	8.16-2
8.17-1	Particulate Emission Factors for Perlite Expansion Furnaces without Controls	8.17-1
8.18-1	Particulate Emission Factors for Phosphate Rock Processing without Controls	8.18-1
8.20-1	Particulate Emission Factors for Rock-Handling Processes	8.20-1
9.1-1	Emission Factors for Petroleum Refineries	9.1-3
10.1-1	Emission Factors for Sulfate Pulping	10.1-3
10.2-1	Particulate Emission Factors for Pulpboard Manufacturing	10.2-2
A-1	Nationwide Emissions for 1970	A-2
A-2	Distribution by Particle Size of Average Collection Efficiencies for Various Particulate Control Equipment	A-3
A-3	Thermal Equivalents for Various Fuels	A-4
A-4	Weights of Selected Substances	A-4
A-5	General Conversion Factors	A-5

ABSTRACT

Emission data obtained from source tests, material balance studies, engineering estimates, etc., have been compiled for use by individuals and groups responsible for conducting air pollution emission inventories. Emission factors given in this document, the result of the expansion and continuation of earlier work, cover most of the common emission categories: fuel combustion by stationary and mobile sources; combustion of solid wastes; evaporation of fuels, solvents, and other volatile substances; various industrial processes; and miscellaneous sources. When no source-test data are available, these factors can be used to estimate the quantities of primary pollutants (particulates, CO, SO_2, NO_x, and hydrocarbons) being released from a source or source group.

Key words: fuel combustion, stationary sources, mobile sources, industrial processes, evaporative losses, emissions, emission data, emission inventories, primary pollutants, emission factors.

COMPILATION

OF

AIR POLLUTANT EMISSION FACTORS

INTRODUCTION

In the assessment of community air pollution, there is a critical need for accurate data on the quantity and characteristics of emissions from the numerous sources that contribute to the problem. The large numbers of these individual sources and the diversity of source types make conducting field measurements of emissions on a source-by-source basis at the point of release impractical. The only feasible method of determining pollutant emissions for a given community is to make generalized estimates of typical emissions from each of the source types.

The *emission factor* is an average estimate of the rate at which a pollutant is released to the atmosphere as a result of some activity, such as combustion or industrial production, divided by the level of that activity. For example, assume that in the production of 260,000 tons (236,000 MT*) of ammonia per year, 26,000 tons (23,600 MT) of carbon monoxide is emitted to the atmosphere. The emission factor for the production of ammonia would therefore be 200 pounds of CO released per ton (100 kilograms per MT) of ammonia produced. The emission factor thus relates the quantity of pollutants emitted to some indicator such as production capacity, quantity of fuel burned, or vehicle miles traveled by autos.

The emission factors presented in this report were estimated by using the entire spectrum of techniques available for determining such factors. These techniques include: detailed source testing that involved many measurements related to a variety of process variables, single measurements not clearly defined as to their relationship to process operating conditions, process material balances, and engineering appraisals of a given process.

The limitations and applicability of emission factors must be understood. To give some idea of the accuracy of the factors presented for a specific process, each process has been ranked as "A," "B," "C," "D," or "E." For a process with an "A" ranking, the emission factor should be considered excellent, i.e., based on field measurements of a large number of sources. A process ranked "B" should be considered above average, i.e., based on a limited number of field measurements. A ranking of "C" is considered average; "D," below average; and "E," poor. These rankings are presented below the table titles throughout the report.

*MT = metric ton.

In general, the emission factors presented are not precise indicators of emissions for a single source. They are more valid when applied to a large number of processes. With this limitation in mind, emission factors are extremely useful when intelligently applied in conducting source inventories as part of community or nationwide air pollution studies.

In addition to the specific tables in each section of this report, the Appendix presents nationwide emission estimates for 1970, average collection efficiencies for different types of particulate control equipment, and conversion factors for a number of different substances.

1. EXTERNAL COMBUSTION SOURCES

External combustion sources include steam-electric generating plants, industrial boilers, commercial and institutional boilers, and commercial and domestic combustion units. Coal, fuel oil, and natural gas are the major fossil fuels used by these sources. Other fuels used in relatively small quantities are liquefied petroleum gas, wood, coke, refinery gas, blast furnace gas, and other waste- or by-product fuels. Coal, oil, and natural gas currently supply about 95 percent of the total thermal energy consumed in the United States. In 1970 over 500 million tons (454×10^6 MT) of coal, 623 million barrels (99×10^9 liters) of distillate fuel oil, 715 million barrels (114×10^9 liters) of residual fuel oil, and 22 trillion cubic feet (623×10^{12} liters) of natural gas were consumed in the United States.[1]

Power generation, process heating, and space heating are some of the largest fuel-combustion sources of sulfur oxides, nitrogen oxides, and particulate emissions. The following sections present emission factor data for the major fossil fuels – coal, fuel oil, and natural gas – as well as for liquefied petroleum gas and wood waste combustion in boilers.

REFERENCE

1. Ackerson, D.H. Nationwide Inventory of Air Pollutant Emissions. Unpublished report. Office of Air and Water Programs, Environmental Protection Agency, Research Triangle Park, N.C. May 1971.

1.1 BITUMINOUS COAL COMBUSTION

Revised by Robert Rosensteel and Thomas Lahre

1.1.1 General

Coal, the most abundant fossil fuel in the United States, is burned in a wide variety of furnaces to produce heat and steam. Coal-fired furnaces range in size from small handfired units with capacities of 10 to 20 pounds (4.5 to 9 kilograms) of coal per hour to large pulverized-coal-fired units, which may burn 300 to 400 tons (275 to 360 MT) of coal per hour.

Although predominantly carbon, coal contains many compounds in varying amounts. The exact nature and quantity of these compounds are determined by the location of the mine producing the coal and will usually affect the final use of the coal.

1.1.2 Emissions and Controls

1.1.2.1 Particulates[1] - Particulates emitted from coal combustion consist primarily of carbon, silica, alumina, and iron oxide in the fly-ash. The quantity of atmospheric particulate emissions is dependent upon the type of combustion unit in which the coal is burned, the ash content of the coal, and the type of control equipment used.

Table 1.1-1 gives the range of collection efficiencies for common types of fly-ash control equipment. Particulate emission factors expressed as pounds of particulate per ton of coal burned are presented in Table 1.1-2.

1.1.2.2 Sulfur Oxides[11] - Factors for uncontrolled sulfur oxides emission are shown in Table 1-2 along with factors for other gases emitted. The emission factor for sulfur oxides indicates a conversion of 95 percent of the available sulfur to sulfur oxide. The balance of the sulfur is emitted in the fly-ash or combines with the slag or ash in the furnace and is removed with them.[1] Increased attention has been given to the control of sulfur oxide emissions from the combustion of coal. The use of low-sulfur coal has been recommended in many areas; where low-sulfur coal is not available, other methods in which the focus is on the removal of sulfur oxide from the flue gas before it enters the atmosphere must be given consideration.

A number of flue-gas desulfurization processes have been evaluated; effective methods are undergoing full-scale operation. Processes included in this category are: limestone-dolomite injection, limestone wet scrubbing, catalytic oxidation, magnesium oxide scrubbing, and the Wellman-Lord process. Detailed discussion of various flue-gas desulfurization processes may be found in the literature.[12,13]

1.1.2.3. Nitrogen Oxides[1,5] - Emissions of oxides of nitrogen result not only from the high temperature reaction of atmospheric nitrogen and oxygen in the combustion zone, but also from the partial combustion of nitrogenous compounds contained in the fuel. The important factors that affect NO_x production are: flame and furnace temperature, residence time of combustion gases at the flame temperature, rate of cooling of the gases, and amount of excess air present in the flame. Discussions of the mechanisms involved are contained in the indicated references.

1.1.2.4 Other Gases - The efficiency of combustion primarily determines the carbon monoxide and hydrocarbon content of the gases emitted from bituminous coal combustion. Successful combustion that results in a low level of carbon monoxide and organic emissions requires a high degree of turbulence, a high temperature, and sufficient time for the combustion reaction to take place. Thus, careful control of excess air rates, the use of high combustion temperature, and provision for intimate fuel-air contact will minimize these emissions.

Factors for these gaseous emissions are also presented in Table 1.1-2. The size range in Btu per hour for the various types of furnaces as shown in Table 1.1-2 is only provided as a guide in selecting the proper factor and is not meant to distinguish clearly between furnace applications.

TABLE 1.1-1. RANGE OF COLLECTION EFFICIENCIES FOR COMMON TYPES OF FLY-ASH CONTROL EQUIPMENT[a]

Type of furnace	Range of collection efficiencies, %			
	Electrostatic precipitator	High-efficiency cyclone	Low-resistance cyclone	Settling chamber expanded chimney bases
Cyclone furnace	65 to 99.5[b]	30 to 40	20 to 30	10[b]
Pulverized unit	80 to 99.5[b]	65 to 75	40 to 60	20[b]
Spreader stoker	99.5[b]	85 to 90	70 to 80	20 to 30
Other stokers	99.5[b]	90 to 95	75 to 85	25 to 50

[a]References 1 and 2.

[b]The maximum efficiency to be expected for this collection device applied to this type source.

Table 1.1-2. EMISSION FACTORS FOR BITUMINOUS COAL COMBUSTION WITHOUT CONTROL EQUIPMENT
EMISSION FACTOR RATING: A

Furnace size, 10^6 Btu/hr heat input[a]	Particulates[b]		Sulfur oxides[c]		Carbon monoxide		Hydro-carbons[d]		Nitrogen oxides		Aldehydes	
	lb/ton coal burned	kg/MT coal burned	lb/ton coal burned	kg/MT coal burned	lb/ton coal burned	kg/MT coal burned	lb/ton coal burned	kg/MT coal burned	lb/ton coal burned	kg/MT coal burned	lb/ton coal burned	kg/MT coal burned
Greater than 100[e] (Utility and large industrial boilers)												
Pulverized												
General	16A	8A	38S	19S	1	0.5	0.3	0.15	18	9	0.005	0.0025
Wet bottom	13A[f]	6.5A	38S	19S	1	0.5	0.3	0.15	30	15	0.005	0.0025
Dry bottom	17A	8.5A	38S	19S	1	0.5	0.3	0.15	18	9	0.005	0.0025
Cyclone	2A	1A	38S	19S	1	0.5	0.3	0.15	55	27.5	0.005	0.0025
10 to 100[g] (large commercial and general industrial boilers)[g]												
Spreader stoker[h]	13A[i]	6.5A	38S	19S	2	1	1	0.5	15	7.5	0.005	0.0025
Less than 10[j] (commercial and domestic furnaces)												
Spreader stoker	2A	1A	38S	19S	10	5	3	1.5	6	3	0.005	0.0025
Hand-fired units	20	10	38S	19S	90	45	20	10	3	1.5	0.005	0.0025

[a] 1 Btu/hr = 0.252 kcal/hr.
[b] The letter A on all units other than hand-fired equipment indicates that the weight percentage of ash in the coal should be multiplied by the value given. Example: If the factor is 16 and the ash content is 10 percent, the particulate emissions before the control equipment would be 10 times 16, or 160 pounds of particulate per ton of coal (10 times 8, or 80 kg of particulates per MT of coal).
[c] S equals the sulfur content (see footnote b above).
[d] Expressed as methane.
[e] References 1 and 3 through 7.
[f] Without fly-ash reinjection.
[g] References 1, 4, and 7 through 9.
[h] For all other stokers use 5A for particulate emission factor.
[i] Without fly-ash reinjection. With fly-ash reinjection use 20. This value is not an emission factor but represents loading reaching the control equipment.[1]
[j] References 7, 9, and 10.

References for Section 1.1

1. Smith, W. S. Atmospheric Emissions from Coal Combustion. U.S. DHEW, PHS, National Center for Air Pollution Control. Cincinnati, Ohio. PHS Publication Number 999-AP-24. April 1966.

2. Control Techniques for Particulate Air Pollutants. U.S. DHEW, PHS, EHS, National Air Pollution Control Administration. Washington, D.C. Publication Number AP-51. January 1969.

3. Perry, H. and J. H. Field. Air Pollution and the Coal Industry. Transactions of the Society of Mining Engineers. *238*:337-345, December 1967.

4. Heller, A. W. and D. F. Walters. Impact of Changing Patterns of Energy Use on Community Air Quality. J. Air Pol. Control Assoc. *15*:426, September 1965.

5. Cuffe, S. T. and R. W. Gerstle. Emissions from Coal-Fired Power Plants: A Comprehensive Summary. U.S. DHEW, PHS, National Air Pollution Control Administration. Raleigh, N. C. PHS Publication Number 999-AP-35. 1967. p. 15.

6. Austin, H. C. Atmospheric Pollution Problems of the Public Utility Industry. J. Air Pol. Control Assoc. *10*(4):292-294, August 1960.

7. Hangebrauck, R. P., D. S. Von Lehmden, and J. E. Meeker. Emissions of Polynuclear Hydrocarbons and Other Pollutants from Heat Generation and Incineration Processes. J. Air Pol. Control Assoc. *14*:267-278, July 1964.

8. Hovey, H. H., A. Risman, and J. F. Cunnan. The Development of Air Contaminant Emission Tables for Nonprocess Emissions. J. Air Pol. Control Assoc. *16*:362-366, July 1966.

9. Anderson, D. M., J. Lieben, and V. H. Sussman. Pure Air for Pennsylvania. Pennsylvania Department of Health. Harrisburg, Pa. November 1961. p. 91-95.

10. Communication with National Coal Association. Washington, D. C. September 1969.

11. Private communication with R.D. Stern, Control Systems Division, Environmental Protection Agency. Research Triangle Park, N.C. June 21, 1972.

12. Control Techniques for Sulfur Oxide Air Pollutants. U.S. DHEW, PHS, EHS, National Air Pollution Control Administration. Washington, D.C. Publication Number AP-52. January 1969. p. xviii and xxii.

13. Air Pollution Aspects of Emission Sources: Electric Power Production. Environmental Protection Agency, Office of Air Programs. Research Triangle Park, N.C. Publication Number AP-96. May 1971.

1.2 ANTHRACITE COAL COMBUSTION

Revised by Robert Rosensteel

1.2.1 General [1]

Because of its low volatile content and the nonclinkering characteristics of its ash, anthracite coal is used in medium-sized industrial and institutional boilers with stationary or traveling grates. Although it is not used in spreader stokers because of its low volatile content and relatively high ignition temperature, anthracite coal may be burned in pulverized-coal-fired units, but this practice is limited to only a few plants in Eastern Pennsylvania because of ignition difficulties. Anthracite coal has also been widely used in hand-fired furnaces.

1.2.2 Emissions and Controls[1]

Particulate emissions from anthracite coal combustion are greatly affected by the rate of firing and by the ash content of the fuel. Smoke emissions from anthracite coal combustion are rarely a problem. High grate loadings result in excessive emissions because of the underfire air required to burn the fuel. Large units equipped with forced-draft fans may also produce high rates of particulate emissions. Hand-fired furnaces and some small natural-draft units have fewer particulate emissions because underfire air is not usually supplied by mechanical means.

The quantity of sulfur dioxide emissions from coal combustion, as from other fuels, is directly related to the sulfur content of the coal. Nitrogen oxide and carbon monoxide emissions are similar to those found in bituminous-coal-fired units because excess air rates and combustion temperatures are similar. Because the volatile matter content of anthracite is lower than that of bituminous, hydrocarbon emissions from combustion of anthracite are somewhat lower than those from bituminous coal combustion.

The factors for uncontrolled emissions from anthracite coal combustion are presented in Table 1.2-1.

Table 1.2-1. EMISSIONS FROM ANTHRACITE COAL COMBUSTION WITHOUT CONTROL EQUIPMENT
EMISSION FACTOR RATING: B

Type of furnace	Particulate[a,b]		Sulfur dioxide[c]		Sulfur trioxide[c,d]		Hydrocarbons[e,f]		Carbon monoxide[g]		Nitrogen oxides[d,h]	
	lb/ton	kg/MT	lb/ton	kg/MT	lb/ton	kg/MT	lb/ton	kg/MT	lb/ton	kg/MT	lb/ton	kg/MT
Pulverized (dry bottom), no fly-ash reinjection	17A	8.5A	38S	19S	0.5S	0.25S	0.03	0.015	1	0.5	18	9
Overfeed stokers, no fly-ash reinjection[i]	2A	1A	38S	19S	0.5S	0.25S	0.2	0.1	(2 to 10)[j]	(1 to 5)	(6 to 15)[k]	(3 to 7.5)
Hand-fired units	10	5	36S	18S	0.8S	0.4S	2.5	1.25	90	45	3	1.5

[a]References 2 through 7.
[b]A is the ash content expressed as weight percent.
[c]S is the sulfur content expressed as weight percent.
[d]References 5, 7, and 8.
[e]Based on Reference 2 and bituminous coal combustion.
[f]Expressed as methane.
[g]Based on bituminous coal combustion.
[h]Emitted as NO, but calculated as NO_2.
[i]Based on data obtained from traveling-grate stokers in the 12 to 180 Btu/hr (3 to 45 kcal/hr) heat input range. Anthracite is not burned in spreader stokers.
[j]Use high side of range for smaller-sized units [less than 10×10^6 Btu/hr (2.5×10^6 kcal/hr) heat input].
[k]Use low side of range for smaller-sized units [less than 10×10^6 Btu/hr (2.5×10^6 kcal/hr) heat input].

NOTE: Approximate efficiencies of control devices used for anthracite are: cyclone, 75 to 85 percent, and electrostatic precipitator, 85 percent.

References for Section 1.2

1. Air Pollutant Emission Factors. Final Report. Resources Research, Inc. Reston, Va. Prepared for National Air Pollution Control Administration, Durham, N.C., under Contract Number CPA-22-69-119. April 1970.

2. Hovey, H.H., A. Risman, and J.F. Cunnan. The Development of Air Contaminant Emission Tables for Nonprocess Emissions. J. Air Pol. Control Assoc. *16*:362-366, July 1966.

3. Unpublished stack test data on emissions from athracite coal combustion. Pennsylvania Air Pollution Commission. Harrisburg, Pa. 1969.

4. Unpublished stack test data on emissions from anthracite coal combustion. New Jersey Air Pollution Control Program. Trenton, N.J. 1969.

5. Anderson, D.M., J. Lieben, and V.H. Sussman. Pure Air for Pennsylvania. Pennsylvania Department of Health. Harrisburg, Pa. November 1961. p.15.

6. Blackie, A. Atmospheric Pollution from Domestic Appliances. The Report of the Joint Conference of the Institute of Fuel and the National Smoke Abatement Society. London. February 23, 1945.

7. Smith, W.S. Atmospheric Emissions from Coal Combustion. U.S. DHEW, PHS, National Center for Air Pollution Control. Cincinnati, Ohio. PHS Publication Number 999-AP-24. April 1966. p.76.

8. Crumley, P.H. and A.W. Fletcher. The Formation of Sulphur Trioxide in Flue Gases. J. Inst. of Fuel Combustion. *30*:608-612, August 1957.

1.3 FUEL OIL COMBUSTION

Revised by Thomas Lahre

1.3.1 General[1]

Fuel oil is classified into two major types, residual and distillate. Distillate fuel oil is primarily a domestic fuel. but it is used in some commercial and industrial applications where a high-quality oil is required. Fuel oils are classified by grades: grades No. 1 and No. 2, distillate; No. 5 and No. 6, residual; and No. 3 and No. 4, blends. (Grade No. 3 has been practically discontinued.) The primary differences between residual oil and distillate oil are the higher ash and sulfur content of residual oil and the fact that it is much more viscous and therefore harder to burn properly. Residual fuel oils have a heating value of approximately 150,000 Btu/gallon (10,000 kcal/liter); the heating value for distillate oils is about 140,000 Btu/gallon (9,300 kcal/liter).

1.3.2 Emissions

Emissions from oil combustion are dependent on type and size of equipment, method of firing, and maintenance. Table 1.3-1 presents emission factors for fuel oil combustion. Note that the industrial and commercial category is split into residual and distillate because there is a significant difference in particulate emissions from the same equipment, depending on the fuel oil used. It should also be noted that power plants emit less particulate matter per quantity of oil consumed, reportedly because of better design and more precise operation of equipment.

In general, large sources produce more nitrogen oxides than small sources,[1] primarily because of the higher flame and boiler temperatures characteristic of large sources. Large sources, however, emit fewer aldehydes than smaller sources as a result of more complete combustion and higher flame temperatures. Hydrocarbon and carbon monoxide emissions can be kept minimal if proper operating practices are employed; however, as the data suggest, this control is more often accomplished in larger equipment.

Table 1.3-1. EMISSION FACTORS FOR FUEL OIL COMBUSTION
EMISSION FACTOR RATING: A

Pollutant	Type of unit: Industrial and commercial							
	Power plant		Residual		Distillate		Domestic	
	lb/10^3 gal	kg/10^3 liters	lb/10^3 gal	kg/10^3 liters	lb/10^3 gal	kg/10^3 liters	lb/10^3 gal	kg/10^3 liters
Particulate[a]	8	1	23	2.75	15	1.8	10	1.2
Sulfur dioxide[b,c]	157S	19S	157S	19S	142S	17S	142S	17S
Sulfur trioxide[b,c]	2S	0.25S	2S	0.25S	2S	0.25S	2S	0.25S
Carbon monoxide[d]	3	0.4	4	0.5	4	0.5	5	0.6
Hydrocarbons[e]	2	0.25	3	0.35	3	0.35	3	0.35
Nitrogen oxides (NO_2)[f]	105[g]	12.6[g]	(40 to 80)[h]	(4.8 to 9.6)[h]	(40 to 80)[h]	(4.8 to 9.6)[h]	12	1.5
Aldehydes (HCHO)[i]	1	0.12	1	0.12	2	0.25	2	0.25

[a]References 2 through 6.
[b]Reference 2.
[c]S equals percent by weight of sulfur in the oil.
[d]References 2, 7 through 10, 12, and 15.
[e]References 2, 6, and 9 through 12.
[f]References 2 through 6, 9, 10, 12, 13, 15, and 16.
[g]Use 50(6) for tangentially fired units.
[h]Use 40 (4.8) for tangentially fired units and 80 (9.6) for horizontally fired units.
[i]References 2, 9, 11, and 14.

References for Section 1.3

1. Unpublished stack test data on emissions from coal-fired boilers. Resources Research, Inc. Reston, Va. Prepared for the Office of Air Programs, Environmental Protection Agency, Research Triangle Park, N.C., under Contract Number 70-81. 1971.

2. Smith, W.S. Atmospheric Emissions from Fuel Oil Combustion: An Inventory Guide. U.S. DHEW, PHS, National Center for Air Pollution Control. Cincinnati, Ohio. PHS Publication Number 999-AP-2. 1962.

3. Weisburd, M.I. and S.S. Griswold (eds.). Air Pollution Control Field Operations Manual: A Guide for Inspection and Enforcement. U.S. DHEW, PHS, Division of Air Pollution. Washington, D.C. PHS Publication Number 937. 1962.

4. McGill, P.L. and R.W. Benoliel. Air Pollution in Los Angeles County: Contribution of Industrial Products. Ind. Eng. Chem. *44*:1347-1352, June 1952.

5. The Smog Problem in Los Angeles County. Menlo Park, Calif., Stanford Research Institute. Western Oil and Gas Assoc. 1954.

6. Taylor, F.R. et al. Emissions from Fuel Oil Combustion. Final Report. Prepared for American Petroleum Institute. Scott Research Laboratory. Parkasie, Pa. March 1963.

7. Unpublished data from San Francisco Bay Area Air Pollution Control District on emissions from fuel oil combustion. 1968.

8. Unpublished data from Los Angeles County Air Pollution Control District on fuel oil combustion. April 8, 1969.

9. Wasser, J.H., G. B. Martin, and R.P. Hangebrauck. Effects of Combustion Gas Residence Time on Air Pollutant Emissions from Oil-Fired Test Furnace. U.S. DHEW, PHS, National Air Pollution Control Administration. Cincinnati, Ohio. September 1968.

10. Howekamp, D.P. and M.K. Hooper. Effects of Combustion-Improving Devices on Air Pollutant Emissions from Residential Oil-Fired Furnaces. U.S. DHEW, PHS, National Air Pollution Control Administration. Cincinnati, Ohio. June 1970.

11. MacPhee, R.D., J.R. Taylor, and R.L. Chaney. Some Data on Particulates from Fuel Oil Burning. Los Angeles County Air Pollution Control District. (Presented at APCA Semiannual Technical Conference, San Francisco, Calif. November 1957.)

12. Levy, A. et al. A Field Investigation of Emissions from Fuel Oil Combustion for Space Heating. API Publication 4099. Battelle Columbus Laboratories. Columbus, Ohio. November 1971.

13. Barrett, R.E., S.E. Miller, and D.W. Locklin. Investigation of the Effect of Combustion Parameters on Emissions from Residential and Commercial Heating Equipment, 5th Monthly Report. Battelle Columbus Laboratories. Columbus, Ohio. Prepared for Environmental Protection Agency, Research Triangle Park, N.C., under Contract Number 68-02-0251. April 27, 1972.

14. Chass, R.L. and R.E. George. Contaminant Emissions from Combustion of Fuels. J. Air Pol. Control Assoc. *10*:34-43, February 1960.

15. Bartok, W. et al. Systematic Field Study of NO_X Emission Control Methods for Utility Boilers. ESSO Research and Engineering Co. Prepared for Environmental Protection Agency, Research Triangle Park, N.C., under Contract Number CPA-70-90. December 31, 1971.

16. Blakeslee, C.E. and H.E. Burbach. Controlling NO_X Emissions from Steam Generators. J. Air Pol. Control Assoc. *23*:37-42, January 1973.

1.4 NATURAL GAS COMBUSTION

Revised by Thomas Lahre

1.4.1 General

Natural gas has become one of the major fuels used throughout the country. It is used mainly in power plants, in industrial heating, and in domestic and commercial space heating. The primary component of natural gas is methane, but smaller quantities of inorganics, particularly nitrogen and carbon dioxide, are also present. Pennsylvania natural gas has been reported to contain as much as one-third ethane.[1] The heating value of natural gas is approximately 1050 Btu/std. $ft.^3$ (9350 kcal/$\underline{N}m^3$).

1.4.2 Emissions and Controls

Even though natural gas is considered to be a relatively clean fuel, some emissions do occur from the combustion reaction. When insufficient air is supplied, large amounts of carbon monoxide and hydrocarbons may be produced.[2] Emissions of sulfur oxides are dependent upon the amount of sulfur in the fuel. The sulfur content of natural gas is usually low, around 2000 grains/10^6 ft^3 (4600 g/10^6 m^3).

Nitrogen oxide emissions are a function of the temperature in the combustion chamber and the rate of cooling of the combustion products. These values vary considerably with the type and size of unit. Emissions of aldehydes are increased when there is an insufficient amount of combustion air or an incomplete mixing of the fuel and the combustion air.

Emission factors for natural gas combustion are presented in Table 1.4-1. Flue gas cleaning equipment has not been used to control emissions from natural gas combustion equipment.

Table 1.4-1. EMISSION FACTORS FOR NATURAL-GAS COMBUSTION
EMISSION FACTOR RATING: B

Pollutant	Type of Unit					
	Power plant		Industrial process boiler		Domestic and commercial heating	
	$lb/10^6\ ft^3$	$kg/10^6\ m^3$	$lb/10^6\ ft^3$	$kg/10^6\ m^3$	$lb/10^6\ ft^3$	$kg/10^6\ m^3$
Particulates[a]	15	240	18	290	19	302
Sulfur-oxides (SO_2)[b]	0.6	9.6	0.6	9.6	0.6	9.6
Carbon monoxide[c]	17	270	17	270	20	320
Hydrocarbons[d] (CH_4)	1	16	3	48	8	128
Nitrogen oxides (NO_2)[e]	600	9600[f]	(120 to 230)[g]	(1920 to 3700)[g]	(80 to 120)[h]	(1280 to 1920)[h]

[a]References 3 and 4.
[b]Reference 5 (based on average sulfur content of natural gas of 2000 grains/$10^6\ ft^3$ (4600 g/$10^6\ m^3$).
[c]References 4 and 6 through 10.
[d]References 4 and 6 through 11.
[e]References 2 through 4 and 9 through 13.
[f]Use 300 (4800) for tangentially fired units.
[g]Use 120 (1920) for smaller industrial boilers <500 boiler horsepower and 230 (3700) for larger industrial boilers> 7500 boiler horsepower.
[h]Use 80 (1280) for domestic heating units and 120 (1920) for commercial units.

References for Section 1.4

1. Shreve, R.N. Chemical Process Industries, 3rd Ed. New York, McGraw-Hill Book Co., 1967.

2. Hall, E.L. What Is the Role of the Gas Industry in Air Pollution? Proceedings of 2nd National Air Pollution Symposium. Pasadena, Calif. 1952. p. 54-58.

3. Weisburd, M.T. and S.S. Griswold (eds.). Air Pollution Control Field Operations Manual: A Guide for Inspection and Enforcement. U.S. DHEW, PHS, Division of Air Pollution. Washington, D.C. PHS Publication Number 937. 1962.

4. Hangebrauck, P.P., D.S. VonLehmden, and J.E. Meeker. Emissions of Polynuclear Hydrocarbons and Other Pollutants from Heat Generation and Incineration Processes. J. Air Pol. Control Assoc. *14*:267-268, July 1964.

5. Hovey, H.H., A. Risman, and J.F. Cunnan. The Development of Air Contaminant Emission Tables for Nonprocess Emissions. New York State Department of Health, Albany. 1965.

6. Private communication with the American Gas Association Laboratories. Cleveland, Ohio. May 1970.

7. Wohlers, H.C. and G.B. Bell. Literature Review of Metropolitan Air Pollutant Concentrations: Preparation, Sampling, and Assay of Synthetic Atmospheres. Menlo Park, Calif., Stanford Research Institute. 1956.

8. Unpublished data on domestic gas-fired units. U.S. DHEW, PHS, EHS, National Air Pollution Control Administration. Cincinnati, Ohio. 1970.

9. Bartok, W. et al. Systematic Study of NO_x Emission Control Methods for Utility Boilers. ESSO Research and Engineering Co. Prepared for Environmental Protection Agency, Research Triangle Park, N.C., under Contract Number CPA-70-90, December 31, 1971.

10. Dietzmann, H.E. A Study of Power Plant Boiler Emissions. Southwest Research Inst. San Antonio, Texas. August 1972.

11. Levy, A. et al. A Field Investigation of Emissions from Fuel Oil Combustion for Space Heating. Battelle Columbus Laboratories. Columbus, Ohio. API Publication 4099. November 1971.

12. Blakeslee, C.E. and H.E. Barbach. Controlling NO_x Emissions from Steam Generators. J. Air Pol. Control Assoc. *23*:37-42, January 1973.

13. Magill, P.L. and R.W. Benoliel. Air Pollution in Los Angeles County: Contribution of Industrial Products. Ind. Eng. Chem. *44*:1347-1352, June 1952.

1.5 LIQUEFIED PETROLEUM GAS CONSUMPTION

Revised by Thomas Lahre

1.5.1 General[1]

Liquefied petroleum gas, commonly referred to as LPG, consists mainly of butane, propane, or a mixture of the two, and of trace amounts of propylene and butylene. This gas, obtained from oil or gas wells as a by-product of gasoline refining, is sold as a liquid in metal cylinders under pressure and, therefore, is often called bottled gas. LPG is graded according to maximum vapor pressure with Grade A being predominantly butane, Grade F being predominantly propane, and Grades B through E consisting of varying mixtures of butane and propane. The heating value of LPG ranges from 97,400 Btu/gallon (6,480 kcal/liter) for Grade A to 90,500 Btu/gallon (6,030 kcal/liter) for Grade F. The largest market for LPG is the domestic-commercial market, followed by the chemical industry and the internal combustion engine.

1.5.2 Emissions[1]

LPG is considered a "clean" fuel because it does not produce visible emissions. Gaseous pollutants such as carbon monoxide, hydrocarbons, and nitrogen oxides do occur, however. The most significant factors affecting these emissions are the burner design, adjustment, and venting.[2] Improper design, blocking and clogging of the flue vent, and lack of combustion air result in improper combustion that causes the emission of aldehydes, carbon monoxide, hydrocarbons, and other organics. Nitrogen oxide emissions are a function of a number of variables including temperature, excess air, and residence time in the combustion zone. The amount of sulfur dioxide emitted is directly proportional to the amount of sulfur in the fuel. Emission factors for LPG combustion are presented in Table 1.5-1.

References for Section 1.5

1. Air Pollutant Emission Factors. Final Report. Resources Research, Inc. Reston, Va. Prepared for National Air Pollution Control Administration, Durham, N.C., under Contract Number CPA-22-69-119. April 1970.

2. Clifford, E.A. A Practical Guide to Liquified Petroleum Gas Utilization. New York, Moore Publishing Co. 1962.

Table 1.5-1. EMISSION FACTORS FOR LPG COMBUSTION[a]
EMISSION FACTOR RATING: C

Pollutant	Industrial process furnaces				Domestic and commercial furnaces			
	Butane		Propane		Butane		Propane	
	lb/10^3 gal	kg/10^3 liters	lb/10^3 gal	kg/10^3 liters	lb/10^3 gal	kg/10^3 liters	lb/10^3 gal	kg/10^3 liters
Particulates	1.8	0.22	1.7	0.20	1.9	0.23	1.8	0.22
Sulfur oxides[b]	0.09S	0.09S	0.01S	0.01S	0.09S	0.01S	0.09S	0.01S
Carbon monoxide	1.6	0.19	1.5	0.18	2.0	0.24	1.9	0.23
Hydrocarbons	0.3	0.036	0.3	0.036	0.8	0.096	0.7	0.084
Nitrogen oxides[c]	12.1	1.45	11.2	1.35	(8 to 12)[d]	(1.0 to 1.5)[d]	(7 to 11)[d]	(0.8 to 1.3)[d]

[a]LPG emission factors calculated assuming emissions (excluding sulfur oxides) are the same, on a heat input basis, as for natural gas combustion.
[b]S equals sulfur content expressed in grains per 100 ft^3 gas vapor; e.g., if the sulfur content is 0.16 grain per 100 ft^3 (0.366 g/100 m^3) vapor, the SO_2 emission factor would be 0.09 x 0.16 or 0.014 lb SO_2 per 1000 gallons (0.01 x 0.366 or 0.0018 kg $SO_2/10^3$ liters) butane burned.
[c]Expressed as NO_2.
[d]Use lower value for domestic units and higher value for commercial units.

1.6 WOOD WASTE COMBUSTION IN BOILERS

1.6.1 General

Wood is no longer a primary source of heat energy; however, in certain industries such as lumber, furniture, and plywood, in which it is a readily available product, wood is a desirable fuel. The wood is used in the form of bark, hogged chips, shavings, and sawdust.

1.6.2 Firing Practices

In general, furnaces designed for the burning of wood waste are of three types: (1) pile, (2) thin-bed, and (3) cyclonic. These furnaces are usually water-cooled and can be modified to burn supplemental fuel with the wood.

In pile burning, the wood is fed through the furnace roof and burned in a cone-shaped pile on the grate. Thin-bed burning is accomplished on a moving grate similar to that of a spreader stoker. In a cyclone furnace, wood (especially bark) is usually burned with coal.

1.6.3 Emissions[1]

Excessive smoking results from improper grate maintenance of wood-burning furnaces, especially where coal is burned simultaneously with the wood. Another major factor affecting emissions is the water content of the wood refuse. This is not only a function of the absorptive property of the wood, but also a function of the process that produces the waste. Wet bark generally produces more emissions than kiln-dried lumber. Of minor importance, except as it reflects on the factor noted above, is the composition of the material being burned. For example, bark contains less carbon and nitrogen, but more sulfur, than wood. This difference, coupled with a high moisture content, is thought to account for the more severe dust and smoke problems associated with burning bark. Emission factors for the combustion of wood and bark in boilers are shown in Table 1.6-1.

Table 1.6-1. EMISSION FACTORS FOR WOOD AND BARK COMBUSTION IN BOILERS WITH NO REINJECTION[a,b]
EMISSION FACTOR RATING: C

Pollutant	Emissions	
	lb/ton	kg/MT
Particulates[c]	25 to 30	12.5 to 15.0
Sulfur oxides (SO_2)[d]	0 to 3	0.0 to 1.5
Carbon monoxide	2	1
Hydrocarbons[e]	2	1
Nitrogen oxides (NO_2)	10	5

[a]References 1 through 4.
[b]Approximately 50 percent moisture content.
[c]This number is the atmospheric emission factor without fly-ash reinjection. For boilers with reinjection, the particulate loadings reaching the control equipment are 30 to 35 lb/ton (15 to 17.5 kg/MT) fuel with 50 percent reinjection and 40 to 45 lb/ton (20 to 22.5 kg/MT) fuel with 100 percent reinjection.
[d]Use 0 for most wood and higher values for bark.
[e]Expressed as methane.

References for Section 1.6

1. Air Pollutant Emission Factors. Final Report. Resources Research, Inc. Reston, Va. Prepared for National Air Pollution Control Administration, Durham, N.C., under Contract Number CPA-22-69-119. April 1970.

2. Hough, G.W. and L.J. Gross. Air Emission Control in a Modern Pulp and Paper Mill. Amer. Paper Industry. *51*:36, February 1969.

3. Fryling, G.R. (ed.). Combustion Engineering. New York. 1967. p. 27-3.

4. Private communication on wood combustion with W.G. Tucker, Division of Process Control Engineering, U.S. DHEW, PHS, National Air Pollution Control Administration. Cincinnati, Ohio. November 19, 1968.

2. SOLID WASTE DISPOSAL

Revised by Robert Rosensteel

As defined in the Solid Waste Disposal Act of 1965, the term "solid waste" means garbage, refuse, and other discarded solid materials, including solid-waste materials resulting from industrial, commercial, and agricultural operations, and from community activities. It includes both combustibles and noncombustibles.

Solid wastes may be classified into four general categories: urban, industrial, mineral, and agricultural. Although urban wastes represent only a relatively small part of the total solid wastes produced, this category has a large potential for air pollution since in heavily populated areas solid waste is often burned to reduce the bulk of material requiring final disposal.[1] The following discussion will be limited to the urban and industrial waste categories.

An average of 5.5 pounds (2.5 kilograms) of urban refuse and garbage is collected per capita per day in the United States.[2] This figure does not include uncollected urban and industrial wastes that are disposed of by other means. Together, uncollected urban and industrial wastes contribute at least 4.5 pounds (2.0 kilograms) per capita per day. The total gives a conservative per capita generation rate of 10 pounds (4.5 kilograms) per day of urban and industrial wastes. Approximately 50 percent of all the urban and industrial waste generated in the United States is burned, using a wide variety of combustion methods with both enclosed and open burning[3]. Atmospheric emissions, both gaseous and particulate, result from refuse disposal operations that use combustion to reduce the quantity of refuse. Emissions from these combustion processes cover a wide range because of their dependence upon the refuse burned, the method of combustion or incineration, and other factors. Because of the large number of variables involved, it is not possible, in general, to delineate when a higher or lower emission factor, or an intermediate value should be used. For this reason, an average emission factor has been presented.

References

1. Solid Waste - It Will Not Go Away. League of Women Voters of the United States. Publication Number 675. April 1971.

2. Black, R.J., H.L. Hickman, Jr., A.J. Klee, A.J. Muchick, and R.D. Vaughan. The National Solid Waste Survey: An Interim Report. Public Health Service, Environmental Control Administration. Rockville, Md. 1968.

3. Nationwide Inventory of Air Pollutant Emissions, 1968. U.S. DHEW, PHS, EHS, National Air Pollution Control Administration. Raleigh, N.C. Publication Number AP-73. August 1970.

2.1 REFUSE INCINERATION

Revised by Robert Rosensteel

2.1.1 Process Description[1-4]

The most common types of incinerators consist of a refractory-lined chamber with a grate upon which refuse is burned. In some newer incinerators water-walled furnaces are used. Combustion products are formed by heating and burning of refuse on the grate. In most cases, since insufficient underfire (unde grate) air is provided to enable complete combustion, additional over-fire air is admitted above the burning waste to promote complete gas-phase combustion. In multiple-chamber incinerators, gases from the primary chamber flow to a small secondary mixing chamber where more air is admitted, and more complete oxidation occurs. As much as 300 percent excess air may be supplied in order to promote oxidation of combustibles. Auxiliary burners are sometimes installed in the mixing chamber to increase the combustion temperature. Many small-size incinerators are single-chamber units in which gases are vented from the primary combustion chamber directly into the exhaust stack. Single-chamber incinerators of this type do not meet modern air pollution codes.

2.1.2 Definitions of Incinerator Categories[1]

No exact definitions of incinerator size categories exist, but for this report the following general categories and descriptions have been selected:

1. *Municipal incinerators* – Multiple-chamber units often have capacities greater than 50 tons (45.3 MT) per day and are usually equipped with automatic charging mechanisms, temperature controls, and movable grate systems. Municipal incinerators are also usually equipped with some type of particulate control device, such as a spray chamber or electrostatic precipitator.

2. *Industrial/commercial incinerators* – The capacities of these units cover a wide range, generally between 50 and 4,000 pounds (22.7 and 1,800 kilograms) per hour. Of either single- or multiple-chamber design, these units are often manually charged and intermittently operated. Some industrial incinerators are similar to municipal incinerators in size and design. Better designed emission control systems include gas-fired afterburners or scrubbing, or both.

3. *Trench Incinerators* – A trench incinerator is designed for the combustion of wastes having relatively high heat content and low ash content. The design of the unit is simple: a U-shaped combustion chamber is formed by the sides and bottom of the pit and air is supplied from nozzles along the top of the pit. The nozzles are directed at an angle below the horizontal to provide a curtain of air across the top of the pit and to provide air for combustion in the pit. The trench incinerator is not as efficient for burning wastes as the municipal multiple-chamber unit, except where careful precautions are taken to use it for disposal of low-ash, high-heat-content refuse, and where special attention is paid to proper operation. Low construction and operating costs have resulted in the use of this incinerator to dispose of materials other than those for which it was originally designed. Emission factors for trench incinerators used to burn three such materials[7] are included in Table 2.1-1.

4. *Domestic incinerators* – This category includes incinerators marketed for residential use. Fairly simple in design, they may have single or multiple chambers and usually are equipped with an auxiliary burner to aid combustion.

Table 2.1-1. EMISSION FACTORS FOR REFUSE INCINERATORS WITHOUT CONTROLS[a]
EMISSION FACTOR RATING: A

Incinerator type	Particulates		Sulfur oxides[b]		Carbon monoxide		Hydrocarbons[c]		Nitrogen oxides[d]	
	lb/ton	kg/MT	lb/ton	kg/MT	lb/ton	kg/MT	lb/ton	kg/MT	lb/ton	kg/MT
Municipal[e]										
Multiple chamber, uncontrolled	30	15	2.5	1.25	35	17.5	1.5	0.75	3	1.5
With settling chamber and water spray system[f]	14	7	2.5	1.25	35	17.5	1.5	0.75	3	1.5
Industrial/commercial										
Multiple chamber[g]	7	3.5	2.5[h]	1.25	10	5	3	1.5	3	1.5
Single chamber[i]	15	7.5	2.5[h]	1.25	20	10	15	7.5	2	1
Trench[j]										
Wood	13	6.5	0.1[k]	0.05	NA[l]	NA	NA	NA	4	2
Rubber tires	138	69	NA	NA	NA	NA	NA	NA	NA	NA
Municipal refuse	37	18.5	2.5[h]	1.25	NA	NA	NA	NA	NA	NA
Controlled air[m]	1.4	0.7	1.5	0.75	Neg	Neg	Neg	Neg	10	5
Flue-fed single chamber[n]	30	15	0.5	0.25	20	10	15	7.5	3	1.5
Flue-fed (modified)[o,p]	6	3	0.5	0.25	10	5	3	1.5	10	5
Domestic single chamber										
Without primary burner[q]	35	17.5	0.5	0.25	300	150	100	50	1	0.5
With primary burner[r]	7	3.5	0.5	0.25	Neg	Neg	2	1	2	1
Pathological[s]	8	4	Neg	Neg	Neg	Neg	Neg	Neg	3	1.5

[a]Average factors given based on EPA procedures for incinerator stack testing.
[b]Expressed as sulfur dioxide.
[c]Expressed as methane.
[d]Expressed as nitrogen dioxide.
[e]References 5 and 8 through 14.
[f]Most municipal incinerators are equipped with at least this much control: see Table 2.1-2 for appropriate efficiencies for other controls.
[g]References 3, 5, 10, 13, and 15.
[h]Based on municipal incinerator data.
[i] References 3, 5, 10, and 15.
[j] Reference 7.
[k]Based on data for wood combustion in conical burners.
[l] Not available.
[m]Reference 9.
[n]References 3, 10, 11, 13, 15, and 16.
[o]With afterburners and draft controls.
[p]References 3, 11, and 15.
[q]References 5 and 10.
[r] Reference 5.
[s]References 3 and 9.

5. *Flue-fed incinerators* – These units, commonly found in large apartment houses, are characterized by the charging method of dropping refuse down the incinerator flue and into the combustion chamber. Modified flue-fed incinerators utilize afterburners and draft controls to improve combustion efficiency and reduce emissions.

6. *Pathological incinerators* – These are incinerators used to dispose of animal remains and other organic material of high moisture content. Generally, these units are in a size range of 50 to 100 pounds (22.7 to 45.4 kilograms) per hour. Wastes are burned on a hearth in the combustion chamber. The units are equipped with combustion controls and afterburners to ensure good combustion and minimal emissions.

7. *Controlled air incinerators* – These units operate on a controlled combustion principle in which the waste is burned in the absence of sufficient oxygen for complete combustion in the main chamber. This process generates a highly combustible gas mixture that is then burned with excess air in a secondary chamber, resulting in efficient combustion. These units are usually equipped with automatic charging mechanisms and are characterized by the high effluent temperatures reached at the exit of the incinerators.

2.1.3 Emissions and Controls[1]

Operating conditions, refuse composition, and basic incinerator design have a pronounced effect on emissions. The manner in which air is supplied to the combustion chamber or chambers has, among all the parameters, the greatest effect on the quantity of particulate emissions. Air may be introduced from beneath the chamber, from the side, or from the top of the combustion area. As underfire air is increased, an increase in fly-ash emissions occurs. Erratic refuse charging causes a disruption of the combustion bed and a subsequent release of large quantities of particulates. Large quantities of uncombusted particulate matter and carbon monoxide are also emitted for an extended period after charging of batch-fed units because of interruptions in the combustion process. In continuously fed units, furnace particulate emissions are strongly dependent upon grate type. The use of rotary kiln and reciprocating grates results in higher particulate emissions than the use of rocking or traveling grates.[14] Emissions of oxides of sulfur are dependent on the sulfur content of the refuse. Carbon monoxide and unburned hydrocarbon emissions may be significant and are caused by poor combustion resulting from improper incinerator design or operating conditions. Nitrogen oxide emissions increase with an increase in the temperature of the combustion zone, an increase in the residence time in the combustion zone before quenching, and an increase in the excess air rates to the point where dilution cooling overcomes the effect of increased oxygen concentration.[14]

Table 2.1-2 lists the relative collection efficiencies of particulate control equipment used for municipal incinerators. This control equipment has little effect on gaseous emissions. Table 2.1-1 summarizes the uncontrolled emission factors for the various types of incinerators previously discussed.

Table 2.1-2. COLLECTION EFFICIENCIES FOR VARIOUS TYPES OF MUNICIPAL INCINERATION PARTICULATE CONTROL SYSTEMS[a]

Type of system	Efficiency, %
Settling chamber	0 to 30
Settling chamber and water spray	30 to 60
Wetted baffles	60
Mechanical collector	30 to 80
Scrubber	80 to 95
Electrostatic precipitator	90 to 96
Fabric filter	97 to 99

[a]References 3, 5, 6, and 17 through 21.

References for Section 2.1

1. Air Pollutant Emission Factors. Final Report. Resources Research Incorporated, Reston, Virginia. Prepared for National Air Pollution Control Administration, Durham, N.C., under Contract Number CPA-22-69-119. April 1970.

2. Control Techniques for Carbon Monoxide Emissions from Stationary Sources. U.S. DHEW, PHS, EHS, National Air Pollution Control Administration. Washington, D.C. Publication Number AP-65. March 1970.

3. Danielson, J.A. (ed.). Air Pollution Engineering Manual. U.S. DHEW, PHS National Center for Air Pollution Control. Cincinnati, Ohio. Publication Number 999-AP-40. 1967. p. 413-503.

4. De Marco, J. et al. Incinerator Guidelines 1969. U.S. DHEW, Public Health Service. Cincinnati, Ohio. SW-13TS. 1969. p. 176.

5. Kanter, C. V., R. G. Lunche, and A.P. Fururich. Techniques for Testing for Air Contaminants from Combustion Sources. J. Air Pol. Control Assoc. *6(4)*:191-199. February 1957.

6. Jens. W. and F.R. Rehm. Municipal Incineration and Air Pollution Control. 1966 National Incinerator Conference, American Society of Mechnical Engineers. New York, May 1966.

7. Burkle, J.O., J. A. Dorsey, and B. T. Riley. The Effects of Operating Variables and Refuse Types on Emissions from a Pilot-Scale Trench Incinerator. Proceedings of the 1968 Incinerator Conference, American Society of Mechanical Engineers. New York. May 1968. p. 34-41.

8. Fernandes, J. H. Incinerator Air Pollution Control. Proceedings of 1968 National Incinerator Conference, American Society of Mechanical Engineers. New York. May 1968. p. 111.

9. Unpublished data on incinerator testing. U.S. DHEW, PHS, EHS, National Air Pollution Control Administration. Durham, N.C. 1970.

10. Stear, J. L. Municipal Incineration: A Review of Literature. Environmental Protection Agency, Office of Air Programs. Research Triangle Park, N.C. OAP Publication Number AP-79. June 1971.

11. Kaiser, E.R. et al. Modifications to Reduce Emissions from a Flue-fed Incinerator. New York University. College of Engineering. Report Number 552.2. June 1959. p. 40 and 49.

12. Unpublished data on incinerator emissions. U.S. DHEW, PHS, Bureau of Solid Waste Management. Cincinnati, Ohio. 1969.

13. Kaiser, E.R. Refuse Reduction Processes in Proceedings of Surgeon General's Conference on Solid Waste Management. Public Health Service. Washington, D.C. PHS Report Number 1729. July 10-20, 1967.

14. Nissen, Walter R. Systems Study of Air Pollution from Municipal Incineration. Arthur D. Little, Inc. Cambridge, Mass. Prepared for National Air Pollution Control Administration, Durham, N.C., under Contract Number CPA-22-69-23. March 1970.

15. Unpublished source test data on incinerators. Resources Research, Incorporated. Reston, Virginia. 1966-1969.

16. Communication between Resources Research, Incorporated, Reston, Virginia, and Maryland State Department of Health, Division of Air Quality Control, Baltimore, Md. 1969.

17. Rehm, F.R. Incinerator Testing and Test Results. J. Air Pol. Control Assoc. *6:*199-204. February 1957.

18. Stenburg, R.L. et al. Field Evaluation of Combustion Air Effects on Atmospheric Emissions from Municipal Incinerations. J. Air Pol. Control Assoc. *12:*83-89. February 1962.

19. Smauder, E.E. Problems of Municipal Incineration. (Presented at First Meeting of Air Pollution Control Association, West Coast Section, Los Angeles, California. March 1957.)

20. Gerstle, R. W. Unpublished data: revision of emission factors based on recent stack tests. U.S. DHEW, PHS, National Center for Air Pollution Control. Cincinnati, Ohio. 1967.

21. A Field Study of Performance of Three Municipal Incinerators. University of California, Berkeley, Technical Bulletin. *6:*41, November 1957.

2.2 AUTOMOBILE BODY INCINERATION

Revised by Robert Rosensteel

2.2.1 Process Description

Auto incinerators consist of a single primary combustion chamber in which one or several partially stripped cars are burned. (Tires are removed.) Approximately 30 to 40 minutes is required to burn two bodies simultaneously.[2] As many as 50 cars per day can be burned in this batch-type operation, depending on the capacity of the incinerator. Continuous operations in which cars are placed on a conveyor belt and passed through a tunnel-type incinerator have capacities of more than 50 cars per 8-hour day.

2.2.2 Emissions and Controls[1]

Both the degree of combustion as determined by the incinerator design and the amount of combustible material left on the car greatly affect emissions. Temperatures on the order of 1200°F (650°C) are reached during auto body incineration.[2] This relatively low combustion temperature is a result of the large incinerator volume needed to contain the bodies as compared with the small quantity of combustible material. The use of overfire air jets in the primary combustion chamber increases combustion efficiency by providing air and increased turbulence.

In an attempt to reduce the various air pollutants produced by this method of burning, some auto incinerators are equipped with emission control devices. Afterburners and low-voltage electrostatic precipitators have been used to reduce particulate emissions; the former also reduces some of the gaseous emissions.[3,4] When afterburners are used to control emissions, the temperature in the secondary combustion chamber should be at least 1500°F (815°C). Lower temperatures result in higher emissions. Emission factors for auto body incinerators are presented in Table 2.2-1.

Table 2.2-1. EMISSION FACTORS FOR AUTO BODY INCINERATION[a]
EMISSION FACTOR RATING: B

Pollutants	Uncontrolled		With afterburner	
	lb/car	kg/car	lb/car	kg/car
Particulates[b]	2	0.9	1.5	0.68
Carbon monoxide[c]	2.5	1.1	Neg	Neg
Hydrocarbons (CH_4)[c]	0.5	0.23	Neg	Neg
Nitrogen oxides (NO_2)[d]	0.1	0.05	0.02	0.01
Aldehydes (HCOH)[d]	0.2	0.09	0.06	0.03
Organic acids (acetic)[d]	0.21	0.10	0.07	0.03

[a]Based on 250 lb (113 kg) of combustible material on stripped car body.
[b]References 2 and 4.
[c]Based on data for open burning and References 2 and 5.
[d]Reference 3.

References for Section 2.2

1. Air Pollutant Emission Factors. Final Report. Resources Research Inc. Reston, Va. Prepared for National Air Pollution Control Administration, Durham, N.C., under Contract Number CPA-22-69-119. April 1970.

2. Kaiser, E.R. and J. Tolcias. Smokeless Burning of Automobile Bodies. J. Air Pol. Control Assoc. *12*:64-73, February 1962.

3. Alpiser, F.M. Air Pollution from Disposal of Junked Autos. Air Engineering. *10*:18-22, November 1968.

4. Private communication with D.F. Walters, U.S. DHEW, PHS, Division of Air Pollution. Cincinnati, Ohio. July 19, 1963.

5. Gerstle, R.W. and D.A. Kemnitz. Atmospheric Emissions from Open Burning. J. Air Pol. Control Assoc. *17*:324-327. May 1967.

2.3 CONICAL BURNERS

2.3.1 Process Description[1]

Conical burners are generally a truncated metal cone with a screened top vent. The charge is placed on a raised grate by either conveyor or bulldozer; however, the use of a conveyor results in more efficient burning. No supplemental fuel is used, but combustion air is often supplemented by underfire air blown into the chamber below the grate and by overfire air introduced through peripheral openings in the shell.

2.3.2 Emissions and Controls

The quantities and types of pollutants released from conical burners are dependent on the composition and moisture content of the charged material, control of combustion air, type of charging system used, and the condition in which the incinerator is maintained. The most critical of these factors seems to be the level of maintenance on the incinerators. It is not uncommon for conical burners to have missing doors and numerous holes in the shell, resulting in excessive combustion air, low temperatures, and, therefore, high emission rates of combustible pollutants.[2]

Particulate control systems have been adapted to conical burners with some success. These control systems include water curtains (wet caps) and water scrubbers. Emission factors for conical burners are shown in Table 2.3-1.

Table 2.3-1. EMISSION FACTORS FOR WASTE INCINERATION IN CONICAL BURNERS WITHOUT CONTROLS[a]
EMISSION FACTOR RATING: B

Type of waste	Particulates		Sulfur oxides		Carbon monoxide		Hydrocarbons		Nitrogen oxides	
	lb/ton	kg/MT	lb/ton	kg/MT	lb/ton	kg/MT	lb/ton	kg/MT	lb/ton	kg/MT
Municipal refuse[b]	20(10 to 60)[c,d]	10	2	1	60	30	20	10	5	2.5
Wood refuse[e]	1[f] 7[g] 20[h]	0.5 3.5 10	0.1	0.05	130	65	11	5.5	1	0.5

[a]Moisture content as fired is approximately 50 percent for wood waste.
[b]Except for particulates, factors are based on comparison with other waste disposal practices.
[c]Use high side of range for intermittent operations charged with a bulldozer.
[d]Based on Reference 3.
[e]References 4 through 9.
[f]Satisfactory operation: properly maintained burner with adjustable underfire air supply and adjustable, tangential overfire air inlets, approximately 500 percent excess air and 700°F (370°C) exit gas temperature.
[g]Unsatisfactory operation: properly maintained burner with radial overfire air supply near bottom of shell, approximately 1200 percent excess air and 400°F (204°C) exit gas temperature.
[h]Very unsatisfactory operation: improperly maintained burner with radial overfire air supply near bottom of shell and many gaping holes in shell, approximately 1500 percent excess air and 400°F (204°C) exit gas temperature.

References for Section 2.3

1. Air Pollutant Emission Factors. Final Report. Resources Research Inc. Reston, Va. Prepared for National Air Pollution Control Administration, Durham, N.C., under Contract Number CPA-22-69-119. April 1970.

2. Kreichelt, T.E. Air Pollution Aspects of Teepee Burners. U.S. DHEW, PHS, Division of Air Pollution. Cincinnati, Ohio. PHS Publication Number 999-AP-28. September 1966.

3. Magill, P.L. and R.W. Benoliel. Air Pollution in Los Angeles County: Contribution of Industrial Products. Ind. Eng. Chem. *44*:1347-1352, June 1952.

4. Private communication with Public Health Service, Bureau of Solid Waste Management, Cincinnati, Ohio. October 31, 1969.

5. Anderson, D.M., J. Lieben, and V.H. Sussman. Pure Air for Pennsylvania. Pennsylvania State Department of Health, Harrisburg. November 1961. p.98.

6. Boubel, R.W. et al. Wood Waste Disposal and Utilization. Engineering Experiment Station, Oregon State University, Corvallis. Bulletin Number 39. June 1958. p.57.

7. Netzley, A.B. and J.E. Williamson. Multiple Chamber Incinerators for Burning Wood Waste. In: Air Pollution Engineering Manual, Danielson, J.A. (ed.). U.S. DHEW, PHS, National Center for Air Pollution Control. Cincinnati, Ohio. PHS Publication Number 999-AP-40. 1967. p.436-445.

8. Droege, H. and G. Lee. The Use of Gas Sampling and Analysis for the Evaluation of Teepee Burners. Bureau of Air Sanitation, California Department of Public Health. (Presented at the 7th Conference on Methods in Air Pollution Studies, Los Angeles. January 1965.)

9. Boubel R.W. Particulate Emissions from Sawmill Waste Burners. Engineering Experiment Station, Oregon State University, Corvallis. Bulletin Number 42. August 1968. p.7,8.

2.4 OPEN BURNING

2.4.1 General[1]

Open burning can be done in open drums or baskets and in large-scale open dumps or pits. Materials commonly disposed of in this manner are municipal waste, auto body components, landscape refuse, agricultural field refuse, wood refuse, and bulky industrial refuse.

2.4.2 Emissions

Ground-level open burning is affected by many variables including wind, ambient temperature, composition and moisture content of the debris burned, size and shape of the debris burned, and compactness of the pile. In general, the relatively low temperatures associated with open burning increase the emission of particulates, carbon monoxide, and hydrocarbons and suppress the emission of nitrogen oxides. Sulfur oxide emissions are a direct function of the sulfur content of the refuse. Emission factors are presented in Table 2.4-1 for the open burning of three broad categories of waste: municipal refuse, automobile components, and horticultural refuse.

Table 2.4-1. EMISSION FACTORS FOR OPEN BURNING
EMISSION FACTOR RATING: B

Pollutant	Municipal refuse[a]	Automobile components[b,c]	Agricultural field burning[d]	Landscape refuse and pruning[d]	Wood[d] refuse
Particulates					
lb/ton	16	100	17	17	17
kg/MT	8	50	8.5	8.5	8.5
Sulfur oxides					
lb/ton	1	Neg	Neg	Neg	Neg
kg/MT	0.5	Neg	Neg	Neg	Neg
Carbon monoxide					
lb/ton	85	125	100	60	50
kg/MT	42.5	62.5	50	30	25
Hydrocarbons (CH_4)					
lb/ton	30	30	20	20	4
kg/MT	15	15	10	10	2
Nitrogen oxides					
lb/ton	6	4	2	2	2
kg/MT	3	2	1	1	1

[a]References 2 through 6.
[b]Upholstery , belts, hoses, and tires burned in common.
[c]Reference 2.
[d]References 2, 5, and 7 through 9.

References for Section 2.4

1. Air Pollutant Emission Factors. Final Report. Resources Research Inc., Reston, Va. Prepared for National Air Pollution Control Administration, Durham, N.C., under Contract Number CPA-22-69-119. April 1970.

2. Gerstle, R.W. and D.A. Kemnitz. Atmospheric Emissions from Open Burning. J. Air Pol. Control Assoc. *12*:324-327. May 1967.

3. Burkle, J.O., J.A. Dorsey, and B.T. Riley. The Effects of Operating Variables and Refuse Types on Emissions from a Pilot-Scale Trench Incinerator. Proceedings of 1968 Incinerator Conference, American Society of Mechanical Engineers. New York. May 1968. p.34-41.

4. Weisburd, M.I. and S.S. Griswold (eds.). Air Pollution Control Field Operations Guide: A Guide for Inspection and Control. U.S. DHEW, PHS, Division of Air Pollution. Washington, D.C. PHS Publication Number 937. 1962.

5. Unpublished data on estimated major air contaminant emissions. State of New York Department of Health. Albany. April 1, 1968.

6. Darley, E.F. et al. Contribution of Burning of Agricultural Wastes to Photochemical Air Pollution. J. Air Pol. Control Assoc. *16*:685-690, December 1966.

7. Feldstein, M. et al. The Contribution of the Open Burning of Land Clearing Debris to Air Pollution. J. Air Pol. Control Assoc. *13*:542-545, November 1963.

8. Boubel, R.W., E.F. Darley, and E.A. Schuck. Emissions from Burning Grass Stubble and Straw. J. Air Pol. Control Assoc. *19*:497-500, July 1969.

9. Waste Problems of Agriculture and Forestry. Environ. Sci. and Tech. *2*:498, July 1968.

3. INTERNAL COMBUSTION ENGINE SOURCES

The internal combustion engine in both mobile and stationary applications is a major source of air pollutant emissions. Internal combustion engines were responsible for approximately 73 percent of the carbon monoxide, 56 percent of the hydrocarbons, and 50 percent of the nitrogen oxides (NO_x as NO_2) emitted during 1970 in the United States.[1] These sources, however, are relatively minor contributors of total particulate and sulfur oxides emissions. In 1970, nationwide, internal combustion sources accounted for only about 2.5 percent of the total particulate and 3.4 percent of the sulfur oxides.[1]

The three major uses for internal combustion engines are: to propel highway vehicles, to propel off-highway vehicles, and to provide power from a stationary position. Associated with each of these uses are engine duty cycles that have a profound effect on the resulting air pollutant emissions from the engine. The following sections describe the many applications of internal combustion engines, the engine duty cycles, and the resulting emissions.

DEFINITIONS USED IN CHAPTER 3

Calendar year – a cycle in the Gregorian calendar of 365 or 366 days divided into 12 months beginning with January and ending with December.

Catalytic device – a piece of emission control equipment that is anticipated to be the major component used in post 1974 light-duty vehicles to meet the Federal emission standards.

Crankcase emissions – airborne substance emitted to the atmosphere from any portion of the crankcase ventilation or lubrication systems of a motor vehicle engine.

Deterioration factor – the ratio of the pollutant (p) exhaust emission rate at "x" miles to the pollutant (p) exhaust emission rate at 4000 miles.

Emission factor (highway vehicle) – the emissions of a vehicle (in grams/mile) that result from the product of the low mileage emission rate, the deterioration factor, and the speed adjustment factor.

Emission rate (highway vehicle) – the results (in grams/mile) of an emissions test on the 1975 Federal Test Procedure.

1975 Federal Test Procedure – the Federal motor vehicle emission test as described in the *Federal Register*, Vol. 36, Number 128, July 2, 1971.

Fuel evaporative emissions – vaporized fuel emitted into the atmosphere from the fuel system of a motor vehicle.

Heavy-duty vehicle – a motor vehicle either designated primarily for transportation of property and rated at more than 6000 pounds gross vehicle weight (GVW) or designed primarily for transportation of persons and having a capacity of more than 12 persons.

High-altitude emission rates – substantial changes in emission rates from gasoline-powered vehicles occur as altitude increases. These changes are caused by fuel metering enrichment because of decreasing density. No relationship between mass emissions and altitude has been developed. Tests have been conducted at near sea level and at approximately 5000 feet above sea level, however. Because most major U.S. urban areas at high altitude are close to 5000 feet, an arbitrary value of 3500 and above is used to define high-altitude cities.

Horsepower-hours – a unit of work.

Light-duty vehicle – any motor vehicle either designated primarily for transportation of property and rated at 6000 GVW or less or designated primarily for transportation of persons and having a capacity of 12 persons or less.

Model year – a motor vehicle manufacturer's annual production period. If a manufacturer has no annual production period, the term "model year" means a calendar year.

Model year mix – the distribution of vehicles registered by model year expresses as a fraction of the total vehicle population.

Nitrogen oxides – the sum of the nitric oxide and nitrogen dioxide contaminants in a gas sample expressed as if the nitric oxide were in the form of nitrogen dioxide. All nitrogen oxides values in this chapter are corrected for relative humidity.

Speed adjustment factor – the ratio of the pollutant (p) exhaust emission factor at speed "x" to the pollutant (p) exhaust emission factor as determined by the 1975 Federal Test Procedure (19.6 miles per hour).

Reference

1. Cavender, J., D.S. Kircher, and J.R. Hammerle. Nationwide Air Pollutant Trends (1940-1970). U.S. Environmental Protection Agency, Office of Air and Water Programs. Research Triangle Park, N.C. Publication Number AP-115. April 1973.

3.1 HIGHWAY VEHICLES

by David S. Kircher

Passenger cars and light trucks, heavy-duty trucks, and motorcycles comprise the three main categories of highway vehicles. Within each of these categories, powerplant and fuel variations result in significantly different emission characteristics. For example, passenger cars may be powered by gasoline or diesel fuel or operate on a gaseous fuel such as compressed natural gas (CNG). Similarly, a motorcycle may have either a four-stroke or a two-stroke engine.

Highway vehicle emission factors are presented in two forms in this chapter. Section 3.1.1 contains average emission factors based on statistical information for all major types of highway vehicles combined (i.e. light- and heavy-duty, gasoline-powered vehicles and heavy-duty, diesel-powered vehicles). These values are presented in grams of pollutant per mile traveled (and in grams of pollutant per kilometer). The emission factors given in sections 3.1.2 through 3.1.7 are for individual classes of highway vehicles and their application may require the acquisition of statistical data specific to the area for which emission factors are desired. These additional data may include vehicle registrations by model year and annual vehicle travel in miles or kilometers by vehicle class (e.g. heavy-duty diesels, two-stroke motorcycles, light-duty CNG-powered vehicles, etc.)

It is important to note that highway vehicle emission factors change with time and, therefore, must be calculated for a specific time period, normally 1 calendar year. The major reason for this time dependence is the gradual replacement of vehicles without emission control equipment by vehicles with control equipment.

3.1.1 Average Emission Factors for Highway Vehicles

by David S. Kircher

3.1.1.1 General – Emission factors in this section update emission factors for gasoline-powered motor vehicles presented in the February 1972 *Compilation of Air Pollutant Emission Factors.*[1] These new factors are based on nationwide statistical data for light-duty, gasoline-powered vehicles; heavy-duty, gasoline-powered vehicles; and heavy-duty, diesel-powered vehicles. Average emission factors are intended to assist those individuals interested in compiling approximate emission estimates for large areas, such as an individual state or the nation. The emission factor calculation techniques presented in sections 3.1.2 through 3.1.7 of this chapter are strongly recommended for the formulation of localized emission estimates required for air quality modeling or for the evaluation of air pollutant control strategies.

3.1.1.2 Emissions – Average emission factors by calendar year based on statistical data for the United States are presented in Table 3.1.1-1. These factors were calculated using the techniques described in sections 3.1.2, 3.1.4, and 3.1.5 of this chapter. Because the majority of highway vehicle emissions are produced (on a nationwide basis) by gasoline-powered light-duty vehicles and heavy-duty, gasoline- and diesel-powered vehicles, these are the only vehicles considered in Table 3.1.1-1. The emission contribution from diesel-powered, light-duty vehicles, from gaseous-fuel-powered vehicles, and from motorcycles is assumed to be insignificant for the purpose of developing these approximate factors.

The exhaust emission values presented in Table 3.1.1-1 for carbon monoxide, hydrocarbons, and nitrogen oxides are for an average speed of approximately 19.6 mi/hr (31.5 km/hr). These values can be modified to make them representative of the area for which emission estimates are being prepared, by using the average speed adjustment factors contained in Figure 3.1.1-1. For example, if carbon monoxide emissions in 1970 are to be estimated for a state where the average speed is 35 mi/hr, the appropriate emission factor would be 0.6 times 78 or 47 grams per mile. This value would then be multiplied by the total vehicle miles of travel (VMT) to arrive at a carbon monoxide emission estimate.

Crankcase and evaporative hydrocarbons, particulate, and sulfur oxide emission factors are average values that can be considered independent of speed. Emission estimates for these pollutants are calculated by simply multiplying the VMT by the emission factor.

Note: The emission factor data presented for highway vehicles in this chapter are based on a generalized test cycle that involves operation typical of every-day driving patterns. Because this driving cycle is intended to represent typical driving, it cannot apply in specific instances, i.e. to a particular segment of a particular roadway at a particular time. In order to estimate vehicular emissions under a specific set of conditions, "modal" emission factor data are required. Driving modes include: idle, constant speed, acceleration, and deceleration. Because all driving patterns can be divided into one of these four modes, emissions can be determined by summing the modal emissions for a particular driving pattern.

The Environmental Protection Agency is currently evaluating the use of modal emission data. Emission data for idle, various constant speeds, and various initial and final speeds (accelerations and decelerations) are being collected and analyzed. It is anticipated that these data will be published in Sections 3.1.2 and 3.1.4 in subsequent revisions of this publication. Modal data for light-duty vehicles (Section 3.1.2) will be published during 1973, and data for heavy-duty gasoline vehicles will be published at a later date.

Table 3.1.1-1. AVERAGE EMISSION FACTORS FOR HIGHWAY VEHICLES BASED ON NATIONWIDE STATISTICS[a]

Year	Carbon monoxide		Hydrocarbons: Exhaust		Hydrocarbons: Crankcase and evaporation		Nitrogen oxides (NO_x as NO_2)		Particulates: Exhaust		Particulates: Tire wear		Sulfur oxides (SO_2)	
	g/mi	g/km	g/mi	g/km	g/mi	g/km	g/mi	g/km	g/mi	g/km	g/mi	g/km	g/mi	g/km
1965	89	55	9.2	5.7	5.8	3.6	4.8	3.0	0.38	0.24	0.20	0.12	0.20	0.12
1970	78	48	7.8	4.8	3.9	2.4	5.3	3.3	0.38	0.24	0.20	0.12	0.20	0.12
1971	74	46	7.2	4.5	3.5	2.2	5.4	3.4	0.38	0.24	0.20	0.12	0.20	0.12
1972	68	42	6.6	4.1	2.9	1.8	5.4	3.4	0.38	0.24	0.20	0.12	0.20	0.12
1973	62	39	6.1	3.8	2.4	1.5	5.4	3.4	0.38	0.24	0.20	0.12	0.20	0.12
1974	56	35	5.5	3.4	2.0	1.2	5.2	3.2	0.38	0.24	0.20	0.12	0.20	0.12
1975	50	31	4.9	3.0	1.5	0.93	4.9	3.0	0.38	0.24	0.20	0.12	0.20	0.12
1976	42	26	4.2	2.6	1.3	0.81	4.7	2.9	0.38	0.24	0.20	0.12	0.20	0.12
1977	36	22	3.6	2.2	1.0	0.62	4.2	2.6	0.38	0.24	0.20	0.12	0.20	0.12
1978	31	19	3.1	1.9	0.83	0.52	3.7	2.3	0.38	0.24	0.20	0.12	0.20	0.12
1979	26	16	2.7	1.7	0.67	0.42	3.4	2.1	0.38	0.24	0.20	0.12	0.20	0.12
1980	22	14	2.4	1.5	0.53	0.33	3.1	1.9	0.38	0.24	0.20	0.12	0.20	0.12
1990	14	8.7	1.6	0.99	0.38	0.24	2.2	1.4	0.38	0.24	0.20	0.12	0.20	0.12

[a]Based on sections 3.1.2, 3.1.4, and 3.1.5 and on References 2 through 4.

NOTE: This table does not reflect interim standards promulgated by the EPA Administrator on April 11, 1973. These standards will be incorporated in the next revision to this section.

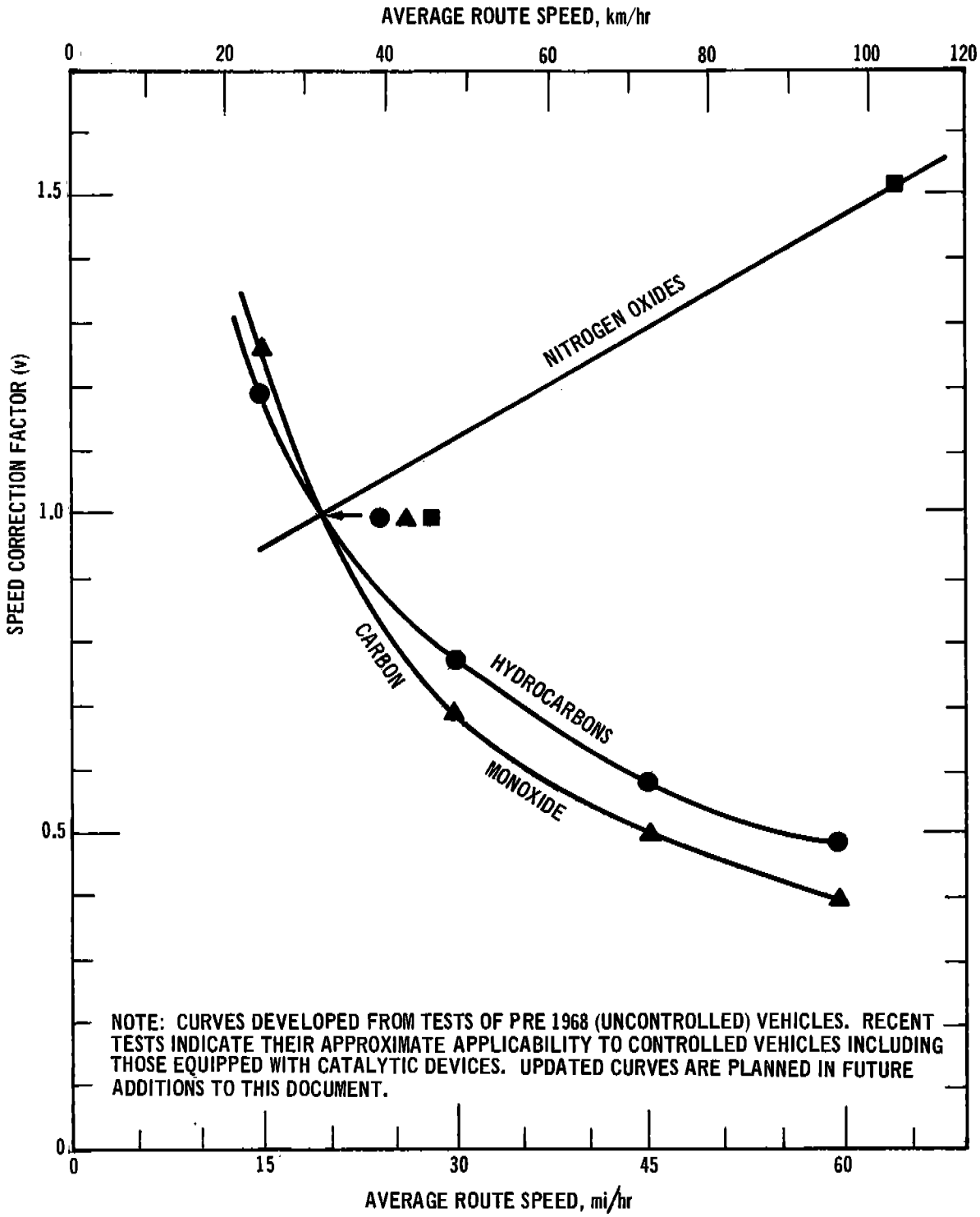

Figure 3.1.1-1. Average speed correction factors for all model years.[5-7]

References for Section 3.1.1

1. Compilation of Air Pollutant Emission Factors. U.S. Environmental Protection Agency, Office of Air Programs. Research Triangle Park, N.C. Publication Number AP-42. February 1972.

2. Highway Statistics 1970. U.S. Department of Transportation, Federal Highway Administration. Washington, D.C. 1971.

3. Census of Transportation – Truck Inventory and Use Survey. U.S. Department of Commerce, Bureau of the Census. Washington, D.C. July 1970.

4. Automotive Facts and Figures. Automobile Manufacturers Association. Washington, D.C. July 1970.

5. McMichael, W.F. and A.H. Rose, Jr. A Comparison of Emissions from Automobiles in Cities at Two Different Altitudes. U.S. Department of Health, Education and Welfare, Public Health Service. Cincinnati, Ohio. July 1965.

6. Study of Emissions from Light-Duty Vehicles in Six Cities. Automotive Environmental Systems Inc. San Bernadino, Calif. Prepared for the Environmental Protection Agency, Research Triangle Park, N.C., under Contract Number 68-04-0042. June 1972.

7. Walsh, M.P., Unpublished data on emissions from a catalyst-equipped light duty vehicle. The City of New York Department of Air Resources, Bureau of Motor Vehicle Pollution Control. New York, N.Y. November 1972.

3.1.2 Light-Duty, Gasoline-Powered Vehicles

by David S. Kircher

3.1.2.1 General – Because of their widespread use, light-duty, gasoline-powered highway vehicles are responsible for a large percentage of the total emissions from highway vehicles on a nationwide as well as on a regionwide basis. The information contained in this section permits the calculation of emission factors for this class of highway vehicles operated in a specific geographic area under study. Section 3.1.1 provided generalized emission factors for all highway vehicles combined; this section provides the information necessary to *calculate* emission factors for one class of vehicles by using the technique outlined below.

3.1.2.2 Carbon Monoxide, Hydrocarbon, and Nitrogen Oxide Emissions – The calculation of light-duty vehicle exhaust emission factors for carbon monoxide, hydrocarbons, and nitrogen oxides can be expressed mathematically as:

$$e_{np} = \sum_{i=n-12}^{n+1} c_i \, d_i \, m_i \, s_i \qquad (1)$$

where: e_{np} = Emission factor in grams per vehicle mile for calendar year (n), and pollutant (p)

c_i = The 1975 Federal test procedure emission rate for pollutant (p) in g/mi for the ith model year at low mileage [1,2]

d_i = The controlled vehicle pollutant (p) emission deterioration factor for the ith model year at calendar year (n)

m_i = The weighted annual travel of the ith model year during calendar year (n). The determination of this variable involves the use of the vehicle model year distribution

s_i = The weighted speed adjustment factor for the ith model year vehicles

In addition to exhaust emission factors, the calculation of hydrocarbon emissions from gasoline motor vehicles involves evaporative and crankcase hydrocarbon emission rates. Evaporation and crankcase emissions can be determined using:

$$f_n = \sum_{i=n-12}^{n+1} h_i \, m_i \qquad (2)$$

where: f_n = The combined evaporative and crankcase hydrocarbon emission factor for calendar year (n)

h_i = The combined evaporative and crankcase emission rate for the ith model year

m_i = The weighted annual travel of the ith model year during calendar year (n)

A brief discussion of each of the variables presented in the above equations is necessary to help clarify their formulation and use. These discussions amplify the definitions at the beginning of the chapter.

Test cycle emission rates (c and h). A recent study of light-duty vehicle exhaust emission rates in six cities resulted in the data for 1971 and earlier model years that are presented in Tables 3.1.2-1 and 3.1.2-2.[3] Emission

Table 3.1.2-1. CARBON MONOXIDE, HYDROCARBON, AND NITROGEN OXIDE EMISSION FACTORS FOR LIGHT-DUTY VEHICLES AT LOW AND HIGH ALTITUDE[a]

EMISSION FACTOR RATING: A

Location and pollutant	Exhaust emission factors at low mileage per model year[b]								
	Pre 1968	1968	1969	1970	1971	1972[c]	1973 through 1974[c]	1975[d]	Post 1975[d]
Low altitude (excluding Calif.)									
Carbon monoxide									
g/mi	87	46	39	36	34	19	19	1.8	1.8
g/km	54	29	24	22	21	12	12	1.1	1.1
Exhaust hydrocarbons									
g/mi	8.8	4.5	4.4	3.6	2.9	2.7	2.7	0.23	0.23
g/km	5.5	2.8	2.7	2.2	1.8	1.7	1.7	0.14	0.14
Nitrogen oxides									
g/mi	3.6	4.3	5.5	5.1	4.8	4.8	2.3	2.3	0.31
g/km	2.2	2.7	3.4	3.2	3.0	3.0	1.4	1.4	0.19
High altitude (excluding Calif.)									
Carbon monoxide									
g/mi	130	74	48	72	75	42	42	1.8	1.8
g/km	81	46	30	45	47	26	26	1.1	1.1
Exhaust hydrocarbons									
g/mi	10	6.0	5.4	6.1	5.3	4.9	4.9	0.23	0.23
g/km	6.2	3.7	3.4	3.8	3.3	3.0	3.0	0.14	0.14
Nitrogen oxides									
g/mi	1.9	2.2	2.6	2.8	3.1	3.1	1.4	1.4	0.31
g/km	1.2	1.4	1.6	1.7	1.9	1.9	0.87	0.87	0.19

[a] References 2 through 6.
[b] Pre-1968 results are not at low mileage but are arithmetic means of tests of a random sample of vehicles. There is no reason to present low mileage emission rates for pre-1968 vehicles because they are not subject to exhaust control device deterioration.
[c] Estimates based on the relationship of low mileage emissions to standards for 1971 and earlier controlled vehicles.
[d] Based on estimates in Reference 6.

Table 3.1.2-2. CARBON MONOXIDE, HYDROCARBON, AND NITROGEN OXIDES EMISSION FACTORS FOR LIGHT-DUTY VEHICLES, STATE OF CALIFORNIA ONLY[a]

EMISSION FACTOR RATING: A

Pollutant	Exhaust emission factors at low mileage per model year[b]										
	Pre 1966	1966	1967	1968	1969	1970	1971	1972[c]	1973 through 1974	1975	Post 1975[d]
Carbon monoxide											
g/mi	87	51	50	46	39	36	34	19	19	1.8	1.8
g/km	54	32	31	29	24	22	21	12	12	1.1	1.1
Exhaust hydrocarbons											
g/mi	8.8	6.0	4.6	4.5	4.4	3.6	2.9	2.7	2.7	0.23	0.23
g/km	5.5	3.7	2.9	2.8	2.7	2.2	1.8	1.7	1.7	0.14	0.14
Nitrogen oxides											
g/mi	3.6	3.4	3.4	4.3	5.5	5.1	3.5	3.5	2.3	2.3	0.31
g/km	2.2	2.1	2.1	2.7	3.4	3.2	2.2	2.2	1.4	1.4	0.19

[a] References 2 through 6.
[b] Pre-1968 results are not at low mileage but are arithmetic means of tests of a random sample of vehicles. There is no reason to present low mileage emission rates for pre-1968 vehicles because they are not subject to exhaust control device deterioration.
[c] Estimates based on the relationship of low mileage emissions to standards for 1971 and earlier controlled vehicles.
[d] Based on estimates in Reference 5. These are not test results.

Table 3.1.2-3. LIGHT-DUTY VEHICLE CRANKCASE AND EVAPORATIVE HYDROCARBON EMISSIONS BY MODEL YEAR FOR ALL AREAS EXCEPT CALIFORNIA[a]
EMISSION FACTOR RATING: C

Model year	Hydrocarbons	
	g/mi	g/km
Pre-1963	7.1	4.4
1963 through 1967	3.8	2.4
1968 through 1970	3.0	1.9
1971	0.5	0.3
1972	0.2	0.1
Post-1972	0.2	0.1

[a] Reference 7.

Table 3.1.2-4. LIGHT-DUTY VEHICLE CRANKCASE AND EVAPORATIVE HYDROCARBON EMISSIONS BY MODEL YEAR FOR CALIFORNIA[a]
EMISSION FACTOR RATING: C

Model year	Hydrocarbons	
	g/mi	g/km
Pre-1961	7.1	4.4
1961 through 1963	3.8	2.4
1964 through 1967	3.0	1.9
1968 through 1969	3.0	1.9
1970 through 1971	0.5	0.3
1972	0.2	0.1
Post- 1972	0.2	0.1

[a] Reference 7.

rates for 1972 and later vehicles in these tables are based primarily on the applicable California and Federal emission standards. These standards were modified to reflect low-mileage emission rates using information provided in the references.[4,5] Reference 4 also provided the information necessary to modify the 1971 and earlier test results to low-mileage emission rates. Evaporative and crankcase hydrocarbon emission values are shown in Tables 3.1.2-3 and 3.1.2-4. Test cycle emission rates are presented for both low and high altitudes (exhaust emissions) and for California and all areas except California (exhaust, evaporative, and crankcase emissions). High-altitude areas are considered separately because of the significant impact altitude has on carbon monoxide, hydrocarbon, and nitrogen oxide exhaust emissions. California is considered separately because emission control standards were implemented there on a different and somewhat more accelerated schedule than were the Federal emission standards.

Deterioration factors (d). Exhaust deterioration factors for emission controlled vehicles by model year and pollutant are presented in Tables 3.1.2-5 and 3.1.2-6. Deterioration factors enable the modification of low mileage emission rates to account for the ageing or deterioration of exhaust emission control devices. The deterioration rates presented were derived primarily from testing done by the California Air Resources Board.[4]

Weighted annual mileage (m). The determination of the weighted annual mileage is best illustrated by the example in Table 3.1.2-7. In this example, the model year distribution as of July 1 (in this case nationwide) is combined with nationwide annual travel by model year, unless localized annual mileages by model year are available. In the calculation of city-specific emission factors, the model year distribution for the area under consideration should be obtained from registration statistics and combined with the annual mileages as in Table 3.1.2-7.

Weighted speed adjustment factor (s). The weighted speed adjustment factor enables the calculation of a region-wide emission factor that takes into account variation in average route speed. This variable is calculated using:

$$s_i = \sum_{j=1}^{n} f_j v_j \qquad (3)$$

where: s_i = The weighted speed adjustment factor for the ith model year

f_j = The fraction of total annual vehicle miles traveled at speed (j)

v_j = The vehicular average speed correction factor for average speed (j)

The values for the vehicular speed adjustment factor (v) are contained in Figure 3.1.1-1.

3.1.2.3 Particulate and Sulfur Oxide Emissions – Light-duty, gasoline-powered vehicles emit relatively small quantities of particulate and sulfur oxides in comparison with the three pollutants discussed above. For this reason, average rather than calculated emission factors should be sufficiently accurate for approximating particulate and sulfur oxide emissions from light-duty, gasoline-powered vehicles. Average emission factors for these pollutants are presented in Table 3.1.2-8. No Federal standards for these two pollutants are presently in effect, although many areas do have opacity (antismoke) regulations applicable to motor vehicles.

Table 3.1.2-5. CARBON MONOXIDE, EXHAUST HYDROCARBON, AND NITROGEN OXIDES DETERIORATION FACTORS (d) FOR LIGHT-DUTY, GASOLINE-POWERED VEHICLES IN ALL AREAS EXCEPT CALIFORNIA[a]

Pollutant and model year	Vehicle age, years									
	0	1	2	3	4	5	6	7	8	≥9
Carbon monoxide										
Pre-1968[b]	1.00	1.00	1.00	1.00	1.00	1.00	1.00	1.00	1.00	1.00
1968	1.00	1.24	1.35	1.41	1.47	1.53	1.58	1.63	1.67	1.72
1969	1.00	1.42	1.53	1.59	1.63	1.68	1.71	1.75	1.79	1.82
1970 through 1974[c]	1.00	1.18	1.32	1.38	1.40	1.44	1.47	1.50	1.51	1.56
1975[d]	1.00	1.34	1.77	2.14	2.42	2.73	2.99	3.26	3.48	3.77
Post-1975[d]	1.00	1.34	1.77	2.14	2.42	2.73	2.99	3.26	3.48	3.77
Exhaust hydrocarbon										
Pre-1968[b]	1.00	1.00	1.00	1.00	1.00	1.00	1.00	1.00	1.00	1.00
1968	1.00	1.12	1.18	1.21	1.23	1.26	1.28	1.30	1.32	1.35
1969	1.00	1.10	1.16	1.18	1.21	1.23	1.25	1.28	1.29	1.31
1970 through 1974[c]	1.00	1.05	1.10	1.13	1.15	1.17	1.20	1.22	1.24	1.26
1975[d]	1.00	1.45	1.95	2.40	2.76	3.14	3.46	3.79	4.07	4.42
Post-1975[d]	1.00	1.45	1.95	2.40	2.76	3.14	3.46	3.79	4.07	4.42
Nitrogen oxides										
Pre-1973[b]	1.00	1.00	1.00	1.00	1.00	1.00	1.00	1.00	1.00	1.00
1973 through 1975[e]	1.00	1.11	1.18	1.20	1.21	1.22	1.23	1.24	1.25	1.26
Post-1975[d]	1.00	1.34	1.77	2.14	2.42	2.73	2.99	3.26	3.48	3.77

[a]References 4 and 5.
[b] Values of unity are given for Pre-1968 vehicles because they were not equipped with exhaust control devices and, therefore, are not subject to exhaust control device deterioration. Deterioration in the emission performance of pre-1968 vehicles because of poor maintenance, age, etc., is taken into account by their emission factors, which are based on a random sample of vehicles.
[c] Based on test results for 1970 model year vehicles.
[d]Based on Reference 5. Deterioration factors based on tests of prototype 1975-1976 model year vehicles.
[e] Based on test results for 1971 (California) model year vehicles.

Table 3.1.2-6. CARBON MONOXIDE, EXHAUST HYDROCARBON, AND NITROGEN OXIDES DETERIORATION FACTORS (d) FOR LIGHT-DUTY, GASOLINE-POWERED VEHICLES IN CALIFORNIA[a]

Pollutant and model year	Vehicle age, years									
	0	1	2	3	4	5	6	7	8	≥9
Carbon monoxide										
Pre-1966[b]	1.00	1.00	1.00	1.00	1.00	1.00	1.00	1.00	1.00	1.00
1966	1.00	1.13	1.21	1.24	1.25	1.28	1.29	1.31	1.32	1.34
1967	1.00	1.11	1.18	1.23	1.29	1.35	1.40	1.46	1.50	1.56
1968	1.00	1.24	1.35	1.41	1.47	1.53	1.58	1.63	1.67	1.72
1969	1.00	1.42	1.53	1.59	1.63	1.68	1.71	1.75	1.79	1.82
1970 through 1974[c]	1.00	1.18	1.32	1.38	1.40	1.44	1.47	1.50	1.51	1.56
1975[d]	1.00	1.34	1.77	2.14	2.42	2.73	2.99	3.26	3.48	3.77
Post-1975[d]	1.00	1.34	1.77	2.14	2.42	2.73	2.99	3.26	3.48	3.77
Hydrocarbon										
Pre-1966[b]	1.00	1.00	1.00	1.00	1.00	1.00	1.00	1.00	1.00	1.00
1966	1.00	1.14	1.22	1.25	1.27	1.29	1.30	1.32	1.35	1.35
1967	1.00	1.07	1.10	1.12	1.14	1.15	1.17	1.18	1.20	1.21
1968	1.00	1.12	1.18	1.21	1.23	1.26	1.28	1.30	1.32	1.35
1969	1.00	1.10	1.16	1.18	1.21	1.23	1.25	1.28	1.29	1.31
1970 through 1974[c]	1.00	1.05	1.10	1.13	1.15	1.17	1.20	1.22	1.24	1.26
1975[d]	1.00	1.45	1.95	2.40	2.76	3.14	3.46	3.79	4.07	4.42
Post-1975[d]	1.00	1.45	1.95	2.40	2.76	3.14	3.46	3.79	4.07	4.42
Nitrogen oxides										
Pre-1970[b]	1.00	1.00	1.00	1.00	1.00	1.00	1.00	1.00	1.00	1.00
1971 through 1975[e]	1.00	1.11	1.18	1.20	1.21	1.22	1.23	1.24	1.25	1.26
Post-1975[d]	1.00	1.34	1.77	2.14	2.42	2.73	2.99	3.26	3.48	3.77

[a]References 4 and 5.

[b] Values of unity are given for these model years because the vehicles were not equipped with exhaust control devices and, therefore, are not subject to exhaust control device deterioration. Deterioration in the emission performance of these vehicles because of poor maintenance, age, etc., is taken into account by their emission factors, which are based on a random sample of vehicles.

[c] Based on test results for 1970 model year vehicles.

[d]Based on Reference 5. Deterioration factors based on tests of prototype 1975-1976 model year vehicles.

[e] Based on test results for 1971 (California) model year vehicles.

Table 3.1.2-7. SAMPLE CALCULATION OF WEIGHTED LIGHT-DUTY VEHICLE ANNUAL TRAVEL[a]

Age, years	Fraction of total vehicles in use nationwide (a)[b]	Average annual miles driven (b)[c]	a x b	Annual travel (m)[d]
0[e]	0.000	15,900	0	0.000
1	0.078	15,900	1,240	0.107
2	0.116	15,000	1,740	0.151
3	0.110	14,000	1,540	0.133
4	0.098	13,100	1,284	0.111
5	0.106	12,200	1,293	0.112
6	0.106	11,300	1,198	0.104
7	0.088	10,300	906	0.078
8	0.078	9,400	733	0.063
9	0.063	8,500	536	0.046
10	0.041	7,600	312	0.027
11	0.035	6,700	235	0.020
12	0.021	6,700	141	0.012
≥13	0.060	6,700	402	0.036

[a]References 8 and 9.
[b]These data are for July 1, 1970, from Reference 8 and represent the U.S. population of light-duty vehicles by model year.
[c]Mileage values are the results of at least squares analysis of data in Reference 9.

[d] $m = \frac{ab}{\Sigma ab}$.

[e]Refers to "next" year's models introduced in the fall.

Table 3.1.2-8. PARTICULATE AND SULFUR OXIDES EMISSION FACTORS FOR LIGHT-DUTY, GASOLINE-POWERED VEHICLES
EMISSION FACTOR RATING: C

Pollutant	Emissions	
	g/mi	g/km
Particulate[a]		
Exhaust	0.34	0.21
Tire wear	0.20	0.12
Sulfur oxides[b] (SO_x as SO_2)	0.13	0.08

[a]References 10, 11, and 12.
[b]Based on an average fuel consumption of 13.6 mi/gal (5.8 km/liter) from Reference 8 and on the use of a fuel with a 0.032 percent sulfur content from References 13 through 15, and a density of 6.1 lb/gal (0.73 kg/liter) from References 13 and 14.

References for Section 3.1.2

1. Control of Air Pollution from New Motor Vehicles and New Motor Vehicle Engines. Federal Register. Part II. *35*(219):17288-17313, November 10, 1970.

2. Exhaust Emission Standards and Test Procedures. Federal Register. Part II. *36*(128):12652-12664. July 2, 1971.

3. Study of Emissions from Light-Duty Vehicles in Six Cities. Automotive Environmental Systems, Inc. San Bernadino, Calif. Prepared for the Environmental Protection Agency, Research Triangle Park, N.C., under Contract Number 68-04-0042. June 1971.

4. Hocker, A.J. Exhaust Emissions from Privately Owned 1966-70 California Automobiles - A Statistical Evaluation of Surveillance Data. California Air Resources Laboratory. Los Angeles, Calif. July 1971.

5. Semiannual Report by the Committee on Motor Vehicle Emissions of the National Academy of Sciences to the Environmental Protection Agency. National Academy of Sciences. Washington, D.C. January 1972.

6. McMichael, W.F. and A.H. Rose, Jr. A Comparison of Emissions from Automobiles in Cities at Two Different Altitudes. U.S. Department of Health, Education and Welfare, Public Health Service. Cincinnati, Ohio. July 1965.

7. Sigworth, H.W., Jr. Estimates of Motor Vehicle Emission Rates. Internal document Environmental Protection Agency, Research Triangle Park, N.C. March 1971.

8. Automobile Facts and Figures. Automobile Manufacturers Association. Washington, D.C. 1971.

9. Strate, H.E. Nationwide Personal Transportation Study - Annual Miles of Automobile Travel. Report Number 2. U.S. Department of Transportation, Federal Highway Administration. Washington, D.C. April 1972.

10. Control Techniques for Particulate Air Pollutants. U.S. Department of Health, Education and Welfare. National Air Pollution Control Administration. Washington, D.C. Publication Number AP-51, January 1969.

11. Ter Haar, G.L., D.L. Lenare, J.N. Hu, and M. Brandt. Composition, Size and Control of Automotive Exhaust Particulates. J. Air Pol. Control Assoc. *22*:39-46, January 1972.

12. Subramani, J.P. Particulate Air Pollution from Automobile Tire Tread Wear. Ph.D. Dissertation. University of Cincinnati. Cincinnati, Ohio. May 1971.

13. Shelton, E.M. and C.M. McKinney. Motor Gasolines, Winter 1970-1971. U.S. Department of the Interior, Bureau of Mines. Bartlesville, Okla. June 1971.

14. Shelton, E.M. Motor Gasolines, Summer 1971. U.S. Department of the Interior, Bureau of Mines. Bartlesville, Okla. January 1972.

15. Automotive Fuels and Air Pollution. U.S. Department of Commerce Report of the Panel on Automotive Fuels and Air Pollution. Washington, D.C. March 1971.

3.1.3 Light-Duty, Diesel-Powered Vehicles

by David S. Kircher

3.1.3.1 General – In comparison with the conventional, "uncontrolled," gasoline-powered, spark-ignited, automotive engine, the uncontrolled diesel automotive engine is a low pollution powerplant. In its uncontrolled form, the diesel engine emits (in grams per mile) considerably less carbon monoxide and hydrocarbons and somewhat less nitrogen oxides than a comparable uncontrolled gasoline engine. A relatively small number of light-duty diesels are in use in the United States.

3.1.3.2 Emissions – Carbon monoxide, hydrocarbons, and nitrogen oxides emission factors for the light-duty, diesel-powered vehicle are shown in Table 3.1.3-1. These factors are based on tests of several Mercedes 220D automobiles using a slightly modified version of the Federal light-duty vehicle test procedure.[1,2] Available automotive diesel test data are limited to these results. No data are available on emissions versus average speed nor are data available for deterioration of 1976 and later controlled diesels. Emissions from light-duty diesel vehicles during a calendar year (n) and for a pollutant (p) can be approximately calculated using:

$$e_{np} = \sum_{i=n-12}^{n+1} c_i f_i \qquad (1)$$

where: e_{np} = Emission factor in grams per vehicle mile for calendar year (n) and pollutant (p)

c_i = The 1975 Federal test procedure emission rate for pollutant (p) in grams/mile for the ith model year at calendar year (n) (Table 3.1.3-1)

f_i = The fraction of total light-duty diesel vehicle miles driven by the ith model year diesel light-duty vehicles

Details of this calculation technique are discussed in section 3.1.2.

The emission factors in Table 3.1.3-1 for particulates and sulfur oxides were developed using an average sulfur content fuel in the case of sulfur oxides and the Dow Measuring Procedure on the 1975 Federal test cycle for particulate.[1,6]

Table 3.1.3-1. EMISSION FACTORS FOR LIGHT-DUTY, DIESEL-POWERED VEHICLES
EMISSION FACTOR RATING: B

	Model years			
	≤ 1975		≥ 1976	
Pollutant	g/mi	g/km	g/mi	g/km
Carbon monoxide[a]	1.7	1.1	1.7	1.1
Exhaust hydrocarbons	0.45	0.28	0.45	0.28
Nitrogen oxides[a,b] (NO_x as NO_2)	1.6	0.99	0.40	0.25
Particulate[c]	0.73	0.45	0.73	0.45
Sulfur oxides[d]	0.63	0.39	0.63	0.39

[a] Estimates are arithmetic mean of tests of vehicles, References 3 through 5.
[b] Nitrogen oxides estimate for 1976 based on emission standard, Reference 2.
[c] Reference 4.
[d] Calculated using the fuel consumption rate reported in Reference 6 and assuming the use of a diesel fuel containing 0.20 percent sulfur.

References for Section 3.1.3

1. Exhaust Emission Standards and Test Procedures. Federal Register. Part II. *36*(128): 12652-12664, July 2, 1971.

2. Control of Air Pollution from Light Duty Diesel Motor Vehicles. Federal Register. Part II. *37*(193): 20914-20923, October 4, 1972.

3. Springer, K.J. Emissions from a Gasoline - and Diesel-Powered Mercedes 220 Passenger Car. Southwest Research Institute. San Antonio, Texas. Prepared for the Environmental Protection Agency, Research Triangle Park, N.C., under Contract Number CPA 70-44. June 1971.

4. Ashby, H.A. Final Report: Exhaust Emissions from a Mercedes-Benz Diesel Sedan. Environmental Protection Agency. Ann Arbor, Mich. July 1972.

5. Test Results from the Last 9 Months – MB220D. Mercedes-Benz of North America. Fort Lee, New Jersey. Report E1 0472. March 1972.

6. Hare, C.T. and K.J. Springer. Evaluation of the Federal Clean Car Incentive Program Vehicle Test Plan. Southwest Research Institute. San Antonio, Texas. Prepared for Weiner Associates, Incorporated., Cockeysville, Md. October 1971.

3.1.4 Heavy-Duty, Gasoline-Powered Vehicles

by David S. Kircher

3.1.4.1 General – Heavy-duty, gasoline-powered highway vehicles, are, because of their lesser numbers, not as great an air pollutant source as light-duty gasoline-powered highway vehicles. Heavy-duty vehicles are driven on the same roadways as light-duty vehicles; therefore, their emission characteristics are somewhat similar. The information provided in this section allows the separate calculation of an emission factor for this weight class of highway vehicles. The quantities presented in section 3.1.1 are for all major highway vehicles based on nationwide statistics including this category.

3.1.4.2 Carbon Monoxide, Hydrocarbon, and Nitrogen Oxides Emissions – The calculation of heavy-duty, gasoline-powered exhaust emission factors can be accomplished using:

$$e_{np} = \sum_{i=n-12}^{n+1} c_i \, d_i \, m_i \, s_i \qquad (1)$$

where: e_{np} = Emission factor in grams per vehicle mile (g/km) for calendar year (n) and pollutant (p)

c_i = The test procedure emission rate (Table 3.1.4-1) for pollutant (p) in g/mi for the ith model year, at low mileage

d_i = The controlled vehicle pollutant (p) emission deterioration factor for the ith model year at calendar year (n)

m_i = The weighted annual travel of the ith model year vehicles during calendar year (n). The determination of this variable involves the use of the vehicle year distribution

s_i = The weighted speed adjustment factors for the ith model year vehicles

In addition to exhaust emission factors, the calculation of evaporative and crankcase hydrocarbon emissions are determined using:

$$f_n = \sum_{i=n-12}^{n+1} h_i \, m_i \qquad (2)$$

where: f_n = The combined evaporative and crankcase hydrocarbon emission factor for calendar year (n)

h_i = The combined evaporative and crankcase hydrocarbon emission rate for the ith model year. Emission factors for this source are: pre 1968, 8.2 g/mi (5.1 g/km); and 1968 and later vehicles, 3.0 g/mi (1.9 g/km). In California: 1964-1972, 3.0 g/mi (1.9 g/km); post-1972, 0.2 g/mi (0.1 g/km).

m_i = The weighted annual travel of the ith model year vehicle during calendar year (n)

A brief discussion of the variables presented in the above equations is necessary to help clarify their formulation and use. The following paragraphs further describe the variables c_i, d_i, m_i, s_i, and h_i, as they apply to heavy-duty gasoline vehicles.

Test procedure emission rate (c). The emission rates listed in Table 3.1.4-1 for all areas except high altitude and California are based on dynamometer test results, on-the-road emission sampling, and emission standards.[1] Mass emission results based on a dynamometer test cycle that simulates on-the-road operation were used to obtain the emission rates for pre 1970 vehicles. Vehicles covered by the 1970 emission standards for heavy-duty gasoline vehicles[8] were tested using both an on-the-road and a dynamometer test procedure. The results of these tests were combined to give the emission rates reported for 1970 through 1973 heavy-duty vehicles. Mass emission rates for 1974 and later heavy-duty vehicles are based on the applicable Federal emission standards.[5] High altitude emission rates (Table 3.1.4-1) were calculated from the values for all areas except high altitude listed in Table 3.1.4-1 using the relationship between high- and low-altitude light-duty vehicle emission rates.[9] California emission rates also shown in Table 3.1.4-1 were calculated from California State emission standards.

Deterioration factors (d). Because of the lack of actual heavy-duty deterioration information, light-duty deterioration data must be used for controlled heavy-duty vehicles. Actual mass emission reductions on vehicles meeting the 1970 emission standards have generally proven to be very small. For this reason deterioration factors on these vehicles seem unnecessary. It is anticipated that this will also be the case for 1974 and later non-California vehicles. The emission reduction on 1975 and later, heavy-duty vehicles in California is more substantial; therefore, the heavy-duty vehicle emission deterioration factors (Table 3.1.4-2) should be used.

Weighted annual mileage (m). The determination of this variable is illustrated in Table 3.1.4-3. For purposes of this illustration, nationwide statistics have been used. Localized data should be substituted when calculating the variable (m) for a specific area under study.

Weighted speed adjustment factor (s). Again, as with deterioration information, data based on tests of heavy-duty emissions versus average speed are unavailable. The variable (s) is calculated using:

$$s_i = \sum_{j=1}^{n} f_j v_j \qquad (3)$$

where: s_i = The weighted speed adjustment factor for the ith model year from Figure 3.1.1-1

f_j = The fraction of the total annual vehicle miles traveled at speed (j)

v_j = The vehicular average speed correction factor for average speed (j)

3.1.4.3 Sulfur Oxide and Particulate Emissions – Sulfur oxide and particulate emission factors for all model year heavy-duty vehicles are presented in Table 3.1.4-4. Sulfur oxides factors are based on fuel sulfur content and fuel consumption. Tire-wear particulate factors are based on automobile test results, a premise necessary because of the lack of data. Truck tire wear is likely to result in greater particulate emission than automobiles because of larger tires, heavier loads on tires, and more tires per vehicle.

Table 3.1.4-1. HEAVY-DUTY, GASOLINE-POWERED VEHICLE EXHAUST EMISSION FACTORS FOR CARBON MONOXIDE, HYDROCARBONS, AND NITROGEN OXIDES
EMISSION FACTOR RATING: B

Location	Model year	Carbon monoxide		Exhaust hydrocarbons		Nitrogen oxides	
		g/mi	g/km	g/mi	g/km	g/mi	g/km
All areas except high altitude and California	Pre-1970[a]	140	87	17	11	9.4	5.8
	1970 through 1973[b]	130	81	16	9.9	9.2	5.7
	Post-1973[c]	130	81	13	8.1	9.2	5.7
High altitude only[d]	Pre-1970[a]	210	130	19	12	5.0	3.1
	1970 through 1973[b]	190	120	18	11	4.9	3.0
	Post-1973[c]	190	120	15	9.3	4.9	3.0
California only	Pre-1970[a]	140	87	17	11	9.4	5.8
	1970 through 1971[b]	130	81	16	9.9	9.2	5.7
	1972[e]	130	81	13	8.1	9.2	5.7
	1973 through 1974[c]	130	81	13	8.1	9.2	5.7
	1975[e]	81	50	4.1	2.5	2.8	1.7

[a]Data from References 1 through 3.
[b]Data from References 1 through 7.
[c]References 5 and 7.
[d]Based on light-duty emissions at high altitude compared with light-duty emissions at low altitude.
[e]Based on applicable emission standards and Reference 7. These are low mileage emission rates.

Table 3.1.4-2. EXHAUST EMISSION DETERIORATION FACTORS FOR HEAVY-DUTY, GASOLINE-POWERED VEHICLES (CALIFORNIA ONLY), 1975 AND LATER MODELS[a]

	Vehicle age, years									
Pollutant	0	1	2	3	4	5	6	7	8	≥9
Carbon monoxide	1.00	1.24	1.35	1.43	1.50	1.57	1.63	1.69	1.73	1.77
Hydrocarbon	1.00	1.12	1.18	1.22	1.25	1.28	1.30	1.33	1.36	1.38
Nitrogen oxides (NO_x as NO_2)	1.00	1.11	1.18	1.20	1.22	1.23	1.24	1.25	1.27	1.28

[a]Reference 10. The deterioration factor for all non-California and pre-1975 California heavy-duty vehicles is 1.00 regardless of age. These values apply to all 1975 and later California heavy-duty vehicles.

Table 3.1.4-3. SAMPLE CALCULATION OF WEIGHTED HEAVY-DUTY VEHICLE ANNUAL TRAVEL

Age, years	Fraction of total vehicles in use nationwide (a)[a]	Average annual miles driven (b)[b]	a x b	Annual travel (m)[c]
0	0.000	17,200	0	0.000
1	0.071	17,200	1,221	0.107
2	0.106	17,200	1,823	0.159
3	0.087	15,800	1,375	0.120
4	0.081	15,800	1,280	0.112
5	0.084	13,000	1,090	0.095
6	0.076	13,000	988	0.086
7	0.065	11,000	715	0.062
8	0.055	11,000	605	0.052
9	0.047	9,000	423	0.037
10	0.035	9,000	315	0.028
11	0.037	5,500	204	0.018
12	0.033	5,500	182	0.016
≥13	0.223	5,500	1,226	0.108

[a] Vehicles in use by model year as of July 1, 1970 (Reference 11).
[b] Reference 12.

[c] $m = \frac{ab}{\Sigma ab}$.

Table 3.1.4-4. SULFUR OXIDES AND PARTICULATE EMISSION FACTORS FOR HEAVY-DUTY, GASOLINE-POWERED VEHICLES EMISSION FACTOR RATING: B

Pollutant	Emissions	
	g/mi	g/km
Particulate		
Exhaust[a]	0.65	0.40
Tire wear[b]	0.20	0.12
Sulfur oxides[c] (SO_x as SO_2)	0.26	0.16

[a] Calculated from the Reference 13 value of 12 lb/10^3 gal (1.46 g/liter) gasoline. An 8.4 mi/gal (3.6 km/liter) value from Reference 11 was used to convert to a per mile emission factor.
[b] Reference 14. The data from this reference are for passenger cars. In the absence of specific data for heavy-duty vehicles, they are assumed to be representative of truck-tire-wear particulate.
[c] Based on an average fuel consumption of 8.4 mi/gal (3.6 km/liter) from Reference 11 on a 0.04 percent sulfur content from References 15 and 16, and on a density of 6.1 lb/gal (0.73 kg/liter) from References 15 and 16.

References for Section 3.1.4

1. Exhaust Emission Analysis and Mode Cycle Development for Gasoline-Powered Trucks. Ethyl Corporation. Ferndale, Mich. Prepared for the U.S. Public Health Service, Washington, D.C., under Contract Number PH 86-66-150. September 1967.

2. Springer, K.J. An Investigation of Emissions from Trucks above 6,000 lb GVW Powered by Spark-Ignited Engines. Southwest Research Institute. San Antonio, Texas. Prepared for the U.S. Public Health Service, Washington, D.C., under Contract Number PH 86-67-72. March 1969.

3. In-House Surveillance Program of Heavy Duty Gasoline Vehicles between 6,000-lb GVW and 10,000-lb GVW. U.S. Environmental Protection Agency. Ann Arbor, Mich. November 1972.

4. Ingalls, M.N. and K.J. Springer. Monthly Progress Report Number 28-Surveillance Study of Control Equipped Heavy-Duty Gasoline-Powered Vehicles. Southwestern Research Institute. San Antonio, Texas. Prepared for the Environmental Protection Agency, Research Triangle Park, N.C., under Contract Number EHA 70-113. November 1972.

5. Control of Air Pollution from New Motor Vehicles and Engines. Heavy Duty Engines. Federal Register. Part II. *37*(175): 18262-18270, September, 8, 1972.

6. Springer, K.J. and M.N. Ingalls. Mass Emissions from Trucks above 6,000-lb GVW-Gasoline Fueled. Southwest Research Institute. San Antonio, Texas. Prepared for the Environmental Protection Agency, Research Triangle Park, N.C., under Contract Number EHS 70-113. August 1972.

7. Sigworth, H.W., Jr. Estimates of Motor Vehicle Emission Rates. Internal document U.S. Environmental Protection Agency. Research Triangle Park, N.C. March 1971.

8. Control of Air Pollution from New Motor Vehicles and New Motor Vehicle Engines. Federal Register. Part II. *33*(108):8304-8324, June 4, 1968.

9. Study of Emissions from Light-Duty Vehicles in Six Cities. Automotive Environmental Systems, Inc. San Bernadino, Calif. Prepared for the Environmental Protection Agency, Research Triangle Park, N.C., under Contract Number 68-04-0042. June 1972.

10. Hocker, A.J. Exhaust Emission from Privately Owned 1966-1970 California Automobiles – A Statistical Evaluation of Surveillance Data. California Air Resources Laboratory. Los Angeles, Calif. July 1971.

11. 1971 Motor Truck Facts. Automobile Manufacturers Association. Washington, D.C. 1972.

12. 1967 Census of Transportation. Truck Inventory and Use Survey. U.S. Department of Commerce, Bureau of the Census. Washington, D.C. July 1970.

13. Control Techniques for Particulate Air Pollutants. U.S. DHEW, National Air Pollution Control Administration. Washington, D.C. Publication Number AP-51. January 1969.

14. Subramani, J.P. Particulate Air Pollution form Automobile Tire Tread Wear. Ph.D. Dissertation. University of Cincinnati, Cincinnati. Ohio. May 1971.

15. Shelton, E.M. and C.M. McKinney. Motor Gasolines, Winter 1970-1971. U.S. Department of the Interior, Bureau of Mines. Bartlesville, Okla. June 1971.

16. Shelton, E.M. Motor Gasolines, Summer 1971. U.S. Department of the Interior, Bureau of Mines. Bartlesville, Okla. January 1972.

3.1.5 Heavy-Duty, Diesel-Powered Vehicles

Revised by Michael J. McGraw and David S. Kircher

3.1.5.1 General[1,2] – On the highway, heavy-duty diesel engines are primarily used in trucks and buses. Diesel engines in any application demonstrate operating principles that are significantly different from those of the gasoline engine.

3.1.5.2 Emissions – Diesel trucks and buses emit pollutants from the same sources as gasoline-powered vehicles: exhaust, crankcase blow-by, and fuel evaporation. Blow-by is practically eliminated in the diesel because only air is in the cylinder during the compression stroke. The low volatility of diesel fuel along with the use of closed injection systems essentially eliminates evaporation losses in diesel systems.

Exhaust emissions from diesel engines have the same general characteristics of auto exhausts. Concentrations of some of the pollutants, however, may vary considerably. Emissions of sulfur dioxide are a direct function of the fuel composition. Thus, because of the higher average sulfur content of diesel fuel (0.20 percent S) as compared with gasoline (0.035 percent S), sulfur dioxide emissions are relatively higher from diesel exhausts.[3,4]

Because diesel engines allow more complete combustion and use less volatile fuels than spark-ignited engines, their hydrocarbon and carbon monoxide emissions are relatively low. Because hydrocarbons in diesel exhaust are largely unburned diesel fuel, their emissions are related to the volume of fuel sprayed into the combustion chamber. New, improved needle valve injectors that reduce the amount of fuel that can be burned can reduce hydrocarbon emissions by as much as 50 percent.[5] Both the high temperatures and the large excesses of oxygen involved in diesel combustion are conducive to high nitrogen oxide emission, however.[6]

Particulates from diesel exhaust are in two major forms – black smoke and white smoke. White smoke is emitted when the fuel droplets are kept cool in an environment abundant in oxygen (cold starts). Black smoke is emitted when the fuel droplets are subjected to high temperatures in an environment lacking in oxygen (road conditions). A hot diesel engine properly adjusted and operated under design loads should emit no visible "smoke."

Emission factors for heavy-duty, diesel-powered vehicles are shown in Table 3.1.5-1.

Table 3.1.5-1. EMISSION FACTORS FOR HEAVY-DUTY, DIESEL-POWERED VEHICLES[a,b]
EMISSION FACTOR RATING: B

Pollutant	Emissions			
	lb/10^3 gal	kg/10^3 liter	g/mi	g/km
Particulate	13	1.6	1.2	0.75
Sulfur oxides[c] (SO_x as SO_2)	27	3.2	2.4	1.5
Carbon monoxide	225	27.0	20.4	12.7
Hydrocarbons	37	4.4	3.4	2.1
Nitrogen oxides (NO_x as NO_2)	370	44.0	34	21
Aldehydes (as HCHO)	3	0.4	0.3	0.2
Organic acids	3	0.4	0.3	0.2

[a] Data are based on weighting factors applied to actual tests conducted at various load and idle conditions with an average gross vehicle weight of 30 tons (27.2 MT) and fuel consumption of 5.0 mi/gal (2.2 km/liter).
[b] Reference 7.
[c] Data based on fuel with average sulfur content of 0.2 percent.

References for Section 3.1.5

1. The Automobile and Air Pollution: A Program for Progress. Part II. U.S. Department of Commerce. Washington, D.C. December 1967. p. 34.

2. Control Techniques for Carbon Monoxide, Nitrogen Oxides, and Hydrocarbons from Mobile Sources. U.S. DHEW, PHS, EHS, National Air Pollution Control Administration. Washington, D.C. Publication Number AP-66. March 1970. p. 2-9 through 2-11.

3. McConnel, G. and H.E. Howels. Diesel Fuel Properties and Exhaust Gas-Distant Relations? Society of Automotive Engineers. New York, N.Y. Publication Number 670091. January 1967.

4. Motor Gasolines, Summer 1969. Mineral Industry Surveys, U.S. Department of the Interior, Bureau of Mines. Washington, D.C. Petroleum Products Survey Number 63. 1970. p. 5.

5. Merrion, D.F. Diesel and Turbine Driven Vehicles and Air Pollution. (Presented at University of Missouri Air Pollution Conference, Columbia, Mo. November 18, 1969.)

6. Hurn, R.W. The Diesel Fuel Involvement in Air Pollution. (Presented at the National Fuels and Lubricants Meeting, New York, N.Y. September 17-18, 1969.)

7. Young T.C. Unpublished emission factor data on diesel engines. Engine Manufacturers Association Emission Standards Committee. Chicago, Ill. May 18, 1971.

3.1.6 Gaseous-Fueled Vehicles

by David S. Kircher

3.1.6.1 General – Conversion of vehicles to gaseous fuels has been practiced for many years. In the past the principal motivation for the conversion has been the economic advantage of gaseous fuels over gasoline rather than lower air pollutant emission levels that result from their use. Recently, however, conversions have been made for air pollution control as well as for lower operating cost. Liquified petroleum gas (LPG), the most common form of gaseous fuel for vehicles, is currently used to power approximately 300,000 vehicles in the United States. Natural gas, in the form of compressed natural gas (CNG) or liquified natural gas (LNG), is being used nationally to power about 4,000 vehicles.[1] Of the two natural gas fuels, CNG is the most common. Natural gas conversions are usually dual fuel systems that permit operation on either gaseous fuel (CNG or LNG) or gasoline.

3.1.6.2 Emissions – Tables 3.1.6-1 and 3.1.6-2 contain emission factors for light- and heavy-duty vehicles converted for either gaseous fuel or dual fuel operation. The test data used to determine the average light duty emission factors were based on both the 1972 Federal test procedure and the earlier seven-mode method.[7,8] These test data were converted to the current Federal test procedure[9] using conversion factors determined empirically.[10,11] This conversion was necessary to make the emission factors for these vehicles consistent with emission factors reported in previous sections of this chapter.

Heavy-duty vehicle emission factors (Table 3.1.6-2) are based on tests of vehicles on an experimental dynamometer test cycle[6] and on the Federal test procedure. Emissions data for heavy-duty vehicles are limited to tests of only a few vehicles. For this reason the factors listed in table 3.1.6-2 are only approximate indicators of emissions from these vehicles.

Emission data on gaseous-powered vehicles are limited to dynamometer test results. Deterioration factors and speed correction factors are not available. The data contained in the tables, therefore, are emission factors for in-use vehicles at various mileages rather than emission rates (as defined in section 3.1.2).

Emission factors for a particular population of gaseous-fueled vehicles can be determined using the relationship:

$$e_{npwc} = \sum_{i=n-12}^{n+1} c_i f_i \qquad (1)$$

where: e_{npwc} = Emission factor is grams per mile (or g/km) for calendar year (n), pollutant (p), vehicle weight (w) (light- or heavy-duty), and conversion fuel system (c) (e.g. LPG)

c_i = The test cycle emission factor (Tables 3.1.6-1 and 3.1.6-2) for pollutant (p) for the ith model year vehicles

f_i = The fraction of total miles driven by a population of gaseous-fueled vehicles that are driven by the ith model year vehicles

Carbon monoxide, hydrocarbon, and nitrogen oxides emission factors are listed in the tables. Particulates and sulfur oxides are not listed because of the lack of test data. Because stationary external combustion of gaseous fuel results in extremely low particulate and sulfur oxides, it is reasonable to assume that the emissions of these pollutants from gaseous-fueled vehicles are negligible.

Table 3.1.6-1. EMISSION FACTORS BY MODEL YEAR FOR LIGHT-DUTY VEHICLES USING LPG, LPG/DUAL FUEL, OR CNG/DUAL FUEL[a]
EMISSION FACTOR RATING: B

Fuel and model year	Carbon monoxide		Exhaust hydrocarbons		Nitrogen oxides (NO_x as NO_2)	
	g/mi	g/km	g/mi	g/km	g/mi	g/km
LPG						
Pre-1970[b]	11	6.8	1.8	1.1	3.2	2.0
1970 through 1972[c]	3.4	2.1	0.67	0.42	2.8	1.7
LPG/Dual fuel[d]						
Pre-1973	7.8	4.8	2.4	1.5	3.4	2.1
CNG/Dual fuel[e]						
Pre-1973	9.2	5.7	1.5	0.93	2.8	1.7

[a] References 1 through 5.
[b] Emission factors are based on tests of 1968 and 1969 model year vehicles. Sufficient data for earlier models are not available.
[c] Based on tests of 1970 model year vehicles. No attempt was made to predict the emissions resulting from the conversion of post 1974 model year vehicles to gaseous fuels. It is likely that 1973 and 1974 model year vehicles converted to gaseous fuels will emit pollutant quantities similar to those emitted by 1972 vehicles with the possible exception of nitrogen oxides.
[d] The dual fuel system represents certain compromises in emission performance to allow the flexibility of operation on gaseous or liquid (gasoline) fuels. For this reason their emission factors are listed separately from vehicles using LPG only.
[e] Based on tests of 1968 and 1969 model year vehicles. It is likely that 1973 and 1974 model year vehicles will emit similar pollutant quantities to those listed with the possible exception of nitrogen oxides. No attempt was made to estimate 1975 and later model year gaseous-fueled-vehicle emissions.

Table 3.1.6-2. EMISSION FACTORS FOR HEAVY-DUTY VEHICLES USING LPG OR CNG/DUAL FUEL
EMISSION FACTOR RATING: C

Pollutant	Emissions (all model years)[a]			
	LPG[b,c]		CNG/dual fuel[d]	
	g/mi	g/km	g/mi	g/km
Carbon monoxide	4.2	2.6	7.5	4.6
Exhaust hydrocarbons	2.4	1.5	2.2	1.4
Nitrogen oxides (NO_x as NO_2)	2.8	1.7	5.8	3.6

[a] Test results are for 1959 through 1970 model years. These results are assumed to apply to all future heavy-duty vehicles based on present and future emission standards.
[b] References 2 and 4.
[c] LPG values for heavy-duty vehicles are based on a limited number of tests of vehicles tuned for low emissions. Vehicles converted to LPG solely for economic reasons gave much higher emission values. For example, eleven vehicles (1950 through 1963) tested in Reference 6 demonstrated average emissions of 160 g/mi (99 g/km) of carbon monoxide, 8.5 g/mi (5.3 g/km) of hydrocarbons, and 4.2 g/mil (2.6 g/km) of nitrogen oxides.
[d] Reference 5.

References for Section 3.1.6

1. Conversion of Motor Vehicles to Gaseous Fuel to Reduce Air Pollution. U.S. Environmental Protection Agency, Office of Air Programs. Washington, D.C. April 1972.

2. Fleming, R.D. et al. Propane as an Engine Fuel for Clean Air Requirements. J. Air Pol. Control Assoc. *22:*451-458. June 1972.

3. Genslak, S.L. Evaluation of Gaseous Fuels for Automobiles. Society of Automotive Engineers, Inc. New York, N.Y. Publication Number 720125. January 1972.

4. Eshelman, R.H. LP Gas Conversion. Automotive Industries. Reprinted by Century LP-Gas Carburetion, Marvel–Schebler. Decatur, III.

5. Pollution Reduction with Cost Savings. General Services Administration. Washington, D.C. 1971.

6. Springer, K.J. An Investigation of Emissions from Trucks above, 6,000-lb GVW Powered by Spark-Ignited Engines. Southwest Research Institute. San Antonio, Texas. Prepared for the U.S. Public Health Service, Washington, D.C., under Contract Number PH 86-67-72. March 1969.

7. Control of Air Pollution from New Motor Vehicles and New Motor Vehicle Engines. Federal Register. Part II. *33*(219):17288-17313, November 10, 1970.

8. Control of Air Pollution from New Motor Vehicles and New Motor Vehicle Engines. Federal Register. Part II. *33*(219):17288-17313, November 10, 1970.

9. Exhaust Emission Standards and Test Procedures. Federal Register. Part II. *36*(128):12652-12663, July 2, 1971.

10. Sigworth, H.W., Jr. Unpublished estimates of motor vehicle emission rates. Environmental Protection Agency. Research Triangle Park, N.C. March 1971.

11. Study of Emissions from Light-Duty Vehicles in Six Cities. Automotive Environmental Systems, Inc. San Bernadino, Calif. Prepared for the Environmental Protection Agency, Research Triangle Park, N.C., under Contract Number 68-04-0042. June 1972.

3.1.7 Motorcycles

by David S. Kircher

3.1.7.1 General – Motorcycles, which are not, generally, considered an important source of air pollution, have become more popular and their numbers have been steadily increasing in the last few years. Sales grew at an annual rate of 20 percent from 1965 to 1971.[1] The majority of motorcycles are powered by either 2- or 4-stroke, air-cooled engines; however, water-cooled motorcycles and Wankel-powered motorcycles have recently been introduced. Until recently the predominant use of 4-stroke motorcycles was on-highway and the 2-stroke variety was off-highway. This difference in roles was primarily a reflection of significant weight and power variations between available 2- and 4-stroke vehicles. As light-weight 4-strokes and more powerful 2-strokes become available the relative number of motorcycles in each engine category may change. Currently the nationwide population of motorcycles is approximately 38 percent 2-stroke and 62 percent 4-stroke. Individual motorcycles travel, on the average, approximately 4000 miles per year.[1] These figures, along with registration statistics, enable the rough estimation of motorcycle miles by engine category and the computation of resulting emissions.

3.1.7.2 Emissions – The quantity of motorcycle emission data is rather limited in comparison with the data available on other highway vehicles. For instance, data on motorcycle average speed versus emission levels are not available. Average emission factors for motorcycles used on highways are reported in Table 3.1.7-1. These data, from several test vehicles, are based on the Federal light-duty vehicle test procedure.[2] The table illustrates differences in 2-stroke and 4-stroke engine emission rates. On a per mile basis, 2-stroke engines emit nearly five times more hydrocarbons than 4-stroke engines. Both engine categories emit somewhat similar quantities of carbon monoxide and both produce low levels of nitrogen oxides.

Table 3.1.7-1. EMISSION FACTORS FOR MOTORCYCLES[a]
EMISSION FACTOR RATING: B

Pollutant	Emissions			
	2-stroke engine		4-stroke engine	
	g/mi	g/km	g/mi	g/km
Carbon monoxide	27	17	33	20
Hydrocarbons				
Exhaust	16	9.9	2.9	1.8
Crankcase[b]	–	–	0.60	0.37
Evaporative[c]	0.36	0.22	0.36	0.22
Nitrogen oxides (NO_x as NO_2)	0.12	0.075	0.24	0.15
Particulates	0.33	0.21	0.046	0.029
Sulfur oxides[d] (SO_2)	0.038	0.024	0.022	0.014
Aldehydes (RCHO as HCHO)	0.11	0.068	0.047	0.029

[a] Reference 1.
[b] Most 2-stroke engines use crankcase induction and produce no crankcase losses.
[c] Evaporative emissions were calculated assuming that carburetor losses were negligible. Diurnal breathing of the fuel tank (a function of fuel vapor pressure, vapor space in the tank, and diurnal temperature variation) was assumed to account for all the evaporative losses associated with motorcycles. The value presented is based on average vapor pressure, vapor space, and temperature variation.
[d] Calculated using a 0.043 percent sulfur content (by weight) for regular fuel used in 2-stroke engines and 0.022 percent sulfur content (by weight) for premium fuel used in 4-stroke engines.

References for Section 3.1.7

1. Hare, C.T. and K.J. Springer. Exhaust Emissions from Uncontrolled Vehicles and Related Equipment Using Internal Combustion Engines. Part III, Motorcycles. Final Report. Southwest Research Institute. San Antonio, Texas. Prepared for the Environmental Protection Agency, Research Triangle Park, N.C., under Contract Number EHS 70-108. March 1973.

2. Exhaust Emission Standards and Test Procedures. Federal Register. *36*(128):12652-12663, July 2, 1971.

3.2 OFF-HIGHWAY, MOBILE SOURCES

The off-highway category of internal combustion engines embraces a wide range of mobile and semimobile sources. Emission data are reported in this section on the following sources: aircraft; locomotives; vessels (inboard and outboard); and small general utility engines, such as those used in lawnmowers and minibikes. Other sources that fall into this category, but for which emission data are not currently available, include: snowmobiles, all-terrain vehicles, and farm and construction equipment. Data on these sources will be added to this chapter in future revisions.

3.2.1 Aircraft

by Charles C. Masser

3.2.1.1 General – Aircraft engines are of two major categories; reciprocating (piston) and gas turbine.

The basic element in the aircraft piston engine is the combustion chamber, or cylinder, in which mixtures of fuel and air are burned and from which energy is extracted through a piston and crank mechanism that drives a propeller. The majority of aircraft piston engines have two or more cylinders and are generally classified according to their cylinder arrangement – either "opposed" or radial." Opposed engines are installed in most light or utility aircraft; radial engines are used mainly in large transport aircraft.

The gas turbine engine in general consists of a compressor, a combustion chamber, and a turbine. Air entering the forward end of the engine is compressed and then heated by burning fuel in the combustion chamber. The major portion of the energy in the heated air stream is used for aircraft propulsion. Part of the energy is expended in driving the turbine, which in turn drives the compressor. Turbofan and turboshaft engines use energy from the turbine for propulsion; turbojet engines use only the expanding exhaust stream for propulsion.

The aircraft classification system used is listed in Table 3.2.1-1. Both turbine aircraft and piston engine aircraft have been further divided into sub-classes depending on the size of the aircraft and the most commonly used engine for that class. Jumbo jets normally have approximately 40,000 pounds maximum thrust per engine, and medium-range jets have about 14,000 pounds maximum thrust per engine. For piston engines, this division is more pronounced. The large transport piston engines are in the 500 to 3,000 horsepower range, whereas the small piston engines develop less than 500 horsepower.

Table 3.2.1-1. AIRCRAFT CLASSIFICATION

Aircraft class	Representative aircraft	Engines per aircraft	Engine commonly used
Jumbo jet	Boeing 747 Lockheed L-1011 McDonald Douglas DC-10	4 3 3	Pratt & Whitney JT-9D
Long-range jet	Boeing 707 McDonald Douglas DC-8	4 4	Pratt & Whitney JT-3D
Medium-range jet	Boeing 727 Boeing 737 McDonald Douglas DC-9	3 2 2	Pratt & Whitney JT-8D
Air carrier turboprop	Convair 580 Electra L-188 Fairchild Hiller FH-227	2 4 2	Allison 501-D13
Business jet	Gates Learjet Lockheed Jetstar	2 4	General Electric CJ610 Pratt & Whitney JT-12A
General aviation turboprop	—	—	Pratt & Whitney PT-6A
General aviation piston	Cessna 210 Piper 32-300	1 1	Teledyne-Continental Ø-200 Lycoming Ø-320
Piston transport	Douglas DC-6	4	Pratt & Whitney R-2800
Helicopter	Sikorsky S-61 Vertol 107	2 2	General Electric CT-58
Military transport			Allison T56A7
Military jet			General Electric J-79 Continental J-69
Military piston			Curtiss-Wright R-1820

3.2.1.2 Landing and Takeoff Cycle – A landing-takeoff (LTO) cycle includes all normal operation modes performed by an aircraft between the time it descends through an altitude of 3,500 feet (1,100 meters) on its approach and the time it subsequently reaches the 3,500 foot (1,100 meters) altitude after take. It should be made clear that the term "operation" used by the Federal Aviation Administration to describe either a landing or a takeoff is not the same as the LTO cycle. Two operations are involved in one LTO cycle. The LTO cycle incorporates the ground operations of idle, taxi, landing run, and takeoff run and the flight operations of takeoff and climbout to 3,500 feet (1,100 meters) and approach from 3,500 feet (1,100 meters) to touchdown

Each class of aircraft has its own typical LTO cycle. In order to determine emissions, the LTO cycle is separated into five distinct modes: (1) taxi-idle, (2) takeoff, (3) climbout, (4) approach and landing, and (5) taxi-idle. Each of these modes has its share of time in the LTO cycle. Table 3.2.1-2 shows typical operating time in each mode for the various types of aircraft classes during periods of heavy activity at a large metropolitan airport. Emissions factors for the complete LTO cycle presented in Table 3.2.1-3 were determined using the typical times shown in Table 3.2.1-2.

Table 3.2.1-2. TYPICAL TIME IN MODE FOR LANDING TAKEOFF CYCLE AT A METROPOLITAN AIRPORT[a]

Aircraft	Time in mode, minutes				
	Taxi-idle	Takeoff	Climbout	Approach	Taxi-idle
Jumbo jet	19.00	0.70	2.20	4.00	7.00
Long range jet	19.00	0.70	2.20	4.00	7.00
Medium range jet	19.00	0.70	2.20	4.00	7.00
Air carrier turboprop	19.00	0.50	2.50	4.50	7.00
Business jet	6.50	0.40	0.50	1.60	6.50
General aviation turboprop	19.00	0.50	2.50	4.50	7.00
General aviation piston	12.00	0.30	4.98	6.00	4.00
Piston transport	6.50	0.60	5.00	4.60	6.50
Helicopter	3.50	0	6.50	6.50	3.50
Military transport	19.00	0.50	2.50	4.50	7.00
Military jet	6.50	0.40	0.50	1.60	6.50
Military piston	6.50	0.60	5.00	4.60	6.50

[a]References 1 and 2.

Table 3.2.1-3. EMISSION FACTORS PER AIRCRAFT LANDING-TAKEOFF CYCLE[a,b]
(lb/engine and kg/engine)
EMISSION FACTOR RATING: B

Aircarft	Solid particulates[a]		Sulfur oxides[d]		Carbon monoxide[e]		Hydrocarbons[e]		Nitrogen oxides[d] (NO_x as NO_2)	
	lb	kg	lb	kg	lb	kg	lb	kg	lb	kg
Jumbo jet	1.30	0.59	1.82	0.83	46.8	21.2	12.2	5.5	31.4	14.2
Long range jet	1.21	0.55	1.56	0.71	47.4	21.5	41.2	18.7	7.9	3.6
Medium range jet	0.41	0.19	1.01	0.46	17.0	7.71	4.9	2.2	10.2	4.6
Air carrier turboprop	1.1	0.49	0.40	0.18	6.6	3.0	2.9	1.3	2.5	1.1
Business jet	0.11	0.05	0.37	0.17	15.8	7.17	3.6	1.6	1.6	0.73
General aviation turboprop	0.20	0.09	0.18	0.08	3.1	1.4	1.1	0.5	1.2	0.54
General aviation piston	0.02	0.01	0.014	0.006	12.2	5.5	0.40	0.18	0.047	0.021
Piston transport	0.56	0.25	0.28	0.13	304.0	138.0	40.7	18.5	0.40	0.18
Helicopter	0.25	0.11	0.18	0.08	5.7	2.6	0.52	0.24	0.57	0.26
Military transport	1.1	0.49	0.41	0.19	5.7	2.6	2.7	1.2	2.2	1.0
Military jet	0.31	0.14	0.76	0.35	15.1	6.85	9.93	4.5	3.29	1.49
Military piston[f]	0.28	0.13	0.14	0.04	152.0	69.0	20.4	9.3	0.20	0.09

[a] References 1 through 5.
[b] Emission factors based on typical times in mode shown in Table 3.2.1-2.
[c] References 1 and 5.
[d] Based on 0.05 percent sulfur content fuel.
[e] References 1, 2, and 4.
[f] Engine emissions based on Pratt & Whitney R-2800 engine scaled down two times.

3.2.1.3 Modal Emission Factors – In Table 3.2.1-4 a set of modal emission factors by engine type are given for carbon monoxide, total hydrocarbons, nitrogen oxides, and solid particulates along with the fuel flow rate per engine for each LTO mode. With this data and knowledge of the time-in-mode, it is possible to construct any LTO cycle or mode and calculate a more accurate estimate of emissions for the situation that exists at a specific airport. This capability is especially important for estimating emissions during the taxi-idle mode when large amounts of carbon monoxide and hydrocarbons are emitted. At smaller commercial airports the taxi-idle time will be less than at the larger, more congested airports.

Table 3.2.1-4. MODAL EMISSION FACTORS[a]
EMISSION FACTOR RATING: B

Engine and mode	Fuel rate		Carbon monoxide		Hydrocarbons		Nitrogen oxides (NO_x as NO_2)		Solid particulates	
	lb/hr	kg/hr	lb/hr	kg/hr	lb/hr	kg/hr	lb/hr	kg/hr	lb/hr	kg/hr
Pratt & Whitney JT-9D (Jumbo jet)										
Taxi-idle	1,738	788	102.0	46.3	27.3	12.4	6.06	2.75	2.2	1.0
Takeoff	17,052	7,735	8.29	3.76	2.95	1.34	720.0	327.0	3.75	1.7
Climbout	14,317	6,494	11.7	5.31	2.65	1.20	459.0	208.0	4.0	1.8
Approach	5,204	2,361	32.6	14.8	3.00	1.36	54.1	24.5	2.3	1.0
General Electric CF6 (Jumbo jet)										
Taxi-idle	1,030	467	51.7	23.5	15.4	7.0	3.6	1.63	0.04	0.02
Takeoff	13,449	6,100	6.7	3.04	1.3	0.59	540.0	245.0	0.54	0.24
Climbout[b]	11,400	5,171	6.6	2.99	1.3	0.59	333.0	151.0	0.54	0.24
Approach	6,204	2,814	18.6	8.44	1.9	0.86	173.0	78.5	0.44	0.20
Pratt & Whitney JT-3D (Long range jet)										
Taxi-idle	872	396	109.0	49.4	98.6	44.7	1.43	0.649	0.45	0.20
Takeoff	10,835	4,915	12.3	5.60	4.65	2.11	148.0	67.1	8.25	3.7
Climbout	8,956	4,062	15.3	6.94	4.92	2.23	96.2	43.6	8.5	3.9
Approach	4,138	1,877	39.7	18.0	7.84	3.56	21.8	9.89	8.0	3.6
Pratt & Whitney JT-3C (Long range jet)										
Taxi-idle	1,198	543	92.6	42.0	92.2	41.8	2.49	1.13	0.40	0.18
Takeoff	10,183	4,619	9.04	4.10	0.855	0.388	119.0	54.0	6.50	2.9
Climbout	8,509	3,860	16.0	7.26	0.893	0.405	84.7	38.4	6.25	2.8
Approach	4,115	1,867	49.0	22.2	8.26	3.75	23.2	10.5	3.25	1.5
Pratt & Whitney JT-4A (Long range jet)										
Taxi-idle	1,389	630	62.8	28.5	64.8	29.4	2.71	1.23	1.2	0.54
Takeoff	15,511	7,036	18.8	8.53	0.674	0.306	236.0	107.0	21.0	9.5
Climbout	13,066	5,927	18.3	8.30	1.27	0.576	155.0	70.3	20.0	9.1
Approach	5,994	2,719	26.3	11.9	3.83	1.74	35.9	16.3	6.0	2.7

Table 3.2.1-4 (continued). MODAL EMISSION FACTORS[a]
EMISSION FACTOR RATING: B

Engine and mode	Fuel rate		Carbon monoxide		Hydrocarbons		Nitrogen oxides (NO_x as NO_2)		Solid particulates	
	lb/hr	kg/hr	lb/hr	kg/hr	lb/hr	Kg/hr	lb/hr	kg/hr	lb/hr	kg/hr
General Electric CJ805 (Long range jet)										
Taxi-idle	1,001	454	63.8	28.9	27.3	12.4	1.57	0.712	1.3	0.59
Takeoff	9,960	4,518	29.1	13.2	0.556	0.252	111.0	50.3	15.0	6.8
Climbout	8,290	3,760	28.9	13.1	0.583	0.264	74.0	33.6	15.0	6.8
Approach	3,777	1,713	42.8	19.4	2.43	1.10	17.8	8.07	5.0	2.3
Pratt & Whitney JT-8D[c] (Med. range jet)										
Taxi-idle	959	435	33.4	15.2	6.99	3.71	2.91	1.32	0.36	0.16
Takeoff	8,755	3,971	7.49	3.40	0.778	0.353	198.0	89.8	3.7	1.7
Climbout	7,337	3,328	8.89	4.03	0.921	0.418	131.0	59.4	2.6	1.2
Approach	3,409	1,546	18.2	8.26	1.75	0.794	30.9	14.0	1.5	0.68
Rolls Royce Sprey MK511 (Med. range jet)										
Taxi-idle	662	300	60.2	27.3	66.1	30.0	0.849	0.385	0.17	0.077
Takeoff	7,625	3,459	14.2	6.44	Neg	Neg	153.0	69.4	16.0	7.3
Climbout	6,355	2,883	15.3	6.94	0.242	0.110	115.0	52.2	10.0	4.5
Approach	3,052	1,384	39.1	17.7	4.22	1.91	30.4	13.8	1.5	0.68
Allison T56-A15 (Air carrier turboprop; mil. transport)										
Taxi-idle	493	224	8.74	3.96	7.39	3.35	1.23	0.560	1.6	0.73
Takeoff	2,393	1,085	3.77	1.71	0.440	0.200	27.9	12.7	3.7	1.7
Climbout	2,188	992	3.40	1.54	0.399	0.181	22.2	10.1	3.0	1.4
Approach	1,146	520	3.49	1.58	0.326	0.148	7.32	3.32	3.0	1.4
Allison T56-A7 (Air carrier turboprop; mil. transport)										
Taxi-idle	548	249	15.3	6.94	6.47	2.93	2.16	0.980	1.6	0.73
Takeoff	2,079	943	2.15	0.975	0.430	0.195	22.9	10.4	3.7	1.7
Climbout	1,908	865	3.01	1.37	0.476	0.216	21.2	9.62	3.0	1.4
Approach	1,053	478	3.67	1.66	0.517	0.235	7.78	3.53	3.0	1.4

Table 3.2.1-4 (continued). MODAL EMISSION FACTORS[a]
EMISSION FACTOR RATING: B

Engine and mode	Fuel rate		Carbon monoxide		Hydrocarbons		Nitrogen oxides (NO_x as NO_2)		Solid particulates	
	lb/hr	kg/hr	lb/hr	kg/hr	lb/hr	kg/hr	lb/hr	kg/hr	lb/hr	kg/hr
Airesearch TPE-331[d] (Gen. aviation turboprop)										
Taxi-idle	146	66.2	3.53	1.60	0.879	0.399	0.955	0.433	0.3	0.14
Takeoff	365	166.0	0.393	0.178	0.055	0.025	3.64	1.65	0.8	0.36
Climbout	339	154.0	0.568	0.258	0.053	0.024	3.31	1.50	0.6	0.27
Approach	206	93.4	2.58	1.17	0.240	0.109	1.69	0.767	0.6	0.27
Teledyne/Continental 0-200 (Gen. aviation piston)										
Taxi-idle	7.68	3.48	7.52	3.41	0.214	0.097	0.009	0.004	NA[e]	NA
Takeoff	48.4	22.0	54.6	24.8	0.720	0.327	0.259	0.117	NA	NA
Climbout	48.4	22.0	54.6	24.8	0.720	0.327	0.259	0.117	NA	NA
Approach	21.3	9.66	23.8	10.8	0.380	0.172	0.052	0.024	NA	NA
Lycoming 0-320 (Gen. aviation piston)										
Taxi-idle	13.0	5.90	11.1	5.03	0.355	0.161	0.013	0.006	NA	NA
Takeoff	65.7	29.8	70.9	32.2	1.49	0.676	0.214	0.097	NA	NA
Climbout	63.5	28.8	65.8	29.8	1.31	0.594	0.375	0.170	NA	NA
Approach	23.1	10.5	24.3	11.0	0.496	0.225	0.051	0.023	NA	NA

[a] References 4 and 5.
[b] Estimated and/or calculated.
[c] "Diluted smokeless" JT-8D. All air carriers scheduled for conversion of JT-8D engines to smokeless by January 1973.
[d] Similar to the PT-6A engine.
[e] NA—Not available.

References for Section 3.2.1

1. Nature and Control of Aircraft Engine Exhaust Emissions. Northern Research and Engineering Corporation, Cambridge, Mass. Prepared for National Air Pollution Control Administration, Durham, N.C., under Contract Number PH22-68-27. November 1968.

2. The Potential Impact of Aircraft Emissions upon Air Quality. Northern Research and Engineering Corporation, Cambridge, Mass. Prepared for the Environmental Protection Agency, Research Triangle Park, N.C., under Contract Number 68-02-0085. December 1971.

3. Assessment of Aircraft Emission Control Technology. Northern Research and Engineering Corporation, Cambridge, Mass. Prepared for the Environmental Protection Agency, Research Triangle Park, N.C., under Contract Number 68-04-0011. September 1971.

4. Analysis of Aircraft Exhaust Emission Measurements. Cornell Aeronautical Laboratory Inc. Buffalo, N.Y. Prepared for the Environmental Protection Agency, Research Triangle Park, N.C., under Contract Number 68-04-0040. October 1971.

5. Private communication with Dr. E. Karl Bastress. IKOR Incorporated. Burlington, Mass. November 1972.

3.2.2 Locomotives

by David S. Kircher

3.2.2.1 General – Railroad locomotives generally follow one of two use patterns: railyard switching or road-haul service. Locomotives can be classified on the basis of engine configuration and use pattern into five categories: 2-stroke switch locomotive (supercharged), 4-stroke switch locomotive, 2-stroke road service locomotive (supercharged), 2-stroke road service locomotive (turbocharged), and 4-stroke road service locomotive.

The engine duty cycle of locomotives is much simpler than many other applications involving diesel internal combustion engines because locomotives usually have only eight throttle positions in addition to idle and dynamic brake. Emission testing is made easier and the results are probably quite accurate because of the simplicity of the locomotive duty cycle.

3.2.2.2 Emissions – Emissions from railroad locomotives are presented two ways in this section. Table 3.2.2-1 contains average factors based on the nationwide locomotive population breakdown by category. Table 3.2.2-2 gives emission factors by locomotive category on the basis of fuel consumption and on the basis of work output (horsepower hour).

The calculation of emissions using fuel-based emission factors is straightforward. Emissions are simply the product of the fuel usage and the emission factor. In order to apply the work output emission factor, however, an

Table 3.2.2-1. AVERAGE LOCOMOTIVE EMISSION FACTORS BASED ON NATIONWIDE STATISTICS[a]

Pollutant	Average emissions[b]	
	lb/10^3 gal	kg/10^3 liter
Particulates[c]	25	3.0
Sulfur oxides[d] (SO_x as SO_2)	57	6.8
Carbon monoxide	130	16
Hydrocarbons	94	11
Nitrogen oxides (NO_x as NO_2)	370	44
Aldehydes (as HCHO)	5.5	0.66
Organic acids[c]	7	0.84

[a] Reference 1.
[b] Based on emission data contained in Table 3.2.2-2 and the breakdown of locomotive use by engine category in the United States in Reference 1.
[c] Data based on highway diesel data from Reference 2. No actual locomotive particulate test data are available.
[d] Based on a fuel sulfur content of 0.4 percent from Reference 3.

Table 3.2.2-2. EMISSION FACTORS BY LOCOMOTIVE ENGINE CATEGORY[a]
EMISSION FACTOR RATING: B

Pollutant	Engine category				
	2-Stroke supercharged switch	4-Stroke switch	2-Stroke supercharged road	2-Stroke turbocharged road	4-Stroke road
Carbon monoxide					
lb/10^3 gal	84	380	66	160	180
kg/10^3 liter	10	46	7.9	19	22
g/hphr	3.9	13	1.8	4.0	4.1
g/metric hphr	3.9	13	1.8	4.0	4.1
Hydrocarbon					
lb/10^3 gal	190	146	148	28	99
lb/10^3 liter	23	17	18	3.4	12
g/hphr	8.9	5.0	4.0	0.70	2.2
g/metric hphr	8.9	5.0	4.0	0.70	2.2
Nitrogen oxides (NO_x as NO_2)					
lb/10^3 gal	250	490	350	330	470
kg/10^3 liter	30	59	42	40	56
g/hphr	11	17	9.4	8.2	10
g/metric hphr	11	17	9.4	8.2	10

[a] Use average factors (Table 3.2.2-1) for pollutants not listed in this table.

additional calculation is necessary. Horsepower hours can be obtained using the following equation:

$$w = l\,p\,h$$

where: w = Work output (horsepower hour)

l = Load factor (average power produced during operation divided by available power)

p = Available horsepower

h = Hours of usage at load factor (l)

After the work output has been determined, emissions are simply the product of the work output and the emission factor. An approximate load factor for a line-haul locomotive (road service) is 0.4; a typical switch engine load factor is approximately 0.06.[1]

References for Section 3.2.2

1. Hare, C.T. and K.J. Springer. Exhaust Emissions from Uncontrolled Vehicles and Related Equipment Using Internal Combustion Engines. Part 1. Locomotive Diesel Engines and Marine Counterparts. Final Report. Southwest Research Institute. San Antonio, Texas Prepared for the Environmental Protection Agency, Research Triangle Park, N.C., under Contract Number EHA 70-108. October 1972.

2. Young, T.C. Unpublished Data from the Engine Manufacturers Association. Chicago, Ill. May 1970.

3. Hanley, G.P. Exhaust Emission Information on Electro-Motive Railroad Locomotives and Diesel Engines. General Motors Corp. Warren, Mich. October 1971.

3.2.3 Inboard-Powered Vessels

3.2.3.1 General[1] – Fuel oil, the primary fuel used in vessels powered by inboard engines, powers steamships, motor ships, and gas-turbine-powered ships. Gas turbines presently are not in wide-spread use and are thus not included in this section. Within the next few years, however, their use may become increasingly common.[2,3]

Steamships are any ships that have steam turbines driven by an external combustion engine. Motor ships, on the other hand, have internal combustion engines operated on the diesel cycle.

3.2.3.2 Emissions – The air pollutant emissions resulting from vessel operations may be divided into two categories: emissions that occur as the ship is underway and emissions that occur when the ship is dockside or in-berth.

Underway emissions may vary considerably for vessels that are maneuvering or docking because of the varying fuel consumption. During such a time a vessel is operated under a wide range of power demands for a period of 15 minutes to 1 hour. The high demand may be 15 times the low demand; however, once the vessel has reached and sustained a normal operation speed, the fuel consumed is reasonably constant. Table 3.2.3-1. shows that 29 to 65 gallons of fuel oil is consumed per nautical mile (60 to 133 liters per kilometer) for steamships and 7 to 30 gallons of oil per nautical mile (14 to 62 liters per kilometer) for motorships.

Table 3.2.3-1. FUEL CONSUMPTION RATES FOR STEAMSHIPS AND MOTOR SHIPS[a]

Fuel consumption	Steamships		Motor ships	
	Range	Average	Range	Average
Underway				
lb/hphr	0.51 to 0.65	0.57	0.28 to 0.44	0.34
kg/hphr	0.23 to 0.29	0.26	0.13 to 0.20	0.15
gal/naut. mi	29 to 65	44	7 to 30	19
liters/km	59.4 to 133.0	90	14 to 62	38.8
In-berth				
gal/day	840 to 3,800	1,900	240 to 1,260	660
liters/day	3,192 to 14,400	7,200	910 to 4,800	2,500

[a] Reference 1.

Unless a ship receives auxiliary steam provided by the port, goes immediately into drydock, or is out of operation after arrival in port, she continues her emissions at dockside. Power must be generated for the ship's light, heat, pumps, refrigeration, ventilation, etc. A few steamships use auxiliary engines to supply power, but they generally operate one or two main boilers under reduced draft and lowered fuel rates, a much less efficient process. Motor ships generally use diesel-powered generators to furnish auxiliary power.

As shown in Table 3.2.3-1, fuel oil consumption at dockside varies appreciably. Based on the data presented in this table and the emission factors for residual fuel-oil combustion and diesel-oil combustion, emission factors have been determined for vessels and are presented in Table 3.2.3-2.

Table 3.2.3-2. EMISSION FACTORS FOR INBOARD VESSELS
EMISSION FACTOR RATING: D

Pollutant	Steamships[a]				Motor ships[b]			
	Underway		In-berth		Underway		In-berth	
	lb/mi	kg/km	lb/day	kg/day	lb/mi	kg/km	lb/day	kg/day
Particulate	0.4	0.098	15	6.8	2	0.49	16.5	7.5
Sulfur dioxide[c]	7S	1.71S	300S	136S	(SO_x) 1.5	0.37	43	19.5
Sulfur trioxide[c]	0.1S	0.02S	4S	1.8S	—	—	—	—
Carbon monoxide	0.002	0.0005	0.08	0.036	1.2	0.29	46	20.8
Hydrocarbons	0.2	0.05	9	4.1	0.9	0.22	33	14.9
Nitrogen oxides (NO_2)	4.6	1.13	200	90.7	1.4	0.34	50	22.7
Aldehydes (HCHO)	0.04	0.01	2	0.9	0.07	0.017	2.6	1.2

[a] Based on data in Table 3.2.3-1 and emission factors for fuel oil.
[b] Based on data in Table 3.2.3-1 and emission factors for diesel fuel.
[c] S = weight percent sulfur in fuel; assumed to be 0.5 percent for diesel.

References for Section 3.2.3

1. Pearson, J.R. Ships As Sources of Emissions. (Presented at the Annual Meeting of the Pacific Northwest International Section of the Air Pollution Control Association. Portland, Oregon. November 1969.)

2. Standard Distillate Fuel for Ship Propulsion. Report of a Committee to the Secretary of the Navy. U.S. Department of the Navy. Washington, D.C. October 1968.

3. GTS Admiral William M. Callahan Performance Results. Diesel and Gas Turbine Progress. *35* (9):78, September 1969.

3.2.4 Outboard-Powered Vessels

by David S. Kircher

3.2.4.1 General – Most of the approximately 7 million outboard motors in use in the United States are 2-stroke engines with an average available horsepower of about 25. Because of the predominately leisure-time use of outboard motors, emissions related to their operation occur primarily during nonworking hours, in rural areas, and during the three summer months. Nearly 40 percent of the outboards are operated in the states of New York, Texas, Florida, Michigan, California, and Minnesota. This distribution results in the concentration of a large portion of total nationwide outboard emissions in these states.[1]

3.2.4.2 Emissions – Because the vast majority of outboards have underwater exhaust, emission measurement is very difficult. The values presented in Table 3.2.4-1 are the approximate atmospheric emissions from outboards. These data are based on tests of four outboard motors ranging from 4 to 65 horsepower.[1] The emission results from these motors are a composite based on the nationwide breakdown of outboards by horsepower. Emission factors are presented two ways in this section: in terms of fuel use and in terms of work output (horsepower hour). The selection of the factor used depends on the source inventory data available. Work output factors are used when the number of outboards in use is available. Fuel-specific emission factors are used when fuel consumption data are obtainable.

Table 3.2.4-1. AVERAGE EMISSION FACTORS FOR OUTBOARD MOTORS[a]
EMISSION FACTOR RATING: B

	Based on fuel consumption		Based on work output[c]	
Pollutant[b]	lb/10^3 gal	kg/10^3 liter	g/hphr	g/metric hphr
Sulfur oxides[d] (SO_x as SO_2)	6.4	0.77	0.49	0.49
Carbon monoxide	3300	400	250	250
Hydrocarbons[e]	1100	130	85	85
Nitrogen oxides (NO_x as NO_2)	6.6	0.79	0.50	0.50

[a] Reference 1. Data in this table are emissions to the atmosphere. A portion of the exhaust remains behind in the water.

[b] Particulate emission factors are not available because of the problems involved with measurement from an underwater exhaust system but are considered negligible.

[c] Horsepower hours are calculated by multiplying the average power produced during the hours of usage by the population of outboards in a given area. In the absence of data specific to a given geographic area, the hphr value can be estimated using average nationwide values from Reference 1. Reference 1 reports the average power produced (not the available power) as 9.1 hp and the average annual usage per engine as 50 hours. Thus, hphr = (number of outboards) (9.1 hp) (50 hours/outboard-year). Metric hphr = 0.9863 hphr.

[d] Based on fuel sulfur content of 0.043 percent from Reference 2 and on a density of 6.17 lb/gal.

[e] Includes exhaust hydrocarbons only. No crankcase emissions occur because the majority of outboards are 2-stroke engines that use crankcase induction. Evaporative emissions are limited by the widespread use of unvented tanks.

References for sections 3.2.4

1. Hare, C.T. and K.J. Springer. Exhaust Emissions from Uncontrolled Vehicles and Related Equipment Using Internal Combustion Engines. Part II, Outboard Motors. Final Report. Southwest Research Institute. San Antonio, Texas. Prepared for the Environmental Protection Agency, Research Triangle Park, N.C., under Contract Number EHS 70-108. January 1973.

2. Hare, C.T. and K.J. Springer. Study of Exhaust Emissions from Uncontrolled Vehicles and Related Equipment Using Internal Combustion Engines. Emission Factors and Impact Estimates for Light-Duty Air-Cooled Utility Engines and Motorcycles. Southwest Research Institute. San Antonio, Texas. Prepared for the Environmental Protection Agency, Research Triangle Park, N.C., under Contract Number EHS 70-108. January 1972.

3.2.5 Small, General Utility Engines

by David S. Kircher

3.2.5.1 General – This category of engines comprises small 2-stroke and 4-stroke, air-cooled, gasoline-powered motors. Examples of the uses of these engines are: lawnmowers, small electric generators, compressors, pumps, minibikes, snowthrowers, and garden tractors. This category does *not* include motorcycles, outboard motors, chain saws, and snowmobiles, which are either included in other parts of this chapter or are not included because of the lack of emission data.

Approximately 89 percent of the more than 44 million engines of this category in service in the United States are used in lawn and garden applications.[1]

3.2.5.2 Emissions – Emissions from these engines are reported in Table 3.2.5-1. For the purpose of emission estimation, engines in this category have been divided into lawn and garden (2-stroke), lawn and garden (4-stroke) and miscellaneous (4-stroke). Emission factors are presented in terms of horsepower hour and in terms of annual usage.

Table 3.2.5-1. EMISSION FACTORS FOR SMALL, GENERAL-UTILITY ENGINES[a,b]
EMISSION FACTOR RATING: B

Engine	Sulfur oxides[c] (SO_x as SO_2)	Particulate	Carbon monoxide	Hydrocarbons		Nitrogen oxides (NO_x as NO_2)	Aldehydes (HCHO)
				Exhaust	Evaporative[d]		
2-Stroke, lawn and garden							
g/hphr	–	25	480	190	–	1.4	1.8
g/metric hphr	–	25	480	190	–	1.4	1.8
g/unit-year	49	1,700	33,000	13,000	90	96	120
4-Stroke, lawn and garden							
g/hphr	–	2.5	290	21	–	3.9	0.44
g/metric hphr	–	2.5	290	21	–	3.9	0.44
g/unit-year	26	170	20,000	1,500	90	270	30
4-Stroke miscellaneous							
g/hphr	–	2.5	230	14	–	5.1	0.40
g/metric hphr	–	2.5	230	14	–	5.1	0.40
g/unit-year	29	190	18,000	1,100	230	390	27

[a] Reference 2.
[b] Values for g/unit-year were calculated assuming an annual usage of 50 hours and a 40 percent load factor. Factors for g/hphr can be used in instances where annual usages, load factors, and rated horsepower are known. Horsepower hours are the product of the usage in hours, the load factor, and the rated horsepower.
[c] Values calculated, not measured, based on the use of 0.043 percent sulfur content fuel.
[d] Values calculated from annual fuel consumption. Evaporative losses from storage and filling operations are not included (see Chapter 4).

References for Section 3.2.5

1. Donohue, J.A., G.C. Hardwick, H.K. Newhall, K.S. Sanvordenker, and N.C. Woelffer. Small Engine Exhaust Emissions and Air Quality in the United States. (Presented at the Automotive Engineering Congress, Society of Automotive Engineers. Detroit. January 1972.)

2. Hare, C.T. and K.J. Springer. Study of Exhaust Emissions from Uncontrolled Vehicles and Related Equipment Using Internal Combustion Engines. Emission Factors and Impact Estimates for Light-Duty Air-Cooled Utility Engines and Motorcycles. Southwest Research Institute. San Antonio, Texas. Prepared for the Environmental Protection Agency, Research Triangle Park, N.C., under Contract Number EHS 70-108. January 1972.

3.3 OFF-HIGHWAY, STATIONARY SOURCES

By David S. Kircher

In general, engines included in this category are internal combustion engines used in applications similar to those associated with external combustion sources (see Chapter 1). The major engines within this category are gas turbines and large, heavy-duty, general utility reciprocating engines. Emission data currently available for these engines are limited to gas turbines and natural-gas-fired, heavy-duty, general utility engines. Most stationary, off-highway internal combustion engines are used to generate electric power, to pump gas or other fluids, and to compress air for pneumatic machinery.

3.3.1 Stationary Gas Turbines

3.3.1.1 General – Stationary gas turbines find application in electric power generators, in gas pipeline pump and compressor drives, and in various process industries. A recent survey revealed that the majority of these engines are used in electrical generation for continuous, peaking, or standby power.[1] The survey also indicated that the primary fuels used are natural gas and No. 2 (distillate) fuel oil, although residual oil is used in a few instances.

Stationary gas turbines are adaptations of aircraft turbines that use a power turbine to convert jet thrust into rotational power. Although turbine duty cycles vary with the engine application, many are run continuously at base load, which is customarily about 80 percent of maximum capability.[2]

3.3.1.2 Emissions – Tables 3.3.1-1 and 3.3.1-2 contain emission factors for gas turbines burning distillate fuel oil and natural gas, respectively. The emission values reported are for base load (except for sulfur oxides, which are dependent on fuel consumption and sulfur content). Test data reveal little difference between base load emission levels and peak load emissions levels. For this reason the values listed in the tables can be used to estimate peak load emissions as well as base load emissions. The tabulated values do not apply to emissions at low power settings. Most gas turbine applications, however, do not involve the frequent use of low power so that base load factors apply in the majority of cases.

Table 3.3.1-1. EMISSION FACTORS FOR GAS TURBINES USING DISTILLATE FUEL OIL
EMISSION FACTOR RATING: C

Pollutant[a]	Emissions (base load)			
	lb/10^3 gal[b]	kg/10^3 liter[b]	lb/10^6 Btu	kg/10^6 kcal
Particulate[c]	8.4	1.0	0.06	0.11
Sulfur oxides[d] (SO_x as SO_2)	142S	17S	1.0S	1.8S
Nitrogen oxides (NO_x as NO_2)[c]	120	14	0.84	1.5

[a] No data are available for carbon monoxide and hydrocarbon mass emissions. These pollutants exist in significant quantities only at lower power settings (Reference 1). Because normal operation of stationary gas turbines is at base load, carbon monoxide and hydrocarbon emissions can be considered negligible.
[b] Particulate and nitrogen oxides emissions were reported as lb/10^6 Btu and have been converted to lb/10^3 gal (kg/10^3 liter) assuming 140,500 Btu/gal.
[c] References 3 and 4.
[d] This factor was calculated assuming that all surfur in the fuel is oxidized to SO_2. The SO_2 emission factor is calculated using the weight percent sulfur in fuel.

Table 3.3.1-2. EMISSION FACTORS FOR GAS TURBINES USING NATURAL GAS
EMISSION FACTOR RATING: C

Pollutant[c]	Emissions (base load)[a,b]			
	$lb/10^6\ ft^3$	$kg/10^6\ m^3$	$lb/10^6$ Btu	$kg/10^6$ kcal
Nitrogen oxides (NO_x as NO_2)	600	9,600	0.57	1.0
Sulfur oxides[d]	0.6	9.6	0.0006	0.001

[a] Reference 3.
[b] Natural gas heat content of 1050 Btu/ft^3 (9350 kcal/m^3) was assumed.
[c] Carbon monoxide and hydrocarbon emissions can be considered negligible. Emission factors for particulate are not available but are assumed to be negligible.
[d] Reference 5. Values based on an average natural gas sulfur content of 2000 gr/10^6 ft^3 (4600 g/10^6 m^3).

References for Section 3.3.1

1. O'Keefe, W. and R.G. Schwieger. Prime Movers. Power. *115*(11):522-531. November 1971.

2. McGaw, W.L., Jr. Operating Considerations Affecting the Performance of Gas Turbine Systems. Tappi. *54*(6):950-954. New York, N.Y. June 1971.

3. Unpublished emission data for gas turbines. Turbo Power and Marine Systems, Subsidiary of United Aircraft Corporation. Farmington, Conn. September 1971.

4. Johnson, R.H. and M.B. Hilt. Environmental Performance of Gas Turbines. General Electric Company, Gas Turbine Department, Schenectady, N.Y. Technical Information Series. Number 71-GTD-10. March 1971.

5. Hovey, H.H., A. Risman, and J.F. Cunnan. The Development of Air Contaminant Emission Tables for Nonprocess Emissions. New York State Department of Health. Albany, N.Y. 1965.

3.3.2 Heavy-Duty, General Utility, Gaseous-Fueled Engines

3.3.2.1 General – Engines in this category are used in the oil and gas industry for driving compressors in pipeline pressure boosting systems, in gas distribution systems, and in vapor recovery systems (at petroleum refineries). The engines burn either natural gas or refinery gas.

3.3.2.2 Emissions – Emissions from heavy-duty, gaseous-fueled internal combustion engines are reported in Table 3.3.2-1. Test data were available for nitrogen oxides and hydrocarbons only; sulfur oxides are calculated from fuel sulfur content. Nitrogen oxides have been found to be extremely dependent on an engine's work output; hence, Figure 3.3.2-1 presents the relationship between nitrogen oxide emissions and horsepower.

Table 3.3.2-1. EMISSION FACTORS FOR HEAVY-DUTY, GENERAL-UTILITY, STATIONARY ENGINES USING GASEOUS FUELS

EMISSION FACTOR RATING: C

Pollutant	Emissions[a]			
	$lb/10^6\ ft^3$	$kg/10^6\ m^3$	lb/hr	kg/hr
Sulfur oxides[b]	0.6	9.6	–	–
Nitrogen oxides[c]	–	–	–	–
Hydrocarbons[d]	1.2	19	4.2	1.9

[a] Reference 1. Values for $lb/10^6\ ft^3$ ($kg/10^6\ m^3$) based on 3.37 $10^6\ ft^3/hr$ heat input.
[b] Based on an average natural gas sulfur content of 2000 $gr/10^6\ ft^3$ (4600 $g/10^6\ m^3$).
[c] See Figure 3.3.2-1.
[d] Values in Reference 1 were given as tons/day. In converting to lb/hr, 24-hour operation was assumed.

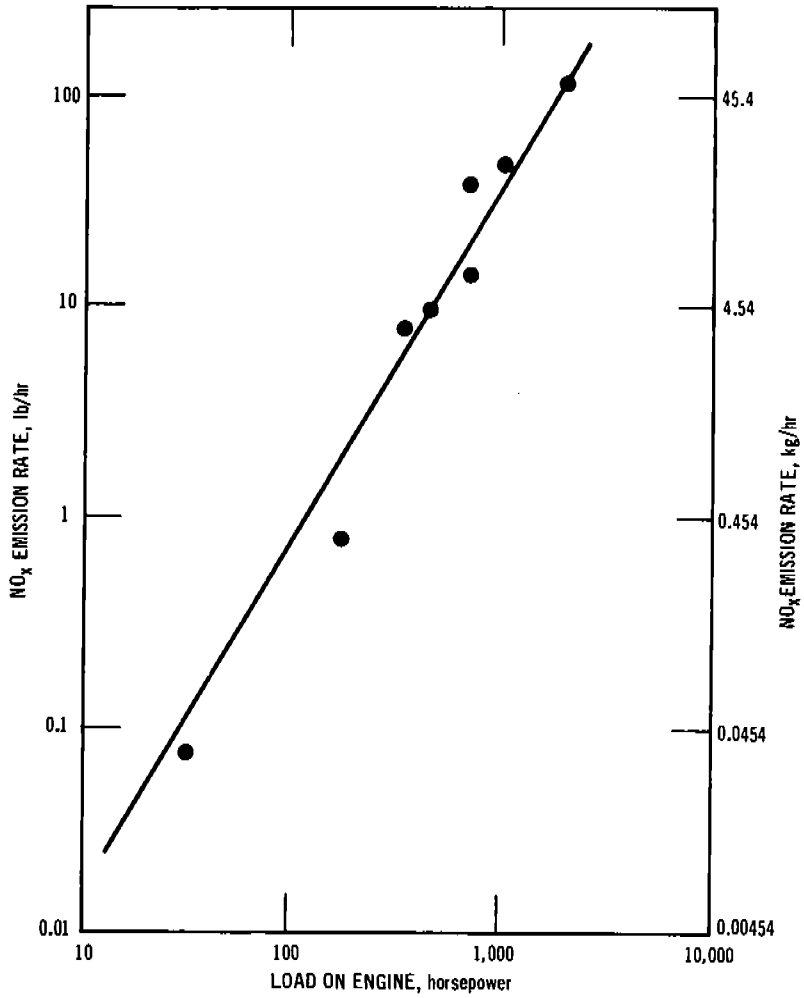

Figure 3.3.2-1. Nitrogen oxides emissions from stationary internal combustion engines.[2,3]

References for Section 3.3.2

1. Emissions to the Atmosphere from Eight Miscellaneous Sources in Petroleum Refineries. Los Angeles County Air Pollution Control District, Los Angeles, Calif., Report Number VIII. June 1958.

2. Bartok, W., A.R. Crawford, A.R. Cunningham, H.J. Hall, E.H. Manny, and A. Skopp. Systems Study of Nitrogen Oxide Control Methods for Stationary Sources. Final Report-Volume II. Esso Research and Engineering Company. Newark, N.J. Prepared for the National Air Pollution Control Administration, Durham, N.C., under Contract Number PH-22-68-55. November 1969.

3. Mills, J.A., K.D. Leudtke, P.F. Woolrich, and S.B. Perry. Emissions of Oxides of Nitrogen from Stationary Sources in Los Angeles County. Report Number 3. Los Angeles County Air Pollution Control District, Los Angeles, Calif. April 1961.

4. EVAPORATION LOSS SOURCES

Evaporation losses include the organic solvents emitted from dry-cleaning plants and surface-coating operations as well as the volatile matter in petroleum products. This chapter presents the hydrocarbon emissions from these sources, including petroleum storage and gasoline marketing. Where possible, the effect of controls to reduce the emissions of organic compounds has been shown.

4.1 DRY CLEANING

4.1.1 General[1]

Clothing and other textiles may be cleaned by treating them with organic solvents. This treatment process involves agitating the clothing in a solvent bath, rinsing with clean solvent, and drying with warm air.

There are basically two types of dry-cleaning installations: those using petroleum solvents [Stoddard and 140°F (60°C)] and those using chlorinated synthetic solvents (perchloroethylene). The trend in dry-cleaning operations today is toward smaller package operations located in shopping centers and suburban business districts that handle approximately 1500 pounds (675 kg) of clothes per week on the average. These plants almost exclusively use perchloroethylene, whereas the older, larger dry-cleaning plants use petroleum solvents. It has been estimated that perchloroethylene is used on 50 percent of the weight of clothes dry-cleaned in the United States today and that 70 percent of the dry-cleaning plants use perchloroethylene.[2]

4.1.2 Emissions and Controls[1]

The major source of hydrocarbon emissions in dry cleaning is the tumbler through which hot air is circulated to dry the clothes. Drying leads to vaporization of the solvent and consequent emissions to the atmosphere, unless control equipment is used. The primary control element in use in synthetic solvent plants is a water-cooled condenser that is an integral part of the closed cycle in a tumbler or drying system. Up to 95 percent of the solvent that is evaporated from the clothing is recovered here. About half of the remaining solvent is then recovered in an activated-carbon adsorber, giving an overall control efficiency of 97 to 98 percent. There are no commercially available control units for solvent recovery in petroleum-based plants because it is not economical to recover the vapors. Emission factors for dry-cleaning operations are shown in Table 4.1-1.

It has been estimated that about 18 pounds (8.2 kilograms) per capita per year of clothes are cleaned in moderate climates[3] and about 25 pounds (11.3 kilograms) per capita per year in colder areas.[4] Based on this information and the facts that 50 percent of all solvents used are petroleum-based[2] and 25 percent of the synthetic solvent plants are controlled,[5] emission factors can be determined on a pounds- (kilograms-) per-capita basis. Thus approximately 2 pounds (0.9 kilogram) per capita per year are emitted from dry-cleaning plants in moderate climates and 2.7 pounds (1.23 kilograms) per capita per year in colder areas.

Table 4.1-1. HYDROCARBON EMISSION FACTORS FOR DRY-CLEANING OPERATIONS
EMISSION FACTOR RATING: C

Control	Petroleum solvents		Synthetic solvents	
	lb/ton	kg/MT	lb/ton	kg/MT
Uncontrolled[a]	305	152.5	210	105
Average control[b]	–	–	95	47.5
Good control[c]	–	–	35	17.5

[a]References 2, 4, 6, and 7.
[b]Reference 6.
[c]Reference 8.

References for Section 4.1

1. Air Pollutant Emission Factors. Final Report. Resources Research, Incorporated. Prepared for National Air Pollution Control Administration, Durham, N.C., under Contract Number CPA-22-69-119. April 1970.

2. Communication with the National Institute of Dry Cleaning. 1969.

3. Duprey, R.L. Compilation of Air Pollutant Emission Factors. U.S. DHEW, PHS, National Center for Air Pollution Control, Durham, N. C. PHS Publication Number 999-AP-42. 1968. p. 46.

4. Dry Cleaning Plant Survey. Michigan Department of Health. Kent County, Michigan. 1965.

5. Communication on dry cleaning plants with S. Landon, Washer Machinery Corporation. June 1968.

6. Chass, R. L., C.V. Kanter, and J.H. Elliot. Contribution of Solvents to Air Pollution and Methods for Controlling Their Emissions. J. Air Pol. Control Assoc. *13*:64-72, February 1963.

7. Bi-State Study of Air Pollution in the Chicago Metropolitan Area. Ill. Dept. of Public Health, Ind. State Board of Health, and Purdue University. Chicago, Illinois. 1957-59.

8. Communication on emissions from dry cleaning plants with A. Netzley. Los Angeles County Air Pollution Control District. Los Angeles, California. July 1968.

4.2 SURFACE COATING

4.2.1 Process Description[1,2]

Surface-coating operations primarily involve the application of paint, varnish, lacquer, or paint primer for decorative or protective purposes. This is accomplished by brushing, rolling, spraying, flow coating, and dipping. Some of the industries involved in surface-coating operations are automobile assemblies, aircraft companies, container manufacturers, furniture manufacturers, appliance manufacturers, job enamelers, automobile repainters, and plastic products manufacturers.

4.2.2 Emissions and Controls[3]

Emissions of hydrocarbons occur in surface-coating operations because of the evaporation of the paint vehicles, thinners, and solvents used to facilitate the application of the coatings. The major factor affecting these emissions is the amount of volatile matter contained in the coating. The volatile portion of most common surface coatings averages approximately 50 percent, and most, if not all, of this is emitted during the application and drying of the coating. The compounds released include aliphatic and aromatic hydrocarbons, alcohols, ketones, esters, alkyl and aryl hydrocarbon solvents, and mineral spirits. Table 4.2-1 presents emission factors for surface-coating operations.

Control of the gaseous emissions can be accomplished by the use of adsorbers (activated carbon) or afterburners. The collection efficiency of activated carbon has been reported at 90 percent or greater. Water curtains or filler pads have little or no effect on escaping solvent vapors; they are widely used, however, to stop paint particulate emissions.

Table 4.2-1. GASEOUS HYDROCARBON EMISSION FACTORS FOR SURFACE-COATING APPLICATIONS[a]
EMISSION FACTOR RATING: B

Type of coating	Emissions[b]	
	lb/ton	kg/MT
Paint	1120	560
Varnish and shellac	1000	500
Lacquer	1540	770
Enamel	840	420
Primer (zinc chromate)	1320	660

[a]Reference 1.
[b]Reported as undefined hydrocarbons, usually organic solvents, both aryl and alkyl. Paints weigh 10 to 15 pounds per gallon (1.2 to 1.9 kilograms per liter); varnishes weigh about 7 pounds per gallon (0.84 kilogram per liter).

References for Section 4.2

1. Weiss, S.F. Surface Coating Operations. In: Air Pollution Engineering Manual, Danielson, J.A. (ed.). U.S. DHEW, PHS, National Center for Air Pollution Control. Cincinnati, Ohio. Publication Number 999-AP-40. p.387-390.

2. Control Techniques for Hydrocarbon and Organic Gases From Stationary Sources. U.S. DHEW, PHS, EHS, National Air Pollution Control Administration. Washington, D.C. Publication Number AP-68. October 1969. Chapter 7.6.

3. Air Pollutant Emission Factors. Final Report. Resources Research, Inc. Reston, Va. Prepared for National Air Pollution Control Administration, Durham, N.C., under Contract Number CPA-22-69-119. April 1970.

4.3 PETROLEUM STORAGE

4.3.1 General[1,2]

In the storage and handling of crude oil and its products, evaporation losses may occur. These losses may be divided into two categories: breathing loss and working loss. Breathing losses are associated with the thermal expansion and contraction of the vapor space resulting from the daily temperature cycle. Working losses are associated with a change in liquid level in the tank (filling or emptying).

4.3.2 Emissions

There are two major classifications of tanks used to store petroleum products: fixed-roof tanks and floating-roof tanks. The evaporation losses from both of these types of tanks depend on a number of factors, such as type of product stored (gasoline or crude oil), vapor pressure of the stored product, average temperature of the stored product, tank diameter and construction, color of tank paint, and average wind velocity of the area. In order to estimate emissions from a given tank, References 1 and 3 should be used. An average factor can be obtained, however, by making a few assumptions. These average factors for both breathing losses and working losses for fixed-roof and floating-roof tanks are presented in Table 4.3-1.

References for Section 4.3

1. Evaporation Loss from Fixed Roof Tanks. American Petroleum Institute. New York, N.Y. API Bulletin Number 2518. June 1962.

2. Evaporative Loss in the Petroleum Industry: Causes and Control. American Petroleum Institute. New York, N.Y. API Bulletin Number 2513. February 1959.

3. Evaporation Loss from Floating Roof Tanks. American Petroleum Institute. New York, N.Y. API Bulletin Number 2517. February 1962.

4. Tentative Methods of Measuring Evaporation Loss from Petroleum Tanks and Transportation Equipment. American Petroleum Institute. New York, N.Y. API Bulletin Number 2512. July 1957.

Table 4.3-1. HYDROCARBON EMISSION FACTORS FOR EVAPORATION LOSSES FROM THE STORAGE OF PETROLEUM PRODUCTS
EMISSION FACTOR RATING: C

Type of tank[a]	Units	Type of material stored	
		Gasoline or finished petroleum product	Crude oil
Fixed roof			
Breathing loss[b]	lb/day-1000 gal storage capacity	0.4	0.3
	kg/day-1000 liters storage capacity	0.05	0.04
Working loss[b,c]	lb/1000 gal throughput	11	8
	kg/1000 liters throughput	1.32	0.96
Floating roof			
Breathing loss[d]	lb/day-tank	140(40 to 210)[e]	100(30 to 160)[f]
	kg/day-tank	63.5	45.4
Working loss[d]	lb/1000 gal throughput	Neg	Neg
	kg/1000 liters throughput	Neg	Neg

[a]For tanks equipped with vapor-recovery systems, emissions are negligible.[4]
[b]Reference 1.
[c]An average turnover rate for petroleum storage is approximately 6.[4] Thus, the throughput is equal to 6 times the capacity.
[d]Reference 3.
[e]140 (63.5) based on average conditions and tank diameter of 100 ft (30.5 m); use 40 (18.1 kg) for smaller tanks, 50 ft (15.3 m) diameter; use 210 (95 kg) for larger tanks, 150 ft (45.8 m) diameter.
[f]Use 30 (13.6 kg) for smaller tanks, 50 ft (15.3 m) diameter; use 160 (72.5 kg) for larger tanks, 150 ft (45.8m) diameter.

4.4 GASOLINE MARKETING

4.4.1 General

In the marketing of gasoline from the original storage and distribution to the final use in motor vehicles, there are five major points of emission:

1. Breathing and working losses from storage tanks at refineries and bulk terminals.

2. Filling losses from loading-tank conveyances at refineries and bulk terminals (included under working losses from storage tanks).

3. Filling losses from loading underground storage tanks at service stations.

4. Spillage and filling losses in filling automobile gas tanks at service stations.

5. Evaporative losses from the carburetor and gas tank of motor vehicles.

In this section only points 3 and 4 will be discussed. Points 1 and 2 have been covered in the section on petroleum storage and point 5 is covered under the section on gasoline-powered motor vehicles.

4.4.2 Emissions and Controls

The emissions associated with gasoline marketing are primarily vapors expelled from a tank by displacement as a result of filling. The vapor losses are a function of the method of filling the tank (either splash or submerged fill). Splash and submerged fill have been defined as follows: "In splash fill the gasoline enters the top of the fill pipe and then has a free fall to the liquid surface in the tank. The free falling tends to break up the liquid stream into droplets. As these droplets strike the liquid surface, they carry entrained air into the liquid, and a 'boiling' action results as this air escapes up through the liquid surface. The net effect of these actions is the creation of additional vapors in the tank. In submerged filling, the gasoline flows to the bottom of the tank through the fill pipes and enters below the surface of the liquid. This method of filling creates very little disturbance in the liquid bath and, consequently, less vapor formation than splash filling."[1]

Emission factors for gasoline marketing are shown in Table 4.4-1. As is shown in footnote "b," if a vapor-return system in which the underground tank vent line is left open is used, losses from filling service station tanks can be greatly reduced. If a displacement type, closed vapor-return system is employed, the losses can be almost completely eliminated.

Table 4.4-1. EMISSION FACTORS FOR EVAPORATION LOSSES FROM GASOLINE MARKETING
EMISSION FACTOR RATING: B

Point of emission	Emissions	
	lb/10^3 gal	kg/10^3 liters
Filling service station tanks[a,b]		
Splash fill	12	1.44
Submerged fill	7	0.84
50% splash fill and 50% submerged fill	9	1.08
Filling automobile tanks[c]	12	1.44

[a]Reference 1.
[b]With a vapor return, open-system emissions can be reduced to approximately 0.8 lb/10^3 gal (0.096 kg/10^3 liters), and closed-system emissions are negligible.
[c]References 2 and 3.

References for Section 4.4

1. Chass, R. L. et al. Emissions from Underground Gasoline Storage Tanks. J. Air Pol. Control Assoc. *13*:524-530, November 1963.

2. MacKnight, R. A. et al. Emission of Olefins from Evaporation of Gasoline and Significant Factors Affecting Production of Low Olefin Gasolines. Unpublished report. Los Angeles Air Pollution Control District. Los Angeles, California. March 1959.

3. Bureau of Air Sanitation, State of California Department of Health. Clean Air Quarterly. *8*:1. March 1964.

5. CHEMICAL PROCESS INDUSTRY

This section deals with emissions from the manufacture and use of chemicals or chemical products. Potential emissions from many of these processes are high, but because of the nature of the compounds they are usually recovered as an economic necessity. In other cases, the manufacturing operation is run as a closed system allowing little or no escape to the atmosphere.

In general, the emissions that reach the atmosphere from chemical processes are primarily gaseous and are controlled by incineration, adsorption, or absorption. In some cases, particulate emissions may also be a problem. The particulates emitted are generally extremely small and require very efficient treatment for removal. Emission data from chemical processes are sparse. It was therefore frequently necessary to make estimates of emission factors on the basis of material balances, yields, or similar processes.

5.1 ADIPIC ACID

5.1.1 Process Description[1]

Adipic acid, $COOH \cdot (CH_2)4 \cdot COOH$, is a dibasic acid used in the manufacture of synthetic fibers. The acid is made in a continuous two-step process. In the first step, cyclohexane is oxidized by air over a catalyst to a mixture of cyclohexanol and cyclohexanone. In the second step, adipic acid is made by the catalytic oxidation of the cyclohexanol-cyclohexanone mixture using 45 to 55 percent nitric acid. The final product is then purified by crystallization.[2]

5.1.2 Emissions

The only significant emissions from the manufacture of adipic acid are nitrogen oxides. In oxidizing the cyclohexanol/cyclohexanone, nitric acid is reduced to unrecoverable N_2O and potentially recoverable NO and NO_2. This NO and NO_2 can be emitted into the atmosphere. Table 5.1-1 shows typical emissions of NO and NO_2 from an adipic acid plant.

Table 5.1-1. EMISSION FACTORS FOR AN ADIPIC ACID PLANT WITHOUT CONTROL EQUIPMENT
EMISSION FACTOR RATING: D

Source	Nitrogen oxides (NO,NO_2)	
	lb/ton	kg/MT
Oxidation of cyclohexanol/cyclohexanone[a]	12	6

[a]Reference 1.

References for Section 5.1

1. Control Techniques for Nitrogen Oxides from Stationary Sources. U.S. DHEW, PHS, EHS, National Air Pollution Control Administration. Washington, D.C. Publication Number AP-67. March 1970. p. 7-12, 7-13.

2. Goldbeck, M., Jr. and F.C. Johnson. Process for Separating Adipic Acid Precursors. E.I. DuPont De Nemours and Co. U.S. Patent No. 2, 703, 331. Official Gazette U.S. Patent Office. *692*(1): March 1, 1955.

5.2 AMMONIA

5.2.1 Process Description[1]

The manufacture of ammonia (NH_3) is accomplished primarily by the catalytic reaction of hydrogen and nitrogen at high temperatures and pressures. In a typical plant a hydrocarbon feed stream (usually natural gas) is desulfurized, mixed with steam, and catalytically reformed to carbon monoxide and hydrogen. Air is introduced into the secondary reformer to supply oxygen and provide a nitrogen to hydrogen ratio of 1 to 3. The gases then enter a two-stage shift converter that allows the carbon monoxide to react with water vapor to form carbon dioxide and hydrogen. The gas stream is next scrubbed to yield a gas containing less than 1 percent CO_2. A methanator may be used to convert quantities of unreacted CO to inert CH_4 before the gases, now largely nitrogen and hydrogen in a ratio of 1 to 3, are compressed and passed to the converter. Alternatively, the gases leaving the CO_2 scrubber may pass through a CO scrubber and then to the converter. The synthesis gases finally react in the converter to form ammonia.

5.2.2 Emissions and Controls[1]

When a carbon monoxide scrubber is used before sending the gas to the converter, the regenerator offgases contain significant amounts of carbon monoxide (73 percent) and ammonia (4 percent). This gas may be scrubbed to recover ammonia and then burned to utilize the CO fuel value.[2]

The converted ammonia gases are partially recycled, and the balance is cooled and compressed to liquefy the ammonia. The noncondensable portion of the gas stream, consisting of unreacted nitrogen, hydrogen, and traces of inerts such as methane, carbon monoxide, and argon, is largely recycled to the converter. To prevent the accumulation of these inerts, however, some of the noncondensable gases must be purged from the system.

The purge or bleed-off gas stream contains about 15 percent ammonia.[2] Another source of ammonia is the gases from the loading and storage operations. These gases may be scrubbed with water to reduce the atmospheric emissions. In addition, emissions of CO and ammonia can occur from plants equipped with CO-scrubbing systems. Emission factors are presented in Table 5.2-1.

Table 5.2-1. EMISSION FACTORS FOR AMMONIA MANUFACTURING WITHOUT CONTROL EQUIPMENT[a]
EMISSION FACTOR RATING: B

Type of source	Carbon monoxide		Hydrocarbons[b]		Ammonia	
	lb/ton	kg/MT	lb/ton	kg/MT	lb/ton	kg/MT
Plants with methanator						
Purge gas[c]	Neg	Neg	90	45	3	1.5
Storage and loading[c]	–	–	–	–	200	100
Plants with CO absorber and regeneration system						
Regenerator exit[d]	200	100	–	–	7	3.5
Purge gas[c]	Neg	Neg	90	45	3	1.5
Storage and loading[c]	–	–	–	–	200	100

[a]References 2 and 3.
[b]Expressed as methane.
[c]Ammonia emissions can be reduced by 99 percent by passing through three stages of a packed-tower water scrubber. Hydrocarbons are not reduced.
[d]A two-stage water scrubber and incineration system can reduce these emissions to a negligible amount.

References for Section 5.2

1. Air Pollutant Emission Factors. Final Report. Resources Research, Incorporated. Reston, Virginia. Prepared for National Air Pollution Control Administration, Durham, N.C., under Contract Number CPA-22-69-119. April 1970.

2. Burns, W.E. and R.R. McMullan. No Noxious Ammonia Odor Here. Oil and Gas Journal. p. 129-131, February 25, 1967.

3. Axelrod, L.C. and T.E. O'Hare. Production of Synthetic Ammonia. New York, M. W. Kellogg Company. 1964.

5.3 CARBON BLACK

Carbon black is produced by the reaction of hydrocarbon fuel such as oil or gas, or both, with a limited supply of air at temperatures of 2500 to 3000°F (1370 to 1650°C). Part of the fuel is burned to CO_2, CO, and water, thus generating heat for the combustion of fresh feed. The unburned carbon is collected as a black fluffy particle. The three basic processes for producing this compound are the furnace process, accounting for about 83 percent of production; the older channel process, which accounts for about 6 percent of production; and the thermal process.

5.3.1 Channel Black Process[1]

In the channel black process, natural gas is burned with a limited air supply in long, low buildings. The flame from this burning impinges on long steel channel sections that swing continuously over the flame. Carbon black is deposited on the channels, is scraped off, and falls into collecting hoppers. The combustion gases containing the solid carbon that is not collected on the channels, in addition to carbon monoxide and other combustion products, are then vented directly from the building. Approximately 1 to 1.5 pounds of carbon black is produced from the 32 pounds of carbon available in 1000 cubic feet of natural gas (16 to 24 kilograms carbon black from the 513 kilograms in 1000 cubic meters).[2-4] The balance is lost as CO, CO_2, hydrocarbons, and particulates.

5.3.2 Furnace Process[1]

The furnace process is subdivided into either the gas or oil process depending on the primary fuel used to produce the carbon black. In either case, the fuel—gas in the gas process or gas and oil in the oil process—is injected into a reactor with a limited supply of combustion air. The combustion gases containing the hot carbon are then rapidly cooled to a temperature of about 500°F (260°C) by water sprays and by radiant cooling.

The largest and most important portion of the furnace process consists of the particulate or carbon black removal equipment. While many combinations of control equipment exist, an electrostatic precipitator, a cyclone, and a fabric filter system in series are most commonly used to collect the carbon black. Gaseous emissions of carbon monoxide and hydrocarbons are not controlled in the United States.

5.3.3 Thermal Black Process[1]

In thermal black plants, natural gas is decomposed by heat in the absence of air or flame. In this cyclic operation, methane is pyrolyzed or decomposed by passing it over a heated brick checkerwork at a temperature of about 3000°F (1650°C). The decomposed gas is then cooled and the carbon black removed by a series of cyclones and fabric filters. The exit gas, consisting largely of hydrogen (85 percent), methane (5 percent), and nitrogen, is then either recycled to the process burners or used to generate steam in a boiler. Because of the recycling of the effluent gases, there are essentially no atmospheric emissions from this process, other than from product handling.

Table 5.3-1 presents the emission factors from the various carbon black processes. Nitrogen oxide emissions are not included but are believed to be low because of the lack of available oxygen in the reaction.

Table 5.3-1. EMISSION FACTORS FOR CARBON BLACK MANUFACTURING[a]
EMISSION FACTOR RATING: C

Type of process	Particulate		Carbon monoxide		Hydrogen sulfide		Hydrocarbons[b]	
	lb/ton	kg/MT	lb/ton	kg/MT	lb/ton	kg/MT	lb/ton	kg/MT
Channel	2,300	1,150	33,500	16,750	–	–	11,500	5,750
Thermal	Neg	Neg	Neg	Neg	Neg	Neg	Neg	Neg
Furnace								
Gas	c	c	5,300	2,650	–	–	1,800	900
Oil	c	c	4,500	2,250	38S[d]	19S[d]	400	200
Gas or oil	220[e]	110[e]						
	60[f]	30[f]						
	10[g]	5[g]						

[a]Based on data in References 2, 3, 5, and 6.
[b]As methane.
[c]Particulate emissions cannot be separated by type of furnace and are listed for either gas or oil furnaces.
[d]S is the weight percent sulfur in feed.
[e]Overall collection efficiency was 90 percent with no collection after cyclone.
[f]Overall collection efficiency was 97 percent with cyclones followed by scrubber.
[g]Overall collection efficiency was 99.5 percent with fabric filter system.

References for Section 5.3

1. Air Pollutant Emission Factors. Final Report. Resources Research, Incorporated. Reston, Virginia. Prepared for National Air Pollution Control Administration, Durham, N.C., under Contract Number CPA-22-69-119. April 1970.

2. Drogin, I. Carbon Black. J. Air Pol. Control Assoc. *18*:216-228, April 1968.

3. Cox, J.T. High Quality, High Yield Carbon Black. Chem. Eng. *57*:116-117, June 1950.

4. Shreve, R.N. Chemical Process Industries, 3rd Ed. New York, McGraw-Hill Book Company. 1967. p. 124-130.

5. Reinke, R.A. and T.A. Ruble. Oil Black. Ind. Eng. Chem. *44*:685-694, April 1952.

6. Allan, D. L. The Prevention of Atmospheric Pollution in the Carbon Black Industry. Chem. Ind. p. 1320-1324, October 15, 1955

5.4 CHARCOAL

5.4.1 Process Description[1]

Charcoal is generally manufactured by means of pyrolysis, or destructive distillation, of wood waste from members of the deciduous hardwood species. In this process, the wood is placed in a retort where it is externally heated for about 20 hours at 500 to 700°F (260 to 370°C). Although the retort has air intakes at the bottom, these are only used during start-up and thereafter are closed. The entire distillation cycle takes approximately 24 hours, the last 4 hours being an exothermic reaction. Four units of hardwood are required to produce one unit of charcoal.

5.4.2 Emissions and Controls[1]

In the pyrolysis of wood, all the gases, tars, oils, acids, and water are driven off, leaving virtually pure carbon. All of these except the gas, which contains methane, carbon monoxide, carbon dioxide, nitrogen oxides, and aldehydes, are useful by-products if recovered. Unfortunately, economics has rendered the recovery of the distillate by-products unprofitable, and they are generally permitted to be discharged to the atmosphere. If a recovery plant is utilized, the gas is passed through water-cooled condensers. The condensate is then refined while the remaining cool, noncondensable gas is discharged to the atmosphere. Gaseous emissions can be controlled by means of an afterburner because the unrecovered by-products are combustible. If the afterburner operates efficiently, no organic pollutants should escape into the atmosphere. Emission factors for the manufacture of charcoal are shown in Table 5.4-1.

Table 5.4-1. EMISSION FACTORS FOR CHARCOAL MANUFACTURING[a]
EMISSION FACTOR RATING: C

Pollutant	Type of operation			
	With chemical recovery plant		Without chemical recovery plant	
	lb/ton	kg/MT	lb/ton	kg/MT
Particulate (tar, oil)	–	–	400	200
Carbon monoxide	320[b]	160[b]	320[b]	160[b]
Hydrocarbons[c]	100[b]	50[b]	100[b]	50[b]
Crude methanol	–	–	152	76
Acetic acid	–	–	232	116
Other gases (HCHO, N_2 NO)	60	30	60[b]	30[b]

[a]Calculated values based on data in Reference 2.
[b]Emissions are negligible if afterburner is used.
[c]Expressed as methane.

References for Section 5.4

1. Air Pollutant Emission Factors. Final Report. Resources Research, Inc. Reston, Va. Prepared for National Air Pollution Control Administration, Durham, N.C., under Contract Number CPA-22-69-119. April 1970.

2. Shreve, R.N. Chemical Process Industries, 3rd Ed. New York, McGraw-Hill Book Company. 1967. p. 619.

5.5 CHLOR–ALKALI

5.5.1 Process Description[1]

Chlorine and caustic are produced concurrently by the electrolysis of brine in either the diaphragm or mercury cell. In the diaphragm cell, hydrogen is liberated at the cathode and a diaphragm is used to prevent contact of the chlorine produced at the anode with either the alkali hydroxide formed or the hydrogen. In the mercury cell, liquid mercury is used as the cathode and forms an amalgam with the alkali metal. The amalgam is removed from the cell and is allowed to react with water in a separate chamber, called a denuder, to form the alkali hydroxide and hydrogen.

Chlorine gas leaving the cells is saturated with water vapor and then cooled to condense some of the water. The gas is further dried by direct contact with strong sulfuric acid. The dry chlorine gas is then compressed for in-plant use or is cooled further by refrigeration to liquefy the chlorine.

Caustic as produced in a diaphragm-cell plant leaves the cell as a dilute solution along with unreacted brine. The solution is evaporated to increase the concentration to a range of 50 to 73 percent; evaporation also precipitates most of the residual salt, which is then removed by filtration. In mercury-cell plants, high-purity caustic can be produced in any desired strength and needs no concentration.

5.5.2 Emissions and Controls[1]

Emissions from diaphragm- and mercury-cell chlorine plants include chlorine gas, carbon dioxide, carbon monoxide, and hydrogen. Gaseous chlorine is present in the blow gas from liquefaction, from vents in tank cars and tank containers during loading and unloading, and from storage tanks and process transfer tanks. Other emissions include mercury vapor from mercury cathode cells and chlorine from compressor seals, header seals, and the air blowing of depleted brine in mercury-cell plants.

Chlorine emissions from chlor-alkali plants may be controlled by one of three general methods: (1) use of the gas in other plant processes, (2) neutralization in alkaline scrubbers, and (3) recovery of chlorine from effluent gas streams. The effect of specific control practices is shown to some extent in the table on emission factors (Table 5.5-1).

References for Section 5.5

1. Atmospheric Emissions from Chlor-Alkali Manufacture. U.S. EPA, Air Pollution Control Office. Research Triangle Park, N.C. Publication Number AP-80. January 1971.

2. Duprey, R.L. Compilation of Air Pollutant Emission Factors. U.S. DHEW, PHS, National Center for Air Pollution Control. Durham, N.C. PHS Publication Number 999-AP-42. 1968. p. 49.

Table 5.5-1. EMISSION FACTORS FOR CHLOR-ALKALI PLANTS[a]
EMISSION FACTOR RATING: B

Type of source	Chlorine gas	
	lb/100 tons	kg/100 MT
Liquefaction blow gases		
Diaphragm cell, uncontrolled	2,000 to 10,000	1,000 to 5,000
Mercury cell[b], uncontrolled	4,000 to 16,000	2,000 to 8,000
Water absorber	25 to 1,000	12.5 to 500
Caustic or lime scrubber	1	0.5
Loading of chlorine		
Tank car vents	450	225
Storage tank vents	1,200	600
Air-blowing of mercury-cell brine	500	250

[a]References 1 and 2.
[b]Mercury cells lose about 1.5 pounds mercury per 100 tons (0.75 kg/100 MT) of chlorine liquefied.

5.6 EXPLOSIVES

5.6.1 General

An explosive is a material that, under the influence of thermal or mechanical shock, decomposes rapidly and spontaneously with the evolution of large amounts of heat and gas.[1] Explosives fall into two major categories: high explosives and low explosives. Although a multitude of different types of explosives exists, this section will deal only with an example of each major category: TNT as the high explosive and nitrocellulose as the low explosive.

5.6.2 TNT Production[2]

TNT is usually prepared by a batch three-stage nitration process using toluene, nitric acid, and sulfuric acid as raw materials. A combination of nitric acid and fuming sulfuric acid (oleum) is used as the nitrating agent. Spent acid from the nitration vessels is fortified with make-up nitric acid before entering the next nitrator. The spent acid from the primary nitrator and the fumes from all the nitrators are sent to the acid-fume recovery system. This system supplies the make-up nitric acid needed in the process. After nitration, the undesired by-products are removed from the TNT by agitation with a solution of sodium sulfite and sodium hydrogen sulfite (Sellite process). The wash waste (commonly called red water) from this purification process is either discharged directly into a stream or is concentrated to a slurry and incinerated. The TNT is then solidified, granulated, and moved to the packing house for shipment or storage.

5.6.3 Nitrocellulose Production[2]

Nitrocellulose is prepared in the United States by the "mechanical dipper" process. This batch process involves dripping the cellulose into a reactor (niter pot) containing a mixture of concentrated nitric acid and a dehydrating agent such as sulfuric acid, phosphoric acid, or magnesium nitrate. When nitration is complete, the reaction mixtures are centrifuged to remove most of the spent acid. The centrifuged nitrocellulose is then "drowned" in water and pumped as a water slurry to the final purification area.

5.6.4 Emissions

Emissions of sulfur oxides and nitrogen oxides from processes that produce some of the raw materials for explosives production, such as nitric acid and sulfuric acid, can be considerable. Because all of the raw materials are not manufactured at the explosives plant, it is imperative to obtain detailed process information for each plant in order to estimate emissions. The emissions from the manufacture of nitric acid and sulfuric acid are not included in this section as they are discussed in other sections of this publication.

The major emissions from the manufacturing of explosives are nitrogen oxides. The nitration reactors for TNT production and the reactor pots and centrifuges for nitrocellulose represent the largest nitrogen oxide sources. Sulfuric acid regenerators or concentrators, considered an integral part of the process, are the major sources of sulfur oxide emissions. Emission factors for explosives manufacturing are presented in Table 5.6-1.

Table 5.6-1. EMISSION FACTORS FOR EXPLOSIVES MANUFACTURING WITHOUT CONTROL EQUIPMENT
EMISSION FACTOR RATING: C

Type of process	Particulate		Sulfur oxides (SO_2)		Nitrogen oxides (NO_2)	
	lb/ton	kg/MT	lb/ton	kg/MT	lb/ton	kg/MT
High explosives						
TNT						
Nitration reactors[a]	–	–	–	–	160	80
Nitric acid concentrators[b]	–	–	–	–	1	0.5
Sulfuric acid regenerators[c]	0.4	0.2	18	9	–	–
Red water incinerator[c,d]	36	18	13	6.5	6	3
Nitric acid manufacture	(See section on nitric acid)					
Low explosives						
Nitrocellulose[e]						
Reactor pots	–	–	–	–	12	6
Sulfuric acid concentrators	–	–	65	32.5	29	14.5

[a]With bubble cap absorption, system is 90 to 95 percent efficient.
[b]References 3 and 4.
[c]Reference 4.
[d]Not employed in manufacture of TNT for commercial use.[5]
[e]Reference 6.

References for Section 5.6

1. Shreve, R.N. Chemical Process Industries, 3rd Ed. New York, McGraw-Hill Book Company. 1967. p. 383-395.

2. Larson, T. and D. Sanchez. Unpublished report on nitrogen oxide emissions and controls from explosives manufacturing. National Air Pollution Control Administration, Office of Criteria and Standards. Durham, N. C. 1969.

3. Unpublished data on emissions from explosives manufacturing. National Air Pollution Control Administration, Federal Facilities Section. Washington, D.C.

4. Unpublished data on emissions from explosives manufacturing. National Air Pollution Control Administration, Office of Criteria and Standards. Durham, N. C. June 1970.

5. Control Techniques for Nitrogen Oxides from Stationary Sources. U.S. DHEW, PHS, EHS, National Air Pollution Control Administration. Washington, D.C. Publication Number AP-67. March 1970. p. 7-23.

6. Unpublished stack test data from an explosives manufacturing plant. Army Environmental Hygiene Agency. Baltimore, Maryland. December 1967.

5.7 HYDROCHLORIC ACID

Hydrochloric acid is manufactured by a number of different chemical processes. Approximately 80 percent of the hydrochloric acid, however, is produced by the by-product hydrogen chloride process, which will be the only process discussed in this section. The synthesis process and the Mannheim process are of secondary importance.

5.7.1 Process Description[1]

By-product hydrogen chloride is produced when chlorine is added to an organic compound such as benzene, toluene, and vinyl chloride. Hydrochloric acid is produced as a by-product of this reaction. An example of a process that generates hydrochloric acid as a by-product is the direct chlorination of benzene. In this process benzene, chlorine, hydrogen, air, and some trace catalysts are the raw materials that produce chlorobenzene. The gases from the reaction of benzene and chlorine consist of hydrogen chloride, benzene, chlorobenzenes, and air. These gases are first scrubbed in a packed tower with a chilled mixture of monochlorobenzene and dichlorobenzene to condense and recover any benzene or chlorobenzene. The hydrogen chloride is then absorbed in a falling film absorption plant.

5.7.2 Emissions

The recovery of the hydrogen chloride from the chlorination of an organic compound is the major source of hydrogen chloride emissions. The exit gas from the absorption or scrubbing system is the actual source of the hydrogen chloride emitted. Emission factors for hydrochloric acid produced as by-product hydrogen chloride are presented in Table 5.7-1.

Table 5.7-1. EMISSION FACTORS FOR HYDROCHLORIC ACID MANUFACTURING[a]
EMISSION FACTOR RATING: B

Type of process	Hydrogen chloride emissions	
	lb/ton	kg/MT
By-product hydrogen chloride		
With final scrubber	0.2	0.1
Without final scrubber	3	1.5

[a]Reference 1.

Reference for Section 5.7

1. Atmospheric Emissions from Hydrochloric Acid Manufacturing Processes. U.S. DHEW, PHS, CPEHS, National Air Pollution Control Administration. Durham, N.C. Publication Number AP-54. September 1969.

5.8 HYDROFLUORIC ACID

5.8.1 Process Description[1]

All hydrofluoric acid in the United States is currently produced by the reaction of acid-grade fluorspar with sulfuric acid for 30 to 60 minutes in externally fired rotary kilns at a temperature of 400° to 500°F (204° to 260°C).[2,3,4] The resulting gas is then cleaned, cooled, and absorbed in water and weak hydrofluoric acid to form a strong acid solution. Anhydrous hydrofluoric acid is formed by distilling 80 percent hydrofluoric acid and condensing the gaseous HF which is driven off.

5.8.2 Emissions and Controls[1]

Air pollutant emissions are minimized by the scrubbing and absorption systems used to purify and recover the HF. The initial scrubber utilizes concentrated sulfuric acid as a scrubbing medium and is designed to remove dust, SO_2, SO_3, sulfuric acid mist, and water vapor present in the gas stream leaving the primary dust collector. The exit gases from the final absorber contain small amounts of HF, silicon tetrafluoride (SiF_4), CO_2, and SO_2 and may be scrubbed with a caustic solution to reduce emissions further. A final water ejector, sometimes used to draw the gases through the absorption system, will reduce fluoride emissions. Dust emissions may also result from raw fluorspar grinding and drying operations. Table 5.8-1 lists the emission factors for the various operations.

Table 5.8-1. EMISSION FACTORS FOR HYDROFLUORIC ACID MANUFACTURING[a]
EMISSION FACTOR RATING: C

Type of operation	Fluorides		Particulates	
	lb/ton acid	kg/MT acid	lb/ton fluorspar	kg/MT fluorspar
Rotary kiln				
Uncontrolled	50	25	–	–
Water scrubber	0.2	0.1	–	–
Grinding and drying of fluorspar	–	–	20[b]	10[b]

[a]References 2 and 5.
[b]Factor given for well-controlled plant.

References for Section 5.8

1. Air Pollutant Emission Factors. Final Report. Resources Research Inc., Reston, Va. Prepared for National Air Pollution Control Administration, Durham, N.C., under Contract Number CPA-22-69-119. April 1970.

2. Rogers, W.E. and K. Muller. Hydrofluoric Acid Manufacture. Chem. Eng. Progr. *59*:85-88, May 1963.

3. Heller, A.N., S.T. Cuffe, and D.R. Goodwin. Inorganic Chemical Industry. In: Air Pollution Engineering Manual. Danielson, J.A. (ed.). U.S. DHEW, PHS, National Center for Air Pollution Control. Cincinnati, Ohio. Publication Number 999-AP-40. 1967. p. 197-198.

4. Hydrofluoric Acid. Kirk-Othmer Encyclopedia of Chemical Technology, Vol. 9. New York, John Wiley and Sons, Inc. 1964. p. 444-485.

5. Private Communication between Resources Research, Incorporated, and E.I. DuPont de Nemours and Company. Wilmington, Delaware. January 13, 1970.

5.9 NITRIC ACID

Revised by William Vatavuk

5.9.1 Process Description

5.9.1.1 Weak Acid Production[1] - Nearly all the nitric acid produced in the United States is manufactured by the high-pressure catalytic oxidation of ammonia (Figure 5.9-1). Typically, this process consists of three steps, each of which corresponds to a distinct chemical reaction. First, a 1:9 ammonia-air mixture is oxidized at high temperature and pressure (6.4 to 9.2 atmospheres), as it passes through a platinum-rhodium catalyst, according to the reaction:

$$\underset{\text{Ammonia}}{4NH_3} + \underset{\text{Oxygen}}{5O_2} \longrightarrow \underset{\text{Nitric oxide}}{4NO} + \underset{\text{Water}}{6H_2O} \qquad (1)$$

After the process stream is cooled to 100°F (38°C) or less by passage through a cooler-condenser, the nitric oxide reacts with residual oxygen:

$$2NO + O_2 \longrightarrow \underset{\text{Nitrogen dioxide}}{2NO_2} \rightleftharpoons \underset{\text{Nitrogen tetroxide}}{N_2O_4} \qquad (2)$$

Finally, the gases are introduced into a bubble-cap plate absorption column where they are contacted with a countercurrent stream of water. The exothermic reaction that occurs is:

$$3NO_2 + H_2O \longrightarrow \underset{\substack{\text{Nitric acid} \\ \text{50 to 70\% aqueous}}}{2HNO_3} + NO \qquad (3)$$

The production of nitric oxide in reaction (3) necessitates the introduction of a secondary air stream into the column to effect its oxidation to nitrogen dioxide, thereby perpetuating the absorption operation.

The spent gas flows from the top of the absorption tower to an entrainment separator for acid mist removal, through the ammonia oxidation unit for energy absorption from the ammonia stream, through an expander for energy recovery, and finally to the stack. In most plants the stack gas is treated before release to the atmosphere by passage through either a catalytic combustor or, less frequently, an alkaline scrubber.

5.9.1.2 High-Strength Acid Production[1] - To meet requirements for high strength acid, the 50 to 70 percent acid produced by the pressure process is concentrated to 95 to 99 percent at approximately atmospheric pressure. The concentration process consists of feeding strong sulfuric acid and 60 percent nitric acid to the top of a packed column where it is contacted by an ascending stream of weak acid vapor, resulting in the dehydration of the latter. The concentrated acid vapor that leaves the column passes to a bleacher and countercurrent condenser system to effect condensation of the vapors and separation of the small amounts of nitric oxides and oxygen that form as dehydration by-products. These by-products then flow to an absorption column where the nitric oxide mixes with auxiliary air to form nitrogen dioxide, which is, in turn, recovered as weak nitric acid. Finally, unreacted gases are vented to the atmosphere from the top of the column.

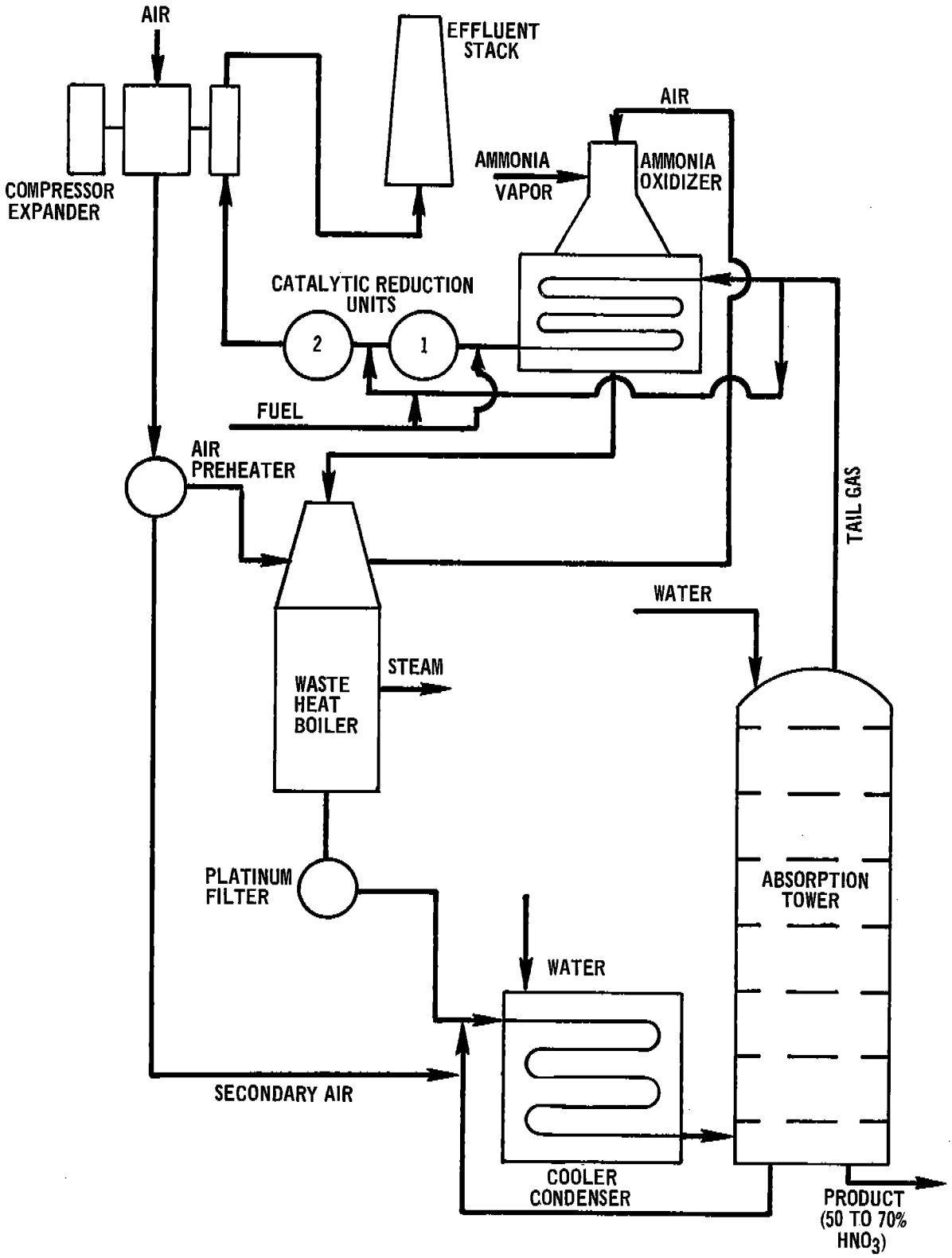

Figure 5.9-1. Flow diagram of typical nitric acid plant using pressure process.

5.9.2 Emissions and Controls[1-3]

The emissions derived from nitric acid manufacture consist primarily of nitric oxide, which accounts for visible emissions; nitrogen dioxide; and trace amounts of nitric acid mist. By far, the major source of nitrogen oxides is the tail gas from the acid absorption tower (Table 5.9-1). In general, the quantity of NO_x emissions is directly related to the kinetics of the nitric acid formation reaction.

The specific operating variables that increase tail gas NO_x emissions are: (1) insufficient air supply, which results in incomplete oxidation of NO; (2) low pressure in the absorber; (3) high temperature in the cooler-condenser and absorber; (4) production of an excessively high-strength acid; and (5) operation at high throughput rates, which results in decreased residence time in the absorber.

Aside from the adjustment of these variables, the most commonly used means for controlling emissions is the catalytic combustor. In this device, tail gases are heated to ignition temperature, mixed with fuel (natural gas, hydrogen, or a mixture of both), and passed over a catalyst. The reactions that occur result in the successive reduction of NO_2 to NO and, then, NO to N_2. The extent of reduction of NO_2 to N_2 in the combustor is, in turn, a function of plant design, type of fuel used, combustion temperature and pressure, space velocity through the combustor, type and amount of catalyst used, and reactant concentrations (Table 5.9-1).

Comparatively small amounts of nitrogen oxides are also lost from acid concentrating plants. These losses (mostly NO_2) occur from the condenser system, but the emissions are small enough to be easily controlled by the installation of inexpensive absorbers.

Table 5.9-1. NITROGEN OXIDE EMISSIONS FROM NITRIC ACID PLANTS[a]
EMISSION FACTOR RATING: B

Type of control	Control efficiency, %	Emissions (NO_2)[b]	
		lb/ton acid	kg/MT acid
Weak acid			
Uncontrolled	0	50 to 55[c]	25.0 to 27.5
Catalytic combustor (natural gas fired)	78 to 97	2 to 7[d]	1.0 to 3.5
Catalytic combustor (hydrogen fired)	97 to 99.8	0.0 to 1.5	0.0 to 0.75
Catalytic combustor (75% hydrogen, 25% natural gas fired)	98 to 98.5	0.8 to 1.1	0.4 to 0.55
High-strength acid	–	0.2 to 5.0	0.1 to 2.5

[a]References 1 and 2.
[b]Based on 100 percent acid production.
[c]Range of values taken from four plants measured at following process conditions: production rate, 120 tons (109 MT) per day (100 percent rated capacity); absorber exit temperature, 90° F (32° C); absorber exit pressure, 7.8 atmospheres; acid strength, 57 percent. Under different conditions, values can vary from 43 to 57 lb/ton (21.5 to 28.5 kg/MT).
[d]To present a more realistic picture, ranges of values were used instead of averages.

Acid mist emissions do not occur from a properly operated plant. The small amounts that may be present in the absorber exit gas stream are removed by a separator or collector prior to entering the catalytic combustor or expander.

Finally, small amounts of nitrogen dioxide are lost during the filling of storage tanks and tank cars.

Nitrogen oxide emissions (expressed as NO_2) are presented for weak nitric acid plants in table 5.9-1. The emission factors vary considerably with the type of control employed, as well as with process conditions. For comparison purposes, the Environmental Protection Agency (EPA) standard for both new and modified plants is 3.0 pounds per ton of 100 percent acid produced (1.5 kilograms per metric ton), maximum 2-hour average, expressed as NO_2.[4] Unless specifically indicated as 100 percent acid, production rates are generally given in terms of the total weight of product (water and acid). For example, a plant producing 500 tons (454 MT) per day of 55 weight percent nitric acid is really producing only 275 tons (250 MT) per day of 100 percent acid.

References for Section 5.9

1. Control of Air Pollution from Nitric Acid Plants. Unpublished Report. Environmental Protection Agency, Research Triangle Park, N.C.

2. Atmospheric Emissions from Nitric Acid Manufacturing Processes. U.S. DHEW, PHS, Division of Air Pollution. Cincinnati, Ohio. Publication Number 999-AP-27. 1966.

3. Unpublished emission data from a nitric acid plant. U.S. DHEW, PHS, EHS, National Air Pollution Control Administration, Office of Criteria and Standards. Durham, N.C. June 1970.

4. Standards of Performance for New Stationary Sources. Environmental Protection Agency, Washington, D.C. Federal Register. *36*(247): December 23, 1971.

5.10 PAINT AND VARNISH

5.10.1 Paint Manufacturing[1]

The manufacture of paint involves the dispersion of a colored oil or pigment in a vehicle, usually an oil or resin, followed by the addition of an organic solvent for viscosity adjustment. Only the physical processes of weighing, mixing, grinding, tinting, thinning, and packaging take place; no chemical reactions are involved.

These processes take place in large mixing tanks at approximately room temperature.

The primary factors affecting emissions from paint manufacture are care in handling dry pigments, types of solvents used, and mixing temperature.[2,3] About 1 or 2 percent of the solvents is lost even under well-controlled conditions. Particulate emissions amount to 0.5 to 1.0 percent of the pigment handled.[4]

5.10.2 Varnish Manufacturing[1-3]

The manufacture of varnish also involves the mixing and blending of various ingredients to produce a wide range of products. However, in this case chemical reactions are initiated by heating. Varnish is cooked in either open or enclosed gas-fired kettles for periods of 4 to 16 hours at temperatures of 200 to 650°F (93 to 340°C).

Varnish cooking emissions, largely in the form or organic compounds, depend on the cooking temperatures and times, the solvent used, the degree of tank enclosure, and the type of air pollution controls used. Emissions from varnish cooking range from 1 to 6 percent of the raw material.

To reduce hydrocarbons from the manufacture of paint and varnish, control techniques include condensers and/or adsorbers on solvent-handling operations, and scrubbers and afterburners on cooking operations. Emission factors for paint and varnish are shown in Table 5.10-1.

Table 5.10-1. EMISSION FACTORS FOR PAINT AND VARNISH MANUFACTURING WITHOUT CONTROL EQUIPMENT[a,b]
EMISSION FACTOR RATING: C

Type of product	Particulate		Hydrocarbons[c]	
	lb/ton pigment	kg/MT pigment	lb/ton of product	kg/MT pigment
Paint	2	1	30	15
Varnish				
Bodying oil	–	–	40	20
Oleoresinous	–	–	150	75
Alkyd	–	–	160	80
Acrylic	–	–	20	10

[a]References 2 and 4 through 8.
[b]Afterburners can reduce gaseous hydrocarbon emissions by 99 percent and particulates by about 90 percent. A water spray and oil filter system can reduce particulates by about 90 percent.[5]
[c]Expressed as undefined organic compounds whose composition depends upon the type of varnish or paint.

References for Section 5.10

1. Air Pollutant Emission Factors. Final Report. Resources Research, Inc. Reston, Va. Prepared for National Air Pollution Control Administration, Durham, N.C., under Contract Number CPA-22-69-119. April 1970.

2. Stenburg, R.L. Atmospheric Emissions from Paint and Varnish Operations. Paint Varn. Prod. p. 61-65 and 111-114, September 1959.

3. Private Communication between Resources Research, Incorporated, and National Paint, Varnish and Lacquer Association. September 1969.

4. Unpublished engineering estimates based on plant visits in Washington, D.C. Resources Research, Incorporated. Reston, Va. October 1969.

5. Chatfield, H.E. Varnish Cookers. In: Air Pollution Engineering Manual. Danielson, J. A. (ed.). U.S. DHEW, PHS, National Center for Air Pollution Control. Cincinnati, Ohio. Publication Number 999-AP-40. 1967. p. 688-695.

6. Lunche, E.G. et al. Distribution Survey of Products Emitting Organic Vapors in Los Angeles County. Chem. Eng. Progr. *53*. August 1957.

7. Communication on emissions from paint and varnish operations with G. Sallee, Midwest Research Institute. December 17, 1969.

8. Communication with Roger Higgins, Benjamin Moore Paint Company. June 25, 1968 .

5.11 PHOSPHORIC ACID

Phosphoric acid is produced by two principal methods, the wet process and the thermal process. The wet process is usually employed when the acid is to be used for fertilizer production. Thermal-process acid is normally of higher purity and is used in the manufacture of high-grade chemical and food products.

5.11.1 Wet Process[1,2]

In the wet process, finely ground phosphate rock is fed into a reactor with sulfuric acid to form phosphoric acid and gypsum. There is usually little market for the gypsum produced, and it is handled as waste material in gypsum ponds. The phosphoric acid is separated from the gypsum and other insolubles by vacuum filtration. The acid is then normally concentrated to about 50 to 55 percent P_2O_5. When superphosphoric acid is made, the acid is concentrated to between 70 and 85 percent P_2O_5.

Emissions of gaseous fluorides, consisting mostly of silicon tetrafluoride and hydrogen fluoride, are the major problems from wet-process acid. Table 5.11-1 summarizes the emission factors from both wet-process acid and thermal-process acid.

5.11.2 Thermal Process[1]

In the thermal process, phosphate rock, siliceous flux, and coke are heated in an electric furnace to produce elemental phosphorus. The gases containing the phosphorus vapors are passed through an electrical precipitator to remove entrained dust. In the "one-step" version of the process, the gases are next mixed with air to form P_2O_5 before passing to a water scrubber to form phosphoric acid. In the "two-step" version of the process, the phosphorus is condensed and pumped to a tower in which it is burned with air, and the P_2O_5 formed is hydrated by a water spray in the lower portion of the tower.

The principal emission from thermal-process acid is P_2O_5 acid mist from the absorber tail gas. Since all plants are equipped with some type of acid-mist collection system, the emission factors presented in Table 5.11-1 are based on the listed types of control.

Table 5.11-1. EMISSION FACTORS FOR PHOSPHORIC ACID PRODUCTION
EMISSION FACTOR RATING: B

Source	Particulates		Fluorides	
	lb/ton	kg/MT	lb/ton	kg/MT
Wet process (phosphate rock)				
Reactor, uncontrolled	–	–	18[a]	9[a]
Gypsum pond	–	–	1[b]	1.1[b]
Condenser, uncontrolled	–	–	20[a]	10[a]
Thermal process (phosphorus burned[c])				
Packed tower	4.6	2.3	–	–
Venturi scrubber	5.6	2.8	–	–
Glass-fiber mist eliminator	3.0	1.5	–	–
Wire-mesh mist eliminator	2.7	1.35	–	–
High-pressure-drop mist eliminator	0.2	0.1	–	–
Electrostatic precipitator	1.8	0.9	–	–

[a]References 2 and 3.

[b]Pounds per acre per day (kg/hectare-day); approximately 0.5 acre (0.213 hectare) is required to produce 1 ton of P_2O_5 daily.

[c]Reference 4.

References for Section 5.11

1. Duprey, R.L. Compilation of Air Pollutant Emission Factors. U.S. DHEW, PHS, National Center for Air Pollution Control. Durham, N.C. PHS Publication Number 999-AP-42. 1968. p. 16.

2. Atmospheric Emissions from Wet-Process Phosphoric Acid Manufacture. U.S. DHEW, PHS, EHS, National Air Pollution Control Administration. Raleigh, N.C. Publication Number AP-57. April 1970.

3. Control Techniques for Fluoride Emissions. Internal document. U.S. EPA, Office of Air Programs. Research Triangle Park, N.C. 1970.

4. Atmospheric Emissions from Thermal-Process Phosphoric Acid Manufacturing. Cooperative Study Project: Manufacturing Chemists' Association, Incorporated, and Public Health Service. U.S. DHEW, PHS, National Air Pollution Control Administration. Durham, N.C. Publication Number AP-48. October 1968.

5.12 PHTHALIC ANHYDRIDE

5.12.1 Process Description[1,2]

Phthalic anhydride is produced primarily by oxidizing naphthalene vapors with excess air over a catalyst, usually V_2O_5. *O*-xylene can be used instead of naphthalene, but it is not used as much. Following the oxidation of the naphthalene vapors, the gas stream is cooled to separate the phthalic vapor from the effluent. Phthalic anhydride crystallizes directly from this cooling without going through the liquid phase. The phthalic anhydride is then purified by a chemical soak in sulfuric acid, caustic, or alkali metal salt, followed by a heat soak. To produce 1 ton of phthalic anhydride, 2,500 pounds of naphthalene and 830,000 standard cubic feet (scf) of air are required (or 1,130 kilograms of naphthalene and 23,500 standard cubic meters of air to produce 1 MT of phthalic anhydride).

5.12.2 Emissions and Controls[1]

The excess air from the production of phthalic anhydride contains some uncondensed phthalic anhydride, maleic anhydride, quinones, and other organics. The venting of this stream to the atmosphere is the major source of organic emissions. These emissions can be controlled with catalytic combustion. Table 5.12-1 presents emission factor data from phthalic anhydride plants.

Table 5.12-1. EMISSION FACTORS FOR PHTHALIC ANHYDRIDE PLANTS[a]
EMISSION FACTOR RATING: E

Overall plant	Organics (as hexane)	
	lb/ton	kg/MT
Uncontrolled	32	16
Following catalytic combustion	11	5.5

[a]Reference 3.

References for Section 5.12

1. Duprey, R.L. Compilation of Air Pollutant Emission Factors. U.S. DHEW, PHS, National Center for Air Pollution Control. Durham, N.C. PHS Publication Number 999-AP-42. 1968. p. 17.

2. Phthalic Anhydride. Kirk-Othmer Encyclopedia of Chemical Technology, Vol. 15, 2nd Ed. New York, John Wiley and Sons, Inc. p. 444-485. 1968.

3. Bolduc, M.J. et al. Systematic Source Test Procedure for the Evaluation of Industrial Fume Converters. (Presented at 58th Annual Meeting of the Air Pollution Control Association, Toronto, Canada. June 1965).

5.13 PLASTICS

5.13.1 Process Description[1]

The manufacture of most resins or plastics begins with the polymerization or linking of the basic compound (monomer), usually a gas or liquid, into high molecular weight noncrystalline solids. The manufacture of the basic monomer is not considered part of the plastics industry and is usually accomplished at a chemical or petroleum plant.

The manufacture of most plastics involves an enclosed reaction or polymerization step, a drying step, and a final treating and forming step. These plastics are polymerized or otherwise combined in completely enclosed stainless steel or glass-lined vessels. Treatment of the resin after polmerization varies with the proposed use. Resins for moldings are dried and crushed or ground into molding powder. Resins such as the alkyd resins that are to be used for protective coatings are normally transferred to an agitated thinning tank, where they are thinned with some type of solvent and then stored in large steel tanks equipped with water-cooled condensers to prevent loss of solvent to the atmosphere. Still other resins are stored in latex form as they come from the kettle.

5.13.2 Emissions and Controls[1]

The major sources of air contamination in plastics manufacturing are the emissions of raw materials or monomers, emissions of solvents or other volatile liquids during the reaction, emissions of sublimed solids such as phthalic anhydride in alkyd production, and emissions of solvents during storage and handling of thinned resins. Emission factors for the manufacture of plastics are shown in Table 5.13-1.

Table 5.13-1. EMISSION FACTORS FOR PLASTICS MANUFACTURING WITHOUT CONTROLS[a]
EMISSION FACTOR RATING: E

Type of plastic	Particulate		Gases	
	lb/ton	kg/MT	lb/ton	kg/MT
Polyvinyl chloride	35[b]	17.5[b]	17[c]	8.5[c]
Polypropylene	3	1.5	0.7[d]	0.35[d]
General	5 to 10	2.5 to 5	–	–

[a]References 2 and 3.
[b]Usually controlled with a fabric filter efficiency of 98 to 99 percent.
[c]As vinyl chloride.
[d]As propylene.

Much of the control equipment used in this industry is a basic part of the system and serves to recover a reactant or product. These controls include floating roof tanks or vapor recovery systems on volatile material, storage units, vapor recovery systems (adsorption or condensers), purge lines that vent to a flare system, and recovery systems on vacuum exhaust lines.

References for Section 5.13

1. Air Pollutant Emission Factors. Final Report. Resources Research, Inc. Reston, Va. Prepared for National Air Pollution Control Administration, Durham, N.C., under Contract Number CPA-22-69-119. April 1970.

2. Unpublished data from industrial questionnaire. U.S. DHEW, PHS, National Air Pollution Control Administration, Division of Air Quality and Emissions Data. Durham, N.C. 1969.

3. Private Communication between Resources Research, Incorporated, and Maryland State Department of Health, Baltimore, Md. November 1969.

5.14 PRINTING INK

5.14.1 Process Description[1]

There are four major classes of printing ink: letterpress and lithographic inks, commonly called oil or paste inks; and flexographic and rotogravure inks, which are referred to as solvent inks. These inks vary considerably in physical appearance, composition, method of application, and drying mechanism. Flexographic and rotogravure inks have many elements in common with the paste inks but differ in that they are of very low viscosity, and they almost always dry by evaporation of highly volatile solvents.[2]

There are three general processes in the manufacture of printing inks: (1) cooking the vehicle and adding dyes, (2) grinding of a pigment into the vehicle using a roller mill, and (3) replacing water in the wet pigment pulp by an ink vehicle (commonly known as the flushing process).[3] The ink "varnish" or vehicle is generally cooked in large kettles at 200° to 600°F (93° to 315°C) for an average of 8 to 12 hours in much the same way that regular varnish is made. Mixing of the pigment and vehicle is done in dough mixers or in large agitated tanks. Grinding is most often carried out in three-roller or five-roller horizontal or vertical mills.

5.14.2 Emissions and Controls[1,4]

Varnish or vehicle preparation by heating is by far the largest source of ink manufacturing emissions. Cooling the varnish components – resins, drying oils, petroleum oils, and solvents – produces odorous emissions. At about 350°F (175°C) the products begin to decompose, resulting in the emission of decomposition products from the cooking vessel. Emissions continue throughout the cooking process with the maximum rate of emissions occuring just after the maximum temperature has been reached. Emissions from the cooking phase can be reduced by more than 90 percent with the use of scrubbers or condensers followed by afterburners.[4,5]

Compounds emitted from the cooking of oleoresinous varnish (resin plus varnish) include water vapor, fatty acids, glycerine, acrolein, phenols, aldehydes, ketones, terpene oils, terpenes, and carbon dioxide. Emissions of thinning solvents used in flexographic and rotogravure inks may also occur.

The quantity, composition, and rate of emissions from ink manufacturing depend upon the cooking temperature and time, the ingredients, the method of introducing additives, the degree of stirring, and the extent of air or inert gas blowing. Particulate emissions resulting from the addition of pigments to the vehicle are affected by the type of pigment and its particle size. Emission factors for the manufacture of printing ink are presented in Table 5.14-1.

Table 5.14-1. EMISSION FACTORS FOR PRINTING INK MANUFACTURING[a]
EMISSION FACTOR RATING: E

Type of process	Gaseous organic[b] lb/ton of product	Gaseous organic[b] kg/MT of product	Particulates lb/ton of pigment	Particulates kg/MT of pigment
Vehicle cooking				
General	120	60	–	–
Oils	40	20	–	–
Oleoresinous	150	75	–	–
Alkyds	160	80	–	–
Pigment mixing	–	–	2	1

[a]Based on data from section on paint and varnish.
[b]Emitted as gas, but rapidly condense as the effluent is cooled.

References for Section 5.14

1. Air Pollutant Emission Factors. Final Report. Resources Research Inc. Reston, Va. Prepared for National Air Pollution Control Administration, Durham, N.C., under Contract Number CPA-22-69-119. April 1970.

2. Shreve, R. N. Chemical Process Industries, 3rd Ed. New York, McGraw Hill Book Co. 1967. p. 454-455.

3. Larsen, L.M. Industrial Printing Inks. New York, Reinhold Publishing Company. 1962.

4. Chatfield, H.E. Varnish Cookers. In: Air Pollution Engineering Manual. Danielson, J.A. (ed.). U.S. DHEW, PHS, National Center for Air Pollution Control. Cincinnati, Ohio. Publication Number 999-AP-40. 1967. p. 688-695.

5. Private communication with Interchemical Corporation, Ink Division. Cincinnati, Ohio. November 10, 1969.

5.15 SOAP AND DETERGENTS

5.15.1 Soap Manufacture[1]

The manufacture of soap entails the catalytic hydrolysis of various fatty acids with sodium or potassium hydroxide to form a glycerol-soap mixture. This mixture is separated by distillation, then neutralized and blended to produce soap. The main atmospheric pollution problem in the manufacture of soap is odor, and, if a spray drier is used, a particulate emission problem may also occur. Vent lines, vacuum exhausts, product and raw material storage, and waste streams are all potential odor sources. Control of these odors may be achieved by scrubbing all exhaust fumes and, if necessary, incinerating the remaining compounds. Odors emanating from the spray drier may be controlled by scrubbing with an acid solution.

5.15.2 Detergent Manufacture[1]

The manufacture of detergents generally begins with the sulfuration by sulfuric acid of a fatty alcohol or linear alkylate. The sulfurated compound is then neutralized with caustic solution (NaOH), and various dyes, perfumes, and other compounds are added.[2,3] The resulting paste or slurry is then sprayed under pressure into a vertical drying tower where it is dried with a stream of hot air (400° to 500°F or 204° to 260°C). The dried detergent is then cooled and packaged. The main source of particulate emissions is the spray-drying tower. Odors may also be emitted from the spray-drying operation and from storage and mixing tanks. Particulate emissions from spray-drying operations are shown in Table 5.15-1.

Table 5.15-1. PARTICULATE EMISSION FACTORS FOR SPRAY-DRYING DETERGENTS[a]
EMISSION FACTOR RATING: B

Control device	Overall efficiency, %	Particulate emissions lb/ton of product	Particulate emissions kg/MT of product
Uncontrolled	–	90	45
Cyclone[b]	85	14	7
Cyclone followed by:			
Spray chamber	92	7	3.5
Packed scrubber	95	5	2.5
Venturi scrubber	97	3	1.5

[a]Based on analysis of data in References 2 through 6.
[b]Some type of primary collector, such as a cyclone, is considered an integral part of the spray-drying system.

References for Section 5.15

1. Air Pollutant Emission Factors. Final Report. Resources Research Inc. Reston, Va. Prepared for National Air Pollution Control Administration, Durham, N.C., under Contract Number CPA-22-69-119. April 1970.

2. Phelps, A.H. Air Pollution Aspects of Soap and Detergent Manufacture. J. Air Pol. Control Assoc. *17*(8):505-507, August 1967.

3. Shreve, R.N. Chemical Process Industries. 3rd Ed. New York, McGraw-Hill Book Company. 1967. p. 544-563.

4. Larsen, G.P., G.I. Fischer, and W.J. Hamming. Evaluating Sources of Air Pollution. Ind. Eng. Chem. *45*:1070-1074, May 1953.

5. McCormick, P.Y., R.L. Lucas, and D.R. Wells. Gas-Solid Systems. In: Chemical Engineer's Handbook. Perry, J.H. (ed.). New York, McGraw-Hill Book Company. 1963. p. 59.

6. Private communication with Maryland State Department of Health, Baltimore, Md. November 1969.

5.16 SODIUM CARBONATE (Soda Ash)

5.16.1 Process Description[1]

Soda ash is manufactured by three processes: (1) the natural or Lake Brine process, (2) the Solvay process (ammonia-soda), and (3) the electrolytic soda-ash process. Because the Solvay process accounts for over 80 percent of the total production of soda ash, it will be the only one discussed in this section.

In the Solvay process, the basic raw materials are ammonia, coke, limestone (calcium carbonate), and salt (sodium chloride). The salt, usually in the unpurified form of a brine, is first purified in a series of absorbers by precipitation of the heavy metal ions with ammonia and carbon dioxide. In this process sodium bicarbonate is formed. This bicarbonate coke is heated in a rotary kiln, and the resultant soda ash is cooled and conveyed to storage.

5.16.2 Emissions

The major source of emissions from the manufacture of soda ash is the release of ammonia. Small amounts of ammonia are emitted in the gases vented from the brine purification system. Intermittent losses of ammonia can also occur during the unloading of tank trucks into storage tanks. The major sources of dust emissions include rotary dryers, dry solids handling, and processing of lime. Dust emissions of fine soda ash also occur from conveyor transfer points and air classification systems, as well as during tank-car loading and packaging. Emission factors are summarized in Table 5.16-1.

Table 5.16-1. EMISSION FACTORS FOR SODA-ASH PLANTS WITHOUT CONTROLS
EMISSION FACTOR RATING: D

Type of source	Particulates		Ammonia	
	lb/ton	kg/MT	lb/ton	kg/MT
Ammonia recovery[a,b]	–	–	7	3.5
Conveying, transferring, loading, etc.[c]	6	3	–	–

[a]Reference 2.
[b]Represents ammonia loss following the recovery system.
[c]Based on data in References 3 through 5.

References for Section 5.16

1. Air Pollutant Emission Factors. Final Report. Resources Research, Inc. Reston, Va. Prepared for National Air Pollution Control Administration, Durham, N.C., under Contract Number CPA-22-69-119. April 1970.

2. Shreve, R.N. Chemical Process Industries, 3rd Ed. New York, McGraw-Hill Book Company. 1967. p. 225-230.

3. Facts and Figures for the Chemical Process Industries. Chem. Eng. News. *43*:51-118, September 6, 1965.

4. Faith, W.L., D.B. Keyes, and R.L. Clark. Industrial Chemicals, 3rd Ed. New York, John Wiley and Sons, Inc. 1965.

5. Kaylor, F.B. Air Pollution Abatement Program of a Chemical Processing Industry. J. Air Pol. Control Assoc. *15*:65-67, February 1965.

5.17 SULFURIC ACID

Revised by William Vatavuk and Donald Carey

5.17.1 Process Description

All sulfuric acid is made by either the lead chamber or the contact process. Because the contact process accounts for more than 97 percent of the total sulfuric acid production in the United States, it is the only process discussed in this section. Contact plants are generally classified according to the raw materials charged to them: (1) elemental sulfur burning, (2) spent acid and hydrogen sulfide burning, and (3) sulfide ores and smelter gas burning plants. The relative contributions from each type of plant to the total acid production are 68, 18.5, and 13.5 percent, respectively.

All contact processes incorporate three basic operations, each of which corresponds to a distinct chemical reaction. First, the sulfur in the feedstock is burned to sulfur dioxide:

$$\underset{\text{Sulfur}}{S} + \underset{\text{Oxygen}}{O_2} \rightarrow \underset{\text{Sulfur dioxide}}{SO_2}. \qquad (1)$$

Then, the sulfur dioxide is catalytically oxidized to sulfur trioxide:

$$\underset{\text{Sulfur dioxide}}{2SO_2} + \underset{\text{Oxygen}}{O_2} \rightarrow \underset{\text{Sulfur trioxide}}{2SO_3}. \qquad (2)$$

Finally, the sulfur trioxide is absorbed in a strong, aqueous solution of sulfuric acid:

$$\underset{\text{Sulfur trioxide}}{SO_3} + \underset{\text{Water}}{H_2O} \rightarrow \underset{\text{Sulfuric acid}}{H_2SO_4}. \qquad (3)$$

5.17.1.1 Elemental Sulfur-Burning Plants[1,2] - Elemental sulfur, such as Frasch-process sulfur from oil refineries, is melted, settled, or filtered to remove ash and is fed into a combustion chamber. The sulfur is burned in clean air that has been dried by scrubbing with 93 to 99 percent sulfuric acid. The gases from the combustion chamber are cooled and then enter the solid catalyst (vanadium pentoxide) converter. Usually, 95 to 98 percent of the sulfur dioxide from the combustion chamber is converted to sulfur trioxide, with an accompanying large evolution of heat. After being cooled, the converter exit gas enters an absorption tower where the sulfur trioxide is absorbed with 98 to 99 percent sulfuric acid. The sulfur trioxide combines with the water in the acid and forms more sulfuric acid.

If oleum, a solution of uncombined SO_3 in H_2SO_4, is produced, SO_3 from the converter is first passed to an oleum tower that is fed with 98 percent acid from the absorption system. The gases from the oleum tower are then pumped to the absorption column where the residual sulfur trioxide is removed.

A schematic diagram of a contact process sulfuric acid plant that burns elemental sulfur is shown in Figure 5.17-1.

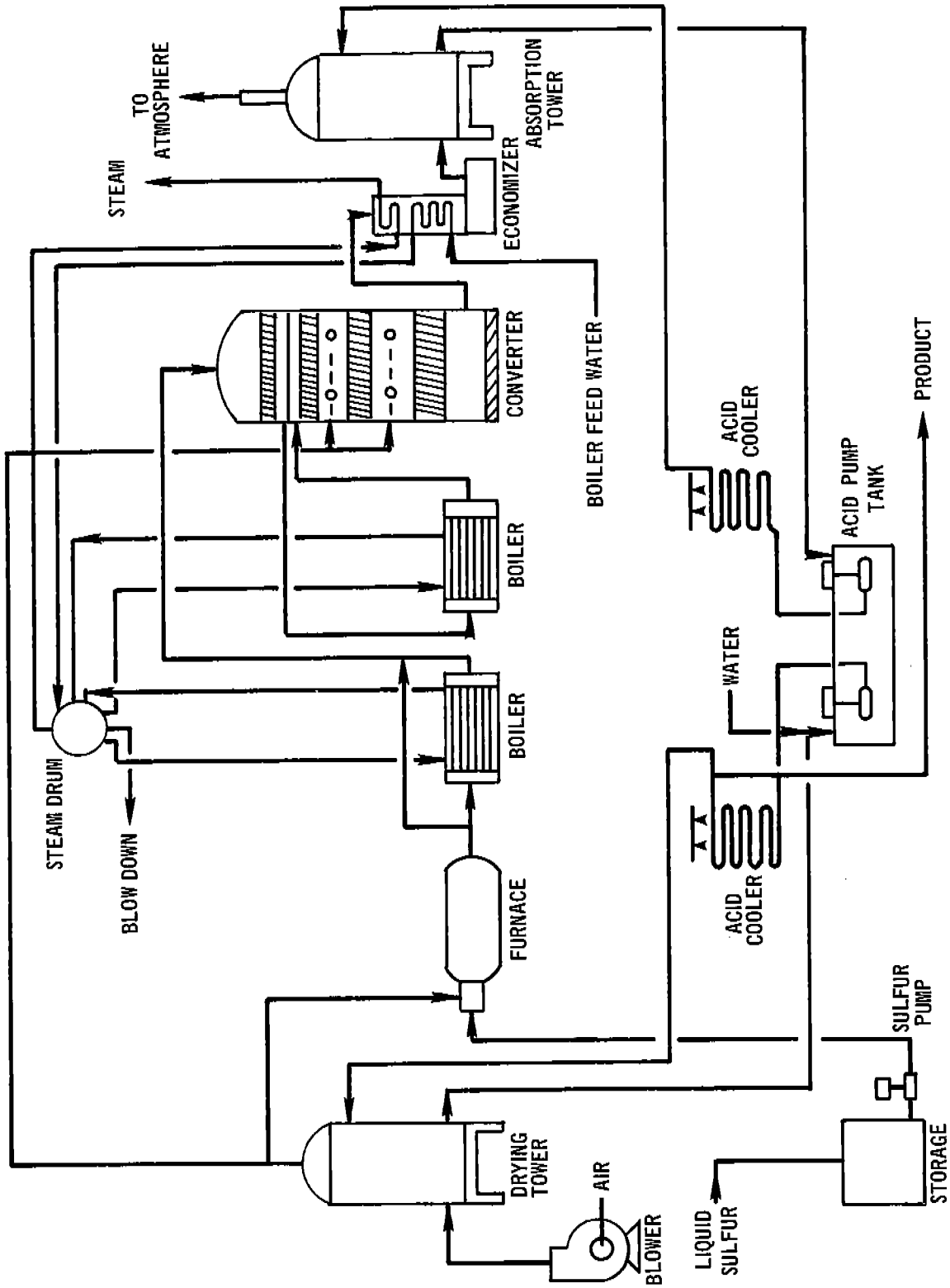

Figure 5.17-1. Basic flow diagram of contact-process sulfuric acid plant burning elemental sulfur.

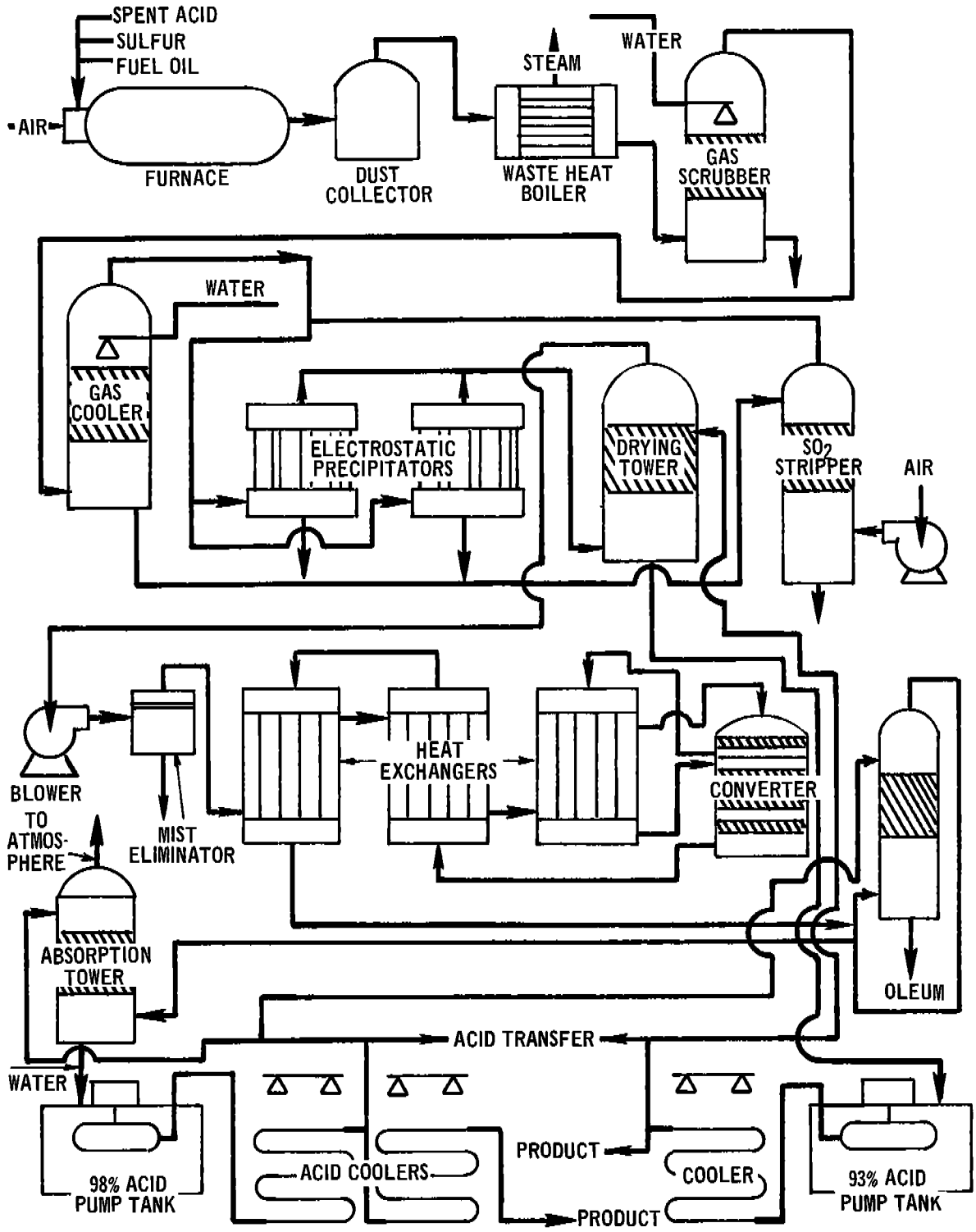

Figure 5.17-2. Basic flow diagram of contact-process sulfuric acid plant burning spent acid.

5.17.1.2 Spent Acid and Hydrogen Sulfide Burning Plants[1,2] - Two types of plants are used to process this type of sulfuric acid. In one the sulfur dioxide and other combustion products from the combustion of spent acid and/or hydrogen sulfide with undried atmospheric air are passed through gas-cleaning and mist-removal equipment. The gas stream next passes through a drying tower. A blower draws the gas from the drying tower and discharges the sulfur dioxide gas to the sulfur trioxide converter. A schematic diagram of a contact-process sulfuric acid plant that burns spent acid is shown in Figure 5.17-2.

In a "wet-gas plant," the wet gases from the combustion chamber are charged directly to the converter with no intermediate treatment. The gas from the converter flows to the absorber, through which 93 to 98 percent sulfuric acid is circulating.

5.17.1.3 Sulfide Ores and Smelter Gas Plants - The configuration of this type of plant is essentially the same as that of a spent-acid plant (Figure 5.17-2) with the primary exception that a roaster is used in place of the combustion furnace.

The feed used in these plants is smelter gas, available from such equipment as copper converters, reverberatory furnaces, roasters, and flash smelters. The sulfur dioxide in the gas is contaminated with dust, acid mist, and gaseous impurities. To remove the impurities the gases must be cooled to essentially atmospheric temperature and passed through purification equipment consisting of cyclone dust collectors, electrostatic dust and mist precipitators, and scrubbing and gas-cooling towers. After the gases are cleaned and the excess water vapor is removed, they are scrubbed with 98 percent acid in a drying tower. Beginning with the drying tower stage, these plants are nearly identical to the elemental sulfur plants shown in Figure 5.17-1.

5.17.2 Emissions and Controls

5.17.2.1 Sulfur Dioxide[1-3] - Nearly all sulfur dioxide emissions from sulfuric acid plants are found in the exit gases. Extensive testing has shown that the mass of these SO_2 emissions is an inverse function of the sulfur conversion efficiency (SO_2 oxidized to SO_3). This conversion is, in turn, affected by the number of stages in the catalytic converter, the amount of catalyst used, the temperature and pressure, and the concentrations of the reactants, sulfur dioxide and oxygen. For example, if the inlet SO_2 concentration to the converter were 8 percent by volume (a representative value), and the conversion temperature were 473°C, the conversion efficiency would be 96 percent. At this conversion, the uncontrolled emission factor for SO_2 would be 55 pounds per ton (27.5 kg/MT) of 100 percent sulfuric acid produced, as shown in Table 5.17-1. For purposes of comparison, note that the Environmental Protection Agency performance standard[3] for new and modified plants is 4 pounds per ton (2kg / MT) of 100 percent acid produced, maximum 2-hour average. As Table 5.17-1 and Figure 5.17-3 indicate, achieving this standard requires a conversion efficiency of 99.7 percent in an uncontrolled plant or the equivalent SO_2 collection mechanism in a controlled facility. Most single absorption plants have SO_2 conversion efficiencies ranging from 95 to 98 percent.

In addition to exit gases, small quantities of sulfur oxides are emitted from storage tank vents and tank car and tank truck vents during loading operations; from sulfuric acid concentrators; and through leaks in process equipment. Few data are available on emissions from these sources.

Of the many chemical and physical means for removing SO_2 from gas streams, only the dual absorption and the sodium sulfite-bisulfite scrubbing processes have been found to increase acid production without yielding unwanted by-products.

Table 5.17-1. EMISSION FACTORS FOR SULFURIC ACID PLANTS[a]
EMISSION FACTOR RATING: A

Conversion of SO_2 to SO_3, %	SO_2 emissions lb/ton of 100 % H_2SO_4	SO_2 emissions kg/MT of 100 % H_2SO_4
93	96	48.0
94	82	41.0
95	70	35.0
96	55	27.5
97	40	20.5
98	27	13.0
99	14	7.0
99.5	7	3.5
99.7	4	2.0
100	0	0.0

[a]Reference 1.
[b]The following linear interpolation formula can be used for calculating emission factors for conversion efficiencies between 93 and 100 percent: emission factor (lb/ton acid) = -13.65 (percent conversion efficiency) + 1365.

In the dual absorption process, the SO_3 gas formed in the primary converter stages is sent to a primary absorption tower where H_2SO_4 is formed. The remaining unconverted sulfur dioxide is forwarded to the final stages in the converter, from whence it is sent to the secondary absorber for final sulfur trioxide removal. The result is the conversion of a much higher fraction of SO_2 to SO_3 (a conversion of 99.7 percent or higher, on the average, which meets the performance standard). Furthermore, dual absorption permits higher converter inlet sulfur dioxide concentrations than are used in single absorption plants because the secondary conversion stages effectively remove any residual sulfur dioxide from the primary absorber.

Where dual absorption reduces sulfur dioxide emissions by increasing the overall conversion efficiency, the sodium sulfite-bisulfite scrubbing process removes sulfur dioxide directly from the absorber exit gases. In one version of this process, the sulfur dioxide in the waste gas is absorbed in a sodium sulfite solution, separated, and recycled to the plant. Test results from a 750 ton (680 MT) per day plant equipped with a sulfite scrubbing system indicated an average emission factor of 2.7 pounds per ton (1.35 kg/MT).

15.17.2.2 Acid Mist[1-3] - Nearly all the acid mist emitted from sulfuric acid manufacturing can be traced to the absorber exit gases. Acid mist is created when sulfur trioxide combines with water vapor at a temperature below the dew point of sulfur trioxide. Once formed within the process system, this mist is so stable that only a small quantity can be removed in the absorber.

In general, the quantity and particle size distribution of acid mist are dependent on the type of sulfur feedstock used, the strength of acid produced, and the conditions in the absorber. Because it contains virtually no water vapor, bright elemental sulfur produces little acid mist when burned; however, the hydrocarbon impurities in other feedstocks – dark sulfur, spent acid, and hydrogen sulfide – oxidize to water vapor during combustion. The water vapor, in turn, combines with sulfur trioxide as the gas cools in the system.

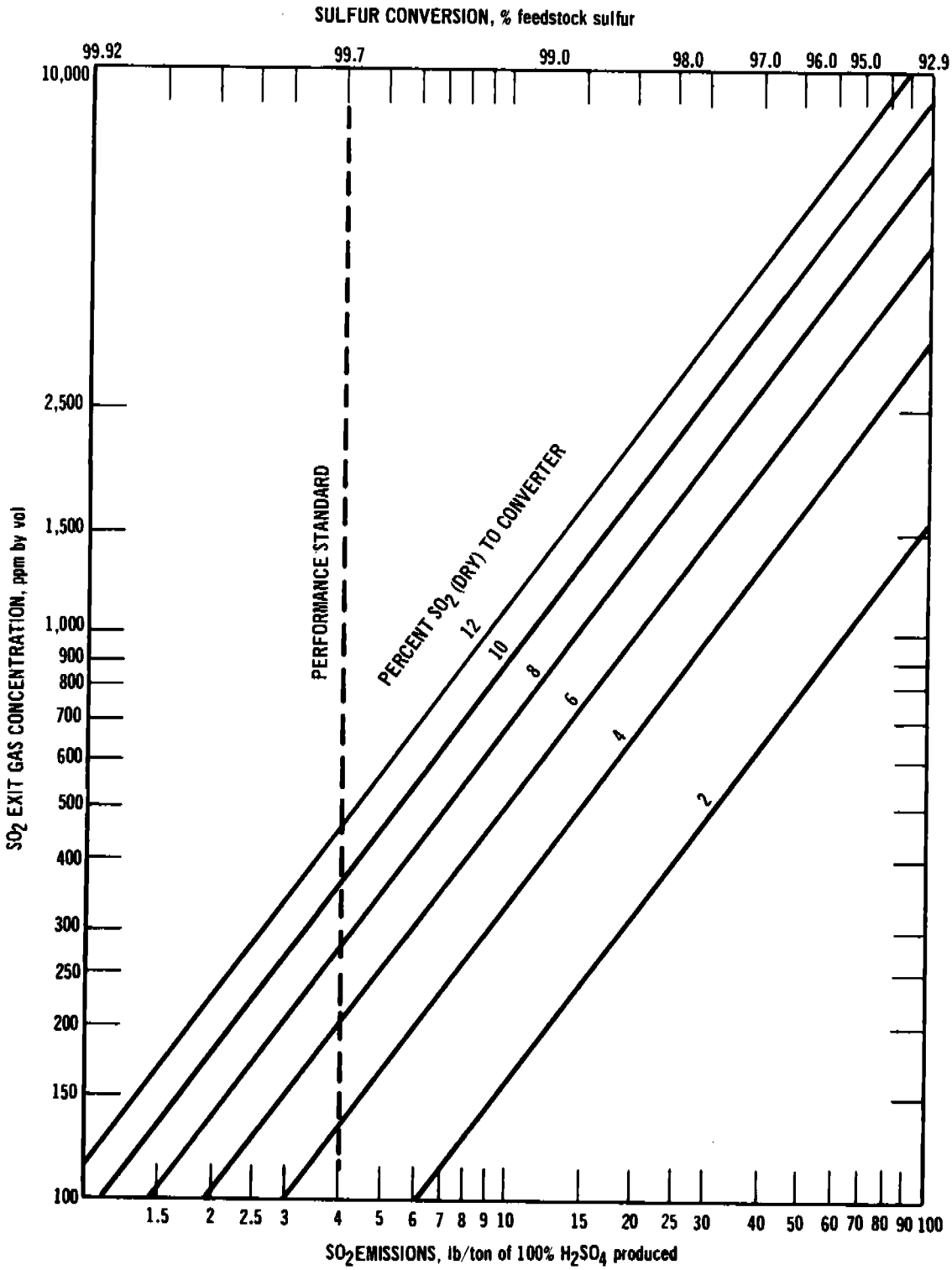

Figure 5.17-3. Sulfuric acid plant feedstock sulfur conversion versus volumetric and mass SO_2 emissions at various inlet SO_2 concentrations by volume.

The strength of acid produced—whether oleum or 99 percent sulfuric acid—also affects mist emissions. Oleum plants produce greater quantities of finer, more stable mist. For example, uncontrolled mist emissions from oleum plants burning spent acid range from 0.1 to 10.0 pounds per ton (0.05 to 5.0 kg/MT), while those from 98 percent acid plants burning elemental sulfur range from 0.4 to 4.0 pounds per ton (0.2 to 2.0 kg/MT). Furthermore, 85 to 95 weight percent of the mist particles from oleum plants are less than 2 microns in diameter, compared with only 30 weight percent that are less than 2 microns in diameter from 98 percent acid plants.

The operating temperature of the absorption column directly affects sulfur trioxide absorption and, accordingly, the quality of acid mist formed after exit gases leave the stack. The optimum absorber operating temperature is dependent on the strength of the acid produced, throughput rates, inlet sulfur trioxide concentrations, and other variables peculiar to each individual plant. Finally, it should be emphasized that the percentage conversion of sulfur dioxide to sulfur trioxide has no direct effect on acid mist emissions. In Table 5.17-2 uncontrolled acid mist emissions are presented for various sulfuric acid plants.

Two basic types of devices, electrostatic precipitators and fiber mist eliminators, effectively reduce the acid mist concentration from contact plants to less than the EPA new-source performance standard, which is 0.15 pound per ton (0.075 kg/MT) of acid. Precipitators, if properly maintained, are effective in collecting the mist particles at efficiencies up to 99 percent (see Table 5.17-3).

The three most commonly used fiber mist eliminators are the vertical tube, vertical panel, and horizontal dual-pad types. They differ from one another in the arrangement of the fiber elements, which are composed of either chemically resistant glass or fluorocarbon, and in the means employed to collect the trapped liquid. The operating characteristics of these three types are compared with electrostatic precipitators in Table 5.17-3.

Table 5.17-2. ACID MIST EMISSION FACTORS FOR SULFURIC ACID PLANTS WITHOUT CONTROLS[a]
EMISSION FACTOR RATING: B

Raw material	Oleum produced, % total output	Emissions[b] lb/ton acid	Emissions[b] kg/MT acid
Recovered sulfur	0 to 43	0.35 to 0.8	0.175 to 0.4
Bright virgin sulfur	0	1.7	0.85
Dark virgin sulfur	33 to 100	0.32 to 6.3	0.16 to 3.15
Sulfide ores	0 to 25	1.2 to 7.4	0.6 to 3.7
Spent acid	0 to 77	2.2 to 2.7	1.1 to 1.35

[a]Reference 1.
[b]Emissions are proportional to the percentage of oleum in the total product. Use the low end of ranges for low oleum percentage and high end of ranges for high oleum percentage.

Table 5.17-3. EMISSION COMPARISON AND COLLECTION EFFICIENCY OF TYPICAL ELECTROSTATIC PRECIPITATOR AND FIBER MIST ELIMINATORS[a]

Control device	Particle size collection efficiency, %		Acid mist emissions			
			98% acid plants[b]		oleum plants	
	>3 μm	≤3 μm	lb/ton	kg/MT	lb/ton	kg/MT
Electrostatic precipitator	99	100	0.10	0.05	0.12	0.06
Fiber mist eliminator						
Tubular	100	95 to 99	0.02	0.01	0.02	0.01
Panel	100	90 to 98	0.10	0.05	0.10	0.05
Dual pad	100	93 to 99	0.11	0.055	0.11	0.055

[a]Reference 2.
[b]Based on manufacturers' generally expected results; calculated for 8 percent sulfur dioxide concentration in gas converter.

References for Section 5.17

1. Atmospheric Emissions from Sulfuric Acid Manufacturing Processes. U.S. DHEW, PHS, National Air Pollution Control Administration. Washington, D.C. Publication Number 999-AP-13. 1966.

2. Unpublished report on control of air pollution from sulfuric acid plants. Environmental Protection Agency. Research Triangle Park, N.C. August 1971.

3. Standards of Performance for New Stationary Sources. Environmental Protection Agency. Washington, D.C. Federal Register. *36*(247): December 23, 1971.

5.18 SULFUR

By William Vatavuk

5.18.1 Process Description

Nearly all of the elemental sulfur produced from hydrogen sulfide is made by the modified Claus process. The process (Figure 5.18-1) consists of the multi-stage oxidation of hydrogen sulfide according to the following reaction:

$$\underset{\text{Hydrogen sulfide}}{2H_2S} + \underset{\text{Oxygen}}{O_2} \longrightarrow \underset{\text{Sulfur}}{2S} + \underset{\text{Water}}{2H_2O}$$

In the first step, approximately one-third of the hydrogen sulfide is reacted with air in a pressurized boiler (1.0 to 1.5 atmosphere) where most of the heat of reaction and some of the sulfur are removed. After removal of the water vapor and sulfur, the cooled gases are heated to between 400 and 500°F, and passed over a "Claus" catalyst bed composed of bauxite or alumina, where the reaction is completed. The degree of reaction conpletion is a function of the number of catalytic stages employed. Two stages can recover 92 to 95 percent of the potential sulfur; three stages, 95 to 96 percent; and four stages, 96 to 97 percent. The conversion to sulfur is ultimately limited by the reverse reaction in which water vapor recombines with sulfur to form gaseous hydrogen sulfide and sulfur dioxide. Additional amounts of sulfur are lost as vapor, entrained mist, or droplets and as carbonyl sulfide and carbon disulfide (0.25 to 2.5 percent of the sulfur fed). The latter two compounds are formed in the pressurized boiler at high temperature (1500 to 2500°F) in the presence of carbon compounds.

The plant tail gas, containing the above impurities in volume quantities of 1 to 3 percent, usually passes to an incinerator, where all of the sulfur is oxidized to sulfur dioxide at temperatures ranging from 1000 to 1200°F. The tail gas containing the sulfur dioxide then passes to the atmosphere via a stack.

5.18.2 Emissions and Controls[1,2]

Virtually all of the emissions from sulfur plants consist of sulfur dioxide, the main incineration product. The quantity of sulfur dioxide emitted is, in turn, a function of the number of conversion stages employed, the process temperature and pressure, and the amounts of carbon compounds present in the pressurized boiler.

The most commonly used control method involves two main steps – conversion of sulfur dioxide to hydrogen sulfide followed by the conversion of hydrogen sulfide to elemental sulfur. Conversion of sulfur dioxide to hydrogen sulfide occurs via catalytic hydrogenation or hydrolysis at temperatures from 600 to 700°F. The products are cooled to remove the water vapor and then reacted with a sodium carbonate solution to yield sodium hydrosulfide. The hydrosulfide is oxidized to sulfur in solution by sodium vanadate. Finely divided sulfur appears as a froth that is skimmed off, washed, dried by centrifugation, and added to the plant product. Overall recovery of sulfur approaches 100 percent if this process is employed. Table 5.18-1 lists emissions from controlled and uncontrolled sulfur plants.

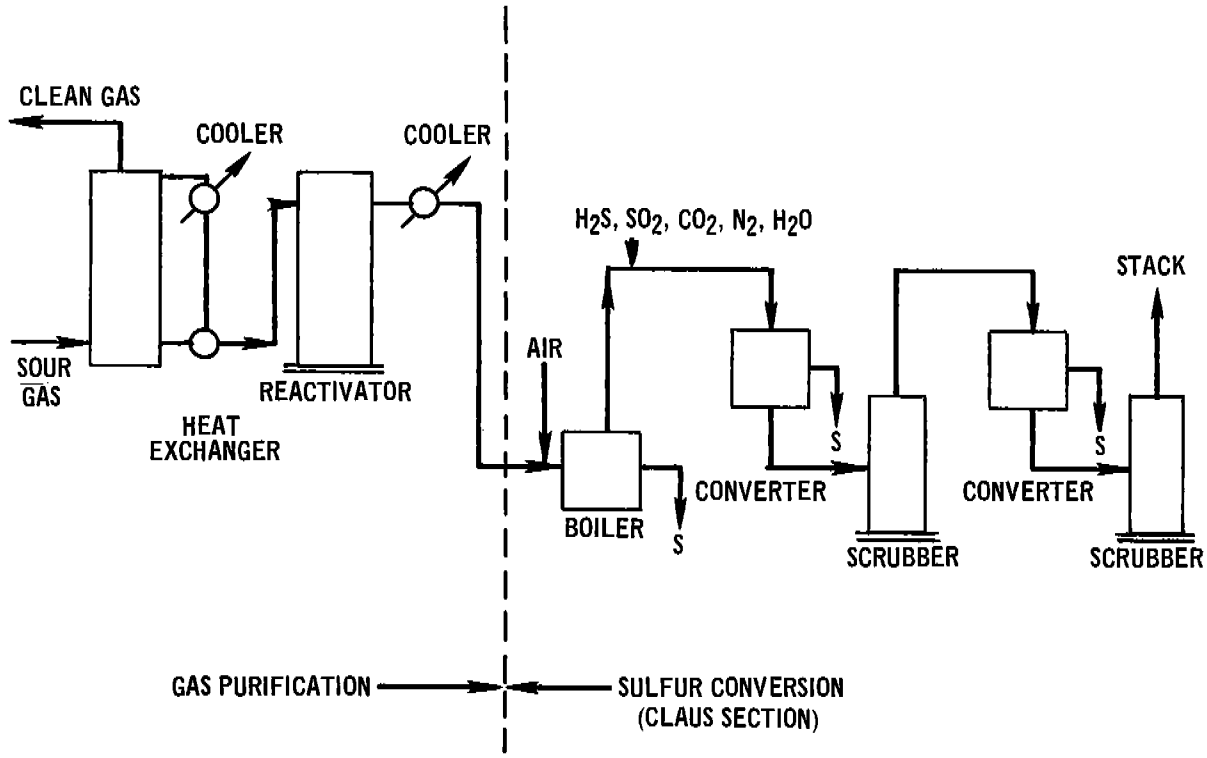

Figure 5.18-1. Basic flow diagram of modified Claus process with two converter stages used in manufacturing sulfur.

Table 5.18-1. EMISSION FACTORS FOR MODIFIED-CLAUS SULFUR PLANTS EMISSION FACTOR RATING: D

Number of catalytic stages	Recovery of of sulfur, %	SO_2 emissions[a] lb/ton 100% sulfur	SO_2 emissions[a] kg/MT 100% sulfur
Two, uncontrolled	92 to 95	211 to 348	106 to 162
Three, uncontrolled	95 to 96	167 to 211	84 to 106
Four, uncontrolled	96 to 97	124 to 167	62 to 84
Sulfur removal process	99.9	4.0	2.0

[a]The range in emission factors corresponds to the range in the percentage recovery of sulfur.

References for Section 5.18

1. Beavon, David K. Abating Sulfur Plant Tail Gases. Pollution Engineering. *4*(1):34-35, January 1972.

2. Kirk-Othmer Encyclopedia of Chemical Technology, Vol. 19. New York, John Wiley and Sons, Inc. 1969.

5.19 SYNTHETIC FIBERS

5.19.1 Process Description[1]

Synthetic fibers are classified into two major categories, semi-synthetic and "true" synthetic. Semi-synthetics, such as viscose rayon and acetate fibers, result when natural polymeric materials such as cellulose are brought into a dissolved or dispersed state and then spun into fine filaments. True synthetic polymers, such as Nylon, * Orlon, and Dacron, result from addition and other polymerization reactions that form long chain molecules.

True synthetic fibers begin with the preparation of extremely long, chain-like molecules. The polymer is spun in one of four ways:[2] (1) melt spinning, in which molten polymer is pumped through spinneret jets, the polymer solidifying as it strikes the cool air; (2) dry spinning, in which the polymer is dissolved in a suitable organic solvent, and the resulting solution is forced through spinnerets; (3) wet spinning, in which the solution is coagulated in a chemical as it emerges from the spinneret; and (4) core spinning, the newest method, in which a continuous filament yarn together with short-length "hard" fibers is introduced onto a spinning frame in such a way as to form a composite yarn.

5.19.2 Emissions and Controls[1]

In the manufacture of viscose rayon, carbon disulfide and hydrogen sulfide are the major gaseous emissions. Air pollution controls are not normally used to reduce these emissions, but adsorption in activated carbon at an efficiency of 80 to 95 percent, with subsequent recovery of the CS_2 can be accomplished.[3] Emissions of gaseous hydrocarbons may also occur from the drying of the finished fiber. Table 5.19-1 presents emission factors for semi-synthetic and true synthetic fibers.

Table 5.19-1. EMISSION FACTORS FOR SYNTHETIC FIBERS MANUFACTURING
EMISSION FACTOR RATING: E

Type of fiber	Hydrocarbons		Carbon disulfide		Hydrogen sulfide		Oil vapor or mist	
	lb/ton	kg/MT	lb/ton	kg/MT	lb/ton	kg/MT	lb/ton	kg/MT
Semi-synthetic								
Viscose rayon[a,b]	–	–	55	27.5	6	3	–	–
True synthetic[c]								
Nylon	7	3.5	–	–	–	–	15	7.5
Dacron	–	–	–	–	–	–	7	3.5

[a]Reference 4.
[b]May be reduced by 80 to 95 percent adsorption in activated charcoal.[3]
[c]Reference 5.

*Mention of company or product names does not constitute endorsement by the Environmental Protection Agency.

References for Section 5.19

1. Air Pollutant Emission Factors. Final Report. Resources Research, Inc. Reston, Va. Prepared for National Air Pollution Control Administration, Durham, N.C., under Contract Number CPA-22-69-119. April 1970.

2. Fibers, Man-Made. In: Kirk-Othmer Encyclopedia of Chemical Technology. New York, John Wiley and Sons, Inc. 1969.

3. Fluidized Recovery System Nabs Carbon Disulfide. Chem. Eng. *70*(8):92-94, April 15, 1963.

4. Private communication between Resources Research, Incorporated, and Rayon Manufacturing Plant. December 1969.

5. Private communication between Resources Research, Incorporated, and E.I. Dupont de Nemours and Company. January 13, 1970.

5.20 SYNTHETIC RUBBER

5.20.1 Process Description[1]

Copolymers of butadiene and styrene, commonly known as SBR, account for more than 70 percent of all synthetic rubber produced in the United States. In a typical SBR manufacturing process, the monomers of butadiene and styrene are mixed with additives such as soaps and mercaptans. The mixture is polymerized to a conversion point of approximately 60 percent. After being mixed with various ingredients such as oil and carbon black, the latex product is coagulated and precipitated from the latex emulsion. The rubber particles are then dried and baled.

5.20.2 Emissions and Controls[1]

Emissions from the synthetic rubber manufacturing process consist of organic compounds (largely the monomers used) emitted from the reactor and blow-down tanks, and particulate matter and odors from the drying operations.

Drying operations are frequently controlled with fabric filter systems to recover any particulate emissions, which represent a product loss. Potential gaseous emissions are largely controlled by recycling the gas stream back to the process. Emission factors from synthetic rubber plants are summarized in Table 5.20-1.

Table 5.20-1. EMISSION FACTORS FOR SYNTHETIC RUBBER PLANTS: BUTADIENE-ACRYLONITRILE AND BUTADIENE-STYRENE EMISSION FACTOR RATING: E

Compound	Emissions[a,b]	
	lb/ton	kg/MT
Alkenes		
Butadiene	40	20
Methyl propene	15	7.5
Butyne	3	1.5
Pentadiene	1	0.5
Alkanes		
Dimethylheptane	1	0.5
Pentane	2	1
Ethanenitrile	1	0.5
Carbonyls		
Acrylonitrile	17	8.5
Acrolein	3	1.5

[a]The butadiene emission is not continuous and is greatest right after a batch of partially polymerized latex enters the blow-down tank.
[b]References 2 and 3.

References for Section 5.20

1. Air Pollutant Emission Factors. Final Report. Resources Research Inc. Reston, Va. Prepared for National Air Pollution Control Administration, Durham, N.C., under Contract Number CPA-22-69-119. April 1970.

2. The Louisville Air Pollution Study. U.S. DHEW, PHS, Division of Air Pollution. Cincinnati, Ohio. 1961. p. 26-27 and 124.

3. Unpublished data from synthetic rubber plant. U.S. DHEW, PHS, EHS, National Air Pollution Control Administration, Division of Air Quality and Emissions Data. Durham, N.C. 1969.

5.21 TEREPHTHALIC ACID

5.21.1 Process Description[1,2]

The main use of terephthalic acid is to produce dimethylterephthalate, which is used for polyester fibers (like Dacron) and films. Terephthalic acid can be produced in various ways, one of which is the oxidation of *p*-xylene by nitric acid. In this process an oxygen-containing gas (usually air), *p*-xylene, and HNO_3 are all passed into a reactor where oxidation by the nitric acid takes place in two steps. The first step yields primarily N_2O; the second step yields mostly NO in the offgas. The terephthalic acid precipitated from the reactor effluent is recovered by conventional crystallization, separation, and drying operations.

5.21.2 Emissions

The NO in the offgas from the reactor is the major air contaminant from the manufacture of terephthalic acid. The amount of nitrogen oxides emitted is roughly estimated in Table 5.21-1.

Table 5.21-1. NITROGEN OXIDES EMISSION FACTORS FOR TEREPHTHALIC ACID PLANTS[a] EMISSION FACTOR RATING: D

Type of operation	Nitrogen oxides (NO)	
	lb/ton	kg/MT
Reactor	13	6.5

[a]Reference 2.

References for Section 5.21

1. Air Pollutant Emission Factors. Final Report. Resources Research, Inc. Reston, Va. Prepared for National Air Pollution Control Administration, Durham, N.C. under Contract Number CPA-22-69-119. April 1970.

2. Terephthalic Acid. In: Kirk-Othmer Encyclopedia of Chemical Technology, Vol. 9. New York, John Wiley and Sons, Inc. 1964.

6. FOOD AND AGRICULTURAL INDUSTRY

Before food and agricultural products are used by the consumer they undergo a number of processing steps, such as refinement, preservation, and product improvement, as well as storage and handling, packaging, and shipping. This section deals with the processing of food and agricultural products and the intermediate steps that present air pollution problems. Emission factors are presented for industries where data were available. The primary pollutant emitted from these processes is particulate matter.

6.1 ALFALFA DEHYDRATING

6.1.1 General[1,2]

An alfalfa dehydrating plant produces an animal feed from alfalfa. The dehydration and grinding of alfalfa that produces alfalfa meal is a dusty operation most commonly carried out in rural areas.

Wet, chopped alfalfa is fed into a direct-fired rotary drier. The dried alfalfa particles are conveyed to a primary cyclone and sometimes a secondary cyclone in series to settle out the product from air flow and products of combustion. The settled material is discharged to the grinding equipment, which is usually a hammer mill. The ground material is collected in an air-meal separator and is either conveyed directly to bagging or storage, or blended with other ingredients.

6.1.2 Emissions and Controls

Sources of dust emissions are the primary cyclone, the grinders, and the air-meal separator. Overall dust losses have been reported as high as 7 percent,[2] but average losses are around 3 percent by weight of the meal produced.[3] The use of a baghouse as a secondary collection system can greatly reduce emissions. Emission factors for alfalfa dehydration are presented in Table 6.1-1.

Table 6.1-1. PARTICULATE EMISSION FACTORS FOR ALFALFA DEHYDRATION[a]
EMISSION FACTOR RATING: E

Type of operation	Particulate emissions	
	lb/ton of meal produced	kg/MT of meal produced
Uncontrolled	60	30
Baghouse collector	3	1.5

[a]Reference 3.

References for Section 6.1

1. Duprey, R. L. Compilation of Air Pollutant Emission Factors. U.S. DHEW, PHS, National Center for Air Pollution Control. Durham, N.C. PHS Publication Number 999-AP-42. 1968. p. 19.

2. Stern, A. (ed.). Air Pollution, Volume III, Sources of Air Pollution and Their Control, 2nd. Ed. New York, Academic Press. 1968.

3. Process Flow Sheets and Air Pollution Controls. American Conference of Governmental Industrial Hygienists. Committee on Air Pollution. Cincinnati, Ohio. 1961.

6.2 COFFEE ROASTING

6.2.1 Process Description[1,2]

Coffee, which is imported in the form of green beans, must be cleaned, blended, roasted, and packaged before being sold. In a typical coffee roasting operation, the green coffee beans are freed of dust and chaff by dropping the beans into a current of air. The cleaned beans are then sent to a batch or continuous roaster. During the roasting, moisture is driven off, the beans swell, and chemical changes take place that give the roasted beans their typical color and aroma. When the beans have reached a certain color, they are quenched, cooled, and stoned.

6.2.2 Emissions[1,2]

Dust, chaff, coffee bean oils (as mists), smoke, and odors are the principal air contaminants emitted from coffee processing. The major source of particulate emissions and practically the only source of aldehydes, nitrogen oxides, and organic acids is the roasting process. In a direct-fired roaster, gases are vented without recirculation through the flame. In the indirect-fired roaster, however, a portion of the roaster gases are recirculated and particulate emissions are reduced. Emissions of both smoke and odors from the roasters can be almost completely removed by a properly designed afterburner.[1,2]

Particulate emissions also occur from the stoner and cooler. In the stoner, contaminating materials heavier than the roasted beans are separated from the beans by an air stream. In the cooler, quenching the hot roasted beans with water causes emissions of large quantities of steam and some particulate matter.[3] Table 6.2-1 summarizes emissions from the various operations involved in coffee processing.

Table 6.2-1. EMISSION FACTORS FOR ROASTING PROCESSES WITHOUT CONTROLS
EMISSION FACTOR RATING: B

Type of process	Pollutant							
	Particulates[a]		NO_x[b]		Aldehydes[b]		Organic acids[b]	
	lb/ton	kg/MT	lb/ton	kg/MT	lb/ton	kg/MT	lb/ton	kg/MT
Roaster								
Direct-fired	7.6	3.8	0.1	0.05	0.2	0.1	0.9	0.45
Indirect-fired	4.2	2.1	0.1	0.05	0.2	0.1	0.9	0.45
Stoner and cooler[c]	1.4	0.7	–	–	–	–	–	–
Instant coffee spray dryer	1.4[d]	0.7[d]	–	–	–	–	–	–

[a]Reference 3.
[b]Reference 1.
[c]If cyclone is used, emissions can be reduced by 70 percent.
[d]Cyclone plus wet scrubber always used, representing a controlled factor.

References for Section 6.2

1. Polglase, W.L., H.F. Dey, and R.T. Walsh. Coffee Processing. In: Air Pollution Engineering Manual. Danielson, J.A. (ed.). U.S. DHEW, PHS, National Center for Air Pollution Control. Cincinnati, Ohio. Publication Number 999-AP-40. 1967. p. 746-749.

2. Duprey, R.L. Compilation of Air Pollutant Emission Factors. U.S. DHEW, PHS, National Center for Air Pollution Control. Durham, N.C. PHS Publication Number 999-AP-42. 1968. p. 19-20.

3. Partee, F. Air Pollution in the Coffee Roasting Industry. Revised Ed. U.S. DHEW, PHS, Division of Air Pollution. Cincinnati, Ohio. Publication Number 999-AP-9. 1966.

6.3 COTTON GINNING

6.3.1 General[1]

The primary function of a cotton gin is to take raw seed cotton and separate the seed and the lint. A large amount of trash is found in the seed cotton, and it must also be removed. The problem of collecting and disposing of gin trash is two-fold. The first problem consists of collecting the coarse, heavier trash such as burrs, sticks, stems, leaves, sand, and dirt. The second problem consists of collecting the finer dust, small leaf particles, and fly lint that are discharged from the lint after the fibers are removed from the seed. From 1 ton (0.907 MT) of seed cotton, approximately one 500-pound (226-kilogram) bale of cotton can be made.

6.3.2 Emissions and Controls

The major sources of particulates from cotton ginning include the unloading fan, the cleaner, and the stick and burr machine. From the cleaner and stick and burr machine, a large percentage of the particles settle out in the plant, and an attempt has been made in Table 6.3-1 to present emission factors that take this into consideration. Where cyclone collectors are used, emissions have been reported to be about 90 percent less.[1]

Table 6.3-1. EMISSION FACTORS FOR COTTON GINNING OPERATIONS WITHOUT CONTROLS[a,b]
EMISSION FACTOR RATING: C

Process	Estimated total particulates		Particles > 100 μm settled out, %	Estimated emission factor (released to atmosphere)	
	lb/bale	kg/bale		lb/bale	kg/bale
Unloading fan	5	2.27	0	5.0	2.27
Cleaner	1	0.45	70	0.30	0.14
Stick and burr machine	3	1.36	95	0.20	0.09
Miscellaneous	3	1.36	50	1.5	0.68
Total	12	5.44	–	7.0	3.2

[a]References 1 and 2.
[b]One bale weighs 500 pounds (226 kilograms).

References for Section 6.3

1. Air-Borne Particulate Emissions from Cotton Ginning Operations. U.S. DHEW, PHS, Taft Sanitary Engineering Center. Cincinnati, Ohio. 1960.

2. Control and Disposal of Cotton Ginning Wastes. A Symposium Sponsored by National Center for Air Pollution Control and Agricultural Research Service, Dallas, Texas. May 1966.

6.4 FEED AND GRAIN MILLS AND ELEVATORS

6.4.1 General[1]

Grain elevators are primarily transfer and storage units and are classified as either the smaller, more numerous country elevators or the larger terminal elevators. At grain elevator locations the following operations can occur: receiving, transfer and storage, cleaning, drying, and milling or grinding. Many of the large terminal elevators also process grain at the same location. The grain processing may include wet and dry milling (cereals), flour milling, oil-seed crushing, and distilling. Feed manufacturing involves the receiving, conditioning (drying, sizing, cleaning), blending, and pelleting of the grains, and their subsequent bagging or bulk loading.

6.4.2 Emissions[1]

Emissions from feed and grain operations may be separated into those occurring at elevators and those occurring at grain processing operations or feed manufacturing operations. Emission factors for these operations are presented in Table 6.4-1. Because dust collection systems are generally applied to most phases of these operations to reduce product and component losses, the selection of the final emission factor should take into consideration the overall efficiency of these control systems.

Emissions from grain elevator operations are dependent on the type of grain, the moisture content of the grain (usually 10 to 30 percent), the amount of foreign material in the grain (usually 5 percent or less), the degree of enclosure at loading and unloading areas, the type of cleaning and conveying, and the amount and type of control used.

Factors affecting emissions from grain processing operations include the type of processing (wet or dry), the amount of grain processed, the amount of cleaning, the degree of drying or heating, the amount of grinding, the temperature of the process, and the degree of control applied to the particulates generated.

Factors affecting emissions from feed manufacturing operations include the type and amount of grain handled, the degree of drying, the amount of liquid blended into the feed, the type of handling (conveyor or pneumatic), and the degree of control.

References for Section 6.4

1. Air Pollutant Emission Factors. Final Report. Resources Research, Incorporated. Prepared for National Air Pollution Control Administration, Durham, N.C., under Contract Number CPA-22-69-119, April 1970. Reston, Virginia.

2. Thimsen, D.J. and P.W. Aften. A Proposed Design for Grain Elevator Dust Collector. J. Air Pol. Control Assoc. *18*(11):738-742, November 1968.

3. Private communication between H. L. Kiser, Grain and Feed Dealers National Association, and Resources Research, Inc., Washington, D.C. September 1969.

Table 6.4-1. PARTICULATE EMISSION FACTORS FOR GRAIN HANDLING AND PROCESSING
EMISSION FACTOR RATING: B

Type of source	Emissions	
	lb/ton	kg/MT
Terminal elevators[a]		
Shipping or receiving	1	0.5
Transferring, conveying, etc.	2	1
Screening and cleaning	5	2.5
Drying	6	3
Country elevators[b]		
Shipping or receiving	5	2.5
Transferring, conveying, etc.	3	1.5
Screening and cleaning	8	4
Drying	7	3.5
Grain processing		
Corn meal[c]	5	2.5
Soybean processing[b]	7	3.5
Barley or wheat cleaner[d]	0.2[e]	0.1[e]
Milo cleaner[f]	0.4[e]	0.2[e]
Barley flour milling[c]	3[e]	1.5[e]
Feed manufacturing		
Barley[f]	3[e]	1.5[e]

[a]References 2 and 3.
[b]Reference 3.
[c]References 3 and 4.
[d]References 5 and 6.
[e]At cyclone exit (only non-ether-soluble particulates).
[f]Reference 6.

4. Contribution of Power Plants and Other Sources to Suspended Particulate and Sulfur Dioxide Concentrations in Metropolis, Illinois. U.S. DHEW, PHS, National Air Pollution Control Administration. 1966.

5. Larson, G.P., G.I. Fischer, and W.J. Hamming. Evaluating Sources of Air Pollution. Ind. Eng. Chem. *45*:1070-1074. May 1953.

6. Donnelly, W.H. Feed and Grain Mills. In: Air Pollution Engineering Manual. Danielson, J.A. (ed.). U.S. DHEW, PHS, National Center for Air Pollution Control. Cincinnati, Ohio. Publication Number 999-AP-40. 1967. p. 359.

6.5 FERMENTATION

6.5.1 Process Description[1]

For the purpose of this report only the fermentation industries associated with food will be considered. This includes the production of beer, whiskey, and wine.

The manufacturing process for each of these is similar. The four main brewing production stages and their respective sub-stages are: (1) brewhouse operations, which include (a) malting of the barley, (b) addition of adjuncts (corn, grits, and rice) to barley mash, (c) conversion of starch in barley and adjuncts to maltose sugar by enzymatic processes, (d) separation of wort from grain by straining, and (e) hopping and boiling of the wort; (2) fermentation, which includes (a) cooling of the wort, (b) additional yeast cultures, (c) fermentation for 7 to 10 days, (d) removal of settled yeast, and (e) filtration and carbonation; (3) aging, which lasts from 1 to 2 months under refrigeration; and (4) packaging, which includes (a) bottling-pasteurization, and (b) racking draft beer.

The major differences between beer production and whiskey production are the purification and distillation necessary to obtain distilled liquors and the longer period of aging. The primary difference between wine making and beer making is that grapes are used as the initial raw material in wine rather than grains.

6.5.2 Emissions[1]

Emissions from fermentation processes are nearly all gases and primarily consist of carbon dioxide, hydrogen, oxygen, and water vapor, none of which present an air pollution problem. Emissions of particulates, however, can occur in the handling of the grain for the manufacture of beer and whiskey. Gaseous hydrocarbons are also emitted from the drying of spent grains and yeast in beer and from the whiskey-aging warehouses. No significant emissions have been reported for the production of wine. Emission factors for the various operations associated with beer, wine, and whiskey production are shown in Table 6.5-1.

Table 6.5-1. EMISSION FACTORS FOR FERMENTATION PROCESSES
EMISSION FACTOR RATING: E

Type of product	Particulates		Hydrocarbons	
	lb/ton	kg/MT	lb/ton	kg/MT
Beer				
Grain handling[a]	3	1.5	–	–
Drying spent grains, etc.[a]	5	2.5	NA[b]	NA
Whiskey				
Grain handling[a]	3	1.5	–	–
Drying spent grains, etc.[a]	5	2.5	NA	NA
Aging	–	–	10[c]	0.024[d]
Wine	Neg[e]	Neg	Neg[e]	Neg

[a]Based on section on grain processing.
[b]No emission factor available, but emissions do occur.
[c]Pounds per year per barrel of whiskey stored.[2]
[d]Kilograms per year per liter of whiskey stored.
[e]No significant emissions.

References for Section 6.5

1. Air Pollutant Emission Factors. Final Report. Resources Research, Inc. Reston, Va. Prepared for National Air Pollution Control Administration, Durham, N.C., under Contract Number CPA-22-69-119. April 1970.

2. Shreve, R.N. Chemical Process Industries, 3rd Ed. New York, McGraw-Hill Book Company. 1967. p. 591-608.

6.6 FISH PROCESSING

6.6.1 Process Description[1]

The canning, dehydration, and smoking of fish, and the manufacture of fish meal and fish oil are the important segments of fish processing. There are two types of fish-canning operations: the "wet-fish" method, in which the trimmed fish are cooked directly in the can, and the "pre-cooked" process, in which the whole fish is cooked and then hand-sorted before canning.

A large fraction of the fish received in a cannery is processed into by-products, the most important of which is fish meal. In the manufacture of fish meal, fish scrap from the canning lines is charged to continuous live-steam cookers. After the material leaves the cooker, it is pressed to remove oil and water. The pressed cake is then broken up, usually in a hammer mill, and dried in a direct-fired rotary drier or in a steam-tube rotary drier.

6.6.2 Emissions and Controls[1]

The biggest problem from fish processing is odorous emissions. The principal odorous gases generated during the cooking portion of fish-meal manufacturing are hydrogen sulfide and trimethylamine. Some of the methods used to control odors include adsorption by activated carbon, scrubbing with oxidizing solution, and incineration. The only significant sources of dust emissions in fish processing are the driers and grinders used to handle dried fish meal. Emission factors for fish meal manufacturing are shown in Table 6.6-1.

Table 6.6-1. EMISSION FACTORS FOR FISH MEAL PROCESSING
EMISSION FACTOR RATING: C

Emission source	Particulates		Trimethylamine $(CH_3)_3N$		Hydrogen sulfide (H_2S)	
	lb/ton	kg/MT	lb/ton	kg/MT	lb/ton	kg/MT
Cookers, lb/ton (kg/MT) of fish meal produced[a]						
Fresh fish	–	–	0.3	0.15	0.01	0.005
Stale fish	–	–	3.5	1.75	0.2	0.10
Driers, lb/ton (kg/MT) of fish scrap[b]	0.1	0.05	–	–	–	–

[a]Reference 2.
[b]Reference 1.

References for Section 6.6

1. Walsh, R.T., K.D. Luedtke, and L.K. Smith. Fish Canneries and Fish Reduction Plants. In: Air Pollution Engineering Manual. Danielson, J.A. (ed.). U.S. DHEW, PHS, National Center for Air Pollution Control. Cincinnati, Ohio. Publication Number 999-AP-40. 1967. p. 760-770.

2. Summer, W. Methods of Air Deodorization. New York, Elsevier Publishing Company. p. 284-286.

6.7 MEAT SMOKEHOUSES

6.7.1 Process Description[1]

Smoking is a diffusion process in which food products are exposed to an atmosphere of hardwood smoke, causing various organic compounds to be absorbed by the food. Smoke is produced commerically in the United States by three major methods: (1) by burning dampened sawdust (20 to 40 percent moisture), (2) by burning dry sawdust (5 to 9 percent moisture) continuously, and (3) by friction. Burning dampened sawdust and kiln-dried sawdust are the most widely used methods. Most large, modern, production meat smokehouses are the recirculating type, in which smoke is circulated at reasonably high temperatures throughout the smokehouse.

6.7.2 Emissions and Controls[1]

Emissions from smokehouses are generated from the burning hardwood rather than from the cooked product itself. Based on approximately 110 pounds of meat smoked per pound of wood burned (110 kilograms of meat per kilogram of wood burned), emission factors have been derived for meat smoking and are presented in Table 6.7-1.

Emissions from meat smoking are dependent on several factors, including the type of wood, the type of smoke generator, the moisture content of the wood, the air supply, and the amount of smoke recirculated. Both low-voltage electrostatic precipitators and direct-fired afterburners may be used to reduce particulate and organic emissions. These controlled emission factors have also been shown in Table 6.7-1.

Table 6.7-1. EMISSION FACTORS FOR MEAT SMOKING[a,b]
EMISSION FACTOR RATING: D

Pollutant	Uncontrolled		Controlled[c]	
	lb/ton of meat	kg/MT of meat	lb/ton of meat	kg/MT of meat
Particulates	0.3	0.15	0.1	0.05
Carbon monoxide	0.6	0.3	Neg[d]	Neg
Hydrocarbons (CH_4)	0.07	0.035	Neg	Neg
Aldehydes (HCHO)	0.08	0.04	0.05	0.025
Organic acids (acetic)	0.2	0.10	0.1	0.05

[a]Based on 110 pounds of meat smoked per pound of wood burned (110 kg meat/kg wood burned).
[b]References 2, 3, and section on charcoal production.
[c]Controls consist of either a wet collector and low-voltage precipitator in series or a direct-fired afterburner.
[d]With afterburner.

References for Section 6.7

1. Air Pollutant Emission Factors. Final Report. Resources Research, Inc. Reston, Va. Prepared for National Air Pollution Control Administration, Durham, N.C., under Contract Number CPA-22-69-119. April 1970.

2. Carter, E. Private communication between Maryland State Department of Health and Resources Research, Incorporated. November 21, 1969.

3. Polglase, W.L., H.F. Dey, and R.T. Walsh. Smokehouses. In: Air Pollution Engineering Manual. Danielson, J. A. (ed.). U.S. DHEW, PHS, National Center for Air Pollution Control. Cincinnati, Ohio. Publication Number 999-AP-40. 1967. p. 750-755.

6.8 NITRATE FERTILIZERS

6.8.1 General[1,2]

For this report, nitrate fertilizers are defined as the product resulting from the reaction of nitric acid and ammonia to form ammonium nitrate solutions or granules. Essentially three steps are involved in producing ammonium nitrate: neutralization, evaporation of the neutralized solution, and control of the particle size and characteristics of the dry product.

Anhydrous ammonia and nitric acid (57 to 65 percent HNO_3)[3,4] are brought together in the neutralizer to produce ammonium nitrate. An evaporator or concentrator is then used to increase the ammonium nitrate concentration. The resulting solutions may be formed into granules by the use of prilling towers or by ordinary granulators. Limestone may be added in either process in order to produce calcium ammonium nitrate.[5,6]

6.8.2 Emissions and Controls

The main emissions from the manufacture of nitrate fertilizers occur in the neutralization and drying operations. By keeping the neutralization process on the acidic side, losses of ammonia and nitric oxides are kept at a minimum. Nitrate dust or particulate matter is produced in the granulation or prilling operation. Particulate matter is also produced in the drying, cooling, coating, and material handling operations. Additional dust may escape from the bagging and shipping facilities.

Typical operations do not use collection devices on the prilling tower. Wet or dry cyclones, however, are used for various granulating, drying, or cooling operations in order to recover valuable products. Table 6.8-1 presents emission factors for the manufacture of nitrate fertilizers.

Table 6.8-1. EMISSION FACTORS FOR NITRATE FERTILIZER MANUFACTURING WITHOUT CONTROLS EMISSION FACTOR RATING: B

Type of process[a]	Particulates		Nitrogen oxides (NO_3)		Ammonia	
	lb/ton	kg/MT	lb/ton	kg/MT	lb/ton	kg/MT
With prilling tower[b]						
Neutralizer[c,d]	–	–	–	–	2	1
Prilling tower	0.9	0.45	–	–	–	–
Dryers and coolers[e]	12	6	–	–	–	–
With granulator[b]						
Neutralizer[c,d]	–	–	–	–	2	1
Granulator[e]	0.4	0.2	0.9	0.45	0.5	0.25
Dryers and coolers[e,f]	7	3.5	3	1.5	1.3	0.65

[a]Plants will use either a prilling tower or a granulator but not both.
[b]Reference 7.
[c]Reference 8.
[d]Controlled factor based on 95 percent recovery in recycle scrubber.
[e]Use of wet cyclones can reduce emissions by 70 percent.
[f]Use of wet-screen scrubber following cyclone can reduce emissions by 95 to 97 percent.

References for Section 6.8

1. Air Pollutant Emission Factors. Final Report. Resources Research, Inc. Reston, Va. Prepared for National Air Pollution Control Administration, Durham, N.C., under Contract Number CPA-22-69-119. April 1970.

2. Stern, A. (ed.). Sources of Air Pollution and Their Control. In: Air Pollution Vol. III, 2nd Ed. New York, Academic Press. 1968. p. 231-234.

3. Sauchelli, V. Chemistry and Technology of Fertilizers. New York, Reinhold Publishing Company. 1960.

4. Falck-Muus, R. New Process Solves Nitrate Corrosion. Chem. Eng. *74*(14):108, July 3, 1967.

5. Ellwood, P. Nitrogen Fertilizer Plant Integrates Dutch and American Know-How. Chem. Eng. p. 136-138, May 11, 1964.

6. Chemico, Ammonium Nitrate Process Information Sheets.

7. Unpublished source sampling data. Resources Research, Incorporated. Reston, Virginia.

8. Private communication with personnel from Gulf Design Corporation. Lakeland, Florida.

6.9 ORCHARD HEATERS

by Dennis H. Ackerson

6.9.1 General[1-6]

Orchard heaters are commonly used in various areas of the United States to prevent frost damage to fruit and fruit trees. The five common types of orchard heaters—pipeline, lazy flame, return stack, cone, and solid fuel—are shown in Figure 6.9-1. The pipeline heater system is operated from a central control and fuel is distributed by a piping system from a centrally located tank. Lazy flame, return stack, and cone heaters contain integral fuel reservoirs, but can be converted to a pipeline system. Solid fuel heaters usually consist only of solid briquettes, which are placed on the ground and ignited.

The ambient temperature at which orchard heaters are required is determined primarily by the type of fruit and stage of maturity, by the daytime temperatures, and by the moisture content of the soil and air.

During a heavy thermal inversion, both convective and radiant heating methods are useful in preventing frost damage; there is little difference in the effectiveness of the various heaters. The temperature response for a given fuel rate is about the same for each type of heater as long as the heater is clean and does not leak. When there is little or no thermal inversion, radiant heat provided by pipeline, return stack, or cone heaters is the most effective method for preventing damage.

Proper location of the heaters is essential to the uniformity of the radiant heat distributed among the trees. Heaters are usually located in the center space between four trees and are staggered from one row to the next. Extra heaters are used on the borders of the orchard.

6.9.2 Emissions[1,6]

Emissions from orchard heaters are dependent on the fuel usage rate and the type of heater. Pipeline heaters have the lowest particulate emission rates of all orchard heaters. Hydrocarbon emissions are negligible in the pipeline heaters and in lazy flame, return stack, and cone heaters that have been converted to a pipeline system. Nearly all of the hydrocarbon losses are evaporative losses from fuel contained in the heater reservoir. Because of the low burning temperatures used, nitrogen oxide emissions are negligible.

Emission factors for the different types of orchard heaters are presented in Table 6.9-1 and Figure 6.9-2.

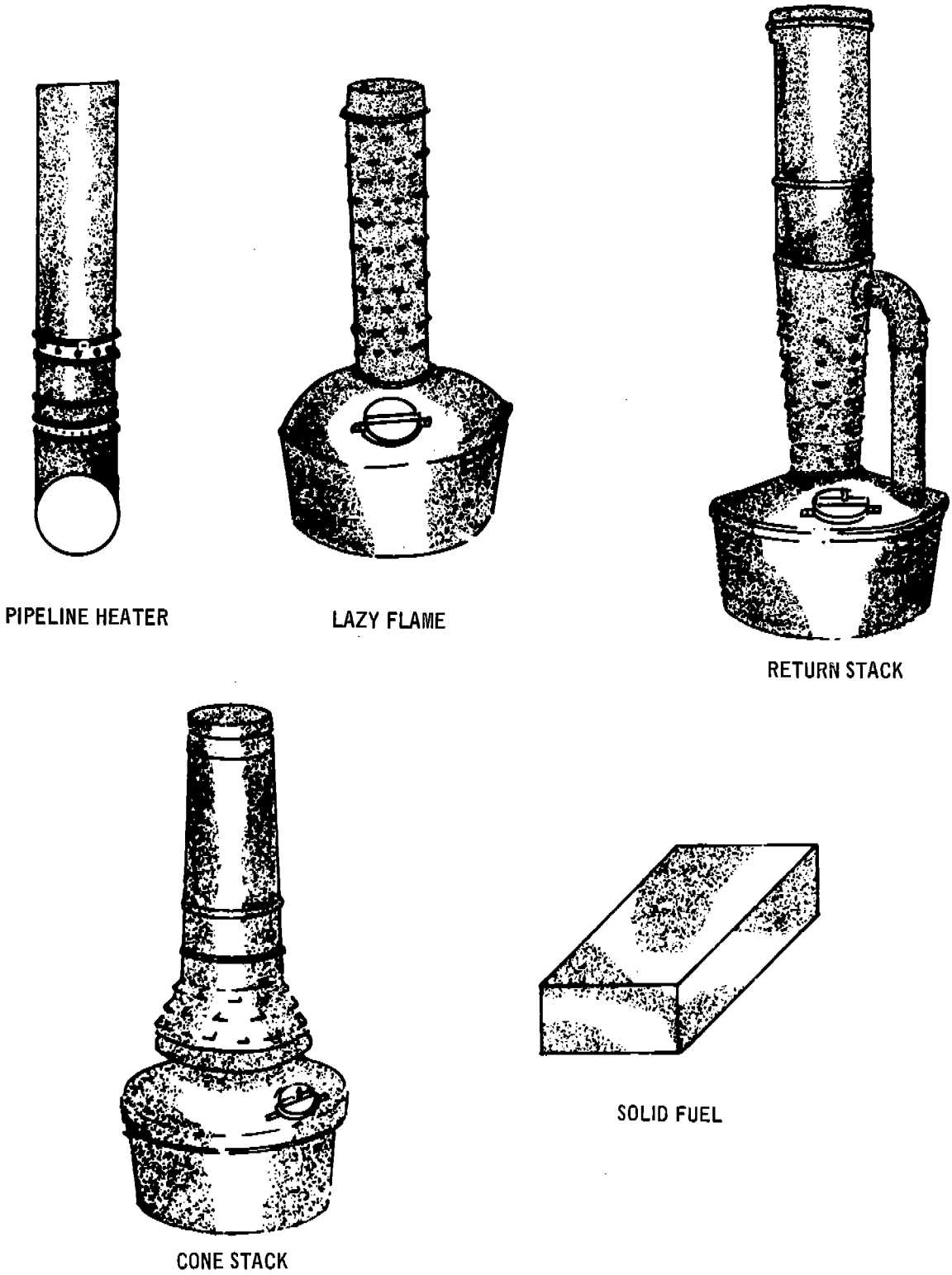

Figure 6.9-1. Types of orchard heaters.[6]

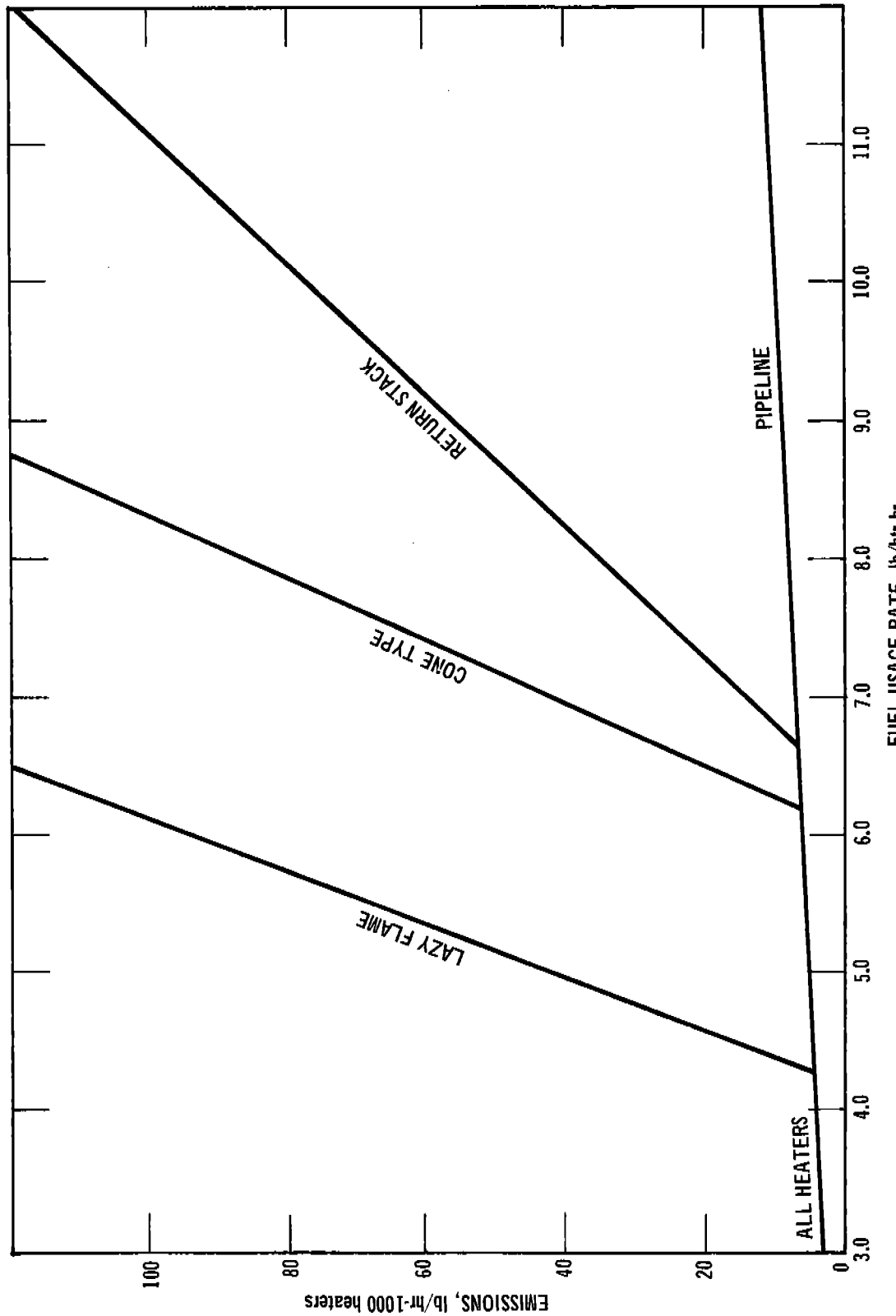

Figure 6.9-2. Particulate emissions from orchard heaters.[3,6]

Table 6.9-1. EMISSION FACTORS FOR ORCHARD HEATERS[a]
EMISSION FACTOR RATING: C

Pollutant	Type of heater				
	Pipeline	Lazy flame	Return stack	Cone	Solid fuel
Particulate					
lb/htr-hr	b	b	b	b	0.05
kg/htr-hr	b	b	b	b	0.023
Sulfur oxides[c]					
lb/htr-hr	0.13S[d]	0.11S	0.14S	0.14S	NA[e]
kg/htr-hr	0.06S	0.05S	0.06S	0.06S	NA
Carbon monoxide					
lb/htr-hr	6.2	NA	NA	NA	NA
kg/htr-hr	2.8	NA	NA	NA	NA
Hydrocarbons[f]					
lb/htr-hr	Neg[g]	16.0	16.0	16.0	Neg
kg/htr-hr	Neg	7.3	7.3	7.3	Neg
Nitrogen oxides[h]					
lb/htr-hr	Neg	Neg	Neg	Neg	Neg
kg/htr-hr	Neg	Neg	Neg	Neg	Neg

[a]References 1, 3, 4, and 6.
[b]Particulate emissions for pipeline, lazy flame, return stack, and cone heaters are shown in Figure 6.9-2.
[c]Based on emission factors for fuel oil combustion in Section 1.3.
[d]S=sulfur content.
[e]Not available.
[f]Based on emission factors for fuel oil combustion in Section 1.3. Evaporative losses only. Hydrocarbon emissions from combustion are considered negligible. Evaporative hydrocarbon losses for units that are part of a pipeline system are negligible.
[g]Negligible.
[h]Little nitrogen oxide is formed because of the relatively low combustion temperatures.

References for Section 6.9

1. Air Pollution in Ventura County. County of Ventura Health Department, Santa Paula, Calif. June 1966.

2. Frost Protection in Citrus. Agricultural Extension Service, University of California, Ventura. November 1967.

3. Personal communication with Mr. Wesley Snowden. Valentine, Fisher, and Tomlinson, Consulting Engineers, Seattle, Washington. May 1971.

4. Communication with the Smith Energy Company, Los Angeles, Calif. January 1968.

5. Communication with Agricultural Extension Service. University of California, Ventura, Calif. October 1969.

6. Personal communication with Mr. Ted Wakai. Air Pollution Control District, County of Ventura, Ojai, Calif. May 1972.

6.10 PHOSPHATE FERTILIZERS

Nearly all phosphatic fertilizers are made from naturally occurring, phosphorus-containing minerals such as phosphate rock. Because the phosphorus content of these minerals is not in a form that is readily available to growing plants, the minerals must be treated to convert the phosphorus to a plant-available form. This conversion can be done either by the process of acidulation or by a thermal process. The intermediate steps of the mining of phosphate rock and the manufacture of phosphoric acid are not included in this section as they are discussed in other sections of this publication; it should be kept in mind, however, that large integrated plants may have all of these operations taking place at one location.

In this section phosphate fertilizers have been divided into three categories: (1) normal superphosphate, (2) triple superphosphate, and (3) ammonium phosphate. Emission factors for the various processes involved are shown in Table 6.10-1.

Table 6.10-1. EMISSION FACTORS FOR THE PRODUCTION OF PHOSPHATE FERTILIZERS
EMISSION FACTOR RATING: C

Type of product	Particulates[a]		Fluorides[b]	
	lb/ton	kg/MT	lb/ton	kg/MT
Normal superphosphate[c]				
Grinding, drying	9	4.5	–	–
Main stack	–	–	0.15	0.075
Triple superphosphate[c]				
Run-of-pile (ROP)	–	–	0.03	0.015
Granular	–	–	0.10	0.05
Diammonium phosphate[d]				
Dryer, cooler	80	40	e	e
Ammoniator-granulator	2	1	0.04	0.02

[a]Control efficiencies of 99 percent can be obtained with fabric filters.
[b]Total fluorides, including particulate fluorides. Factors all represent outlet emissions following control devices, and should be used as typical only in the absence of specific plant information.
[c]References 1 through 3.
[d]References 1, 4, and 5 through 8.
[e]Included in ammoniator-granulator total.

6.10.1 Normal Superphosphate

6.10.1.1 General[4,9]—Normal superphosphate (also called single or ordinary superphosphate) is the product resulting from the acidulation of phosphate rock with sulfuric acid. Normal superphosphate contains from 16 to 22 percent phosphoric anhydride (P_2O_5). The physical steps involved in making superphosphate are: (1) mixing rock and acid, (2) allowing the mix to assume a solid form (denning), and (3) storing (curing) the material to allow the acidulation reaction to be completed. After the curing period, the product can be ground and bagged for sale, the cured superphosphate can be sold directly as run-of-pile product, or the material can be granulated for sale as granulated superphosphate.

6.10.1.2 Emissions – The gases released from the acidulation of phosphate rock contain silicon tetrafluoride, carbon dioxide, steam, particulates, and sulfur oxides. The sulfur oxide emissions arise from the reaction of phosphate rock and sulfuric acid.[10]

If a granulated superphosphate is produced, the vent gases from the granulator-ammoniator may contain particulates, ammonia, silicon tetrafluoride, hydrofluoric acid, ammonium chloride, and fertilizer dust. Emissions from the final drying of the granulated product will include gaseous and particulate fluorides, ammonia, and fertilizer dust.

6.10.2 Triple Superphosphate

6.10.2.1 General[4,9]–Triple superphosphate (also called double or concentrated superphosphate) is the product resulting from the reaction between phosphate rock and phosphoric acid. The product generally contains 44 to 52 percent P_2O_5, which is about three times the P_2O_5 usually found in normal superphosphates.

Presently, there are three principal methods of manufacturing triple superphosphate. One of these uses a cone mixer to produce a pulverized product that is particularly suited to the manufacture of ammoniated fertilizers. This product can be sold as run-of-pile (ROP), or it can be granulated. The second method produces in a multi-step process a granulated product that is well suited for direct application as a phosphate fertilizer. The third method combines the features of quick drying and granulation in a single step.

6.10.2.2 Emissions–Most triple superphosphate is the nongranular type. The exit gases from a plant producing the nongranular product will contain considerable quantities of silicon tetrafluoride, some hydrogen fluoride, and a small amount of particulates. Plants of this type also emit fluorides from the curing buildings.

In the cases where ROP triple superphosphate is granulated, one of the greatest problems is the emission of dust and fumes from the dryer and cooler. Emissions from ROP granulation plants include silicon tetrafluoride, hydrogen fluoride, ammonia, particulate matter, and ammonium chloride.

In direct granulation plants, wet scrubbers are usually used to remove the silicon tetrafluoride and hydrogen fluoride generated from the initial contact between the phosphoric acid and the dried rock. Screening stations and bagging stations are a source of fertilizer dust emissions in this type of process.

6.10.3 AMMONIUM PHOSPHATE

6.10.3.1 General–The two general classes of ammonium phosphates are monammonium phosphate and diammonium phosphate. The production of these types of phosphate fertilizers is starting to displace the production of other phosphate fertilizers because the ammonium phosphates have a higher plant food content and a lower shipping cost per unit weight of P_2O_5.

There are various processes and process variations in use for manufacturing ammonium phosphates. In general, phosphoric acid, sulfuric acid, and anhydrous ammonia are allowed to react to produce the desired grade of ammonium phosphate. Potash salts are added, if desired, and the product is granulated, dried, cooled, screened, and stored.

6.10.3.2 Emissions--The major pollutants from ammonium phosphate production are fluoride, particulates, and ammonia. The largest sources of particulate emissions are the cage mills, where oversized products from the screens are ground before being recycled to the ammoniator. Vent gases from the ammoniator tanks are the major source of ammonia. This gas is usually scrubbed with acid, however, to recover the residual ammonia.

References for Section 6.10

1. Unpublished data on phosphate fertilizer plants. U.S. DHEW, PHS, National Air Pollution Control Administration, Division of Abatement. Durham, N.C. July 1970.

2. Jacob, K. O., H. L. Marshall, D. S. Reynolds, and T. H. Tremearne. Composition and Properties of Superphosphate. Ind. Eng. Chem. *34*(6):722-728. June 1942.

3. Slack, A. V. Phosphoric Acid, Vol. 1, Part II. New York, Marcel Dekker, Incorporated. 1968. p. 732.

4. Stearn, A. (ed.). Air Pollution, Sources of Air Pollution and Their Control, Vol. III, 2nd Ed. New York, Academic Press. 1968. p. 231-234.

5. Teller, A. J. Control of Gaseous Fluoride Emissions. Chem. Eng. Progr. *63*(3):75-79, March 1967.

6. Slack, A. V. Phosphoric Acid, Vol. I, Part II. New York, Marcel Dekker, Incorporated. 1968. p. 722.

7. Slack, A. V. Phosphoric Acid, Vol. 1, Part II. New York, Marcel Dekker, Incorporated. 1968. p. 760-762.

8. Salee, G. Unpublished data from industrial source. Midwest Research Institute. June 1970.

9. Bixby, D. W. Phosphatic Fertilizer's Properties and Processes. The Sulphur Institute. Washington, D.C. October 1966.

10. Sherwin, K. A. Transcript of Institute of Chemical Engineers, London. *32*:172, 1954.

6.11 STARCH MANUFACTURING

6.11.1 Process Description[1]

The basic raw material in the manufacture of starch is dent corn, which contains starch. The starch in the corn is separated from the other components by "wet milling."

The shelled grain is prepared for milling in cleaners that remove both the light chaff and any heavier foreign material. The cleaned corn is then softened by soaking (steeping) it in warm water acidified with sulfur dioxide. The softened corn goes through attrition mills that tear the kernels apart, freeing the germ and loosening the hull. The remaining mixture of starch, gluten, and hulls is finely ground, and the coarser fiber particles are removed by screening. The mixture of starch and gluten is then separated by centrifuges, after which the starch is filtered and washed. At this point it is dried and packaged for market.

6.11.2 Emissions

The manufacture of starch from corn can result in significant dust emissions. The various cleaning, grinding, and screening operations are the major sources of dust emissions. Table 6.11-1 presents emission factors for starch manufacturing.

Table 6.11-1. EMISSION FACTORS FOR STARCH MANUFACTURING[a] EMISSION FACTOR RATING: D

Type of operation	Particulates	
	lb/ton	kg/MT
Uncontrolled	8	4
Controlled[b]	0.02	0.01

[a]Reference 2.
[b]Based on centrifugal gas scrubber.

References for Section 6.11

1. Starch Manufacturing. In: Kirk-Othmer Encyclopedia of Chemical Technology, Vol. IX. New York, John Wiley and Sons, Inc. 1964.

2. Storch, H. L. Product Losses Cut with a Centrifugal Gas Scrubber. Chem. Eng. Progr. *62*:51-54. April 1966.

6.12 SUGAR CANE PROCESSING

6.12.1 General[1]

The processing of sugar cane starts with the harvesting of the crops, either by hand or by mechanical means. If mechanical harvesting is used, much of the unwanted foliage is left, and it thus is standard practice to burn the cane before mechanical harvesting to remove the greater part of the foliage.

After being harvested, the cane goes through a series of processes to be converted to the final sugar product. It is washed to remove larger amounts of dirt and trash; then crushed and shredded to reduce the size of the stalks. The juice is next extracted by one of two methods, milling or diffusion. In milling the cane is pressed between heavy rollers to press out the juice, and in diffusion the sugar is leached out by water and thin juices. The raw sugar then goes through a series of operations including clarification, evaporation, and crystallization in order to produce the final product.

Most mills operate without supplemental fuel because of the sufficient bagasse (the fibrous residue of the extracted cane) that can be burned as fuel.

6.12.2 Emissions

The largest sources of emissions from sugar cane processing are the openfield burning in the harvesting of the crop and the burning of bagasse as fuel. In the various processes of crushing, evaporation, and crystallization, some particulates are emitted but in relatively small quantities. Emission factors for sugar cane processing are shown in Table 6.12-1.

Table 6.12-1. EMISSION FACTORS FOR SUGAR CANE PROCESSING
EMISSION FACTOR RATING: D

Type of process	Particulate	Carbon monoxide	Hydrocarbons	Nitrogen oxides
Field burning[a,b]				
lb/acre burned	225	1,500	300	30
kg/hectare burned	250	1,680	335	33.5
Bagasse burning[c]				
lb/ton bagasse	22	–	–	–
kg/MT bagasse	11	–	–	–

[a]Based on emission factors for open burning of agricultural waste.
[b]There are approximately 4 tons/acre (9,000 kg/hectare) of unwanted foliage on the cane and 11 tons/acre (25,000 kg/hectare) of grass and weed, all of which are combustible[2]
[c]Reference 2.

References for Section 6.12

1. Sugar Cane. In: Kirk-Othmer Encyclopedia of Chemical Technology, Vol. IX. New York, John Wiley and Sons, Inc. 1964.

2. Cooper, J. Unpublished data on emissions from the sugar cane industry. Air Pollution Control Agency, Palm Beach County, Florida. July 1969.

7. METALLURGICAL INDUSTRY

The metallurgical industries can be broadly divided into primary and secondary metal production operations. The term primary metals refers to production of the metal from ore. The secondary metals industry includes the recovery of metal from scrap and salvage and the production of alloys from ingot.

The primary metals industries discussed in Sections 7.1 through 7.7 include the nonferrous operations of primary aluminum production, copper smelters, lead smelters, and zinc smelters. These industries are characterized by the large quantities of sulfur oxides and particulates emitted. The primary metals industry also includes iron and steel mills, ferroalloy production, and metallurgical coke manufacture.

The secondary metallurgical industries discussed in Sections 7.8 through 7.14 are aluminum operations, brass and bronze ingots, gray iron foundries, lead smelting, magnesium smelting, steel foundries, and zinc processing. The major air contaminants from these operations are particulates in the forms of metallic fumes, smoke, and dust.

7.1 PRIMARY ALUMINUM PRODUCTION

7.1.1 Process Description[1]

Revised by William M. Vatavuk

Bauxite, a hydrated oxide of aluminum associated with silicon, titanium, and iron, is the base ore for aluminum production. Most bauxite ore is purified by the Bayer process in which the ore is dried, ground in ball mills, and mixed with sodium hydroxide. Iron oxide, silica, and other impurities are removed by settling, dilution, and filtration. The aluminum hydroxide is precipitated from this diluted, cooled solution and calcined to produce pure alumina, according to the reaction:

$$\underset{\text{Aluminium hydroxide}}{2Al(OH)_3} \longrightarrow \underset{\text{Water}}{3H_2O} + \underset{\text{Alumina}}{Al_2O_3} \qquad (1)$$

Aluminum metal is manufactured by the Hall-Heroult process, which involves the electrolytic reduction of alumina dissolved in a molten salt bath of cryolite (a complex of $NaF \cdot AlF_3$) and various salt additives:

$$\underset{\text{Alumina}}{2Al_2O_3} \xrightarrow{\text{Electrolysis}} \underset{\text{Aluminum}}{4Al} + \underset{\text{Oxygen}}{3O_2} \qquad (2)$$

The electrolysis is performed in a carbon crucible housed in a steel shell, known as a "pot." The electrolysis employs the carbon crucible as the cathode (negative pole) and a carbon mass as the anode (positive pole). The type of anode configuration used distinguishes the three types of pots: prebaked (PB), horizontal-stud Soderberg (HSS), and vertical-stud Soderberg (VSS).

The major portion of aluminum produced in the United States (61.9 percent of 1970 production) is processed in prebaked cells. In this type of pot, the anode consists of blocks that are formed from a carbon paste and baked

in an oven prior to their use in the cell. These blocks—typically 14 to 24 per cell—are attached to metal rods and serve as replaceable anodes. As the reduction proceeds, the carbon in these blocks is gradually consumed (at a rate of about 1 inch per day) by reaction with the oxygen by-product (see Table 7.1-1).

Table 7.1-1. RAW MATERIAL AND ENERGY REQUIREMENTS FOR ALUMINUM PRODUCTION

Parameter	Representative value
Cell operating temperature	~1740°F (~950°C)
Current through pot line	60,000 to 125,000 amp
Voltage drop per cell	4.3 to 5.2
Current efficiency	85 to 90%
Energy required	6.0 to 8.5 kwh/lb aluminum (13.2 to 18.7 kwh/kg aluminum)
Weight alumina consumed	1.89 to 1.92 lb AL_2O_3/lb aluminum (1.89 to 1.92 kg AL_2O_3/kg aluminum)
Weight electrolyte fluoride consumed	0.03 to 0.10 lb fluoride/lb aluminum (0.03 to 0.10 kg fluoride/kg aluminum)
Weight carbon electrode consumed	0.45 to 0.55 lb electrode/lb aluminum (0.45 to 0.55 kg electrode/kg aluminum)

The second most commonly used furnace (25.5 percent of 1970 production) is the horizontal-stud Soderberg. This type of cell uses a "continuous" carbon anode; that is, a mixture of pitch and carbon aggregate called "paste" is added at the top of the superstructure periodically, and the entire anode assembly is moved downward as the carbon burns away. The cell anode is contained by aluminum sheeting and perforated steel channels, through which electrode connections, called studs, are inserted into the anode paste. As the baking anode is lowered, the lower row of studs and the bottom channel are removed, and the flexible electrical connectors are moved to a higher row. One disadvantage of baking the paste in place is that heavy organic materials (tars) are added to the cell effluent stream. The heavy tars often cause plugging of the ducts, fans, and control equipment, an effect that seriously limits the choice of air cleaning equipment.

The vertical-stud Soderberg is similar to the horizontal-stud furnace, with the exception that the studs are mounted vertically in the cell. The studs must be raised and replaced periodically, but that is a relatively simple process. Representative raw material and energy requirements for aluminum reduction cells are presented in Table 7.1-1. A schematic representation of the reduction process is shown in Figure 7.1-1.

7.1.2 Emissions and Controls[1,2,3]

Emissions from aluminum reduction processes consist primarily of gaseous hydrogen fluoride and particulate fluorides, alumina, hydrocarbons or organics, sulfur dioxide from the reduction cells and the anode baking furnaces. Large amounts of particulates are also generated during the calcining of aluminum hydroxide, but the economic value of this dust is such that extensive controls have been employed to reduce emissions to relatively small quantities. Finally, small amounts of particulates are emitted from the bauxite grinding and materials handling processes.

The source of fluoride emissions from reduction cells is the fluoride electrolyte, which contains cryolite, aluminum fluoride (AlF_3), and fluorspar (CaF_2). For normal operation, the weight or "bath" ratio of sodium fluoride (NaF) to AlF_3 is maintained between 1.36 and 1.43 by the addition of Na_2CO_3, NaF, and AlF_3. Experience has shown that increasing this ratio has the effect of decreasing total fluoride effluents. Cell fluoride emissions are also decreased by lowering the operating temperature and increasing the alumina content in the bath. Specifically, the ratio of gaseous (mainly hydrogen fluoride) to particulate fluorides varies from 1.2 to 1.7 with PB and HSS cells, but attains a value of approximately 3.0 with VSS cells.

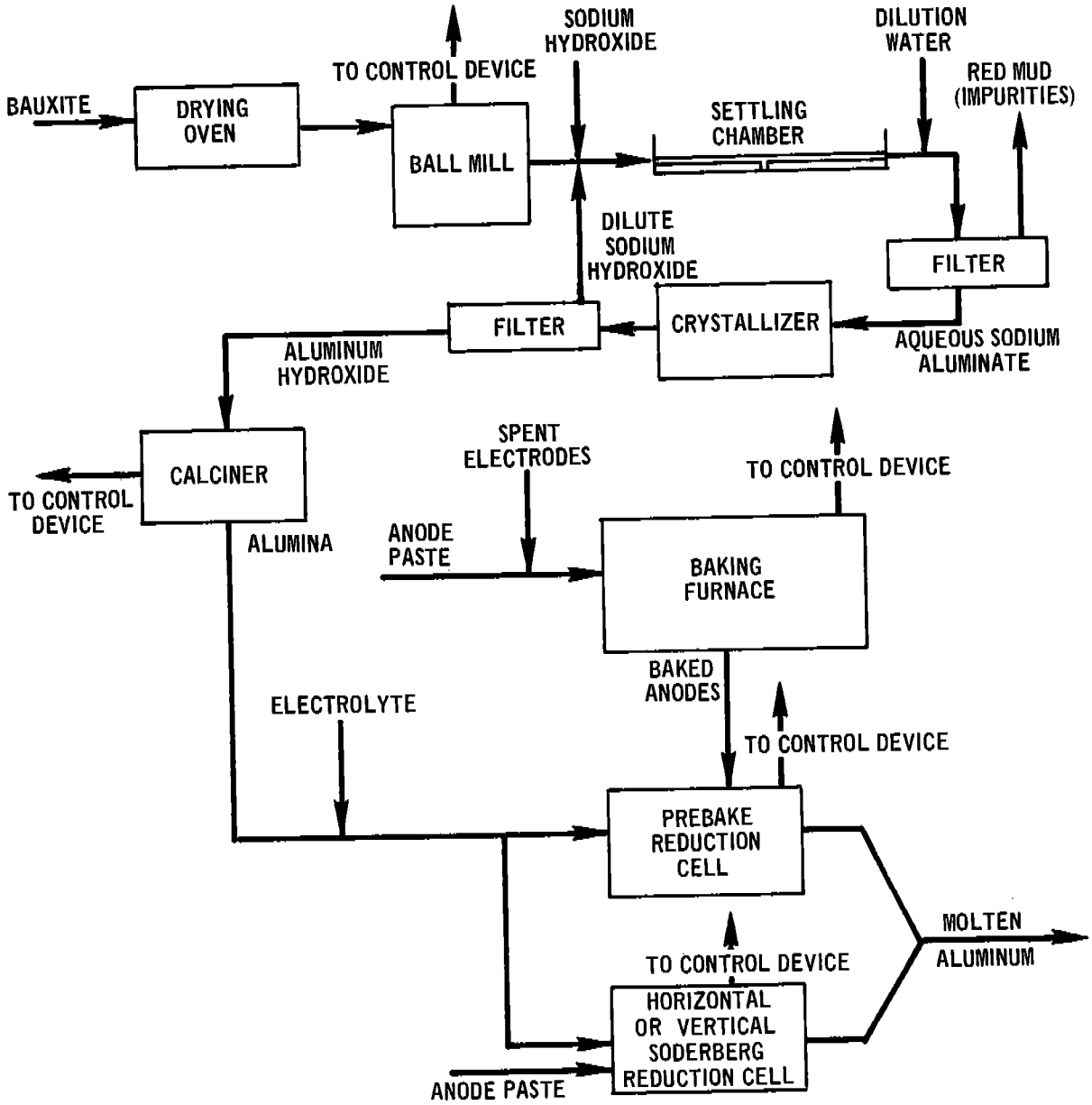

Figure 7.1-1. Schematic diagram of primary aluminum production process.

Table 7.1-2. REPRESENTATIVE PARTICLE SIZE DISTRIBUTIONS OF UNCONTROLLED EFFLUENTS FROM PREBAKED AND HORIZONTAL-STUD SODERBERG CELLS[1]

Size range, μm	Particles within size range, wt%	
	Prebaked	Horizontal-stud Soderberg
<1	35	44
1 to 5	25	26
5 to 10	8	8
10 to 20	5	6
20 to 44	5	4
>44	22	12

Particulate emissions from reduction cells consist of alumina and carbon from anode dusting, cryolite, aluminum fluoride, calcium fluoride, chiolite ($Na_5Al_3F_{14}$), and ferric oxide. Representative size distributions for PB and HSS particulate effluents are presented in Table 7.1-2. Particulates less than 1 micron in diameter represent the largest percentage (35 to 44 percent by weight) of uncontrolled effluents.

Moderate amounts of hydrocarbons derived from the anode paste are emitted from horizontal- and vertical-Soderberg pots. In vertical cells these compounds are removed by combustion via integral gas burners before the off-gases are released.

Because many different kinds of gases and particulates are emitted from reduction cells, many kinds of control devices have been employed. To abate both gaseous and particulate emissions, one or more types of wet scrubbers – spray tower and chambers, quench towers, floating beds, packed beds, venturis, and self-induced sprays – are used on all three cells and on anode baking furnaces. In addition, particulate control methods, such as electrostatic precipitators (wet and dry), multiple cyclones, and dry scrubbers (fluid-bed and coated-filter types), are employed with baking furnaces on PB and VSS cells. Dry alumina adsorption has been used at several PB and VSS installations in foreign countries. In this technique, both gaseous and particulate fluorides are controlled by passing the pot off-gases through the entering alumina feed, on which the fluorides are absorbed; the technique has an overall control efficiency of 98 percent.

In the aluminum hydroxide calcining, bauxite grinding, and materials handling operations, various dry dust collection devices–such as centrifugal collectors, multiple cyclones, or electrostatic precipitators–and wet scrubbers or both may be used. Controlled and uncontrolled emission factors for fluorides and total particulates are presented in Table 7.1.-3.

Table 7.1-3. EMISSION FACTORS FOR PRIMARY ALUMINUM PRODUCTION PROCESSES[a]
EMISSION FACTOR RATING: A

Type of operation	Total particulates[b]		Gaseous fluorides (HF)		Particulate fluorides (F)	
	lb/ton	kg/MT	lb/ton	kg/MT	lb/ton	kg/MT
Bauxite grinding[a,c]						
Uncontrolled	6.0	3.0	Neg	Neg	NA[d]	NA
Spray tower	1.8[e]	0.90	Neg	Neg	NA	NA
Floating-bed scrubber	1.7	0.85	Neg	Neg	NA	NA
Quench tower and spray screen	1.0	0.50	Neg	Neg	NA	NA
Electrostatic precipitator	0.12	0.060	Neg	Neg	NA	NA
Calcining of aluminum hydroxide[a,c]						
Uncontrolled	200.0	100.0	Neg	Neg	NA	NA
Spray tower	60.0	30.0	Neg	Neg	NA	NA
Floating-bed scrubber	56.0	28.0	Neg	Neg	NA	NA
Quench tower and spray screen	34.0	17.0	Neg	Neg	NA	NA
Electrostatic precipitator	4.0	2.0	Neg	Neg	NA	NA
Anode baking furnace[f]						
Uncontrolled	3.0 (1.0 to 5.0)[g]	1.5 (0.5 to 2.5)	0.93	0.47	Neg	Neg
Spray tower	NA	NA	0.0372	0.0186	Neg	Neg
Dry electrostatic precipitator	1.13	0.57	0.93	0.47	Neg	Neg
Self-induced spray	0.06	0.03	0.0372	0.0186	Neg	Neg
Prebaked reduction cell[h]						
Uncontrolled	81.3 (11.9 to 177.0)	40.65 (5.95 to 88.5)	24.7 (13.8 to 34.8)	12.35 (6.9 to 17.4)	20.4 (9.8 to 35.5)	10.2 (4.9 to 17.8)
Multiple cyclone	17.9	8.95	24.7	12.35	4.49	2.25
Fluid-bed dry scrubber system	2.02	1.01	0.247	0.124	0.507	0.253

Table 7.1-3 (continued). EMISSION FACTORS FOR PRIMARY ALUMINUN PRODUCTION PROCESSES[a]
EMISSION FACTOR RATING: A

Type of operation	Total particulates[b]		Gaseous fluorides (HF)		Particulate fluorides (F)	
	lb/ton	kg/MT	lb/ton	kg/MT	lb/ton	kg/MT
scrubber system						
Coated filter dry scrubber	1.62	0.81	1.98 to 5.93	0.99 to 2.97	0.408	0.204
Dry electrostatic precipitator	1.62 to 8.94	0.81 to 4.47	24.7	12.35	0.408 to 2.24	0.204 to 1.12
Spray tower	16.2	8.1	0.494 to 2.72	0.247 to 1.36	4.08	2.04
Floating-bed scrubber	16.2	8.1	0.494	0.247	4.08	2.04
Chamber scrubber	12.2	6.1	2.96	1.48	3.06	1.53
Vertical flow packed bed	12.2	6.1	8.4	4.2	3.06	1.53
Dry alumina adsorption	1.62	0.81	0.494	0.247	0.408	0.204
Horizontal-stud Soderberg cell[i]						
Uncontrolled	98.4 (93.6 to 104.0)	49.2 (46.8 to 52.0)	26.6 (25.2 to 28.8)	13.3 (12.6 to 14.4)	15.6 (14.4 to 16.2)	7.8 (7.2 to 8.1)
Spray tower	19.6 to 36.4	9.8 to 18.2	1.86 to 2.39	0.93 to 1.195	3.12 to 5.77	1.56 to 2.885
Floating-bed scrubber	21.6	10.8	0.532	0.266	0.343	0.1715
Wet electrostatic precipitator	7.10	3.55	26.6	13.3	1.13	0.563
Vertical-stud Soderberg cell[j]						
Uncontrolled	78.4	39.2	30.4 (20.0 to 35.0)	15.2 (10.0 to 17.5)	10.6 (5.6 to 55.3)	5.3 (2.8 to 27.7)
Spray tower	19.6	9.8	0.304	0.152	2.65	1.325
Self-induced spray	NA	NA	0.304	0.152	NA	NA
Venturi scrubber	3.14	1.57	0.304	0.152	0.424	0.212
Wet electrostatic precipitator	0.784 to 7.84	0.392 to 3.92	30.4	15.2	0.106 to 1.06	0.053 to 0.53
Multiple cyclones	3.92 to 4.7	1.96 to 2.35	30.4	15.2	5.30 to 6.36	2.65 to 3.18
Dry alumina adsorption	1.57	0.784	0.608	0.304	0.212	0.106
Materials handling[c]						
Uncontrolled	10.0	5.0	Neg	Neg	NA	NA
Spray tower	3.0	1.5	Neg	Neg	NA	NA

Table 7.1-3 (continued). EMISSION FACTORS FOR PRIMARY ALUMINUM PRODUCTION PROCESSES[a]
EMISSION FACTOR RATING: A

Type of operation	Total particulates[b]		Gaseous fluorides (HF)		Particulate fluorides (F)	
	lb/ton	kg/MT	lb/ton	kg/MT	lb/ton	kg/MT
Floating-bed scrubber	2.8	1.4	Neg	Neg	NA	NA
Quench tower and spray screen	1.7	0.85	Neg	Neg	NA	NA
Electrostatic precipitator	0.20	0.10	Neg	Neg	NA	NA

[a]Emission factors for bauxite grinding expressed as pounds per ton (kg/MT) of bauxite processed. Factors for calcining of aluminum hydroxide expressed as pounds per ton (kg/MT) of alumina produced. All other factors in terms of tons (MT) of molten aluminum produced.
[b]Includes particulate fluorides.
[c]References 1 and 3.
[d]No information available.
[e]Controlled emission factors are based on average uncontrolled factors and on average observed collection efficiencies.
[f]References 1,2, and 4 through 6.
[g]Numbers in parentheses are ranges of uncontrolled values observed.
[h]References 2 and 4 through 6.
[i]Reference 1.
[j]References 2 and 6.

References for Section 7.1

1. Engineering and Cost Effectiveness Study of Fluoride Emissions Control, Vol. I. TRW Systems and Resources Research Corp., Reston, Va. Prepared for Environmental Protection Agency, Office of Air Programs, Research Triangle Park, N.C., under Contract Number EHSD-71-14, January 1972.

2. Air Pollution Control in the Primary Aluminum Industry, Vol. I. Singmaster and Breyer, New York, N.Y. Prepared for Environmental Protection Agency, Office of Air Programs, Research Triangle Park, N.C., under Contract Number CPA-70-21. March 1972.

3. Particulate Pollutant System Study, Vol. I. Midwest Research Institute, Kansas City, Mo. Prepared for Environmental Protection Agency, Office of Air Programs, Research Triangle Park, N.C. May 1971.

4. Source Testing Report: Emissions from Wet Scrubbing System. York Research Corp., Stamford, Conn. Prepared for Environmental Protection Agency, Office of Air Programs, Research Triangle Park, N.C. Report Number Y-7730-E.

5. Source Testing Report: Emissions from Primary Aluminum Smelting Plant. York Research Corp., Stamford, Conn. Prepared for Environmental Protection Agency, Office of Air Programs, Research Triangle Park, N.C. Report Number Y-7730-B. June 1972.

6. Source Testing Report: Emissions from the Wet Scrubber System. York Research Corp., Stamford, Conn. Prepared for Environmental Protection Agency, Office of Air Programs, Research Triangle Park, N.C. Report Number Y-7730-F. June 1972.

7.2 METALLURGICAL COKE MANUFACTURING

7.2.1 Process Description[1]

Coking is the process of heating coal in an atmosphere of low oxygen content, i.e., destructive distillation. During this process, organic compounds in the coal break down to yield gases and a residue of relatively nonvolatile nature. Two processes are used for the manufacture of metallurgical coke, the beehive process and the by-product process; the by-product process accounts for more than 98 percent of the coke produced.

Beehive oven:[1] The beehive is a refractory-lined enclosure with a dome-shaped roof. The coal charge is deposited onto the floor of the beehive and leveled to give a uniform depth of material. Openings to the beehive oven are then restricted to control the amount of air reaching the coal. The carbonization process begins in the coal at the top of the pile and works down through it. The volatile matter being distilled escapes to the atmosphere through a hole in the roof. At the completion of the coking time, the coke is "watered out" or quenched.

By-product process:[1] The by-product process is oriented toward the recovery of the gases produced during the coking cycle. The rectangular coking ovens are grouped together in a series, alternately interspersed with heating flues, called a coke battery. Coal is charged to the ovens through ports in the top, which are then sealed. Heat is supplied to the ovens by burning some of the coke gas produced. Coking is largely accomplished at temperatures of 2000° to 2100° F (1100° to 1150° C) for a period of about 16 to 20 hours. At the end of the coking period, the coke is pushed from the oven by a ram and quenched with water.

7.2.2 Emissions[1]

Visible smoke, hydrocarbons, carbon monoxide, and other emissions originate from the following by-product coking operations: (1) charging of the coal into the incandescent ovens, (2) oven leakage during the coking period, (3) pushing the coke out of the ovens, and (4) quenching the hot coke. Virtually no attempts have been made to prevent gaseous emissions from beehive ovens. Gaseous emissions from the by-product ovens are drawn off to a collecting main and are subjected to various operations for separating ammonia, coke-oven gas, tar, phenol, light oil (benzene, toluene, xylene), and pyridine. These unit operations are potential sources of hydrocarbon emissions.

Oven-charging operations and leakage around poorly sealed coke-oven doors and lids are major sources of gaseous emissions from by-product ovens. Sulfur is present in the coke-oven gas in the form of hydrogen sulfide and carbon disulfide. If the gas is not desulfurized, the combustion process will emit sulfur dioxide.

Associated with both coking processes are the material-handling operations of unloading coal, storing coal, grinding and sizing of coal, screening and crushing coke, and storing and loading coke. All of these operations are potential particulate emission sources. In addition, the operations of oven charging, coke pushing and quenching produce particulate emissions. The emission factors for coking operations are summarized in Table 7.2-1.

Table 7.2-1. EMISSION FACTORS FOR METALLURGICAL COKE MANUFACTURE WITHOUT CONTROLS[a]
EMISSION FACTOR RATING: C

Type of operation	Particulates		Sulfur dioxide		Carbon monoxide		Hydrocarbons[b]		Nitrogen oxides (NO_2)		Ammonia	
	lb/ton	kg/MT	lb/ton	kg/MT	lb/ton	kg/MT	lb/ton	kg/MT	lb/ton	kg/MT	lb/ton	kg/MT
By-product coking[c]												
Unloading	0.4	0.2	–	–	–	–	–	–	–	–	–	–
Charging	1.5	0.75	0.02	0.01	0.6	0.3	2.5	1.25	0.03	0.015	0.02	0.01
Coking cycle	0.1	0.05	–	–	0.6	0.3	1.5	0.75	0.01	0.005	0.06	0.03
Discharging	0.6	0.3	–	–	0.07	0.035	0.2	0.1	–	–	0.1	0.05
Quenching	0.9	0.45	–	–	–	–	–	–	–	–	–	–
Underfiring[d]	–	–	4	2	–	–	–	–	–	–	–	–
Beehive ovens[e]	200	100	–	–	1	0.5	8	4	–	–	2	1

[a]Emission factors expressed as units per unit weight of coal charged.
[b]Expressed as methane.
[c]References 2 and 3.
[d]Reference 5. The sulfur dioxide factor is based on the following representative conditions: (1) sulfur content of coal charged to oven is 0.8 percent by weight; (2) about 33 percent by weight of total sulfur in the coal charged to oven is transferred to the coke-oven gas; (3) about 40 percent of coke-oven gas is burned during the underfiring operation and the remainder is used in other parts of the steel operation where the rest of the sulfur dioxide is discharged—about 6 lb/ton (3 kg/MT) of coal charged; and (4) gas used in underfiring has not been desulfurized.
[e]References 1 and 4.

References for Section 7.2

1. Air Pollutant Emission Factors, Final Report. Resources Research, Incorporated. Reston, Virginia. Prepared for National Pollution Control Administration, Durham, N.C., under Contract Number CPA-22-69-119. April 1970.

2. Air Pollution by Coking Plants. United Nations Report: Economic Commission for Europe, ST/ECE/Coal/26. 1968. p. 3-27.

3. Fullerton, R.W. Impingement Baffles to Reduce Emissions from Coke Quenching. J. Air Pol. Control Assoc. *17*:807-809. December 1967.

4. Sallee, G. Private Communication on Particulate Pollutant Study. Midwest Research Institute, Kansas City, Mo. Prepared for National Air Pollution Control Administration, Durham, N.C., under Contract Number 22-69-104. June 1970.

5. Varga, J. and H.W. Lownie, Jr. Final Technological Report on: A Systems Analysis Study of the Integrated Iron and Steel Industry. Battelle Memorial Institute, Columbus, Ohio. Prepared for U.S. DHEW, National Air Pollution Control Administration, Durham, N.C., under Contract Number PH 22-68-65. May 1969.

7.3 COPPER SMELTERS

7.3.1 Process Description[1,2]

Copper is produced primarily from low-grade sulfide ores, which are concentrated by gravity and flotation methods. Copper is recovered from the concentrate by four steps: roasting, smelting, converting, and refining. Copper sulfide concentrates are normally roasted in either multiple-hearth or fluidized-bed roasters to remove the sulfur and then calcined in preparation for smelting in a reverberatory furnace. For about half the smelters the roasting step is eliminated. Smelting removes other impurities as a slag with the aid of fluxes. The matter that results from smelting is blown with air to remove the sulfur as sulfur dioxide, and the end product is a crude metallic copper. A refining process further purifies the metal by insertion of green logs or natural gas. This is often followed by electrolytic refining.

7.3.2 Emissions and Controls[2]

The high temperatures attained in roasting, smelting, and converting cause volatilization of a number of the trace elements present in copper ores and concentrates. The raw waste gases from these processes contain not only these fumes but also dust and sulfur oxide. Carbon monoxide and nitrogen oxides may also be emitted, but no quantitative data have been reported in the literature.

The value of the volatilized elements dictates efficient collection of fumes and dusts. A combination of cyclones and electrostatic precipitators seems to be most often used. Table 7.3-1 summarizes the uncontrolled emissions of particulates and sulfur oxides from copper smelters.

Table 7.3-1. EMISSION FACTORS FOR PRIMARY COPPER SMELTERS WITHOUT CONTROLS[a]
EMISSION FACTOR RATING: C

Type of operation	Particulates[b,c]		Sulfur oxides[d]	
	lb/ton	kg/MT	lb/ton	kg/MT
Roasting	45	22.5	60	30
Smelting (reverberatory furnace)	20	10	320	160
Converting	60	30	870	435
Refining	10	5	–	–
Total uncontrolled	135	67.5	1250	625

[a]Approximately 4 unit weights of concentrate are required to produce 1 unit weight of copper metal. Emission factors expressed as units per unit weight of concentrated ore produced.
[b]References 2 through 4.
[c]Electrostatic precipitators have been reported to reduce emissions by 99.7 percent.
[d]Sulfur oxides can be reduced by about 90 percent by using a combination of sulfuric acid plants and lime slurry scrubbing.

References for Section 7.3

1. Duprey, R.L. Compilation of Air Pollutant Emission Factors. U. S. DHEW PHS, National Center for Air Pollution Control. Durham, N. C. PHS Publication No. 999-AP-42. 1968. p. 24.

2. Stern, A. (ed.). Sources of Air Pollution and Their Control. In: Air Pollution, Vol. III, 2nd Ed. New York, Academic Press. 1968. p. 173-179.

3. Sallee, G. Private communication on Particulate Pollutant Study, Midwest Research Institute, Kansas City, Mo. Prepared for National Air Pollution Control Administration under Contract Number 22-69-104. June 1970.

4. Systems Study for Control of Emissions in the Primary Nonferrous Smelting Industry. 3 Volumes. San Francisco, California, Arthur G. McKee and Company. June 1969.

7.4 FERROALLOY PRODUCTION

7.4.1 Process Description[1,2]

Ferroalloy is the generic term for alloys consisting of iron and one or more other metals. Ferroalloys are used in steel production as alloying elements and deoxidants. There are three basic types of ferroalloys: (1) silicon-based alloys, including ferrosilicon and calciumsilicon; (2) manganese-based alloys, including ferromanganese and silicomanganese; and (3) chromium-based alloys, including ferrochromium and ferrosilicochrome.

The four major procedures used to produce ferroalloy and high-purity metallic additives for steelmaking are: (1) blast furnace, (2) electrolytic deposition, (3) alumina silico-thermic process, and (4) electric smelting furnace. Because over 75 percent of the ferroalloys are produced in electric smelting furnaces, this section deals only with that type of furnace.

The oldest, simplest, and most widely used electric furnaces are the submerged-arc open type, although semi-covered furnaces are also used. The alloys are made in the electric furnaces by reduction of suitable oxides. For example, in making ferrochromium the charge may consist of chrome ore, limestone, quartz (silica), coal and wood chips, along with scrap iron.

7.4.2 Emissions[3]

The production of ferroalloys has many dust- or fume-producing steps. The dust resulting from raw material handling, mix delivery, and crushing and sizing of the solidified product can be handled by conventional techniques and is ordinarily not a pollution problem. By far the major pollution problem arises from the ferroalloy furnaces themselves. The conventional submerged-arc furnace utilizes carbon reduction of metallic oxides and continuously produces large quantities of carbon monoxide. This escaping gas carries large quantities of particulates of submicron size, making control difficult.

In an open furnace, essentially all of the carbon monoxide burns with induced air at the top of the charge, and CO emissions are small. Particulate emissions from the open furnace, however, can be quite large. In the semi-closed furnace, most or all of the CO is withdrawn from the furnace and burns with dilution air introduced into the system. The unburned CO goes through particulate control devices and can be used as boiler fuel or can be flared directly. Particulate emission factors for electric smelting furnaces are presented in Table 7.4-1. No carbon monoxide emission data have been reported in the literature.

Table 7.4-1. EMISSION FACTORS FOR FERROALLOY PRODUCTION IN ELECTRIC SMELTING FURNACES[a] EMISSION FACTOR RATING: C

Type of furance and product	Particulates	
	lb/ton	kg/MT
Open furnace		
50% FeSi[b]	200	100
75% FeSi[c]	315	157.5
90% FeSi[b]	565	282.5
Silicon metal[d]	625	312.5
Silicomanganese[e]	195	97.5
Semi-covered furnace		
Ferromanganese[e]	45	22.5

[a]Emission factors expressed as units per unit weight of specified product produced.
[b]Reference 4.
[c]References 5 and 6.
[d]References 4 and 7.
[e]Reference 6.

References for Section 7.4

1. Air Pollutant Emission Factors. Final Report. Resources Research, Inc., Reston, Va. Prepared for National Air Pollution Control Administration, Durham, N.C., under Contract Number CPA-22-69-119. April 1970.

2. Ferroalloys: Steel's All-purpose Additives. The Magazine of Metals Producing. February 1967.

3. Person, R. A. Control of Emissions from Ferroalloy Furnace Processing. Niagara Falls, New York. 1969.

4. Unpublished stack test results. Resources Research, Incorporated. Reston, Virginia.

5. Ferrari, R. Experiences in Developing an Effective Pollution Control System for a Submerged-Arc Ferroalloy Furnace Operation. J. Metals. p. 95-104, April 1968.

6. Fredriksen and Nestaas. Pollution Problems by Electric Furnace Ferroalloy Production. United Nations Economic Commission for Europe. September 1968.

7. Gerstle, R. W. and J. L. McGinnity. Plant Visit Memorandum. U. S. DHEW, PHS, National Center for Air Pollution Control, Cincinnati, Ohio. June 1967.

7.5 IRON AND STEEL MILLS

Revised by William M. Vatavuk and L.K. Felleisen

7.5.1 General[1]

Iron and steel manufacturing processes may be grouped into five distinct sequential operations: (1) coke production; (2) pig iron manufacture in blast furnaces; (3) steel-making processes using basic oxygen, electric arc, and open hearth furnaces; (4) rolling mill operations; and (5) finishing operations (see Figure 7.5-1). The first three of these operations encompass nearly all of the air pollution sources. Coke production is discussed in detail elsewhere in this publication.

7.5.1.1 Pig Iron Manufacture[2,3]—Pig iron is produced in blast furnaces, which are large refractory-lined chambers into which iron ore, coke, and limestone are charged and allowed to react with large amounts of hot air to produce molten iron. Slag and blast furnace gases are by-products of this operation. The production of 1 unit weight of pig iron requires an average charge of 1.55 unit weights of iron-bearing charge, 0.55 unit weight of coke, 0.20 unit weight of limestone, and 2.3 unit weight of air. Blast furnace by-products consist of 0.2 unit weight of slag, 0.02 unit weight of flue dust, and 2.5 unit weights of gas per unit of pig iron produced. Most of the coke used in the process is produced in by-product coke ovens. The flue dust and other iron ore fines from the process are converted into useful blast furnace charge via sintering operations.

Blast furnace combustion gas and the gases that escape from bleeder openings constitute the major sources of particulate emissions. The dust in the gas consists of 35 to 50 percent iron, 4 to 14 percent carbon, 8 to 13 percent silicon dioxide, and small amounts of aluminum oxide, manganese oxide, calcium oxide, and other materials. Because of its high carbon monoxide content, this gas has a low heating value (about 100 Btu/ft) and is utilized as a fuel within the steel plant. Before it can be efficiently oxidized, however, the gas must be cleaned of particulates. Initially, the gases pass through a settling chamber or dry cyclone, where about 60 percent of the dust is removed. Next, the gases undergo a one- or two-stage cleaning operation. The primary cleaner is normally a wet scrubber, which removes about 90 percent of the remaining particulates. The secondary cleaner is a high-energy wet scrubber (usually a venturi) or an electrostatic precipitator, either of which can remove up to 90 percent of the particulates that have passed through the primary cleaner. Taken together, these control devices provide an overall dust removal efficiency of approximately 96 percent.

All of the carbon monoxide generated in the gas is normally used for fuel. Conditions such as "slips," however, can cause instantaneous emissions of carbon monoxide. Improvements in techniques for handling blast furnace burden have greatly reduced the occurrence of slips. In Table 7.5-1 particulate and carbon monoxide emission factors are presented for blast furnaces.

7.5.1.2 Steel-Making Processes -

7.5.1.2.1 Open Hearth Furnaces[2,3]—In the open hearth process, a mixture of scrap iron, steel, and pig iron is melted in a shallow rectangular basin, or "hearth," for which various liquid gaseous fuels provide the heat. Impurities are removed in a slag.

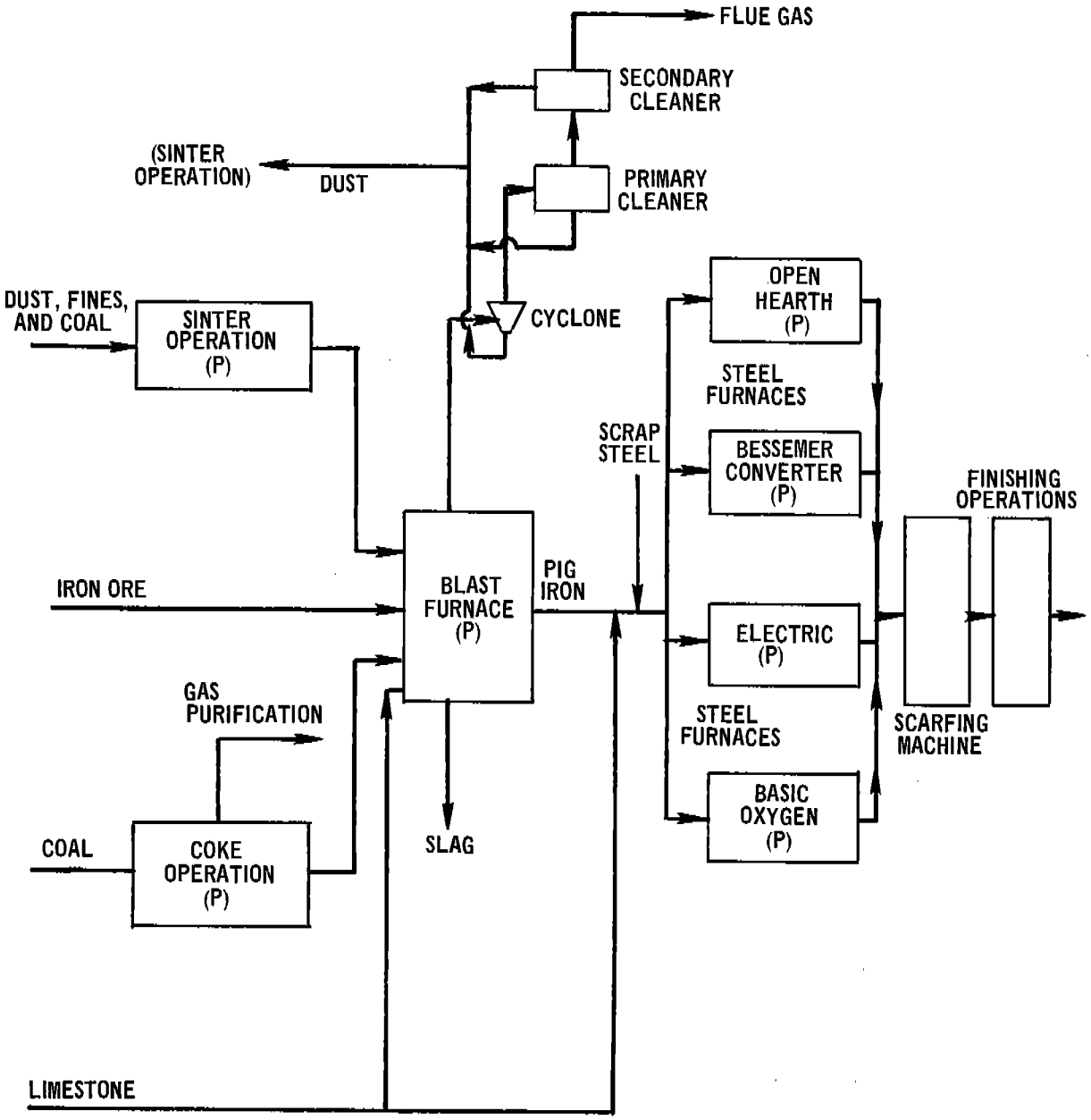

Figure 7.5-1. Basic flow diagram of iron and steel processes. "P" denotes a major source of particulate emissions.

Emissions from open hearths consist of particulates and small amounts of fluorides when fluoride-bearing ore, fluorspar, is used in the charge. The particulates are composed primarily of iron oxides, with a large portion (45 to 50 percent) in the 0 to 5 micrometer size range. The quantity of dust in the off-gas increases considerably when oxygen lancing is used (see Table 7.5-1).

The devices most commonly used to control the iron oxide and fluoride particulates are electrostatic precipitators and high-energy venturi scrubbers, both of which effectively remove about 98 percent of the particulates. The scrubbers also remove nearly 99 percent of the gaseous fluorides and 95 percent of the particulate fluorides.

7.5.1.2.2 Basic Oxygen Furnaces[2,3]—The basic oxygen process, also called the Linz-Donawitz (LD) process, is employed to produce steel from a furnace charge composed of approximately 70 percent molten blast-furnace metal and 30 percent scrap metal by use of a stream of commercially pure oxygen to oxidize the impurities, principally carbon and silicon.

The reaction that converts the molten iron into steel generates a considerable amount of particulate matter, largely in the form of iron oxide, although small amounts of fluorides may be present. Probably as the result of the tremendous agitation of the molten bath by the oxygen lancing, the dust loadings vary from 5 to 8 grains per standard cubic foot (11 to 18 grams/standard cubic meter) and high percentages of the particles are in the 0 to 5 micrometer size range.

In addition, tremendous amounts of carbon monoxide (140 lb/ton of steel and more) are generated by the reaction. Combustion in the hood, direct flaring, or some other means of ignition is used in the stack to reduce the actual carbon monoxide emissions to less than 3 lb/ton (1.5 kg/MT).

The particulate control devices used are venturi scrubbers and electrostatic precipitators, both of which have overall efficiencies of 99 percent. Furthermore, the scrubbers are 99 percent efficient in removing gaseous fluorides (see Table 7.5-1).

7.5.1.2.3 Electric Arc Furnaces[2,3]—Electric furnaces are used primarily to produce special alloy steels or to melt large amounts of scrap for reuse. Heat is furnished by direct-arc electrodes extending through the roof of the furnace. In recent years, oxygen has been used to increase the rate of uniformity of scrap-melt-down and to decrease power consumption.

The particulates, primarily oxides of iron, manganese, aluminum, and silicon, that evolve when steel is being processed in an electric furnace result from the exposure of molten steel to extremely high temperatures. The quantity of these emissions is a function of the cleanliness and composition of the scrap metal charge, the refining procedure used (with or without oxygen lancing), and the refining time. As with open hearths, many of the particulates (40 to 75 percent) are in the 0 to 5 micrometer range. Additionally, moderate amounts of carbon monoxide (15 to 20 lb/ton) are emitted.

Particulate control devices most widely used with electric furnaces are venturi scrubbers, which have a collection efficiency of approximately 98 percent, and bag filters, which have collection efficiencies of 99 percent or higher.

7.5.1.3 Scarfing[3]—Scarfing is a method of surface preparation of semi-finished steel. A scarfing machine removes surface defects from the steel billets and slabs, before they are shaped or rolled, by applying jets of oxygen to the surface of the steel, which is at orange heat, thus removing a thin upper layer of the metal by rapid oxidation.

Emissions from scarfing operations consist of iron oxide fumes. The rate at which particulates are emitted is dependent on the condition of the billets or slabs and the amount of metal removal required (Table 7.5-1). Emission control techniques for the removal of fine particles vary among steel producers, but one of the most commonly used devices is the electrostatic precipitator, which is approximately 94 percent efficient.

Table 7.5-1. EMISSION FACTORS FOR IRON AND STEEL MILLS[a,b]
EMISSION FACTOR RATINGS: A (PARTICULATES AND CARBON MONOXIDE)
C (FLUORIDES)

Type of operation	Total particulates		Carbon monoxide		Fluorides[c,d]			
					Gaseous (HF)		Particulates (CaF_2)	
	lb/ton	kg/MT	lb/ton	kg/MT	lb/ton	kg/MT	lb/ton	kg/MT
Pig iron production								
Blast furnaces[e]								
Ore charge, uncontrolled	110	55	1750 (1400 to 2100)	875 (700 to 1050)	–	–	–	–
Agglomerates charge, uncontrolled	40	20	–	–	–	–	–	–
Total, uncontrolled	150 (130 to 200)	75 (65 to 100)	1750 (1400 to 2100)	875 (700 to 1050)	–	–	–	–
Settling chamber or dry cyclone	60	30	–	–	–	–	–	–
Plus wet scrubber	15	7.5	–	–	–	–	–	–
Plus venturi or electrostatic precipitator	1.5	0.75	–	–	–	–	–	–
Sintering[f]								
Windbox, uncontrolled[g]	20	10	–	–	–	–	–	–
Dry cyclone	2.0	1.0	–	–	–	–	–	–
Dry cyclone plus electrostatic precipitator	1.0	0.5	–	–	–	–	–	–
Dry cyclone plus wet scrubber	0.04	0.02	–	–	–	–	–	–
Discharge, uncontrolled	22	11	44	22	–	–	–	–
Dry cyclone	2.2	1.1	44	22	–	–	–	–
Dry cyclone plus electrostatic precipitator	0.11	0.055	44	22	–	–	–	–
Steel production								
Open hearth[h]								
No oxygen lance, uncontrolled	8.3 (5.8 to 12.0)	4.15 (2.9 to 6.0)	–	–	0.100	0.05	0.030	0.015
Venturi scrubber	0.17	0.085	–	–	0.011	0.0055	0.0015	0.0008
Electrostatic precipitator	0.17	0.085	–	–	0.100	0.050	0.0006	0.0003
Oxygen lance, uncontrolled	17.4 (9.3 to 22.0)	8.7 (4.65 to 11.0)	–	–	0.100	0.050	0.030	0.015

Table 7.5-1 (continued). EMISSION FACTORS FOR IRON AND STEEL MILLS[a,b]
EMISSION FACTOR RATINGS: A (PARTICULATES AND CARBON MONOXIDE)
C (FLUORIDES)

Type of operation	Total particulates		Carbon monoxide		Fluorides[c,d] Gaseous (HF)		Fluorides[c,d] Particulates (CaF_2)	
	lb/ton	kg/MT	lb/ton	kg/MT	lb/ton	kg/MT	lb/ton	kg/MT
Venturi scrubber	0.17	0.085	–	–	0.011	0.0055	0.0015	0.0008
Electrostatic precipitator	0.35	0.175	–	–	0.100	0.050	0.0006	0.0003
Basic oxygen, uncontrolled	51 (32 to 86)	25.5 (16 to 43)	139 (104 to 237)	69.5 (52.0 to 118.5)	Neg	Neg	0.200	0.100
Venturi scrubber	0.51	0.255	–	–	–	–	0.002	0.001
Electrostatic precipitator	0.51	0.255	–	–	–	–	0.002	0.001
Spray chamber	15.3	7.65	–	–	–	–	0.060	0.030
Electric arc[j]								
No oxygen lance[k], uncontrolled	9.2 (7.0 to 10.6)	4.6 (3.5 to 5.3)	18	9	0.012	0.006	0.238	0.119
Venturi scrubber	0.18 (0.28 to 0.74)	0.09 (0.14 to 0.37)	18	9	0.0018	0.0009	0.011	0.0055
Electrostatic precipitator			18	9	0.0018	0.0009	0.011	0.0055
Baghouse	0.09	0.045	18	9	0.012	0.006	0.011	0.0055
Oxygen lance[l], uncontrolled	11	5.5	18	9	0.012	0.006	0.0024	0.0012
Venturi scrubber	0.22 (0.33 to 0.88)	0.11 (0.165 to 0.44)	18	9	0.012	0.006	0.238	0.119
Electrostatic precipitator			18	9	0.0018	0.0009	0.011	0.0055
Baghouse	0.11	0.055	18	9	0.012	0.006	0.011	0.0055
Scarfing[m], uncontrolled	≤ 1	≤ 0.5	–	–	–	–	0.0024	0.0012
Electrostatic precipitator	≤ 0.06	≤ 0.03	–	–	–	–	–	–
Venturi scrubber	≤ 0.02	≤ 0.01	–	–	–	–	–	–

[a]Emission factors expressed as units per unit weight of metal produced.
[b]Numbers in parentheses after uncontrolled values are ranges. Controlled factors are calculated using average uncontrolled factors and observed equipment efficiencies.
[c]Reference 4.
[d]Value included in "Total Particulates" figure.
[e]References 2, 3, and 5.
[f]References 3.
[g]Approximately 3 pounds of sulfur dioxide per ton (1.5 kg/MT) of sinter is produced at windbox.
[h]References, 2, 3, 5, and 6.
[i]References 2 through 10.
[j]Values are for carbon type electric are furnaces. For alloy type furnaces, multiply given values by 2.80.
[k]References 2 through 5.
[l]References 3 and 4.
[m]Factors are based on operating experience and engineering judgment.

References for Section 7.5

1. Bramer, Henry C. Pollution Control in the Steel Industry. Environmental Science and Technology. p. 1004-1008, October 1971.

2. Celenza. C.J. Air Pollution Problems Faced by the Iron and Steel Industry. Plant Engineering. p. 60-63, April 30, 1970.

3. Compilation of Air Pollutant Emission Factors (Revised). Environmental Protection Agency, Office of Air Programs. Research Triangle Park, N.C. Publication Number AP-42. 1972.

4. Personal communication between Ernest Kirkendall, American Iron and Steel Institute, and John McGinnity, Environmental Protection Agency, Durham, N.C. September 1970.

5. Particulate Pollutant Systems Study, Vol. I. Midwest Research Institute, Kansas City, Mo. Prepared for Environmental Protection Agency, Office of Air Programs, Research Triangle Park, N.C., under Contract Number CPA 22-69-104. May 1971.

6. Walker, A.B. and R.F. Brown. Statistics on Utilization, Performance, and Economics of Electrostatic Precipitation for Control of Particulate Air Pollution. (Presented at 2nd International Clean Air Congress, International Union of Air Pollution Prevention Association, Washington, D.C. December 1970.)

7. Source Testing Report - EPA Task 2. Midwest Research Institute, Kansas City. Prepared for Environmental Protection Agency, Office of Air Program, Research Triangle Park, N.C., under Contract Number 68-02-0228. February 1972.

8. Source Testing Report - EPA Test 71-MM-24. Engineering Science, Inc., Washington, D.C. Prepared for Environmental Protection Agency, Office of Air Programs, Research Triangle Park, N.C., under Contract Number 68-02-0225. March 1972.

9. Source Testing Report - EPA Task 2. Rust Engineering Co., Birmingham, Ala. Prepared for Environmental Protection Agency, Office of Air Program, Research Triangle Park, N.C., under Contract Number CPA 70-132. April 1972.

10. Source Testing Report - EPA Task 4. Roy F. Weston, Inc., West Chester, Pa. Prepared for Environmental Protection Agency, Office of Air Programs, Research Triangle Park, N.C., under Contract Number 68-02-0231.

7.6 LEAD SMELTING

7.6.1 Process Description[1,2]

The ore from which primary lead is produced contains both lead and zinc. Thus, both lead and zinc concentrates are made by concentration and flotation from the ore. The lead concentrate is usually roasted in traveling-grate sintering machines, thereby removing sulfur and forming lead oxide. The lead oxide, sinter, coke, and flux (usually limestone) are fed to the blast furnace, in which oxide is reduced to metallic lead. The lead may be further refined by a variety of other processes, usually including a brass reverberatory furnace.

7.6.2 Emissions and Controls

Effluent gases from the roasting, sintering, and smelting operations contain considerable particulate matter and sulfur dioxide. Dust and fumes are recovered from the gas stream by settling in large flues and by precipitation in Cottrell treaters or filtration in large baghouses. The emission factors for lead smelting are summarized in Table 7.6-1. The effect of controls is shown in the footnotes of this table.

Table 7.6-1. EMISSION FACTORS FOR PRIMARY LEAD SMELTERS[a]
EMISSION FACTOR RATING: B

Type of operation	Particulates[b]		Sulfur oxides	
	lb/ton	kg/MT	lb/ton	kg/MT
Sintering and sinter crushing[c]	50[d]	25[d]	660	330
Blast furnace[e]	75	37.5	f	f
Reverberatory furnace[e]	12	6	f	f

[a]Approximately 2 unit weights of concentrated ore are required to produce 1 unit weight of lead metal. Emission factors expressed as units per unit weight of concentrated ore produced.
[b]Electrostatic precipitator collection efficiency = 96 percent. Baghouse collection efficiency = 99.5 percent.
[c]References 2 and 3.
[d]Pounds per ton (kg/MT) of sinter.
[e]Reference 4.
[f]Overall plant emissions are about 660 pounds of sulfur oxide per ton (330 kg/MT) of concentrated ore.

References for Section 7.6

1. Duprey, R. L. Compilation of Air Pollutant Emission Factors. U. S. DHEW, PHS, National Center for Air Pollution Control. Durham, N. C. PHS Publication Number 999-AP-42. 1968. p. 26.

2. Stern, A. (ed.). Sources of Air Pollution and Their Control. In: Air Pollution, Vol. III, 2nd Ed. New York, Academic Press, 1968. p. 179-182.

3. Systems Study for Control of Emissions in the Primary Nonferrous Smelting Industry, Volumes I, II, and III. San Francisco, Arthur G. McKee and Company. June 1969.

4. Sallee, G. Private communications on Particulate Pollutant Study, Midwest Research Institute. Prepared for National Air Pollution Control Administration, Durham, N.C., under Contract Number 22-69-104. June 1970.

7.7 ZINC SMELTING

7.7.1 Process Description[1,2]

As stated previously, most domestic zinc comes from zinc and lead ores. Another important source of raw material for zinc metal has been zinc oxide from fuming furnaces. For efficient recovery of zinc, sulfur must be removed from concentrates to a level of less than 2 percent. This is done by fluidized beds or multiple-hearth roasting occasionally followed by sintering. Metallic zinc can be produced from the roasted ore by the horizontal or vertical retort process or by the electrolytic process if a high-purity zinc is needed.

7.7.2 Emissions and Controls[1,2]

Dust, fumes, and sulfur dioxide are emitted from zinc concentrate roasting or sintering operations. Particulates may be removed by electrostatic precipitators or baghouses. Sulfur dioxide may be converted directly into sulfuric acid or vented. Emission factors for zinc smelting are presented in Table 7.7-1.

Table 7.7-1. EMISSION FACTORS FOR PRIMARY ZINC SMELTING WITHOUT CONTROLS[a]
EMISSION FACTOR RATING: B

Type of operation	Particulates		Sulfur oxides	
	lb/ton	kg/MT	lb/ton	kg/MT
Roasting (multiple-hearth)[b]	120	60	1100	550
Sintering[c]	90	45	d	d
Horizontal retorts[e]	8	4	–	–
Vertical retorts[e]	100	50	–	–
Electrolytic process	3	1.5	–	–

[a]Approximately 2 unit weights of concentrated ore are required to produce 1 unit weight of zinc metal. Emission factors expressed as units per unit weight of concentrated ore produced.
[b]References 3 and 4.
[c]References 2 and 3.
[d]Included in SO_2 losses from roasting.
[e]Reference 3.

References for Section 7.7

1. Duprey, R. L. Compilation of Air Pollutant Emission Factors. U.S. DHEW, PHS, National Center for Air Pollution Control. Durham, N.C. PHS Publication Number 999-AP-42. 1968. p. 26-28.

2. Stern, A. (ed.). Sources of Air Pollution and Their Control. In: Air Pollution, Vol. III, 2nd Ed. New York, Academic Press. 1968. p. 182-186.

3. Sallee, G. Private communication on Particulate Pollutant Study. Midwest Research Institute. Kansas City, Mo. Prepared for National Air Pollution Control Administration, Durham, N.C., under Contract Number 22-69-104. June 1970.

4. Systems Study for Control of Emissions in the Primary Nonferrous Smelting Industry. 3 Volumes, San Francisco, Arthur G. McKee and Company, June 1969.

7.8 SECONDARY ALUMINUM OPERATIONS

7.8.1 Process Description[1,2]

Secondary aluminum operations involve making lightweight metal alloys for industrial castings and ingots. Copper, magnesium, and silicon are the most common alloying constituents. Aluminum alloys for castings are melted in small crucible furnaces charged by hand with pigs and foundry returns. Larger melting operations use open-hearth reverberatory furnaces charged with the same type of materials but by mechanical means. Small operations sometimes use sweating furnaces to treat dirty scrap in preparation for smelting.

To produce a high-quality aluminum product, fluxing is practiced to some extent in all secondary aluminum melting. Aluminum fluxes are expected to remove dissolved gases and oxide particles from the molten bath. Sodium and various mixtures of potassium or sodium chloride with cryolite and chlorides of aluminum zinc are used as fluxes. Chlorine gas is usually lanced into the molten bath to reduce the magnesium content by reacting to form magnesium and aluminum chlorides.[3,4]

7.8.2 Emissions[2]

Emissions from secondary aluminum operations include fine particulate matter and gaseous chlorine. A large part of the material charged to a reverberatory furnace is low-grade scrap and chips. Paint, dirt, oil, grease, and other contaminants from this scrap cause large quantities of smoke and fumes to be discharged. Even if the scrap is clean, large surface-to-volume ratios require the use of more fluxes, which can cause serious air pollution problems. Table 7.8-1 presents particulate emission factors for secondary aluminum operations.

Table 7.8-1. PARTICULATE EMISSION FACTORS FOR SECONDARY ALUMINUM OPERATIONS[a]
EMISSION FACTOR RATING: B

Type of operation	Uncontrolled		Baghouse		Electrostatic precipitator	
	lb/ton	kg/MT	lb/ton	kg/MT	lb/ton	kg/MT
Sweating furnace	14.5	7.25	3.3	1.65	–	–
Smelting						
Crucible furnace	1.9	0.95	–	–	–	–
Reverberatory furnace	4.3	2.15	1.3	0.65	1.3	0.65
Chlorination station[b]	1000	500	50	25	–	–

[a]Reference 5. Emission factors expressed as units per unit weight of metal processed.
[b]Pounds per ton (kg/MT) of chlorine used.

References for Section 7.8

1. Duprey, R. L. Compilation of Air Pollutant Emission Factors. U. S. DHEW, PHS, National Center for Air Pollution Control. Durham, N. C. PHS Publication Number 999-AP-42. 1968. p. 29.

2. Hammond, W.F. and H. Simon. Secondary Aluminum-Melting Processes. In: Air Pollution Engineering Manual. Danielson, J. A. (ed.). U. S. DHEW, PHS, National Center for Air Pollution Control. Cincinnati, Ohio. Publication Number 999-AP-40. 1967. p. 284-290.

3. Technical Progress Report: Control of Stationary Sources. Los Angeles County Air Pollution Control District. *1*: April 1960.

4. Allen, G. L. et al. Control of Metallurgical and Mineral Dusts and Fumes in Los Angeles County. Bureau of Mines, Washington, D. C. Information Circular Number 7627. April 1952.

5. Hammond, W. F. and S. M. Weiss. Unpublished report on air contaminant emissions from metallurgical operations in Los Angeles County. Los Angeles County Air Pollution Control District. (Presented at Air Pollution Control Institute, July 1964.)

7.9 BRASS AND BRONZE INGOTS (COPPER ALLOYS)

7.9.1 Process Description[1]

Obsolete domestic and industrial copper-bearing scrap is the basic raw material of the brass and bronze ingot industry. The scrap frequently contains any number of metallic and nonmetallic impurities, which can be removed by such methods as hand sorting, magnetizing, heat methods such as sweating or burning, and gravity separation in a water medium.

Brass and bronze ingots are produced from a number of different furnaces through a combination of melting, smelting, refining, and alloying of the processed scrap material. Reverberatory, rotary, and crucible furnaces are the ones most widely used, and the choice depends on the size of the melt and the alloy desired. Both the reverberatory and the rotary furnaces are normally heated by direct firing, in which the flame and gases come into direct contact with the melt. Processing is essentially the same in any furnace except for the differences in the types of alloy being handled. Crucible furnaces are usually much smaller and are used principally for special-purpose alloys.

7.9.2 Emissions and Controls[1]

The principal source of emissions in the brass and bronze ingot industry is the refining furnace. The exit gas from the furnace may contain the normal combustion products such as fly ash, soot, and smoke. Appreciable amounts of zinc oxide are also present in this exit gas. Other sources of particulate emissions include the preparation of raw materials and the pouring of ingots.

The only air pollution control equipment that is generally accepted in the brass and bronze ingot industry is the baghouse filter, which can reduce emissions by as much as 99.9 percent. Table 7.9-1 summarizes uncontrolled emissions from various brass and bronze melting furnaces.

Table 7.9-1. PARTICULATE EMISSION FACTORS FOR BRASS AND BRONZE MELTING FURNACES WITHOUT CONTROLS[a]
EMISSION FACTOR RATING: A

Type of furnace	Uncontrolled emissions[b]	
	lb/ton	kg/MT
Blast[c]	18	9
Crucible	12	6
Cupola	73	36.5
Electric induction	2	1
Reverberatory	70	35
Rotary	60	30

[a]Reference 1. Emission factors expressed as units per unit weight of metal charged.
[b]The use of a baghouse can reduce emissions by 95 to 99.6 percent.
[c]Represents emissions following precleaner.

Reference for Section 7.9

1. Air Pollution Aspects of Brass and Bronze Smelting and Refining Industry. U. S. DHEW, PHS, EHS, National Air Pollution Control Administration. Raleigh, N. C. Publication Number AP-58. November 1969.

7.10 GRAY IRON FOUNDRY

7.10.1 Process Description[1]

Three types of furnaces are used to produce gray iron castings: cupolas, reverberatory furnaces, and electric induction furnaces. The cupola is the major source of molten iron for the production of castings. In operation, a bed of coke is placed over the sand bottom in the cupola. After the bed of coke has begun to burn properly, alternate layers of coke, flux, and metal are charged into the cupola. Combustion air is forced into the cupola, causing the coke to burn and melt the iron. The molten iron flows out through a taphole.

Electric furnaces are commonly used where special alloys are to be made. Pig iron and scrap iron are charged to the furnace and melted, and alloying elements and fluxes are added at specific intervals. Induction furnaces are used where high-quality, clean metal is available for charging.

7.10.2 Emissions[1]

Emissions from cupola furnaces include gases, dust, fumes, and smoke and oil vapors. Dust arises from dirt on the metal charge and from fines in the coke and limestone charge. Smoke and oil vapor arise primarily from the partial combustion and distillation of oil from greasy scrap charged to the furnace. Also, the effluent from the cupola furnace has a high carbon monoxide content that can be controlled by an afterburner. Emissions from reverberatory and electric induction furnaces consist primarily of metallurgical fumes and are relatively low. Table 7.10-1 presents emission factors for the manufacture of iron castings.

Table 7.10-1. EMISSION FACTORS FOR GRAY IRON FOUNDRIES[a,b,c]
EMISSION FACTOR RATING: B

Type of furnace	Particulates		Carbon monoxide	
	lb/ton	kg/MT	lb/ton	kg/MT
Cupola				
Uncontrolled	17	8.5	145[c,d]	72.5[c,d]
Wet cap	8	4	–	–
Impingement scrubber	5	2.5	–	–
High-energy scrubber	0.8	0.4	–	–
Electrostatic precipitator	0.6	0.3	–	–
Baghouse	0.2	0.1	–	–
Reverberatory	2	1	–	–
Electric induction	1.5	0.75	–	–

[a]References 2 through 5. Emission factors expressed as units per unit weight of metal charged.

[b]Approximately 85 percent of the total charge is metal. For every unit weight of coke in the charge, 7 unit weights of gray iron are produced.

[c]Reference 6.

[d]A well-designed afterburner can reduce emissions to 9 pounds per ton (4.5 kg/MT) of metal charged.[2]

References for Section 7.10

1. Hammond, W. F. and J. T. Nance. Iron Castings. In: Air Pollution Engineering Manual. Danielson, J. A. (ed.). U.S. DHEW, PHS, National Center for Air Pollution Control. Cincinnati, Ohio. Publication Number 999-AP-40. 1967. p. 258-268.

2. Hammond, W. F. and S. M. Weiss. Unpublished report on air contaminant from emissions metallurgical operations in Los Angeles County. Los Angeles County Air Pollution Control District. (Presented at Air Pollution Control Institute, July 1964).

3. Crabaugh, H. C. et al. Dust and Fumes from Gray Iron Foundries: How They Are Controlled in Los Angeles County. Air Repair. *4*(3): November 1954.

4. Hammond, W. F., and J. T. Nance. Iron Castings. In: Air Pollution Engineering Manual. Danielson, J. A. (ed.). U.S. DHEW, PHS. National Center for Air Pollution Control. Cincinnati, Ohio. Publication Number 999-AP-40. 1967. p. 260.

5. Kane, J. M. Equipment for Cupola Control. American Foundryman's Society Transactions. *64*:525-531. 1956.

6. Air Pollution Aspects of the Iron Foundry Industry. A. T. Kearney and Company. Prepared for Environmental Protection Agency, Research Triangle Park, N.C., under Contract Number CPA 22-69-106. February 1971.

7.11 SECONDARY LEAD SMELTING

7.11.1 General[1]

Three types of furnaces are used to produce the common types of lead: the pot furnace, the reverberatory furnace, and the blast furnace or cupola. The pot furnaces are used for the production of the purest lead products, and they operate under closely controlled temperature conditions. Reverberatory furnaces are used for the production of semi-soft lead from lead scrap, oxides, and drosses. The third common type of furnace, the blast furnace, is used to produce hard lead (typically averaging 8 percent antimony and up to 2 percent additional metallic impurity).[2] The charge to these furnaces consists of rerun, slag, and reverberatory slags.

7.11.2 Emissions and Controls[1]

The primary emissions from lead smelting are particulates consisting of lead, lead oxides, and contaminants in the lead charged. Carbon monoxide is released by the reduction of lead oxide by carbon in the cupola. Nitrogen oxides are formed by the fixation of atmospheric nitrogen, caused by the high tempratures associated with the smelting.

Factors affecting emissions from the pot furnace include the composition of the charge, the temperature of the pot, and the degree of control (usually hooding followed by a baghouse). Emissions from the reverberatory furnace are affected by the sulfur content in the charge, the temperature in the furnace, and the amount of air pulled across the furnace. Lead blast-furnace emissions are dependent on the amount of air passed through the charge, the temperature of the furnace, and the amount of sulfur and other impurities in the charge. In addition, blast furnaces emit significant quantities of carbon monoxide and hydrocarbons that must be controlled by incineration. Table 7.11-1 summarizes the emission factors from lead smelting.

References for Section 7.11

1. Air Pollutant Emission Factors. Final Report. Resources Research, Inc. Reston, Va. Prepared for National Air Pollution Control Administration, Durham, N.C., under Contract Number CPA-22-69-119. April 1970.

2. Nance, J. T. and K. O. Luedtke. Lead Refining. In: Air Pollution Engineering Manual. Danielson, J. A. (ed.). U. S. DHEW, PHS, National Center for Air Pollution Control. Cincinnati, Ohio. Publication Number 999-AP-40. 1967. p. 300-304.

3. Allen, G. L. et al. Control of Metallurgical and Mineral Dusts and Fumes in Los Angeles County. Department of the Interior, Bureau of Mines. Washington, D.C. Information Circular Number 7627. April 1952.

4. Private communication between Resources Research, Incorporated, and Maryland State Department of Health, Baltimore, Md. November 1969.

Table 7.11-1. EMISSION FACTORS FOR SECONDARY LEAD SMELTING
EMISSION FACTOR RATING: C

Pollutant	Type of furnace			
	Pot[a]	Reverberatory[b]	Blast (cupola)[c]	Rotary reverberatory[d]
Particulates				
Uncontrolled				
lb/ton	0.8	130	190	70
kg/MT	0.4	65	95	35
Controlled				
lb/ton	Neg[e]	1.6	2.3	–
kg/MT	Neg	0.8	1.15	–
Sulfur oxides				
Uncontrolled				
lb/ton	–	85.0	90	–
kg/MT	–	42.5	45	–
Controlled				
lb/ton	–	–	0.8[f],46[g]	–
kg/MT	–	–	0.4[f],23[g]	–

[a]References 3 through 6. Emission factors expressed as units per unit weight of metal processed.
[b]References 2, 3, and 6.
[c]References 2, 6, and 7.
[d]Reference 5
[e]Negligible.
[f]With NaOH scrubber.
[g]With water spray chamber.

5. Restricting Dust and Sulfur Dioxide Emissions from Lead Smelters (translated from German). Kommission Reinhaltung der Luft. Reproduced by U.S. DHEW, PHS. Washington, D.C. VDI Number 2285. September 1961.

6. Hammond, W. F. Data on Non-Ferrous Metallurgical Operations. Los Angeles County Air Pollution Control District. November 1966.

7. Unpublished stack test data. Pennsylvania State Department of Health. Harrisburg, Pa. 1969.

7.12 SECONDARY MAGNESIUM SMELTING

7.12.1 Process Description[1]

Magnesium smelting is carried out in crucible or pot-type furnaces that are charged with magnesium scrap and fired by gas, oil, or electric heating. A flux is used to cover the surface of the molten metal because magnesium will burn in air at the pouring temperature (approximately 1500°F or 815°C). The molten magnesium, usually cast by pouring into molds, is annealed in ovens utilizing an atmosphere devoid of oxygen.

7.12.2 Emissions[1]

Emissions from magnesium smelting include particulate magnesium (MgO) from the melting, nitrogen oxides from the fixation of atmospheric nitrogen by the furnace temperatures, and sulfur dioxide losses from annealing oven atmospheres. Factors affecting emissions include the capacity of the furnace; the type of flux used on the molten material; the amount of lancing used; the amount of contamination of the scrap, including oil and other hydrocarbons; and the type and extent of control equipment used on the process. The emission factors for a pot furnace are shown in Table 7.12-1.

Table 7.12-1. EMISSION FACTORS FOR MAGNESIUM SMELTING EMISSION FACTOR RATING: C

Type of furnace	Particulates[a] lb/ton	Particulates[a] kg/MT
Pot furnace		
Uncontrolled	4	2
Controlled	0.4	0.2

[a]References 2 and 3. Emission factors expressed as units per unit weight of metal processed.

References for Section 7.12

1. Air Pollutant Emission Factors. Final Report. Resources Research, Inc. Reston, Va. Prepared for National Air Pollution Control Administration, Durham, N.C., under Contract Number CPA-22-69-119. April 1970.

2. Allen, G. L. et al. Control of Metallurgical and Mineral Dusts and Fumes in Los Angeles County. Department of the Interior, Bureau of Mines. Washington, D.C. Information Circular Number 7627. April 1952.

3. Hammond, W. F. Data on Non-Ferrous Metallurgical Operations. Los Angeles County Air Pollution Control District. November 1966.

7.13 STEEL FOUNDRIES

7.13.1 Process Description[1]

Steel foundries produce steel castings by melting steel metal and pouring it into molds. The melting of steel for castings is accomplished in one of five types of furnaces: direct electric-arc, electric induction, open-hearth, crucible, and pneumatic converter. The crucible and pneumatic converter are not in widespread use, so this section deals only with the remaining three types of furnaces. Raw materials supplied to the various melting furnaces include steel scrap of all types, pig iron, ferroalloys, and limestone. The basic melting process operations are furnace charging, melting, tapping the furnace into a ladle, and pouring the steel into molds. An integral part of the steel foundry operation is the preparation of casting molds, and the shakeout and cleaning of these castings. Some common materials used in molds and cores for hollow casting include sand, oil, clay, and resin. Shakeout is the operation by which the cool casting is separated from the mold. The castings are commonly cleaned by shot-blasting, and surface defects such as fins are removed by burning and grinding.

7.13.2 Emissions[1]

Particulate emissions from steel foundry operations include iron oxide fumes, sand fines, graphite, and metal dust. Gaseous emissions from foundry operations include oxides of nitrogen, oxides of sulfur, and hydrocarbons. Factors affecting emissions from the melting process include the quality and cleanliness of the scrap and the amount of oxygen lancing. The concentrations of oxides of nitrogen are dependent upon operating conditions in the melting unit, such as temperature and the rate of cooling of the exhaust gases. The concentration of carbon monoxide in the exhaust gases is dependent on the amount of draft on the melting furnace. Emissions from the shakeout and cleaning operations, mostly particulate matter, vary according to type and efficiency of dust collection. Gaseous emissions from the mold and baking operations are dependent upon the fuel used by the ovens and the temperature reached in these ovens. Table 7.13-1 summarizes the emission factors for steel foundries.

References for Section 7.13

1. Air Pollutant Emission Factors. Final Report. Resources Research, Inc. Reston, Va. Prepared for National Air Pollution Control Administration, Durham, N.C., under Contract Number CPA-22-69-119. April 1970.

2. Schueneman, J. J. et al. Air Pollution Aspects of the Iron and Steel Industry. National Center for Air Pollution Control. Cincinnati, Ohio. June 1963.

3. Foundry Air Pollution Control Manual, 2nd Ed. Des Plaines, Illinois, Foundry Air Pollution Control Committee. 1967. p. 8.

4. Coulter, R. S. Bethlehem Pacific Coast Steel Corporation, Personal communication (April 24, 1956). Cited in Cincinnati, Ohio. June 1963. Air Pollution Aspects of the Iron and Steel Industry. National Center for Air Pollution Control.

5. Coulter, R. S. Smoke, Dust, Fumes Closely Controlled in Electric Furnaces. Iron Age. *173*:107-110. January 14, 1954.

6. Los Angeles County Air Pollution Control District, Unpublished data as cited in Air Pollution Aspects of the Iron and Steel Industry. p. 109.

7. Kane, J. M. and R. V. Sloan. Fume-Control Electric Melting Furnaces. American Foundryman. *18*:33-35, November 1950.

Table 7.13-1. EMISSION FACTORS FOR STEEL FOUNDRIES
EMISSION FACTOR RATING: A

Type of process	Particulates[a]		Nitrogen oxides	
	lb/ton	kg/MT	lb/ton	kg/MT
Melting				
Electric arc[b,c]	13 (4 to 40)	6.5 (2 to 20)	0.2	0.1
Open-hearth[d,e]	11 (2 to 20)	5.5 (1 to 10)	0.01	0.005
Open-hearth oxygen lanced[f,g]	10 (8 to 11)	5 (4 to 5.5)	–	–
Electric induction[h]	0.1	0.05	–	–

[a]Emission factors expressed as units per unit weight of metal processed. If the scrap metal is very dirty or oily, or if increased oxygen lancing is employed, the emission factor should be chosen from the high side of the factor range.
[b]Electrostatic precipitator, 92 to 98 percent control efficiency; baghouse (fabric filter), 98 to 99 percent control efficiency; venturi scrubber, 94 to 98 percent control efficiency.
[c]References 2 through 11.
[d]Electrostatic precipitator, 95 to 98.5 percent control efficiency; baghouse, 99.9 percent control efficiency; venturi scrubber, 96 to 99 percent control efficiency.
[e]References 2 and 12 through 14.
[f]Electrostatic precipitator, 95 to 98 percent control efficiency; baghouse, 99 percent control efficiency; venturi scrubber, 95 to 98 percent control efficiency.
[g]References 7 and 15.
[h]Usually not controlled.

8. Pier, H. M. and H. S. Baumgardner. Research-Cottrell, Inc., Personal Communication. Cited in: Air Pollution Aspects of the Iron and Steel Industry. National Center for Air Pollution Control. Cincinnati, Ohio. June 1963. p. 109.

9. Faist, C. A. Remarks-Electric Furnace Steel. Proceedings of the American Institute of Mining and Metallurgical Engineers. *11*:160-161, 1953.

10. Faist, C. A. Burnside Steel Foundry Company, Personal communication. Cited in: Air Pollution Aspects of the Iron and Steel Industry. National Center for Air Pollution Control. Cincinnati, Ohio. June 1963. p. 109.

11. Douglas, I. H. Direct Fume Extraction and Collection Applied to a Fifteen-Ton Arc Furnace. Special Report on Fume Arrestment. Iron and Steel Institute. 1964. p. 144, 149.

12. Inventory of Air Contaminant Emissions. New York State Air Pollution Control Board. Table XI, p. 14-19.

13. Elliot, A. C. and A. J. Freniere. Metallurgical Dust Collection in Open-Hearth and Sinter Plant. Canadian Mining and Metallurgical Bulletin. *55*(606):724-732, October 1962.

14. Hemeon, C. L. Air Pollution Problems of the Steel Industry. J. Air Pol. Control Assoc. *10*(3):208-218, March 1960.

15. Coy, D. W. Unpublished data. Resources Research, Incorporated. Reston, Virginia.

7.14 SECONDARY ZINC PROCESSING

7.14.1 Process Description[1]

Zinc processing includes zinc reclaiming, zinc oxide manufacturing, and zinc galvanizing. Zinc is separated from scrap containing lead, copper, aluminum, and iron by careful control of temperature in the furnace, allowing each metal to be removed at its melting range. The furnaces typically employed are the pot, muffle, reverberatory, or electric induction. Further refining of the zinc can be done in retort distilling or vaporization furnaces where the vaporized zinc is condensed to the pure metallic form. Zinc oxide is produced by distilling metallic zinc into a dry air stream and capturing the subsequently formed oxide in a baghouse. Zinc galvanizing is carried out in a vat or in bath-type dip tanks utilizing a flux cover. Iron and steel pieces to be coated are cleaned and dipped into the vat through the covering flux.

7.14.2 Emissions[1]

A potential for particulate emissions, mainly zinc oxide, occurs if the temperature of the furnace exceeds 1100°F (595°C). Zinc oxide (ZnO) may escape from condensers or distilling furnaces, and because of its extremely small particle size (0.03 to 0.5 micron), it may pass through even the most efficient collection systems. Some loss of zinc oxides occurs during the galvanizing processes, but these losses are small because of the flux cover on the bath and the relatively low temperature maintained in the bath. Some emissions of particulate ammonium chloride occur when galvanized parts are dusted after coating to improve their finish. Another potential source of emissions of particulates and gaseous zinc is the tapping of zinc-vaporizing muffle furnaces to remove accumulated slag residue. Emissions of carbon monoxide occur when zinc oxide is reduced by carbon. Nitrogen oxide emissions are also possible because of the high temperature associated with the smelting and the resulting fixation of atmospheric nitrogen. Table 7.14-1 summarizes the emission factors from zinc processing.

Table 7.14-1. PARTICULATE EMISSION FACTORS FOR SECONDARY ZINC SMELTING[a]
EMISSION FACTOR RATING: C

Type of furnace	Emissions	
	lb/ton	kg/MT
Retort reduction	47	23.5
Horizontal muffle	45	22.5
Pot furnace	0.1	0.05
Kettle sweat furnace processing[b]		
Clean metallic scrap	Neg	Neg
General metallic scrap	11	5.5
Residual scrap	25	12.5
Reverberatory sweat furnace processing[b]		
Clean metallic scrap	Neg	Neg
General metallic scrap	13	6.5
Residual scrap	32	16
Galvanizing kettles	5	2.5
Calcining kiln	89	44.5

[a]References 2 through 4. Emission factors expressed as units per unit weight of metal produced.
[b]Reference 5.

References for Section 7.14

1. Air Pollutant Emission Factors. Final Report. Resources Research, Inc. Reston, Va. Prepared for National Air Pollution Control Administration, Durham, N.C., under Contract Number CPA-22-69-119. April 1970.

2. Allen, G. L. et al. Control of Metallurgical and Mineral Dusts and Fumes in Los Angeles County. U.S. Department of the Interior, Bureau of Mines. Washington, D.C. Information Circular Number 7627. April 1952.

3. Restricting Dust and Sulfur Dioxide Emissions from Lead Smelters (translated from German). Kommission Reinhaltung der Luft. Reproduced by U.S. DHEW, PHS. Washington, D.C. VDI Number 2285. September 1961.

4. Hammond, W. F. Data on Non-Ferrous Metallurgical Operations. Los Angeles County Air Pollution Control District. November 1966.

5. Herring, W. Secondary Zinc Industry Emission Control Problem Definition Study (Part I). Environmental Protection Agency, Office of Air Programs. Research Triangle Park, N.C. Publication Number APTD-0706. May 1971.

8. MINERAL PRODUCTS INDUSTRY

This section involves the processing and production of various minerals. Mineral processing is characterized by particulate emissions in the form of dust. Frequently, as in the case of crushing and screening, this dust is identical to the material being handled. Emissions also occur through handling and storing the finished product because this material is often dry and fine. Particulate emissions from some of the processes such as quarrying, yard storage, and dust from transport are difficult to control. Most of the emissions from the manufacturing processes discussed in this section, however, can be reduced by conventional particulate control equipment such as cyclones, scrubbers, and fabric filters. Because of the wide variety in processing equipment and final product, emissions cover a wide range; however, average emission factors have been presented for general use.

8.1 ASPHALTIC CONCRETE PLANTS

Revised by Dennis H. Ackerson and James H. Southerland

8.1.1 Process Description

Selecting and handling the raw material is the first step in the production of asphaltic concrete, a paving substance composed of a combination of aggregates uniformly mixed and coated with asphalt cement. Different applications of asphaltic concrete require different aggregate size distributions, so that the raw aggregates are crushed and screened at the quarries. The coarse aggregate usually consists of crushed stone and gravel, but waste materials, such as slag from steel mills or crushed glass, can be used as raw material.

Plants produce finished asphaltic concrete through either batch (Figure 8.1-1) or continuous (Figure 8.1-2) aggregate mixing operations. The raw aggregate is normally stock-piled near the plant at a location where the moisture content will stabilize between 3 and 5 percent by weight.

As processing for either type of operation begins, the aggregate is hauled from the storage piles and placed in the appropriate hoppers of the cold-feed unit. The material is metered from the hoppers onto a conveyor belt and is transported into a gas- or oil-fired rotary dryer. Because a substantial portion of the heat is transferred by radiation, dryers are equipped with flights that are designed to tumble the aggregate and promote drying.

As it leaves the dryer, the hot material drops into a bucket elevator and is transferred to a set of vibrating screens where it is classified by size into as many as four different grades. At this point it enters the mixing operation.

In a batch plant, the classified aggregate drops into one of four large bins. The operator controls the aggregate size distribution by opening individual bins and allowing the classified aggregate to drop into a weigh hopper until the desired weight is obtained. After all the material is weighed out, the sized aggregates are dropped into a mixer and mixed dry for about 30 seconds. The asphalt, which is a solid at ambient temperatures, is pumped from heated storage tanks, weighed, and then injected into the mixer. The hot, mixed batch is then dropped into a truck and hauled to the job site.

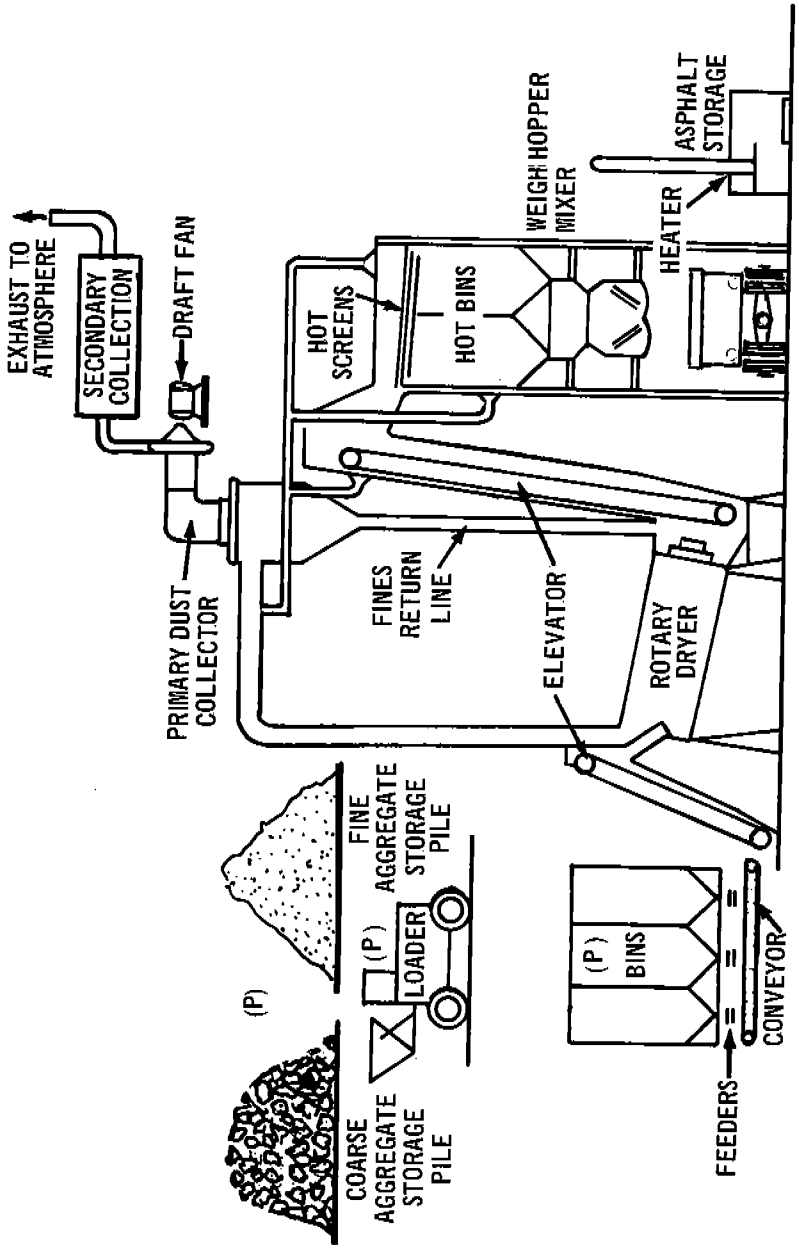

Figure 8.1-1. Batch hot-mix asphalt plant. "P" denotes particulate emission points.[1]

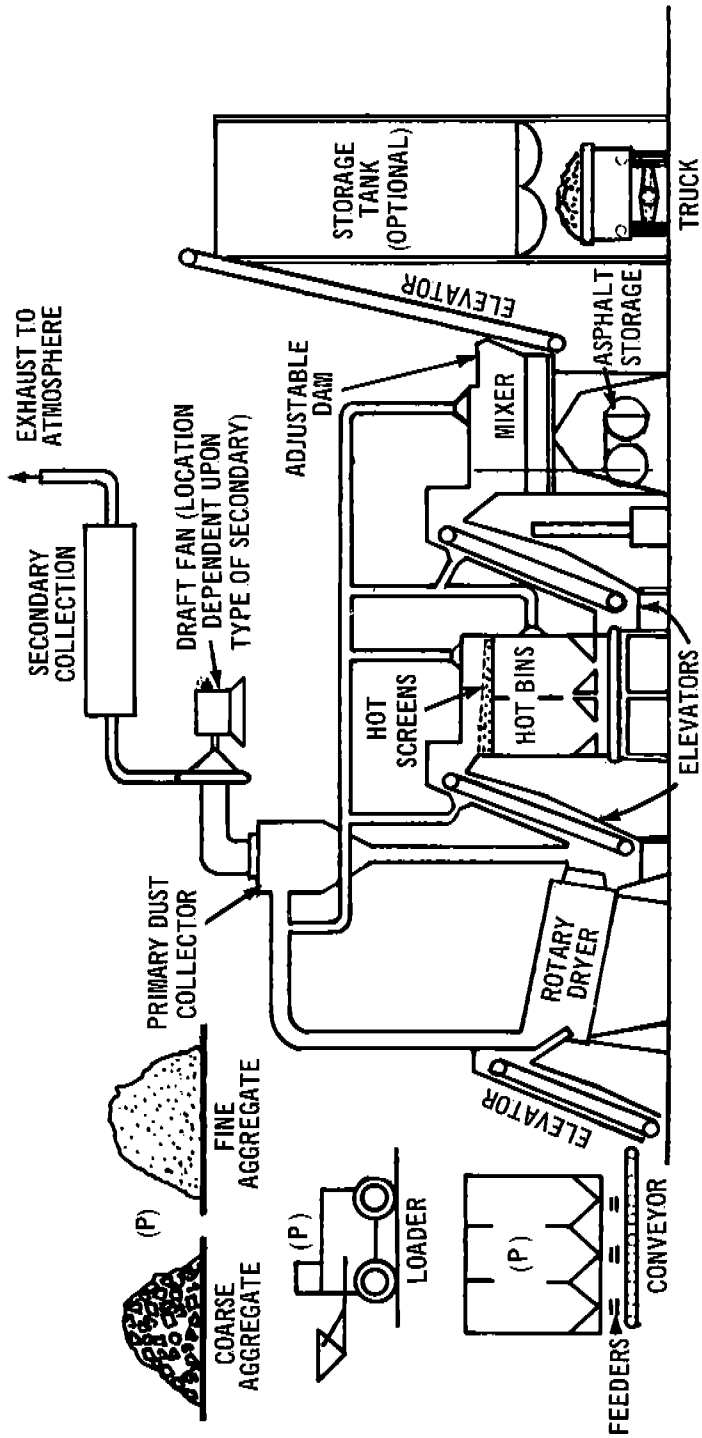

Figure 8.1-2. Continous hot-mix asphalt plant. "P" denotes particulate emission points.[1]

In a continuous plant, the classified aggregate drops into a set of small bins, which collect and meter the classified aggregate to the mixer. From the hot bins, the aggregate is metered through a set of feeder conveyors to another bucket elevator and into the mixer. Asphalt is metered into the inlet end of the mixer, and retention time is controlled by an adjustable dam at the end of the mixer. The mix flows out of the mixer into a hopper from which the trucks are loaded.

8.1.2 Emissions and Controls[3,4]

Dust sources are the rotary dryer; the hot aggregate elevators; the vibrating screens; and the hot-aggregate storage bins, weigh hoppers, mixers, and transfer points. The largest dust emission source is the rotary dryer. In some plants, the dust from the dryer is handled separately from emissions from the other sources. More commonly, however, the dryer, its vent lines, and other fugitive sources are treated in combination by a single collector and fan system.

The choice of applicable control equipment ranges from dry, mechanical collectors to scrubbers and fabric collectors; attempts to apply electrostatic precipitators have met with little success. Practically all plants use primary dust collection equipment, such as large diameter cyclone, skimmer, or settling chambers. These chambers are often used as classifiers with the collected materials being returned to the hot aggregate elevator to combine with the dryer aggregate load. The air discharge from the primary collector is seldom vented to the atmosphere because high emission levels would result. The primary collector effluent is therefore ducted to a secondary or even to a tertiary collection device.

Emission factors for asphaltic concrete plants are presented in Table 8.1-1. Particle size information has not been included because the particle size distribution varies with the aggregate being used, the mix being made, and the type of plant operation.

Table 8.1-1. PARTICULATE EMISSION FACTORS FOR ASPHALTIC CONCRETE PLANTS[a]
EMISSION FACTOR RATING: A

Type of control	Emissions	
	lb/ton	kg/MT
Uncontrolled[b]	45.0	22.5
Precleaner	15.0	7.5
High-efficiency cyclone	1.7	0.85
Spray tower	0.4	0.20
Multiple centrifugal scrubber	0.3	0.15
Baffle spray tower	0.3	0.15
Orifice-type scrubber	0.04	0.02
Baghouse[c]	0.1	0.05

[a]References 1, 2, and 5 through 10.
[b]Almost all plants have at least a precleaner following the rotary dryer.
[c]Emissions from a properly designed, installed, operated, and maintained collector can be as low as 0.005 to 0.020 lb/ton (0.0025 to 0.010 kg/MT).

References for Section 8.1

1. Asphaltic Concrete Plants Atmospheric Emissions Study. Valentine, Fisher, and Tomlinson, Consulting Engineers, Seattle, Washington. Prepared for Environmental Protection Agency, Research Triangle Park, N.C., under Contract Number 68-02-0076. November 1971.

2. Guide for Air Pollution Control of Hot Mix Asphalt Plants. National Asphalt Pavement Association, Riverdale, Md. Information Series 17.

3. Danielson, J. A. Control of Asphaltic Concrete Batching Plants in Los Angeles County. J. Air Pol. Control Assoc. *10*(2):29-33. 1960.

4. Friedrich, H. E. Air Pollution Control Practices and Criteria for Hot-Mix Asphalt Paving Batch Plants. American Precision Industries, Inc., Buffalo, N.Y. (Presented at the 62nd Annual Meeting of the Air Pollution Control Association.) APCA Paper Number 69-160.

5. Air Pollution Engineering Manual. Air Pollution Control District, County of Los Angeles. U.S. DHEW, Public Health Service. PHS Publication Number 999-AP-40. 1967.

6. Allen, G. L., F. H. Vicks, and L. C. McCabe. Control of Metallurgical and Mineral Dust and Fumes in Los Angeles County, California. U.S. Department of Interior, Bureau of Mines. Washington. Information Circular 7627. April 1952.

7. Kenline, P. A. Unpublished report on control of air pollutants from chemical process industries. Robert A. Taft Engineering Center. Cincinnati, Ohio. May 1959.

8. Sallee, G. Private communication on particulate pollutant study between Midwest Research Institute and National Air Pollution Control Administration, Durham, N.C. Prepared under Contract Number 22-69-104. June 1970.

9. Danielson, J. A. Unpublished test data from asphalt batching plants, Los Angeles County Air Pollution Control District. (Presented at Air Pollution Control Institute, University of Southern California, Los Angeles, November 1966.)

10. Fogel, M. E. et al. Comprehensive Economic Study of Air Pollution Control Costs for Selected Industries and Selected Regions. Research Triangle Institute, Research Triangle Park, N.C. Prepared for Environmental Protection Agency, Research Triangle Park, N.C., under Final Report Number R-OU-455. February 1970.

8.2 ASPHALT ROOFING

8.2.1 Process Description[1]

The manufacture of asphalt roofing felts and shingles involves saturating fiber media with asphalt by means of dipping and/or spraying. Although it is not always done at the same site, preparation of the asphalt saturant is an integral part of the operation. This preparation, called "blowing," consists of oxidizing the asphalt by bubbling air through the liquid asphalt for 8 to 16 hours. The saturant is then transported to the saturation tank or spray area. The saturation of the felts is accomplished by dipping, high-pressure sprays, or both. The final felts are made in various weights: 15, 30, and 55 pounds per 100 square feet (0.72, 1.5, and 2.7 kg/m^2). Regardless of the weight of the final product, the makeup is approximately 40 percent dry felt and 60 percent asphalt saturant.

8.2.2 Emissions and Controls[1]

The major sources of particulate emissions from asphalt roofing plants are the asphalt blowing operations and the felt saturation. Another minor source of particulates is the covering of the roofing material with roofing granules. Gaseous emissions from the saturation process have not been measured but are thought to be slight because of the initial driving off of contaminants during the blowing process.

A common method of control at asphalt saturating plants is the complete enclosure of the spray area and saturator with good ventilation through one or more collection devices, which include combinations of wet scrubbers and two-stage low-voltage electrical precipitators, or cyclones and fabric filters. Emission factors for asphalt roofing are presented in Table 8.2-1.

Table 8.2-1. EMISSION FACTORS FOR ASPHALT ROOFING MANUFACTURING WITHOUT CONTROLS[a]
EMISSION FACTOR RATING: D

Operation	Particulates[b]		Carbon monoxide		Hydrocarbons (CH_4)	
	lb/ton	kg/MT	lb/ton	kg/MT	lb/ton	kg/MT
Asphalt blowing[c]	2.5	1.25	0.9	0.45	1.5	0.75
Felt saturation[d]						
Dipping only	1	0.5	–	–	–	–
Spraying only	3	1.5	–	–	–	–
Dipping and spraying	2	1	–	–	–	–

[a]Approximately 0.65 unit of asphalt input is required to produce 1 unit of saturated felt. Emission factors expressed as units per unit weight of saturated felt produced.

[b]Low-voltage precipitators can reduce emissions by about 60 percent; when they are used in combination with a scrubber, overall efficiency is about 85 percent.

[c]Reference 2.

[d]References 3 and 4.

References for Section 8.2

1. Air Pollutant Emission Factors. Final report. Resources Research, Incorporated. Reston, Virginia. Prepared for National Air Pollution Control Administration, Durham, N.C., under Contract Number CPA-22-69-119. April 1970.

2. Von Lehmden, D. J., R. P. Hangebrauck, and J. E. Meeker. Polynuclear Hydrocarbon Emissions from Selected Industrial Processes. J. Air Pol. Control Assoc. *15*:306-312, July 1965.

3. Weiss, S. M. Asphalt Roofing Felt-Saturators. In: Air Pollution Engineering Manual. Danielson, J. A. (ed.). U. S. DHEW, PHS, National Center for Air Pollution Control. Cincinnati, Ohio. Publication Number 999-AP-40. 1967. p. 378-383.

4. Goldfield, J. and R. G. McAnlis. Low-Voltage Electrostatic Precipitators to Collect Oil Mists from Roofing-Felt Asphalt Saturators and Stills. J. Industrial Hygiene Assoc. July-August 1963.

8.3 BRICKS AND RELATED CLAY PRODUCTS

Revised by Dennis H. Ackerson

8.3.1 Process Description

The manufacture of brick and related products such as clay pipe, pottery, and some types of refractory brick involves the mining, grinding, screening, and blending of the raw materials, and the forming, cutting or shaping, drying or curing, and firing of the final product.

Surface clays and shales are mined in open pits; most fine clays are found underground. After mining, the material is crushed to remove stones and stirred before it passes onto screens that are used to segregate the particles by size.

At the start of the forming process, clay is mixed with water, usually in a pug mill. The three principal processes for forming brick are: stiff-mud, soft-mud, and dry-process. In the stiff-mud process, sufficient water is added to give the clay plasticity; bricks are then formed by forcing the clay through a die and using cutter wire to separate the bricks. All structural tile and most brick are formed by this process. The soft-mud process is usually used when the clay contains too much water for the stiff-mud process. The clay is mixed with water until the moisture content reaches 20 to 30 percent, and the bricks are formed in molds. In the dry-press process, clay is mixed with a small amount of water and formed in steel molds by applying a pressure of 500 to 1500 psi. The brick manufacturing process is shown in Figure 8.3-1.

Before firing, the wet clay units that have been formed are almost completely dried in driers that are usually heated by waste heat from the kilns. Many types of kilns are used for firing brick; however, the most common are the tunnel kiln and the periodic kiln. The downdraft periodic kiln is a permanent brick structure that has a number of fireholes where fuel is fired into the furnace. The hot gases from the fuel are drawn up over the bricks, down through them by underground flues, and out of the oven to the chimney. Although fuel efficiency is not as high as that of a tunnel kiln because of lower heat recovery, the uniform temperature distribution through the kiln leads to a good quality product. In most tunnel kilns, cars carrying about 1200 bricks each travel on rails through the kiln at the rate of one 6-foot car per hour. The fire zone is located near the middle of the kiln and remains stationary.

In all kilns, firing takes place in six steps: evaporation of free water, dehydration, oxidation, vitrification, flashing, and cooling. Normally, gas or residual oil is used for heating, but coal may be used. Total heating time varies with the type of product; for example, 9-inch refractory bricks usually require 50 to 100 hours of firing. Maximum temperatures of about 2000°F (1090°C) are used in firing common brick.

8.3.2 Emissions and Controls[1,3]

Particulate matter is the primary emission in the manufacture of bricks. The main source of dust is the materials handling procedure, which includes drying, grinding, screening, and storing the raw material. Combustion products are emitted from the fuel consumed in the curing, drying, and firing portion of the process. Fluorides, largely in gaseous form, are also emitted from brick manufacturing operations. Sulfur dioxide may be emitted from the bricks when temperatures reach 2500°F (1370°C) or greater; however, no data on such emissions are available.[4]

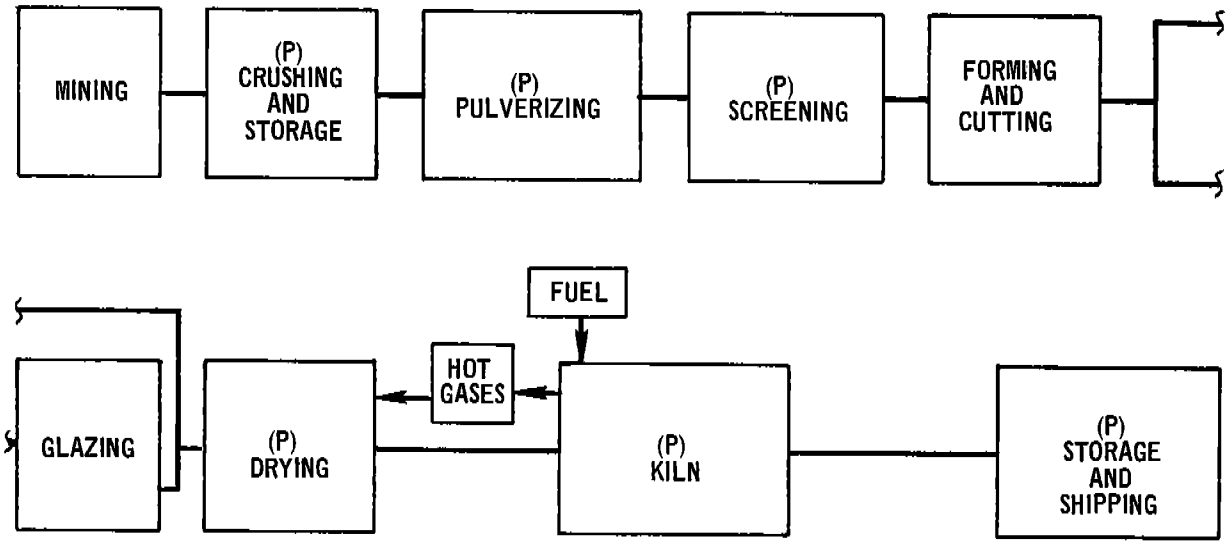

Figure 8.3-1. Basic flow diagram of brick manufacturing process. "P" denotes a major source of particulate emissions.

A variety of control systems may be used to reduce both particulate and gaseous emissions. Almost any type of particulate control system will reduce emissions from the material handling process, but good plant design and hooding are also required to keep emissions to a minimum.

The emissions of fluorides can be reduced by operating the kiln at temperatures below 2000°F (1090°C) and by choosing clays with low fluoride content. Satisfactory control can be achieved by scrubbing kiln gases with water; wet cyclonic scrubbers are available that can remove fluorides with an efficiency of 95 percent, or higher.

Emission factors for brick manufacturing are presented in Table 8.3-1. Insufficient data are available to present particle size information.

Table 8.3-1. EMISSION FACTORS FOR BRICK MANUFACTURING WITHOUT CONTROLS[a]
EMISSION FACTOR RATING: C

Type of process	Particulates		Sulfur oxides (SO_x)		Carbon monoxide (CO)		Hydrocarbons (HC)		Nitrogen oxides (NO_x)		Fluorides[b] (HF)	
	lb/ton	kg/MT	lb/ton	kg/MT	lb/ton	kg/MT	lb/ton	kg/MT	lb/ton	kg/MT	lb/ton	kg/MT
Raw material handling[c]												
Dryers, grinders, etc.	96	48	–	–	–	–	–	–	–	–	–	–
Storage	34	17	–	–	–	–	–	–	–	–	–	–
Curing and firing[d]												
Tunnel kilns												
Gas-fired	0.04	0.02	Neg[e]	Neg	0.04	0.02	0.02	0.01	0.15	0.08	1.0	0.5
Oil-fired	0.6	0.3	4.0S[f]	2.0S	Neg	Neg	0.1	0.05	1.1	0.55	1.0	0.5
Coal-fired	1.0A	0.5A[g]	7.2S	3.6S	1.9	0.95	0.6	0.3	0.9	0.45	1.0	0.5
Periodic kilns												
Gas-fired	0.11	0.05	Neg	Neg	0.11	0.05	0.04	0.02	0.42	0.21	1.0	0.5
Oil-fired	0.9	0.45	5.9S	2.95S	Neg	Neg	0.1	0.05	1.7	0.85	1.0	0.5
Coal-fired	1.6A	0.8A	12.0S	6.0S	3.2	1.6	0.9	0.45	1.4	0.70	1.0	0.5

[a]One brick weighs about 6.5 pounds (2.95 kg). Emission factors expressed as units per unit weight of brick produced.

[b]Based on data from References 3 and 6 through 10.

[c]Based on data from sections on ceramic clays and cement manufacturing in this publication. Because of process variation, some steps may be omitted. Storage losses apply only to that quantity of material stored.

[d]Based on data from References 1 and 5 and emission factors for fuel combustion.

[e]Negligible.

[f]S is the percent sulfur in the fuel.

[g]A is the percent ash in the coal.

References for Section 8.3

1. Air Pollutant Emission Factors. Final Report. Resources Research, Inc., Reston, Virginia. Prepared for National Air Pollution Control Administration, Durham, N.C., under Contract Number CPA-22-69-119. April 1970.

2. Technical Notes on Brick and Tile Construction. Structural Clay Products Institute. Washington, D.C. Pamphlet Number 9. September 1961.

3. Unpublished control techniques for fluoride emissions. Environmental Protection Agency, Office of Air Programs, Research Triangle Park, N.C.

4. Allen, M. H. Report on Air Pollution, Air Quality Act of 1967 and Methods of Controlling the Emission of Particulate and Sulfur Oxide Air Pollutants. Structural Clay Products Institute, Washington, D. C. September 1969.

5. Norton, F. H. Refractories, 3rd Ed. New York, McGraw-Hill Book Company. 1949.

6. Semran, K. T. Emissions of Fluorides from Industrial Processes: A Review. J. Air Pol. Control Assoc. *7*(2):92-108. August 1957.

7. Kirk-Othmer. Encyclopedia of Chemical Technology, Vol. V, 2nd Ed. New York, Interscience (John Wiley and Sons, Inc.), 1964. p. 561-567.

8. Wentzel, K. F. Fluoride Emissions in the Vicinity of Brickworks. Staub. *25*(3):45-50. March 1965.

9. Allen, G. L. et al. Control of Metallurgical and Mineral Dusts and Fumes in Los Angeles County. U. S. Department of Interior, Bureau of Mines. Washington, D.C. Information Circular Number 7627. April 1952.

10. Private communication between Resources Research, Inc. Reston, Va. and the State of New Jersey Air Pollution Control Program, Trenton. July 20, 1969.

8.4 CALCIUM CARBIDE MANUFACTURING

8.4.1 Process Description[1,2]

Calcium carbide is manufactured by heating a mixture of quicklime (CaO) and carbon in an electric-arc furnace, where the lime is reduced by the coke to calcium carbide and carbon monoxide. Metallurgical coke, petroleum coke, or anthracite coal is used as the source of carbon. About 1900 pounds (860 kg) of lime and 1300 pounds (600 kg) of coke yield 1 ton (1 MT) of calcium carbide. There are two basic types of carbide furnaces: (1) the open furnace, in which the carbon monoxide burns to carbon dioxide when it comes in contact with air above the charge; and (2) the closed furnace, in which the gas is collected from the furnace. The molten calcium carbide from the furnace is poured into chill cars or bucket conveyors and allowed to solidify. The finished calcium carbide is dumped into a jaw crusher and then into a cone crusher to form a product of the desired size.

8.4.2 Emissions and Controls

Particulates, acetylene, sulfur compounds, and some carbon monoxide are emitted from the calcium carbide plants. Table 8.4-1 contains emission factors based on one plant in which some particulate matter escapes from the hoods over each furnace and the remainder passes through wet-impingement-type scrubbers before being vented to the atmosphere through a stack. The coke dryers and the furnace-room vents are also sources of emissions.

Table 8.4-1. EMISSION FACTORS FOR CALCIUM CARBIDE PLANTS[a]
EMISSION FACTOR RATING: C

Type of source	Particulates		Sulfur oxides		Acetylene	
	lb/ton	kg/MT	lb/ton	kg/MT	lb/ton	kg/MT
Electric furnace						
Hoods	18	9	–	–	–	–
Main stack	20	10	3	1.5	–	–
Coke dryer	2	1	3	1.5	–	–
Furnace room vents	26	13	–	–	18	9

[a]Reference 3. Emission factors expressed as units per unit weight of calcium carbide produced.

References for Section 8.4

1. Duprey, R. L. Compilation of Air Pollutant Emission Factors. U. S. DHEW, PHS, National Center for Air Pollution Control. Durham, N. C. PHS Publication Number 999-AP-42. 1968. p. 34-35.

2. Carbide. In: Kirk-Othmer Encyclopedia of Chemical Technology. New York, John Wiley and Sons, Inc. 1964.

3. The Louisville Air Pollution Study. U. S. DHEW, PHS, Robert A. Taft Sanitary Engineering Center. Cincinnati, Ohio. 1961.

8.5 CASTABLE REFRACTORIES

8.5.1 Process Description[1-3]

Castable or fused-cast refractories are manufactured by carefully blending such components as alumina, zirconia, silica, chrome, and magnesia; melting the mixture in an electric-arc furnace at temperatures of 3200 to 4500°F (1760 to 2480°C); pouring it into molds; and slowly cooling it to the solid state. Fused refractories are less porous and more dense than kiln-fired refractories.

8.5.2 Emissions and Controls[1]

Particulate emissions occur during the drying, crushing, handling, and blending of the components; during the actual melting process; and in the molding phase. Fluorides, largely in the gaseous form, may also be emitted during the melting operations.

The general types of particulate controls may be used on the materials handling aspects of refractory manufacturing. Emissions from the electric-arc furnace, however, are largely condensed fumes and consist of very fine particles. Fluoride emissions can be effectively controlled with a scrubber. Emission factors for castable refractories manufacturing are presented in Table 8.5-1.

Table 8.5-1. PARTICULATE EMISSION FACTORS FOR CASTABLE REFRACTORIES MANUFACTURING[a]
EMISSION FACTOR RATING: C

Type of process	Type of control	Uncontrolled		Controlled	
		lb/ton	kg/MT	lb/ton	kg/MT
Raw material dryer[b]	Baghouse	30	15	0.3	0.15
Raw material crushing and processing[c]	Scrubber			7	3.5
	Cyclone	120	60	45	22.5
Electric-arc melting[d]	Baghouse	50	25	0.8	0.4
	Scrubber			10	5
Curing oven[e]	–	0.2	0.1	–	–
Molding and shakeout[b]	Baghouse	25	12.5	0.3	0.15

[a]Fluoride emissions from the melt average about 1.3 pounds of HF per ton of melt (0.65 kg HF/MT melt). Emission factors expressed as units per unit weight of feed material.
[b]Reference 4.
[c]References 4 and 5.
[d]References 4 through 6.
[e]Reference 5.

References for Section 8.5

1. Air Pollutant Emission Factors. Final Report. Resources Research, Inc. Reston, Va. Prepared for National Air Pollution Control Administration, Durham, N.C., under Contract Number CPA-22-69-119. April 1970.

2. Brown, R. W. and K. H. Sandmeyer. Applications of Fused-Cast Refractories. Chem. Eng. *76*:106-114, June 16, 1969.

3. Shreve, R.N. Chemical Process Industries, 3rd Ed. New York, McGraw-Hill Book Company. 1967. p. 158.

4. Unpublished data provided by a Corhart Refractory. Kentucky Department of Health, Air Pollution Control Commission. Frankfort, Kentucky. September 1969.

5. Unpublished stack test data on refractories. Resources Research, Incorporated. Reston, Virginia. 1969.

6. Unpublished stack test data on refractories. Resources Research, Incorporated. Reston, Virginia. 1967.

8.6 PORTLAND CEMENT MANUFACTURING

Revised by Dennis H. Ackerson

8.6.1 Process Description [1-3]

Portland cement manufacture accounts for about 98 percent of the cement production in the United States. The more than 30 raw materials used to make cement may be divided into four basic components: lime (calcareous), silica (siliceous), alumina (argillaceous), and iron (ferriferous). Approximately 3200 pounds of dry raw materials are required to produce 1 ton of cement. Approximately 35 percent of the raw material weight is removed as carbon dioxide and water vapor. As shown in Figure 8.6-1, the raw materials undergo separate crushing after the quarrying operation, and, when needed for processing, are proportioned, ground, and blended using either the wet or dry process.

In the dry process, the moisture content of the raw material is reduced to less than 1 percent either before or during the grinding operation. The dried materials are then pulverized into a powder and fed directly into a rotary kiln. Usually, the kiln is a long, horizontal, steel cylinder with a refractory brick lining. The kilns are slightly inclined and rotate about the longitudinal axis. The pulverized raw materials are fed into the upper end and travel slowly to the lower end. The kilns are fired from the lower end so that the hot gases pass upward and through the raw material. Drying, decarbonating, and calcining are accomplished as the material travels through the heated kiln, finally burning to incipient fusion and forming the clinker. The clinker is cooled, mixed with about 5 percent gypsum by weight, and ground to the final product fineness. The cement is then stored for later packaging and shipment.

With the wet process, a slurry is made by adding water to the initial grinding operation. Proportioning may take place before or after the grinding step. After the materials are mixed, the excess water is removed and final adjustments are made to obtain a desired composition. This final homogeneous mixture is fed to the kilns as a slurry of 30 to 40 percent moisture or as a wet filtrate of about 20 percent moisture. The burning, cooling, addition of gypsum, and storage are carried out as in the dry process.

8.6.2 Emissions and Controls[1,2,4]

Particulate matter is the primary emission in the manufacture of portland cement. Emissions also include the normal combustion products of the fuel used to supply heat for the kiln and drying operations, including oxides of nitrogen and small amounts of oxides of sulfur.

Sources of dust at cement plants include: (1) quarrying and crushing, (2) raw material storage, (3) grinding and blending (dry process only), (4) clinker production, (5) finish grinding, and (6) packaging. The largest source of emissions within cement plants is the kiln operation, which may be considered to have three units: the feed system, the fuel-firing system, and the clinker-cooling and handling system. The most desirable method of disposing of the collected dust is injection into the burning zone of the kiln and production of clinkers from the dust. If the alkali content of the raw materials is too high, however, some of the dust is discarded or leached before returning to the kiln. In many instances, the maximum allowable alkali content of 0.6 percent (calculated as sodium oxide) restricts the amount of dust that can be recycled. Additional sources of dust emissions are raw material storage piles, conveyors, storage silos, and loading/unloading facilities.

The complications of kiln burning and the large volumes of materials handled have led to the adoption of many control systems for dust collection. Depending upon the emission, the temperature of the effluents in the

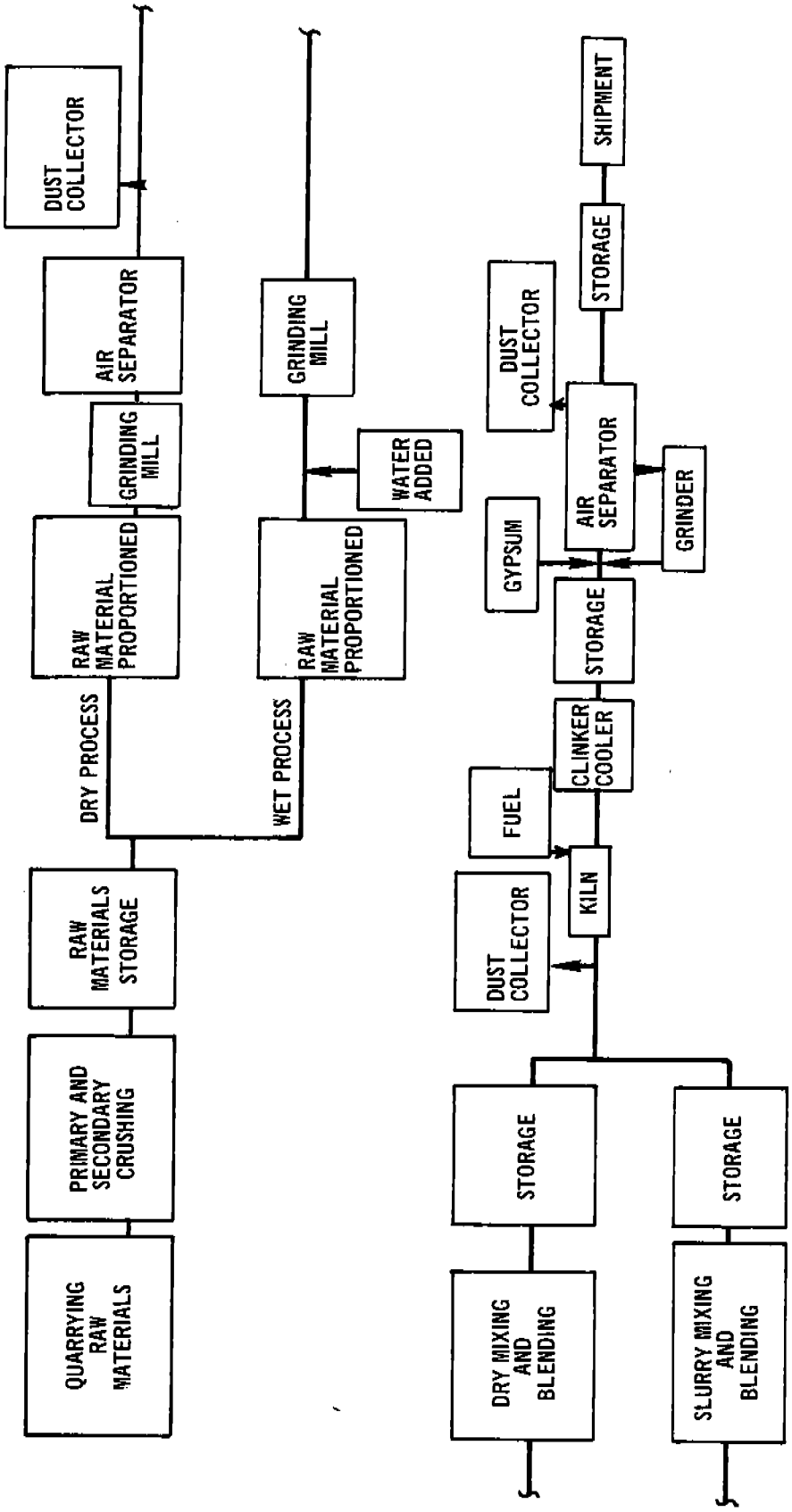

Figure 8.6-1. Basic flow diagram of portland cement manufacturing process.

plant in question, and the particulate emission standards in the community, the cement industry generally uses mechanical collectors, electrical precipitators, fabric filter (baghouse) collectors, or combinations of these devices to control emissions.

Table 8.6-1 summarizes emission factors for cement manufacturing and also includes typical control efficiencies of particulate emissions. Table 8.6-2 indicates the particle size distribution for particulate emissions from kilns and cement plants before control systems are applied.

Table 8.6-1. EMISSION FACTORS FOR CEMENT MANUFACTURING WITHOUT CONTROLS[a,b,c]
EMISSION FACTOR RATING: B

Pollutant	Dry Process		Wet process	
	Kilns	Dryers, grinders, etc.	Kilns	Dryers, grinders, etc.
Particulate[d]				
lb/ton	245.0	96.0	228.0	32.0
kg/MT	122.0	48.0	114.0	16.0
Sulfur dioxide[e]				
Mineral source[f]				
lb/ton	10.2	–	10.2	–
kg/MT	5.1	–	5.1	–
Gas combustion				
lb/ton	Neg[g]	–	Neg	–
kg/MT	Neg	–	Neg	–
Oil combustion				
lb/ton	4.2S[h]	–	4.2S	–
kg/MT	2.1S	–	2.1S	–
Coal combustion				
lb/ton	6.8S	–	6.8S	–
kg/MT	3.4S	–	3.4S	–
Nitrogen oxides				
lb/ton	2.6	–	2.6	–
kg/MT	1.3	–	1.3	–

[a]One barrel of cement weighs 376 pounds (171 kg).

[b]These emission factors include emissions from fuel combustion, which should not be calculated separately.

[c]References 1 and 2.

[d]Typical collection efficiencies for kilns, dryers, grinders, etc., are: multicyclones, 80 percent; electrostatic precipitators, 95 percent; electrostatic precipitators with multicyclones, 97.5 percent; and fabric filter units, 99.8 percent.

[e]The sulfur dioxide factors presented take into account the reactions with the alkaline dusts when no baghouses are used. With baghouses, approximately 50 percent more SO_2 is removed because of reactions with the alkaline particulate filter cake. Also note that the total SO_2 from the kiln is determined by summing emission contributions from the mineral source and the appropriate fuel.

[f]These emissions are the result of sulfur being present in the raw materials and are thus dependent upon source of the raw materials used. The 10.2 lb/ton (5.1 kg/MT) factors account for part of the available sulfur remaining behind in the product because of its alkaline nature and affinity for SO_2.

[g]Negligible.

[h]S is the percent sulfur in fuel.

Table 8.6-2. SIZE DISTRIBUTION OF DUST EMITTED FROM KILN OPERATIONS WITHOUT CONTROLS[1,5]

Particle size, μm	Kiln dust finer than corresponding particle size, %
60	93
50	90
40	84
30	74
20	58
10	38
5	23
1	3

Sulfur dioxide may be generated from the sulfur compounds in the ores as well as from combusion of fuel. The sulfur content of both ores and fuels will vary from plant to plant and with geographic location. The alkaline nature of the cement, however, provides for direct absorption of SO_2 into the product. The overall control inherent in the process is approximately 75 percent or greater of the available sulfur in ore and fuel if a baghouse that allows the SO_2 to come in contact with the cement dust is used. Control, of course, will vary according to the alkali and sulfur content of the raw materials and fuel.[6]

References for Section 8.6

1. Kreichelt, T. E., D. A. Kemnitz, and S. T. Cuffe. Atmospheric Emissions from the Manufacture of Portland Cement. U. S. DHEW, Public Health Service. Cincinnati, Ohio. PHS Publication Number 999-AP-17, 1967.

2. Unpublished standards of performance for new and substantially modified portland cement plants. Environmental Protection Agency, Bureau of Stationary Source Pollution Control, Research Triangle Park, N.C. August 1971.

3. A Study of the Cement Industry in the State of Missouri. Resources Research Inc., Reston, Va. Prepared for the Air Conservation Commission of the State of Missouri. December 1967.

4. Standards of Performance for New Stationary Sources. Environmental Protection Agency. Federal Register. *36*(247, Pt II): December 23, 1971.

5. Particulate Pollutant System Study. Midwest Research Institute, Kansas City, Mo. Prepared for Environmental Protection Agency, Air Pollution Control Office, Research Triangle Park, N.C., under Contract Number CPA-22-69-104. May 1971.

6. Restriction of Emissions from Portland Cement Works. VDI Richtlinien. Dusseldorf, Germany. February 1967.

8.7 CERAMIC CLAY MANUFACTURING

8.7.1 Process Description[1]

The manufacture of ceramic clay involves the conditioning of the basic ores by several methods. These include the separation and concentration of the minerals by screening, floating, wet and dry grinding, and blending of the desired ore varieties. The basic raw materials in ceramic clay manufacture are kaolinite ($Al_2O_3 \cdot 2SiO_2 \cdot 2H_2O$) and montmorillonite [(Mg, Ca) $O \cdot Al_2O_3 \cdot 5SiO_2 \cdot nH_2O$] clays. These clays are refined by separation and bleaching, blended, kiln-dried, and formed into such items as whiteware, heavy clay products (brick, etc.), various stoneware, and other products such as diatomaceous earth, which is used as a filter aid.

8.7.2 Emissions and Controls[1]

Emissions consist primarily of particulates, but some fluorides and acid gases are also emitted in the drying process. The high temperatures of the firing kilns are also conducive to the fixation of atmospheric nitrogen and the subsequent release of NO, but no published information has been found for gaseous emissions. Particulates are also emitted from the grinding process and from storage of the ground product.

Factors affecting emissions include the amount of material processed, the type of grinding (wet or dry), the temperature of the drying kilns, the gas velocities and flow direction in the kilns, and the amount of fluorine in the ores.

Common control techniques include settling chambers, cyclones, wet scrubbers, electrostatic precipitators, and bag filters. The most effective control is provided by cyclones for the coarser material, followed by wet scrubbers, bag filters, or electrostatic precipitators for dry dust. Emission factors for ceramic clay manufacturing are presented in Table 8.7-1.

Table 8.7-1. PARTICULATE EMISSION FACTORS FOR CERAMIC CLAY MANUFACTURING[a]
EMISSION FACTOR RATING: A

Type of process	Uncontrolled		Cyclone[b]		Multiple-unit cyclone and scrubber[c]	
	lb/ton	kg/MT	lb/ton	kg/MT	lb/ton	kg/MT
Drying[d]	70	35	18	9	7	3.5
Grinding[e]	76	38	19	9.5	–	–
Storage[d]	34	17	8	4	–	–

[a]Emission factors expressed as units per unit weight of input to process.
[b]Approximate collection efficiency: 75 percent.
[c]Approximate collection efficiency: 90 percent.
[d]References 2 through 5.
[e]Reference 2.

References for Section 8.7-1

1. Air Pollutant Emission Factors. Final Report. Resources Research, Inc. Reston, Va. Prepared for National Air Pollution Control Administration, Durham, N.C., under Contract Number CPA-22-69-119. April 1970.

2. Allen, G. L. et al. Control of Metallurgical and Mineral Dusts and Fumes in Los Angeles County. Department of Interior, Bureau of Mines. Washington, D.C. Information Circular Number 7627. April 1952.

3. Private Communication between Resources Research, Incorporated, Reston, Virginia, and the State of New Jersey Air Pollution Control Program, Trenton, New Jersey. July 20, 1969.

4. Henn, J. J. et al. Methods for Producing Alumina from Clay: An Evaluation of Two Lime Sinter Processes. Department of Interior, Bureau of Mines. Washington, D.C. Report of Investigations Number 7299. September 1969.

5. Peters, F. A. et al. Methods for Producing Alumina from Clay: An Evaluation of the Lime-Soda Sinter Process. Department of Interior, Bureau of Mines. Washington, D.C. Report of Investigation Number 6927. 1967.

8.8 CLAY AND FLY-ASH SINTERING

8.8.1 Process Description[1]

Although the processes for sintering fly ash and clay are similar, there are some distinctions that justify a separate discussion of each process. Fly-ash sintering plants are generally located near the source, with the fly ash delivered to a storage silo at the plant. The dry fly ash is moistened with a water solution of lignin and agglomerated into pellets or balls. This material goes to a traveling-grate sintering machine where direct contact with hot combustion gases sinters the individual particles of the pellet and completely burns off the residual carbon in the fly ash. The product is then crushed, screened, graded, and stored in yard piles.

Clay sintering involves the driving off of entrained volatile matter. It is desirable that the clay contain a sufficient amount of volatile matter so that the resultant aggregate will not be too heavy. It is thus sometimes necessary to mix the clay with finely pulverized coke (up to 10 percent coke by weight).[2,3] In the sintering process the clay is first mixed with pulverized coke, if necessary, and then pelletized. The clay is next sintered in a rotating kiln or on a traveling grate. The sintered pellets are then crushed, screened, and stored, in a procedure similar to that for fly ash pellets.

8.8.2 Emissions and Controls[1]

In fly-ash sintering, improper handling of the fly ash creates a dust problem. Adequate design features, including fly-ash wetting systems and particulate collection systems on all transfer points and on crushing and screening operations, would greatly reduce emissions. Normally, fabric filters are used to control emissions from the storage silo, and emissions are low. The absence of this dust collection system, however, would create a major emission problem. Moisture is added at the point of discharge from the silo to the agglomerator, and very few emissions occur there. Normally, there are few emissions from the sintering machine, but if the grate is not properly maintained, a dust problem is created. The consequent crushing, screening, handling, and storage of the sintered product also create dust problems.

In clay sintering, the addition of pulverized coke presents an emission problem because the sintering of coke-impregnated dry pellets produces more particulate emissions than the sintering of natural clay. The crushing, screening, handling, and storage of the sintered clay pellets creates dust problems similar to those encountered in fly-ash sintering. Emission factors for both clay and fly-ash sintering are shown in Table 8.8-1.

Table 8.8-1. PARTICULATE EMISSION FACTORS FOR SINTERING OPERATIONS[a]
EMISSION FACTOR RATING: C

Type of material	Sintering operation[b]		Crushing, screening, and yard storage[b,c]	
	lb/ton	kg/MT	lb/ton	kg/MT
Fly ash[d]	110	55	e	e
Clay mixed with coke[f,g]	40	20	15	7.5
Natural clay[h,i]	12	6	12	6

[a]Emission factors expressed as units per unit weight of finished product.
[b]Cyclones would reduce this emission by about 80 percent. Scrubbers would reduce this emission by about 90 percent.
[c]Based on data in section on stone quarrying and processing.
[d]Reference 1.
[e]Included in sintering losses.
[f]90 percent clay, 10 percent pulverized coke; traveling-grate, single-pass, up-draft sintering machine.
[g]References 3 through 5.
[h]Rotary dryer sinterer.
[i]Reference 2.

References for Section 8.8

1. Air Pollutant Emission Factors. Final Report. Resources Research, Inc. Reston, Va. Prepared for National Air Pollution Control Administration, Durham, N.C., under Contract Number CPA-22-69-119. April 1970.

2. Communication between Resources Research, Incorporated, Reston, Virginia, and a clay sintering firm. October 2, 1969.

3. Communication between Resources Research, Incorporated, Reston, Virginia, and an anonymous Air Pollution Control Agency. October 16, 1969.

4. Henn, J. J. et al. Methods for Producing Alumina from Clay: An Evaluation of Two Lime Sinter Processes. Department of the Interior, Bureau of Mines. Washington, D.C. Report of Investigation Number 7299. September 1969.

5. Peters, F. A. et al. Methods for Producing Alumina from Clay: An Evaluation of the Lime-Soda Sinter Process. Department of the Interior, Bureau of Mines. Washington, D.C. Report of Investigation Number 6927. 1967.

8.9 COAL CLEANING

8.9.1 Process Description[1]

Coal cleaning is the process by which undesirable materials are removed from bituminous and anthracite coal and lignite. The coal is screened, classified, washed, and dried at coal preparation plants. The major sources of air pollution from these plants are the thermal dryers. Seven types of thermal dryers are presently used: rotary, screen, cascade, continuous carrier, flash or suspension, multilouver, and fluidized bed. The three major types, however, are the flash, multilouver, and fluidized bed.

In the flash dryer, coal is fed into a stream of hot gases where instantaneous drying occurs. The dried coal and wet gases are drawn up a drying column and into the cyclone for separation. In the multilouver dryer, hot gases are passed through falling curtains of coal. The coal is raised by flights of a specially designed conveyor. In the fluidized bed the coal is suspended and dried above a perforated plate by rising hot gases.

8.9.2 Emissions and Controls[1]

Particulates in the form of coal dust constitute the major air pollution problem from coal cleaning plants. The crushing, screening, or sizing of coal are minor sources of dust emissions; the major sources are the thermal dryers. The range of concentration, quantity, and particle size of emissions depends upon the type of collection equipment used to reduce particulate emissions from the dryer stack. Emission factors for coal-cleaning plants are shown in Table 8.9-1. Footnote b of the table lists various types of control equipment and their possible efficiencies.

Table 8.9-1. PARTICULATE EMISSION FACTORS FOR THERMAL COAL DRYERS[a]
EMISSION FACTOR RATING: B

Type of dryer	Uncontrolled emissions[b]	
	lb/ton	kg/MT
Fluidized bed[c]	20	10
Flash[c]	16	8
Multilouvered[d]	25	12.5

[a]Emission factors expressed as units per unit weight of coal dried.
[b]Typical collection efficiencies are: cyclone collectors (product recovery), 70 percent; multiple cyclones (product recovery), 85 percent; water sprays following cyclones, 95 percent; and wet scrubber following cyclones, 99 to 99.9 percent.
[c]References 2 and 3.
[d]Reference 4.

References for Section 8.9

1. Air Pollutant Emission Factors. Final Report. Resources Research, Inc. Reston, Va. Prepared for National Air Pollution Control Administration, Durham, N.C., under Contract Number CPA-22-69-119. April 1970.

2. Unpublished stack test results on thermal coal dryers. Pennsylvania Department of Health, Bureau of Air Pollution Control. Harrisburg, Pa.

3. Amherst's Answer to Air Pollution Laws. Coal Mining and Processing. p. 26-29, February 1970.

4. Jones, D. W. Dust Collection at Moss. No. 3. Mining Congress Journal. *55*(7):53-56, July 1969.

8.10 CONCRETE BATCHING

8.10.1 Process Description[1-3]

Concrete batching involves the proportioning of sand, gravel, and cement by means of weigh hoppers and conveyors into a mixing receiver such as a transit mix truck. The required amount of water is also discharged into the receiver along with the dry materials. In some cases, the concrete is prepared for on-site building construction work or for the manufacture of concrete products such as pipes and prefabricated construction parts.

8.10.2 Emissions and Controls[1]

Particulate emissions consist primarily of cement dust, but some sand and aggregate gravel dust emissions do occur during batching operations. There is also a potential for dust emissions during the unloading and conveying of concrete and aggregates at these plants and during the loading of dry-batched concrete mix. Another source of dust emissions is the traffic of heavy equipment over unpaved or dusty surfaces in and around the concrete batching plant.

Control techniques include the enclosure of dumping and loading areas, the enclosure of conveyors and elevators, filters on storage bin vents, and the use of water sprays. Table 8.10-1 presents emission factors for concrete batch plants.

Table 8.10-1. PARTICULATE EMISSION FACTORS FOR CONCRETE BATCHING[a]
EMISSION FACTOR RATING: C

Concrete batching[b]	Emission	
	lb/yd^3 of concrete	kg/m^3 of concrete
Uncontrolled	0.2	0.12
Good control	0.02	0.012

[a]One cubic yard of concrete weighs 4000 pounds (1 m^3 = 2400 kg). The cement content varies with the type of concrete mixed, but 735 pounds of cement per yard (436 kg/m^3) may be used as a typical value.

[b]Reference 4.

References for Section 8.10

1. Air Pollutant Emission Factors. Final Report. Resources Research Inc. Reston, Va. Prepared for National Air Pollution Control Administration, Durham, N.C., under Contract Number CPA-22-69-119. April 1970.

2. Vincent, E. J. and J. L. McGinnity. Concrete Batching Plants. In: Air Pollution Engineering Manual. Danielson, J. A. (ed.). U.S. DHEW, PHS, National Center for Air Pollution Control. Cincinnati, Ohio. PHS Publication Number 999-AP-40. 1967. p. 334-335.

3. Communication between Resources Research, Incorporated, Reston, Virginia, and the National Ready-Mix Concrete Association. September 1969.

4. Allen, G. L. et al. Control of Metallurgical and Mineral Dusts and Fumes in Los Angeles County. Department of the Interior, Bureau of Mines. Washington, D.C. Information Circular Number 7627. April 1952.

8.11 FIBER GLASS MANUFACTURING

Revised by James H. Southerland

8.11.1 Process Description

Glass fiber products are manufactured by melting various raw materials to form glass (predominantly borosilicate), drawing the molten glass into fibers, and coating the fibers with an organic material. The two basic types of fiber glass products, textile and wool, are manufactured by different processes. Typical flow diagrams are shown in Figures 8.11-1 and 8.11-2.

8.11.1.1 Textile Products–In the manufacture of textiles, the glass is normally produced in the form of marbles after refining at about 2800°F (1540°C) in a regenerative, recuperative, or electric furnace. The marble-forming stage can be omitted with the molten glass passing directly to orifices to be formed or drawn into fiber filaments. The fiber filaments are collected on spools as continuous fibers and staple yarns, or in the form of a fiber glass mat on a flat, moving surface. An integral part of the textile process is treatment with organic binder materials followed by a curing step.

8.11.1.2 Wool Products–In the manufacture of wool products, which are generally used in the construction industry as insulation, ceiling panels, etc., the molten glass is most frequently fed directly into the forming line without going through a marble stage. Fiber formation is accomplished by air blowing, steam blowing, flame blowing, or centrifuge forming. The organic binder is sprayed onto the hot fibers as they fall from the forming device. The fibers are collected on a moving, flat surface and transported through a curing oven at a temperature of 400° to 600°F (200° to 315°C) where the binder sets. Depending upon the product, the wool may also be compressed as a part of this operation.

8.11.2 Emissions and Controls[1]

The major emissions from the fiber glass manufacturing processes are particulates from the glass-melting furnace, the forming line, the curing oven, and the product cooling line. In addition, gaseous organic emissions occur from the forming line and curing oven. Particulate emissions from the glass-melting furnace are affected by basic furnace design, type of fuel (oil, gas, or electricity), raw material size and composition, and type and volume of the furnace heat-recovery system. Organic and particulate emissions from the forming line are most affected by the composition and quality of the binder and by the spraying techniques used to coat the fibers; very fine spray and volatile binders increase emissions. Emissions from the curing ovens are affected by oven temperature and binder composition, but direct-fired afterburners with heat exchangers may be used to control these emissions. Emission factors for fiber glass manufacturing are summarized in Table 8.11-1.

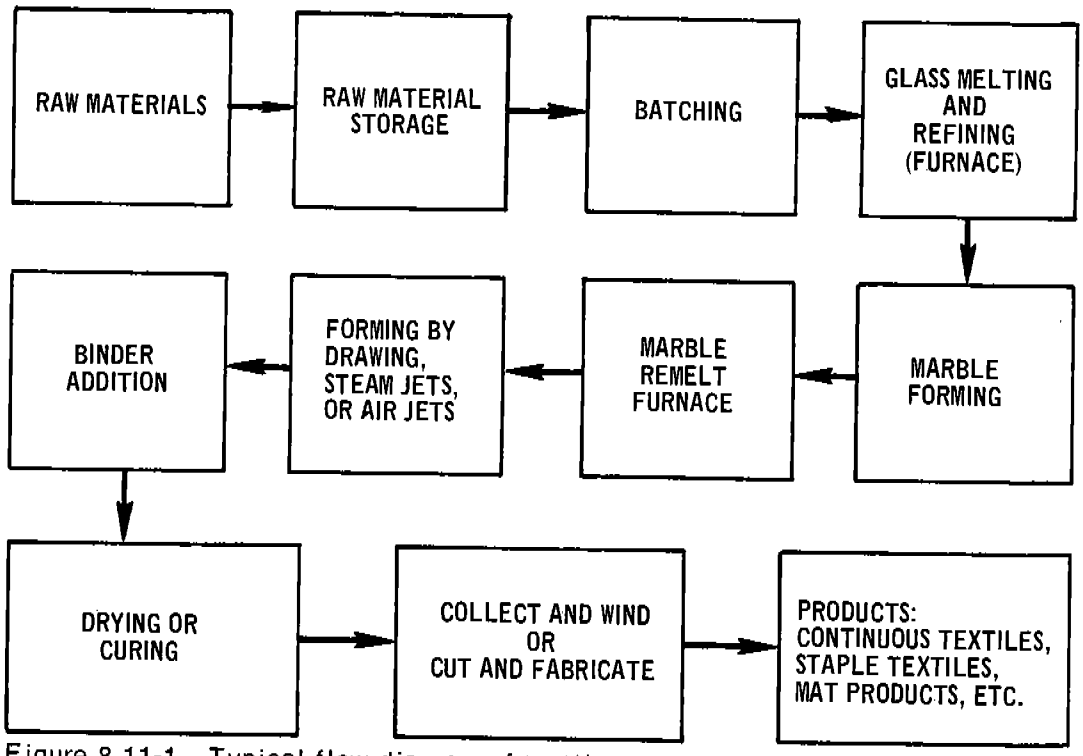

Figure 8.11-1. Typical flow diagram of textile-type glass fiber production process.

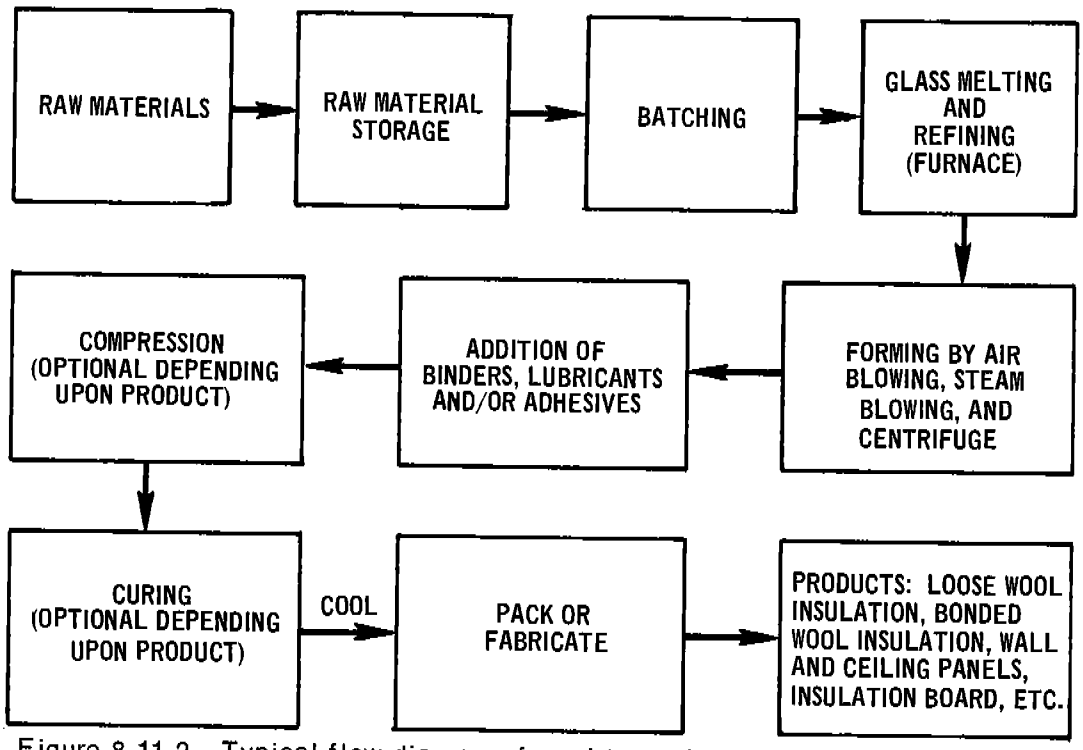

Figure 8.11-2. Typical flow diagram of wool-type glass fiber production process.

Table 8.11-1. EMISSION FACTORS FOR FIBER GLASS MANUFACTURING WITHOUT CONTROLS[a,b]
EMISSION FACTOR RATING: A

Type of process	Particulate		Sulfur oxides (SO_2)		Carbon monoxide		Nitrogen oxides (NO_2)		Fluorides	
	lb/ton	kg/MT	lb/ton	kg/MT	lb/ton	kg/MT	lb/ton	kg/MT	lb/ton	kg/MT
Textile products										
Glass furnace[c]										
Regenerative	16.4	8.2	29.6	14.8	1.1	0.6	9.2	4.6	3.8	1.9
Recuperative	27.8	13.9	2.7	1.4	0.9	0.5	29.2	14.6	12.5	6.3
Electric	ND[d]	–	–	–	–	–	–	–	–	–
Forming	1.6	0.8	–	–	–	–	–	–	–	–
Curing oven	1.2	0.6	–	–	1.5	0.8	2.6	1.3	–	–
Wool products[e]										
Glass furnace[c]										
Regenerative	21.5	10.8	10.0	5.0	0.25	0.13	5.0	2.5	0.12	0.06
Recuperative	28.3	14.2	9.5	4.8	0.25	0.13	1.70	0.9	0.11	0.06
Electric	0.6	0.3	0.04	0.02	0.05	0.03	0.27	0.14	0.02	0.01
Forming	57.6	28.8	–	–	–	–	–	–	–	–
Curing oven	3.5	1.8	ND	–	1.7	0.9	1.1	0.6	–	–
Cooling	1.3	0.7	–	–	0.2	0.1	0.2	0.1	–	–

[a] Emission factors expressed as units per unit weight of material processed.
[b] Reference 3.
[c] Only one process is generally used at any one plant.
[d] No data available.
[e] In addition, 0.09 lb/ton (0.05 kg/MT) phenol and 3.3 lb/ton (1.7 mg/MT) aldehyde are released from the wool curing and cooling operations.

References for Section 8.11

1. Air Pollutant Emission Factors. Final Report. Resources Research, Inc., Reston, Va. Prepared for National Air Pollution Control Administration, Durham, N.C., under Contract Number CPA-22-69-119. April 1970.

2. Kirk-Othmer. Encyclopedia of Chemical Technology, Vol. X. 2nd Ed. New York, Interscience (John Wiley and Sons, Inc.). 1966. p. 564-566.

3. Private correspondence from S. H. Thomas, Owens-Corning Fiberglas Corp., Toledo, Ohio including intra-company correspondence from R. J. Powels. Subject: Air Pollutant Emission Factors. April 26, 1972.

8.12 FRIT MANUFACTURING

8.12.1 Process Description[1,2]

Frit is used in enameling iron and steel and in glazing porcelain and pottery. In a typical plant, the raw materials consist of a combination of materials such as borax, feldspar, sodium fluoride or fluorspar, soda ash, zinc oxide, litharge, silica, boric acid, and zircon. Frit is prepared by fusing these various minerals in a smelter, and the molten material is then quenched with air or water. This quenching operation causes the melt to solidify rapidly and shatter into numerous small glass particles, called frit. After a drying process, the frit is finely ground in a ball mill where other materials are added.

8.12.2 Emissions and Controls[2]

Significant dust and fume emissions are created by the frit-smelting operation. These emissions consist primarily of condensed metallic oxide fumes that have volatilized from the molten charge. They also contain mineral dust carryover and sometimes hydrogen fluoride. Emissions can be reduced by not rotating the smelter too rapidly (to prevent excessive dust carry-over) and by not heating the batch too rapidly or too long (to prevent volatilizing the more fusible elements).

The two most feasible control devices for frit smelters are baghouses and venturi water scrubbers. Emission factors for frit smelters are shown in Table 8.12-1. Collection efficiencies obtainable for venturi scrubbers are also shown in the table.

Table 8.12-1. EMISSION FACTORS FOR FRIT SMELTERS WITHOUT CONTROLS[a]
EMISSION FACTOR RATING: C

Type of furnace	Particulates[b]		Fluorides[b]	
	lb/ton	kg/MT	lb/ton	kg/MT
Rotary	16	8	5	2.5

[a]Reference 2. Emission factors expressed as units per unit weight of charge.
[b]A venturi scrubber with a 21-inch (535-mm) water-gauge pressure drop can reduce particulate emissions by 67 percent and fluorides by 94 percent.

References for Section 8.12

1. Duprey, R. L. Compilation of Air Pollutant Emission Factors. U.S. DHEW, PHS, National Center for Air Pollution Control. Durham, N.C. PHS Publication Number 999-AP-42. 1968. p. 37-38.

2. Spinks, J. L. Frit Smelters. In: Air Pollution Engineering Manual. Danielson, J. A. (ed.), U.S. DHEW, PHS, National Center for Air Pollution Control. Cincinnati, Ohio. PHS Publication Number 999-AP-40. 1967. p. 738-744.

8.13 GLASS MANUFACTURING

8.13.1 Process Description[1,2]

Nearly all glass produced commercially is one of five basic types: soda-lime, lead, fused silica, borosilicate, and 96 percent silica. Of these, the modern soda-lime glass constitutes 90 percent of the total glass produced and will thus be the only type discussed in this section. Soda-lime glass is produced on a massive scale in large, direct-fired, continuous-melting furnaces in which the blended raw materials are melted at 2700°F (1480°C) to form glass.

8.13.2 Emissions and Controls[1,2]

Emissions from the glass-melting operation consist primarily of particulates and fluorides, if fluoride-containing fluxes are used in the process. Because the dust emissions contain particles that are only a few microns in diameter, cyclones and centrifugal scrubbers are not as effective as baghouses or filters in collecting particulate matter. Table 8.13-1 summarizes the emission factors for glass melting.

Table 8.13-1. EMISSION FACTORS FOR GLASS MELTING
EMISSION FACTOR RATING: D

Type of glass	Particulates[a]		Fluorides[b]	
	lb/ton	kg/MT	lb/ton	kg/MT
Soda-lime	2	1	4F[c]	2F[c]

[a] Reference 3. Emission factors expressed as units per unit weight of glass produced.
[b] Reference 4.
[c] F equals weight percent of fluoride in input to furnace; e.g., if fluoride content is 5 percent, the emission factor would be 4F or 20 (2F or 10).

References for Section 8.13

1. Netzley, A. B. and J. L. McGinnity. Glass Manufacture. In: Air Pollution Engineering Manual. Danielson, J.A. (ed.). U.S. DHEW, PHS, National Center for Air Pollution Control. Cincinnati, Ohio. PHS Publication Number 999-AP-40. 1967. p. 720-730.

2. Duprey, R. L. Compilation of Air Pollutant Emission Factors. U.S. DHEW, PHS, National Center for Air Pollution Control. Durham, N.C. PHS Publication Number 999-AP-42. 1968. p. 38.

3. Technical Progress Report: Control of Stationary Sources. Los Angeles County Air Pollution Control District. *1*: April 1960.

4. Semrau, K. T. Emissions of Fluorides from Industrial Processes: A Review. J. Air Pol. Control Assoc. *7(2)*:92-108, August 1957.

8.14 GYPSUM MANUFACTURING

8.14.1 Process Description[1]

Gypsum, or hydrated calcium sulfate, is a naturally occurring mineral that is an important building material. When heated gypsum loses its water of hydration, it becomes plaster of paris, or when blended with fillers it serves as wall plaster. In both cases the material hardens as water reacts with it to form the solid crystalline hydrate.[2,3]

The usual method of calcination of gypsum consists of grinding the mineral and placing it in large, externally heated calciners. Complete calcination of 1 ton (0.907 MT) of plaster takes about 3 hours and requires about 1.0 million Btu (0.25 million kcal).[4,5]

8.14.2 Emissions[1]

The process of calcining gypsum appears to be devoid of any air pollutants because it involves simply the relatively low-temperature removal of the water of hydration. However, the gases created by the release of the water of crystalization carry gypsum rock dust and partially calcined gypsum dust into the atmosphere.[6] In addition, dust emissions occur from the grinding of the gypsum before calcining and from the mixing of the calcined gypsum with filler. Table 8.14-1 presents emission factors for gypsum processing.

Table 8.14-1. PARTICULATE EMISSION FACTORS FOR GYPSUM PROCESSING[a]
EMISSION FACTOR RATING: C

Type of process	Uncontrolled emissions		With fabric filter		With cyclone and electrostatic precipitator	
	lb/ton	kg/MT	lb/ton	kg/MT	lb/ton	kg/MT
Raw-material dryer (if used)	40	20	0.2	0.1	0.4	0.2
Primary grinder	1	0.5	0.001	0.0005	–	–
Calciner	90	45	0.1	0.05	–	–
Conveying	0.7	0.35	0.001	0.0005	–	–

[a]Reference 7. Emission factors expressed as units per unit weight of process throughput.

References for Section 8.14

1. Air Pollutant Emission Factors. Final Report. Resources Research Inc. Reston, Va. Prepared for National Air Pollution Control Administration, Durham, N.C., under Contract Number CPA-22-69-119. April 1970.

2. Shreve, R. N. Chemical Process Industries, 3rd Ed. New York, McGraw-Hill Book Company. 1967. p. 180-182.

3. Havinghorst, R. A Quick Look at Gypsum Manufacture. Chem. Eng. *72*:52-54, January 4, 1965.

4. Work, L. T. and A. L. Stern. Size Reduction and Size Enlargement. In: Chemical Engineers Handbook, 4th Ed. New York, McGraw-Hill Book Company. 1963. p. 51.

5. Private communication on emissions from gypsum plants between M. M. Hambuik and the National Gypsum Association, Chicago, Illinois. January 1970.

6. Culhane, F. R. Chem. Eng. Progr. *64*:72, January 1, 1968.

7. Communication between Resources Research, Incorporated, Reston, Virginia, and the Maryland State Department of Health, Baltimore, Maryland. November 1969.

8.15 LIME MANUFACTURING

8.15.1 General[1]

Lime (CaO) is the high-temperature product of the calcination of limestone ($CaCO_3$). Lime is manufactured in vertical or rotary kilns fired by coal, oil, or natural gas.

8.15.2 Emissions and Controls[1]

Atmospheric emissions in the lime manufacturing industry include particulate emissions from the mining, handling, crushing, screening, and calcining of the limestone and combustion products from the kilns. The vertical kilns, because of a larger size of charge material, lower air velocities, and less agitation, have considerably fewer particulate emissions. Control of emissions from these vertical kilns is accomplished by sealing the exit of the kiln and exhausting the gases through control equipment.

Particulate emission problems are much greater on the rotary kilns because of the smaller size of the charge material, the higher rate of fuel consumption, and the greater air velocities through the rotary chamber. Methods of control on rotary-kiln plants include simple and multiple cyclones, wet scrubbers, baghouses, and electrostatic precipitators.[2] Emission factors for lime manufacturing are summarized in Table 8.15-1.

Table 8.15-1. PARTICULATE EMISSION FACTORS FOR LIME MANUFACTURING WITHOUT CONTROLS[a]
EMISSION FACTOR RATING: B

Operation	Emissions[b]	
	lb/ton	kg/MT
Crushing[c]		
Primary	31	15.5
Secondary	2	1
Calcining[d]		
Vertical kiln	8	4
Rotary kiln	200	100

[a] Emission factors expressed as units per unit weight of lime processed.

[b] Cyclones could reduce these factors by about 70 percent. Venturi scrubbers could reduce these factors by about 95 to 99 percent. Fabric filters could reduce these factors by about 99 percent.

[c] Reference 3.

[d] References 2, 4, and 5.

References for Section 8.15

1. Air Pollutant Emission Factors. Final Report. Resources Research, Inc. Reston, Va. Prepared for National Air Pollution Control Administration, Durham, N.C., under Contract Number CPA-22-69-119. April 1970.

2. Lewis, C. and B. Crocker. The Lime Industry's Problem of Airborne Dust. J. Air Pol. Control Assoc. *19*:31-39, January 1969.

3. State of Maryland Emission Inventory Data. Maryland State Department of Health, Baltimore, Maryland. 1969.

4. A Study of the Lime Industry in the State of Missouri for the Air Conservation Commission of the State of Missouri. Reston, Virginia, Resources Research, Incorporated. December 1967. p. 54.

5. Communication between Midwest Research Institute and a control device manufacturer. 1968.

8.16 MINERAL WOOL MANUFACTURING

8.16.1 Process Description[1,2]

The product mineral wool used to be divided into three categories: slag wool, rock wool, and glass wool. Today, however, straight slag wool and rock wool as such are no longer manufactured. A combination of slag and rock constitutes the charge material that now yields a product classified as a mineral wool, used mainly for thermal and acoustical insulation.

Mineral wool is made primarily in cupola furnaces charged with blast-furnace slag, silica rock, and coke. The charge is heated to a molten state at about 3000°F (1650°C) and then fed to a blow chamber, where steam atomizes the molten rock into globules that develop long fibrous tails as they are drawn to the other end of the chamber. The wool blanket formed is next conveyed to an oven to cure the binding agent and then to a cooler.

8.16.2 Emissions and Controls

The major source of emissions is the cupola or furnace stack. Its discharge consists primarily of condensed fumes that have volatilized from the molten charge and gases such as sulfur oxides and fluorides. Minor sources of particulate emissions include the blowchamber, curing oven, and cooler. Emission factors for various stages of mineral wool processing are shown in Table 8.16-1. The effect of control devices on emissions is shown in footnotes to the table.

Table 8.16-1. EMISSION FACTORS FOR MINERAL WOOL PROCESSING WITHOUT CONTROLS[a]
EMISSION FACTOR RATING: C

Type of process	Particulates		Sulfur oxides	
	lb/ton	kg/MT	lb/ton	kg/MT
Cupola	22	11	0.02	0.01
Reverberatory furnace	5	2.5	Neg[b]	Neg
Blow chamber[c]	17	8.5	Neg	Neg
Curing oven[d]	4	2	Neg	Neg
Cooler	2	1	Neg	Neg

[a]Reference 2. Emission factors expressed as units per unit weight of charge.
[b]Negligible.
[c]A centrifugal water scrubber can reduce particulate emissions by 60 percent.
[d]A direct-flame afterburner can reduce particulate emissions by 50 percent.

References for Section 8.16

1. Duprey, R. L. Compilation of Air Pollutant Emission Factors. U.S. DHEW, PHS, National Center for Air Pollution Control. Durham, N. C. PHS Publication Number 999-AP-42. 1968. p. 39-40.

2. Spinks, J. L. Mineral Wool Furnaces. In: Air Pollution Engineering Manual. Danielson, J. A. (ed.). U.S. DHEW, PHS, National Center for Air Pollution Control. Cincinnati, Ohio. PHS Publication Number 999-AP-40. 1967. p. 343-347.

8.17 PERLITE MANUFACTURING

8.17.1 Process Description[1,2]

Perlite is a glassy volcanic rock consisting of oxides of silicon and aluminum combined as a natural glass by water of hydration. By a process called exfoliation, the material is rapidly heated to release water of hydration and thus to expand the spherules into low-density particles used primarily as aggregate in plaster and concrete. A plant for the expansion of perlite consists of ore unloading and storage facilities, a furnace-feeding device, an expanding furnace, provisions for gas and product cooling, and product-classifying and product-collecting equipment. Vertical furnaces, horizontal stationary furnaces, and horizontal rotary furnaces are used for the exfoliation of perlite, although the vertical types are the most numerous. Cyclone separators are used to collect the product.

8.17.2 Emissions and Controls[2]

A fine dust is emitted from the outlet of the last product collector in a perlite expansion plant. The fineness of the dust varies from one plant to another, depending upon the desired product. In order to achieve complete control of these particulate emissions, a baghouse is needed. Simple cyclones and small multiple cyclones are not adequate for collecting the fine dust from perlite furnaces. Table 8.17-1 summarizes the emissions from perlite manufacturing.

Table 8.17-1. PARTICULATE EMISSION FACTORS FOR PERLITE EXPANSION FURNACES WITHOUT CONTROLS[a]
EMISSION FACTOR RATING: C

Type of furnace	Emissions[b]	
	lb/ton	kg/MT
Vertical	21	10.5

[a]Reference 3. Emission factors expressed as units per unit weight of charge.

[b]Primary cyclones will collect 80 percent of the particulates above 20 micrometers, and baghouses will collect 96 percent of the particles above 20 micrometers.[2]

References for Section 8.17

1. Duprey, R. L. Compilation of Air Pollutant Emission Factors. U.S. DHEW, PHS, National Center for Air Pollution Control. Durham, N.C. PHS Publication Number 999-AP-42. 1968. p. 39.

2. Vincent, E. J. Perlite-Expanding Furnaces. In: Air Pollution Engineering Manual. Danielson, J. A. (ed.). U.S. DHEW, PHS, National Center for Air Pollution Control. Cincinnati, Ohio. PHS Publication Number 999-AP-40. 1967. p. 350-352.

3. Unpublished data on perlite expansion furnace. National Center for Air Pollution Control. Cincinnati, Ohio. July 1967.

8.18 PHOSPHATE ROCK PROCESSING

8.18.1 Process Description[1]

Phosphate rock preparation involves beneficiation to remove impurities, drying to remove moisture, and grinding to improve reactivity. Usually, direct-fired rotary kilns are used to dry phosphate rock. These dryers burn natural gas or fuel oil and are fired counter-currently. The material from the dryers may be ground before storage in large storage silos. Air-swept ball mills are preferred for grinding phosphate rock.

8.18.2 Emissions and Controls[1]

Although there are no significant emissions from phosphate rock beneficiation plants, emissions in the form of fine rock dust may be expected from drying and grinding operations. Phosphate rock dryers are usually equipped with dry cyclones followed by wet scrubbers. Particulate emissions are usually higher when drying pebble rock than when drying concentrate because of the small adherent particles of clay and slime on the rock. Phosphate rock grinders can be a considerable source of particulates. Because of the extremely fine particle size, baghouse collectors are normally used to reduce emissions. Emission factors for phosphate rock processing are presented in Table 8.18-1.

Table 8.18-1. PARTICULATE EMISSION FACTORS FOR PHOSPHATE ROCK PROCESSING WITHOUT CONTROLS[a]
EMISSION FACTOR RATING: C

Type of source	Emissions	
	lb/ton	kg/MT
Drying[b,c]	15	7.5
Grinding[b,d]	20	10
Transfer and storage[d,e]	2	1
Open storage piles[e]	40	20

[a]Emission factors expressed as units per unit weight of phosphate rock.
[b]References 2 and 3.
[c]Dry cyclones followed by wet scrubbers can reduce emissions by 95 to 99 percent.
[d]Dry cyclones followed by fabric filters can reduce emissions by 99.5 to 99.9 percent.
[e]Reference 3.

References for Section 8.18

1. Stern, A. (ed.). In: Air Pollution, Vol. III, 2nd Ed. Sources of Air Pollution and Their Control. New York, Academic Press. 1968. p. 221-222.

2. Unpublished data from phosphate rock preparation plants in Florida. Midwest Research Institute. June 1970.

3. Control Techniques for Fluoride Emissions. Internal document. U.S. Environmental Protection Agency, Office of Air Programs, Durham, N.C. p. 4-46, 4-36, and 4-34.

8.19 SAND AND GRAVEL PROCESSING

By James H. Southerland

8.19.1 Process Description[1]

Deposits of sand and gravel, the consolidated granular materials resulting from the natural disintegration of rock or stone, are found in banks and pits and in subterranean and subaqueous beds.

Depending upon the location of the deposit, the materials are excavated using power shovels, draglines, cableways, suction dredge pumps, or other apparatus; light-charge blasting may be necessary to loosen the deposit. The materials are transported to the processing plant by suction pump, earth mover, barge, truck, or other means. The processing of sand and gravel for a specific market involves the use of different combinations of washers; screens and classifiers, which segregate particle sizes; crushers, which reduce oversize material; and storage and loading facilities.

8.19.2 Emissions[2,3]

Dust emissions occur during conveying, screening, crushing, and storing operations. Because these materials are generally moist when handled, emissions are much lower than in a similar crushed stone operation. Sizeable emissions may also occur as vehicles travel over unpaved roads and paved roads covered by dirt. Although little actual source testing has been done, an estimate has been made for particulate emissions from a plant using crushers:

Particulate emissions: 0.1 lb/ton (0.05 kg/MT) of product.[3]

References for Section 8.19

1. Walker, Stanton. Production of Sand and Gravel. National Sand and Gravel Association. Washington, D.C. Circular Number 57. 1954.

2. Schreibeis, William J. and H. H. Schrenk. Evaluation of Dust and Noise Conditions at Typical Sand and Gravel Plants. Study conducted under the auspices of the Committee on Public Relations, National Sand and Gravel Association, by the Industrial Hygiene Foundation of America, Inc. 1958.

3. Particulate Pollutant System Study, Vol. I, Mass Emissions. Midwest Research Institute, Kansas City, Mo. Prepared for the Environmental Protection Agency, Research Triangle Park, N.C., under Contract Number CPA 22-69-104. May 1971.

8.20 STONE QUARRYING AND PROCESSING

8.20.1 Process Description[1]

Rock and crushed stone products are loosened by drilling and blasting them from their deposit beds and are removed with the use of heavy earth-moving equipment. This mining of rock is done primarily in open pits. The use of pneumatic drilling and cutting, as well as blasting and transferring, causes considerable dust formation. Further processing includes crushing, regrinding, and removal of fines.[2] Dust emissions can occur from all of these operations, as well as from quarrying, transferring, loading, and storage operations. Drying operations, when used, can also be a source of dust emissions.

8.20.2 Emissions[1]

As enumerated above, dust emissions occur from many operations in stone quarrying and processing. Although a big portion of these emissions is heavy particles that settle out within the plant, an attempt has been made to estimate the suspended particulates. These emission factors are shown in Table 8.20-1. Factors affecting emissions include the amount of rock processed; the method of transfer of the rock; the moisture content of the raw material; the degree of enclosure of the transferring, processing, and storage areas; and the degree to which control equipment is used on the processes.

Table 8.20-1. PARTICULATE EMISSION FACTORS FOR ROCK-HANDLING PROCESSES
EMISSION FACTOR RATING: C

Type of process	Uncontrolled total[a]		Settled out in plant, %	Suspended emission	
	lb/ton	kg/MT		lb/ton	kg/MT
Dry crushing operations[b,c]					
Primary crushing	0.5	0.25	80	0.1	0.05
Secondary crushing and screening	1.5	0.75	60	0.6	0.3
Tertiary crushing and screening (if used)	6	3	40	3.6	1.8
Recrushing and screening	5	2.5	50	2.5	1.25
Fines mill	6	3	25	4.5	2.25
Miscellaneous operations[d]					
Screening, conveying, and handling[e]	2	1			
Storage pile losses[f]	10	5			

[a]Typical collection efficiencies: cyclone, 70 to 85 percent; fabric filter, 99 percent.

[b]All values are based on raw material entering primary crusher, except those for recrushing and screening, which are based on throughput for that operation.

[c]Reference 3.

[d]Based on units of stored product.

[e]Reference 4.

[f]The significance of storage pile losses is mentioned in Reference 5. The factor assigned here is the author's estimate for uncontrolled total emissions. Use of this factor should be tempered with knowledge about the size of materials stored, the local meteorological factors, the frequency with which the piles are disturbed, etc.

References for Section 8.20

1. Air Pollutant Emission Factors. Final Report. Resources Research, Inc. Reston, Va. Prepared for National Air Pollution Control Administration, Durham, N.C., under Contract Number CPA-22-69-119. April 1970.

2. Communication between Resources Research, Incorporated, Reston, Virginia, and the National Crushed Stone Association. September 1969.

3. Culver, P. Memorandum to files. U.S. DHEW, PHS, National Air Pollution Control Administration, Division of Abatement, Durham, N.C. January 6, 1968.

4. Unpublished data on storage and handling or rock products. U.S. DHEW, PHS, National Air Pollution Control Administration, Division of Abatement, Durham, N.C. May 1967.

5. Stern, A. (ed.) In: Air Pollution, Vol. III, 2nd Ed. Sources of Air Pollution and Their Control. New York, Academic Press. 1968. p. 123-127.

9. PETROLEUM INDUSTRY

9.1 PETROLEUM REFINING

Revised by William M. Vatavuk

9.1.1 General

Although a modern refinery is a complex system of many processes, the entire operation can be divided into four major steps: separating, converting, treating, and blending. The crude oil is first separated into selected fractions (e.g. gasoline, kerosene, fuel, oil, etc.). Because the relative volumes of each fraction produced by merely separating the crude may not conform to the market demands for each fraction, some of the less valuable products, such as heavy naptha, are converted to products with a greater sale value, such as gasoline. This conversion is accomplished by splitting (cracking), uniting (polymerization), or rearranging (reforming) the original molecules. The final step is the blending of the refined base stocks with each other and with various additives to meet final product specifications. The various unit operations involved at petroleum refineries will be briefly discussed in the following sections. A generalized petroleum refinery flow sheet is shown in Figure 9.1-1.

9.1.2 Crude Oil Distillation[1-6]

Crude oil is a mixture of many different hydrocarbons, some of them combined with small amounts of impurities. Crude oils vary considerably in composition and physical properties, but primarily consist of three families of hydrocarbons: paraffins, saturated hydrocarbons having the empirical formula C_nH_{2n+2}; napthenes, ring-structure saturated hydrocarbons with the formula C_nH_{2n}; and aromatics, characterized by a benzene ring, C_6H_6, in the molecular structure. In addition to carbon and hydrogen, significant amounts of sulfur, oxygen, and nitrogen can be present in crude petroleum.

Separation of these hydrocarbon constituents into their respective fractions is performed by simple distillation in crude topping or skimming units. Crude oil is heated in pipe stills and passed to fractionating towers or columns for vaporization and preparation. Heavy fractions of the crude oil, which do not vaporize in the topping operation, are separated by steam or vacuum distillation. The heavy residuum products are reduced to coke and more valuable volatile products via destructive distillation and coking. Depending on the boiling range of the stock and its stability with respect to heat and product specifications, solvent extraction and/or absorption techniques can also be used. The distillation fractions - "straight run products" - usually include refinery gas, gasoline, kerosene, light fuel oil, diesel oils, gas oil, lube distillate, and heavy bottoms, the amount of each being determined by the type and composition of the crude oil. Some of these products are treated to remove impurities and used as base stocks or sold as finished products; the remainder are used as feedstock for other refinery units.

9.1.2.1 Emissions—The main source of emissions from crude oil preparation processes is the barometric condenser on the vacuum distillation column. This condenser, while maintaining a vacuum on the tower, often allows noncondensable light hydrocarbons and hydrogen sulfide to pass through to the atmosphere. The quantity of these emissions is a function of the unit size, type of feedstock, and the cooling water temperature. Vapor recovery systems reduce these emissions to negligible amounts (see Table 9.1-1).

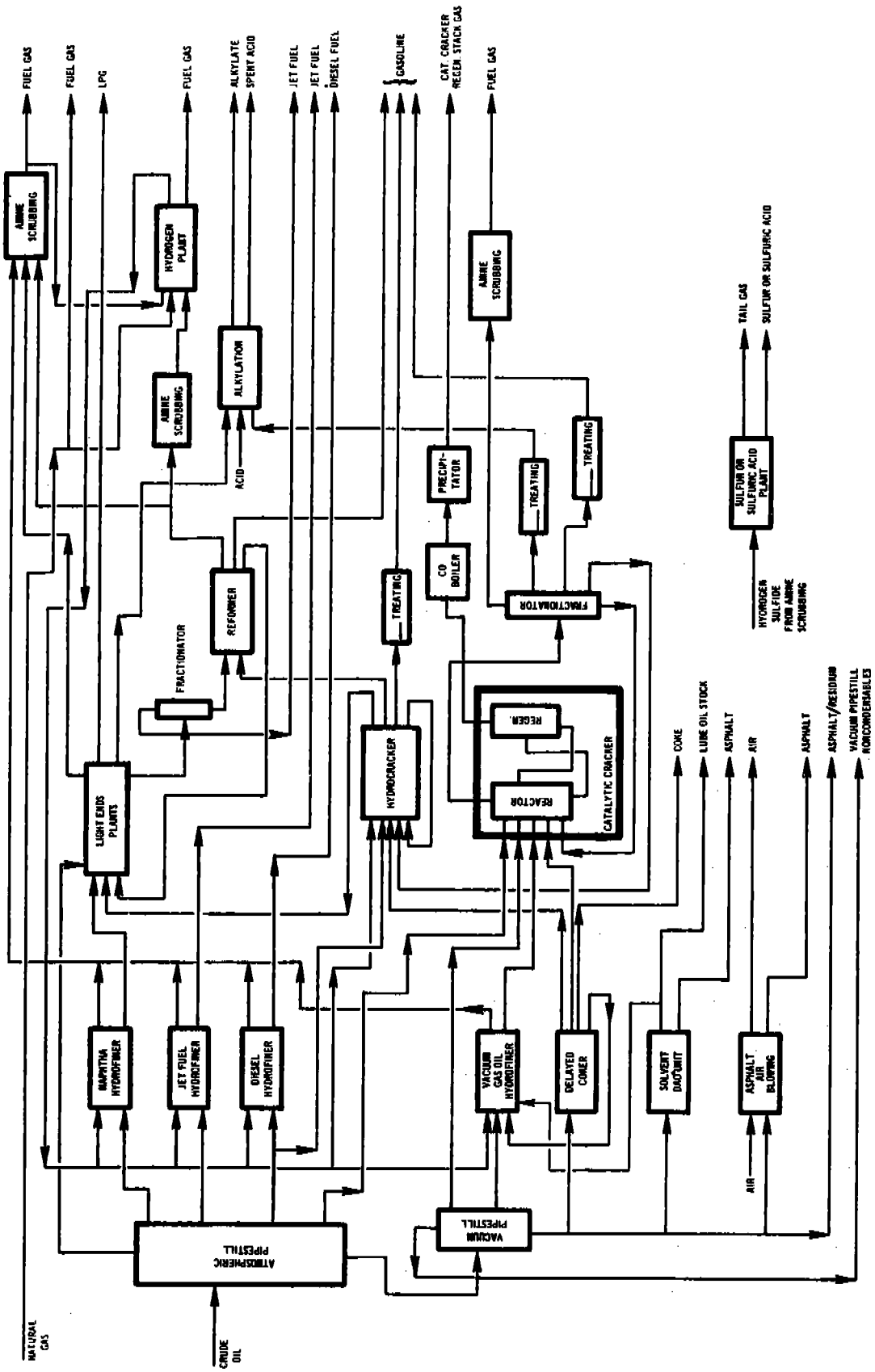

Figure 9.1-1. Basic flow diagram of petroleum refinery.

Table 9.1-1. EMISSION FACTORS FOR PETROLEUM REFINERIES
EMISSION FACTOR RATING: A

Type of process	Particulates	Sulfur oxides (SO_2)	Carbon monoxide	Hydro-carbons	Nitrogen oxides (NO_2)	Alde-hydes	Ammonia
Boilers and process heaters[a]							
lb/10^3 bbl oil burned	840	6,720S[b]	Neg[c]	140	2,900	25	Neg
kg/10^3 liters oil burned	2.4	19.2S	Neg	0.4	8.3	0.071	Neg
lb/10^3 ft^3 gas burned	0.02	2s[d]	Neg	0.03	0.23	0.003	Neg
kg/10^3 m^3 gas burned	0.32	32s	Neg	0.48	3.7	0.048	Neg
Fluid catalytic cracking units[e]							
Uncontrolled							
lb/10^3 bbl fresh feed	242 (93 to 340)[f]	493 (313 to 525)	13,700	220	71.0 (37.1 to 145.0)	19	54
kg/10^3 liters fresh feed	0.695 (0.267 to 0.976)	1.413 (0.898 to 1.505)	39.2	0.630	0.204 (0.107 to 0.416)	0.054	0.155
Electrostatic precipitator and CO boiler							
lb/10^3 bbl fresh feed	44.7 (12.5 to 61.0)	493 (313 to 525)	Neg	220	71.0 (37.1 to 145.0)	19	54
kg/10^3 liters fresh fresh feed	0.128 (0.036 to 0.175)	1.413 (0.898 to 1.505)	Neg	0.630	0.204 (0.107 to 0.416)	0.054	0.155
Moving-bed catalytic cracking units[a]							
lb/10^3 bbl fresh feed	17	60	3,800	87	5	12	6
kg/10^3 liters fresh feed	0.049	0.171	10.8	0.250	0.014	0.034	0.017
Fluid coking units[g]							
Uncontrolled							
lb/10^3 bbl fresh feed	523	NA[h]	Neg	Neg	Neg	Neg	Neg
kg/10^3 liters fresh feed	1.50	NA	Neg	Neg	Neg	Neg	Neg
Electrostatic precipitator							
lb/10^3 bbl fresh feed	6.85	NA	Neg	Neg	Neg	Neg	Neg
kg/10^3 liters fresh feed	0.0196	NA	Neg	Neg	Neg	Neg	Neg

Table 9.1-1. (continued). EMISSION FACTORS PETROLEUM REFINERIES
EMISSION FACTOR RATING: A

Type of process	Particulates	Sulfur oxides (SO_2)	Carbon monoxide	Hydro-carbons	Nitrogen oxides (NO_2)	Alde-hydes	Ammonia
Compressor internal combustion engines[a]							
lb/10^3 ft^3 gas burned	Neg	2s	Neg	1.2	0.9	0.1	0.2
kg/10^3 m^3 gas burned	Neg	32s	Neg	19.3	14.4	1.61	3.2
Blowdown systems[a]							
Uncontrolled							
lb/10^3 bbl refinery capacity	Neg	Neg	Neg	300	Neg	Neg	Neg
kg/10^3 liters refinery capacity	Neg	Neg	Neg	0.860	Neg	Neg	Neg
Vapor recovery system or flaring							
lb/10^3 bbl refinery capacity	Neg	Neg	Neg	5	Neg	Neg	Neg
kg/10^3 liters refinery capacity	Neg	Neg	Neg	0.014	Neg	Neg	Neg
Process drains, Uncontrolled							
lb/10^3 bbl waste water	Neg	Neg	Neg	210	Neg	Neg	Neg
kg/10^3 liters waste water	Neg	Neg	Neg	0.600	Neg	Neg	Neg
Vapor recovery or separator covers							
lb/10^3 bbl waste water	Neg	Neg	Neg	8	Neg	Neg	Neg
kg/10^3 liters waste water	Neg	Neg	Neg	0.023	Neg	Neg	Neg
Vacuum jets[a]							
Uncontrolled							
lb/10^3 bbl vacuum distillate	Neg	Neg	Neg	130	Neg	Neg	Neg
kg/10^3 liters vacuum distillate	Neg	Neg	Neg	0.370	Neg	Neg	Neg
Fume burner or waste-heat boiler							
lb/10^3 bbl vacuum distillate	Neg	Neg	Neg	Neg	Neg	Neg	Neg

Table 9.1-1. (continued). EMISSION FACTORS FOR PETROLEUM REFINERIES
EMISSION FACTOR RATING: A

Type of process	Particulates	Sulfur oxides (SO_2)	Carbon monoxide	Hydro-carbons	Nitrogen oxides (NO_2)	Alde-hydes	Ammonia
kg/10^3 liters vacuum distillate	Neg	Neg	Neg	Neg	Neg	Neg	Neg
Cooling towers[a]							
lb/10^6 gal cooling water	Neg	Neg	Neg	6	Neg	Neg	Neg
kg/10^6 liters cooling water	Neg	Neg	Neg	0.72	Neg	Neg	Neg
Pipeline valves and flanges[a]							
lb/10^3 bbl refining capacity	Neg	Neg	Neg	28	Neg	Neg	Neg
kg/10^3 liter refining capacity	Neg	Neg	Neg	0.080	Neg	Neg	Neg
Vessel relief valves[a]							
lb/10^3 bbl refining capacity	Neg	Neg	Neg	11	Neg	Neg	Neg
kg/10^3 liter refining capacity	Neg	Neg	Neg	0.031	Neg	Neg	Neg
Pump seals[a]							
lb/10^3 bbl refining capacity	Neg	Neg	Neg	17	Neg	Neg	Neg
kg/10^3 liter refining capacity	Neg	Neg	Neg	0.049	Neg	Neg	Neg
Compressor seals[a]							
lb/10^3 bbl refining capacity	Neg Neg	Neg	Neg	5	Neg	Neg	Neg
kg/10^3 liter refining capacity	Neg	Neg	Neg	0.014	Neg	Neg	Neg
Miscellaneous (air blowing, sampling, etc.)[a]							
lb/10^3 bbl refining capacity	Neg	Neg	Neg	10	Neg	Neg	Neg
kg/10^3 liter refining capacity	Neg	Neg	Neg	0.029	Neg	Neg	Neg

[a]Reference 1.
[b]S = Fuel oil sulfur content (weight percent): factors based on 100 percent combustion of sulfur to SO_2 and assumed density of 336 lb/bbl (0.96 kg/liter).
[c]Negligible emission.
[d]s = refinery gas sulfur content (lb/100 ft^3): factors based on 100 percent combustion of sulfur to SO_2.
[e]References 1 through 6.
[f]Numbers in parenthesis indicate range or values observed.
[g]Reference 3.

9.1.3 Converting

To meet quantity demands for certain types of petroleum products, it is often necessary to chemically convert the molecular structures of certain hydrocarbons via "cracking" and "reforming" to produce compounds of different structures.

9.1.3.1 Catalytic Cracking[1]—In the cracking operation, large molecules are decomposed by heat, pressure, and catalysis into smaller, lower-boiling molecules. Simultaneously, some of the molecules combine (polymerize) to form larger molecules. Products of cracking are gaseous hydrocarbons, gasoline, gas oil, fuel oil, and coke.

Most catalytic cracking operations in the U.S. today are performed by using four main methods: (1) fixed-bed, a batch operation; (2) moving-bed, typified by thermofor catalytic cracking (TCC) and Houdriflow units; (3) fluidized-bed (FCC); and (4) "once-through" units. The two most widely used units are the moving- and fluidized-bed types, with the latter most predominant.

In a moving-bed cracker, the charge (gas oil) is heated to 900°F under pressure and passed to the reactor where it passes cross-flow to a descending stream of molecular sieve-type catalyst in the form of beads or pellets. The cracked products then pass to a fractionating tower where the various compounds are tapped off. Meanwhile, the spent catalyst flows through a regeneration zone where coke deposits are burned off in a continuous process. The regenerated catalyst is then conveyed to storage bins atop the reactor vessel for reuse.

In fluidized systems, finely powdered catalyst is lifted into the reactor by the incoming heated oil charge, which vaporizes upon contact with the hot catalyst. Spent catalyst settles out in the reactor, is drawn off at a controlled rate, purged with steam, and lifted by an air stream into the regenerator where the deposited coke is burned off.

Emissions—Emissions from cracking unit regenerators consist of particulates (coke and catalyst fines), hydrocarbons, sulfur oxides, carbon monoxide, aldehydes, ammonia, and nitrogen oxides in the combusion gases. In addition, catalyst fines may be discharged by vents on the catalyst handling systems on both TCC and FCC units. Control measures commonly used on regenerators consist of cyclones and electrostatic precipitators to remove particulates and energy-recovery combustors to reduce carbon monoxide emissions. The latter recovers the heat of combustion of the CO to produce refinery process steam.

9.1.3.2 Hydrocracking[2]—The hydrocracker uses a fixed-bed catalytic reactor, wherein cracking occurs in the presence of hydrogen under substantial pressure. The principal functions of the hydrogen are to suppress the formation of heavy residual material and to increase the yield of gasoline by reacting with the cracked products. High-molecular-weight, sulfur-bearing hydrocarbons are also cracked, and the sulfur combines with the hydrogen to form hydrogen sulfide (H_2S). Therefore, waste gas from the hydrocracker contains large amounts of H_2S, which can be processed for removal of sulfur.

9.1.3.3 Catalytic Reforming[1]—In reforming processes, a feedstock of gasoline undergoes molecular rearrangement via catalysis (usually including hydrogen removal) to produce a gasoline of higher quality and octane number. In various fixed-bed and fluidized-bed processes, the catalyst is regenerated continously, in a manner similar to that used with cracking units.

There are essentially no emissions from reforming operations.

9.1.3.4 Polymerization, Alkylation, and Isomerization[1]—Polymerization and alkylation are processes used to produce gasoline from the gaseous hydrocarbons formed during cracking operations. Polymerization joins two or

more olefins (noncyclic unsaturated hydrocarbons with C=C double bonds), and alkylation unites an olefin and an iso-paraffin (noncyclic branched-chain hydrocarbon saturated with hydrogen). Isomerization is the process for altering the arrangement of atoms in a molecule without adding or removing anything from the original material, and is usually used in the oil industry to form branched-chain hydrocarbons. A number of catalysts such as phosphoric acid, sulfuric acid, platinum, aluminum chloride, and hydrofluoric acid are used to promote the combination or rearrangement of these light hydrocarbons.

9.1.3.5 Emissions–These three processes, including regeneration of any necessary catalysts, form essentially closed systems and have no unique, major source of atmospheric emissions. However, the highly volatile hydrocarbons handled, coupled with the high process pressures required, make valve stems and pump shafts difficult to seal, and a greater emission rate from these sources can generally be expected in these process areas than would be the average throughout the refinery. The best method for controlling these emissions is the effective maintenance, repair, and replacement of pump seals, valve caulking, and pipe-joint sealer.

9.1.4 Treating

"Hydrogen," "chemical," and "physical" treating are used in the refinery process to remove undesirable impurities such as sulfur, nitrogen, and oxygen to improve product quality.

9.1.4.1 Hydrogen Treating[1]–In this procedure hydrogen is reacted with impurities in compounds to produce removable hydrogen sulfide, ammonia, and water. In addition, the process converts diolefins (gum-forming hydrocarbons with the empirical formula R=C=R) into stable compounds while minimizing saturation of desirable aromatics.

Hydrogenation units are nearly all the fixed-bed type with catalyst replacement or regeneration (by combustion) done intermittently, the frequency of which is dependent upon operating conditions and the product being treated. The hydrogen sulfide produced is removed from the hydrogen stream via extraction and converted to elemental sulfur or sulfuric acid or, when present in small quantities, burned to SO_2 in a flare or boiler firebox.

9.1.4.2 Chemical Treating[1]–Chemical treating is generally classified into four groups: (1) acid treatment, (2) sweetening, (3) solvent extraction, and (4) additives. Acid treatment involves contacting hydrocarbons with sulfuric acid to partially remove sulfur and nitrogen compounds, to precipitate asphaltic or gum-like materials, and to improve color and odor. Spent acid sludges that result are usually converted to ammonium sulfate or sulfuric acid.

Sweetening processes oxidize mercaptans (formula: R-S-H) to disulfide (formula: R-S-S-R) without actual sulfur removal. In some processes, air and steam are used for agitation in mixing tanks and to reactivate chemical solutions.

Solvent extraction utilizes solvents that have affinities for the undesirable compounds and that can easily be removed from the product stream. Specifically, mercaptan compounds are usually extracted using a strong caustic solution; hydrogen sulfide is removed by a number of commercial processes.

Finally, additives or inhibitors are primarily materials added in small amounts to oxidize mercaptans to disulfide and to retard gum formation.

9.1.4.3 Physical Treating[1]—Some of the many physical methods used to remove impurities include electrical coalescence, filtration, absorption, and air blowing. Specific applications of physical methods are desalting crude oil, removing wax, decolorizing lube oils, and brightening diesel oil.

9.1.4.4 Emissions – Emissions from treating operations consist of SO_2, hydrocarbons, and visible plumes. Emission levels depend on the methods used in handling spent acid and acid sludges, as well as the means employed for recovery or disposal of hydrogen sulfide. Other potential sources of these emissions in treating include catalyst regeneration, air agitation in mixing tanks, and other air blowing operations. Trace amounts of malodorous substances may escape from numerous sources including settling tank vents, purge tanks, waste treatment units, waste-water drains, valves, and pump seals.

Control methods used include: covers for waste water separators; vapor recovery systems for settling and surge tanks; improved maintenance for pumps, valves, etc; and sulfur recovery plants.

9.1.5 Blending[1]

The final major operation in petroleum refining consists of blending the products in various proportions to meet certain specifications, such as vapor pressure, specific gravity, sulfur content, viscosity, octane number, initial boiling point, and pour point.

9.1.5.1 Emissions – Emissions associated with this operation are hydrocarbons that leak from storage vessels, valves, and pumps. Vapor recovery systems and specially built tanks minimize storage emissions; good housekeeping precludes pump and valve leakage.

9.1.6 Miscellaneous Operations[1]

In addition to the four refinery operations described above, there are many process operations connected with all four. These involve the use of cooling towers, blow-down systems, process heaters and boilers, compressors, and process drains. The emissions and controls associated with these operations are listed in Table 9.1-1.

References for Chapter 9

1. Atmospheric Emissions from Petroleum Refineries: A Guide for Measurement and Control. U.S. DHEW, Public Health Service. Washington, D.C. PHS Publication Number 763. 1960.

2. Impurities in Petroleum. In: Petreco Manual. Long Beach, Petrolite Corp. 1958. p.1.

3. Jones, Ben G. Refinery Improves Particulate Control. The Oil and Gas Journal. *69*(26):60-62. June 28, 1971.

4. Private communications with personnel in the Emission Testing Branch, Applied Technology Division, Environmental Protection Agency, Research Triangle Park, N.C., regarding source testing at a petroleum refinery preparatory to setting new source standards. June-August 1972.

5. Control Techniques for Sulfur Oxide in Air Pollutants. Environmental Protection Agency, Office of Air Programs, Research Triangle Park, N.C. Publication Number AP-52. January 1969.

6. Olson, H.N. and K.E. Hutchinson. How Feasible are Giant, One-Train Refineries? The Oil and Gas Journal. *70*(1):39-43. January 3, 1972.

10. WOOD PROCESSING

Wood processing involves the conversion of raw wood to either pulp or pulpboard. This section presents emission data both for wood pulping operations and for the manufacture of two types of pulpboard: paperboard and fiber board. The burning of wood waste in boilers and conical burners is not included as it is discussed in other sections for this publication.

10.1 WOOD PULPING

10.1.1 General[1]

Wood pulping involves the production of cellulose from wood by dissolving the lignin that binds the cellulose fiber together. The three major chemical processes for pulp production are the kraft or sulfate process, the sulfite process, and the neutral sulfite semichemical process. The choice of pulping process is determined by the product being made, by the type of wood species available, and by economic considerations. There is a lack of valid emission data for the sulfite and neutral sulfite semichemical processes; therefore, only the kraft process will be discussed in this section.

10.1.2 Process Description(Kraft Process)[1,2]

The kraft process involves the cooking of wood chips under pressure in the presence of a cooking liquor in either a batch or continuous digester. The cooking liquor, an aqueous solution of sodium sulfide and sodium hydroxide, dissolves the lignin that binds the cellulose fibers together.

When cooking is completed, the bottom of the digester is suddenly opened, and its contents are forced into the blow tank. Here the major portion of the spent cooking liquor, which contains the dissolved lignin, is drained, and the pulp enters the initial stage of washing. From the blow tank the pulp passes through the knotter, where unreacted chunks of wood are removed. The pulp is then processed through intermittent stages of washing and bleaching, after which it is pressed and dried into the finished product.

Most of the chemicals from the spent cooking liquor are recovered for reuse in subsequent cooks. These spent chemicals and organics, called "black liquor," are concentrated in multiple-effect evaporators and/or direct-contact evaporators.

The concentrated black liquor is then sprayed into the recovery furnace, where the organic content supports combustion. The inorganic compounds fall to the bottom of the furnace and are withdrawn as a molten smelt, which is dissolved to form a solution called "green liquor." The green liquor is then pumped from the smelt-dissolving tank, treated with slaked lime, and clarified. The resulting liquor, referred to as "white liquor," is the cooking liquor used in the digesters.

10.1.3 Emissions and Controls[3]

Particulate emissions from the kraft process occur primarily from the recovery furnace, the lime kiln, and the smelt-dissolving tank. They are caused mainly by the carryover of solids plus the sublimation and condensation of inorganic chemicals.

The characteristic kraft-mill odor is caused principally by the presence of a variable mixture of hydrogen sulfide and dimethyl disulfide. Hydrogen sulfide is emitted from the breakdown of the weak base, sodium sulfide, which is characteristic of kraft cooking liquor. It may also be generated by improper operation of a recovery furnace. Methyl mercaptan and dimethyl sulfide are formed in reactions with the wood component lignin. Dimethyl disulfide is formed through the oxidation of mercaptan groups derived from the lignins.

Sulfur dioxide emissions in the kraft process result from the oxidation of reduced sulfur compounds. A potential source of sulfur dioxide is the recovery boilers, where reduced sulfur gases present can be oxidized in the furnace atmosphere.

Potential sources of carbon monoxide emissions from the kraft process include the recovery furnace and lime kilns. The major cause of carbon monoxide emissions is furnace operation well above rated capacity, making it impossible to maintain oxidizing conditions.

Rather than presenting a lengthy discussion on the control techniques presently available for each phase of the kraft process, the most widely used controls are shown, where applicable, in the table for emission factors. Table 10.1-1 presents these emission factors for both controlled and uncontrolled sources.

References for Section 10.1

1. Hendrickson, E. R. et al. Control of Atmospheric Emissions in the Wood Pulping Industry, Vol. I. U.S. DHEW, PHS, National Air Pollution Control Administration. Final report under Contract Number CPA 22-69-18. March 15, 1970.

2. Duprey, R. L. Compilation of Air Pollutant Emission Factors. U.S. DHEW, PHS, National Center for Air Pollution Control. Durham, N.C. PHS Publication Number 999-AP-42. 1968. p. 43.

3. Hendrickson, E. R. et al. Control of Atmospheric Emissions in the Wood Pulping Industry, Vol. III. U.S. DHEW, PHS, National Air Pollution Control Administration. Final report under Contract Number CPA-22-69-18. March 15, 1970.

4. Control Techniques for Carbon Monoxide Emissions from Stationary Sources. U.S. DHEW, PHS, EHS, National Air Pollution Control Administration. Washington, D.C. Publication Number AP-65. March 1970. p. 4-24, 4-25.

Table 10.1-1. EMISSION FACTORS FOR SULFATE PULPING[a]
(unit weights of air-dried unbleached pulp)
EMISSION FACTOR RATING: A

Source	Type control	Particulates[b]		Sulfur dioxide (SO_2)[b]		Carbon monoxide[c]		Hydrogen sulfide[b]		RSH, RSR, RSSR[d]	
		lb/ton	kg/MT	lb/ton	kg/MT	lb/ton	kg/MT	lb/ton	kg/MT	lb/ton	kg/MT
Blow tank accumulator	Untreated	–	–	–	–	–	–	0.1	0.05	3.0	1.5
Washers and screens	Untreated	–	–	–	–	–	–	0.02	0.01	0.2	0.1
Multiple-effect evaporators	Untreated	–	–	–	–	–	–	0.5	0.25	0.4	0.2
Recovery boilers and direct-contact evaporators	Untreated	151	75.5	5.0	2.5	60	30	12	6	0.9	0.45
	Electrostatic precipitators	15	7.5	5.0	2.5	60	30	12	6	0.9	0.45
	Venturi scrubber	47	23.5	5.0	2.5	60	30	12	6	0.9	0.45
Smelt dissolving tank	Untreated	2	1	–	–	–	–	0.03	0.015	0.04	0.02
Lime kiln	Untreated	45	22.5	–	–	10	5	1.0	0.5	0.6	0.3
	Scrubber	4	2	–	–	10	5	1.0	0.5	0.6	0.3
Turpentine condenser	Untreated	–	–	–	–	–	–	0.01	0.005	0.5	0.25
Fluidized-bed calciner[e]	Untreated	72	36	–	–	–	–	–	–	–	–
	Scrubber	0.7	0.35	–	–	–	–	–	–	–	–

[a]For more detailed data on specific types of plants, consult Reference 1.
[b]Reference 1.
[c]Reference 4.
[d]RSH - mercaptans, RSR - sulfides RSSR - disulfides.
[e]Only a few plants in the western United States use this process.

10.2 PULPBOARD

10.2.1 General[1]

Pulpboard manufacturing includes the manufacture of fibrous boards from a pulp slurry. This includes two distinct types of product, paperboard and fiberboard. Paperboard is a general term that describes a sheet 0.012 inch (0.30 mm) or more in thickness made of fibrous material on a paper machine.[2] Fiberboard, also referred to as particle board, is much thicker than paperboard and is made somewhat differently.

There are two distinct phases in the conversion of wood to pulpboard: (1) the manufacture of pulp from the raw wood, and (2) the manufacture of pulpboard from the pulp. This section deals only with the latter as the first is covered under the section on wood pulping industry.

10.2.2 Process Description[1]

In the manufacture of paperboard, the stock is sent through screens into the head box, from which it flows onto a moving screen. Approximately 15 percent of the water is removed by suction boxes located under the screen. Another 50 to 60 percent of the moisture content is removed in the drying section. The dried board then enters the calendar stack, which imparts the final surface to the product.

In the manufacture of fiberboard, the slurry that remains after pulping is washed and sent to the stock chests where sizing is added. The refined fiber from the stock chests is fed to the head box of the board machine. The stock is next fed onto the forming screens and sent to dryers, after which the dry product is finally cut and fabricated.

10.2.3 Emissions[1]

Emissions from the paperboard machine consist only of water vapor,[3-5] and little or no particulate matter is emitted from the dryers. Particulates are emitted, however, from the drying operation of fiberboard. Additional particulate emissions occur from the cutting and sanding operations, but no data are available by which to estimate these emissions. Emission factors for pulpboard manufacturing are shown in Table 10.2-1.

Table 10.2-1. PARTICULATE EMISSION FACTORS FOR PULPBOARD MANUFACTURING[a]
EMISSION FACTOR RATING: E

Type of product	Emissions	
	lb/ton	kg/MT
Paperboard	Neg	Neg
Fiberboard[b]	0.6	0.3

[a]Emission factors expressed as units per unit weight of finished product.
[b]Reference 6.

References for Section 10.2

1. Air Pollutant Emission Factors. Final Report. Resources Research, Incorporated, Reston, Virginia. Prepared for National Air Pollution Control Administration, Durham, N.C., under Contract Number CPA-22-69-119. April 1970.

2. The Dictionary of Paper. New York, American Paper and Pulp Association. 1940.

3. Hough, G. W. and L. J. Gross. Air Emission Control in a Modern Pulp and Paper Mill. Amer. Paper Industry. *51*:36, February 1969.

4. Pollution Control Progress. J. Air Pol. Control Assoc. *17*:410, June 1967.

5. Private communication between I. Gellman and the National Council of the Paper Industry for Clean Air and Stream Improvement, New York. October 28, 1969.

6. Communication between Resources Research, Inc., Reston, Virginia, and New Jersey State Department of Health, Trenton, New Jersey. July 1969.

APPENDIX

Note: Previous editions of *Compilation of Air Pollutant Emission Factors* presented a table entitled Percentage Distribution by Size of Particles from Selected Sources without Control Equipment. Many of the data have become obsolete with the development of new information. As soon as the new information is sufficiently refined, a new table, complete with references, will be published for addition to this document.

Table A-1. NATIONWIDE EMISSIONS FOR 1970[a]

Pollutant	Stationary combustion		Solid waste disposal		Mobile combustion		Industrial processes		Miscellaneous		Total[b]	
	ton/yr	MT/yr	ton/yr	MT/yr	ton/yr	MT/yr	ton/yr	MT/yr	ton/yr	MT/yr	ton/yr	MT/yr
Particulates	6,700,000	3,400,000	1,400,000	700,000	800,000	400,000	13,300,000	6,600,000	4,000,000	2,000,000	26,200,000	13,100,000
Sulfur oxides	26,400,000	13,200,000	100,000	50,000	1,000,000	500,000	6,400,000	3,200,000	200,000	100,000	34,100,000	17,100,000
Carbon monoxide	800,000	400,000	7,200,000	3,600,000	111,000,000	55,500,000	11,400,000	5,700,000	18,300,000	9,200,000	149,000,000	74,500,000
Hydrocarbons	600,000	300,000	2,000,000	1,000,000	19,500,000	9,800,000	5,500,000	2,800,000	7,300,000	3,700,000	34,900,000	17,500,000
Nitrogen oxides	10,000,000	5,000,000	400,000	200,000	11,700,000	5,800,000	200,000	100,000	500,000	300,000	22,800,000	11,400,000
Arsenic	762	381	263	132	Neg	Neg	6,329	3,164	3,203	1,602	10,557	5,278
Asbestos	Neg	Neg	Neg	Neg	Neg	Neg	6,679	3,340	29	14	6,708	3,354
Beryllium	162	81	Neg	Neg	Neg	Neg	10.3	5.2	Neg	Neg	172.3	86.2
Cadmium	Neg	Neg	98	49	1.0	0.5	2,059	1,030	6	3	2,164	1,082
Fluorides	10,500	5,250	Neg	Neg	Neg	Neg	155,400	77,700	Neg	Neg	165,900	82,950
Lead	2,220	1,110	2,720	1,360	214,000	107,000	10,700	5,350	42	21	229,700	114,850
Manganese	2,030	1,015	175	88	Neg	Neg	15,700	7,850	Neg	Neg	17,900	8,950
Mercury	268	134	180	90	Neg	Neg	149	74	260	130	857	428
Nickel	6,271	3,136	Neg	Neg	Neg	Neg	1,037	518	Neg	Neg	7,308	3,654
Vanadium	20,110	10,055	Neg	Neg	Neg	Neg	233	116	Neg	Neg	20,340	10,170

[a]Reference 1.

[b]Some totals may be rounded to a convenient number of figures.

Table A-2. DISTRIBUTION BY PARTICLE SIZE OF AVERAGE COLLECTION EFFICIENCIES FOR VARIOUS PARTICULATE CONTROL EQUIPMENT[a,b]

Type of collector	Efficiency, %					
		Particle size range, μm				
	Overall	0 to 5	5 to 10	10 to 20	20 to 44	>44
Baffled settling chamber	58.6	7.5	22	43	80	90
Simple cyclone	65.3	12	33	57	82	91
Long-cone cyclone	84.2	40	79	92	95	97
Multiple cyclone (12-in. diameter)	74.2	25	54	74	95	98
Multiple cyclone (6-in. diameter)	93.8	63	95	98	99.5	100
Irrigated long-cone cyclone	91.0	63	93	96	98.5	100
Electrostatic precipitator	97.0	72	94.5	97	99.5	100
Irrigated electrostatic precipitator	99.0	97	99	99.5	100	100
Spray tower	94.5	90	96	98	100	100
Self-induced spray scrubber	93.6	85	96	98	100	100
Disintegrator scrubber	98.5	93	98	99	100	100
Venturi scrubber	99.5	99	99.5	100	100	100
Wet-impingement scrubber	97.9	96	98.5	99	100	100
Baghouse	99.7	99.5	100	100	100	100

[a]References 2 and 3.
[b]Data based on standard silica dust with the following particle size and weight distribution:

Particle size range, μm	Percent by weight
0 to 5	20
5 to 10	10
10 to 20	15
20 to 44	20
> 44	35

Table A-3. THERMAL EQUIVALENTS FOR VARIOUS FUELS

Type of fuel	Btu (gross)	kcal
Solid fuels		
Bituminous coal	(21.0 to 28.0) x 10^6/ton	(5.8 to 7.8) x 10^6/MT
Anthracite coal	25.3 x 10^6/ton	7.03 x 10^6/MT
Lignite	16.0 x 10^6/ton	4.45 x 10^6/MT
Wood	21.0 x 10^6/cord	1.47 x 10^6/m^3
Liquid fuels		
Residual fuel oil	6.3 x 10^6/bbl	10 x 10^3/liter
Distillate fuel oil	5.9 x 10^6/bbl	9.35 x 10^3/liter
Gaseous fuels		
Natural gas	1,050/ft^3	9,350/m^3
Liquefied petroleum gas		
Butane	97,400/gal	6,480/liter
Propane	90,500/gal	6,030/liter

Table A-4. WEIGHTS OF SELECTED SUBSTANCES

Type of substance	lb/gal	g/liter
Asphalt	8.57	1030
Butane, liquid at 60° F	4.84	579
Crude oil	7.08	850
Distillate oil	7.05	845
Gasoline	6.17	739
Propane, liquid at 60° F	4.24	507
Residual oil	7.88	944
Water	8.4	1000

Table A-5. GENERAL CONVERSION FACTORS

Type of substance	Conversion factors
Fuel	
Oil	1 bbl = 42 gal = 159 liters
Natural gas	1 therm = 100,000 Btu = 95 ft^3
	1 therm = 25,000 kcal = 2.7 m^3
Agricultural products	
Corn	1 bu = 56 lb = 25.4 kg
Milo	1 bu = 56 lb = 25.4 kg
Oats	1 bu = 32 lb = 14.5 kg
Barley	1 bu = 48 lb = 21.8 kg
Wheat	1 bu = 60 lb = 27.2 kg
Cotton	1 bale = 500 lb = 226 kg
Mineral products	
Brick	1 brick = 6.5 lb = 2.95 kg
Cement	1 bbl = 375 lb = 170 kg
Cement	1 yd^3 = 2500 lb = 1130 kg
Concrete	1 yd^3 = 4000 lb = 1820 kg
Mobile sources	
Gasoline-powered motor vehicle	1.0 mi/gal = 0.426 km/liter
Diesel-powered motor vehicle	1.0 mi/gal = 0.426 km/liter
Steamship	1.0 gal/naut mi = 2.05 liters/km
Motorship	1.0 gal/naut mi = 2.05 liters/km
Other substances	
Paint	1 gal = 10 to 15 lb = 4.5 to 6.82 kg
Varnish	1 gal = 7 lb = 3.18 kg
Whiskey	1 bbl = 50 gal = 188 liters
Water	1 gal = 8.3 lb = 3.81 kg
Miscellaneous factors	1 lb = 7000 grains = 453.6 grams
	1 ft^3 = 7.48 gal = 28.32 liters
Metric system	1 ft = 0.3048 m
	1 mi = 1609 m
	1 lb = 453.6 g
	1 ton (short) = 907.2 kg
	1 ton (short) = 0.9072 MT (metric ton)

REFERENCES FOR APPENDIX

1. Unpublished data file of nationwide emissions for 1970. Environmental Protection Agency, Office of Air Programs, Research Triangle Park, N.C.

2. Stairmand, C.J. The Design and Performance of Modern Gas Cleaning Equipment. J. Inst. Fuel. *29*:58-80. 1956.

3. Stairmand, C.J. Removal of Grit, Dust, and Fume from Exhaust Gases from Chemical Engineering Processes. London. Chem. Eng. p. 310-326, December 1965.

☆ U. S. GOVERNMENT PRINTING OFFICE: 1973 —746772/4191