EPA-453/R-92-017

Alternative Control Technology Document for Bakery Oven Emissions

Emission Standards Division

U.S. ENVIRONMENTAL PROTECTION AGENCY
Office of Air and Radiation
Office of Air Quality Planning and Standards
Research Triangle Park, North Carolina 27711
December 1992

ALTERNATIVE CONTROL TECHNOLOGY DOCUMENTS

This report is issued by the Emission Standards Division, Office of Air Quality Planning and Standards, U.S. Environmental Protection Agency, to provide information to State and local air pollution control agencies. Mention of trade names or commercial products is not intended to constitute endorsement or recommendation for use. Copies of this report are available - as supplies permit - from the Library Services Office (MD-35), U.S. Environmental Protection Agency, Research Triangle Park, North Carolina 27711, or for a nominal fee, from the National Technical Information Service, 5285 Port Royal Road, Springfield, Virginia 22161.

TABLE OF CONTENTS

Section		Page
1.0	INTRODUCTION	
	1.1 Objectives	1-1
	1.2 Overview of the Bakery Industry	1-2
	1.3 Contents of this Document	1-2
	1.4 References	1-4
2.0	INDUSTRY DESCRIPTION, PROCESSES, AND EMISSIONS	1-6
	2.1 Industry Description	2-1
	2.2 Unit Operations	2-1
	2.2.1 Dough Processes	2-2
	2.2.2 Equipment	2-2
	2.2.3 Operating Parameters	2-8
	2.3 Air Emissions	2-14
	2.3.1 Emission Sources	2-15
	2.3.2 Emission Stream Characteristics	2-16
	2.4 Summary of Current Air Emission Regulations	2-16
	2.4.1 BAAQMD	2-21
	2.4.2 SCAQMD	2-21
	2.4.3 New Jersey	2-21
	2.4.4 Other Areas	2-22
	2.4.5 Prevention of Significant Deterioration	2-22
	2.4.6 New Source Review	2-22
	2.4.7 Monitoring and Enforceability	2-23
	2.5 References	2-23
3.0	VOC EMISSION CONTROL DEVICES	2-25
	3.1 Combustion Control Devices	3-1
	3.1.1 Direct Flame Thermal Oxidation	3-1
	3.1.2 Regenerative Oxidation	3-1
	3.1.3 Catalytic Oxidation	3-2
	3.2 Noncombustion Control Devices	3-4
	3.2.1 Carbon Adsorption	3-6
	3.2.2 Scrubbing	3-6
	3.2.3 Condensation	3-7
	3.2.4 Biofiltration	3-8
	3.2.5 Process and Formulation Changes	3-9
	3.3 References	3-10
4.0	IMPACT ANALYSIS OF ALTERNATIVE CONTROL TECHNIQUES	3-12
	4.1 Model Ovens and VOC Emissions	4-1
	4.1.1 VOC Emission Factors	4-1
	4.1.2 Oven Type and Number of Stacks	4-3
	4.1.3 Oven Heat Input	4-3
		4-4

TABLE OF CONTENTS

Section	Page
4.1.4 Oven Operating Time	4-4
4.1.5 Control Devices	4-5
4.1.6 Flow Rates	4-5
4.1.7 Bread Production	4-5
4.1.8 Destruction Efficiency	4-5
4.2 Costing Methodology General Assumptions	4-6
4.3 Cost Analysis	4-6
4.4 Cost Effectiveness	4-6
4.5 References	4-14

LIST OF TABLES

Number		Page
2-1	Representative White Pan Bread Formula	2-3
4-1	Model Ovens	4-2
4-2a	Cost of Catalytic Oxidation	4-7
4-2b	Cost of Regenerative Oxidation	4-8
4-3a	Cost Effectiveness of Catalytic Oxidation at Bakery Ovens	4-9
4-3b	Cost Effectiveness of Regenerative Oxidation at Bakery Ovens	4-10

LIST OF FIGURES

Number		Page
2-1	Tunnel Oven	2-10
2-2	Single-Lap Oven	2-12
2-3	Spiral Oven	2-13
3-1	Regenerative Oxidation	3-3
3-2	Catalytic Oxidation	3-5
4-1	Cost Effectiveness of Catalytic Oxidation on Bakery Ovens	4-11
4-2	Cost Effectiveness of Regenerative Oxidation on Bakery Ovens	4-12

APPENDICES

Appendix		Page
A	Tables Referenced in Section 2.1 Industry Description	
	A-1 Number of Bakeries by Product Category and Number of Employees	A-1
	A-2 Top 100 Regional Contribution To Sales	A-3
	A-3 Plants by Bakery Type , Region, and State	A-5
		A-11
B	Bakery Oven Test Results	B-1
C	Example Calculations of Cost Analysis	
	OAQPS Control Cost Analysis for Catalytic Incinerators	C-1
	OAQPS Control Cost Analysis for Regenerative Incinerators	C-2
		C-7
D	BAAQMD Regulation 8 Rule 42	D-1
E	SCAQMD Rule 1153	E-1

1.0 INTRODUCTION

The Clean Air Act Amendments (CAAA) of 1990 established new requirements for State implementation plans (SIP) for many areas that have not attained the national ambient air quality standards (NAAQS) for ozone. These requirements include an expansion of the applicability of reasonably available control technology (RACT) to sources of volatile organic compounds (VOC) smaller than those previously covered by the U.S. Environmental Protection Agency (EPA). They also require that certain nonattainment areas reduce VOC emissions below the existing RACT requirements to ensure continual progress toward attainment of the ozone NAAQS. In addition, certain areas require a demonstration through atmospheric dispersion modeling that VOC emission reductions will produce ozone concentrations consistent with the ozone NAAQS.

To help the States identify the kinds of VOC control that could be used to help meet these and other requirements, the 1990 Amendments also require EPA to publish alternative control technology (ACT) documents for a variety of VOC sources. This document was produced in response to a request by the baking industry for Federal guidance to assist in providing a more uniform information base for State decision-making. The information in this document pertains to bakeries that produce bread, rolls, buns, and similar products, but not those that produce crackers, pretzels, sweet goods, or baked foodstuffs that are not yeast-leavened. In this document, bread refers to yeast-leavened pan bread, rolls, buns, or similar yeast-leavened products unless otherwise noted.

1.1 OBJECTIVES

One objective of this document is to provide information on the baking process, potential emissions from baking, and potential emission control options for use by State and local air pollution control agencies in their analysis of new and existing bakeries. This can be accomplished by identifying the cost effectiveness of controls for each oven in their area and comparing to other facilities or industries to judge where money might be spent most wisely to lower emissions in the air shed. Another important objective of this document is to provide a predictive equation similar to an existing industry-derived equation (described in Section 1.2), but for total VOC, using recently gathered emission test data.

1.2 OVERVIEW OF THE BAKERY INDUSTRY

About 600 large commercial bakeries produce breadstuffs in the United States.[1] Because bread is perishable and delays in distribution to retail outlets are undesirable, bakeries are usually located in or near population centers. Because population correlates with vehicular travel and other VOC emission sources, bakeries are frequently located in ozone nonattainment areas.

About 23 bakery ovens in the United States currently have emission control devices installed.[2] Some of these are located in States or districts that have rules specific to bakeries (such as California's Bay Area and South Coast). The other controlled bakery ovens are located in ozone nonattainment areas where RACT is required for major stationary sources, in ozone attainment areas subject to prevention of significant deterioration (PSD) review, or at bakeries electing to control VOC emissions for other reasons.

The primary VOC emitted from bakery operation is ethanol. In yeast-leavened breads, yeast metabolizes sugars in an

anaerobic fermentation, producing carbon dioxide that is largely responsible for causing the bread to rise. Besides the carbon dioxide, equimolar amounts of ethanol and small amounts of other alcohols, esters, and aldehydes are produced.

The primary emission source at a bakery is the oven. Because the ethanol produced by yeast metabolism is generally liquid at temperatures below 77°C (170°F), it is not emitted in appreciable amounts until the dough is exposed to high temperatures in the oven. Although high concentrations of VOC exist in the proof boxes that are often used to raise the panned dough, the low airflow through those boxes minimizes emissions.

The regulation of VOC emissions from bakery ovens is a recent development. Three major studies, detailed in Section 2.3.2, have been conducted to establish an emission factor for quantifying VOC emissions from bakeries.

The first, Commercial Bakeries as a Major Source of Reactive Volatile Organic Gases, was conducted in 1977 under an EPA contract.[1] Ethanol emissions were calculated as 1.0 lb/ton of bread for straight dough and 11.2 lb/ton of bread for sponge dough.

The second study was performed by the Bay Area Air Quality Management District (BAAQMD) in San Francisco.[4] After early tests showed that ethanol was the primary VOC emitted, a total of 16 ovens were tested using aqueous impingers and gas chromatography/flame ionization. Ethanol emissions were calculated to range from 0.6 to 14.0 lb/ton of bread.[4]

The third study was performed by the American Institute of Baking (AIB).[4] This study was intended to explain the wide range of emission factors resulting from the BAAQMD study and to provide a mathematical model for predicting ethanol emissions from bakeries. Statistical analysis suggested that the factors correlating best with ethanol emissions were yeast concentration and total fermentation time, and that the relationship was described as:

$$EtOH = 0.40425 + 0.444585\ (Yt)$$

where

EtOH = pounds ethanol per ton of baked bread

Y = baker's percent yeast

t = total time of fermentation

This formula includes a little known correction for the addition of spiking yeast where:

$$Yt = (Y_i \times t_i) + (S \times t_s)$$

and

Y_i = baker's percent yeast in sponge

t_i = total time of fermentation in hours

S = baker's percent yeast added to dough

t_s = proof time + floor time

The "percent yeast in sponge" and "percent yeast added to dough" are in terms of baker's percent of yeast to the nearest tenth of a percent. The "total time of fermentation" and "proof time + floor time" are the fermentation times in hours to the nearest tenth of an hour.

1.3 CONTENTS OF THIS DOCUMENT

Typical bakery processes, equipment, operating parameters, emission sources, emission stream characteristics, emission estimates, techniques for determining emissions and regulations currently affecting VOC emissions from bakeries are described in Chapter 2.0. Chapter 3.0 presents emission control techniques that are generally used, emission control techniques that may be effective but are not in general use, and emission control techniques that involve transfer of technology from other industries. Chapter 4.0 presents capital and annualized costs of controlling emissions for the control techniques identified as feasible in Chapter 3.0, guidance on methods of estimating the

costs of alternative control techniques, and environmental and energy impacts.

1.4 REFERENCES

1. 1991 Baking/Snack Directory & Buyer's Guide. Kansas City, Missouri, Sosland Publishing Co.

2. Telecon. Sanford W., Research Triangle Institute (RTI), with T. Otchy, CSM Environmental Systems, Inc. March 18, 1992. Oxidizers at bakeries.

3. Henderson, D.C. Commercial Bakeries as a Major Source of Reactive Volatile Organic Gases. U. S. Environmental Protection Agency. San Francisco. December 1977.

4. Cutino, J., and Owen, S. Technical Assessment Report for Regulation 8, Rule 42 - Organic Compounds - Large Commercial Bakeries. Bay Area Air Quality Management District. San Francisco. July 1989.

5. Ref. 4.

6. Stitley, J.W., K.E. Kemp, B.G. Kyle, and K. Kulp, Bakery Oven Ethanol Emissions - Experimental and Plant Survey Results. American Institute of Baking. Manhattan, Kansas. December 1987.

2.0 INDUSTRY DESCRIPTION, PROCESSES, AND EMISSIONS

This chapter presents a description of the baking industry, regulations currently affecting the industry, and information on typical bakery unit operations including processes, equipment, operating parameters, emission sources, and emission stream characteristics.

2.1 INDUSTRY DESCRIPTION

The baking industry in the United States is large and decentralized. In 1990 there were 2,636 commercial bakeries in the United States.[1] As shown in Table A-1, located in Appendix A, 854 bakeries produced white pan bread, 980 produced buns and soft rolls, 1,097 produced variety bread, and 713 produced hearth bread and rolls.[2] These four types of baked goods constitute the bulk of the baked goods considered in this document. As shown in Table A-2[3], of Appendix A, the top 100 bakery companies operated 618 plants with sales ranging from $30 million to $2.6 billion in 1990.[4] Aggregate sales from these 618 bakeries was $89.5 billion.[5] Consumer expenditures for bakery food in 1990 ranged between 9 and 11 percent of all dollars spent on food consumed at home, with from $209 to $259 spent per year per household.[6] Per capita bread consumption in 1990 was 49.93 lbs, and was predicted to increase 2.2 percent annually through 1996.[7] Table A-3, in Appendix A, presents the national distribution of bakeries by type, region, and State.[8] Because bread is perishable and distribution delays are undesirable, the location of bakeries tends to correlate with population and are in larger cities in all States.

2.2 UNIT OPERATIONS

The following descriptions are aggregate and composite, and not necessarily descriptive of a particular operation. Production volumes, for example, fluctuate by daily orders, holidays, and seasonal fluctuations.

2.2.1 Dough Processes

Bread production at large commercial bakeries is a highly automated process. When operating at full capacity, a single large bread bakery may produce up to 300,000 pounds of over 100 different varieties of bread and other bakery products per day. All physical mixing and blending of ingredients, as well as the working and dividing of the doughs, is performed mechanically. Most dough batches are conveyed through each step of the process, from the initial dividing through the final slicing and bagging, with minimal handling.

Four basic dough processes are used by commercial bread bakeries: sponge and dough, straight dough, liquid ferments, and no-time dough. The sponge and dough and liquid ferment methods are used most often by large commercial bakeries. Straight doughs are used for a few types of variety breads.

Bread in its simplest form requires four ingredients: flour, water, yeast, and salt. Attributes such as loaf volume, crumb softness, grain uniformity, silkiness of texture, crust color, flavor and aroma, softness retention, shelf life, and, most important, nutritive value can all be improved by the addition of appropriate optional ingredients. The materials that are either required or may be optionally included in the production of various standardized bread products are legally defined by the Food and Drug Administration (21 CFR Part 136).[9]

A representative formula for white pan bread is shown in Table 2-1.[10] Two terms used throughout the document which are

Table 2-1. Representative White Pan Bread Formula*

Ingredients	Sponge %*	Dough (Remix) %*	Total % in Formula
Essential			
Flour	65.00	35.00	100.00
Water	37.00	27.00	64.00
Yeast	2.75		2.75
Salt		2.1	2.1
Optional			
Yeast food	0.50		0.50
Sweeteners (solids)		7.25	7.25
Shortening		2.3	2.3
Dairy blend		2.0	2.0
Protease enzyme	0.25		0.25
Emulsifier		0.50	0.50
Dough strengthener		0.50	0.50
Preservative		0.20	0.20
			182.35

* % equals baker's percent
*Reference 10

unique to the bakery industry are "baker's percent" and "fermentation time". The baker's percent of an ingredient in a bread formula refers to the weight of that ingredient per 100 lbs. of flour in the formula. For a given formula, the baker's percent of all the ingredients will total to more than 100 percent as the flour alone equals 100 baker's percent. Table 2-1 presents a bread formula and the baker's percents (or weights) of each ingredient. The total weight of flour in the formula is 100 lbs., the total weight or baker's percent of yeast is 2.75. The baker's percents of all the ingredients in this formula totals to 182.35 baker's percent. Fermentation time refers to the period of time the yeast is fermenting. The clock for fermentation time starts when the yeast comes in contact with water (whether it is in a brew or dough) which can supply it with nutrients needed for reproduction. The clock stops when the bread enters the oven.

As about 50 percent of white pan bread produced in the United States is made by the sponge and dough process, the formula in Table 2-1 is shown in its adaptation to that procedure. In the straight dough method, a somewhat higher yeast level (about 3.0 percent or more) is generally used, and all of the listed ingredients are processed as a single batch. It should also be kept in mind that individual bakers introduce minor quantitative variations in their formulations and that the values shown represent weighted averages.

In the sponge and dough method, the major fermentative action takes place in a preferment, called the sponge, in which normally from 50 to 70 percent of the total dough flour is subjected to the physical, chemical, and biological actions of fermenting yeast. The sponge is subsequently combined with the rest of the dough ingredients to receive its final physical development during the dough mixing or remix stage.[11]

The mixed sponge is discharged into a greased trough and set to ferment in a special fermentation room. The sponge fermentation time normally lasts 4.5 hours, but may vary from 3.5

hours for sponges incorporating 75 percent of the total flour to 5 hours for sponges with only 50 percent of the total flour. Increased yeast levels bring about a noticeable reduction in fermentation time.[12]

The fully fermented sponge is returned to the mixer and mixed into the final dough, which receives additional fermentation for a short floor time (no more than 45 minutes under average conditions).[13]

The straight dough method is a single-step process in which all the dough ingredients are mixed into a single batch. The quality of the flour, the temperature of the mixed dough and the amount of yeast used will determine the fermentation time.[14] The dough is fermented for periods of 2 to 4 hours, with the actual practice time being generally close to 3 hours.[15] Once fermentation begins, the completion schedule is inflexible.[16]

About 70 years ago, efforts to simplify the sponge and dough method of breadmaking resulted in a stable ferment process that replaced the sponge with a liquid, flour-free ferment.[17] The basic stable ferment was made of up to 70 percent water, and small amounts of yeast, yeast food, malt, sugar, nonfat dry milk, and salt.[18] The resultant suspension was fermented at a constant temperature for 6 hours under gentle agitation. The mature ferment was then either used immediately in whole or in part for doughmaking, or it could be stored for about 48 hours, in a stable condition, by cooling.[19]

Since the 1950's, the stable ferment process has been subjected to a number of modifications and the resultant ferments are variously referred to as liquid sponges, liquid ferments, preferments, brews or broths, and continuous mix.[20]

Although many variations on the original list of ingredients exist, flour-free ferments are currently often made up of 82 percent water, and small amounts of sweeteners, yeast, salt, and buffer salts to control the pH.[21] These ferments undergo

fermentation for 1 to 1.5 hours while being mildly agitated; the mature ferment is used or cooled.[22]

In general, the time required for the proper fermentation of liquid ferments depends primarily on the level of flour in the ferment. Flour-free ferments, given an appropriate set temperature, require about 1 hour of fermentation, whereas ferments containing 40 percent flour need 2 to 2.5 hours to reach the end point.[23]

Attempts to reduce the time required before the final proof have taken two directions: (1) mechanical dough development obtained by intensive high-speed mixing of dough for a short time, and (2) chemical dough development in which the dough is treated with appropriate reducing agents and oxidants and mixed at conventional speeds. Both approaches, in effect, eliminate the bulk fermentation stage that represents about 60 per cent of the total time in the traditional breadmaking process.[24] These doughs are often called no-time doughs.

The elimination of bulk fermentation time by mechanical dough development usually means that these doughs require an increase in the yeast level of 0.5 to 1.0 percent and a decrease of 1.0 to 2.0 percent in the amount of added sweeteners. The production time from the start of mixing to the end of baking may be reduced to less than 2 hours.[25]

Chemically developed doughs are generally referred to as short-time doughs if they are subjected to bulk fermentation for periods of 0.5 to 1 hour, and no-time doughs if they are taken directly from the mixer to the divider with no more than 15 minutes of floor time.[26] These doughs require an increase in the yeast level of 0.5 to 1.0 per cent and a decrease of 1.0 per cent in the amount of added sweeteners. After an average fermentation time of 30 minutes, the yeast slurry may be cooled or mixed as a straight dough.[27] The production time from the start of mixing to the end of baking may be reduced to less than 3 hours.[28]

Following fermentation, the dough produced by any of the above processes is divided, rounded and made up into pieces of proper weight for intermediate proofing, moulding, final proofing and baking. Dividing and rounding operations subject the dough to considerable physical abuse.[29] The rounded dough balls are given a brief rest period in an intermediate or overhead proofer. Proofers are cabinet areas off the floor of the bakery which are protected from drafts. The actual proof time in practice can last anywhere from 30 seconds to 20 minutes, although it will usually fall within a range of 4 to 12 minutes.[30] On leaving the intermediate proofer, the dough pieces enter a moulder in which they are shaped and moulded into a cylindrical loaf form and then deposited in the baking pan.[31]

After the dough is deposited in the baking pan, it is ready for final proofing in a proof box. Proof times in practice generally fall within a range of 55 to 65 minutes. For the most part, panned dough is proofed to volume or height rather than for a fixed time.[32]

After final proofing, the dough is baked in an oven. Modern ovens are generally designed to convey the baking loaf through a series of zones in which it is exposed for definite time periods to different temperature and humidity conditions. The first stage of baking, at a temperature of about 240°C (400° F) lasts about 6.5 minutes. The second and third stages of baking together last some 13 minutes at a constant temperature of about 238° C (460° F). The final zone is maintained at a constant temperature of 221 to 238° C (430 to 460° F) and the loaf baked for about 6.5 minutes.[33]

While these temperatures and durations of the individual baking phases are representative of conventional baking practice, considerable deviations are encountered. Factors such as oven design, weight or volume of product, crust character and color, level of residual crumb moisture and others all have a bearing on

actual baking temperature and time. Product size in particular is an important determinant of baking time.[34]

These are only the basic processes. Each bakery employs variations of these basic processes to suit its production equipment, which is further varied for each individual type of product.

2.2.2 Equipment

2.2.2.1 Mixers. Various mixing devices are used to combine the dough ingredients. These devices vent inside the bakery and are sources of minimal volatile organic compound (VOC) emissions.[35]

2.2.2.2 Fermentation Vessels. These are typically vats in brew processes and tubs in sponge processes. The yeast reproduces here if under aerobic conditions; it generates carbon dioxide gas, liquid ethanol, and other products if under anaerobic conditions. The rooms housing these vats are humid and warm, and are designed to have minimal air changes.

2.2.2.3 Intermediate Proofers. Intermediate proofers are used to relax dough pieces for 3 to 12 minutes[36] after dividing and rounding and before they are moulded into loaves. Intermediate proofers are generally operated under ambient conditions. The intermediate proof time is usually between 4 and 12 minutes.[37]

2.2.2.4 Proof Boxes. Proof boxes are where some doughs are allowed to proof (rise) after being panned. The proof box is a relatively large chamber, fabricated of well insulated panels and equipped with temperature and humidity controls. The three basic control factors in final proofing are temperature, humidity, and time. In practice, temperatures within the range of 32 to 54° C

(90 to 130° F) and relative humidities of 60 to 90 percent are encountered, with proofing temperatures of 41 to 43° C (105 to 110° F) being most prevalent for bread doughs.[38] Under the influence of the elevated temperature, the yeast activity in the dough is accelerated and the loaves expand under the increasing pressure of carbon dioxide produced by the yeast until its thermal death in the oven.[39] Care is taken to minimize exhausts from these rooms, thereby minimizing the cost of heating and humidifying them. Although significant VOC concentrations have been measured in proof boxes, the small flow of air through them indicates small VOC emissions.[40]

2.2.2.5 Ovens. Large bakeries typically operate from one to four ovens of varying sizes, each one suited to produce certain types of breads, buns, rolls, and other bakery products. All known ovens burn natural gas, although some are equipped to burn propane as a standby fuel. Approximately 85 to 90 percent are directly fired[41] by long ribbon burners across the width of the oven. Indirectly fired ovens use gun burners and separate burner and oven exhausts, allowing for the use of fuel such as distillate oil. Indirectly fired ovens tend to be found in areas where natural gas is not available, and often are adapted for higher heat input after natural gas becomes available by jetting (drilling) the fire tubes. This modified oven is sometimes referred to as a semi-indirect-fired oven.

Generally, large commercial bakeries operate one very large oven for baking high-volume products such as white and wheat breads. Most bakeries also have one or more smaller ovens for producing buns, rolls, and short-run specialty breads. There are three basic configurations of large ovens:

- Tunnel Oven: Doughs are conveyed along the length of the oven from the front entrance to the rear exit. Generally, the oven has two or more exhaust stacks (see Figure 2-1).

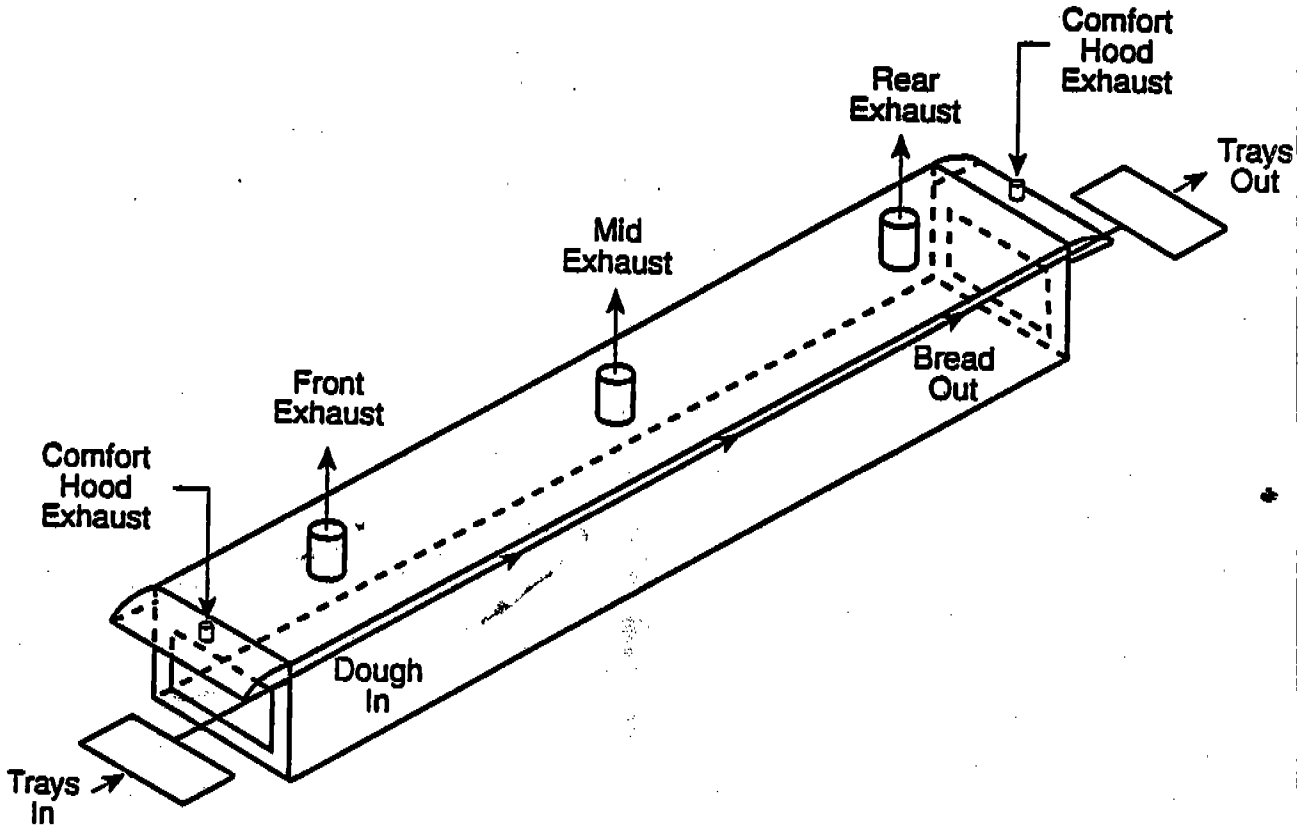

Figure 2-1. Tunnel oven.

- Lap Oven: Conveyor is "lapped" so that doughs are both loaded and removed at the front of the oven, after travelling the length of the oven and back. Usually the oven has two or three exhaust stacks (see Figure 2-2).
- Spiral Oven: Conveyor path is spiraled so that doughs circle the oven latitudinally several times. The oven requires only a single exhaust stack (see Figure 2-3).

Ovens are often equipped with a purge stack for exhausting residual gases in the oven prior to burner ignition. The damper for this stack is normally closed prior to baking. Emissions from these purge stacks should be very minor, and for the purposes of control devices and permitting, they will presumably be treated in the same way as other minor emission sources.

Many ovens are also equipped with comfort hoods on either end. These devices collect air emissions from the oven that might otherwise vent to the bakery interior. Comfort hoods that rely on fans rather than on convection to exhaust emissions have a greater potential for emissions.

When an oven is first installed, it takes approximately 2 weeks to adjust it[42] and balance the airflows before it is ready for production. Turbulence in the exhaust airflow can cause unstable or extinguished burner flames and non-uniform lateral heat distribution throughout the zone. This may result in uneven, improperly baked bread with poor texture, crumb characteristics, and flavor, as well as other undesirable characteristics.

Some bakeries have additional baking equipment for producing such miscellaneous items as muffins, croutons, and breadsticks. This equipment differs substantially from bread ovens and was not within the scope of this document.

2.2.2.6 Cooling Boxes. After baking, bread is conveyed to an area to cool. Cooling may take place either on a spiral

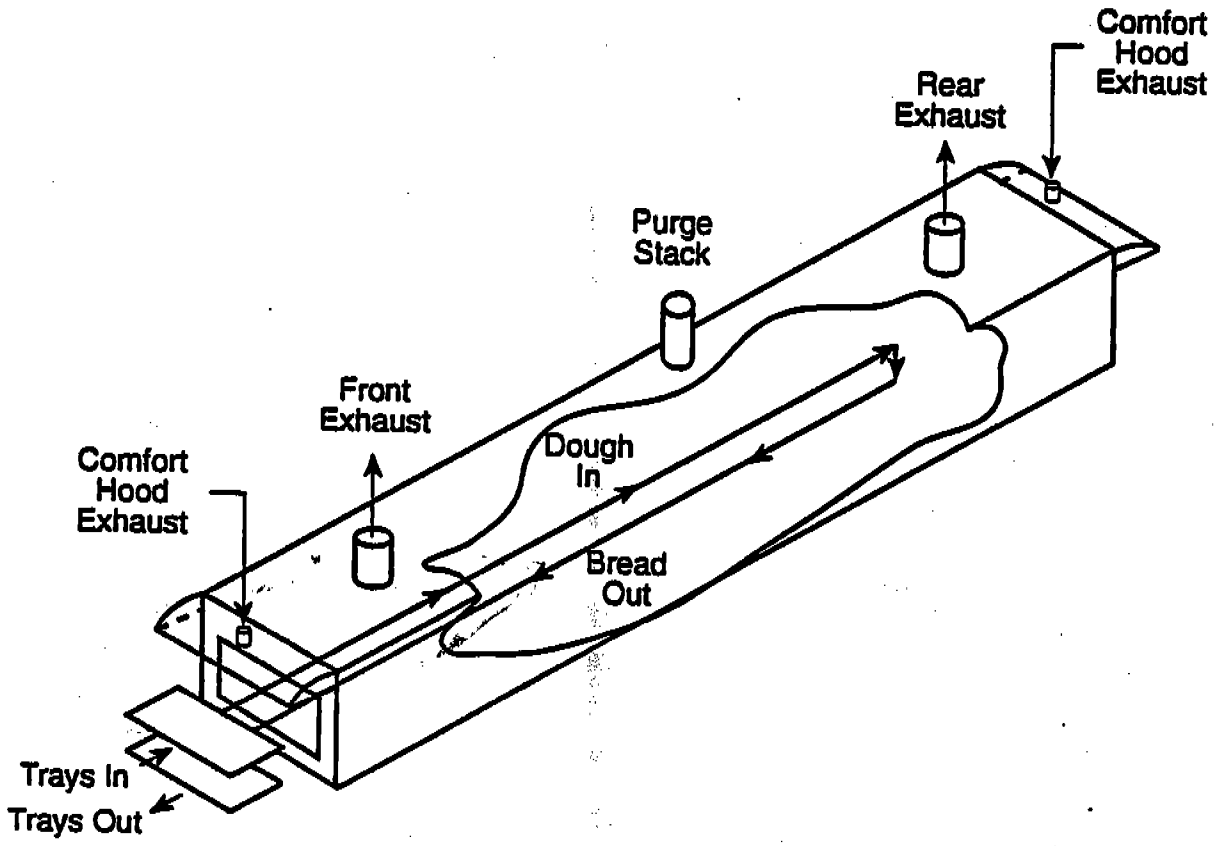

Figure 2-2. Single-lap oven.

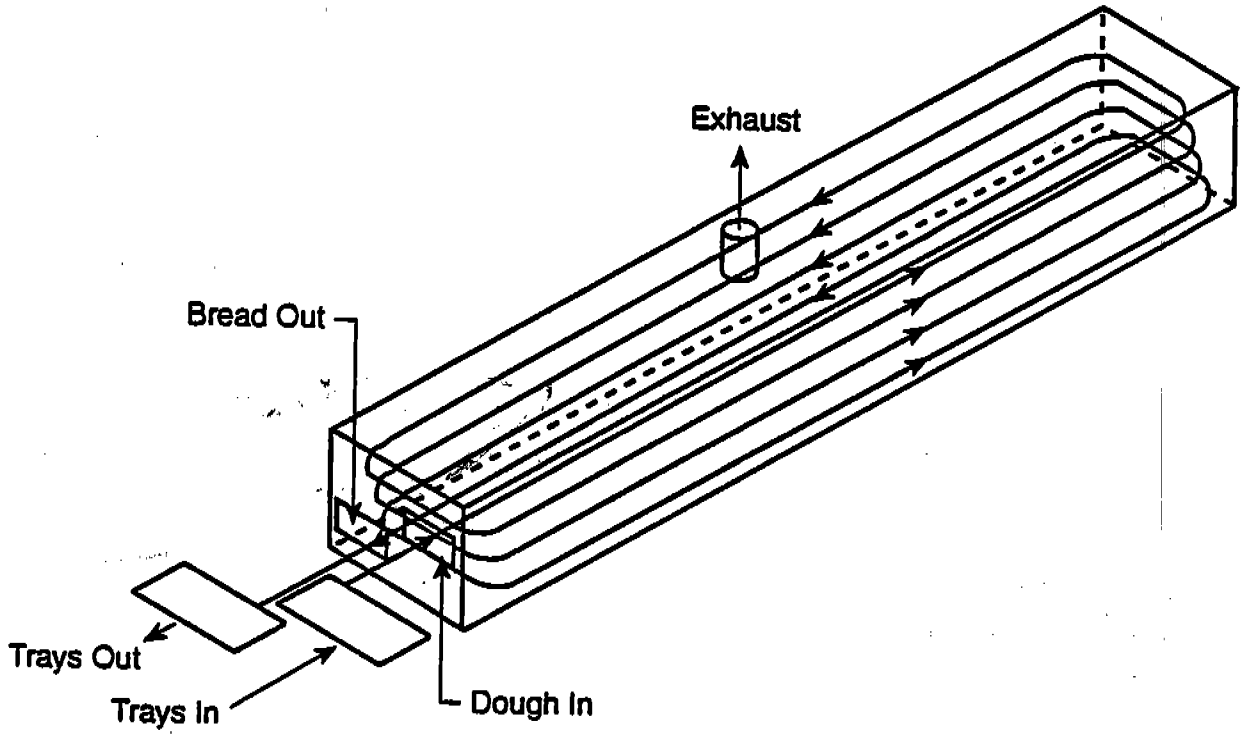

Figure 2-3. Spiral oven.

conveyor or on a multi-tier looped conveyor suspended from the ceiling. Cooling conveyors may or may not be enclosed.

2.2.2.7 Packaging. After cooling, the bread is packaged for shipping. Some bread products are sliced before packaging. These processes are highly mechanized.

2.2.3 Operating Parameters

The oven is separated into several temperature zones to control the baking process. In the initial zones of the oven, the loaf rises to its final volume (oven spring) and the yeast is killed, halting the fermentation reactions. In the middle zones, excess moisture and ethanol are driven off. In the final zones, the crust is browned and the sides of the loaf become firm enough for slicing. The baking process is complete when the temperature at the center of the loaf reaches approximately 90 to 94°C (194 to 201°F).[43]

The operator can adjust the oven temperature to compensate for differences between batches and bread varieties based on visual inspection and experience. The temperature in each zone is controlled by adjusting the burner heat output with temperature controllers and manually adjusting the exhaust dampers. Constant temperature and laminar flow of exhaust gases must be maintained across the width of the oven.

The entire baking process is very sensitive to upset. By law, white pan bread must weigh the amount stated on the package without exceeding 38 percent moisture.[44]

All equipment must be extremely reliable to maintain high bread quality while maintaining a tight, continuous production schedule. For example, panned dough and bread are usually transported from one process to another, such as from baking to cooling, by mechanical conveyor belts. A conveyor shutdown may cause the bread in the oven to remain too long in the oven and to

overheat. If the loaves about to go into the oven are delayed, they may rise above the size that will fit in the bread bags.

Each process unit depends on the smooth operation of the preceding unit, and a breakdown in one process may affect dough not scheduled for baking for several hours. For example, even a minor malfunction of the bag twist-tie machine can result in the loss of dough in the proof box. This dough cannot be baked and stored or stored at temperatures low enough to retard proofing because there are rarely provisions for storage at any intermediate stage in processing. One cost of installing control equipment on a bakery oven is the loss of production time while rebalancing the heat flow in the oven after installation of the control equipment.

As bread is produced for human consumption, bakeries are required by health and safety regulations to maintain strict sanitary conditions. In addition to daily cleaning, most bakeries are shut down for cleaning and maintenance one or two days per week.

2.3 AIR EMISSIONS

The major pollutants emitted from bread baking are VOC emissions, chiefly the ethanol produced as a by-product of the leavening process, which are precursors to the formation of ambient ozone. Under aerobic conditions, yeast uses sugars added to the dough or converts starches in the dough to sugars for nutrients supporting the generation of new yeast cells. Oxygen consumption during yeast reproduction produces an anaerobic environment. Under anaerobic conditions, yeast ferments sugars, creating carbon dioxide, ethanol, and other by-products by the enzymatic conversion of sucrose to glucose to pyruvic acid to acetaldehyde to ethanol. The yeast fermentation of 100 lbs of sugar (from either added sugar or sugar converted from starch by the yeast) produces 49 lbs ethanol, 47 lbs carbon dioxide, and 4 lbs of glycerol, organic acids, aldehydes, and various minor

compounds.[45] These compounds are responsible for the characteristic flavors and aromas of bread. The ethanol formed in the dough is vaporized and emitted from the oven during the end of the baking process when the internal crumb temperature reaches the boiling point of ethanol. Emissions of criteria pollutants arising from combustion (oxides of nitrogen, oxides of sulfur, and carbon monoxide) are comparatively small from the typically natural gas-fired ovens.

A few types of bread, such as corn bread and soda bread, are chemically leavened with baking powder. An acid/base reaction releases carbon dioxide, raising the dough without ethanol formation. However, since the trace organic flavoring agents are also not formed, the resulting bread products taste different from conventional breads.

2.3.1 Emission Sources

The primary source of VOC emissions at a bakery is the oven. Screening measurements taken at mixers, fermentation vessels, comfort hoods, proof boxes, oven exhausts, cooling area exhausts, and packaging areas suggest that greater than 90 percent of VOC emissions are from the oven.[46]

2.3.2 Emission Stream Characteristics

Most studies of emissions from dough and bread have been to investigate flavor constituents, rather than to evaluate air pollution concerns.[47,48] Several studies, however, have been conducted to characterize bakery air emissions. They are described below.

2.3.2.1 Commercial Bakeries as a Major Source of Reactive Volatile Organic Gases. This study, performed under an EPA contract in 1977, represents the first attempt at estimating

ethanol emissions.[49] Four loaves of bread were prepared, fermented, and baked in a small electric oven under a tent to capture emissions from each stage of the breadmaking process. Emissions were measured at 0.5 lbs ethanol per 1000 lbs bread for the straight dough process and 5.6 lbs ethanol per 1000 lbs bread for the sponge dough process. Over 90 percent of the ethanol was emitted during the baking. Several other emission factors, ranging from 5 to 8 lbs ethanol per 1000 lbs bread, were also calculated from various theoretical considerations for comparison purposes.

The dough formulas used differed considerably from standard industry recipes in both relative quantity and type of ingredients used. Sweetener and yeast concentrations were both relatively high, and a standard commercial baking grade of yeast was not used to make the test loaves.

2.3.2.2 Bay Area Air Quality Management District (BAAQMD) Study. This 1985-1986 study entailed source testing of bakery ovens.[50] In its attempt to develop more realistic emission factors, the BAAQMD performed at least one source test using BAAQMD Method ST-32 on every bread, bun, and roll oven at each of the seven large commercial bakeries within the Bay Area. A total of 16 ovens were tested, with some tested several times under different operating conditions. Source emission factors, expressed in pounds of ethanol per thousand pounds of bread, were calculated for each test performed. The results obtained ranged from 0.3 to 7.0 lbs of ethanol per 1000 lbs of bread baked. The reasons for this variation of ethanol emissions were not reported.

2.3.2.3 American Institute of Baking (AIB) Study. This 1987 study examined the ethanol emissions data collected by the BAAQMD.[51] The purpose of this study was to explain the wide fluctuations in levels of ethanol measured during the BAAQMD

survey and to look for correlations in the levels measured. The AIB was requested to study the relationship between the test results and process parameters that may affect emissions. The parameters studied included yeast and sweetener concentrations, fermentation time, type of process (sponge dough vs. straight dough vs. brew), type of product (white bread, buns, sourdough bread, variety), and baking conditions (time and temperature). A linear relationship was found between emissions (lbs ethanol per 1000 lbs bread) and the product of the initial yeast concentration and total fermentation and proof time. The dough process type (sponge, straight, and liquid brew) also had a small influence.

To confirm this relationship, AIB derived a mathematical model based on the source test data. Using the formula developed based on this model (see page 1-4), an ethanol emission factor can be estimated for each variety of bread, and ethanol emissions from an oven baking breads of the varieties for which the formula is applicable can be quantified by multiplying the product mix by the appropriate emission factors.

2.3.2.4 South Coast Air Quality Management District (SCAQMD) Study. This 1988 survey was initiated by the SCAQMD's Rule Development Office to quantify ethanol emissions and determine the number, types, and characteristics of bakery ovens operating in the District.[52] The study was carried out using a questionnaire designed by SCAQMD and distributed to bakery operators by the newly formed Southern California Baker's Air Quality Association. Information on bakery operations was supplied by the major bakeries in the District. The quantity of ethanol emissions reflected in answers to the questionnaire was estimated by the bakery owners using the AIB formula. Results from the questionnaire indicate that there were 24 major bakeries operating 72 ovens in the District. Total bread production in the District was 446,700 tons per year and total ethanol

emissions there were calculated as 4.1 tons per day. Average emission rates were calculated as 2.5 lbs ethanol per 1000 lbs bread produced.

The SCAQMD's Emissions Inventory Unit also attempted to quantify ethanol emissions generated by bread bakeries. Based on their report, the total VOC emissions from bakeries in the South Coast Air Basin was 2442 tons per year or 9.4 tons per day.

2.3.2.5 Current Study. Because of increasing regulatory concern for certain constituents emitted in small quantities (such as acetaldehyde) from bakery oven exhausts and the need to predict total VOC emissions (rather than just ethanol emissions) from common baking parameters, emission data were gathered. Sampling and analysis was performed using EPA Test Methods 18 (to quantify total organic carbon) and 25A (to speciate the constituents of the exhaust gas) at four typical bakeries on 18 different products with varying yeast concentrations and fermentation times. Products sampled were selected to provide a range of yeast concentrations and fermentation times similar to the AIB study and representative of the baking industry. A multiple step-wise linear regression was performed on the process parameters and emission rates. The resulting data is summarized in Appendix B, and indicates that total VOC from bakery ovens can best be described as:

$$\text{VOC E.F.} = 0.95Y_i + 0.195t_i - 0.51S - 0.86t_s + 1.90$$

where

VOC E.F. = pounds VOC per ton of baked bread

Y_i = initial baker's percent of yeast to the nearest tenth of a percent

t_i = total yeast action time in hours to the nearest tenth of an hour

S = final (spike) baker's percent of yeast to the nearest tenth of a percent

t_s = spiking time in hours to the nearest tenth of an hour

Although it appears that by changing a bread formula and increasing the amount of final yeast (S), it would be possible to obtain low or even a negative value for VOC emission estimates, a product of high quality would not be produced.[53] Where no final yeast is added, the formula condenses to:

$$\text{VOC E.F.} = 0.95Y_i + 0.195t_i + 1.90$$

This predictive equation can be used for quantifying VOC emissions from bakery ovens. A baker knows the yeast concentrations and yeast action times for each variety baked. Those values can be inserted into this equation and pounds of VOC per ton of bread baked can be calculated. This number is multiplied by the tons of bread baked during a given time period, and the product is pounds of VOC emitted from the oven for that particular product for the given time period (typically per year). The following equation demonstrates this calculation:

VOC Emissions tons/yr = VOC E.F. x BP x k

where

VOC E.F. = lbs VOC emissions/ton of bread produced
BP = bread production in tons/yr
k = conversion constant (ton/2000lb)

2.3.2.6 Other Studies. Numerous other studies of bread emissions or constituents have been performed but are primarily qualitative. These include Rothe,[54] Wiseblatt and Kohn,[55] Hironaka,[56] El-Samahy,[57] Makuljukow,[58] Markova,[59] and others. These works discuss the relative affects of baking parameters such as proof temperature and baking time on ratios of aldehydes to alcohols and other similar relationships. While of interest in

efforts directed at narrowing the range of species for which to analyze and minimize emissions through process modification, these studies relate only slightly to the quantification and control of total VOC emissions from bakery ovens.

2.4 SUMMARY OF CURRENT AIR EMISSION REGULATIONS

2.4.1 BAAQMD

BAAQMD in 1989 adopted Regulation 8 Rule 42 (Appendix D), effective January 1, 1992, requiring 90 percent reduction of ethanol emissions from large commercial bakeries. The regulation exempts chemically leavened baked goods; miscellaneous baked goods such as croutons, muffins, crackers, and breadsticks; bakeries producing less than 100,000 lbs per day of bread, averaged monthly; and ovens emitting less than 150 lbs per day of ethanol. Ovens operating before January 1, 1988, are exempt if they emit no more than 250 lbs per day of ethanol. Emissions are estimated using the AIB formula and measured using BAAQMD Method ST-32.

2.4.2 SCAQMD

SCAQMD in 1990 adopted Rule 1153 - Commercial Bakery Ovens regulating VOC emissions from bakery ovens with a rated heat input capacity of 2 million BTU per hour or more (Appendix E). The rule requires 95 percent reduction of VOC emissions by July 1, 1992, from new ovens emitting more than 50 lbs per day of VOC, 95 percent reduction of VOC emissions by July 1, 1994, from ovens operating before January 1, 1991, that emit 100 or more lbs of VOC per day, and 70 percent reduction of VOC emissions by July 1, 1993, from ovens operating before January 1, 1991, that emit between 50 and 100 lbs VOC per day. Emissions are estimated using the AIB formula and measured using EPA Test Method 25, or SCAQMD Test Method 25.1.

2.4.3 New Jersey

The State of New Jersey regulates VOC emissions from bakeries according to the New Jersey Administrative Code Title 7 Chapter 27 Subchapter 16.6 "Source Operations other than Storage Tanks, Transfers, Open Top Tanks, Surface Cleaners, Surface Coaters and Graphic Arts Operations." This rule limits VOC emissions to between 3.5 and 15 lbs per hr. Emissions estimates and measurement are by approved methods.

2.4.4 Other Areas

Several other State and local agencies regulate one or more of the constituents of bakery oven emissions under a general approach such as the regulation of hazardous air pollutants. In the State of Washington, The Puget Sound Air Pollution Control Agency limits ethanol emissions to levels that will not cause ambient concentrations greater than 6000 ug/m^3.[60] Compliance determination is by ambient modeling. The State of North Carolina limits acetaldehyde emissions to levels that will not cause ambient concentrations greater than 27 mg/m^3.[61] This type of standard is not known to have been used to require emission reductions by a control device at a bakery.

2.4.5 Prevention of Significant Deterioration

Areas in attainment with National Ambient Air Quality Standards (NAAQS) and subject to prevention of significant deterioration (PSD) regulations typically evaluate significant increases in emissions of VOC from a modification to an existing bakery or a new bakery (to the extent that either is considered a major PSD source, i.e., 250 tons per year) by using either the AIB formula or a source test generated at a similar facility.

Under PSD, the level of significance is a 40 tons per year (tpy) increase.

2.4.6 New Source Review

Areas in nonattainment with ozone NAAQS and subject to new source review (NSR) regulations typically evaluate increased emissions of VOC from a significant modification to an existing bakery or a new bakery by using either the AIB formula or a source test generated at a similar facility. Under NSR, the level of significance is a 40 tpy increase in areas classified as marginal or moderate. Modifications in areas classified as serious, severe, or extreme are subject to more stringent levels for determining a significant emissions increase. While not the subject of this document, the EPA is developing guidance as to how this review will be implemented. The major source cutoff for new sources ranges from 100 tons per year in an area classified as marginal ozone nonattainment to 10 tons per year in an area classified as extreme ozone nonattainment. Several bakeries, including an existing bakery in Atlanta, GA, and a new bakery in Denver, PA, have been required to install VOC emission control devices as a result of NSR regulations.

2.4.7 Monitoring and Enforceability

Careful record-keeping by any source of air emissions is essential to the determination of compliance for that source. This is particularly true of VOC sources since the ozone standard related to VOC emissions is of short duration compared to other criteria pollutants. Continuous emission monitoring (CEM) is one method used to record emission rates. However, other alternatives are available that may be less burdensome. These include but are not limited to permit limits based on verifiable quantities, temperature increase across catalysts, hot wire

thermistors, and various flow-based alternatives to classical CEM.

2.5 REFERENCES

1. Gorman Publishing. Gorman Red Book, 1991. Chicago. February 1992. p. 18.

2. Ref. 1, pp. 24-29.

3. Ref. 1, pp. 24-29.

4. Ref. 1, pp. 24-29.

5. Ref. 1, pp. 24-29.

6. Food Survey Pinpoints Consumer's Bakery Buying Habits. Bakery. p. 20. September, 1991. p. 20.

7. Anonymous. Per Capita Bread Consumption to Increase 2 Percent through '96. Milling and Baking News. January 15, 1991. p. 1.

8. Ref. 1, p. 30.

9. Pyler, E. J., Baking Science & Technology, Sosland Publishing Company. Volume II, 1988. p. 590

10. Ref. 9, p. 591.

11. Ref. 9, p. 595.

12. Ref. 9, p. 596.

13. Ref. 9, p. 651.

14. Ref. 9, p. 653.

15. Ref. 9, p. 592.

16. Ref. 9, p. 593.

17. Ref. 9, p. 683.

18. Ref. 9, p. 684.

19. Ref. 9, p. 683.

20. Ref. 9, p. 684.

21. Ref. 9, p. 687.

22. Ref. 9, p. 686.

23. Ref. 9, p. 687.

2.5 References (Continued)

24. Ref. 9, p. 699.

25. Ref. 9, p. 700.

26. Ref. 9, p. 703.

27. Ref. 9, p. 704.

28. Ref. 9, p. 706.

29. Ref. 9, pp. 709-718.

30. Ref. 9, pp. 718-719.

31. Ref. 9, pp. 719-723.

32. Ref. 9, p. 733.

33. Ref. 9, p. 741.

34. Ref. 9, p. 742.

35. Parrish, C. Radian Corporation. Site survey at Fox/Holsum bakery. February 28, 1992.

36. Letter from Anne Giesecke, ABA to Martha Smith, EPA. October, 20, 1992.

37. Ref. 36.

38. Ref. 9, p. 731.

39. Ref. 36.

40. Ref. 35.

41. Telecon. Sanford, W., RTI, with Lanham, W., Lanham Bakery Solutions. May 5, 1992. Direct and indirect firing of bakery ovens.

42. Ref. 36.

43. Ref. 36.

44. Ref. 36.

45. Sanderson, G., G. Reed, B. Bruinsma, and E. J. Cooper. Yeast Fermentation in Bread Baking. American Institute of Baking Technical Bulletin. Manhattan, Kansas. V.12:4. December 1983.

2.5 References (Continued)

46. Ref. 35.

47. Rothe, M. Aroma von Brot. Berlin, Akademie-Verlag. 1974. pp. 10-14.

48. Wiseblatt, L., F. E. Kohn. Some Volatile Aromatic Compounds in Fresh Bread. Washington, D.C. Presented at 44th annual meeting of the Quartermaster Food and Container Institute for the Armed Forces. Washington, D.C. May 1959. pp. 55-66.

49. Henderson, D. Commercial Bakeries as a Major Source of Reactive Volatile Organic Gases. U.S. Environmental Protection Agency. San Francisco. December 1977. 18 pp.

50. Cutino, J., S. Owen. Technical Assessment Report for Regulation 8, Rule 42-Organic Compounds - Large Commercial Bakeries. Bay Area Air Quality Management District. San Francisco. July 27, 1989. 34 pp.

51. Stitley, J. W., K. E. Kemp, B. G. Kyle, and K. Kulp. Bakery Oven Ethanol Emissions - Experimental and Plant Survey Results. American Institute of Baking. Manhattan, Kansas. December 1987.

52. South Coast Air Quality Management District. Rule 1153 - Commercial Bakery Ovens. El Monte. November 26, 1990.

53. Doerry, Wulf T., American Institute of Baking, to Giesecke, A., American Bakers Association. October 8,1992. Proposed predictive formula.

54. Ref. 47.

55. Ref. 48.

56. Hironaka, Y. Effects of Fermentation Conditions on Flavour Substances in French Bread Produced by the Straight Dough Method. Journal of Japanese Society of Food Science and Technology (Yamaguchi, Japan). 1985.

57. El-Samahy, S. K. Aroma of Egyptian "Baladi" Bread. Getreide, Mehl-und-Brot. Zagazig, Egypt. 1981.

58. Maklyukov, V. I. Influence of Various Baking Methods on the Quality of Bread. Baecker-und-Konditor. Moscow. 1982.

59. Markova, J. Non-enzymic Browning Reaction in Cereal Products. Sbornik-Vysoke-Skoly-Chemcko-Technologicke-V-Praze. Prague. 1972.

2.5 References (Continued)

60. Telecon. Sanford, W., RTI, with Pait, J., Puget Sound Air Pollution Control Agency. February 7, 1992. Bakery regulations.

61. North Carolina Administrative Code Title 15A Chapter 2 Subchapter 2D.1104.

3.0 VOC EMISSION CONTROL DEVICES

Control technologies such as thermal oxidation, catalytic oxidation, carbon adsorption, scrubbing, condensation, biofiltration, and process changes were considered for reducing VOC emissions from commercial bakery ovens. Devices under development or not demonstrated were not considered, although some show promise for the future.

This chapter describes emission control techniques potentially applicable to VOC from bakeries and identifies the control techniques to be evaluated in Chapter 4.0. These control techniques are grouped into two broad categories: combustion control devices and noncombustion control devices.

3.1 COMBUSTION CONTROL DEVICES

3.1.1 Direct Flame Thermal Oxidation

3.1.1.1 Control Description. Direct flame thermal oxidation, also called thermal oxidation, is the process of burning organic vapors in a separate combustion chamber. One type of thermal oxidizer consists of a refractory-lined chamber containing one or more discrete burners that premix the organic vapor gas stream with the combustion air and any required supplemental fuel. A second type of oxidizer uses a plate-type burner firing natural gas to produce a flame zone through which the organic vapor gas stream passes. Supplemental fuel, generally natural gas, may be added to the bakery oven exhaust to make the mixture combustible if the oven exhaust has a heating value of less than 1.9 MJ/m^3 (50 Btu/ft^3),[1] as is usually the case in bakery ovens. Supplemental fuel consumption can be minimized

by installing a heat exchanger to recover heat from the exhaust gas to preheat the incoming gas.

Thermal oxidizer exhaust gas is mainly carbon dioxide and water. Good design and operation limit unburned hydrocarbons and carbon monoxide emissions to very low levels. These design considerations include residence time, temperature, and turbulence in the oxidizer chamber.

3.1.1.2 Effectiveness and Applicability of Thermal Oxidation to Bakery Ovens. Oxidizers are most effective at controlling exhaust streams with relatively high concentrations of organics. When the oxidizer temperature is maintained at 870 °C (1600 °F) and a residence time of 0.75 seconds, over 98 percent of the unhalogenated organic compounds in the waste stream can be converted to carbon dioxide and water.[2-6] Although VOC concentrations in bakery exhaust can fluctuate, a thermal oxidizer can be designed to achieve reduction efficiency greater than 98 percent.[7]

Although effective at VOC removal, the high cost of supplemental fuel for thermal oxidizers usually makes some form of heat recovery desirable in applications having gas exhaust with heating values similar to bakery ovens. Thermal oxidation is a technically feasible but relatively expensive technique for the control of VOC emissions from bakery ovens and was not evaluated in Chapter 4.

3.1.2 Regenerative Oxidation

3.1.2.1 Control Description. Regenerative thermal oxidation is a variant of thermal oxidation (see Figure 3-1). The inlet gas first passes through a hot ceramic bed thereby heating the stream (and cooling the bed) to its ignition temperature. If the desired temperature is not attainable, a small amount of auxiliary fuel is added in the combustion chamber. The hot gases

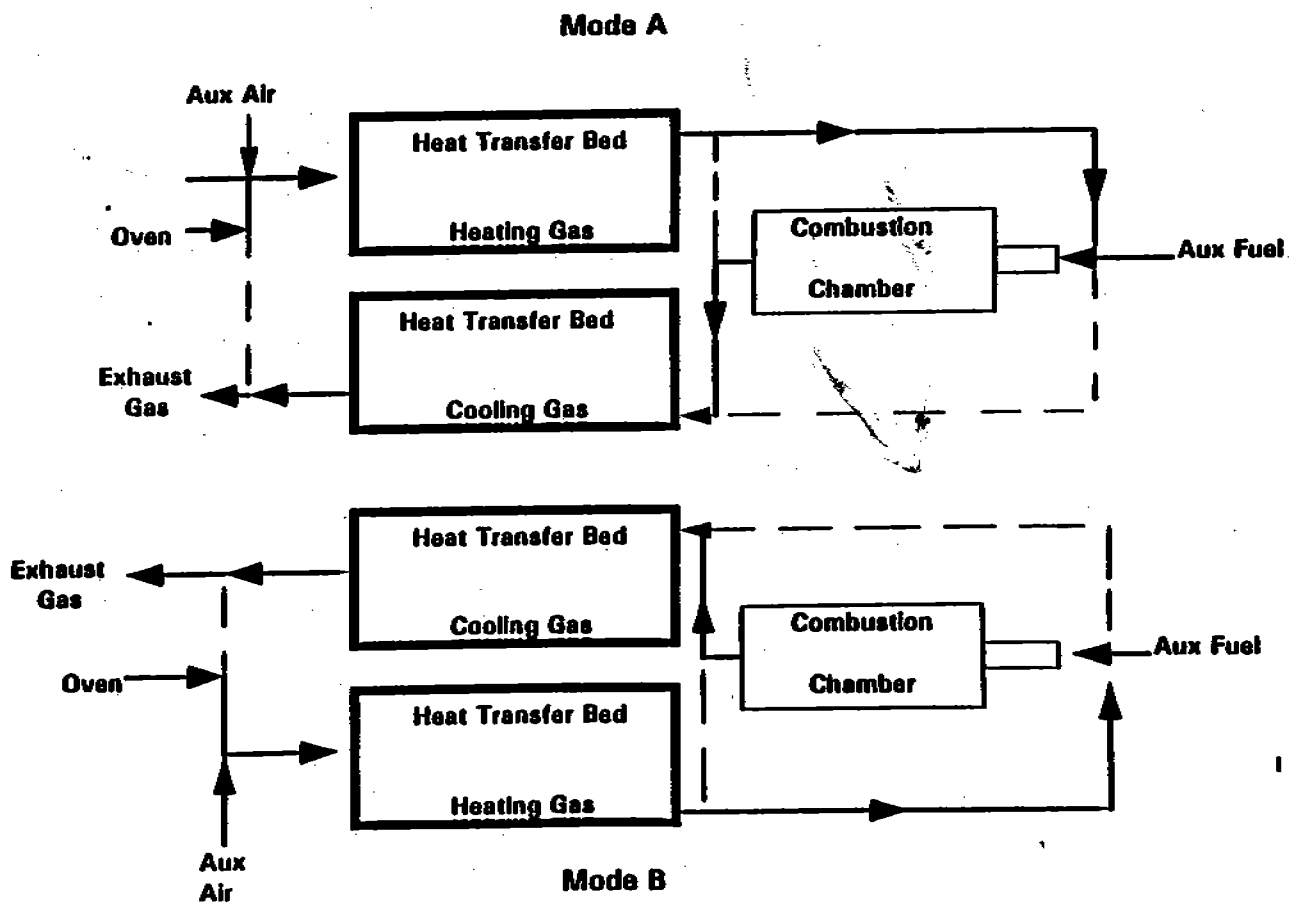

Figure 3-1. Regenerative Oxidation

then react (releasing energy) in the combustion chamber and while passing through another ceramic bed, thereby heating it to the combustion chamber outlet temperature. The process flows are then switched, now feeding the inlet stream to the hot bed. This cyclic process affords very high energy recovery (up to 95%).

Regenerative thermal oxidizers are available with either single or multiple beds. When a single bed is employed, the bed is used both as a combustion chamber and a regenerative heat-recovery exchanger. Combustion of the air pollutant occurs in the midsection of the single ceramic bed. When the multiple beds are used, the combustion chamber is separate from the heat transfer beds and is equipped with a burner to provide supplemental heat when needed.

3.1.2.2 Effectiveness and Applicability of Regenerative Oxidizers to Bakery Ovens. VOC reduction efficiencies greater than 98 percent are achievable.[8] Regenerative oxidizers are a feasible control technique for control of VOC from bakery ovens, and one is installed at a bakery in the United States. The cost effectiveness of a regenerative oxidizer is evaluated in Chapter 4.

3.1.3 Catalytic Oxidation

3.1.3.1 Control Description. A catalytic oxidizer is similar to a thermal oxidizer except that combustion of the exhaust gas takes place in the presence of a catalyst (see Figure 3-2). This allows the oxidizer to be operated at lower temperatures, ranging from 320 to 650°C (600 to 1200 °F),[9] consequently reducing NO_x formation, supplemental fuel consumption, and associated operating costs. Temperatures below this range slow the oxidation reactions resulting in lower destruction efficiencies. Temperatures above this range can cause premature catalyst failure. Where catalytic oxidation of

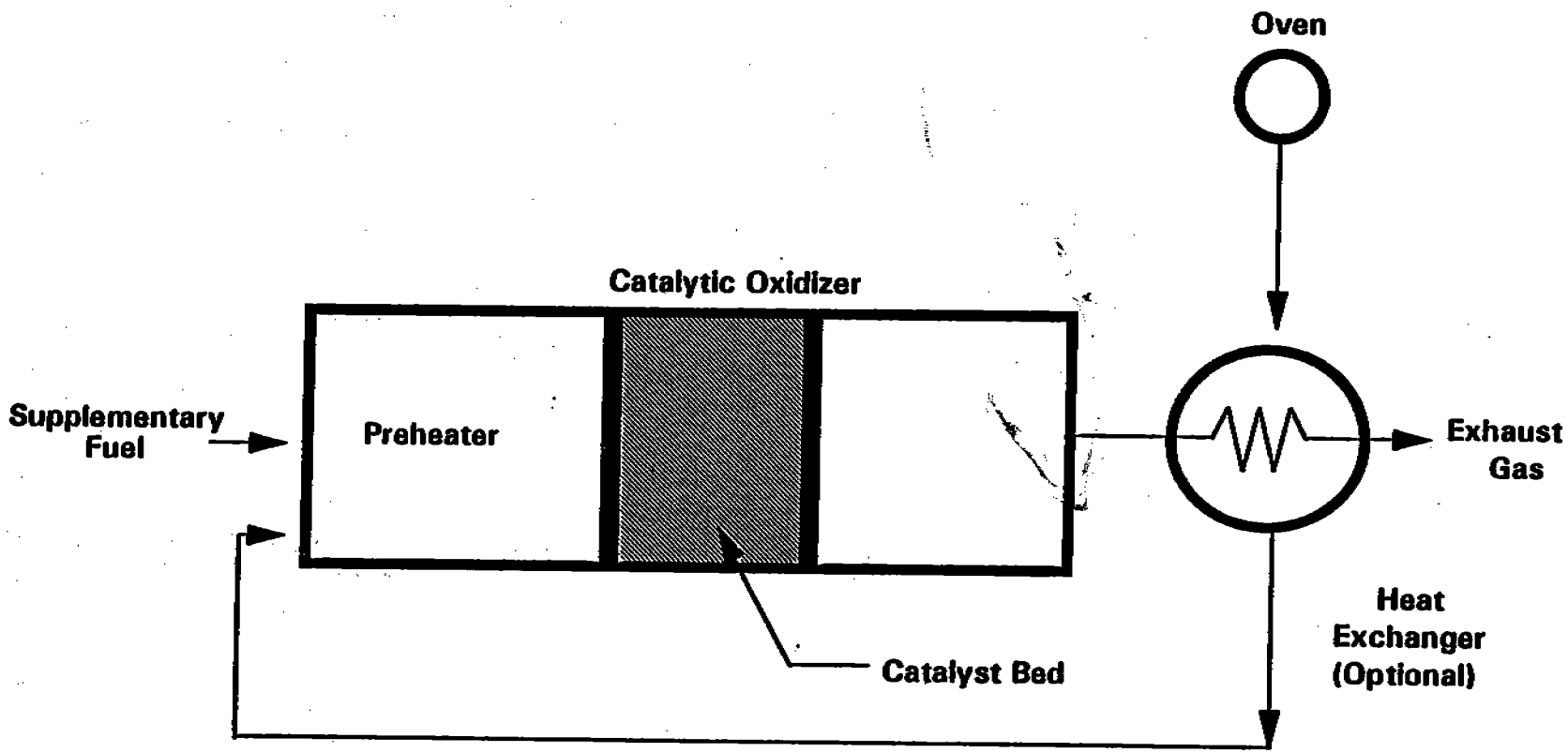

Figure 3-2. Catalytic Oxidation

vapor streams with a high organic content can produce temperatures above 650 °C (1200 °F), catalytic oxidizers can be suitable after dilution of those streams with fresh air.

Catalysts are typically composed of a porous inert substrate plated with metal alloy containing platinum, palladium, copper, chromium, or cobalt, and require an extremely clean exhaust stream. In early bakery applications, there was some concern that trace compounds and fine particulates may foul the catalyst, reducing the efficiency. However, a catalytic oxidizer installed in 1987 on a large bakery oven in the Bay Area has been running trouble-free for five years.[10] Although no test results are available at this time, advances in catalyst technology may eliminate the need for a preburner, thereby lowering costs. At least one bakery is currently evaluating such a system.[11]

3.1.3.2 Effectiveness and Applicability of Catalytic Oxidizers to Bakery Ovens. VOC reduction efficiencies greater than 98 percent are achievable.[12,13] Catalytic oxidation is considered to be technically and economically feasible. Of the 23 known existing oxidizers on bakery ovens, 21 are of a catalytic design.[14]

3.2 NONCOMBUSTION CONTROL DEVICES

3.2.1 Carbon Adsorption.

3.2.1.1 Control Description. A carbon adsorption unit consists of one or more beds of activated carbon, which adsorb organic compounds from the exhaust stream. The organic vapors adhere to the large surface area and when the bed becomes saturated, steam is passed through it to regenerate the carbon. The steam/organic vapor mix is then condensed and either sent for disposal or distilled to recover the organic compounds.

3.2.1.2 Effectiveness and Applicability of Carbon Adsorption to Bakery Ovens. Carbon adsorption is very effective in removing low concentrations of VOC, with efficiencies greater than 95 percent. However, there are several problems with adapting this technology to a bakery oven. Ethanol, the primary organic gas in oven exhaust, has a high affinity for carbon and is difficult to strip from the carbon beds. Incomplete stripping lowers bed capacity and reduces abatement efficiency. Fats and oils in the exhaust may clog the carbon pores, reducing capacity and bed life. The resulting ethanol/water mixture would require further treatment and disposal. Because of these problems, carbon adsorption is not considered for reduction of VOC emissions from bakery ovens.

3.2.2 Scrubbing

3.2.2.1 Control Description. Scrubbing is the absorption of gaseous pollutants by liquid. In a packed tower scrubber, a fine water mist is sprayed countercurrent to the exhaust flow in the presence of packing material with a large surface area to maximize liquid/gas mixing. Soluble organic compounds are absorbed by the water and the water/organics mixture is either treated for recovery of the organics or sent for disposal.

3.2.2.2 Effectiveness and Applicability of Scrubbing to Bakery Ovens. Since ethanol is readily soluble in water, scrubbers are technically feasible as a control device for VOC removal in some applications. Substantial quantities of water would be required to handle the exhaust gas from bakery ovens that would either present a massive wastewater disposal problem or require the installation of large-scale wastewater treatment that does not simply release the ethanol to the ambient air or cause other cross-media emissions transfer, or ethanol recovery equipment. Due to the high costs of wastewater treatment and

ethanol recovery, scrubbing is not considered feasible as a technique for VOC reduction from bakery ovens.

3.2.3 Condensation

3.2.3.1 Control Description. Condensation is the process by which pollutants are removed by cooling the gases below the dew point of the contaminants, causing them to condense. Two types of condensation devices are surface condensers and contact condensers.

Surface condensers are generally of a shell-and-tube design in which the coolant (usually water) and vapor phases are separated by the tube wall and do not contact each other.

Contact condensers cool vapors by spraying a relatively cold liquid into the gas stream. They are generally more efficient, inexpensive, and flexible than surface condensers, but typically produce large amounts of wastewater if the condensate cannot be recycled, and therefore, are not considered appropriate for bakeries.

3.2.3.2 Effectiveness and Applicability of Condensation to Bakery Ovens. Condensing the VOC gas stream emitted by baking would require freon-chilled coils to cool a very wet gas stream from 120 to 10 °C (250 to 50 °F). Water would freeze on the coils, insulating them, thereby reducing the abatement efficiency of the system. Fats and oils would condense more readily, exacerbating any potential sanitation problems in the ductwork. However, the resulting condensed liquid would present a disposal problem. Condensers are usually associated with airflows less than 2,000 ft^3/min,[15] and most older ovens are operated at substantially higher airflows. Condensation is not considered a technically feasible option for controlling VOC emissions from bakeries because most ovens are operated at an airflow higher than desirable for condensers, the cost of refrigeration is high,

the value of the VOC recovered is low, and the potential for wastewater disposal problem is high. Condensers have been not been demonstrated to be effective VOC control devices on bakery ovens.

3.2.4 Biofiltration

3.2.4.1 Control Description. Biofilters are a relatively new, unproven technology, used in Europe for odor control and in the United States on processes (such as yeast production) which discharge gases at near ambient temperature.[16] The exhaust stream is passed through a bed of soil, which absorbs the organic compounds. Microorganisms naturally present in the soil break down the organics into carbon dioxide and water. The beds must be monitored and kept damp to prevent cracking or insult to the microorganisms. This system appears to have several advantages not offered by other control options. The capital costs are low enough to permit the installation of separate beds for each stack of a multi-stack oven. This avoids any flow-balance problems and minimizes the expense of additional ducting. Annual operating expenses are minimal, and include minor bed maintenance and electricity for the exhaust fan only.

3.2.4.2 Effectiveness and Applicability of Biofiltration to Bakery Ovens. Because the gas stream temperature from a bakery oven is higher than the temperature which soil microorganisms can tolerate, biofiltration has not been demonstrated to be a feasible control technique for bakery ovens. Even if this temperature problem were solved by cooling the gas stream (by scrubbing, for example), the wastewater and fats condensation problems associated with most cooling strategies are significant, and sufficient space for these soil beds is unavailable at many bakeries in the United States. The effectiveness of biofiltration as a technique for VOC reduction from bakery ovens

is not known. Therefore, biofiltration is not considered in Chapter 4.

3.2.5 Process and Formulation Changes

3.2.5.1 Control Description. The AIB study demonstrated that shorter fermentation and lower yeast percentages do reduce the amount of ethanol emitted. However, these changes also affect the taste, texture, and quality of the finished product. It is not known if comparable products can be produced using low-ethanol formulations.

By substituting chemical leavening (baking powder) for the yeast, bakers can produce bread without any ethanol formation or emissions. Examples of such breads include corn bread and Irish soda bread. However, by eliminating the fermentation reactions, the chemical leavening process also prevents formation of the various agents responsible for the flavors and aromas of conventional yeast-leavened bread. Chemically leavened breads have their own distinct flavor which may not be acceptable to consumers as a substitute.

Much research has been done to find ways to enhance the flavor of bread prepared with short fermentation time,[17] but none has been successful.[18] A major yeast manufacturer is currently testing an additive intended to shorten fermentation time and thereby lower VOC emissions,[19] but initial tests have not provided consistently acceptable products.[20]

3.2.5.2 Effectiveness and Applicability of Process and Formulation Changes to Bakery Ovens. Process and formulation changes can be effective in reducing or nearly eliminating VOC emissions from bakery ovens. However, no modified yeast, additive, or enzyme that lowers VOC emissions has been demonstrated to provide taste acceptable to the baking industry and consumers in the United States. Although future prospects

are promising, process and formulation changes are not currently feasible as a means of substantially reducing bakery VOC emissions.

3.3 REFERENCES

1. U. S. Environmental Protection Agency. Distillation Operations in Synthetic Organic Chemical Manufacturing-Background Information for Proposed Standards. Publication No. EPA-450/3-83/005a. December 1983. p. 4-21.

2. Memorandum and attachments from Farmer, J. R., U. S. Environmental Protection Agency, Office of Air Quality Planning and Standards. August 22, 1980. Thermal incinerators and flares.

3. Lee, K., J. L. Hansen, and D. C. McCauley, Union Carbide. Revised Model for the Prediction of Time-Temperature Requirements for Thermal Destruction of Dilute Organic Vapors and Its Use for Predicting Compound Destructibility. Presented at the 75th annual meeting of the Air Pollution Control Association. New Orleans, LA. June 1982.

4. Midwest Research Institute. Emission Test of Acrylic Acid and Ester Manufacturing Plant, Union Carbide, Taft, Louisiana. Prepared for the U. S. Environmental Protection Agency, Office of Air Quality Planning and Standards. Research Triangle Park, NC. EMB Report 78-OCM8. September 1980.

5. Midwest Research Institute. Emission Test of Acrylic Acid and Ester Manufacturing Plant, Rohm and Haas, Deer Park, Texas. Prepared for the U. S. Environmental Protection Agency, Office of Air Quality Planning and Standards. Research Triangle Park, NC. EMB Report 78-OCM9. August 1980.

6. Midwest Research Institute. Stationary Source Testing of a Maleic Anhydride Plant at the Denka Chemical Corporation, Houston, TX. Prepared for the U. S. Environmental Protection Agency, Office of Air Quality Planning and Standards. Research Triangle Park, NC. EMB Report 78-OCM4. March 1978.

7. Cutino, J., S. Owen. Technical Assessment Report for Regulation 8, Rule 42-Organic Compounds - Large Commercial Bakeries. Bay Area Air Quality Management District. San Francisco. July 27, 1989. p. 11.

8. Ref. 3, p. 11.

9. Ref. 1, p. 4-31.

10. Telecon. Sanford, W., RTI, with Gjersvik, C., Continental Baking Company. July 14, 1992. Catalytic oxidizers.

11. Ref. 10

3.3 References (Continued)

12. U. S. Environmental Protection Agency. Parametric Evaluation of VOC/HAP Destruction via Catalytic Incineration. Project Summary. Publication No. EPA/600/52-85/041. Research Triangle Park, NC. July 1985. 4 p.

13. U. S. Environmental Protection Agency. Destruction of Chlorinated Hydrocarbons by Catalytic Oxidation. Publication No. EPA-600/2-86-079. Washington, DC. September 1986. p. 9.

14. Telecon. Sanford, W., RTI, with Otchy, T., CSM Environmental Systems, Inc. March 18, 1992. Oxidizers at bakeries.

15. Purcell, R. Y., and G. S. Shareef. Evaluation of Control Technologies for Hazardous Air Pollutants. U. S. Environmental Protection Agency. Research Triangle Park, NC. Publication No. EPA/600/7-86/009a. February 1986. p. 3-3.

16. U. S. Environmental Protection Agency. Assessment of VOC Emissions and Their Control from Baker's Yeast Manufacturing Facilities. Research Triangle Park, NC. Publication No. EPA-450-3-91-027. January 1992. p. 35-37.

17. Wiseblatt, L., and F. E. Kohn. Some Volatile Aromatic Compounds in Fresh Bread. Washington, D.C. Presented at 44th annual meeting of the Quartermaster Food and Container Institute for the Armed Forces. Washington, D.C. May 1959.

18. Telecon. Sanford, W., RTI, with Lanham, W., Lanham Bakery Solutions. May 5, 1992. Preferment additives.

19. Fleischmann's Yeast. Product Announcement. NPFC Significant Factor in Reducing Ethanol Output. January 10, 1992.

20. Telecon. Sanford, W., RTI, with Franek, J., Northeast Foods. March 12, 1992. Emission tests using NPFC.

4.0 IMPACT ANALYSIS OF ALTERNATIVE CONTROL TECHNIQUES

This chapter presents the cost effectiveness of various control strategies based on a set of model baking lines. This approach identifies a range of oven sizes and dough formulas typical for the industry and derives VOC emissions and the resulting costs of control for an oven. Of the control methods described in Chapter 3.0, oxidation is the most feasible and widely used, and the control devices selected for cost analysis are catalytic and regenerative oxidizers. The cost analysis was performed using the OAQPS Control Cost Manual, Fourth Edition.[1] Example calculations are in Appendix C.

Because the parameters affecting bakery oven emissions vary, a range of parameters such as yeast concentration, proofing time, oven heat input, and air flow were used, and the resulting values for cost per ton of VOC removed and oven heat input and air flow are displayed as summary graphs.

4.1 MODEL OVENS AND VOC EMISSIONS

Due to the number of bakery ovens and wide variation in process parameters affecting emissions, models were used to represent typical baking lines. The models are not intended to represent all bakeries, nor any specific bakery, but rather to summarize the range of process parameters encountered at commercial bakeries in current operation. Nine different size ovens and three different dough formulas were used in the modeling. This approach provides 27 different representative model baking lines for analysis (see Table 4-1). The parameters chosen are optimized in some respects and may not reflect the mode of operation of some bakeries. For instance, many bakeries do not operate 24 hours per day, their schedule being driven by

TABLE 4-1. MODEL OVENS

Case No.	Oven Size 10^6 BTU/hr	Bread Production (tons/yr)[a]	Initial Yeast (Y)	Spike Yeast (S)	Y Action Time (ti)	Spike Time (ts)	VOC Emissions Factor (lbs/ton)	VOC Emissions[b] (tons/yr)
1	2	5,769	2.25	0	1.63	0	4.4	13
2	3	8,654	2.25	0	1.63	0	4.4	19
3	4	11,538	2.25	0	1.63	0	4.4	25
4	5	14,423	2.25	0	1.63	0	4.4	32
5	6	17,308	2.25	0	1.63	0	4.4	38
6	7	20,192	2.25	0	1.63	0	4.4	44
7	8	23,077	2.25	0	1.63	0	4.4	51
8	9	25,962	2.25	0	1.63	0	4.4	57
9	10	28,846	2.25	0	1.63	0	4.4	63
10	2	5,769	4	0.5	5.67	1.38	5.4	16
11	3	8,654	4	0.5	5.67	1.38	5.4	23
12	4	11,538	4	0.5	5.67	1.38	5.4	31
13	5	14,423	4	0.5	5.67	1.38	5.4	39
14	6	17,308	4	0.5	5.67	1.38	5.4	47
15	7	20,192	4	0.5	5.67	1.38	5.4	55
16	8	23,077	4	0.5	5.67	1.38	5.4	62
17	9	25,962	4	0.5	5.67	1.38	5.4	70
18	10	28,846	4	0.5	5.67	1.38	5.4	78
19	2	5,769	4.25	0	5.15	0	6.9	20
20	3	8,654	4.25	0	5.15	0	6.9	30
21	4	11,538	4.25	0	5.15	0	6.9	40
22	5	14,423	4.25	0	5.15	0	6.9	50
23	6	17,308	4.25	0	5.15	0	6.9	60
24	7	20,192	4.25	0	5.15	0	6.9	70
25	8	23,077	4.25	0	5.15	0	6.9	80
26	9	25,962	4.25	0	5.15	0	6.9	90
27	10	28,846	4.25	0	5.15	0	6.9	100

[a] Assumes 520 BTU/lb bread and 6000 hr/yr production
[b] Emissions calculated from predictive formula

orders, holidays, and seasonal variations. In the case of bakeries operating less than 24 hours per day, the decrease in hours means a decrease in emissions, but since the control device need not be operated when the oven is not baking, fuel and other operating costs are also reduced. Selection of the bakery process parameters is discussed below.

4.1.1 VOC Emission Factors

In the absence of specific source tests, the emission of VOC's from bakery ovens is best described by a formula relating yeast concentration and total yeast action times (mixing, proofing, floor, and fermentation times) to VOC emissions as described in Chapter 2.0. According to this study and the AIB study on bakery oven ethanol emissions,[2] parameters such as dough type (sponge, straight, brew), sugar concentration in the dough, oven type, and bread type do not appreciably affect VOC emissions. In this study four bakeries were tested. The bakeries were chosen to test a wide variety of products indicative of the range in the industry. In this model, values for initial yeast (Y_i), total yeast action time (t_i), final yeast (S), and spiking time (t_s) that are known to result in a marketable product were chosen. These values reflect the range of values found in the dough formulas that were tested in this study and, therefore, represent a reasonable range of the industry.

4.1.2 Oven Type and Number of Stacks

Model ovens were assumed to be directly fired by natural gas and have only one stack. Because indirectly fired ovens make up a small portion of the known ovens, they are not considered. Since the products of combustion would presumably not enter the control device in indirectly fired ovens, the flow rate to the

control device for indirectly fired ovens would be lower and the control device may be smaller, lowering control costs. Oven design (spiral, tunnel, tray) is not thought to affect emission levels.[3]

Because adjustments to exhaust stack dampers in a multi-stack oven will change the air flow distribution and, therefore, the distribution of emissions from individual stacks, the need to treat the exhaust from one or more stacks must be examined on a case-by-case basis.[4] Such a site-specific engineering analysis is beyond the scope of this document. The analysis in this chapter assumes that each control technology would require an exhaust system ducting sufficient stacks in multi-stack ovens through a single plenum to a control device, in order to achieve the required level of emission reduction. An estimate for the increased capital cost of additional stacks is $40,000 per stack.[6]

4.1.3 Oven Heat Input

Oven heat inputs from 2 to 10 MBtu/hr were selected in increments of 1 MBtu/hr. This is representative of the range of heat inputs for commercial bakery ovens. This analysis assumes a linear relationship between heat input, oven airflow, and bread production, and uses heat input as the independent variable; however, the physical quantity actually most affecting control device cost is airflow.

4.1.4 Oven Operating Time

All ovens were assumed to operate 24 hours per day, five days a week (6000 hours per year) and represents common practice in the commercial baking industry.

4.1.5 Control Devices

Of the approximately 23 ovens currently controlled, 21 use catalytic oxidizers, one uses a thermal oxidizer, and one uses a regenerative oxidizer.[7] Cost effectiveness analyses were generated for catalytic and regenerative oxidizers.

4.1.6 Flow Rates

Flow rates are estimated by the same mathematical model used by the SCAQMD.[8] Flow rates are calculated as a function of heat input. Assuming 7.37 lb air used in combusting 10,000 Btu of natural gas, 110 percent theoretical air as supplied, 0.0808 lb air per cubic feet,[9] and adding the resulting value to the 10 percent moisture[10] potentially evaporated from the white bread dough, flow rates can be calculated.[11] The percent moisture loss will vary for other products. The values so derived were doubled to compensate for the increase in temperature and moisture.[12]

4.1.7 Bread Production

Bread production is assumed to be a linear function of heat input. The common design value of 520 Btu per pound of bread is used[13] (see Table 4-1).

4.1.8 Destruction Efficiency

A destruction efficiency of 98 per cent is assumed, consistent with EPA policy.[14] The EPA policy maintains that 98 percent destruction efficiency is reasonable for oxidation based on the results of emission tests at incinerators in several industries. Certain existing control devices may have been designed for a lower control efficiency, such as 95 per cent. State or local agencies considering control of bakery VOC

emissions should consider allowing facilities to continue to use these devices rather than requiring immediate replacement.

4.2 COSTING METHODOLOGY GENERAL ASSUMPTIONS

The following assumptions were made in estimating control costs:

- All costs are presented in 1991 dollars;
- The factor method used is nominally accurate to within ± 30 per cent;
- The site is readily accessible by rail or road;
- Control devices are dedicated to single ovens (one oxidizer per oven);
- Costs of combining multiple stacks are not included;
- There is no salvage value for the used control equipment at the end of its service life;
- No site preparation or civil engineering cost other than the amount allowed by the OAQPS Control Cost Manual is included (site-specific costs such as roof reinforcement is not included); and
- Utilities are available at the site.

4.3 COST ANALYSIS

Tables 4-2a and 4-2b summarize the parameters, total capital investment, utility costs, and total annual cost used in the cost analyses for catalytic and regenerative oxidization.

4.4 COST EFFECTIVENESS

Tables 4-3a and 4-3b summarize the cost-effectiveness of catalytic and regenerative oxidation as control technologies for bakeries. As reflected in the tables, the technologies become more cost-effective as the size of the oven increases. The cost of control decreases per ton of VOC removed and per pound of bread produced as the oven size (and therefore, production capacity) increases.

Figures 4-1 and 4-2 graphically summarize the relative cost-effectiveness of catalytic and regenerative oxidation. The

TABLE 4-2a. COST OF CATALYTIC OXIDATION[a]

Case No.	Total Capital Investment ($)	Natural Gas Usage (scfm)	Natural Gas Usage ($/yr)	Electricity Usage (kWh/yr)	Electricity Usage ($/yr)	Total Annual Cost ($/yr)
1	$84,000	1.5	$1,800	11,000	$700	$36,000
2	$106,000	2.3	$2,700	16,500	$1,000	$42,000
3	$124,000	3.0	$3,600	22,000	$1,300	$47,000
4	$140,000	3.8	$4,500	27,600	$1,600	$52,000
5	$155,000	4.6	$5,400	33,100	$2,000	$56,000
6	$169,000	5.3	$6,300	38,600	$2,300	$60,000
7	$182,000	6.1	$7,200	44,100	$2,600	$65,000
8	$194,000	6.8	$8,100	49,600	$2,900	$68,000
9	$206,000	7.6	$9,000	55,100	$3,300	$72,000
10	$84,000	1.2	$1,400	11,000	$700	$36,000
11	$106,000	1.8	$2,100	16,500	$1,000	$41,000
12	$124,000	2.3	$2,800	22,000	$1,300	$46,000
13	$140,000	2.9	$3,500	27,500	$1,600	$51,000
14	$155,000	3.5	$4,200	33,100	$2,000	$55,000
15	$169,000	4.1	$4,900	38,600	$2,300	$59,000
16	$182,000	4.7	$5,600	44,100	$2,600	$63,000
17	$194,000	5.3	$6,300	49,600	$2,900	$67,000
18	$206,000	5.9	$7,000	55,100	$3,300	$70,000
19	$84,000	0.7	$800	11,000	$600	$35,000
20	$106,000	0.9	$1,100	16,500	$1,000	$40,000
21	$124,000	1.2	$1,500	22,000	$1,300	$45,000
22	$140,000	1.5	$1,800	27,500	$1,600	$49,000
23	$155,000	1.9	$2,200	33,000	$1,900	$53,000
24	$169,000	2.2	$2,600	38,500	$2,300	$57,000
25	$182,000	2.5	$2,900	44,000	$2,600	$60,000
26	$194,000	2.8	$3,300	49,500	$2,900	$64,000
27	$205,000	3.1	$3,700	55,000	$3,200	$67,000

[a] Costs in this table are in 1988 dollars. Total Capital Investment can be multiplied by 1.06 to reflect 1992 dollars. For updating Total Annual Costs, current utility rates should be verified with utility companies and the appropriate correction applied. The additional cost for more than one stack has NOT been used in this calculation. Although this cost would be based on oven size and other site-specific characteristics, an increase in capital cost of $40,000 per stack can be used. This would translate to an annual cost of $40,000 multiplied by a capital recovery factor (CRF) of 0.1628 and would equal $6,512.00.

TABLE 4-2b. COST OF REGENERATIVE OXIDATION[a]

Case No.	Total Capital Investment ($)	Natural Gas Usage (scfm)	Natural Gas Usage ($/yr)	Electricity Usage (kWh/yr)	Electricity Usage ($/yr)	Total Annual Cost ($/yr)
1	$197,000	4.4	$5,200	10,000	$600	$72,000
2	$218,000	6.6	$7,800	15,100	$900	$74,000
3	$234,000	8.7	$10,400	20,100	$1,200	$85,000
4	$248,000	10.9	$13,000	25,100	$1,500	$91,000
5	$259,000	13.1	$15,600	30,100	$1,800	$96,000
6	$270,000	15.3	$18,200	35,100	$2,100	$101,000
7	$279,000	17.5	$20,700	40,200	$2,400	$106,000
8	$287,000	19.7	$23,300	45,200	$2,700	$110,000
9	$295,000	21.8	$25,900	50,200	$3,000	$115,000
10	$197,000	4.0	$4,800	10,000	$600	$71,000
11	$218,000	6.0	$7,200	15,100	$900	$78,000
12	$234,000	8.0	$9,500	20,100	$1,200	$84,000
13	$248,000	10.0	$10,300	25,100	$1,500	$90,000
14	$259,000	12.1	$14,300	30,100	$1,800	$95,000
15	$269,000	14.1	$16,700	35,100	$2,100	$99,000
16	$279,000	16.1	$19,100	40,100	$2,400	$104,000
17	$287,000	18.1	$21,500	45,200	$2,700	$108,000
18	$295,000	20.1	$23,900	50,200	$3,000	$113,000
19	$197,000	3.5	$4,100	10,000	$600	$71,000
20	$218,000	4.4	$6,200	15,000	$900	$77,000
21	$234,000	6.9	$8,200	20,000	$1,200	$83,000
22	$248,000	8.6	$10,300	25,000	$1,500	$88,000
23	$259,000	10.4	$12,300	30,100	$1,800	$93,000
24	$269,000	12.1	$14,400	35,100	$2,100	$97,000
25	$279,000	13.8	$16,400	40,100	$2,400	$101,000
26	$287,000	15.5	$18,500	45,100	$2,700	$105,000
27	$295,000	17.3	$20,500	50,100	$3,000	$109,000

[a] Costs in this table are in 1988 dollars. Total Capital Investment can be multiplied by 1.06 to reflect 1992 dollars. For updating Total Annual Costs, current utility rates should be verified with utility companies and the appropriate correction applied. The additional cost for more than one stack has NOT been used in this calculation. Although this cost would be based on oven size and other site-specific characteristics, an increase in capital cost of $40,000 per stack can be used. This would translate to an annual cost of $40,000 multiplied by a capital recovery factor (CRF) of 0.1628 and would equal $6,512.00.

TABLE 4-3a. COST EFFECTIVENESS OF CATALYTIC OXIDATION AT BAKERY OVENS

Case No.	VOC Emissions (tons/yr) [a]	VOC Reductions (tons/year)	Bread Production (lb/yr)	Cost Effectiveness ($/ton VOC)	Cost Effectiveness ($/lb bread)
1	13	12	11,538,000	$2,945	0.0031
2	19	18	17,308,000	$2,274	0.0024
3	25	25	23,076,000	$1,913	0.0020
4	32	31	28,846,000	$1,684	0.0011
5	38	37	34,616,000	$1,524	0.0016
6	44	43	40,384,000	$1,404	0.0015
7	51	49	46,154,000	$1,311	0.0014
8	57	55	51,924,000	$1,236	0.0013
9	63	62	57,692,000	$1,173	0.0013
10	16	15	11,538,000	$2,364	0.0031
11	23	23	17,308,000	$1,819	0.0024
12	31	30	23,076,000	$1,526	0.0020
13	39	38	28,846,000	$1,340	0.0018
14	47	45	34,616,000	$1,210	0.0016
15	55	53	40,384,000	$1,113	0.0015
16	62	61	46,154,000	$1,037	0.0014
17	70	68	51,924,000	$976	0.0013
18	78	76	57,692,000	$925	0.0012
19	20	20	11,538,000	$1,797	0.0031
20	30	29	17,308,000	$1,372	0.0023
21	40	39	23,076,000	$1,145	0.0019
22	50	49	28,846,000	$1,001	0.0017
23	60	59	34,616,000	$901	0.0015
24	70	69	40,384,000	$825	0.0014
25	80	79	46,154,000	$767	0.0013
26	90	88	51,924,000	$720	0.0012
27	100	98	57,692,000	$681	0.0012

[a] Emissions calculated from predictive formula.

TABLE 4-3b. COST EFFECTIVENESS OF REGENERATIVE OXIDATION AT BAKERY OVENS

Case No.	VOC Emissions (tons/yr) [a]	VOC Reductions (tons/year)	Bread (Prod. lb/yr)	Cost Effectiveness ($/ton VOC)	Cost Effectiveness ($/lb bread)
1	13	12	11,538,000	$5,831	0.0062
2	19	18	17,308,000	$4,186	0.0045
3	25	25	23,076,000	$3,457	0.0037
4	32	31	28,846,000	$2,949	0.0031
5	38	37	34,616,000	$2,599	0.0028
6	44	43	40,384,000	$2,342	0.0025
7	51	49	46,154,000	$2,146	0.0023
8	57	55	51,924,000	$1,990	0.0021
9	64	62	57,692,000	$1,863	0.0020
10	16	15	11,538,000	$4,707	0.0062
11	23	23	17,308,000	$3,444	0.0045
12	31	30	23,076,000	$2,780	0.0037
13	39	38	28,846,000	$2,367	0.0031
14	47	45	34,616,000	$2,083	0.0027
15	55	53	40,384,000	$1,875	0.0025
16	62	61	46,154,000	$1,715	0.0023
17	70	68	51,924,000	$1,589	0.0021
18	78	76	57,692,000	$1,486	0.0020
19	20	20	11,538,000	$3,602	0.0061
20	30	29	17,308,000	$2,527	0.0045
21	40	39	23,076,000	$2,113	0.0036
22	50	49	28,846,000	$1,794	0.0031
23	60	59	34,616,000	$1,575	0.0027
24	70	69	40,384,000	$1,414	0.0024
25	80	79	46,154,000	$1,291	0.0022
26	90	88	51,924,000	$1,193	0.0020
27	100	98	57,692,000	$1,114	0.0019

[a] Emissions calculated from predictive formula

Figure 4-1

Cost Effectiveness of Catalytic Oxidation on Bakery Ovens

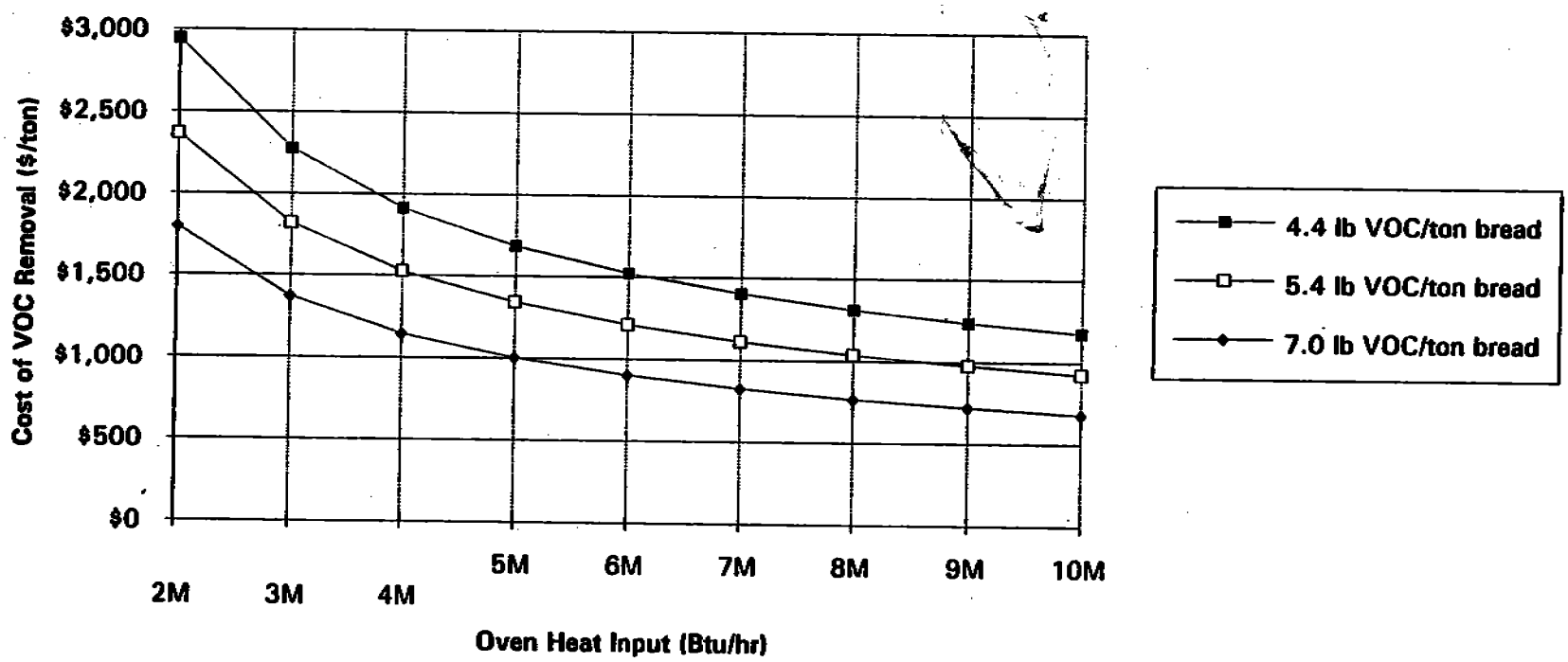

Figure 4-2
Cost Effectiveness of Regenerative Oxidation on Bakery Ovens

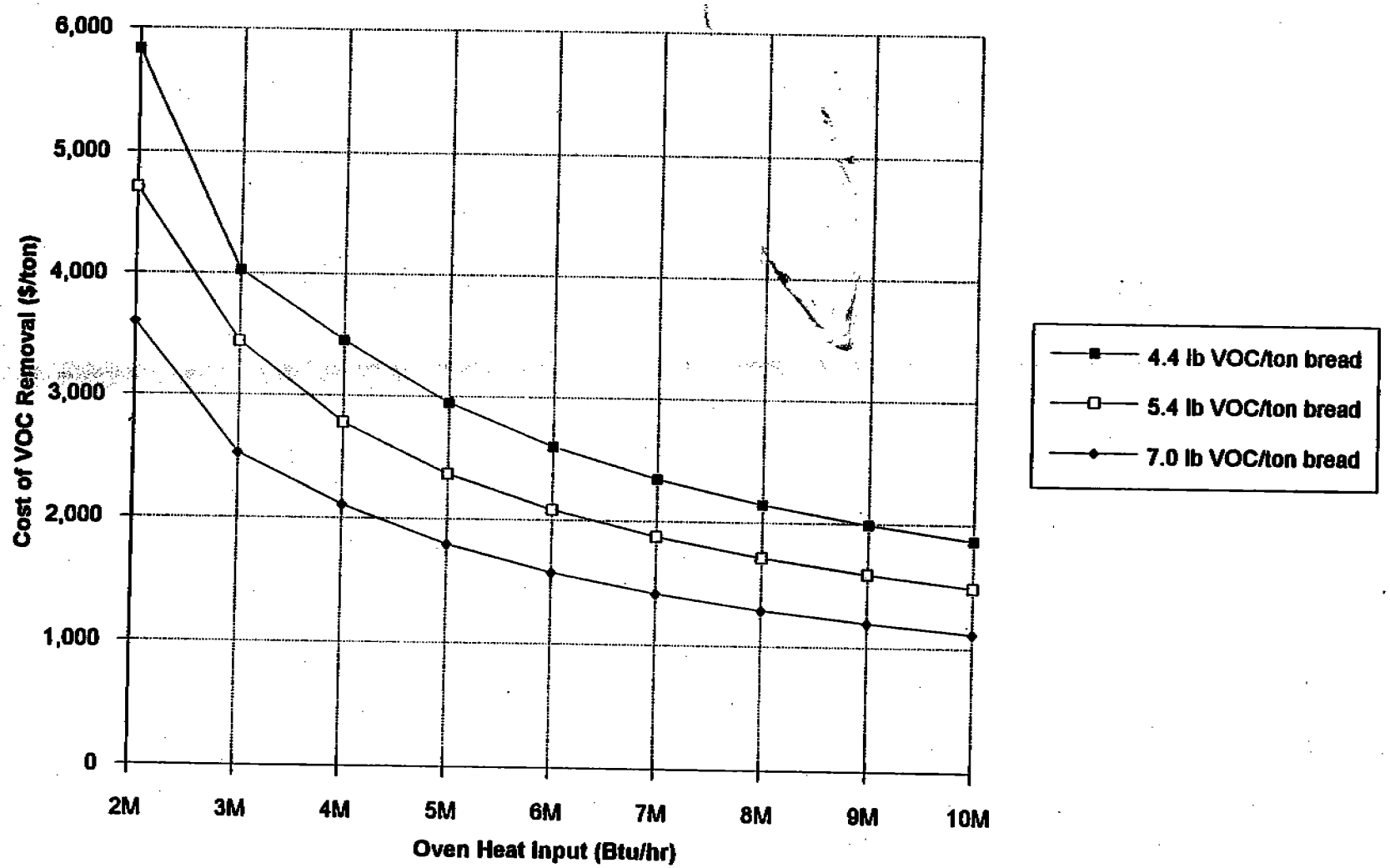

minimum, average, and maximum cost per ton of VOC removed is labeled on each graph. These cost-effectiveness curves can be used to evaluate the cost of VOC removal for an individual oven.

Because it is rare that an oven is dedicated exclusively to the baking of one product, the VOC emissions for each product typically baked in an individual oven must be estimated. These individual product estimates are multiplied by their annual production tonnage and then summed to reflect actual total emissions from the oven. This sum should then be divided by the sum of the individual annual production tonnages. This quotient is in pounds of VOC emissions per ton of bread. For example:

(4.4 lb/ton) (1000 tons/year) = 4400 lb/yr
(5.4 lb/ton) (2000 tons/year) = 10800 lb/yr
(7.0 lb/ton) (5000 tons/year) = 35000 lb/yr
(8000 tons/year) 50200 lb/yr = 25 tons/yr

(50200 lb/yr)/(8000 tons/yr) = 6.3 lb/ton

4.5 REFERENCES

1. Vatavuk, W. M. OAQPS Control Cost Manual, Fourth Edition. EPA 450/3-90-006. U. S. Environmental Protection Agency. Research Triangle Park, 1990.

2. Stitley, J. W., K. E. Kemp, B. G. Kyle, and K. Kulp. Bakery Oven Ethanol Emissions - Experimental and Plant Survey Results. American Institute of Baking. Manhattan, Kansas. December, 1987. p. 11.

3. Ref. 2, p. 11.

4. Fischer, H., APV Baker, to Giesecke, A., American Bakers Association. April 22, 1991. Exhaust levels of a multi-stack oven.

5. American Institute of Baking. Draft: Control of Ethanol Emissions from Ovens. Manhattan, Kansas. August, 1988. p. 15.

6. Frederiksen Engineering. Study and Conceptual Cost Estimate-Bakery Oven Ethanol Abatement. Oakland, California. October, 1990. p. 11.

7. Telecon. W. Sanford, Research Triangle Institute (RTI), with T. Otchy, CSM Environmental Systems, Inc. March 18, 1992. Oxidation.

8. South Coast Air Quality Management District. Rule 1153 - Commercial Bakery Ovens. El Monte, California, November, 1990. p. 32.

9. Perry, R. H. Perry's Chemical Engineer's Handbook. New York. McGraw-Hill. 1984. pp. 9-38.

10. Pyler, E. J., Baking Science & Technology, Sosland Publishing Company. Volume II, 1988. P. 590.

11. Telecon. Sanford, W., RTI, with Doerry, W., American Institute of Baking. August 19, 1992. Flow rates in bread baking ovens.

12. Ref. 8.

13. Ref. 11, p.763.

14. Memorandum from Farmer, J.R., U.S. Environmental Protection Agency, to NSPS contractors. August 22, 1980. Thermal Incineration and Flares. p. 1.

APPENDIX A

TABLES REFERENCED IN SECTION 2.1 - INDUSTRY DESCRIPTION

Table A-1. Number of Bakeries by Product Category and Number of Employees*

Products Produced	Number of Employees						
	1-19	20-49	50-99	100-249	250-499	500-1000	TOTAL
White pan bread	75	289	152	195	92	51	***854***
Buns/soft rolls	118	254	173	199	90	46	***980***
Variety breads	147	443	197	182	84	44	***1,097***
Hearth breads/rolls	114	337	129	80	38	15	***713***

*Gorman Publishing. Gorman Red Book, 1991. Chicago. February 1992. pp. 24-29.

Table A-2 Top 100
Regional Contribution To Sales (%)[a]

Rank Company	1990 sales (mil$)	Plants	Employees	Routes	Northeast	Southeast	Midwest	Southwest	West	Canada
1. Nabisco Brands USA, Biscuit Div.[b]	2,600	9	9,500	1,600	20	15	30	15	20	0
2. Continental Baking Co.[c,d]	1,836	37	22,400	7,000	13	12	45	5	25	0
3. Keebler Co.[d]	1,495	10	9,757	NA	18	19	50	6	7	0
4. Campbell Taggart, Inc.[e,g]	1,400	53	20,000	5,100	0	45	15	25	15	0
5. General Foods Baking Cos., Inc.[f,g]	1,100	17	9,600	NA	NA	NA	NA	NA	NA	NA
6. Interstate Bakeries Corp.[g]	1,079	29	14,800	4,000	0	36	29	10	25	0
7. Flowers Industries[g]	782	28	9,500	1,500	0	100	0	0	0	0
8. Pepperidge Farm, Inc.[g,h]	582	7	5,000	1,500	52	18	18	7	5	0
9. Sunshine Biscuits, Inc.[h]	540	5	3,800	NA	NA	NA	NA	NA	NA	NA
10. Sara Lee Bakery[i,g]	502	6	1,550	NA	20	20	30	10	20	0
11. CPC International Inc. Best Foods Baking Group[g]	500	11	4,800	2,000	30	20	10	15	20	5
12. Lance, Inc.	446	2	5,911	2,442	20	59	8	13	0	0
13. Metz Baking Co.[g]	434	22	6,500	1,443	0	0	96	0	4	0
14. Weston Bakeries, Ltd.[j,g]	420	12	3,600	709	0	0	0	0	0	100
15. McKee Baking Co.	395	2	3,700	500[e]	12	42	26	16	4	0
16. Frito-Lay, Inc.[k]	360	5	26,000	10,000	15	25	25	15	20	0
17. Rich Products Corp.[g]	350	8	1,785	NA	26	13	30	12	19	0
18. Stroehmann Bros. Co.[l,g]	342	10	4,500	600	100	0	0	0	0	0
19. Culinar, Inc.	330	7	1,700	320	5	0	0	0	0	95

Table A-2 (continued)

Rank Company	1990 sales (mil$)	Plants	Employees	Routes	Northeast	Southeast	Midwest	Southwest	West	Canada
20. The Kroger Co.[a]	311	6	2,500	0	0	34	57	9	0	0
21. Wyndham Baking Co. Inc.	300	8	2,700	700	10	50	10	20	10	0
22. Multi-Marques, Inc.[b]	268	19	3,750	1,280	0	0	0	0	0	100
23. Chef Pierre[m]	229	2	1,200	0	20	20	25	20	15	0
24. Safeway Stores, Bakery Div.[a]	225	7	900	0	0	20	0	8	72	0
25. Mrs. Smith's Frozen Foods[g]	218	6	1,357	0	25	10	45	10	10	0
26. Corporate Foods, Ltd.[a]	200	5	950	270	4	0	6	0	0	90
27. Interbake Foods, Inc.	195	4	2,000	20	20	10	30	0	40	0
28. Tasty Baking Co.[a]	191	1	1,200	500	80	15	5	0	0	0
29. Mrs. Baird's Bakeries[g]	175	11	3,000	650	0	0	0	100	0	0
30. Northeast Foods[g]	159	7	1,000	110	80	20	0	0	0	0
31. Country Home Bakery, Inc.[a]	157	5	1,600	40	31	14	34	6	15	0
32. J.J. Nissen Baking Co.[g]	151	4	1,300	450	100	0	0	0	0	0
33. Alfred Nickles Bakery[c]	150	5	2,000	500	20	2	78	0	0	0
34. Archway Cookies	140	9	900	600	20	10	50	10	10	0
35. Gai's Seattle French Baking Co.[a]	140	2	2,200	350	0	0	0	0	85	15
36. Hazelwood Farms Bakeries, Inc.[a]	140	3	800	NA	20	25	21	18	16	0
37. Lender's Bagel Bakery	140	4	700	80	35	15	40	0	20	0
38. McGlynn Bakeries[g]	140	3	1,500	NA	5	5	70	0	20	0

Table A-2 (continued)

Rank Company	1990 sales (mil$)	Plants	Employees	Routes	Northeast	Southeast	Midwest	Southwest	West	Canada
39. Bahlsen, Inc.	136	1	900	0	30	30	30	5	5	0
40. Christie Brown Co.	129	5	1,450	0	0	0	0	0	0	100
41. Good Stuff Bakery	120	3	1,600	400	0	0	0	0	100	0
42. Drake Bakeries[a]	115	3	1,521	503	97	3	0	0	0	0
43. San Francisco French Bread Co.[a]	110	10	1,525	300	5	0	15	5	75	0
44. Southern Bakeries, Inc.[a]	102	3	982	246	0	100	0	0	0	0
45. Mother's Cake & Cookie Co.[a]	100	1	NA	0	0	0	0	0	100	0
46. Newly Wed Foods, Inc.[a]	100	3	410	0	50	30	10	0	10	0
47. Schmidt Baking Co., Inc.[a]	100	4	1,400	400	10	90	0	0	0	0
48. Mission Foods	92	7	600	220	0	0	0	35	65	0
49. Lewis Bros. Bakeries, Inc.[a]	90	7	1,600	280	0	30	70	0	0	0
50. McGavin Foods, Ltd.[a]	85	3	1,000	200	0	0	0	0	0	100
51. Schwebel Baking Co.[a]	81	3	1,100	300	30	0	70	0	0	0
52. Smith's Bakery, Inc.[a]	81	2	610	128	0	100	0	0	0	0
53. The Bachman Co.	80	3	525	339	96	1	1	0	1	1
54. Perfection Biscuit Co., Inc.	80	5	950	400	0	0	100	0	0	0
55. Kern's & Assoc. Bakeries[a]	79	4	1,100	362	0	100	0	0	0	0
56. Klosterman Baking Co.[a]	76	5	830	170	0	20	80	0	0	0
57. United States (Franz) Bakery[a]	76	4	980	235	0	0	0	0	100	0
58. Alpha Baking Co.[a]	75	3	900	130	2	12	83	2	1	0

Table A-2 (continued)

Rank Company	1990 sales (mil$)	Plants	Employees	Routes	Northeast	Southeast	Midwest	Southwest	West	Canada
59. Maplehurst, Inc.	75	2	700	50	20	50	20	5	5	0
60. F.R. Lepage Bakery, Inc.[a]	73	2	500	200	100	0	0	0	0	0
61. Maier's Bakery[a]	73	2	980	300	100	0	0	0	0	0
62. Alpha Beta Bakery[a]	70	1	220	0	0	0	0	0	100	0
63. Bake-Line Products, Inc.	70	1	750	0	25	20	25	15	15	0
64. Gold Medal Bakery[a]	70	1	320	12	100	0	0	0	0	0
65. J & J Snack Foods	70	3	900	20	43	12	30	2	13	0
66. Giant Foods, Inc., Bakery Div.[a]	67	1	419	0	0	100	0	0	0	0
67. Richter's Bakery, Inc.[a]	60	4	1,000	300	0	0	0	100	0	0
68. Vie de France[a]	60	13	900	110	27	34	20	3	16	0
69. Fresh Start Bakeries[a]	57	5	410	0	0	20	0	80	0	0
70. Pet, Inc. Bakery Operations[a]	55	4	432	0	25	41	26	6	2	0
71. Eastern Bakeries, Ltd.[a]	54	6	625	215	0	0	0	0	0	100
72. Awrey Bakeries[a]	52	1	540	30	26	20	26	12	11	5
73. Grocers Baking Co.[a]	52*	1	657	143	0	0	100	0	0	0
74. Franklin Baking Co., Inc.[a]	51	4	675	200	0	100	0	0	0	0
75. American Bread Co.[a]	50	3	800	75	0	100	0	0	0	0
76. Dough Delight, Ltd.	50	2	340	0	30	0	0	0	0	70
77. Fuchs Baking Co.[a]	50	2	610	185	0	100	0	0	0	0
78. Gourmet Baker, Inc.	50	8	350	0	2	1	0	1	1	95
79. Waldensian Bakeries, Inc.[a]	50	1	675	215	0	100	0	0	0	0

Table A-2 (continued)

Rank Company	1990 sales (mil$)	Plants	Employees	Routes	Northeast	Southeast	Midwest	Southwest	West	Canada
80. Crackin'Good Bakers Inc.	49*	1	370	0	0	100	0	0	0	0
81. Ben's Limited[a]	46	2	500	100	0	0	0	0	0	100
82. Meyer's Bakeries, Inc.[a]	44*	4	481	70	10	30	20	30	10	0
83. Schulze & Burch Biscuit Co.	42	1	700	0	0	25	75	0	0	0
84. Mrs. Alison's Cookie Co.	40	2	375	27	20	20	45	5	10	0
85. Edward's Baking Co.	38	1	200	0	15	40	10	20	15	0
86. Fink Banking Corp.[a]	38	1	420	99	100	0	0	0	0	0
87. New Southwest Baking Co.[a]	35	1	200	0	0	40	0	60	0	0
88. Publix Super Markets Inc.[a]	35	1	320	0	0	100	0	0	0	0
89. Seneau's Baking Co.[a]	35	1	150	0	70	20	10	0	0	0
90. Gonnella Baking Co.[a]	35	3	325	75	0	0	100	0	0	0
91. Pan-O-Gold Holsum Baking Co.[a]	33	2	500	100	0	0	100	0	0	0
92. Sterling Foods, Inc.[a]	32	1	NA	NA	NA	NA	NA	NA	NA	NA
93. Buns Unlimited, Inc.[a]	31	3	225	NA	0	30	35	0	25	0
94. Venice Bakery[a]	31	1	353	65	0	0	0	0	5	95
95. Bridgford Foods Corp.	30	4	200	0	15	15	25	15	30	0
96. International Baking	30	2	300	100	0	20	0	10	70	0
97. Lucerne Foods, Lts.[a]	30	3	300	0	0	0	0	0	0	100
98. Modern Maid Food Products, Inc.[a]	30	3	375	NA	20	35	45	0	0	0
99. Pioneer French Baking[a]	30	1	350	80	0	0	0	0	100	0

Table A-2 (continued)

Rank Company	1990 sales (mil$)	Plants	Employees	Routes	Northeast	Southeast	Midwest	Southwest	West	Canada
100. Royal Cake Co., Inc.	30	1	300	NA	13	51	16	0	15	5

[a]Gorman Publishing. Gorman Red Book, 1991. Chicago. February 1992. pp24-29
[b]Subsidiary of RJR Nabisco, Inc.
[c]Subsidiary of Ralston Purina, Inc.
[d]Subsidiary of United Biscuits PLC
[e]Subsidiary of Anheuser-Busch, Inc.
[f]Includes Entenmann's, Inc., Oroweat Foods Co., Chas. Freihofer Baking Co.
[g]Subsidiary of Campbell Soup, Inc.
[h]Subsidiary of G. F. Industries, Inc.
[i]Subsidiary of Sara Lee Corp
[j]Subsidiary of George Weston Ltd.
[k]Subsidiary of Pepsi Co., Inc.
[l]Includes only Tastykake Co. bakery sales
[m]Purchased by Culinar, Dec. 31, 1990
[n]Formerly with BSN Groupe
[o]Wholesale bakery sales only, pending sale to Yamazaki Baking
[p]Formerly Empress Foods Ltd.
[q]Primarily producing bread and rolls

Table A-3. Plants By Bakery Type, Region and State[a]

Region	Wholesale	Grocery Chain	Multi-Unit Retail	Cookie & Cracker/ Frozen Food	Total
NORTHEAST					
Connecticut	26	0	5	7	38
Dist. of Columbia	6	1	2	0	9
Maine	17	0	0	1	18
Massachusetts	54	2	12	17	85
New Hampshire	7	0	1	1	9
New Jersey	80	0	8	30	118
New York	169	1	19	29	218
Pennsylvania	123	1	16	36	176
Rhode Island	12	0	0	1	13
Vermont	5	0	0	2	7
Total	*499*	*5*	*63*	*124*	*691*
MIDWEST					
Illinois	91	3	16	30	140
Indiana	31	3	4	18	56
Iowa	15	0	2	4	21
Michigan	56	5	16	19	96
Minnesota	31	3	7	9	50
Missouri	27	2	2	7	38
Ohio	66	5	18	25	114
Wisconsin	38	5	10	10	63
Total	*355*	*26*	*75*	*122*	*578*

Table A-3 (continued)

Region	Wholesale	Grocery Chain	Multi-Unit Retail	Cookie & Cracker/ Frozen Food	Total
SOUTH					
Alabama	14	0	0	3	17
Arkansas	13	1	0	6	20
Delaware	2	0	0	0	2
Florida	73	1	4	13	91
Georgia	29	0	3	19	51
Kentucky	6	0	2	6	14
Louisiana	17	0	3	1	21
Maryland	32	2	8	4	46
Mississippi	6	2	0	1	9
North Carolina	32	0	3	11	46
South Carolina	8	0	1	4	13
Tennessee	28	0	5	11	44
Virginia	32	1	2	6	41
West Virginia	5	0	1	2	8
Total	***297***	***7***	***32***	***87***	***423***
SOUTHWEST					
Arizona	25	1	0	3	29
New Mexico	6	0	1	3	10
Oklahoma	13	0	2	3	18
Texas	87	5	6	25	123
Total	***131***	***6***	***9***	***34***	***180***

Table A-3 (continued)

Region	Wholesale	Grocery Chain	Multi-Unit Retail	Cookie & Cracker/ Frozen Food	Total
PLAINS					
Colorado	21	1	1	6	29
Kansas	14	2	0	4	20
Montana	2	0	0	1	3
Nebraska	10	0	1	2	13
North Dakota	6	0	1	2	9
South Dakota	4	0	3	1	8
Utah	17	2	3	6	28
Total	***74***	***5***	***9***	***22***	***110***
WEST					
Alaska	5	1	0	0	6
California	212	9	26	65	312
Hawaii	20	0	3	6	29
Idaho	4	0	0	0	4
Nevada	8	0	0	0	8
Oregon	26	1	4	10	41
Washington	32	1	3	8	44
Total	***307***	***12***	***36***	***89***	***444***

Region	Wholesale	Grocery Chain	Multi-Unit Retail	Cookie & Cracker/ Frozen Food	Total
Puerto Rico	3	0	2	6	11
Canada	154	2	9	34	199
Total no. of plants	***1,820***	***63***	***235***	***518***	***2,636***

*Gorman Publishing. Gorman Red Book, 1991. Chicago. February 1992. pp. 24-29.

APPENDIX B

BAKERY OVEN TEST RESULTS

Bakery Oven Test Results

Test ID Number	1	2	3	4	5	6	7	8	9	10	11	12	13	14	15	16	17	18	19	20
Initial Yeast (Y in B%)	3.50	2.92	2.92	2.37	2.92	2.37	4.25	2.80	3.00	2.80	2.73	2.80	4.00	1.50	2.80	2.50	4.00	2.80	3.50	2.25
Final Yeast (S in B%)	0.00	0.25	0.25	0.25	0.25	0.25	0.00	0.00	0.00	0.00	1.00	0.00	0.50	0.00	3.00	1.25	0.75	1.00	0.00	0.00
Yeast Action Time (ti in hrs)	5.08	3.52	3.58	3.53	3.58	3.53	5.15	2.72	5.67	2.8	3.58	2.97	5.67	5.13	3.17	3.92	2.53	3.6	1.63	1.63
Spiking Time (ts in hrs)	0.00	0.52	0.58	0.53	0.58	0.53	0.00	0.00	0.00	0.00	0.58	0.00	1.38	0.00	1.43	1.67	1.20	1.23	0.00	0.00
Bake Time (Bt in min)	18.0	7.5	17.0	22.0	20.0	20.0	19.0	20.5	17.0	12.5	21.0	11.0	20.3	9.0	18.0	20.5	6.9	19.5	20.5	19.5
Bake Temp (BF in deg F)	409	370	405	410	410	370	390	405	442	450	400	450	410	500	409	403	427	390	405	390
Water (H2O in B%)	49.5	50.8	54	60	61	63.5	55	53	64	49	65	49	61	53	93.5	104	55.3	56	53	56
Sugar (Sgr in B%)	8.2	7.9	16	0.3	0	9	8	11	17	0	9.6	0	0	14	4.7	15	13.5	12	11	12
Oven Type	1	1	1	1	1	1	2	2	1	2	1	2	1	2	2	2	1	2	1	1
Process	1	3	3	3	3	3	1	3	1	3	3	3	3	1	3	1	3	3	2	2
Sample Time (min)	50	50	50	50	50	50	50	60	50	60	50	60	85	50	60	50	50	60	35	35
Bread Produced (lb)	10898	7687	8438	9225	8438	9225	3527	5465	6745	5716	8438	4764	6799	4711	4836	3609	2818	1997	513	718
VOC measured (lb/hr)	40.940	30.499	30.068	27.687	26.760	25.431	17.750	15.473	14.807	13.038	12.678	12.676	12.548	11.489	7.475	6.894	4.290	3.782	2.629	2.047
Y*ti	17.792	10.269	10.463	8.374	10.463	8.357	21.888	7.607	17.000	7.840	9.783	8.307	22.667	7.700	8.867	9.792	10.133	10.080	5.717	3.675
Y*ti+S*ts	17.792	10.398	10.609	8.507	10.609	8.49	21.888	7.607	17.000	7.840	10.366	8.307	23.358	7.700	13.167	11.875	11.033	11.313	5.717	3.675
VOC measured (lb/ton bread)	6.261	6.613	5.939	5.002	5.286	4.595	8.388	5.663	3.659	4.562	2.504	5.322	5.229	4.065	3.091	3.184	2.542	3.788	5.979	3.326
VOC-RTI predicted (lb/ton bread)	6.23	4.80	4.75	4.26	4.75	4.26	6.96	5.10	5.87	5.12	4.19	5.15	5.38	4.33	2.44	2.98	4.80	3.70	5.56	4.36
EtOH-AIB predicted (lb/ton bread)	8.31	5.03	5.12	4.19	5.12	4.18	10.14	3.79	7.96	3.89	5.01	4.1	10.79	3.83	6.26	5.68	5.31	5.43	2.95	2.04
Solution of y=mx...+b	6.23	4.80	4.75	4.26	4.75	4.26	6.96	5.10	5.87	5.12	4.19	5.15	5.38	4.33	2.44	2.98	4.80	3.70	5.56	4.36

APPENDIX C

EXAMPLE CALCULATIONS OF COST ANALYSIS

OAQPS Control Cost Analysis for Catalytic Incinerators

Section 3.4.1 - Steps Common to Regenerative and Catalytic Units

Step 1. Establish Design Specifications

Enter the following data corresponding to the waste gas:

Volumetric Flow Rate, scfm (77 degrees F, 1 atm)		447.00 scfm	
Temperature, preheater inlet, Twi		100.00 deg. F	
(Assume balance oxygen composition)			
Chemical Composition of Combustibles			
enter names here -->	*ethanol*	1,939.00 ppmv	please use two most combustible compounds. If less than two, please enter 1's to avoid division by zero errors
	acetaldehyde	19.39 ppmv	

Heating Value of Combustibles

ethanol	2,407.00	neg.del.h sub c, BTU/scf
acetaldehyde	2,149.00	neg.del.h sub c, BTU/scf

Enter hours per year of operation	6,000.00	hours/year

Enter the following data specific to the incinerator:

Desired Control Efficiency (best to assume >0.90)	0.98	
Combustion Chamber Outlet Temperature	700.00	deg. F
Desired Percent Energy Recovery, decimal	0.7	
(choose: 0, 0.35, 0.50, or 0.70)		

Step 2. Verify that the oxygen content of the waste gas exceeds 20%.

Air Content =	99.80	Vol. %
Oxygen Content =	20.86	percent

Step 3. Calculate the LEL and the Percent of the LEL of the gas mixture

Enter the LEL of the following compounds:

ethanol	3.25	vol. %	32,500.00 ppmv
acetaldehyde	3.97	vol. %	39,700.00 ppmv
sum of x sub i, i equals 1 to n	1,958.39		

Lower Explosive Limit of the mixture equals:	34,997.41	ppmv
Percent LEL of the mixture equals:	5.60	percent

if greater than 25%, dilution air should be added to avoid fire insurance regulations

Step 4. Calculate the volumetric heat of combustion of the waste gas stream

heat of combustion,	ethanol	2,407.00	BTU/scf
	acetaldehyde	2,149.00	BTU/scf
Heat of combustion for the mixture is		4.71	BTU/scf

Assuming waste gas is principally air (molecular weight 28.97, density 0.0739 lb/scf), then

Heat of combustion per pound of incoming gas is - 63.72 BTU/lb

For catalytic applications the heat of combustion must normally be less than 10 BTU/scf (for VOC's in air).

Section 3.4.3 - Steps Specific to Catalytic Units

Step 5c. Establish desired outlet temperature of the catalyst bed, Tfi

Enter catalyst bed outlet temp. 900.00 deg. F
assume 300-900 deg. F for 90-95% destruction efficiency
maximum temp. of 1200 deg. F should not be exceeded

Step 6c. Calculate waste gas temperature at preheater exit

Define the following temperatures:

Two, VOC stream leaving heat exchanger	x	deg. F
Twi, waste gas inlet temperature	100.00	deg. F
Tfo, flue temperature after heat exchanger	x	deg. F
Tfi, catalyst chamber outlet temperature	900.00	deg. F

x = to be calculated

thermal efficiency of heat exchanger = 0.70

Two is therefore calculated to be: 660.00 deg. F

Tfo is therefore calculated to be: 340.00 deg. F

Step 7c. Calculate the auxiliary fuel requirement, Qaf

Enter the auxiliary fuel heat of combustion 21,502.00 neg. del. h sub c sub af, BTU/lb.
for methane, use 21,502 BTU/lb
also for methane, rho = 0.0408 lb./scf

Qaf is therefore calculated to be: 0.70 scfm
this must be a positive number for burner flame stability

Summary of Variable Valuation

Stream	subscript j	rho sub j lb/scf	Q sub j scfm	Cpm sub j BTU/#*F	T sub j deg. F	
IN - Sensible Heat						
Auxiliary Air	a	n/a	n/a	n/a	n/a	
Auxiliary Fuel	af	0.0408	0.70	not used	77	for methane
Waste Gas	wo	0.0739	447.00	0.248	660.00	for air
OUT - Sensible Heat						
Waste stream	fi	0.0739	447.70	0.248	900,00	assuming primarily air

Energy Balance around Combustor	subscript	Value, BTU/min
IN - Sensible Heat, rho*Q*Cp*(Ti-Tref)		
Auxiliary Air	a	0
Waste Gas	wo	4,776
OUT - Sensible Heat		
Waste Stream	fi	6,753
OUT - Losses		
ten percent of total energy input		675
GENERATION - Heat of Combustion, rho*Q*(neg.del.h sub c)		
Waste Gas	wo	2,105
Auxiliary Fuel	af	617

Step 8c. Verify that auxiliary fuel requirement will stabilize burner flame

Five percent of Total Energy Input equals: 338 BTU/min
Auxiliary Fuel Energy Input equals: 617 BTU/min

If Aux. Fuel Energy Input is greater than 5% Total Energy Input, burner flame should be stable.

Step 9c. Estimate the inlet temperature to the catalyst bed, Tri

Tri is calculated to be:	674.91	deg. F
Delta T (temperature rise across catalyst bed) equals:	225.09	deg. F

Step 10c. Calculate total volumetric flow rate of gas through the incinerator, Qfi

Flue Gas Flow Rate, Qfi, equals:	447.70	scfm

Step 11c. Calculate the volume of catalyst in the catalyst bed.

Given Qfi and nominal residence time, catalyst volume can be calculated.

First, adjust Qfi to petro-chemical industry convention of 60 deg. F, 1 atm.	Qfi(60) =	433.53	cfm
Input catalyst space velocity in per minute		500	/min
Precious metal catalysts vary: 166.67 to 1,000 /minute			
Volume of catalyst bed therefore equals:		0.87	cubic feet

Section 3.5.1 - Estimating Total Capital Investment

Scope of Cost Correlations

Incinerator Type	Total (flue) flow, scfm	
Fixed-bed Catalytic	2,000-50,000	packaged
Fluid-bed Catalytic	2,000-25,000	packaged

If Qfi is outside these parameters for the specific incinerator type, this costing formulation may not be used.

Section 3.5.1.1 - Equipment Costs, EC

Catalytic Incinerators

Total flue gas rate, Qfi	447.70	scfm
heat recovery factor	70	percent

Fixed-Bed and Monolithic Catalytic Incinerators

Heat Recovery (percent)	Equipment Cost , EC 1988 dollars	delta P in. Water
0	$31,169	0
35	$46,727	4
50	$36,518	8
70	$42,118	15

Fluid-Bed Catalytic Incinerators

Heat Recovery (percent)	Equipment Cost , EC 1988 dollars	delta P in. Water
0	$90,710	0
35	$94,936	4
50	$93,674	8
70	$92,496	15

Section 3.5.1.2 - Installation Costs

Choose Equipment Cost based on Catalytic Incinerator type and Heat Recovery percent *and enter base equipment cost (EC) here -->* $44,410

Section 3.5.2 - Estimating Total Annual Cost

Section 3.5.2.1 - Direct Annual Costs

Enter the delta P, fixed-bed catalytic incinerato (6):	6 in. Water	
Enter the delta P, fluid-bed catalytic incinerator (6-10):	8 in. Water	
Enter the delta P (based on heat recovery) (from 3.5.1.1, above)	15 in. Water	
Number of hours/year of operation:	6000 hours/year	
Enter the combined motor/fan efficiency (decimal):	0.6	
Enter the cost per kilowatt hour of electricity:	0.059 $/kWh	
Enter natural gas unit cost in $/scf:	0.0033 $/scf	
Fixed-Bed:Power (fan), in kilowatts, equals	1.83 kW	
Fluid-Bed: Power (fan), in kilowatts, equals	2.01 kW	
Electricity Cost, $/yr, equals	$649 per year	Fixed-bed
	$711 per year	Fluid-bed
Annual Fuel Cost:		
(Methane assumed to be combustor fuel)		
Rate of fuel usage	0.70 scfm	
Annual Fuel Cost, in $/yr, equals	$835 per year	

Total Capital Investment

Table 3-8, page 3-52, OAQPS Control Cost Manual (EPA 450/3-90-006, January 1990)
Capital Cost Factors for Catalytic Incinerators

Direct Costs		
Purchased Equipment Costs		
Incinerator (EC) + auxiliary equipment	$44,410	as estimated,A
Instrumentation	$4,441	A * 0.10
Sales Tax	$1,332	A * 0.03
Freight	$2,220	A * 0.05
Purchased Equipment Cost, PEC	$52,404	B = 1.18 * A
Direct Installation Costs		
Foundation and supports	$4,192	B * 0.08
Handling and erection	$7,336	B * 0.14
Electrical	$2,096	B * 0.04
Piping	$1,048	B * 0.02
Insulation for ductwork	$524	B * 0.01
Painting	$524	B * 0.01
Direct Installation Cost	$15,721	B * 0.30
Enter Site Preparation Costs	$0	As required, SP
Enter Buildings Costs	$0	As required, Bldg.
Total Direct Cost, DC	$68,125	B * 1.30 + SP + Bldg.
Indirect Costs (installation)		
Engineering	$5,240	B * 0.10
Construction or field expenses	$2,620	B * 0.05

Contractor fees	$5,240	B * 0.10
Start-up	$1,048	B * 0.02
Performance test	$524	B * 0.01
Contingencies	$1,572	B * 0.03
Total Indirect Cost, IC	$16,245	B * 0.31
Total Capital Investment = DC + IC	$84,370	B * 1.61 + SP + Bldg.

Total Annual Cost

Table 3.10 page 3-54, OAQPS Control Cost Manual (EPA 450/3-90-006, January 1990)
Annual Costs for Catalytic Incinerators

Total Capital Investment (from previous table) $84,370

Cost Item	Suggested Factor	Unit Cost	Catalytic Fluid-Bed	
Direct Annual Costs, DC				
Operating Labor				
Operator	*0.5 hrs/shift*	*$12.26/hour*	$4,860	*
Supervisor	15% of operator	-	$729	*
Operating materials		-	$0	
Maintenance				
Labor	*0.5 hrs/shift*	*$14.26/hour*	$5,348	*
Material	Equals Maint. Labor	-	$5,348	*
Catalyst Replacement	*Every 5 years*	*$3500/cu.ft. (metal oxide)*	$607	
Utilities				
Natural Gas, $/scf	-	$ 0.0033 per scf	$835	
Electricity, $/kWh	-	$ 0.059 per kWh	$649	Fixed-bed
Total Direct Cost, DC			$18,375	
Indirect Annual Costs, IC				
Overhead	Sixty percent of sum of op., supv., & maint. labor & maint. mat'l	-	$14,340	
Admin. charges	TCI * 0.02	-	$1,687	
Property taxes	TCI * 0.01		$844	
Insurance	TCI * 0.01		$844	
Capital recovery	CRF [TCI - 1.08 * (Cat. Cost)]		$13,522	
Total Indirect Costs, IC			$16,897	
Total Annual Cost	TAC = DC + IC		$35,272	per year

* based on user-provided hours/year of operation

CRF: The capital recovery factor, CRF, is a function of the catalyst or equipment life (typically, 5 and 10 years, respectively) and the opportunity cost of the capital (i.e., interest rate). For example, for a 10 year equipment life and a 10% interest rate, CRF = 0.1628.

OAQPS Control Cost Analysis for Regenerative Incinerators

Section 3.4.1 - Steps Common to Regenerative and Catalytic Units

Step 1. Establish Design Specifications

Enter the following data corresponding to the waste gas:

Volumetric Flow Rate, scfm (77 degrees F, 1 atm)	447.00 scfm	
Temperature, preheater inlet, Twi	100.00 deg. F	
(Assume balance oxygen composition)		
Chemical Composition of Combustibles		
enter names here –> *ethanol*	1,939.00 ppmv	please use two most combustible compounds. If less than two, please enter 1's to avoid division by zero errors
acetaldehyde	19.39 ppmv	

Heating Value of Combustibles

ethanol	2,407.00 neg. del. h sub c, BTU/scf
acetaldehyde	2,149.00 neg. del. h sub c, BTU/scf

Enter the number of hours/year of operation: 6000 hours/year

Enter the following data specific to the incinerator:

Desired Control Efficiency (best to assume >0.90)	0.98
Combustion Chamber Outlet Temperature	1,600.00 deg. F
Desired Percent Energy Recovery, decimal	0.70
choose 0, 0.35, 0.50, 0.70, or 0.95	

Step 2. Verify that the oxygen content of the waste gas exceeds 20%.

Air Content =	99.80 Vol. %
Oxygen Content =	20.86 percent

Step 3. Calculate the LEL and the Percent of the LEL of the gas mixture

Enter the LEL of the following compounds:

ethanol	3.25 vol. %	32500 ppmv
acetaldehyde	3.97 vol. %	39700 ppmv
sum of x sub i, i equals 1 to n	1,958.39	

Lower Explosive Limit of the mixture equals:	34,997.41 ppmv
Percent LEL of the mixture equals:	5.60 percent

if greater than 25%, dilution air should be added to avoid fire insurance regulations

Step 4. Calculate the volumetric heat of combustion of the waste gas stream

heat of combustion,	ethanol	2,407.00 BTU/scf
	acetaldehyde	2,149.00 BTU/scf

Heat of combustion for the mixture is 4.71 BTU/scf

Assuming waste gas is principally air (molecular weight 28.97, density 0.0739 lb/scf), then

Heat of combustion per pound of incoming gas is 63.72 BTU/lb

Section 3.4.2 - Steps Specific to Regenerative Units

Step 5t. Establish incinerator operating temperature, Tfi

operating temperature (comb. chamber outlet temp.) 1,600.00 deg. F

Step 6t. Calculate waste gas temperature at preheater exit

Define the following temperatures:

Two, VOC stream leaving heat exchanger	x	deg. F
Twi, waste gas inlet temperature	100.00	deg. F
Tfo, flue temperature after heat exchanger	x	deg. F
Tfi, incinerator operating temperature	1,600.00	deg. F

x = to be calculated

thermal efficiency of heat exchanger = 0.7

Two is therefore calculated to be: 1,150.00 deg. F

Tfo is therefore calculated to be: 550.00 deg. F

Step 7t. Calculate the auxiliary fuel requirement, Qaf

Enter auxiliary fuel heat of combustion 21,502.00 neg. del. h sub c sub af, BTU/lb.
for methane, use 21,502 BTU/lb
also for methane, rho = 0.0408 lb./scf

Qaf is therefore calculated to be: 3.45 scfm

Summary of Variable Valuation

Stream	subscript j	rho sub j lb/scf	Q sub j scfm	Cpm sub j BTU/#*F	T sub j deg. F	
IN - Sensible Heat						
Auxiliary Air	a	n/a	n/a	n/a	n/a	
Auxiliary Fuel	af	0.0408	3.45	not used	77.00	for methane
Waste Gas	wo	0.0739	447.00	0.255	1,150.00	for air
OUT - Sensible Heat						
Waste stream	fi	0.0739	450.45	0.255	1,600.00	assuming primarily air

Energy Balance around Combustor	subscript	Value, BTU/min
IN - Sensible Heat, rho*Q*Cp*(Ti-Tref)		
Auxiliary Air	a	0
Waste Gas	wo	9,038
OUT - Sensible Heat		
Waste Stream	fi	12,928
OUT - Losses		
ten percent of total energy input		1,293
GENERATION -Heat of Combustion, rho*Q*(neg.del.h sub c)		
Waste Gas	wo	2,105
Auxiliary Fuel	af	3,029

Step 8t. Verify that auxiliary fuel requirement will stabilize burner flame

Five percent of Total Energy Input equals: 646 BTU/min
Auxiliary Fuel Energy Input equals: 3,029 BTU/min

If Aux. Fuel Energy Input is greater than 5% Total Energy Input, burner flame should be stable.

Step 9t. Calculate Total Volumetric Flow Rate of gas through incinerator, Qfi

Flue Gas Flow Rate, Qfi, equals: 450.45 scfm

Section 3.5.1 - Estimating Total Capital Investment

Scope of Cost Correlations

Incinerator Type	Total (flue) flow, scfm	
Thermal - regen.	500-50,000	field-erected
Thermal - recup.	10,000-100,000	packaged

If Qfi is outside these parameters for the specific incinerator type, this costing formulation may not be used.

Section 3.5.1.1 - Equipment Costs, EC

Regenerative Incinerators

Total flue gas rate, Qfi	450.45	scfm
heat recovery factor	0.7	

Heat Recovery (percent)	Equipment Cost , EC 1988 dollars	delta P in. Water
0	$43,403	0
35	$64,749	4
50	$78,672	8
70	$98,321	15
95	$225,612	35

Section 3.5.1.2 - Installation Costs

Choose Equipment Cost based on Heat Recovery percent and
Enter base equipment cost (EC) here –> $103,671

Section 3.5.2 - Estimating Total Annual Cost

Section 3.5.2.1 - Direct Annual Costs

Enter the delta P for a regenerative incinerator (4):	4	in. Water
Enter the delta P (based on heat recovery) (from 3.5.1.1, above)	15	in. Water
Number of hours/year of operation:	6000	hours/year
Enter the combined motor/fan efficiency (decimal):	0.6	
Enter the cost per kilowatt hour of electricity:	0.059	$/kWh
Enter natural gas unit cost in $/scf:	0.0033	$/scf
Power (fan), in kilowatts, equals	1.67	kW
Electricity Cost, $/yr, equals	$591	per year
Annual Fuel Cost:		
(Methane assumed to be combustor fuel)		
Rate of fuel usage	3.45	scfm
Annual Fuel Cost, in $/yr, equals	$4,102	per year

Total Capital Investment

Table 3-8, page 3-52, OAQPS Control Cost Manual (EPA 450/3-90-006, January 1990)
Capital Cost Factors for Regenerative and Catalytic Incinerators

Direct Costs

Purchased Equipment Costs

Incinerator (EC) + auxiliary equipment	$103,671	as estimated,A
Instrumentation	$10,367	A * 0.10
Sales Tax	$3,110	A * 0.03
Freight	$5,184	A * 0.05
Purchased Equipment Cost, PEC	$122,332	B = 1.18 * A
Direct Installation Costs		
Foundation and supports	$9,787	B * 0.08
Handling and erection	$17,126	B * 0.14
Electrical	$4,893	B * 0.04
Piping	$2,447	B * 0.02
Insulation for ductwork	$1,223	B * 0.01
Painting	$1,223	B * 0.01
Direct Installation Cost	$36,699	B * 0.30
Enter Site Preparation Costs:	$0	As required, SP
Enter Buildings Costs:	$0	As required, Bldg.
Total Direct Cost, DC	$159,031	B * 1.30 + SP + Bldg.
Indirect Costs (installation)		
Engineering	$12,233	B * 0.10
Construction or field expenses	$6,117	B * 0.05
Contractor fees	$12,233	B * 0.10
Start-up	$2,447	B * 0.02
Performance test	$1,223	B * 0.01
Contingencies	$3,670	B * 0.03
Total Indirect Cost, IC	$37,923	B * 0.31
Total Capital Investment = DC + IC	$196,954	B * 1.61 + SP + Bldg.

Total Annual Cost

Table 3.10 page 3-54, OAQPS Control Cost Manual (EPA 450/3-90-006, January 1990)
Annual Costs for Regenerative and Catalytic Incinerators

Total Capital Investment (from previous table) $196,954

Cost Item	Suggested Factor	Unit Cost	Regenerative
Direct Annual Costs, DC			
Operating Labor			
Operator	*0.5 hrs/shift*	*$12.96/hour*	$4,860
Supervisor	15% of operator	-	$729
Operating materials	-		$0
Maintenance			
Labor	*0.5 hrs/shift*	*$14.26/hour*	$5,348
Material	Equal to Maint. Labor	-	$5,348
Utilities			
Natural Gas, $/scf	-	$ 0.0033 per scf	$4,102
Electricity, $/kWh	-	$ 0.059 per kWh	$591
Total Direct Cost, DC			$20,976
Indirect Annual Costs, IC			
Overhead	Sixty percent of sum of	-	$9,770

	operating, supv., & maint. labor & maint. materials	
Administrative charges	TCI * 0.02	$3,939
Property taxes	TCI * 0.01	$1,970
Insurance	TCI * 0.01	$1,970
Capital recovery	CRF *TCI	$32,064
Total Indirect Costs, IC		$49,713
Total Annual Cost, TAC	TAC = DC + IC	$70,689

* based on user-provided hours/year of operation
CRF: The capital recovery factor, CRF, is a function of the equipment life (typically 10 years) and the opportunity cost of the capital (i.e., interest rate). For example, for a 10 year equipment life and a 10% interest rate, CRF = 0.1628.

APPENDIX D

BAY AREA AIR QUALITY MANAGEMENT DISTRICT

REGULATION 8 RULE 42

LARGE COMMERCIAL BREAD BAKERIES

REGULATION 8

ORGANIC COMPOUNDS

RULE 42

LARGE COMMERCIAL BREAD BAKERIES

INDEX

8-42-100 GENERAL

8-42-101 Description
8-42-110 Exemption, Small Bakeries
8-42-111 Exemption, Low Emitting Ovens
8-42-112 Exemption, Existing Ovens
8-42-113 Exemption, Miscellaneous Bakery Products
8-42-114 Exemption, Chemically Leavened Products

8-42-200 DEFINITIONS

8-42-201 Approved Emission Control System
8-42-202 Baseline Emissions
8-42-203 Bread
8-42-204 Fermentation Time
8-42-205 Large Commercial Bread Bakery
8-42-206 Leaven
8-42-207 Yeast Percentage

8-42-300 STANDARDS

8-42-301 New and Modified Bakery Ovens
8-42-302 Emission Control Requirements, New and Modified Ovens
8-42-303 Emission Control Requirements, Existing Ovens
8-42-304 Delayed Compliance, Existing Ovens

8-42-400 ADMINISTRATIVE REQUIREMENTS

8-42-401 Compliance Schedule
8-42-402 Delayed Compliance Schedule

8-42-500 MONITORING AND RECORDS (Not Included)

8-42-600 MANUAL OF PROCEDURES

8-42-601 Determination of Emissions
8-42-602 Emission Calculation Procedures

REGULATION 8

ORGANIC COMPOUNDS

RULE 42

LARGE COMMERCIAL BREAD BAKERIES

(Adopted September 20, 1989)

8-42-100 GENERAL

8-42-101 **Description:** The purpose of this rule is to limit the emission of precursor organic compounds from bread ovens at large commercial bread bakeries.

8-42-110 **Exemption, Small Bakeries:** This rule shall not apply to bakeries whose total production of bread, buns, and rolls per operating day is less than 45,450 kg (100,000 pounds), averaged over all operating days in any one month.

8-42-111 **Exemption, Low Emitting Ovens:** Ovens demonstrated to the satisfaction of the APCO to emit less than 68.2 kg (150 pounds) of ethanol per operating day averaged over a period of one year shall be exempt from the requirements of Section 8-42-301.

8-42-112 **Exemption, Existing Ovens:** The requirements of Section 8-42-303 shall not apply to ovens, which commenced operation prior to January 1, 1988 and which are demonstrated to the satisfaction of the APCO to emit less than 113.7 kg (250 pounds) of ethanol per operating day, averaged over a period of one year.

8-42-113 **Exemption, Miscellaneous Bakery Products:** This rule does not apply to equipment used exclusively for the baking of bakery products other than bread, buns, and rolls. Such products include, but are not limited to, muffins, croutons, breadsticks, and crackers.

8-42-114 **Exemption, Chemically Leavened Products:** This rule does not apply to equipment used exclusively for the baking of bakery products leavened chemically in the absence of yeast.

8-42-200 DEFINITIONS

8-42-201 **Approved Emission Control System:** A system for reducing emissions of precursor organic compounds to the atmosphere consisting of a control device, which has been approved by the APCO and which satisfies the following conditions:

201.1 The control device shall achieve the control efficiency specified in the applicable standards section at all times during normal operation of the equipment being controlled.

201.2 The collection system shall vent all exhaust from the oven stack or stacks to the control device during normal operation.

8-42-202 **Baseline Emissions:** The average amount of precursor organic compounds emitted per operating day from an oven between January 1, 1988 and December 31, 1988. Emissions shall be calculated in accordance with Section 8-42-602.

8-42-203 **Bread:** A perishable foodstuff prepared from a dough whose primary ingredients are flour, sugar, salt, water, and yeast and which is baked into loaves, buns, or rolls.

8-42-204 **Fermentation Time:** Elapsed time between adding yeast to the dough or sponge and placing the loaves into the oven, expressed in hours.

8-42-205 **Large Commercial Bread Bakery:** Any bakery producing more than 45,454 kg (100,000 pounds) of breads, buns, and rolls per day.

8-42-206 **Leaven:** To raise a dough by causing gas to thoroughly permeate it.

8-42-207 **Yeast Percentage:** Pounds of yeast per hundred pounds of total recipe flour, expressed as a percentage.

8-42-300 STANDARDS

8-42-301 **New and Modified Bakery Ovens:** Effective January 1, 1989, a person subject to this rule shall not operate the following equipment unless the requirements of Section 8-42-302 are met:

301.1 Any newly constructed oven commencing operation after January 1, 1989.

301.2 Any newly constructed oven replacing an existing oven and commencing operation after January 1, 1989.

301.3 Any existing oven which has been modified, with modifications completed after January 1, 1989, at a cost exceeding 50% of replacement cost of the oven.

301.4 Any oven with a change in production after January 1, 1989, resulting in an emission increase, averaged over a 30 day period, of 68.2 kg (150 pounds) per operating day above the baseline emissions.

8-42-302 **Emission Control Requirements, New and Modified Ovens:** All new and modified ovens shall be required to vent all emissions to an approved emission control system capable of reducing emissions of precursor organic compounds by 90% on a mass basis.

8-42-303 **Emission Control Requirements, Existing Ovens:** Effective January 1, 1992, all existing ovens which commenced operation prior to January 1, 1989, shall be required to vent emissions to a control system meeting the following standards:

303.1 Emission collection system shall capture all emissions of precursor organic compounds from all oven stacks.

303.2 Collected emissions shall be vented to an approved emission control device which has a destruction efficiency of at least 90% on a mass basis.

8-42-304 **Delayed Compliance, Existing Ovens:** In lieu of complying with the requirements of Section 8-42-303, an applicant may elect to replace those ovens subject to Section 8-42-303 with new ovens meeting the requirements of Section 8-42-302 by January 1, 1994. Such election must be made by January 1, 1991, subject to approval of the APCO. In approving such an election, the APCO may require the posting of a bond and may impose permit conditions on the existing subject ovens in order to assure compliance with the January 1, 1994 installation of new ovens.

8-42-400 ADMINISTRATIVE REQUIREMENTS

8-42-401 **Compliance Schedule:** Any person subject to the requirements of Section 8-42-303 of this rule shall comply with the following increments of progress:

401.1 By January 1, 1990: Submit a status report to the APCO stating the options under consideration for retrofitting or replacing existing ovens.

401.2 By January 1, 1991: Submit a plan describing the methods proposed to be used to comply with 8-42-303.

401.3 By March 31, 1991: Submit a completed application for any Authority to Construct necessary to comply with these requirements.

401.4 By January 1, 1992: Be in full compliance with all applicable requirements.

8-42-402 **Delayed Compliance Schedule:** Any person seeking to comply with this rule under Section 8-42-304 shall comply with the following increments of progress:

402.1 By January 1, 1991: Submit a plan describing the methods proposed to be used to comply with 8-42-302.

402.2 By January 1, 1992: Submit to the APCO a status report on the purchase of the new ovens.

402.3 By January 1, 1993: Submit a completed application for any Authority to Construct necessary to comply with these requirements.

402.4 By January 1, 1994: Be in full compliance with all applicable requirements.

8-42-600 MANUAL OF PROCEDURES

8-42-601 Determination of Emissions: Emissions of organics shall be measured as prescribed in the Manual of Procedures, Source Test Procedure ST-32.

8-42-602 Emission Calculation Procedures: If emission measurements conducted in accordance with Section 8-42-601 are not available for a specific bakery product, oven emissions shall be calculated using the emission factors in Table I.

TABLE I

Yt*	Pounds VOC/ton bakery product	Yt*	Pounds VOC/ton bakery product
1.0	.8488	16.0	7.5176
1.5	1.0711	16.5	7.7399
2.0	1.2934	17.0	7.9622
2.5	1.5157	17.5	8.1845
3.0	1.7380	18.0	8.4068
3.5	1.9603	18.5	8.6291
4.0	2.1826	19.0	8.8514
4.5	2.4049	19.5	9.0737
5.0	2.6272	20.0	9.2959
5.5	2.8495	20.5	9.5182
6.0	3.0718	21.0	9.7405
6.5	3.2941	21.5	9.9628
7.0	3.5163	22.0	10.1851
7.5	3.7386	22.5	10.4074
8.0	3.9609	23.0	10.6297
8.5	4.1832	23.5	10.8520
9.0	4.4055	24.0	11.0743
9.5	4.6278	24.5	11.2966
10.0	4.8501	25.0	11.5189
10.5	5.0724	25.5	11.7412
11.0	5.2947	26.0	11.9635
11.5	5.5170	26.5	12.1857
12.0	5.7393	27.0	12.4080
12.5	5.9616	27.5	12.6303
13.0	6.1839	28.0	12.8526
13.5	6.4061	28.5	13.0749
14.0	6.6284	29.0	13.2972
14.5	6.8507	29.5	13.5195
15.0	7.0730	30.0	13.7418
15.5	7.2953		

*Yt = (yeast percentage) * (fermentation time).
If yeast is added in 2 steps, Yt = [(initial yeast percentage) * (total fermentation time) + (remaining yeast percentage) * (remaining fermentation time)].

APPENDIX E

SOUTH COAST AIR QUALITY MANAGEMENT DISTRICT

RULE 1153

COMMERCIAL BAKERY OVENS

(Adopted January 4, 1991)

RULE 1153. COMMERCIAL BAKERY OVENS

(a) Applicability

This rule controls volatile organic compound (VOC) emissions from commercial bakery ovens with a rated heat input capacity of 2 million BTU per hour or more and with an average daily emission of 50 pounds or more of VOC.

(b) Definitions

For the purpose of this rule the following definitions shall apply:

(1) AVERAGE DAILY EMISSIONS is the product of the total calendar year emissions (in tons/year) divided by the number of days the oven was employed for production during that year.

(2) BAKERY OVEN is an oven for baking bread or any other yeast leavened products by convection.

(3) BASE YEAR is the calendar 1989 or any subsequent calendar year in which the average daily emissions are 50 pounds or more per day.

(4) EMISSIONS are any VOC formed and released from the oven as a result of the fermentation and baking processes of yeast leavened products.

(5) EXEMPT COMPOUNDS are any of the following compounds which have been determined to be non-precursors of ozone:

(A) Group I (General)

chlorodifluoromethane (HCFC-22)
dichlorotrifluoroethane (HCFC-123)
tetrafluoroethane (HFC-134a)
dichlorofluoroethane (HCFC-141b)
chlorodifluoroethane (HCFC-142b)

(B) Group II (Under Review)

methylene chloride
1,1,1-trichloroethane (methyl chloroform)
trifluoromethane (FC-23)
trichlorotrifluoroethane (CFC-113)
dichlorodifluoromethane (CFC-12)
trichlorofluoromethane (CFC-11)
dichlorotetralfuoroethane (CFC-114)
chloropentafluoroethane (CFC-115)

The Group II compounds may have restrictions on their use because they are toxic or potentially toxic, or upper-atmosphere ozone depleters, or cause other environmental impacts. The District Board has adopted a policy which states that chlorofluorocarbons (CFC) will be phased out at the earliest practicable date on or before 1997.

(6) EXISTING OVEN is an oven that was constructed and commenced operation prior to January 1, 1991.

(7) FERMENTATION TIME is the elapsed time between adding yeast to the dough or sponge and placing it into the oven, expressed in hours.

(8) LEAVEN is to raise a dough by causing gas to permeate it.

(9) VOLATILE ORGANIC COMPOUNDS (VOC) is any volatile chemical compound that contains the element of carbon compound, excluding carbon monoxide, carbon dioxide, carbonic acid, metallic carbides or carbonates, methane, and exempt compounds.

(10) YEAST PERCENTAGE is the pounds of yeast per hundred pounds of total recipe flour, expressed as a percentage.

(c) Requirements

(1) No person shall operate an existing bakery oven unless VOC emissions are reduced by at least:

(A) 70 percent (by weight) for an oven with a base year average daily VOC emissions of 50 pounds or more, but less than 100 pounds.

(B) 95 percent by weight for an oven with a base year average daily VOC emissions of 100 pounds or more.

(2) No person shall operate a new bakery oven unless VOC emissions are reduced by at least 95 percent by weight if the uncontrolled average daily VOC emissions are 50 pounds or more.

(d) Compliance Schedule

No person shall operate a bakery oven subject to this rule unless the following increments of progress are met:

(1) For bakery ovens subject to subparagraph (c)(1)(A):

(A) By January 1, 1992, submit required applications for permits to construct and operate.

(B) By July 1, 1993, demonstrate compliance with subparagraph (c)(1)(A).

(2) For bakery ovens subject to subparagraph (c)(1)(B):

(A) By January 1, 1993, submit required applications for permits to construct and operate.

(B) By July 1, 1994, demonstrate compliance with subparagraph (c)(1)(B).

(3) For bakery ovens subject to subparagraph (c)(2) be in compliance by July 1, 1992 or by the date of installation, whichever is later.

(e) Alternate Compliance Schedule

The subparagraph (d)(1) and (d)(2) compliance deadlines may be postponed by one year if the owner of a bakery oven elects to replace the existing oven with a new one. Such election must be made by January 1, 1992 via a compliance plan submitted to, and subject to approval of, the Executive Officer or his designee. In approving such an election, the Executive Officer may impose interim conditions or control measures on the existing oven in order to assure compliance pending the installation or construction of the new, replacement oven.

(f) Exemptions

The provisions of paragraphs (c) and (d) do not apply to any existing bakery oven that emits less than 50 pounds of VOC per operating day on an uncontrolled basis. Daily VOC emissions shall be determined according to the calculation procedures of Attachment A, or according to any test methods specified in paragraph (h).

(g) Recordkeeping Requirements

Any person operating a bakery oven subject to this rule and claiming an exemption under paragraph (f) shall maintain a daily record of operations, including, but not limited to, the amount of raw material processed, yeast percentage, fermentation time, and the type of product baked. Such records shall be retained in the owner's or operator's files for a period of not less than two years.

(h) Test Methods

EPA Test Method 25, or SCAQMD Test Method 25.1, or any other method determined to be equivalent and approved by the Executive Officer or his designee, may be used to determine compliance with this rule.

ATTACHMENT A

Yt*	Pounds VOC/ton Bakery Product	Yt*	Pounds VOC/ton Bakery Product
1.0	0.8488	16.0	7.5176
1.5	1.0711	16.5	7.7399
2.0	1.2934	17.0	7.9622
2.5	1.5157	17.5	8.1845
3.0	1.7380	18.0	8.4068
3.5	1.9603	18.5	8.6291
4.0	2.1826	19.0	8.8514
4.5	2.4049	19.5	9.0737
5.0	2.6272	20.0	9.2959
5.5	2.8495	20.5	9.5182
6.0	3.0718	21.0	9.7405
6.5	3.2941	21.5	9.9628
7.0	3.5163	22.0	10.1851
7.5	3.7386	22.5	10.4074
8.0	3.9609	23.0	10.6297
8.5	4.1832	23.5	10.8520
9.0	4.4055	24.0	11.0743
9.5	4.6278	24.5	11.2966
10.0	4.8501	25.0	11.5189
10.5	5.0724	25.5	11.7412
11.0	5.2947	26.0	11.9635
11.5	5.5170	26.5	12.1857
12.0	5.7393	27.0	12.4080
12.5	5.9616	27.5	12.6303
13.0	6.1839	28.0	12.8526
13.5	6.4061	28.5	13.0749
14.0	6.6284	29.0	13.2972
14.5	6.8507	29.5	13.5195
15.0	7.0730	30.0	13.7418
15.5	7.2953		

* Yt = (yeast percentage) x (fermentation time)
If yeast is added in 2 steps, Yt = (initial yeast percentage)
* (total fermentation time) + (remaining Yeast percentage)
* (remaining fermentation time)

TECHNICAL REPORT DATA
(Please read Instructions on the reverse before completing)

1. REPORT NO. EPA 453/R-92-017	2.	3. RECIPIENT'S ACCESSION NO.
4. TITLE AND SUBTITLE Alternative Control Technology Document for Bakery Oven Emissions		5. REPORT DATE December 1992
		6. PERFORMING ORGANIZATION CODE
7. AUTHOR(S) C. Wally Sanford		8. PERFORMING ORGANIZATION REPORT NO.
9. PERFORMING ORGANIZATION NAME AND ADDRESS Research Triangle Institute, Post Office Box 12194, Research Triangle Park, NC 27709-2194		10. PROGRAM ELEMENT NO.
		11. CONTRACT/GRANT NO. 68-D1-0118
12. SPONSORING AGENCY NAME AND ADDRESS Office of Air Quality Planning and Standards, US Environmental Protection Agency, Research Triangle Park, NC 27711		13. TYPE OF REPORT AND PERIOD COVERED Final
		14. SPONSORING AGENCY CODE

15. SUPPLEMENTARY NOTES

16. ABSTRACT

This document was produced in response to a request by the baking industry for Federal guidance to assist in providing a more uniform information base for State decision-making with regard to control of bakery oven emissions. The information in the document pertains to bakeries that produce yeast-leavened bread, rolls, buns, and similar products but not crackers, sweet goods, or baked foodstuffs that are not yeast leavened. Information on the baking processes, equipment, operating parameters, potential emissions from baking, and potential emission control options are presented. Catalytic and regenerative oxidation are identified as the most appropriate existing control technologies applicable to VOC emissions from bakery ovens. Cost analyses for catalytic and regenerative oxidation are included. A predictive formula for use in estimating oven emissions has been derived from source tests done in junction with the development of this document. Its use and applicability are described.

17. KEY WORDS AND DOCUMENT ANALYSIS

a. DESCRIPTORS	b. IDENTIFIERS/OPEN ENDED TERMS	c. COSATI Field/Group
Bakery, oven, emissions, baker's percent, fermentation time, VOC controls, ethanol, catalytic oxidation, regenerative oxidation, dough formula, predictive formula		

18. DISTRIBUTION STATEMENT Release Unlimited	19. SECURITY CLASS (This Report) Unclassified	21. NO. OF PAGES 105
	20. SECURITY CLASS (This page) Unclassified	22. PRICE

EPA Form 2220-1 (Rev. 4-77) PREVIOUS EDITION IS OBSOLETE