TECHNICAL ASSISTANCE DOCUMENT: THE APPLICATION AND CALIBRATION OF PRESSURE INSTRUMENTS, FLOWMETERS, AND FLOW CONTROL DEVICES AS APPLIED TO INJECTION WELLS

Prepared by:

The Underground Injection Control
Quality Assurance (UIC-QA) Workgroup,
U.S. Environmental Protection Agency
Office of Drinking Water, State Programs Division
Underground Injection Control Branch*

Project Manager:

Mario Salazar
State Programs Division
ODW (WH-550E)
EPA Headquarters
401 M Street, S.W.
Washington, D.C. 20460

Final Technical Editing:

Drew Dawn Enterprises, Inc.
2522 South Dakota Avenue, N.E.
Washington, D.C. 20018-1634
(202) 526-3577

September 1987

*See Acknowledgements

DISCLAIMER

This report was prepared for informational training and technical assistance purposes. Any references to specific companies, trade names, or commercial products do not constitute endorsements or recommendations of them by the United States Environmental Protection Agency.

ACKNOWLEDGEMENTS

The preliminary drafts of this document were prepared by Mr. Anthony J. Vellios and Mr. John Mentz of SMC Martin Inc., Valley Forge, Pennsylvania under EPA Contract No. 68-01-6288. The manual was extensively revised and completed by the UIC-QA work group. The authors acknowledge the valuable input provided by Mr. Jeff Cantwell of 3D Instruments and Mr. Jim Casey of Waco Associates. Special mention is given to Mr. Joe Roesler of EPA EMSL-Cincinnati as the principal reviewer and contributor in his role as instrumentation expert.

The UIC-QA work group members were:

Philip Baca*
New Mexico Oil Conservation Division
P.O. Box 2088
Santa Fe, NM 87501

Gene Coker (404) 347-3866
U.S. EPA Region IV, GWS, WSB
345 Courtland Street, NE
Atlanta, GA 30365

John Creech*
Dupont Company
Box 3269
Beaumont, TX 77704

Richard Ginn*
Railroad Commission of Texas
P.O. Drawer 12967
Capital Station
Austin, TX 78711

Fred Hille (601) 961-5171
Bureau of Pollution Control
Mississippi Department of Natural Resources
P.O. Box 10385
Jackson, MS 39209

Juanita Hillman (303) 236-5065
U.S. EPA Region VIII, 8ES
One Denver Place
999 18th Street
Denver, CO 80295

Linda Kirkland (214) 655-2217
U.S. EPA Region VI, Office of
Quality Assurance
1445 Ross Avenue
Dallas, TX 75202-2733

ACKNOWLEDGEMENTS
(continued)

Charles A. Koch (701) 224-2969
North Dakota Industrial Com.
900 East Blvd.
Bismarck, ND 58505

Bert Moniz*
Dupont Company
Box 3269
Beaumont, TX 77704

Bernie Orenstein*
U.S. EPA Region V, 5WD
230 South Dearborn Street
Chicago, IL 60604

Paul Osborne*
U.S. EPA Region VIII, Water Division,
8WM-DW
1860 Lincoln Street
Denver, CO 80295

Irwin Pomerantz*
U.S. EPA Headquarters
QAO, Office of Drinking Water (WH-550)
401 M Street, S.W.
Washington, D.C. 20460

Joseph Roesler** (513) 569-7286
U.S. EPA, EMSL
26 W. St. Clair
Cincinnati, OH 45268

Mario Salazar (Project Manager) (202) 382-5561
U.S. EPA Headquarters
401 M Street, S.W.
Washington, D.C. 20460

Jeff van Ee (702) 798-2367
U.S. EPA, EMSL-LV, AMD, AMW
P.O. Box 15027
Las Vegas, NV 89114

Ron Van Wyk (Task Leader)** (214) 655-7160
U.S. EPA Region VI, WSB (6W-SG)
1445 Ross Avenue
Dallas, TX 75202-2733

* No longer in work group
**Mainly responsible for the manual

PREFACE

Correctly selected, accurately installed, and properly functioning flowmeters and pressure gauges are essential to precisely monitor injection wells. The type of device selected must be suitable for the accuracy and precision required of the measurement. The construction material of the instrument must be compatible with the environment in which the meter or gauge is placed; it must be appropriate also for the pressures, temperatures, fluid properties, and flow ranges that are anticipated. Moreover, measurement control devices should always be properly maintained and calibrated; the manufacturers' specifications and guidelines should be followed, and their factory services used, when appropriate.

The best way to maintain the proper functioning of a gauge or meter is to regularly clean and calibrate it. The time limits between recalibrations depend upon the type of instruments, and type of fluids to be measured. Gauges and meters can be recalibrated on site by the owner, if the right equipment is available; and, if it is not, done off site by either a service shop or the manufacturer.

Finally, this document was prepared to introduce the basic concepts of flow and pressure metering in injection wells to EPA Regional office staffers, state regulators, and the regulated community.

The reader will find manufacturer's lists, and inspection and operator checklists at the end of the manual.

TABLE OF CONTENTS

	Page
PREFACE	iv
LIST OF FIGURES	vi
LIST OF TABLES	viii
INTRODUCTION	1
PRESSURE MEASURING DEVICES	3
Pressure Gauges	3
Bourdon Tubes	3
Helical Coil Gauges	10
Gauges and Extreme Environments	10
Pressure Transducers	15
Downhole Pressure Recording Devices	17
Pressure Recording Devices	20
Methods for Testing Pressure Instruments	23
Deadweight Tester	23
Portable Gauge Testers	24
Calibrating Pressure Gauges	28
"Negative" Pressure Gauges	31
Open Annulus Wells	32
FLOWMETERS	33
Types of Flowmeters	33
Operational Principles	38
Positive-Displacement Flowmeters	38
Turbine Flowmeters	44
Differential Pressure-Producing Flowmeters	49
Sonic Flowmeters	55
Doppler Flowmeters	57
Float-Type Flowmeters	59
Electromagnetic Flowmeters	61
Vortex-Shedding Flowmeters	63
Other Flowmeter Designs	63
Testing and Calibrating Flowmeters	65
Flow Recording Devices	68
CONTROL DEVICES	69
Valves	71
Actuators	78
APPENDIX A - List of Manufacturers	79
APPENDIX B - Glossary	82
APPENDIX C - Publications	85
REFERENCES	88
CHECKLISTS FOR INSPECTIONS	89

LIST OF FIGURES

Figure	Title	Page
1	The Working Components of the Bourdon Tube Driven Pressure Gauge	4
2	Retarded Gauge	11
3	Retard Spring and Clamp	11
4	Helical Coil Gauge	12
5	Diaphragm Seal	14
6	The Pressure Transducer (bottom) and the Wheatstone Bridge Strain Gauge (top)	16
7	The Amerada RPB-4 Gauge	18
8	Electronic Receiver-Recorder	21
9	Mechanical Pressure Recorder	22
10	Deadweight Tester and Portable Gauge Tester	25
11	Portable Gauge Tester	27
12	Bourdon Gauge Components	29
13	Bi-Rotor Oval Gear Meter	39
14	Rotating-Paddle Meter	40
15	Oscillating Piston Meter	41
16	Rotating Vane Meter	42
17	Major Components of a Turbine Meter	45
18	Bearingless Flowmeter	47
19	Flow Ranges and K-Factors	48
20	Typical Turbine Performance Curve	48
21	Schematic Diagram of a Working Orifice	50
22	Schematic Diagram of a Working Flow Nozzle	51

LIST OF FIGURES
(continued)

Figure	Title	Page
23	Plan View of a Flow Tube	52
24	Plan View of a Venturi Tube	53
25	Sonic Flowmeter	56
26	Doppler Flowmeter	58
27	Typical Transparent Float Flowmeter	60
28	Principles of Magnetic Flowmeters	62
29	Cut-Away View of a Vortex-Shedding Flowmeter	64
30	Schematic Diagram of a Piston Prover	67
31	Block Diagram of the Working Components of an Electronic Recorder	70
32	The Eccentric Plug Valve	74
33	Globe Control Valve	75
34	Cage Plug	77

LIST OF TABLES

Table	Title	Page
1	Fluid Media and Appropriate Bourdon Tube Material	6
2	Different Flowmeter Specifications	34
3	Flowmeter Material Resistance	36
4	Applications of Various Valve Designs	72

INTRODUCTION

The Underground Injection Control (UIC) program was established by the U.S. Environmental Protection Agency to protect underground sources of drinking water (USDWs) from potential pollution by injection wells. Improperly completed or operated wells can cause ground water contamination.

The UIC program requires that the mechanical integrity of all injection wells be tested before operation begins, and at least once every five years thereafter. For Class I wells the annulus pressures, injection pressures, flow rates and volumes must also be continuously monitored and recorded. Periodic monitoring of pressures and flow rates is required for Class II and III wells.

Except during well stimulation, injection pressures must not exceed a magnitude which would initiate fractures or propagate existing fractures in confining beds adjacent to USDWs (in regards to Class II wells), or the injection zone in the case of Class I and III wells.

An important part of the Underground Injection Control program involves monitoring injection volumes and rates, and injection and annulus pressures. This observance requires the availability of accurate and reliable equipment, along with the knowledge needed for proper application. Flowmeters, indicators, and recorders are used to measure and record volumes and injection rates; the pressures are ascertained with gauges, transducers, and/or various downhole

instruments.

Each instrument has its own operating requirements, which must be met to assure that the device operates within specifications. Excessive temperatures, pressures, flows, or vibrations will generally adversely affect the accuracy and service life of these instruments; care must, therefore, be taken to install and maintain these devices according to the manufacturer's instructions.

Devices that measure pressures and flows often have to be calibrated before installation and recalibrated periodically to assure continued accuracy. It is the operator's responsibility to assure that tests and recalibrations are conducted as required. Inaccurate instruments should be recalibrated, repaired, or replaced as quickly as feasible.

This report discusses the various devices that are used to measure the pressures and the flow rates of injection wells; particularly, those instruments that are used by regulatory agencies and injection well operators for assessing well operations.

Some terms are used in this report that may be unfamiliar to the reader; these expressions are defined in Appendix B.

Check Lists are included at the end of the document which can be used by appropriate personnel to determine the effectiveness of flow control devices as applied to underground injection control programs.

PRESSURE MEASURING DEVICES

Injection pressures are measured in several ways. One procedure uses the pressure source to mechanically expand a hollow tube or a coil which in turn causes a pointer to move across a graduated dial; this method utilizes several kinds of pressure gauges as well as downhole pressure "bombs," and self-contained pressure recorders. Another uses pressure transducers that contain a strain gauge that is connected to an exposed diaphragm. As the diaphragm stretches under pressure, its strain is converted into an electrical signal that is proportional to pressure. Both pressure transducers and pressure gauges are discussed in detail in the following pages:

PRESSURE GAUGES

The standard pressure gauge is a small instrument (1"-6" diameter) and consists of a dial face, a pointer, and a driving mechanism. It is connected directly to the pipe in which pressure is to be monitored. Pressure can be instantly read on the dial face. Most such gauges are inexpensive and compact -- if compared to other measuring devices.

Bourdon Tubes

Most pressure gauges use the Bourdon "C" tube as the driving mechanism for the gauge pointer. The Bourdon tube is a hollow C-shaped tube as shown in Figure 1. The tube is located inside the gauge case and is directly attached to a

Figure 1. The Working Components of the Bourdon Tube Driven Pressure Gauge. The fluid under pressure flows directly into the tube and causes it to expand. This expansion pulls a segment gear which in turn drives a pointer.

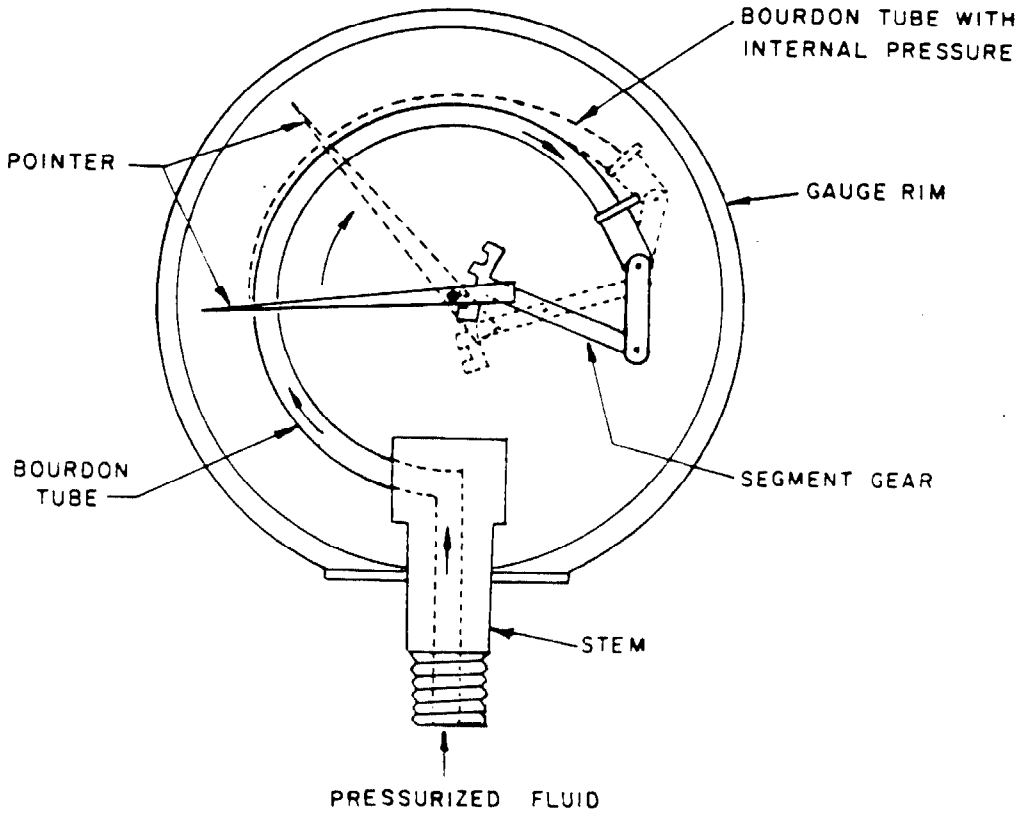

threaded stem. The fluid travels through the stem into the tube. The tube deflects in proportion to the amount of fluid pressure. This in turn forces a segmented gear arm to drive the pointer gear. The gearing can be slightly adjusted to assure linearity and provide an accurate pressure reading.

The tube can be made from a variety of materials, but construction materials must be selected so as to protect the instrument from corrosion, since the fluid is in contact with the inside of the tube. Table 1 gives the appropriate materials to be used for different fluid media. Bourdon tube gauges can be designed to measure pressures up to 20,000 psi. Inaccuracies range from 0.25 percent to 3 percent of full range. (Temperature is an important factor to be considered in reducing error.)

The error expected can be approximated by the formula:

$$e = \frac{.02 \times T \times P}{Ps}$$

In which:

.02 = an empirical constant

e = error

T = Temperature (°K)

P = Pressure applied

Ps = Pressure range

(Considine, 1974)

TABLE 1

FLUID MEDIA AND APPROPRIATE BOURDON TUBE MATERIAL

LEGEND	Bourdon Tube Material
P	Phosphor Bronze
S403	403 Stainless Steel
M	K Monel
S316	316 Stainless Steel

Medium	Bourdon Tube Material	Medium	Bourdon Tube Material
Acetone	P, S403, M, S316	Bromine (dry)	M
Acetic Acid	S316, S403	Butane	S403, M, S316
Acetate Solvents	S403, M, S316	Butanol	P, M
Acetic Anhydride	M, S316	Butyric Acid	P
Acetylene (dry)	P, S403, M, S316	Calcium Chloride*	P, S403, S316
Alcohols	P, S403, M, S316	Calcium Bisulfite	S403, S316
Alums	S403, M, S316	Calcium Hydroxide	P
Ammonia	S403, S316	Carbon Dioxide (dry)	P, S403, M, S316
Ammonium Carbonate	S403, S316	Carbon Disulfide	S403, S316
Ammonium Chloride	M	Carbon Tetrachloride (dry)	M, S316
Ammonium Hydroxide	S403, S316	Carbonic Acid	M, S316
Ammonium Phosphate	S403, S316	Carbolic Acid	M, S316
Ammonium Sulfate	M	Chlorine (dry)	M, S316, S403
Aluminum Chloride	M	Casein	P
Aluminum Fluoride*	M	Chloroform (dry)	P, M, S316
Aluminum Sulfate	S403, M, S316	Chromic Acid	S403, S316
Amyl Chloride (dry)	M	Chromium Fluoride*	M
Beer	P, M, S316	Citric Acid	S403, M, S316
Benzene	P, S403, M, S316	Coal Gas	P
Benzol	P, S403, M, S316	Cottonseed Oil	S403, M, S316
Boric Acid	P, M	Copper Sulfate	S403, S316
Benzyl Alcohol	S403, M, S316	Cuprous Oxide	S403, M, S316
Brine*	M	Ethers	P, S403, M, S316

TABLE 1

(continued)

Medium	Bourdon Tube Material
Ethyl Cellulose	P, S403, M, S316
Ethyl Acetate	P, S403, M, S316
Ethylene (dry)	M
Ethyl Chloride (dry)	M
Ethylene Dibromide (dry)	P, M
Ethylene Dichloride (dry)	M
Ethylene Glycol	P, S403, M, S316
Ferric Nitrate	S403, S316
Ferric Sulfate	S403, S316
Formaldehyde	M, S316
Freon	P, S403, M, S316
Gasoline	P, S403, M, S316
Gelatine	M, S316
Glucose	P, S403, M, S316
Glycerine	P, S403, M, S316
Hydrocyanic Acid	S403, M, S316
Hydrogen	P. M, S316
Hydrogen Peroxide*	S403, M, S316
Hydrogen Sulfide	M
Kerosene	P, S403, M, S316
Lacquers	P, S403, M, S316
Lactic Acid	S403, S316
Lithium Chloride*	M
Magnesium Chloride*	M
Magnesium Sulfate	P, S403, M, S316
Naptha	P, S403, M, S316
Mercury	S403, S316
Natural Gas	P, S403, M, S316

Medium	Bourdon Tube Material
Magnesium Hydroxide	S403, M, S316
Nickel Acetate	P, M
Nitrogen	P, S403, M, S316
Nitric Acid*	S316
Nitrous Acid*	S316
Nitrosyl Chloride	M
Oleic Acid	S403, M, S316
Oxalic Acid	M
Oxygen*	P, S403, M, S316
Paraffin	P, S403, M, S316
Picric Acid	S403, S316
Phosphoric Acid*	S403, S316
Phosphorous Acid*	S403, S316
Photographic Solutions	S403, S316
Petroleum Oils	P, S403, M, S316
Potassium Chloride*	M
Potassium Hydroxide	M
Potassium Sulfate*	M
Potassium Permanganate	S403, S316
Propane Gas	P, S403, M, S316
Pyroxylin	M
Salicylic Acid	P, S403, M, S316
Steam (under 300 psi)	P, S403, M, S316
Steam (over 300 psi)	S403, S316
Sodium Bicarbonate	M, S316
Sodium Bisulfate	M, S316
Sodium Carbonate	M, S316
Sodium Chloride*	M

TABLE 1

(continued)

Medium	Bourdon Tube Material
Sodium Cyanide	S403, S316
Sodium Fluoride*	M
Sodium Hydroxide*	M, S316
Sodium Metaphosphate	M, S316
Sodium Nitrate*	S403, M, S316
Sodium Perborate*	M, S316
Sodium Peroxide*	S403, M, S316
Sodium Phosphate	S403, M, S316
Sodium Silicate	S403, M, S316
Sodium Sulfate*	M
Sodium Sulfide	S403, M, S316
Sodium Sulfite*	M, S316
Silver Nitrate	S403, S316
Stearic Acid	S403, M, S316
Sulfur Dioxide*	S403, S316
Sulfurous Acid*	S403, S316
Tetraethyl Lead	M
Titanium Sulfate	M
Toluene	P, S403, M, S316
Trichloroethylene (dry)	S403, M, S316

* Depending upon certain conditions

(Chilton, 1976)

The gauges used for injection well monitoring should have a full scale pressure range not more than twice that of the normal injection pressure (Chilton, 1976), otherwise the sensitivity of the meter to measure accurately is lost. For example, a Bourdon gauge installed on a well where normal operating pressure is 1000 psi should have a full range of not more than 2000 psi. If a 10,000 psi is used, the maximum error would increase from 60 to 300 psi (140 to 700 feet of head).

One advantage of Bourdon gauges is that their movements can be retarded. The scale of a retarded gauge abruptly changes at a certain point on the dial (see Figure 2). Often these gauges have a small portion of the total scale reading spread out over 90 percent of the dial. This allows a gauge reader to observe a normal range of pressures, while providing a means to read pressures far above normal. Retarding is achieved by attaching a spring to the gauge movement (see Figure 3) and allowing the segment gear to come in contact with the spring only at the required pressure range.

A disadvantage of the Bourdon tube pressure gauge is its inability to handle vibrations without special equipment. Pulsating pressure or vibrating pipelines can cause gear teeth and bearing wear; powder from these abraded parts can deposit on other moving parts of the gauge which can result in loss of calibration and operational life.

There are several methods to diminish the harmful effects of vibration. One is to connect pulsation dampeners

to the stem of the gauge. For these mechanisms to work correctly, the tube must be filled with glycerin. The glycerin slows the action of the Bourdon tube and reduces the effect of vibration.

One dampener design is a synthetic rubber bulb that seals the service medium from the gauge proper; another uses a moving pin, which works like a piston, to absorb most of the vibration energy. For permanently encased gauges the casing should be filled with glycerin or silicone to directly dampen gear movement (Dresser-Ashcroft, Bulletin OH-1).

Helical Coil Gauges

Pressure can also be measured mechanically with a helical coil gauge (see Figure 4). These gauges use sensing coils instead of tubes to move a pointer across a dial. The pipe fluid is directly connected to the coil which unwinds under pressure.

Bearings steady the coil and force the lateral movement to translate into rotation. The degree of unwinding is directly proportional to pressure.

Helical coil gauges are especially suited for high vibration applications, since they have few parts and no gears. Some coil gauges can measure pressures as high as 20,000 psi with errors that range only from 0.25 to 1.0 percent of full range.

Gauges and Extreme Environments

Some difficulties can arise with pressure gauges under certain temperature and chemical conditions. Joint construc-

Figure 2. Retarded Gauge. The scale changes at 10 psi (Dresser-Ashcroft, 250-1353-H).

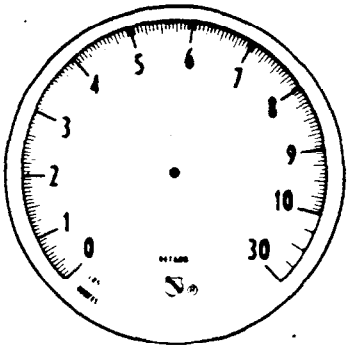

SINGLE RETARD
0 to 30 psi Dial

Figure 3. Retard Spring and Clamp. The segment gear swings downward with pressure and requires more force once it strikes the spring (Dresser-Ashcroft, 250-1353-H).

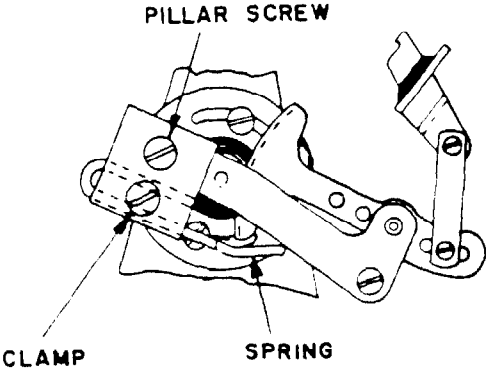

Figure 4. Helical Coil Gauge. As the pressure increases inside the stem tube, the helical coil unwinds, thus rotating the pointer clockwise.

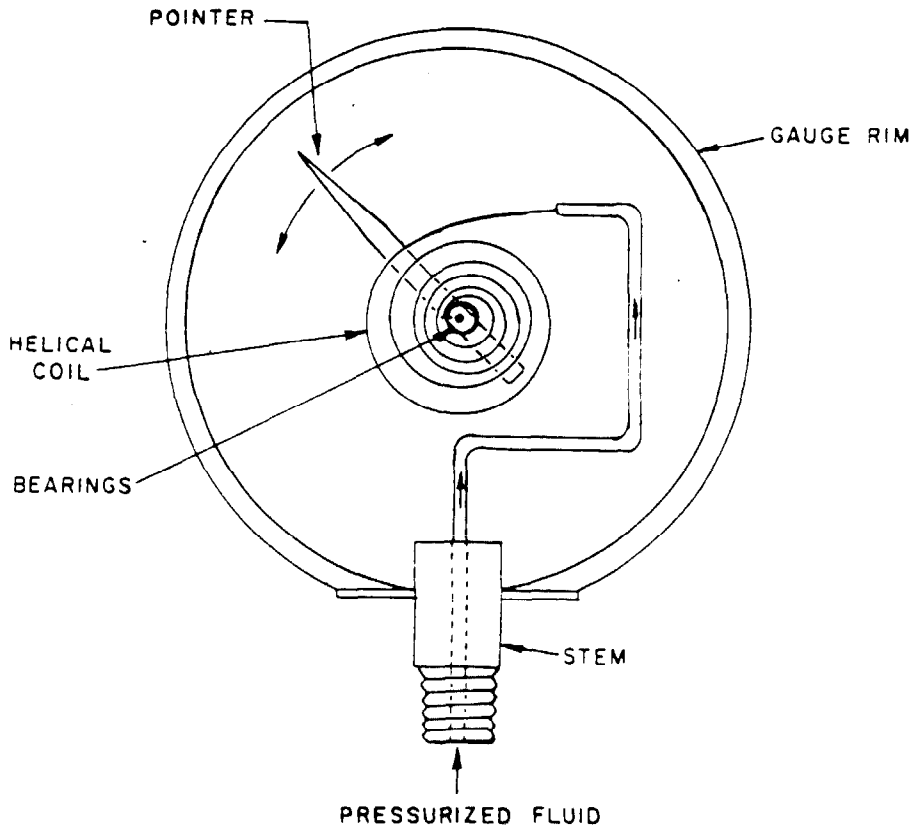

tion is an important factor in the ability of the gauge to operate properly at a given temperature. Only gauges with welded joints are rated to withstand a temperature of 750°F; while silver brazed joints operate to 450°F and soft soldered joints are rated to 150°F. Even in gauges with strong joints, more delicate internal working parts may fail at high temperatures. Gauges also may lose accuracy with increasing temperatures; for example, the accuracy in the reading of some gauges can change 1.5 percent per 100°F. To protect gauges from the effects of high temperatures operators usually connect the gauge to service lines with a piece of pipe. Tests have shown that a foot-long, half-inch pipe can reduce a process temperature from 200°F to 120°F at the gauge where ambient temperatures are 80°F (Dresser-Ashcroft 250-1353-H).

Pipe fluids can damage a gauge by corroding or clogging the measuring element (e.g., Bourdon tube) when they come in direct contact. Diaphragm seals should be used between the injection or annulus fluid and the gauge (see Figure 5) to isolate the gauge from the process fluid. The pressure is then transmitted to the gauge via the glycerin that fills the tube and stem.

A diaphragm seal is useful when a single gauge is used to monitor several injection systems at different times. If a diaphragm is provided for a pipe, cross-contamination due to switching pressure gauges is eliminated.

Diaphragm seals are also useful to prevent extremely low temperature fluids from entering the gauge and causing freeze

Figure 5. Diaphragm Seal. The diaphragm transmits pipe pressure to the instrument without allowing the pipe medium to pass (ITT Hildebrandt, 1983).

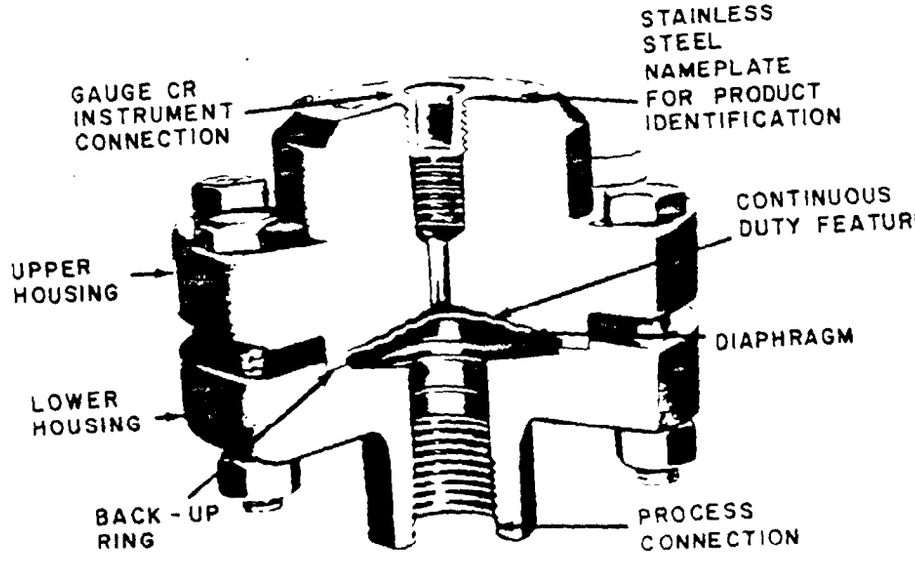

damage; however, a diaphragm seal can affect the precision of a gauge and its ability to withstand pressures; such a seal can also magnify errors created by temperature increases. A way to remedy this is to fill the instrument with fluids that have low thermal coefficients of expansion. Such fluids include glycerin which can be used up to 300°F and silicone D.L. 710 which can be employed to 700°F. Since the total error is dependent upon the fluid volume expansion, temperature change on each component, as well as the spring constant of the diaphragm foil, the resultant accuracy can only be estimated (Considine, 1974).

PRESSURE TRANSDUCERS

Pressure transducers convert the mechanical force of pressure in the pipe to an electrical signal. A transducer (see Figure 6) typically contains a pressure sensitive diaphragm that has four strain gauges attached to it in a configuration called a Wheatstone bridge. When there is no pressure upon the diaphragm, the bridge stays flat and the resistance of each strain gauge is equal. The diaphragm changes its shape as pressure is applied and this deflection creates a change in resistance that is proportional to pressure. When the diaphragm is exposed to pressure, the transducer behaves like a pressure gauge.

The lack of moving parts makes the pressure transducers ideal for employment in vibrating, corrosive, or dirty environments; they can be fitted with diaphragm seals and dampeners for any unusual conditions. Some transducers can

Figure 6. The Pressure Transducer (bottom) and the Wheatstone Bridge Strain Gauge (top). Pressured fluid creates a deflection on the diaphragm which in turn changes the resistance of the Wheatstone Bridge. The change in current is proportional to the pressure that is applied to the diaphragm.

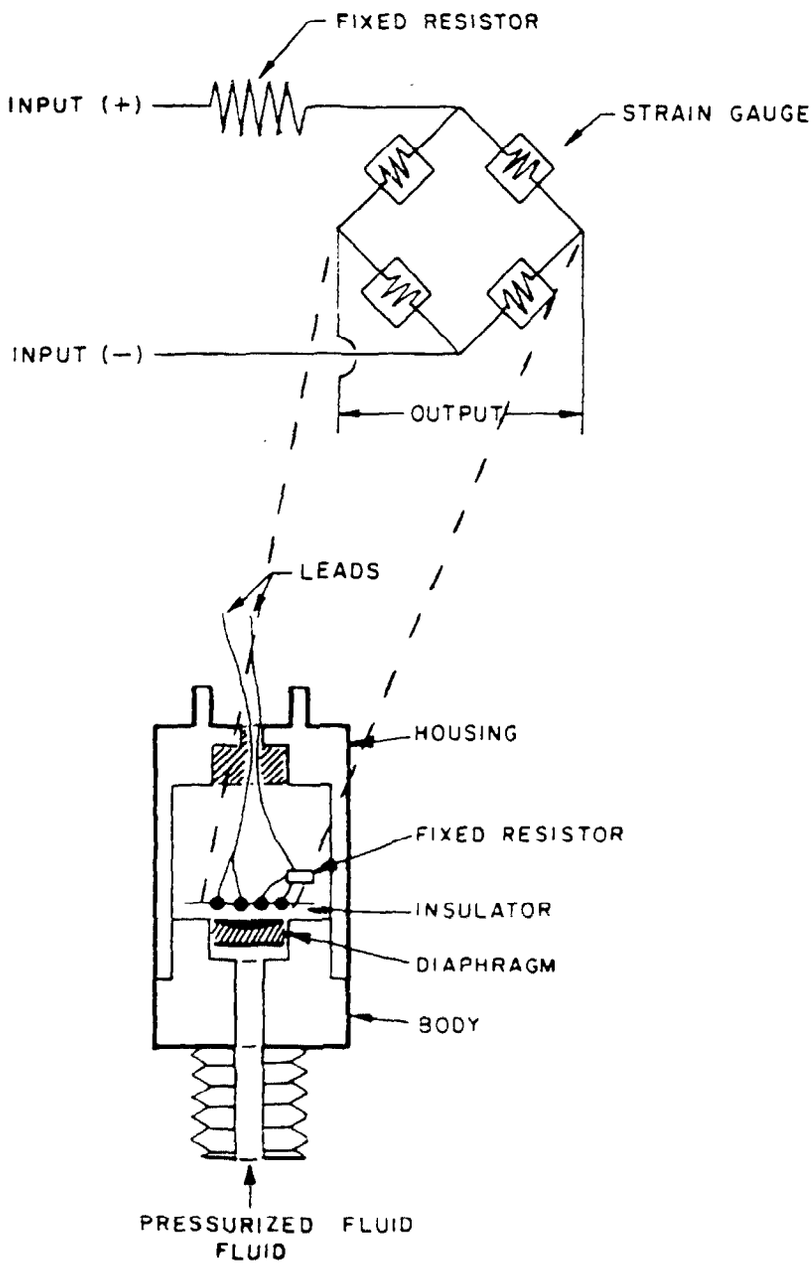

operate at temperatures of up to 450°F, although effective operations of most are limited to 250°F. Rated pressures can be as high as 25,000 psi. Typical errors are around 0.5 percent.

DOWNHOLE PRESSURE RECORDING DEVICES

Downhole pressure instruments are most commonly used during formation testing. A downhole pressure gauge is commonly referred to as a "bomb." The bomb components are either a Bourdon tube pressure gauge or a coil-spring assembly, plus a strip chart recorder (see Figure 7). The chart can be set to record over a certain time period, and then the whole instrument is lowered -- usually by wire-line down the casing or borehole. After the designated time has elapsed, the bomb must be raised to obtain the data.

Figure 7 shows a cross section of the two areas of an Amerada bomb. The top part (recording section) contains the clock, chart, and stylus; while the bottom unit (pressure element) holds a helically-wound Bourdon tube, bellows, and a maximum registering thermometer. The bellows is needed to isolate the Bourdon tube from contaminating well fluids. The bellows should be cleaned after each run, since it is often exposed to corrosive environments. It should also be routinely checked to determine whether it is operating properly.

A common test to ascertain if the bellows has failed is to push on it with a metal tube. A "spongy" feel to the bellows, as opposed to a solid feel, indicates a leak in the system (again, a maximum registering thermometer should be

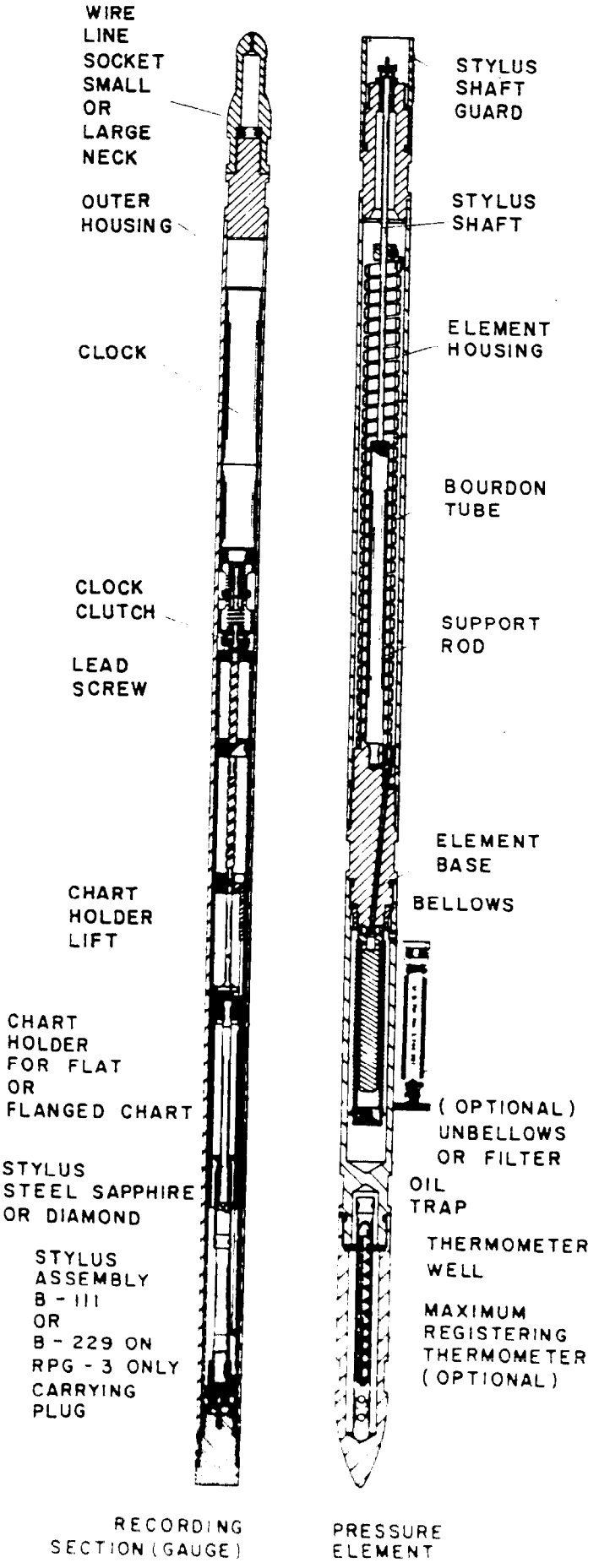

Figure 7. The Amerada RPB-4 Gauge. Pressured fluid enters the bellows and the bourdon tube which activates the stylus (Geophysical Research Corp.).

provided and used since the maximum testing temperatures should be known and because the instrument calibration will vary with temperatures). The recording section of the bomb is used to generate a record of pressures encountered.

Coil-spring recorders use a piston, that moves due to external pressure, to push a calibrated spring. A stylus is provided to record pressures on the chart, and the stylus can be driven by either a piston spring or a Bourdon tube; moreover, it may have a steel, sapphire, or diamond point. The chart is generally brass and it is coated on one side with gray paint so that the pressure curve can be seen as a contrast between the colors, which are usually brass and gray.

The upper pressure limit of these instruments can be as high as 20,000 psi with errors of 0.2 percent of full scale. Special high temperature gauges can withstand temperatures up to 500°F. Clocktimes range from 3 to 360 hours. Coil-spring bombs may have errors of 5-10 percent of full scale.

Several types of downhole gauges may be permanently installed. One, made by Ball Brothers Research Corporation of Boulder, Colorado, uses a Bourdon tube that telemeters data to a chart/recorder at the surface; and, it uses a single conductor cable. Recorded pressure curves often have a "stair-step" appearance because the information transfer between the surface and downhole is not continuous. The gauge is accurate to about 0.2 percent of full scale (Matthews and Russell, 1967). Another gauge has a downhole transmitter that consists of a steel cylinder with a diaphragm on one

end and a taut wire that stretches from the diaphragm to the cylinder body. A coil and magnet surround the wire and cause it to vibrate. Changing pressures cause the diaphragm to deform; this in turn proportionally changes the frequency of the wire vibrations, which allows the current change in the coil to be transmitted to a receiver on the surface. Total error can be as low as 0.25 percent with a recording range of 1,100 to 5,900 psi (Matthews and Russell, 1967).

PRESSURE RECORDING DEVICES

Many instruments that measure pressure, flow, and temperature (e.g., pressure transducers), can transmit electrical signals to a receiver-recorder (see Figure 8). Electronic recorders write on either circular or strip charts, and such recorders are discussed later in this report.

Most pressure gauges are self-contained units that mechanically display data with pointers. Connecting a recorder directly to these gauges is impossible. Several manufacturers solve this problem by creating a recorder that directly measures the deflection of a Bourdon tube that is contained insides a recorder case (see Figure 9). The recorder resembles a 360-degree chart recorder except that the pen arm is driven mechanically by a Bourdon tube, instead of electrical signals. The tube is directly connected to the pressure source by a bendable hollow extension. A recorder offered by C. E. Invalco can measure pressures of up to 10,000 psi with errors of only 1.0 percent of full scale.

Figure 8. Electronic Receiver-Recorder (Omega, 1984).

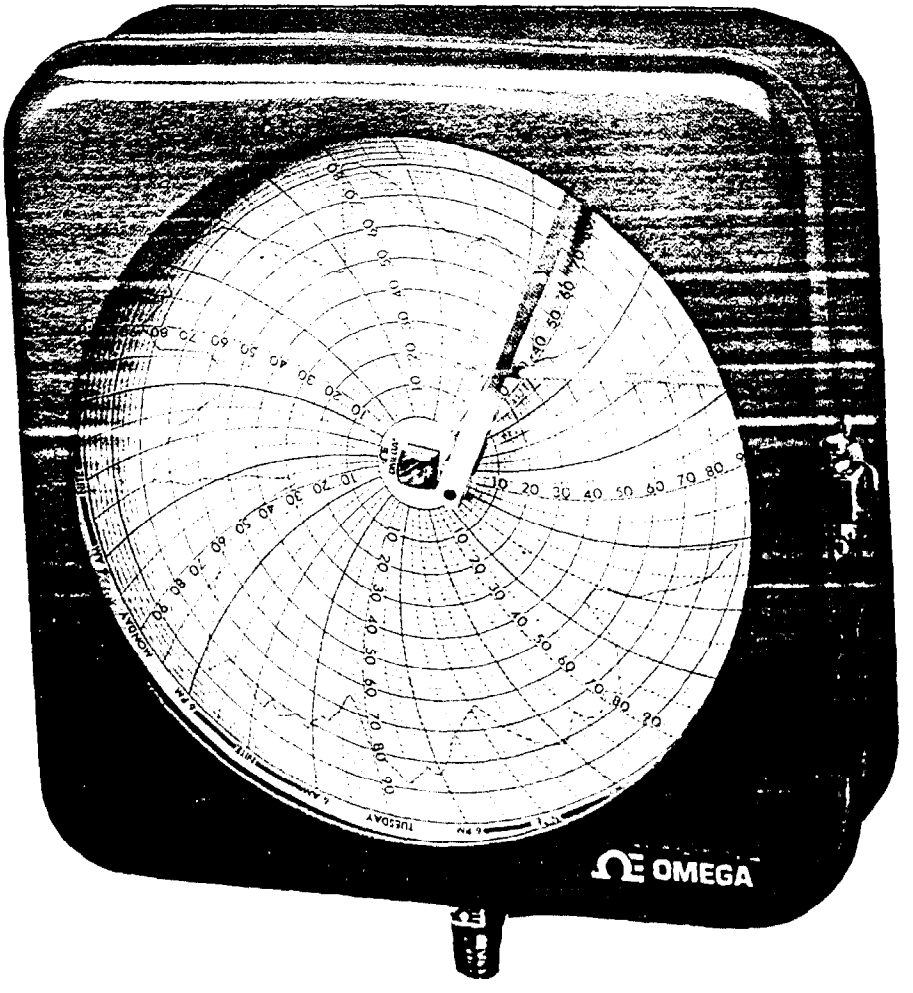

Figure 9. Mechanical Pressure Recorder. Typical recorder made by Combustion Engineering, Inc. The pressure line is to the right of the chart drive. The line conducts process fluid pressure to the bourdon tube (C), which in turn guides the pen arm with a link (C. E. Invalco, 1984).

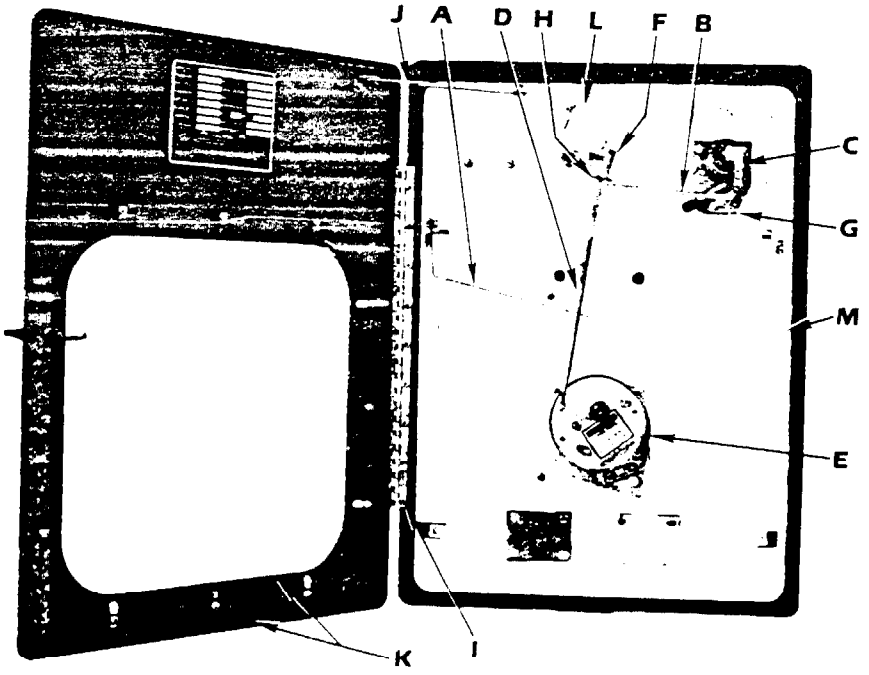

A. PEN LIFTER
B. ADJUSTABLE STATIC ELEMENT CONNECTION LINK
C. STATIC ELEMENT MICRO - RANGE ADJUST
D. PEN ARM
E. CHART DRIVE
F. PEN SHAFT ARM
G. STATIC ELEMENT LINEARITY ADJUST
H. PEN ZERO ADJUST
I. AIRCRAFT HINGE
J. DOOR STOP
K. CLOSED CELL NEOPRENE GASKET
L. PEN BRACKET (ONE PIECE)
M. ADJUSTABLE DOOR LATCH

INTERIOR VIEW OF MODEL 212

METHODS FOR TESTING PRESSURE INSTRUMENTS

Pressure instruments should be examined regularly, although the frequency depends on the environment. Instruments subject to high temperature and fluctuating pressures should be checked for accuracy more than annually; and, devices measuring pressure of highly corrosive fluids should be checked more frequently for correctness.

Testing frequency will also depend on the type of installation; for example, a Bourdon tube or helical coil in which a corrosive fluid is in direct contact with the gauge should be checked for accuracy several times per year. If a diaphragm separates the gauge from the corrosive substance, less frequent testing may be required. Testing dates should always be recorded on a chart, along with the amount of error found on the gauge during the test. Corrective action, such as recalibration, should also be included. A history of performance of the pressure instrument will give the operator or inspector an indication of how often the gauge is to be tested or recalibrated.

Pressure instruments may be tested by the following methods:

- use of a deadweight gauge tester
- use of one of many portable gauge testers that employ a test gauge as a standard

Deadweight Tester

A deadweight tester uses primary weight measurements that are based upon National Bureau of Standards' (NBS) data for calibration to obtain about 99.9 percent accuracy over a

pressure range of 15 to 10,000 psi. Each unit is adjusted for standard gravity conditions, thus local gravity situations should be taken into account during testing (Miller, 1983).

The apparatus consists of a hydraulic pump that is used to pressure a manifold; the manifold is connected to either a precalibrated test gauge or a free floating piston which holds calibrated weights and a tube which leads to the gauge that is being tested (see Figure 10).

In use, the hydraulic pump exerts pressure against the piston and the weights that ride on the piston. When the piston and the weights spin freely, the pressure in the manifold is equal to the total mass of the piston and weights -- divided by the cross-sectional area of the piston. The gauge or transducer being tested should read a value equal to this calculated pressure throughout the scale (Dresser-Ashcroft Form No. 250-1526-A). Tests also involve pumping the deadweight tester until the gauge shows its maximum reading. Slowly releasing pressure after this test is an effective way to scan for any sticking of the needle.

The deadweight tester is the ideal tool for testing instruments in the laboratory, due to its high degree of accuracy throughout the testing scale. However, the weights used in testing should be periodically rechecked to provide assurance that they conform to NBS standards.

Portable Gauge Testers

For field applications, where portability and ease of

Figure 10. Deadweight Tester and Portable Gauge Tester. The same degree of pressure exits both openings of the manifold. The pressure entering the uncalibrated gauge can be compared with weights (deadweight tester) or another gauge (portable gauge tester).

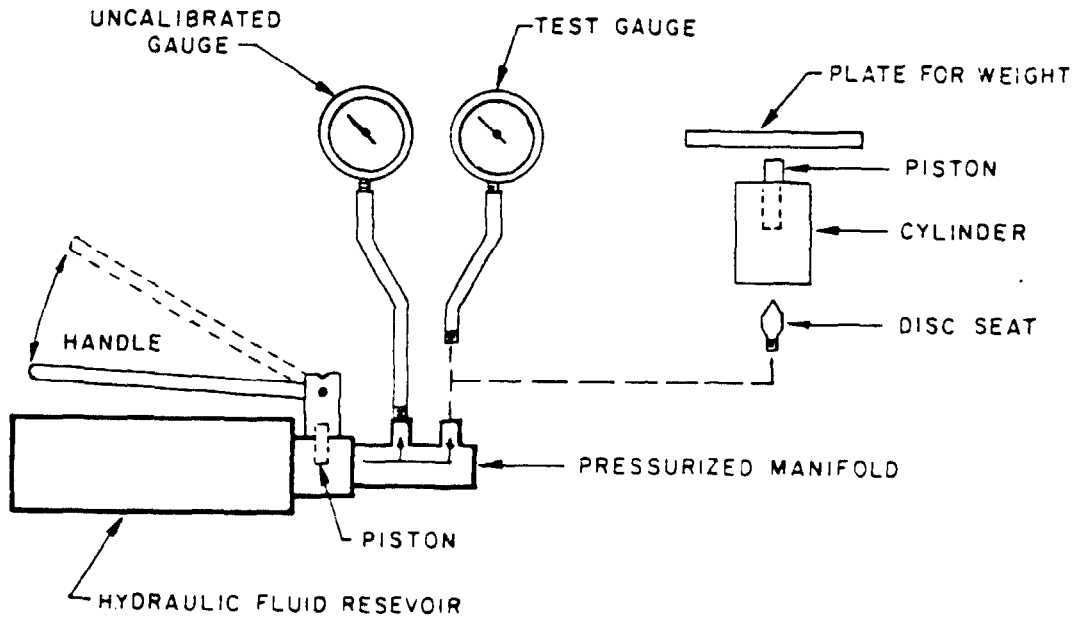

use are important, several manufacturers offer portable gauge testers. These testers rely on less accurate means of measuring pressure than the deadweights described above. For example, Dresser-Ashcroft makes a portable test pump that is interchangeable with its deadweight tester but uses a test gauge instead of weights for calibration (see Figure 10; the test range is from 15 to 10,000 psi with an error of 0.25 percent). Although accuracy is reduced, the whole assembly is easier to carry into the field than a deadweight tester; and moreover, it does not have to be used on a level surface. Dresser-Ashcroft also makes a portable gauge testing set that weighs only about 12 pounds. Portability is gained in return for a slightly higher error of within 0.5 percent and a lower pressure range of 0-500 psi. These gauge testers consist of a hydraulic test pump with two connections; one for a test gauge and another for an uncalibrated gauge.

Yet another type of portable gauge tester is manufactured by 3D Instruments (see Figure 11). The unit has a cylindrical reservoir which connects to a manifold; two pump handles are placed underneath the manifold and opposite to each other. A transparent reservoir is filled with water and a 1/4-inch hose is connected to the gauge to be tested. The handles are pumped manually until the test gauge reads a desired pressure; the vernier knob is then used to adjust the pressure gauge to the proper value.

Figure 11. Portable Gauge Tester. Both a test gauge and an uncalibrated gauge can be attached to the tester at the same time (3D Instruments, Inc. 1981).

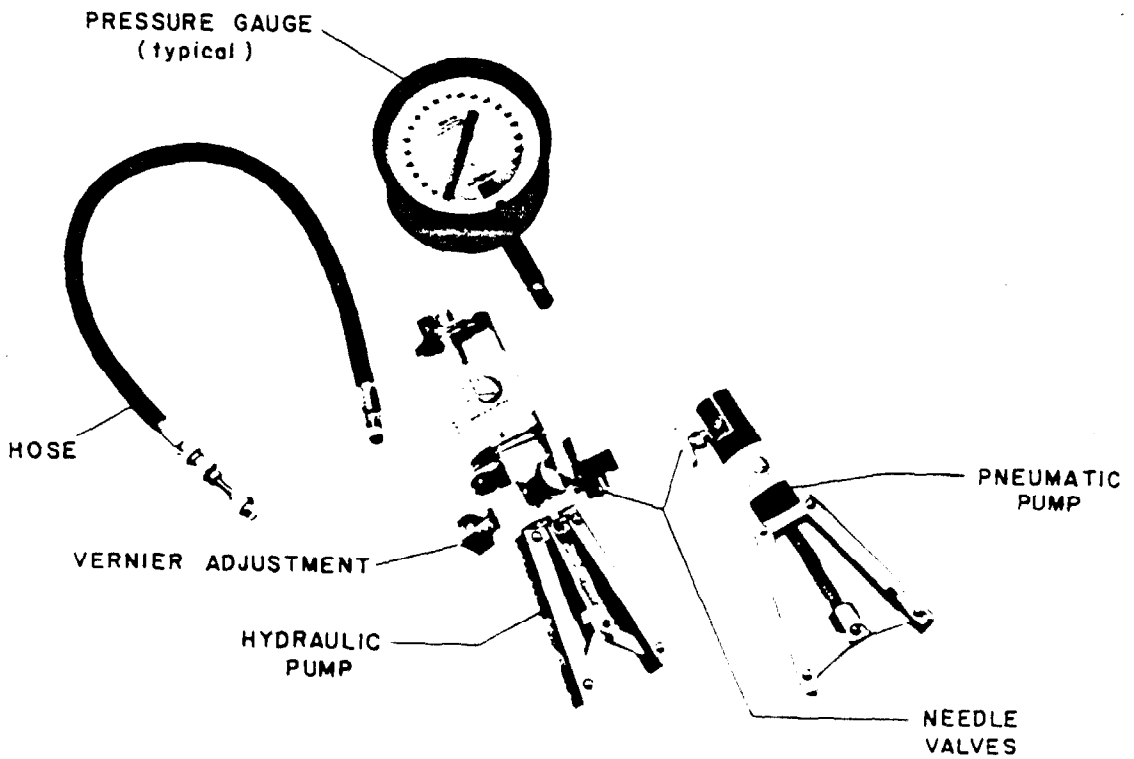

CALIBRATING PRESSURE GAUGES

If any inaccuracies in a gauge have been found during testing, it is important that the gauge be either cleaned or recalibrated. Some calibration procedures can be performed easily and quickly, while others require special tools, knowledge and time.

In order to restore a gauge to efficiency, sometimes, a complete replacement of the movement and linkage is needed. Often, however, just cleaning the parts or calibrating the gauge is all that is required; frequently, only a pointer adjustment is needed which is called "rezeroing" (Dresser-Ashcroft Form No. 250-1526-A).

There are many ways to adjust pointers in gauges (some gauges have adjustable gears or friction bushings, while others have a cam adjustment which rotates the entire movement). If the pointer is nonadjustable, it is necessary to loosen the pointer and retighten it at another position. In C-type (Bourdon) tubes (see Figure 12) hairsprings should be tightened with a tweezer to maintain sufficient torque throughout the gauge range.

Pressure gauge manufacturers have a variety of ways to change the pivot radius and they should always be contacted if such change is needed; the same is true when linearity adjustments are necessary. When calibrating liquid-filled gauges, the liquid must be initially drained (Dresser-Ashcroft Form No. 250-1526-A).

Figure 12. Bourdon Gauge Components (Dresser-Ashcroft, 250-1353-H).

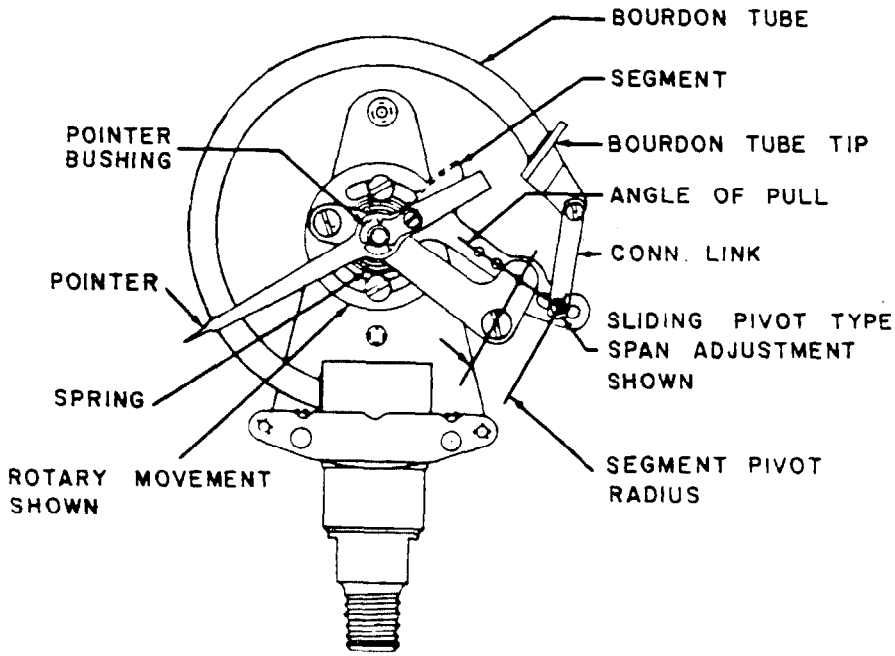

Pointer adjustments required under certain circumstances are summarized below:

Pointer Behavior	Corrective Action
1. Pointer behaves in uniform manner except above or below maximum scale at maximum pressure.	1. Adjust span
2. Pointer travels too far	2. Increase pivot radius
3. Pointer does not travel far enough	3. Decrease pivot radius

The above calibration procedures do not apply to gauges with helical coils because the tube designs are relatively simple; all that is generally necessary for recalibration is either a pointer adjustment with a screw or a replacement of the coil.

While pressure transducers can be rezeroed at the receiver, linearity cannot be so adjusted. A loss of linearity indicates that the transducer must be replaced.

Pressure bombs can be calibrated with a deadweight tester; first, the recording element should be checked by installing a protractor on the element and a pointer on the stylus shaft. If the movement is smooth and complete under pressure, the test may begin. To calibrate -- simply apply five or ten known pressures, starting from the maximum and going to the minimum; then spin the chart holder to have it read the corresponding pressures and then set. Again, if nonlinearity results, the element should be replaced.

Since most downhole pressure recorders are of unique designs, the manufacturers should be consulted for calibration

procedures.

"NEGATIVE" PRESSURE GAUGES

In cases in which a well injects into an underpressurized formation, pressure at the well-head could be lower than the atmospheric pressure. In these cases, accurate injection pressure readings can only be attained with a gauge that measures absolute pressure. The primary measuring elements in these gauges would have to be isolated from the atmosphere and the instrument would have to be more sophisticated than regular pressure gauges. Pressure gauge systems that contain one absolute and one "positive" gauge are commonly known as compound gauges. Several manufacturers produce absolute and/or compound gauges. A complete list was not available at the printing of this document (see the list of Manufacturers of standard pressure instrumentation at the end of the document). Prices for these gauges and recording devices range from around $15, to several thousand dollars for very accurate gauges with recording devices.

"Negative" pressure gauges can have an application in measuring less than atmospheric conditions in injection wells. These measurements can be used in determining pressure vs. injection rate trends which can be analyzed to determine the mechanical integrity of the tubular goods; this is because any significant departure from the trend can signal changes in the injection conditions. However, if the well has an isolated annulus, a more sensitive mechanical integrity tracking system would consist of monitoring

changes in the annulus pressure, especially if it is higher than the injection pressure.

OPEN ANNULUS WELLS

Open annulus (also known as fluid seal) wells can be of two designs, static and dynamic. Static systems are by far the more common; it is for this reason, only static systems will be discussed here. The difference in the two is whether the liquid in the annulus is contained there or comingled with the injection fluid at the bottom of the well. A static open annulus well uses two "immiscible" fluids that interface in the bottom of the annulus and isolate it from the injection fluid.

The annulus fluid level is monitored to estimate the location of its interface with the injection fluid. This estimate allows the operator to infer the mechanical integrity of the casing and tubing. One such monitoring assembly consists of a graduated holding tank that is connected to the annulus; the tank is used to keep a positive pressure on the annulus. The annulus is filled usually with a noncorrosive fluid to a reference level on the holding tank. A significant casing leak is generally indicated by a drop in fluid level as it drains into the formation adjacent to the point of leakage. If tubing pressure exceeds annulus pressure, a leak in the tubing can result in a rise in the fluid level.

A way to continuously record the annulus fluid level is to use one of two models of Stevens recorders (types A or F). Each of these recorders uses a float, which rises and falls

with the fluid level. The float is connected to a pulley by a cable. On the Type F recorder, the pulley rotates a drum that is marked with a steady moving pen. On a Type A recorder, the pulley moves the pen as the water level changes. Both record fluid levels versus time on the charts.

FLOWMETERS

TYPES OF FLOWMETERS

Flowmeters can be classified into distinct groups; that is, positive displacement meters and inference type meters. Positive displacement meters measure flow directly by separating the flow stream into segments of known volumes and counting them (Reason, 1983), while inference meters infer a flow rate by measuring a certain dynamic property of the flow stream that is proportional to the flow rate. Below is a listing of seven of the most used inference flowmeters:

- Turbine
- Differential Pressure Producing
- Sonic
- Doppler
- Float Type
- Electromagnetic
- Vortex Shedder Meters

Table 2 lists the most common types of flowmeters along with their approximate accuracies, pressure limits, and other important parameters. All of these values are general and may vary among manufacturers and between the separate models offered by a single manufacturer. Table 3 lists construction materials which should be used in flowmeters for various chemical exposures.

The following section contains some basic calibration

TABLE 2

DIFFERENT FLOWMETER SPECIFICATIONS

Flowmeter	Typical Application	Maximum Pressure (psi)*	Maximum Temperature*	Maximum Flow rate/ Velocity**	Advantage	Drawback	Error	Manu-facturers	General Price***
Oscillating Piston	Slurries, acids solutions	150	300°F	35 gpm	Magnetic pickoff, no contact with gears	Vulnerable to extremes	0.5%	Badger	$ 2,000 for 2-inch
Rotating Paddle	Wide variety of liquids	1,440	450°F	1,250 gpm	Low pressure loss, wide range of viscosities	Fluids with solids	0.2%	Liquid Controls	$ 2,000 for 2-inch
Oval Gear	Wide variety of substances	275	200°F	150 gpm	Wide application, viscous liquids	Fluids with solids	0.5%	Smith	$ 4,130 for 2-inch
Rotating Vane	Wide variety of liquids	1,440	200°F	8,750 gpm	Low pressure drop, wide range of viscosities	Liquids with solids	0.5%	Smith	$20,000; $3,600 for 2-inch with counter
Piston	Noncorrosive	275	180°F	20 gpm	Low flow, counter	Liquids with solids	0.5%	Smith, Tokheim	$ 830 for 1-inch with counter
Bearing-less	Highly corro-sive	300	288°F	320 gpm	Handles corro-sives	Liquids with solids	2.0%	C.E. Invalco	$ 1,240 for 2-inch
Turbine	Clean fluids	500	850°F	50,000 gpm	Can be more accu-rate than rating, precise	Liquids with solids	0.5%	C.E. Invalco Smith, Flow Technology	$ 6,500
Single Impeller Turbine	Water	150	150°F	2,250 gpm	Inexpensive, high flow	Narrow appli-cation	2.0%	Badger	$ 1,100
Orifice	Clean fluids	600	700°F	25,000 gpm	Inexpensive, high flow	High head loss, inac-curate during low flow	1.0 - 3.0%	Badger, Ametek, Daniels	$ 150+ with flange $530

TABLE 2

(continued)

Flowmeter	Typical Application	Maximum Pressure (psi)*	Maximum Temperature*	Maximum Flow rate/ Velocity**	Advantage	Drawback	Error	Manu-facturers	General Price***
Nozzle	Clean fluids	4,000	800°F	25,000 gpm	High flow, high pressure	High head loss, inaccurate during low flow	1.0 - 3.0%	Badger	$ 2,000+
Flow Tube	Sludge, oils acids, water	500	800°F	25,000 gpm	Low head loss, high flow	Inaccurate during low flow	1.0%	BIF, Badger	$ 3,000
Venturi Tube	Sludge, oils acids, water	4,000	800°F	25,000 gpm	Low head loss, high flow	Inaccurate during low flow	0.8%	BIF, Badger	$ 3,300
Sonic	Clean liquids, any type	3,000	300°F	10ft/sec 48-inch pipe	Piggable, large diameter pipe	Liquids with solids	2.0%	Mapco	$ 2,500
Doppler	Suspended solids	Exterior	140°F	35ft/sec	Piggable, good for dirty fluids	Clean liquids	2.0%	Mapco	$ 1,400
Float	Clean liquids	8,960	752°F	660 gpm	Simple, inexpensive	Liquids with solids	1.0%	Krone, Ametek	$ 400 for 2-inch
Electromagnetic	Sewage, other conductive liquids	300	356°F	30ft/sec	Piggable, only 3-5 diameter pipe lead needed	Nonconductive liquids	1.0%	Krone	$ 3,500
Strain Gage	Liquids, dirty corrosives	5,000	700°F	40ft/sec	Simple, withstands extremes	High head loss for small pipes	0.5%	Ramapo	$ 2,500
Nutating Disc	Clean corrosives solvents	150	250°F	20 gpm	Low flow, counter	Vulnerable to extremes	2.0%	Tokheim	$ 656 for 1-inch
Vortex Shedding	Wide variety of liquids	1,500	580°F	2,850 gpm	Simple, durable	Not piggable, affected on overrange	1.25%	Fischer & Porter Yokogowa Foxboro	$ 1,250 for 2-inch installed cost competitive with orifice plate meters

* Depending upon materials and size.
** Percent of flow rate. The accuracy is stated by the manufacturer and is not specific to any viscosity or temperature.
*** 8-inch pipe except when otherwise stated. 1985 prices (+ Plus $1,000 for transmitters)

TABLE 3

FLOWMETER MATERIAL RESISTANCE

(Smith Meters, 1980)

Material Used for Flowmeter	Resistant To	Not Resistant To
Aluminum	Organic acids, amines, solvents, alcohols, ketones	Hydroxides, acids, acid salts, alkalis
Bronze	Solvents, acetates, esters, alcohols, ketones, petroleum solvents, glycols, aromatic hydrocarbons, water	Mineral acids, amines, alkalis, hydroxides
Cast Iron	93-95% sulfuric acids, alkalis, hydroxides, ammonia, amines, solvents, alcohols, ethers, ketones, petroleum solvents	Organic acids, dilute acids
Tungsten Carbide	Dilute and concentrated sulfuric and hydrochloric acids, brine	Oxidizing acids (nitric), organic acids (lactic and citric)
Carbon Steel	High resistance to petroleum products	Acids, water
Austenitic Stainless Steels	Organic acids, amines, hydroxides, food products, fatty acids, anilines, solvents, alcohols, ethers, ketones	Mineral acids, concentrated acid salts
Buna-N	Petroleum products, water, ethylene glycol fluids	Ketones, acids, halogenated hydrocarbons
Viton A	Aromatic hydrocarbons, acids, halogenated hydrocarbons	Ketones, amines
Ethylenes, Propylenes	Ketones, alcohols, water, steam	Petroleum products
Teflon*	Most chemicals	Hydrofluoric acid

TABLE 3

(continued)

Material Used for Flowmeter	Resistant To	Not Resistant To
Ryton**	Most chemicals	Most oxidizing acids
Carbon Pure-Bon***	Most chemicals	Strong oxidizing acids

* Trademark E. I. DuPont
** Trademark Phillips Petroleum Company
*** Trademark Pure Carbon Company

adjustment information for most flowmeters; however, specific procedures vary for each type and make of meter. The manufacturers should therefore be consulted if detailed calibration procedures are needed (see Appendix A).

OPERATIONAL PRINCIPLES

Positive-Displacement Flowmeters

Positive-displacement meters measure volumetric flow directly by continuously separating a flow stream into discrete volumetric segments and then counting them. Several types of positive-displacement meters are illustrated in Figures 13 through 16. Although the specific method of flow segregation varies, common characteristics of all positive-displacement meters include:

- Can be used on lines ranging from 1/4-inch to 16 inches
- Can handle pressures up to 1,440 psi although most are made to withstand much lower pressures
- Can be designed to measure almost any flow rate
- Can be accurate to within 0.2 percent of full scale
- Can operate better at lower pressure
- Can not be cleaned through the use of a "pig"
- Can use the energy of flow to drive the counter through a gear train
- Can not be used with fluids that contain solids or grains.

In the Bi-Rotor oval gear meter (see Figure 13) two rotors are geared together and each revolves about a shaft. Water entering the meter causes the rotors to revolve, but only the water trapped in the measuring chamber (hatched section) passes through the meter. Two volumes of measured water pass for each single rotation of a rotor. The rotor revolves freely around a non-rotating shaft which is hollow and houses a second rotation shaft in its center. The rotation of the

Figure 13. Bi-Rotor Oval Gear Meter. The two rotors (bottom) move with the flow (Smith Meters, 1977).

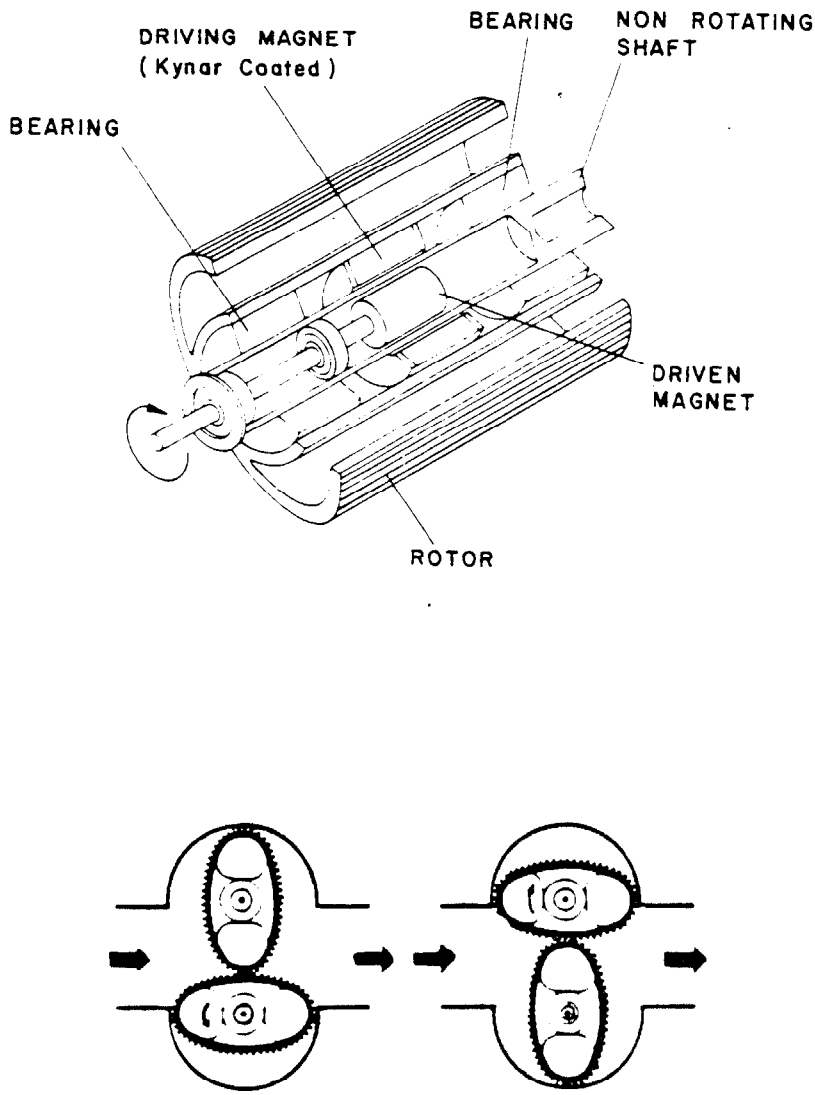

Figure 14. Rotating-Paddle Meter. Exterior gears on each paddle move the upper main paddle, which records data.

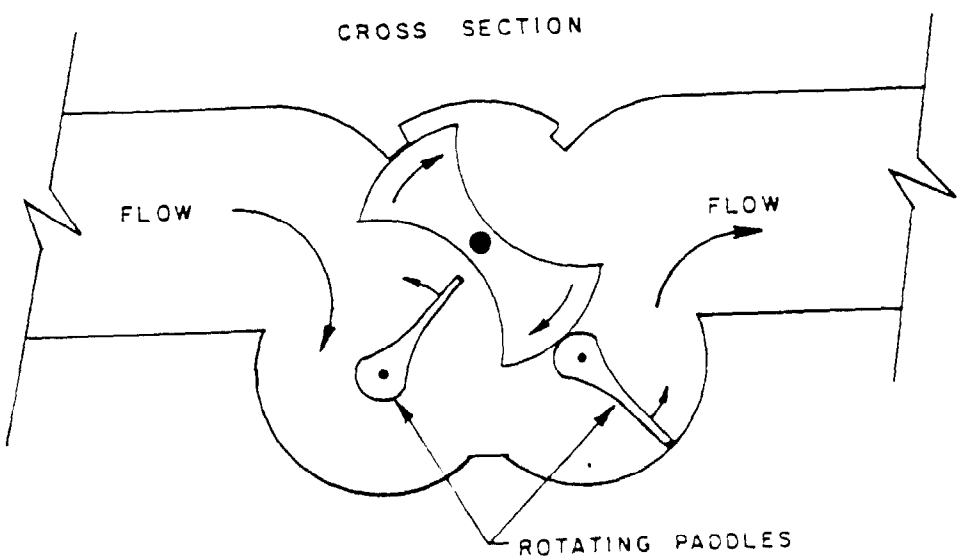

Figure 15. Oscillating Piston Meter. Fluid enters the intake, bounces off the barrier, and alternatively pushes (solid) and pulls (dotted) the piston vertically.

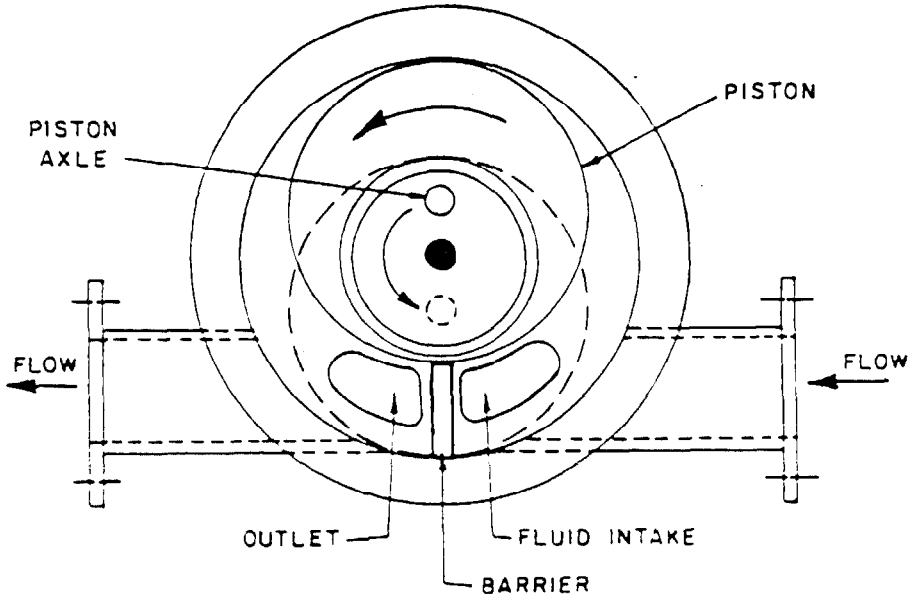

Figure 16. Rotating Vane Meter. The cam forces the blades to extend and then contain a discrete volume of fluid (Smith Meters, 1977).

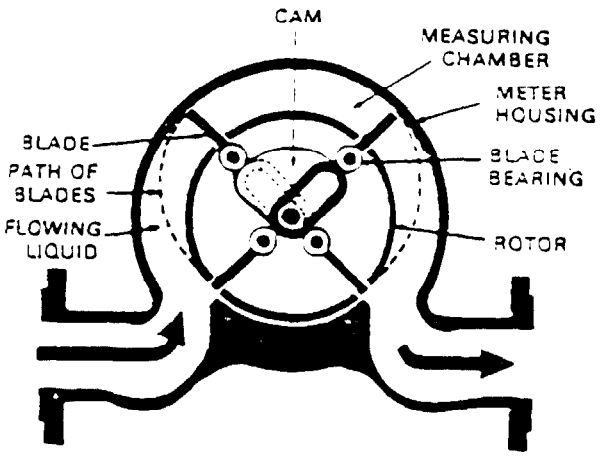

rotors is magnetically coupled to the second shaft forcing it to rotate in proportion to the amount of liquid passing through the meter; this rotation is then metered.

The other rotating meters (see Figures 14-16) operate on similar principles. A complete discussion of positive-displacement meters may be found in the Handbook on Process Instruments by Douglas Considine.

Positive-displacement meters generally have a calibrator that fine tunes the output of the counter in 0.05 percent increments, usually over a 5.0 percent total adjustment range. Because differing viscosities alter calibration, a positive-displacement meter should be calibrated after its installation. Positive-displacement meters are considered to be the best flowmeters for higher viscosity fluids (fuel or crude oil), which tend to cause inaccuracies with other types of meters (Reason, 1983). Positive-displacement meters seldom have to be recalibrated when used with low-viscosity, clean liquids, such as water (Ginesi, Greby, 1985). On the other hand, frequent recalibration may be necessary if the meter is used to measure volumes of heavy oils or fluids that contain solids. Fluids that contain solids cause excessive wear of parts through mechanical friction which can degrade the accuracy of the meter. Meters that are used with liquids such as heavy oils should be recalibrated at least once a year; however, past meter performances will dictate better the frequency of recalibrations needed.

Turbine Flowmeters

Turbine meters infer flow rate by measuring the rate of the revolutions of a bladed rotor. To obtain a volumetric flow rate it is necessary to assume that the flow rate is proportional to the stream velocity, and that the stream velocity is proportional to the rotor angular velocity. A turbine meter usually has three basic sub-assemblies (see Figure 17) which are the body, the rotors (turbines), and the pickup (Miller, 1983). The turbine meters that contain the sub-assemblies, can come in almost any size, flow, and pressure rating. A wide variety of materials are available (see Table 3). The most important part of the meter is the bladed rotor which is suspended in the flowing stream on the platform bearing and rotor shaft. The rotor should have regularly spaced paramagnetic material to allow for the detector's pickup coil to monitor revolutions of the rotor. Turbine meters, which can be accurate to within 0.5 percent of flow rate or better, have been constructed to withstand flow rates to 50,000 gpm and pressures to 500 psi.

Of interest is the fact that one form of turbines uses only a single impeller. It is frequently classified as a "water meter" because it is often used on water mains. The meter contains a single, long impeller (instead of a rotor assembly) which is connected, by way of bearings, to either a geared shaft or a cable. This assembly leads to a magnetic pickup housing (Badger Meter, DMR-110). Impeller meters are less accurate, about 2 percent error full range, than stan-

Figure 17. Major Components of a Turbine Meter (C. E. Invalco, 1984).

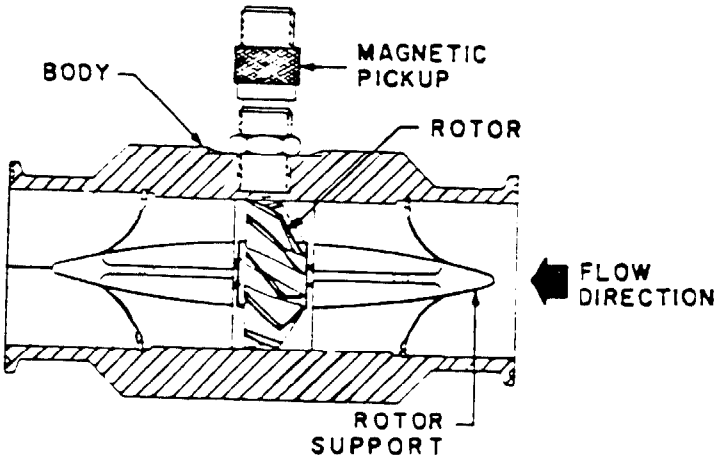

dard turbine meters because of the impeller design.

Another turbine meter incorporates two rotors which are connected by a vertical shaft (see Figure 18). When fluid-flow begins, the rotors are floated above their seat as the stream flows between them. The rotors spin without the need for shafts or bearings; bearing wear and friction are therefore eliminated. These bearingless flowmeters are especially useful for highly corrosive liquids; but, they are only accurate to within 2.0 percent of the flow rate.

The best method for judging the performance of a turbine meter is by the repeatability of its K-factor (pulses per gallon) under identical conditions and by its accuracy throughout a flow range. Figure 19, shows a sample chart which lists the K-factor for certain size meters. The smaller the meter, the higher the K-factor. Figure 20, is a typical turbine flowmeter performance curve which depicts the K-factor variation which must be considered when extreme accuracy is desired.

A common method to measure meter accuracy is to run two meters in series and compare their readings (Smith Meters, 1977). A highly accurate, portable turbine meter kit is available to test and calibrate turbine meters on-site. The kit contains several flowmeters, each made for a certain viscosity range, with accuracy ranges to within 0.25 percent and a precision rating to within 0.05 percent.

Turbine meters are made for fluids without particles. Obstructions and solids can seriously affect the accuracy of

the meter; thus, a removable mesh strainer should be installed ahead of the flowmeter for protection. As a rule-of-thumb, a meter should have 10 diameters length of straight pipe upstream and downstream and the mesh strainer should also be installed at this distance from the meter. Turbine flowmeters should not be located near electric motors, transformers, sparking devices, or high-voltage lines.

Figure 18. Bearingless Flow Meter. The shaft and rotors float during flow. A magnetic pickup records their spin (C. E. Invalco, 1984).

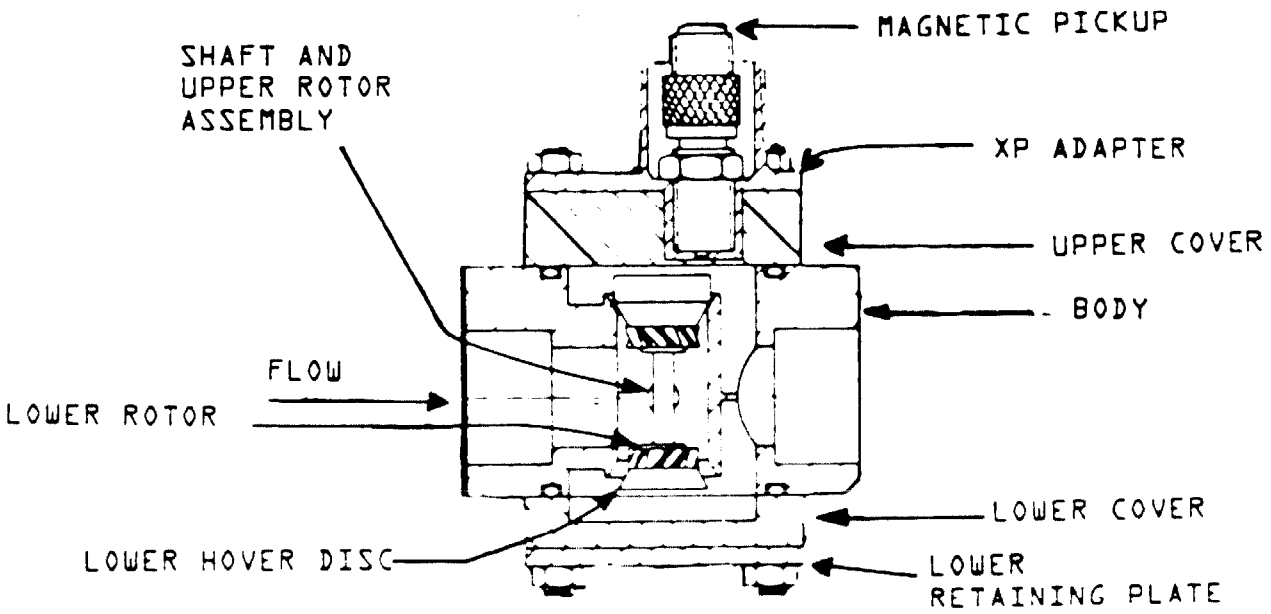

Figure 19. Flow Ranges and "K" Factors (C. E. Invalco, 1984).

Body Size	Repeatable Flow Range		Linear Flow Range		*Pulses Per Gallon K-Factor
	Min.	Max.	Min.	Max.	
3/4"	.8	16	1.4	14	4330
1"	4.7	77	6.6	66	910
1 1/2"	13	209	17.6	176	340
2"	25	400	33.7	337	178
3"	45	700	60.0	600	51

*Data based on water calibration at 20° C.

Figure 20. Typical Turbine Performance Curve. K-Factor versus flow rate percentage (Smith Meters, 1977).

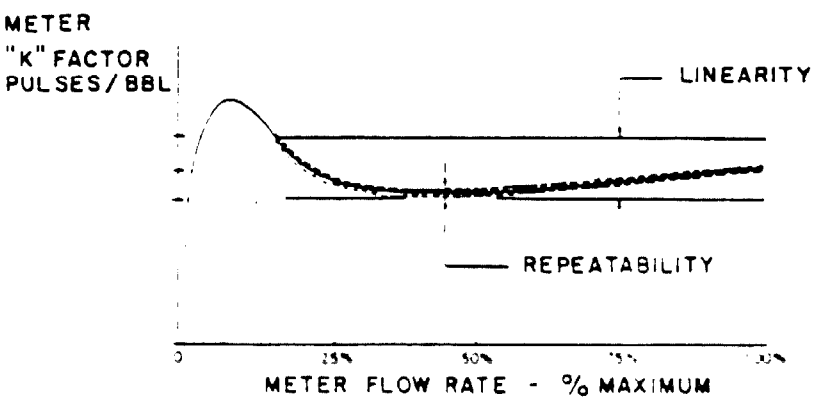

Differential Pressure-Producing Flowmeters

Differential pressure-producing flowmeters use a flow restrictor, usually called a primary element, to decrease the cross sectional area of a pipe. As a fluid passes through the restricted area, its velocity increases. A resulting drop in pressure occurs due to the conservation of energy as described by the Bernoulli equation. Pressure sensors are located at either side of the restricted area to measure the pressure differential that is the result of flow. The differential pressure is proportional to the square of the flow rate, so the square root of the differential pressure is used to determine flow volumes.

A variety of primary elements exist on the market. They either fit inside a section of pipe, or are placed between two sections. In order for the element to work correctly, up to 30 diameters of straight pipe must be run before, and 15 diameters after, the element. Some of the more common types of primary elements are orifice plates (see Figure 21), flow nozzles (see Figure 22), flow tubes (see Figure 23), and venturi tubes (see Figure 24); the latter two are useful for fluids that contain solids, such as sewage, and high flows of up to 25,000 gpm because of their relatively low pressure losses. Flow nozzles and orifice plates should not be used for fluids containing solids because deposits tend to accumulate, and their accuracy is affected. Flow nozzles work well with high pressure steam and fluids under pressures up to 4,000 psi. Primary elements, especially orifice plates,

Figure 21. Schematic Diagram of a Working Orifice Plate. Pressure decreases as the fluid velocity increases through the plate.

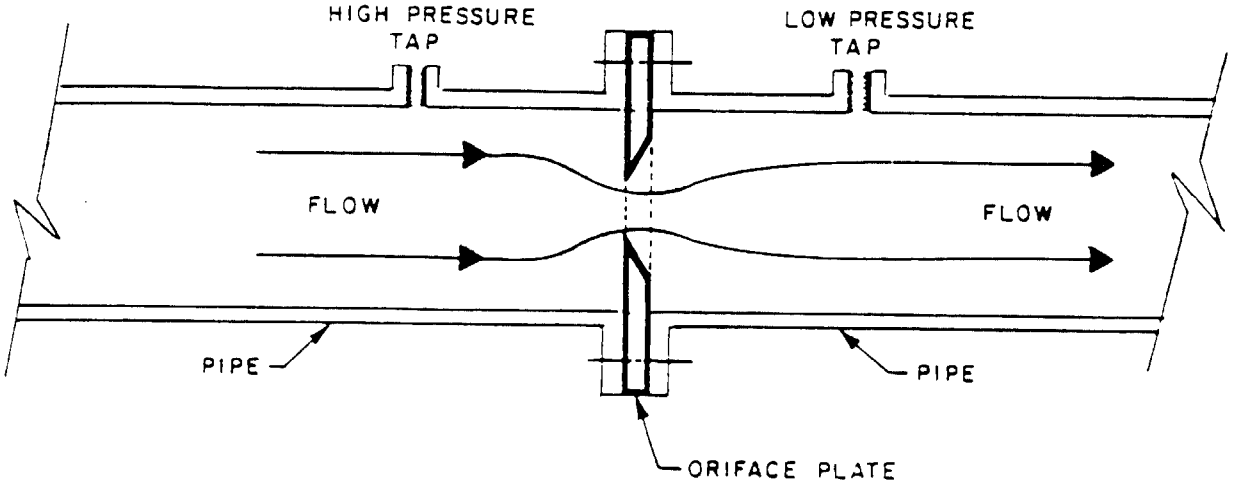

Figure 22. Schematic Diagram of a Working Flow Nozzle.

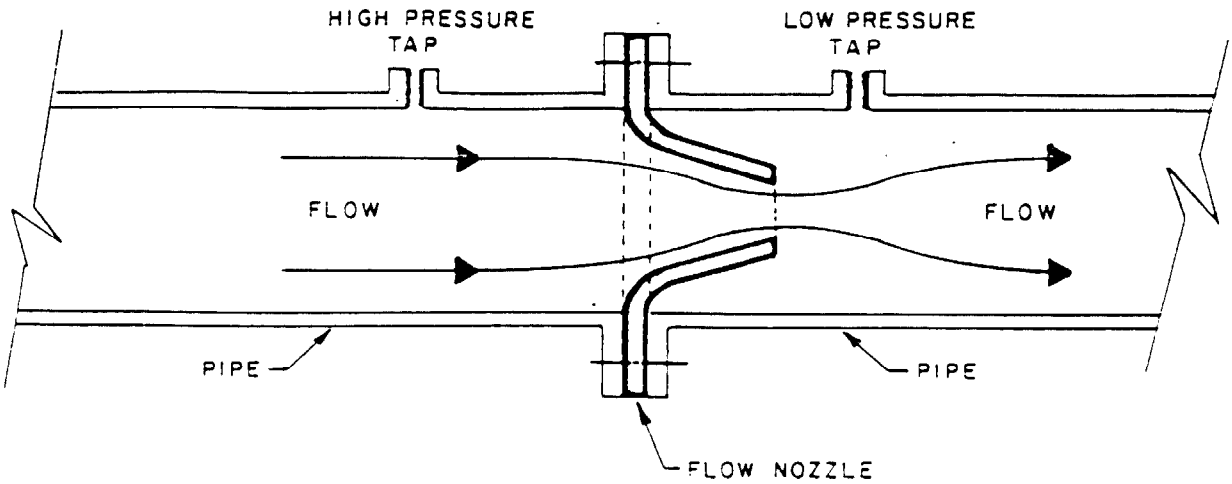

Figure 23. Plan View of a Flow Tube (Badger Meter, Inc., 1981).

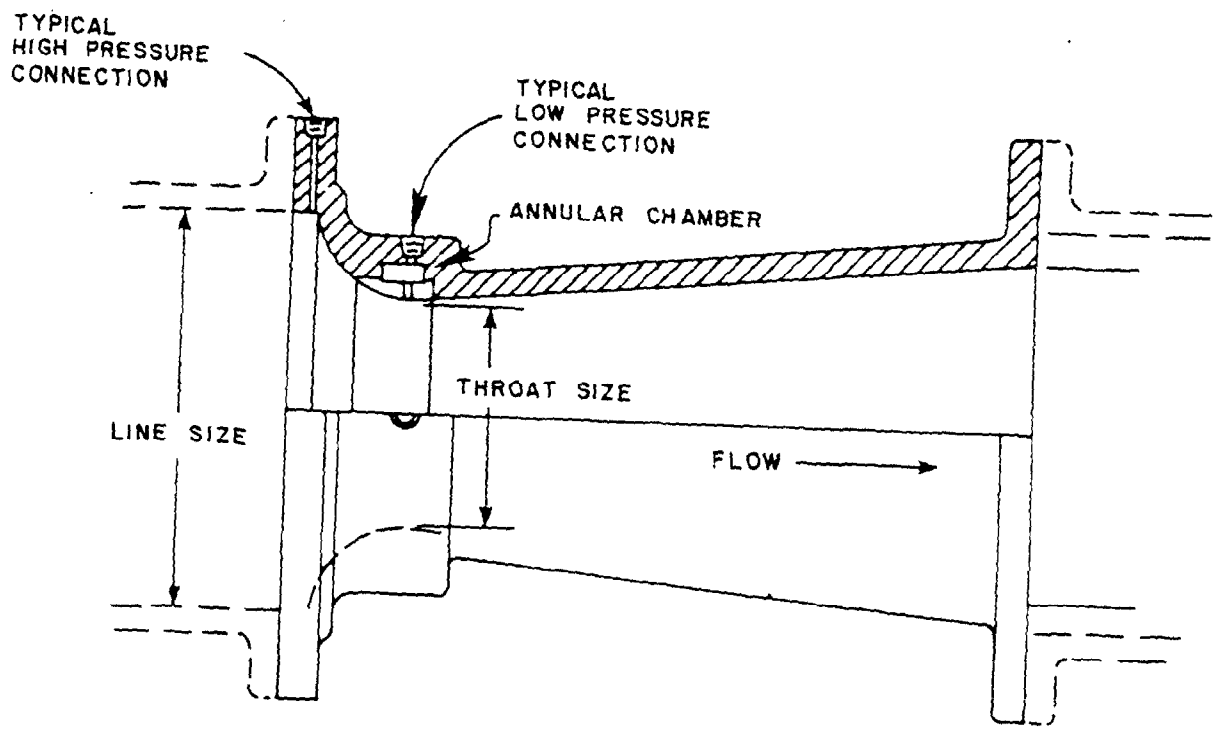

Figure 24. Plan View of a Venturi Tube (Badger Meter, Inc., 1962).

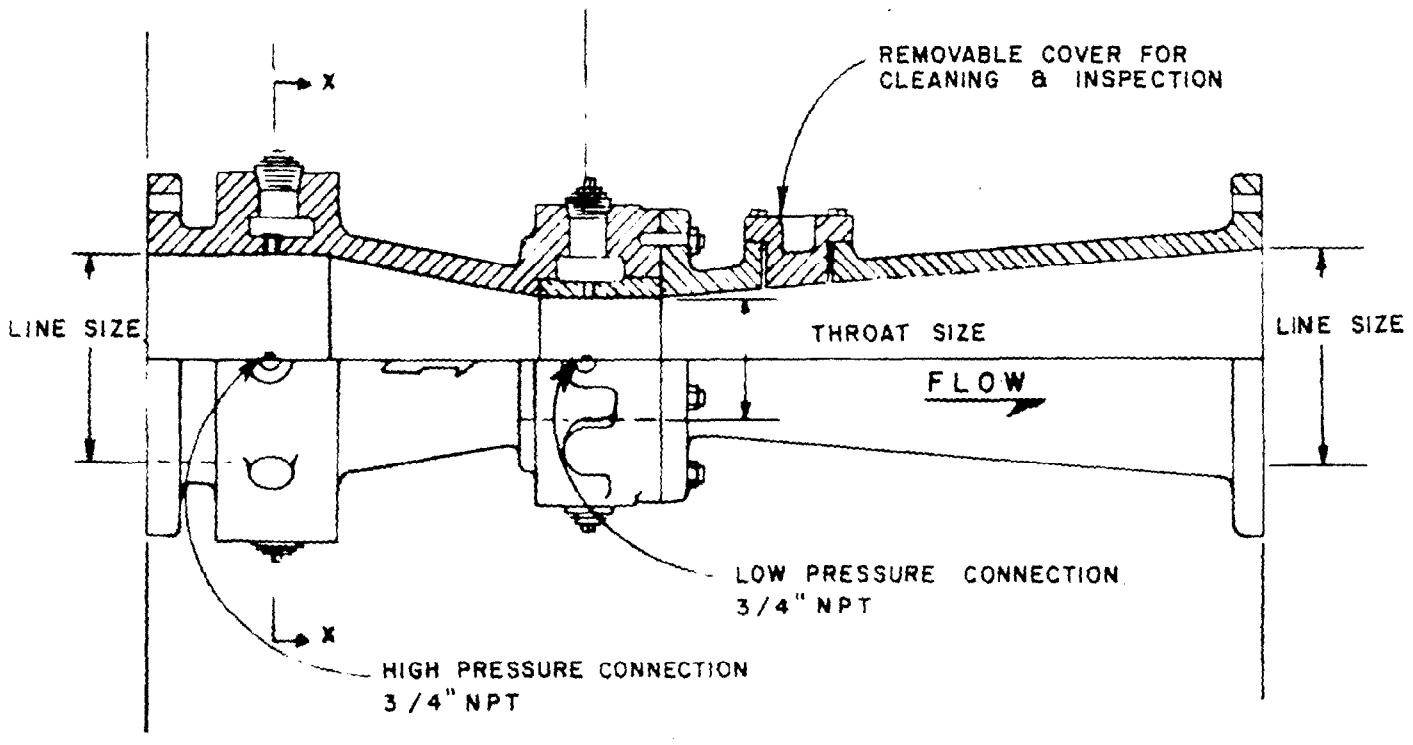

cause pressure lossès and are not piggable.

The accuracy of a primary element can be checked by placing a manometer in the pressure sensor opening without having to shut down the flow (Halmi, 1976). To maintain the calibration when using fluids that contain solids, the interior surfaces should be finished with a deposit-resistant material; a primary element also should be easily accessible through a large opening to facilitate checking and cleaning of any deposits. Some factors that determine the adequacy of instruments using orifices as the primary measuring devices are:

- Tolerance of meter tube bore
- Uniformity of flow profile
- Fabrication of the orifice plate
- Installation of the orifice plate
- Wear of the orifice plate and metering tube

An important aspect of differential pressure flowmeters is the manner in which the differential pressure, and therefore flow rate, is determined. These systems, when first developed, used two piezometer standpipes. Tubes ran from the pressure sensor holes to two standpipes that were filled with the pipe fluid. The fluid levels in the standpipes changed with the flow velocity. A more common measuring technique is to use a bellows transmitter (differential pressure transmitter) with both tubes running from the meter to each side of a bellows.

The position of the bellows varies with differential pressure which changes the signal that is emitted from the transmitter. Other transmitters use the pressure from the

tubes to push mercury within a manometer to move a core within an induction coil to produce a voltage which can be recorded electronically. Due to the toxic characteristics of mercury, other liquids are now used.

With some brines or other particle-laden fluids, pressure lines can clog even when equipped with elaborate flushing systems. To solve this problem, some current differential pressure flowmeters use a liquid-filled probe with a diaphragm set flush to the inside of the primary element. A small motor inside the probe applies an equalizing pressure to the dry side of the diaphragm. The differential pressure is recorded by a transmitter.

Electronic transducers are more susceptible to fouling than differential pressure transmitter systems; therefore, most operators use the simple pressure transducer, especially for fluids that do not precipitate. The accuracy of all probes can be checked with a manometer without shutting down the system.

Sonic Flowmeters

Sonic flowmeters use the speed of sound to estimate the speed of fluids in a pipe to extrapolate their flow rate. Most types use two transducers pointed at each other and set at a 45 degree angle to, or inside the pipe (see Figure 25). One transducer emits ultrasonic waves while the other receives them. The moving fluid affects the speed of the ultrasonic waves in proportion to the flow rate. Sonic flowmeters can measure any moving liquid; however, the

Figure 25. Sonic Flowmeter. The speed of sound from Transducer A to B is substracted by the speed from B to A. The difference in the speed of sound measured from A to B and transducers B to A is proportional to the flow rate (Mapco, 1984).

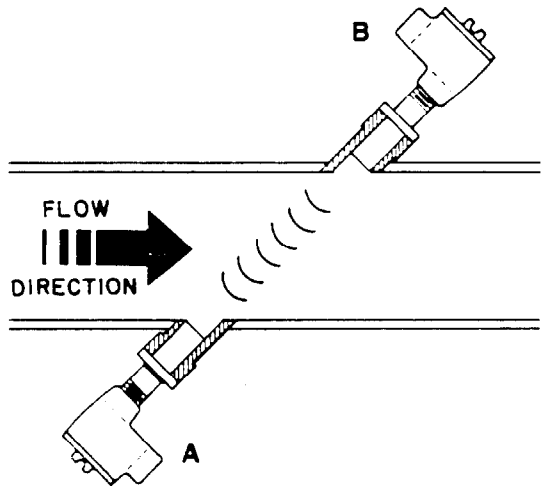

performance of meters that are clamped to the exterior of the pipe can be greatly affected by the pipe material, especially with fiberglass and cast iron pipes. Sonic flowmeters should not be used for metering liquids with large amounts of solid particles; even a few gas bubbles can cause problems. Sonic flowmeters can handle flows up to 10 ft/sec in pipes as large as 48-inch and pressures as high as 3,000 psi.

Zeroing sonic flowmeters can be accomplished in the field, while rescaling requires special instructions or a return to the dealer/manufacturer. A sonic flowmeter has the advantages of being piggable, and able to deal with large volumes, high pressures, and to handle corrosive fluids.

Doppler Flowmeters

Doppler ultrasonic flowmeters utilize the Doppler Effect to estimate the speed of a liquid traveling through a pipe. The fluid must contain either solids or bubbles for the meter to work correctly. A transducer transmits a sonic wave which reflects off particles in the fluid onto a receiving transducer (see Figure 26). The difference in frequencies of these two sonic waves serves to calculate the fluid velocity. The accuracy of the flow rate measured by a Doppler flowmeter is affected by the accuracy of the measured internal diameter, since this measurement is used to calculate the volume of the fluid in the pipe. Concrete, certain heterogeneous media, or pipes less than one inch in diameter cannot be monitored by Doppler meters. However, the big advantages of Doppler flowmeters are that they are portable, do not interfere with

Figure 26. Doppler Flowmeter. The pitch of the sound from a passing car changes and is explained by the Doppler effect. It also affects the reflection of sound from particles inside the pipe. The particles accelerate the sound waves that emanate from a transmitting element (Mapco, 1981).

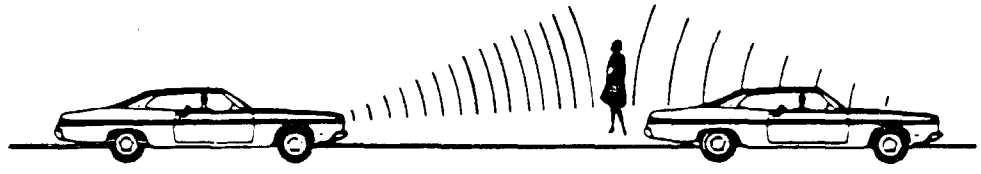

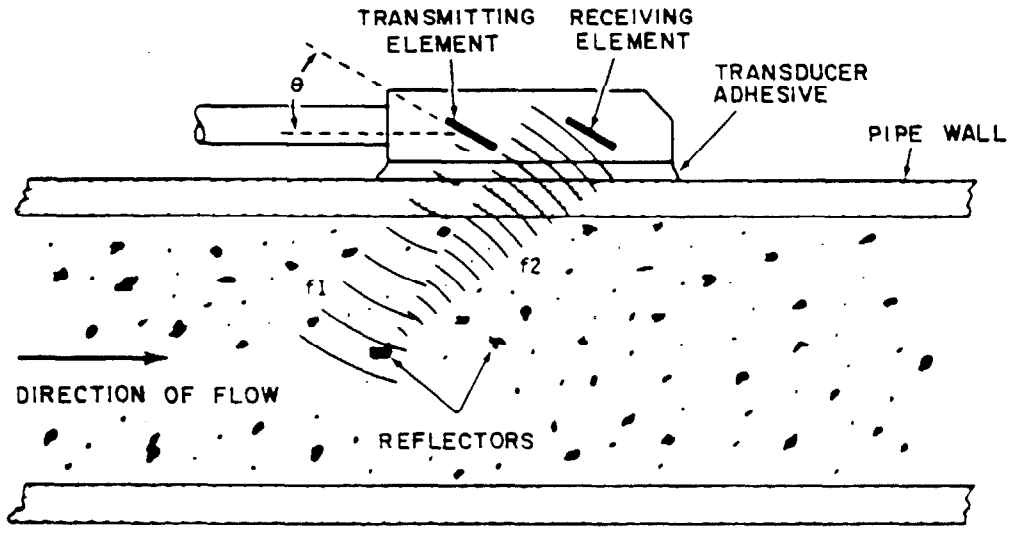

flow, and because they are mounted on the pipe's exterior can handle any pressures.

Like other sonic type flowmeters, zeroing Doppler flowmeters is simple but rescaling is usually difficult. Operators often must consult the manufacturer for help.

Float-Type Flowmeters

Float-type flowmeters (sometimes called rotameters, or variable area meters) operate on the float principle and have an upright conical metering tube made of glass, metal, or plastic. Inside the tube is a float (see Figure 27) which moves up as the fluid enters through the bottom of the meter. The float rises proportionally to the flow rate. Transparent flowmeters have a scale set on the meter which shows the flow rate per height of the float. Flowmeters with a plastic or metal metering cone magnetically transmit the value of the flow rate. While most see-through, glass-float meters cannot withstand high pressures, Krohne makes a metal-float meter that can withstand pressures of almost 9,000 psi. Fischer and Porter also make a heavy-duty model that withstands 3,000 psi. Flow rates are generally limited to less than 700 gpm with this type of meter.

While float-style flowmeters can be used for fluids of different viscosities, they should not be used with fluids that contain solids. Deposits could change the weight and flow properties of the float which would severely retard its accuracy. Float-type flowmeters should never have to be recalibrated if kept clean.

Figure 27. Typical Transparent Float Flowmeter. The incoming fluid lifts the float to a height that is proportional to the rate (Ramapo Instrument Co.).

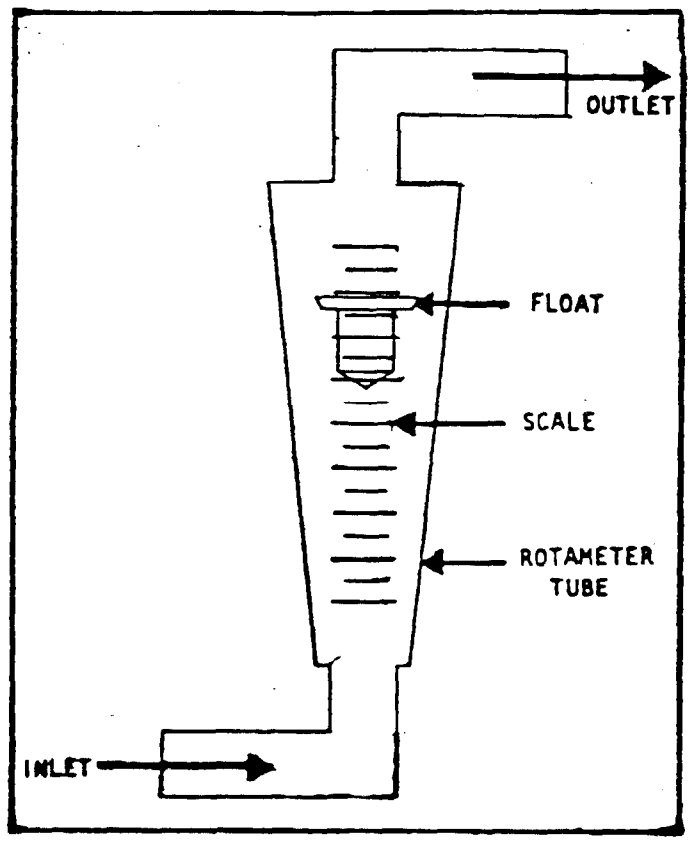

Electromagnetic Flowmeters

Electromagnetic flowmeters, sometimes called magnetic induction flowmeters, create a magnetic field which surrounds the fluid passing through the pipe. The field coils of the meters are energized by a pulsed D.C. current or by line alternating current. When the fluid flows through the magnetic field, a voltage proportional to flow velocity is induced. The current produced is monitored after passing through the electrodes which are at right angles to the field coils (see Figure 28). Fluid electrical conductivity level should be at least 0.05 μs/cm (Microsiemens/centimeter) to 20 μs/cm for these meters to operate. The conductivity of drinking water is generally 500 μs/cm; therefore, magnetic flowmeters have many applications for metering conductive fluids such as water and sewage.

Advantages of the electromagnetic flowmeter are:

- No pressure loss occurs and the system is piggable if the proper size meter is used
- The pipe liner and possibly the electrodes are in contact with the fluid
- Measurements are independent of the flow profile and other properties of the fluid
- They measure flows up to 15,000 gpm with accuracies that range from within 98 to 99.5 percent

However, the pressure limits are rarely more than 600 psi. Direct-current meters have the advantages of continual and automatic zero-point correction that occurs between each pulse, and reliable suppression of interference voltages. Alternating-current meters can be rezeroed by the operator,

Figure 28. Principles of Magnetic Flowmeters. The medium flows at a certain velocity (V) inside a pipe of a certain diameter (D) and passes through the magnetic field (B) and the electrodes pick up the induced voltage (U) (Krohne, Product Guide 3).

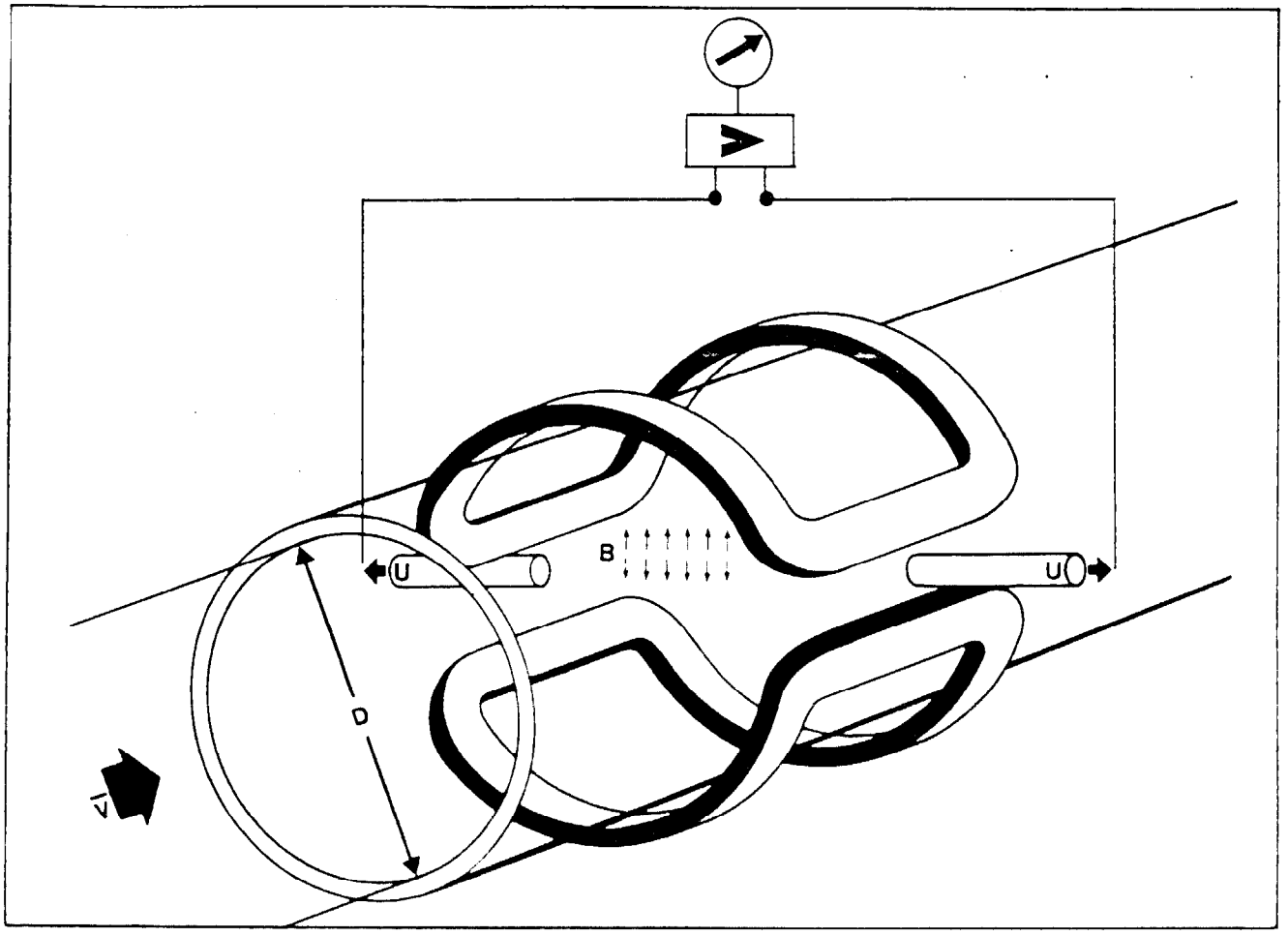

but special equipment is often required.

Vortex-Shedding Flowmeters

The principle of operation of a vortex-shedding flowmeter is to generate turbulence which is then used to monitor flow. A narrow vertical bar, called a vortex shedder (see Figure 29), produces eddies that pulse from alternating sides of the bar during flow. A torque tube twists with these pulsing vortices, whose frequencies are proportional to the flow rate. Strain gauges sense the tube movement and translate that movement into a flow rate.

The advantages of vortex-shedding flowmeters are their accuracy, linearity over a wide range, physical strength, and the fact that deposits normally do not form on them. Since the sensor rests outside the meter, the pulses from the strain gauge can be related to a full scale flow value and therefore can be "calibrated" without having to shut off flow. Vortex-shedding flowmeters, however, are not piggable.

The vortex-shedding flowmeters are available in diameters up to 8 inches and can handle flow rates up to 3,000 gpm. They are accurate to within 0.5 percent of the flow rate, although their full scale rating is usually over 1.0 percent.

Other Flowmeter Designs

Flow can be measured by a variety of means, especially when the rate is inferred. One design uses an object of known area which is placed inside a flow stream and connected to a strain gauge. The stress on the object is proportional

Figure 29. Cut-away View of a Vortex-shedding Flowmeter. The fluid strikes the shedder bar and vortices alternately push the two sides of the sensing vane (Fischer and Porter, 1983).

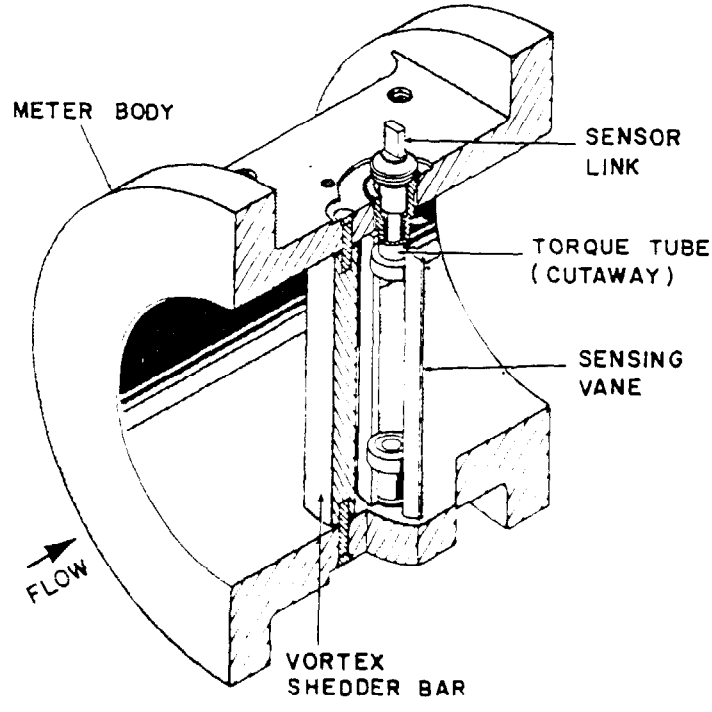

to the flow velocity. Calibration can be performed by applying a known force to the object. Strain-gauge flowmeters are accurate to within 0.5 to 2.0 percent of full range and can withstand pressures as high as 5,000 psi. Another design has a vertical axle that supports a flat-lying disc; when the plane of the disc is tilted at a low angle, the disc nutates about the axle as fluid is passing, which gives the meter the names, "wobble meter" or "nutating-disc meter." With a 2-3 percent error, the wobble meter is not as accurate as positive-displacement or turbine meters, but it is less expensive.

A variety of other flowmeter variations exist on the market. However, they are not nearly as common as the seven major forms of inference meters discussed above.

TESTING AND CALIBRATING FLOWMETERS

While all flowmeters are calibrated in the factory, recalibration may be necessary upon emplacement. This is done because viscosities, pressures, and temperatures can vary from the laboratory conditions where the meter was originally tested (Halmi, 1976). Flowmeters eventually wear, corrode, or accumulate deposits, and they require recalibrations. Operators should follow the manufacturer's recommendations on procedures and frequencies of calibration.

Venturi tubes and other differential-pressure devices can be checked by placing manometers on the pressure openings. Most powered meters can have their frequency or voltage output checked by an electronic test indicator. Some

meters such as D.C. pulse or ultrasonic may require electronic calibration. These procedures would not be accurate if either deposition or corrosion changed the internal areas of the meters. Test results may also vary depending upon line pressures, viscosities and temperatures. The most assured way of checking flowmeter accuracy and calibration is to perform direct volumetric tests with a prover.

Provers may be used for any type of flowmeter, but they are limited by pressure, temperature and type of fluid being measured. The most common and inexpensive prover is the volumetric prover tank. It is a tank, ranging from a five-gallon portable to a 1,000 gallon laboratory model, that is marked off with precise fractions of gallons (the tank should adhere to determinations by the National Bureau of Standards). The liquid from the flowmeter should be timed as it is allowed to flow into the tank.

Piston or ball-type provers are more convenient than tanks (see Figure 30). They use a piston or ball which is pushed along within a smooth bore tube by pressurized gas. The piston or ball in turn displaces a known volume of fluid. Electrodes on the displacer (piston or ball) generate pulses as it passes two fixed points that define a specific volume in the tube. The electrical pulses are counted and timed. Some provers generate a continuous train of electrical pulses for more precise measurement (Cook and Strongman, 1984). The prover may be sensitive to solids, dirt, etc., which interfere with mechanical actions. However, the prover is

Figure 30. Schematic Diagram of a Piston Prover. The piston travels to the other sensor (dashed position) while pushing a standardized volume of fluid out of the prover. The valves reverse to return the piston.

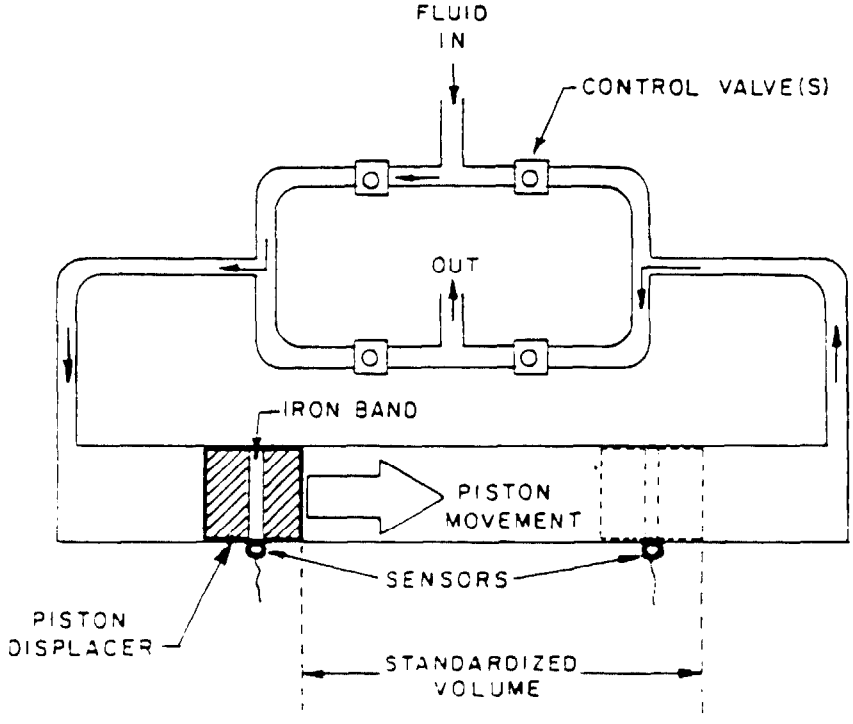

unaffected by the fluid viscosity and density in determining the volumetric flow that goes through a flowmeter.

Differential pressure flowmeters are not volume measuring devices. They should be calibrated for each fluid which is metered depending on its viscosity and specific gravity.

FLOW RECORDING DEVICES

Many flowmeters require transmitters or signal converters to send the signals (mV, V, or mA) that a recorder can accept. Others such as magnetic or turbine meters do not require transmitters or signal converters since the signal can be accepted directly by the recorders.

Others, like positive-displacement meters, use geared counters to measure flow and need a pulse transmitter. Pulse transmitters attach themselves to the exterior of counters, and then they convert the geared movements into signals.

An electronic recorder can be one of two standard designs; the circular chart recorder and the strip-chart recorder. The circular recorder (see Figure 8) rotates a chart on an axle. A pen is provided to record pressure or flow rate on the chart. The pressure or flow rate scale lies along the chart radius and the time axis is the chart circumference. Strip recorders consist of a rotating cylinder which rolls a strip chart with time. The variable axis lies perpendicular to the rolling direction.

The internal working parts of most electronic recorders are generally the same. The major components are: the electronic amplifier, the two-phase servo motor, the gear train,

and the feedback element (see Figure 31).

An electronic signal from a flowmeter, transducer, or other device is amplified to a power level high enough to drive the servo motor. The servo motor is often a two-phase reversible type that runs at speeds proportional to input, and in the established phase direction. Through gearing, the servo motor positions the pen and the feedback element; the latter then generates a voltage which is fed back to the servo motor.

Strip recorders have accuracies to within 0.5 percent of full scale, whereas circular chart recorders usually have accuracies to within only 1.0 percent. The recorder should be calibrated while it is connected to the measuring system. Occasionally the chart speed should be checked during the test by writing the time on the chart and comparing it with the time elapsed. Most circular recorders use charts that are interchangeable with those of other manufacturers.

CONTROL DEVICES

Flowmeters and pressure measuring instruments are often accompanied by valves which are placed downstream to reduce shock. Elaborate systems can be designed to automatically shut down flow when pressure, flow, or temperature exceeds specified limits. An automatic shut-off device, called an actuator can be connected to a valve and set to operate only when an instrument transmitter sends a signal at a special frequency.

Figure 31. Block Diagram of the Working Components of an Electronic Recorder (BIF, 1975).

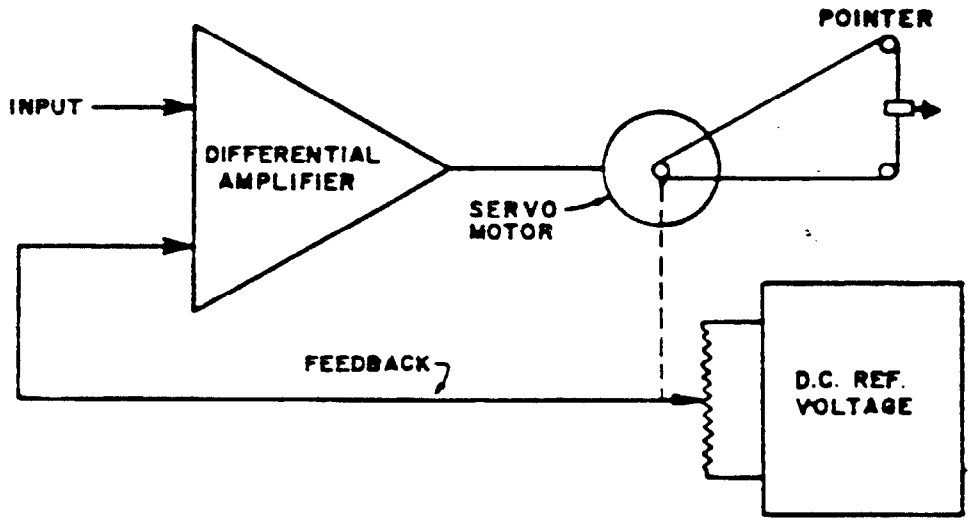

Valves are also used frequently to protect gauges and flowmeters from freezing or corroding by separating the instrument from the system. An operator may have separate lines that contain the measuring devices. A gauge or meter may be taken off of the line and kept indoors until testing is required. Both valves and actuators are discussed briefly in the following pages.

VALVES

Valves are devices that control fluid flow through pipes. As with other instruments, valve designs vary for differing applications. Flow control can be executed by a simple on-off switch or a gradual throttling device. Some valves are exclusively used for diversional purposes. The most common designs are: the ball valve, butterfly valve, plug valve, globe control valve, knife gate valve, and the pinch valve. Table 4 lists many functions of several of the valve designs.

The ball valve is often a hollow sphere, or half sphere that is tightly fitted inside a valve body. The sphere can be turned with the poles perpendicular to the flow direction. The flow is gradually reduced as the valve opening is restricted by the sphere surface. Some balls have a V-shaped opening to provide smooth throttling throughout the quarter turn that is necessary to close the valve. Ball valves can fit pipes as large as 48 inches in diameter and they can be designed to withstand pressures of up to 800 psi. These valves are often used for throttling because of their

TABLE 4

APPLICATIONS OF VARIOUS VALVE DESIGNS
(DeZurik, 1984)

	Globe Control						Butterfly						
	Cage Guided	Top & Bottom Guided	Top Guided	Split Body	Angle	3-Way	Ball Valves	High Pressure	Rubber Sealed	Eccentric	3-Way 4-Way	Gate Valves	Pinch Valves
Function													
On-Off	A	A	A	A	A	D	B	A	A	A	D	A	A
Throttling	A	A	A	A	A	A	A	A	A	A	A	C	A
Diversion	D	D	D	D	D	A	D	C	C	D	A	D	B
Media													
Liquids (clean)	A	A	A	A	A	A	A	A	A	A	A	A	A
Liquids (dirty)	D	A	A	A	A	B	A	D	B	A	A	A	A
Liquids (viscous)	D	A	A	A	A	A	A	B	A	A	A	A	A
Liquids (corrosive)	A	A	A	A	A	A	A	A	B	A	A	C	A
Slurries (sludge)	D	B	A	A	A	C	A	C	B	A	A	A	A
Slurries (abrasive)	D	B	B	B	A	D	C	D	C	A	B	A	A
Slurries (fibrous)	D	D	D	D	D	D	A	B	B	B	A	A	A
High Pressure Steam	A	A	B	B	A	B	C	B	D	D	D	D	D
Low Pressure Steam	A	B	A	A	A	A	A	A	D	C	C	D	C
Gases (clean)	A	A	A	A	A	A	A	A	A	A	A	A	A
Gases (dirty)	C	A	A	A	A	B	A	C	B	A	A	A	A
Gases (corrosive)	A	A	A	A	A	A	A	A	B	A	A	A	A
Dry Materials	D	D	D	D	D	D	D	D	B	B	D	A	A
Food Service	D	D	D	D	D	D	D	C	B	B	D	C	C
Valve Characteristics													
High Flow Capacity	A	A	A	A	A	A	A	A	A	A	A	A	A
High Pressure Drop Throttling	A	A	B	B	A	C	C	C	D	D	D	D	C
Low Head Loss (wide open)	E	E	E	E	E	E	A	A	A	A	A	A	A
Low Torque/Thrust	A	A	C	C	B	B	A	A	B	B	A	B	C
High Temperature	B	A	A	C	A	C	B	D	D	C	D	A	D
Cryogenic	B	C	A	B	D	D	D	D	D	D	D	D	D
Erosion Resistance	D	B	B	B	A	C	C	D	C	A	C	A	A

Key:

A = Typical Application
B = May Be Used
C = Limited Application
D = Not Used
E = Not Applicable

stability in high pressure situations and their resistance to cavitation; however, they generally tend to cavitate more at lower pressure drops than other valves (e.g., globe valves).

The butterfly valve is a circular plate that is as wide as the inner diameter of the pipe. The valve closes by rotating the plate along a central axis, until it is perpendicular to the flow direction. Most butterfly valves are made to withstand pressures of approximately 150 psi, and they rest on a rubber or metal seal when closed. Some that are designed for pressures of 700 psi are unable to handle abrasives; of interest is that butterfly valves can be as large as 96 inches in diameter.

The plug valve uses a cylindrical plug that functions like the sphere in ball valves, in that the valve closes on a quarter turn. One form of plug valve uses an eccentric action to help prevent seat scraping and wear. Figure 32 shows how the valve face moves forward into the rubber seat as it closes. Plug valves can perform like ball valves at less cost, although they cannot throttle under high pressures.

Globe-control and knife-gate valves differ from other valve designs in that they close with a straight downward motion instead of a quarter turn.

The globe-control valve (see Figure 33) controls flow between an upper and lower chamber, with a cylindrical or conical stopper. The conical stoppers are tapered to allow for smooth throttling while the cylindrical stoppers are

Figure 32. The Eccentric Plug Valve. The plug moves forward into its seat as it is closing (DeZurik, 1974).

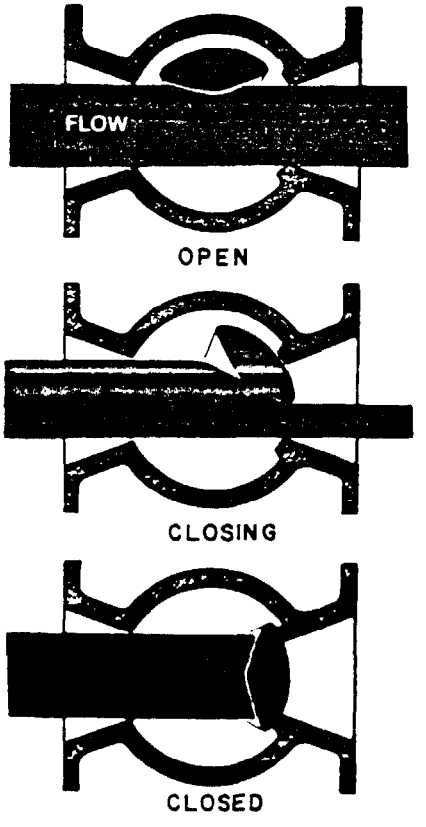

Figure 33. Globe Control Valve. Fluid passes through the valve as the plug is raised (C. E. Invalco, 1984).

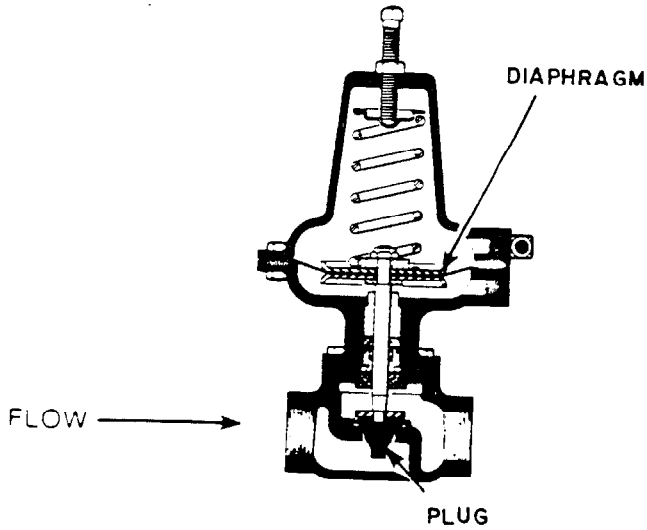

designed for quick on-off switching. Some globe-control valves use what is called a cage. Cages are hollow cylinders (see Figure 34) that allow fluids to pass through slots as the cage is raised. Some slots are shaped for a certain throttle characteristic. Globe-control valves are rarely made for pipes with a diameter of more than 16 inches. Because of their simple designs, globe-control valves can handle extreme temperatures and pressures. However, they create high head losses even when wide open and they cannot be used with solids or fibrous slurries.

The knife-gate valve is simply a gate door type that descends from the top of the pipe and fits tightly into the lower inside edge during closing. The valve is inexpensive and therefore suitable for on-off applications, even though it is a rather poor throttle. The knife-gate valve is manufactured for pipes with diameters of up to 72 inches.

The pinch valve contains two gates which squeeze together from each side of the valve body to shut off flow. The valve is noted for its ruggedness and its straight unobstructed flow path, both of which give the valve a wide applicability. However, pinch valves need more than a quarter-turn, and then considerable torque in order to be closed.

In order to divert fluids, three-way and four-way valves are used. Three-way valves utilize either a rotating plug or an angled globe-control stopper to divert flow from one channel to another. Four-way valves place a spinning barrier at

Figure 34. Cage Plug (C. E. Invalco, 1984).

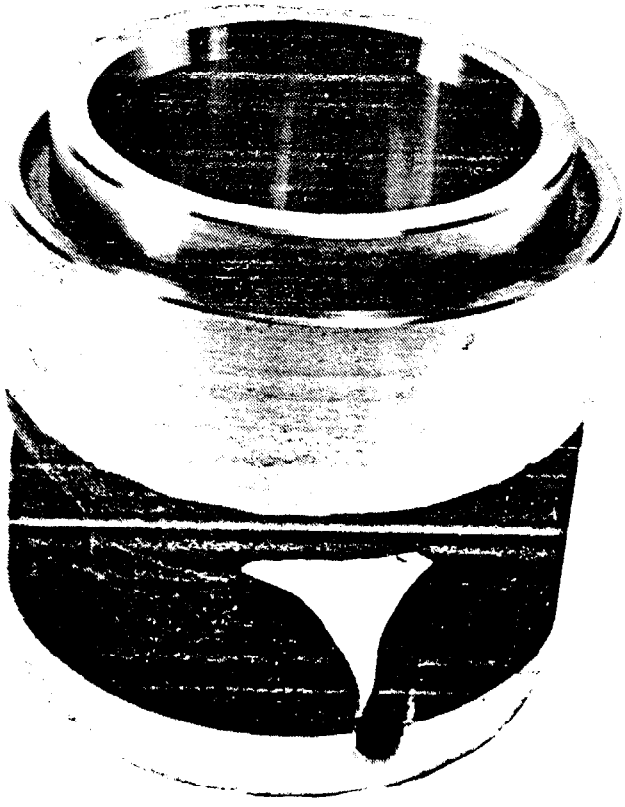

an intersection of pipes in order to exchange flow.

Cavitation is a phenomenon that can occur when fluids suddenly encounter a section of pipe that has a reduced cross-sectional area, such as a venturi tube or a closing valve. The pressure is lowest at the thinnest point and it sometimes drops below the vapor pressure of the liquid (which is a function of temperature); this condition causes vapor bubbles which often collapse with great force downstream and can cause severe valve and/or pipe damage. Because cavitation is dependent upon several factors, such as flow velocity, valve shape, and pipe diameter, the manufacturer should be consulted for specific instructions and the known cavitation coefficients.

ACTUATORS

Most valves can be equipped with automatic control devices, called actuators, which can be either pneumatically or electrically powered. Pneumatically powered actuators use air pressure to force a valve to work with either a piston traveling inside of a cylinder or a spring-loaded diaphragm. Other actuators use electric motors. For those valves that required a quarter-turn, the actuator is connected via levers or a rack and pinion set-up.

Actuators can be fine-tuned to allow for throttling -- even though most are built to simply open and close valves. Some globe-control valves are spring-loaded to open automatically at specific line pressures.

APPENDIX A
LIST OF MANUFACTURERS

(This is neither an endorsement of these particular manufacturers nor is it an all-inclusive list of manufacturers of flowmeters, pressure gauges, and flow control devices. Manufacturers listed here are those who responded to the authors' inquiries.)

Manufacturer	Instrument/Device
Ametek U.S. Gauge Division P.O. Box 152 Sellersville, PA 18960 (215) 257-6531	Pressure Gauges Compound Gauges Others
Badger Meter Mfg. Company 6116 East 15th Street Tulsa, OK 74112 (918) 836-8411	Flowmeters Recorders
Basic In Flow (BIF) 1600 Division Road West Warwick, RI 02893 (215) 839-3551	Flowmeters
Brooks Instruments Division Emerson Electric Company 407 West Vine Street Hatfield, PA 19440 (215) 362-3500	Flowmeters
C. E. Invalco Combustion Engineering, Inc. Tulsa, Oklahoma (918) 834-5671	Flowmeters Pressure Recorders Valves
DeZurik Sartell, MN 56377 (612) 251-0221	Valves
Dresser Instrument Division 250 East Main Street Stratford, CT 06497 (203) 378-8281	Pressure Gauges Flowmeters Deadweight Testers Portable Gauge Calibrators
Fischer and Porter County Line Road Warminster, PA 18974 (215) 674-6000	Flowmeters

APPENDIX A
(continued)

Flow Technology, Inc. 4250 East Broadway Road Phoeniz, AZ 85040 (602) 437-1315	Flowmeters Piston Provers
Geophysical Research Corporation 6540 East Apache P.O. Box 15968 Tulsa, OK 74158 (918) 834-9600	Pressure Bombs
Hildebrandt Engineering Co., Inc. 7707 Pinemont Drive Houston, TX 77040 (713) 462-5341	Diaphragm Seals
ISCO, Inc. Environmental Division P.O. Box 82531 Lincoln, NE 68501 (800) 228-4373	Flowmeters Samples
Kent Meters Ocala, FL 32678 (904) 732-4670	Flowmeters
Krohne America Inc. Ltd. 11 Dearborn Road Peabody, MA 01960 (617) 535-6060	Flowmeters
Liquid Controls Wacker Park North Chicago, IL 60064 (312) 689-2400	Flowmeters
Nusonics, Inc. (formerly Mapco) 1800 South Baltimore Avenue Tulsa, OK 74119 (918) 438-1010	Flowmeters
Omega Engineering, Inc. Box 4047 Stamford, CT 06907 (203) 359-1660	Pressure Transducers Electronic Recorders

APPENDIX A
(continued)

Paine Instrument, Inc. 2401 South Bayview Street Seattle, WA 98144 (206) 273-1705	Differential Pressure Transducers
Polysonics P.O. Box 22432 Houston, TX 77227 (713) 623-2134	Flowmeters
Ramapo Instrument Co., Inc. 2 Mars Court P.O. Box 428 Montville, NJ 07045 (201) 263-8800	Flowmeters
Smith Meters 1602 Wagner Avenue Erie, PA 16512 (814) 899-0661	Flowmeters
3D Instruments Inc. 15542 Chemical Lane Huntington Beach, LA 92649 (714) 894-5351	Gauges Portable Gauge Calibrators
Tokheim Corporation Box 260 Fort Wayne, IN 46801 (219) 493-2554	Flowmeters

APPENDIX B
GLOSSARY

Actuator. A device that operates a valve.

Annulus. The space between the injection tubing and the well casing.

Bomb. A down-hole pressure recording instrument.

Calibration. The process of setting an instrument into agreement with an established standard.

Class I Wells.
1. A well used, by a generator of hazardous waste or an owner or operator of a hazardous waste management facility, to inject hazardous waste beneath the lowermost formation containing, within one-quarter mile of the well bore, an underground source of drinking water.
2. Another industrial and municipal disposal well which injects fluids beneath the lowermost formation containing, within one-quarter mile of the well bore, an underground source of drinking water.

Class II Wells. A well that is used to inject fluids:
1. Which are brought to the surface in connection with conventional oil or natural gas production and may be comingled with waste waters from gas plants which are classified as a hazardous waste at the time of injection.
2. For enhanced recovery of oil or natural gas; and
3. For storage of hydrocarbons which are liquids at standard temperatures and pressures.

Class III Wells. A well that is employed to inject fluids for extraction of minerals including:
1. Mining of sulfur by the Frasch process.
2. In-situ production of uranium or other metals; this category includes only in-situ production from ore bodies which have not been conventionally mined. Solution mining of conventional mines such as stopes leaching is included in Class V.
3. Solution mining of salts or potash.

Class IV Wells.
1. A well used by a generator of hazardous waste or of radioactive waste, by an owner or operator of a hazardous waste management facility; or by an owner or operator of a radioactive waste disposal site to dispose of hazardous waste or radioactive waste into a formation which is within one-quarter mile of the well and it contains an underground source of drinking water.

2. Wells used by generators of hazardous waste or of radioactive waste, by an owner or operator of a hazardous waste management facility; or by an owner or operator of a radioactive waste disposal site to dispose of hazardous waste or radioactive waste above a formation which within one-quarter mile of the well contains an underground source of drinking water.
3. Wells used by a generator of hazardous waste or an owner or operator of hazardous waste management facility to dispose of hazardous waste, which cannot otherwise be classified as Class I or IV (e.g., wells used to dispose of hazardous waste into or above a formation which contains an aquifer which has been exempted pursuant to (§146.04).

Class V Wells. An injection well not included in Classes I, II, III, or IV.

Cryogenics. Pertaining to very low temperatures.

Injection Zone. A geological "formation," groups of formations, or part of a formation receiving fluids through a "well."

K-Factor. The number of pulses of a meter per gallons of fluid measured.

Linearity. The closeness of a calibration curve to a specified straight line.

Manometer. An instrument for determining the pressure of gases, vapors, or liquids.

NBS. National Bureau of Standards, Department of Commerce.

Nutating Meter. A flowmeter that operates on the principle of the positive displacement of fluid by the wobbling motion of a piston or disk.

Null. A condition, such as a balance, which results in a minimum absolute value of output.

Piggable. Able to be cleaned internally with a pig, which is a scrubber that is guided by cables or water pressures.

Pressure Drop, Loss of Head. The difference in pressure between the inlet and outlet of a hydraulic device during flow.

PSI (Pounds per Square Inch). The gauge reading of contained liquids and gases. Sometimes written as PSIG for gauge pressure alone, or PSIA for gauge plus atmospheric pressure.

Rescaling. Altering an instrument so that it can measure different ranges or substances.

Throttling. The process of turning a valve to produce a specific flow rate.

Torque. The force required to turn a valve or work a mechanical flowmeter.

APPENDIX C
PUBLICATIONS

Equipment manufacturers publish technical and promotional materials for their specific flowmeters, pressure instruments and flow control devices. These publications are generally available from the equipment manufacturers; their names and addresses are found in Appendix A. The author of this manual used manufacturers' literature extensively in preparing this document. A list of some publications used are as follows:

Manufacturer	Publication
Badger Meter Manufacturing Co.	-Orifice Plates, Bulletin P-400 -Flow Nozzles, Bulletin A-401 -Low Loss Flow Tubes, Bulletin P-405 -Model MLFT, DMR 110 Z-8977
Basic In Flow	-Electronic Receivers - Specification Data 257-01.201-1, 1975 -Reproduction of Pressure Differentials as Sensed at Piezometer Openings
C. E. Invalco	- Instruction Manual - Wand WCC - Series Turbine Flowmeter: Issue 7 November, 1983 - Industrial W-Series Flowmeter Installation Instructions September, 1979 -IVC 251-A2, 1980 -IVC 290-A1, 1984
DeZurik	-Valve Selection Guide Bulletin 12.00-1, January, 1984 -Series 100 Eccentric Valves Bulletin 1200-1, October, 1974
Dresser-Ashcroft	-Engineering Data Ashcroft Gauges: Form #250-1353-H -Installation and Maintenance Manual for Ashcroft Type 1305 Dual Range Deadweight Tester and Type 1327 Portable Test Pump: Form Number 250-1526-A -Pressure, Temperature, Control Instrument Ordering Handbook, Bulletin OH-1

Manufacturer	Publication
Dresser-Roots	-Meters: Bulletin MR-781
Fischer and Porter	-Technical Information, 10LV-6, May, 1983
Flow Technology Inc.	-Flow Transfer Kit Model FT - AFT-4-CF Bulletin FTK 744
Geophysical Research Corp.	-Amerada RPG-3 and RPG-4 Gauge Operator's Manual, 1983
Hildebrandt Engineering Co., Inc.	-Diaphragm Seal Protectors - Description, Operation, and Application, 1983 -Turbine Water Meters, Bulletin No: IND-476 -Installation Instructions: INS-6004 -Positive Displacement Water Meters: Bulletin No. IND-376 -Installation/Start-up Instructions: INS-0001-DOC
Krohne America Ind. Ltd.	-Krohne Float Type Flowmeters Product Guide 1 -Autoflux Magnetic - Inductive Flowmeters Product Guide 3
Liquid Controls	-Meters and Accessories, Catalog 102 C, 1983
Mapco	-Instruction Manual, Model 9000 Nusonics Flowmeter, Publication #ESD-611, June, 1979 -Instruction Manual, Model 1181 Doppler Flowmeter; Publication #ESD-623, December, 1981
Omega Engineering, Inc.	-Pressure and Strain Measurement Handbook, 1984
Paine Instruments, Inc.	-Brochure EPC-83-1: Price Schedule EPP-84-1
Ramapo Instrument Co., Inc.	-Form GP-3, April, 1983
Smith Meters	-Technical Paper 101A, 1977 -Technical Paper 103A, 1977 -Compatibility Manual Bulletin 1822

Manufacturer	Publication
3D Instruments, Inc.	-Form No. 3D-2001, 1981
Tokheim Meters	-Advanced Design Customized Metering Systems: Bulletin No. 2610-AR

REFERENCES

Chilton's Co. Chilton's Instruments and Control Systems. Volume 49, Radnor, PA., December, 1976.

Considine, D.M. Process Instruments Controls Handbook. 2nd edition. McGraw Hill Book Co., New York, NY., 1974.

Cook, R.R. and Strongman, John R. "New Displacer Piston Sensing System Promises More Accurate Meter Proving." Oil and Gas Journal. Volume 81, p.p. 55-8, November 21, 1984.

Ginesi, D. and Greby, G. "A Comparison of Performance Features vs. Economic Costs." Proceedings of the ISA 85 International Conference. Volume 40, Part 2, October, 1985.

Halliday, David and Resnick, Robert. The Fundamentals of Physics. John Wiley and Sons, New York, NY., 1981.

Halmi, D. "Practical Guide to the Evaluation of the Metering Performance of Differential Procedures." Mechanical Society of Mechanical Engineers. Paper 72-WA/FM-2, 1976.

Matthews, L.S. and Russell, D.G. Pressure Buildup and Flow Tests in Wells. Monograph Series. Society of Petroleum Engineers of AIME. Dallas, TX., 1967.

Miller, R.W. Flow Measurement Handbook. McGraw Hill Co., New York, NY., 1983.

Reason, J. "Special Purpose Flowmeters Offer Better Accuracy, Range, Linearity." Power, March, 1983.

Welge, E.A. Testing Oil and Gas Wells for Water Shutoff with a Formation Tester. California Division of Oil and Gas, Sacramento, CA., 1981.

CHECKLIST FOR FLOW MEASUREMENT INSPECTION

Prepared By: Date:
Facility: Well#:

A. General

Yes	No	N/A	1.	(a) Is primary flow measuring device properly installed and maintained?
Yes	No	N/A		(b) Is there a straight length of pipe before and after the flowmeter of at least 5 to 20 diameters? This depends on the type of flowmeter and the ratio of pipe diameter to throat diameter. Also, the introduction of straightening vanes may reduce this requirement.
Yes	No	N/A		(c) If a magnetic flowmeter is used, check for electric noise (interference) in its proximity and that the unit is properly grounded.*
Yes	No	N/A		(d) Is the full pipe requirement met?
			2.	Flow records are properly kept.
Yes	No	N/A		(a) Are records of flow measurement recorded in a bound numbered log book?
Yes	No	N/A		(b) Are all charts maintained in a file?
Yes	No	N/A		(c) Are all calibration data entered in the log book?
Yes	No	N/A	3.	Are sharp drops or increases in flow values accounted for?
Yes	No	N/A	4.	Is actual flow measured?
Yes	No	N/A	5.	Are secondary instruments (totalizers, recorders, etc.) properly operated and maintained?
Yes	No	N/A	6.	Are appropriate spare parts stocked or is service available?

*Electrical noise can sometimes be detected by erratic operation of the flowmeter's output. Another indication is the flowmeter location in the proximity of large motors, power lines, welding machines, and other high electrical field generating devices.

B. Flowmeter

1. Type of flowmeter used: _____

2. Show on the back a diagram of flowmeter placement in the system. Indicate the direction of flow, the vertical height relationship of the source, outfall, and measuring meter. Give all dimensions in pipe diameters.

3. Is meter installed correctly?
   (a) If magnetic flowmeter is used, it should be installed in an ascending column, to reduce air bubbles and assure full pipe flow.
   (b) If a differential pressure meter such as venturi is used, it should be installed in a horizontal plane so that high pressure tap is on the inlet of flow and taps are horizontal sloping slightly downward with facilities for cleaning taps.

4. Flow range to be measured: _____

Yes No N/A 5. Is flow measurement equipment adequate to handle expected ranges of flow values?

6. What are the most common problems that the operator has had with the flowmeter? Describe: _____
_____

7. Flowmeter flow rate: _____ mgd; totalizer flow rate: ____ mgd; error: _____%

8. Permit projected rate of injection: _____ gal./day

Yes No N/A 9. Is flow totalizer properly calibrated?

10. Frequency of routine inspection by trained operator: _____ / month

11. Frequency of maintenance inspections by facility personnel: _____ / year

12. Frequency of flowmeter calibration: _____

13. Indicator of correct operation: redundant flowmeters____ auxiliary flowmeters_____ pressure readings_____ other_____ power usage of pumps_____

14. Indicators of proper Quality Assurance: redundant flowmeters_____ frequent recalibrations_____ other_____

PRESSURE GAUGE INSPECTION CHECKLIST

Pressure Gauges

Yes No N/A 1. Is Bourdon tube gauge protected from corrosion and freezing?

Yes No N/A 2. Is pressure reading relatively constant? (i.e., absence of rapid pointer movement due to pulsating pressure or pipeline vibration)

Yes No N/A 3. Are gauge materials suitable for the media monitored?

Yes No N/A 4. Is a pressure transducer properly installed?

5. Date gauge last calibrated: _____

6. Method of calibration: _____
_____

Yes No N/A 7. Is the measuring range twice the operating range or less?

Yes No N/A 8. Is the gauge retarded?

Pressure Recorders

Yes No N/A 1. Are pressure recorders properly installed? (e.g., chart protected from weather, etc.)

Yes No N/A 2. Are pressure recorders operational? (e.g. ink, charts moving, etc.)

Yes No N/A 3. Is back-up gauge provided?

Yes No N/A 4. Do back-up gauge pressure and recorded pressure agree?

Yes No N/A 5. Is the measuring range twice the operating range or less?

CHECKLIST FOR FLOW MEASUREMENT, OPERATOR'S FORM

Prepared By: Date:
Facility: Well#:

A. General

1. (a) Type of primary flow measurement device.

Yes No N/A (b) Is there a straight length of pipe before and after the flowmeter of at least 5 to 20 diameters? This depends on the type of flowmeter and the ratio of pipe diameter to throat diameter. (Also, the introduction of straightening vanes may reduce this requirement.)

Yes No N/A (c) If a magnetic flowmeter is used, is the unit properly grounded?*

Yes No N/A (d) Is the pipe flowing free?

2. Flow records.

Yes No N/A (a) Are records of flow measurement recorded in a bound numbered log book?

Yes No N/A (b) Are all charts maintained in a file?

Yes No N/A (c) Are all calibration data entered in the log book?

Yes No N/A 3. Are sharp drops or increases in flow values accounted for?

Yes No N/A 4. Is actual flow measured? If not indicate factor. Other? _____

Yes No N/A 5. Are secondary instruments (totalizers, recorders, etc.) properly operated and maintained?

Yes No N/A 6. Are appropriate spare parts stocked? Please list.

a. _____
b. _____
c. _____
d. _____
e. _____
f. _____

*Electrical noise can sometimes be detected by erratic operation of the flowmeter's output. Another indication is the flowmeter location in the proximity of large motors, power lines, welding machines, and other high electrical field generating devices.

B. Flowmeter

1. Type of flowmeter used: _____

2. Note on diagram flowmeter placement in the system; observe the direction of flow, the vertical height relationship of the source, outfall, and measuring meter. Give all dimensions in pipe diameters.

Yes No N/A 3. Is meter installed correctly?
(a) If a magnetic flowmeter is used, it should be installed in an ascending column to reduce air bubbles and assure full pipe flow.
(b) If a differential pressure meter such as venturi is used, it should be installed in a horizontal plane so that high pressure tap is on the inlet of flow and taps are horizontal sloping slightly downward with facilities for cleaning taps.

4. Flow range to be measured: _____

5. Indicate criteria for selecting flow range.
_____
_____

6. What are the most common problems with the flowmeter? _____
_____

7. Flowmeter flow rate: _____ mgd; totalizer flow rate: ____ mgd; error_____%

8. Permit projected rate of inspection: _____

Yes No N/A 9. Is flow totalizer properly calibrated? gal./day

10. Frequency of routine inspection by trained Operator: _____ / Month

PRESSURE GAUGE OPERATOR'S CHECKLIST

Pressure Gauges

Yes No N/A 1. Is Bourdon tube gauge protected from corrosion and freezing? Describe briefly _____

Yes No N/A 2. Is pressure reading relatively constant (i.e., absence of rapid pointer movement due to pulsating pressure or pipeline vibration)?

Yes No N/A 3. Are gauge materials suitable for the media monitored?

Yes No N/A 4. Is a pressure transducer properly installed?

5. Date gauge last calibrated: _____

6. Method of calibration: _____
_____

Yes No N/A 7. Is the measuring range twice the operating range or less?

Yes No N/A 8. Is the gauge retarded?

Pressure Recorders

Yes No N/A 1. Are pressure recorders properly installed (e.g., chart protected from weather, etc.)? Indicate how _____

Yes No N/A 2. Are pressure recorders operational (e.g., ink, charts moving, etc.)?

Yes No N/A 3. Is a back-up gauge provided?

Yes No N/A 4. Do back-up gauge pressure and recorded pressure agree?

Yes No N/A 5. Is the measuring range twice the operating range or less?