United States
Environmental Protection
Agency

Office of
Solid Waste
Washington, D.C. 20460

June 30, 2000

Listing Background Document for the Chlorinated Aliphatics Listing Determination (Final Rule)

FINAL

Prepared for:

U.S. ENVIRONMENTAL PROTECTION AGENCY
Office of Solid Waste
Hazardous Waste Identification Division
401 M Street, S.W.
Washington, DC 20460

Prepared by:

Science Applications International Corporation
Engineering and Environmental Management Group
11251 Roger Bacon Drive
Reston, VA 20190

HAZARDOUS WASTE MINIMIZATION AND MANAGEMENT
DIVISION TECHNICAL SUPPORT CONTRACT

EPA Contract No. 68-W98-025, WA No. 2–11

TABLE OF CONTENTS Page Number

1. INTRODUCTION 1
   1.1 Background 1
   1.2 Existing Chlorinated Aliphatics Listings 2
   1.3 Other EPA Regulatory Programs Affecting the Chlorinated Aliphatics Industry 4

2. INDUSTRY DESCRIPTION 7
   2.1 Chlorinated Aliphatics Industry Overview 7
      2.1.1 Industry Study Profile 7
      2.1.2 Recent Developments 11
   2.2 Industry Study 14
      2.2.1 Engineering Site Visits 14
      2.2.2 RCRA Section 3007 Questionnaires 16
      2.2.3 Familiarization Sampling 17
      2.2.4 Record Sampling 19

3. MANUFACTURING AND WASTEWATER TREATMENT PROCESS DESCRIPTIONS 25
   3.1 Chlorinated Aliphatics Manufacturing Processes 25
      3.1.1 Ethylene Dichloride (EDC or 1,2-dichloroethane) and Vinyl Chloride Monomer (VCM or chloroethene) 26
      3.1.2 Vinyl Chloride Monomer Using Acetylene as a Raw Material (VCM-A) 31
      3.1.3 Methyl Chloride 33
      3.1.4 Allyl Chloride 34
      3.1.5 Other Chlorinated Aliphatic Manufacturing Processes 36
      3.1.6 Manufacturing Processes That Do Not Generate Wastewater 41
   3.2 Waste Treatment Processes 41
      3.2.1 Biological Wastewater Treatment Systems 41
      3.2.2 Non-biological Wastewater Treatment Systems Discharging to NPDES Permitted Sites 42
      3.2.3 Non-Biological Pretreatment Processes Prior to POTW/PrOTW Discharge 42
      3.2.4 Underground Injection 42

4. WASTE GROUPINGS 43
4.1 Wastewaters 44
4.1.1 Proposed No-List: Wastewaters Generated from the Production of Vinyl Chloride Monomer Using Mercuric Chloride Catalyst in an Acetylene-Based Process (VCM-A Wastewaters) 44
4.1.2 Proposed K173: Chlorinated Aliphatics Wastewaters, excluding VCM-A Wastewaters 47
4.2 Wastewater Treatment Sludges 53
4.2.1 Proposed K174: EDC/VCM Wastewater Treatment Sludges, excluding VCM-A Sludge 53
4.2.2 Proposed K175: VCM-A Wastewater Treatment Sludges 59
4.2.3 Proposed No-List: Methyl Chloride Wastewater Treatment Sludges . . . 61
4.2.4 Proposed No-List: Allyl Chloride Wastewater Treatment Sludges 64

5. ADDITIONAL INFORMATION FOR FINAL RULE 67
5.1 Wastewaters Managed in Surface Impoundments 67
5.2 Scope of Facilities Included in the Listing 68
5.2.1 Discussion of Analysis 68

Appendix A. RCRA Section 3007 Questionnaire

Appendix B. EPA Record Sampling Analytical Data

Appendix C. Industry Split Sample Comparison with EPA Record Sample Data

Appendix D. Summary of Waste Generation and Management Practices

Appendix E. Summary of Chlorinated Aliphatics Manufacturers

LIST OF FIGURES

Page Number

Figure 2–1. Geographical Distribution of Chlorinated Aliphatics Manufacturers 8
Figure 3–1. Generic EDC/VCM Balanced Process 28
Figure 3–2. Chlorinated Methanes Process Flow Diagram 37

LIST OF TABLES

Page Number

Table 1–1. Existing Chlorinated Aliphatics Listed Hazardous Wastes 3
Table 1–2. Chlorinated Aliphatic Toxicity Characteristic (TC) Hazardous Wastes 4
Table 2–1. Frequency of Manufacturing Processes within the Chlorinated Aliphatics Industry (1996 Data) 9
Table 2–2. Products/Processes at Chlorinated Aliphatics Facilities (1996 Data) 10
Table 2–3. EDC Production Capacity 12
Table 2–4. VCM Production Capacity 12
Table 2–5. Methyl Chloride Production Capacity 13
Table 2–6. Perchloroethylene Production Capacity 13
Table 2–7. VCM Production Capacity 14
Table 2–8. Engineering Site Visits Conducted 15
Table 2–9. Familiarization Samples Taken 18
Table 2–10. Representativeness of the Record Sampling Program 22
Table 2–11. Samples Collected for Record Analysis 23
Table 3–1. EDC/VCM Manufacturers 27
Table 3–2. Methyl Chloride Manufacturers 33
Table 3–3. Chlorinated Methanes Manufacturers 36
Table 4–1. Waste Generation Statistics for VCM-A Wastewaters 44
Table 4–2. Waste Management Statistics for VCM-A Wastewater 44
Table 4–3. Waste Characterization Data for VCM-A Wastewaters 46
Table 4–4. Waste Generation Statistics for Chlorinated Aliphatics Headworks Used in the Risk Assessment 47
Table 4–5. Waste Management Statistics for Individual Chlorinated Aliphatics Wastewaters 48
Table 4–6. Selection of Risk Assessment Modeling Scenarios: Chlorinated Aliphatics Wastewaters 48
Table 4–7. Waste Characterization Data for Chlorinated Aliphatics Wastewaters 50
Table 4–8. Waste Generation Statistics for EDC/VCM Sludge 54
Table 4–9. Waste Management Statistics for EDC/VCM Sludge 55
Table 4–10. Selection of Risk Assessment Modeling Scenarios: EDC/VCM Sludge 55
Table 4–11. Waste Characterization Data for EDC/VCM Sludges 56
Table 4–12. Waste Generation Statistics for VCM-A Sludge 59
Table 4–13. Waste Management Statistics for VCM-A Sludge 59
Table 4–14. Waste Characterization Data for VCM-A Sludge 60

Table 4–15. Waste Generation Statistics for Methyl Chloride Sludge 61
Table 4–16. Waste Management Statistics for Methyl Chloride Sludge 62
Table 4–17. Selection of Risk Assessment Modeling Scenarios: Methyl Chloride Sludge . . 62
Table 4–18. Waste Characterization Data for Methyl Chloride Sludges 63
Table 4–19. Waste Generation Statistics for Allyl Chloride Sludge 64
Table 4–20. Waste Management Statistics for Allyl Chloride Sludge 64
Table 4–21. Waste Characterization Data for Allyl Chloride Sludge 65
Table 5–1. Facilities Identified by EPA and CMA 69
Table 5–2. Condea Vista 70
Table 5–3. Oxychem 71
Table 5–4. Companies that do not Manufacture Chlorinated Aliphatics 71
Table B–1. Analytical Data Summary, Sample by Sample
Table C–1. Facilities Providing Chlorinated Aliphatic Listing Split-Sample Data
Table C–2. Split Sample Comparison Summary
Table E–1. Summary of Chlorinated Aliphatics Manufacturers

1. INTRODUCTION

1.1 Background

The U.S. Environmental Protection Agency's (EPA's) Office of Solid Waste (OSW), as directed by Congress in the Hazardous and Solid Waste Amendments (HSWA) of 1984 to the Resource Conservation and Recovery Act (RCRA), has undertaken an investigation of the chlorinated aliphatics industry. This investigation was mandated by a 1994 consent decree resulting from litigation brought by the Environmental Defense Fund (EDF). The consent decree specifically requires listing determinations be made on "wastewaters and wastewater treatment sludges from the production of the chlorinated aliphatics specified in the F024 listing."

Under this consent decree, the Agency embarked on a multi-year project to determine whether these wastewaters and wastewater treatment sludges pose a threat to human health and the environment, and to develop a basis for making such a determination. This background document presents the information collected to support the listing determinations.

OSW studied the chlorinated aliphatics industry previously in the early 1980s. This industry study resulted in several hazardous waste listings, including F024, F025, and numerous K listings (see Section 1.2). The F024 listing, which covers a variety of process wastes from the manufacture of chlorinated aliphatics, specifically excludes the two waste streams addressed in this listing determination: wastewaters and wastewater treatment sludges (see Table 1–1). Spent catalyst wastes also are specifically excluded from the F024 definition and for a short period of time the Agency also initiated data collection efforts with respect to spent catalyst wastes. However, the Agency did not pursue listing determinations for spent catalyst wastes.

For the purposes of the current listing investigation, the Agency defined "chlorinated aliphatic" as it had previously in the F024 listing. Specifically, a chlorinated aliphatic is defined as any organic compound characterized by straight-chain, branched-chain, or cyclic hydrocarbons containing one to five carbons, with varying amounts and locations of chlorine substitution. Hydrocarbons are organic compounds composed solely of the atoms hydrogen and carbon. Aliphatics occur where the chemical bonding between carbon atoms are single, double, or triple covalent bonds (not aromatic bonds). Cyclic aliphatic hydrocarbons included in this class consist of alkanes, alkenes or alkadienes, and alkynes. For an aliphatic to be chlorinated, the hydrogen atoms in the "aliphatic hydrocarbon" have been chemically replaced with chlorine atoms, at different positions and also in multiple positions. It should be noted that while the F024 and F025 definitions are limited to wastes generated from the production of chlorinated aliphatics by free radical catalyzed processes, the Agency did not limit the current industry study to free radical catalyzed processes.

Chlorinated aliphatics products and intermediates reported (as of 1996) from facilities studied as part of this listing investigation include those involved in the manufacture of (CAS registry numbers are included in parenthesis):

- allyl chloride (107-05-1)
- chloromethane (74-87-3)
- dichloromethane (75-09-2)
- chloroform (67-66-3)
- carbon tetrachloride (56-23-5)
- chloroprene (126-99-8)
- ethylene dichloride (EDC) (107-06-2)
- trans-1,2-dichloroethylene (156-60-5)
- 1,3-dichloropropene (542-75-6)
- vinyl chloride monomer (VCM) (75-01-4)
- hexachlorocyclopentadiene (77-47-4)
- [CBI Redacted]
- [CBI Redacted]
- [CBI Redacted]
- 1,1,2-trichloroethane (79-00-5)
- 1,1,1-trichloroethane (71-55-6)
- methallyl chloride (513-37-1)
- perchloroethylene (127-18-4)
- trichloroethylene (79-01-6)
- chloroethane (75-00-3)
- vinylidene chloride (75-35-4)
- 3,4-dichloro-1-butene (760-23-6)
- 1,4-dichloro-2-butene (764-41-0)

As part of the Agency's current investigation of residuals from chlorinated aliphatics, EPA conducted engineering site visits at manufacturing facilities to gain an understanding of the present state of the industry. The Agency collected familiarization samples to obtain data on the nature of the residuals of concern and to identify potential problems with respect to record sampling and analysis of the residuals of concern. Concurrently, the Agency developed, distributed, and evaluated a census survey of the industry. Science Applications International Corporation (SAIC) (EPA Contract No. 68-W4-0042) assisted EPA/OSW in an engineering review and subsequent entry of the questionnaire data into the Chlorinated Aliphatics Industry Studies Database (ISDB).

Due to budget constraints, the Agency suspended activity on the Chlorinated Aliphatics Listing Determination in late 1993, prior to collecting record samples. The listing determination process was resumed in May of 1996. Due to this lapse in the study, the Agency reevaluated the status of the industry via a questionnaire update request (1996 data) and various telephone conversations with facility contacts. Data from the questionnaire updates were incorporated into the Chlorinated Aliphatics ISDB. Utilizing the updated data, the Agency revised site selection and sample locations for the record sampling program and completed record sampling and analysis by the end of 1997.

1.2 Existing Chlorinated Aliphatics Listings

The Agency previously promulgated a series of listings that apply to the chlorinated aliphatics industry in previous investigations in the 1980s. These listing are associated both with general chlorinated aliphatics productions process and with the production of specific chlorinated aliphatic chemicals. In addition to the hazardous wastes shown in Table 1–1, there are a number of chlorinated aliphatics chemicals that are listed hazardous wastes when they are discarded, off-specification, container residues, or spills (U and P list wastes). Table 1–2 presents the Toxicity Characteristic (TC) hazardous wastes that also are chlorinated aliphatics.

Table 1–1. Existing Chlorinated Aliphatics Listed Hazardous Wastes

Hazardous Waste Listing	Listing Description	Date of *FR* Publication
F024	Process wastes, including but not limited to, distillation residues, heavy ends, tars, and reactor cleanout wastes from the production of certain chlorinated aliphatic hydrocarbons, by free radical catalyzed processes. These chlorinated aliphatic hydrocarbons are those having carbon chain lengths ranging from one to and including five, with varying amounts and positions of chlorine substitution. *[This listing does not include wastewaters, wastewater treatment sludges, spent catalysts, and wastes listed in 40 CFR 261.31 or 261.32.]*	12/11/89
F025	Condensed light ends, spent filter and filter aids, and spent desiccant wastes from the production of certain chlorinated aliphatic hydrocarbons, by free radical catalyzed processes. These chlorinated aliphatic hydrocarbons are those having carbon chain lengths ranging from one to and including five, with varying amounts and positions of chlorine substitution.	12/11/89
K016	Heavy ends or distillation residues from the production of carbon tetrachloride	11/12/80
K018	Heavy ends from the fractionation column in ethyl chlorine production.	11/12/80
K019	Heavy ends from the distillation of vinyl chloride in vinyl chloride monomer production	11/12/80
K020	heavy ends from the distillation of vinyl chloride in vinyl chloride monomer production.	11/12/80
K028	Spent catalyst from the hydrochlorinator reactor in the production of 1,1,1-trichloroethane.	11/12/80
K029	Waste from the product steam stripper in the production of 1,1,1-trichloroethane.	11/12/80
K030	Column bottoms of heavy ends from the combined production of trichloroethylene and perchloroethylene.	11/12/80
K095	Distillation bottoms from the production of 1,1,1-trichloroethane.	11/12/80
K096	Heavy ends from the heavy ends column from the production of 1,1,1-trichloroethane	11/12/80

Table 1–2. Chlorinated Aliphatic Toxicity Characteristic (TC) Hazardous Wastes

Hazardous Waste Listing	Listing Description	Date of *FR* Publication
D019	Carbon Tetrachloride	3/29/90

Hazardous Waste Listing	Listing Description	Date of *FR* Publication
D022	Chloroform	3/29/90
D028	1,2-Dichloroethane	3/29/90
D029	1,1-Dichloroethylene	3/29/90
D033	Hexachlorobutadiene	3/29/90
D034	Hexachloroethane	3/29/90
D039	Tetrachloroethylene	3/29/90
D040	Trichloroethylene	3/29/90
D043	Vinyl chloride	3/29/90

1.3 Other EPA Regulatory Programs Affecting the Chlorinated Aliphatics Industry

Each of EPA's major program offices has long-standing regulatory controls that apply to the chlorinated aliphatics industry. Some of the more significant programs with some relevance to this listing determination include the following:

- The Clean Air Act's National Emission Standards for Hazardous Air Pollutants (NESHAPs) for organic hazardous air pollutants from the synthetic organic chemical manufacturing industry at 40 CFR Part 63 include the following regulations:
    - Subpart F, which applies to any plant which produces ethylene dichloride (EDC) via oxychlorination, vinyl chloride monomer (VCM) by any process, or one or more polymers containing any fraction of polymerized VCM and limits the concentration of vinyl chloride to less than 10 ppm in process wastewaters and sets standards for emissions of VCM from a variety of fugitive emission sources.
    - Subpart G, which regulates process vents, storage vessels, transfer operations, and wastewater.
- The Clean Air Act's National Ambient Air Quality Standards (NAAQS), which prescribe limits for SOx, CO, particulates, NOx, and ozone.
- The Clean Water Act sets specific effluent guidelines for discharges to surface waters and POTWs for facilities in the organic chemical, plastic, and synthetic fibers sector, which includes manufacturers of chlorinated aliphatics.

- The Toxicity Characteristic, particularly for chlorinated aliphatic chemicals (e.g., vinyl chloride, D043), in combination with existing K and F hazardous waste listings applicable to chlorinated aliphatics (e.g., F024). There are existing land disposal restrictions (LDR) for such wastes.

EPA is presently pursuing regulatory approaches which may impact facilities manufacturing chlorinated aliphatics and generating K173–K175. These programs, obtained from the April 26, 1999 Unified Agenda (www.gpo.gov), are as follows:

- Land Disposal Restrictions; Potential Revisions for Mercury Listed and Characteristic Wastes: EPA will soon publish an Advance Notice of Proposed Rulemaking (ANPRM) to solicit data and comments on treatment data that the Agency has gathered on the treatment of mercury wastes. The data and information gathered by this ANPRM process are intended to be used to propose revised treatment standards for some forms of mercury hazardous wastes in a future rulemaking.

- NESHAP for Chlorine Production: EPA is evaluating emissions from facilities engaged in the production of chlorine and sodium hydroxide (caustic). Hazardous air pollutants emitted include chlorine, hydrogen chloride, and mercury. Some of these facilities may be co-located with chlorinated aliphatics producers.

- NSPS for Synthetic Organic Chemicals Manufacturing Industry: EPA proposed a rule (September 12, 1994) to develop a new source performance standard to control air emissions of volatile organic compounds from wastewater treatment operations of the synthetic chemical manufacturing industry. The rule is scheduled to be finalized in April 2000. Generators of K173 to K175 would likely be subject to this rule, and because it impacts wastewater treatment operations the quantities of K173 to K175 may be affected although the direction or magnitude of any change in waste quantities is difficult to predict.

It is difficult to determine the effect of these regulatory programs on the generation and management of K173–K175. Some of the regulatory programs underway may, in fact, have little to no effect on the generation rates and subsequent management of these wastes.

This page intentionally left blank.

2. INDUSTRY DESCRIPTION

2.1 Chlorinated Aliphatics Industry Overview

2.1.1 Industry Study Profile

In 1992, the U.S. chlorinated aliphatics industry consisted of 27 facilities owned by 20 corporations. However, as a result of questionnaire updates in collected in 1997, the Agency learned that two chlorinated aliphatic facilities had closed, reducing the number of facilities to 25 and corporations to 19. Chlorinated aliphatics production facilities are located primarily in and around the petroleum industry along the Gulf Coast. Figure 2–1 illustrates the distribution of facilities across the country. The majority of these locations are fully integrated petrochemical processing facilities in which chlorinated aliphatic wastewaters are co-managed with non-chlorinated aliphatic wastewaters creating a co-mingled wastewater sludge. There are a number of facilities whose wastewater treatment systems manage only chlorinated aliphatics wastewaters; for the purpose of this listing determination these treatment systems, and resulting sludges, are termed "dedicated."

Nearly 10 million metric tons of chlorinated aliphatics were reported to be produced in 1996 from 23 different chlorinated products and intermediates. (1996 data from the RCRA Section 3007 questionnaire[1]). The production capacity for the three largest chlorinated aliphatics products and intermediates (EDC, VCM, and methyl chloride constitute the great majority of the total industry-wide production of chlorinated aliphatics) exceeds 20 million metric tons. (www.chemexpo.com, 1998). For the purposes of this industry study intermediate and product are defined in relation to the chlorinated aliphatics industry. A chlorinated aliphatic "intermediate" is a chemical which is produced and consumed on-site in a chlorinated aliphatic process, a chlorinated aliphatic "product" is a chemical which is either sold or shipped off site or is consumed on-site in a non-chlorinated aliphatic process (i.e., VCM consumed on-site in the manufacture of polyvinyl chloride is considered a product, while the EDC consumed during the manufacture of VCM is considered an intermediate). Of this total, greater than 85% was EDC/VCM manufactured via the balanced process (see Section 3.1.1). Chlorinated methanes and chloromethane production volumes accounted for 7% and 3%, respectively. The remaining volume is produced using nine other processes. Only five of the 25 facilities produce two or more chlorinated aliphatic products; the four largest facilities manufacture a majority of all chlorinated aliphatics by volume.

Tables 2.1 and 2.2 provide information on the types of products and manufacturing processes that are found in the U.S. chlorinated aliphatics industry. These manufacturing processes are discussed in greater detail in Section 3.

---

[1]Facilities did not always provide production quantities, particularly for captively used intermediates (i.e., EDC consumed in the manufacture of VCM), hence this production number is lower than actual 1996 production.

Figure 2–1. Geographical Distribution of Chlorinated Aliphatics Manufacturers

Table 2–1. Frequency of Manufacturing Processes within the Chlorinated Aliphatics Industry (1996 Data)

Processes Generating EDF Consent Decree Wastes	Production Quantity (Mtons)	Market Share	# of Processes	# of Production Quantities Not Reported
EDC and/or VCM, balanced process	7,864,697	85.38%	17	2
Chlorinated Methanes	687,735	7.47%	4	
Methyl Chloride	270,300	2.93%	3	
Perc/Tri/Carbon Tet	[CBI Redacted]			1
VCM (based on acetylene)				
Chloroprene/Chlorinated butenes				
Methyl chloroform (1,1,1-trichloroethane)				1
VDCM (Vinylidene Chloride)				1
Trichloroethylene				
Hexachlorocyclopentadiene				
Methallyl Chloride				
Allyl Chloride				

Total: 9,211,614 Mtons

Process Not Generating EDF Consent Decree Wastes	Production Quantity (Mtons)	Market Share	# of Processes	# of Production Quantities Not Reported
Chloroethane	[CBI Redacted]			1
trans-1,2-dichloroethylene				1
Allyl Chloride				1
1,3-dichloropropane				1
1,1,2-trichloroethane				1
Perc/Tri/Carbon Tetrachloride				

Total: [CBI Redacted]

Table 2–2. Products/Processes at Chlorinated Aliphatics Facilities (1996 Data) that Generate Consent Decree Wastes

Facility Name/Locations	Products Manufactured
Borden Chemicals and Plastics; Geismar, LA	EDC/VCM (balanced process)
	VCM (based on acetylene)
Condea Vista Company; Westlake, LA	EDC/VCM (balanced process)
Dow Chemical Company; Freeport, TX	Chlorinated Methanes
	EDC Only
	EDC/VCM (balanced process)
	Trichloroethylene
	VDCM (Vinylidene Chloride)
Dow Chemical Company; Plaquemine, LA	Chlorinated Methanes
	EDC/VCM (balanced process)
Dow Corning Corporation; Carrollton, KY	Chloromethane
Dow Corning Corporation; Midland, MI	Chloromethane
Du Pont-Dow Elastomers LLC; LaPlace, LA	Chloroprene
Du Pont-Dow Elastomers LLC.; Louisville, KY	[CBI Redacted]
FMC Corporation; Baltimore, MD	Methallyl Chloride
Formosa Plastics Corp. USA; Baton Rouge, LA	EDC/VCM (balanced process)
Formosa Plastics Corp. USA; Point Comfort, TX	EDC/VCM (balanced process)
Ge Electric Corporation; Waterford, NY	Chloromethane
Georgia Gulf Corporation; Plaquemine, LA	EDC/VCM (balanced process)
Occidental Chemical Corp.; Convent, LA	EDC Only
Occidental Chemical Corp.; Deer Park, TX	EDC/VCM (balanced process)
Occidental Chemical Corp/Oxymar; Gregory, TX	EDC/VCM (balanced process), EDC Only
PPG Industries; Lake Charles, LA	EDC/VCM (balanced process), EDC Only
	MC (1,1,1-trichloroethane)
	Perc/Tri/Carbon Tet
	VDCM (Vinylidene Chloride)
Shell Oil Company; Norco, LA	Allyl Chloride
The Geon Company; LaPorte, TX	EDC/VCM (balanced process)
Velsicol Chemical Corporation; Memphis, TN	Hexachlorocyclopentadiene
Vulcan Chemicals Company; Wichita, KS	Chlorinated Methanes
Vulcan Materials Company; Geismar, LA	Chlorinated Methanes
	EDC Only
	MC (1,1,1-trichloroethane)
Westlake Monomers Corp.; Calvert City, KY	EDC/VCM (balanced process)

2.1.2 Recent Developments

Since completion of the updated industry study for 1996, several developments in the chlorinated aliphatics industry have occurred. Limited information has become available that indicates that several facilities have either increased production capacity, others have shut down, and new facilities have opened. Most of this data was obtained from chemexpo.com.

Please note that recent information for all chlorinated aliphatic products and manufacturing facilities could not be collected in time for this background document. Only the available information is presented, and no attempt to integrate the information into the 1996 summary was made.

EDC/VCM

Since completion of the industry study and 1996 update, one new facility has begun production of EDC and VCM, and several facilities have expanded production capacity of EDC and VCM. Tables 2–3 and 2–4 present these capacities for EDC and VCM, respectively. PHH Monomers opened a EDC/VCM production unit in late 1996. (www.chemexpo.com, 1998)

Formosa has plans to add 290 million pounds of EDC at Point Comfort. Georgia Gulf added 400 million pounds of EDC capacity in 1996 at the Plaquemine site. PHH Monomers is a joint venture of PPG and Condea Vista. Oxymar is a joint venture of Occidental and Marubeni Corporation. (www.chemexpo.com, 1998)

Borden is planning on increasing their acetylene-based VCM production capacity by 250 million pounds per year by the end of 1997. Georgia Gulf added 350 million pounds of capacity in 1996 at the Plaquemine facility. OxyMar completed expansion to increase their capacity to 2.1 billion pounds in July 1997. PHH Monomers (joint venture between PPG and Condea Vista) opened a 500 million pound unit at Lake Charles in 1996. Shintech is planning on opening a facility with a production capacity of 500,000 metric tons for VCM. (www.chemexpo.com, 1998)

Table 2–3. EDC Production Capacity

Facility Name	EDC Capacity (million lbs/yr)
Borden; Geismar, LA	745
Condea Vista Company; Westlake, LA (formerly Vista Chemical)	1,400
Dow, Freeport, TX	4,500
Dow, Plaquemine, LA	2,300
Formosa, Baton Rouge, LA	525
Formosa, Point Comfort, TX	1,900
Georgia Gulf, Plaquemine, LA	1,760
OxyChem, Deer Park, TX	1,950
OxyChem, Convent, LA	1,500
OxyChem, Ingleside (Gregory), TX	1,500
OxyMar, Ingleside (Gregory), TX	3,000
PHH Monomers, Lake Charles, LA	1,400
PPG, Lake Charles, LA	1,600
Geon, LaPorte, TX	4,000
Vulcan Materials Company; Geismar, LA	500
Westlake Monomers Corp.; Calvert City, KY	1,950

(Source: www.chemexpo.com, 1998)

Table 2–4. VCM Production Capacity

Facility Name	VCM Capacity (million lbs/yr)
Borden; Geismar, LA	950
Condea Vista Company; Westlake, LA (formerly Vista Chemical)	850
Dow, Plaquemine, LA	1,500
Dow, Freeport, TX	2,200
Formosa, Baton Rouge, LA	1,455
Formosa, Point Comfort, TX	875
Geon, LaPorte, TX	1,650
Georgia Gulf, Plaquemine, LA	1,600
OxyChem, Deer Park, TX	1,100
OxyMar, Ingleside (Gregory), TX	2,100
PHH Monomers, Lake Charles, LA	1,150
Westlake Monomers Corp.; Calvert City, KY	1,200

(Source: www.chemexpo.com, 1998)

Methyl Chloride, Methylene Chloride, Chloroform

LCP Chemicals, Occidental, and Vista (now Condea Vista) closed methyl chloride facilities with a combined capacity of 175 million pounds during 1991 and 1994. Dow and Vulcan captively use a significant portion of their methyl chloride production to manufacture other chloromethanes. GE Plastics and Dow Corning use all their methyl chloride production captively for silicones manufacture. LCP Chemicals and Occidental Chemical closed facilities with methylene chloride and chloroform capacities totaling 170 and 116 million pounds per year, respectively, between 1991 and 1994. Vulcan has expanded production of methyl chloride, methylene chloride, and chloroform its Geismar and Wichita facilities since 1991.

Table 2–5. Methyl Chloride Production Capacity (million lbs/yr)

Facility Name	Methyl Chloride	Methylene Chloride	Chloroform
Dow, Freeport, TX	55	125	200
Dow, Plaquemine, LA	175	125	200
Dow Corning, Carrolton KY	250		
Dow Corning, Midland, MI	50		
GE Plastics, Waterford, NY	100		
Vulcan, Geismar, LA	90	80	160
Vulcan, Wichita, KS	70	100	160

(Source: www.chemexpo.com, 1997)

Perchloroethylene

Most perchloroethylene (tetrachloroethylene) has traditionally be co-produced with carbon tetrachloride by chlorination of propylene. However with the phase out of CFC-11 and 12, which made up virtually all of carbon tetrachloride's commercial use, chlorinated solvent manufacturers have modified their processes to produce perchloroethylene while minimizing or eliminating carbon tetrachloride. Occidental Chemical and Dow shut down perchloroethylene facilities with a total capacity of 230 million pounds in the early 1990s, and Vulcan closed a 25-million pound plant at Wichita in late 1996.

Table 2–6. Perchloroethylene Production Capacity

Facility Name	Perchloroethylene Capacity (million lbs/yr)
Dow, Plaquemine, LA	90
PPG, Lake Charles, LA	125
Vulcan, Geismar, LA	140

(Source: www.chemexpo.com, 1997)

Trichloroethylene

Trichloroethylene can be produced by chlorination of ethylene or EDC. Dow is scheduled to complete an expansion in 1998 to raise capacity and improve efficiency of its trichloroethylene plant in Freeport, TX. Use of trichloroethylene in fluorocarbon production and as a metal cleaning and degreasing solvent are increasing. TCE has gained some market share in vapor degreasing as a result of the phaseout of 1,1,1-trichloroethane for emissive uses. Growth as a fluorocarbon feedstock has more potential as TCE is a precursor for HFC-134a.

Table 2–7. VCM Production Capacity

Facility Name	EDC Capacity (million lbs/yr)
Dow, Freeport, TX	120
PPG, Lake Charles, LA	200

(Source: www.chemexpo.com, 1997)

2.2 Industry Study

OSW's current listing determination for the chlorinated aliphatics industry has been underway since 1992 and consisted of two major avenues for information collection: field work and industry survey. As part of the field work component, the Agency conducted engineering site visits, familiarization sampling, and record sampling. The survey effort included the development, distribution, and assessment of an extensive industry-wide RCRA Section 3007 survey. Each of these elements is described further below, reflecting the relative order in which the Agency conducted these activities over the past 7 years.

2.2.1 Engineering Site Visits

EPA initiated field activities with a series of engineering site visits. The primary purpose of the site visits was to gather first-hand information about manufacturing processes, as well as waste generation, management, and characterization data for each of the two consent decree wastes. In addition, the goals of each engineering site visit included:

1) familiarizing industry with the goals and scope of this listing determination as well as the general steps that EPA will follow in making a determination,

2) clarifying information provided in the RCRA Section 3007 Questionnaire,

3) acquiring any additional information not supplied in the questionnaire regarding waste minimization activities, as well as information valuable to supporting risk assessment determinations, and

4) determining which wastes of interest are generated at the facility, their location, and other information vital to potentially sampling these wastes.

After considering logistical and budgetary constraints, the Agency selected 16 facilities for site visits prior to record sampling. These facilities were selected in order to obtain the most representative sampling of all chlorinated aliphatics processes, and to examine dedicated wastewater treatment units, when possible. The selected facilities are presented in Table 2–3.

Table 2–8. Engineering Site Visits Conducted

Facility/Location	Site Visit Date
Dow Chemical; Freeport, TX	2/23/93
Occidental Chemical; Deer Park, TX	2/24/93
PPG Industries; Lake Charles, LA	2/25/93
Occidental Chemical; Convent, LA	3/16/93
Formosa Plastics; Baton Rouge, LA	3/17/93
Vulcan Chemical; Geismar, LA	3/18/93
Georgia Gulf; Plaquemine, LA	4/6/93
Shell Chemical; Norco, LA	4/7/93
Dupont-Dow Elastomers; LaPlace, LA	4/8/93
The Geon Company (formerly B.F. Goodrich); LaPorte, TX	5/11/93
Borden Chemicals and Plastics; Geismar, LA	5/12/93
Occidental Chemical; Belle, WV	6/8/93
Velsicol Chemical; Memphis, TN	6/9/93
Dow Corning; Carrollton, KY	6/15/93
Dupont-Dow Elastomers; Louisville, KY	6/16/93
FMC Corporation; Baltimore, MD	6/29/93

The Agency developed an engineering site visit report for each of the trips. The site visit reports include the following elements:

- Purpose of Site Visit
- Regulatory and Legal Basis for a Listing Determination
- Chlorinated Aliphatics Process Chemistry
- Process Descriptions
- Waste Streams and Waste Management Practices
- Familiarization Sampling Activities
- Site Visit Chronology

These reports are available in the rulemaking docket.

2.2.2 RCRA Section 3007 Questionnaires

EPA developed an extensive questionnaire under the authority of Section 3007 of RCRA for distribution to the chlorinated aliphatics manufacturing industry (a blank copy is provided as Appendix A). The purpose of the RCRA Section 3007 Questionnaire was to gather information about solid and hazardous waste management practices in the U.S. chlorinated aliphatics manufacturing industry. The Agency used this information to determine whether certain waste streams should be managed as hazardous under RCRA and added to the list of hazardous wastes under 40 CFR 261. The questionnaire included sections requesting information with respect to:

- Corporate and facility information
- Types of chlorinated aliphatic products and chlorinated aliphatic intermediates manufactured at the facility
- Types of processes at the facility
- Solvent use during the manufacturing process[2]
- Specific manufacturing processes; as well as residuals generated
- Residuals characterization
- General residual management information
- Specific on-site residual management information
- Source reduction efforts
- Signed certification

EPA distributed the survey in November of 1992 to 57 facilities and/or corporations identified as potential manufacturers of chlorinated aliphatic chemicals. The Agency extracted this list of facilities from the most recent information available at the time. Information resources included, but were not limited to:

- Documents and reports generated from previous listing determinations for the chlorinated aliphatics industry (F024/F025 and the numerous K listings)
- Toxic Release Inventory (TRI) data
- United States International Trade Commission's (USITC) *Synthetic Organic Chemicals* reports
- SRI's *Directory of Chemical Producers*
- Conversations with the Halogenated Solvents Industry Alliance (HSIA) Division of the Chlorine Institute
- Conversations and telephone calls with industry representatives.

[2]Information regarding solvents usage requested to support the concurrent spent solvents industry study.

Of the 57 surveys distributed, industry returned 28 surveys reporting that they had manufactured chlorinated aliphatics in 1991. These 28 questionnaires belonged to 27 facilities representing 20 companies.[3]

SAIC engineers reviewed the completed surveys for completeness and entered the data into a relational data base. SAIC subjected the entries in the data base to a series of quality assurance reviews to identify inappropriate entries and missing data links. In addition, SAIC conducted an exhaustive engineering review of each facility's response, resulting in follow-up letters and/or telephone calls to facility representatives seeking clarifications, corrections, and additional data where needed. The responses to these requests for clarification, along with additional information gathered during engineering site visits and familiarization and record sampling activities were integrated into the data base.

As noted in Section 1.1, EPA suspended activity due to budget constraints on this listing determination project for two and a half years between the fall of 1993 and spring of 1996. Upon resuming the listing determination activities in 1996, the Agency initiated a review of data collected prior to the work stoppage. EPA contacted facility representatives to gather information regarding the current status of chlorinated aliphatics manufacturing operations. Ultimately, in June of 1997 the Agency sent requests for updated data (for calendar year 1996) regarding consent decree wastes generated by each facility. SAIC processed the data received from this request in the same manner as the original RCRA surveys, and entered into the data base. During the work stoppage, two chlorinated aliphatics manufacturers ceased operations, leaving a total of 25 chlorinated aliphatics manufacturing facilities associated with 19 different companies or corporations.

Each of the 25 facilities generated at least one consent decree waste: all 25 facilities generate wastewater, while 16 reported generation of wastewater treatment sludges.

2.2.3 Familiarization Sampling

As part of the analytical phase of the listing determination, the Agency developed a Quality Assurance Project Plan (QAPP) for sampling and analysis activities, followed by collection of 15 "familiarization" samples from three different manufacturing facilities. The agency collected samples of both consent decree wastes (wastewaters and wastewater treatment sludges), as well as QA/QC blanks and a single spent catalyst sample. The Agency collected these samples to assess the effectiveness of the laboratory analytical methods identified in the QAPP for the analysis of the actual residuals of concern. Table 2–4 provides a summary of the familiarization samples collected.

---

[3]Occidental Chemical Corp., located in Gregory, TX, submitted two separate questionnaires, one for each of two manufacturing processes on-site. One of these manufacturing processes is wholly owned by Occidental while the second is owned by OxyMar, Inc., a joint venture between Occidental and Marubeni.

The results of the familiarization sampling effort essentially confirmed the techniques identified in the QAPP and indicated that the laboratory generally would be able to achieve adequate quantitation of target analytes to support the listing determination. The QAPP is provided in the docket to this rulemaking.

It should be noted that following completion of the familiarization sampling and prior to initiating record sampling the Agency decided it was necessary to augment the sampling program outlined in the familiarization QAPP with dioxin/furan analyses for both the aqueous liquid and solid/sludge matrices. This change is incorporated into the final record sampling QAPP. Wastewater and wastewater treatment sludge samples collected during the first record sampling visit were treated as familiarization samples for the dioxin/furan analyses. However, our contracted laboratories did not encounter analytical difficulties during these analyses and these samples were deemed appropriate for use as record samples.

Table 2–9. Familiarization Samples Taken

Site Name	Sample Date	Sample Number	Sample Name
Georgia Gulf Corporation; Plaquemine, LA	4/6/93	GG-01	Wastewater from EDC phase separator (includes wastewater from EDC caustic treatment and drying stills)
		GG-02	Steam stripper effluent bottoms
		GG-03	Drainage wastewater from rainwater/pad areas prior to steam stripping
		GG-04	Spent catalyst from oxyhydrochlorination reactor
		GG-05	Equipment Blank
		GG-06	Dewatered wastewater treatment sludge from pile
Shell Chemical; Norco, LA	4/7/93	SH-01	Equipment Blank
		SH-02	Caustic scrubber wastewater from HCl storage tank vent scrubber
		SH-03	Wastewater from HCl storage tank vent scrubber
		SH-04	Dewatered wastewater treatment sludge from belt press
DuPont-Dow Elastomers; LaPlace, LA	4/8/93	DP-01	Scrubber wastewater from dichlorobutadiene synthesis
		DP-02	Combined wastewater from refining and scrubber wastewater
		DP-03	Scrubber wastewater from dichlorobutadiene isomerization unit
		DP-04	Brine wastewater from chloroprene production
		DP-05	Scrubber wastewater from incinerator

2.2.4 Record Sampling

Prior to the work stoppage in September, 1993, the Agency had finalized a record sampling strategy and selection of facilities. However, the Agency based this sampling strategy, in part, on selection of spent catalyst waste streams — wastes that are no longer under consideration. In addition, 1996 industry data was available for use in the selection strategy. As a result, the Agency revised the sampling strategy.

Given budgetary constraints and the diversity of the chlorinated aliphatics industry beyond the EDC/VCM manufacturers, the Agency made every attempt to formulate a record sampling selection strategy which would ensure representativeness of the industry as a whole. The remainder of this section describes the rationale employed to identify 1) candidate facilities for record sampling and 2) individual waste samples.

1) Facility Selection: The Agency evaluated the following issues in selecting chlorinated aliphatics facilities for record sampling:

a) What type of products are manufactured at the facility? The Agency made every attempt to make the record sampling program representative of the entire chlorinated aliphatics manufacturing industry. To ensure sufficient coverage of the industry, each production process at a facility and its relative prevalence in the industry was taken into account.

b) Does the facility generate wastes of concern? Even though a facility might manufacture a chlorinated aliphatic product of interest, the manufacturing process may not generate either wastewaters or wastewater treatment sludges. The Agency considered all facilities with production processes generating wastewaters or wastewater treatment sludges.

c) Does the facility have a dedicated wastewater treatment facility? The Agency targeted facilities with dedicated wastewater treatment systems over facilities with treatment systems co-managing non-chlorinated aliphatic wastewaters because these samples are representative solely of chlorinated aliphatic processes.

d) Has an engineering site visit been conducted at the facility? The Agency gave priority to facilities that had been selected for a prior engineering site visit. Additional information regarding sampling locations and process chemistry and engineering was available for these facilities, simplifying sample collection.

e) What is the geographic location of the facility? Due to budget constraints, additional consideration was given to facilities conveniently located to those facilities already chosen for sampling.

2) Sample Selection: In conjunction with the facility selection process, the Agency evaluated specific sample points. The selection of possible individual waste streams from targeted facilities was based on the following criteria:

a) Is a wastewater or wastewater treatment sludge generated? The only wastes streams collected were consent decree wastes (wastewaters and wastewater treatment sludges).

b) Is the sample location representative of the actual waste entering a risk management unit? As record sampling data ultimately was used as an input into risk assessment modeling, it was important to ensure that the samples collected were representative of the wastes that actually enter waste management units. Ideally, wastewater samples will be combined influents (referred to as "headworks") to the wastewater treatment system, while sludges will be sampled after dewatering operations prior to on- or off-site management.

c) Is the waste stream generated solely from chlorinated aliphatic processes? Many wastewaters in the industry are commingled with wastewaters from non-chlorinated aliphatic manufacturing processes. In these cases, wastewater treatment sludges generated from the treatment of these commingled wastewaters (also referred to as non-dedicated headworks) are also considered commingled or non-dedicated. As a result, collecting wastewater treatment sludges samples from dedicated wastewater treatment systems was a priority. Similarly, the first choice in sampling wastewaters was at the headworks of dedicated wastewater treatment systems. At facilities which did not have dedicated wastewater treatment systems, the Agency collected chlorinated aliphatic wastewaters prior to commingling (*i.e.*, at point of generation within the chlorinated aliphatic process), in addition to after commingling (*i.e.*, at the headworks) such that contaminants may be attributed to chlorinated aliphatics processes, if necessary.

d) Is the waste available for sampling? Certain waste streams are generated only periodically. For these waste streams, sample collection was not always possible. Facility personnel were asked when these wastes were expected to be generated, and attempts were made to sample such wastes.

e) Are there physical limitations to sampling the waste stream? During discussions with facility personnel and during engineering site visits every effort was made to identify specific sampling locations for each potential waste stream. Physical limitations such as piping configurations or extreme temperatures of the waste stream occasionally altered the point of collection.

The Agency initially targeted additional wastewaters and wastewater treatment sludges. However, due to additional factors such as process upsets, unscheduled process changes, and

other operational issues, some samples were not collected because it was determined that the sample would not be representative of wastes generated during "typical" process operations.

Upon completion of the familiarization sampling and analysis effort, the Agency initiated record sampling and analysis of the two consent decree wastes. The Agency sampled wastewaters and wastewater treatment sludges from twelve facilities. The Agency collected 52 samples (41 wastewaters and 11 wastewater treatment sludges), in addition to three Trip Blanks for Volatile Organics and two Field Equipment Rinse Blanks that were analyzed for the same constituents as the record samples. Additional sample volume was collected for five wastewater and wastewater treatment sludges to allow the laboratory to perform matrix spike/matrix spike duplicate (MS/MSD) quality assurance analyses for the aqueous, sludge, and TCLP matrixes. All record samples were collected during a four month period beginning in April 1997 and ending in July 1997. A complete sample-by-sample summary of the Agency's characterization of these samples is provided in Appendix B and a comparison of this data to split samples voluntarily submitted by industry is provided in Appendix C.

Table 2–10 presents a summary of the record sampling program and describes the coverage of the chlorinated aliphatics industry attained by the program. Additionally, Table 2–11 provides a summary of each record sampling facility selected, date of sampling, and descriptions of the samples collected.

Despite the efforts made, the record sampling program was unable to completely cover the entire industry. Consent decree waste streams were not sampled from the manufacture of methallyl chloride (occurs at one location — FMC Corporation, Baltimore, MD). However, this manufacturing process accounts for less than [CBI Redacted] of the total industry-wide production volume in 1996. Additionally, samples were not collected from Aldrich Chemical (Milwaukee, WI), as they manufacture less than 100 lbs, annually, of specialty chlorinated aliphatics compounds. Neither of these two facilities generate wastewater treatment sludges; wastewaters are discharged to a POTW following pretreatment at both facilities.

Table 2–10. Representativeness of the Record Sampling Program

Summary of Consent Decree Wastes Sampled	
Wastewaters sampled at 12 of 25 facilities generating wastewaters – headworks sampled at 5 of 7 facilities with dedicated wastewater treatment systems (7 of 9 systems) – 26% of the industry-wide wastewater quantity was sampled	
Wastewater treatment sludges sampled at 8 of 17 facilities generating wastewater treatment sludges – dedicated sludges sampled at 4 of 7 facilities with dedicated wastewater treatment systems (6 of 9 systems – one additional system sampled, however no sludge was being generated at time of sampling) – 85% of the industry-wide sludge quantity was sampled (90% of non-hazardous sludges sampled)	
Manufacturing Process	Number of wastewater treatment facilities sampled
EDC/VCM	8 of 13 (62%)
Methyl Chloride	1 of 3 (33%)
VCM (using acetylene as a feedstock)	1 of 1 (100%)
Allyl Chloride	1 of 1 (100 %)
Other chlorinated aliphatic processes sampled: – chloroprene – [CBI Redacted] – hexachlorocyclopentadiene – incinerator water treatment (EDC/VCM facility)	4 of 11 (36%)
Industry-wide Total:	15 of 29 (54%)

In addition, the Agency did not collect samples from the following manufacturing processes, as they were not reported to generate either wastewaters or wastewater treatment sludges:

- chloroethane (PPG Industries; Lake Charles, LA)
- trans-1,2-dichloroethane (PPG Industries; Lake Charles, LA)
- allyl chloride (Dow Chemical; Freeport, TX)
- 1,3-dichloropropene (Dow Chemical; Freeport, TX)
- 1,1,2-trichloroethane (Dow Chemical; Freeport, TX)
- perchloroethylene/trichloroethylene/carbon tetrachloride (Dow Chemical; Plaquemine, LA)
- perchloroethylene/trichloroethylene/carbon tetrachloride (Vulcan Materials; Geismar, LA)

Table 2–11. Samples Collected for Record Analysis[4]

Site Name	Sample Date	Sample Number	Sample Name
Occidental; Gregory, TX[5]	4/22/97	OG-01	EDC/VCM Wastewater Stripper Bottoms
		OG-02	Rock Box Effluent
		OG-03	EDC Wastewater Stripper Bottoms to WWTS
		OG-04	EDC/VCM WWT Sludge from Filter Press
		OG-05	Limestone Neutralization Sludge
		OG-06	EDC WWT Sludge from Filter Press
Velsicol; Memphis, TN	5/20/97	VT-01	Combined Caustic Scrubber Waters (Prior to Carbon Treatment)
		VT-02	Caustic Scrubber Water from Incineration
		VT-03	Quench Water from Incineration
		VT-04	Combined Headworks to Pre-treatment
Dow Corning; Carrollton, KY	5/21/97	DC-01	WWT Sludge
		DC-02	Waste HCL from Production Line #1
		DC-03	Spent Scrubber Water from Production Line #1
		DC-04	Waste HCL from Production Line #2
		DC-05	Headworks to the WWTS Following Equalization
DuPont Dow Elastomers; Louisville, KY	5/22/97	DK-01	Scrubber Water from DC Process
		DK-02	Scrubber Water from TCB Process
		DK-03	Wastewater from DCD Process
		DK-04	Combined WW Headworks to WWT
Borden Chemicals and Plastics; Geismar, LA	6/4/97	BG-01	Combined Steam Stripper Bottoms from VCM-E
		BG-02	(Not Collected)
		BG-03	(Not Collected)
		BG-04	Dewatered Solids from VCM-E WWT System
		BG-05	Rainwater/Padwater from VCM-A
		BG-06	Sulfide Treatment Sludge
Vulcan Chemicals; Geismar, LA	6/5/97	VG-01	Steam Stripper Bottoms/Effluent
		VG-02	(Not Collected)
		VG-03	Steam Stripper Bottoms/Effluent

[4]Blanks and MS/MSD samples are not included in this list. Please refer to the QAPP and site-specific analytical data reports contained in the docket for this rulemaking for discussions of these samples and associated results.

[5]Samples collected from this facility were treated as familiarization samples for dioxin/furan analyses, however, the dioxin/furan analytical results for these samples ultimately were used with the remainder of the record samples.

Site Name	Sample Date	Sample Number	Sample Name
		VG-04	(Not Collected)
		VG-05	WWT Headworks - Air Stripper Feed
		VG-06	WWT System Feed to Neutralization (After Air Stripper)
DuPont Dow Elastomers; LaPlace, LA	7/10/97	DD-01	(Not Collected)
		DD-02	(Not Collected)
		DD-03	DCB Isomerization Scrubber Water
		DD-04	WW for HCL Recovery
		DD-05	CD Brine from Steam Stripping
Occidental Chemical Company; Convent, LA	7/11/97	OC-01	EDC Wastewater Stripper Bottoms
		OC-02	Wastewater Treatment Sludge
PPG; Lake Charles, LA	7/14/97	PL-01	OHC Stripper Bottoms
		PL-02	Perc/Tri Stripper Bottoms
		PL-03	WTU Stripper Bottoms
		PL-04	Metal Hydroxide Sludge
Shell Chemical; Norco, LA	7/15/97	SN-01	HCL Scrubber Water
		SN-02	Caustic Scrubber Water
		SN-03	Equalization Effluent (Tank 202) — Plant WW
		SN-04	Wastewater Prior to Aeration (Tank 251) — Combined Plant and Refinery WW
		SN-05	Wastewater Treatment Sludge
Dow Chemical; Freeport, TX	7/17–18/97	DF-01	WW from EDC OHC, Unit V
		DF-02	Biological WWT Sludge
		DF-03	WW from EDC OHC, Unit I
		DF-04	WW from Trichloroethylene Plant
		DF-05	WW Headworks to Biological Treatment, Specialty
		DF-06	WW Headworks to Biological Treatment, Chlorohydrin
		DF-07	CEP WW from VDCM Production
		DF-08	CMP WW from Quench/Stripping
		DF-09	CMP WW from Cooling/ Drying/ Neutralization
Geon; Laporte, TX	7/21/97	GL-01	WWT Sludge
		GL-02	WW from EDC/VCM, After Stripping

3. MANUFACTURING AND WASTEWATER TREATMENT PROCESS DESCRIPTIONS

Section 4 presents the Agency's evaluation on whether wastewaters and wastewater treatment sludges from chlorinated aliphatics manufacturing processes should be listed as hazardous wastes. This section presents the manufacturing processes that generate at least one wastewater and on wastewater treatment systems that generate wastewater treatment sludges. Process descriptions are presented and points of waste generation are identified for the manufacturing and waste management operations evaluated in the Chlorinated Aliphatics industry study. Section 3.1 describes the manufacturing processes and points of waste generation, and Section 3.2 describes the waste treatment processes generating wastes of concern.

3.1 Chlorinated Aliphatics Manufacturing Processes

The chlorinated aliphatics manufacturing processes have been organized in to the following waste groups based on the proposed listings:

- Ethylene dichloride/Vinyl Chloride Monomer
  - Wastewater treatment sludge
- Vinyl Chloride Monomer from Acetylene
  - Wastewater
  - Wastewater treatment sludge
- Methyl chloride
  - Wastewater treatment sludge
- Allyl chloride
  - Wastewater treatment sludge
- Other (remaining processes)
  - Wastewaters
    - Chlorinated methanes
    - Chloroprene and [CBI Redacted]
    - Methyl chloroform
    - Vinylidene chloride monomer
    - Trichloroethylene
    - Hexachlorocyclopentadiene
    - Methallyl chloride
    - Perchloroethylene/Trichloroethylene/Carbon tetrachloride

These groups are based the proposed hazardous waste definitions for K173, K174, and K175. K173 wastes are wastewaters from generated from the production EDC and VCM, except wastewaters generated from the production of VCM from acetylene; K174 wastes are wastewater treatment sludges generated from the production of EDC and VCM; and K175 are wastewater treatment sludges generated from the production of VCM using mercuric chloride catalyst in an acetylene-based process. Each of these processes generated at least one wastewater. Additional chlorinated aliphatic manufacturing processes were identified, however these processes did not generate any process wastewaters.

3.1.1 Ethylene Dichloride (EDC or 1,2-dichloroethane) and Vinyl Chloride Monomer (VCM or chloroethene)

Ethylene dichloride and vinyl chloride monomer manufacture are the most common processes in the chlorinated aliphatics industry. In most cases, EDC is manufactured for captive use in the production of vinyl chloride monomer. However, at some facilities, EDC is manufactured as a product for sale or use as an intermediate for other products that include tetrachloroethylene, 1,1,2-trichloroethane, and trichloroethylene.

Following the manufacture of VCM, many facilities consume VCM on-site as an intermediate in the manufacture of polyvinyl chloride (PVC). This polymerization reaction is not within the scope of this listing determination, and was not investigated in the course of this industry study. Other uses for VCM include the production of 1,1,1-trichloroethane (methyl chloroform) which is addressed in Section 3.1.7 of this document.

From the industry study, there are 17 EDC and/or VCM manufacturing processes at 15 facilities (12 processes manufacture EDC and VCM, while the remaining five only manufacture EDC). EDC/VCM manufacture accounts for the vast majority of the chlorinated aliphatics industry market share (>85% based on reported 1996 production). A summary of the facilities manufacturing EDC and/or VCM is provided in Table 3–1. Since completion of the industry study, PHH Monomers in Lake Charles, LA, began producing EDC and VCM in late 1996. Because this facility came online after completion of the industry study, only limited plant-specific information on production is included in this background document.

Table 3–1. EDC/VCM Manufacturers

Facility Name	Production Process(es)
Borden Chem and Plastic; Geismar, LA	EDC/VCM balanced process
Condea Vista Company; Westlake, LA (formerly Vista Chemical)	EDC/VCM balanced process
Dow Chemical; Freeport, TX	EDC/VCM balanced process EDC only (direct chlorination)
Dow Chemical; Plaquemine, LA	EDC/VCM balanced process
Formosa Plastics Corp; Baton Rouge, LA	EDC/VCM balanced process
Formosa Plastics Corp; Point Comfort, TX	EDC/VCM balanced process
The Geon Company; LaPorte, TX	EDC/VCM balanced process
Georgia Gulf Corporation; Plaquemine, LA	EDC/VCM balanced process
Oxy Chemical Corp.; Deer Park, TX	EDC/VCM balanced process
Occidental Chemical Corp; Convent, LA	EDC only (direct chlorination)
Oxymar; Gregory, TX	EDC/VCM balanced process
Occidental Chemical Corp, Gregory, TX	EDC only (direct chlorination)
PHH Monomers, Lake Charles, LA*	EDC/VCM
PPG Industries, Inc.; Lake Charles, LA	EDC/VCM balanced process EDC only (direct chlorination)
Vulcan Materials Company; Geismar, LA	EDC only [CBI Redacted]
Westlake Monomers Corp.; Calvert City, KY	EDC/VCM balanced process

* Joint venture between PPG and Condea Vista that began operation in fourth quarter 1996.

1.1.1 Process Descriptions

EDC and VCM are commonly manufactured in the chlorinated aliphatic industry by the "balanced process." The balanced process consists of three primary reaction steps:

1) direct chlorination of ethylene to produce EDC
2) thermal cracking or pyrolysis of EDC to produce VCM and hydrogen chloride (HCl)
3) oxychlorination of ethylene and HCl from thermal cracking to produce additional EDC

The component reactions and overall reaction are as follows:

Direct Chlorination	$CH_2{\sim}CH_2 + Cl_2$	o	$ClCH_2CH_2Cl$
EDC Pyrolysis	$2ClCH_2CH_2Cl$	o	$2CH_2{\sim}CHCl + 2HCl$
Oxychlorination	$CH_2{\sim}CH_2 + 2HCl + ½\ O_2$	o	$ClCH_2CH_2Cl + H_2O$
Overall Reaction	$2CH_2{\sim}CH_2 + Cl_2 + ½\ O_2$	o	$2CHCl{\sim}CHCl + H_2O$

Overall, the EDC production between direct chlorination and oxychlorination is evenly split, and this process results in no net production or consumption of HCl; hence the "balanced process." All the HCl produced in the EDC pyrolysis step is used as the feed for oxychlorination. Figure 3–1 presents a generic process flow diagram for the EDC/VCM balanced process.

Figure 3–1. Generic EDC/VCM Balanced Process

Prior to thermal cracking, the crude EDC undergoes purification. Typically EDC is

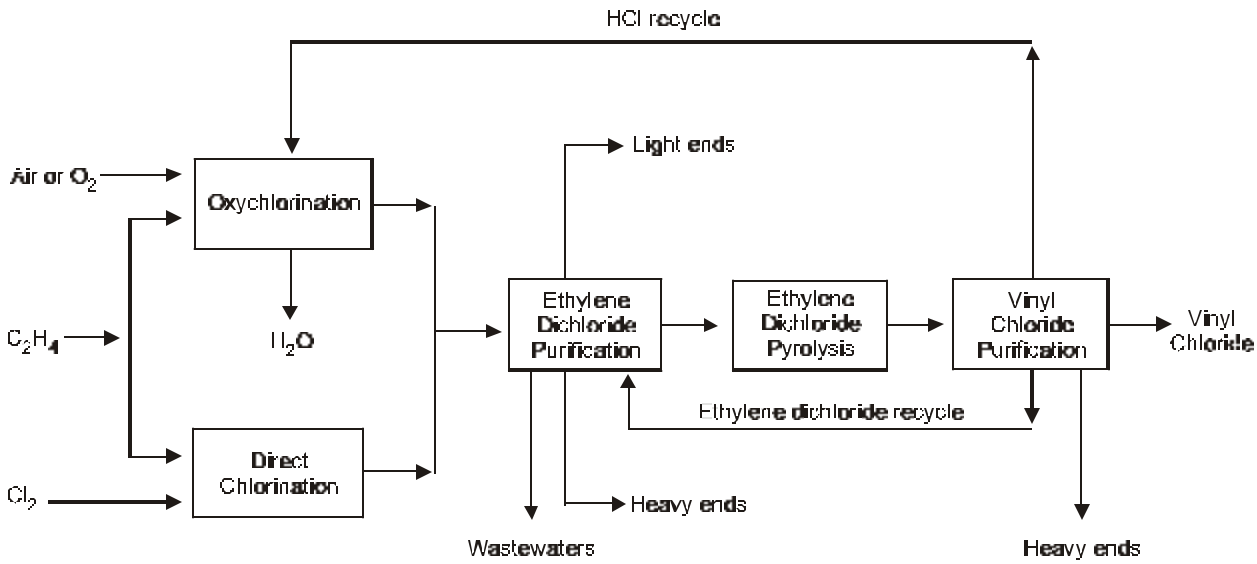

manufactured as an intermediate in the subsequent manufacture of VCM. However, in some cases EDC is manufactured on-site and sent off-site as product or used as an intermediate for other organic chemicals. In most cases, direct chlorination of EDC is used unless there is a convenient source of HCl available. In addition, there is one facility in the United States which manufactures VCM via hydrochlorination of acetylene (this manufacturing process is discussed separately in Section 3.1.2.)

Addition (Direct) Chlorination to Produce Ethylene Dichloride:

Addition (or direct) chlorination, also referred to as catalytic chlorination, is typically carried out in the vapor or liquid phase and uses an accelerator such as ferric chloride, aluminum chloride, antimony pentachloride, or cupric chloride catalyst. The reaction is also influenced by light, the walls of the reactor vessel, and inhibitors such as oxygen. The typical commercial reaction involves the chlorination of ethylene at 40–50°C with ferric chloride in a liquid phase reactor. The following equations illustrate the reactions.

$$FeCl_3 + Cl_2 \quad \circ \quad (FeCl_4^{-}Cl^{+})$$

$$(FeCl_4^{-}Cl^{+}) + CH_2{\sim}CH_2 \quad \circ \quad (CH_2ClCH_2^{+}FeCl_4^{-})$$

$$(CH_2ClCH_2^{+}FeCl_4^{-}) \quad \circ \quad CH_2ClCH_2Cl + FeCl_3.$$

Crude EDC product then exits the reactor and travels as an overhead gas to a condenser system that separates the EDC from noncondensable light ends. After condensation, crude EDC product is combined with crude EDC from the oxychlorination section (described in the next section) and forwarded to EDC purification.

Oxychlorination to Produce Ethylene Dichloride

In the presence of oxygen or air and a cupric chloride catalyst, ethylene and hydrogen chloride react to produce EDC and water. In the balanced process, the source of HCl is typically generated from the pyrolysis of EDC to VCM. However, in some of the EDC-only manufacturing processes, HCl may be supplied from other sources. This reaction can take place in a fluidized or fixed bed reactor and produces ethylene dichloride and water in the following reaction.

$$CH_2{\sim}CH_2 + 2HCl + \tfrac{1}{2}\,O_2 \;\underset{250-300^{\circ}C}{\overset{CuCl_2}{\circ}}\; ClCH_2CH_2Cl + H_2O$$

The product gas stream is sent to a condenser to separate unreacted ethylene from EDC. The unreacted ethylene is recycled back to the reactor as raw material, and EDC proceeds to a phase separator, where crude EDC is separated from process wastewater and washed with caustic to neutralize any residual HCl or chlorine. Crude EDC is then dried to eliminate any water and forwarded with the crude EDC from the addition chlorination process to purification, before thermal dehydrochlorination (thermal cracking) to VCM.

Ethylene Dichloride Purification:

Prior to thermal cracking into VCM, crude EDC enters a sequence of distillation columns to remove light and heavy impurities. The first sequence removes condensable and noncondensable light impurities. By-product, condensable light impurities are removed as tops and sent to an on-site industrial furnace while non-condensable light impurities are discharged as vent (or inerts that must be purged from the process) and sent to a gas incinerator. The bottoms stream is forwarded to a second distillation sequence to remove heavy impurities. Noncondensable impurities are again removed from the top and discharged to a gas incinerator. High-purity EDC is also removed from the top and advanced to the EDC cracking furnaces while bottoms are refinement. From the Dopp kettle, by-product heavies are sent to the on-site industrial furnace, and bottoms are discharged for off-site waste management.

Thermal dehydrochlorination of Ethylene Dichloride to Produce Vinyl Chloride Monomer:

Thermal dehydrochlorination of EDC, also known as thermal cracking, produces VCM and co-product hydrogen chloride.

$$2ClCH_2CH_2Cl \xrightarrow{\Delta} 2CH_2{=}CHCl + 2HCl$$

This reaction routinely takes place in a cracking furnace operating at temperatures ranging from 425–550°C to convert approximately half the purified EDC into VCM and HCl. The product stream is sent to a quenching tower and proceeds to an absorber to remove the HCl by-product. HCl is directed back to the oxychlorination process and used to produce crude EDC. By-product VCM proceeds, along with unreacted EDC, to a VCM stripper and product still for separation. Unreacted EDC is added to crude EDC from oxychlorination and recycled to the cracking furnace. VCM is neutralized with caustic and sent to product storage.

3.1.1.2 Waste Generation and Management

This section focuses on the wastes of concern: wastewaters and wastewater treatment sludges. The wastewater streams are produced during the EDC/VCM manufacturing process from the distillation and purification steps, scrubbers used during start-up/shut-down, crude product washings, phase separation, rainwater, and equipment washdowns. Wastewater treatment sludges are generated from the treatment these wastewaters.

Wastewaters

Two types of wastewater streams are commonly generated from the manufacture of crude EDC. The most common process wastewater consists of water generated as a by-product from the oxychlorination reaction that is separated from the organic EDC phase; this aqueous phase also includes other process wastewaters from caustic washing of wet crude EDC and removal of water from wet EDC. The second type of wastewater generated from various ancillary process activities including: scrubber waters generated during start-up/shut-down operations, drainage wastewaters generated from equipment washdown, and rainwater in the process areas. These wastewaters are typically generated intermittently, and are commonly commingled with the other process wastewaters prior to management.

All EDC/VCM wastewaters are treated in RCRA-exempt tank-based systems or are directly piped to adjacent privately-owned treatment works (PrOTWs). The majority of the on-site treatment systems employ biological wastewater treatment. However, some facilities utilize steam stripping and or carbon treatment only. It should be noted that there are several small volume, periodically generated wastewaters which were reported to be either incinerated or landfillled. These wastewaters are typically generated during reactor clean-outs. A small number of wastewaters were reported to be re-used on-site. At some facilities, acidic wastewaters generated from HCl removal or recovery from the vent gases are used for pH control in the wastewater treatment system, or in other areas of the plant. Section 3.2 provides additional details on wastewater treatment systems in use in the chlorinated aliphatics industry.

Wastewater Treatment Sludges

Wastewater treatment sludges are generated from the treatment EDC/VCM wastewaters. Sludges are generally dewatered using either plate-and-frame filter presses or belt filter presses and dewatered sludge is temporarily stored in roll-off containers prior to on-site or off-site transportation and management. The two most common management methods employed for EDC/VCM sludges are on- or off-site incineration or landfilling. In all cases, incinerators are permitted for management of hazardous wastes, while both Subtitle D and Subtitle C landfills are employed. In addition, one facility (Georgia Gulf; Plaquemine, LA) utilizes an on-site land treatment unit.

Other Wastes (not within scope of this listing determination)

Other wastes generated by EDC/VCM manufacture include distillation bottoms, spent catalysts, cleanout wastes, and other residuals. In general, at least one of the following listed waste codes may apply to these residuals:

F024 process wastes (distillation residues, heavy ends, tars, cleanout) from production of chlorinated aliphatics
F025 condensed light ends, spent filter/filter aids, and spent desiccants from production of chlorinated aliphatics
K020 VCM still bottoms
D043 wastes exhibits toxicity characteristic for vinyl chloride

3.1.2 Vinyl Chloride Monomer Using Acetylene as a Raw Material (VCM-A)

Historically, vinyl chloride monomer was first produced commercially in the 1930s from the reaction of HCl with acetylene. In the 1950s, ethylene became a more plentiful and cheaper feedstock, and commercial processes were developed to produce vinyl chloride from ethylene and chlorine. Today, production of vinyl chloride monomer based on acetylene is less common than the aforementioned EDC/VCM balanced process using ethylene as feedstock. The Agency's industry study identified only one chlorinated aliphatics facility (Borden Chemicals and Plastics; Geismar, LA) using the acetylene-based process. This process represents approximately 1.25% of the total chlorinated aliphatics industry market share in the U.S., and produces only a small fraction of total vinyl chloride monomer in comparison to the balanced process. It should be noted that this facility has recently expanded its VCM production capacity using this process. (See Section 2.1.2 — Recent Developments.)

3.1.2.1 Process Description

This process uses acetylene and anhydrous hydrogen chloride as raw materials in a hydrochlorination reaction to produce vinyl chloride monomer. The basic process chemistry is shown below.

$$CH/CH + HCl \rightarrow CH_2=CHCl$$

In the Borden process, acetylene from the on-site acetylene plant is first purified to remove water. Following drying, the acetylene is mixed with anhydrous hydrogen chloride (HCl) and flows through tubular reactors containing mercuric chloride catalyst. The acetylene and HCl react to form VCM. There are a series of reactors at the facility consisting of primary, secondary and vent reactors. The product gas stream from the primary reactors is condensed and sent to a liquid-vapor phase separator. The vapor from the phase separator is mixed with anhydrous HCl and unreacted acetylene from downstream purification and fed to the secondary reactors. Reaction products from the secondary reactors is condensed and phase separated. The vapor phase is sent to the vent reactor. The vent reactor's effluent is condensed and phase separated. The liquid phase from each of the phase separators, consisting primarily of VCM, is forwarded to purification.

The first column in the distillation train is the crude column. In this distillation step, the overheads consist of unreacted HCl and acetylene and are recycled back to the secondary reactors. The bottoms from the crude column then are sent to a series of two more distillation columns to purify VCM product. These units generate product VCM, crude VCM that is sent to the head of the purification train, and a still bottoms that is sent to a thermal system that recovers the chlorine value as hydrogen chloric acid.

3.1.2.2 Waste Generation and Management

Wastewaters

There are no wastewaters generated directly from the manufacturing process. The reported wastewaters are rainwater and other water (from washing and cleaning) collected from the process area. Due to the presence of mercuric chloride catalyst from catalyst change-outs on the process pad, the padwater (containing mercury) is treated in a sodium sulfide treatment system (described in Section 3.2.2.1) prior to being discharged under an NPDES permit, and is not combined with any other process wastewaters in the plant.

Wastewater Treatment Sludges

Mercury sulfide wastewater treatment sludge is generated from the treatment of the process area padwater. This sludge is dewatered prior to temporary storage on-site in a container. This sludge is managed in an off-site landfill as a nonhazardous waste.

Others (not within the scope of this listing determination)

Additional heavy ends from the VCM purification are incinerated off site as K020 hazardous waste. The stripped chlorinated organic intermediate materials are forwarded to the thermal units for chlorine recovery has HCl. The mercuric chloride catalyst is replaced as the reaction process becomes less effective. The spent catalyst has historically been returned to the manufacturer to utilize and

remaining mercury value. Since May, 1994, Borden has actively pursued an alternative mercury recovery process in the United States.

3.1.3 Methyl Chloride

Manufacture of methyl chloride (chloromethane) is the second most common process in the chlorinated aliphatics industry. Three facilities manufacture methyl chloride as an intermediate which is consumed captively in the production of silicones. The remaining facilities manufacture methyl chloride as the first step in an integrated chlorinated methanes process. Because the proposed listing addresses methyl chloride only, this section will focus on those facilities and processes that manufacture methyl chloride only. The manufacture of higher chlorinated methanes are discussed in more detail in Section 3.1.5.1.

Methyl chloride manufacture accounts for a small percentage of the chlorinated aliphatics industry market share (<3% based on reported 1996 production). A summary of the methyl chloride manufacturing facilities is provided in Table 3–2 on the following page.

Table 3–2. Methyl Chloride Manufacturers

Facility Name	Production Processes
Dow Corning Corporation; Carrollton, KY	Methyl Chloride only
Dow Corning Corporation; Midland, MI	Methyl Chloride only
GE Electric Corporation; Waterford, NY	Methyl Chloride only

3.1.3.1 Process Description

Methyl chloride is commercially manufactured by the hydrochlorination of methanol and hydrogen chloride. The chemical reaction is shown below.

$$CH_3OH + HCl \quad \circ \quad CH_3Cl + H_20$$

The hydrochlorination reaction of methanol and HCl takes place in a liquid phase reaction. The reactor effluent is distilled to remove residual HCl and water as aqueous waste hydrochloric acid. In some cases, this methanol may be recovered from this stream. The methyl chloride stream from the distillation unit is dried and forwarded to product storage or sent on for further conversion to silicones or chlorinated methanes. (See section 3.1.5.1 for discussion on the manufacture of chlorinated methanes.)

3.1.3.2 Waste Generation and Management

Wastewaters

Three facilities reported generating a total of 371,500 metric tons of wastewaters from the production of methyl chloride in 1996. Because the product is washed and water is generated as a by-product of the reaction, acidic wastewaters are generated during product purification. These wastewaters are sent to onsite wastewater treatment.

Wastewater Treatment Sludges

Two facilities reported generating a wastewater treatment sludge. However, only a small percentage of the total wastewater flow to the treatment system can be attributed to methyl chloride production.

Others (not within the scope of this listing determination)

One facility reported generating a spent sulfuric acid (D001) from product drying which is sent off-site for recovery. The spent sulfuric acid undergoes thermal destruction that destroys any organic contaminants and reduces the sulfuric acid to sulfur dioxide (SO_2); sulfuric acid then is regenerated from the SO_2.

3.1.4 Allyl Chloride

One allyl chloride (3-chloro-1-propene) manufacturing process (Shell Chemical, Norco, LA) in the chlorinated aliphatics industry generates wastes within the scope of this listing determination. A second manufacturing process at Dow Chemical, Freeport, TX does not generate any wastes of concern.

3.1.4.1 Process Description

Propylene is reacted with chlorine in a thermal chlorination reaction in the gas phase. The reactor product gas is fed to an allyl chloride prefractionator, which separates allyl chloride from by-product HCl. The crude allyl chloride from the prefractionator is sent to storage, and the HCl is forwarded to an HCl absorber that generates 37% HCl byproduct. The HCl absorber overhead is sent to a caustic scrubber. In addition, storage vents from storage of the HCl by-product are scrubbed with water.

Following crude allyl chloride storage, the allyl chloride enters a three-stage distillation train. The first column removes light ends, the second column removes heavy ends, and the third column purifies a portion of the allyl chloride to a sales grade. The allyl chloride from the second column, which is not purified to sales grade, is fed to a low residence time chlorohydrinator to produce epichlorohydrin. There is a wastewater that is generated from

washing the overhead gas from the second column to knock out any residual allyl chloride. This wash water, containing allyl chloride, also is fed to the chlorohydrinator.

3.1.4.2 Waste Generation and Management

Wastewaters

Two wastewater streams are generated from the manufacture of allyl chloride: caustic scrubber bottoms and HCl scrubber bottoms. These streams are treated in an onsite biological wastewater treatment system with other process wastewaters.

Wastewater Treatment Sludges

This facility reported generating a wastewater treatment sludge. However, only a small fraction (2%) of the total wastewater flow can be attributed to allyl chloride production. Furthermore, this wastewater treatment system accepts process wastewater from the adjacent petroleum refining facility.

Others (not within scope of this listing determination)

The following streams are also generated by this process.

- activated alumina from propylene dryer
- molecular sieve from propylene
- regeneration gases from propylene driers
- coke from allyl chloride reactor
- isopropyl alcohol from clean-out of prefractionator
- coke from crude allyl chloride storage (F024)
- light ends (F025) from allyl chloride purification
- heavy ends (F024) from allyl chloride purification

The activated alumina and spent molecular sieve are managed in an off-site nonhazardous landfill. The regeneration gases are vented to flares. The coke generated from the reactor and allyl chloride storage are incinerated off-site as hazardous and the heavy and light ends are incinerated on-site as hazardous. The isopropyl alcohol stream is managed in the on-site biological wastewater treatment system.

3.1.5 Other Chlorinated Aliphatic Manufacturing Processes

This section describes those chlorinated aliphatics manufacturing processes that generate process wastewaters. However, these facilities commingle chlorinated aliphatic wastewaters with other process wastewaters. In many cases, these wastewater streams are commingled with EDC/VCM wastewaters and would be captured by the proposed listings. Furthermore, in some cases, the contribution to the total wastewater flow is insignificant and the impact and risks associated with these streams cannot be determined with any certainty.

3.1.5.1 Chlorinated Methanes

Chlorinated methanes include methyl chloride (chloromethane, CH_3Cl), methylene chloride (dichloromethane, CH_2Cl_2), chloroform (trichloromethane, $CHCl_3$), and carbon tetrachloride (tetrachloromethane, CCl_4). Facilities producing only chloromethane are discussed in the Section 3.1.3, while facilities producing product carbon tetrachloride via other processes are discussed in more detail in Section 3.1.5.8. Currently, four facilities produce chlorinated methanes commercially in the U.S. In general, these facilities use the same processes with minor variations at each facility.

Table 3–3. Chlorinated Methanes Manufacturers

Facility Name	Production Processes
Dow Chemical Company; Freeport, TX	Methyl Chloride and other Chlorinated Methanes
Dow Chemical Company; Plaquemine, LA	Methyl Chloride and other Chlorinated Methanes
Vulcan Chemicals Company; Geismar, LA	Methyl Chloride and other Chlorinated Methanes
Vulcan Materials Company; Wichita, KS	Methyl Chloride and other Chlorinated Methanes

Commercial facilities typically use two reaction steps to produce chlorinated methanes. The first step is methyl chloride (CH_3Cl) via hydrochlorination of methanol and hydrogen chloride and is described in Section 3.1.3. In the second step, methylene chloride (CH_2Cl_2) and chloroform ($CHCl_3$) co-products are produced along with crude carbon tetrachloride (CCl_4) by-product via thermal chlorination of methyl chloride. The crude reaction products are cooled in a quench system, separated in a condensation unit and finally distilled to yield the two individual pure products. Gaseous hydrogen chloride produced during chlorination is recycled to the hydrochlorinator from the previous step. Several other processes may be used to produce chlorinated methanes, however, none of these processes are performed on a large scale. Figure 3–2 on the following page provides a typical flow diagram for chlorinated methanes production.

Chlorinated methanes plants reported generating a total of [CBI Redacted] MT of wastewaters in 1996. These wastewaters are typically generated from the methanol hydrochlorination step where methyl chloride is dried and purified. By-product water from the reaction and subsequent methyl chloride wash steps generate the bulk of the wastewater. Wastewater treatment sludges were reported to be generated by these facilities, however chlorinated methanes wastewaters make up a very small portion of the total wastewater flow. Furthermore, these streams are commingled with EDC wastewaters, and any wastewater sludge generated would be captured under the proposed listing.

Figure 3–2. Chlorinated Methanes Process Flow Diagram

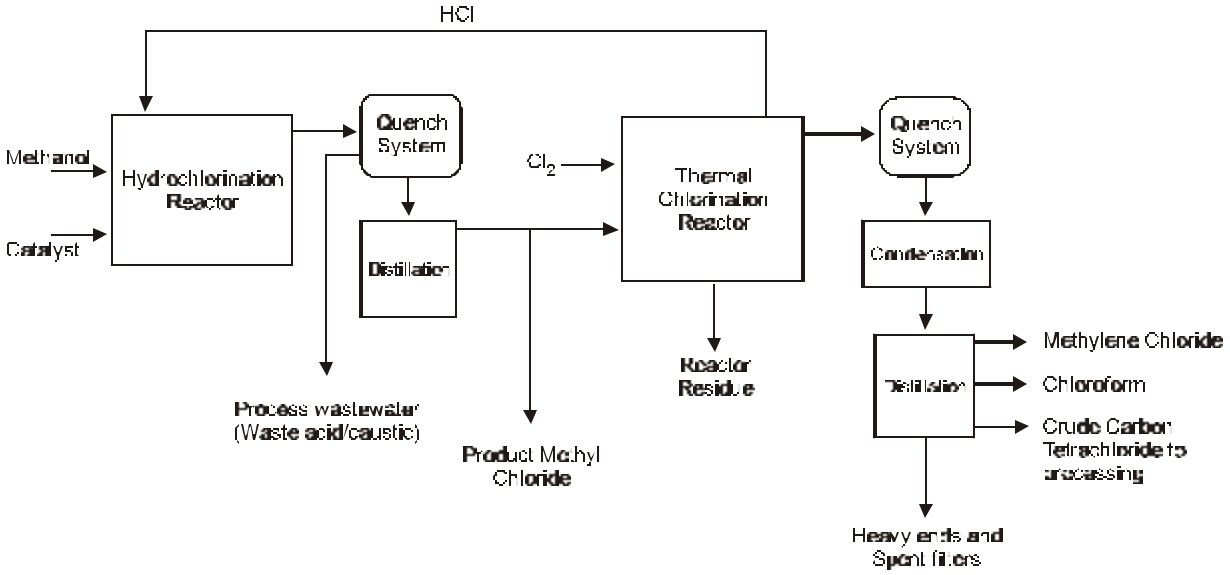

3.1.5.2 Chloroprene and [CBI Redacted]

In the first process, butadiene, chlorine, and caustic are reacted to form a mixture of 1,4-dichloro-2-butene (1,4-DCB) and 3,4-dichloro-1-butene (3,4-DCB). The crude DCB mixture is sent through a series of vacuum distillation units to remove unwanted organics and to separate and purify the DCB components. 1,4-DCB is sent to an isomerization reactor to convert it to 3,4-DCB. Purified 3,4-DCB is combined with caustic, catalyst, and inhibitors in a series of reactors to dehydrochlorinate the 3,4-DCB to crude chloroprene. The crude chloroprene is steam stripped to remove brine that is formed as part of the reaction, and the purified product is sent to the second process to produce neoprene. This process generates the following wastewaters:

- scrubber wastewaters from DCB production
- brine wastewater from chloroprene stripping unit
- HCl recovery scrubber

The DCB scrubber wastewaters are combined with incinerator scrubber waters and sent to a clarifier to remove organics. The aqueous phase is neutralized with HCl or NaOH and sent to underground injection wells as hazardous waste. The organic phase is incinerated onsite as a hazardous waste. The chloroprene brine is typically sent to a separate clarifier that periodically generates an organic layer which is sent to the onsite incinerator as hazardous waste. Normally, the aqueous phase is neutralized with NaOH or HCl, filtered, and disposed in nonhazardous injection wells. However, it is often combined with the hazardous streams prior to neutralization to help meet specific gravity

requirements of the hazardous waste underground injection well. Wastewater from the HCl scrubber is reused onsite for its acid value.

[CBI Redacted]

All the wastewaters are sent to the onsite wastewater treatment system where the streams are neutralized with lime and discharged to a POTW for biological treatment. Wastewater treatment sludges generated from the clarifier are dewatered and managed as hazardous wastes in an onsite incinerator. These facilities generate at total of [CBI Redacted] metric tons of wastewater from the production of chlorobutadiene and chloroprene.

3.1.5.3 Methyl Chloroform (1,1,1-Trichloroethane)

Methyl chloroform, or 1,1,1-trichloroethane, is commonly produced from (1) thermal or photochemical chlorination of 1,1-dichloroethane, (2) hydrochlorination of 1,1,2-trichloroethane produced from 1,1-dichloroethylene, and (3) direct chlorination of ethane. Two facilities manufacture methyl chloroform in the U.S.. Both facilities use the hydrochlorination of VCM to intermediate 1,1-dichloroethane; 1,1-dichloroethane is then reacted with chlorine to form methyl chloroform. However, one facility integrates an EDC/VCM balanced process to manufacture VCM as a feedstock for methyl chloroform production.

Ethylidene, or 1,1-dichloroethane, is produced commercially from the hydrochlorination reaction using hydrogen chloride and vinyl chloride. The reactor is followed by a distillation sequence to remove heavy impurities and unreacted feedstocks from crude 1,1-dichloroethane. The unreacted feedstocks are recycled back to the reactor, the impurities are disposed as hazardous wastes, while intermediate 1,1-dichloroethane sent to the chlorination reactors.

1,1-dichloroethane is thermally or photochemically chlorinated to produce methyl chloroform and HCl . Typical by-products from thermal chlorination include HCl, vinyl chloride, vinylidene chloride, tetrachloroethanes, and pentachloroethane. The photochlorination process generates by-products 1,1,2-trichloroethane, tetrachloroethanes, and pentachloroethanes. The reactor effluent from either process is then forwarded to a distillation sequence to separate by-products and impurities from the methyl chloroform product.

By-product HCl is removed by stripping and may be recycled to the 1,1-dichloroethane process for hydrochlorination or other parts of the plant, while other organics and heavy impurities are separated out in the second sequence. By-product 1,1,2-trichloroethane may be sold as final product by some facilities is separated in a final sequence from the 1,1,1-trichloroethane. Along with remaining heavy impurities, it is combined in a distillation sequence with crude product from the 1,1,2-trichloroethane manufacturing process. Refer to section 3.1.13 for further discussion of typical commercial production using by-product 1,1,2-trichloroethane. The methyl chloroform is often blended with inhibitors to make a final product.

Wastewaters are generated primarily from neutralizing and drying steps during methyl chloroform purification. Both facilities reported generated a wastewater treatment sludge, however only a small percentage of the total wastewater flow to the treatment system can be attributed to methyl chloroform production. Furthermore, these wastewaters are commingled with EDC/VCM wastewaters and any wastewater treatment sludges will be captured under the proposed listing.

3.1.5.4 Vinylidene Chloride Monomer (VDCM) or 1,1-Dichloroethylene

Vinylidene chloride monomer is commercially manufactured by the dehydrochlorination of 1,1,2-trichloroethane. Copolymerization with vinyl chloride, acrylonitrile, and various alkylacrylates is one of its most important uses. Two facilities reported manufacturing vinylidene chloride.

1,1,2-Trichloroethane is produced from the direct chlorination of 1,2-dichloroethane (EDC) with chlorine. The reaction stream is distilled to separate unreacted EDC, by-product HCl, and 1,1,2-trichloroethane intermediate. No wastewaters are generated during this process.

1,1,2-trichloroethane and an aqueous alkali, such as lime or sodium hydroxide, are dehydrochlorinated to produce VDCM. By-products from this reaction include water and calcium or sodium chloride. The reactor effluent is usually rinsed, dried, and distilled to eliminate water and impurities. The overhead stream from the first distillation sequence consists of crude VDCM product and must be filtered. Bottoms is forwarded to the second distillation sequence where unreacted 1,1,2-trichloroethane is separated and recycled to the reactor while polymer waste is also removed.

Wastewaters are generated from the vinylidene chloride purification step. As noted in the previous section, water is generated as a by-product of the dehydrochlorination reaction. This stream is treated onsite in a non-biological treatment system and discharged under NPDES. Both facilities reported generating a wastewater treatment sludge, however only a small percentage of the total wastewater flow to the treatment system can be attributed to vinylidene chloride production. Furthermore, these wastewaters are commingled with EDC/VCM wastewaters and any wastewater treatment sludges will be captured under the proposed listing.

3.1.5.5 Trichloroethylene

Subsequent to production from acetylene, trichloroethylene is mostly manufactured in the U.S. from ethylene or 1,2-dichloroethane. With the addition of chlorine, ethylene or dichloroethane can be chlorinated to produce trichloroethylene and by-product tetrachloroethylene. In an oxychlorination process, 1,2-dichloroethane also produces trichloroethylene and by-product tetrachloroethylene (or perchloroethylene). Production of tetrachloroethylene (or perchloroethylene) is further discussed in section 3.1.12. One facility (Dow Chemical, Freeport, TX) reported manufacturing trichloroethylene product and perchloroethylene and HCl byproducts.

Trichloroethylene is produced from direct chlorination and thermal cracking. EDC and chlorine are reacted and quenched with recycled crude product. The heavies are removed and the crude products are forwarded to a series of condensers to remove chlorine and HCl. The condensed organics are sent to an initial distillation step to separate trichloroethylene from the rest of the stream. The trichloroethylene is dried and forwarded to storage and sales. The remaining residual organics are sent to a second distillation step were a light and heavy stream are produced. The light stream is sent to a third distillation to separate crude tetrachloroethylene from crude trichloroethylene. The crude tetrachloroethylene is shipped offsite to another Dow facility for finishing and sales, and the crude trichloroethylene is recycled back for purification. The heavy stream from the second distillation is combined with tetrachloroethane to form a feed for the cracking furnace. Product from the cracking furnace is recycled back to the second distillation step.

Wastewaters are generated from the drying and finishing operations, and approximately 8,171 metric tons of wastewater from the generation of trichloroethylene were reported for 1996. This stream is sent to onsite wastewater treatment in tanks and discharged under NDPES. This facility reported generating a wastewater treatment sludge, however only a small percentage of the total wastewater flow to the treatment system can be attributed to trichloroethylene production.

3.1.5.6 Hexachlorocyclopentadiene

[CBI Redacted]

3.1.5.7 Methallyl Chloride

[CBI Redacted]

3.1.5.8 Tetrachloroethylene/Trichloroethylene/Carbon Tetrachloride

In addition to the process described in Section 3.1.5.1, trichloroethylene, tetrachloroethylene, and carbon tetrachloroide may be manufactured from a mixed organic feedstock. One facility utilizes oxychlorination to produce trichloroethylene and tetrachloroethylene, another uses thermal chlorination to produce tetrachloroethylene and carbon tetrachloride, and the last facility separates tetrachloroethylene and carbon tetrachloride using organic streams from various onsite processes as feedstock.

Wastewaters are generated only from the oxychlorination process. The other processes do not generate wastewaters. Only a small portion of the total wastewater flow to the treatment system is associated with the tetrachloroethylene/trichloroethylene process, and these

wastewaters are commingled with EDC/VCM wastewaters. Therefore, any wastewater treatment sludges will be captured under the proposed listing.

3.1.6 Manufacturing Processes That Do Not Generate Wastewater

The following manufacturing processes were identified during the industry study, and were determined not to generate process wastewaters.

- 1,1,2-Trichloroethane (Vinyl Trichloride)
- Ethyl Chloride
- trans-1,2-dichloroethene
- 1,1-dichloroethane
- 1,1,2,2-Tetrachloroethane
- Pentachloroethane
- beta-Trichloroethane

3.2 Waste Treatment Processes

This section presents a summary of the wastewater treatment systems that manage wastewaters generated by the chlorinated aliphatics industry. The following sections will focus on those wastewater systems that manage wastewaters and/or generate sludges included in the proposed listing definitions.

3.2.1 Biological Wastewater Treatment Systems

In general, most process wastewaters from EDC/VCM manufacturing operations are sent to a biological wastewater treatment system, along with wastewater from other process units. A treatment system typically consists of primary clarification or sedimentation to remove solids, secondary (biological) treatment and clarification for organics destruction, and polishing prior to discharge under NPDES. The sludges from the primary and/or secondary clarifiers are dewatered and disposed. Wastewater treatment sludges generated from the treatment of EDC/VCM wastewaters are included in the proposed listing. Because many facilities commingle process wastewaters from other chlorinated aliphatics processes, the proposed listing effectively captures wastewaters from chlorinated aliphatics manufacturing processes other than EDC/VCM.

3.2.2 Non-biological Wastewater Treatment Systems Discharging to NPDES Permitted Sites

In addition to conventional biological treatment, two facilities reported using non-biological wastewater treatment systems. At the first facility, wastewaters generated from the production of VCM from acetylene are sent to a sulfide treatment to remove mercury. The second facility uses a combination of steam stripping, distillation, metals precipitation, and carbon treatment for its wastewaters.

3.2.2.1 Mercury Sulfide Treatment

The sulfide treatment system manages wastewater (e.g, rainwater, wash water) that collects on the VCM-A production area. The collected wastewater is fed to a mix tank where sodium sulfide is added to precipitate mercury as mercury sulfide. Diatomaceous earth is added to aid in the subsequent dewatering step. Precipitated solids are and DE are dewatered in a plate and frame press where it is collected for disposal offsite as a nonhazardous waste. The filtered wastewater is recycled through carbon filters until the mercury concentration is less than 5 ppb and is discharged under NPDES. This wastewater treatment process is typically run on a batch basis.

3.2.2.2 Other Nonbiological Treatment

[CBI Redacted]

3.2.3 Non-Biological Pretreatment Processes Prior to POTW/PrOTW Discharge

In addition, a variety of non-biological pretreatment processes (i.e., steam stripping, pH adjustment, primary clarification) were reported for facilities discharging to POTWs/PrOTWs.

3.2.4 Underground Injection

Two facilities reported disposing their wastewaters via underground injection.

4. WASTE GROUPINGS

The EPA-EDF consent decree specifically addresses two waste streams requiring listing determinations: "wastewaters and wastewater treatment sludges from the production of the chlorinated aliphatics specified in the F024 listing." However, as a result of the industry study and record sampling program, the Agency determined that, in certain cases, it was more appropriate to further sub-divide these two broad waste categories. The Agency is proposing to list as hazardous three of these waste groupings (see below) and to no-list the remaining three. Section III.A.1 of the preamble to this proposed rule discusses the rationales utilized to develop the following six chlorinated aliphatics waste groupings:

- Wastewaters generated from the production of vinyl chloride monomer using mercuric chloride catalyst in an acetylene-based process (VCM-A Wastewaters, proposed as no-list)
- Wastewaters from the production of chlorinated aliphatic hydrocarbons, except for wastewaters generated from the production of vinyl chloride monomer using mercuric chloride catalyst in an acetylene-based process (proposed as K173),
- Wastewater treatment sludges from the production of vinyl chloride monomer using mercuric chloride catalyst in an acetylene-based process (proposed as K175)
- Wastewater treatment sludges from the production of ethylene dichloride or vinyl chloride monomer (proposed as K174)
- Wastewater treatment sludges from the production of methyl chloride (proposed as no-list)
- Wastewater treatment sludges from the production of allyl chloride (proposed as no-list)

The following sections, organized by waste grouping, provide a summary of the waste generation, management, and characterization data collected during the industry study (detailed summaries of all wastewaters and wastewater treatment sludges, regardless of groupings, are presented in Appendix D. In addition, discussions are provided which describe how these data were utilized in the assessment of potential risks from the management of these wastes.

It is important to understand the nature of wastewater treatment systems in the chlorinated aliphatics industry before reviewing the discussions and data tables in the remainder of this section. As noted in Section 2, the manufacture of a chlorinated aliphatic product is commonly only one of several manufacturing operations occurring at a given facility. The other manufacturing operations may involve different chlorinated aliphatic products, or products outside the scope of this listing determination. However, individual wastewaters generated from all of these operations are typically commingled and managed in a common wastewater treatment system. The combined influent to this wastewater treatment system is referred to as the "headworks." In the case where all of the wastewaters contributing to the headworks are generated from chlorinated aliphatics processes, the headworks is labeled "dedicated." A non-dedicated headworks would consist of both chlorinated aliphatics wastewaters and other non-chlorinated aliphatics wastewaters. The same terminology applies to sludges generated from the treatment of the headworks waters (i.e., a "dedicated"sludge is one that is generated from the treatment of a dedicated headworks).

1996 data is presented in each of the tables in Sections 4.1 and 4.2.

4.1 Wastewaters

4.1.1 Proposed No-List: Wastewaters Generated from the Production of Vinyl Chloride Monomer Using Mercuric Chloride Catalyst in an Acetylene-Based Process (VCM-A Wastewaters)

This waste grouping defines a single wastewater generated from the VCM-A manufacturing process utilized by Borden Chemicals and Plastics in Geismar, LA (please refer to Section 3.1.2 for additional details on this manufacturing process.) This wastewater is segregated from all other wastewaters generated at the site and treated in a system dedicated to this waste stream. Waste generation and management statistics for this waste grouping are provided in Tables 4–1 and 4–2 below.

Table 4–1. Waste Generation Statistics for VCM-A Wastewaters

Facility/Location	Headworks Quantity (Mtons)	% Dedicated	Waste Codes	Managed as HAZ?	Final Management
Borden Chemicals and Plastics; Geismar, LA	22,200	100%	—	RCRA-exempt tank-based system	NPDES
Total:	22,200				

Table 4–2. Waste Management Statistics for VCM-A Wastewater

Final Management	# of Streams	# of Streams with Unreported Volumes	Total Volume (Mtons)
treatment in tanks to NPDES discharge	1	0	22,200
Total	1	0	22,200

Due to the fact that this waste stream is characteristically hazardous for mercury (see Table 2–6) and is currently managed as a hazardous waste (RCRA-exempt wastewater treatment system), the Agency believes that no additional regulatory action is required to address the risks associated with this waste. See the preamble for this proposed rulemaking for additional details on this no-list decision. As a result, no deterministic or probabilistic risk assessment was performed.

This wastewater was sampled during the Agency's sampling program and assigned sample number BG-05 (see Table 2–6). Table 4–3 provides a summary of the Agency's analytical characterization of this sample.

Table 4-3. Waste Characterization Data for VCM-A Wastewaters

FACILITY ID: BG
Sample Date: 06-04-97
Matrix: Wastewater

Volatile Organics - Method 8260A µg/L

	CAS No.		BG-05
Acetone	67641		4,200
Benzene	71432		85
2-Butanone	78933		67
Carbon disulfide	75150	J	2.6
Chlorobenzene	108907		16
Chloroethane	75003		12
1,2-Dichlorobenzene	95501		5
1,4-Dichlorobenzene	106467	J	2.9
1,1-Dichloroethane	75343		810
1,2-Dichloroethane	107062		40
1,1-Dichloroethene	75354	J	2.6
trans-1,2-Dichloroethene	156605	J	39
1,2-Dichloropropane	78875		9.9
Ethylbenzene	100414		5.2
4-Methyl-2-pentanone	108101	J	2.8
Toluene	108883	J	4.6
1,1,2-Trichloroethane	79005		47
Vinyl chloride	75014	J	680

Semivolatile Organics - Method 8270B µg/L

	CAS No		BG-05
Benzoic acid	65850		67
Benzyl alcohol	100516	J	13
Di-n-butyl phthalate	84742		290
2,4-Dimethylphenol	105679		18
Bis(2-ethylhexyl)phthalate	117817		52

Total Metals - Methods 6010, 7470 mg/L

	CAS No.	BG-05
Aluminum	7429905	2.08
Calcium	7440702	56.0
Chromium	7440473	0.35
Copper	7440508	0.39
Iron	7439896	139
Lead	7439921	0.070
Magnesium	7439954	7.60
Manganese	7439965	1.21
Mercury	7439976	8.60
Molybdenum	7439987	0.10
Nickel	7440020	0.70
Potassium	7440097	11.6
Sodium	7440235	196
Zinc	7440666	3.58

General Chemistry mg/L

	CAS No.	BG-05
TSS	NA	540
Oil & Grease	NA	111
TOC	NA	302

Dioxins/Furans - Method 1613 ng/L

	CAS No.	BG-05
Total TCDF	55722275	0.010
Total TCDD	41903575	0.027
Total HxCDD	34465468	0.050
1,2,3,4,6,7,8-HpCDF	67562394	0.048
Total HpCDF	38998573	0.048
1,2,3,4,6,7,8-HpCDD	35822469	0.170
Total HpCDD	37871004	0.340
OCDF	39001020	0.098
OCDD	3268879	1.300

Notes:

J Compound's concentration is estimated. Mass spectral data indicate the presence of a compound that meets the identification criteria for which the result is less than the laboratory detection limit, but greater than zero.

4.1.2 Proposed K173: Chlorinated Aliphatics Wastewaters, excluding VCM-A Wastewaters

This waste grouping consists of all wastewaters generated from chlorinated aliphatics manufacturing with the exception of the wastewater defined in Section 4.1.1. This waste grouping consists of 75 wastewaters generated by the 23 facilities identified in the Industry Study and represents the generation of more than 11 million metric tons of wastewater per year. These wastewaters are commonly commingled with other non-chlorinated aliphatics wastewaters at the headworks, prior to treatment.

Table 4–4 illustrates the chlorinated aliphatics headworks quantities utilized in the risk assessment, including the calculated central tendency and high end values used in the risk assessment. This data *does not* encompass all of the wastewater headworks which will be captured by this waste grouping. For the purposes of the risk assessment, non-dedicated headworks containing less than 50% chlorinated aliphatics wastewaters were not included in the analysis. Table 4–5 provides a complete waste management statistic summary for *all* chlorinated aliphatics wastewaters in this waste grouping. However, it is important to note that Table 4–5 represents a summary of all individual wastewater streams and not combined headworks (see Appendix D for a complete summary of all individual wastewater streams and associated headworks).

Table 4–4. Waste Generation Statistics for Chlorinated Aliphatics Headworks Used in the Risk Assessment

Facility/Location	Headworks Waste Quantity (Mtons)	% Dedicated	Waste Codes	Managed as HAZ?	Final Management
The Geon Company; LaPorte, TX	962,950	100%	—	RCRA-exempt tank-based systems	NPDES
Occidental/OxyMar	417,000	100%	—		NPDES
PPG Industries; Lake Charles, LA	324,500	100%	—		NPDES
DuPont-Dow Elastomers; LaPlace, LA	314,770	100%	—	No	UIC
PPG Industries; Lake Charles, LA	173,600	100%	—	RCRA-exempt tank-based systems	NPDES
Occidental/OxyMar	157,500	100%	—		NPDES
PPG Industries; Lake Charles, LA	127,250	100%	—		NPDES
Westlake Monomers; Calvert City, KY	98,000	100%	—	—	PrOTW
Total:	2,575,570				
Central Tendency (average):	321,946				
High End (maximum):	962,950				

Table 4–5. Waste Management Statistics for Individual Chlorinated Aliphatics Wastewaters

Final Management	# of Streams	# of Streams with Unreported Volumes	Total Volume (Mtons)
treatment in tank to NPDES discharge	45	4	9,525,343
treatment in tank to POTW discharge	11	0	425,173
treatment in tank to PrOTW discharge	7	0	1,017,734
discharge to UIC on-site	8	0	497,167
drumming and disposal in Subtitle D Landfill	1	0	19
Recovery/re-use/reclamation	3	0	26,120
Total	75	4	11,491,557

For the purposes of assessing risk from the management of this waste stream, the Agency evaluated the manner in which it is currently managed. Regardless of their final disposition, chlorinated aliphatics wastewaters are typically stored or treated in tanks. The Agency assessed the risks associated with treatment in open tanks and found these risks sufficient to support a hazardous waste listing determination. No further assessments were performed. Although treatment in surface impoundments was reported for five facilities in 1991, and for two facilities in 1996, the Agency confirmed that no surface impoundments are currently utilized for the management of chlorinated aliphatic wastewaters. Therefore, a treatment in surface impoundment scenario was not included in the risk assessment.

Table 4–6. Selection of Risk Assessment Modeling Scenarios: Chlorinated Aliphatics Wastewaters

Management	Basis for Consideration in Risk Assessment
treatment in tank to NPDES discharge	treatment in an open tank was assessed as it was considered to be a management practice of concern and is currently in use
treatment in tank to POTW discharge	treatment in an open tank was assessed as it was considered to be a management practice of concern and is currently in use
treatment in tank to PrOTW discharge	treatment in an open tank was assessed as it was considered to be a management practice of concern and is currently in use
discharge to UIC on-site	treatment in an open tank was assessed as it was considered to be a management practice of concern and is currently in use
drumming and disposal in Subtitle D Landfill	Not included: This management practice was reported for a small volume of wastewater generated during reactor clean-out operations on a periodic basis.
Recovery/re-use/reclamation	treatment in an open tank was assessed as it was considered to be a management practice of concern and is currently in use

As a part of the record sampling program, the Agency collected 40 wastewater samples included in this waste grouping (representing both individual wastewater and headworks samples). However, for the risk assessment, the Agency only used samples OG-01, OG-03, PL-01, PL-02, PL-03, and GL-02. Table 4–7 provides a summary of the analytical characterization of this waste grouping used by the Agency in the risk assessment, including calculated central tendency and high end concentrations.

Table 4-7. Waste Characterization Data for Chlorinated Aliphatics Wastewaters

Volatile Organics - Method 8260A µg/L

	CAS No.	OG-01	OG-03	PL-01	PL-02	PL-03	GL-02	Central Tendency	High End
1,2-Dichloroethane	107062	82	J 2.4	6	11	< 2.5	57	26.78	82
2-Chloro-1,3-butadiene	126998	< 2.5	< 2.5	10	8	16	< 2.5	6.83	16
Acetone	67641	< 10	J 16	120	J 13	85	< 10	42.33	120
Allyl chloride	107051	17	J 2.1	< 2.5	< 2.5	< 2.5	< 2.5	4.85	17
Bromodichloromethane	75274	< 2.5	< 2.5	< 2.5	< 2.5	< 2.5	< 2.5	2.50	2.5
Bromoform	75252	J 1.6	< 2.5	< 2.5	< 2.5	< 2.5	< 2.5	2.35	2.5
Carbon disulfide	75150	J 2.2	< 2.5	12	J 3.2	< 2.5	< 2.5	4.15	12
Chlorobenzene	108907	< 2.5	< 2.5	10	8.0	7	< 2.5	5.47	10
Chloroethane	75003	< 5	< 5	< 5	16	< 5	< 5	6.83	16
Chloroform	67663	91	63	9	320	24	700	201.1	700
cis-1,2-Dichloroethene	156592	< 2.5	< 2.5	< 2.5	7	< 2.5	< 2.5	3.27	7.1
Dibromochloromethane	124481	J 1.3	< 2.5	< 2.5	< 2.5	< 2.5	< 2.5	2.30	2.5
Ethylbenzene	100414	< 2.5	< 2.5	< 2.5	J 2.9	J 2.8	< 2.5	2.62	2.9
Methyl ethyl ketone	78933	< 2.5	< 2.5	35	< 2.5	J 2.9	< 2.5	7.98	35
Methylene chloride	75092	< 5	< 5	J 5.3	< 5	< 5	< 5	5.05	5.3
Styrene	100425	< 2.5	< 2.5	7	< 2.5	6	< 2.5	3.92	7.3
Tetrachloroethene	127184	< 2.5	< 2.5	< 2.5	9	< 2.5	< 2.5	3.55	8.8
trans-1,2-Dichloroethene	156605	< 2.5	< 2.5	< 2.5	J 3.0	< 2.5	< 2.5	2.58	3
Trichloroethene	79016	< 2.5	< 2.5	< 2.5	11	< 2.5	< 2.5	3.92	11

Semivolatile Organics - Method 8270B µg/L

	CAS No.	OG-01	OG-03	PL-01	PL-02	PL-03	GL-02	Central Tendency	High End
4-Aminobiphenyl	92671	< 20	< 20	< 20	< 20	< 20	J 20	20	20
Benzoic acid	65850	20	20	23	140	< 10	< 10	37.17	140
Benzyl alcohol	100516	< 5	< 5	< 5	< 5	13	< 5	6.33	13
Bis(2-chloroethyl)ether	111444	< 5	260	< 5	< 5	59	< 5	56.50	260
Bis(2-chloroisopropyl)ether	39638329	< 5	< 5	24	< 5	< 5	< 5	8.17	24
Diethyl phthalate	84662	< 5	< 5	90	< 5	< 5	< 5	19.17	90
Dimethyl phthalate	131113	< 5	< 5	< 5	J 8.7	< 5	< 5	5.62	8.7
Bis(2-ethylhexyl)phthalate	117817	< 5	< 5	< 5	< 5	J 7.4	< 5	5.40	7.4
Hexachlorobenzene	118741	< 5	< 5	< 5	J 5.0	< 5	< 5	5.00	5
2-Methylphenol	95487	< 5	< 5	14	< 5	< 5	< 5	6.50	14
4-Methylphenol	106445	< 5	< 5	24	< 5	< 5	< 5	8.17	24
Di-n-octyl phthalate	117840	< 5	< 5	< 5	< 5	J 5.7	< 5	5.12	5.7
Pentachlorophenol	87865	30	< 10	60	< 10	< 10	< 10	21.67	60
Phenol	108952	< 5	< 5	< 5	110	160	< 5	48.33	160
2,4,5-Trichlorophenol	95954	20	< 5	< 5	< 5	< 5	< 5	7.50	20
2,4,6-Trichlorophenol	88062	22	< 5	93	< 5	< 5	< 5	22.50	93

Table 4-7. Waste Characterization Data for Chlorinated Aliphatics Wastewaters

Total Metals - Methods 6010, 7470 mg/L

	CAS No.	OG-01	OG-03	PL-01	PL-02	PL-03	GL-02	Central Tendency	High End
Aluminum	7429905	< 0.1	0.33	11.5	5.68	1.18	44.6	10.57	44.6
Arsenic	7440382	< 0.005	0.01	0.018	< 0.005	< 0.005	0.069	0.02	0.07
Barium	7440393	< 0.1	< 0.1	< 0.10	0.31	< 0.10	< 0.1	0.14	0.31
Beryllium	7440417	< 0.0025	< 0.0025	0.006	< 0.0025	< 0.0025	< 0.0025	0.00	0.01
Calcium	7440702	81.3	10.4	10.7	82.7	40.5	14.4	40.00	82.7
Chromium	7440473	0.03	0.08	0.67	2.86	0.05	0.30	0.67	2.86
Cobalt	7440484	< 0.025	< 0.025	< 0.025	0.06	< 0.025	< 0.025	0.03	0.06
Copper	7440508	0.20	0.10	33.5	16.3	0.08	8.39	9.76	33.5
Iron	7439896	9.2	136	24.3	658	7.23	4.50	139.87	658
Lead	7439921	< 0.0015	0.02	0.010	0.12	0.003	0.006	0.03	0.12
Magnesium	7439954	8.6	< 2.5	10.7	22.9	20.1	2.46	11.21	22.9
Manganese	7439965	0.10	0.55	0.24	3.69	0.52	0.08	0.86	3.69
Mercury	7439976	< 0.00025	< 0.00025	< 0.00025	< 0.00025	0.0008	< 0.00025	0.00034	0.0008
Molybdenum	7439987	< 0.01	< 0.01	< 0.01	0.24	< 0.01	< 0.01	0.05	0.24
Nickel	7440020	0.15	0.07	10.3	40.6	0.09	0.14	8.56	40.6
Potassium	7440097	53.0	27.2	20.2	16.8	6.0	7.2	21.73	53
Sodium	7440235	7210	2860	26400	181	11200	4750	8766.83	26400
Vanadium	7440622	< 0.025	< 0.025	< 0.025	< 0.025	< 0.025	< 0.025	0.03	0.03
Zinc	7440666	0.10	0.21	0.66	3.90	0.33	0.21	0.90	3.9

Dioxins/Furans - Method 1613 ng/L

	CAS No.	OG-01	OG-03	PL-01	PL-02	PL-03	GL-02	Central Tendency	High End
1,2,3,4,6,7,8-HpCDD	35822469	0.069	< 0.028	0.310	< 0.50	< 0.024	0.880	Dioxin congener concentrations in Sample PL-01 were used to represent central tendency congener concentrations (non-detects were treated as zero).	Dioxin congener concentrations in Sample GL-02 were used to represent high end congener concentrations (non-detects were treated as zero).
1,2,3,4,6,7,8-HpCDF	67562394	1.90	< 0.028	4.60	7.90	< 0.024	43.0		
1,2,3,4,7,8,9-HpCDF	55673897	0.240	< 0.028	0.830	1.70	< 0.024	12.0		
1,2,3,4,7,8-HxCDD	39227286	< 0.025	< 0.028	< 0.0225	< 0.038	< 0.024	0.052		
1,2,3,6,7,8-HxCDD	57653857	< 0.025	< 0.028	< 0.0225	< 0.046	< 0.024	0.091		
1,2,3,7,8,9-HxCDD	19408743	< 0.025	< 0.028	< 0.0225	< 0.047	< 0.024	0.110		
1,2,3,4,7,8-HxCDF	70648269	< 0.070	< 0.028	0.610	2.10	< 0.024	5.30		
1,2,3,6,7,8-HxCDF	57117449	0.110	< 0.028	0.280	1.10	< 0.024	1.20		
1,2,3,7,8,9-HxCDF	72918219	0.098	< 0.028	0.076	0.370	< 0.024	< 1.2		
2,3,4,6,7,8-HxCDF	60851345	0.100	< 0.028	0.120	0.630	< 0.024	0.430		
2,3,4,7,8-PeCDF	57117314	< 0.025	< 0.028	< 0.0225	0.230	< 0.024	0.210		
2,3,7,8-TCDD	41903575	< 0.005	< 0.007	< 0.0045	< 0.005	< 0.005	0.017		
2,3,7,8-TCDF	51207319	< 0.005	< 0.0165	< 0.0045	0.021	< 0.005	0.082		
OCDD	3268879	0.600	0.19	6.50	4.90	< 0.048	6.90		
OCDF	39001020	4.60	0.75	140	24.0	0.110	6000		
Total HpCDD	37871004	0.069	< 0.028	0.510	0.590	< 0.024	1.30		
Total HpCDF	38998753	3.00	0.85	7.00	9.60	< 0.024	60.0		
Total HxCDD	34465468	< 0.025	< 0.028	< 0.0225	< 0.047	< 0.024	0.510		
Total HxCDF	55684941	1.2	0.44	1.70	9.30	< 0.024	9.30		
Total PeCDF	30402154	0.300	0.15	< 0.0225	2.70	< 0.024	0.440		
Total TCDD	41903575	< 0.005	< 0.007	< 0.0045	< 0.005	< 0.005	0.049		
Total TCDF	55722275	0.049	< 0.0165	< 0.0045	0.970	< 0.005	0.860		

Table 4-7. Waste Characterization Data for Chlorinated Aliphatics Wastewaters

General Chemistry (mg/L)

	CAS No.	OG-01	OG-03	PL-01	PL-02	PL-03	GL-02	Central Tendency	High End
TDS	NA	18400	6420	NA	NA	NA	NA	12410	18400
TSS	NA	48	280	1440	< 10	< 10	308	349.33	1440
TOC	NA	790	34	1570	85	19	491	498.17	1570
Oil & Grease	NA	NA	NA	< 1	< 1	< 1	< 1	1	1

Note: The central tendency concentration is the average concentration. The high-end concentration is the maximum detected value. However, for dioxins, only samples PL-01 and GL-02 represent central tendency and high-end concentrations, respectively.

< = Non-Detect values are reported as 1/2 the laboratory reporting limit.

J = Compound's concentration is estimated. Mass spectral data indicate the presence of a compound that meets the identification criteria for which the result is less than the laboratory detection limit, but greater than zero.

NA = Not available

NAP = Not applicable (toxicity equivalency factor is zero)

4.2 Wastewater Treatment Sludges

4.2.1 Proposed K174: EDC/VCM Wastewater Treatment Sludges, excluding VCM-A Sludge

This waste grouping consists of all sludges generated from the treatment of EDC/VCM wastewaters, excluding sludge generated from the treatment of VCM-A wastewater. Please refer to Sections 3.1.1 and 3.2 for additional details on the manufacture of EDC/VCM and wastewater treatment systems utilized to manage these wastewaters. This waste grouping consists of 16 wastewater treatment sludges generated by 12 facilities.

As discussed previously, many wastewater treatment systems handling EDC/VCM wastewaters also handle other chlorinated aliphatic and non-chlorinated aliphatic wastewaters. As a result, this waste grouping captures a large volume of sludge which would not otherwise be captured if these wastewater streams were segregated. The total volume of sludge captured by this waste grouping (based on 1996 data) is 104,561 Mtons. In order to estimate the volume of EDC/VCM sludge attributable to only the EDC/VCM wastewaters, the Agency calculated "apportioned" volumes. An apportioned volume it equal to the total sludge volume multiplied by the percentage of EDC/VCM wastewaters contributing to the total wastewater volume treated[6]. The total 1996 apportioned EDC/VCM volume is 6,574 Mtons.

Table 4–8 illustrates the apportioned EDC/VCM sludge quantities utilized in the risk assessment, including the calculated central tendency and high end values used in the risk assessment. This table includes *all* of the EDC/VCM sludges reported to be generated in 1996. There were two instances where two sludges generated at different facilities were reported to be disposed at the same facility. As a result, these two pairs of quantities were treated as a single commingled waste volume in the risk assessment. Each of these four individual waste volumes are presented in Appendix D. Please note that the italicized quantities (those wastes which are already hazardous) were not utilized in the risk assessment.

Table 4–9 provides a complete waste management statistic summary for *all* EDC/VCM wastewater treatment sludges. Management practices employed for these wastes were limited to landfilling, hazardous waste incineration, and a single occurrence of land treatment.

The Agency conducted both a deterministic and probabilistic risk assessment for this waste grouping for two separate management scenarios: land treatment and landfilling. These two management scenarios represent the only management practices employed for nonhazardous EDC/VCM sludges, and also are the management practices of most concern. The Agency decided to use analytical data associated only with dedicated sludge samples to eliminate the contribution of non-chlorinated aliphatic constituents. As a result, the Agency felt is was necessary to use apportioned sludge volumes in the risk assessment.

---

[6]In other words, for a facility with a wastewater treatment system generating 100 Mtons of sludge that treats 75% EDC/VCM wastewaters and 25% non-chlorinated aliphatic wastewater, their apportioned EDC/VCM sludge volume would be 75 Mtons.

Table 4–8. Waste Generation Statistics for EDC/VCM Sludge

Facility/Location	Waste Quantity (Mtons)	Apportioned EDC/VCM Waste Quantity (Mtons)[1]	Waste Codes	Managed as HAZ?	Final Management
Dow Chemical; Freeport, TX	72,223	115.5	—	No	Subtitle D Landfill
Dow Chemical; Midland, MI	11,100	95.5	—	No	Subtitle D Landfill
Dow Chemical; Freeport, TX	5,627	101	—	Yes	Subtitle C Landfill
Formosa; Point Comfort, TX	4,508[2]	1,104.4[2]	—	No	Subtitle D Landfill
OxyMar; Gregory, TX			—	No	Subtitle D Landfill
Borden; Geismar, LA	3,404[2]	811[2]	—	No	Subtitle D Landfill
Occidental; Convent, LA			—	No	Subtitle D Landfill
PPG Industries, Lake Charles, LA	2,200	581	—	No	Subtitle D Landfill
The Geon Company; LaPorte, TX	1,804	1,804	—	No	Subtitle D Landfill
Georgia Gulf, Plaquemine, LA	1,750	624.2	—	No	Land Treatment
Formosa; Baton Rouge, LA	700	107.3	—	No	Subtitle D Landfill
Occidental/Oxymar; Gregory, TX[3]	*625*	*625*	*F and K*	*Yes*	*Subtitle C Landfill*
Occidental; Deer Park, TX[3]	*442*	*442*	*K*	*Yes*	*Subtitle C Landfill*
Occidental; Gregory, TX	160	160	—	No	Subtitle D Landfill
Condea Vista; Westlake, LA[3]	*11*	*1.6*	*D*	*Yes*	*Incinerate as HAZ*
	7	*1.1*	*D*	*Yes*	*Incinerate as HAZ*
Dow Chemical; Freeport, TX[3]	*0*[4]	*0*[4]	*D*	*Yes*	*Subtitle C Landfill*
Total:	104,561	6,574			
Central Tendency (average)[3]		542.2			
High End (maximum)[3]		1804			
Totals used in Risk Assessment[3]	103,476	4,880			

[1] Quantities calculated based on the percentage of EDC/VCM wastewaters contributing to the wastewater treatment system headworks generating the sludge
[2] Due to evidence of co-management, individual wastes were treated as a single combined waste quantity for the purposes of the risk assessment
[3] *Italics denote wastes not incorporated into the EDC/VCM sludge risk assessment (not used in calculation of central tendency or high end)*
[4] This sludge was not generated in 1996.

Table 4–9. Waste Management Statistics for EDC/VCM Sludge

Final Management	# of Streams	# of Streams with Unreported Volumes	Total Volume (Mtons)
Storage in pile on-site, on-site land treatment unit	1	0	1,750
Storage in container on-site, Subtitle C incineration (on- or off-site)	3	1	18
Storage in container on-site, on-site Subtitle D landfill	2	0	83,323
Storage in container on-site, off-site Subtitle D landfill	8	0	12,776
Storage in container on-site, on-site Subtitle C landfill	1	0	5,627
Storage in container on-site, off-site Subtitle C landfill	2	0	1,067
Total	17	1	104,561

Table 4–10. Selection of Risk Assessment Modeling Scenarios: EDC/VCM Sludge

Management	Basis for Consideration in Risk Assessment
Subtitle D Landfill (on- or off-site)	Management practice currently being used, considered to be of concern
Subtitle C Landfill (on- or off-site)	Not evaluated: risks posed by wastewater treatment sludges managed as hazardous wastes are already addressed by Subtitle C waste management controls
On-site Land Treatment	Management practice currently being used; considered to be of concern

The Agency collected eight (8) samples of EDC/VCM wastewater treatment sludge. These samples were assigned the following identification numbers: OG-04, OG-05, OG-06, GL-01, PL-04, OC-02, DF-02, and BG-04 (see Table 2–11). Complete analytical data summaries are provided for each of these samples in Appendix B. Of these eight, five samples (OG-04, OG-05, OG-06, GL-01, and OC-02) were of dedicated EDC/VCM wastewater treatment systems, however one of the five (OG-05) is currently a hazardous waste. The remaining four dedicated samples were used in the risk assessment, and are presented in Table 4–11 with calculated central tendency and high end concentrations.

Table 4-11. Waste Characterization Data for EDC/VCM Sludges

Volatile Organics - Method 8260A µg/kg

	CAS No.	OG-04		OG-06		OC-02		GL-01	Central Tendency	High End
Acetone	67641		2,000	<	10	<	50		360	605	2,000
Allyl chloride	107051		8	J	4	<	13*	<	12*	5.8	8
2-Butanone	78933		120	<	3	<	13	<	12	36.9	120
Carbon disulfide	75150	<	3	<	3	<	13		34	13.0	34
Chloroform	67663	J	3	J	4	<	13		560	144.8	560
1,2-Dichloroethane	107062		9	J	3	<	13		530	138.7	530
2-Hexanone	591786	J	3	<	3	<	13*	<	12*	2.5	2.5
Methylene chloride	75092	<	5	<	5	<	25		43	19.5	43
Tetrachloroethene	127184	<	3	<	3	<	13	J	18	9.0	18
Trichloroethene	79016	J	3	<	3	<	13*	<	12*	2.7	2.8
Vinyl acetate	108054	J	5		7	<	13*	<	12*	5.9	7
Vinyl chloride	75014	<	5	<	5	<	25*	J	15	8.3	15

TCLP Volatile Organics - Methods 1311 and 8260A µg/L

	CAS No.	OG-04		OG-06		OC-02		GL-01	Central Tendency	High End
Acetone	67641	B	670	B	330	B	23	B	91	278.5	670
2-Butanone	78933		28	<	3	<	3		7	10.0	28
Carbon disulfide	75150	<	3	<	3	<	3		7	3.7	7.2
Chloroform	67663	<	3	<	3	<	3		32	9.9	32
1,2-Dichloroethane	107062	<	3	J	3	J	5		36	11.5	36
cis-1,3-Dichloropropene	10061015	J	4	<	3	<	3	<	3	2.8	3.8
4-Methyl-2-pentanone	108101	<	3	<	3	JB	4	JB	4	3.1	3.7
Methylene chloride	75092		44		23	JB	8	JB	10	21.1	44

Semivolatile Organics - Method 8270B µg/kg

	CAS No	OG-04		OG-06		OC-02		GL-01	Central Tendency	High End
Benzoic acid	65850	J	190	<	650*	<	650*	<	6500*	190	190
Bis(2-chloroethyl)ether	111444	<	330		800	<	330	<	3300*	487	800
Bis(2-ethylhexyl)phthalate	117817	J	140		1,870	J	1,200	J	5,900	2,278	5,900
Hexachlorobenzene	118741	J	110	<	325*	<	330*	<	3300*	110	110

TCLP Semivolatile Organics - Methods 1311 and 8270B µg/L

	CAS No.	OG-04		OG-06		OC-02		GL-01	Central Tendency	High End
Benzoic acid	65850		108	<	10		40		38	49.0	108
Bis(2-chloroethyl)ether	111444	<	5		12	<	5	<	5	6.8	12
4-Methylphenol	106445	<	5	<	5	<	5		42	14.3	42

Table 4-11. Waste Characterization Data for EDC/VCM Sludges

Total Metals - Methods 6010, 7471 mg/kg

	CAS No.	OG-04	OG-06	OC-02	GL-01	Central Tendency	High End
Aluminum	7429905	291	209	579	29,500	7,644.8	29,500
Arsenic	7440382	6	7	< 1	27	10.0	27
Barium	7440393	< 10	43	98	68	54.7	98
Cadmium	7440439	< 0	1	< 0	< 0	0.3	0.63
Calcium	7440702	214,000	13,200	17,300	4,380	62,220	214,000
Chromium	7440473	12	70	25	287	98.5	287
Cobalt	7440484	< 3	10	< 2	< 2	4.3	10.4
Copper	7440508	55	141	129	4,080	1,101	4,080
Iron	7439896	6,940	158,000	40,200	8,390	53,383	158,000
Lead	7439921	2	13	2	4	5.0	13.0
Magnesium	7439954	< 250	2,730	4,040	1,080	2,024.9	4,040
Manganese	7439965	133	663	324	75	298.7	663
Molybdenum	7439987	< 1	< 1	< 1	3	1.4	2.8
Nickel	7440020	32	80	34	120	66.3	120
Potassium	7440097	< 250	< 250	< 250	< 250	ND	ND
Sodium	7440235	2,740	2,830	9,460	2,160	4,297.5	9,460
Vanadium	7440622	15	9	< 2	< 2	7.1	15
Zinc	7440666	56	688	89	149	245.4	688

TCLP Metals - Methods 1311, 6010, and 7470 mg/L

	CAS No.	OG-04	OG-06	OC-02	GL-01	Central Tendency	High End
Arsenic	7440382	14	5	< 5	53	*19.3*	*53*
Calcium	7440702	848	588	413	204	513.3	848
Cobalt	7440484	< 0	0	< 0	< 0	0.0	0.07
Copper	7440508	0	< 0	< 0	22	5.7	22.3
Magnesium	7439954	3	136	154	22	78.7	154
Manganese	7439965	2	13	1	2	4.4	12.9
Molybdenum	7439987	< 0	0	< 0	< 0	0.1	0.22
Nickel	7440020	0	1	< 0	1	0.6	1.3
Potassium	7440097	9	5	4	4	5.6	9.3
Zinc	7440666	< 1	4	< 1	< 1	1.8	4.0

Table 4-11. Waste Characterization Data for EDC/VCM Sludges

Dioxins/Furans - Method 1613 ng/kg

	CAS No.	OG-04	OG-06	OC-02	GL-01	Central Tendency	High End
2,3,7,8-TCDF	51207319	1	< 3	8	145	Dioxin congener concentrations in Sample OG-04 were used to represent central tendency congener concentrations (non-detects were treated as zero).	Dioxin congener concentrations in Sample GL-01 were used to represent high end congener concentrations (non-detects were treated as zero).
2,3,7,8-TCDD	1746016	< 0	< 1	< 0	39		
1,2,3,7,8-PeCDF	57117416	8	21	28	< 1		
2,3,4,7,8-PeCDF	57117314	11	23	12	127		
1,2,3,7,8-PeCDD	40321764	< 1	< 3	< 1	< 40		
1,2,3,4,7,8-HxCDF	67562394	108	107	65	1,425		
1,2,3,6,7,8-HxCDF	57117449	84	< 16	14	< 300*		
2,3,4,6,7,8-HxCDF	60851345	72	33	7	648		
1,2,3,7,8,9-HxCDF	72918219	39	< 40	16	< 140*		
1,2,3,4,7,8-HxCDD	39227286	8	< 3	< 1	< 20*		
1,2,3,6,7,8-HxCDD	57653857	8	< 3	< 1	83		
1,2,3,7,8,9-HxCDD	19408743	6	< 3	< 1	62		
1,2,3,4,6,7,8-HpCDF	67562394	2,100	46	38	20,700		
1,2,3,4,7,8,9-HpCDF	55673897	413	50	24	13,500		
1,2,3,4,6,7,8-HpCDD	35822469	234	15	3	777		
OCDF	39001020	10,800	648	62	212,000		
OCDD	3268879	2,220	297	41	6,480		

TCLP Dioxins/Furans - Methods 1311, 1613 ng/L

	CAS No.	OG-04	OG-06	OC-02	GL-01	Central Tendency	High End
Total TCDF	55722275	0.015	< 0.006	< 0.005	0.049	Dioxin congener concentrations in Sample OG-04 were used to represent central tendency congener concentrations (non-detects were treated as zero).	Dioxin congener concentrations in Sample GL-01 were used to represent high end congener concentrations (non-detects were treated as zero).
Total HxCDF	55684941	< 0.027	< 0.031	< 0.026	0.07		
1,2,3,4,6,7,8-HpCDF	67562394	0.083	< 0.031	< 0.026	1.1		
1,2,3,4,7,8,9-HpCDF	55673897	< 0.027	< 0.031	< 0.026	0.4		
Total HpCDF	38998753	0.083	< 0.031	< 0.026	2.2		
OCDF	39001020	0.5	< 0.06	< 0.05	99		
OCDD	3268879	< 0.055	< 0.06	< 0.05	0.2		

General Chemistry mg/kg

	CAS No.	OG-04	OG-06	OC-02	GL-01	Central Tendency	High End
TOC	NA	NA	NA	3,700	67,900	35,800	67,900
Oil & Grease	NA	NA	NA	680	974	827	974

Note: Central tendency concentration is the average concentration and the high-end concentration is the maximum detected value except for dioxins. Samples OG-04 and GL-01 represent central tendency and high end concentrations, respectively, for dioxins.

J = Compound's concentration is estimated. Mass spectral data indicate the presence of a compoundthat meets the identification criteria for which the result is less than the laboratory detection limit, but greater than zero.

B = Compound also detected in the associated method blank.

* = Non-Detect values greater than the highest detected concentration have been excluded from the calculations.

< = Non-Detect values are reported as 1/2 the laboratory reporting limit.

All concentrations are reported on a wet-weight basis.

4.2.2 Proposed K175: VCM-A Wastewater Treatment Sludges

VCM-A wastewater treatment sludge is generated at Borden Chemicals and Plastics in Geismar, LA from the treatment of the VCM-A wastewater discussed in Section 4.1.1. Please refer to Sections 3.1.2 and 3.2 for additional details on the manufacture of VCM-A and the wastewater treatment system utilized to manage these wastewaters. Waste generation and management statistics for this waste stream are provided in Tables 4–12 and 4–13.

Table 4–12. Waste Generation Statistics for VCM-A Sludge

Facility/Location	Waste Quantity (Mtons)	Apportioned VCM-A Waste Quantity (Mtons)	Waste Codes	Managed as HAZ?	Final Management
Borden Chemicals and Plastics; Geismar, LA	120	120	—	Yes	Subtitle C Landfill
Total:	120	120			

Table 4–13. Waste Management Statistics for VCM-A Sludge

Final Management	# of Streams	# of Streams with Unreported Volumes	Total Volume (Mtons)
Storage in container on-site to off-site Subtitle C Landfill	1	0	120
Total	1	0	120

The agency did not perform a deterministic or probabilistic risk assessment for this waste. The results of a groundwater screening analysis in combination with consideration of additional listing criteria served as the basis for this hazardous waste listing. Please refer to the preamble for this proposed rulemaking for more details on this decision.

This sludge was sampled during the Agency's sampling program and assigned sample number BG-06 (see Table 2–6). Table 4–14 provides a summary of the Agency's analytical characterization of this sample.

Table 4-14. Waste Characterization Data for VCM-A Sludge

FACILITY ID: BG
Sample Date: 06-04-97
Matrix: Wastewater Sludge

TCLP Volatile Organics - Methods 1311, 8260A µg/L

	CAS No.		BG-06
Acetone	67641	B	130
Benzene	71432	J	4.9
Bromodichloromethane	75274	<	5
2-Butanone	78933		9
Carbon disulfide	75150		14
Chloroform	67663	<	5
Dibromochloromethane	124481	<	5
1,1-Dichloroethane	75343		43
1,2-Dichloroethane	107062		7
trans-1,2-Dichloroethene	156605	J	3.2
Methylene chloride	75092	J	6.6
1,1,2-Trichloroethane	79005		10
Vinyl chloride	75014	J	7.1

Semivolatile Organics - Method 8270B µg/kg

	CAS No		BG-06
Benzo(g,h,i)perylene	191242	<	6,600
Di-n-butyl phthalate	84742		20,000
1,2-Dichlorobenzene	95501	J	2,010
1,3-Dichlorobenzene	541731	J	700
1,4-Dichlorobenzene	106467	J	960
Bis(2-ethylhexyl)phthalate	117817	J	3,400
Fluoranthene	206440	J	670
Pyrene	129000	J	2,320
1,2,4-Trichlorobenzene	120821	J	2,340

TCLP Semivolatile Organics - Methods 1311, 8270B µg/L

	CAS No		BG-06
Benzoic acid	65850	J	14
Butyl benzyl phthalate	85687	J	7.9
Phenol	108952	<	10

Total Metals - Methods 6010, 7471 mg/kg

	CAS No.	BG-06
Aluminum	7429905	626
Arsenic	7440382	3.60
Barium	7440393	43.0
Cadmium	7440439	1.0
Calcium	7440702	1,090
Chromium	7440473	15.3
Copper	7440508	43.5
Iron	7439896	2,410
Lead	7439921	15.2
Magnesium	7439954	211.1
Manganese	7439965	14.3
Mercury	7439976	9,200
Nickel	7440020	27.0
Sodium	7440235	785
Vanadium	7440622	6.7
Zinc	7440666	445.7

TCLP Metals - Methods 1311, 6010, 7470 mg/L

	CAS No.	BG-06
Calcium	7440702	417
Chromium	7440473	0.10
Copper	7440508	0.64
Magnesium	7439954	2.7
Manganese	7439965	0.3
Mercury	7439976	0.26
Nickel	7440020	1.0
Potassium	7440097	1.6
Zinc	7440666	9.5

General Chemistry mg/kg

	CAS No.	BG-06
TOC	NA	22,600
Oil & Grease	NA	41,600
BTU	NA	1,085
Percent Solids	NA	43.7

Dioxins/Furans - Method 1613 ng/kg

	CAS No.	BG-06
2,3,7,8-TCDF	51207319	10.1
Total TCDF	55722275	48.1
Total TCDD	41903575	3.8
1,2,3,7,8-PeCDF	57117416	28.8
2,3,4,7,8-PeCDF	57117314	19.7
Total PeCDF	30402154	170.4
1,2,3,4,7,8-HxCDF	70648269	83.0
1,2,3,6,7,8-HxCDF	57117449	48.1
2,3,4,6,7,8-HxCDF	60851345	31.9
1,2,3,7,8,9-HxCDF	72918219	19.2
Total HxCDF	55684941	375.8
Total HxCDD	34465468	65.6
1,2,3,4,6,7,8-HpCDF	67562394	109.3
1,2,3,4,7,8,9-HpCDF	55673897	29.7
Total HpCDF	38998753	139.8
1,2,3,4,6,7,8-HpCDD	35822469	174.8
Total HpCDD	37871004	349.6
OCDF	39001020	100.5
OCDD	3268879	1,440

Notes:

J Compound's concentration is estimated. Mass spectral data indicate the presence of a compound that meets the identification criteria for which the result is less than the laboratory detection limit, but greater than zero.

4.2.3 Proposed No-List: Methyl Chloride Wastewater Treatment Sludges

This waste grouping consists of all sludges generated from the treatment of methyl chloride wastewaters. Please refer to Sections 3.1.3 and 3.2 for additional details on the manufacture of methyl chloride and wastewater treatment systems utilized to manage these wastewaters. There are three methyl chloride sludges generated from two facilities, representing the generation of [CBI Redacted] metric tons of sludge per year.

Table 4–15 illustrates the methyl chloride sludge quantity utilized in the risk assessment, including the calculated central tendency and high end values used in the risk assessment. This table includes *all* of the methyl chloride sludges reported to be generated in 1996. Please note that the italicized quantities (those wastes which are already hazardous) were not utilized in the risk assessment.

Table 4–16 provides a complete waste management statistic summary for *all* methyl chloride wastewater treatment sludges. Management practices employed for these wastes were limited to landfilling.

Table 4–15. Waste Generation Statistics for Methyl Chloride Sludge

Facility/Location	Waste Quantity (Mtons)	Waste Codes	Managed as HAZ?	Final Management
Dow Corning; Carrollton, KY	776	—	No	Subtitle D Landfill
GE Electric; Waterford, NY[2]	*[CBI Redacted]*	*F039*	*Yes*	*Subtitle C Landfill*
	[CBI Redacted]			
Total:	[CBI Redacted]			
Total used in Risk Assessment for both central tendency and high end:	776			

[1] Quantities calculated based on the percentage of methyl chloride wastewaters contributing to the wastewater treatment system headworks generating the sludge
[2] *Italics denote wastes not incorporated into the EDC/VCM sludge risk assessment (not used in calculation of central tendency or high end)*

Table 4–16. Waste Management Statistics for Methyl Chloride Sludge

Final Management	# of Streams	# of Streams with Unreported Volumes	Total Volume (Mtons)
Storage in container on-site, on-site Subtitle D landfill	1	0	776
Storage in container on-site, on-site Subtitle C landfill	2	0	[CBI Redacted]
Total	3	0	[CBI Redacted]

The Agency conducted both a deterministic and probabilistic risk assessment for this waste grouping for a single management scenarios: landfilling. This management scenario represents the only management practice employed for nonhazardous methyl chloride sludges, and also is the management practices of most concern. The Agency used the only analytical data available for this waste grouping: a single non-dedicated sludge sample. As a result, the Agency felt is was necessary to use total (non-apportioned) sludge volume in the risk assessment.

Table 4–17. Selection of Risk Assessment Modeling Scenarios: Methyl Chloride Sludge

Management	Basis for Consideration in Risk Assessment
On-site Subtitle D Landfill	Management practice currently being used, considered to be of concern
On-site Subtitle C Landfill	Not evaluated: risks posed by wastewater treatment sludges managed as hazardous wastes are already addressed by Subtitle C waste management controls

One of the three sludges presented in Table 4–15 (generated at Dow Corning) was sampled during the Agency's sampling program and assigned sample number DC-01 (see Table 2–6). Table 4–18 provides a summary of the Agency's analytical characterization of this sample.

Table 4-18. Waste Characterization Data for Methyl Chloride Sludges

FACILITY ID: DC
Sample Date: 05-21-97
Matrix: Wastewater Sludge

Volatile Organics - Method 8260A µg/kg

	CAS No.		DC-01
Acetone	67641		2,200
Methylene chloride	75092		12,000

TCLP Volatile Organics - Methods 1311, 8260A µg/L

	CAS No.		DC-01
Acetone	67641		150
Carbon disulfide	75150		6
Methylene chloride	75092	J	9.1

TCLP Semivolatile Organics - Methods 1311, 8270B µg/L

	CAS No		DC-01
Benzoic acid	65850	J	13

Total Metals - Methods 6010, 7471 mg/kg

	CAS No.	DC-01
Aluminum	7429905	1,930
Arsenic	7440382	1.9
Calcium	7440702	77,200
Chromium	7440473	7
Copper	7440508	643
Iron	7439896	5,680
Lead	7439921	7
Magnesium	7439954	23,300
Manganese	7439965	109
Nickel	7440020	9.1
Zinc	7440666	574

TCLP Metals - Methods 1311, 6010, 7470 mg/L

	CAS No.	DC-01
Aluminum	7429905	2.4
Arsenic	7440382	0.002
Calcium	7440702	1,470
Copper	7440508	5.3
Magnesium	7439954	81
Manganese	7439965	4.1

General Chemistry mg/kg

	CAS No.	DC-01
TOC	NA	42,100
Oil & Grease	NA	65,400
BTU	NA	3,199
Percent Solids	NA	53.6

Dioxins/Furans - Method 1613 ng/kg

	CAS No.	DC-01
1,2,3,4,6,7,8-HpCDF	67562394	3.1
Total HpCDF	38998753	3.1
1,2,3,4,6,7,8-HpCDD	35822469	7.0
Total HpCDD	37871004	12.9
OCDF	39001020	9.6
OCDD	3268879	44.0

Notes:

J Compound's concentration is estimated. Mass spectral data indicate the presence of a compound that meets the identification criteria for which the result is less than the laboratory detection limit, but greater than zero.

4.2.4 Proposed No-List: Allyl Chloride Wastewater Treatment Sludges

This waste grouping consists of all sludges generated from the treatment of allyl chloride wastewaters. Please refer to Sections 3.1.4 and 3.2 for additional details on the manufacture of allyl chloride and wastewater treatment systems utilized to manage these wastewaters. There is a single allyl chloride sludge generated from one facility, representing the generation of 69,000 metric tons of sludge per year.

Table 4–19 illustrates the allyl chloride sludge quantity utilized in the risk assessment, including the calculated central tendency and high end values used in the risk assessment. This table includes *all* of the allyl chloride sludges reported to be generated in 1996. Table 4–20 provides a complete waste management statistic summary for *all* allyl chloride wastewater treatment sludges. Management practices employed for these wastes were limited to incineration.

Table 4–19. Waste Generation Statistics for Allyl Chloride Sludge

Facility/Location	Waste Quantity (Mtons)	Apportioned Allyl Chloride Waste Quantity (Mtons)	Waste Codes	Managed as HAZ?	Final Management
Shell Chemical; Norco, LA	380,000[7]	1,060	—	No	Incineration as NHAZ
Total:	380,000[7]	1,060			

Table 4–20. Waste Management Statistics for Allyl Chloride Sludge

Final Management	# of Streams	# of Streams with Unreported Volumes	Total Volume (Mtons)
Storage in container on-site, on-site NHAZ incineration	1	0	380,000[7]
Total	1	0	380,000[7]

The agency did not perform a deterministic or probabilistic risk assessment for this waste. The results of an analysis of waste characterization data and the fact that this sludge is generated from a treatment system which is less than 2% dedicated to chlorinated aliphatic wastewaters, in combination with consideration of additional listing criteria served as the basis for this no-listing. Please refer to the preamble for this proposed rulemaking for more details on this decision.

This sludge was sampled during the Agency's sampling program and assigned sample number SN-05 (see Table 2–6). Table 4–21 provides a summary of the Agency's analytical characterization of this sample.

[7]Quantity reported is prior to dewatering (~97% water content).

Table 4-21. Waste Characterization Data for Allyl Chloride Sludge

FACILITY ID: SN
Sample Date: 07-15-97
Matrix: Wastewater Sludge

Volatile Organics - Method 8260A µg/kg

	CAS No.		SN-05
Acetone	67641		230
2-Butanone	78933		62
Carbon disulfide	75150		26
Chlorobenzene	108907	J	15
2-Hexanone	591786	J	33
4-Methyl-2-pentanone	108101	J	20

TCLP Volatile Organics - Methods 1311, 8260A µg/L

	CAS No.		SN-05
Acetone	67641	B	270
2-Butanone	78933		26
4-Methyl-2-pentanone	108101	JB	4.9
Methylene chloride	75092	JB	7.1

TCLP Semivolatile Organics - Methods 1311, 8270B µg/L

	CAS No	SN-05
Benzoic acid	65850	47

Total Metals - Methods 6010, 7471 mg/kg

	CAS No.	SN-05
Aluminum	7429905	8,410
Arsenic	7440382	11.7
Barium	7440393	42.5
Cadmium	7440439	4.4
Calcium	7440702	53,800
Chromium	7440473	53.6
Copper	7440508	36.7
Iron	7439896	6,760.0
Lead	7439921	10.7
Magnesium	7439954	1,930
Manganese	7439965	92.0
Nickel	7440020	39.7
Selenium	7782492	9.0
Sodium	7440235	5,300
Vanadium	7440622	18.7
Zinc	7440666	191.1

TCLP Metals - Methods 1311, 6010, 7470 mg/L

	CAS No.	SN-05
Calcium	7440702	1,350
Magnesium	7439954	16.1
Manganese	7439965	1.35
Nickel	7440020	0.28
Potassium	7440097	3.2

General Chemistry mg/kg

	CAS No.		SN-05
TOC	NA		43,500
Oil & Grease	NA		8,650
BTU	NA	<	335
Percent Solids	NA		32.5

Dioxins/Furans - Method 1613 ng/kg

	CAS No.	SN-05
1,2,3,7,8-PeCDF	57117416	3.2
2,3,4,7,8-PeCDF	57117314	2.2
Total PeCDF	30402154	16.6
1,2,3,4,7,8-HxCDF	70648269	27.6
1,2,3,6,7,8-HxCDF	57117449	12.0
2,3,4,6,7,8-HxCDF	60851345	9.1
1,2,3,7,8,9-HxCDF	72918219	6.2
Total HxCDF	55684941	113.8
1,2,3,6,7,8-HxCDD	57653857	3.9
1,2,3,7,8,9-HxCDD	19408743	6.8
Total HxCDD	34465468	24.1
1,2,3,4,6,7,8-HpCDF	67562394	169.0
1,2,3,4,7,8,9-HpCDF	55673897	55.3
Total HpCDF	38998753	325.0
1,2,3,4,6,7,8-HpCDD	35822469	61.8
Total HpCDD	37871004	126.8
OCDF	39001020	585.0
OCDD	3268879	520.0

Notes:

J Compound's concentration is estimated. Mass spectral data indicate the presence of a compound that meets the identification criteria for which the result is less than the laboratory detection limit, but greater than zero.

B Compound also detected in the associated method blank.

This page intentionally blank.

5. ADDITIONAL INFORMATION FOR FINAL RULE

5.1 Wastewaters Managed in Surface Impoundments

In the proposed rule, the Agency determined that wastewaters from the production chlorinated aliphatics (K173) were not managed in surface impoundments. However, in comments to the proposed rule, EPA became aware that one facility was managing wastewaters in surface impoundments.

The Shell Deer Park Chemical Plant (Chemical Plant) in Texas receives and manages wastewaters for the Shell Chemicals processes, a portion of the Shell Deer Park Refinery, and the Oxy Vinyls vinyl chloride monomer production facility (formally known as Occidental Chemical). The Oxy Vinyls Plant discharges 695,255 Metric tons of wastewater per year which could be classified as a listed hazardous waste by the proposed rule. This stream comprises 7.5% of the approximate 9,298,000 Metric tons per year of the total wastewater flow through the Chemical Plant wastewater treatment system.

The wastewater flow from Oxy Vinyls enters the Chemical Plant sewer where it commingles with wastewater flows from the other sources described above. The combined wastewater stream is treated by activated sludge aggressive biological treatment in three impoundments, followed by three secondary clarifiers operating in parallel. The aerated impoundments cover approximately four acres, and are situated in series (one after another). The facility confirmed that their wastewater treatment impoundments were not Subtitle C impoundments, and that it was unlikely that there was a synthetic liner. The treated wastewater is discharged under Texas Discharge Permit #00402.

According to Shell, an engineering review of required construction to replace the three impoundments with tanks resulted in a capital cost estimate of $50 million. This cost was developed in part from other recently completed projects of similar scope, including the replacement of two impoundments at the Equilon (formerly Shell) Wood River Refinery ($35 million). At Deer Park, the construction would be complicated, and hence more costly, since the new tanks would have to be built on the site of the existing facilities. This would increase costs of the foundation etc. (i.e., pilings, bringing in fill material) to the estimated $50 million level.

Shell indicated that currently there are no hazardous wastewaters managed in the impoundments. If the wastewaters were to become hazardous, the flow from Oxy Vinyls will have to be isolated and piped elsewhere (e.g., to newly-constructed units/tanks). The treated hazardous wastewater would have to by-pass the surface impoundments to a new outfall, and that there might be a lack of available space with respect to the location of any newly-built tanks. In addition, the facility indicated that additional effort and resources will be required to get a permit for any new outfall. The facility also noted that the local Deer Park POTW probably did not have the capacity to manage the wastewaters.

Shell indicated that the source of the chlorinated aliphatics wastewater (Oxy Vinyls Plant) would likely have financial responsibility for any upgrades to the wastewater treatment system resulting from any changes triggered by the wastewater listing (proposed).

5.2 Scope of Facilities Included in the Listing

In response to the proposed rule, the Chemical Manufacturer's Association's (CMA) comments contend that the universe impacted by the chlorinated aliphatics rulemaking is larger than estimated by EPA. In their comments, CMA submitted a list of potentially impacted companies and the compounds that they manufacture. EPA reviewed this list and, using publically available sources, and determined if any of those companies manufactured chlorinated aliphatics, as defined by this rulemaking, and if they had not been addressed by EPA.

EPA performed several types of searches to determine if the facilities were chlorinated aliphatic producers and if they were overlooked in the initial analysis. EPA found that two facilities were potential producers of n-butyl chloride. The remaining facilities were either duplicate listings to those identified by EPA or were not manufacturers of chlorinated aliphatics covered under this rulemaking. Details of the analysis are discussed in Section 5.2.1.

5.2.1 Discussion of Analysis

EPA reviewed and compared the chlorinated aliphatic manufacturing facilities listed by EPA in the Background Document for the proposed rule and the list provided by CMA. This review showed that CMA duplicated many of the facilities already identified by EPA. The CMA list also included compounds which were not chlorinated aliphatics, e.g., fluorinated hydrocarbons.[8] EPA visited company web sites and www.chemexpo.com for publicly-available manufacturing data. Lastly, EPA contacted those facilities where the initial analyses were inconclusive. Below are the details of EPA's research.

In the Background Document for the proposed rule, Table 2.2, Products/Processes at Chlorinated Aliphatics Facilities (1996 Data) that Generate Consent Decree Wastes, EPA identified facilities impacted by this rulemaking. The CMA comments identified many of the same companies. Table 5–1 lists the companies identified by CMA are listed in the EPA Background Document (Proposed Rule).

[8]This rulemaking defines chlorinated aliphatic hydrocarbons as: "... compounds composed of the atoms of hydrogen and carbon, where the carbon atoms are linked by covalent bonds in an open chain (straight and branched) structure, and those cyclical compounds that resemble open-chain compounds." " For an aliphatic to be chlorinated, one or more hydrogen atoms have been chemically replaced with chlorine atoms."

Table 5–1. Facilities Identified by EPA and CMA

Company	Location	Chlorinated Aliphatic	Capacity (million pounds/yr)	Source
Borden	Geismar, LA	Ethylene Dichloride Vinyl Chloride	745 950	www.chemexpo.com
Dow	Freeport, TX	Ethylene Dichloride Chloroform Methyl Chloride Methylene Chloride Vinyl Chloride	4,500 200 55 125 2,200	www.chemexpo.com
Dow	Plaquemine, LA	Vinyl Chloride Ethylene Dichloride Methylene Chloride Chloroform Perchloroethylene Methyl Chloride	1,500 2,300 125 200 90 175	www.chemexpo.com
Dow Corning	Carrolton, KY	Methyl Chloride	250	www.chemexpo.com
Dow Corning	Midland, MI	Methyl Chloride	50	www.chemexpo.com
Formosa	Baton Rouge, LA	Vinyl Chloride Ethylene Dichloride	1,455 525	www.chemexpo.com
Formosa	Point Comfort, TX	Vinyl Chloride Ethylene Dichloride	875 1,900	www.chemexpo.com
GE Plastics	Waterford, NY	Methyl Chloride	100	www.chemexpo.com
Geon	LaPorte, TX	Vinyl Chloride Ethylene Dichloride	1,650 4,000	www.chemexpo.com
Georgia Gulf	Plaquemine, LA	Vinyl Chloride Ethylene Dichloride	1,600 1,760	www.chemexpo.com
Oxychem	Convent, LA	Ethylene Dichloride	1,500	www.chemexpo.com
Oxychem	Deer Park, TX	Vinyl Chloride Ethylene Dichloride	1,100 1,950	www.chemexpo.com
Oxymar	Ingleside, TX	Vinyl Chloride Ethylene Dichloride	2,100 3,000	www.chemexpo.com
PPG	Lake Charles, LA	Ethylene Dichloride Perchloroethylene	1,600 125	www.chemexpo.com
Shell Chemicals	Norco, LA	Allyl Chloride	Not given	www.shellchemicals.com

Company	Location	Chlorinated Aliphatic	Capacity (million pounds/yr)	Source
Vulcan	Geismar, LA	Ethylene Dichloride Methylene Chloride Chloroform Perchloroethylene Methyl Chloride	500 80 160 140 90	www.chemexpo.com
Vulcan	Wichita	Methylene Chloride Chloroform Methyl Chloride	100 160 70	www.chemexpo.com
Westlake	Calvert City, KY	Vinyl Chloride Ethylene Dichloride	1,200 1,950	www.chemexpo.com

*Note — In the Background Document (Section 2.1.2 Recent Developments), EPA identified a new facility producing EDC and VCM. PHH Monomers, a PPG & Condea Vista joint venture (Condea Vista was purchased by Georgia Gulf August 1999), produces 1,150 million pounds of vinyl chloride and 1,400 million pounds of ethylene dichloride annually. This facility was not included in the CMA comments.

Both EPA and CMA identified Condea Vista as a producer of EDC and VCM, however, different cities are identified. After reviewing the Condea Vista and Chemexpo web sites, it appears to be a duplicate listing. CMA, Chemexpo and the Condea Vista web site place the Condea Vista facility (recently purchased by Georgia Gulf) in Lake Charles, LA. EPA identified a facility in Westlake, LA. The facility production rates listed in the Background Document are identical to the capacities listed on the Chemexpo site. Therefore, EPA concluded that the CMA listing duplicates the facility identified by EPA. Table 5–2 summarizes the available information.

Table 5–2. Condea Vista

Company	Location	Chlorinated Aliphatic	Capacity (million pounds/yr)	Source
Condea Vista	Lake Charles, (Westlake)LA	Vinyl Chloride Ethylene Dichloride	850 1,400	www.chemexpo.com

The CMA Comments list an Oxychem facility in Corpus Christi, TX, however, Chemexpo and www.Oxychem.com do not identify a facility at that location. EPA, Chemexpo and Oxychem identify a facility in Ingleside (Gregory), TX. Area maps and Oxychem directions to the site revealed that Ingleside is located across from Corpus Christi on Corpus Christi Bay. Therefore, EPA concluded that the CMA listing duplicates the facility identified by EPA. Table 5–3 summarizes the available information for Oxychem.

Table 5–3. Oxychem

Company	Location	Chlorinated Aliphatic	Capacity (million pounds/yr)	Source
Oxychem	Ingleside, TX	Ethylene Dichloride	1,500	www.chemexpo.com www.Oxychem.com

CMA listed a Dow facility in Oyster Creek. A state was not identified. EPA searched the Dow and Chemexpo web sites and could not find any facility in Oyster Creek (any state), so a search for towns with the name Oyster Creek was performed. Based on industry data provided in the Background Document, Oyster Creek, Texas, located along the Gulf Coast, was identified as the most likely location for the facility. EPA, CMA and Dow identify a facility in Freeport, TX. Because Freeport is just a few miles from Oyster Creek, EPA concluded that CMA mistakenly identified these as separate facilities.

The companies listed in Table 5–4 were removed from consideration because the compounds CMA indicated that were manufactured are not chlorinated aliphatics covered under this rulemaking.

Table 5–4. Companies that do not Manufacture Chlorinated Aliphatics

Company	Location	Compound Produced (according to CMA)	Formula
Albermarle	Magnolia, AK	Bromochloromethane	$BrCH_2Cl$
Allied Signal	Baton Rouge, LA	Chlorodifluoromethane Trichlorotrifluoroethane	$CHClF_2$ CCl_2FCClF_2
Allied Signal	El Segundo, CA	1-Chloro-1,1-difluoroethane Chlorodifluoromethane 1,1-Dichloro-1-fluoroethane	CH_3CClF_2 $CHClF_2$ CH_2Cl_2F
ASHTA	Ashtabula, OH	Chloropicrin	CCl_3NO_2
Ausimont	Thoroughfare, NJ	1-Chloro-1,1difluoroethane	CH_3CClF_2
DuPont*	Louisville, KY	Chlorodifluoromethane	$CHClF_2$
Elf Atochem	Wichita, KS	Chlorodifluoromethane	$CHClF_2$
Elf Atochem	Calvert City, KY	1-Chloro-1,1-difluoroethane 1,1-Dichloro-1-fluoroethane	CH_3CClF_2 CH_2Cl_2F
Great Lakes Chemical	El Dorado, AK	Chlorotrifluoromethane	$CClF_3$
Halocarbon Products	North Augusta, SC	2-Bromo-2-chloro-1,1,1-trifluoroethane	$CF_3CHBrCl$
Holtrachem	Orrington, ME	Chloropicrin	CCl_3NO_2

Company	Location	Compound Produced (according to CMA)	Formula
LaRoche Ind.	Gramercy, LA	1,1-Dichloro-1-fluoroethane	CH_2Cl_2F
Niklor	Long Beach, CA	Chloropicrin	CCl_3NO_2
PCR	Gainsville, FL	Chlorodifluoroethylene	$CHClCF_2$
Trinity Mfct.	Hamlet, NC	Chloropicrin	CCl_3NO_2

*CMA identified the DuPont Louisville, KY facility as a manufacturer of chlorodiflouromethane. This compound is not covered under this rulemaking, however, this DuPont facility is a manufacturer of chlorinated aliphatics. The facility was listed by EPA in the Background Document as a chlorinated aliphatics manufacturer.

CMA identified Akzo Nobel in Gallipolis, WV and Albright and Wilson in Charleston, SC as producers of n-butyl chloride. EPA reviewed company web sites and Chemexpo and confirmed that the companies have facilities located in those towns, however, it was unclear whether the facilities manufactured n-butyl chloride.

The Akzo Nobel web page identified the Gallipolis facility as producing “functional chemicals” (e.g., choline chloride, methyl amines and phosphorus chemicals). On the Chemexpo site it was confirmed that this facility produces chemicals such as phosphorus oxychloride and phosphorus trichloride. However, the Chemexpo site did not identify them as a producer of chlorinated aliphatics. Furthermore, the Agency has received information from the company confirming that the facility does not produce n-butyl chloride.

The Albright and Wilson web page identified the company as a producer of phosphates, surfactants, and phosphorus derivatives and acrylics. The Charleston facility is listed as a manufacturer of phosphates and phosphorus derivatives and acrylics. On the Chemexpo site it was confirmed that this facility produces phosphorus based chemicals (e.g., phosphorus oxychloride and phosphorus trichloride). The Chemexpo site indicated that n-butyl chloride can be obtained from Albright and Wilson, however, it does not specify from which company location and no production capacity numbers are given.

The Agency contacted Albright and Wilson to clarify these issues, and much of the detailed information regarding production chemistry, product volumes, and by-product formation were claimed as Confidential Business Information (CBI). In summary, the Albright and Wilson plant in Charleston, SC is a leading producer of phosphates and phosphorus derivatives. N-butyl chloride and ethylene dichloride are produced as by-products via undesired side reactions during the production of organophosphorous chemical products. Previously, these by-products were disposed of off-site as waste. The company has been exploring more cost-effective disposition of these by-products, including off-site third-party reclamation/purificatoin. EPA does not view the production of these by-products as falling within the scope of "chlorinated aliphatic manufacturing" In addition, the facility’s wastewater is pretreated on-site via air stripping, pH adjustment, and skimming, after which it is sent off-site to a POTW. No wastewater treatment sludges were reported

to be generated other than periodic (every 5 to 10 years) removal of a small volume of solids from the skimmer unit.

CMA identified Shell Chemical in Deer Park, TX as a manufacturer of 1,2,3-trichloropropane. EPA reviewed the Shell Chemical web site. Shell lists the chemicals produced at their different sites. The Deer Park facility produces a variety of chemicals including aliphatic hydrocarbons, however, they do not list any chlorinated aliphatics. At this site, Shell manufactures chemicals such as isoprene, butadiene, benzene, MIBK, ethylene, n-butyl alcohol, sulfur and phenol. EPA received documentation from Shell confirming that this facility does not produce chlorinated aliphatics.

This page intentionally blank.

Appendix A. RCRA Section 3007 Questionnaire

U.S. Environmental Protection Agency

RCRA Section 3007 Survey of the Chlorinated Aliphatics Manufacturing Industry

INSTRUCTIONS

This RCRA Section 3007 questionnaire is being used to gather information about solid and hazardous waste management practices in the U.S. chlorinated aliphatics manufacturing industry. The Environmental Protection Agency requires this information in order to be able to determine whether or not certain waste streams should be managed as hazardous under the Resource Conservation and Recovery Act (RCRA), 42 USC 6901 et seq., and should be listed as such in the Code of Federal Regulations. Under Section 3007 of RCRA, 42 USC 6927, you are required to provide us with this information, except the optional information requested in Question 4.6 and all questions in Section 9. However, if you believe that some parts of the information supplied by you are commercially sensitive, you may claim protection for the data.

Responses may be typed or handwritten neatly. The signature/certification block should be completed by a senior official having authority over plant operations. It may not be completed by a consultant or any other third party.

The questionnaire consists of ten parts:

1. Corporate and facility information,

2. Types of chlorinated aliphatic products and chlorinated aliphatic intermediates manufactured at the facility,

3. Types of processes at the facility,

4. Solvent use during the manufacturing process,

5. Specific manufacturing processes; as well as the residuals generated,

6. Residuals characterization,

7. General residual management information,

8. Specific on-site residual management information,

9. Source reduction efforts (optional), and

10. Certification.

Confidentiality: You may make a business confidentiality claim by marking the appropriate data as `CBI' (Confidential Business Information). We must notify you if we intend to deny your claim, and you have the right to seek judicial review. Otherwise, we must protect the information from disclosure to anyone other than EPA and its authorized representatives, and may not release it under the Freedom of Information Act. It may be disclosed, however, to Congress or the Comptroller General of the United States at their request, or be released by order of a Federal Court. The complete regulations regarding confidential business information are given at 40 CFR Part 2 Subpart B.

Return the completed survey within 45 days from date of receipt to:

Wanda Levine (OS-333), Room SE-243A
Characterization and Assessment Division
Office of Solid Waste
U.S. Environmental Protection Agency
401 M St., S.W.
Washington, D.C. 20460
Telephone: (202) 260-7458

If you wish to claim all or part of your response as confidential, please send your response to Margaret Lee (OS-312), Room SE-264 at the address above.

Public reporting burden for this collection of information is estimated to average 45 hours per respondent, including the time for reviewing instructions, searching existing data sources, gathering and maintaining the data needed, and completing and reviewing the collection of information. Send comments regarding this burden estimate or any other aspect of this collection of information, including suggestions for reducing the burden, to Chief, Information Policy Branch, PM-223, U.S. Environmental Agency, 401 M St., S.W., Washington, D.C., 20460; and to Paperwork Reduction Project (OMB # 2050-0042), Office of Information and Regulatory Affairs, Office of Management and Budget, Washington, D.C. 20603.

U.S. Environmental Protection Agency

1. Corporate/Facility Data

1.1 Name of Corporation _____

1.2 Address of Corporation Headquarters

Street _____

City _____ State _____ Zip _____

Number of Corporate Employees _____

1.3 Name of Facility _____

1.4 Address of Facility

Street _____

City _____ State _____ Zip _____

Number of Facility Employees _____

1.5 Hazardous waste generator ID number: _____

POTW/NPDES Permit number: _____

Other environmental Permits: _____

1.6 Mailing Address of Facility (if different from above)

_____

1.7 Name(s) of personnel to be contacted for additional information pertaining to this questionnaire

Name	**Title**	**Telephone**
_____	_____	_____
_____	_____	_____
_____	_____	_____

U.S. Environmental Protection Agency

2. Products Manufactured

2.1 In 1991 were chlorinated aliphatic[1] products or chlorinated aliphatic intermediates[2] manufactured at this facility? _____ yes _____ no*

2.2 Indicate the common name and Chemical Abstracts chemical name for each chlorinated aliphatic product or chlorinated aliphatic intermediate manufactured at this facility. Please specify if the chemical is a product and/or intermediate.

Common Name	Chemical Name	CAS number	
_____	_____	_____	___ intermediate ___ product
_____	_____	_____	___ intermediate ___ product
_____	_____	_____	___ intermediate ___ product
_____	_____	_____	___ intermediate ___ product
_____	_____	_____	___ intermediate ___ product
_____	_____	_____	___ intermediate ___ product
_____	_____	_____	___ intermediate ___ product
_____	_____	_____	___ intermediate ___ product
_____	_____	_____	___ intermediate ___ product
_____	_____	_____	___ intermediate ___ product

**Note:* If chlorinated aliphatic products or chlorinated aliphatic intermediates are not manufactured at this facility, complete only Questions 1, 2.1, and 10 and return this questionnaire.

[1] For the purposes of this questionnaire, "chlorinated aliphatic" means a straight chain or cyclic compound containing 1 to 5 carbons, with varying amounts and locations of chlorinated substitution

[2] Definition of intermediate as excerpted from the Toxic Substances Control Source Book, December 12, 1977, Part 710 - Inventory Reporting of TSCA:

> "Intermediate means any chemical substance (1) which is intentionally removed from the equipment in which it is manufactured, and (2) which either is consumed in whole or in part in chemical reaction(s) used for the intentional manufacture of other chemical substance(s) or mixture(s)."

U.S. Environmental Protection Agency

3. Type of Facility Processes

3.1 Please indicate the type of process used in the manufacture of each product using the codes shown in the list shown below. In addition, if the process used is catalyzed, specify the catalyst used.

Code	Process
A1.	Chlorination
A2.	Dehydrochlorination
A3.	Hydrochlorination
A4.	Chlorinolysis
A5.	Oxychlorination
A6.	Thermal Cracking
A7.	Combined Process (specify)
A8.	Other (specify)

1) Product _____ Process Code _____ Catalyst _____
2) Product _____ Process Code _____ Catalyst _____
3) Product _____ Process Code _____ Catalyst _____
4) Product _____ Process Code _____ Catalyst _____
5) Product _____ Process Code _____ Catalyst _____
6) Product _____ Process Code _____ Catalyst _____
7) Product _____ Process Code _____ Catalyst _____
8) Product _____ Process Code _____ Catalyst _____
9) Product _____ Process Code _____ Catalyst _____
10) Product _____ Process Code _____ Catalyst _____

3.2 On-site Wastewater Treatment

3.2.1 Are process and treatment residuals treated at an on-site wastewater treatment facility?

_____ yes _____ no

If yes, please identify and include these residuals in your response to Question 5.

3.2.2 Wastewater Disposition (check all that apply)

___ discharge to POTW ___ underground injection

___ NPDES discharge ___ other (specify)

U.S. Environmental Protection Agency

3.3 Other Sources of Wastewater

3.3.1 Are there production processes other than chlorinated aliphatic manufacturing that contribute to the total wastewater load?

Yes __ No __

If yes, please include any wastewater characterization data available and fill out Table I below.

Table I: Response to Question 3.3.1

Product	Process	Wastewater Volume

4. Solvent Use During Manufacturing Process

Please complete Table II for any of the solvents listed below that are used as a solvent in the manufacture of chlorinated aliphatics. Please include only solvents used for their "solvent" properties -- that is, to solubilize (dissolve) or mobilize other constituents. Examples of such solvent use include degreasing, cleaning or fabric scouring, use as diluents, extractants, or reaction and synthesis media, or for similar uses (see 50 FR 53317, December 31, 1985). A chemical is not used as a solvent if it is used as a raw material (i.e., as a reactant or part of the formulation) and converted via chemical reaction to another chemical. Otherwise, if these chemicals are used during the manufacturing process, they should be reported in Table II. See Example I for an example for cyclohexanol use. Sections 4.1 through 4.5 describe the informational requirements of the corresponding columns in Table II.

Solvent	CAS Number
Acetonitrile	75-05-8
Allyl Chloride	107-05-1
Aniline	62-53-3
Benzyl Chloride	100-44-7
Bromoform	75-25-2
Cumene	98-82-8
Cyclohexanol	108-93-0
p-Dichlorobenzene	106-46-7
Diethylamine	109-89-7
1,4-Dioxane	123-91-1
Epichlorohydrin	106-89-8
2-Ethoxyethanol acetate	111-15-9
Ethylene dibromide	106-93-4
Ethylene oxide	75-21-8
Furfural	98-01-1
Isophorone	78-59-1
Methyl Chloride	74-87-3
2-Methoxyethanol	109-86-4
2-Methoxyethanol acetate	110-49-6
Phenol	108-95-2
Vinylidine chloride (1,1-dichoroethylene)	75-35-4

4.1 List the solvent name.

4.2 Describe the use of the solvent (see examples in the paragraph above).

4.3 Provide the name of the process and specific unit operation using the solvent from the process flow diagram.

4.4 Indicate the solvent consumption for the calendar year 1991 in gallons.

4.5 Indicate the solvent consumption for the calendar year 1992 in gallons.

4.6 **OPTIONAL**: Describe any actions the facility has taken to change the solvent consumption (e.g., switching to a new solvent, improved recovery operations, etc.). If you choose to respond, please include your response in Table XII provided in Question 9 - Source Reduction Efforts (pg. 43).

EXAMPLE I—Response to Question 4

Table II—Solvent Use

4.1 Solvent Name	4.2 Solvent Application	4.3 Name of process and unit operation using solvent	4.4 1991 Solvent Consumption (gal)	4.5 1992 Solvent Consumption (gal)
Cyclohexanol	Reactor Cleaning	Vinyl Chloride production	40,000	40,000

U. S. Environmental Protection Agency

Table II—Response to Question 4
Solvent Use

4.1 Solvent Name	4.2 Solvent Application	4.3 Name of process and unit operation using solvent	4.4 1991 Solvent Consumption (gal)	4.5 1992 Solvent Consumption (gal)

copy as needed

5. Process Residual and Treatment Residual Information

This information will be used to address industry-wide variation in type and quantity of residuals generated. **Residuals include any process stream generated during the manufacture of a product which is not used as a raw material or principally sold as a commercial product.** Residuals include wastes from the treatment of process residuals, such as wastewater treatment or incineration. Residuals may be solids (e.g., spent carbon), sludges (still bottoms, sludges from wastewater treatment), liquids (e.g., wastewater), confined gases (e.g., gases that are containerized to facilitate disposal), and unconfined gases generated by the management of solid or liquid residuals (e.g., incinerator stack emissions) or unconfined gases containing condensable gases (e.g., vented light ends). Include "spent" solvents [e.g., solvents that have been used and are no longer fit for use without being regenerated, reclaimed or otherwise processed (50 FR 53317, December 31, 1985)], as well as residuals from solvent recovery.

For each unit process, provide a brief narrative process description and a general process block flow diagram. In addition, include a separate flow diagram showing any on-site wastewater treatment processes and include the current operating capacity as well as the design capacity. Include the information requested in Questions 5.1 through 5.4 in each flow diagram [see Examples II(a) and II(b)]. Provide the information requested in Questions 5.5 and 5.6 in an attachment (see Example III).

5.1 Identify the product process, intermediates, co-products, and by-products produced by the process.

5.2 Provide a block for each major unit operation (e.g., reactor, distillation, washer, filtration, air emission control, aeration lagoon, etc.) in the production process and in each residual management process.

5.3 Identify process inputs such as raw materials, catalysts, reagents, and solvents by chemical or common name or chemical formula, and indicate the point of introduction with arrows.

5.4 Assign a unique Residual Identification Number (RIN) to each of the following types of residuals and indicate its point of generation with an arrow (see Question 7.3 for a list of possible residuals):

a) Residuals generated by unit operations in the product process, including unit operations that produce/recover co-products, by-products and solvents; and

b) Final treatment residuals [i.e., residuals generated by physical, chemical (including incineration and other thermal treatment) or biological treatment that are not intermediate treatment residuals within a treatment chain].

When more than one process block flow diagram is provided (i.e., for multiple product processes), assign unique, sequential RINs to the residuals for each flow diagram.

5.5 If residuals from this product process are combined with the residuals from other product processes at this facility prior to treatment or disposal, identify the product process residual by RIN and specify the source of the other residuals using the codes provided in Question 7.3 on page 17.

5.6 For each product process provide the following information (see Example III):

a) Indicate the typical annual production, the 1991[3] production, and specify the system capacity for each product, co-product and by-product.

[3] 1991 data are requested throughout this questionnaire (e.g., residual quantities, types, management methods, costs, etc.). If complete 1991 data are not available, please provide the most recent available data and specify its date or period.

b) For each product, co-product, and by-product provide the estimated cost of production (specify units), and provide what percent of that cost was used for waste management operations. If exact numbers are not available, please provide an estimated range for the data.

c) Provide the sales volume and price for each of any three quarters over the last three years for all chlorinated aliphatic products, co-products, and by-products manufactured.

U. S. Environmental Protection Agency

EXAMPLE II(a)

Products(s): Perchloroethylene (PERC), Trichloroethylene (TCE)
Intermediate(s): NA
Coproduct(s)/By-products(s): NA

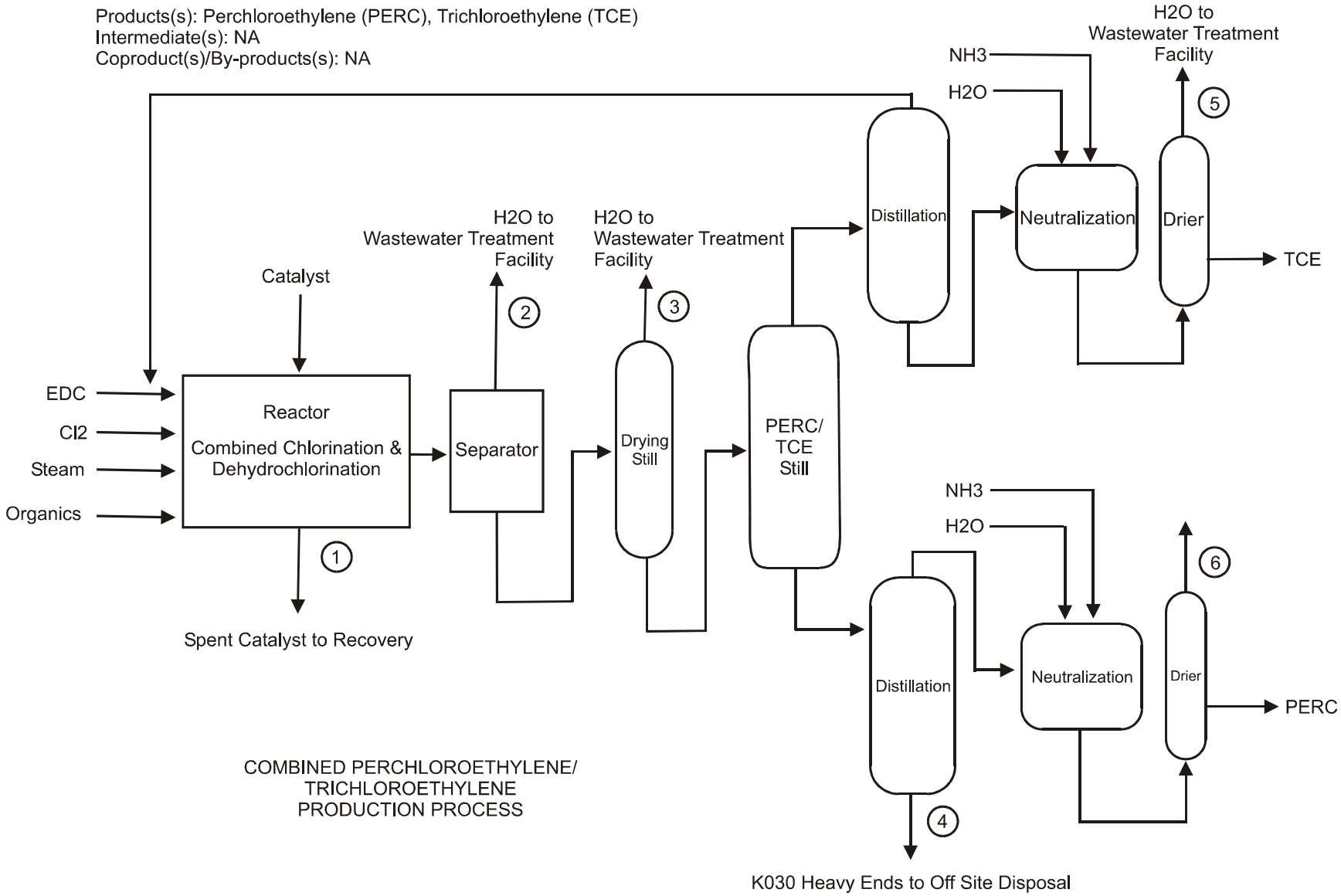

COMBINED PERCHLOROETHYLENE/
TRICHLOROETHYLENE
PRODUCTION PROCESS

U. S. Environmental Protection Agency

EXAMPLE II(b)

WASTEWATER TREATMENT FACILITY: PRODUCTION OF PERCHLOROETHYLENE AND TRICHLOROETHYLENE

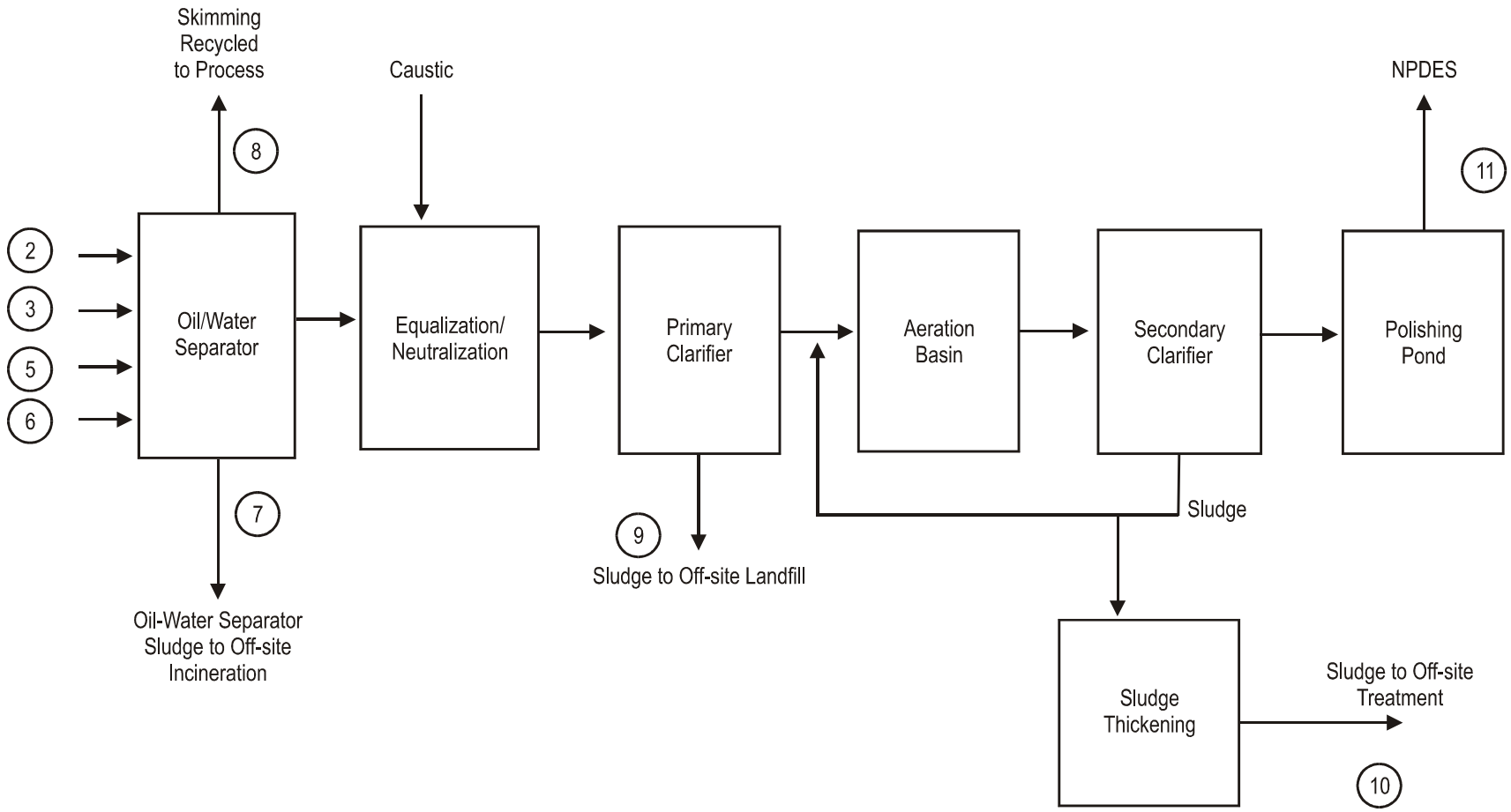

U.S. Environmental Protection Agency

EXAMPLE III—Response to Questions 5.5 and 5.6

Product Process: Combined production of perchloroethylene and trichloroethylene

5.5 **Mixing of Chlorinated Aliphatic Production Residuals with Other Residuals**

RIN (from Flow Diagram)	Source of Other Residuals
7	Benzotrichloride production, C6

5.6.a **Annual Production**

Product:

Perchloroethylene	1,125,000 lbs (1991) 1,500,000 lbs (typical) 1,750,000 lbs (capacity)

Co-product/By-product:

Trichloroethylene	1,100,000 lbs (1991) 1,200,000 lbs (typical) 1,500,000 lbs (capacity)

5.6.b **Estimated cost of production per unit product, co-products, and by-products**.

Product/Co-product/By-product:	Estimated cost of production:
Perchloroethylene	$0.12 per pound (24.3% of the cost for waste management operations)
Trichloroethylene	$0.15 per pound (21.7% of the cost for waste management operations)

5.6.c **Provide the sales volume and price for any three quarters over the last three years for all chlorinated aliphatic products, co-products, and by-products manufactured.**

Product: Perchloroethylene

Quarter	Sales Volume lbs.	Price per lb.
First Quarter 1988	275,000	$0.17
Second Quarter 1989	255,000	$0.16
Third Quarter 1990	260,000	$0.18

U.S. Environmental Protection Agency

Co-product/By-product: Trichloroethylene

Quarter	Sales Volume lbs.	Price per lb.
First Quarter 1988	250,000	$0.20
Second Quarter 1989	225,000	$0.18
Third Quarter 1990	230,000	$0.19

6. Residuals Characterization Information

For each chlorinated aliphatics process identified in Question 5, complete Table III with the following information for every residual (see Example IV on the following page).

6.1 Identify the product process.

6.2 List each residual by Residual Identification Number (RIN). Include by-products and residuals generated from the treatment of process residuals as well as spent solvents, and still bottoms from solvent recovery.

6.3 If the residual has been identified in the facility RCRA notification, indicate whether it was identified as ignitable (I), corrosive (C), reactive (R), EP or TC toxic (E), or listed as hazardous waste by EPA. If the EPA hazardous waste number is known, give that number also (Fxxx, Kxxx, Pxxx, Uxxx). If EP or TC hazardous, please indicate the Dxxx codes which the waste exhibits. If the waste is not regulated as hazardous but is managed in hazardous waste management facilities in any case, please code as "AS" and provide an explanation of why it is managed as hazardous.

6.4 For each residual, describe the following properties: volatility, physical state [e.g., liquid (specify whether organic or aqueous), solid, slurry (indicate solids content), gas]; pH; flash point; BTU content; viscosity; toxicity.

6.5 List the compounds which are known by analysis to be present in the residual and specify the concentration of each. Please submit any available analytical data characterizing the residuals; submit both TCLP and total compositional data where possible.[4]

6.6 If residual analyses are not available, list the compounds which are expected to be present in the residual and estimated concentrations using best engineering and/or scientific judgment.

[4] Laboratory analysis of the residual is not required in order to respond to this question. If analytical data is available, please submit the results with the questionnaire.

U.S. Environmental Protection Agency

EXAMPLE IV—Response to Question 6
Table III

6.1 **Product Process**: Perchloroethylene/ Trichloroethylene

6.2 RIN: 1

6.3 RCRA Identification (I,C,R,E): C

6.4 Properties of Residual: Ph 2, organic liquid

6.5 **Residual Characterization**

Known Compounds	**Total Concentration**	**TCLP Concentration**
Perchloroethylene	225 ppm	
Trichloroethylene	610 ppm	
Ethylene dichloride	52 ppm	
Nickel	20%	

6.6 **Other Constituents**

Expected Compounds	**Estimated Total Concentration**	**Estimated TCLP Concentration**
Carbon Tetrachloride	50 ppm	
Vinyl Chloride	50 ppm	

U.S. Environmental Protection Agency

Table III—Response to Question 6

6.1 **Product Process**: _____ 6.2 RIN: _____

6.3 RCRA Identification (I,C,R,E)	6.4 Properties of Residual
_____	_____
	_____
	_____
	_____
	_____

6.5 **Residual Characterization**

Known Compounds	**Total Concentration**	**TCLP Concentration**
_____	_____	_____
_____	_____	_____
_____	_____	_____
_____	_____	_____
_____	_____	_____
_____	_____	_____
_____	_____	_____

6.6 **Other Constituents**

Known Compounds	**Estimated Total Concentration**	**Estimated TCLP Concentration**
_____	_____	_____
_____	_____	_____
_____	_____	_____
_____	_____	_____
_____	_____	_____
_____	_____	_____

copy as needed

7. Residuals Management/Disposal/Treatment Information—General

The following information pertains to management, disposal, and treatment methods applied on every residual generated by the process(es) identified in Question 5. Complete Table VI for every identified residual as shown in Example V (page 22).

7.1 Identify the product process.

7.2 Specify the Residual Identification Number (RIN).

7.3 Specify the residual category in accordance with codes provided.

Code	Categories of Residuals
C1.	Process precipitates or filtration residues and process sludges
C2.	Process decantates or filtrates
C3.	Treatment sludges: (specify) a. biological b. other
C4.	Spent activated carbon or other adsorbent (specify)
C5.	Spent Catalyst
C6.	Heavy ends: a. distillation residues b. miscellaneous heavy ends
C7.	Spent solvents
C8.	Untreated process wastewater: a. acid b. caustic c. neutral[1]
C9.	Treated wastewater discharge
C10.	Containers, liners, cleaning rags, spill pillows, gloves, etc.

Code	Categories of Residuals (continued)
C11.	Off-specification products and feedstock
C12.	Other (specify)
C13.	By-product
C14.	Light ends: a. condensable[2] b. noncondensable
C15.	Miscellaneous Wastewater a. equipment washdown b. boiler blowdown c. other non-process wastewater (specify)
C16.	Spent scrubber liquid a. aqueous b. organic/aqueous
C17.	Treated organic residual
C18.	Solids from treatment of other residuals
C19.	Filter cloths
C20.	Residuals contaminated with soil or debris (specify type - see Table IV)

[1] Acidic: pH < 2, Neutral: 2 ≤ pH ≤ 12, Caustic: pH>12
[2] Light ends are condensable if primarily composed of gases which are liquid at ambient temperature and pressure.

7.4 Specify residuals management/disposal/treatment methods in accordance with the codes provided. If a residual is subject to a sequence of methods (e.g., storage in a tank, incineration), list the methods in sequence. If a residual is handled alternatively by more than one method (e.g., either incinerated or burned in a boiler), identify the alternate methods.

Code	Management/Disposal/Treatment Methods
M1.	Storage in: a. tank b. container c. pile d. surface impoundment e. other (specify)
M2.	Treatment in: a. tank b. container c. surface impoundment d. pile e. other (specify)
M3.	Burning in a boiler or industrial furnace
M4.	Recovery/reclamation/reuse
M5.	Incineration
M6.	Landfill
M7.	Underground injection

Code	Management/Disposal/Treatment Methods (continued)
M8.	On-site wastewater treatment in: a. tank b. surface impoundment c. container d. other (specify)
M9.	Discharge to publicly-owned wastewater treatment facility
M10.	Discharge to a surface water under NPDES
M11.	Discharge to off-site privately owned treatment works
M12.	Other (specify)
M13.	Scrubber: a. caustic b. water c. other (specify)
M14.	Flare
M15.	Land treatment/application/farming

Table IV: Specific Debris[5] Types for Residual Category C20

Code	Debris Type
01	Asbestos
02	Intact Batteries
03	Battery Cases
04	Bricks, Refractory
05	Bricks, Other
06	Ceramics
07	Cloth
08	Concrete
09	Electrical Wires, Switches, Etc.
10	Electronic Components
11	Equipment and Structures
12	Filter Cartridges
13	Glass
14	Metallics
15	Paper or Cardboard
16	Personal Protection Equipment
17	Plastics, Not Otherwise Specified
18	PVC Pipe
19	Rock or Other Non-Soil Geological Material
20	Rubber Objects
21	Slag
22	Wood

[5] For the purposes of this questionnaire, debris is defined in 57 FR 37222 (August 18, 1992), as:

"...solid material exceeding 60 mm (2.5 inch) particle size that is: (1) a manufactured object; or (2) plant or animal matter; or (3) natural or geologic material (e.g., cobbles and boulders), except that any material for which a specific treatment standard is provided in Subpart D, Part 268, is not debris."

7.5 Indicate units used for managing each type of waste. The treatment codes (Txxx) should be included for each management code. Also show whether these units are RCRA permitted units (HAZ), Non-hazardous units (NH), or exempt units (EX).

Management by technology — Treatment/Recovery Type

Code	System type
	Metals recovery (for reuse)
T011	High temperature metals recovery
T012	Retorting
T013	Secondary smelting
T014	Other metals recovery for reuse [e.g., ion exchange, reverse osmosis, acid leaching, etc. (specify in comments)]
T019	Metals recovery — type unknown
	Solvents recovery
T021	Fractionation/distillation
T022	Thin film evaporation
T023	Solvent extraction
T024	Other solvent recovery (specify in comments)
T029	Solvents recovery — type unknown
	Other recovery
T031	Acid regeneration
T032	Other recovery (e.g., waste oil recovery, nonsolvent organics recovery, etc. (specify in comments)
T039	Other recovery — type unknown
	Incineration
T041	Incineration — liquids
T042	Incineration — sludges
T043	Incineration — solids
T044	Incineration — gases
T049	Incineration — type unknown
	Energy recovery (reuse as fuel)
T051	Energy recovery — liquids
T052	Energy recovery — sludges
T053	Energy recovery — solids
T059	Energy recovery — type unknown
	Fuel blending
T061	Fuel blending
	Aqueous inorganic treatment
T071	Chrome reduction followed by chemical precipitation
T072	Cyanide destruction followed by chemical precipitation
T073	Cyanide destruction only
T074	Chemical oxidation followed by chemical precipitation
T075	Chemical oxidation only
T076	Wet air oxidation
T077	Chemical precipitation
T078	Other aqueous inorganic treatment [e.g., ion exchange, reverse osmosis, etc. (specify in comments)]
T079	Aqueous inorganic treatment — type unknown

Code	System type
	Aqueous organic treatment
T081	Biological treatment
T082	Carbon adsorption
T083	Air/steam stripping
T084	Wet air oxidation
T085	Other aqueous organic treatment (specify in comments)
T089	Aqueous organic treatment — type unknown
	Aqueous organic and inorganic treatment
T091	Chemical precipitation in combination with biological treatment
T092	Chemical precipitation in combination with carbon adsorption
T093	Wet air oxidation
T094	Other organic/inorganic treatment (specify in comments)
T099	Aqueous organic and inorganic treatment — type unknown
	Sludge treatment
T101	Sludge dewatering
T102	Addition of excess lime
T103	Absorption/adsorption
T104	Solvent extraction
T109	Sludge treatment — type unknown
	Stabilization
T111	Stabilization/chemical fixation using cementious and/or pozzolanic materials
T112	Other stabilization (specify in comments)
T119	Stabilization — type unknown
	Other treatment
T121	Neutralization only
T122	Evaporation only
T123	Setting/clarification only
T124	Phase separation (e.g., emulsion breaking, filtration) only
T125	Other treatment (specify in comments)
T129	Other treatment — type unknown

7.6 Indicate the annual quantity for every residual managed/disposed of/treated by each method in 1991 (specify units). Indicate the frequency of generation: generated continuously (C), periodically (P) (e.g., once a month), one-time generation (OT), or remedial action (R). If available, also provide the residual/production ratio. In addition, specify if the residual is managed along with other residuals or RCRA hazardous wastes (specify waste codes) and identify the other wastes and quantity co-managed.

7.7 Indicate whether the residual is managed/disposed of/treated on-site or off-site. If managed/disposed of/treated off-site, identify the site in the space provided in Table VII. Indicate whether the residual is managed as hazardous (HAZ) or non-hazardous (NH).

7.8 For residuals managed/disposed of/treated off-site, except for discharges to a POTW or surface water under a NPDES permit, indicate the average transportation cost per unit quantity of residual in 1991.

7.9 For residuals managed/disposed of/treated off-site, except for discharges to a POTW or surface water under a NPDES permit, indicate the average management/disposal/treatment/ cost per unit quantity of residual in 1991 and supply the names and addresses of off-site facilities in Table VII.

7.10 Indicate planned changes in residual management methods by specifying the code(s) for the new management method (e.g., M2-C from Question 7.4 on pg 17) and treatment/recovery type code(s) (e.g., T072 from Question 7.5 on pg 19) and indicate the anticipated date of change. Also provide information on any changes you foresee in future generation or management.

7.11 In Table V, please provide the following information regarding treatment or recovery systems identified in Question 7.5 for managing the residuals:

Describe any special limitations (chemical or physical constraints) of the system (e.g., seasonality of operation, pumpability of residuals being managed, water content of waste, etc.) and any special materials handling problems in managing the residuals, contaminated soil or debris in this system (e.g., is grinding or shredding required prior to treatment?)

U.S. Environmental Protection Agency

Table V—Response to Question 7.11

Treatment Code	Description of limitations/handling problems

copy as needed

EXAMPLE V — Response to Question 7
Table VI

7.1 Product Process: Perchloroethylene/Trichloroethylene

7.2 RIN	7.3 Residual Code	7.4 Management Code	7.5 Treatment/ Recovery Codes	7.6 1991 Residual Quantities (specify units)	7.7 On-site or Off-site Management	7.8 1991 Costs for Transportation Off-site (cost/quantity)	7.9 1991 Costs for Off-site Management (cost/quant)	7.10 Planned Changes in Management/Treatment/ Recovery Methods Code/Date
1	C5	M4a	T019	1000 lbs	off-site - H	$2.50/lb	$10/lb	none
2	C8a	M8a M10	T032 (organic phase recovery from oil/H20 separation) T081	20,000 gal	on-site - NH	N/A	N/A	add carbon adsorption (T082) in Spr. 1993
3	C8a	M8a M10	T032 (organic phase recovery from oil/H20 separation) T081	1,000 gal	on-site - NH	N/A	N/A	add carbon adsorption (T082) in Spr. 1993

U. S. Environmental Protection Agency

Table VI — Response to Question 7

7.1 Product Process: _____

7.2 RIN	7.3 Residual Code	7.4 Management Code	7.5 Treatment/ Recovery Codes	7.6 1991 Residual Quantities (specify units)	7.7 On-site or Off-site Management	7.8 1991 Costs for Transportation Off-site (cost/quantity)	7.9 1991 Costs for Off-site Management (cost/quant)	7.10 Planned Changes in Management/Treatment/ Recovery Methods Code/Date

copy as needed

U.S. Environmental Protection Agency

Table VII — Response to Question 7.9

Use additional paper if necessary.

Name of Facility: _____
Residual Identification Numbers: _____
_____
Facility Mailing Address:
Street or P.O. Box: _____
City or Town: _____
State: _____ Zip: _____
Facility Location (if different from above):
Street, Route Number or Other Specific Identifier:
_____
City or Town: _____
State: _____ Zip: _____
Hazardous Waste Facility I.D. Number (if any):
_____
Physical/chemical limitations imposed by treater(if any):
_____
Management Code _____ (from Question 7.4)
Treatment/Recovery Code _____ (from Question 7.5)

Name of Facility: _____
Residual Identification Numbers: _____
_____
Facility Mailing Address:
Street or P.O. Box: _____
City or Town: _____
State: _____ Zip: _____
Facility Location (if different from above):
Street, Route Number or Other Specific Identifier:
_____
City or Town: _____
State: _____ Zip: _____
Hazardous Waste Facility I.D. Number (if any):
_____
Physical/Chemical limitations imposed by treater(if any):
_____
Management Code _____ (from Question 7.4)
Treatment/Recovery Code _____ (from Question 7.5)

Name of Facility: _____
Residual Identification Numbers: _____
_____
Facility Mailing Address:
Street or P.O. Box: _____
City or Town: _____
State: _____ Zip: _____
Facility Location (if different from above):
Street, Route Number or Other Specific Identifier:
_____
City or Town: _____
State: _____ Zip: _____
Hazardous Waste Facility I.D. Number (if any):
_____
Physical/chemical limitations imposed by treater(if any):
_____
Management Code _____ (from Question 7.4)
Treatment/Recovery Code _____ (from Question 7.5)

Name of Facility: _____
Residual Identification Numbers: _____
_____
Facility Mailing Address:
Street or P.O. Box: _____
City or Town: _____
State: _____ Zip: _____
Facility Location (if different from above):
Street, Route Number or Other Specific Identifier:
_____
City or Town: _____
State: _____ Zip: _____
Hazardous Waste Facility I.D. Number (if any):
_____
Physical/Chemical limitations imposed by treater(if any):
_____
Management Code _____ (from Question 7.4)
Treatment/Recovery Code _____ (from Question 7.5)

copy as needed

8. Specific On-site Residuals Management/Disposal/Treatment Information

If residuals identified in Question 5 are managed on-site by the following methods listed below, provide the information specified in the appropriate subheading on the following pages.

8.1 Storage or Treatment in Tanks
8.2 Storage or Treatment in Containers
8.3 Storage or Treatment in Piles
8.4 Burning in a Boiler or Industrial Furnace
8.5 Incineration
8.6 Land Treatment
8.7 Surface Impoundments
8.8 Landfills
8.9 Deep Well Injection

8.a Are ground-water monitoring data available? Yes __ No __

8.b Are geologic or hydrogeologic data available? Yes __ No __

8.c In what manner is the land surrounding the facility used (e.g., food farming, wetlands, other industries, rangeland, etc.)?

_____

8.d List the type and distance of the two closest bodies of water to the facility (e.g., stream — 50 ft from facility, lake — 2 miles from facility, etc.)

_____

_____

U.S. Environmental Protection Agency

8.1 Storage or Treatment in Tanks

Have identified residuals been stored or treated in on-site tanks at any time in 1991 (or most recent data)? Yes __ No __

If yes, provide the following information for the 10 largest tanks:

Tank	RIN	Design Capacity[1]	Storage or Treatment (specify)	Type of Treatment/ Recovery Used[2]	Avg. Length of Storage	Cost[3]	Part of Wastewater Treatment Train[4] (Circle Yes/No)	Covered (Circle Yes/No)	Secondary Containment[5] (Circle Yes/No)
1	___	_____	_____	_____	_____	_____	Yes No	Yes No	Yes No
2	___	_____	_____	_____	_____	_____	Yes No	Yes No	Yes No
3	___	_____	_____	_____	_____	_____	Yes No	Yes No	Yes No
4	___	_____	_____	_____	_____	_____	Yes No	Yes No	Yes No
5	___	_____	_____	_____	_____	_____	Yes No	Yes No	Yes No
6	___	_____	_____	_____	_____	_____	Yes No	Yes No	Yes No
7	___	_____	_____	_____	_____	_____	Yes No	Yes No	Yes No
8	___	_____	_____	_____	_____	_____	Yes No	Yes No	Yes No
9	___	_____	_____	_____	_____	_____	Yes No	Yes No	Yes No
10	___	_____	_____	_____	_____	_____	Yes No	Yes No	Yes No

1 Use the following codes to designate the design capacity:
- A < 10,000 gallons
- B 10,000 gallons to 100,000 gallons
- C 100,000 gallons to 1,000,000 gallons
- D > 1,000,000 gallons

2 Use treatment/recovery type code shown in Question 7.5.

3 Yearly cost, including operation and maintenance costs, to dispose of these residuals in this manner.

4 Treatment train from which wastewater is discharged under a NPDES permit or through a sewer system to a publicly-owned treatment works.

5 Secondary containment is provided when the tank is located inside a dike area where the volume of liquid that the diked area can contain is at least equivalent to the capacity of the largest tank (only one example).

8.2 Storage or Treatment in Containers[6]

Have identified residuals been stored or treated on-site in containers at any time in 1991? Yes __ No __

If yes, provide the following information (if the facility has several container storage areas, provide information only on the primary container storage area):

8.2.1 Check typical and maximum quantity stored on any day in 1991 for each residual:

RIN	Average Daily Quantity[1]	Average Maximum Daily Quantity	Storage or Treatment (specify)	Length of Storage	Cost[2]	Treatment/ Recovery Type Code[3]
_____	_____	_____	_____	_____	_____	_____
_____	_____	_____	_____	_____	_____	_____
_____	_____	_____	_____	_____	_____	_____
_____	_____	_____	_____	_____	_____	_____
_____	_____	_____	_____	_____	_____	_____
_____	_____	_____	_____	_____	_____	_____
_____	_____	_____	_____	_____	_____	_____
_____	_____	_____	_____	_____	_____	_____

1 Use the following codes to designate the quantity of residual(s) in storage on any day in 1991:
A < 550 gallons
B 550 gallons to 5,500 gallons
C 5,500 gallons to 55,000 gallons
D > 55,000 gallons

2 Yearly cost, including operation and maintenance costs, to dispose of these residuals in this manner.

3 Use treatment/recovery type code shown in Question 7.5.

8.2.2 Identify the storage area base material:

__ Concrete __ Asphalt __ Soil __ Other (specify) _____

8.2.3 If liquid residuals or residuals containing free liquids are stored, is the storage area designed and operated to collect and contain surface runoff?

__ Yes __ No __ Liquids are not stored

6 Container means any portable device in which residuals were stored, treated, or otherwise handled.

U.S. Environmental Protection Agency

8.3 Storage or Treatment in Piles

Have identified residuals been stored or treated in on-site piles at any time in 1991? Yes __ No __

If yes, provide the following information:

8.3.1 Provide the following information for the 10 largest piles:

Pile	RIN	Storage/ Treatment (specify)	Treatment/ Recovery Type Code[1]	Typical Quantity[2] Managed	Cost[3]	Under Roofed Structure (Circle)	Containment[4] Provided (Circle)	Synthetic[5] Liner Base (Circle)	Permitted for Hazardous Waste
1	___	_____	_____	_____	_____	Yes No	Yes No	Yes No	Yes No
2	___	_____	_____	_____	_____	Yes No	Yes No	Yes No	Yes No
3	___	_____	_____	_____	_____	Yes No	Yes No	Yes No	Yes No
4	___	_____	_____	_____	_____	Yes No	Yes No	Yes No	Yes No
5	___	_____	_____	_____	_____	Yes No	Yes No	Yes No	Yes No
6	___	_____	_____	_____	_____	Yes No	Yes No	Yes No	Yes No
7	___	_____	_____	_____	_____	Yes No	Yes No	Yes No	Yes No
8	___	_____	_____	_____	_____	Yes No	Yes No	Yes No	Yes No
9	___	_____	_____	_____	_____	Yes No	Yes No	Yes No	Yes No
10	___	_____	_____	_____	_____	Yes No	Yes No	Yes No	Yes No

[1] Use treatment/recovery type code shown in Question 7.5.

[2] Use the following codes to designate the typical quantity of residuals contained in the pile on any day in 1991:
A < 20 cubic yards
B 20 to 200 cubic yards
C 200 to 2,000 cubic yards
D 2,000 to 20,000 cubic yards
E > 20,000 cubic yards

[3] Yearly cost including operation and maintenance costs to dispose of these residuals in this manner.

[4] Containment is provided when the pile base is designed, operated, and maintained to contain leachate and run-off.

[5] Is a synthetic liner installed in the pile base? Waste may lie directly on synthetic liner or the liner may be covered with a clay layer.

8.4 Burning in a Boiler or Industrial Furnace

Have identified residuals been burned in an on-site boiler or industrial furnace at any time in 1990 or 1991?

Yes __ No __

If yes, provide the following information for the most recent year for each burner and indicate the specific type:

Boiler (e.g., non-industrial, industrial, or utility) ____, or kiln (e.g., cement or light-weight aggregate) ____, or Industrial Furnace (e.g., Halogen Acid Furnace; smelting, melting, or refining furnace) ___.

8.4.1 Burner and fuel type:

Type	**Burner Capacity (Heat input in BTU/hr)**	**Primary Burner Fuel**
___ Fire Tube	___ < 10 million	___ Oil
___ Water Tube	___ 10 million to 100 million	___ Gas
		___ Coal
	___ > 100 million	___ Wood or other

Percentage of Fuel Replaced by Residuals (Heat Input Basis)	**Typical Burner Load When Firing Residual (% of Capacity)**	**Burner Temperature (°C)**
___ < 5%	___ < 50%	Inlet _____
___ 5 –10%	___ 50 –75%	Outlet _____
___ 10 –25%	___ > 75%	
___ 25 –50%		
___ > 50%		

8.4.2 What is the current annual operating capacity of the boiler/industrial furnace (ton/yr)?

_____

8.4.3 What is the maximum annual design capacity for the boiler/industrial furnace (ton/yr)?

_____

8.4.4 Provide the following information for each of the residuals burned:

Typical

RIN	**Feed Rate (lbs/hr)**	**Typical BTU Content (BTU/lb)**	**Typical Total Ash Content (% by wt.)**	**Halogen Content (% by wt.)**	**Total Water Content (% by wt.)**
_____	_____	_____	_____	_____	_____
_____	_____	_____	_____	_____	_____
_____	_____	_____	_____	_____	_____
_____	_____	_____	_____	_____	_____

U.S. Environmental Protection Agency

8.4.5 Provide the following information on the total feed mixture when residual is burned:

Feed Rate (pounds per hour) _____
Typical BTU Content (BTU/lb) _____
Typical Total Ash Content (% by wt.) _____
Typical Total Halogen Content (% by wt.) _____
Typical Total Water Content (% by wt.) _____

8.4.6 If the burner is equipped with an air pollution control device, specify the type of device:

____ Scrubber
____ Electrostatic precipitator
____ Other (specify)_____

8.4.7 Are residual-burning stack emissions data available? __ Yes __ No

8.4.8. Provide the yearly cost including operation and maintenance costs to dispose of these residuals in this manner in the space below.

_____
_____
_____
_____

8.4.9 Is the burner permitted, or in the process of being permitted, to burn hazardous waste under the Burner and Industrial Furnace (BIF) rule?

Yes ___ No ___

If not, and the subject wastes become hazardous, would your facility consider applying for a permit to burn hazardous waste under the BIF rule?

Yes ___ No ___

8.5 Incineration

Have identified residuals been incinerated on-site at any time in 1991? Yes __ No __

If yes, provide the following information for each incinerator:

8.5.1 Incinerator type:

Type	Incinerator Capacity (Heat Input in BTU/hr)	Feed Type	Percentage Auxiliary Fuel Required (Heat Input Basis)
___ Liquid Injection ___ Rotary kiln ___ Hearth ___ Other _____ (specify)	__ < 10 million __ 10 million to 100 million __ > 100 million	__ Liquid-nozzle type _____ (specify) __ Atomizing pressure _____ (specify) __ Solid __ Batch charge __ Continuous charge	_____

8.5.2 What is the current annual operating capacity of the incinerator (ton/yr)?

_____

8.5.3 What is the maximum annual design capacity of the incinerator (ton/yr)?

_____

8.5.4 Combustion Chamber Design Parameters:

	Primary Chamber	Secondary Chamber
Combustion Chamber Temp.	_____ °C	_____ °C
Location of Temp. Monitor	_____	_____
Residence Time	_____(sec)	_____ (sec)

8.5.5 If the incinerator is equipped with an air pollution control device, specify the type of device:

____ Scrubber

____ Electrostatic precipitator

____ Other (specify) _____

8.5.6 Are incinerator stack emissions data available? __ Yes __ No

U.S. Environmental Protection Agency

8.5.7 Provide the following information for each of the residuals burned:

Typical

RIN	Feed Rate (lbs/hr)	Typical BTU Content (BTU/lb)	Typical Total Ash Content (% by wt.)	Halogen Content (% by wt.)	Total Water Content (% by wt.)
___	_____	_____	_____	_____	_____
___	_____	_____	_____	_____	_____
___	_____	_____	_____	_____	_____
___	_____	_____	_____	_____	_____

8.5.8 Provide the yearly cost, including operation and maintenance costs, to dispose of these residuals in this manner.

_____
_____
_____
_____
_____

8.5.9 Is this incinerator permitted for management of hazardous wastes?

Yes __ No __

If yes, please list the permitted hazardous wastes.

_____
_____
_____
_____

8.6 Land Treatment

Have identified residuals been managed in an on-site land treatment operation at any time in 1991? Yes __ No __

If yes, provide the following information:

8.6.1 Are the land treatment units permitted for management of hazardous waste generated on-site?

Yes __ No __

8.6.2 Year land treatment initiated at site: _____

8.6.3 Year land treatment of identified residuals initiated: _____

8.6.4 Have residuals other than identified residuals been land treated at any time in 1991?

Yes __ No __

8.6.5 What was the total area actively used for land treatment in 1991?

_____ acres

8.6.6 What is the average slope of the land treatment site?

_____ percent

8.6.7 What is the type and percent of vegetative cover?

type _____ percent _____

8.6.8 Is surface water run-off from the site collected for treatment, re-application to the site, or analyzed prior to discharge?

Yes __ No __

8.6.9 Check method(s) used to apply residuals to the land treatment site:

a) ____ Surface spreading or spray irrigation without plow or disc incorporation. Indicate residuals applied in this manner using Residual Identification Numbers (RIN) and quantity of each: _____

b) ____ Surface spreading or spray irrigation with plow or disc incorporation to a depth of _____ (specify). Indicate residuals applied in this manner using RIN and quantity of each: _____

c) ____ Subsurface injection to a depth of _____ (specify). Indicate residuals applied in this manner using RIN and the quantity of each: _____

d) ____ Other methods (specify methods, RINs and quantities): _____

8.6.10 Is soil core monitoring performed? Yes __ No __

8.6.11 Is soil pore water monitoring performed? Yes __ No __

8.6.12 Provide the yearly costs, including operation and maintenance costs, for disposing these residuals in this manner in the space below.

_____

_____

_____

_____

_____

8.7 Surface Impoundments[7]

Have identified residuals been stored, treated, or disposed of in an on-site surface impoundment at any time in 1991?

Yes __ No __

If yes, provide the following information:

8.7.1 Total number of on-site impoundments _____

8.7.2 Provide the information requested in Table VIII on the following page. If more than 6 surface impoundments have been used in 1991 to manage identified residuals, provide information only on the 6 impoundments with the largest capacities. Use Residual Identification Numbers (RIN) to identify residuals. If you do not know whether a liner has been installed, circle both "Yes" and "No." If you do not know the thickness of a liner, indicate "UNK" for unknown.

8.7.3 Total size of surface impoundments: _____ acres

8.7.7 Do you plan to close any surface impoundments?

Yes __ No __

If yes, will tanks be installed to replace the surface impoundment(s)?

Yes __ No __

If yes, will wastes be removed from the surface impoundment(s)

Yes __ No __

If yes, provide the expected volume of wastes and their type (e.g., sludge, soil, etc.)

_____

_____

8.7.8 Are any surface impoundments closed? If yes, provide the volume of waste, type of waste, and year the impoundment was closed in the space below.

_____

_____

_____

_____

_____

[7] A surface impoundment is defined as holding, storage, settling, and aeration pits, ponds, or lagoons formed primarily of earthen materials.

Table VIII — Response to Question 8.7.2

Impound-ment	Residuals Disposed (RIN)	Total Capacity (Gallons)[1]	Storage or Treatment (specify)	Specify Treatment/ Recovery Type if Applicable[2]	Cost[3]	Synthetic Liner			Clay Liner			Leachate Collection System			
						Installed	Thickness (in)	No. of Liners	Installed	Thickness (in)	No. of Liners	System Installed		Leachate Generated	
1	_____	_____	_____	_____	_____	Yes No	_____	_____	Yes No	_____	_____	Yes No		Yes No	
2	_____	_____	_____	_____	_____	Yes No	_____	_____	Yes No	_____	_____	Yes No		Yes No	
3	_____	_____	_____	_____	_____	Yes No	_____	_____	Yes No	_____	_____	Yes No		Yes No	
4	_____	_____	_____	_____	_____	Yes No	_____	_____	Yes No	_____	_____	Yes No		Yes No	
5	_____	_____	_____	_____	_____	Yes No	_____	_____	Yes No	_____	_____	Yes No		Yes No	
6	_____	_____	_____	_____	_____	Yes No	_____	_____	Yes No	_____	_____	Yes No		Yes No	

Surface Area of Impoundments:

Impoundment	Surface Area
1	_____
2	_____
3	_____
4	_____
5	_____
6	_____

RCRA Status:

Permitted for Hazardous Waste
Yes No
Yes No
Yes No
Yes No
Yes No
Yes No

Minimum Technological Requirement (MTR) Status:

Meets MTR	Retrofit Planned	Waiver Request Planned
Yes No	Yes No	Yes No
Yes No	Yes No	Yes No
Yes No	Yes No	Yes No
Yes No	Yes No	Yes No
Yes No	Yes No	Yes No
Yes No	Yes No	Yes No

[1] Use the following code to designate the quantity of residual(s) in storage on any day in 1991:

A < 550 gallons
B 550 to 5,500 gallons
C 5,500 to 55,000 gallons
D > 55,000 gallons

[2] Use treatment/recovery type code shown in Question 7.5.

[3] Provide the yearly cost, including operation and maintenance costs, to dispose of the residuals in this manner.

8.8 Landfills

8.8.1 Have identified residuals been landfilled on-site at any time that you owned or operated this facility? Yes __ No _

If yes, answer Questions 8.8.2, 8.8.3, and 8.8.4.

8.8.2 Has any on-site landfill (or landfill cell) that was used to dispose of identified residuals been closed (i.e., no longer used to dispose of waste)? Yes __ No __

If yes, complete Table IX.

8.8.3 Have any identified residuals been landfilled on-site at any time in 1991 in a cell that has not been closed? Yes __ No __

If yes, complete Table X.

8.8.4 Are the landfills permitted for management of hazardous waste generated on-site?

Yes __ No __

U.S. Environmental Protection Agency

Table IX — Response to Question 8.8.2

Closed Landfill Cells

If more than 5 cells containing identified residuals have been closed, provide information only on the 5 cells that were most recently closed. Use Residual Identification Numbers (RIN) to identify residuals.

		Quantities and Costs		
Cell	Designed or Permitted Capacity	Residuals Disposed (RIN)	Quantity Disposed[1]	Cost[2]
1	_____	_____	_____	_____
2	_____	_____	_____	_____
3	_____	_____	_____	_____
4	_____	_____	_____	_____
5	_____	_____	_____	_____

[1] Use the following codes to designate the typical quantity of residuals contained in the pile on any day in 1991:
A < 20 cubic yards
B 20 to 200 cubic yards
C 200 to 2,000 cubic yards
D 2,000 to 20,000 cubic yards
E > 20,000 cubic yards

[2] Yearly cost, including operation and maintenance costs, to dispose of these residuals in this manner.

Cap/Cover Design

If you do not know whether a layer or liner was installed, circle both "Yes" and "No." If you do not know the thickness of a layer or liner, indicate "UNK" for unknown.

		Drainage Layer			Cap Design / Clay Layer		Synthetic Liner		
Cell	Residuals Disposed (RIN)	Installed	Material	(in)	Installed	Thickness (in)	Installed	Material	(in)
1	_____	Yes No	_____	_____	Yes No	_____	Yes No	_____	_____
2	_____	Yes No	_____	_____	Yes No	_____	Yes No	_____	_____
3	_____	Yes No	_____	_____	Yes No	_____	Yes No	_____	_____
4	_____	Yes No	_____	_____	Yes No	_____	Yes No	_____	_____
5	_____	Yes No	_____	_____	Yes No	_____	Yes No	_____	_____

Table IX (continued)

Bottom Liner Design/Leachate Collection

	Synthetic Layer			Clay Layer			Leachate Collection System	
Cell Number (as assigned above)	Installed	Thickness (in)	No. of Liners	Installed	Thickness (in)	No. of Liners	Installed	Leachate Generated
1 _____	Yes No	_____	_____	Yes No	_____	_____	Yes No	_____
2 _____	Yes No	_____	_____	Yes No	_____	_____	Yes No	_____
3 _____	Yes No	_____	_____	Yes No	_____	_____	Yes No	_____
4 _____	Yes No	_____	_____	Yes No	_____	_____	Yes No	_____
5 _____	Yes No	_____	_____	Yes No	_____	_____	Yes No	_____

U.S. Environmental Protection Agency

Table X — Response to Questions 8.8.3

Landfill Cells Used to Dispose of Identified Residuals at any Time In 1991

If more than 5 cells have been used in 1991 to dispose of identified residuals, provide information only on the 5 containing the greatest quantities of residuals. Use Residual Identification Numbers (RIN) to identify residuals.

Quantities and Costs

Cell	Designed or Permitted Capacity	Residuals Disposed (RIN)	Quantity Disposed[1]	Cost[2]	Permitted for Hazardous Waste
1	_____	_____	_____	_____	Yes No
2	_____	_____	_____	_____	Yes No
3	_____	_____	_____	_____	Yes No
4	_____	_____	_____	_____	Yes No
5	_____	_____	_____	_____	Yes No

[1] Use the following codes to designate the typical quantity of residuals contained in the pile on any day in 1991:
A < 20 cubic yards
B 20 to 200 cubic yards
C 200 to 2,000 cubic yards
D 2,000 to 20,000 cubic yards
E > 20,000 cubic yards

[2] Yearly cost, including operation and maintenance costs, to dispose of these residuals in this manner.

Bottom Liner Design/Leachate Collection

If you do not know whether a liner has been installed, circle both "Yes" and "No." If you do not know the thickness of a liner, indicate "UNK" for unknown.

		Synthetic Layer				Clay Layer			Leachate Collection System	
Cell	Residuals Disposed (RIN)	Installed	Material	Thickness (in)	No. of Liners	Installed	Thickness (in)	No. of Liners	Installed	Leachate Generated
1	_____	Yes No	_____	_____	_____	Yes No	_____	_____	Yes No	_____
2	_____	Yes No	_____	_____	_____	Yes No	_____	_____	Yes No	_____
3	_____	Yes No	_____	_____	_____	Yes No	_____	_____	Yes No	_____
4	_____	Yes No	_____	_____	_____	Yes No	_____	_____	Yes No	_____
5	_____	Yes No	_____	_____	_____	Yes No	_____	_____	Yes No	_____

8.9 Deep Well Injection

8.9.1 Were deep well injection operations used for disposal of chlorinated aliphatic waste in 1991? Yes __ No __

If yes, provide information on all chlorinated aliphatic wastes land disposed by deep well injection on-site as indicated below:

Table XI – Response to Questions 8.9

Well #	RIN	Quantities disposed	Is well monitored for leakage?	Monitoring type	Spillage prevention system	Formation used and depth	Is waste pre-treated?	Are brine or acids co-injected with waste?	Cost[1]	Permitted for Hazardous Waste?
___	___	_____	_____	_____	_____	_____	_____	_____	_____	_____
___	___	_____	_____	_____	_____	_____	_____	_____	_____	_____
___	___	_____	_____	_____	_____	_____	_____	_____	_____	_____
___	___	_____	_____	_____	_____	_____	_____	_____	_____	_____
___	___	_____	_____	_____	_____	_____	_____	_____	_____	_____
___	___	_____	_____	_____	_____	_____	_____	_____	_____	_____
___	___	_____	_____	_____	_____	_____	_____	_____	_____	_____
___	___	_____	_____	_____	_____	_____	_____	_____	_____	_____

[1] Provide yearly cost, including operation and maintenance costs, to dispose of the waste in this manner.

9. OPTIONAL: Source Reduction Efforts

Your response to this section is optional. You may choose not to answer any or all questions in this section and you would fulfill your obligation under RCRA Section 3007.

The U.S. Environmental Protection Agency is interested in knowing what types of source reduction activities are currently being implemented in industry and what barriers are faced by industry in implementing these activities. If you choose to respond, this information will be used in future regulatory development efforts to find ways to expand the opportunities for, and encourage, waste minimization.

The following questions concern source reduction efforts at your facility (both successful and unsuccessful). Source reduction refers to the reduction or elimination of waste or residuals at the source, usually within a process. The term includes equipment or technology modifications; process or procedure modifications; reformulation or redesign of products; substitution of raw materials; and improvements in housekeeping, maintenance, training, or inventory control.

9.1 Has your facility voluntarily prepared and implemented a formal pollution prevention/waste minimization plan? If so, briefly explain the objectives and extent implemented (0%, 25%, 50%, 75%, 100%)?

_____
_____
_____

List waste streams which have been identified as candidates for source reduction but for which no source reduction efforts have been initiated.

_____
_____

9.2 If there are barriers to implementing pollution prevention at your facility (e.g., management, procedures, funding, technical/RD&D, regulatory barriers, apathy), please describe them.

_____
_____
_____
_____

9.3 Please complete Table XII for any source reduction practices initiated at your facility in the last five years that have resulted in significant reductions in residuals or changes in quantities of raw materials used or released to the environment. The table requires the information listed below, and an example is provided on the following page (see Example VI).

- Residual(s) affected and RIN (if applicable)
- Annual volume of residual generated before and after source reduction was implemented
- Description of source reduction activity
- Concentrations of known or expected constituents in residual before and after source reduction was implemented
- Stage of development of the source reduction technique (e.g., pilot stage or fully implemented)
- Date the activity began (and ended, if applicable)
- Costs associated with the activity, including up-front investment and operation/maintenance costs

U.S. Environmental Protection Agency

[OPTIONAL]
EXAMPLE VI– Response to Question 9.3
Table XII

OPTIONAL: Source Reduction Project Description

Unit(s) Affected: Oil/Water Separator

Residuals Affected (RIN): 8

Project dates:
Date approved 9/88
Date completed 2/89
Present % of completion 100%

Project Description:

Removal of oil phase from oil/water separator and return to process feed as raw material.

Project Impact:

	Constituent Name	Before	After
Volume (tons/yr)		50	0
Concentration (vol%)			

Financial Information:

Investment ($): $20,000
Maintenance ($/yr): $2,000

Savings ($/yr): $10,000

Please describe the basis savings: Savings based on reduced waste disposal cost. Waste volume is reduced by 50 tons/yr for the @ disposal cost of $200/ton.

U.S. Environmental Protection Agency

[OPTIONAL]
Table XII – Response to Question 9.3

OPTIONAL: Source Reduction Project Description

Unit(s) Affected: _____

Residuals Affected (RIN): _____

Project dates:
Date approved _____
Date completed _____
Present % of completion _____

Project Description:

_____
_____
_____

Project Impact:

	Constituent Name	Before	After
Volume (ton/yr)		_____	_____
Concentration (vol%)	_____	_____	_____
	_____	_____	_____

Financial Information:

Investment ($): _____
Maintenance ($/yr): _____

Savings ($/yr): _____

Please describe the basis for the savings: _____
_____

copy as needed

U.S. Environmental Protection Agency

10. CERTIFICATION

I certify under penalty of law that I have personally examined and am familiar with the information contained herein, and that based on my inquiry of those responsible for obtaining the information, I believe the above to be true and complete, and I am aware that there are substantial penalties for submitting false information.

Signature .....

Date..... Telephone .....

Name (print) .....

Title .....

Authority for the collection of the above information is contained in the Resource Conservation and Recovery Act, 42 USC 6901 et seq.

U.S. Environmental Protection Agency

Space to Provide Additional Information Regarding the Questionnaire

Appendix B. EPA Record Sampling Analytical Data

Table B-1. Analytical Data Summary, Sample by Sample

FACILITY ID: OG
Sample Date: 04-22-97
Matrix: Wastewater

Volatile Organics - Method 8260A µg/L

	CAS No.		OG-01		OG-02		OG-03
Acetone	67641	<	20	J	3.5	J	16
Allyl chloride	107051		17	<	5	J	2.1
Bromodichloromethane	75274	<	5	J	1.1	<	5
Bromoform	75252	J	1.6		17	<	5
Carbon disulfide	75150	J	2.2	<	5	<	5
Chloroform	67663		91	<	5		63
Dibromochloromethane	124481	J	1.3	J	4.1	<	5
1,2-Dichloroethane	107062		82	<	5	J	2.4

Semivolatile Organics - Method 8270B µg/L

	CAS No		OG-01		OG-02		OG-03
Benzoic acid	65850		20		20		20
Bis(2-chloroethyl)ether	111444	<	10	<	10		260
Pentachlorophenol	87865		30	<	20	<	20
2,4,5-Trichlorophenol	95954		20	<	10	<	10
2,4,6-Trichlorophenol	88062		22	<	10	<	10

Total Metals - Methods 6010, 7470 mg/L

	CAS No.		OG-01		OG-02		OG-03
Aluminum	7429905	<	0.20		16.4		0.33
Arsenic	7440382	<	0.01		0.05		0.01
Beryllium	7440417	<	0.005		0.006	<	0.005
Calcium	7440702		81.3		25,500		10.4
Chromium	7440473		0.03		0.05		0.08
Copper	7440508		0.20		0.13		0.10
Iron	7439896		9.2		28.1		136
Lead	7439921	<	0.003		0.02		0.02
Magnesium	7439954		8.6		85.1	<	5
Manganese	7439965		0.10		1.6		0.55
Molybdenum	7439987	<	0.02		0.04	<	0.02
Nickel	7440020		0.15		0.11		0.07
Potassium	7440097		53.0		24.9		27.2
Sodium	7440235		7,210		2,530		2,860
Vanadium	7440622	<	0.05		0.25	<	0.05
Zinc	7440666		0.10		0.20		0.21

FACILITY ID: OG (cont)

General Chemistry mg/L	CAS No.		OG-01		OG-02		OG-03
TDS	NA		18,400		105,000		6,420
TSS	NA		48		835		280
TOC	NA		790		8.2		34

Dioxins/Furans - Method 1613 ng/L	CAS No.		OG-01		OG-02		OG-03
Total TCDF	55722275		0.049		0.012	<	0.033
Total PeCDF	30402154		0.300		0.056		0.15
1,2,3,4,7,8-HxCDF	70648269	<	0.140		0.420	<	0.056
1,2,3,6,7,8-HxCDF	57117449		0.110		0.440	<	0.056
2,3,4,6,7,8-HxCDF	60851345		0.100		0.430	<	0.056
1,2,3,7,8,9-HxCDF	72918219		0.098		0.210	<	0.056
Total HxCDF	55684941		1.20		3.10		0.44
Total HxCDD	34465468	<	0.050		0.100	<	0.056
1,2,3,4,6,7,8-HpCDF	67562394		1.90		15.0	<	0.056
1,2,3,4,7,8,9-HpCDF	55673897		0.240		4.60	<	0.056
Total HpCDF	38998753		3.00		28.0		0.85
1,2,3,4,6,7,8-HpCDD	35822469		0.069		1.90	<	0.056
Total HpCDD	37871004		0.069		3.10	<	0.056
OCDF	39001020		4.60		86.0		0.75
OCDD	3268879		0.600		22.0		0.19

Notes:

J Compound's concentration is estimated. Mass spectral data indicate the presence of a compound that meets the identification criteria for which the result is less than the laboratory detection limit, but greater than zero.

|::

FACILITY ID: OG
Sample Date: 04-22-97
Matrix: Wastewater Sludge

Volatile Organics - Method 8260A µg/kg

	CAS No.		OG-04**		OG-05**		OG-06**		OG-04		OG-05		OG-06
Acetone	67641		3,340		41	<	52		2000		23	<	20
Allyl chloride	107051		13		61	J	9.2		8		34	J	3.5
Bromoform	75252	<	8		68	<	13	<	5		38	<	5
2-Butanone	78933		200		10	<	13		120		6	<	5
Carbon disulfide	75150	<	8	J	7.8	<	13	<	5	J	4.4	<	5
Chloroform	67663	J	4.2	J	7.8	J	9.2	J	2.5	J	4.4	J	3.5
Dibromochloromethane	124481	<	8		20	<	13	<	5		11	<	5
1,2-Dichloroethane	107062		15		61	J	7.1		9		34	J	2.7
2-Hexanone	591786	J	4.2	<	9	<	13	J	2.5	<	5	<	5
Trichloroethene	79016	J	4.7	J	5.5	<	13	J	2.8	J	3.1	<	5
Vinyl acetate	108054	J	8	<	9		19	J	4.8	<	5		7

TCLP Volatile Organics - Methods 1311, 8260A µg/L

	CAS No.		OG-04		OG-05		OG-06
Acetone	67641	B	670	B	220	B	330
Bromoform	75252	<	5	J	3.6	<	5
2-Butanone	78933		28	J	3.1	<	5
1,2-Dichloroethane	107062	<	5		26	J	2.6
cis-1,3-Dichloropropene	10061015	J	3.8		9	<	5
Methylene chloride	75092		44		18		23

Semivolatile Organics - Method 8270B µg/kg

	CAS No		OG-04**		OG-05**		OG-06**		OG-04		OG-05		OG-06
Benzoic acid	65850	J	320	<	2,300	<	3,400	J	190	<	1,300	<	1,300
Bis(2-chloroethyl)ether	111444	<	1,100	<	1,200		2,100	<	660	<	670		800
Bis(2-ethylhexyl)phthalate	117817	J	230	J	180		4,900	J	140	J	100		1,870
Hexachlorobenzene	118741	J	180	<	1,200	<	1,700	J	110	<	670	<	650

.P Semivolatile Organics - Methods 1311, 8270B µg/L

	CAS No		OG-04		OG-05		OG-06
Benzoic acid	65850		108		31	<	20
Bis(2-chloroethyl)ether	111444	<	10	<	10		12

FACILITY ID: OG (cont)

Total Metals - Methods 6010, 7471 mg/kg

	CAS No.	OG-04**	OG-05**	OG-06**	OG-04	OG-05	OG-06
Aluminum	7429905	486	6,400	549	291	3,590	209
Arsenic	7440382	9.7	25.0	18.6	5.8	14.0	7.1
Barium	7440393	< 33	< 36	112	< 20	< 20	42.5
Cadmium	7440439	< 0.8	< 0.9	1.65	< 0.5	< 0.5	0.63
Calcium	7440702	357,000	273,000	34,600	214,000	153,000	13,200
Chromium	7440473	20.4	40.6	184	12.2	22.8	70.2
Cobalt	7440484	< 8	3.9	27.3	< 5	2.2	10.4
Copper	7440508	91.0	69.2	370	54.5	38.8	141
Iron	7439896	11,600	23,000	415,000	6,940	12,900	158,000
Lead	7439921	2.7	15.5	34.1	1.6	8.7	13.0
Magnesium	7439954	< 830	8,880	7,170	< 500	4,980	2,730
Manganese	7439965	222	1,280	1,740	133	719	663
Molybdenum	7439987	< 3	16.2	< 5	< 2	9.1	< 2
Nickel	7440020	52.6	75.0	210	31.5	42.1	80.2
Potassium	7440097	< 830	1,100	< 1,300	< 500	616	< 500
Sodium	7440235	4,570	3,460	7,430	2,740	1,940	2,830
Vanadium	7440622	24.4	137	23.9	14.6	77.0	9.1
Zinc	7440666	92.8	178	1,810	55.6	99.6	688

TCLP Metals - Methods 1311, 6010, 7470 mg/L

	CAS No.	OG-04	OG-05	OG-06
Calcium	7440702	848	1,270	588
Cobalt	7440484	< 0.05	< 0.05	0.07
Copper	7440508	0.43	< 0.25	< 0.25
Magnesium	7439954	3.2	168	136
Manganese	7439965	1.7	5.1	12.9
Molybdenum	7439987	< 0.20	0.24	0.22
Nickel	7440020	0.34	0.22	0.67
Potassium	7440097	9.3	< 1	5.2
Zinc	7440666	< 2	< 2	4.0

General Chemistry mg/kg

	CAS No.	OG-04**	OG-05**	OG-06**	OG-04	OG-05	OG-06
TOC	NA	NA	NA	NA	NA	NA	NA
Oil & Grease	NA	NA	NA	NA	NA	NA	NA
BTU	NA	NA	NA	NA	< 213	361	362
Percent Solids	NA	NA	NA	NA	59.9	56.1	38.1

|::

FACILITY ID: OG (cont)

Dioxins/Furans - Method 1613 ng/kg

	CAS No.	OG-04**	OG-05**	OG-06**	OG-04	OG-05	OG-06
2,3,7,8-TCDF	51207319	1.9	2.8	< 16.0	1.1	1.6	< 6.1
Total TCDF	55722275	47.0	54.0	580	28.2	30.3	221
Total TCDD	41903575	2.0	< 0.9	< 3.1	1.2	< 0.5	< 1.2
1,2,3,7,8-PeCDF	57117416	14.0	26.0	55.0	8.4	14.6	21.0
2,3,4,7,8-PeCDF	57117314	18.0	44.0	59.0	10.8	24.7	22.5
Total PeCDF	30402154	240	310	1,400	144	174	533
1,2,3,7,8-PeCDD	40321764	< 4.7	12.0	< 15.0	< 2.8	6.7	< 5.7
Total PeCDD	36088229	17.0	190	< 15.0	10.2	107	< 5.7
1,2,3,4,7,8-HxCDF	70648269	180	550	280	108	309	107
1,2,3,6,7,8-HxCDF	57117449	140	500	< 42.0	83.9	281	< 16.0
2,3,4,6,7,8-HxCDF	60851345	120	520	86.0	71.9	292	32.8
1,2,3,7,8,9-HxCDF	72918219	65.0	250	< 210	38.9	140	< 80.0
Total HxCDF	55684941	1,200	3,900	3,600	719	2,190	1,370
1,2,3,4,7,8-HxCDD	39227286	14.0	43.0	< 15.0	8.4	24.1	< 5.7
1,2,3,6,7,8-HxCDD	57653857	13.0	37.0	< 15.0	7.8	20.8	< 5.7
1,2,3,7,8,9-HxCDD	19408743	9.4	34.0	< 15.0	5.6	19.1	< 5.7
Total HxCDD	34465468	71.0	310	< 15.0	42.5	174	< 5.7
1,2,3,4,6,7,8-HpCDF	67562394	3,500	14,000	120	2,100	7,850	45.7
1,2,3,4,7,8,9-HpCDF	55673897	690	4,000	130	413	2,240	49.5
Total HpCDF	38998753	5,700	25,000	5,700	3,400	14,000	2,170
1,2,3,4,6,7,8-HpCDD	35822469	390	2,200	38.0	234	1,230	14.5
Total HpCDD	37871004	390	3,600	38.0	234	2,020	14.5
OCDF	39001020	18,000	86,000	1,700	10,800	48,300	648
OCDD	3268879	3,700	23,000	780	2,220	12,900	297

Notes:

J Compound's concentration is estimated. Mass spectral data indicate the presence of a compound that meets the identification criteria for which the result is less than the laboratory detection limit, but greater than zero.

** Results reported on a dry-weight basis.

|::

FACILITY ID: VT
Sample Date: 05-20-97
Matrix: Wastewater

Volatile Organics - Method 8260A µg/L

	CAS No.		VT-01		VT-02		VT-03		VT-04
Bromodichloromethane	75274		24		110	<	5		7
Bromoform	75252		31		45	<	5	<	5
Carbon disulfide	75150	<	5		140	<	5		8
Carbon tetrachloride	56235		14		8	<	5		160
Chloroform	67663		25		380		5		13
Dibromochloromethane	124481		56		88	<	5		6
Trichloroethene	79016	<	5	<	5	<	5	<	5
Tertachloroethene	127184	<	5	<	5	<	5		18

Semivolatile Organics - Method 8270B µg/L

	CAS No		VT-01		VT-02		VT-03		VT-04
Benzoic acid	65850		82	<	20	<	20		28
Benzyl alcohol	100516	<	10	<	10	<	10		180
1,2-Dichlorobenzene	95501	<	10	J	8.8	<	10	<	10
1,3-Dichlorobenzene	541731	<	10	J	6.9	<	10	<	10
Hexachlorobenzene	118741		20	<	10	<	10	J	9.1
Hexachlorocyclopentadiene	77474		430		24	<	10		100

Total Metals - Methods 6010, 7470 mg/L

	CAS No.		VT-01		VT-02		VT-03		VT-04
Aluminum	7429905	<	0.20	<	0.20	<	0.20		0.35
Beryllium	7440417		0.006	<	0.005	<	0.005	<	0.005
Calcium	7440702		5.6	<	5.0		15.3		15.4
Chromium	7440473		0.08		0.03		0.32		0.01
Copper	7440508	<	0.03	<	0.03	<	0.03		0.06
Iron	7439896		0.8		0.8		3.0		1.8
Lead	7439921	<	0.003		0.003		0.003		0.007
Magnesium	7439954	<	5.0	<	5.0		6.7		5.9
Manganese	7439965	<	0.02	<	0.02		0.07		0.08
Molybdenum	7439987	<	0.02	<	0.02		0.06	<	0.02
Nickel	7440020		12.0		0.11		1.1		0.13
Potassium	7440097		226		6.1	<	5.0	<	5.0
Sodium	7440235		52,400		31,100		22.3		1,660
Zinc	7440666		0.08		0.06		0.07		0.13

FACILITY ID: VT (cont)

General Chemistry mg/L	CAS No.	VT-01	VT-02	VT-03	VT-04
TSS	NA	38	< 20	< 20	20
Oil & Grease	NA	< 2	< 2	< 2	< 2
TOC	NA	< 1	4	< 1	4

Dioxins/Furans - Method 1613 ng/L	CAS No.	*VT-01 ng/kg	VT-02	VT-03	VT-04
2,3,7,8-TCDF	51207319	1.2	< 0.010	< 0.009	0.091
Total TCDF	55722275	2.2	< 0.010	< 0.009	1.40
Total TCDD	41903575	< 1.0	< 0.010	< 0.009	0.099
1,2,3,7,8-PeCDF	57117416	< 4.8	< 0.051	< 0.045	0.950
2,3,4,7,8-PeCDF	57117314	< 4.8	< 0.051	< 0.045	0.079
Total PeCDF	30402154	< 4.8	< 0.051	< 0.045	4.30
1,2,3,4,7,8-HxCDF	70648269	< 4.8	< 0.051	< 0.045	1.20
1,2,3,6,7,8-HxCDF	57117449	< 4.8	< 0.051	< 0.045	1.20
2,3,4,6,7,8-HxCDF	60851345	< 4.8	< 0.051	< 0.045	0.430
1,2,3,7,8,9-HxCDF	72918219	< 6.1	< 0.051	< 0.045	0.680
Total HxCDF	55684941	< 4.8	< 0.051	< 0.045	6.80
Total HxCDD	34465468	< 4.8	< 0.051	< 0.045	0.067
1,2,3,4,6,7,8-HpCDF	67562394	< 4.8	0.200	0.580	2.60
1,2,3,4,7,8,9-HpCDF	55673897	< 4.8	0.065	0.220	2.30
Total HpCDF	38998753	< 4.8	0.330	1.10	6.30
1,2,3,4,6,7,8-HpCDD	35822469	6.2	< 0.051	0.170	0.050
Total HpCDD	37871004	6.2	< 0.051	0.220	0.050
OCDF	39001020	18.0	0.860	7.00	6.500
OCDD	3268879	53.0	< 0.100	1.40	0.240

Notes:

J Compound's concentration is estimated. Mass spectral data indicate the presence of a compound that meets the identification criteria for which the result is less than the laboratory detection limit, but greater than zero.

* Sample was originally analyzed as a solid matrix due to the amount of precipitate present. Sample will be reanalyzed as a liquid matrix.

|::

FACILITY ID: DC
Sample Date: 05-21-97
Matrix: Wastewater

Volatile Organics - Method 8260A µg/L

	CAS No.		DC-02		DC-03		DC-04		DC-05
Acetone	67641	<	20		240	J	15		190
Benzene	71432	<	5	<	5	<	5	J	3.9
Bromomethane	74839	J	3.3		190	<	10	<	10
2-Butanone	78933		8		470	<	5		60
Carbon disulfide	75150		21	J	17	J	4.6	<	5
2-Chloro-1,3-butadiene	126998		8	<	5	<	5	<	5
Chloromethane	74873		24		33,000	<	10		55
1,2-Dichloroethane	107062	<	5	J	7.1	<	5		22
Tetrachloroethene	127184	<	5	<	5	<	5		6
1,1,1-Trichloroethane	71556	<	5	J	2.7	<	5		8

Semivolatile Organics - Method 8270B µg/L

	CAS No		DC-02		DC-03		DC-04		DC-05
Benzoic acid	65850	J	19	<	20	<	20	<	50

Total Metals - Methods 6010, 7470 mg/L

	CAS No.		DC-02		DC-03		DC-04		DC-05
Aluminum	7429905		2.9	<	0.20		13.1		1.53
Arsenic	7440382		0.01	<	0.01	<	0.01		0.01
Barium	7440393	<	0.20	<	0.20	<	0.20		0.21
Calcium	7440702	<	5.0		81.3	<	5.0		2,600
Chromium	7440473		0.01	<	0.01		0.02	<	0.01
Copper	7440508	<	0.03	<	0.03	<	0.03		0.7
Iron	7439896		1.1		0.7		2.3		1.9
Lead	7439921	<	0.003	<	0.003		0.006		0.008
Magnesium	7439954	<	5.0		15.7	<	5.0		12.2
Manganese	7439965	<	0.02	<	0.02	<	0.02		0.17
Potassium	7440097	<	5.0	<	5.0		7.8		7.9
Sodium	7440235	<	5.0		13.4	<	5.0		73.4
Zinc	7440666		0.04	<	0.02		0.07		0.37

|::

FACILITY ID: DC (cont)

General Chemistry mg/L

	CAS No.		DC-02		DC-03	DC-04	DC-05
TSS	NA	<	20	<	20	29	73
Oil & Grease	NA	<	2	<	2	166	42
TOC	NA		90		751	471	113

Dioxins/Furans-Method 1613 ng/L

	CAS No.	DC-02	DC-03	DC-04	DC-05
Not Detected	NA	ND	ND	ND	ND

Notes:

J Compound's concentration is estimated. Mass spectral data indicate the presence of a compound that meets the identification criteria for which the result is less than the laboratory detection limit, but greater than zero.

FACILITY ID: DC
Sample Date: 05-21-97
Matrix: Wastewater Sludge

Volatile Organics - Method 8260A µg/kg

	CAS No.		DC-01**	DC-01
Acetone	67641		4,100	2,200
Methylene chloride	75092		22,400	12,000

TCLP Volatile Organics - Methods 1311, 8260A µg/L

	CAS No.		DC-01
Acetone	67641		150
Carbon disulfide	75150		6
Methylene chloride	75092	J	9.1

Semivolatile Organics - Method 8270B µg/kg

	CAS No		DC-01**	DC-01
Not Detected	NA		ND	ND

.P Semivolatile Organics - Methods 1311, 8270B µg/L

	CAS No		DC-01
Benzoic acid	65850	J	13

Total Metals - Methods 6010, 7471 mg/kg

	CAS No.		DC-01**	DC-01
Aluminum	7429905		3,600	1,930
Arsenic	7440382		3.54	1.90
Calcium	7440702		144,000	77,200
Chromium	7440473		13	7.0
Copper	7440508		1,200	643
Iron	7439896		10,600	5,680
Lead	7439921		13	7.0
Magnesium	7439954		43,500	23,300
Manganese	7439965		203	109
Nickel	7440020		17	9.1
Zinc	7440666		1,070	574

FACILITY ID: DC (cont)

TCLP Metals - Methods 1311, 6010, 7470 mg/L

	CAS No.	DC-01
Aluminum	7429905	2.4
Calcium	7440702	1,470
Copper	7440508	5.3
Magnesium	7439954	81
Manganese	7439965	4.1

General Chemistry mg/kg

	CAS No.	DC-01**	DC-01
TOC	NA	78,500	42,100
Oil & Grease	NA	122,000	65,400
BTU	NA	NA	3,199
Percent Solids	NA	NA	53.6

Dioxins/Furans - Method 1613 ng/kg

	CAS No.	DC-01**	DC-01
1,2,3,4,6,7,8-HpCDF	67562394	5.8	3.1
Total HpCDF	38998753	5.8	3.1
1,2,3,4,6,7,8-HpCDD	35822469	13.0	7.0
Total HpCDD	37871004	24.0	12.9
OCDF	39001020	18.0	9.6
OCDD	3268879	82.0	44.0

Notes:

J Compound's concentration is estimated. Mass spectral data indicate the presence of a compound that meets the identification criteria for which the result is less than the laboratory detection limit, but greater than zero.

** Results reported on a dry-weight basis.

|::

FACILITY ID: DK
Sample Date: 05-22-97
Matrix: Wastewater

Volatile Organics - Method 8260A µg/L

	CAS No.		DK-01		DK-02		DK-03		DK-04
Acetone	67641		150		45		14,000		1,200
Benzene	71432	J	4.9	J	3.2	<	5	<	5
2-Butanone	78933		110		50		150		18
Carbon disulfide	75150		270		81		10		580
Carbon tetrachloride	56235	<	5		11	<	5	<	5
2-Chloro-1,3-butadiene	126998		1,000		62		110		140
Chloroform	67663		17		22	<	5		6
1,1-Dichloroethene	75354		8	<	5		6	<	5
1,2-Dichloropropane	78875		6	<	5	<	5	<	5
2-Hexanone	591786	<	5	<	5		29,000	<	5
Toluene	108883		86		150		1,200		210
1,1,2-Trichloroethane	79005		7		200	<	5	<	5

Semivolatile Organics - Method 8270B µg/L

	CAS No	DK-01	DK-02	DK-03	DK-04
Not Detected	NA	ND	ND	ND	ND

Total Metals - Methods 6010, 7470 mg/L

	CAS No.		DK-01		DK-02		DK-03		DK-04
Aluminum	7429905	<	0.20	<	0.20	<	0.20		0.79
Arsenic	7440382		0.01	<	0.01		0.01	<	0.01
Calcium	7440702		121		6.35		21.3		133
Chromium	7440473		0.55	<	0.01		0.04	<	0.01
Copper	7440508		0.05	<	0.03		0.26	<	0.03
Iron	7439896		2.3	<	0.10		0.96		2.2
Magnesium	7439954		34.6	<	5.0		8.2		10.8
Manganese	7439965		0.89		0.05		0.23		0.12
Molybdenum	7439987		0.10	<	0.02	<	0.02	<	0.02
Nickel	7440020		0.09	<	0.04		0.54		0.09
Potassium	7440097	<	5.0	<	5.0		10.8		11.5
Sodium	7440235		35.8		6.1		8,680		682
Zinc	7440666		0.02	<	0.02	<	0.02		0.07

|::

FACILITY ID: DK (cont)

General Chemistry mg/L

	CAS No.		DK-01		DK-02		DK-03		DK-04
TSS	NA	<	20	<	20		174		85
Oil & Grease	NA	<	2	<	2		318		5
TOC	NA		443		29		939		136

Dioxins/Furans - Method 1613 ng/L

	CAS No.		DK-01		DK-02		DK-03		DK-04
Total TCDF	55722275		0.040		0.094	<	6.70		0.055
Total TCDD	41903575	<	0.010		0.048		1.70		0.040
Total PeCDF	30402154	<	0.050	<	0.051		1.50	<	0.050
Total PeCDD	36088229	<	0.050	<	0.051		0.500	<	0.050
Total HxCDF	55684941	<	0.050	<	0.051		1.30	<	0.050
Total HxCDD	34465468	<	0.050	<	0.051		0.740	<	0.050
Total HpCDD	37871004	<	0.050	<	0.051		0.300	<	0.050

Notes:

J Compound's concentration is estimated. Mass spectral data indicate the presence of a compound that meets the identification criteria for which the result is less than the laboratory detection limit, but greater than zero.

FACILITY ID: BG
Sample Date: 06-04-97
Matrix: Wastewater

Volatile Organics - Method 8260A µg/L

	CAS No.		BG-01		BG-05
Acetone	67641	<	20		4,200
Benzene	71432	<	5		85
2-Butanone	78933		6		67
Carbon disulfide	75150	<	5	J	2.6
Chlorobenzene	108907	<	5		16
Chloroethane	75003	J	98		12
Chloroform	67663		7,100	<	5
1,2-Dichlorobenzene	95501	<	5		5
1,4-Dichlorobenzene	106467	<	5	J	2.9
1,1-Dichloroethane	75343	<	5		810
1,2-Dichloroethane	107062		120		40
1,1-Dichloroethene	75354	<	5	J	2.6
trans-1,2-Dichloroethene	156605	<	5	J	39
1,2-Dichloropropane	78875	<	5		9.9
Ethylbenzene	100414	<	5		5.2
4-Methyl-2-pentanone	108101	<	5	J	2.8
Toluene	108883	<	5	J	4.6
1,1,2-Trichloroethane	79005	<	5		47
Vinyl chloride	75014	<	10	J	680

Semivolatile Organics - Method 8270B µg/L

	CAS No		BG-01		BG-05
Benzoic acid	65850		77		67
Benzyl alcohol	100516	<	10	J	13
Di-n-butyl phthalate	84742	<	10		290
2,4-Dimethylphenol	105679	<	10		18
Bis(2-ethylhexyl)phthalate	117817	<	10		52

FACILITY ID: BG (cont)

Total Metals - Methods 6010, 7470 mg/L

	CAS No.		BG-01		BG-05
Aluminum	7429905		2.28		2.08
Calcium	7440702		40.7		56.0
Chromium	7440473		7.93		0.35
Cobalt	7440484		0.07	<	0.05
Copper	7440508		0.80		0.39
Iron	7439896		96.1		139
Lead	7439921		0.008		0.070
Magnesium	7439954		12.6		7.60
Manganese	7439965		1.97		1.21
Mercury	7439976		0.008		8.60
Molybdenum	7439987		0.04		0.10
Nickel	7440020		3.66		0.70
Potassium	7440097		5.8		11.6
Sodium	7440235		9,760		196
Zinc	7440666		0.27		3.58

General Chemistry mg/L

	CAS No.		BG-01		BG-05
TSS	NA	<	20		540
Oil & Grease	NA	<	2		111
TOC	NA		1,510		302

Dioxins/Furans - Method 1613 ng/L

	CAS No.		BG-01		BG-05
Total TCDF	55722275	<	0.010		0.010
Total TCDD	41903575	<	0.010		0.027
Total HxCDD	34465468	<	0.048		0.050
1,2,3,4,6,7,8-HpCDF	67562394		0.160		0.048
Total HpCDF	38998573		0.160		0.048
1,2,3,4,6,7,8-HpCDD	35822469	<	0.048		0.170
Total HpCDD	37871004	<	0.048		0.340
OCDF	39001020		1.50		0.098
OCDD	3268879	<	0.095		1.300

Notes:

J Compound's concentration is estimated. Mass spectral data indicate the presence of a compound that meets the identification criteria for which the result is less than the laboratory detection limit, but greater than zero.

FACILITY ID: BG
Sample Date: 06-04-97
Matrix: Wastewater Sludge

Volatile Organics - Method 8260A µg/kg

	CAS No.	BG-04**	BG-06**
Not Detected	67641	ND	ND

TCLP Volatile Organics - Methods 1311, 8260A µg/L

	CAS No.		BG-04		BG-06
Acetone	67641	B	570	B	130
Benzene	71432	<	5	J	4.9
Bromodichloromethane	75274		6	<	5
2-Butanone	78933		18		9
Carbon disulfide	75150	<	5		14
Chloroform	67663		18	<	5
Dibromochloromethane	124481		5	<	5
1,1-Dichloroethane	75343	<	5		43
1,2-Dichloroethane	107062		17		7
trans-1,2-Dichloroethene	156605	<	5	J	3.2
Methylene chloride	75092	J	5.7	J	6.6
1,1,2-Trichloroethane	79005	<	5		10
Vinyl chloride	75014	<	5	J	7.1

Semivolatile Organics - Method 8270B µg/kg

	CAS No		BG-04**		BG-06**		BG-04		BG-06
Benzo(g,h,i)perylene	191242		51,600	<	15,100		13,000	<	6,600
Di-n-butyl phthalate	84742	<	32,700		45,800	<	8,250		20,000
1,2-Dichlorobenzene	95501	<	32,700	J	4,600	<	8,250	J	2,010
1,3-Dichlorobenzene	541731	<	32,700	J	1,600	<	8,250	J	700
1,4-Dichlorobenzene	106467	<	32,700	J	2,200	<	8,250	J	960
Bis(2-ethylhexyl)phthalate	117817	<	32,700	J	7,800	<	8,250	J	3,400
Fluoranthene	206440	J	17,100	J	1,500	J	4,300	J	670
Pyrene	129000		63,500	J	5,300		16,000	J	2,320
1,2,4-Trichlorobenzene	120821	<	32,700	J	5,400	<	8,250	J	2,340

FACILITY ID: BG (cont)

.P Semivolatile Organics - Methods 1311, 8270B µg/L

	CAS No		BG-04		BG-06
Benzoic acid	65850	J	17	J	14
Butyl benzyl phthalate	85687	<	10	J	7.9
Phenol	108952	J	6.3	<	10

Total Metals - Methods 6010, 7471 mg/kg

	CAS No.		BG-04**	BG-06**		BG-04	BG-06
Aluminum	7429905		3,200	1,430		805	626
Arsenic	7440382		4.37	8.24		1.10	3.60
Barium	7440393		164	98.4		41.4	43.0
Cadmium	7440439	<	2	2.3	<	0.5	1.0
Calcium	7440702		13,100	2,500		3,290	1,090
Chromium	7440473		65.1	35.0		16.4	15.3
Copper	7440508		687	99.5		173	43.5
Iron	7439896		25,600	5,510		6,440	2,410
Lead	7439921		16.3	34.8		4.1	15.2
Magnesium	7439954	J	1,950	483	J	492	211
Manganese	7439965		235	32.7		59.3	14.3
Mercury	7439976		78.6	21,100		19.8	9,200
Nickel	7440020		81.0	61.8		20.4	27.0
Sodium	7440235		7,540	1,800		1,900	785
Vanadium	7440622	<	20	15.3	<	5	6.7
Zinc	7440666		738	1,020		186	446

TCLP Metals - Methods 1311, 6010, 7470 mg/L

	CAS No.		BG-04	BG-06
Calcium	7440702		128	417
Chromium	7440473	<	0.05	0.10
Copper	7440508		0.52	0.64
Magnesium	7439954		18	2.7
Manganese	7439965		1.3	0.3
Mercury	7439976	<	0.01	0.26
Nickel	7440020		0.24	1.0
Potassium	7440097		2.9	1.6
Zinc	7440666		3.2	9.5

FACILITY ID: BG (cont)

General Chemistry mg/kg	CAS No.		BG-04**	BG-06**		BG-04	BG-06
TOC	NA		265,000	52,000		66,900	22,600
Oil & Grease	NA		6,900	95,000		1,740	41,600
BTU	NA		NA	NA	<	216	1,085
Percent Solids	NA		NA	NA		25.2	43.7

Dioxins/Furans - Method 1613 ng/kg	CAS No.		BG-04**	BG-06**		BG-04	BG-06
2,3,7,8-TCDF	51207319		5.9	23.0		1.5	10.1
Total TCDF	55722275		5.9	110		1.5	48.1
Total TCDD	41903575	<	1.0	8.8	<	0.3	3.8
1,2,3,7,8-PeCDF	57117416	<	18.0	66.0	<	4.5	28.8
2,3,4,7,8-PeCDF	57117314	<	14.0	45.0	<	3.5	19.7
Total PeCDF	30402154		75.0	390		18.9	170
1,2,3,4,7,8-HxCDF	70648269		140	190		35.3	83.0
1,2,3,6,7,8-HxCDF	57117449		84.0	110		21.2	48.1
2,3,4,6,7,8-HxCDF	60851345		63.0	73.0		15.9	31.9
1,2,3,7,8,9-HxCDF	72918219		38.0	44.0		9.6	19.2
Total HxCDF	55684941		740	860		186	376
Total HxCDD	34465468		22.0	150		5.5	65.6
1,2,3,4,6,7,8-HpCDF	67562394		1,000	250		252	109
1,2,3,4,7,8,9-HpCDF	55673897		240	68.0		60.5	29.7
Total HpCDF	38998753		1,800	320		454	140
1,2,3,4,6,7,8-HpCDD	35822469		300	400		75.6	175
Total HpCDD	37871004		580	800		146	350
OCDF	39001020		5,400	230		1,360	101
OCDD	3268879		2,600	3,300		655	1,440

Notes:

J Compound's concentration is estimated. Mass spectral data indicate the presence of a compound that meets the identification criteria for which the result is less than the laboratory detection limit, but greater than zero.

** Results reported on a dry-weight basis.

FACILITY ID: VG
Sample Date: 06-05-97
Matrix: Wastewater

Volatile Organics - Method 8260A µg/L

	CAS No.		VG-01		VG-03		VG-05		VG-06
Acetone	67641	<	20	<	20		25		29
Bromodichloromethane	75274	<	5	<	5		12	J	4.8
Bromoform	75252	<	5	<	5		19	<	5
2-Butanone	78933	J	2.9	<	5		5	J	3.8
Carbon tetrachloride	56235	<	5	<	5		13	<	5
Chloroethane	75003	<	10	<	10		20	<	10
Chloroform	67663		17		24		58		23
Chloromethane	74873	<	10		740		23	<	10
Dibromochloromethane	124481	<	5	<	5		17	J	3.1
1,1-Dichloroethane	75343	<	5	<	5		21	<	5
1,2-Dichloroethane	107062	<	5	<	5		75	<	5
1,1-Dichloroethene	75354	<	5		5	<	5	<	5
cis-1,2-Dichloroethene	156592	<	5	<	5		38	<	5
Methylene chloride	75092	<	10		150		59	<	10
Tetrachloroethene	127184	<	5	<	5		12	<	5
1,1,1-Trichloroethane	71556	<	5		98	<	5	<	5
1,1,2-Trichloroethane	79005	<	5	<	5		21	<	5
Trichloroethene	79016	<	5	<	5	J	4.3	<	5
Vinyl chloride	75014		120	<	10	<	10	<	10

Semivolatile Organics - Method 8270B µg/L

	CAS No		VG-01		VG-03		VG-05		VG-06
Benzoic acid	65850	<	20	<	20	J	10	<	20
Benzyl alcohol	100516	J	5.6	<	10	<	10	<	10
Butyl benzyl phthalate	85687	J	8.4	<	10	<	10	<	10
Hexachlorobutadiene	87683	<	10	<	10	J	6.1	<	10
Pentachlorophenol	87865		54	<	20	<	20	<	20
2,4,6-Trichlorophenol	88062	J	7.8	<	10	<	10	<	10

FACILITY ID: VG (cont)

Total Metals - Methods 6010, 7470 mg/L

	CAS No.		VG-01		VG-03		VG-05		VG-06
Aluminum	7429905		2.53		0.37		0.69		0.38
Arsenic	7440382		0.014	<	0.010		0.05		0.03
Barium	7440393	<	0.20	<	0.20		3.59		1.18
Beryllium	7440417		0.006	<	0.005	<	0.005	<	0.005
Calcium	7440702	<	5.0		22.6		2,050		928
Chromium	7440473		0.10	<	0.010		0.02		0.01
Cobalt	7440484	<	0.05	<	0.05	<	0.05	<	0.05
Copper	7440508		0.46		0.03		0.13		0.12
Iron	7439896		7.11		6.41		26.1		8.46
Lead	7439921	<	0.003	<	0.003		0.022		0.010
Magnesium	7439954	<	5.0		7.63		151		37.7
Manganese	7439965		0.13		0.02		0.97		0.34
Nickel	7440020		1.48	<	0.04		0.21		0.08
Potassium	7440097		76.9		10.2		21.8		28.4
Selenium	7782492		0.02	<	0.005	<	0.005	<	0.005
Sodium	7440235		42,400		21.8		10,800		23,000
Thallium	7440280		0.02	<	0.01	<	0.01	<	0.01
Zinc	7440666		0.03		0.28		0.25		0.10

General Chemistry mg/L

	CAS No.		VG-01		VG-03		VG-05		VG-06
TSS	NA		48	<	20	<	20	<	20
Oil & Grease	NA	<	2	<	2		6	<	2
TOC	NA		4,060		60		46		23

FACILITY ID: VG (cont)

Dioxins/Furans - Method 1613 ng/L

	CAS No.		VG-01		VG-03		VG-05		VG-06
2,3,7,8-TCDF	51207319	<	0.009	<	0.010		0.016	<	0.009
Total TCDF	55722275		0.160	<	0.010		0.016	<	0.009
1,2,3,7,8-PeCDF	57117416		0.600	<	0.048	<	0.050	<	0.047
Total PeCDF	30402154		2.300	<	0.048	<	0.050	<	0.047
1,2,3,4,7,8-HxCDF	70648269		2.500	<	0.048		0.120	<	0.047
1,2,3,6,7,8-HxCDF	57117449		2.700	<	0.048		0.120	<	0.047
2,3,4,6,7,8-HxCDF	60851345		0.140	<	0.048	<	0.050	<	0.047
1,2,3,7,8,9-HxCDF	72918219		0.072	<	0.048	<	0.050	<	0.047
Total HxCDF	55684941		13.000	<	0.048		0.470		0.095
1,2,3,4,7,8-HxCDD	39227286		0.120	<	0.048	<	0.050	<	0.047
1,2,3,6,7,8-HxCDD	57653857		0.110	<	0.048	<	0.050	<	0.047
Total HxCDD	34465468		0.550	<	0.048	<	0.050	<	0.047
1,2,3,4,6,7,8-HpCDF	67562394		6.600	<	0.048		0.540		0.310
1,2,3,4,7,8,9-HpCDF	55673897		0.890	<	0.048		0.130	<	0.049
Total HpCDF	38998753		8.000	<	0.048		0.770		0.310
1,2,3,4,6,7,8-HpCDD	35822469		0.410	<	0.048	<	0.050	<	0.047
Total HpCDD	37871004		0.580	<	0.048	<	0.050	<	0.047
OCDF	39001020		23.000	<	0.095		9.700		3.100
OCDD	3268879		0.078	<	0.095		0.230		0.120

J Compound's concentration is estimated. Mass spectral data indicate the presence of a compound that meets the identification criteria for which the result is less than the laboratory detection limit, but greater than zero.

FACILITY ID: DD
Sample Date: 07-10-97
Matrix: Wastewater

Volatile Organics - Method 8260A µg/L

	CAS No.		DD-03		DD-04		DD-05
Acetone	67641		560		130		290
Benzene	71432		8	<	5	<	5
2-Butanone	78933	<	5	<	5		7
2-Chloro-1,3-butadiene	126998		200,000		74		3,800
Chlorobenzene	108907	<	5		20		12
Chloroethane	75003		150	<	10	<	10
Chloroform	67663		24	<	5	<	5
Chloromethane	74873		64	<	10	<	10
Ethylbenzene	100414		49		11		7
Methylene chloride	75092		24	<	10	<	10
Styrene	100425		102		13	J	2.9
Tetrachloroethene	127184	<	5	<	5	<	5
Toluene	108883		770	<	5		41
Xylenes	108383/106423		60	J	4.5	<	5

Semivolatile Organics - Method 8270B µg/L

	CAS No		DD-03		DD-04		DD-05
Benzoic acid	65850	<	20	J	11	<	500
Benzyl alcohol	100516	<	10	<	10		5,600
2-Methylphenol	95487	<	10	<	10		3,900
N-Nitrosodiphenylamine	86306	<	10	<	10		2,700

FACILITY ID: DD (cont)

Total Metals - Methods 6010, 7470 mg/L

	CAS No.		DD-03		DD-04		DD-05
Aluminum	7429905		0.42	<	0.20	<	0.20
Arsenic	7440382	<	0.010	<	0.010		0.009
Barium	7440393	<	0.20	<	0.20		0.29
Beryllium	7440417	<	0.005	<	0.005		0.007
Calcium	7440702		13.7	<	5.0	<	5.0
Chromium	7440473		0.012		0.16	<	0.01
Copper	7440508		0.16		0.05	<	0.03
Iron	7439896		0.79		3.04		0.10
Manganese	7439965		0.03		0.04	<	0.02
Molybdenum	7439987	<	0.02		0.11		0.08
Nickel	7440020		0.27		1.06		0.04
Potassium	7440097		8.9	<	5.0		132
Sodium	7440235		4,780		3,840		74,700
Zinc	7440666		0.32	<	0.02		0.02

General Chemistry mg/L

	CAS No.		DD-03		DD-04		DD-05
TSS	NA	<	20	<	20	<	20
Oil & Grease	NA	<	2	<	2		291
TOC	NA		5		4		132

Dioxins/Furans - Method 1613 ng/L

	CAS No.		DD-03		DD-04		DD-05
2,3,7,8-TCDF	51207319	<	0.010		0.098		0.0095
Total TCDF	55722275	<	0.010		0.580		0.034
Total TCDD	41903575	<	0.010		0.026	<	0.0085
2,3,4,7,8-PeCDF	57117314	<	0.049		0.095	<	0.042
Total PeCDF	30402154	<	0.049		1.10	<	0.042
1,2,3,4,7,8-HxCDF	70648269	<	0.049		0.100	<	0.042
1,2,3,6,7,8-HxCDF	57117449	<	0.049		0.062	<	0.042
2,3,4,6,7,8-HxCDF	60851345	<	0.049		0.088	<	0.042
Total HxCDF	55684941	<	0.049		0.760		0.092
1,2,3,4,6,7,8-HpCDF	67562394	<	0.049		0.140		0.075
Total HpCDF	38998753	<	0.049		0.140		0.075

Notes: J Compound's concentration is estimated. Mass spectral data indicate the presence of a compound that meets the identification criteria for which the result is less than the laboratory detection limit, but greater than zero.

FACILITY ID: OC
Sample Date: 07-11-97
Matrix: Wastewater

Volatile Organics - Method 8260A µg/L

	CAS No.		OC-01
2-Chloro-1,3-butadiene	126998		16
Chlorobenzene	108907		9
Chloroform	67663		59
1,2-Dichloroethane	107062		113
Ethylbenzene	100414	J	4.4
Styrene	100425		9

Semivolatile Organics - Method 8270B µg/L

	CAS No		OC-01
Benzoic acid	65850	J	18

Total Metals - Methods 6010, 7470 mg/L

	CAS No.		OC-01
Aluminum	7429905		0.43
Calcium	7440702		19.5
Chromium	7440473		0.025
Copper	7440508		0.07
Iron	7439896		62.6
Manganese	7439965		5.68
Manganese	7439965		0.40
Molybdenum	7439987		0.04
Nickel	7440020		0.04
Potassium	7440097		27.0
Sodium	7440235		11,400
Zinc	7440666		0.17

FACILITY ID: OC (cont)

General Chemistry mg/L

	CAS No.		OC-01
TSS	NA		230
Oil & Grease	NA	<	2
TOC	NA		75

Dioxins/Furans - Method 1613 ng/L

	CAS No.	OC-01
Not Detected	NA	ND

Notes:

J Compound's concentration is estimated. Mass spectral data indicate the presence of a compound that meets the identification criteria for which the result is less than the laboratory detection limit, but greater than zero.

FACILITY ID: OC
Sample Date: 07-11-97
Matrix: Wastewater Sludge

Volatile Organics - Method 8260A µg/kg

	CAS No.		OC-02**		OC-02
Not Detected	NA		ND		ND

TCLP Volatile Organics - Methods 1311, 8260A µg/L

	CAS No.		OC-02
Acetone	67641	B	23
1,2-Dichloroethane	107062	J	4.8
4-Methyl-2-pentanone	108101	JB	3.6
Methylene chloride	75092	JB	7.8

Semivolatile Organics - Method 8270B µg/kg

	CAS No		OC-02**		OC-02
Bis(2-ethylhexyl)phthalate	117817	J	1,200	J	400

.P Semivolatile Organics - Methods 1311, 8270B µg/L

	CAS No		OC-02
Benzoic acid	65850		40

Total Metals - Methods 6010, 7471 mg/kg

	CAS No.	OC-02**	OC-02
Aluminum	7429905	1,700	579
Barium	7440393	285	98
Calcium	7440702	50,300	17,300
Chromium	7440473	72.7	25.0
Copper	7440508	375	129
Iron	7439896	117,000	40,200
Lead	7439921	5.5	1.9
Magnesium	7439954	11,700	4,040
Manganese	7439965	942	324
Nickel	7440020	99.1	34.1
Sodium	7440235	27,500	9,460
Zinc	7440666	259	89

FACILITY ID: OC (cont)

TCLP Metals - Methods 1311, 6010, 7470 mg/L

	CAS No.	OC-02
Calcium	7440702	413
Magnesium	7439954	154
Manganese	7439965	0.81
Potassium	7440097	4.1

General Chemistry mg/kg

	CAS No.	OC-02**		OC-02
TOC	NA	10,800		3,700
Oil & Grease	NA	1,980		680
BTU	NA	NA	<	380
Percent Solids	NA	NA		34.4

Dioxins/Furans - Method 1613 ng/kg

	CAS No.	OC-02**	OC-02
2,3,7,8-TCDF	51207319	23.0	7.9
Total TCDF	55722275	130	44.7
Total TCDD	41903575	2.0	0.7
1,2,3,7,8-PeCDF	57117416	80.0	27.5
2,3,4,7,8-PeCDF	57117314	36.0	12.4
Total PeCDF	30402154	240	82.6
1,2,3,4,7,8-HxCDF	70648269	190	65.4
1,2,3,6,7,8-HxCDF	57117449	40.0	13.8
2,3,4,6,7,8-HxCDF	60851345	21.0	7.2
1,2,3,7,8,9-HxCDF	72918219	45.0	15.5
Total HxCDF	55684941	400	138
1,2,3,4,6,7,8-HpCDF	67562394	110	37.8
1,2,3,4,7,8,9-HpCDF	55673897	71.0	24.4
Total HpCDF	38998753	320	110
1,2,3,4,6,7,8-HpCDD	35822469	9.3	3.2
Total HpCDD	37871004	20.0	6.9
OCDF	39001020	180	61.9
OCDD	3268879	120	41.3

Notes:

** Results reported on a dry-weight basis.

J Compound's concentration is estimated. Mass spectral data indicate the presence of a compound that meets the identification criteria for which the result is less than the laboratory detection limit, but greater than zero.

B Compound also detected in the associated method blank.

FACILITY ID: PL
Sample Date: 07-14-97
Matrix: Wastewater

Volatile Organics - Method 8260A µg/L

	CAS No.		PL-01		PL-02		PL-03
Acetone	67641		120	J	13		85
2-Butanone	78933		35	<	5	J	2.9
Carbon disulfide	75150		12	J	3.2	<	5
2-Chloro-1,3-butadiene	126998		10		8		16
Chlorobenzene	108907		10		8.0		7
Chloroethane	75003	<	10		16	<	10
Chloroform	67663		9		320		24
1,2-Dichloroethane	107062		6		11	<	5
cis-1,2-Dichloroethene	156592	<	5		7	<	5
trans-1,2-Dichloroethene	156605	<	5	J	3.0	<	5
Ethylbenzene	100414	<	5	J	2.9	J	2.8
Methylene chloride	75092	J	5.3	<	10	<	10
Styrene	100425		7	<	5		6
Tetrachloroethene	127184	<	5		9	<	5
Trichloroethene	79016	<	5		11	<	5

Semivolatile Organics - Method 8270B µg/L

	CAS No		PL-01		PL-02		PL-03
Benzoic acid	65850		23		140	<	10
Benzyl alcohol	100516	<	10	<	10		13
Bis(2-chloroethyl)ether	111444	<	10	<	10		59
Bis(2-chloroisopropyl)ether	39638329		24	<	10	<	10
Diethyl phthalate	84662		90	<	10	<	10
Dimethyl phthalate	131113	<	10	J	8.7	<	10
Bis(2-ethylhexyl)phthalate	117817	<	10	<	10	J	7.4
Hexachlorobenzene	118741	<	10	J	5.0	<	10
2-Methylphenol	95487		14	<	10	<	10
4-Methylphenol	106445		24	<	10	<	10
Di-n-octyl phthalate	117840	<	10	<	10	J	5.7
Pentachlorophenol	87865		60	<	20	<	20
Phenol	108952	<	10		110		160
2,4,6-Trichlorophenol	88062		93	<	10	<	10

FACILITY ID: PL (cont)

Total Metals - Methods 6010, 7470 mg/L

	CAS No.		PL-01		PL-02		PL-03
Aluminum	7429905		11.5		5.68		1.18
Arsenic	7440382		0.018	<	0.010	<	0.010
Barium	7440393	<	0.20		0.31	<	0.20
Beryllium	7440417		0.006	<	0.005	<	0.005
Calcium	7440702		10.7		82.7		40.5
Chromium	7440473		0.67		2.86		0.05
Cobalt	7440484	<	0.05		0.06	<	0.05
Copper	7440508		33.5		16.3		0.08
Iron	7439896		24.3		658		7.23
Lead	7439921		0.010		0.12		0.003
Magnesium	7439954		10.7		22.9		20.1
Manganese	7439965		0.24		3.69		0.52
Mercury	7439976	<	0.0005	<	0.0005		0.0008
Molybdenum	7439987	<	0.02		0.24	<	0.02
Nickel	7440020		10.3		40.6		0.09
Potassium	7440097		20.2		16.8		6.0
Sodium	7440235		26,400		181		11,200
Zinc	7440666		0.66		3.90		0.33

General Chemistry mg/L

	CAS No.		PL-01		PL-02		PL-03
TSS	NA		1,440	<	20	<	20
Oil & Grease	NA	<	2	<	2	<	2
TOC	NA		1,570		85		19

FACILITY ID: PL (cont)

Dioxins/Furans - Method 1613 ng/L

	CAS No.		PL-01		PL-02		PL-03
2,3,7,8-TCDF	51207319	<	0.009		0.021	<	0.010
Total TCDF	55722275	<	0.009		0.970	<	0.010
2,3,4,7,8-PeCDF	57117314	<	0.045		0.230	<	0.048
Total PeCDF	30402154	<	0.045		2.70	<	0.048
1,2,3,4,7,8-HxCDF	70648269		0.610		2.10	<	0.048
1,2,3,6,7,8-HxCDF	57117449		0.280		1.10	<	0.048
2,3,4,6,7,8-HxCDF	60851345		0.120		0.630	<	0.048
1,2,3,7,8,9-HxCDF	72918219		0.076		0.370	<	0.048
Total HxCDF	55684941		1.70		9.30	<	0.048
1,2,3,4,6,7,8-HpCDF	67562394		4.60		7.90	<	0.048
1,2,3,4,7,8,9-HpCDF	55673897		0.830		1.70	<	0.048
Total HpCDF	38998753		7.00		9.60	<	0.048
1,2,3,4,6,7,8-HpCDD	35822469		0.310	<	1.00	<	0.048
Total HpCDD	37871004		0.510		0.590	<	0.048
OCDF	39001020		140		24.0		0.110
OCDD	3268879		6.50		4.90	<	0.096

Notes:

J Compound's concentration is estimated. Mass spectral data indicate the presence of a compound that meets the identification criteria for which the result is less than the laboratory detection limit, but greater than zero.

FACILITY ID: PL
Sample Date: 07-14-97
Matrix: Wastewater Sludge

Volatile Organics - Method 8260A µg/kg

	CAS No.		PL-04**		PL-04
Carbon disulfide	75150		370		110
Chloroform	67663		270		81
1,2-Dichloroethane	107062	J	50	J	15
Tetrachloroethene	127184		84		25

TCLP Volatile Organics - Methods 1311, 8260A µg/L

	CAS No.		PL-04
Acetone	67641	JB	11
Carbon disulfide	75150		9.3
Chloroform	67663		11
1,2-Dichloroethane	107062	J	3.2
4-Methyl-2-pentanone	108101	JB	3.7
Methylene chloride	75092	JB	7.2

Semivolatile Organics - Method 8270B µg/kg

	CAS No		PL-04**		PL-04
Bis(2-ethylhexyl)phthalate	117817	J	1,400	J	420

.P Semivolatile Organics - Methods 1311, 8270B µg/L

	CAS No		PL-04
Benzoic acid	65850		44
Di-n-butyl phthalate	84742		22
Bis(2-ethylhexyl)phthalate	117817		180

FACILITY ID: PL (cont)

Total Metals - Methods 6010, 7471 mg/kg

	CAS No.	PL-04**	PL-04
Aluminum	7429905	14,400	4,310
Barium	7440393	235	70
Cadmium	7440439	2.0	0.6
Calcium	7440702	32,000	9,560
Chromium	7440473	1,130	338
Cobalt	7440484	22.7	6.8
Copper	7440508	41,800	12,500
Iron	7439896	183,000	54,800
Lead	7439921	27.4	8.2
Magnesium	7439954	15,100	4,510
Manganese	7439965	1,140	342
Mercury	7439976	2.00	0.60
Molybdenum	7439987	14.4	4.3
Nickel	7440020	11,600	3,470
Sodium	7440235	66,900	20,000
Vanadium	7440622	26.4	7.9
Zinc	7440666	2,820	843

TCLP Metals - Methods 1311, 6010, 7470 mg/L

	CAS No.	PL-04
Calcium	7440702	459
Magnesium	7439954	56.2
Manganese	7439965	1.2
Nickel	7440020	1.3
Potassium	7440097	3.1

General Chemistry mg/kg

	CAS No.	PL-04**	PL-04
TOC	NA	25,600	7,660
Oil & Grease	NA	3,550	1,060
BTU	NA	NA	ND
Percent Solids	NA	NA	29.9

FACILITY ID: PL (cont)

Dioxins/Furans - Method 1613 ng/kg

	CAS No.	PL-04**	PL-04
2,3,7,8-TCDF	51207319	22.0	6.6
Total TCDF	55722275	880	263.1
2,3,7,8-TCDD	41903575	12.0	3.6
Total TCDD	41903575	12.0	3.6
1,2,3,7,8-PeCDF	57117416	260	77.7
Total PeCDF	30402154	2,800	837
1,2,3,7,8-PeCDD	40321764	36.0	10.8
Total PeCDD	36088229	69.0	20.6
1,2,3,4,7,8-HxCDF	70648269	2,000	598
2,3,4,6,7,8-HxCDF	60851345	560	167
Total HxCDF	55684941	9,300	2,780
1,2,3,4,7,8-HxCDD	39227286	53.0	15.8
1,2,3,6,7,8-HxCDD	57653857	58.0	17.3
1,2,3,7,8,9-HxCDD	19408743	46.0	13.8
Total HxCDD	34465468	460	138
1,2,3,4,6,7,8-HpCDF	67562394	11,000	3,290
1,2,3,4,7,8,9-HpCDF	55673897	1,800	538
Total HpCDF	38998753	15,000	4,490
1,2,3,4,6,7,8-HpCDD	35822469	720	215
Total HpCDD	37871004	1,100	329
OCDF	39001020	97,000	29,000
OCDD	3268879	5,200	1,560

Notes:

** Results reported on a dry-weight basis.

J Compound's concentration is estimated. Mass spectral data indicate the presence of a compound that meets the identification criteria for which the result is less than the laboratory detection limit, but greater than zero.

B Compound also detected in the associated method blank.

|::

FACILITY ID: SN
Sample Date: 07-15-97
Matrix: Wastewater

Volatile Organics - Method 8260A µg/L

	CAS No.		SN-01		SN-02		SN-03		SN-04
Acetone	67641		54,000		1,900	J	2,800	J	1,500
Allyl chloride	107051	<	5		14	<	5	<	5
Benzene	71432	<	5	<	5		11	<	5
2-Butanone	78933	<	5	<	5		37,000		6,200
Carbon disulfide	75150	<	5	<	5	<	5	J	4.1
2-Chloro-1,3-butadiene	126998	J	4.3	J	3.3	J	2.9	J	2.5
Chlorobenzene	108907	J	3.5		6		190		55
Chloroform	67663	<	5	<	5	<	10	J	3.3
Chloromethane	74873		100		580		19	J	180
1,2-Dichloroethane	107062	<	5	<	5		10	J	3.7
1,2-Dichloropropane	78875		110	<	5	<	5	<	5
cis-1,3-Dichloropropene	10061015		7	<	5	<	5	<	5
trans-1,3-Dichloropropene	10061026		14	<	5	<	5	<	5
Ethylbenzene	100414	J	3.3	<	5	<	5		35
2-Hexanone	591786	<	5	<	5	<	5		7
4-Methyl-2-pentanone	108101	<	5	<	5		190		150
Styrene	100425		6	J	4.8	J	4.9		110
Toluene	108883	<	5	<	5		9	<	5
Vinyl chloride	75014	<	10		600	<	10	<	10
Xylenes	108383/106423	<	5	<	5	<	5		140

Semivolatile Organics - Method 8270B µg/L

	CAS No		SN-01		SN-02		SN-03		SN-04
Benzoic acid	65850	<	20	<	20		86		260
Benzyl alcohol	100516	<	10	<	10	<	10		76
Diethyl phthalate	84662	<	10		57	<	10	<	50
2,4-Dimethylphenol	105679	<	10	<	10		220		350
2-Methylnaphthalene	91576	<	10	<	10	<	10	J	47
2-Methylphenol	95487	<	10	<	10		140		830
4-Methylphenol	106445	<	10	<	10		110		1,500
Naphthalene	91203	<	10	<	10	<	10		250
Phenol	108952	<	10	<	10		470		7,700
Pyridine	110861	<	10	<	10		68	<	50

FACILITY ID: SN (cont)

Total Metals - Methods 6010, 7470 mg/L

	CAS No.		SN-01		SN-02	SN-03		SN-04
Aluminum	7429905	<	0.20	<	0.20	9.85		0.48
Arsenic	7440382	<	0.010	<	0.010	0.027		0.019
Calcium	7440702		17.8	<	5.0	1,510		545
Chromium	7440473	<	0.01	<	0.01	0.03	<	0.01
Iron	7439896	<	0.10	<	0.10	3.46		0.97
Lead	7439921	<	0.003	<	0.003	0.008	<	0.003
Magnesium	7439954		7.75	<	5.0	16.4		10.2
Manganese	7439965	<	0.02	<	0.02	0.36		0.15
Nickel	7440020	<	0.04	<	0.04	0.04	<	0.04
Potassium	7440097	<	5.0	<	5.0	5.5		6.3
Selenium	7782492	<	0.005	<	0.005	0.017		0.027
Sodium	7440235		21.5		871	1,810		6,190
Zinc	7440666	<	0.02		0.02	0.17		0.06

General Chemistry mg/L

	CAS No.		SN-01		SN-02	SN-03		SN-04
TSS	NA	<	20	<	20	215		155
Oil & Grease	NA	<	2	<	2	7		23
TOC	NA		1.6		15	162		387

Dioxins/Furans - Method 1613 ng/L

	CAS No.		SN-01		SN-02	SN-03		SN-04
OCDF	39001020	<	0.097	<	0.100	0.110	<	0.095
OCDD	3268879	<	0.097	<	0.100	0.120	<	0.095

FACILITY ID: SN
Sample Date: 07-15-97
Matrix: Wastewater Sludge

Volatile Organics - Method 8260A µg/kg

	CAS No.		SN-05**		SN-05
Acetone	67641		708		230
2-Butanone	78933		191		62
Carbon disulfide	75150		80		26
Chlorobenzene	108907	J	46	J	15
2-Hexanone	591786	J	102	J	33
4-Methyl-2-pentanone	108101	J	62	J	20

TCLP Volatile Organics - Methods 1311, 8260A µg/L

	CAS No.		SN-05
Acetone	67641	B	270
2-Butanone	78933		26
4-Methyl-2-pentanone	108101	JB	4.9
Methylene chloride	75092	JB	7.1

Semivolatile Organics - Method 8270B µg/kg

	CAS No	SN-05**	SN-05
Not Detected	NA	ND	ND

.P Semivolatile Organics - Methods 1311, 8270B µg/L

	CAS No	SN-05
Benzoic acid	65850	47

FACILITY ID: SN (cont)

Total Metals - Methods 6010, 7471 mg/kg

	CAS No.	SN-05**		SN-05
Aluminum	7429905	25,900		8,410
Arsenic	7440382	36.0		11.7
Barium	7440393	131		42.5
Cadmium	7440439	13.5		4.4
Calcium	7440702	166,000		53,800
Chromium	7440473	165		54
Copper	7440508	113		37
Iron	7439896	20,800		6,760
Lead	7439921	32.9		10.7
Magnesium	7439954	5,940		1,930
Manganese	7439965	283		92
Nickel	7440020	122		40
Selenium	7782492	27.7		9.0
Sodium	7440235	16,300		5,300
Vanadium	7440622	57.5		18.7
Zinc	7440666	588		191

TCLP Metals - Methods 1311, 6010, 7470 mg/L

	CAS No.	SN-05
Calcium	7440702	1,350
Magnesium	7439954	16.1
Manganese	7439965	1.35
Nickel	7440020	0.28
Potassium	7440097	3.2

General Chemistry mg/kg

	CAS No.	SN-05**		SN-05
TOC	NA	134,000		43,500
Oil & Grease	NA	26,600		8,650
BTU	NA	NA	<	335
Percent Solids	NA	NA		32.5

FACILITY ID: SN (cont)

Dioxins/Furans - Method 1613 ng/kg

	CAS No.	SN-05**	SN-05
1,2,3,7,8-PeCDF	57117416	9.9	3.2
2,3,4,7,8-PeCDF	57117314	6.8	2.2
Total PeCDF	30402154	51.0	16.6
1,2,3,4,7,8-HxCDF	70648269	85.0	27.6
1,2,3,6,7,8-HxCDF	57117449	37.0	12.0
2,3,4,6,7,8-HxCDF	60851345	28.0	9.1
1,2,3,7,8,9-HxCDF	72918219	19.0	6.2
Total HxCDF	55684941	350	114
1,2,3,6,7,8-HxCDD	57653857	12.0	3.9
1,2,3,7,8,9-HxCDD	19408743	21.0	6.8
Total HxCDD	34465468	74.0	24.1
1,2,3,4,6,7,8-HpCDF	67562394	520	169
1,2,3,4,7,8,9-HpCDF	55673897	170	55.3
Total HpCDF	38998753	1,000	325
1,2,3,4,6,7,8-HpCDD	35822469	190	61.8
Total HpCDD	37871004	390	127
OCDF	39001020	1,800	585
OCDD	3268879	1,600	520

Notes:

** Results reported on a dry-weight basis.

J Compound's concentration is estimated. Mass spectral data indicate the presence of a compound that meets the identification criteria for which the result is less than the laboratory detection limit, but greater than zero.

B Compound also detected in the associated method blank.

|::

FACILITY ID: DF
Sample Date: 07-17-97
Matrix: Wastewater

Volatile Organics - Method 8260A µg/L

	CAS No.		DF-01		DF-03		DF-04		DF-05		DF-06
Acetone	67641		90		96	<	20	J	4,400		830
Allyl chloride	107051	<	5	<	5	<	5	<	5		11
Bromodichloromethane	75274	<	5	<	5	<	5		7		7
Bromoform	75252	<	5	<	5	<	5	<	5		5
Bromomethane	74839	<	10	<	10	<	10	J	3.2	<	10
2-Butanone	78933		39		20	<	5	J	2,200		6
Carbon tetrachloride	56235	<	5	<	5	<	5	J	3.0	<	5
Chlorobenzene	108907		5	J	4.3	<	5	<	5	<	5
Chloroform	67663	<	5	<	5	J	4.9		49		46
Chloromethane	74873	<	10	<	10	<	10	J	700	<	10
Dibromochloromethane	124481	<	5	<	5	<	5	<	5		11
1,2-Dichlorobenzene	95501	<	5	<	5	<	5	J	310	<	5
1,1-Dichloroethane	75343	<	5	<	5	<	5		7	<	5
1,2-Dichloroethane	107062		160	<	5	<	5		16	<	5
1,1-Dichloroethene	75354	<	5	<	5	<	5		6	<	5
cis-1,2-Dichloroethene	156592	<	5	<	5	<	5		5	<	5
1,2-Dichloropropane	78875	<	5	<	5	<	5		58		40
cis-1,3-Dichloropropene	10061015	<	5	<	5	<	5	<	5		8
trans-1,3-Dichloropropene	10061026	<	5	<	5	<	5	<	5		13
Epichlorohydrin	106898	<	40	<	40	<	40	<	40		19,300
Ethylbenzene	100414	<	5	<	5	<	5	J	230	<	5
4-Methyl-2-pentanone	108101	<	5	<	5	<	5		29	<	5
Methylene chloride	75092	<	10	<	10	<	10		32	<	10
Styrene	100425		5	J	4.4	J	2.9	J	600	<	5
1,1,1,2-Tetrachloroethane	630206	<	5	<	5	<	5		7	<	5
Tetrachloroethene	127184	<	5	<	5	<	5		37	<	5
Toluene	108883	<	5	<	5	<	5	J	1,400	J	3.9
1,1,1-Trichloroethane	71556	<	5	<	5	<	5		12	<	5
1,1,2-Trichloroethane	79005	<	5	<	5	<	5	J	4.0	<	5
Trichloroethene	79016	<	5	<	5		30		36	<	5
Xylenes	108383/106423	<	5	<	5	<	5		93	<	5

FACILITY ID: DF (cont)

Semivolatile Organics - Method 8270B µg/L

	CAS No		DF-01		DF-03		DF-04		DF-05		DF-06
Acenaphthene	83329	<	10	<	10	<	10		160	<	10
Acenaphthylene	208968	<	10	<	10	<	10	J	90	<	10
Benzoic acid	65850	<	20		70		38		730	<	20
Benzyl alcohol	100516	<	10	<	10	<	10	J	83	<	10
Bis(2-chloroisopropyl)ether	39638329	<	10	<	10	<	10	<	100		60
2-Chlorophenol	95578	<	10		23	<	10	<	100	<	10
1,2-Dichlorobenzene	95501	<	10	<	10	<	10		390	<	10
2,4-Dichlorophenol	120832	<	10		170	<	10	<	100	<	10
2,4-Dinitrophenol	51285	<	10	J	7.8	J	6.0	<	100	<	10
Fluorene	86737	<	10	<	10	<	10		100	<	10
Isophorone	78591	<	10	<	10	<	10		110	<	10
2-Methylnaphthalene	91576	<	10	<	10	<	10		2,400	<	10
4-Methylphenol	106445	<	10	<	10	<	10	J	71	<	10
Naphthalene	91203	<	10	<	10	<	10		1,600	<	10
4-Nitrophenol	100027	<	10	<	10	J	9.8	<	100	<	10
Pentachlorophenol	87865		45		470	<	20	<	200	<	20
Phenanthrene	85018	<	10	<	10	<	10	J	72	<	10
Phenol	108952	<	10	<	10	<	10		2,600	<	10
2,4,5-Trichlorophenol	95954	<	10		140	<	10	<	100	<	10
2,4,6-Trichlorophenol	88062		88		1,900	<	10		300	<	10

FACILITY ID: DF (cont)

Total Metals - Methods 6010, 7470 mg/L

	CAS No.		DF-01		DF-03		DF-04		DF-05		DF-06
Aluminum	7429905	<	0.20		0.36	<	0.20		1.20	<	0.20
Arsenic	7440382		0.018	<	0.010	<	0.010		0.020	<	0.010
Beryllium	7440417		0.008		0.008	<	0.005	<	0.005	<	0.005
Calcium	7440702	<	5.0	<	5.0	<	5.0		26.2	<	5.0
Chromium	7440473	<	0.01	<	0.01	<	0.01		0.01	<	0.01
Copper	7440508		2.24		0.43		0.47		0.20		0.04
Iron	7439896	<	0.10		0.46		2.58		2.00		0.26
Lead	7439921		0.008	<	0.003	<	0.003	<	0.003	<	0.003
Magnesium	7439954	<	5.0	<	5.0	<	5.0		11.7		0.28
Manganese	7439965	<	0.02	<	0.02		0.04		0.09	<	0.02
Molybdenum	7439987	<	0.02	<	0.02	<	0.02		0.03	<	0.02
Nickel	7440020		0.14	<	0.04		0.67		0.14	<	0.008
Potassium	7440097		44		32.4	<	5.0		35.5		28.9
Selenium	7782492		0.024	<	0.005	<	0.005	<	0.005	<	0.005
Silver	7440224	<	0.01	<	0.01	<	0.01		0.07	<	0.01
Sodium	7440235		49,400		44,100	<	5.0		19,500		30,200
Thallium	7440280		0.03		0.01	<	0.01	<	0.01	<	0.01
Zinc	7440666		0.09		0.05		0.05		0.28		0.05

General Chemistry mg/L

	CAS No.		DF-01		DF-03		DF-04		DF-05		DF-06
TSS	NA	<	20	<	20	<	20		204	<	20
Oil & Grease	NA	<	2	<	2	<	2		35		3
TOC	NA		1,560		1,450		92		934		198

FACILITY ID: DF (cont)

Dioxins/Furans - Method 1613 ng/L

	CAS No.		DF-01		DF-03		DF-04		DF-05		DF-06
2,3,7,8-TCDF	51207319		0.023		0.050	<	0.010	<	0.009		0.074
Total TCDF	55722275		1.00		3.00	<	0.010		0.280		0.150
1,2,3,7,8-PeCDF	57117416	<	0.410		1.20	<	0.048		0.160		0.110
2,3,4,7,8-PeCDF	57117314	<	1.80		1.50	<	0.048	<	0.160		0.084
Total PeCDF	30402154		8.30		30.0	<	0.048		2.30		0.240
1,2,3,7,8-PeCDD	40321764	<	0.052		0.150	<	0.048	<	0.046	<	0.046
Total PeCDD	36088229	<	0.052		0.710	<	0.048	<	0.046	<	0.046
1,2,3,4,7,8-HxCDF	70648269		18.0		42.0	<	0.048		3.60		0.320
1,2,3,6,7,8-HxCDF	57117449	<	15.0		45.0	<	0.048		3.40		0.069
2,3,4,6,7,8-HxCDF	60851345		3.60		27.0	<	0.048	<	2.50		0.047
1,2,3,7,8,9-HxCDF	72918219	<	12.0		14.0	<	0.048	<	1.60		0.110
Total HxCDF	55684941		130		340	<	0.048		19.0		0.550
1,2,3,4,7,8-HxCDD	39227286	<	0.480	<	0.730	<	0.048		0.059	<	0.046
1,2,3,6,7,8-HxCDD	57653857	<	0.480		0.910	<	0.048		0.100	<	0.046
1,2,3,7,8,9-HxCDD	19408743	<	0.480		0.920	<	0.048		0.087	<	0.046
Total HxCDD	34465468	<	0.480		9.90	<	0.048		0.910	<	0.046
1,2,3,4,6,7,8-HpCDF	67562394		750		1,300	<	0.048		130		0.390
1,2,3,4,7,8,9-HpCDF	55673897		94.0		170	<	0.048		17.0		0.170
Total HpCDF	38998753		970		1,500	<	0.048		150		0.620
1,2,3,4,6,7,8-HpCDD	35822469		23.0		44.0	<	0.048		4.20	<	0.046
Total HpCDD	37871004		41.0		82.0	<	0.048		7.60	<	0.046
OCDF	39001020		3,100		2,400	<	0.096		280		1.00
OCDD	3268879		200		220	<	0.096		29.0		0.210

Notes:

J Compound's concentration is estimated. Mass spectral data indicate the presence of a compound that meets the identification criteria for which the result is less than the laboratory detection limit, but greater than zero.

FACILITY ID: DF
Sample Date: 07-18-97
Matrix: Wastewater

Volatile Organics - Method 8260A µg/L

	CAS No.		DF-07		DF-08		DF-09
Acetone	67641		1,000		1,500	J	14
Bromomethane	74839	<	10	<	10		15
2-Butanone	78933		14		270		9
Carbon disulfide	75150	<	5	<	5		7
Chlorobenzene	108907	<	5	J	4.5	J	2.8
Chloromethane	74873	<	10		32,000		270,000
1,3-Dichlorobenzene	541731	J	4.4	<	5	<	5
1,2-Dichloroethane	107062		103	<	5	<	5
1,1-Dichloroethene	75354		24,000		36		8
cis-1,2-Dichloroethene	156592		220	<	5	<	5
trans-1,2-Dichloroethene	156605		240	<	5	<	5
Methylene chloride	75092	<	10	J	2.6	<	10
Styrene	100425	J	3.2	J	3.5	<	5
Tetrachloroethene	127184		490		7	<	5
Trichloroethene	79016		180	<	5	<	5
Vinyl chloride	75014		710	<	10	<	10

Semivolatile Organics - Method 8270B µg/L

	CAS No		DF-07		DF-08		DF-09
Benzoic acid	65850	<	20		47	<	20
Butyl benzyl phthalate	85687	<	10	<	10	J	5.0

Total Metals - Methods 6010, 7470 mg/L

	CAS No.		DF-07		DF-08		DF-09
Aluminum	7429905	<	0.20		0.23		2.19
Arsenic	7440382	<	0.010		0.24	<	0.010
Beryllium	7440417		0.009		0.010	<	0.005
Chromium	7440473	<	0.01	<	0.01		0.01
Copper	7440508		0.13		0.04		0.45
Iron	7439896	<	0.10		1.11		0.44
Lead	7439921	<	0.003		0.004	<	0.003
Mercury	7439976	<	0.0005		0.0014		0.0005
Nickel	7440020		0.22		0.12		0.92
Potassium	7440097		98.2		103	<	5.0
Selenium	7782492	<	0.005		0.024	<	0.005
Sodium	7440235		77,400		87,500	<	5.0
Zinc	7440666		0.04		0.07		0.05

FACILITY ID: DF (cont)

General Chemistry mg/L

	CAS No.		DF-07		DF-08		DF-09
TSS	NA	<	20		1,780	<	20
Oil & Grease	NA	<	2		9	<	2
TOC	NA		4		816		39

Dioxins/Furans - Method 1613 ng/L

	CAS No.		DF-07		DF-08		DF-09
2,3,7,8-TCDF	51207319		0.230		0.17	<	0.009
Total TCDF	55722275		1.30		0.73	<	0.009
1,2,3,7,8-PeCDF	57117416		0.670		0.51	<	0.046
2,3,4,7,8-PeCDF	57117314		0.570		0.39	<	0.046
Total PeCDF	30402154		2.30		1.70	<	0.046
1,2,3,4,7,8-HxCDF	70648269		1.50		1.00	<	0.046
1,2,3,6,7,8-HxCDF	57117449		0.360		0.31	<	0.046
2,3,4,6,7,8-HxCDF	60851345		0.170		0.14	<	0.046
1,2,3,7,8,9-HxCDF	72918219		0.380		0.25	<	0.046
Total HxCDF	55684941		3.00		2.10	<	0.046
1,2,3,4,6,7,8-HpCDF	67562394		1.40		0.99	<	0.046
1,2,3,4,7,8,9-HpCDF	55673897		0.420		0.33	<	0.046
Total HpCDF	38998753		2.10		1.70	<	0.046
1,2,3,4,6,7,8-HpCDD	35822469		0.074	<	0.042	<	0.046
Total HpCDD	37871004		0.074	<	0.042	<	0.046
OCDF	39001020		1.90		1.50	<	0.092
OCDD	3268879		0.180	<	0.083	<	0.092

Notes:

J Compound's concentration is estimated. Mass spectral data indicate the presence of a compound that meets the identification criteria for which the result is less than the laboratory detection limit, but greater than zero.

FACILITY ID: DF
Sample Date: 07-18-97
Matrix: Wastewater Sludge

Volatile Organics - Method 8260A µg/kg

	CAS No.		DF-02**		DF-02
Benzene	71432	J	89	J	15
Chloroform	67663	J	83	J	14
Ethylbenzene	100414	J	112	J	19

TCLP Volatile Organics - Methods 1311, 8260A µg/L

	CAS No.		DF-02
Acetone	67641	B	180
2-Butanone	78933		23
4-Methyl-2-pentanone	108101	JB	3.2
Methylene chloride	75092	JB	7.2

Semivolatile Organics - Method 8270B µg/kg

	CAS No		DF-02**		DF-02
Benzoic acid	65850	J	4,200	J	710

.P Semivolatile Organics - Methods 1311, 8270B µg/L

	CAS No	DF-02
Not Detected	NA	ND

Total Metals - Methods 6010, 7471 mg/kg

	CAS No.	DF-02**	DF-02
Aluminum	7429905	34,700	5,870
Chromium	7440473	30.8	5.2
Copper	7440508	92.9	15.7
Iron	7439896	1,300	220
Lead	7439921	2.4	0.4
Magnesium	7439954	1,340	227
Manganese	7439965	18.3	3.1
Nickel	7440020	32.5	5.5
Potassium	7440097	8,520	1,440
Sodium	7440235	119,000	20,100
Zinc	7440666	78.1	13.2

FACILITY ID: DF (cont)

TCLP Metals - Methods 1311, 6010, 7470 mg/L

	CAS No.	DF-02
Barium	7440393	2.0
Boron	7440428	0.5
Calcium	7440702	3.9
Iron	7439896	1.1
Magnesium	7439954	7.5
Manganese	7439965	0.07
Potassium	7440097	73.0

General Chemistry mg/kg

	CAS No.	DF-02**		DF-02
TOC	NA	444,000		75,000
Oil & Grease	NA	2,840		480
BTU	NA	NA	<	390
Percent Solids	NA	NA		16.9

FACILITY ID: DF (cont)

Dioxins/Furans - Method 1613 ng/kg

	CAS No.	DF-02**	DF-02
2,3,7,8-TCDF	51207319	49.0	8.3
Total TCDF	55722275	260	43.9
1,2,3,7,8-PeCDF	57117416	220	37.2
2,3,4,7,8-PeCDF	57117314	180	30.4
Total PeCDF	30402154	930	157
1,2,3,4,7,8-HxCDF	70648269	1,200	203
1,2,3,6,7,8-HxCDF	57117449	530	89.6
2,3,4,6,7,8-HxCDF	60851345	340	57.5
1,2,3,7,8,9-HxCDF	72918219	390	65.9
Total HxCDF	55684941	4,200	710
1,2,3,7,8,9-HxCDD	19408743	8.1	1.4
Total HxCDD	34465468	22.0	3.7
1,2,3,4,6,7,8-HpCDF	67562394	10,000	1,690
1,2,3,4,7,8,9-HpCDF	55673897	1,500	254
Total HpCDF	38998753	13,000	2,200
1,2,3,4,6,7,8-HpCDD	35822469	330	55.8
Total HpCDD	37871004	570	96.3
OCDF	39001020	17,000	2,870
OCDD	3268879	1,600	270

Notes:

** Results reported on a dry-weight basis.

J Compound's concentration is estimated. Mass spectral data indicate the presence of a compound that meets the identification criteria for which the result is less than the laboratory detection limit, but greater than zero.

B Compound also detected in the associated method blank.

FACILITY ID: GL
Sample Date: 07-21-97
Matrix: Wastewater

Volatile Organics - Method 8260A µg/L	CAS No.		GL-02
Chloroform	67663		700
1,2-Dichloroethane	107062		57

Semivolatile Organics - Method 8270B µg/L	CAS No		GL-02
4-Aminobiphenyl	92671	J	20

Total Metals - Methods 6010, 7470 mg/L	CAS No.		GL-02
Aluminum	7429905		44.6
Arsenic	7440382		0.069
Calcium	7440702		14.4
Chromium	7440473		0.30
Copper	7440508		8.39
Iron	7439896		4.50
Lead	7439921		0.006
Magnesium	7439954		2.46
Manganese	7439965		0.08
Nickel	7440020		0.14
Potassium	7440097		7.2
Sodium	7440235		4,750
Zinc	7440666		0.21

General Chemistry mg/L	CAS No.		GL-02
TSS	NA		308
Oil & Grease	NA	<	2
TOC	NA		491

FACILITY ID: GL (cont)

Dioxins/Furans - Method 1613 ng/L

	CAS No.	GL-02
2,3,7,8-TCDF	51207319	0.082
Total TCDF	55722275	0.860
2,3,7,8-TCDD	41903575	0.017
Total TCDD	41903575	0.049
2,3,4,7,8-PeCDF	57117314	0.210
Total PeCDF	30402154	0.440
1,2,3,4,7,8-HxCDF	70648269	5.30
1,2,3,6,7,8-HxCDF	57117449	1.20
2,3,4,6,7,8-HxCDF	60851345	0.430
Total HxCDF	55684941	9.30
1,2,3,4,7,8-HxCDD	39227286	0.052
1,2,3,6,7,8-HxCDD	57653857	0.091
1,2,3,7,8,9-HxCDD	19408743	0.110
Total HxCDD	34465468	0.510
1,2,3,4,6,7,8-HpCDF	67562394	43.0
1,2,3,4,7,8,9-HpCDF	55673897	12.0
Total HpCDF	38998753	60.0
1,2,3,4,6,7,8-HpCDD	35822469	0.880
Total HpCDD	37871004	1.30
OCDF	39001020	6,000
OCDD	3268879	6.90

Notes:

J Compound's concentration is estimated. Mass spectral data indicate the presence of a compound that meets the identification criteria for which the result is less than the laboratory detection limit, but greater than zero.

FACILITY ID: GL
Sample Date: 07-21-97
Matrix: Wastewater Sludge

Volatile Organics - Method 8260A µg/kg

	CAS No.		GL-01**		GL-01
Acetone	67641		1,390		360
Carbon disulfide	75150		131		34
Chloroform	67663		2,160		560
1,2-Dichloroethane	107062		2,050		530
Methylene chloride	75092		166		43
Tetrachloroethene	127184	J	70	J	18
Vinyl chloride	75014	J	58	J	15

TCLP Volatile Organics - Methods 1311, 8260A µg/L

	CAS No.		GL-01
Acetone	67641	B	91
2-Butanone	78933		6.8
Carbon disulfide	75150		7.2
Chloroform	67663		32
1,2-Dichloroethane	107062		36
4-Methyl-2-pentanone	108101	JB	3.7
Methylene chloride	75092	JB	9.5

Semivolatile Organics - Method 8270B µg/kg

	CAS No		GL-01**		GL-01
Bis(2-ethylhexyl)phthalate	117817	J	22,800	J	5,900

.P Semivolatile Organics - Methods 1311, 8270B µg/L

	CAS No		GL-01
Benzoic acid	65850		38
4-Methylphenol	106445		42

FACILITY ID: GL (cont)

Total Metals - Methods 6010, 7471 mg/kg

	CAS No.	GL-01**		GL-01
Aluminum	7429905	114,000		29,500
Arsenic	7440382	102		26.5
Barium	7440393	263		68.2
Calcium	7440702	16,900		4,380
Chromium	7440473	1,110		287
Copper	7440508	15,800		4,080
Iron	7439896	32,400		8,390
Lead	7439921	13.9		3.6
Magnesium	7439954	4,170		1,080
Manganese	7439965	288		74.7
Molybdenum	7439987	10.8		2.8
Nickel	7440020	463		120
Sodium	7440235	8,340		2,160
Zinc	7440666	575		149

TCLP Metals - Methods 1311, 6010, 7470 mg/L

	CAS No.	GL-01
Calcium	7440702	204
Copper	7440508	22.3
Magnesium	7439954	21.5
Manganese	7439965	2.0
Nickel	7440020	1.3
Potassium	7440097	3.6

General Chemistry mg/kg

	CAS No.	GL-01 **		GL-01
TOC	NA	262,000		67,900
Oil & Grease	NA	3,760		974
BTU	NA	NA	<	324
Percent Solids	NA	NA		25.9

FACILITY ID: GL (cont)

Dioxins/Furans - Method 1613 ng/kg

	CAS No.	GL-01**	GL-01
2,3,7,8-TCDF	51207319	560	145
Total TCDF	55722275	10,000	2,590
2,3,7,8-TCDD	41903575	150	39
Total TCDD	41903575	1,600	414
2,3,4,7,8-PeCDF	57117314	490	127
Total PeCDF	30402154	1,400	363
Total PeCDD	36088229	180	47
1,2,3,4,7,8-HxCDF	70648269	5,500	1425
2,3,4,6,7,8-HxCDF	60851345	2,500	648
Total HxCDF	55684941	32,000	8,290
1,2,3,6,7,8-HxCDD	57653857	320	83
1,2,3,7,8,9-HxCDD	19408743	240	62
Total HxCDD	34465468	1,200	311
1,2,3,4,6,7,8-HpCDF	67562394	80,000	20,700
1,2,3,4,7,8,9-HpCDF	55673897	52,000	13,500
Total HpCDF	38998753	150,000	38,900
1,2,3,4,6,7,8-HpCDD	35822469	3,000	777
Total HpCDD	37871004	4,400	1,140
OCDF	39001020	820,000	212,000
OCDD	3268879	25,000	6,480

Notes:

** Results reported on a dry-weight basis.

J Compound's concentration is estimated. Mass spectral data indicate the presence of a compound that meets the identification criteria for which the result is less than the laboratory detection limit, but greater than zero.

Appendix C. Industry Split Sample Comparison with EPA Record Sample Data

Introduction

The U.S. Environmental Protection Agency's Office of Solid Waste (OSW), as directed by Congress in the Hazardous and Solid Waste Amendments of 1984 (HSWA), is undertaking an investigation of the Chlorinated Aliphatic Industry to make hazardous waste listing determinations on industry-specific waste types. This investigation also is mandated by the consent decree between EPA and the Environmental Defense Fund (EDF). The consent decree specifies that the Agency must make listing determinations on wastewaters and wastewater treatment sludges generated from the production of chlorinated aliphatics that are excluded from the F024 and F025 hazardous waste listings. These determinations must be well documented and substantiated to withstand extensive review within the Agency and by the public.

Upon completion of a familiarization sampling and analysis effort, the Agency initiated record sampling and analysis of the two consent decree wastes on April 22, 1997, and culminated with final record sampling event on July 21, 1997. The Agency sampled wastewaters and wastewater treatment sludges from twelve facilities to obtain 52 samples (41 wastewaters and 11 wastewater treatment sludges). All sampling events were conducted according to guidance provided by the *Quality Assurance Project Plan for Listing/BDAT Determination of Wastes Generated from the Manufacture of Chlorinated Aliphatic Hydrocarbons ($C_1 - C_5$)*. All facilities visited during the record sampling phase were entitled to receive duplicate split samples for the purpose of replicating the Agency's analytical effort. After the sample results were submitted to each facility in the form of an analytical data report (ADR), the EPA requested all facilities to provide, if available, the analytical results of the split-sample analyses. The goal of this effort was to gain a better understanding of wastestream chemical composition along with the ability to determine the comparability of the EPA-generated data with Industry split-sample results.

The purpose of this report is to compare facility split-sample analytical data results to the EPA data obtained from the laboratory analysis of Chlorinated Aliphatics Listing Determination Samples. There were a total of 52 (41 wastewaters and 11 wastewater treatment sludges) samples that were collected by SAIC or facility personnel on behalf of the EPA. All EPA samples were submitted to Agricultural and Priority Pollutants Laboratories, Inc.(APPL) to perform analyses for volatiles, semivolatiles, metals and general chemistry; and Maxim

Technologies, Inc. to perform dioxin analyses. All sample volumes were also obtained in duplicate for the purpose of providing the facilities with sample-splits and the possibility of generating a duplicate data set. Of the twelve facilities sampled, the EPA requested and received split-sample analytical data from six facilities which represented over 50 percent (23 wastewaters and 5 wastewater treatment sludges) of the 52 samples collected. Each of these six facilities either contracted the sample analyses to a commercial laboratory or performed the analysis using an in-house laboratory. A summary of facilities submitting split-sample data and the associated analytical laboratory performing the analysis is provided in Table C–1.

Table C–1. Facilities Providing Chlorinated Aliphatic Listing Split-Sample Data

Facility Name	Location	# Split-Sample Data Results		Analytical Laboratory
		Wastewater	Sludge	
Velsicol Chemical Corporation	Memphis, TN	4	None Collected	Memphis Environmental Center
DuPont-Dow Elastomers	Louisville, KY	4	None Collected	Quanterra Environmental Services
Borden Chemicals & Plastics	Geismar, LA	2	2	Gulf Coast Analytical Laboratories, Inc
OxyChem	Convent, LA	1	1	Gulf Coast Analytical Laboratories, Inc
Shell Chemical Company	Norco, LA	4	1	PACE Analytical and Triangle Laboratories, Inc
The Dow Chemical Company	Freeport, TX	8	1	In-House Dow Laboratory

Data Evaluation And Comparison

Initially, the facility-reported target constituents for each sample were matched directly to the corresponding EPA summarized analytical data. Data summary comparison tables for each facility are included in the Appendix. These comparison tables include only those EPA samples for which facility results were available. The facility results are presented to the right of the corresponding EPA data columns and are designated with a “S” after the sample ID to indicate split-sample. Only those target analytes that were detected in at least one sample for a given facility are listed according to the analytical method. Constituent concentrations that were

present in one data set but were absent or not detected in the other were designated with a "NR" (not reported or the analysis was not performed by the laboratory) or if available the associated laboratory reporting limit.

In an attempt to compare the constituent concentrations reported with the facility split-sample results to the EPA results, the data comparison tables were used to calculate the Relative Percent Difference (% RPD) for instances where both values were reported and were greater than the laboratory reporting limit. The % RPD's were calculated relative to the EPA constituent concentration, therefore, a negative % RPD indicates the facility result is greater than the EPA result, whereas a positive % RPD represents a facility result less than the corresponding EPA result. Since an established data quality objective for split sample or intralaboratory data precision was unavailable, a ± 50% RPD was assumed to be reasonable given the interlaboratory precision guideline established in the Quality Assurance Project Plan (QAPjP) was set at 25% RPD.

A total of 373 EPA and facility data sets possessed sample concentrations that could be compared in order to determine the % RPD. For those instances where the % RPD could not be calculated due to one or both values below the laboratory reporting level or listed as "NR", a "NC" was noted to indicate not calculatable. Of the 373 calculated % RPD's, 257 or 69% were negative while 116 or 31% were positive. This indicates that approximately two-thirds of the facility split data were greater than the corresponding EPA concentration. In addition, 37% of the negative % RPD's were greater than 50%, in contrast to 22% of the positive % RPD's that were greater than 50%. However, the majority of the % RPD's greater than 50% were attributed to sample concentrations that were either at trace levels or qualified as "J" values indicating the concentrations were below the method detection limit.

Conclusions

Overall, there was good data agreement between the number and types of constituents reported with the EPA and facility split-sample Chlorinated Aliphatics Listing analytical data. The facility split-sample data provide additional confirmation and validity to those constituents that were also reported with the EPA data. Given that data from six separate facility-designated

laboratories were comparted to data from two EPA laboratories, the precision results as measured by the % RSD are not unreasonable. In addition, there are several possible explanations for constituent concentration results with poor intralaboratory data agreement. These include deviations in sample preparation, digestion, extraction , dilution, as well as analyst technique that may have affected data variability.

Table C-2. Split Sample Comparison Summary

FACILITY ID: VT
Sample Date: 05-20-97
Matrix: Wastewater

Volatile Organics - Method 8260A µg/L

	CAS No.		VT-01		VT-01-S	%RPD		VT-02		VT-02-S	%RPD		VT-03		VT-03-S	%RPD		VT-04		VT-04-S	%RPD
Acetone	67641	<	20		2,100	NC	<	20	<	1,000	NC	<	20	<	20	NC	<	20	<	20	NC
Bromodichloromethane	75274		24		508	-182%		110	<	250	NC	<	5	<	5	NC		6.8		10.7	-45%
Bromoform	75252		31	<	250	NC		45	<	250	NC	<	5	<	5	NC	<	5	<	5	NC
Carbon disulfide	75150	<	5	<	500	NC		140	<	500	NC	<	5	<	10	NC		7.7	<	10	NC
Carbon tetrachloride	56235		14	<	250	NC		8.2	<	250	NC	<	5	<	5	NC		160		200	-22%
Chloroform	67663		25		4,520	-198%		380		1,190	-103%		5.3	<	5	NC		13		17.7	-31%
Chloromethane	74873	<	10	<	500	NC	<	10	<	500	NC	<	10		17.7	NC	<	10	<	10	NC
Dibromochloromethane	124481		56	<	250	NC		88	<	250	NC	<	5	<	5	NC		5.7		9.6	-51%
Methylene chloride	75092	<	10	<	250	NC	<	10		389	NC	<	10	<	10	NC	<	10.0	<	10	NC
Tetrachloroethene	127184	<	5	<	250	NC	<	5	<	250	NC	<	5	<	5	NC		18		31.3	-54%

Semivolatile Organics - Method 8270B µg/L

	CAS No		VT-01		VT-01-S	%RPD		VT-02		VT-02-S	%RPD		VT-03		VT-03-S	%RPD		VT-04		VT-04-S	%RPD
Benzoic acid	65850		82	<	250,000	NC	<	20	<	250,000	NC	<	20	<	250,000	NC		28	<	250,000	NC
Benzyl alcohol	100516	<	10	<	50,000	NC	<	10	<	50,000	NC	<	10	<	50,000	NC		180	<	50,000	NC
1,2-Dichlorobenzene	95501	<	10	<	50,000	NC	J	8.8	<	50,000	NC	<	10	<	50,000	NC	<	10	<	50,000	NC
1,3-Dichlorobenzene	541731	<	10	<	50,000	NC	J	6.9	<	50,000	NC	<	10	<	50,000	NC	<	10	<	50,000	NC
Hexachlorobenzene	118741		20	<	50,000	NC	<	10	<	50,000	NC	<	10	<	50,000	NC		9.1	<	50,000	NC
Hexachlorocyclopentadiene	77474		430	<	50,000	NC		24	<	50,000	NC	<	10	<	50,000	NC		100	<	50,000	NC

Total Metals - Methods 6010, 7470 mg/L

	CAS No.		VT-01		VT-01-S	%RPD		VT-02		VT-02-S	%RPD		VT-03		VT-03-S	%RPD		VT-04		VT-04-S	%RPD
Aluminum	7429905	<	0.20		25.1	NC	<	0.20		26.1	NC	<	0.20	<	20	NC		0.35	<	20	NC
Beryllium	7440417		0.006	<	0.50	NC	<	0.005	<	0.50	NC	<	0.005	<	0.50	NC	<	0.005	<	0.50	NC
Calcium	7440702		5.6	<	500	NC	<	5.0	<	500	NC		15.3	<	500	NC		15.4	<	50	NC
Chromium	7440473		0.08	<	1.0	NC		0.03	<	1.0	NC		0.32	<	1.0	NC		0.01	<	1.0	NC
Copper	7440508	<	0.03	<	1.0	NC	<	0.03	<	1.0	NC	<	0.03	<	1.0	NC		0.06	<	1.0	NC
Iron	7439896		0.8	<	10	NC		0.8	<	10	NC		3.0	<	10	NC		1.8	<	10	NC
Lead	7439921	<	0.003	<	0.3	NC		0.003	<	0.3	NC		0.003	<	0.3	NC		0.007	<	0.3	NC
Magnesium	7439954	<	5.0	<	500	NC	<	5.0	<	500	NC		6.7	<	500	NC		5.9	<	500	NC
Manganese	7439965	<	0.02	<	1.5	NC	<	0.02	<	1.5	NC		0.07	<	1.5	NC		0.08	<	1.5	NC
Molybdenum	7439987	<	0.02	<	20	NC	<	0.02	<	20	NC		0.06	<	20	NC	<	0.02	<	2.0	NC
Nickel	7440020		12.0		15.7	-27%		0.11	<	4.0	NC		1.1	<	4.0	NC		0.13	<	4.0	NC
Potassium	7440097		226	<	500	NC		6.1	<	500	NC	<	5.0	<	500	NC	<	5.0	<	500	NC
Sodium	7440235		52,400		85,800	-48%		31,100		32,500	-4%		22.3	<	500	NC		1,660		1,430	15%
Zinc	7440666		0.08	<	2.0	NC		0.06	<	2.0	NC		0.07	<	2.0	NC		0.13	<	2.0	NC

General Chemistry mg/L

	CAS No.		VT-01		VT-01-S	%RPD		VT-02		VT-02-S	%RPD		VT-03		VT-03-S	%RPD		VT-04		VT-04-S	%RPD
TSS	NA		38		726	-180%	<	20		43	NC	<	20		164	NC		20		166	-157%
Oil & Grease	NA	<	2		3,380	NC	<	2	<	50	NC	<	2	<	5	NC	<	2	<	5	NC
TOC	NA	<	1		47.5	NC		3.6		118	-188%	<	1	<	0.5	NC		4.1		4.54	-10%

FACILITY ID: DK
Sample Date: 05-22-97
Matrix: Wastewater

Volatile Organics - Method 8260A µg/L

	CAS No.		DK-01		DK-01-S	%RPD		DK-02		DK-02-S	%RPD		DK-03		DK-03-S	%RPD		DK-04		DK-04-S	%RPD
Acetone	67641		150	<	500	NC		45	<	100	NC		14,000		11,000	24%		1,200		450	91%
Benzene	71432	J	4.9	<	500	NC	J	3.2	<	100	NC	<	5	<	500	NC	<	5	<	10	NC
2-Butanone	78933		110	<	500	NC		50	<	100	NC		150	<	500	NC		18		10	86%
Carbon disulfide	75150		270	<	500	NC		81	<	100	NC		9.5	<	500	NC		580	<	10	NC
Carbon tetrachloride	56235	<	5	<	500	NC		11	<	100	NC	<	5	<	500	NC	<	5	<	10	NC
2-Chloro-1,3-butadiene	126998		1,000		1,200	-18%		62	<	100	NC		110	<	500	NC		140		1,100	-155%
Chloroform	67663		17	<	500	NC		22	<	100	NC	<	5	<	500	NC		6.3	<	10	NC
1,1-Dichloroethene	75354		8.1	<	500	NC	<	5	<	100	NC		5.8	<	500	NC	<	5	<	10	NC
1,2-Dichloropropane	78875		6.4	<	500	NC	<	5	<	100	NC	<	5	<	500	NC	<	5	<	10	NC
2-Hexanone	591786	<	5	<	500	NC	<	5	<	100	NC		29,000	<	500	NC	<	5	<	10	NC
Toluene	108883		86	<	250	NC		150		220	-38%		1,200		1,500	-22%		210		200	5%
1,1,2-Trichloroethane	79005		6.7	<	500	NC		200		210	-5%	<	5	<	500	NC	<	5	<	10	NC

Semivolatile Organics - Method 8270B µg/L

	CAS No		DK-01		DK-01-S	%RPD		DK-02		DK-02-S	%RPD		DK-03		DK-03-S	%RPD		DK-04		DK-04-S	%RPD
Not Detected	NA		ND		ND	NC		ND		ND	NC		ND		ND	NC		ND		ND	NC

Total Metals - Methods 6010, 7470 mg/L

	CAS No.		DK-01		DK-01-S	%RPD		DK-02		DK-02-S	%RPD		DK-03		DK-03-S	%RPD		DK-04		DK-04-S	%RPD
Aluminum	7429905	<	0.20	<	0.20	NC	<	0.20	<	0.20	NC	<	0.20	<	0.20	NC		0.79		0.23	110%
Arsenic	7440382		0.01	<	0.01	NC	<	0.01	<	0.01	NC		0.01	<	0.01	NC	<	0.01	<	0.01	NC
Calcium	7440702		121		107	12%		6.35		6.2	2%		21.3		22.8	-7%		133		130	2%
Chromium	7440473		0.55		0.48	14%	<	0.01	<	0.01	NC		0.04		0.013	102%	<	0.01	<	0.01	NC
Copper	7440508		0.05		0.27	-138%	<	0.03	<	0.025	NC		0.26	<	0.025	NC	<	0.03	<	0.025	NC
Iron	7439896		2.3		2.1	9%	<	0.10	<	0.10	NC		0.96	<	0.10	NC		2.2		1.8	20%
Magnesium	7439954		34.6		35.0	-1%	<	5.0	<	5.0	NC		8.2	<	5.0	NC		10.8		10.8	0%
Manganese	7439965		0.89		0.90	-1%		0.05		0.051	-2%		0.23		0.017	172%		0.12		0.12	0%
Molybdenum	7439987		0.10		0.09	11%	<	0.02	<	0.02	NC	<	0.02	<	0.02	NC	<	0.02	<	0.02	NC
Nickel	7440020		0.09		0.099	-10%	<	0.04	<	0.04	NC		0.54		0.07	154%		0.09		0.096	-6%
Potassium	7440097	<	5.0		6.2	NC	<	5.0	<	5.0	NC		10.8		15.3	-34%		11.5		14.9	-26%
Sodium	7440235		35.8		36.3	-1%		6.1		69.0	-168%		8,680		10,900	-23%		682		719	-5%
Zinc	7440666		0.02	<	0.02	NC	<	0.02	<	0.02	NC	<	0.02	<	0.02	NC		0.07		0.079	-12%

General Chemistry mg/L

	CAS No.		DK-01		DK-01-S	%RPD		DK-02		DK-02-S	%RPD		DK-03		DK-03-S	%RPD		DK-04		DK-04-S	%RPD
TSS	NA	<	20	<	4	NC	<	20	<	4	NC		174		190	-9%		85		150	-55%
Oil & Grease	NA	<	2	<	5	NC	<	2	<	5	NC		318		223	35%		5	<	5	NC
TOC	NA		443		170	89%		28.9		36	-22%		939		840	11%		136		130	5%

Dioxins/Furans - Method 1613 ng/L

	CAS No.		DK-01		DK-01-S	%RPD		DK-02		DK-02-S	%RPD		DK-03		DK-03-S	%RPD		DK-04		DK-04-S	%RPD
2,3,7,8-TCDF	51207319	<	0.010	<	0.001	NC	<	0.010	<	0.001	NC	<	0.30		0.540	NC	<	0.010	<	0.002	NC
Total TCDF	55722275		0.040	<	0.001	NC		0.094	<	0.003	NC		0.90		1.60	-56%		0.055	<	0.004	NC
Total TCDD	41903575	<	0.010	<	0.002	NC		0.048	<	0.002	NC		1.70		0.019	196%		0.040	<	0.002	NC
Total PeCDF	30402154	<	0.050	<	0.002	NC	<	0.051	<	0.001	NC		1.50	<	0.011	NC	<	0.050	<	0.001	NC
Total PeCDD	36088229	<	0.050	<	0.002	NC	<	0.051	<	0.001	NC		0.500	<	0.005	NC	<	0.050	<	0.001	NC
Total HxCDF	55684941	<	0.050	<	0.003	NC	<	0.051	<	0.003	NC		1.30	<	0.003	NC	<	0.050	<	0.003	NC
Total HxCDD	34465468	<	0.050	<	0.001	NC	<	0.051	<	0.001	NC		0.740	<	0.001	NC	<	0.050	<	0.002	NC
Total HpCDD	37871004	<	0.050	<	0.002	NC	<	0.051	<	0.001	NC		0.300	<	0.002	NC	<	0.050		0.028	NC

FACILITY ID: BG
Sample Date: 06-04-97
Matrix: Wastewater

Volatile Organics - Method 8260A µg/L

	CAS No.		BG-01		BG-01-S	%RPD		BG-05		BG-05-S	%RPD
Acetone	67641	<	20	<	2,500	NC		4,200	B	1,990	107%
Benzene	71432	<	5	<	500	NC		85		229	-92%
2-Butanone	78933		6	<	2,500	NC		67	<	500	NC
Carbon disulfide	75150	<	5	<	500	NC	J	2.6	<	100	NC
Chlorobenzene	108907	<	5	<	500	NC		16	<	100	NC
Chloroethane	75003		98	J	210	-109%		12	<	100	NC
Chloroform	67663		7,100		8,850	-22%	<	5		685	NC
1,2-Dichlorobenzene	95501	<	5	<	500	NC		5.2	<	100	NC
1,4-Dichlorobenzene	106467	<	5	<	500	NC	J	2.9	<	100	NC
1,1-Dichloroethane	75343	<	5	<	500	NC		810		1,790	-113%
1,2-Dichloroethane	107062		120	<	500	NC		40	J	76.8	-95%
1,1-Dichloroethene	75354	<	5	<	500	NC	J	2.6	<	100	NC
cis-1,2-Dichloroethene	156592	<	5	<	500	NC	<	5		126	NC
trans-1,2-Dichloroethene	156605	<	5	<	500	NC		39		129	-107%
1,2-Dichloropropane	78875	<	5	<	500	NC		9.9	<	100	NC
Ethylbenzene	100414	<	5	<	500	NC		5.2	<	100	NC
4-Methyl-2-pentanone	108101	<	5	<	500	NC	J	2.8	<	100	NC
Toluene	108883	<	5	<	500	NC	J	4.6	<	100	NC
1,1,2-Trichloroethane	79005	<	5	J	247	NC		47	J	93.8	-100%
Trichloroethene	79016	<	5	J	452	NC	<	5	<	100	NC
Vinyl chloride	75014	<	10	<	500	NC		680		1,380	-68%

Semivolatile Organics - Method 8270B µg/L

	CAS No		BG-01		BG-01-S	%RPD		BG-05		BG-05-S	%RPD
Benzoic acid	65850		77	J	8	244%		67	<	500	NC
Benzyl alcohol	100516	<	10	<	10	NC	J	13	<	100	NC
Bis(2-chloroethyl)ether	111444	<	10		13.7	NC	<	25	<	100	NC
Butyl benzyl phthalate	85687	<	10	<	10	NC	<	25	J	10.2	NC
2-Chlorophenol	95578	<	10	J	1.8	NC	<	25	<	100	NC
Di-n-butyl phthalate	84742	<	10	<	10	NC		290		358	-21%
Di-n-octyl phthalate	117840	<	10	<	10	NC	<	25	J	2.2	NC
2,4-Dimethylphenol	105679	<	10	<	10	NC		18	<	100	NC
Bis(2-ethylhexyl)phthalate	117817	<	10	<	10	NC		52	J	57.4	-15%

Total Metals - Methods 6010, 7470 mg/L

	CAS No.		BG-01		BG-01-S	%RPD		BG-05		BG-05-S	%RPD
Aluminum	7429905		2.28		3.04	-29%		2.08		2.39	-14%
Antimony	7440360	<	0.06		0.58	NC	<	0.06	<	0.5	NC
Calcium	7440702		40.7		51.0	-22%		56.0		66.0	-16%
Chromium	7440473		7.93		30.7	-118%		0.35		0.39	-11%
Cobalt	7440484		0.07	<	0.25	NC	<	0.05	<	0.25	NC
Copper	7440508		0.80		0.89	-11%		0.39		0.45	-14%
Iron	7439896		96.1		184	-63%		139		147	-6%
Lead	7439921		0.008	<	0.5	NC		0.007	<	0.5	NC
Magnesium	7439954		12.6		15.8	-23%		7.60		9.40	-21%
Manganese	7439965		1.97		4.38	-76%		1.21		1.43	-17%
Mercury	7439976		0.008		0.003	91%		8.60		6.78	24%
Molybdenum	7439987		0.04		0.33	-157%		0.10		0.23	-79%
Nickel	7440020		3.66		13.2	-113%		0.70		0.82	-16%
Potassium	7440097		5.8		4.6	23%		11.6		11.2	4%
Sodium	7440235		9,760		9,470	3%		196		222	-12%
Zinc	7440666		0.27		0.37	-31%		3.58		3.84	-7%

FACILITY ID: BG (cont)

Dioxins/Furans - Method 1613 ng/L

	CAS No.		BG-01		BG-01-S	%RPD		BG-05		BG-05-S	%RPD
Total TCDF	55722275	<	0.010	<	0.007	NC		0.010	<	0.007	NC
Total TCDD	41903575	<	0.010	<	0.002	NC		0.027	<	0.002	NC
Total HxCDD	34465468	<	0.048	<	0.021	NC		0.050	<	0.029	NC
1,2,3,4,6,7,8-HpCDF	67562394		0.160		0.210	-41%		0.048	<	0.013	NC
Total HpCDF	38998753		0.160		0.210	-41%		0.048	<	0.021	NC
1,2,3,4,6,7,8-HpCDD	35822469	<	0.048	<	0.029	NC		0.170	<	0.029	NC
Total HpCDD	37871004	<	0.048	<	0.029	NC		0.340	<	0.029	NC
OCDF	39001020		1.50		2.69	-57%		0.098	<	0.017	NC
OCDD	3268879	<	0.095	<	0.013	NC		1.30		1.97	-61%

FACILITY ID: BG
Sample Date: 06-04-97
Matrix: Wastewater Sludge

Volatile Organics - Method 8260A µg/kg

	CAS No.		BG-04		BG-04-S	%RPD		BG-06		BG-06-S	%RPD
Acetone	67641	<	2,000	<	50	NC	<	2,000		74	NC
Bromodichloromethane	75274	<	500	J	6.7	NC	<	500	<	10	NC
Carbon disulfide	75150	<	500	<	10	NC	<	500	J	9.3	NC
cis-1,2-Dichloroethene	156592	<	500	<	10	NC	<	500		25	NC
Chloroform	67663	<	500		24	NC	<	500	J	5.2	NC
1,1-Dichloroethane	75343	<	500	<	10	NC	<	500		120	NC
1,2-Dichloroethane	107062	<	500		21	NC	<	500	<	10	NC
1,2-Dichloropropane	78875	<	500	<	10	NC	<	500	J	4.9	NC
Ethylbenzene	100414	<	500	J	4.2	NC	<	500	<	10	NC
Methylene chloride	75092	<	1,000		219	NC	<	1,000		15	NC
1,1,2-Trichloroethane	79005	<	500	<	10	NC	<	500	J	9.7	NC
Vinyl chloride	75014	<	1,000	<	10	NC	<	1,000		39	NC

Volatile Organics - Methods 1311, 8260A µg/L

	CAS No.		BG-04		BG-04-S	%RPD		BG-06		BG-06-S	%RPD
Acetone	67641		570		NR	NC		130		NR	NC
Benzene	71432	<	5	<	50	NC	J	4.9	<	50	NC
Bromodichloromethane	75274		6		NR	NC	<	5		NR	NC
2-Butanone	78933		18	<	250	NC		9.4	<	250	NC
Carbon disulfide	75150	<	5		NR	NC		14		NR	NC
Chloroform	67663		18	<	50	NC	<	5	<	50	NC
Dibromochloromethane	124481		5		NR	NC	<	5		NR	NC
1,1-Dichloroethane	75343	<	5		NR	NC		43		NR	NC
1,2-Dichloroethane	107062		17	<	50	NC		7.3	<	50	NC
trans-1,2-Dichloroethene	156605	<	5		NR	NC	J	3.2		NR	NC
Methylene chloride	75092	J	5.7		NR	NC	J	6.6		NR	NC
1,1,2-Trichloroethane	79005	<	5		NR	NC		9.9		NR	NC
Vinyl chloride	75014	<	5	<	50	NC	J	7.1	<	50	NC

FACILITY ID: BG (cont)

Semivolatile Organics - Method 8270B µg/kg

	CAS No		BG-04		BG-04-S	%RPD		BG-06		BG-06-S	%RPD
Acenaphthylene	208968	<	8,250	J	1,220	NC	<	6,600	<	3,300	NC
Benzo(a)pyrene	50328	<	8,250	J	1,280	NC	<	6,600	<	3,300	NC
Benzo(b)fluoranthene	205992	<	8,250	J	479	NC	<	6,600	<	3,300	NC
Benzo(g,h,i)perylene	191242		13,000		7,600	52%	<	6,600	<	3,300	NC
Butyl benzyl phthalate	85687	<	8,250	<	3,300	NC	<	6,600	J	612	NC
2-Chloronaphthalene	91587	<	8,250	<	3,300	NC	<	6,600	J	201	NC
Di-n-butyl phthalate	84742	<	8,250	<	3,300	NC		20,000		21,200	-6%
1,2-Dichlorobenzene	95501	<	8,250	<	3,300	NC	J	2,010	J	1,450	49%
1,3-Dichlorobenzene	541731	<	8,250	<	3,300	NC	J	700	J	556	34%
1,4-Dichlorobenzene	106467	<	8,250	<	3,300	NC	J	960	J	755	36%
Bis(2-ethylhexyl)phthalate	117817	<	8,250	J	136	NC	J	3,400		3,310	3%
Fluoranthene	206440	J	4,300	J	2,160	99%	J	670	<	3,300	NC
Fluorene	86737	<	8,250	J	145	NC	<	6,600	J	95	NC
Indeno(1,2,3-cd)pyrene	193395	<	8,250	J	1,920	NC	<	6,600	<	3,300	NC
Isophorone	78591	<	8,250	J	93	NC	<	6,600	<	3,300	NC
2-Methylnaphthalene	91576	<	8,250	<	3,300	NC	<	6,600	J	139	NC
Naphthalene	91203	<	8,250	J	337	NC	<	6,600	<	3,300	NC
Phenanthrene	85018	<	8,250	J	825	NC	<	6,600	J	478	NC
Pyrene	129000		16,000		4,560	111%	J	2,320	J	1,220	93%
1,2,4-Trichlorobenzene	120821	<	8,250	<	3,300	NC	J	2,340	J	1,580	58%

nivolatile Organics - Methods 1311, 8270B µg/L

	CAS No		BG-04		BG-04-S	%RPD		BG-06		BG-06-S	%RPD
Benzoic acid	65850	J	17	<	250	NC	J	14	<	250	NC
Butyl benzyl phthalate	85687	<	10	<	50	NC	J	7.9	<	50	NC
Di-n-butyl phthalate	84742	<	10	<	50	NC	<	10	J	7.7	NC
Phenol	108952	J	6.3	<	50	NC	<	10	<	50	NC

Total Metals - Methods 6010, 7471 mg/kg

	CAS No.		BG-04		BG-04-S	%RPD		BG-06		BG-06-S	%RPD
Aluminum	7429905		805		1,060	-27%		626		1,740	-94%
Arsenic	7440382		1.10		0.93	17%		3.60		3.03	17%
Barium	7440393		41.4		47.0	-13%		43.0		96.0	-76%
Cadmium	7440439	<	0.5	<	2	NC		1.0	<	2	NC
Calcium	7440702		3,290		3,570	-8%		1,090		3,800	-111%
Chromium	7440473		16.4		18.3	-11%		15.3		35.3	-79%
Copper	7440508		173		185	-7%		43.5		58.8	-30%
Iron	7439896		6,440		6,750	-5%		2,410		6,300	-89%
Lead	7439921		4.1	<	20	NC		15.2		22.5	-39%
Magnesium	7439954		492		560	-13%		211		452	-73%
Manganese	7439965		59.3		64.8	-9%		14.3		30.9	-74%
Mercury	7439976		19.8		18.2	8%		9,200		17,700	-63%
Molybdenum	7439987	<	2	<	8	NC		37.6		47.0	-22%
Nickel	7440020		20.4		23.9	-16%		27.0		45.0	-50%
Potassium	7440097	<	500		105	NC	<	500		209	NC
Selenium	7782492	<	0.5		0.20	NC	<	0.5		0.80	NC
Sodium	7440235		1,900		1,920	-1%		785		1,030	-27%
Vanadium	7440622	<	5		5.22	NC		6.7		10.0	-40%
Zinc	7440666		186		233	-22%		446		598	-29%

FACILITY ID: BG (cont)

:LP Metals - Methods 1311, 6010, 7470 mg/L

	CAS No.		BG-04		BG-04-S	%RPD		BG-06	BG-06-S	%RPD
Cadmium	7440439	<	0.05	<	0.01	NC	<	0.05	0.03	NC
Calcium	7440702		128		NR	NC		417	NR	NC
Chromium	7440473	<	0.05	<	0.05	NC		0.10	0.08	22%
Copper	7440508		0.52		NR	NC		0.64	NR	NC
Lead	7439921	<	0.5	<	0.10	NC	<	0.5	0.21	NC
Magnesium	7439954		18		NR	NC		2.7	NR	NC
Manganese	7439965		1.3		NR	NC		0.3	NR	NC
Mercury	7439976	<	0.01		0.0002	NC		0.26	0.65	-86%
Nickel	7440020		0.24		NR	NC		1.0	NR	NC
Potassium	7440097		2.9		NR	NC		1.6	NR	NC
Zinc	7440666		3.2		NR	NC		9.5	NR	NC

Dioxins/Furans - Method 1613 ng/kg

	CAS No.		BG-04		BG-04-S	%RPD		BG-06		BG-06-S	%RPD
2,3,7,8-TCDF	51207319		1.5	<	0.5	NC		10.1	<	0.5	NC
Total TCDF	55722275		1.5	<	0.5	NC		48.1	<	0.5	NC
Total TCDD	41903575	<	0.3	<	0.5	NC		3.8	<	0.5	NC
1,2,3,7,8-PeCDF	57117416	<	4.5	<	0.7	NC		28.8	<	0.7	NC
2,3,4,7,8-PeCDF	57117314	<	3.5	<	1.5	NC		19.7	<	1.5	NC
Total PeCDF	30402154		18.9	<	1.5	NC		170	<	1.5	NC
1,2,3,4,7,8-HxCDF	67562394		35.3	<	0.3	NC		83.0	<	0.3	NC
1,2,3,6,7,8-HxCDF	57117449		21.2	<	1.6	NC		48.1	<	1.6	NC
2,3,4,6,7,8-HxCDF	60851345		15.9	<	0.8	NC		31.9	<	0.8	NC
1,2,3,7,8,9-HxCDF	72918219		9.6	<	1.0	NC		19.2	<	1.0	NC
Total HxCDF	55684941		186	<	1.6	NC		376	<	1.6	NC
Total HxCDD	34465468		5.5	<	2.0	NC		65.6	<	2.0	NC
1,2,3,4,6,7,8-HpCDF	67562394		252		296	-16%		109	<	1.0	NC
1,2,3,4,7,8,9-HpCDF	55673897		60.5	<	3.6	NC		29.7	<	3.6	NC
Total HpCDF	38998753		454		296	42%		140	<	3.6	NC
1,2,3,4,6,7,8-HpCDD	35822469		75.6	<	1.7	NC		175	<	1.7	NC
Total HpCDD	37871004		146	<	1.7	NC		350	<	1.7	NC
OCDF	39001020		1,360		898	41%		101	<	2.4	NC
OCDD	3268879		655		1,155	-55%		1,440		902	46%

FACILITY ID: OC
Sample Date: 07-11-97
Matrix: Wastewater

Volatile Organics - Method 8260A µg/L

	CAS No.		OC-01		OC-01-S	%RPD
Acetone	67641	<	20	J	15	NC
2-Chloro-1,3-butadiene	126998		16	<	5	NC
Chlorobenzene	108907		9.3	<	5	NC
Chloroform	67663		59		54	9%
1,2-Dichloroethane	107062		113		12	162%
Ethylbenzene	100414	J	4.4	<	5	NC
Styrene	100425		8.6	<	5	NC

Semivolatile Organics - Method 8270B µg/L

	CAS No		OC-01		OC-01-S	%RPD
Benzoic acid	65850	J	18	J	4.8	174%
Bis(2-chloroethyl)ether	111444	<	10	J	4.4	NC
Bis(2-ethylhexyl)phthalate	117817	<	10	J	1.4	NC

Total Metals - Methods 6010, 7470 mg/L

	CAS No.		OC-01		OC-01-S	%RPD
Aluminum	7429905		0.43	J	1.2	-142%
Barium	7440393	<	0.20	J	0.21	NC
Calcium	7440702		19.5	J	26	-43%
Chromium	7440473		0.025	J	0.11	-189%
Cobalt	7440484	<	0.05	J	0.16	NC
Copper	7440508		0.07	<	0.10	NC
Iron	7439896		62.6	J	82	-40%
Magnesium	7439954		5.68	J	7.7	-45%
Manganese	7439965		0.40	J	0.54	-45%
Molybdenum	7439987		0.04	<	0.20	NC
Nickel	7440020		0.04		0.046	-14%
Potassium	7440097		27.0		31	-14%
Sodium	7440235		11,400		12,000	-5%
Thallium	7440280	<	0.01	J	0.004	NC
Zinc	7440666		0.17	<	0.24	NC

General Chemistry mg/L

	CAS No.		OC-01		OC-01-S	%RPD
TSS	NA		230		160	36%
Oil & Grease	NA	<	2	<	1.0	NC
TOC	NA		75	J	91	-29%

Dioxins/Furans - Method 1613 ng/L

	CAS No.		OC-01		OC-01-S	%RPD
1,2,3,4,7,8-HxCDF	67562394	<	0.051		0.052	NC
Total HxCDF	55684941	<	0.051		0.052	NC
OCDF	39001020	<	0.10		0.11	NC
OCDD	3268879	<	0.10		0.16	NC

FACILITY ID: OC
Sample Date: 07-11-97
Matrix: Wastewater Sludge

Volatile Organics - Method 8260A µg/kg

	CAS No.		OC-02		OC-02-S	%RPD
Not Detected	NA		ND		ND	NC

Volatile Organics - Methods 1311, 8260A µg/L

	CAS No.		OC-02		OC-02-S	%RPD
Acetone	67641	B	23		NR	NC
1,2-Dichloroethane	107062	J	4.8	<	5	NC
4-Methyl-2-pentanone	108101	JB	3.6	<	5	NC
Methylene chloride	75092	JB	7.8	<	10	NC

Semivolatile Organics - Method 8270B µg/kg

	CAS No		OC-02		OC-02-S	%RPD
Benzo(a)pyrene	50328	<	660	J	260	NC
Benzo(g,h,i)perylene	191242	<	660	J	400	NC
Bis(2-ethylhexyl)phthalate	117817	J	400	<	2,000	NC
N-nitrosodimethylamine	62759	<	660	J	300	NC

nivolatile Organics - Methods 1311, 8270B µg/L

	CAS No		OC-02		OC-02-S	%RPD
Benzoic acid	65850		40	<	250	NC

Total Metals - Methods 6010, 7471 mg/kg

	CAS No.		OC-02**		OC-02-S	%RPD
Aluminum	7429905		1,700	J	2,600	-63%
Arsenic	7440382	<	2.9	J	2.5	NC
Barium	7440393		285	J	360	-35%
Calcium	7440702		50,300	J	65,000	-38%
Chromium	7440473		72.7	J	88	-29%
Cobalt	7440484	<	14.5	J	11	NC
Copper	7440508		375	J	420	-17%
Iron	7439896		117,000	J	130,000	-16%
Lead	7439921		5.5	J	13	-122%
Magnesium	7439954		11,700	J	15,000	-37%
Manganese	7439965		942	J	1,100	-23%
Mercury	7439976	<	0.58	J	0.25	NC
Nickel	7440020		99.1	J	120	-29%
Potassium	7440097	<	1,450	J	1,100	NC
Sodium	7440235		27,500	J	30,000	-13%
Zinc	7440666		259	J	440	-78%

:LP Metals - Methods 1311, 6010, 7470 mg/L

	CAS No.		OC-02		OC-02-S	%RPD
Aluminum	7429905	<	1.0		0.24	NC
Calcium	7440702		413		1,100	-91%
Cobalt	7440484	<	0.05		0.096	NC
Copper	7440508	<	0.25		0.12	NC
Magnesium	7439954		154		240	-44%
Manganese	7439965		0.81		11	-173%
Nickel	7440020	<	0.20		0.58	NC
Potassium	7440097		4.1	<	5.8	NC

FACILITY ID: OC (cont)

General Chemistry mg/kg

	CAS No.		OC-02**		OC-02-S	%RPD
TOC	NA		10,800		11,000	-2%
Oil & Grease	NA		1,980	<	100	NC
BTU	NA	<	380	<	90	NC
Percent Solids	NA		34.4		32	7%

Dioxins/Furans - Method 1613 ng/kg

	CAS No.	OC-02**		OC-02-S	%RPD
2,3,7,8-TCDF	51207319	23.0	J	33	-54%
Total TCDF	55722275	130	J	200	-64%
Total TCDD	41903575	2.0	J	2.8	-50%
1,2,3,7,8-PeCDF	57117416	80.0	J	110	-47%
2,3,4,7,8-PeCDF	57117314	36.0	J	57	-68%
Total PeCDF	30402154	240	J	400	-75%
1,2,3,4,7,8-HxCDF	67562394	190	J	300	-67%
1,2,3,6,7,8-HxCDF	57117449	40.0	J	68	-78%
2,3,4,6,7,8-HxCDF	60851345	21.0	J	30	-53%
1,2,3,7,8,9-HxCDF	72918219	45.0	J	48	-10%
Total HxCDF	55684941	400	J	580	-55%
1,2,3,4,6,7,8-HpCDF	67562394	110	J	180	-72%
1,2,3,4,7,8,9-HpCDF	55673897	71.0	J	130	-88%
Total HpCDF	38998753	320	J	530	-74%
1,2,3,4,6,7,8-HpCDD	35822469	9.3	J	14	-61%
Total HpCDD	37871004	20.0	J	29	-55%
OCDF	39001020	180	J	340	-92%
OCDD	3268879	120	J	260	-111%

FACILITY ID: SN
Sample Date: 07-15-97
Matrix: Wastewater

Volatile Organics - Method 8260A µg/L

	CAS No.		SN-01		SN-01-S	%RPD		SN-02		SN-02-S	%RPD		SN-03		SN-03-S	%RPD		SN-04		SN-04-S	%RPD
Acetone	67641		54,000	<	10	NC		1,900	<	10	NC	J	2,800		15,700	-139%	J	1,500		1,620	-8%
Allyl chloride	107051	<	5	<	10	NC		14	<	10	NC	<	5	<	10	NC	<	5	<	1,000	NC
Benzene	71432	<	5	<	10	NC	<	5	<	10	NC		11	<	10	NC	<	5	<	1,000	NC
2-Butanone	78933	<	5	<	10	NC	<	5	<	10	NC		37,000		37,900	-2%		6,200		4,650	29%
Carbon disulfide	75150	<	5	<	10	NC	<	5	<	10	NC	<	5	<	10	NC	J	4.1	<	1,000	NC
2-Chloro-1,3-butadiene	126998	J	4.3	<	50	NC	J	3.3	<	50	NC	J	2.9	<	10	NC	J	2.5	<	5,000	NC
Chlorobenzene	108907	J	3.5	<	10	NC		6.3	<	10	NC		190		191	-1%		55	<	1,000	NC
Chloroform	67663	<	5	<	10	NC	<	5	<	10	NC	<	10	<	10	NC	J	3.3	<	1,000	NC
Chloromethane	74873		100	<	10	NC		580	<	10	NC		19	<	10	NC	J	180	<	1,000	NC
1,2-Dichloroethane	107062	<	5	<	10	NC	<	5	<	10	NC		10		10.1	-1%	J	3.7	<	1,000	NC
1,2-Dichloropropane	78875		110		67.4	48%	<	5	<	10	NC	<	5	<	10	NC	<	5	<	1,000	NC
cis-1,3-Dichloropropene	10061015		7.1	<	10	NC	<	5	<	10	NC	<	5	<	10	NC	<	5	<	1,000	NC
trans-1,3-Dichloropropene	10061026		14	<	10	NC	<	5	<	10	NC	<	5	<	10	NC	<	5	<	1,000	NC
Ethylbenzene	100414	J	3.3	<	10	NC	<	5	<	10	NC	<	5	<	10	NC		35	<	1,000	NC
2-Hexanone	591786	<	5	<	10	NC	<	5	<	10	NC	<	5	<	10	NC		6.5	<	1,000	NC
4-Methyl-2-pentanone	108101	<	5	<	10	NC	<	5	<	10	NC		190	<	10	NC		150	<	1,000	NC
Methylene chloride	75092	<	10		16.6	NC	<	10	<	10	NC	<	10	<	10	NC	<	10	<	1,000	NC
Styrene	100425		6.0	<	10	NC	J	4.8	<	10	NC	J	4.9	<	10	NC		110	<	1,000	NC
Toluene	108883	<	5	<	10	NC	<	5	<	10	NC		9.3	<	10	NC	<	5	<	1,000	NC
Vinyl chloride	75014	<	10	<	10	NC		600	<	10	NC	<	10	<	10	NC	<	10	<	1,000	NC
Xylenes	108383/106423	<	5	<	10	NC	<	5	<	10	NC	<	5	<	10	NC		140	<	1,000	NC

Semivolatile Organics - Method 8270B µg/L

	CAS No		SN-01		SN-01-S	%RPD		SN-02		SN-02-S	%RPD		SN-03		SN-03-S	%RPD		SN-04		SN-04-S	%RPD
Benzoic acid	65850	<	20	<	25	NC	<	20	<	25	NC		86	<	25	NC		260	<	250	NC
Benzyl alcohol	100516	<	10	<	10	NC	<	10	<	10	NC	<	10	<	10	NC		76	<	100	NC
Diethyl phthalate	84662	<	10	<	10	NC		57	<	10	NC	<	10	<	10	NC	<	50	<	100	NC
2,4-Dimethylphenol	105679	<	10	<	10	NC	<	10	<	10	NC		220		161	31%		350		341	3%
2-Methylnaphthalene	91576	<	10	<	10	NC	<	10	<	10	NC	<	10	<	10	NC	J	47	<	100	NC
2-Methylphenol	95487	<	10	<	10	NC	<	10	<	10	NC		140		97.9	35%		830		1,160	-33%
4-Methylphenol	106445	<	10	<	10	NC	<	10	<	10	NC		110		74	39%		1,500		2,050	-31%
Naphthalene	91203	<	10	<	10	NC	<	10	<	10	NC	<	10	<	10	NC		250		238	5%
Phenol	108952	<	10	<	10	NC	<	10	<	10	NC		470		334	34%		7,700		8,030	-4%
Pyridine	110861	<	10	<	10	NC	<	10	<	10	NC		68	<	10	NC	<	50	<	100	NC

Total Metals - Methods 6010, 7470 mg/L

	CAS No.		SN-01		SN-01-S	%RPD		SN-02		SN-02-S	%RPD		SN-03	SN-03-S	%RPD		SN-04		SN-04-S	%RPD
Aluminum	7429905	<	0.20	<	0.20	NC	<	0.20	<	0.20	NC		9.85	8.97	9%		0.48		0.57	-17%
Arsenic	7440382	<	0.010	<	0.010	NC	<	0.010	<	0.010	NC		0.027	0.025	8%		0.019	<	0.010	NC
Calcium	7440702		17.8		15.7	13%	<	5.0	<	0.50	NC		1,510	1,350	11%		545		351	43%
Chromium	7440473	<	0.01	<	0.01	NC	<	0.01	<	0.01	NC		0.03	0.03	0%	<	0.01	<	0.01	NC
Copper	7440508	<	0.03	<	0.03	NC	<	0.03	<	0.03	NC	<	0.03	0.03	NC	<	0.03	<	0.03	NC
Iron	7439896	<	0.10	<	0.10	NC	<	0.10		0.10	NC		3.46	3.19	8%		0.97		1.25	-25%
Lead	7439921	<	0.003	<	0.003	NC	<	0.003	<	0.003	NC		0.008	0.008	0%	<	0.003	<	0.003	NC
Magnesium	7439954		7.75		7.14	8%	<	5.0	<	0.50	NC		16.4	13.2	22%		10.2		7.85	26%
Manganese	7439965	<	0.02	<	0.015	NC	<	0.02	<	0.015	NC		0.36	0.32	12%		0.15		0.13	14%
Nickel	7440020	<	0.04	<	0.04	NC	<	0.04	<	0.04	NC		0.04	0.05	-22%	<	0.04	<	0.04	NC
Potassium	7440097	<	5.0		3.72	NC	<	5.0		2.92	NC		5.5	13.9	-87%		6.3		18.5	-98%
Selenium	7782492	<	0.005	<	0.005	NC	<	0.005	<	0.005	NC		0.017	0.015	13%		0.027		0.035	-26%
Sodium	7440235		21.5		18.6	14%		871		787	10%		1,810	1,760	3%		6,190	<	5,000	NC
Zinc	7440666	<	0.02		0.03	NC		0.02		0.042	-71%		0.17	0.15	13%		0.06		0.11	-59%

FACILITY ID: SN (cont)

General Chemistry mg/L

	CAS No.		SN-01		SN-01-S	%RPD		SN-02		SN-02-S	%RPD		SN-03		SN-03-S	%RPD		SN-04		SN-04-S	%RPD
TSS	NA	<	20	<	4	NC	<	20	<	4	NC		215		213	1%		155		46	108%
Oil & Grease	NA	<	2	<	5	NC	<	2	<	5	NC		7		12.0	-53%		23		24.4	-6%
TOC	NA		1.6		2.90	-58%		15		14.4	4%		162		127	24%		387		308	23%

Dioxins/Furans - Method 1613 ng/L

	CAS No.		SN-01		SN-01-S	%RPD		SN-02		SN-02-S	%RPD		SN-03		SN-03-S	%RPD		SN-04		SN-04-S	%RPD
2,3,7,8-TCDD	1746016	<	0.010	<	0.010	NC	<	0.010	<	0.010	NC	<	0.010	<	0.010	NC	<	0.010		0.014	NC
Total TCDD	41903575	<	0.010	<	0.010	NC	<	0.010	<	0.010	NC	<	0.010	<	0.010	NC	<	0.010		0.014	NC
Total TCDF	55722275	<	0.010	<	0.010	NC	<	0.010		0.011	NC	<	0.010	<	0.010	NC	<	0.010	<	0.010	NC
1,2,3,4,6,7,8-HpCDD	35822469	<	0.049		0.115	NC	<	0.050	<	0.050	NC	<	0.052		0.057	NC	<	0.047	<	0.050	NC
Total HpCDD	37871004	<	0.049		0.177	NC	<	0.050	<	0.050	NC	<	0.052		0.099	NC	<	0.047	<	0.050	NC
Total HxCDF	55684941	<	0.049		0.065	NC	<	0.050	<	0.050	NC	<	0.052		0.084	NC	<	0.047	<	0.050	NC
1,2,3,4,6,7,8-HpCDF	67562394	<	0.049	<	0.050	NC	<	0.050	<	0.050	NC	<	0.052		0.097	NC	<	0.047	<	0.050	NC
Total HpCDF	38998753	<	0.049	<	0.050	NC	<	0.050	<	0.050	NC	<	0.052		0.209	NC	<	0.047	<	0.050	NC
OCDF	39001020	<	0.097	<	0.100	NC	<	0.100	<	0.101	NC		0.110		0.327	-99%	<	0.095	<	0.100	NC
OCDD	3268879	<	0.097		0.883	NC	<	0.100	<	0.101	NC		0.120		0.466	-118%	<	0.095	<	0.100	NC

FACILITY ID: SN
Sample Date: 07-15-97
Matrix: Wastewater Sludge

Volatile Organics - Method 8260A µg/kg

	CAS No.		SN-05**		SN-05-S	%RPD
Acetone	67641		708		4,550	-146%
2-Butanone	78933		191		2,210	-168%
Carbon disulfide	75150		80	<	34.5	NC
Chlorobenzene	108907	J	46		92.8	-67%
2-Hexanone	591786	J	102	<	34.5	NC
4-Methyl-2-pentanone	108101	J	62	<	34.5	NC
Methylene chloride	75092	<	77		80.7	NC

' Volatile Organics - Methods 1311, 8260A µg/L

	CAS No.		SN-05		SN-05-S	%RPD
Acetone	67641	B	270		NR	NC
2-Butanone	78933		26	<	100	NC
4-Methyl-2-pentanone	108101	JB	4.9		NR	NC
Methylene chloride	75092	JB	7.1		NR	NC

Semivolatile Organics - Method 8270B µg/kg

	CAS No		SN-05		SN-05-S	%RPD
Not Detected	NA		ND		ND	NC

nivolatile Organics - Methods 1311, 8270B µg/L

	CAS No		SN-05		SN-05-S	%RPD
Benzoic acid	65850		47		NR	NC

FACILITY ID: SN (cont)

Total Metals - Methods 6010, 7471 mg/kg

	CAS No.	SN-05**	SN-05-S	%RPD
Aluminum	7429905	25,900	29,800	-21%
Arsenic	7440382	36.0	42.3	-16%
Barium	7440393	131	147	-12%
Cadmium	7440439	13.5	17.3	-25%
Calcium	7440702	166,000	162,000	4%
Chromium	7440473	165	180	-13%
Copper	7440508	113	102	15%
Iron	7439896	20,800	25,500	-30%
Lead	7439921	32.9	38.6	-24%
Magnesium	7439954	5,940	6,560	-15%
Manganese	7439965	283	333	-24%
Nickel	7440020	122	144	-17%
Selenium	7782492	27.7	30.9	-11%
Sodium	7440235	16,300	40,600	-85%
Vanadium	7440622	57.5	67.3	-16%
Zinc	7440666	588	717	-30%

:LP Metals - Methods 1311, 6010, 7470 mg/L

	CAS No.	SN-05	SN-05-S	%RPD
Calcium	7440702	1,350	NR	NC
Magnesium	7439954	16.1	NR	NC
Manganese	7439965	1.35	NR	NC
Nickel	7440020	0.28	NR	NC
Potassium	7440097	3.2	NR	NC

General Chemistry mg/kg

	CAS No.	SN-05**	SN-05-S	%RPD
TOC	NA	134,000	NR	NC
Oil & Grease	NA	26,600	NR	NC
BTU	NA	< 335	< 100	NC
Percent Solids	NA	32.5	29	11%

Dioxins/Furans - Method 1613 ng/kg

	CAS No.	SN-05**	SN-05-S	%RPD
2,3,7,8-TCDD	1746016	< 1.0	1.3	NC
Total TCDD	41903575	< 1.0	12.2	NC
2,3,7,8-TCDF	51207319	< 1.0	12.0	NC
Total TCDF	55722275	< 1.0	61.4	NC
1,2,3,7,8-PeCDF	57117416	9.9	7.0	34%
2,3,4,7,8-PeCDF	57117314	6.8	5.0	31%
Total PeCDF	30402154	51.0	72.6	-35%
1,2,3,4,7,8-HxCDF	67562394	85.0	103	-19%
1,2,3,6,7,8-HxCDF	57117449	37.0	36.1	2%
2,3,4,6,7,8-HxCDF	60851345	28.0	27.8	1%
1,2,3,7,8,9-HxCDF	72918219	19.0	6.2	102%
Total HxCDF	55684941	350	406	-15%
1,2,3,6,7,8-HxCDD	57653857	12.0	9.0	29%
1,2,3,7,8,9-HxCDD	19408743	21.0	7.9	91%
Total HxCDD	34465468	74.0	76.4	-3%
1,2,3,4,6,7,8-HpCDF	67562394	520	502	4%
1,2,3,4,7,8,9-HpCDF	55673897	170	181	-6%
Total HpCDF	38998753	1,000	1,060	-6%
1,2,3,4,6,7,8-HpCDD	35822469	190	209	-10%
Total HpCDD	37871004	390	427	-9%
OCDF	39001020	1,800	1,880	-4%
OCDD	3268879	1,600	1,680	-5%

FACILITY ID: DF
Sample Date: 07-17-97
Matrix: Wastewater

Volatile Organics - Method 8260A µg/L

	CAS No.	DF-01	DF-01-S	%RPD	DF-03	DF-03-S	%RPD	DF-04	DF-04-S	%RPD	DF-05	DF-05-S	%RPD	DF-06	DF-06-S	%RPD
Acetone	67641	90	< 32	NC	96	< 32	NC	< 20	NR	NC	J 4,400	2,700	48%	830	< 3,200	NC
Allyl chloride	107051	< 5	NR	NC	< 5	NR	NC	< 5	NR	NC	< 5	NR	NC	11	< 1,000	NC
Bromodichloromethane	75274	< 5	NR	NC	< 5	NR	NC	< 5	NR	NC	6.9	< 400	NC	7.2	< 400	NC
Bromoform	75252	< 5	NR	NC	< 5	NR	NC	< 5	NR	NC	< 5	NR	NC	5.4	< 2,000	NC
Bromomethane	74839	< 10	NR	NC	< 10	NR	NC	< 10	NR	NC	J 3.2	< 500	NC	< 10	NR	NC
2-Butanone	78933	39	< 19	NC	20	< 19	NC	< 5	NR	NC	J 2,200	< 190	NC	5.8	< 1,900	NC
Carbon tetrachloride	56235	< 5	NR	NC	< 5	NR	NC	< 5	NR	NC	J 3.0	< 110	NC	< 5	NR	NC
Chlorobenzene	108907	5.1	< 3	NC	J 4.3	< 3	NC	< 5	NR	NC	< 5	NR	NC	< 5	NR	NC
Chloroform	67663	< 5	NR	NC	< 5	NR	NC	J 4.9	< 4	NC	49	< 40	NC	46	< 400	NC
Chloromethane	74873	< 10	NR	NC	< 10	NR	NC	< 10	NR	NC	J 700	< 500	NC	< 10	NR	NC
Dibromochloromethane	124481	< 5	NR	NC	< 5	NR	NC	< 5	NR	NC	< 5	NR	NC	11	< 400	NC
1,2-Dichlorobenzene	95501	< 5	NR	NC	< 5	NR	NC	< 5	NR	NC	J 310	280	10%	< 5	NR	NC
1,1-Dichloroethane	75343	< 5	NR	NC	< 5	NR	NC	< 5	NR	NC	6.6	< 40	NC	< 5	NR	NC
1,2-Dichloroethane	107062	< 160	140	13%	< 5	NR	NC	< 5	NR	NC	16	< 40	NC	< 5	NR	NC
1,1-Dichloroethene	75354	< 5	NR	NC	< 5	NR	NC	< 5	NR	NC	6.0	< 40	NC	< 5	NR	NC
cis-1,2-Dichloroethene	156592	< 5	NR	NC	< 5	NR	NC	< 5	NR	NC	5.0	< 40	NC	< 5	NR	NC
1,2-Dichloropropane	78875	< 5	NR	NC	< 5	NR	NC	< 5	NR	NC	58	< 50	NC	40	< 500	NC
cis-1,3-Dichloropropene	10061015	< 5	NR	NC	< 5	NR	NC	< 5	NR	NC	< 5	NR	NC	8.3	< 400	NC
trans-1,3-Dichloropropene	10061026	< 5	NR	NC	< 5	NR	NC	< 5	NR	NC	< 5	NR	NC	13	< 400	NC
Epichlorohydrin	106898	< 40	NR	NC	< 40	NR	NC	< 40	NR	NC	< 40	NR	NC	19,300	< 25,000	NC
Ethylbenzene	100414	< 5	NR	NC	< 5	NR	NC	< 5	NR	NC	J 230	210	9%	< 5	NR	NC
4-Methyl-2-pentanone	108101	< 5	NR	NC	< 5	NR	NC	< 5	NR	NC	29	< 500	NC	< 5	NR	NC
Methylene chloride	75092	< 10	NR	NC	< 10	NR	NC	< 10	NR	NC	32	< 90	NC	< 10	NR	NC
Styrene	100425	5.2	< 3	NC	J 4.4	< 3	NC	J 2.9	< 3	NC	J 600	570	5%	< 5	NR	NC
1,1,1,2-Tetrachloroethane	630206	< 5	NR	NC	< 5	NR	NC	< 5	NR	NC	6.7	< 40	NC	< 5	NR	NC
Tetrachloroethene	127184	< 5	NR	NC	< 5	NR	NC	< 5	NR	NC	37	< 20	NC	< 5	NR	NC
Toluene	108883	< 5	NR	NC	< 5	NR	NC	< 5	NR	NC	J 1,400	1,600	-13%	J 3.9	< 300	NC
1,1,1-Trichloroethane	71556	< 5	NR	NC	< 5	NR	NC	< 5	NR	NC	12	< 40	NC	< 5	NR	NC
1,1,2-Trichloroethane	79005	< 5	NR	NC	< 5	NR	NC	< 5	NR	NC	J 4.0	< 50	NC	< 5	NR	NC
1,2,3-Trichloropropane	96184	NR	NR	NC	NR	NR	NC	NR	NR	NC	NR	NR	NC	NR	6,300	NC
Trichloroethene	79016	< 5	NR	NC	< 5	NR	NC	30	20	40%	36	< 50	NC	< 5	NR	NC
Xylenes	108383/106423	< 5	NR	NC	< 5	NR	NC	< 5	NR	NC	93	< 100	NC	< 5	NR	NC

Semivolatile Organics - Method 8270B µg/L

	CAS No	DF-01	DF-01-S	%RPD	DF-03	DF-03-S	%RPD	DF-04	DF-04-S	%RPD	DF-05	DF-05-S	%RPD	DF-06	DF-06-S	%RPD
Acenaphthene	83329	< 10	NR	NC	< 10	NR	NC	< 10	NR	NC	160	130	21%	< 10	NR	NC
Acenaphthylene	208968	< 10	NR	NC	< 10	NR	NC	< 10	NR	NC	J 90	120	-29%	< 10	NR	NC
Benzoic acid	65850	< 20	NR	NC	70	< 50	NC	38	< 30	NC	730	660	10%	< 20	NR	NC
Benzyl alcohol	100516	< 10	NR	NC	< 10	NR	NC	< 10	NR	NC	J 83	290	-111%	< 10	NR	NC
Bis(2-chloroisopropyl)ether	39638329	< 10	NR	NC	< 10	NR	NC	< 10	NR	NC	< 100	NR	NC	60	< 100	NC
2-Chlorophenol	95578	< 10	NR	NC	23	30	-26%	< 10	NR	NC	< 100	NR	NC	< 10	NR	NC
1,2-Dichlorobenzene	95501	< 10	NR	NC	< 10	NR	NC	< 10	NR	NC	390	290	29%	< 10	NR	NC
2,4-Dichlorophenol	120832	< 10	NR	NC	170	250	-38%	< 10	NR	NC	< 100	NR	NC	< 10	NR	NC
2,6-Dichlorophenol	87650	NR	NR	NC	NR	32	NC	NR	NR	NC	NR	NR	NC	NR	NR	NC
1,3-Dinitrobenzene	99650	NR	NR	NC	NR	NR	NC	NR	NR	NC	NR	240	NC	NR	NR	NC
2,4-Dinitrophenol	51285	< 10	NR	NC	J 7.8	< 50	NC	J 6.0	< 50	NC	< 100	NR	NC	< 10	NR	NC
Fluorene	86737	< 10	NR	NC	< 10	NR	NC	< 10	NR	NC	100	< 10	NC	< 10	NR	NC
Isophorone	78591	< 10	NR	NC	< 10	NR	NC	< 10	NR	NC	110	< 10	NC	< 10	NR	NC
2-Methylnaphthalene	91576	< 10	NR	NC	< 10	NR	NC	< 10	NR	NC	2,400	2,900	-19%	< 10	NR	NC
4-Methylphenol	106445	< 10	NR	NC	< 10	NR	NC	< 10	NR	NC	J 71	< 100	NC	< 10	NR	NC
Naphthalene	91203	< 10	NR	NC	< 10	NR	NC	< 10	NR	NC	1,600	1,400	13%	< 10	NR	NC
4-Nitrophenol	100027	< 10	NR	NC	< 10	NR	NC	J 9.8	< 20	NC	< 100	NR	NC	< 10	NR	NC
Pentachlorophenol	87865	45	980	-182%	470	730	-43%	< 20	NR	NC	< 200	NR	NC	< 20	NR	NC
Phenanthrene	85018	< 10	NR	NC	< 10	NR	NC	< 10	NR	NC	J 72	< 10	NC	< 10	NR	NC
Phenol	108952	< 10	NR	NC	< 10	NR	NC	< 10	NR	NC	2,600	1,900	31%	< 10	NR	NC
2,3,4,6-Tetrachlorophenol	58902	NR	J 1,200	NC	NR	NR	NC	NR	NR	NC	NR	510	NC	NR	NR	NC
2,4,5-Trichlorophenol	95954	< 10	NR	NC	140	210	-40%	< 10	NR	NC	< 100	NR	NC	< 10	NR	NC
2,4,6-Trichlorophenol	88062	88	840	-162%	1,900	J 1,400	45%	< 10	NR	NC	300	390	-26%	< 10	NR	NC

FACILITY ID: DF (cont)

General Chemistry mg/L

	CAS No.		DF-01		DF-01-S	%RPD		DF-03		DF-03-S	%RPD		DF-04		DF-04-S	%RPD		DF-05	DF-05-S	%RPD		DF-06		DF-06-S	%RPD
TSS	NA	<	20		16	NC	<	20		90	NC	<	20	<	5	NC		204	129	45%	<	20	<	5	NC
Oil & Grease	NA	<	2	<	2	NC	<	2	<	2	NC	<	2	<	2	NC		35	16	75%		3		4	-29%
TOC	NA		1,560		1,944	-22%		1,450		1,522	-5%		92		201	-74%		934	1,215	-26%		198		332	-51%

Dioxins/Furans - Method 1613 ng/L

	CAS No.		DF-01		DF-01-S	%RPD		DF-03		DF-03-S	%RPD		DF-04		DF-04-S	%RPD		DF-05	DF-05-S	%RPD		DF-06		DF-06-S	%RPD
2,3,7,8-TCDF	51207319		0.023		NR	NC		0.050		NR	NC	<	0.010		NR	NC	<	0.009	NR	NC		0.074		NR	NC
Total TCDF	55722275		1.00		1.67	-50%		3.00		3.40	-13%	<	0.010		NR	NC		0.280	0.241	15%		0.150		0.288	-63%
1,2,3,7,8-PeCDF	57117416	<	0.410		NR	NC		1.20		NR	NC	<	0.048		NR	NC		0.160	NR	NC		0.110		NR	NC
2,3,4,7,8-PeCDF	57117314	<	1.80		NR	NC		1.50		NR	NC	<	0.048		NR	NC	<	0.160	NR	NC		0.084		NR	NC
Total PeCDF	30402154		8.30		16.4	-66%		30.0		34.8	-15%	<	0.048		NR	NC		2.30	4.06	-55%		0.240		0.393	-48%
1,2,3,7,8-PeCDD	40321764	<	0.052		NR	NC		0.150		NR	NC	<	0.048		NR	NC	<	0.046	NR	NC	<	0.046		NR	NC
Total PeCDD	36088229	<	0.052		NR	NC		0.710		1.11	-44%	<	0.048		NR	NC	<	0.046	NR	NC	<	0.046		NR	NC
1,2,3,4,7,8-HxCDF	67562394		18.0		NR	NC		42.0		NR	NC	<	0.048		NR	NC		3.60	NR	NC		0.320		NR	NC
1,2,3,6,7,8-HxCDF	57117449	<	15.0		NR	NC		45.0		NR	NC	<	0.048		NR	NC		3.40	NR	NC		0.069		NR	NC
2,3,4,6,7,8-HxCDF	60851345		3.60		NR	NC		27.0		NR	NC	<	0.048		NR	NC	<	2.50	NR	NC		0.047		NR	NC
1,2,3,7,8,9-HxCDF	72918219	<	12.0		NR	NC		14.0		NR	NC	<	0.048		NR	NC	<	1.60	NR	NC		0.110		NR	NC
Total HxCDF	55684941		130		135	-4%		340		279	20%	<	0.048		NR	NC		19.0	31.5	-50%		0.550		0.749	-31%
1,2,3,4,7,8-HxCDD	39227286	<	0.480		NR	NC	<	0.730		NR	NC	<	0.048		NR	NC		0.059	NR	NC	<	0.046		NR	NC
1,2,3,6,7,8-HxCDD	57653857	<	0.480		NR	NC		0.910		NR	NC	<	0.048		NR	NC		0.100	NR	NC	<	0.046		NR	NC
1,2,3,7,8,9-HxCDD	19408743	<	0.480		NR	NC		0.920		NR	NC	<	0.048		NR	NC		0.087	NR	NC	<	0.046		NR	NC
Total HxCDD	34465468	<	0.480		NR	NC		9.90		13.7	-32%	<	0.048		NR	NC		0.910	1.44	-45%	<	0.046		NR	NC
1,2,3,4,6,7,8-HpCDF	67562394		750		NR	NC		1,300		NR	NC	<	0.048		NR	NC		130	NR	NC		0.390		NR	NC
1,2,3,4,7,8,9-HpCDF	55673897		94.0		NR	NC		170		NR	NC	<	0.048		NR	NC		17.0	NR	NC		0.170		NR	NC
Total HpCDF	38998753		970		1,310	-30%		1,500		2,380	-45%	<	0.048		0.105	NC		150	262	-54%		0.620		1.09	-55%
1,2,3,4,6,7,8-HpCDD	35822469		23.0		NR	NC		44.0		NR	NC	<	0.048		NR	NC		4.20	NR	NC	<	0.046		NR	NC
Total HpCDD	37871004		41.0		57.7	-34%		82.0		118	-36%	<	0.048		NR	NC		7.60	11.9	-44%	<	0.046		NR	NC
OCDF	39001020		3,100		3,010	3%		2,400		4,410	-59%	<	0.096		0.140	NC		280	497	-56%		1.00		1.88	-61%
OCDD	3268879		200		286	-35%		220		384	-54%	<	0.096		0.023	NC		29.0	41.7	-36%		0.210		0.124	51%

FACILITY ID: DF
Sample Date: 07-18-97
Matrix: Wastewater

Volatile Organics - Method 8260A µg/L

	CAS No.		DF-07		DF-07-S	%RPD		DF-08		DF-08-S	%RPD		DF-09		DF-09-S	%RPD
Acetone	67641		1,000	<	3,200	NC		1,500	<	3,200	NC	J	14	<	3,200	NC
Bromomethane	74839	<	10		NR	NC	<	10		NR	NC		15	<	5,000	NC
2-Butanone	78933		14	<	1,900	NC		270		1,900	-150%		8.5	<	1,900	NC
Carbon disulfide	75150	<	5		NR	NC	<	5		NR	NC		6.5	<	600	NC
Chlorobenzene	108907	<	5		NR	NC	J	4.5	<	300	NC	J	2.8	<	300	NC
Chloroform	67663	<	5		800	NC	<	5		NR	NC	<	5		NR	NC
Chloromethane	74873	<	10		NR	NC		32,000		140,000	-126%		270,000		130,000	70%
1,3-Dichlorobenzene	541731	J	4.4	<	300	NC	<	5		NR	NC	<	5		NR	NC
1,2-Dichloroethane	107062		103	<	400	NC	<	5		NR	NC	<	5		NR	NC
1,1-Dichloroethene	75354		24,000		44,000	-59%		36	<	400	NC		7.7	<	400	NC
cis-1,2-Dichloroethene	156592		220	<	400	NC	<	5		NR	NC	<	5		NR	NC
trans-1,2-Dichloroethene	156605		240	<	400	NC	<	5		NR	NC	<	5		NR	NC
Methylene chloride	75092	<	10		NR	NC	J	2.6	<	900	NC	<	10		NR	NC
Styrene	100425	J	3.2	<	300	NC	J	3.5	<	300	NC	<	5		NR	NC
Tetrachloroethene	127184		490	<	200	NC		6.8	<	200	NC	<	5		NR	NC
Trichloroethene	79016		180	<	500	NC	<	5		NR	NC	<	5		NR	NC
Vinyl chloride	75014		710	<	5,000	NC	<	10		NR	NC	<	10		NR	NC

Semivolatile Organics - Method 8270B µg/L

	CAS No		DF-07		DF-07-S	%RPD		DF-08		DF-08-S	%RPD		DF-09		DF-09-S	%RPD
Benzoic acid	65850	<	20		NR	NC		47	<	250	NC	<	20		NR	NC
Butyl benzyl phthalate	85687	<	10		NR	NC	<	10		NR	NC	J	5.0	<	10	NC

FACILITY ID: DF (cont)

General Chemistry mg/L

	CAS No.		DF-07		DF-07-S	%RPD		DF-08		DF-08-S	%RPD		DF-09		DF-09-S	%RPD
TSS	NA	<	20		52	NC		1,780		142	170%	<	20	<	5	NC
Oil & Grease	NA	<	2	<	2	NC		9	<	2	NC	<	2	<	2	NC
TOC	NA		4		44	-167%		816		875	-7%		39		117	-100%

Dioxins/Furans - Method 1613 ng/L

	CAS No.		DF-07		DF-07-S	%RPD		DF-08		DF-08-S	%RPD		DF-09		DF-09-S	%RPD
2,3,7,8-TCDF	51207319		0.230		NR	NC		0.17		NR	NC	<	0.009		NR	NC
Total TCDF	55722275		1.30		2.12	-48%		0.73		0.862	-17%	<	0.009		NR	NC
1,2,3,7,8-PeCDF	57117416		0.670		NR	NC		0.51		NR	NC	<	0.046		NR	NC
2,3,4,7,8-PeCDF	57117314		0.570		NR	NC		0.39		NR	NC	<	0.046		NR	NC
Total PeCDF	30402154		2.30		2.70	-16%		1.70		1.45	16%	<	0.046		NR	NC
1,2,3,4,7,8-HxCDF	67562394		1.50		NR	NC		1.00		NR	NC	<	0.046		NR	NC
1,2,3,6,7,8-HxCDF	57117449		0.360		NR	NC		0.31		NR	NC	<	0.046		NR	NC
2,3,4,6,7,8-HxCDF	60851345		0.170		NR	NC		0.14		NR	NC	<	0.046		NR	NC
1,2,3,7,8,9-HxCDF	72918219		0.380		NR	NC		0.25		NR	NC	<	0.046		NR	NC
Total HxCDF	55684941		3.00		2.85	5%		2.10		1.80	15%	<	0.046		NR	NC
1,2,3,4,6,7,8-HpCDF	67562394		1.40		NR	NC		0.99		NR	NC	<	0.046		NR	NC
1,2,3,4,7,8,9-HpCDF	55673897		0.420		NR	NC		0.33		NR	NC	<	0.046		NR	NC
Total HpCDF	38998753		2.10		2.74	-26%		1.70		1.64	4%	<	0.046		0.010	NC
1,2,3,4,6,7,8-HpCDD	35822469		0.074		NR	NC	<	0.042		NR	NC	<	0.046		NR	NC
Total HpCDD	37871004		0.074		0.167	-77%	<	0.042		NR	NC	<	0.046		NR	NC
OCDF	39001020		1.90		2.53	-28%		1.50		1.51	-1%	<	0.092		0.020	NC
OCDD	3268879		0.180		0.240	-29%	<	0.083		NR	NC	<	0.092		0.030	NC

FACILITY ID: DF
Sample Date: 07-18-97
Matrix: Wastewater Sludge

Volatile Organics - Method 8260A µg/kg

	CAS No.		DF-02**		DF-02-S	%RPD
Benzene	71432	J	89	<	200	NC
Chloroform	67663	J	83	<	200	NC
Ethylbenzene	100414	J	112		200	-56%
Styrene	100425	<	148		200	NC
Toluene	108883	<	148		200	NC
1,2,3-Trichloropropane	96184		NR		1,500	NC
1,2,4-Trimethylbenzene	95636		NR		200	NC

Semivolatile Organics - Method 8270B µg/kg

	CAS No		DF-02**		DF-02-S	%RPD
Acenaphthylene	208968	<	3,910		116	NC
Benzoic acid	65850	J	4,200	<	1,120	NC
Hexachlorobenzene	118741	<	3,910		52	NC
Pyrene	129000	<	3,910		20	NC

nivolatile Organics - Methods 1311, 8270B µg/L

	CAS No	DF-02	DF-02-S	%RPD
Not Detected	NA	ND	ND	NC

FACILITY ID: DF (cont)

Dioxins/Furans - Method 1613 ng/kg

	CAS No.	DF-02**	DF-02-S	%RPD
2,3,7,8-TCDF	51207319	49.0	NR	NC
Total TCDF	55722275	260	626	-83%
1,2,3,7,8-PeCDF	57117416	220	NR	NC
2,3,4,7,8-PeCDF	57117314	180	NR	NC
Total PeCDF	30402154	930	1,410	-41%
1,2,3,4,7,8-HxCDF	67562394	1,200	NR	NC
1,2,3,6,7,8-HxCDF	57117449	530	NR	NC
2,3,4,6,7,8-HxCDF	60851345	340	NR	NC
1,2,3,7,8,9-HxCDF	72918219	390	NR	NC
Total HxCDF	55684941	4,200	6,300	-40%
1,2,3,7,8,9-HxCDD	19408743	8.1	NR	NC
Total HxCDD	34465468	22.0	187	-158%
1,2,3,4,6,7,8-HpCDF	67562394	10,000	NR	NC
1,2,3,4,7,8,9-HpCDF	55673897	1,500	NR	NC
Total HpCDF	38998753	13,000	30,400	-80%
1,2,3,4,6,7,8-HpCDD	35822469	330	NR	NC
Total HpCDD	37871004	570	1,420	-85%
OCDF	39001020	17,000	56,000	-107%
OCDD	3268879	1,600	3,740	-80%

Notes:

- ** Results reported on a dry-weight basis.
- J Compound's concentration is estimated. Mass spectral data indicate the presence of a compound that meets the identification criteria for which the result is less than the laboratory detection limit, but greater than zero.
- B Compound also detected in the associated method blank.
- NR Result not reported or the analysis was not performed by the laboratory.
- NC Not Calculatable due to a non-detect or not reported sample result.

Appendix D. Summary of Waste Generation and Management Practices

Table D-1. Chlorinated Aliphatics Wastewaters, by Management Type and Facility - 1996 Data

(contains 1991 data updated with 1996 data, or most recently available data)

Facility/Location	Production Process	Process Wastewater Qty (Mtons/yr)	Waste Codes	Process Wastewaters Sampled?	Headworks Qty (Mtons)	Headworks Sampled?	% Dedicated	Sludge Generated?
Treatment in a Tank On-site to Discharge to NPDES								
Condea Vista; Westlake, LA	A	230,000		No	4,481,000	No	16%	Yes
		230,000		No				
		130,000		No				
		64,000		No				
		42,000		No				
The Geon Company; LaPorte, TX	A	962,950		Yes	962,950	Yes	100%	Yes
Dow Chemical; Plaquemine, LA		250,000		No	29,050,000	No	1%	
		22,000	D028	No	3,660,000	No	44%	
		1,600,000	D002F002F003F005 F025K019K020	No				
Dow Corning, Carrolton, KY	K	162,000	[CBI Redacted]	Yes	959,000	Yes	18%	Yes
		14,000		Yes				
Formosa Plastics Corp USA; Baton Rouge, LA	A	451,000	D028	No	5,433,000	No	15%	Yes
		165,000	D002D028	No				
		140,000	D002D028	No				
		77,000	D002	No				
GE Electric Corp.; Waterford, NY	K	[CBI Redacted]	D002	No	[CBI Redacted]	No	[CBI Redacted]	Yes
Georgia Gulf; Plaquemine, LA	A	860,000	D028	No	[CBI Redacted]	No		Yes
		240,000	D028	No				
		140,000	D028	No				
		13,000	D028	No				
PPG Industries; Lake Charles, LA		173,600		Y				
		127,250		Y				
		324,500		Y				
Shell Chemical; Norco, LA	B	54,000		Yes	[CBI Redacted]	Yes		Yes
		10,000		Yes				
Vulcan Materials Company; Geismar, LA	A	NR		N	NR	Yes		No
	D	NR		N				
		[CBI Redacted]	D002	Y				
		NR		N				
	I	NR		N				
Borden Chemicals and Plastics, Geismar, LA	A	334,000		Y	763,200	Yes	50%	Yes
		47,700		Y				
	H	22,200		Yes	22,200	Yes	100%	Yes
Dow Chemical; Freeport, TX	D	101,000	D002	Y				
		53,500		Y				
	A	34,700		Y				
	F	8,171	D002D040	Y				
	G	420,000	D029	Y				
	A	41,300		Y				
	E	1,340		N				
Formosa Plastics Corp USA; Point Comfort, TX	A	300,000		No	11,670,000	No	8%	Yes
		600,000		No				
Occidental Chemical; Gregory, TX	E	157,500		Yes		Yes		Yes
Occidental Chemical; Convent, LA	E	223,000	D028	Yes	223,000	Yes	100%	Yes
Oxymar; Gregory, TX	A	417,000		Yes		Yes		Yes
		81,632		Yes		Yes		Yes
		[CBI Redacted]						
Treatment/Storage in a Tank On-site to Discharge to PrOTW								
[CBI Redacted]	[CBI Redacted]	200,000	D002D028D032	No	200,000	No	100%	No
		49,000		No	49,000	No	100%	No
		49,000		No	49,000	No	100%	No

Occidental Chemical; Deer Park, TX	A	360,349	D002	No	360,349	No	100%	No/yes
		60		No	60	No	100%	No/yes
		334,825		No	334,825	No	100%	No/yes
Dow Corning, Midland, MI	K	24,500		No	24,500	No	100%	No
		1,017,734						

Storage in a Tank On-site to Recovery/Reclamation/Reuse On- and Off-site

Velsicol Chemical; Memphis, TN	L	3,600	D002	Y	NA	NA	NA	NA
[CBI Redacted]	A	[CBI Redacted]	D002	Y	NA	NA	NA	NA
[CBI Redacted]	D	[CBI Redacted]	D002	No	NA	NA	NA	NA
		[CBI Redacted]						

Storage in a Container On-site to Landfill Off-site

Occidental Chemical; Deer Park, TX	A	19		No	NA	NA	NA	NA

Treatment in a Tank On-site to Underground Injection/Deepwell On-site

DuPont-Dow Elastomers; LaPlace, LA	C	314,770	D002	Y				
		67,187	D002	Y				
		54,476	D002	N				
		47,213	D002	N				
		12,711	F001F002F003F005	Y				
Vulcan Materials Company; Wichita, KS	D	[CBI Redacted]	D002	No	1,203,737	No	0.0%	No
		[CBI Redacted]	D002	No				
		[CBI Redacted]	D002	No				
		[CBI Redacted]						

Treatment in a Tank On-site to Discharge to POTW

DuPont-Dow Elastomers; Louisville, KY	[CBI Redacted]	[CBI Redacted]		Yes	[CBI Redacted]	No	[CBI Redacted]	No
	[CBI Redacted]	[CBI Redacted]		Yes	[CBI Redacted]		[CBI Redacted]	
	[CBI Redacted]	[CBI Redacted]		Yes	[CBI Redacted]		[CBI Redacted]	
[CBI Redacted]	M	[CBI Redacted]		No	[CBI Redacted]	No		No
		[CBI Redacted]		No	[CBI Redacted]			
Velsicol Chemical; Memphis, TN	L	NR		Y	675,915	Yes	9%	No
		29,799		Y				
		838		Y				
		18,588	D002	N				
		8,200	D002	Y				
		6,759		Y				
		[CBI Redacted]						
		11,513,757	Mtons/yr					

A - EDC/VCM; B - Allyl Chloride; C - Chloroprene/[CBI Redacted]+A5; D - Chlorinated Methanes; E - EDC only; F - Trichloroethylene; G = VDCM; H - VCM (acetylene); I - Methyl Chloroform; J - Perc/Tri/Carbon Tet; K - Methyl Chloride; L - Hexachlorocylcopentadiene; M - Methallyl Chloride

Table D-2. Chlorinated Aliphatics Wastewater Treatment Sludges, by Management Type and Facility - 1996 Data

(contains 1991 data updated with 1996 data, or most recently available data)

Facility/Location	Qty (Mtons/yr)	Apportioned Chlorinated Aliphatics Qty (Mtons/yr)	Managed as HAZ?	Waste Codes	Dedicated?	Associated products	Sampled?
Storage in a Pile On-site to Land Treatment On-site							
Georgia Gulf; Plaquemine, LA	1,750	624	N		N	A	N
Storage in a Container On-site to Incineration On-site, Non-hazardous							
Shell Chemical; Norco, LA***	380,000	5,900	N		N	B	Y
Storage in a Container On-site to Incineration On- and Off-site, Hazardous							
DuPont-Dow Elastomers; LaPlace, LA	596	596	Y	F005	Y	C	N
DuPont-Dow Elastomers; LaPlace, LA	20	20	Y	F005	Y	C	N
Condea Vista; Westlake, LA	11	2	Y	D002D028	N	A	N
DuPont-Dow Elastomers; LaPlace, LA	10	10	Y	F005	Y	C	N
Condea Vista; Westlake, LA	7	1	Y	D018D028D029D040D043	N	A	N
Dow Chemical; Freeport, TX	0	0	Y	D019D022D028D029D039D040D043	N		N
Total	644	628					
Storage in a Container On-site to Landfill Off-site, Non-hazardous							
The Geon Company; LaPorte, TX	1,804	1,804	N		Y	A	Y
Oxymar; Gregory, TX	820	820	N		Y		Y
Occidental Chemical; Gregory, TX	160	160	N		Y		Y
Occidental Chemical; Convent, LA	500	500	N		Y	E	Y
Formosa Plastics Corp USA; Baton Rouge, LA	700	107	N		N	A	N
Borden Chemicals and Plastics, Geismar, LA	120	120	N		Y	H	Y
PPG Industries; Lake Charles, LA	2,200	2,200	N		Y	A, E, G, I, J	Y
Borden Chemicals and Plastics, Geismar, LA	2,904	311	N		N	A	Y
Formosa Plastics Corp USA; Point Comfort, TX	3,688	284	N		N	A	N
Total	12,897	6,307					
Storage in a Container On-site to Landfill On-site, Non-hazardous							
Dow Chemical; Freeport, TX	72,223	860	N		N		Y
Dow Chemical; Plaquemine, LA	11,100	96	N		N	A, D	N
Dow Corning, Carrolton, KY	776	142	N		N	K	Y
Total	84,099	1,097					
Storage in a Container On-site to Landfill Off-site, Hazardous							
Occidental/Oxymar; Gregory, TX	625	625	Y	F001F003F005F025K019K020	Y	A, E	Y
Occidental Chemical; Deer Park, TX	442	442	Y	K019K020	Y	A	N
Total	1,067	1,067					
Storage in a Container On-site to Landfill On-site, Hazardous							
GE Electric Corp.; Waterford, NY	[CBI Redacted]	[CBI Redacted]	Y	Fo39	[CBI Redacted]	[CBI Redacted]	[CBI Redacted]
Dow Chemical; Freeport, TX	5,627	756	Y		N		N
GE Electric Corp.; Waterford, NY	[CBI Redacted]	[CBI Redacted]	Y	F039	[CBI Redacted]	[CBI Redacted]	[CBI Redacted]
Total	[CBI Redacted]	[CBI Redacted]					
Industry-Wide TOTAL	[CBI Redacted]	[CBI Redacted]	**Mtons/yr**				

A - EDC/VCM
B - Allyl Chloride
C - Chloroprene
D - Chlorinated Methanes
E - EDC only
F - Trichloroethylene
G - VDCM
H - VCM (acetylene)
I - Methyl Chlofoform
J - Perc/Tri/Carbon Tetrachloride
K - Methyl Chloride

*** quantity reported prior to dewatering (~97% water content)

Appendix E. Summary of Chlorinated Aliphatics Manufacturers

Table E-1. Summary of Chlorinated Aliphatics Manufacturers

NAME	CITY	STATE	HAZID1	COMMENT
AKZO CHEMICAL, INC.	GALLIPOLIS FERRY	WV	WVD009708702	NOT A GENERATOR OF CONSENT DECREE WASTES
ALDRICH CHEMICAL CO., INC.	MILWAUKEE	WI	WID006113906	GENERATOR - SMALL VOLUME PRODUCTS
BASF CORPORATION	GEISMAR	LA	LAD040776809	NOT A GENERATOR OF CONSENT DECREE WASTES
BORDEN CHEM AND PLASTIC OPERATING PRTNER	GEISMAR	LA	LAD003913449	GENERATOR
CEDAR CHEMICAL COPORATION	VICKSBURG	MS	MSD990714081	NOT A GENERATOR OF CONSENT DECREE WASTES
CHEMSYN SCIENCE LAB	LENEXA	KS	KSD980966501	NOT A GENERATOR OF CONSENT DECREE WASTES
CONDEA VISTA COMPANY	WESTLAKE	LA	LAD086478047	GENERATOR
DOW CHEMICAL CO.	PLAQUEMINE	LA	LAD008187080	GENERATOR
DOW CHEMICAL CO.	MIDLAND	MI	MID000724724	NOT A GENERATOR OF CONSENT DECREE WASTES
DOW CHEMICAL COMPANY	FREEPORT	TX	TXD008092793	GENERATOR
DOW CORNING CORPORATION	CARROLLTON	KY	KYD042943985	GENERATOR
DOW CORNING CORPORATION	MIDLAND	MI	MID000809632	GENERATOR
DU PONT	BELLE	WV	WVD005012851	NOT A GENERATOR OF CONSENT DECREE WASTES
DU PONT	INGLESIDE	TX	TXD063101794	NOT A GENERATOR OF CONSENT DECREE WASTES
DU PONT-DOW ELASTOMERS L.L.C.	LA PLACE	LA	LAD001890367	GENERATOR
DU PONT-DOW ELASTOMERS L.L.C.	LOUISVILLE	KY	KYR000004994	GENERATOR
FMC CORPORATION	BALTIMORE	MD	MDD003071875	GENERATOR
FORMOSA PLASTICS CORP USA	POINT COMFORT	TX	TXT490011293	GENERATOR
FORMOSA PLASTICS CORP., USA	BATON ROUGE	LA	LAD041224932	GENERATOR
GE ELECTRIC CORPORATION	WATERFORD	NY	NYD002080034	GENERATOR
GE PLASTICS	MOUNT VERNON	IN	IND006376362	NOT A GENERATOR OF CONSENT DECREE WASTES
GEORGIA GULF CORPORATION	PLAQUEMINE	LA	LAD057117434	GENERATOR
J.T. BAKER, INC.	PHILLIPSBURG	NJ	NJD001213487	NOT A GENERATOR OF CONSENT DECREE WASTES
MILES, INC.	BAYTOWN	TX	TXD058260977	NOT A GENERATOR OF CONSENT DECREE WASTES
MILES, INC.	HOUSTON	TX	TXD084972777	GENERATOR - CLOSED
MTM AMERICAS, INC.	ELGIN	SC	SCD042627448	NOT A GENERATOR OF CONSENT DECREE WASTES
OCCIDENTAL CHEMICAL CORP	CONVENT	LA	LAD098168206	GENERATOR
OCCIDENTAL CHEMICAL CORP.	BELLE	WV	WVD005010277	GENERATOR - CLOSED
OCCIDENTAL CHEMICAL CORP.	LA PORTE	TX	TXD000327429	NOT A GENERATOR OF CONSENT DECREE WASTES
OCCIDENTAL CHEMICAL CORP.	NIAGARA FALLS	NY	NYD000824482	NOT A GENERATOR OF CONSENT DECREE WASTES
OCCIDENTAL CHEM-ICAL CORP.	DEER PARK	TX	TXD981911209	GENERATOR
OCCIDENTIAL CHEMICAL CORP	GREGORY	TX	TXD982286932	GENERATOR - SAME FACILITY AS 1306, TWO PROCESSES MAINTAIN SEPARATE OWNERSHIP
OLIN CORPORATION	BRANDENBURG	KY	KYD006396246	NOT A GENERATOR OF CONSENT DECREE WASTES
OLIN CORPORATION	LAKE CHARLES	LA	LAD008080681	NOT A GENERATOR OF CONSENT DECREE WASTES
OXYMAR	GREGORY	TX	TXD982286932	GENERATOR - SAME FACILITY AS 1304, TWO PROCESSES MAINTAIN SEPARATE OWNERSHIP
PHILLIPS 66 COMPANY	BARTLESVILLE	OK	OKD-----	NOT A GENERATOR OF CONSENT DECREE WASTES
PPG INDUSTRIES, INC.	LAKE CHARLES	LA	LAD008086506	GENERATOR
RHONE-POULENC, INC.	FREEPORT	TX	TXD990659682	GENERATOR - C.A. PRODUCT MFG AS BY-PRODUCT OF NON-C.A. PROCESS
RHONE-POULENC, INC.	LOUISVILLE	KY	KYD000605568	NOT A GENERATOR OF CONSENT DECREE WASTES
RSA CORPORATION	ARDSLEY	NY	NYD001520279	NOT A GENERATOR OF CONSENT DECREE WASTES
SHELL OIL COMPANY	DEER PARK	TX	TXD067285973	NOT A GENERATOR OF CONSENT DECREE WASTES
SHELL OIL COMPANY	NORCO	LA	LAD980622104	GENERATOR
THE GEON COMPANY	LA PORTE	TX	TXD070133319	GENERATOR
UNION CARBIDE- CHEM & PLAC CO INC	SOUTH CHARLESTON	WV	WVD005005483	NOT A GENERATOR OF CONSENT DECREE WASTES
UNION CARBIDE CHEM & PLASTICS CO INC	SISTERVILLE	WV	WVD004325353	NOT A GENERATOR OF CONSENT DECREE WASTES
UNION CARBIDE CHEM & PLASTICS CO, INC	TEXAS CITY	TX	TXD000461533	NOT A GENERATOR OF CONSENT DECREE WASTES
UNION CARBIDE CHEM & PLASTICS INC	TAFT	LA	LAD041581422	NOT A GENERATOR OF CONSENT DECREE WASTES
UNITED-GUARDIAN, INC.	HAUPPAUGE	NY	NYD980646798	NOT A GENERATOR OF CONSENT DECREE WASTES
VELSICOL CHEMICAL CORPORATION	MEMPHIS	TN	TND007024664	GENERATOR
VULCAN CHEMICALS COMPANY	WICHITA	KS	KSD007482029	GENERATOR
VULCAN MATERIALS COMPANY	GEISMAR	LA	LAD092681824	GENERATOR
WESTLAKE MONOMERS CORP.	CALVERT CITY	KY	KYD985072008	GENERATOR
WESTLAKE PVC CORPORATION	PACE	FL	FLD984175737	NOT A GENERATOR OF CONSENT DECREE WASTES

NOTES:
Aldrich Chemical generates small volumes of specialty chlorinated aliphatics - not included in Industry Study
Rhone-Poulenc; Freeport, TX generates methyl chloride as a by-product in an non-chlorinated aliphatic production process - not included in the Industry Study
PHH Monomers, a joint venture between PPG Industries and Condea Vista (beginning production in late 1996) is not reflected in this Industry Study