Table of Contents

Section 9 .....

Inspection and Evaluation of Bridge Bearings

9.1 Bridge Bearings..... 9.1.1

9.1.1 Introduction..... 9.1.1
Fixed and Expansion Bearings 9.1.2

9.1.2 Four Basic Elements of a Bearing..... 9.1.2
Sole Plate..... 9.1.2
Bearing or Bearing Surface 9.1.2
Masonry Plate..... 9.1.2
Anchorage 9.1.2

9.1.3 Bearing Types and Functionality 9.1.3
Sliding Plate Bearings 9.1.3
Lubricated Steel Plates..... 9.1.3
Lead Sheets Between Steel Plates..... 9.1.4
Bronze Bearing Plates..... 9.1.5
Asbestos Sheet Packing Between Metal Plates..... 9.1.5
Self-Lubricating Bronze Bearings 9.1.5
Roofing Felt / Tar Paper 9.1.6
PTFE on Stainless Steel Plates 9.1.6
Roller Bearings..... 9.1.6
Single Roller Bearings 9.1.6
Roller Nest Bearings 9.1.7
Rocker Bearings 9.1.8
Segmental Rocker Bearings..... 9.1.9
Rocker Nest Bearings 9.1.10
Pinned Rocker Bearings..... 9.1.11
Elastomeric Bearings..... 9.1.12
Plain Neoprene Pads 9.1.12
Laminated Neoprene Pads 9.1.13
Seismic Bearings 9.1.14
Isolation Bearings 9.1.14

Friction-Pendulum Bearings 9.1.15
High-dampening Rubber Bearings..... 9.1.15
Pot Bearings 9.1.16
Neoprene Pot Bearings 9.1.16
Spherical Pot Bearings..... 9.1.16
Restraining Bearings 9.1.17
Pin and Link Bearings..... 9.1.18

9.1.4 Inspection Procedures 9.1.19
Inspection of Steel Bearings..... 9.1.20
Visual Procedures 9.1.20
Physical Procedures 9.1.20
Advanced Procedures..... 9.1.20
General Procedures 9.1.22
Sliding Plate Bearings..... 9.1.25
Roller Bearings 9.1.27
Rocker Bearings..... 9.1.28
Pin and Link Bearings..... 9.1.29
Pot Bearings..... 9.1.30
Restraining Bearings..... 9.1.31
Inspection of Elastomeric Bearings..... 9.1.31
Neoprene Bearings..... 9.1.31
Isolation Bearings 9.1.33

9.1.5 Evaluation 9.1.34
NBI Rating Guidelines 9.1.34
Element Level Condition State Assessment..... 9.1.34
Serious Bearing Conditions..... 9.1.35

Section 9

Inspection and Evaluation of Bridge Bearings

Topic 9.1 Bridge Bearings

9.1.1 Introduction

A bridge bearing is a superstructure element that provides an interface between the superstructure and the substructure. The three primary functions of a bridge bearing are:

- To transmit loads from the superstructure to the substructure
- To allow rotation caused by dead load and live load deflection.
- To permit horizontal movement of the superstructure due to thermal expansion and contraction (expansion bearings only)

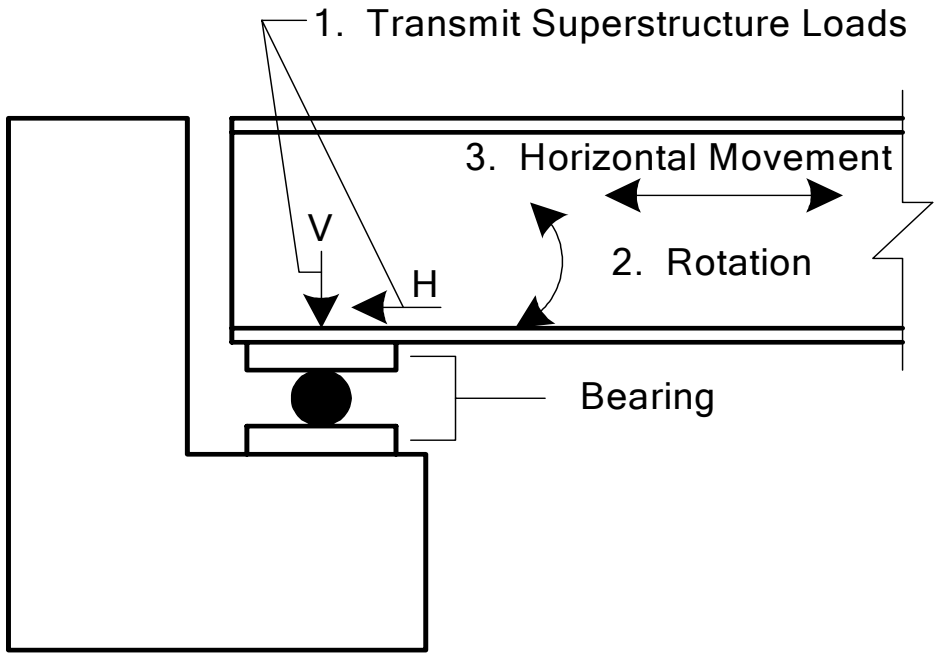

Figure 9.1.1 Three Functions of a Bearing

Fixed and Expansion Bearings

Bearings that do not allow for horizontal translation or movement of the superstructure are referred to as fixed bearings. Bearings that do allow for horizontal translation or movement of the superstructure are known as expansion bearings. Both fixed and expansion bearings permit rotation that occurs as loads are applied or removed from the bridge.

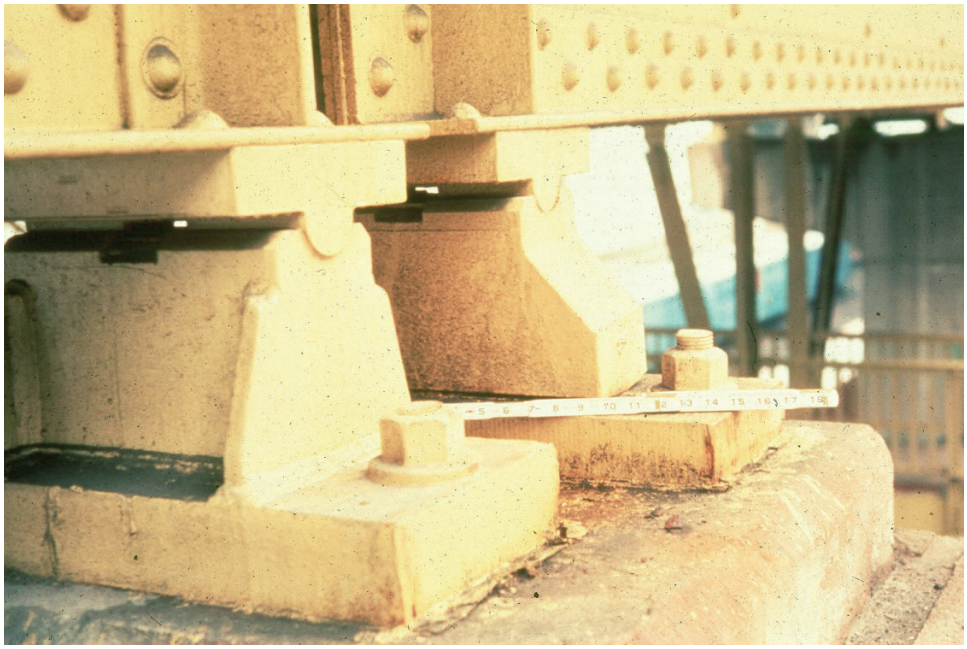

Figure 9.1.2 Fixed and Expansion Bearings

9.1.2 Four Basic Elements of a Bearing

A bridge bearing consists of four basic elements; sole plate, bearing or bearing surface, masonry plate and anchorage.

Sole Plate

The sole plate is a steel plate that is attached to the bottom of girders or beams or truss chords. A sole plate may also be embedded into the bottom flange of a prestressed concrete girder. With concrete beams, girders, or slabs, the lower flange or bottom of the section may function as a sole plate.

Bearing or Bearing Surface

The bearing or bearing surface is secured to the sole plate and masonry plate and provides the function of transmitting the forces from the sole plate to the masonry plate.

Masonry Plate

The masonry plate is a steel plate that is attached to the bearing seat of an abutment or pier. The masonry plate serves to distribute vertical forces from the bearing to the substructure unit.

Anchorage

The anchor bolts connect the bearing to the substructure unit. Anchor bolts are designed to restrain the masonry plate from horizontal translation. The anchor bolts can, however, pass through or alongside the expansion bearing element to provide restraint against transverse movement. The local or governing agency requirements should be checked to determine the minimum bolt diameter and the

minimum embedded length.

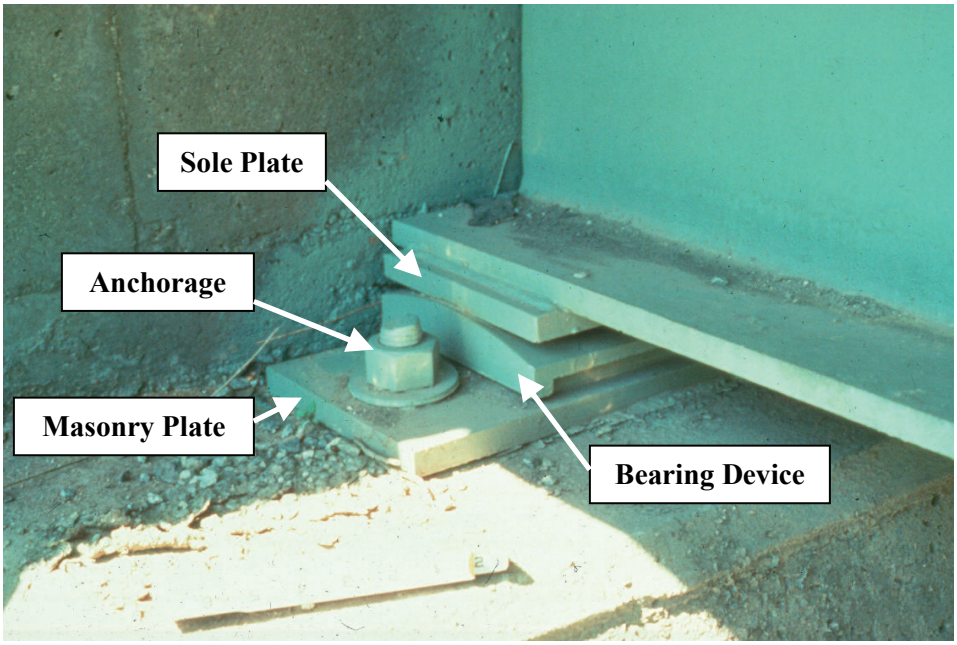

Figure 9.1.3 Elements of a Typical Bridge Bearing

Not all bearings have all four of these distinct elements. All bearings do, however, have at least the bearing or bearing surface.

9.1.3 Bearing Types and Functionality

Various expansion bearing types have evolved out of the need to accommodate superstructure movement. These expansion bearings include:

- Sliding plate bearings
- Roller bearings
- Rocker bearings
- Pin and link bearings
- Elastomeric bearings
- Seismic Bearings
- Pot bearings
- Restraining bearings

Sliding Plate Bearings

Several types of sliding plate bearings have been used in bridges over the years. They are primarily used on structures with a span length of less than 12 m (40 feet). Longitudinal movement is provided by one plate sliding upon another. The basic difference in the various types is the method of lubrication. Among the various types of plates are those presented below.

Lubricated Steel Plates

The first generation of lubricated steel plates consisted of two steel plates with the bearing surfaces planed smooth. Lubrication between the plates consisted of grease, graphite, and tallow. Unfortunately, the lubricant tended to hold dirt which

absorbed moisture, eventually corroding and freezing the bearing. "Freezing", as used in describing bearings, indicates that the bearing movement or rotation is restricted due to corrosion, mechanical binding, dirt buildup, or other interference. The bearing can not move or rotate as intended.

The next generation of sliding steel plates consisted of a small plate sliding on a considerably larger one. The theory behind this was that if the contact area were smaller, the forces transmitted would overcome the freezing forces. However, the smaller plate actually wore a groove in the larger one, eventually freezing the bearing anyway.

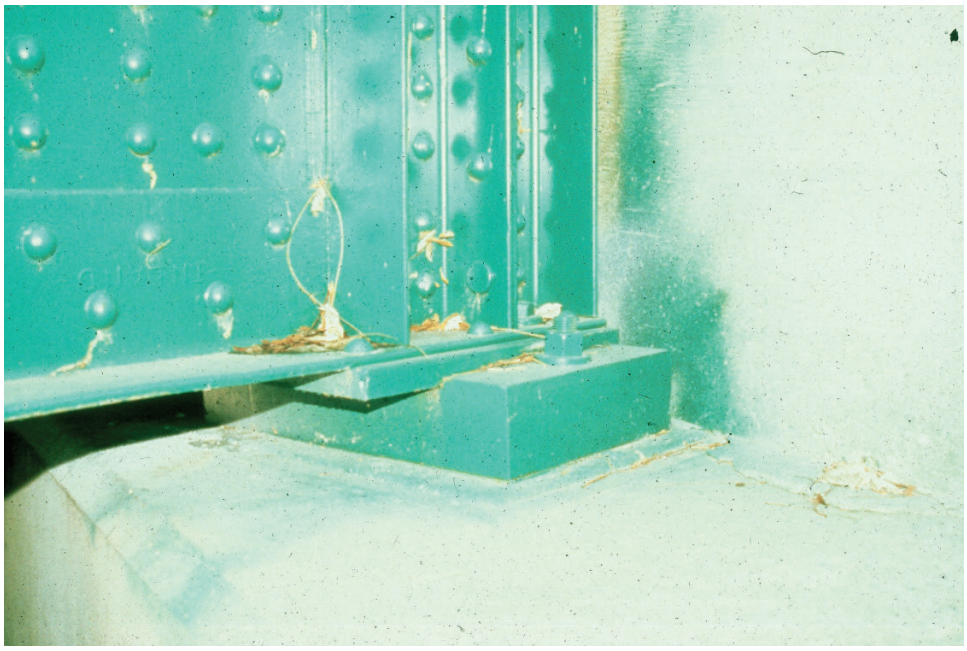

Figure 9.1.4 Lubricated Steel Plate Bearing

Lead Sheets Between Steel Plates

By placing a thin lead sheet between the steel plates, it is possible to keep the plates from freezing together when they corrode. Lead sheets are used to reduce corrosion between the plates, thereby providing more freedom of movement. However, in this type of bearing, the lead has a tendency to work its way out from between the plates.

Bronze Bearing Plates

A bronze bearing plate was introduced to avoid the corrosion problems of steel plates in contact with one another. Since bronze does not corrode, it was used to maintain the freedom of movement. Although corrosion is reduced, the bronze, which is soft material, becomes worn due to trapped dirt and the action of expansion and contraction. Eventually, a freezing of the plates may take place.

Figure 9.1.5 Bronze Sliding Plate Bearing

Asbestos Sheet Packing Between Metal Plates

A graphite-impregnated asbestos sheet has been used between steel bearing plates to provide some movement in spans of less than 12 m (40 feet).

Self-Lubricating Bronze Bearings

The self-lubricating bronze bearing was developed to ensure a graphite lubricant between bearing plates, regardless of their wear. Portions of the face of the bearing were removed and replaced with a graphite compound, which continuously lubricated the bearing surfaces. Some manufacturers claim that these bearings are corrosion resistant and never require any maintenance. The bearings may be maintenance free if they are kept free from dirt and abrasive dusts.

These bearings are widely available in many different forms, including plates, plates with one side cut to a radius, and half cylinders. The (top) flat side provides translation movement, and rotational movement is provided by the (bottom) radius side. (See Figure 9.1.6).

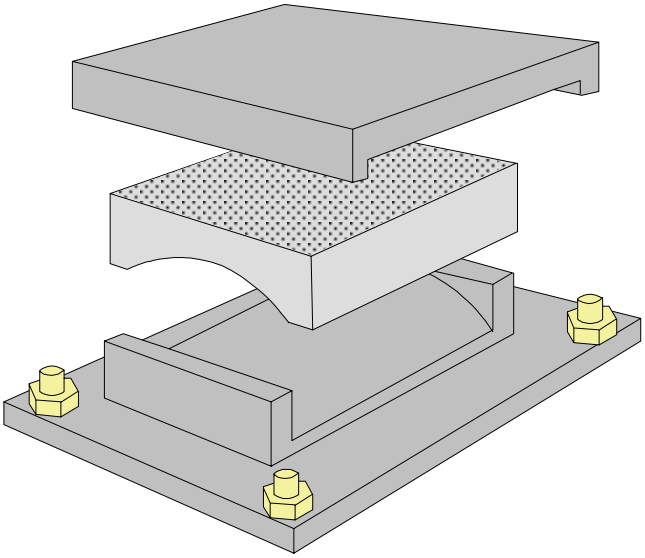

Figure 9.1.6 Self-lubricating Bronze Sliding Plate Bearing

Roofing Felt / Tar Paper

Another type of bearing consists of oil-soaked felt or tar paper that has been dusted with graphite. Several layers are placed on the bridge seat with the superstructure placed directly on it. This is a simple but effective bearing that is commonly used on short span concrete slabs and girders that sit on concrete abutments. These bearing types provide limited horizontal movement.

PTFE on Stainless Steel Plates

A compound known as "polytetrafluoroethylene" (PTFE or TFE) has the lowest coefficient of friction of any of the commonly available materials, making it quite desirable for use in bridge bearings.

Various types of bearings have been offered to take advantage of PTFE's characteristics. Today, bearings using PTFE have a sheet of stainless steel underneath the sole plate to slide across the PTFE. Pure PTFE has a low compressive strength and a high coefficient of thermal expansion. To make it suitable for use in bridge bearings, PTFE must be combined with suitable fillers. These fillers are typically glass fiber and bronze and, while giving strength to the PTFE, they do not increase its low coefficient of friction.

Roller Bearings

A roller bearing consists of a cylinder, which "rolls" between the sole plate and masonry plate as the superstructure expands, and contracts. Roller bearings are used in a wide variety of forms, including single rollers and roller nests.

Single Roller Bearings

The single roller is one of the most widely used expansion bearings. Rollers can vary in size, with specified diameters ranging from 150 to 380 mm (6 to 15 inches). While the larger rollers are less susceptible to corrosion problems, dirt may get trapped in the contact areas along the top and bottom of the bearing. This

enables moisture absorption, eventually deteriorating the bearing surface. However, because only a small portion of the roller actually becomes corroded, the corroded roller can be rotated and another portion of the roller surface can be used. Many single roller bearings are made of corrosion resistant steel.

An unrestrained roller may gradually work itself out from underneath the bridge superstructure. For this reason, pintle pins are used to keep the roller in place. These pins fit tightly into the roller but loosely into the upper and lower plates. The loose fit allows for the necessary structure movement.

Figure 9.1.7 Single Roller Bearing

Roller Nest Bearings

First used in steel bridges in the early 1900's, roller nests consist of a group of rollers, each about 38 to 50 mm (1½ to 2 inches) in diameter. When clean, roller nests work well. However, the small rollers offer many places for dirt and moisture to collect. This results in wear and corrosion of the rollers, and ultimately results in bearing failure. Attempts to seal this bearing require careful maintenance of protective covers and skirts and are typically unsucessful. (See Figure 9.1.8).

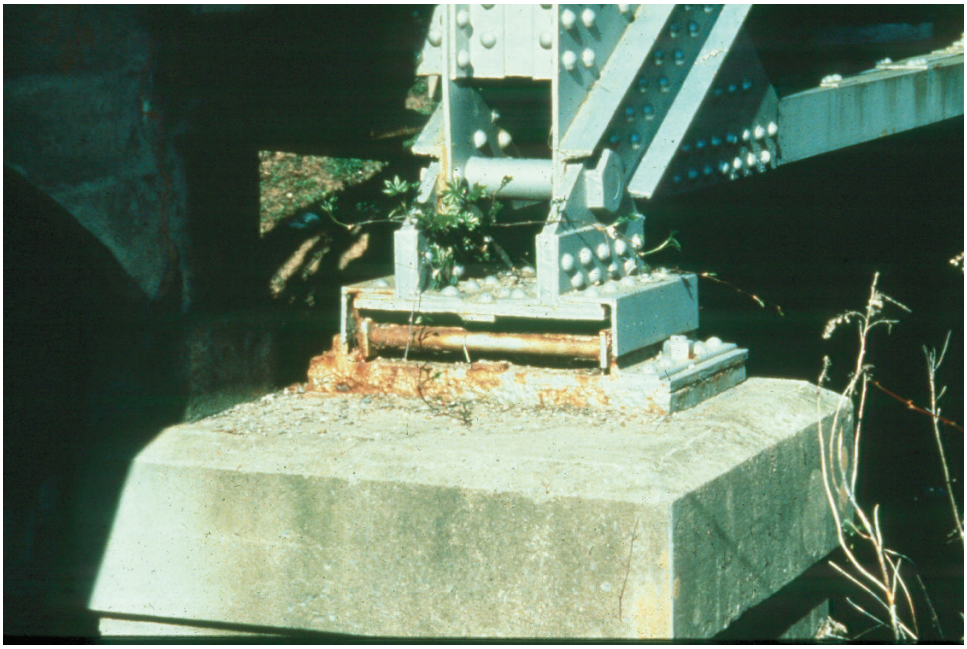

Figure 9.1.8 Roller Nest Bearing

Rocker Bearings

The rocker bearing functions in a similar manner to the roller bearing and is generally used where a substantial amount of longitudinal movement is required (see Figure 9.1.9). As with roller bearings, rocker bearings come in different forms, such as segmental rockers, rocker nests, and pinned rockers.

Figure 9.1.9 Rocker Bearing

Segmental Rocker Bearings

These rockers evolved out of the use of large rollers. When the rollers get up to 510 mm (20 inches) in diameter, they become very heavy and difficult to handle. Since only a small portion of the roller bearing is actually in contact between the sole plate and masonry plate, the unused portion can be cut away and a substantial weight savings can be realized.

Larger segmental rockers have also been fabricated from rectangular blocks, rounded at both ends, which allow the bearing to roll and the horizontal movement to take place.

Figure 9.1.10 Segmental Rocker Bearing

Rocker Nest Bearings

A group of several rockers forms a rocker nest. Rocker nests provide many small areas for dirt and moisture to collect, similar to roller nest bearings. Moisture can lead to corrosion which can result in a bearing failure.

Figure 9.1.11 Segmental Rocker Nest Bearing

Pinned Rocker Bearings

The pinned rocker is the most popular rocker bearing in use today. The top is basically a large pin and tends to keep the bearing aligned correctly. Longitudinal movement is provided by the rotation afforded by the pin and the rolling provided by the rocker. When exposed to adverse environmental conditions, however, the pin can corrode and freeze. Pinned rocker bearings can be quite large and are commonly used for relatively long spans and heavy loads. Holes in the radius portion of the bearing may be slotted to accommodate longitudinal movement.

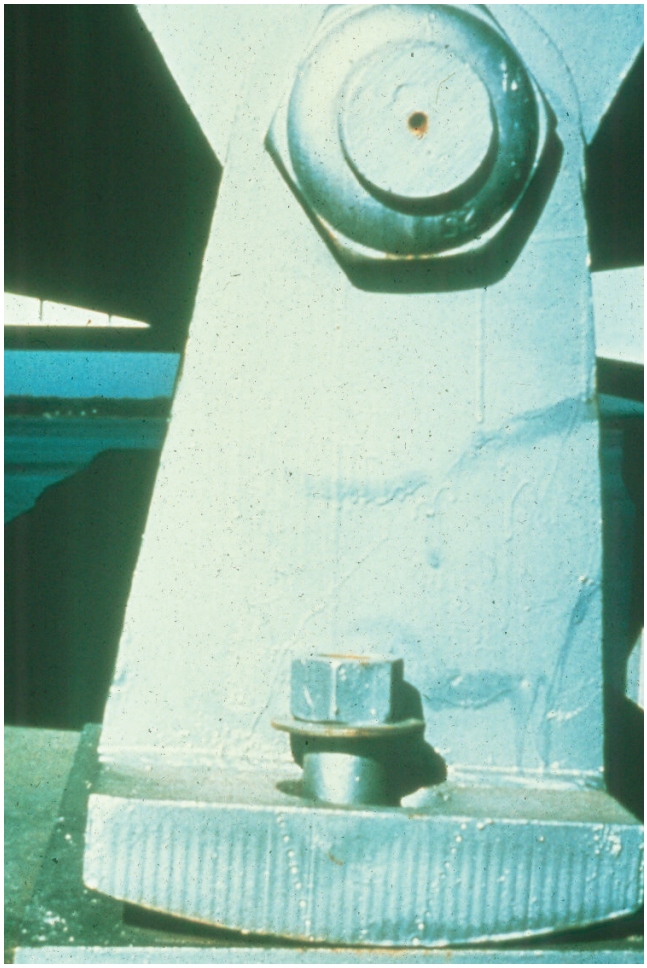

Figure 9.1.12 Pinned Rocker Bearing

Elastomeric Bearings

Elastomeric bearings include both plain and laminated neoprene pads. Neoprene is a heavy rubber like material that deforms slightly under compression or shear.

Plain Neoprene Pads

A plain neoprene bearing consists of a rectangular pad of pure neoprene and is used primarily on short span, prestressed concrete structures. Neoprene bearings are popular for steel beam bridges as well. Expansion and contraction are achieved through a shearing deformation of the neoprene.

Typically these bearings are of uniform thickness and are rectangular with parallel sides, but round, disc-shaped pads have also been used.

Various means are used to prevent the neoprene bearing from "walking" out of position from under a beam. An epoxy compound has been used to bond the pad to the beam and the bridge seat, but it has not always been successful.

Figure 9.1.13 Plain Neoprene Bearing Pad

Laminated Neoprene Pads

A laminated neoprene bearing is simply a stack of neoprene pads with steel or fiberglass plates separating them. The plates are not visible if the entire bearing is encased in neoprene. Laminated bearing pads are used on longer structures where the expansion and contraction requirements and the vertical superstructure loads are greater.

Although a single, thicker pad could conceivably do the job of the laminated bearing, excess bulging and wearing of the pad would dramatically decrease its useful life. The laminated bearing eliminates this excess bulging and allows the expansion and contraction without excessive wear.

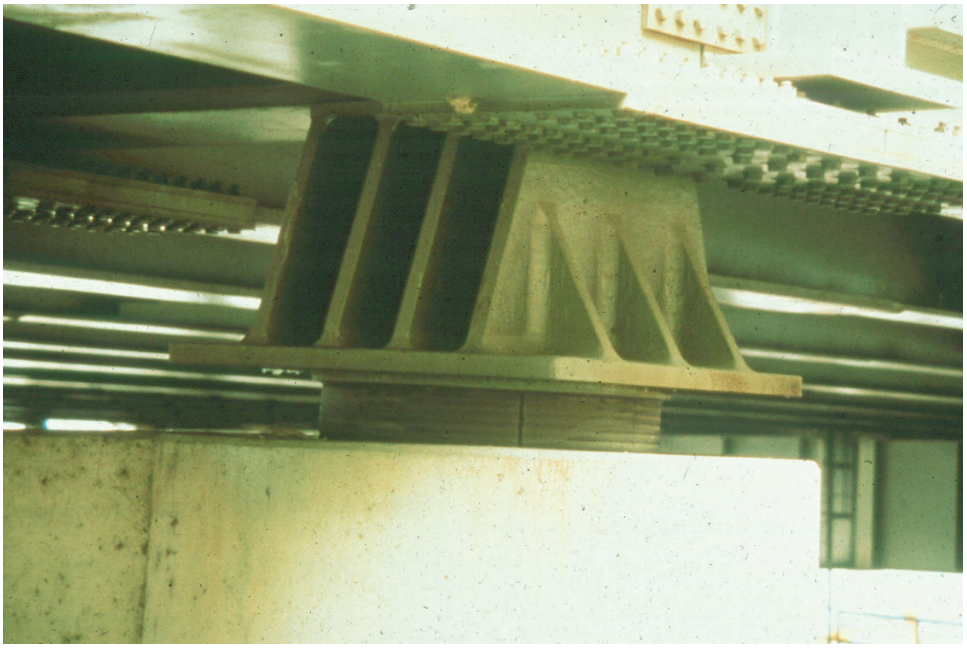

Figure 9.1.14 Laminated Neoprene Bearing Pad

Seismic Bearings

Isolation Bearings

The isolation bearing was developed to protect structures against earthquake damage. It is similar to the laminated neoprene bearing in that it is a sandwich of neoprene and steel plates. It also contains a lead core that is used primarily for horizontal seismic loads. A cover of neoprene protects the steel plates but the top of the lead core remains exposed.

The isolation bearing behaves like a laminated bearing when exposed to normal bridge loading. The lead core stiffens the bearing and helps it to resist these loads. However, under seismic loads, the lead core is designed to yield, thereby making the bearing more flexible and allowing it to isolate the bridge from the effects of earthquake motion.

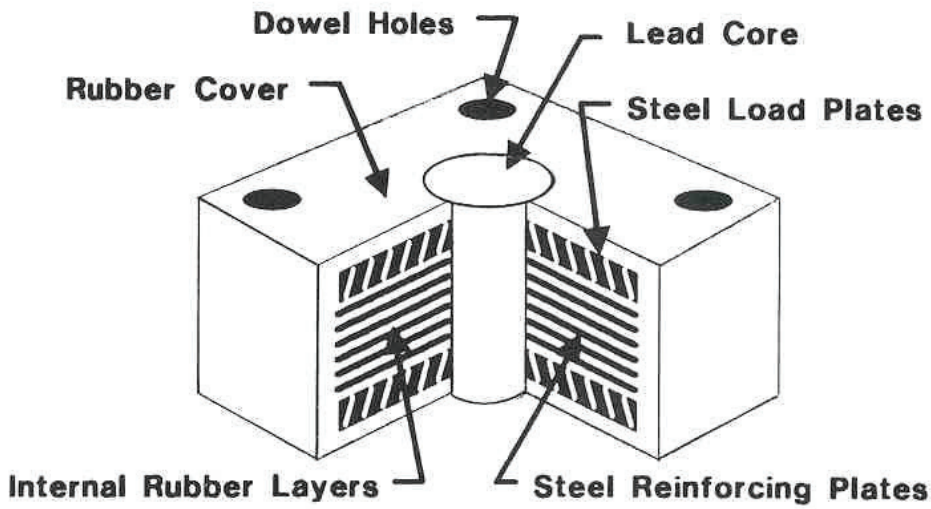

Figure 9.1.15 Lead Core Isolation Bearing

Figure 9.1.16 Lead Core Isolation Bearing

Friction Pendulum Bearings

Another bearing type designed to protect against earthquake damage is friction pendulum bearings. The bearings are designed to reduce lateral loads and shaking movements transmitted to the structure. They can protect structures and their contents during strong, high magnitude earthquakes and can accommodate near fault pulses and deep soil sites.

Friction pendulum bearings incorporate the characteristics of a pendulum to lengthen the natural period of the isolated structure so as to avoid the strongest earthquake forces. The period of the bearing is selected by choosing the radius of curvature of the concave surface. It is independent of the loads of the superstructure. Torsion motions of the substructure are minimized because the center of stiffness of the bearings automatically coincides with the center of mass of the superstructure.

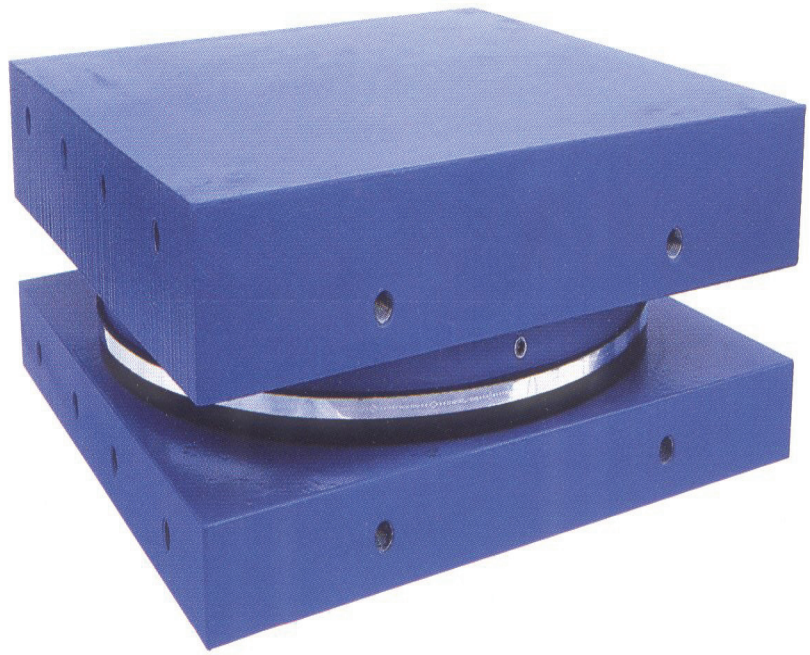

Figure 9.1.17 Friction Pendulum Bearing

High Dampening Rubber Bearings

High dampening rubber bearings were also developed to protect structures from the damage of earthquakes. Under service load conditions, the bearing provides support in a similar fashion to elastomeric bearings. Its rigidity is provided by a high rubber modulus at small shear strains. During an earthquake, a special hysteretic rubber compound in the bearing dissipates the energy of the earthquake. As a result, the structure is isolated from the shaking forces of the earthquake and is less likely to collapse.

Pot Bearings

Pot bearings allow for the multi-dimensional rotations of a structure. There are two different pot bearing configurations: neoprene and spherical.

Neoprene Pot Bearings

A neoprene pot bearing has a stainless steel plate that is attached to the sole plate. This stainless steel plate slides on a polytetrafluoroethylene (PTFE) disc. The PTFE disc is attached to a steel piston, which rests on a neoprene pad, allowing for the rotation of the structure. The pad rests in a shallow steel cylinder that is attached to the masonry plate. This cylinder is referred to as the pot. Guide bars in the expansion pot bearing restrict transverse movement.

A fixed bearing version of this configuration does not possess the stainless steel plate or the PTFE disc.

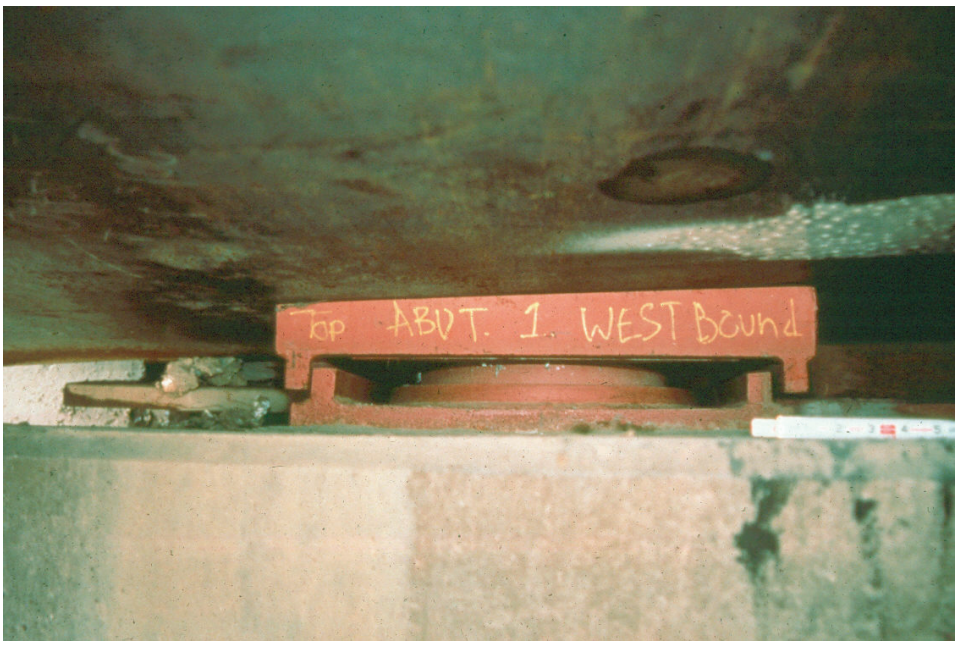

Figure 9.1.18 Pot Bearing

Spherical Pot Bearings

A spherical pot bearing has a stainless steel plate that is attached to the sole plate. This stainless steel plate slides on a disc of PTFE that is bonded to an aluminum alloy casting. The casting has a flat top and a spherical bottom. The bottom of the casting fits into another PTFE-coated aluminum alloy casting. The spherical shaped castings allow for the rotation of the structure.

A fixed bearing version of this configuration has the upper aluminum casting attached to the sole plate. There is no stainless steel plate sliding on the PTFE disc.

Restraining Bearings

Restraining bearings serve to hold a bridge down in the case of uplift. Uplift usually occurs on cantilever anchor spans. The devices used to resist uplift can be as simple as long bolts running through the bearings on short span bridges or as complex as chains of eyebars on larger structures. Lock nuts are used with bolted restraining devices to resist uplift. Pin and link members are also used as restraining devices. The type of restraining device used depends on the magnitude of the uplift force.

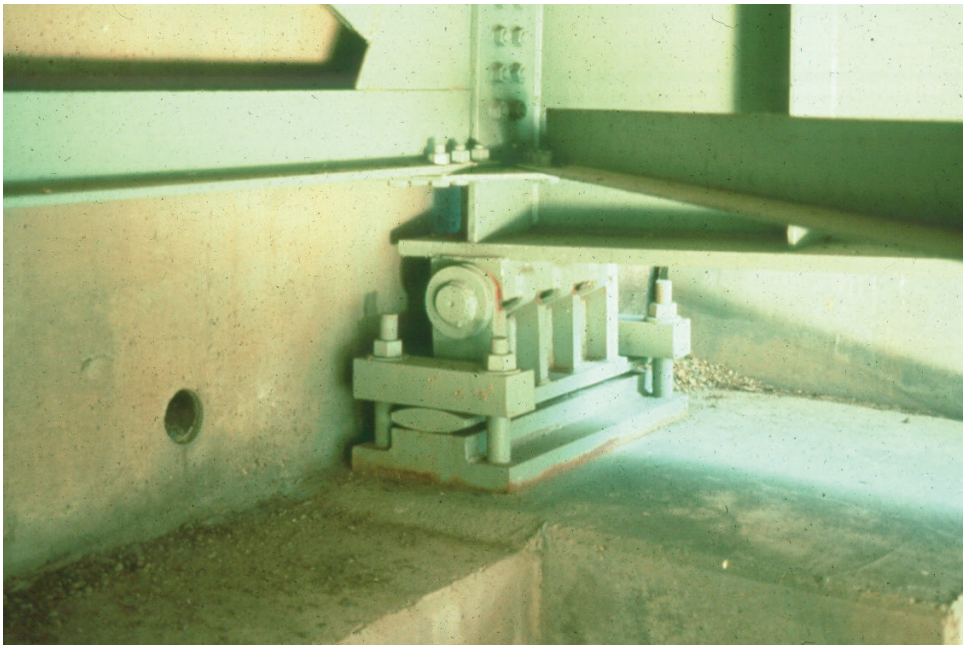

Figure 9.1.19 Restraining Bearing

Pin and Link Bearings

The pin and link bearing is typically used on continuous cantilever structures to support the ends of a suspended span. It can also be used as a type of restraining device, which is discussed later in this topic. This bearing type consists of two vertically oriented steel plates pinned at the top and bottom to allow longitudinal movement. A disadvantage of this type of bearing is that, as the superstructure expands and contracts, the deck rises and falls (but only slightly). Another disadvantage is that pins can fracture when frozen by corrosion.

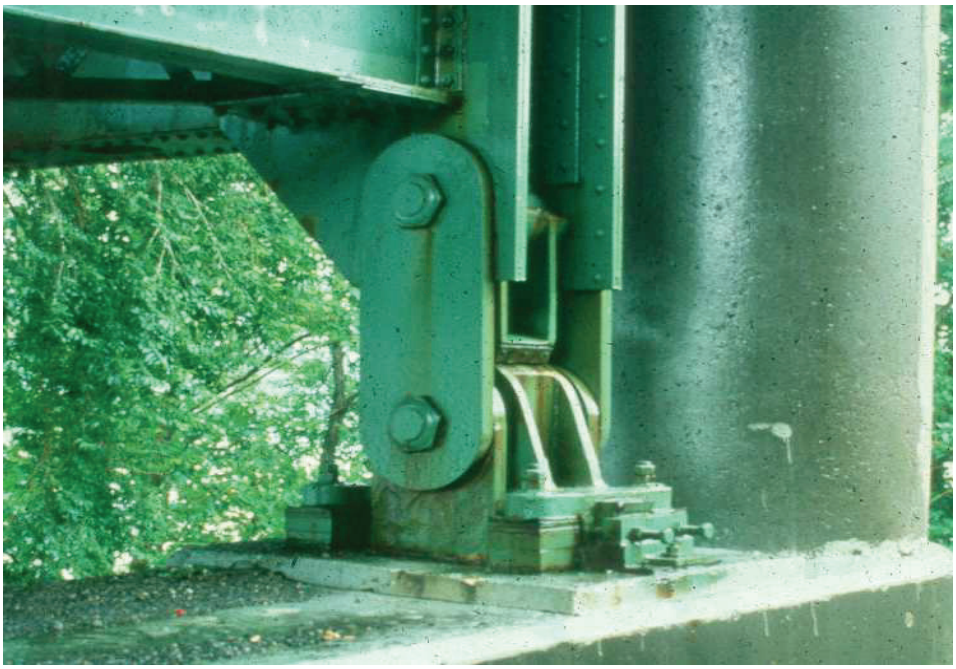

Figure 9.1.20 Pin and Link Bearing

9.1.4 Inspection Procedures

When inspecting a bearing, the inspector must first determine if the bearing was initially intended to be fixed or expansion. If the bearing was designed to allow for translation or movement of the superstructure, then it is an expansion bearing; if not, then it is a fixed bearing. The inspector should refer to the design plans if available. It is critical that the inspector assess whether expansion bearings still allow for translation or horizontal movement.

All bearings must have a suitable support. A distance of several inches should exist between the edge of the masonry plate and the edge of the supporting member, abutment, or pier. Note any loss to the supporting member near the bearing (e.g., spalling of a concrete bridge seat).

Small maintenance problems with bearings can grow progressively worse if ignored, eventually causing major problems for the bridge. Inoperable bearings can transfer significant overstresses to the superstructure or substructure.

Although there are many different types of bearings, bearing inspection can be broken down into two major categories based upon the basic materials from which they are made:

- Metal bearings
- Elastomeric bearings

Various metallic materials have been used in bearings, including steel, bronze, aluminum, lead, and cast iron. However, steel is by far the most prominent and also the most susceptible to deterioration, while the others mentioned are either non-corrosive or corrosion-resistant. Consequently, the following discussions will concentrate on the most common materials: steel bearings and elastomeric bearings.

Inspection of Steel Bearings

Inspection procedures to determine other causes of steel deterioration are discussed in detail in Topic 2.3.8.

Visual Procedures

The inspection of steel bridge members for defects is primarily a visual activity.

Most defects in steel bridges are first detected by visual inspection. In order for this to occur, a hands-on inspection, or inspection where the inspector is close enough to touch the area being inspected, is required. More exact visual observations can also be employed using a magnifying unit after cleaning the paint from the suspect area.

Physical Procedures

Removal of paint can be done using a wire brush, grinding, or sand blasting, depending on the size of the suspected defect. The use of degreasing spray before and after removal of the paint may help in revealing the defect.

When section loss occurs, use a wire brush, grinder or hammer to remove loose or flaked steel. After the flaked steel is removed, measure the remaining section and compare it to a similar section with no section loss.

The usual and most reliable sign of fatigue cracks is the oxide or rust stains that develop after the paint film has cracked. Experience has shown that cracks have generally propagated to a depth between one-fourth and one-half the plate thickness before the paint film is broken, permitting the oxide to form. This occurs because the paint is more flexible than the underlying steel.

Smaller cracks are not likely to be detected visually unless the paint, mill scale, and dirt are removed by carefully cleaning the suspect area. If the confirmation of a possible crack is to be conducted by another person, it is advisable not to disturb the suspected crack area so that re-examination of the actual conditions can be made.

Once the presence of a fatigue crack has been verified, the inspector should examine all other similar locations and details.

Advanced Inspection Techniques

Several advanced techniques are available for steel inspection.

Nondestructive methods, described in Topic 13.3.2, include:

- Acoustic emissions testing
- Computer tomography
- Corrosion sensors
- Smart paint 1

- Smart paint 2
- Dye penetrant
- Magnetic particle
- Radiographic testing
- Robotic inspection
- Ultrasonic testing (see Figure 9.1.21)
- Eddy current

Other methods, described in Topic 13.3.3, include:

- Brinell hardness test
- Charpy impact test
- Chemical analysis
- Tensile strength test

Figure 9.1.21 UT Inspection of a Pin in a Bearing

Some inspection items are common to all steel bearings. For example, steel bearings are subject to the same corrosive forces as steel superstructures. Therefore, check all bearing elements for any significant section loss.

Frozen bearings can occur when deterioration and debris buildup cause the bearing to bind up, thereby preventing free movement. Evidence of a frozen bearing includes bending, buckling, improper alignment of members, or cracks in the bearing or bearing seat.

Bearings should be properly aligned horizontally and vertically, and the bearing surfaces should be clean and in full contact with each other. If only partial contact is made, damage can occur to the bearing device, superstructure, or substructure. This damage can occur when a girder has moved horizontally so that the bearing rests on only a portion of the masonry plate. The full load of the superstructure is therefore being applied to a smaller area on the masonry plate. This results in a higher stress that could crush the bridge seat. Also, such redistribution of the load may cause buckling to occur in the girder web of the superstructure above the bearing.

General Procedures

Steel bearings should not be loose. Looseness can be identified by noise at the bearing or by visually detectable movement in the bearing when the bridge is subjected to live loads. Loosening can be caused by any of the following:

- Settlement or movement of the bearing support away from the portion of the bridge being supported
- Excessive rust or corrosion which results in a loss of material in the bearing itself
- Excessive deflection or vibration in the bridge
- Loose or missing fasteners that are used to attach the bearing to either the superstructure or the substructure
- Worn bearing elements
- Uplift in curved bridge superstructures
- Pavement pressure which drives the backwall into the beams

Examine steel bearings for broken or cracked welds and missing or sheared fasteners.

Bearings and the concrete substructure lateral shear keys on skewed bridges should be inspected for binding and damage due to the creep effect of the bridge (i.e., the tendency of the bridge to move laterally along the skew).

Record the temperature during the inspection. Special thermometers with magnets are available to measure the actual temperature of the superstructure and bearing. Measure the movement of the bearings and compare it to the recorded temperature. The bearings should be in the expanded position when the temperature is greater then 68° F and in the contracted position when the temperature is less than 68° F.

The following figures show examples of some common deficiencies in steel bearings.

Figure 9.1.22 Heavy Corrosion and Excessive Movement on Steel Rocker Bearing

Figure 9.1.23 Rocker Bearing with Excessive Horizontal Movement

Figure 9.1.24 Spalling of Concrete Bridge Seat Due to High Edge Stress

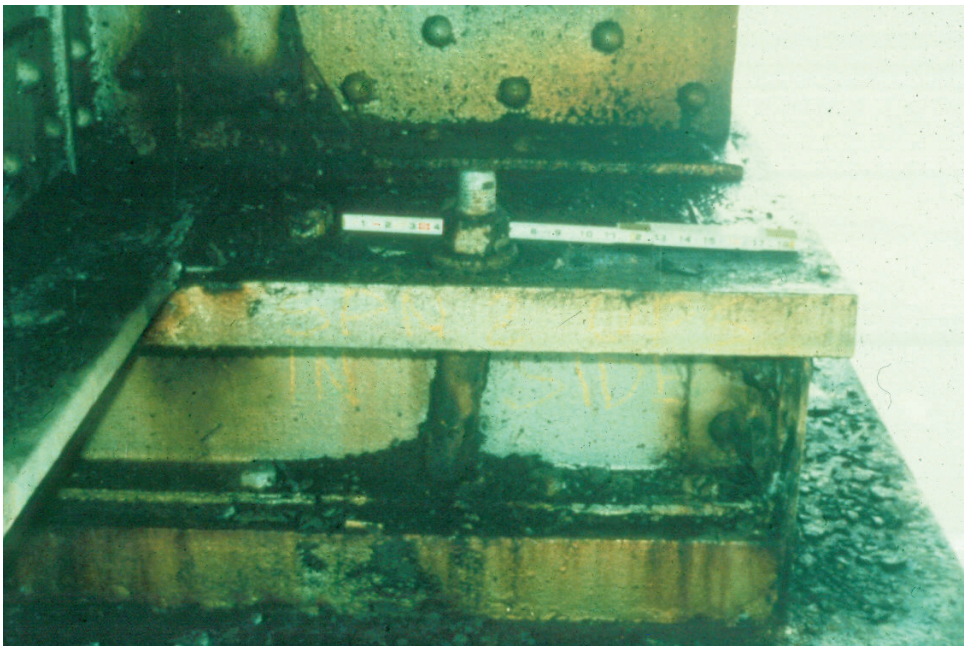

Figure 9.1.25 Bent Anchor Bolt due to Excessive Horizontal Movement

Figure 9.1.26 Uplift at Bridge Bearing

Specific inspection items for the various types of steel bearings are detailed in the following paragraphs.

Sliding Plate Bearings

When a bridge is constructed, the upper and lower plates of the sliding plate bearing are placed such that they are centered with respect to each other at a certain temperature, usually 68°F. Any movement of the bearing can be measured based on this initial alignment.

For plates of equal size, the amount of expansion or longitudinal movement that has occurred is the distance from the front or back of the top plate to the front or back of the bottom plate or, alternatively, the distance between the centers of the top and bottom plates. (See Figure 9.1.28). For plates of unequal size, the amount of expansion is one half of the difference between the front and back distances between the top and bottom plates. Alternatively, and perhaps easier to measure, the expansion is the distance between the centers of the top and bottom plates. These dimensions should be measured to the nearest 3 mm (1/8 inch), and the temperature at the time of inspection should be recorded.

Bearings employing bronze sliding plates with steel masonry plates on bridges

exposed to a salt air environment should be examined for signs of electrolytic corrosion between the bronze and steel plates. Electrolytic corrosion can also occur between aluminum and steel plates.

See Figure 9.1.27 for a checklist of sliding plate bearing inspection items.

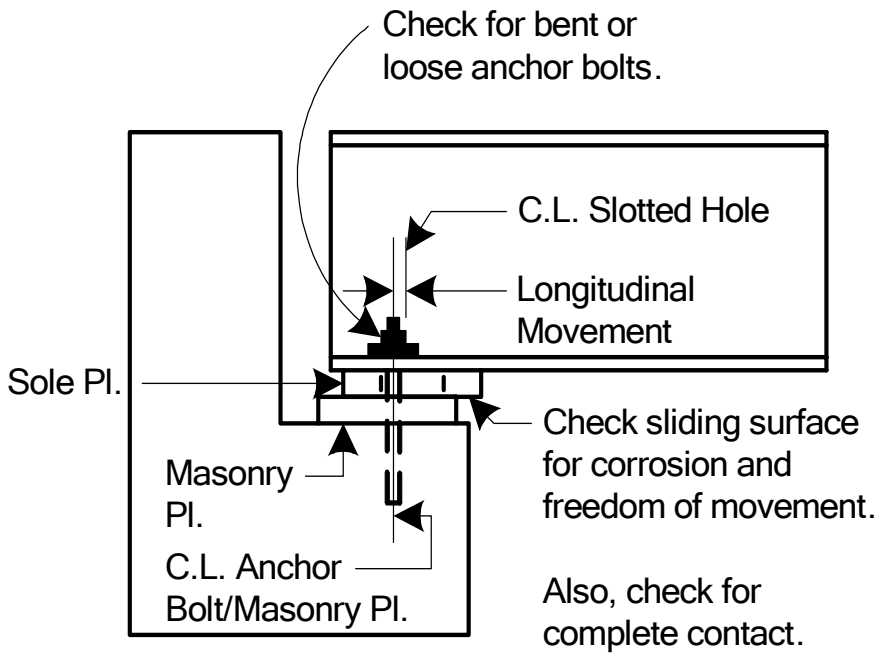

Figure 9.1.27 Sliding Plate Bearing Inspection Checklist Items

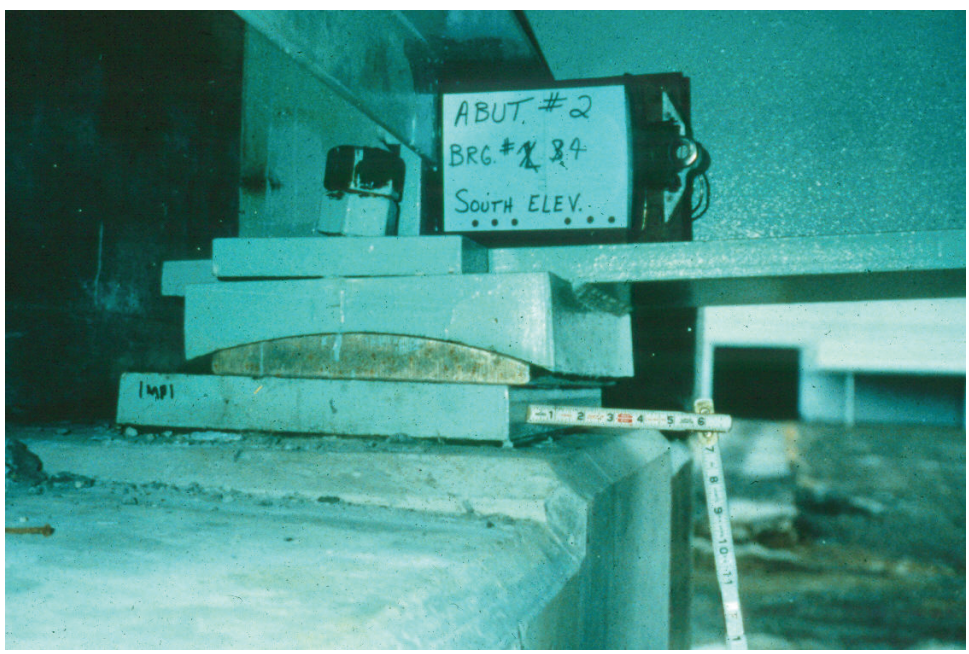

Figure 9.1.28 Longitudinal Misalignment in Bronze Sliding Plate Bearing

Roller Bearings

Roller bearings are similar to sliding plate bearings in that the roller unit should be centered on the masonry plate at its design erection temperature. Therefore, the expansion (or contraction) is one half of the difference between the front of plate-to-roller distance and the back of plate-to-roller distance (see Figure 9.1.29). Alternatively, and perhaps easier to measure, the expansion (or contraction) is also the distance between the center of the roller (where it contacts the masonry plate) and the center of the masonry plate. Again, the temperature at the time of inspection should be recorded.

Rollers and masonry plates should be clean and free of corrosion in order to remain operable. They should be inspected for signs of wear.

The position of the roller should also be examined to see if the pintles are exposed or missing. Such conditions may indicate excessive superstructure expansion or contraction movement or undesirable substructure movement.

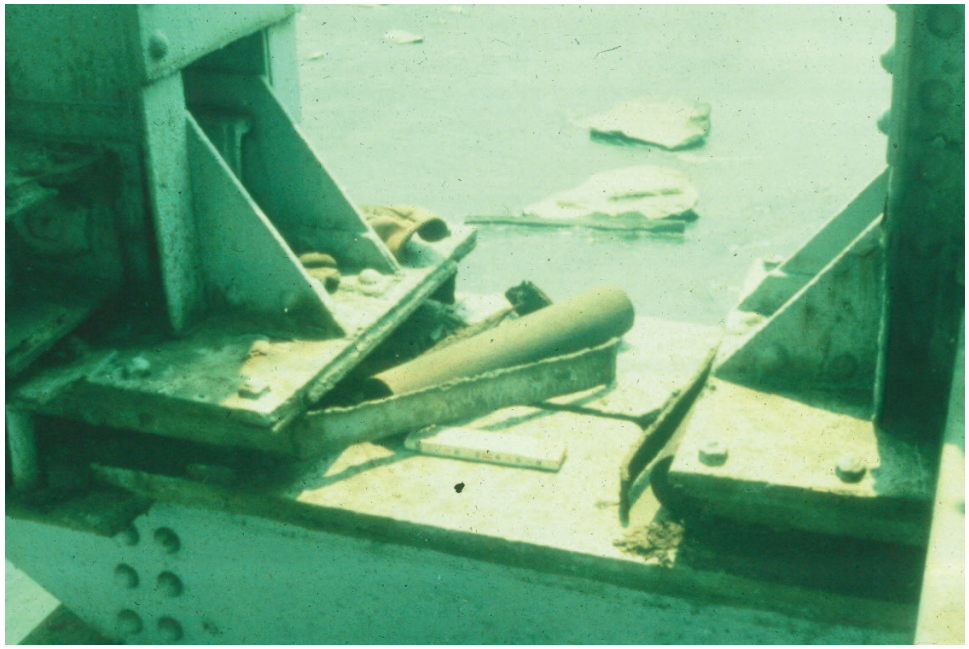

Figure 9.1.29 Damaged Roller Nest Bearing

Rocker Bearings

See Figure 9.1.30 for a checklist of rocker bearing inspection items.

Some rocker bearings have markings on the rocker and masonry plates. With no expansion or contraction, these marks should line up perfectly vertically. The amount of longitudinal movement can be determined by measuring the distance along the masonry plate between the two marks.

If the bearing has no markings, the expansion can be determined by measuring the distance between the current point of contact between the rocker and the masonry plate and the original point of contact, which is assumed to be the midpoint along the rocker's curved surface (see Figure 9.1.31).

Measurements should be to the nearest 3 mm (1/8 inch), and the inspection temperature should be recorded.

Rockers should be inspected for proper tilt. In warmer temperatures (above 68ºF), the rockers should be tilted towards the backwall in the expanded direction; in colder temperatures, the rockers should be tilted backward in the contracted position away from the backwall (see Figure 9.1.30). Also check for the condition of the pintles if they are visible.

Rocker bearings and pins (if present) should be examined for corrosion, wear and freedom of movement (see Figure 9.1.32).

Check the condition of the anchor bolts and nuts for corrosion and freedom of movement on expansion bearings.

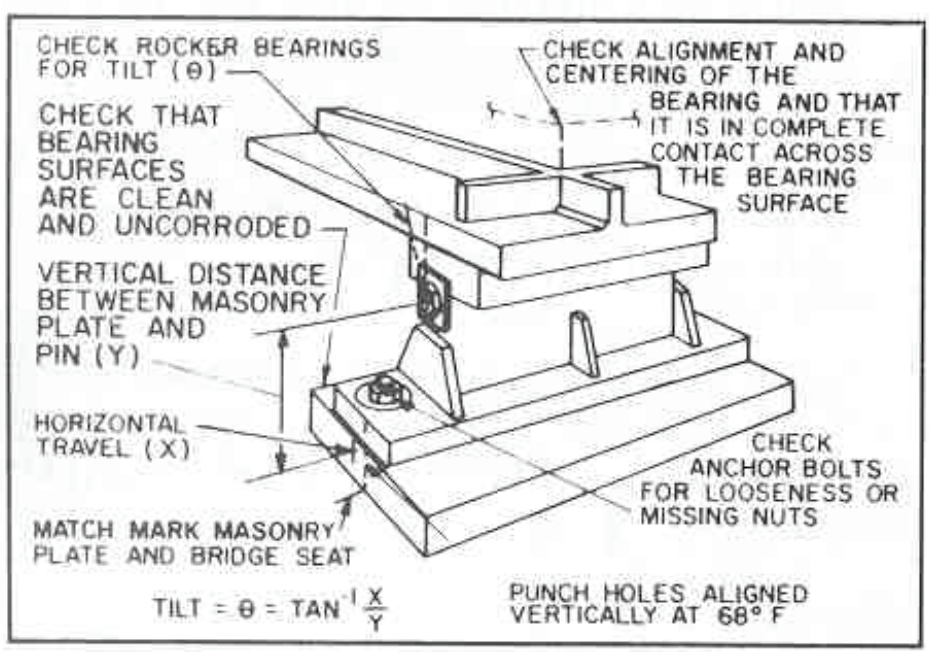

Figure 9.1.30 Rocker Bearing Inspection Checklist Items

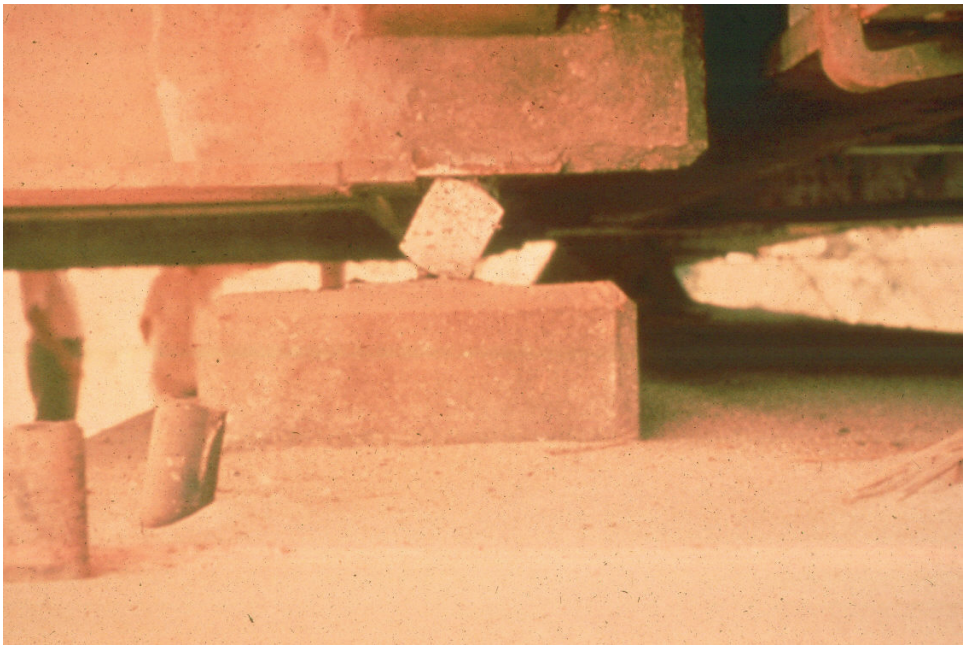

Figure 9.1.31 Excessive Tilt in a Segmental Rocker

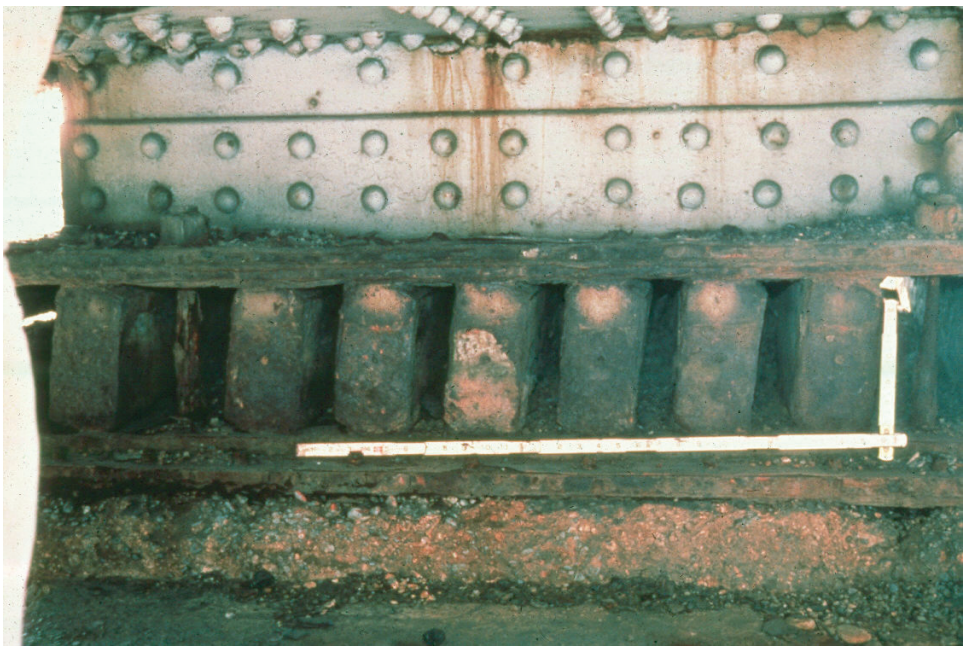

Figure 9.1.32 Frozen Rocker Nest

Pin and Link Bearings

Inspection of pin and link bearings is essentially the same as that described for pins and hangers in Topic 8.4. The amount of corrosion and ability of the connection to move freely is of critical concern, especially for suspended span bridges.

The amount of corrosion on the pin and the interior portion of the link adjacent to it are impossible to detect visually. Ultrasonic testing or disassembly of the connection is required to determine the actual extent of deterioration. For a

discussion of ultrasonic testing, refer to Topic 13.3. Since disassembly is impractical during normal periodic bridge inspections, the inspector must closely examine all exposed portions of the pin and link for signs of corrosion, wear, stress, cracks, bending, and misalignment. If warranted, the inspector should recommend further action (i.e., special testing or disassembly of the pin and link).

Also examine the hanger/link for proper amount of tilt using a plumb line or level, record the opening between the ends of the girders, and record the inspection temperature.

Pot Bearings

Pot bearing longitudinal movement can be measured in the same way as for a sliding plate bearing. The movement is one half of the difference between the front and back distances of the top and bottom plates. If the pot bearing allows movement in two directions, the inspector should investigate transverse movement as well. The inspection temperature at which the measurements are taken should also be recorded.

Although not normally required, pot bearing rotation should also be measured if it appears to be excessive. The top and bottom plates of a pot bearing are usually designed to be parallel if no rotation has taken place. Rotation can therefore be determined by measuring the length of the bottom plate and the distance between the two plates at the front and back of the bearing. The angle of rotation, measured from the horizontal, can be calculated using the following equation:

$$\text{Rotation (Degrees)} = \tan^{-1} [(\text{Height}_1\text{-Height}_2)/\text{Plate Length}]$$

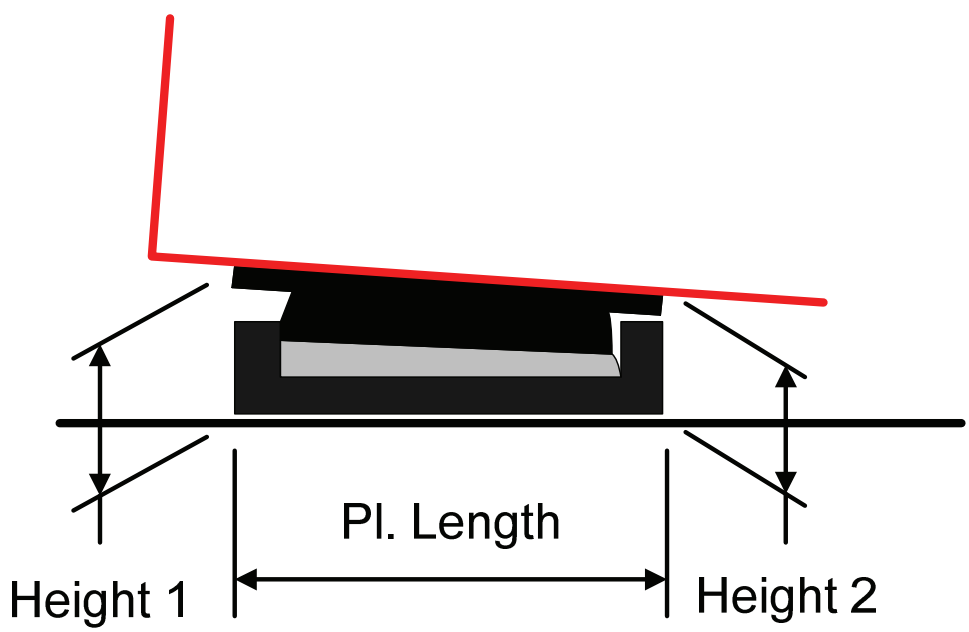

Figure 9.1.33 Angle of Rotation for Pot Bearing

Since the pot bearing allows multidirectional rotation, the inspector should check rotation along both sides of the bearing.

Examine pot bearings for proper seating of the various elements with respect to one another. That is, check to see that the neoprene pad is properly seated within the pot and that the top plate is located properly over the elements below. Determine if the neoprene element is being extruded from the pot. Inspect guide bars for wear, binding, cracking and deterioration.

Investigate welds for cracks, and examine for any separation between the PTFE and the steel surface to which it is bonded. Although they are usually hidden from view, check any exposed portions of the neoprene elements for splitting or tearing. Look for any buildup of dirt and debris in and around the bearing that would affect the smooth operation of the bearing.

Restraining Bearings

Inspection of restraining bearings is very similar to that for pin and link bearings in that the condition of the main tension elements (i.e., hanger plates, eyebars, and anchor rods/bolts) and pins is the main concern. Where these elements encompass a normal bridge bearing, the inspection of the bearing assembly itself follows the procedures normally used for that particular type of bearing.

The elements that make up the restraining portion of the bearing should be investigated for deterioration, misalignment, or other defects that could affect the normal operation of the bearing. Anchor bolts may need nondestructive testing to determine their condition.

Inspection of Elastomeric Bearings

Inspection of elastomeric bearings is somewhat simpler than the steel bearings since there are usually fewer elements to inspect. However, certain defects in elastomeric bearings are rather difficult to detect. Elements that are common to both steel bearings and elastomeric bearings are sole plates, masonry plates, and anchor bolts. Only the elastomeric elements or elements specific to elastomeric bearings will be discussed here. See Figure 9.1.34 for a checklist of elastomeric bearing inspection items.

Neoprene Bearings

Neoprene bearing pads should be inspected for excessive bulging (approximately greater than 15% of thickness) (see Figure 9.1.35). This indicates that the bearing might be too tall for the application and therefore improperly designed. Slight bulging in the sides of the pad can be expected. Whether or not it is excessive may be difficult to determine, but if it appears excessive for the height/thickness of the pad, then it should be noted. As expansion and contraction of the structure takes place, the bulge will tend to roll on the beam or bridge seat.

The bearing pad should be inspected for any splitting or tearing. Close attention should be paid to laminated neoprene bearings. Improper manufacturing can sometimes cause a failure in the area where the neoprene and interior steel shims are bonded together.

The pad should also be inspected for variable thickness other than that attributable to normal rotation of the bearing.

A plain (unlaminated) pad should be examined for any apparent growth in the

length of the pad at the masonry plate. This growth indicates excessive strain in the pad. This is not a normal condition and usually indicates a problem with the design or manufacturing of the bearing. If this condition persists, the pad will eventually experience a shearing failure. Pad growth is not usually a problem with laminated bearings.

Close attention should be given to the area where the pad is bonded to the sole and masonry plates. This is where a neoprene bearing frequently fails. Therefore, some agencies prohibit bonding of the bearing. Sometimes the pad tends to "walk" out from under the beam or girder. Some agencies prohibit painting of the contact surface between the neoprene and the sole plate for this reason.

The longitudinal movement of a neoprene bearing pad is measured in nearly the same manner as for a sliding plate bearing. The longitudinal movement is the horizontal offset (in the longitudinal direction) between the top edge of the pad and the bottom edge of the pad. Record the temperature at the time of inspection.

The rotation on a neoprene bearing is measured the same way as for a pot bearing. The top and bottom of the pad are normally parallel if no rotation has taken place. The inspector should measure the length of the pad and the height of the pad at the front and rear of the bearing. The equation presented in the pot bearing section can then be used to calculate the rotation. If a beveled pad is used to accommodate a bridge on grade, then the original dimensions of the pad must be known in order to determine the bearing rotation.

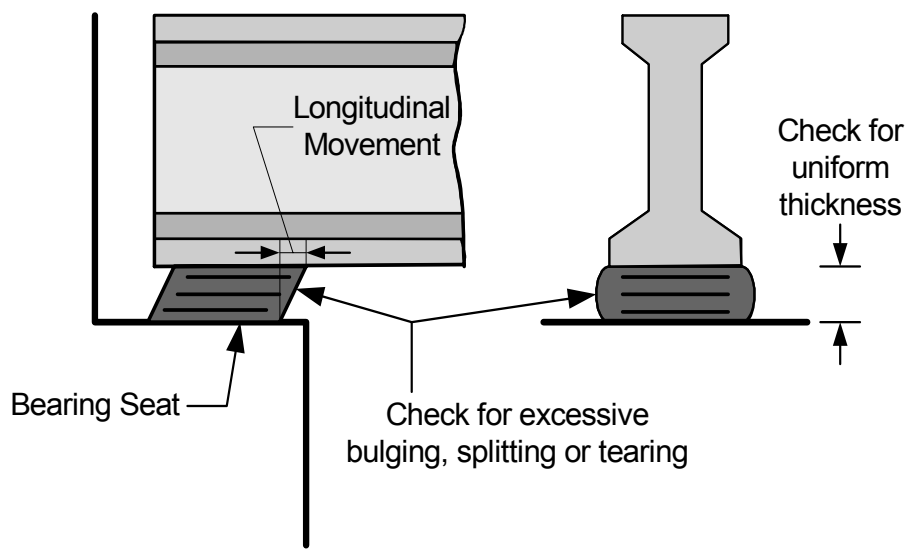

Figure 9.1.34 Elastomeric Bearing Inspection Checklist Items

Figure 9.1.35 Neoprene Bearing Pad Excessive Bulging

Isolation Bearings

Isolation bearings are similar to neoprene bearing pads. They are composed of alternating layers of rubber and thin steel plates bonded together to form the bearing. A lead core is tightly fitted into a preformed hole to provide rigidity (under low lateral loads such as wind and braking forces) and energy dissipation (under seismic loads). These bearings also use steel dowels to transfer shear forces.

The inspection items for isolation bearings are essentially the same as those for plain or laminated neoprene bearings. The only elements unique to isolation bearings are the lead core and steel dowels, both of which are hidden from view and can not be inspected. The lead core may yield during an earthquake. After a seismic event, the bearing shape and horizontal alignment in both the longitudinal and transverse direction must be closely inspected. It may be necessary to replace these bearings after an earthquake.

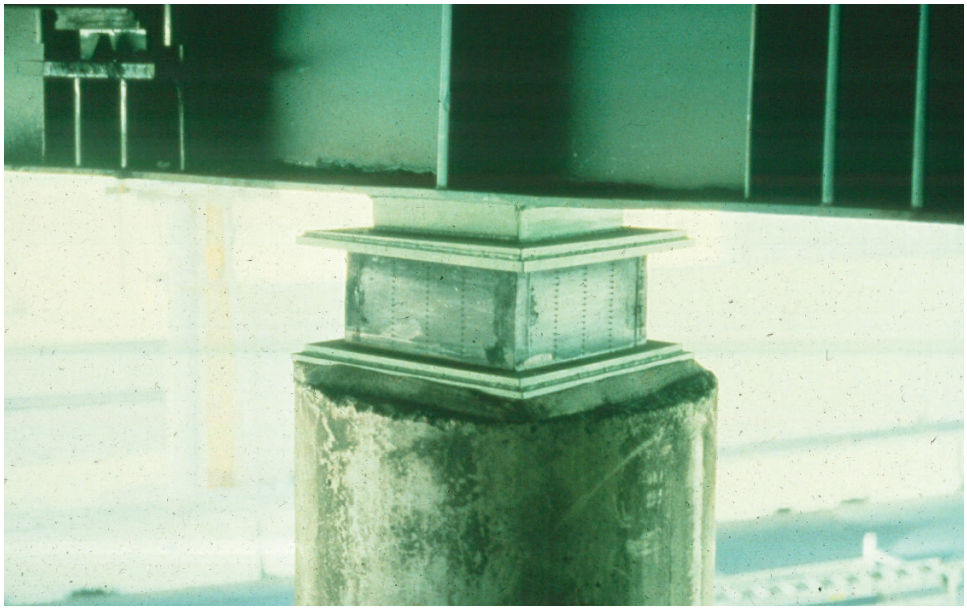

Figure 9.1.36 Lead Core Isolation Bearing

9.1.5 Evaluation

State and federal rating guideline systems have been developed to aid in the inspection of bearings. The two major rating guideline systems currently in use are the FHWA's *Recording and Coding Guide for the Structural Inventory and Appraisal of the Nation's Bridges* used for the National Bridge Inventory (NBI) component rating method and the AASHTO element level condition state assessment method.

NBI Rating Guidelines

Using NBI rating guidelines, bearings fall under the superstructure on the Federal Structure Inventory and Appraisal (SI&A). The bearing type and the condition of the bearing are noted on the inspection form, but no rating is given. Some bridge owners do ask inspectors to provide a condition rating for bearings. The bearing condition does not influence the superstructure component rating, unless it is a serious condition.

Element Level Condition State Assessment

In an element level condition state assessment of a bridge bearing, the AASHTO CoRe element is one of the following, depending on the type:

Element No.	Description
310	Elastomeric Bearing
311	Movable Bearing (roller, sliding, etc.)
312	Enclosed / Concealed Bearing
313	Fixed Bearing
314	Pot Bearing
315	Disk Bearing

The unit quantity for the bearing elements is “each”, and each bearing element must be placed in one of the three available condition states based on the overall bearing condition. The inspector must note the condition of all the bearings individually and fit them into a given condition state description. Condition state 1 is the best possible rating for the bearings. See the *AASHTO Guide for Commonly Recognized (CoRe) Structural Elements* for condition state descriptions.

No Element Level Smart Flags are currently available for bearings.

Serious Bearing Conditions

Serious situations could be created for a bridge superstructure if horizontal failure of several bearings allows the superstructure to pull off the substructure. Failure of a tiedown (restraining) device which could allow a span to collapse and would also be considered a serious condition.

If such a serious condition exists with the bearings, then the bearings have an impact on the superstructure condition rating. Otherwise, the bearings affect the superstructure rating very little.

Figure 9.1.37 Serious Bearing Condition

Figure 9.1.38 Broken Pintle on a Bearing