Table of Contents

Basic Concepts
Primer

P.3 Culvert Characteristics P.3.1

P.3.1 Introduction P.3.1
Purpose of Culvert Inspection P.3.2
Safety P.3.3
Maintenance Needs P.3.3
Outcomes P.3.3

P.3.2 Differentiation Between Culverts and Bridges P.3.4
Hydraulic P.3.4
Structural P.3.4
Maintenance P.3.5
Traffic Safety P.3.5
Construction P.3.5
Durability P.3.5
Inspection P.3.5

P.3.3 Structural Characteristics of Culverts P.3.5
Loads on Culverts P.3.5
Categories of Structural Materials P.3.8
Construction and Installation Requirements P.3.8

P.3.4 Culvert Shapes P.3.10
Circular P.3.10
Pipe Arch and Elliptical Shapes P.3.11
Arches P.3.11
Box Sections P.3.12
Multiple Barrels P.3.12
Frame Culverts P.3.13

P.3.5 Culvert Materials P.3.13
Precast Concrete P.3.13
Cast-In-Place Concrete P.3.15
Metal Culverts P.3.15
Masonry P.3.15

Timber P.3.15
Other Materials P.3.17

P.3.6 Culvert End Treatments P.3.17

P.3.7 Hydraulics of Culverts P.3.20
Hydrologic Analysis P.3.21
Hydraulic Capacity P.3.22
Inlet Control P.3.22
Outlet Control P.3.23
Special Hydraulic Considerations P.3.23

P.3.8 Factors Affecting Culvert Performance P.3.23

P.3.9 Types and Locations of Culvert Distress P.3.24
Types of Distress P.3.24
Inspection Locations P.3.26
Overall Conditions P.3.27
Approach Roadway & Embankment P.3.27
Embankment P.3.28
End Treatments P.3.29
Appurtenance Structure P.3.32
Culvert Barrel P.3.33

P.3.10 Durability P.3.33
Corrosion P.3.33
Abrasion P.3.34

P.3.11 Soil and Water Conditions that Affect Culverts P.3.34
pH Extremes P.3.34
Electrical Resistivity P.3.35
Soil Characteristics P.3.35

P.3.12 Culvert Protective Systems P.3.35
Extra Thickness P.3.35
Bituminous Coating P.3.35
Bituminous Paved Inverts P.3.35
Other Coatings P.3.36

Topic P.3 Culvert Characteristics

P.3.1 Introduction

A culvert is a structure designed hydraulically to take advantage of submergence to increase water carrying capacity. Culverts, as distinguished from bridges, are usually covered with embankment and are composed of structural material around the entire perimeter, although some are supported on spread footings with the streambed serving as the bottom of the culvert. Culverts may qualify to be considered “bridge” length.

Over the years, culverts have traditionally received less attention than bridges. Since culverts are less visible it is easy to put them out of mind, particularly when they are performing adequately. Additionally, a culvert usually represents a significantly smaller investment than a bridge and in the event of a failure usually represents much less of a safety hazard.

Since 1967 there has been an increased emphasis on bridge safety and on bridge rehabilitation and replacement programs. In many cases small bridges have been replaced with multiple barrel culverts, box culverts, or long span culverts (see Figure P.3.1). There have also been recent advances in culvert design and analysis techniques. Long span corrugated metal culverts with spans in excess of 12.2 m (40 feet) were introduced in the late 1960's.

Figure P.3.1 Culvert Structure

As a result of these developments, the number, size, complexity, and cost of culvert installations have increased. The failure of a culvert may be more than a mere driving inconvenience. Failure of a major culvert may be both costly and hazardous.

Like bridges, culverts should be inspected regularly to identify potential safety

problems and maintenance needs or other actions required to preserve the investment in the structure and to minimize property damage due to improper hydraulic functioning.

Purpose of Culvert Inspection

The National Bridge Inspection Program was designed to insure the safe passage of vehicles and other traffic. The inspection program provides a uniform database from which nationwide statistics on the structural and functional safety of bridges and large culvert-type structures are derived. Although these bridge inspections are essentially for safety purposes, the data collected is also used to develop rehabilitation and replacement priorities.

Bridges with spans over 6.1 m (20 ft) in length are inspected on a two-year cycle in accordance with the National Bridge Inspection Standards (NBIS). According to the American Association of State Highway and Transportation Officials (AASHTO) the definition of bridges includes culverts with openings measuring more than 6.1 m (20 ft) along the centerline of the road and also includes multiple pipes where the distance between openings is less than or equal to half of the pipe opening.

Multiple barrel culvert installations with relatively small pipes can therefore meet the definition of a bridge. Structures included in the NBIS are evaluated by utilizing a standardized inventory appraisal process that is based on rating certain structural and functional features. The data obtained is recorded on standardized inspection forms. The minimum data required for bridge length culverts is shown on the Structure Inventory and Appraisal Sheet (SI&A). Procedures for coding these items are provided in the *FHWA Recording and Coding Guide for the Structure Inventory and Appraisal of the Nation's Bridges* (*Coding Guide*)

While the importance of the NBIS inspection program cannot be overemphasized, the SI&A data sheets are oriented toward bridges rather than culverts; thus, they do not allow an inspector to collect either detailed condition data or maintenance data. Additionally, the NBIS program does not specifically address structures where the total opening length is less than 6.1 m (20 feet). However, some type of formal inventory and inspection is needed for culverts that are not bridge length. In many cases, the failure of a culvert or other structure with openings less than 6.1 m (20 ft) long can present a life threatening hazard. Although the primary purpose of this, and other sections relating to culverts is to provide inspection guidelines for culverts included in the NBIS program, the guidelines should also be generally applicable to culverts with openings which are less than 6.1 m (20 feet) long. For culverts (and bridges) less than 6.1 m (20 ft) in length, the state in which the structure is located must incorporate it into their “Local Bridge Inventory”. In this case, the state defines the minimum structure opening to be included in the “Local Bridge Inventory”.

Ideally, all culverts should be inventoried and periodically inspected. Some limitations may be necessary because a considerable effort is required to establish a current and complete culvert inventory. Small culverts may not warrant the same rigorous level of inspection as large culverts. Each agency should define its culvert inspection program in terms of inspection frequency, size, and type of culverts to be inventoried and inspected, and the information to be collected. Culverts larger than 6.1 m (20 ft) must be inspected every two years under the NBIS program. If possible all culverts should be inventoried and inspected to establish a structural

adequacy and to evaluate the potential for roadway overtopping or flooding.

The types and amount of condition information to be collected should be based on the purpose for which the information will be used. For example, if small pipes are not repaired but are replaced after failures occur, then the periodic collection of detailed condition data may not be warranted. Documentation of failures as well as the causes of failures, may be all the condition data that is needed. However, the inventory should be updated whenever a replacement is accomplished.

Safety

Safety is the most important reason why culverts should be inspected. To insure that a culvert is functioning safely, the inspector should evaluate structural integrity, hydraulic performance, and roadside compatibility.

- Structural Integrity - The failure of major culverts can present a life threatening safety hazard. The identification of potential structural and material problems requires a careful evaluation of indirect evidence of structural distress as well as actual deterioration and distress in the culvert material.

- Hydraulic Performance - When a culvert's hydraulic performance is inadequate, potential safety hazards may result. The flooding of adjacent properties from unexpected headwater depth may occur. Downstream areas may be flooded by failure of the embankment. The roadway embankment or culvert may be damaged because of erosion.

- Roadside Compatibility - Many culverts, like older bridges, present roadside hazards. Headwalls and wingwalls higher than the road or embankment surface may constitute a fixed obstacle hazard. Abrupt drop-offs over the end of a culvert or steep embankments may represent rollover hazards to vehicles that leave the roadway.

- Hazards of Culvert Inspection – Discussed in Topic 3.2, Safety Practices.

Maintenance Needs

Lack of maintenance is a prime cause of improper functioning in culverts and other drainage structures. Regular periodic inspections allow minor problems to be spotted and corrected before they become serious.

Outcomes

The primary outcome of this topic as well as Topics 3.1, 3.2, 4.2, 4.3, 5.5, 7.5, 7.12, 11.2, 12.3, and 12.4 is to provide information that will enable bridge inspectors to do the following tasks:

- Properly inspect an existing culvert.
- Evaluate structural adequacy.
- Evaluate hydraulic adequacy and recognize potential flood hazards.
- Rate the condition of the culvert.
- Correctly document and rate the findings of a culvert inspection using the appropriate coding items.
- Recognize and document traffic safety conditions.
- Recommend corrective actions/maintenance needs.

To meet the primary outcome, the topics provide general procedures for conducting, reporting, and documenting a culvert inspection, and guidelines for inspecting and rating specific hydraulic and structural culvert components.

A second outcome of these sections is to provide users with the information necessary to understand and evaluate the significance of defects found during an inspection of an existing culvert. To meet this outcome, a review of how culverts should function structurally and hydraulically is provided briefly in this section, and covered in more detail in Topics 7.12, 12.3, and 12.4. Durability concepts are also reviewed.

P.3.2 Differentiation Between Culverts and Bridges

Traditional definitions of culverts are based on the span length rather than function or structure type. For example, part of the culvert definition included in the Bridge Inspector's Training Manual 70 states:

"...structures over 20 feet in span parallel to the roadway are usually called bridges; and structures less than 20 feet in span are called culverts even though they support traffic loads directly."

Many structures that measure more than 6.1 m (20 feet) along the centerline of the roadway have been designed hydraulically and structurally as culverts. The structural and hydraulic design of culverts is substantially different from bridges, as are construction methods, maintenance requirements, and inspection procedures. A few of the more significant differences between bridges and culverts are:

Hydraulic

Culverts are usually designed to operate at peak flows with a submerged inlet to improve hydraulic efficiency. The culvert constricts the flow of the stream to cause ponding at the upstream or inlet end. The resulting rise in elevation of the water surface produces a head at the inlet that increases the hydraulic capacity of the culvert. Bridges may constrict flow to increase hydraulic efficiency or be designed to permit water to flow over the bridge or approach roadways during peak flows. However, bridges are generally not designed to take advantage of inlet submergence to the degree that is commonly used for culverts. The effects of localized flooding on appurtenant structures, embankments, and abutting properties are important considerations in the design and inspection of culverts.

Structural

Culverts are usually covered by embankment material. Culverts must be designed to support the dead load of the soil over the culvert as well as live loads of traffic. Either live loads or dead loads may be the most significant load element depending on the type of culvert, type and depth of cover, and amount of live load. However, live loads on culverts are generally not as significant as the dead load unless the cover is shallow. Box culverts with shallow cover are examples of the type of installation where live loads may be significant.

In most culvert designs the soil or embankment material surrounding the culvert plays an important structural role. Lateral soil pressures enhance the culverts ability to support vertical loads. The stability of the surrounding soil is important to the structural performance of most culverts.

Maintenance

Because culverts usually constrict flow there is an increased potential for waterway blockage by debris and sediment, especially for culverts subject to seasonal flow. Multiple barrel culverts may also be particularly susceptible to debris accumulation. Scour caused by high outlet velocity and turbulence at inlet end is a concern. As a result of these factors, routine maintenance for culverts primarily involves the removal of obstructions and the repair of erosion and scour. Prevention of joint leakage may be critical in culverts bedded in pipeable soils to prevent undermining and loss of support.

Traffic Safety

A significant safety advantage of many culverts is the elimination of bridge parapets and railings. Culverts can usually be extended so that the standard roadway cross section can be carried over the culvert to provide a vehicle recovery area. However, when ends are located near traffic lanes or adjacent to shoulders, guardrails may be used to protect the traffic. Another safety advantage of culverts is that less differential icing occurs. Differential icing is the tendency of water on the bridge deck to freeze prior to water on the approaching roadway. Since culverts are under fill material and do not have a bridge deck, the temperature of the roadway over the culvert is at or near the temperature of the roadway approaching the culvert.

Construction

Careful attention to construction details such as bedding, compaction, and trench width during installation is important to the structural integrity of the culvert. Poor compaction or poor quality backfill around culverts may result in uneven settlement over the culvert and possibly structural distress of the culvert.

Durability

Durability of material is a significant problem in culverts and other drainage structures. In very hostile environments such as acid mine drainage and chemical discharge, corrosion and abrasion can cause deterioration of all commonly available culvert materials.

Inspection

The inspection and assessment of the structural condition of culverts requires an evaluation of not only actual distress but circumstantial evidence such as roadway settlement, pavement patches, and embankment condition.

P.3.3 Structural Characteristics of Culverts

Loads on Culverts

In addition to their hydraulic functions, culverts must also support the weight of the embankment or fill covering the culvert and any load on the embankment. There are two general types of loads that must be carried by culverts: dead loads and live loads.

Dead Loads

Dead loads include the earth load or weight of the soil over the culvert and any added surcharge loads such as buildings or additional earth fill placed over an existing culvert. If the actual weight of earth is not known, 1920 kilograms per cubic meter (120 pounds per cubic foot) is generally assumed.

Live Loads

The live loads on a culvert include the loads and forces, which act upon the culvert due to vehicular or pedestrian traffic. The highway wheel loads generally used for analysis are shown in Figure P.3.2. The effect of live loads decreases as the height of cover over the culvert increases. When the cover is more than two feet, concentrated loads may be considered as being spread uniformly over a square with sides 1.75 times the depth of cover. This concept is illustrated in Figure P.3.3 and P.3.4. In fact, for single spans, if the height of earth fill is more than 2.4 meters (8 feet) and exceeds the span length, the effects of live loads can be ignored all together. (see AASHTO)

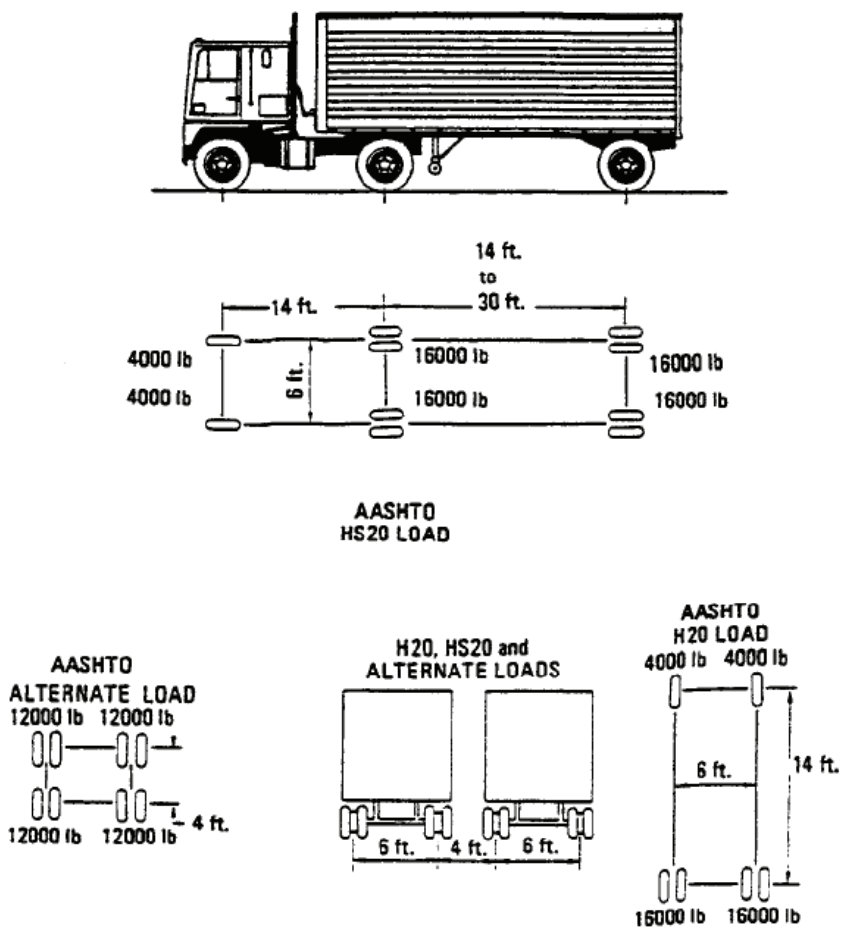

Figure P.3.2 AASHTO Live Load Spacing for Highway Structures

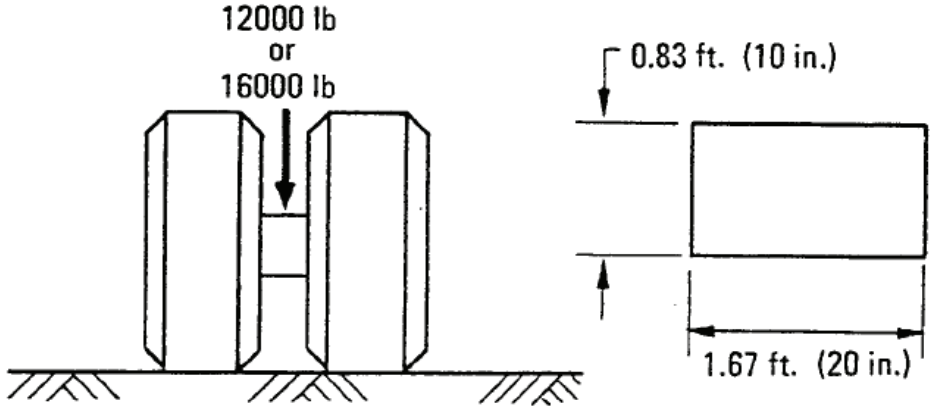

Source: Concrete Pipe Handbook
American Concrete Pipe Association

Figure P.3.3 Surface Contact Area for Single Dual Wheel

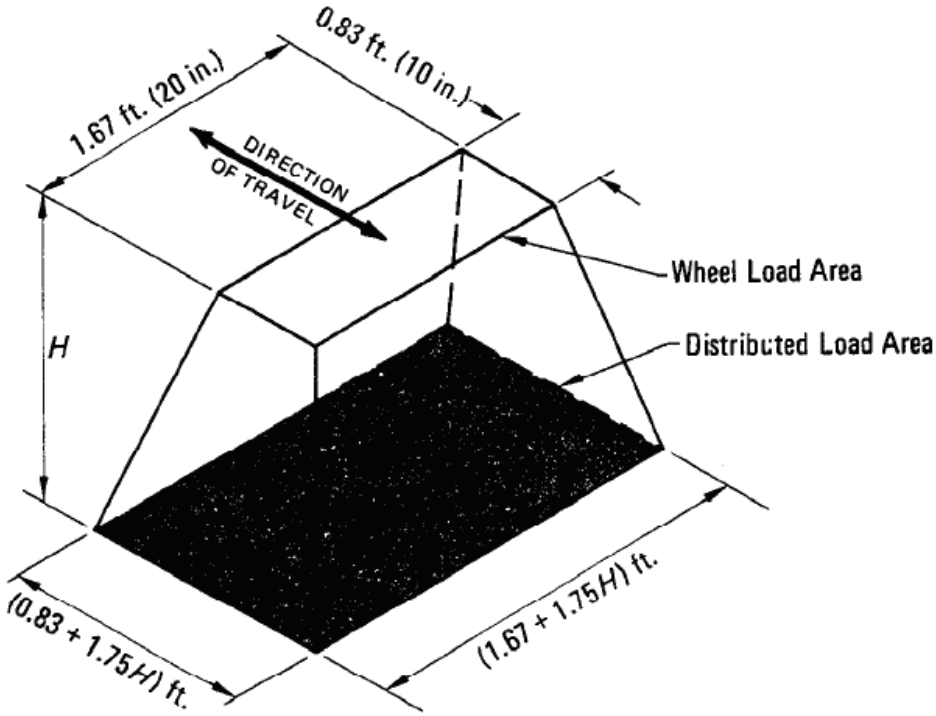

Source: Concrete Pipe Handbook
American Concrete Pipe Association

Figure P.3.4 Distribution of Live Load (Single Dual Wheel) for Depth of Cover

Categories of Structural Materials

Based upon material type, culverts can be divided into two broad structural categories: rigid and flexible.

- Rigid Culverts

Culverts made from materials such as reinforced concrete and stone masonry are very stiff and do not deflect appreciably. The culvert material itself provides the needed stiffness to resist loads. In doing this, zones of tension and compression are created. The culvert material is designed to resist the corresponding stresses.

Rigid Culverts are discussed in detail in Sections 7.5, 7.12, and 12.3.

- Flexible culverts

Flexible culverts are commonly made from steel or aluminum. In some states composite materials are used. As stated earlier, flexible culverts rely on the surrounding backfill material to maintain their structural shape. Since they are flexible, they can be deformed significantly with no cracks occurring.

As vertical loads are applied, a flexible culvert will deflect if the surrounding fill material is loose. The vertical diameter decreases while the horizontal diameter increases. Soil pressures resist the increase in horizontal diameter.

For flexible culverts with large openings, sometimes longitudinal and/or circumferential stiffeners are used to prevent excessive deflection. Circumferential stiffeners are usually metal ribs bolted around the circumference of the culvert. Longitudinal stiffeners may be metal or reinforced concrete. This type of stiffener is sometimes called a thrust beam.

Construction and Installation Requirements

The structural behavior of flexible and rigid culverts is often dependent on construction practices during installation (see Figure P.3.5). Items, which require particular attention during construction, are discussed briefly in the following text. This information is provided so that the bridge inspector may gain insight on why certain structural defects are found when inspecting a culvert.

- Compaction and Side Support - Good backfill material and adequate compaction are of critical importance to flexible culverts. A well-compacted soil envelope is needed to develop the lateral pressures required to maintain the shape of flexible culverts. Well-compacted backfill is also important to the performance of rigid culverts. Poorly compacted soils do not provide the intended lateral support.
- Trench Width - Trench width can significantly affect the earth loads on rigid culverts. It is therefore important that trench widths be specified on the plans and that the specified width not be exceeded without authorization from the design engineer.
- Foundations and Bedding - A foundation capable of providing uniform and stable support is important for both flexible and rigid culverts. The foundation must be able to support the structure at the proposed grade and elevation without concentration of foundation pressures. Foundations should be relatively yielding when compared to side fill. Establishing a

suitable foundation requires removal and replacement of any hard spots or soft spots. Bedding is needed to level out any irregularities in the foundation and to insure uniform support. When using flexible culverts, bedding should be shaped to a sufficient width to permit compaction of the remainder of the backfill, and enough loose material should be placed on top of the bedding to fill the corrugations. When using rigid culverts, the bedding should conform to the bedding conditions specified in the plans and should be shaped to allow compaction and to provide clearance for the bell ends on bell and spigot type rigid pipes. Adequate support is critical in rigid pipe installations, or shear stress may become a problem.

- Construction Loads - Culverts are generally designed for the loads they must carry after construction is completed. Construction loads may exceed design loads. These heavy loads can cause damage if construction equipment crosses over the culvert installation before adequate fill has been placed or moves too close to the walls, creating unbalanced loading. Additional protective fill may be needed for equipment crossing points.
- Camber - In high fills the center of the embankment tends to settle more than the areas under the embankment side slopes. In such cases it may be necessary to camber the foundation slightly. This should be accomplished by using a flat grade on the upstream half of the culvert and a steeper grade on the downstream half of the culvert. The initial grades should not cause water to pond or pocket.

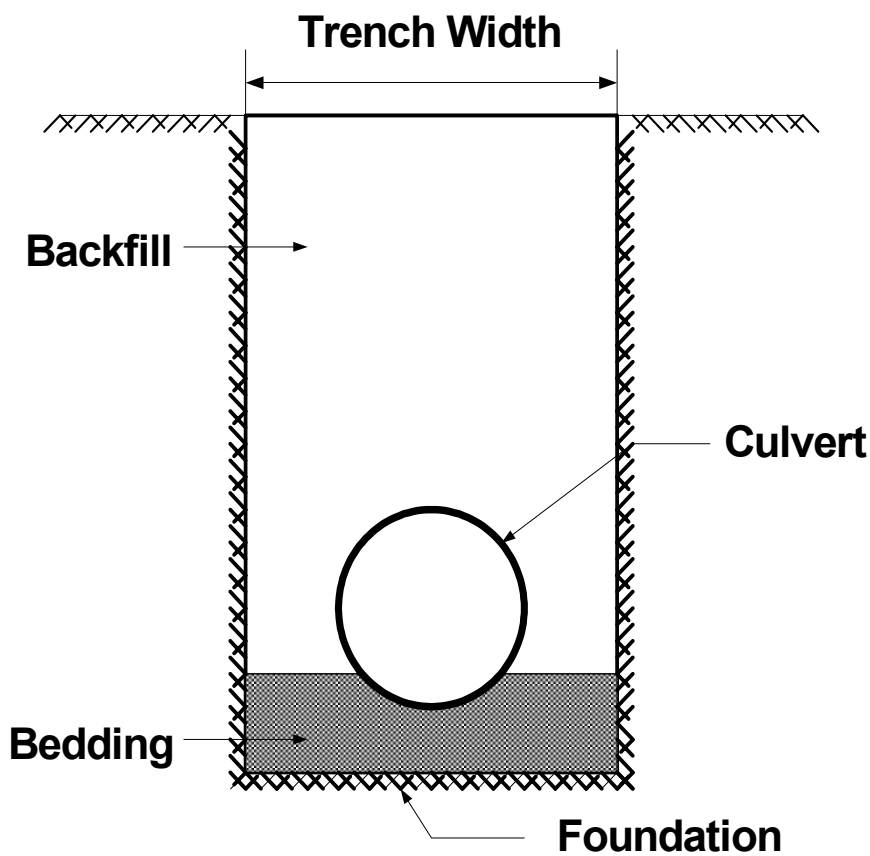

Figure P.3.5 Culvert Construction and Installation Requirements

P.3.4
Culvert Shapes

A wide variety of standard shapes and sizes are available for most culvert materials. Since equivalent openings can be provided by a number of standard shapes, the selection of shape may not be critical in terms of hydraulic performance. Shape selection is often governed by factors such as depth of cover or limited headwater elevation. In such cases a low profile shape may be needed. Other factors such as the potential for clogging by debris, the need for a natural stream bottom, or structural and hydraulic requirements may influence the selection of culvert shape. Each of the common culvert shapes are discussed in the following paragraphs.

Circular

The circular shape is the most common shape manufactured for pipe culverts (see Figure P.3.6). It is hydraulically and structurally efficient under most conditions. Possible hydraulic drawbacks are that circular pipe generally causes some reduction in stream width during low flows. It may also be more prone to clogging than some other shapes due to the diminishing free surface as the pipe fills beyond the midpoint. With very large diameter corrugated metal pipes, the flexibility of the sidewalls dictates that special care be taken during backfill construction to maintain uniform curvature.

Figure P.3.6 Circular Culvert Structure

Pipe Arch and Elliptical Shapes

Pipe arch and elliptical shapes are often used instead of circular pipe when the distance from channel invert to pavement surface is limited or when a wider section is desirable for low flow levels (see Figure P.3.7). These shapes may also be prone to clogging as the depth of flow increases and the free surface diminishes. Pipe arch and elliptical shapes are not as structurally efficient as a circular shape.

Figure P.3.7 Pipe Arch Culvert

Arches

Arch culverts offer less of an obstruction to the waterway than pipe arches and can be used to provide a natural stream bottom where the stream bottom is naturally erosion resistant (see Figure P.3.8). Foundation conditions must be adequate to support the footings. Riprap is frequently used for scour protection.

Figure P.3.8 Arch Culvert

Box Sections

Rectangular cross-section culverts are easily adaptable to a wide range of site conditions including sites that require low profile structures. Due to the flat sides and top, rectangular shapes are not as structurally efficient as other culvert shapes (see Figure P.3.9). In addition, box sections have an integral floor.

Figure P.3.9 Concrete Box Culvert

Multiple Barrels

Multiple barrels are used to obtain adequate hydraulic capacity under low embankments or for wide waterways (see Figure P.3.10). In some locations they may be prone to clogging as the area between the barrels tends to catch debris and sediment. When a channel is artificially widened, multiple barrels placed beyond the dominant channel are subject to excessive sedimentation. The span or opening length of multiple barrel culverts includes the distance between barrels as long as that distance is less than half the opening length of the adjacent barrels.

Figure P.3.10 Multiple Cell Concrete Culvert

Frame Culverts

Frame culverts are constructed of cast-in-place (see Figure P.3.11) or precast reinforced concrete. This type of culvert has no floor (concrete bottom) and fill material is placed over the structure.

Figure P.3.11 Frame Culvert

P.3.5 Culvert Materials

Precast Concrete

Precast concrete culverts are manufactured in six standard shapes:

- Circular
- Pipe arch
- Horizontal elliptical
- Vertical elliptical
- Rectangular
- Arch

With the exception of box culverts, concrete culvert pipe is manufactured in up to five standard strength classifications. The higher the classification number, the higher the strength. Box culverts are designed for various depths of cover and live loads. All of the standard shapes are manufactured in a wide range of sizes. Circular and elliptical pipes are available with standard sizes as large as 3.7 m (144 inches) in diameter, with larger sizes available as special designs. Standard box sections are also available with spans as large as 3.7 m (144 inches). Precast concrete arches on cast-in-place footings are available with spans up to 12.5 m (41 feet). A listing of standard sizes is provided at the end of Topics 7.12, 12.3, and 12.4.

SHAPE	RANGE OF SIZES	COMMON USES
CIRCULAR 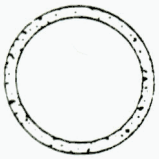	12 to 180 inches reinforced 4 to 36 inches non-reinforced	Culverts, storm drains, and sewers.
PIPE ARCH 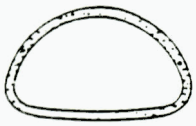	15 to 132 inches equivalent diameter	Culverts, storm drains, and sewers. Used where head is limited.
HORIZONTAL ELLIPSE 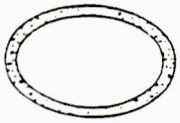	Span x Rise 18 to 144 inches equivalent diameter	Culverts, storm drains, and sewers. Used where head is limited.
VERTICAL ELLIPSE 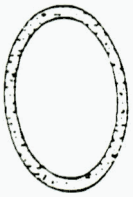	Span x Rise 36 to 144 inches equivalent diameter	Culverts, storm drains, and sewers. Used where lateral clearance is limited.
RECTANGULAR (box sections) 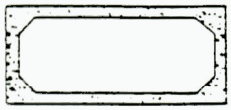	Span 3ft to 12ft	Culverts, storm drains, and sewers. Used for wide openings with limited head.
ARCH	Span 24 ft to 41 ft	Culvert and storm drains. For low, wide waterway enclosures.

Figure P.3.12 Standard Concrete Pipe Shapes
(Source: *FHWA Culvert Inspection Manual*, Supplement to the BIRM, July 1986)

Cast-in-Place Concrete

Culverts that are reinforced cast-in-place concrete are typically either rectangular or arch-shaped. The rectangular shape is more common and is usually constructed with multiple cells (barrels) to accommodate longer spans. One advantage of cast-in-place construction is that the culvert can be designed to meet the specific requirements of a site. Due to the long construction time of cast-in-place culverts, precast concrete or corrugated metal culverts are sometimes selected. However, in many areas, cast-in-place culverts are more practical and represent a significant number of installations.

Metal Culverts

Flexible culverts are typically either steel or aluminum and are constructed from factory-made corrugated metal pipe or field assembled from structural plates. Structural plate products are available as plate pipes, box culverts, or long span structures (see Figure 12.4.4). Several factors such as span length, vertical and horizontal clearance, peak stream flow and terrain determine which flexible culvert shape is used.

Masonry

Stone and brick are durable, low maintenance materials. Prior to the 1920's, both stone and brick were used frequently in railroad and road construction projects because they were readily available from rock cuts or local brickyards. Currently stone and brick are seldom used for constructing culvert barrels. Stone is used occasionally for this purpose in locations which have very acidic runoff, but the most common use of stone is for headwalls where a rustic or scenic appearance is desired. A stone masonry arch culvert is shown in Figure P.3.13. Refer to Topic 2.4 for a detailed discussion of stone masonry.

Figure P.3.13 Typical Stone Masonry Arch Culvert

Timber

There are a limited amount of timber culverts throughout the nation.

Timber culverts are generally box culverts and are constructed from individual timbers similar to railroad ties. Timber culverts are also analagous to a short span

timber bridge on timber abutments (see Figure P.3.14).

An inspection of a timber culvert should be conducted in the same manner as a timber bridge, including sounding and drilling to determine the extent of decay. The inspector should accurately describe the construction of the timber culvert and make note of the following timber defects and their location and extent:

- Defects from Checks, Splits, and Shakes
- Decay by Fungi
- Damage by Parasites
- Damage from chemical attack
- Damage from fire
- Damage from Impact/Collisions
- Damage from Abrasion/Wear
- Damage from Overstress
- Damage from Weathering/Warping

Refer to Topic 2.1.5 for a more detailed presentation of the types and causes of timber deterioration.

Bulging of the walls and any shape deformations may indicate unstable soil conditions. These problems and their location and extent should be recorded.

The vast majority of these culverts do not have floors. The inspector should check carefully at the footings for any scour or undermining. A probing rod should be used since scour holes can and do fill up with sediment.

Figure P.3.14 Timber Box

Other Materials

Aluminum, steel, concrete, and stone masonry are the most commonly found materials for existing culverts. There are several other materials which may be encountered during culvert inspections, including cast iron, stainless steel, terra cotta, asbestos cement, and plastic. These materials are not commonly found because they are either relatively new (plastic), labor intensive (terra cotta), or used for specialized situations (stainless steel and cast iron).

P.3.6 Culvert End Treatments

Culverts may have end treatments or end structures. End structures are used to control scour, support backfill, retain the embankment, improve hydraulic efficiency, protect the culvert barrel, and provide additional stability to the culvert ends.

The most common types of end treatments are:

- Projecting - The barrel simply extends beyond the embankment. No additional support is used (see Figure P.3.15).
- Mitered - The end of the culvert is cut to match the slope of the embankment. This type of treatment is also referred to as beveling and is commonly used when the embankment has some sort of slope paving (see Figure P.3.16).
- Skewed - Culverts, which are not perpendicular to the roadway, may have their ends cut parallel to the roadway (see Figure P.3.17).
- Pipe end section - A section of pipe is added to the ends of the culvert barrel. These are typically used on relatively smaller culverts.
- Headwalls - Used along with wingwalls to retain the fill, resist scour, and improve the hydraulic capacity of the culvert. Headwalls are usually reinforced concrete (see Figure P.3.18), but can be constructed of timber or masonry. Metal headwalls are usually found on metal box culverts.

Figure P.3.15 Culvert End Projection

Figure P.3.16 Culvert Mitered End

Figure P.3.17 Culvert Skewed End

Figure P.3.18 Culvert Headwall

Miscellaneous Appurtenance Structures may also be used with end treatments to improve hydraulic efficiency and reduce scour. Typical appurtenances are:

- Aprons - Used to reduce streambed scour at the inlets and outlets of culverts. Aprons are typically concrete slabs, but they may also be riprap (see Figure P.3.19). Most aprons include an upstream cutoff wall to protect against undermining.
- Energy Dissipators - Used when outlet velocities are likely to cause streambed scour downstream from the culvert. Stilling basins, riprap or other devices that reduce flow velocity can be considered energy dissipators (see Figure P.3.20).

Figure P.3.19 Apron

Figure P.3.20 Energy Dissipator

P.3.7 Hydraulics of Culverts

Culverts are primarily constructed to convey water under a highway, railroad, or other embankment. A culvert which does not perform this function properly may jeopardize the throughway, cause excessive property damage, or even loss of life. The hydraulic requirements of a culvert usually determine the size, shape, slope,

and inlet and outlet treatments. Culvert hydraulics can be divided into two general design elements:

- Hydrologic Analysis
- Hydraulic Analysis

A hydrologic analysis is the evaluation of the watershed area for a stream and is used to determine the design discharge or the amount of runoff the culvert should be designed to convey.

A hydraulic analysis is used to select a culvert, or evaluate whether an existing culvert is capable of adequately conveying the design discharge. To recognize whether a culvert is performing adequately the inspector should understand the factors that influence the amount of runoff to be handled by the culvert as well as the factors which influence the culvert's hydraulic capacity.

Hydrologic Analysis

Most culverts are designed to carry the surface runoff from a specific drainage area. While the selection and use of appropriate methods of estimating runoff requires a person experienced in hydrologic analysis and would usually not be performed by the inspector, the inspector should understand how changes in the topography of the drainage area can cause major changes in runoff. Climatic and topographic factors are briefly discussed in the following sections.

Climatic Factors

Climatic factors that may influence the amount of runoff include:

- Rainfall intensity
- Storm duration
- Rainfall distribution within the drainage area
- Soil moisture
- Snow melt
- Rain-on-snow
- Rain-hail
- Other factors

Topographic Factors

Topographic factors that may influence runoff include:

- The land use within the drainage area
- The size, shape, and slope of the drainage area
- Other factors such as the type of soil, elevation, and orientation of the area

Land use is the most likely characteristic to change significantly during the service life of a culvert. Changes in land use may have a considerable effect on the amount and type of runoff. Some surface types will permit more infiltration than other surface types. Practically all of the rain falling on paved surfaces will drain off

while much less runoff will result from undeveloped land. If changes in land use were not planned during the design of a culvert, increased runoff may exceed the capacity of an existing culvert when the land use does change.

The size, shape, and slope of a culvert's drainage area influence the amount of runoff that may be collected and the speed with which it will reach the culvert. The amount of time required for water to flow to the culvert from the most remote part of a drainage area is referred to as the time of concentration. Changes within the drainage area may influence the time of concentration.

Straightening or enclosing streams and eliminating temporary storage by replacing undersized upstream pipes are examples of changes which may decrease time of concentration. Land use changes may also decrease time of concentration since water will flow more quickly over paved surfaces. Since higher rainfall intensities occur for shorter storm durations, changes in time of concentration can have a significant impact on runoff. Drainage areas are sometimes altered and flow diverted from one watershed to another.

Hydraulic Capacity

The factors affecting capacity may include headwater depth, tailwater depth, inlet geometry, the slope of the culvert barrel, and the roughness of the culvert barrel. The various combinations of the factors affecting flow can be grouped into two types of conditions in culverts:

- Inlet control
- Outlet control

Inlet Control

Under inlet control the discharge from the culvert is controlled at the entrance of the culvert by headwater depth and inlet geometry (see Figure P.3.21). Inlet geometry includes the cross-sectional area, shape, and type of inlet edge. Inlet control governs the discharge as long as water can flow out of the culvert faster than it can enter the culvert.

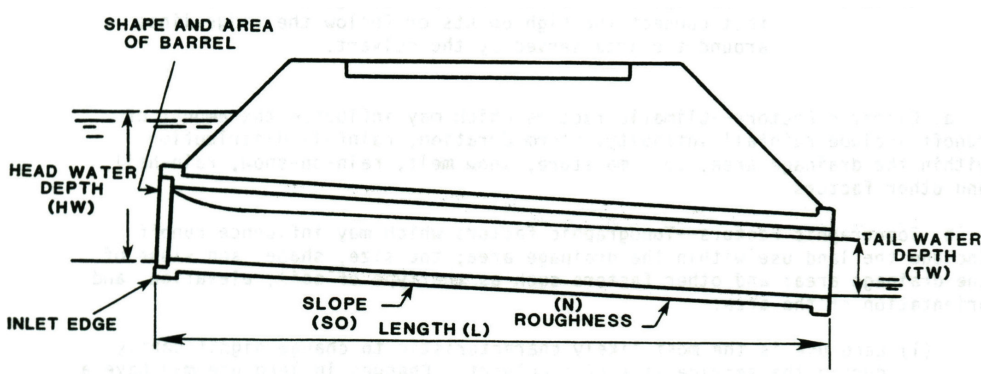

Figure P.3.21 Factors Affecting Culvert Discharge (Source: Adapted from Concrete Pipe Handbook, American Concrete Pipe Association)

Most culverts, except those in flat terrain, are designed to operate under inlet control during peak flows. Since the entrance characteristics govern, minor modifications at the culvert inlet can significantly effect hydraulic capacity. For example, change in the approach alignment of the stream may reduce capacity, while the improvement of the inlet edge condition, or addition of properly

designed headwalls and wingwalls, may increase the capacity.

Outlet Control

Under outlet control water can enter the culvert faster than water can flow through the culvert. The discharge is influenced by the same factors as inlet control plus the tailwater depth and barrel characteristics (slope, length, and roughness). Culverts operating with outlet control usually lie on flat slopes or have high tailwater.

When culverts are operating with outlet control, changes in barrel characteristics or tailwater depth may effect capacity. For example, increased tailwater depth or debris in the culvert barrel may reduce the capacity.

Special Hydraulic Considerations

Inlet and Outlet Protection

The inlets and outlets of culverts may require protection to withstand the hydraulic forces exerted during peak flows. Inlet ends of flexible pipe culverts, which are not adequately protected or anchored, may be subject to entrance failures due to buoyant forces. The outlet may require energy dissipators to control erosion and scour and to protect downstream properties. High outlet velocities may cause scour which undermines the endwall, wingwalls, and culvert barrel. This erosion can cause end-section drop-off in rigid sectional pipe culverts.

Protection Against Piping

Seepage along the outside of the culvert barrel may remove supporting material. This process is referred to as “piping”, since a hollow cavity similar to a pipe is often formed. Piping can also occur through open joints. Piping is controlled by reducing the amount and velocity of water seeping along the outside of the culvert barrel. This may require watertight joints and in some cases anti-seep collars. Good backfill material and adequate compaction of that material are also important.

P.3.8 Factors Affecting Culvert Performance

Some of the common factors that can affect the performance of a culvert include the following:

- Construction Techniques - Specifically, how well the foundation was prepared, the bedding placed, and the backfill compacted.
- The characteristics of the stream flow - water depth, velocity, turbulence.
- Structural Integrity - how well the structure can withstand the loads to which it is subjected, especially after experiencing substantial deterioration and section loss.
- Suitability of the Foundation - Can the foundation material provide adequate support?
- Stability of the embankment in relationship to other structures on the upstream or downstream side.
- Hydraulic capacity - if the culvert cross section is insufficient for flow, upstream ponding could result and damage the embankment.
- The presence of vegetation - can greatly affect the means and efficiency of

the flow through the culvert.

- The possibility of abrasion and corrosion caused by substances in the water, the surrounding soil or atmosphere.

P.3.9 Types and Locations of Culvert Distress

Types of Distress

The combination of high earth loads, long pipe-like structures and running water tends to produce the following types of distress:

- Shear or bending failure - High embankments may impose very high loads on all sides of a culvert and can cause shear or bending failure (see Figure P.3.22).
- Foundation failure - Either a smooth sag or differential vertical displacement at construction or expansion joints (settlement). Tipping of wingwalls. Lateral movement of precast or cast-in-place box sections (see Figure P.3.23).
- Hydraulic failure - Full flow design conditions result in accelerated scour and undermining at culvert ends as well as at any irregularities within the culvert due to foundation problems (see Figure P.3.24).
- Debris accumulation - Branches, sediment and trash can often be trapped at the culvert entrance restricting the channel flow and causing scour (see Figure P.3.25).

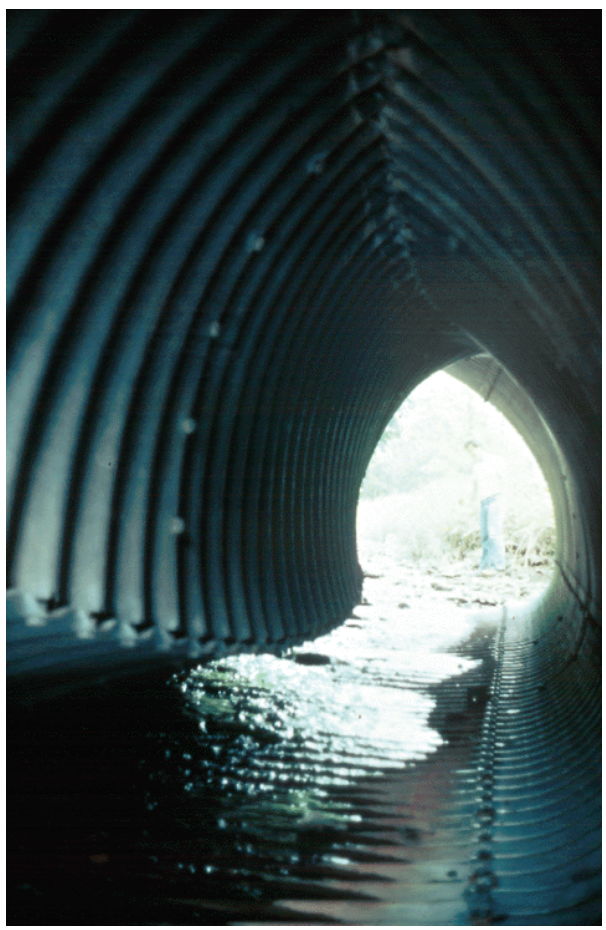

Figure P.3.22 Bending or Shear Failure

Figure P.3.23 Cracking of Culvert End Treatment Due to Foundation Settlement

Figure P.3.24 Scour and Undermining at Culvert Inlet

Figure P.3.25 Debris and Sediment Buildup

Inspection Locations

A logical sequence for inspecting culverts helps ensure that a thorough and complete inspection will be conducted. In addition to the culvert components, the inspector should also look for highwater marks, changes in the drainage area, and other indications of potential problems. In this regard, the inspection of culverts is similar to the inspection of bridges.

For typical installations, it is usually convenient to begin the field inspection with general observations of the overall condition of the structure and inspection of the approach roadway. The inspector should select one end of the culvert and inspect the embankment, waterway, headwalls, wingwalls, and culvert barrel. The inspector should then move to the other end of the culvert. The following sequence is applicable to all culvert inspections:

- Overall condition
- Approach roadway and embankment settlement
- Waterway (see in Topic 11.2)
- End treatments
- Appurtenance structures
- Culvert barrel

Overall Condition

General observations of the condition of the culvert should be made while approaching the culvert area. The purpose of these initial observations is to familiarize the inspector with the structure. They may also point out a need to modify the inspection sequence or indicate areas requiring special attention. The inspector should also be alert for changes in the drainage area that might affect runoff characteristics.

Approach Roadway and Embankment

Inspection of the approach roadway and embankment includes an evaluation of the functional adequacy (see Figure P.3.26).

The approach roadway and embankment should also be inspected for the following functional requirements:

- Signing
- Alignment
- Clearances
- Adequate shoulder profile
- Safety features

Figure P.3.26 Approach Roadway at a Culvert Site

Defects in the approach roadway and embankment may be indicators of possible structural or hydraulic problems in the culvert. The approach roadway and embankment should be inspected for the following conditions:

- Sag in roadway or guardrail
- Cracks in pavement

- Pavement patches or evidence that roadway has settled
- Erosion or failure of side slopes

Approach roadways should be examined for sudden dips, cracks, and sags in the pavement (see Figure P.3.27). These usually indicate excessive deflection of the culvert or inadequate compaction of the backfill material.

Figure P.3.27 Roadway Over a Culvert

New pavement can temporarily hide approach problems. It is advisable for the inspector to have previous inspection reports that may indicate the age of the present overlay.

It is important to note that not all defects in the approach roadways have an adverse affect on the culvert. Deterioration of the pavement may be due to excessive traffic and no other reason.

Embankment

The embankment around the culvert entrance and exit should be inspected for slide failures in the fill around the box (see Figure P.3.28). Check for debris at the inlet and outlet and within the culvert. Also note if vegetation is obstructing the ends.

Figure P.3.28 Slide Failure

End Treatments

The SI&A Inspection Sheet does not specifically address end treatments in terms of inventory data or condition. The condition rating of end treatments is part of SI&A Item 62, Culvert Condition, and can have an impact on SI&A Item 67, Structural Evaluation.

Inspections of end treatments primarily involve visual inspection, although hand tools should be used such as a plumb bob to check for misalignment, a hammer to sound for defects, and a probing rod to check for scour and undermining. In general, headwalls should be inspected for movement or settlement, cracks, deterioration, and traffic hazards. Culvert ends should be checked for undermining, scour, and evidence of piping.

Figure P.3.29 Headwall and Wingwall End Treatment on Box Culvert

The most common types of box culvert end treatments are:

- Skewed Ends
- Headwalls

Both end treatment types use wingwalls to retain the embankment around the opening.

Wingwalls should be inspected to ensure they are in proper vertical alignment (see Figure P.3.30). Wingwalls may be tilted due to settlement, slides or scour. See Topic 10.1 for a detailed description of defects and inspection procedures of wingwalls.

Figure P.3.30 Potential for Tilted Wingwalls

Skewed Ends - Skewing the end of a culvert has nearly the same effect on structural capacity as does mitering (see Figure P.3.31). Stresses increase because a full box shape is not present at the end.

Figure P.3.31 Skewed End

Headwalls – Headwalls and wingwalls should be inspected for undermining and settlement. Cracking, tipping or separation of culvert barrel from the headwall and wingwalls is usually good evidence of undermining. (see Figure P.3.32 and P.3.33).

Figure P.3.32 Culvert Headwall

Appurtenance Structures Typical appurtenance structures are:

- Aprons
- Energy Dissipators

Aprons – should be checked for any undermining or settlement. The joints between the apron and headwalls should be inspected to see if it is watertight. (see Figure P.3.33)

Figure P.3.33 Apron

Energy Dissipaters – are used when outlet velocities are likely to cause streambed scour downstream from the culvert (see Figure P.3.34). Energy dissipaters may include stilling basins, riprap or other devices. Energy dissipaters should be inspected for material defects and overall effectiveness.

Figure P.3.34 Energy Dissipater

Culvert Barrel

The full length of the culvert should be inspected from the inside. All components of the culvert barrel should be visually examined, including walls, floor, top slab, and joints. The concrete should be sounded by tapping with a hammer particularly around cracks and other defects. It is important to time the inspection so that water levels are low. Culverts with small diameters can be inspected by looking through the culvert from both ends or by using a small movable camera. The condition of the culvert barrel is rated under SI&A Item 62, which covers all structural components of a culvert.

For concrete box culverts, the culvert barrels should be inspected primarily for defects such as misalignment, joint defects, cracking, spalling, and other material defects. For a detailed description of concrete box culvert inspection, refer to Topic 7.12.

P.3.10 Durability

Although the structural condition is a very important element in the performance of culverts, durability problems are probably the most frequent cause of replacement. Culverts are more likely to "wear away" than fail structurally. Durability is affected by two mechanisms: corrosion and abrasion.

Corrosion

Corrosion affects all metals and alloys, although the rates can vary widely depending both upon the chemical and physical properties of the metal and upon the environmental condition to which it is exposed. When a metal corrodes a very low voltage electrical current is established between two parts of a metal surface that have different voltage potential. The difference in voltage potential may be caused by slight variations in the material, changes in surface condition, or the presence of foreign materials. The current removes metallic ions from one location and deposits them at another location, causing corrosion. The chemicals present in the water greatly influence its effectiveness as an electrolyte.

Corrosion is the deterioration of culvert materials by chemical or electrochemical reaction to the environment. Culvert corrosion may occur in many different soils and waters. These soils and waters may contain acids, alkalis, dissolved salts, organics, industrial wastes or other chemicals, mine drainage, sanitary effluents, and dissolved or free gases. However, culvert corrosion is generally related to water and the chemicals that have reacted to, become dissolved in, or been transported by the water.

Corrosion can attack the inside or outside of the culvert barrel. The chemicals in drainage water can attack the material on the interior of the culvert. Culverts subject to continuous flows or standing water with aggressive chemicals are more likely to be damaged than those with intermittent flows. The exterior of culverts can be attacked by chemicals in the ground water which can originate in the soil, be introduced through contaminates in the backfill soil, or be transported by subsurface flow.

Although less common than with metal pipe, corrosion can occur in concrete culverts. Metallic corrosion can take place in the reinforcing steel when it is exposed by cracking or spalling, when the concrete cover is inadequate or when the concrete is porous enough to allow water to contact the reinforcing steel.

If the steel corrodes, the corrosion products expand and may cause spalling of the concrete. Corrosion can also take place in the concrete itself. It is not, however, the same type of electrochemical reaction that occurs in metal. Other reactions between the concrete materials and the chemicals present in the stream flow or ground water are involved and can result in deterioration of the concrete.

Abrasion

Abrasion is the process of wearing down or grinding away surface material as water laden with sand, gravel, or stones flows through a culvert. Abrasive forces increase as the velocity of the water flowing through a culvert increases; for example, doubling the velocity of a stream flow can cause the abrasive power to become approximately four-fold.

Often corrosion and abrasion operate together to produce far greater deterioration than would result from either alone. Abrasion can accelerate corrosion by removing protective coatings and allowing water-borne chemicals to come into contact with corrodible culvert materials.

P.3.11 Soil and Water Conditions that Affect Culverts

Certain soil and water conditions have been found to have a strong relationship to accelerated culvert deterioration. These conditions are referred to as "aggressive" or "hostile." The most significant conditions of this type are:

pH Extremes

pH is a measure of the relative acidity or alkalinity of water. A pH of 7.0 is neutral; values of less than 7.0 are acid, and values of more than 7.0 are alkaline. For culvert purposes, soils or water having a pH of 5.5 or less are strongly acid and those of 8.5 or more are strongly alkaline.

Acid water stems from two sources, mineral and organic. Mineral acidity comes from sulfurous wells and springs, and drainage from coal mines. These sources contain dissolved sulfur and iron sulfide which may form sulfurous and sulfuric

acids. Mineral acidity as strong as pH 2.3 has been encountered. Organic acidity usually found in swampy land and barnyards rarely produces a pH of less than 4.0. Alkalinity in water is caused by strong alkali-forming minerals and from limed and fertilized fields. Acid water (low pH) is more common to wet climates and alkaline water (high pH) is more common to dry climates. As the pH of water in contact with culvert materials, either internally or externally, deviates from neutral, 7.0, it generally becomes more hostile.

Electrical Resistivity

This measurement depends largely on the nature and amount of dissolved salts in the soil. The greater the resistance the less the flow of electrical current associated with corrosion. High moisture content and temperature lower the resistivity and increase the potential for corrosion. Soil resistivity generally decreases as the depth increases. The use of granular backfill around the entire pipe will increase electrical resistivity and will reduce the potential for galvanic corrosion.

Several states rely on soil and water resistivity measurements as an important index of corrosion potential. Some states and the FHWA have published guidelines that use a combination of the pH and electrical resistivity of soil and water to indicate the corrosion potential at proposed culvert sites. The collection of pH and electrical resistivity data during culvert inspections can provide valuable information for developing local guidelines.

Soil Characteristics

The chemical and physical characteristics of the soil, which will come into contact with a culvert, can be analyzed to determine the potential for corrosion. The presence of base-farming and acid-forming chemicals is important. Chlorides and other dissolved salts increase electrical conductivity and promote the flow of corrosion currents. Sulfate soils and water can be erosive to metals and harmful to concrete. The permeability of soil to water and to oxygen is another variable in the corrosion process.

P.3.12 Culvert Protective Systems

There are several protective measures that can be taken to increase the durability of culverts. The more commonly used measures are:

Extra Thickness

For some aggressive environments, it may be economical to provide extra thickness of concrete or metal.

Bituminous Coating

This is the most common protective measure used on corrugated steel pipe. This procedure can increase the resistance of metal pipe to acidic conditions if the coating is properly applied and remains in place. Careful handling during transportation, storage, and placement is required to avoid damage to the coating. Bituminous coatings can also be damaged by abrasion. Field repairs should be made when bare metal has been exposed. Fiber binding is sometimes used to improve the adherence of bituminous material to the metallic-coated pipe.

Bituminous Paved Inverts

Paving the inverts of corrugated metal culverts to provide a smooth flow and to protect the metal has sometimes been an effective protection from particularly abrasive and corrosive environments. Bituminous paving is usually at least 3 mm (1/8-inch) thick over the inner crest of the corrugations. Generally only the lower quadrant of the pipe interior is paved. Fiber binding is sometimes used to improve

the adherence of bituminous material to the metallic-coated pipe.

Other Coatings

There are several other coating materials that are being used to some degree throughout the country. Polymeric, epoxy, fiberglass, clay, and concrete field paving, have all been used as protection against corrosion. Galvanizing is the most common of the metallic coatings used for steel. It involves the application of a thin layer of zinc on the metal culvert. Other metallic coatings used to protect steel culverts are aluminum and aluminum-zinc.