Table of Contents

Basic Concepts
Primer

P.2 Bridge Mechanics P.2.1

P.2.1 Introduction P.2.1

P.2.2 Bridge Design Loadings P.2.1
Dead Loads P.2.2
Primary Live Loads P.2.2
AASHTO Truck Loadings P.2.3
AASHTO Lane Loadings P.2.5
LRFD Live Loads P.2.5
Alternate Military Loading P.2.7
Permit Vehicles P.2.8
Secondary Loads P.2.8

P.2.3 Bridge Response to Loadings P.2.9
Equilibrium P.2.9
Axial Forces P.2.10
Bending Forces P.2.11
Shear Forces P.2.13
Torsional Forces P.2.14
Reactions P.2.15

P.2.4 Material Response to Loadings P.2.16
Force P.2.16
Stress P.2.16
Deformation P.2.17
Strain P.2.17
Elastic Deformation P.2.17
Plastic Deformation P.2.17
Creep P.2.18
Thermal Effects P.2.18
Stress-Strain Relationship P.2.18
Modulus of Elasticity P.2.18
Overloads P.2.19
Buckling P.2.19

Elongation P.2.20
Ductility and Brittleness P.2.20
Fatigue P.2.20
Isotropy P.2.21

P.2.5 Mechanics of Materials P.2.21
Yield Strength P.2.21
Tensile Strength P.2.21
Toughness P.2.21

P.2.6 Bridge Movements P.2.21
Live Load Deflections P.2.21
Thermal Movements P.2.22
Rotational Movements P.2.22

P.2.7 Design Methods P.2.22
Allowable Stress Design P.2.22
Load Factor Design P.2.22
Load and Resistance Factor Design P.2.22

P.2.8 Bridge Ratings P.2.22
Inventory Rating P.2.23
Operating Rating P.2.24
Permit Loading P.2.24
Rating Vehicles P.2.24
Bridge Posting P.2.26

P.2.9 Span Classifications P.2.27
Simple P.2.28
Continuous P.2.29
Cantilever P.2.30

P.2.10 Bridge Roadway Interaction P.2.31
Non-composite P.2.31
Composite P.2.32
Integral P.2.33
Orthotropic P.2.33

P.2.11 Redundancy P.2.34
Load Path Redundancy P.2.34
Structural Redundancy P.2.34
Internal Redundancy P.2.34

P.2.12 Foundations P.2.35
Spread Footings P.2.35
Deep Foundations P.2.35

This page intentionally left blank.

Basic Equations of Bridge Mechanics

$$f_a = \frac{P}{A}$$ (Page P.2.9)

$$f_b = \frac{Mc}{I}$$ (Page P.2.11)

$$f_v = \frac{V}{A_w}$$ (Page P.2.13)

$$S = \frac{F}{A}$$ (Page P.2.16)

$$\varepsilon = \frac{\Delta L}{L}$$ (Page P.2.17)

$$E = \frac{S}{\varepsilon}$$ (Page P.2.18)

$$\text{Bridge Load Capacity Rating} = \frac{\text{Allowable Load - Dead Load}}{\text{Rating Vehicle Live Load Plus Impact}} \text{ x Vehicles Weight (Tons)}$$

where:

A	=	area; cross-sectional area
A_w	=	area of web
c	=	distance from neutral axis to extreme fiber (or surface) of beam
E	=	modulus of elasticity
F	=	force; axial force
f_a	=	axial stress
f_b	=	bending stress
f_v	=	shear stress
I	=	moment of inertia
L	=	original length
M	=	applied moment
S	=	stress
V	=	vertical shear force due to external loads
ΔL	=	change in length
ε	=	strain

Topic P.2 Bridge Mechanics

P.2.1 Introduction

Mechanics is the branch of physical science that deals with energy and forces and their relation to the equilibrium, deformation, or motion of bodies. The bridge inspector will primarily be concerned with statics, or the branch of mechanics dealing with solid bodies at rest and with forces in equilibrium.

The two most important reasons for a bridge inspector to study bridge mechanics are:

- To understand how bridge members function
- To recognize the impact a defect may have on the load-carrying capacity of a bridge component or element

While this topic presents the basic principles of bridge mechanics, the references listed in the bibliography should be referred to for a more complete presentation of this subject.

P.2.2 Bridge Design Loadings

A bridge is designed to carry or resist design loadings in a safe and economical manner. Loads may be concentrated or distributed depending on the way in which they are applied to the structure.

A concentrated load, or point load, is applied at a single location or over a very small area. Vehicle loads are considered concentrated loads.

A distributed load is applied to all or part of the member, and the amount of load per unit of length is generally constant. The weight of superstructures, bridge decks, wearing surfaces, and bridge parapets produce distributed loads. Secondary loads, such as wind, stream flow, earth cover and ice, are also usually distributed loads.

Highway bridge design loads are established by the American Association of State Highway and Transportation Officials (AASHTO). For many decades, the primary bridge design code in the United States was the AASHTO *Standard Specifications for Highway Bridges* (*Specifications*), as supplemented by agency criteria as applicable.

During the 1990's AASHTO developed and approved a new bridge design code, entitled *AASHTO LRFD Bridge Design Specifications*. It is based upon the principles of Load and Resistance Factor Design (LRFD), as described in Topic P.2.7.

Load and Resistance Factor Rating (LRFR) consists of three methods: design load rating, legal load rating, and permit load rating. Each serves a specific purpose in the evaluation of bridge safety or serviceability.

Bridge design loadings can be divided into three principal categories:

- Dead loads
- Primary live loads
- Secondary loads

Dead Loads

Dead loads do not change as a function of time and are considered full-time, permanent loads acting on the structure. They consist of the weight of the materials used to build the bridge (see Figure P.2.1). Dead load includes both the self-weight of structural members and other permanent external loads. They can be broken down into two groups, initial and superimposed.

Initial dead loads are loads which are applied before the concrete deck is hardened, including the beam itself and the concrete deck. Initial deck loads must be resisted by the non-composite action of the beam alone. Superimposed dead loads are loads which are applied after the concrete deck has hardened (on a composite bridge), including parapets and any anticipated future deck pavement. Superimposed dead loads are resisted by the beam and the concrete deck acting compositely. Non-composite and composite action are described in Topic P.2.10.

Dead load includes both the self-weight of the structural members and other permanent external loads.

Example of self-weight: A 6.1 m (20-foot) long beam weighs 0.73 kN per m (50 pounds per linear foot). The total weight of the beam is 4.45 kN (1000 pounds). This weight is called the self-weight of the beam.

Example of an external dead load: If a utility such as a water line is permanently attached to the beam in the previous example, then the weight of the water line is an external dead load. The weight of the water line plus the self weight of the beam comprises the total dead load.

Total dead load on a structure may change during the life of the bridge due to additions such as deck overlays, parapets, utility lines, and inspection catwalks.

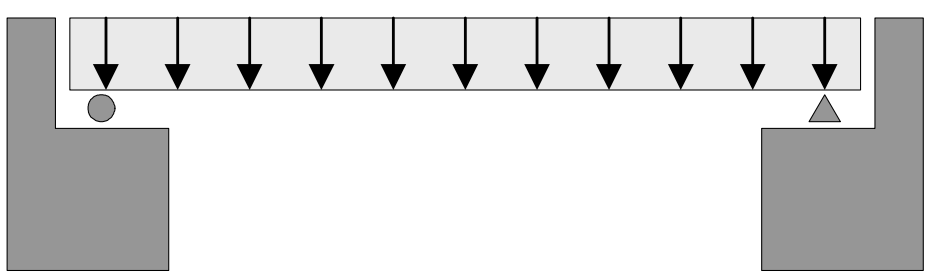

Figure P.2.1 Dead Load on a Bridge

Primary Live Loads

A live load is a temporary dynamic load applied to a structure. In bridge applications, the primary live loads are moving vehicular loads (see Figure P.2.2).

To account for the affects of speed, vibration, and momentum, highway live loads are typically increased for impact. Impact is expressed as a fraction of the live load, and its value is a function of the span length.

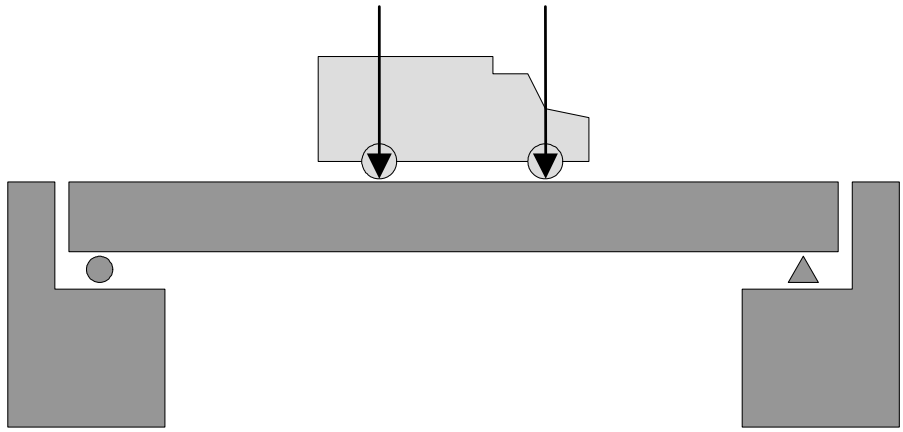

Figure P.2.2 Vehicle Live Load on a Bridge

AASHTO Truck Loadings

Standard vehicle live loads have been established by AASHTO for use in bridge design and rating. There are two basic types of standard truck loadings described in the current *AASHTO Specifications*. A third type of loading is used for AASHTO Load and Resistance Factor Design and Rating.

The first type is a single unit vehicle with two axles spaced at 14 feet (4.3 m) and designated as a highway truck or "H" truck (see Figure P.2.3). The weight of the front axle is 20% of the gross vehicle weight, while the weight of the rear axle is 80% of the gross vehicle weight. The "H" designation is followed by the gross tonnage of the particular design vehicle. The AASHTO LRFD design vehicular live load, designated HL-93, is a modified version of the HS-20 highway loadings from the *AASHTO Standard Specifications*.

Example of an H truck loading: H20-35 indicates a 20 ton vehicle with a front axle weighing 4 tons, a rear axle weighing 16 tons, and the two axles spaced 14 feet apart. This standard truck loading was first published in 1935. The 1935 truck loading used a train of trucks that imitated the railroad industry's standards.

As trucks grew heavier during World War II, AASHTO developed the new concept of hypothetical trucks. These fictitious trucks are used only for design and do not resemble any real truck on the road. The loading is now performed by placing one truck, per lane, per span. The truck is moved along the span to determine the point where it produces the maximum moment. The current designation is H20-44 published in 1944.

The second type of standard truck loading is a two unit, three axle vehicle comprised of a highway tractor with a semi-trailer. It is designated as a highway semi-trailer truck or "HS" truck (see Figure P.2.4).

The tractor weight and wheel spacing is identical to the H truck loading. The semi-trailer axle weight is equal to the weight of the rear tractor axle, and its spacing from the rear tractor axle can vary from 4.3 to 9.1 m (14 to 30 feet). The "HS" designation is followed by a number indicating the gross weight in tons of the tractor only.

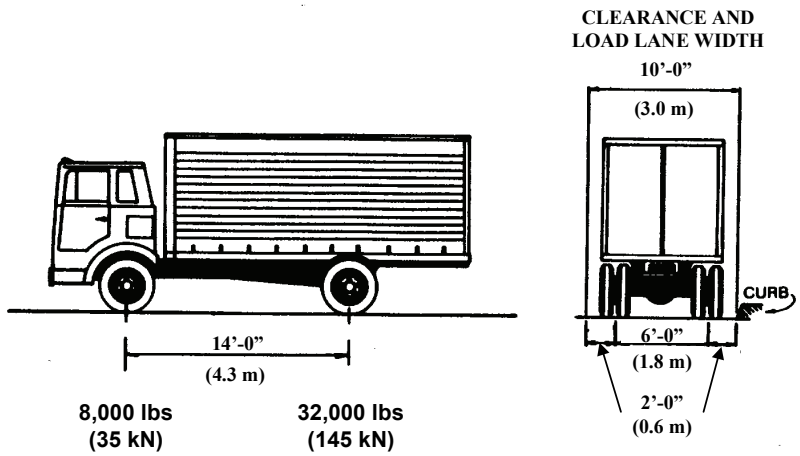

Figure P.2.3 AASHTO H20 Truck

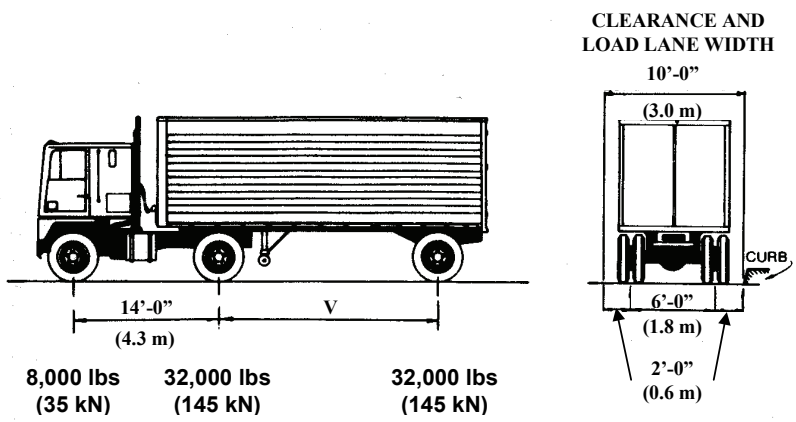

Figure P.2.4 AASHTO HS20 Truck

Example of an HS truck loading: HS20-44 indicates a vehicle with a front tractor axle weighing 4 tons, a rear tractor axle weighing 16 tons, and a semi-trailer axle weighing 16 tons. The tractor portion alone weighs 20 tons, but the gross vehicle weight is 36 tons. This standard truck loading was first published in 1944.

In specifications prior to 1944, a standard loading of H15 was used. In 1944, the policy of affixing the publication year of design loadings was adopted. In

specifications prior to 1965, the HS20-44 loading was designated as H20-S16-44, with the S16 identifying the gross axle weight of the semi-trailer in tons.

The H and HS vehicles do not represent actual vehicles, but can be considered as "umbrella" loads. The wheel spacings, weight distributions, and clearance of the Standard Design Vehicles were developed to give a simpler method of analysis, based on a good approximation of actual live loads. These loads are used for the design of bridge members. Depending on such items as highway classification, truck usage and span classification, for example, an appropriate design load is chosen to determine the most economical member. Bridge posting is determined by performing a rating analysis using the current member condition of an in-service bridge. Various rating methods will be discussed further in Topic P.2.8.

AASHTO Lane Loadings

In addition to the standard truck loadings, a system of equivalent lane loadings was developed in order to provide a simple method of calculating bridge response to a series, or "train" of trucks. Lane loading consists of a uniform load per linear foot of traffic lane combined with a concentrated load located on the span to produce the most critical situation in the structure (see Figure P.2.5).

For design and load capacity rating analysis, an investigation of both a truck loading and a lane loading must be made to determine which produces the greatest stress for each particular member. Lane loading will generally govern over truck loading for longer spans. Both the H and HS loadings have corresponding lane loads.

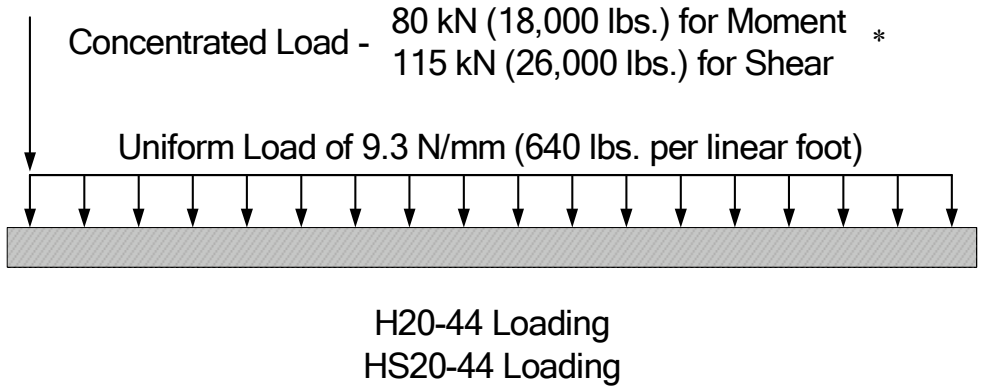

* Use two concentrated loads for negative moment in continuous spans (Refer to *AASHTO Bridge Design Specifications*, 2005 Interim; Article 3.6.1.3)

Figure P.2.5 AASHTO Lane Loadings.

LRFD Live Loads

Under HS-20 loading as described earlier, the truck or lane load is applied to each loaded lane. Under HL-93 loading, the design truck or tandem is combined with the lane load and applied to each loaded lane.

The LRFD design truck is exactly the same as the AASHTO HS-20 design truck. The LRFD design tandem, on the other hand, consists of a pair of 110 kN axels spread at 1.2 m (25 kip axles spaced 4 feet) apart. The transverse wheel spacing

of all of the trucks is 6 feet.

The magnitude of the HL-93 lane load is equal to that of the HS-20 lane load. The lane load is 9.3 N/mm (0.64 kips per linear foot) longitudinally and it is distributed uniformly over a 3 m (10 foot) width in the transverse direction. The difference between the HL-93 lane load and the HS-20 lane load is that the HL-93 lane load does not include a point load. The HL-93 design load consists of a combination of the design truck or design tandem, and design lane load (see Figure P.2.6).

Finally, for LRFD live loading, the dynamic load allowance, or impact, is applied to the design truck or tandem but is not applied to the design lane load. It is typically 33 percent of the design vehicle.

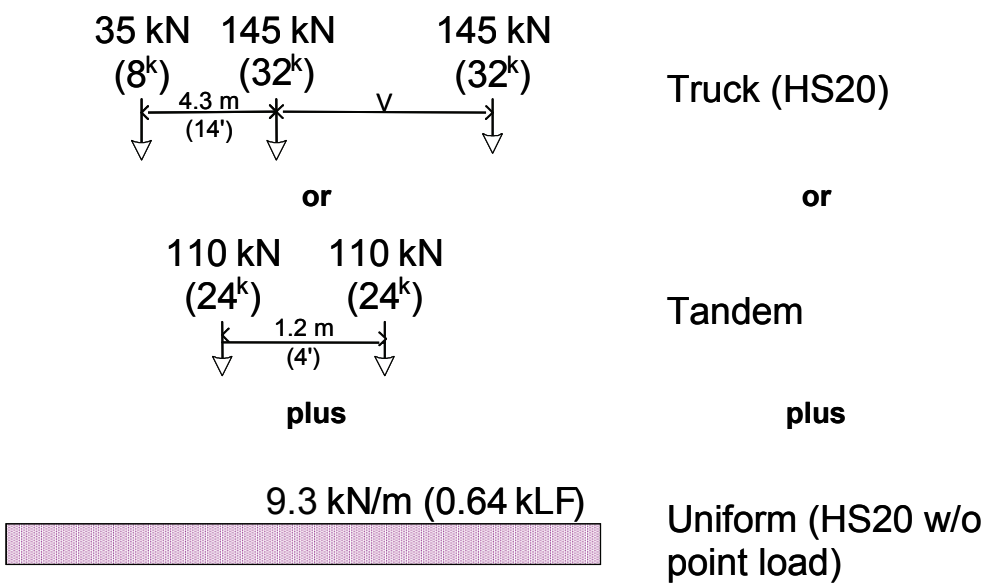

Figure P.2.6 AASHTO LRFD Loading

Alternate Military Loading

The Alternate Military Loading is a single unit vehicle with two axles spaced at 1.2 m (4 feet) and weighing 110 kN (12 tons) each. It has been part of the AASHTO *Specifications* since 1977. Bridges on interstate highways or other highways which are potential defense routes are designed for either an HS20 loading or an Alternate Military Loading (see Figure P.2.7).

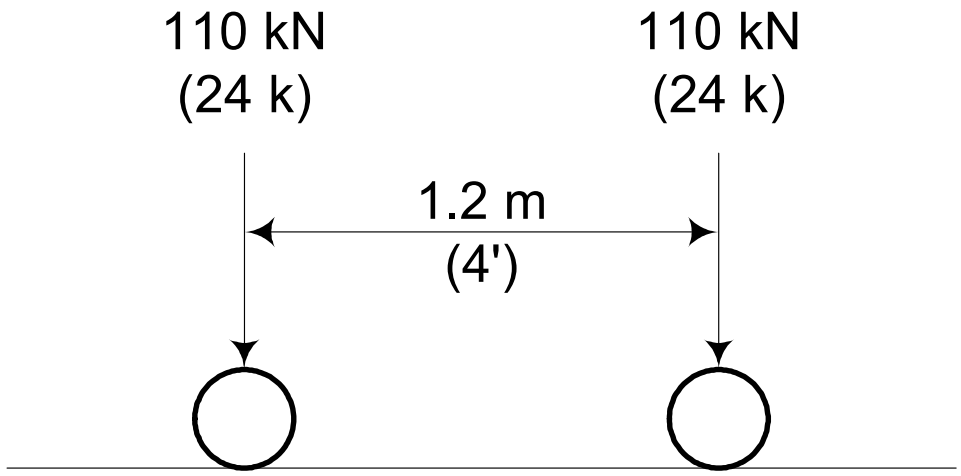

Figure P.2.7 Alternate Military Loading

Permit Vehicles

Permit vehicles are overweight vehicles which, in order to travel a state's highways, must apply for a permit from that state. They are usually heavy trucks (e.g., combination trucks, construction vehicles, or cranes) that have varying axle spacings depending upon the design of the individual truck. To ensure that these vehicles can safely operate on existing highways and bridges, most states require that bridges be designed for a permit vehicle or that the bridge be checked to determine if it can carry a specific type of vehicle. For safe and legal operation, agencies issue permits upon request that identify the required gross weight, number of axles, axle spacing, and maximum axle weights for a designated route (see Figure P.2.8).

Figure P.2.8 Permit Vehicle

Secondary Loads

In bridge applications, the secondary loads are temporary dynamic loads and consist of the following:

- **Buoyancy** - the force created due to the tendency of an object to rise when submerged in water
- **Centrifugal force -** an outward force that a live load vehicle exerts on a curved bridge
- **Curb loading -** curbs are designed to resist a lateral force of not less than 7.3 kN per linear meter (500 pounds per linear foot)
- **Earth pressure** - a horizontal force acting on earth-retaining substructure units, such as abutments and retaining walls
- **Earthquake -** bridge structures must be built so that motion during an earthquake will not cause a collapse
- **Ice pressure** - a horizontal force created by static or floating ice jammed against bridge components
- **Longitudinal force** - a force in the direction of the bridge caused by braking and accelerating of live load vehicles

- **Railing loading -** railings are provided along the edges of structures for protection of traffic and pedestrians; the maximum transverse load applied to any one element need not exceed 44.5 kN (10 kips)
- **Rib shortening -** a force in arches and frames created by a change in the geometrical configuration due to dead load
- **Shrinkage -** applied primarily to concrete structures, this is a multi-directional force due to dimensional changes resulting from the curing process
- **Sidewalk loading -** sidewalk floors and their immediate supports are designed for a pedestrian live load not exceeding 4.1 kN per square meter (85 pounds per square foot)
- **Stream flow pressure -** a horizontal force acting on bridge components constructed in flowing water
- **Temperature -** since materials expand as temperature increases and contract as temperature decreases, the force caused by these dimensional changes must be considered
- **Wind load on live load** - wind effects transferred through the live load vehicles crossing the bridge
- **Wind load on structure** - wind pressure on the exposed area of a bridge

A bridge may be subjected to several of these loads simultaneously. The AASHTO *Specifications* have established a table of loading groups. For each group, a set of loads is considered with a coefficient to be applied for each particular load. The coefficients used were developed based on the probability of various loads acting simultaneously.

P.2.3 Bridge Response to Loadings

Each member of a bridge is intended to respond to loads in a particular way. The bridge inspector must understand the manner in which loads are applied to each member in order to evaluate if it functions as intended. Once the inspector understands a bridge member's response to loadings, he will be able to determine if a member defect has an adverse effect on the load-carrying capacity of that member.

Bridge members respond to various loadings by resisting four basic types of forces. These are:

- Axial forces (compression and tension)
- Bending forces (flexure)
- Shear forces
- Torsional forces

Equilibrium

In calculating these forces, the analysis is governed by equations of equilibrium. Equilibrium equations represent a balanced force system and may be expressed as:

$$\sum V = 0$$
$$\sum H = 0$$
$$\sum M = 0$$

where: Σ = summation of
V = vertical forces
H = horizontal forces
M = moments (bending forces)

Axial Forces

An axial force is a push or pull type of force which acts parallel to the longitudinal axis of a member. An axial force causes compression if it is pushing and tension if it is pulling (see Figure P.2.9). Axial forces are generally expressed in English units of pounds or kips, and metric units of Newtons or kilonewtons.

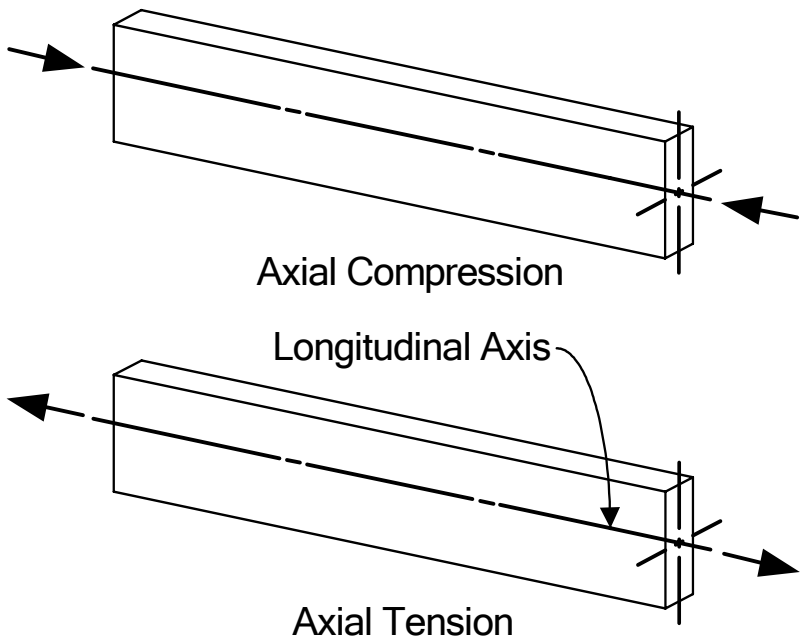

Figure P.2.9 Axial Forces

Examples of axial forces: A man sitting on top of a fence post is exerting an axial force that causes compression in the fence post. A group of people playing tug-of-war exerts an axial force that causes tension in the rope.

Truss members are common bridge elements which carry axial loads. They are designed for either compression and tension forces. Cables are designed for axial forces in tension.

True axial forces act uniformly over a cross-sectional area. Therefore, axial stress can be calculated by dividing the force by the area on which it acts.

$$f_a = \frac{P}{A}$$

where: f_a = axial stress
P = axial force
A = cross-sectional area

When bridge members are designed to resist axial forces, the cross-sectional area will vary depending on the magnitude of the force, whether the force is tensile or compressive, and the type of material used.

For tension and compression members, the cross-sectional area must satisfy the previous equation for an acceptable axial stress. However, the acceptable axial compressive stress is generally lower than that for tension because of a phenomenon called buckling.

Bending Forces

Bending forces in bridge members are caused when a load is applied perpendicular to the longitudinal or neutral axis. A moment is commonly developed by the perpendicular loading which causes a member to bend. The greatest bending moment that a beam can resist is generally the governing factor which determines the size and material of the member. Bending moments can be positive or negative and produce both compression and tension forces at different locations in the member (see Figure P.2.10). Moments are generally expressed in English units of pound-feet or kip-feet, and metric units of Newton-meters or kilonewton-meters.

Example of bending moment: When a rectangular rubber eraser is bent, a moment is produced in the eraser. If the ends are bent upwards, the top half of the eraser can be seen to shorten, while the bottom half can be seen to lengthen. Therefore, the moment produces compression forces in the top layers of the eraser and tension forces in the bottom layers.

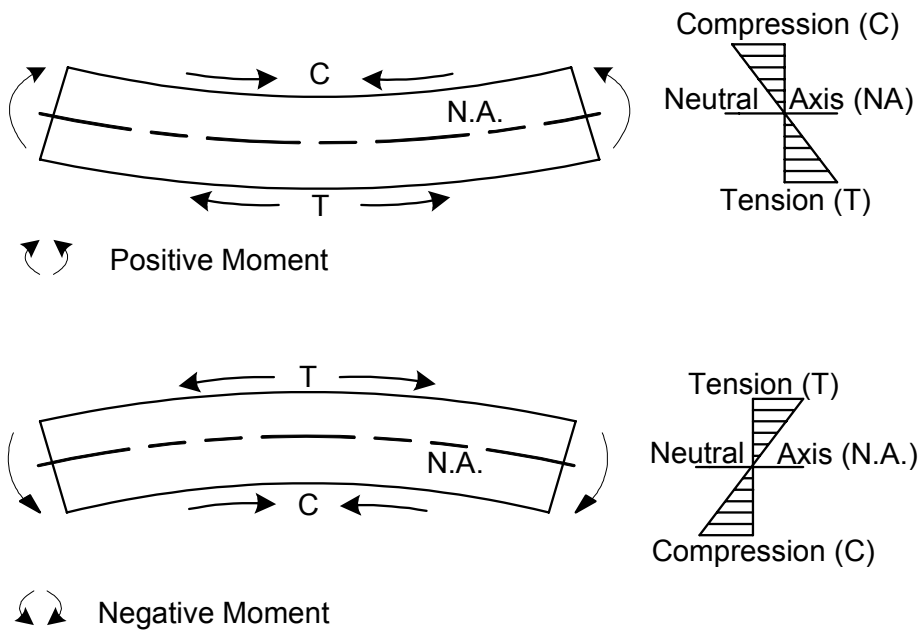

Figure P.2.10 Positive and Negative Moment

Beams and girders are the most common bridge elements used to resist bending moments. The flanges are most critical because they provide the greatest resistance to the compressive and tensile forces developed by the moment (see Figure P.2.11).

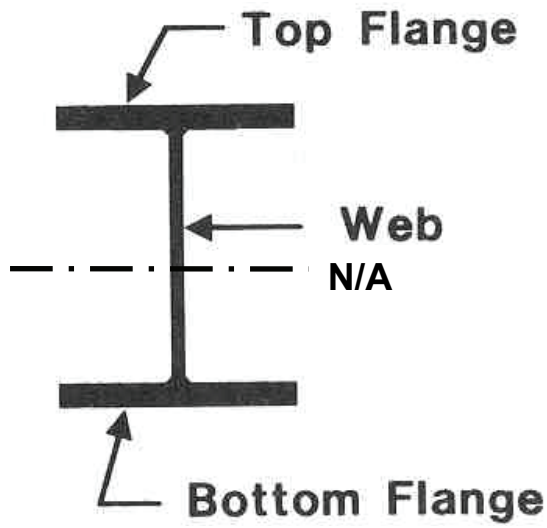

Figure P.2.11 Girder Cross Section

Bending stress is normally considered zero at the neutral axis. On a cross section of a member, bending stresses vary linearly with respect to the distance from the neutral axis (see Figures P.2.10 and P.2.12).

The formula for maximum bending stress is (see Figure P.2.12):

$$f_b = \frac{Mc}{I}$$

where:
- f_b = bending stress on extreme fiber (or surface) of beam
- M = applied moment
- c = distance from neutral axis to extreme fiber (or surface) of beam
- I = moment of inertia (a property of the beam cross-sectional area and shape)

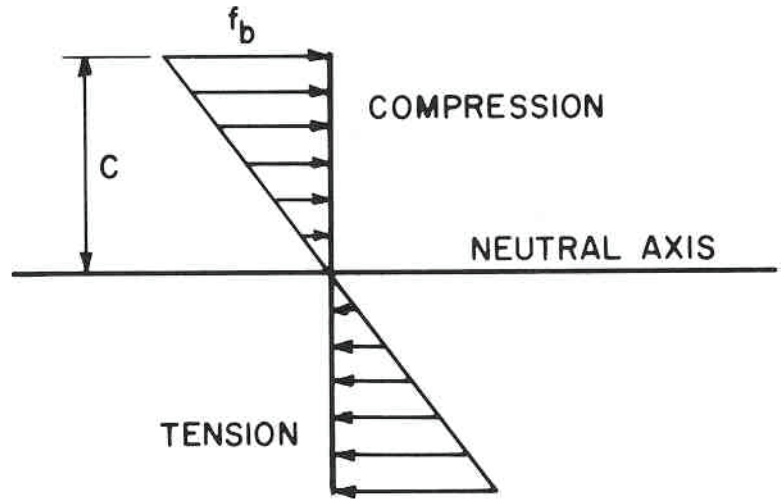

Figure P.2.12 Bending Stresses

Shear Forces

Shear is a force, which results from equal but opposite transverse forces, which tend to slide one section of a member past an adjacent section (see Figure P.2.13). Shear forces are generally expressed in English units of pounds or kips, and metric units of Newtons or kilonewtons.

Example of shear: When scissors are used to cut a piece of paper, a shear force has caused one side of the paper to separate from the other. Scissors are often referred to as shears since they exert a shear force.

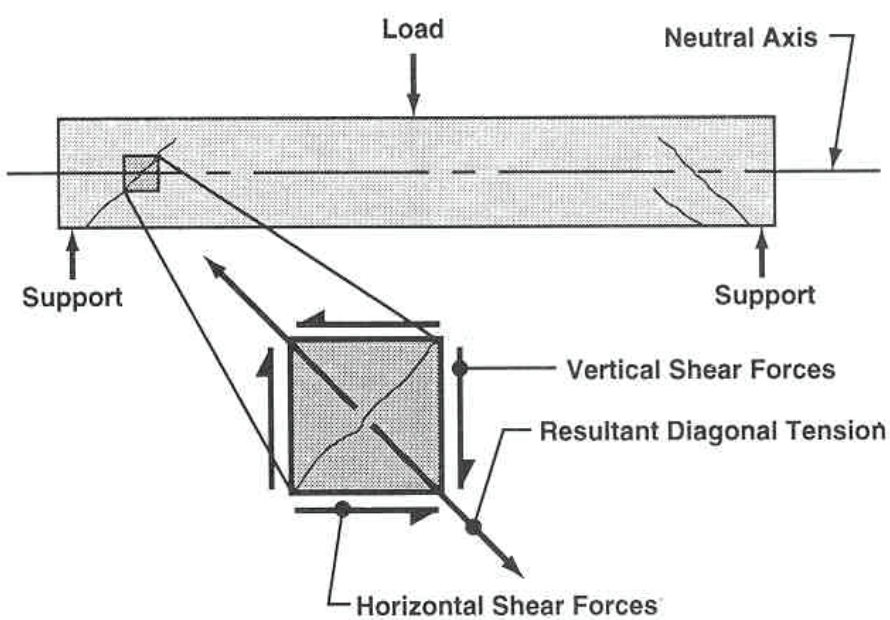

Figure P.2.13 Shear Forces in a Member Element

Beams and girders are common shear resisting members. In an I- or T-beam, most of the shear is resisted by the web (see Figure P.2.11). The shear stress produced by the transverse forces is manifested in a horizontal shear stress which is accompanied by a vertical shear stress of equal magnitude. The horizontal shear forces are required to keep the member in equilibrium (not moving). Vertical shear strength is generally considered in most design criteria. The formula for vertical shear stress in I- or T-beams is:

$$f_v = \frac{V}{A_W}$$

where:

f_v	=	shear stress
V	=	vertical shear due to external loads
A_w	=	area of web

Torsional Forces

Torsion is a force resulting from externally applied moments which tend to rotate or twist a member about its longitudinal axis. Torsional force is commonly referred to as torque and is generally expressed in English units of pound-feet or kip-feet, and metric units of Newton-meters or Kilonewtons-meters.

Example of torsion: One end of a long rectangular steel bar is clamped horizontally in a vise so that the long side is up and down. Using a large wrench, a moment is applied to the other end, which causes it to rotate so that the long side is now left to right. The steel bar is resisting a torsional force or torque which has twisted it 90˚ with respect to its original orientation (see Figure P.2.14).

Torsional forces develop in bridge members, which are interconnected and experience unbalanced loadings. Bridge elements are generally not designed as torsional members. However, in some bridge superstructures where elements are framed together, torsional forces can occur in longitudinal members. When these members experience differential deflection, adjoining transverse members apply twisting moments resulting in torsion. In addition, curved bridges are generally subject to torsion (see Figure P.2.15).

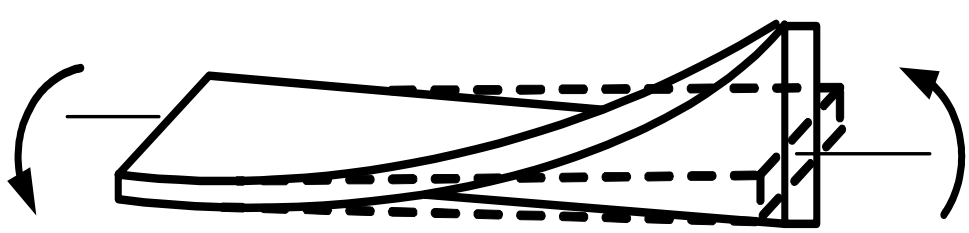

Figure P.2.14 Torsion

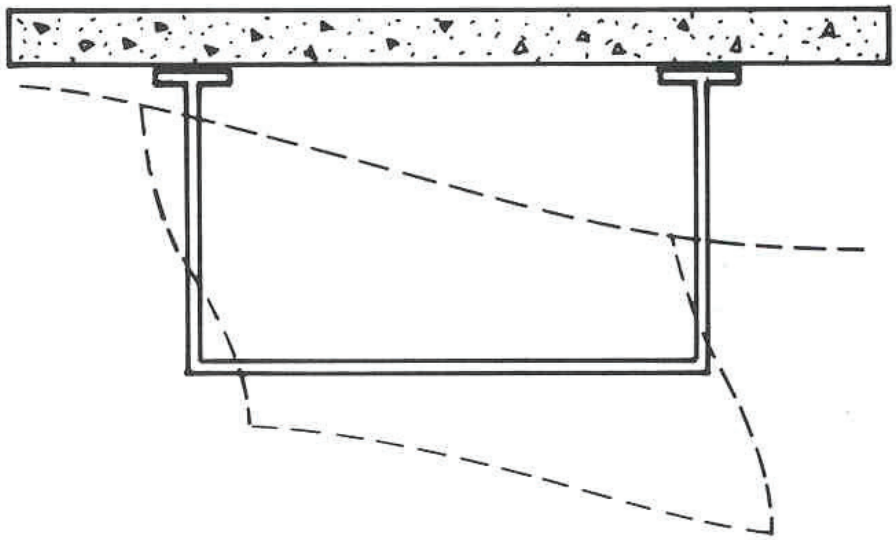

Figure P.2.15 Torsional Distortion

Reactions

A reaction is a force provided by a support that is equal but opposite to the force transmitted from a member to its support (see Figure P.2.16). Reactions are most commonly vertical forces, but a reaction can also be a horizontal force. The reaction at a support is the measure of force that it must transmit to the ground. A vertical reaction increases as the loads on the member are increased or as the loads are moved closer to that particular support. Reactions are generally expressed in English units of pounds or kips, and metric units of Newtons or kilonewtons.

Example of reactions: Consider a bookshelf consisting of a piece of wood supported at its two ends by bricks. The bricks serve as supports, and the reaction is based on the weight of the shelf and the weight of the books on the shelf. As more books are added, the reaction provided by the bricks will increase. As the books are shifted to one side, the reaction provided by the bricks at that side will increase, while the reaction at the other side will decrease.

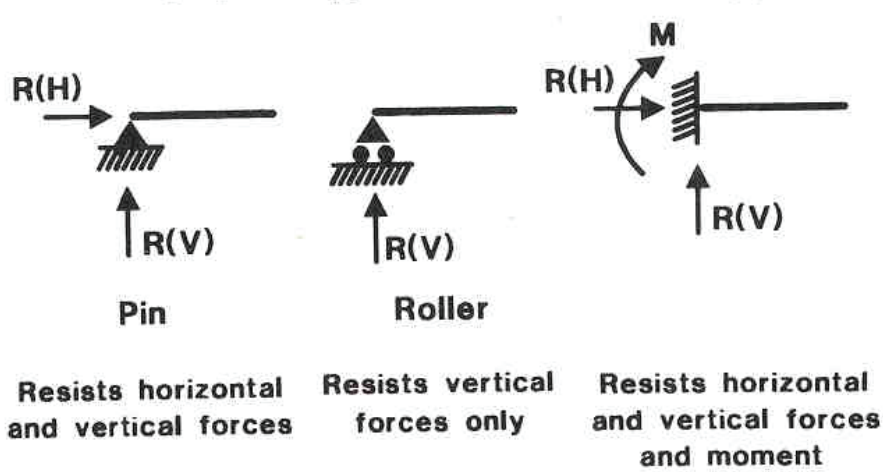

Figure P.2.16 Types of Supports

The loads of the entire bridge always equal the reactions provided by the abutments and the piers. However, on a smaller scale, each individual beam and girder also exerts forces, which create reactions provided by its supporting members.

P.2.4 Material Response to Loadings

Each member of a bridge has a unique purpose and function, which directly affects the selection of material, shape, and size for that member. Certain terms are used to describe the response of a bridge material to loads. A working knowledge of these terms is essential for the bridge inspector.

Force

A force is the action that one body exerts on another body. Force has two components: magnitude and direction (see Figure P.2.17). The basic English unit of force is called pound (abbreviated as lb.). The basic metric unit of force is called Newton (N). A common unit of force used among engineers is a kip (K), which is 1000 pounds. In the metric system, the kilonewton (kN), which is 1000 Newtons, is used. Note: 1 kip = 4.4 kilonewton.

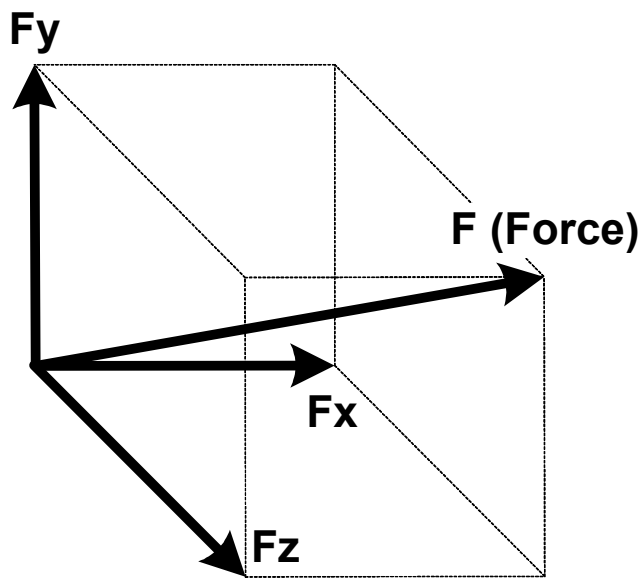

Figure P.2.17 Basic Force Components

Stress

Stress is a basic unit of measure used to denote the intensity of an internal force. When a force is applied to a material, an internal stress is developed. Stress is defined as a force per unit of cross-sectional area.

$$\text{Stress (S)} = \frac{\text{Force (F)}}{\text{Area (A)}}$$

The basic English unit of stress is pounds per square inch (abbreviated as psi). However, stress can also be expressed in kips per square inch (ksi) or in any other units of force per unit area. The basic metric unit of stress is Newton per square meter, or Pascal (Pa). An allowable unit stress is generally established for a given material. Note: 1 ksi = 6.9 Pa.

Example of a stress: If a 30,000 lb. force acts uniformly over an area of 10 square inches, then the stress caused by this force is 3000 psi (or 3 ksi).

Similarly, if a 40,000 Newton force acts uniformly over an area of 20 square meters, then the stress caused by this force is 2000 Pa.

Deformation

Deformation is the local distortion or change in shape of a material due to stress.

Strain

Strain is a basic unit of measure used to describe an amount of deformation. It denotes the ratio of a material's deformed dimension to a material's original dimensions. For example, strain in a longitudinal direction is computed by dividing the change in length by the original length.

$$\text{Strain } (\varepsilon) = \frac{\text{Change in Length } (\Delta L)}{\text{Original Length } (L)}$$

Strain is a dimensionless quantity. However, it can also be expressed as a percentage or in units of length per length (e.g., inch/inch).

Example of strain: If a force acting on a 20 foot long column causes an axial deformation of 0.002 feet, then the resulting axial strain is 0.002 feet divided by 20 feet, or 0.0001 foot/foot. This strain can also be expressed simply as 0.0001 (with no units) or as 0.0l%.

Similarly, if a force acting on a 50 m long column causes an axial deformation of 0.05 m, then the resulting axial strain is 0.001 m/m. This strain can also be compressed simply as 0.001 (with no units) or as 0.1%.

Elastic Deformation

Elastic deformation is the reversible distortion of a material. A member is elastically deformed if it returns to its original shape upon removal of a force. Elastic strain is sometimes termed reversible strain because it disappears after the stress is removed. Bridges are designed to deform elastically and return to their original shape after the live loads are removed.

Example of elastic deformation: A stretched rubber band will return to its original shape after being released from a taut position. Generally, if the strain is elastic, there is a direct proportion between the amount of strain and the applied stress.

Plastic Deformation

Plastic deformation is the irreversible or permanent distortion of a material. A material is plastically deformed if it retains a deformed shape upon removal of a stress. Plastic strain is sometimes termed irreversible or permanent strain because it remains after the stress is removed. Plastic strain is not directly proportional to the given applied stress as is the case with the elastic strain.

Example of plastic deformation: If a car crashed into a brick wall, the fenders and bumpers would deform. This deformation would remain even after the car is backed away from the wall. Therefore, the fenders and bumpers have undergone

plastic deformation.

Creep

Creep is a form of plastic deformation that occurs gradually at stress levels normally associated with elastic deformation. Creep is defined as the gradual, continuing irreversible change in the dimensions of a member due to the sustained application of load. It is caused by the molecular readjustments in a material under constant load. The creep rate is the change in strain (plastic deformation) over a certain period of time.

Example of creep: If heavy paint cans remain left untouched on a thin wooden shelf for several months, the shelf will gradually deflect and change in shape. This deformation is due to the sustained application of a constant dead load and illustrates the effects of creep.

Thermal Effects

In bridges, thermal effects are most commonly experienced in the longitudinal expansion and contraction of the superstructure. It is possible to disregard deformations caused by thermal effects when members are free to expand and contract. However, there may be members for which expansion and contraction is inhibited or prevented in certain directions. Thermal changes in these members can cause significant frictional stresses and must be considered by the inspector.

Materials expand as temperature increases and contract as temperature decreases. The amount of thermal deformation in a member depends on:

- A coefficient of thermal expansion, unique for each material
- The temperature change
- The member length

Example of thermal effects: Most thermometers operate on the principle that the material within the glass bulb expands as the temperature increases and contracts as the temperature decreases.

Stress-Strain Relationship

For most structural materials, values of stress and strain are directly proportional (see Figure P.2.18). However, this proportionality exists only up to a particular value of stress called the elastic limit. Two other frequently used terms, which closely correspond with the elastic limit, are the proportional limit and the yield point.

When applying stress up to the elastic limit, a material deforms elastically. Beyond the elastic limit, deformation is plastic and strain is not directly proportional to a given applied stress. The material property, which defines its stress-strain relationship, is called the modulus of elasticity, or Young's modulus.

Modulus of Elasticity

Each material has a unique modulus of elasticity, which defines the ratio of a given stress to its corresponding strain. It is the slope of the elastic portion of the stress-strain curve.

$$\text{Modulus of Elasticity (E)} = \frac{\text{Stress (S)}}{\text{Strain } (\varepsilon)}$$

The modulus of elasticity applies only as long as the elastic limit of the material has not been reached. The units for modulus of elasticity are the same as those for stress (i.e., psi or ksi for English, and Pa or kPa for metric).

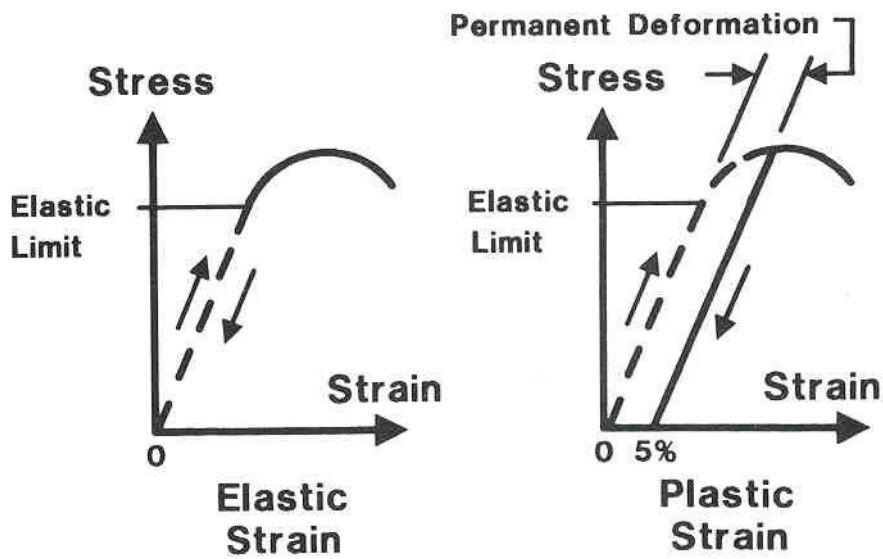

Figure P.2.18 Stress-Strain Diagram

Example of modulus of elasticity: If a stress of 20 MPa (2900 psi) is below the elastic limit and causes a strain of 0.0001, then the modulus of elasticity can be computed based on these values of stress and strain.

$$E = \frac{2{,}900\,\text{psi}}{0.0001} = 29{,}000{,}000\,\text{psi} = 29{,}000\,\text{ksi}\,(200{,}000\,\text{MPa})$$

This is approximately equal to the modulus of elasticity for steel. The modulus of elasticity for concrete is approximately 20,700 to 31,000 MPa (3000 to 4500 ksi), and for commonly used grades of timber it is approximately 11,000 MPa (1600 ksi).

Overloads

Overload damage may occur when members are overstressed. Overload occurs when the stresses applied are greater than the elastic limit for the material.

Buckling

Buckling is the tendency of a member to crush or bend out of plane when subjected to a compressive force. As the length and slenderness of a compression member increases, the likelihood of buckling also increases.

Compression members require additional cross-sectional area or bracing to resist buckling.

Example of buckling: A paper or plastic straw compressed axially at both ends with an increasing force will eventually buckle.

Elongation

Elongation is the tendency of a member to extend, stretch or crack when subjected to a tensile force. Elongation can be either elastic or plastic.

Example of elongation: A piece of taffy pulled will stretch in a plastic manner.

Ductility and Brittleness

Ductility is the measure of plastic (permanent) strain that a material can endure. A ductile material will undergo a large amount of plastic deformation before breaking. It will also have a greatly reduced cross-sectional area before breaking.

Example of ductility: A baker working with pizza dough will find that the dough can be stretched a great deal before it will break into two sections. Therefore, pizza dough is a ductile material. When the dough finally does break, it will have a greatly reduced cross-sectional area.

Structural materials for bridges that are generally ductile include:

- Steel
- Copper
- Aluminum
- Wood

Brittle, or non-ductile, materials will not undergo significant plastic deformation before breaking. Failure of a brittle material occurs suddenly, with little or no warning.

Example of brittleness: A glass table may be able to support several magazines and books. However, if more and more weight is piled onto the table, the glass will eventually break with little or no warning. Therefore, glass is a brittle material.

Structural materials for bridges that are generally brittle include:

- Concrete
- Stone
- Cast iron
- Fiber Reinforced Polymer

Fatigue

Fatigue is a material response that describes the tendency of a material to break when subjected to repeated loading. Fatigue failure occurs within the elastic range of a material after a certain number and magnitude of stress cycles have been applied.

Each material has a hypothetical maximum stress value to which it can be loaded and unloaded an infinite number of times. This stress value is referred to as the fatigue limit and is usually lower than the breaking strength for infrequently applied loads.

Ductile materials such as steel and aluminum have high fatigue limits, while brittle materials such as concrete have low fatigue limits. Wood has a high fatigue limit even though it is more like a brittle material than a ductile one.

Example of fatigue: If a rubber band is stretched and then allowed to return to

its original position (elastic deformation), it is unlikely that the rubber band will break. However, if this action is repeated many times, the rubber band will eventually break. The rubber band failure is analogous to a fatigue failure.

For a description of fatigue categories for various steel details, refer to Topic 8.1.

Isotropy

A material that has the same mechanical properties regardless of which direction it is loaded is said to be isotropic.

Example of isotropy: Plain, unreinforced concrete, and steel.

For a description of isotropic materials, refer to Topics 2.2 and 2.3.

P.2.5 Mechanics of Materials

Materials respond to loadings in a manner dependent on their mechanical properties. In characterizing materials, certain mechanical properties must be defined.

Yield Strength

The ability of a material to resist plastic (permanent) deformation is called the yield strength. Yield strength corresponds to stress level defined by a material's yield point.

Tensile Strength

The tensile strength of a material is the stress level defined by the maximum tensile load that it can resist without failure. Tensile strength corresponds to the highest ordinate on the stress-strain curve and is sometimes referred to as the ultimate strength.

Toughness

Toughness is a measure of the energy required to break a material. It is related to ductility. Toughness is not necessarily related to strength. A material might have high strength but little toughness. A ductile material with the same strength as a non-ductile material will require more energy to break and thus exhibit more toughness. For highway bridges, the CVN (Charpy V-notch) toughness is the toughness value usually used. It is an indicator of the ability of the steel to resist crack propagation in the presence of a notch or flaw. The unit for toughness N-m @ degrees C (ft-lbs @ degrees F).

P.2.6 Bridge Movements

Bridges move because of many factors; some are anticipated, but others are not. Unanticipated movements generally result from settlement, sliding, and rotation of foundations. Anticipated movements include live load deflections, thermal expansions and contractions, shrinkage and creep, earthquakes, rotations, wind drifting, and vibrations. Of these movements, the three major anticipated movements are live load deflections, thermal movements. and rotational movements.

Live Load Deflections

Deflection produced by live loading should not be excessive because of aesthetics, user discomfort, and possible damage to the whole structure.

Limitations are generally expressed as a deflection-to-span ratio. AASHTO generally limits live load bridge deflection for steel and concrete bridges to 1/800 (i.e., 25-mm (1inch) vertical movement per 20.3 m (67 feet) of span length). For bridges that have sidewalks, AASHTO limits live load bridge deflection to 1/1000 (i.e., 25-mm (1-inch) vertical movement per 25 m (83 feet) of span length).

Thermal Movements

The longitudinal expansion and contraction of a bridge is dependent on the range of temperature change, length of bridge, and most importantly, materials used in construction. Thermal movements are frequently accommodated using expansion joints and movable bearings. To accommodate thermal movements, AASHTO recommends the designer allow 32-mm (1-1/4 inches) of movement for each 30.5 m (100 feet) of span length for steel bridges and 30-mm (1-3/16 inches) of movement for each 30.5 m (100 feet) of span length for concrete bridges.

Rotational Movements

Rotational movement in bridges is a direct result of live load deflection and occurs with the greatest magnitude at the bridge supports. This movement can be accommodated using bearing devices that permit rotation.

P.2.7 Design Methods

Bridge engineers use various design methods that incorporate safety factors to account for uncertainties and random deviations in material strength, fabrication, construction, durability, and loadings.

Allowable Stress Design

The Allowable Stress Design (ASD) or Working Stress Design (WSD) is a method in which the maximum stress a particular member may carry is limited to an allowable or working stress. The allowable or working stress is determined by applying an appropriate factor of safety to the limiting stress of the material. For example, the allowable tensile stress for a steel tension member is 0.55 times the steel yield stress. This results in a safety factor of 1.8. The capacity of the member is based on either the inventory rating level or the operating rating level. AASHTO currently has ten possible WSD group loadings.

Load Factor Design

Load Factor Design (LFD) is a method in which the ultimate strength of a material is limited to the combined effect of the factored loads. The factored loads are determined from the applied loadings, which are increased by selected multipliers that provide a factor of safety. The load factors for AASHTO Group I are 1.3(DL+1.67(LL+I)). AASHTO currently has ten possible LFD group loadings.

Load and Resistance Factor Design

Load and Resistance Factor Design (LRFD) is a design procedure based on the actual strength, rather than on an arbitrary calculated stress. It is an ultimate strength concept where both working loads and resistance are multiplied by factors, and the design performed by assuming the strength exceeds the load. (The load multipliers used in LRFD are not the same multipliers that are used in LFD.)

These design methods are conservative due to safety factors and limit the stress in bridge members to a level well within the material's elastic range, provided that the structural members are in good condition. That is why it is important for inspectors to accurately report any deficiency found in the members.

P.2.8 Bridge Ratings

One of the primary functions of a bridge inspection is to collect information necessary for a bridge load capacity rating. Therefore, the bridge inspector should understand the principles of bridge load ratings. Bridge load rating methods and guidelines are provided by AASHTO in the *Manual for Condition Evaluation of Bridges*, *and Manual for Condition Evaluation and LRFR of Highway Bridges*.

A bridge load rating is used to determine the usable live load capacity of a bridge. Each member of a bridge has a unique load rating, and the bridge load rating represents the most critical one. Bridge load rating is generally expressed in units of tons, and it is computed based on the following basic formula:

$$\text{Bridge Rating Factor (RF)} = \frac{C - A_1 D}{A_2 L(1 + I)}$$

where:
- RF= the rating factor for the live-load carrying capacity; the rating factor multiplied by the rating vehicle in tons gives the rating of the structure
- C = the capacity of the member
- D = the dead load effect on the member
- L = the live load effect on the member
- I = the impact factor to be used with the live load effect
- A_1 = factor for dead loads
- A_2 = factor for live loads

Bridge load rating for LRFR is computed based on the following basic formula:

$$\text{Bridge Rating Factor (RF)} = \frac{C - (\gamma_{DC})(DC) - (\gamma_{DW})(DW) \pm (\gamma_P)(P)}{(\gamma_L)(LL + IM)}$$

where:
- RF= rating factor
- C = capacity
- DC = dead load effect due to structural components and attachments
- DW= dead load effect due to wearing surface and utilities
- P = permanent load other than dead loads
- LL = live load effect
- IM = dynamic load allowance
- γ_{DC} = LRFD load factor for structural components and attachments
- γ_{DW} = LRFD load factor for wearing surfaces and utilities
- γ_P = LRFD load factor for permanent loads other than dead loads = 1.0
- γ_L = evaluation live-load factor

Both of the formulas above determine a rating factor for the controlling member of the bridge. For either case, the safe load capacity in tons can be calculated as follows:

$$RT = RF \times W$$

where:
- RT= rating in tons for truck used in computing live-load effect
- RF= rating factor
- W = weight in tons of truck used in computing live-load effect

Note that when LRFR lane loading controls the rating, the equivalent truck weight (W) to be used in calculating the safe load capacity in tons is 40 tons.

Inventory Rating

The inventory rating level generally corresponds to the customary design level of

stresses but reflects the existing bridge and material conditions with regard to deterioration and loss of section. Load ratings based on the inventory level allow comparisons with the capacity for new structures and, therefore, results in a live load, which can safely utilize an existing structure for an indefinite period of time. For the allowable stress method, the inventory rating for steel used to be based on 55% of the yield stress. Inventory ratings have been refined to reflect the various material and load types. See the *AASHTO Manual for Condition Evaluation of Bridges* (Section 6.6.2 for Allowable Stress Inventory Ratings and Section 6.6.3 for Load Factor Inventory Ratings).

The LRFD design level is comparable to the traditional Inventory rating. Bridges that pass HL-93 screening at the Inventory level are capable of carrying AASHTO legal loads and state legal loads within the AASHTO exclusion limits described in the *LRFD Bridge Design Specifications*.

Operating Rating

Load ratings based on the operating rating level generally describe the maximum permissible live load to which the structure may be subjected. Allowing unlimited numbers of vehicles to use the bridge at operating level may shorten the life of the bridge. For steel, the allowable stress for operating rating used to be 75% of the yield stress. Operating ratings have been refined to reflect the various material and load types. See the *AASHTO Manual for Condition Evaluation of Bridges* (Section 6.6.2 for Allowable Stress Operating Ratings and Section 6.6.3 for Load Factor Operating Ratings).

Permit Loading

Special permits for heavier than normal vehicles may occasionally be issued by a governing agency. The load produced by the permit vehicle must not exceed the structural capacity determined by the operating rating.

The second level rating is a legal load rating providing a single safe load capacity for a specific truck configuration. The second level rating is comparable to the traditional Operating rating. Bridges that pass HL-93 screening at the Operating level are capable of carrying AASHTO legal loads, but may not rate for state legal loads especially those that are considerably heavier than AASHTO trucks.

The third level rating is used to check the serviceability and safety of bridges in the review of permit applications. Permits are required for vehicles above the legal load. This third level rating should only be applied to bridges with sufficient capacity for AASHTO legal loads. Calibrated load factors by permit type and traffic conditions are specified for checking the effect of the overweight vehicle. Guidance on checking serviceability criteria are also given.

Rating Vehicles

Rating vehicles are truck loads applied to the bridge to establish the inventory and operating ratings. These rating vehicles (see Figure P.2.19) include:

- H loading
- HS loading
- HL-93
- Alternate Interstate Loading (Military Loading)
- Type 3 unit
- Type 3-S2 unit
- Type 3-3 unit
- The maximum legal load vehicles of the state

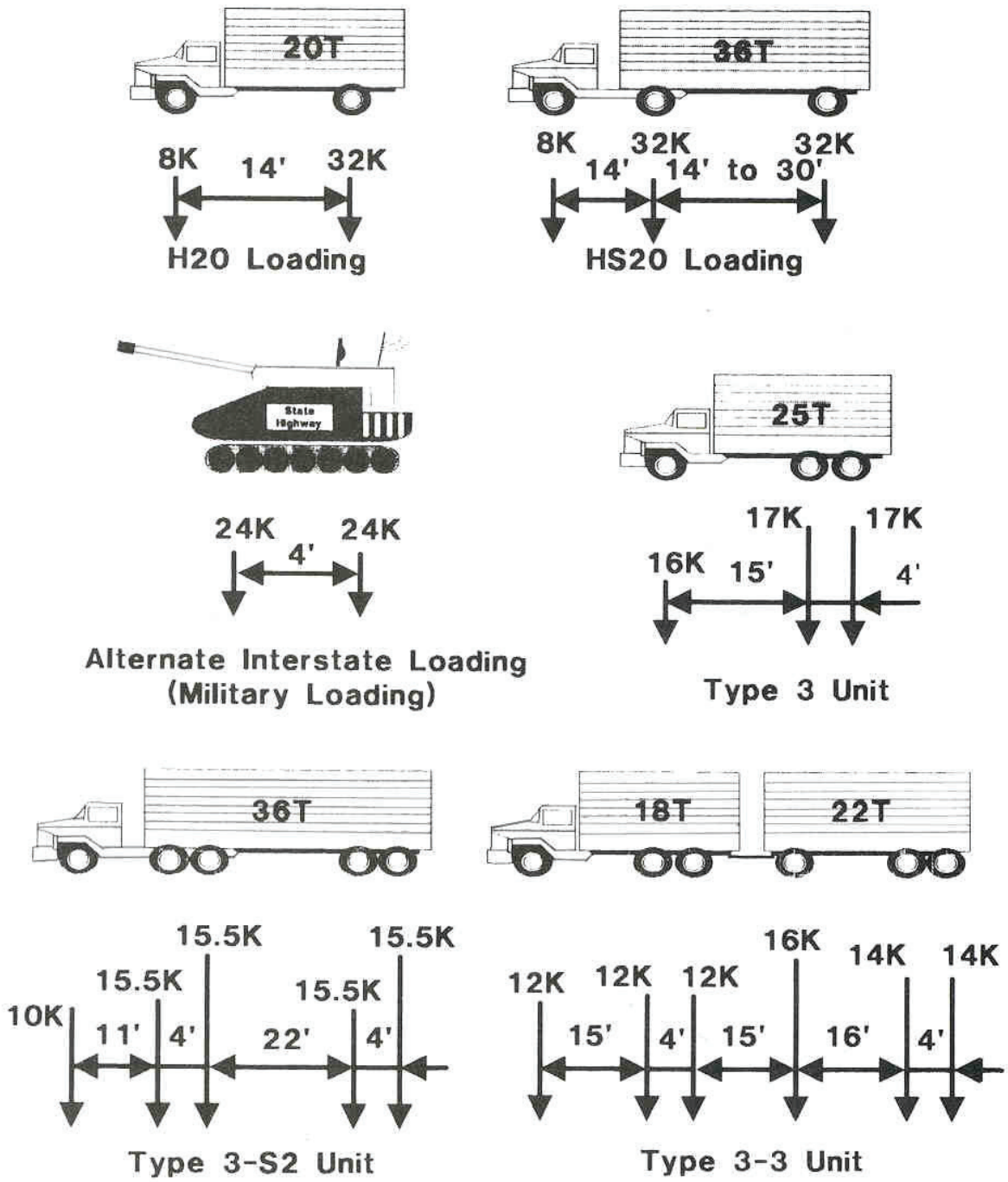

Figure P.2.19 Rating Vehicles

The axle spacing and weights of the Type 3 unit, Type 3-S2 unit, and Type 3-3 unit are based on actual vehicles. However, as described previously, the H and HS loadings do not represent actual vehicles.

These standard rating vehicles were chosen based on load regulations of most states and governing agencies. However, individual states and agencies may also establish their own unique rating vehicles.

Bridge Posting

Bridge loads are posted to warn the public of the load capacity of a bridge, to avoid safety hazards, and to adhere to federal law. Federal regulation requires highway bridges on public roads to be inspected every twenty-four months for lengths greater than 6.1 m (20 feet). Federal regulation also requires bridges to be posted when the State's legal loads exceed the operating rating or equivalent rating factor for the bridge. It is the inspector's responsibility to gather and provide information that the structural engineer can use to analyze and rate the bridge.

The safe load-carrying capacity of a bridge considers the following criteria:

- Physical condition
- Potential for fatigue damage
- Type of structure/configuration
- Truck traffic data

Bridge postings show the maximum allowable load by law for single vehicles and combinations while still maintaining an adequate safety margin (see Figure P.2.20).

Figure P.2.20 Bridge Weight Limit Posting

Failure to comply with bridge posting may result in fines, tort suits/financial liabilities, accidents, or even death. In addition, bridges may be damaged when postings are ignored (see Figure P.2.21).

Figure P.2.21 Damaged Bridge due to Failure to Comply with Bridge Posting

P.2.9 Span Classifications

Beams and bridges are classified into three span classifications that are based on the nature of the supports and the interrelationship between spans. These classifications are:

- Simple
- Continuous
- Cantilever

Simple

A simple span is a span with only two supports, each of which is at or near the end of the span (see Figure P.2.22).

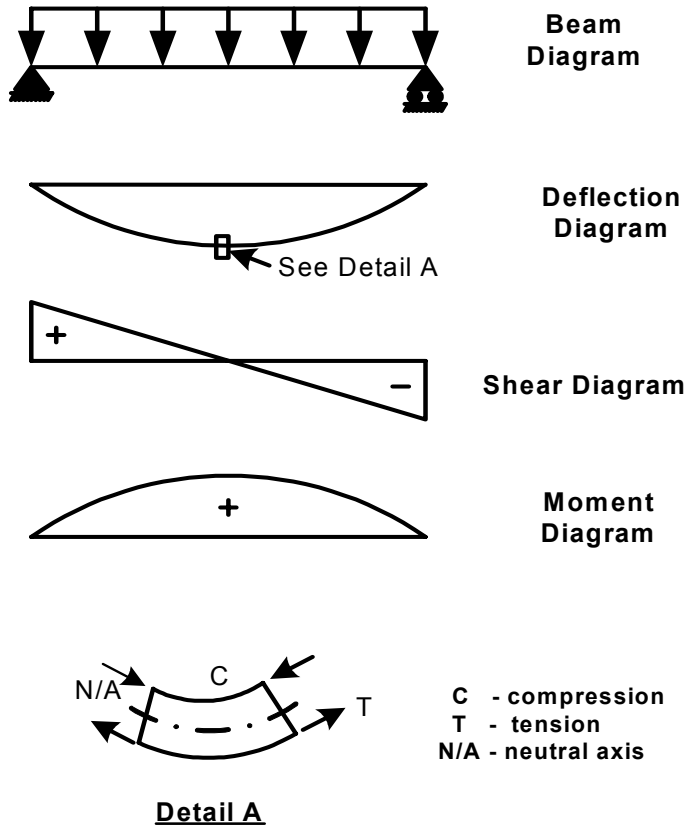

Figure P.2.22 Simple Span

A simple span bridge can have a single span supported at the ends by two abutments or multiple spans with each span behaving independently of the others. Some characteristics of simple span bridges are:

- When loaded, the span deflects downward and rotates at the supports (i.e., the abutments)
- The sum of the reactions provided by the two supports equals the entire load
- Shear forces are maximum at the supports and zero at or near the middle of the spans
- Bending moment throughout the span is positive and maximum at or near the middle of the span (the same location at which shear is zero); bending moment is zero at the supports
- The part of the superstructure below the neutral axis is in tension while the portion above the neutral axis is in compression

A simple span bridge is easily analyzed using equilibrium equations. However, it does not always provide the most economical design solution.

Continuous

A continuous span is a configuration in which a beam has one or more intermediate supports and the behavior of each individual span is dependent on its adjacent spans (see Figure P.2.23).

A continuous span bridge is one which is supported at the ends by two abutments and which spans uninterrupted over one or more piers. Some characteristics of continuous span bridges are:

- When loaded, the spans deflect downward and rotate at the supports (i.e., the abutments and the piers)
- The reactions provided by the supports depend on the span configuration and the distribution of the loads
- Shear forces are maximum at the supports and zero at or near the middle of the spans
- Positive bending moment is greatest at or near the middle of each span
- Negative bending moment is greatest at the intermediate supports (i.e., the piers); the bending moment is zero at the end supports (i.e., the abutments); there are also two locations per intermediate support at which bending moment is zero, known as inflection points
- For positive bending moments, compression occurs on the top portion of the beam and tension occurs on the bottom portion of the beam
- For negative bending moments, tension occurs on the top portion of the beam and compression occurs on the bottom portion of the beam

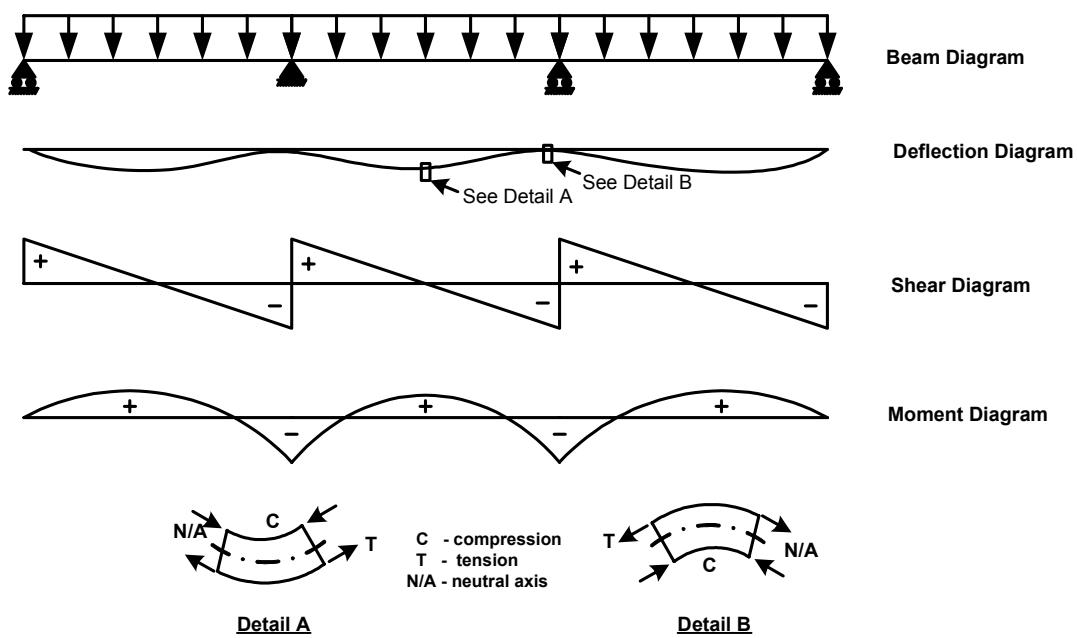

Figure P.2.23 Continuous Span

A continuous span bridge allows longer spans and is more economical than a bridge consisting of many simple spans. This is due to its efficient design with members that are shallower. However, a continuous bridge is more difficult to analyze than a simple span bridge and is more susceptible to overstress conditions if the abutments or piers settle.

Cantilever

A cantilever span is a span with one end restrained against rotation and deflection and the other end completely free (see Figure P.2.24). The restrained end is also known as a fixed support (see Figure P.2.18).

While a cantilever generally does not form an entire bridge, portions of a bridge can behave as a cantilever (e.g., cantilever bridges and bascule bridges). Some characteristics of cantilevers are:

- When loaded, the span deflects downward, but there is no rotation or deflection at the support
- The fixed support reaction consists of a vertical force and a resisting moment
- The shear is maximum at the fixed support and is zero at the free end
- The bending moment throughout the span is negative and maximum at the fixed support; bending moment is zero at the free end

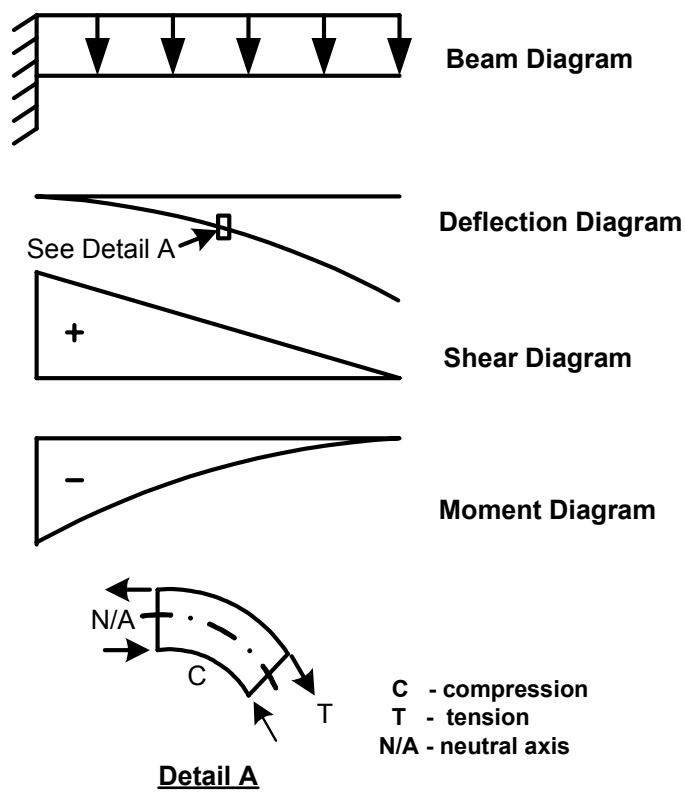

Figure P.2.24 Cantilever Span

When cantilever spans are incorporated into a bridge, they are generally extensions of a continuous span. Therefore, moment and rotation at the cantilever support will be dependent on the adjacent span (see Figure P.2.25).

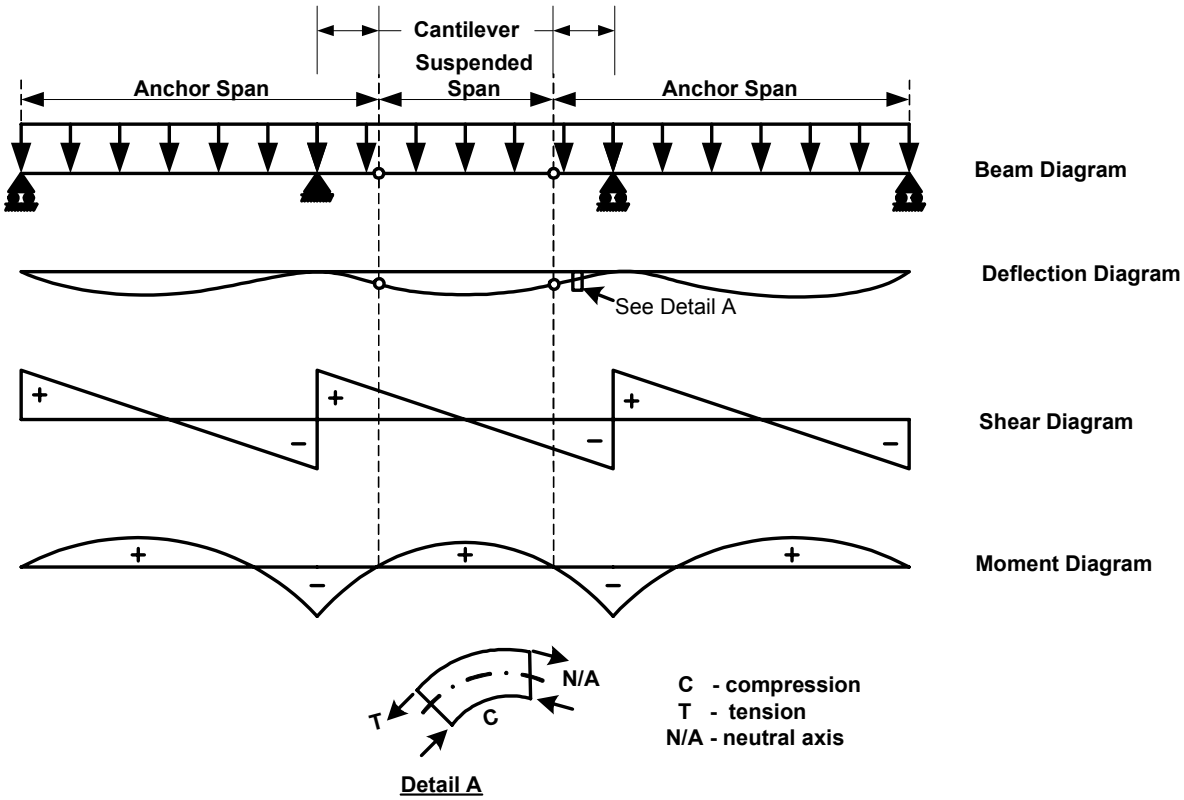

Figure P.2.25 Cantilever Bridge

P.2.10 Bridge Roadway Interaction

Bridges also have two classifications that are based on the relationship between the deck and the superstructure. These classifications are:

- Non-composite
- Composite

Non-composite

A non-composite structure is one in which the superstructure acts independently of the deck. Therefore, the beams or floor systems alone must resist all of the loads applied to them, including the dead load of the superstructure, deck, and railing, and all of the live loads.

Composite

A composite structure is one in which the deck acts together with the superstructure to resist the loads (see Figure P.2.26). The deck material must be strong enough to contribute significantly to the overall strength of the section. The deck material is different than the superstructure material. The most common combinations are concrete deck on steel superstructure and concrete deck on prestressed concrete superstructure. Shear connectors such as studs, spirals, channels, or stirrups that are attached to the superstructure and are embedded in a deck provide composite action. This ensures that the superstructure and the deck will act as a unit by preventing slippage between the two when a load is applied.

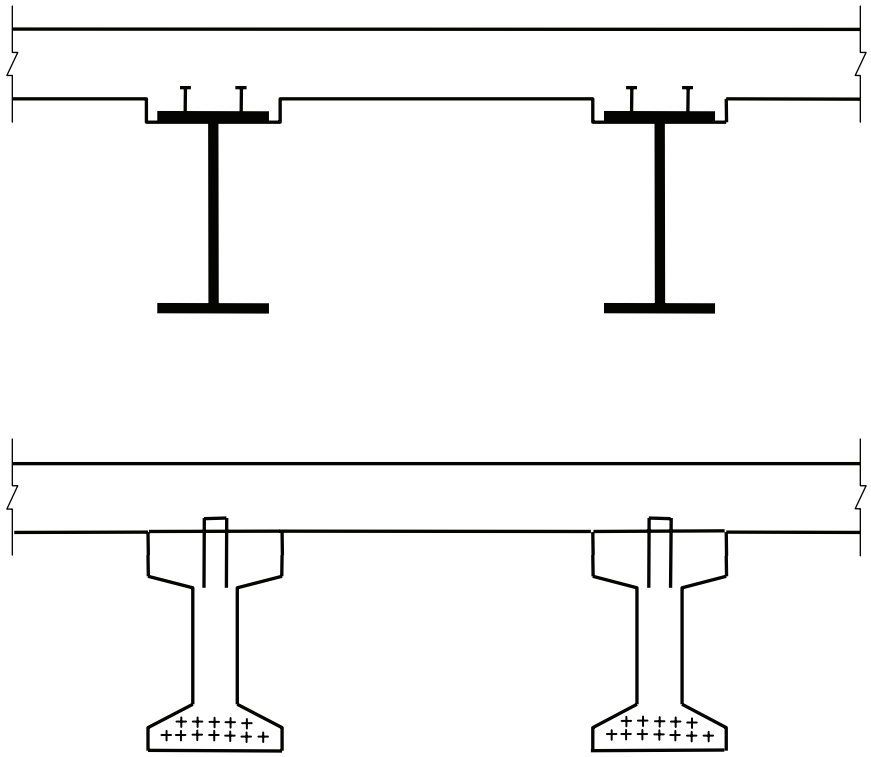

Figure P.2.26 Composite Concrete Deck on Steel Beams and Pretressed Concrete Beams

Composite action is achieved only after the concrete deck has hardened. Therefore, some of the dead load (Dead Load 1) must be resisted by the non-composite action of the superstructure alone. These dead loads include the weight of:

- The superstructure itself
- Any diaphragms and cross-bracing
- The concrete deck
- Any concrete haunch between the superstructure and the deck
- Any other loads which are applied before the concrete deck has hardened

Other dead loads, known as superimposed dead loads (Dead Load 2), are resisted by the superstructure and the concrete deck acting compositely. Superimposed dead loads include the weight of:

- Any anticipated future deck pavement
- Parapets
- Railings
- Any other loads which are applied after the concrete deck has hardened

Since live loads are applied to the bridge only after the deck has hardened, they are also resisted by the composite section.

The bridge inspector can identify a simple span, a continuous span, and a cantilever span based on their configuration. However, the bridge inspector can not identify the relationship between the deck and the superstructure while at the bridge site. Therefore, bridge plans must be reviewed to determine whether a structure is non-composite or composite.

Integral

On an integral bridge deck, the deck portion of the beam is constructed to act integrally with the stem, providing greater stiffness and allowing increased span lengths (see Figure P.2.27).

Figure P.2.27 Integral Bridge

Orthotropic

An orthotropic deck consists of a flat, thin steel plate stiffened by a series of closely spaced longitudinal ribs at right angles to the floor beams. The deck acts integrally with the steel superstructure. An orthotropic deck becomes the top flange of the entire floor system. Orthotropic decks are occasionally used on large bridges (see Figure P.2.28).

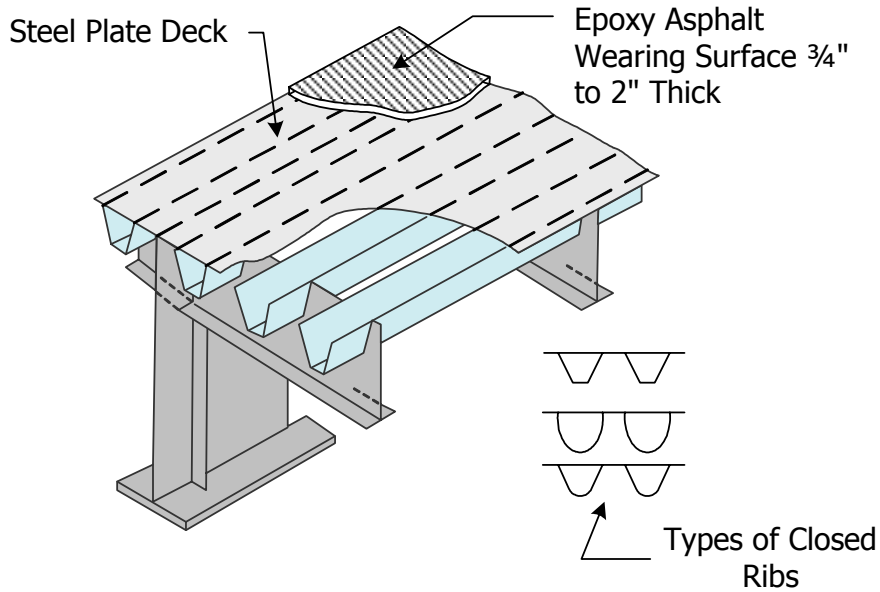

Figure P.2.28 Orthotropic Bridge Deck

P.2.11 Redundancy

Redundancy is the quality of a bridge that enables it to perform its design function in a damaged state.

There are three types of redundancy in bridge design.

Load Path Redundancy

Bridge designs that are load path redundant have three or more main load-carrying members or load paths between supports. If one member were to fail, load would be redistributed to the other members and bridge failure would not be expected. Bridge designs that are non-redundant have two or fewer main load carrying members or load paths.

Structural Redundancy

Most bridge designs, which provide continuity of load path from span to span are referred to as structurally redundant. Some continuous span two-girder bridge designs are structurally redundant. In the event of a member failure, loading from that span can be redistributed to the adjacent spans and total bridge failure may not occur.

Internal Redundancy

Internal redundancy is when a bridge member contains several elements which are mechanically fastened together so that multiple load paths are formed. Failure of one member element would not cause total failure of the member.

Redundancy is discussed in greater detail in Topic 8.1.

P.2.12 Foundations

Foundations are critical to the stability of the bridge since the foundation ultimately supports the entire structure. There are two basic types of bridge foundations:

- Shallow foundations commonly referred to as spread footings
- Deep foundations

Spread Footings

A spread footing is used when the bedrock layers are close to the ground surface or when the soil is capable of supporting the bridge. A spread footing is typically a rectangular slab made of reinforced concrete. This type of foundation "spreads out" the loads from the bridge to the underlying rock or well-compacted soil. While a spread footing is usually buried, it is generally covered with a minimal amount of soil. In cold regions, the bottom of a spread footing will be just below the recognized maximum frost line depth for that area (see Figure P.2.29).

Deep Foundations

A deep foundation is used when the soil is not suited for supporting the bridge or when the bedrock is not close to the ground surface. A pile is a long, slender support that is typically driven into the ground but can be partially exposed. It is made from steel, concrete, or timber. Various numbers and configurations of piles can be used to support a bridge foundation. This type of foundation transfers load to sound material well below the surface or, in the case of friction piles, to the surrounding soil (see Figure P.2.30). “Caissons”, “drilled caissons”, and “drilled shafts” are frequently used to transmit loads to bedrock in a manner similar to piles.

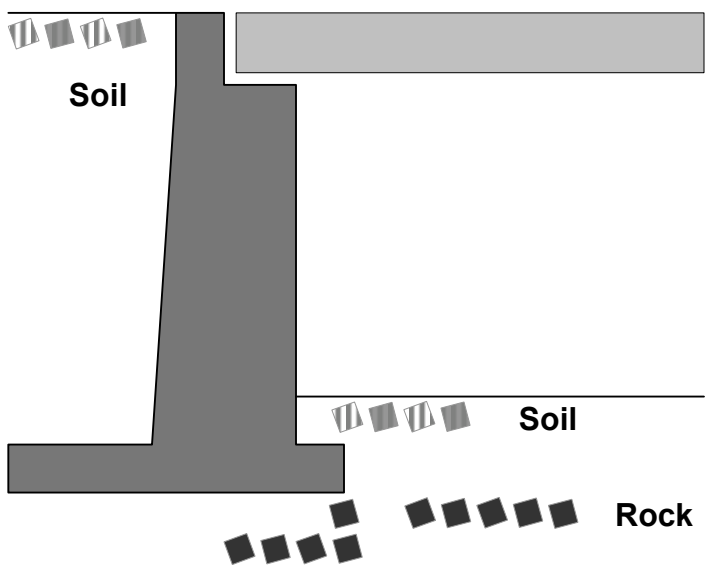

Figure P.2.29 Spread Footing

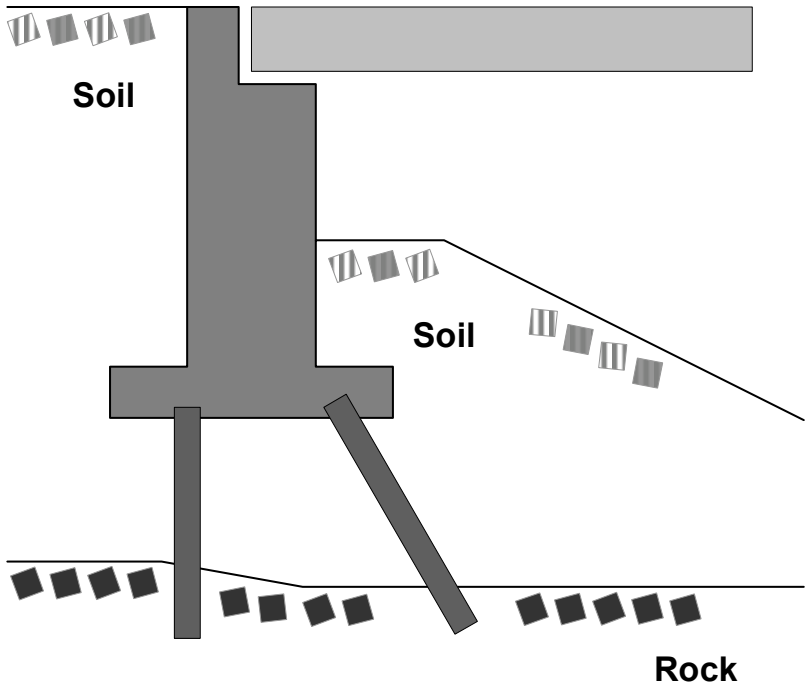

Figure P.2.30 Pile Foundation