COPY 2

WAR DEPARTMENT PAMPHLET • NO. 27-4

S/S by AR 633-15 1959

PROCEDURE FOR MILITARY EXECUTIONS

Return to Army Library
Room 1A522, Pentagon

WAR DEPARTMENT • 12 JUNE 1944

RESTRICTED. *DISSEMINATION OF RESTRICTED MATTER.*—The information contained in restricted documents and the essential characteristics of restricted material may be given to any person known to be in the service of the United States and to persons of undoubted loyalty and discretion who are cooperating in Government work, but will not be communicated to the public or to the press except by authorized military public relations agencies. (See also par. 23b, AR 380-5, 15 Mar 1944.)

WAR DEPARTMENT,
WASHINGTON 25, D. C., 12 June 1944.

War Department Pamphlet No. 27–4, Procedure for Military Executions, is published for the information and guidance of all concerned.

[A. G. 250.47 (9 Mar 44).]

BY ORDER OF THE SECRETARY OF WAR:

G. C. MARSHALL,
Chief of Staff.

OFFICIAL:
J. A. ULIO,
Major General,
The Adjutant General.

DISTRIBUTION:
T of Opns (10); Sv C (10); Base Comds (10); Island Comds (10); Def Comds (Overseas) (10); Sectors (Overseas) (10); Depts (10); Armies (10); Corps (10); D (2); Posts, Camps, Sta (1); Arm & Sv Boards (2); Stf Div (2); Tech Sv (2).

For explanation of symbols, see FM 21–6.

CONTENTS

		Paragraphs
SECTION I.	General	1–11
II.	Execution by Musketry	12–14
III.	Execution by Hanging	15–17
IV.	Proceedings After Execution	18–20
V.	Departures	21
VI.	Structures	22–24
VII.	Equipment	25–28

SECTION I

GENERAL

	Paragraph
Authority	1
Time and Place	2
Delegation of Authority	3
Insanity	4
Pregnancy	5
Witnesses	6
Multiple Executions	7
Escort	8
Chaplain	9
Medical Officer	10
Miscellaneous	11

1. Authority

Military executions will be by musketry or by hanging as designated by a court martial in imposing the sentence of death. (Manual for Courts-Martial, 103*a*, page 93.)

2. Time and Place

a. The authority ordering the execution of a sentence of death designates or causes to be designated the time and place for such execution, any designation made by the court as to such matters being disregarded. (Manual for Courts-Martial, 87*b*, page 76.)

b. Where it is found to be impracticable to proceed with the execution at the time named or at the place selected, the officer designated by the confirming authority to execute the sentence will designate at the earliest opportunity another time or place, and the execution will proceed according to the new designation.

3. Delegation of Authority

a. The officer designated by the confirming authority to execute the approved sentence of death will be responsible for its execution. He may delegate to a subordinate officer the duties connected with the carrying out of the execution.

b. The subordinate officer named will be one under the direct control of the delegating authority. He will be duly and officially named by an order of the officer designated to execute the sentence and directed therein to carry out the execution.

4. Insanity

If, after issuance of order of execution, the prisoner shows signs of having become insane, the officer designated to execute the sentence may cause a board to be convened under the provisions of AR 600–500 to determine the sanity of the prisoner. If the board finds the prisoner to be sane, the execution will proceed as ordered; but in the event he shall be found to be insane, notice of the findings of the board, including, if practicable, its report, will be transmitted to the confirming authority if other than the President, or to The Adjutant General if the sentence was confirmed by the President, and the execution will be stayed pending the receipt of further instructions.

5. Pregnancy

If the prisoner is a woman and medical examination reveals that she is pregnant, immediate report of the fact will be made to the confirming authority or to The Adjutant General, as prescribed in paragraph 4, and the execution will be stayed pending the receipt of further instructions.

6. Witnesses

The officer designated to execute the sentence will prescribe whether the execution will be public or private, rules of secrecy as to time, place, and the presence of witnesses, military or civilian, including members of the press if the presence of the latter is deemed proper. If troops are designated to observe an execution by musketry, these troops will be paraded and formed into the three sides of a hollow rectangle, facing inward and toward the site on which the prisoner is to be placed. In executions by hanging, the troops, if designated to witness the execution, will be paraded and formed in a square around the gallows. No photographs nor motion pictures of the actual execution will be permitted except for official purposes. The environs of the place of execution will be closely and securely guarded to prevent the intrusion of un-

authorized persons. All persons in attendance will be cautioned that no demonstrations or unseemly conduct will be tolerated. Troops will assume the position of attention upon the approach of the escort and will remain at attention until the conclusion of the ceremony.

7. Multiple Executions

In multiple executions by musketry, a separate execution party will be provided for each of the prisoners. The latter will be placed in line at an interval of 10 paces and executed simultaneously. When a multiple execution by hanging is required, the officer designated to execute the sentence will prescribe the number of gallows to be erected, and the prisoners will be hanged from the gallows simultaneously or by groups.

8. Escort

The escort for execution may be mounted, dismounted, or motorized, but upon arrival at the scene of execution, mounted or motorized escorts will form in the manner prescribed for dismounted escorts. The minimum escort will consist of components as prescribed in paragraph 13*b*.

9. Chaplain

In all executions, a chaplain of the prisoner's choice will be provided if practicable. If no chaplain of the prisoner's choice or of his particular denomination is available, the officer charged with the execution of the sentence will take all reasonable measures to provide a civilian clergyman from that denomination.

10. Medical Officer

A medical officer will be officially designated to be in attendance upon the execution. It will be his duty to determine the extinction of life in the prisoner and to make pronouncement thereof. He will furnish a death certificate to accompany the report of execution.

11. Miscellaneous

a. The prisoner will be notified of the time of execution no less than 24 hours prior thereto if practicable, at which time the order directing the execution will be read to him by the officer charged with the execution of the sentence or by some officer at his direction.

b. If practicable, due notice will be given to the next of kin of the prisoner and an opportunity provided for the claiming of the body following the execution.

c. A prisoner in the Armed Forces of the United States will be dressed in regulation uniform from which all decorations, insignia, or other evidences of membership therein have been removed. Likewise, no such evidences will appear on any clothing used in burial. Similar procedures may be dispensed with, in the discretion of the officer responsible for carrying out the execution (or higher authority), in the case of a prisoner in the armed forces of another nation. A prisoner not within the foregoing categories may be dressed in any clothing available.

SECTION II

EXECUTION BY MUSKETRY

	Paragraph
Officer Charged with Execution	12
Assembly of Escort	13
Execution	14

12. Officer Charged with Execution

The officer charged with the execution will command the escort and make the necessary arrangements for the conduct of the execution. He will—

a. Instruct the escort and the execution party in their duties.

b. Arrange for the receipt of the prisoner by the prisoner guard.

c. Arrange for an execution party of twelve men and one sergeant.

d. Arrange for a chaplain to accompany the prisoner.

e. Arrange for the presence of a medical officer at the scene of the execution.

f. Cause a post with proper rings placed therein for securing the prisoner in an upright position to be erected at the place of execution.

g. Cause twelve rifles to be loaded in his presence. Not more than four nor less than one will be loaded with blank ammunition. He will place the rifles at random in the rack provided for that purpose.

h. Provide a black hood to cover the head of the prisoner.

i. Provide a 4-inch, round, white target.

j. Cause the prisoner's arms to be secured behind his back, before or immediately after his receipt by the prisoner guard.

k. Arrange for an ambulance or other conveyance with sufficient personnel to be in attendance upon the execution to receive and care for the body. In the event a contract undertaker is used by the quartermaster, his services may be substituted. See AR 30–1820.

13. Assembly of Escort

a. The band will be formed in accordance with section V, FM 28–5, will proceed to the exterior door of the place of imprisonment at which the prisoner is to be received by the prisoner guard, and halt near the door, facing in the direction of the scene of the execution. The presence of the band is optional at executions where the presence of troops is not required.

b. The prisoner guard will consist of twelve men armed with rifles, under the command of a sergeant armed with a pistol. The prisoner guard will form in double ranks and at the proper time will proceed to the place of imprisonment to receive the prisoner.

c. The main guard will consist of one or more platoons and will form in the rear of the band.

d. The execution party will be formed unarmed and proceed to a previously prepared rack of rifles, secure arms, and move to the scene of the execution, halting 15 paces from and facing the position to be taken by the prisoner. At close interval, and at order arms, the party will await the arrival of the prisoner and escort.

e. At the designated time the prisoner, with his arms bound securely behind his back, accompanied by the chaplain, will be received by the prisoner guard and placed between the ranks. The escort will then proceed toward the scene of the execution, the band playing the "Dead March."

f. The escort will approach the scene of the execution on line with the open side of the rectangle formed by the witnessing troops. The band will move past the point at which the prisoner is to be placed, and will take position on the opposite side of the rectangle, facing the scene of the execution. The prisoner guard, prisoner, and chaplain will proceed directly to the prisoner's post, halt, and face the execution party. The main guard will proceed to a point 5 paces behind the execution party and form a line facing the scene of execution.

14. Execution

a. The officer charged with the execution will take position in front of the execution party and face the prisoner. He will then read the charge, finding, sentence, and orders aloud to the prisoner. He will then notify the prisoner and the chaplain

that a brief time will be allowed the prisoner for any last statement. After a reasonable time, he will order the sergeant of the execution party to secure the prisoner to the post and to place the hood over his head. Then the medical officer will place the target over the prisoner's heart. The prisoner prepared, the officer charged with the execution will order the prisoner guard to join the main guard; the chaplain and medical officer will retire to the flank taken by the band. The officer charged with the execution will take position 5 paces to the right of and 5 paces to the front of the execution party.

b. Commands for the execution may be given by a combination of manual and oral signals as prescribed.

(1) When the officer charged with the execution raises the right arm vertically overhead, palm forward, fingers extended and joined, the execution party will come to the "Ready" position as prescribed for firing a volley, and will unlock rifles.

(2) When the officer charged with the execution lowers his arm to a horizontal position in front of his body, the execution party will take the position of "Aim."

(3) When the officer charged with the execution drops his arm directly to his side and orally commands: FIRE, the execution party will fire simultaneously.

(4) The officer charged with the execution will then bring the execution party to "Order Arms."

c. When the use of manual signals is not practical, the following oral commands are prescribed:

(1) At the command READY, the execution party will take that position and unlock rifles.

(2) At the command AIM, the execution party will take that position with rifles aimed at target on the prisoner's body.

(3) At the command FIRE, the execution party will fire simultaneously.

d. The officer charged with the execution will join the medical officer who will examine the prisoner and, if necessary, direct that the "coup de grace" be administered. Should the medical officer so decide, the sergeant of the execution party will administer the "coup de grace," with a hand weapon, holding the muzzle just above the ear and one foot from the skull.

e. Under exceptional circumstances, the officer charged with the execution, with the permission of the commanding officer, may detail an extra file of six men to administer the "coup de grace." This file will form the rear rank of the execution party, and if it is necessary to administer the "coup de grace," will move in front of the execution party and fire, at the command of the officer charged with the execution.

f. Upon pronouncement of the death of the prisoner by the medical officer, the execution party will proceed to the racks from which the rifles were originally obtained, and replace the rifles in the racks at random. The execution party will then be dismissed.

g. The escort, with the band playing a lively air, will return to their parade ground and be dismissed.

h. The witnessing troops will parade in column in front of the body and proceed to their respective parade grounds where they will be dismissed.

i. The officer charged with the execution will direct the burial party in the disposal of the body as prescribed by AR 210–500 and 30–1820.

SECTION III

EXECUTION BY HANGING

	Paragraph
Officer Charged with Execution	15
Assembly	16
Execution	17

15. Officer Charged with Execution

The officer charged with the execution will command the escort and make the necessary arrangements for the conduct of the execution. He will—

a. Instruct components of the escort in their duties.

b. Arrange for the receipt of the prisoner by the prisoner guard.

c. Arrange for a chaplain to accompany the prisoner.

d. Arrange for the presence of a medical officer at the scene of the execution.

e. Provide a proper gallows.

f. Provide a black hood to cover the head of the prisoner.

g. Provide a collapse board for use if necessary.

h. Cause the prisoner's arms to be secured behind his back, before or immediately upon his receipt by the prisoner guard.

i. Arrange for a burial party as prescribed in paragraph 12*k*.

16. Assembly

a. The band will be formed in accordance with section V, Chapter 2, FM 28–5, will proceed to the exterior door of the place of imprisonment at which the prisoner is to be received by the prisoner guard, and halt near the place of imprisonment, facing in the direction of the scene of the execution. The presence of the band is optional at executions where the presence of troops is not required.

b. The prisoner guard will consist of twelve men armed with rifles, under the command of a sergeant armed with a pistol. The prisoner guard will form in double ranks and at the proper time will proceed to the door to receive the prisoner.

c. The main guard will consist of one or more platoons and will form in the rear of the band.

d. At the designated time the prisoner, with his arms bound securely behind his back, accompanied by the chaplain, will be received by the prisoner guard and placed between the ranks. The escort will then proceed toward the scene of the execution, the band playing the "Dead March."

e. Upon the arrival of the escort, consisting of the band, prisoner guard, main guard, prisoner and chaplain within the square formed by the witnessing troops before the gallows, the sergeant of the prisoner guard and a sergeant from the main guard will conduct the prisoner to the platform of the gallows, the officer charged with the execution and the chaplain preceding the prisoner.

17. Execution

a. The officer charged with the execution will face the prisoner and read aloud to him the charge, finding, sentence and orders. He will then notify the chaplain and the prisoner that a brief time will be allowed the prisoner for any last statement. After a reasonable time he will have the sergeant from the main guard place the hood over the prisoner's head and bind his ankles. The sergeant of the execution party will then adjust the noose around the prisoner's neck. The sergeant of the execution party will then place himself in position at the trigger and, upon a signal from the officer charged with the execution, will spring the trap. The officer charged with the execution and the medical officer will then examine the body for time of death.

b. Upon the pronouncement of the death of the prisoner, the escort, with the band playing a lively air, will return to the parade ground and be dismissed.

c. The witnessing troops will move to their respective areas where they will be dismissed.

d. The officer charged with the execution will direct the burial party in the disposal of the body as prescribed by the commanding officer.

SECTION IV

PROCEEDINGS AFTER EXECUTION

	Paragraph
Disposition of Remains	18
Disposition of Effects	19
Notification and Reports	20

18. Disposition of Remains

If the next of kin or other relatives of the deceased desire the body, the officer designated to execute the sentence will, if practicable, permit its delivery to them for burial. If no such claim is made, he will cause it to be buried in a post or civilian cemetery or at the place of death, whichever may be deemed proper and is authorized by pertinent regulations. (See AR 210–500 and 30–1820.)

19. Disposition of Effects

See Article of War 112 and sections V, VI and VII, AR 600–550.

20. Notification and Reports

The officer designated to execute the sentence will notify The Adjutant General immediately following the execution, by fastest available method of communication, of the carrying out of the sentence of death, the time, place and any unusual circumstances attendant thereon. He will likewise, in addition, comply with the requirements of section II, AR 600–550. The quartermaster or other officer in charge of burial will furnish report as provided in AR 30–1815.

SECTION V

DEPARTURES

Paragraph
Limited facilities 21

21. Limited Facilities

If the facilities are not available for the carrying out of each of the provisions of this pamphlet or if the exigencies of the situation require it, the officer designated to execute the sentence may make the necessary departures from the provisions herein contained, except that he may not change the mode of execution.

SECTION VI

STRUCTURES

	Paragraph
Permanent Scaffold	22
Semipermanent Scaffold	23
Emergency Structures	24

22. Permanent Scaffold

A permanent type, demountable scaffold, with a metal trigger mechanism, will be erected when the need for such a structure is determined by the commanding officer. (See fig. 1.) Where available, troops belonging to the Corps of Engineers will be employed in the constructing of the scaffold, but where not available, or where it is more practicable, other troops or civilians may be employed. Preliminary tests will be made to insure the strength of the rope in the stability of the scaffold's construction. If facilities are limited, a trap door on the second floor of the building may be constructed to effect the execution, or a similar improvising employed.

23. Semipermanent Scaffold

A semipermanent scaffold which requires no special metal fittings may be used in executions by hanging when deemed expedient by the commanding officer. (See fig. 2.)

24. Emergency Structures

When the exigencies of the field so dictate, emergency type gallows may be used. (See fig. 3.)

SECTION VII

EQUIPMENT

	Paragraph
Hood	25
Collapse Board and Binding Strap	26
Rope	27
Post	28

25. Hood

The hood will be of black sateen material, split at the open end so that it will come well down on the prisoner's chest and back. A draw string will be attached to secure the hood snugly around the neck.

26. Collapse Board and Binding Strap

a. A collapse board will be provided for use in case of the collapse of the prisoner. (See fig. 4.)

b. A strap will be provided for binding prisoner's arms to his side. (See fig. 5.) A plain strap will be provided for securing the prisoner's legs.

27. Rope

The rope will be of manila hemp, 1¼ inches in diameter and approximately 20 feet in length. The rope will be stretched to eliminate any spring. After the hangman's knot is tied, the rope will be treated with wax, soap, or grease to insure a smooth sliding action through the knot.

28. Post.

Design for post used in execution by musketry as mentioned in paragraph 14*a,* is shown in figure 6.

FIGURE 1

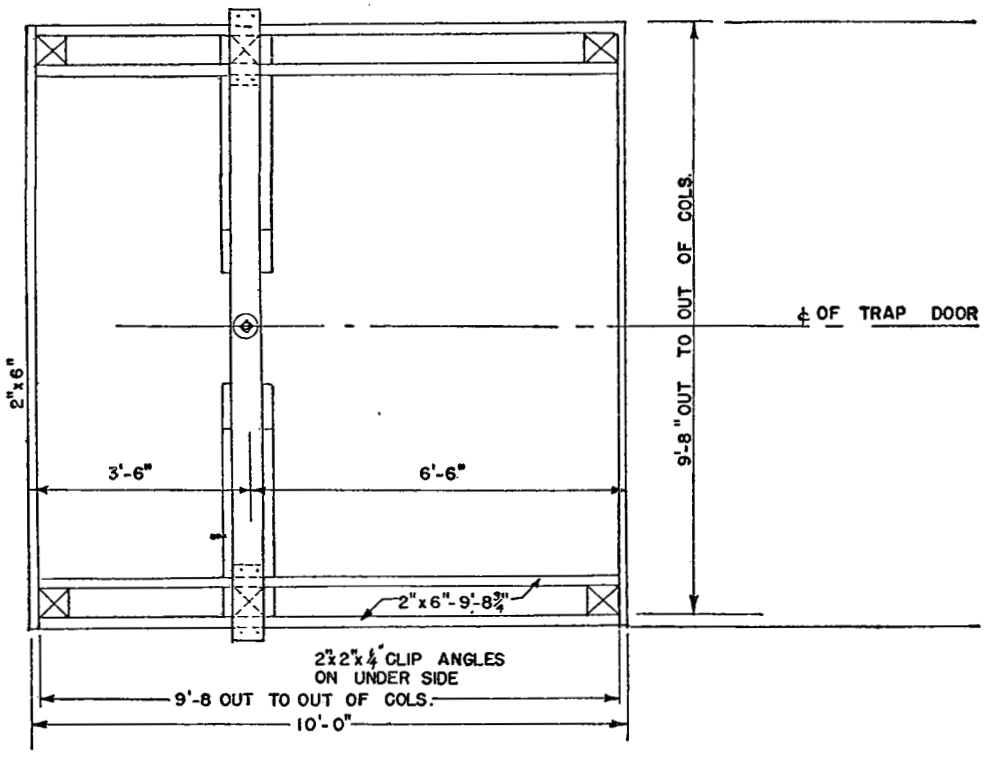

PLAN OVER BEAM

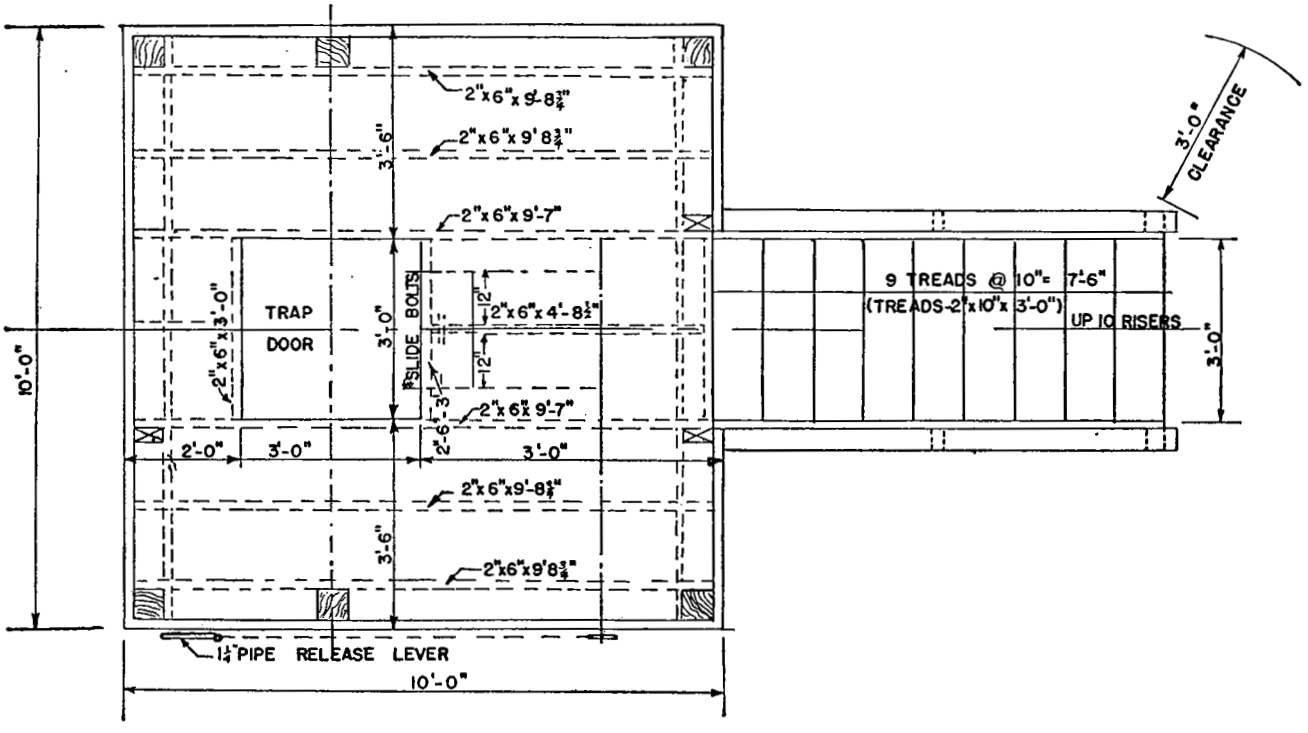

PLATFORM AND STAIR PLAN AT SECTION A-A SCALE ½″=1′–0″

FIGURE 1 CONT'D

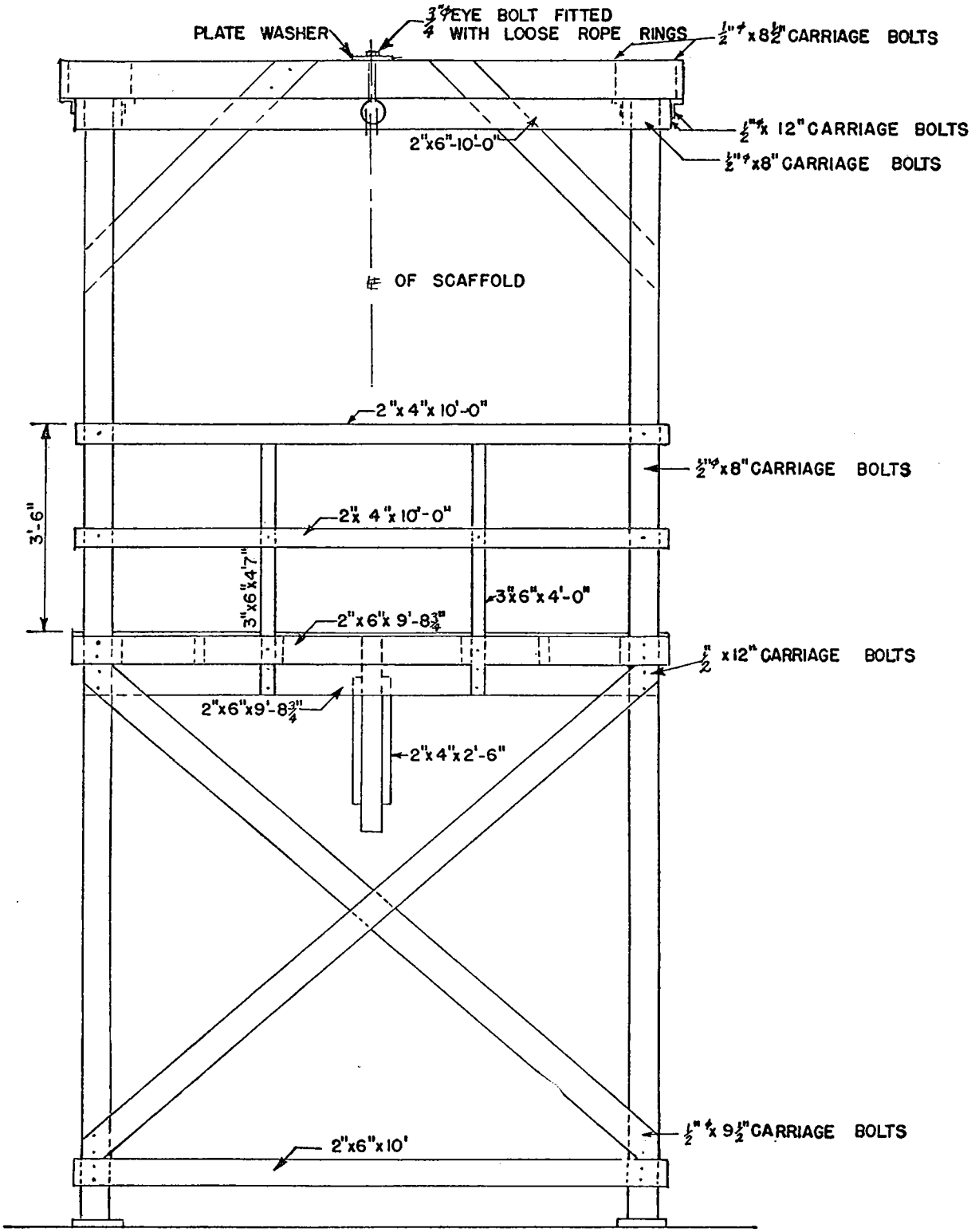

FRONT ELEVATION SCALE 1/2"=1'-0"

FIGURE 1 CONT'D

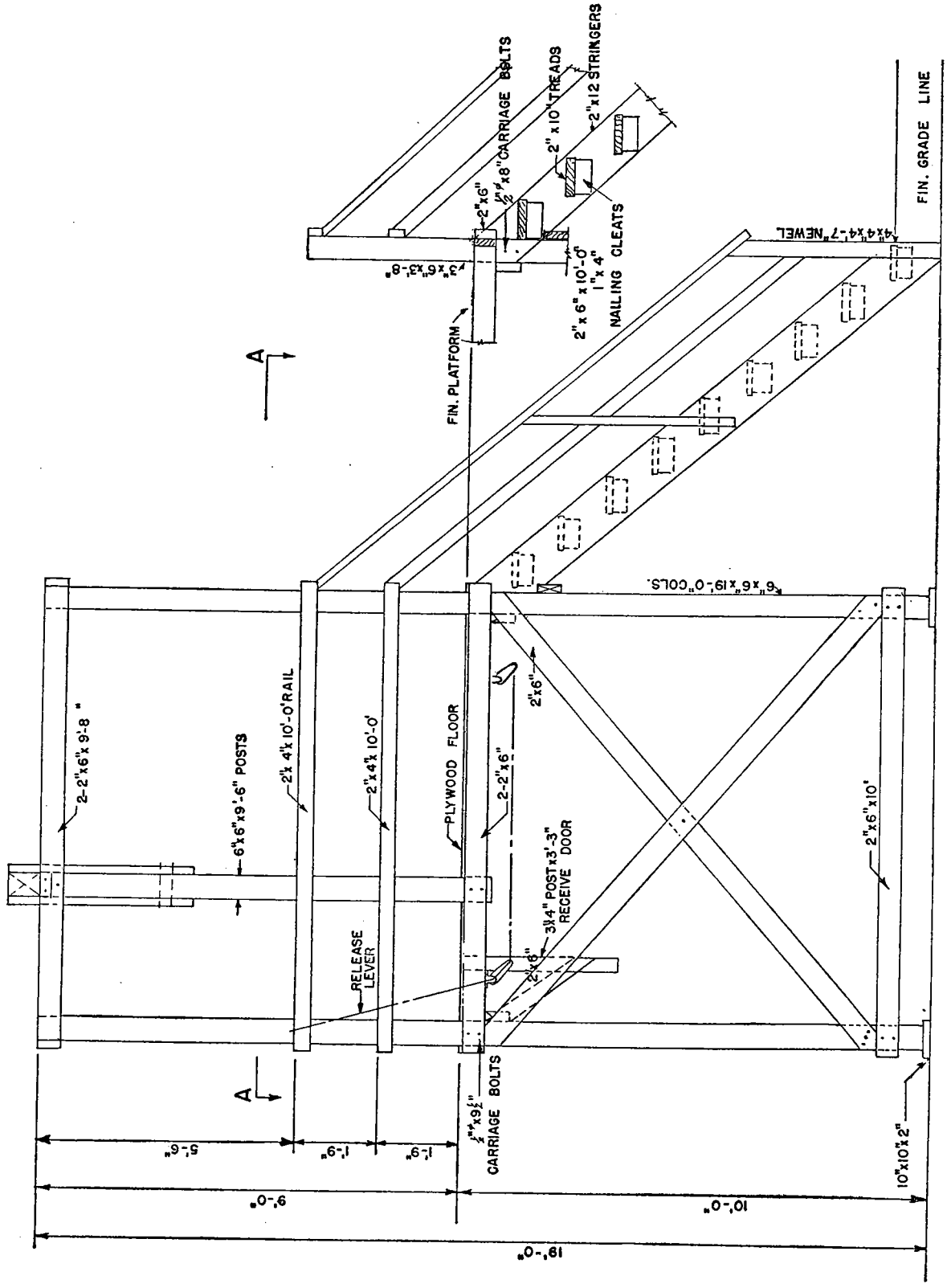

SIDE ELEVATION SCALE 1/2" = 1'-0"

FIGURE 1 CONT'D

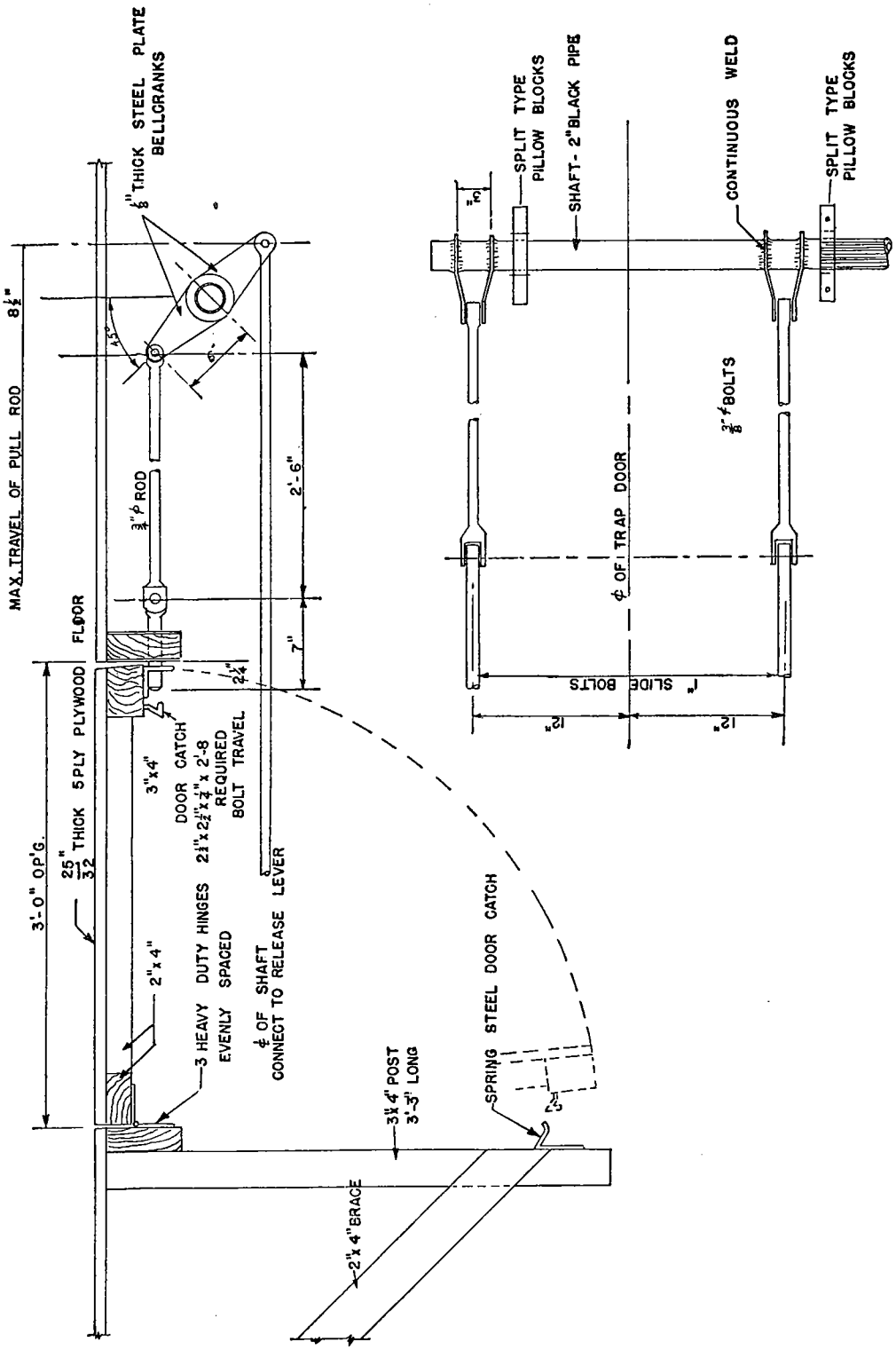

PLAN VIEW OF BELL CRANK

FIGURE 2

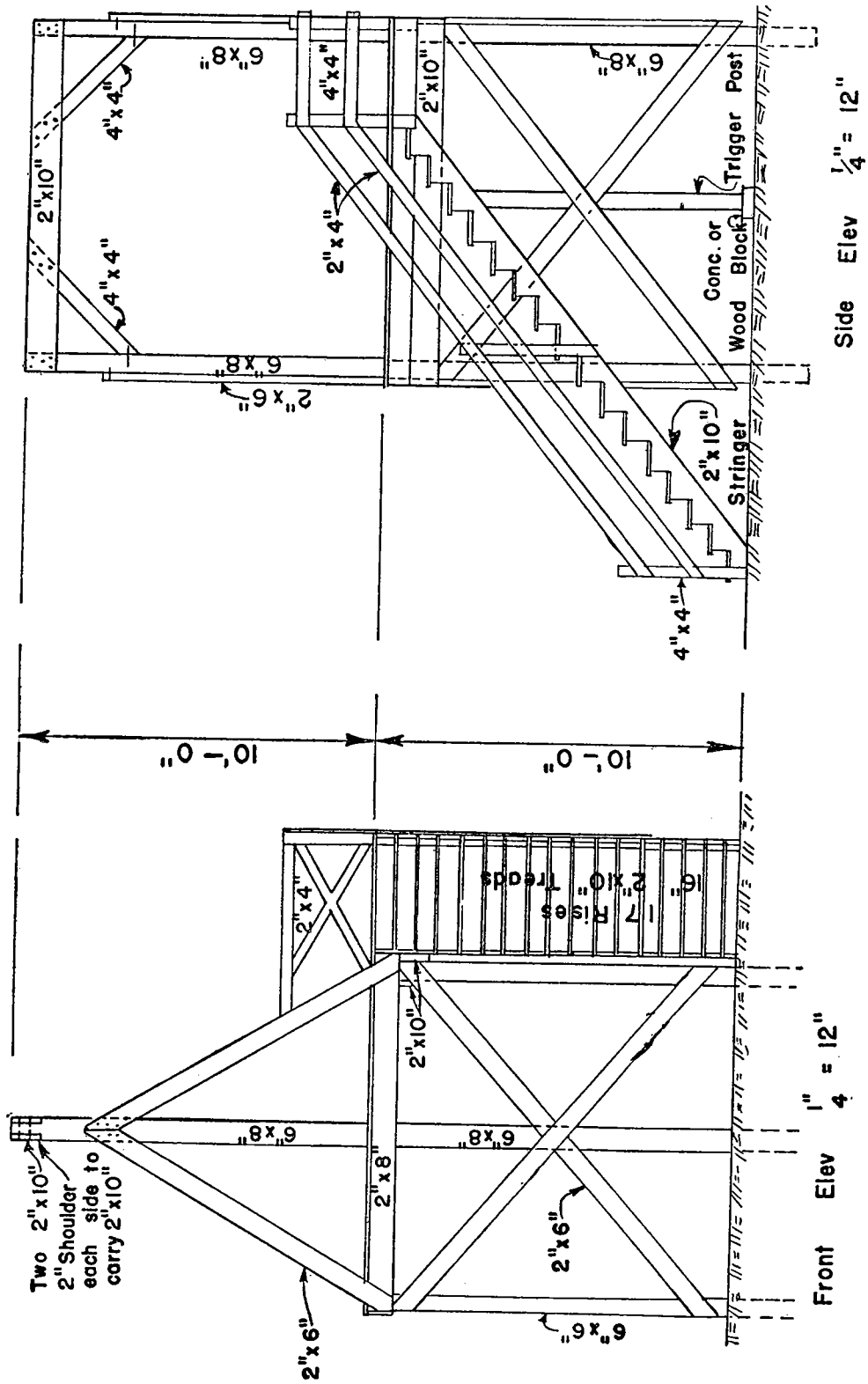
Side Elev 1/4" = 12"
Front Elev 1/4" = 12"
Trigger Post
Conc. or Wood Block
2"x10" Stringer
4"x4"
2"x4"
2"x10"
6"x8"
2"x6"
2"x8"
Two 2"x10" 2" Shoulder each side to carry 2"x10"
10'-0"
10'-0"
16" 2"x10" Treads
17 Risers

FIGURE 2 CONT'D

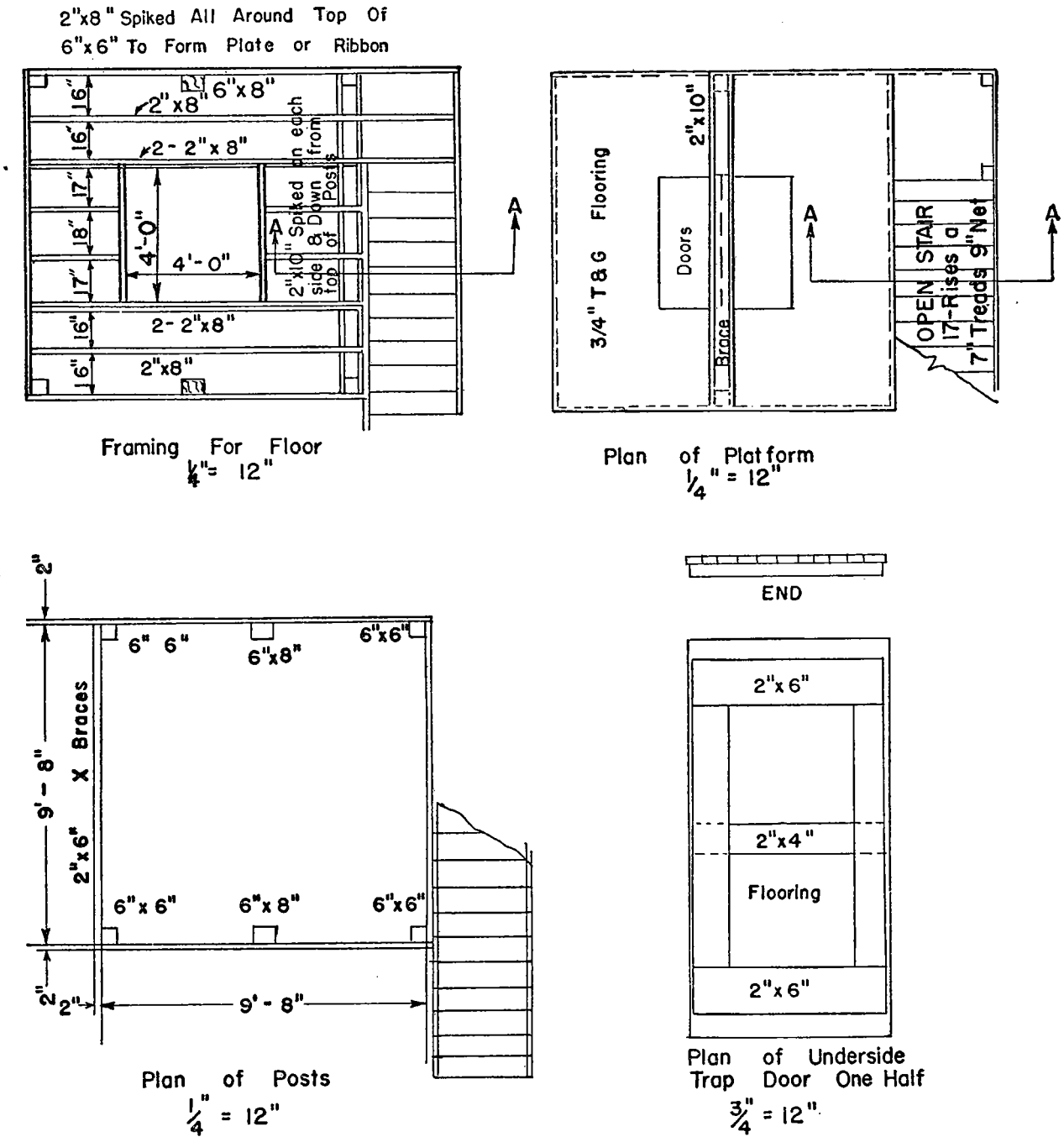

FIGURE 2 CONT'D

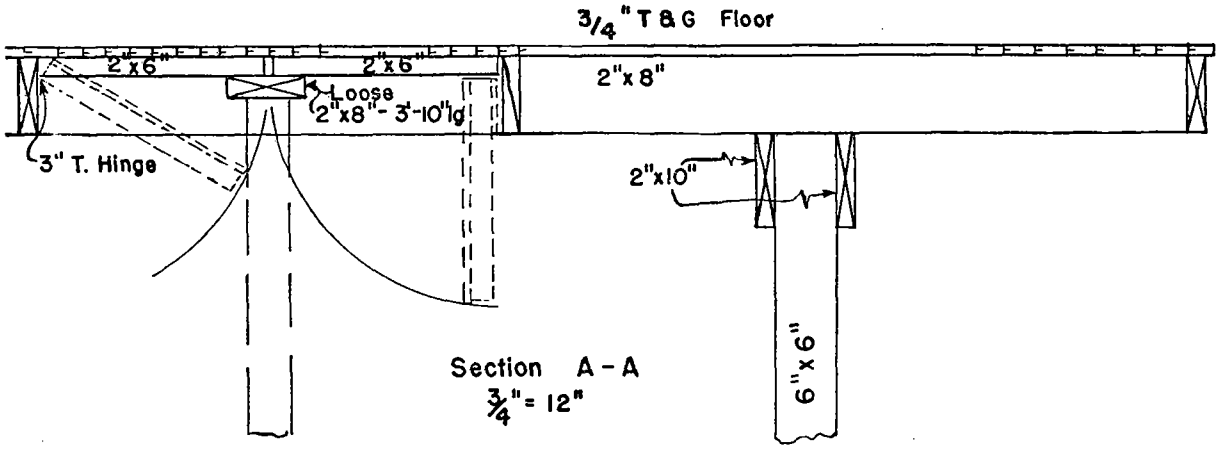

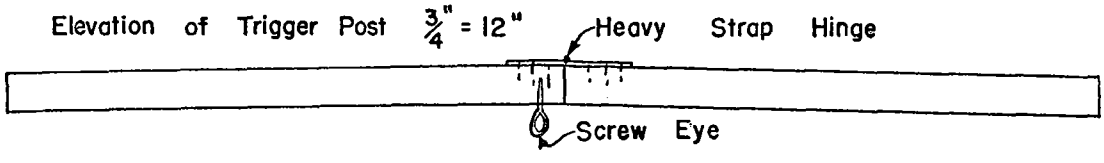

4"x4" 9'-6" Long Cut In Two Pieces At Center.

Hinged To Stand with 1-Inch Bow At Center

MATERIALS

2	pcs	6"x 8"-	22'	Long	Gallows Posts
4	"	6"x6"-	12'	"	Platform Posts
2	"	2"x 10"-	16'	"	Step Stringers
4	"	2"x10"-	10'	"	Cross Bar - Beam
3	"	2"x8" -	14'	"	Joist-Extend for stair landing
1	"	2"x8"-	12'	"	Joist- Short
7	"	2"x8"-	10'	"	Joists- Regular
8	"	2"x6"-	14'	"	X Braces
4	"	2"x6"-	10'	"	Gallows Braces
1	"	4"x4"-	10'	"	Knee Braces [cut to 5'-0"]
4	"	4"x4"-	4'	"	Newels
2	"	2"x4"-	16'	"	Stair Rail
1	"	2"x4"-	14'	"	Stair Rail
3	"	2"x4"-	10	"	Stair Rail & Trap Door Rail
(Flooring if 2" thick			10 pcs	2"x8"- 12'	Long)
			6 "	2"x8" -10'	Long)
			3 "	2"x8"- 8'	Long)
1	pcs	2"x6"-	8'	Long	Trap Door Rails
1	"	2"x6 3/4"	8'	"	140 BM 3/4" T & G Pine Flooring
4	"	2"x10"-	14'	"	Cut into 3'-6" lengths. Step Tread
1	"	4"x4"-	10'	"	Trigger

FIGURE 3

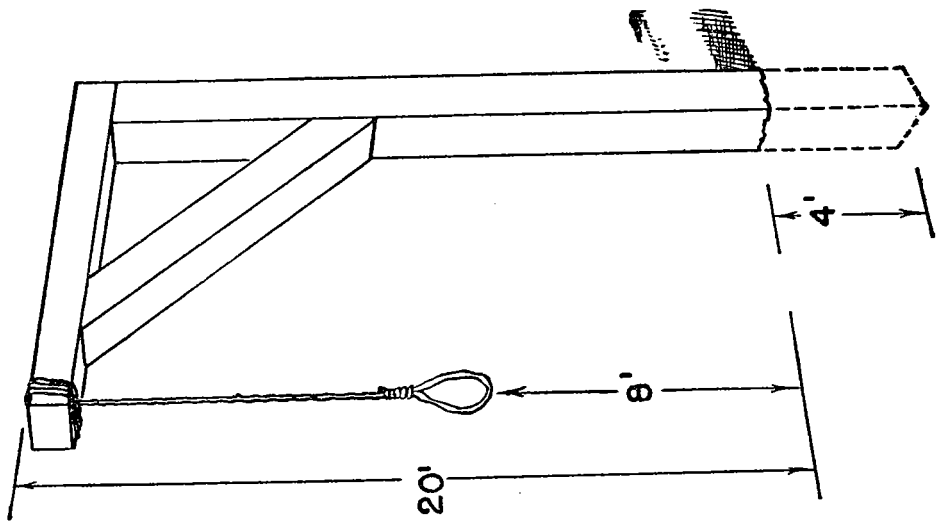

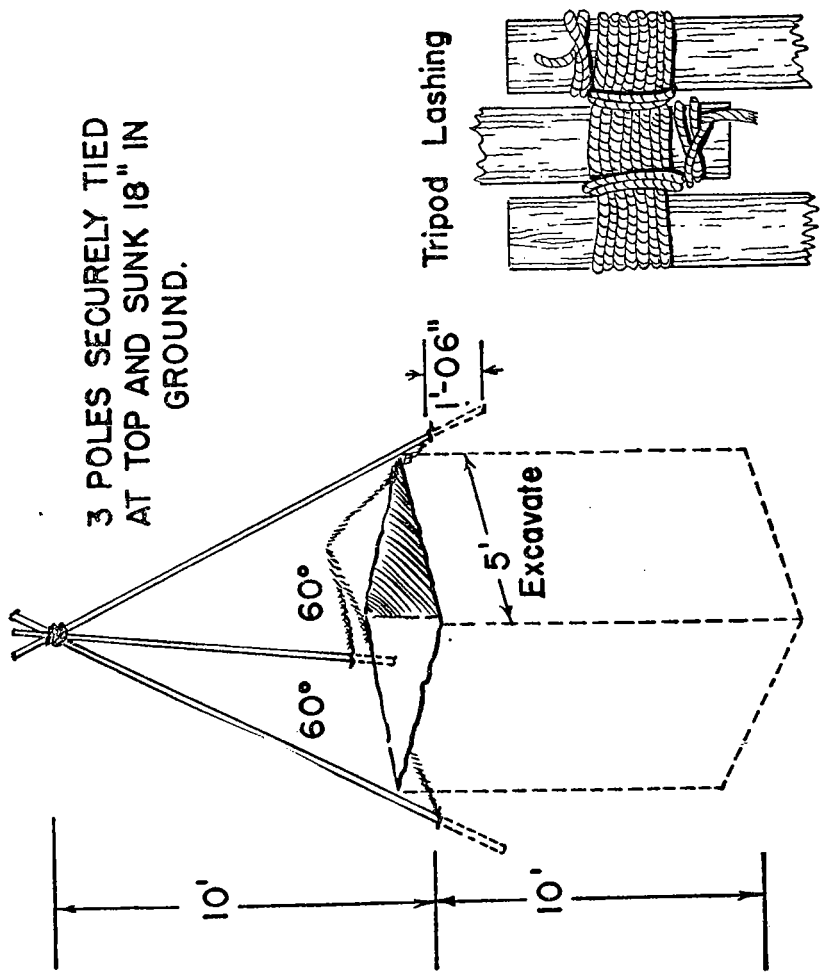

EMERGENCY GALLOWS

FIGURES 4, 5 AND 6

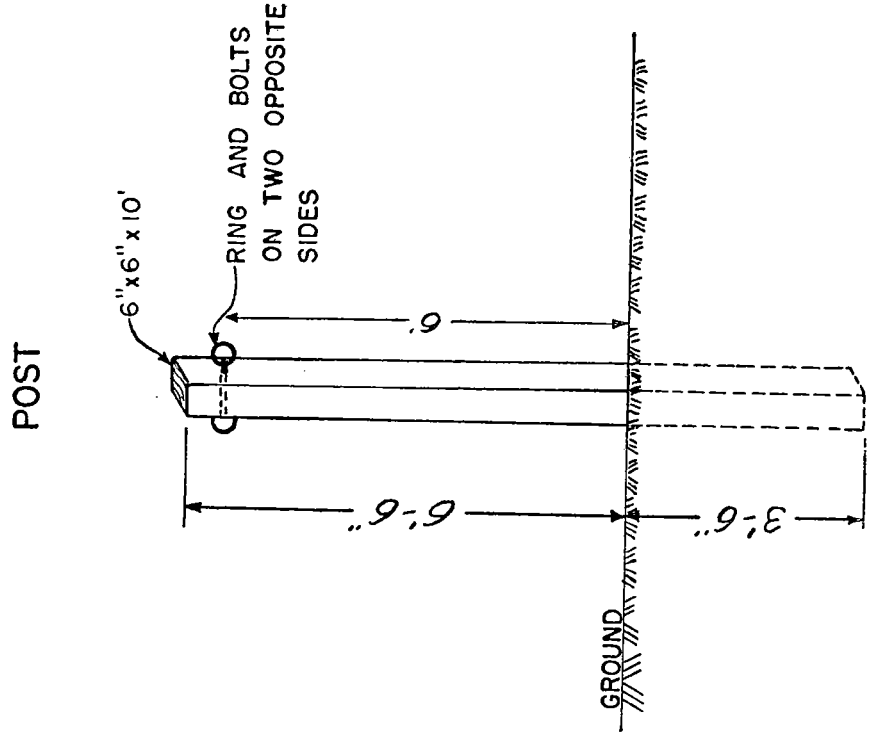

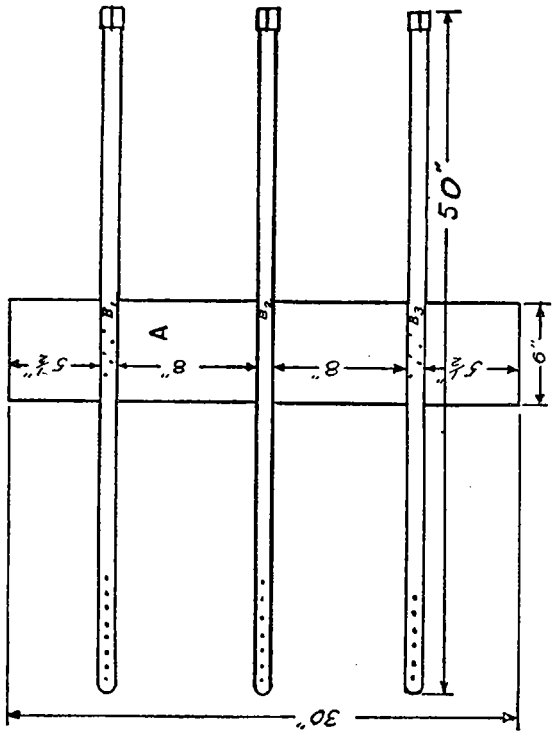

Collapse Board
A- Brace Board
B_1-B_2-B_3- 1 Inch straps

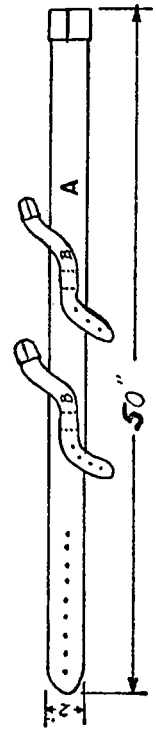

A- Body Strap
B- Arm Straps 1"x9"

U. S. GOVERNMENT PRINTING OFFICE: 1944