TECHNICAL MANUAL

OPERATOR'S, AVIATION UNIT MAINTENANCE (AVUM) AND AVIATION INITERMEDIATE MAINTFENANCE (AVIM)MANUAL (INCLUDING REPAIR PARTS AND SPECIAL TOOLS LIST)

FOR

TRUCK, HELICOPTER GROUND HANDLING

PART NUMBER	NSN
204-050-200-5	1730-00-980-9552
214-706-104-101	1730-01-133-9204
1730-EG-1 00	1730-01-133-9204

DISTRIBUTION STATEMENT A: APPROVED FOR PUBLIC RELEASE; DISTRIBUTION IS UNLIMITED.

* THIS MANUAL SUPERSEDES TM1-1730-230-20P,19 JUNE 1989, INCLUDING ALL CHANGES.

H E A D Q U A R T E R S , D E P A R T M E N T O F T H E A R M Y

30 JUNE 1995

GENERAL WARNINGS

WARNING

High pressure hydraulics operate this equipment. Never disconnect any hydraulic line or fitting without first dropping the hydraulic pressure to zero. A high pressure oil stream can pierce the body and cause severe injury.

WARNING

Dry cleaning solvent P-D-680 is toxic and flammable. Always wear protective goggles and gloves and use only a well ventilated area. Avoid contact with skin, eyes, and clothes and DO NOT use near open flame or excessive heat. The solvent's flash point is 100°-138°F (38°-50°C). If you become dizzy while using cleaning solvent, immediately get fresh air and medical help. If solvent contacts eyes, immediately flush your eyes with clean water and get medical help.

WARNING

Sharp edges can cut hands. Use rags or brush to lubricate.

WARNING

Prolonged contact with oils MIL-H-5606, MIL-L-23699 or MILL-7808 may cause a skin rash. Skin and clothing that contact oil should be thoroughly washed immediately.

WARNING

Always use the same fastener part number (or equivalent) when replacing fasteners. DO NOT risk using a fastener of less quality; DO NOT mix metric and inch (customary) fasteners. Mismatched or incorrect fasteners can result in damage, malfunction, or injury.

GENERAL WARNINGS (CONTINUED)

WARNING

Use caution when inflating tires. Make sure tire is properly seated on rim before inflating. An improperly seated tire can burst with explosive force. Failure to comply can cause DEATH or serious injury. Never use split-rim wheel assemblies with nuts or bolts that are damaged, loose, or have damaged threads. Damaged threads can cause improper assembly, which could cause fasteners to fail, resulting in injury or death.

WARNING

Never inflate wheel assembly without first checking wheel locknut torques, to insure wheel locknuts are tightened to specifications. An assembly with missing washers, bolts, nuts or improperly tightened locknuts could separate under pressure, causing serious injury or death.

WARNING

Stand on one side of cage, during inflation, never directly in front. Inflate assembly to recommended pressure, using a clip-on air chuck. DO NOT exceed cold inflation pressures indicated. Failure to comply may result in serious injury or death.

WARNING

Hydraulic fluid under pressure can penetrate the skin or damage eyes. Fluid leaks under pressure may not be visible. Use a piece of cardboard or wood to find leaks, but DO NOT use a bare hand. Wear safety goggles for protection. If fluid enters the skin or eye, get immediate medical help.

GENERAL WARNINGS (CONTINUED)

WARNING

Personnel injury may result when operating the hydraulic pump, if the metering valve is not mounted properly in the pump outlet. This valve controls the rate of descent, and any attempt to use the control valve release knob to control descent of the helicopter, may prevent the metering valve from activating properly.

WARNING

Ensure that no personnel or obstructions are under helicopter skids prior to lowering. DO NOT attempt to use the pressure release knob to control descent of the helicopter. Personnel injury or equipment damage may occur if the metering valve, which controls the rate of descent, is not activated. Never operate the hydraulic pump if the metering valve is not installed in the pump outlet.

WARNING

Personnel injury or damage to the helicopter or ground handling equipment may result if an attempt is made to disengage the quick release pin before all hydraulic pressure has been released from the hydraulic pump, and the helicopter skid is resting on the ground.

WARNING

To prevent injury to personnel or damage to equipment, release all pressure from the hydraulic pump before starting any maintenance action. Release hydraulic pressure by rapidly rotating the pressure release knob counterclockwise.

WARNING

Grip only the pump handle when operating the hand pump. Never operate the hydraulic pump without the metering valve installed in the pump outlet. This valve controls the rate of descent when lowering a helicopter after use. Lack of a metering valve could cause damage to the helicopter and/or injury to personnel.

GENERAL WARNINGS (CONTINUED)

WARNING

Ensure that no personnel or obstructions are under helicopter skids prior to lowering. DO NOT attempt to use the pressure release knob to control descent of the helicopter. This may prevent the metering valve from activating and could cause damage to the helicopter and/or injury to personnel.

WARNING

Operator injury or death and equipment damage may occur if the clevis pin mandatory configuration is not implemented. Mandatory configuration requires one washer under head of clevis pin and one on other end of clevis pin, between clevis and cotter pin. A fracture or stress of clevis pin may occur under hoses helical weighted load.

WARNING

To prevent personnel injury, the tire and tube must be completely deflated, and the valve stem cores removed, before attempting to separate the wheel halves.

WARNING

If removal of castle nut from axle requires any appreciable torque, immediately check condition and security of each split rim attaching bolt and nut. Assure that they are securely holding inner and outer wheel rim halves together. If not, removal of the castle nut from axle may result in explosive separation of rims with resultant damage, injury or death.

TECHNICAL MANUAL

NO. 1-1730-232-13&P

HEADQUARTERS
DEPARTMENT OF THE ARMY
WASHINGTON, D.C., 30 June 1995

Operator's, Aviation Unit Maintenance (AVUM),and Intermediate Maintenance (AVIM) Manual (Including Repair Parts and Special Tools List)

TRUCK, HELICOPTER GROUND HANDLING

PART NUMBER	NSN
204-050-200-5	1730-00-980-9552
214-706-104-101	1730-01-133-9204
1730-EG-100	1730-01-133-9204

REPORTING ERRORS AND RECOMMENDING IMPROVEMENTS

You can help improve this manual. If you find any mistakes, or if you know of a way to improve these procedures, please let us know. Mall your letter or DA Form 2028 (Recommended Changes to Publications and Blank Forms), or DA Form 2028-2 located in the back of this manual directly to: Commander, US Army Aviation and Troop Command, ATTN: AMSAT-I-MP, 4300 Goodfellow Blvd. , St. Louis, MO 63120-1798. A reply will be furnished directly to you.

DISTRIBUTION STATEMENT A: Approved for public release; distribution is unlimited

TABLE OF CONTENTS

		PAGE
Section I	GENERAL WARNINGS	a
CHAPTER 1	**INTRODUCTION**	**1-1**
Section I	General Information	1-1
Section II	Equipment Description and Data	1-6
Section III	Technical Principles of Operation	1-10
CHAPTER 2	**OPERATING INSTRUCTIONS**	**2-1**
Section I	Description and Use of Operator's Controls and Indicators	2-1
Section II	Preventive Maintenance Checks and Services (PMCS)	2-4
Section III	Operations Under Usual Conditions	2-10
Section IV	Operations Under Unusual Conditions	2-13

*This manual supersedes TM 1-1 730-230-20P, 19 June 1989, including all changes

CHAPTER 3	**AVIATION UNIT MAINTENANCE (AVUM) INSTRUCTIONS .....**	**3-1**
Section I	AVUM Repair Parts, Special Tools, TMDE, and Support Equipment ...	3-1
Section II	AVUM Service Upon Receipt	3-2
Section III	AVUM Preventive Maintenance Checks and Services (PMCS)	3-3
Section IV	AVUM Troubleshooting.....	3-9
Section V	AVUM Maintenance Procedures	3-12
Section VI	AVUM Preparation for Storage or Shipment	3-43
CHAPTER 4	**AVIATION INTERMEDIATE MAINTENANCE (AVIM) INSTRUCTIONS**	**4-1**
Section I	AVIM Repair Parts, Special Tools, TMDE, and Support Equipment	4-1
Section II	AVIM Service Upon Receipt	4-2
Section III	AVIM Preventive Maintenance Checks and Services (PMCS)	4-3
Section IV	AVIM Troubleshooting	4-5
Section V	AVIM Maintenance Procedures.....	4-6
Section VI	AVIM Preparation for Storage or Shipment	4-28
APPENDIX A	**REFERENCES .....**	**A-1**
APPENDIX B	**MAINTENANCE ALLOCATION CHART .....**	**B-1**
APPENDIX C	**REPAIR PARTS AND SPECIAL TOOLS LIST .....**	**C-1**
APPENDIX D	**EXPENDABLE SUPPUES AND MATERIALS UST.....**	**D-1**
APPENDIX E	**ILLUSTRATED UST OF MANUFACTURED ITEMS .....**	**E-1**
APPENDIX F	**TORQUE LIMITS .....**	**F-1**
	ALPHABETICAL INDEX	**INDEX-1**
	GLOSSARY	**GLOSSARY-1**

CHAPTER 1

INTRODUCTION

SECTION I GENERAL INFORMATION

1-1. SCOPE OF MANUAL. This manual contains the operating and maintenance instructions for three models of the Truck, Ground Handling, used during ground handling and maneuvering of a helicopter equipped with skids. The type of manual, equipment names and model numbers, and purpose of equipment are described below.

1-1.1. Type of Manual. This is a 13&P Operator's, Aviation Unit, and Aviation Intermediate Maintenance Manual, including Repair Parts and Special Tools List (RPSTL).

1-1.2. Equipment Names and Model Numbers. Three models of the Ground Handling Wheels Assembly are described in this manual. The equipment names and model numbers are listed below and shown in Figures 1-1, 1-2, and 1-3 respectively.

Wheels Assembly	Model 204-050-200-5 (Used with OH-58D)
Wheels Assembly	Model 214-706-104-101 (Used with AH-1 or UH-1)
Wheels Assembly	Model 1730-EG-100 (Used with or AH-1 or UH-1)

1-1.3. Purpose of Equipment. The Ground Handling **Wheels Assembly is used for ground handling and maneuvering of helicopters. When** attached to each skid of a helicopter, hand operated hydraulic pumps are used to rotate eccentric axles and lift **the helicopter skids off the ground.** The helicopter can then be **moved and maneuvered in accordance** with **ground** handling instructions. Model 204-050-200-5 is used **for ground** handling and maneuvering of helicopter type OH-58D. Model 214-706-104-101 **and Model** 1730-EG-100**, are used for ground handling and maneuvering of helicopter types AH-1** and UH1. .

1-2. MAINTENANCE FORMS, RECORDS, AND REPORTS. The Department of the **Army forms and procedures required** for **equipment maintenance** will be **those prescribed by DA** Pam 738-750, The **Army Maintenance** Management **System (TAMMS)** and **DA Pam 738-751,** Functional Users Manual for The **Army** Maintenance **Management System- Aviation (TAMMS-A); or AR** 700-138, **Army** Logistics Readiness and Sustainabllity.

1-3. CORROSION PREVENTION AND CONTROL It is important that any **corrosion problems** with **the Ground** Handling Wheels Assembly be reported so that the **problem can be corrected** and **improvements can be made to prevent** the problem in **the future. Corrosion** is typically associated with rusting **of metals, but can** also include deterioration of **other** materials, **such as rubber and plastic Unusual** cracking, softening, swelling, **or breaking of these materials may be corrosion problems.** Report corrosion problems using Standard Form 368, Product Quality Deficiency Report. Use key words such as "corrosion," "rust," "deterioration," or "cracking," to ensure that the information is identified as a CPC problem. Submit the report to the address specified in **DA** PAM 738-751.

1-4. DESTRUCTION OF ARMY MATERIAL TO PREVENT ENEMY USE. Procedures for destroying Army material to prevent enemy use are listed in TM 750-244-1-4 (FSC 1730).

1-5. REPORTING EQUIPMENT IMPROVEMENT RECOMMENDATIONS (EIR). Report equipment improvement recommendations, for **the** Ground Handling Wheels Assembly, on an SF 368 Product Quality Deficiency Report. Specifically state any design or performance deficiencies found during operation or maintenance, and recommendations to correct the deficiencies. Mail the report to: Commander, US Army Aviation and Troop Command, **ATTN: AMSAT-1-MDO,** 4300 Goodfellow Blvd. , St. Louis, MO 63120-1798.

1-6. WARRANTY INFORMATION. There **are no** warranties on these assemblies.

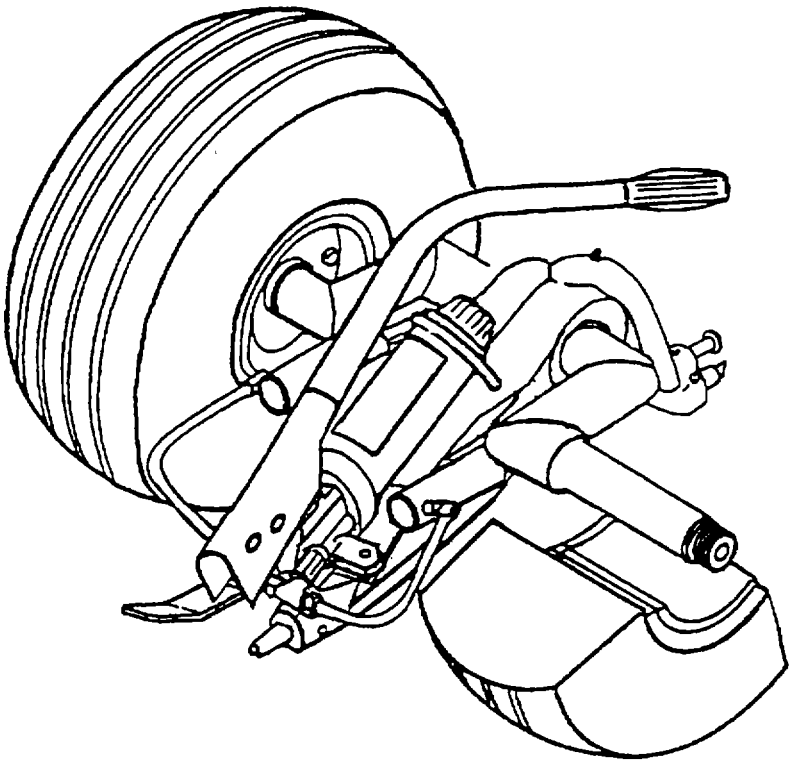

Figure 1-1. Ground Handling Wheels Assembly (Model 204-050-200-5)

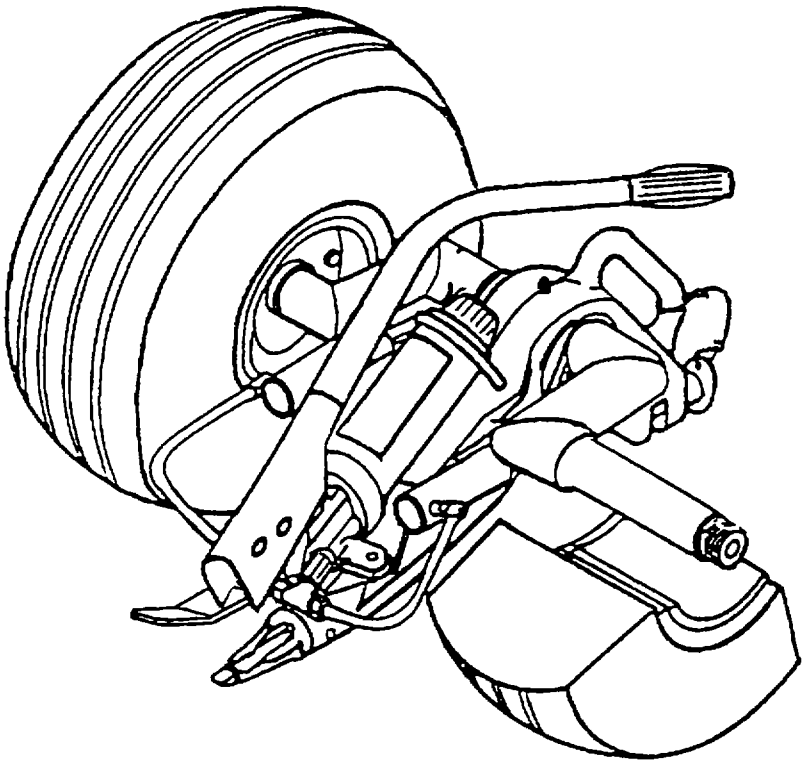

Figure 1-2. Ground Handling Wheels Assembly (Model 214-706-104-101)

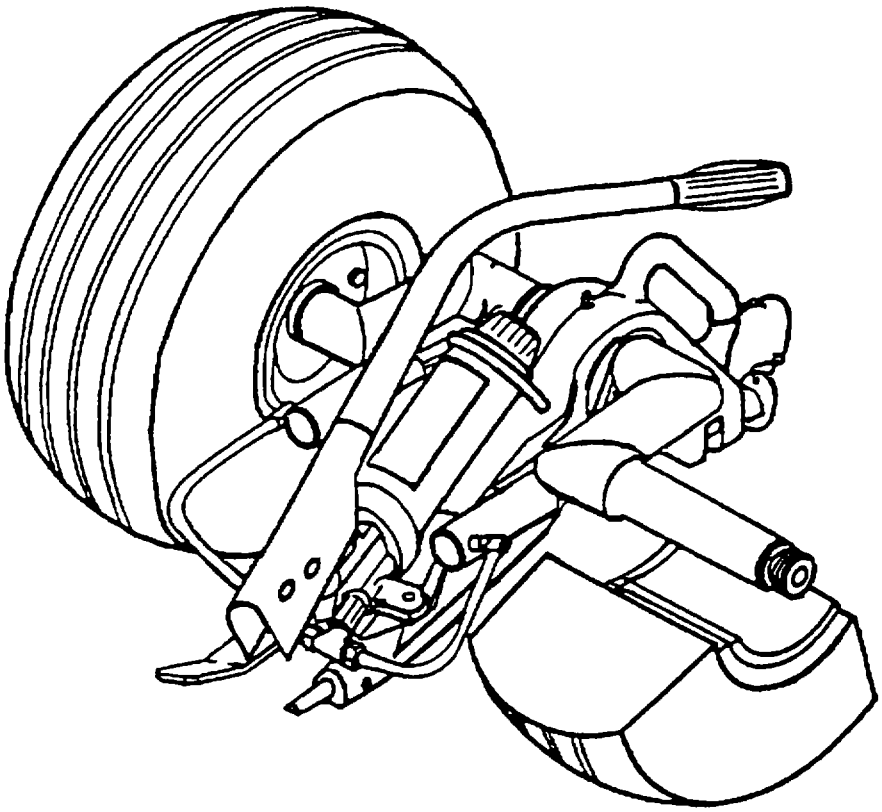

Figure 1-3. Ground Handling Wheels Assembly (Model 1730-EG-100)

SECTION II EQUIPMENT DESCRIPTION AND DATA

1-7. EQUIPMENT CHARACTERISTICS, CAPABILITIES, AND FEATURES.

The Ground Handling Wheels Assemblies are designed for ground handling and maneuvering of Army helicopter types OH-58D, AH-1, and UH-1. The equipment characteristics, capabilities, and features are as follows:

1-7.1 Characteristics. The Ground Handling Wheels Assembly is portable, uses quick release pins for attachment to helicopter skids, has an integral hydraulic hand pump for lifting the helicopter, and has an unlimited turning radius when maneuvering the helicopter.

1-7.2 Capabilities. The weight and lifting capacity of these units by model are

MODEL	**WEIGHT**	**LIFTING** CAPACITY
204-050-200-5	75	5250 pounds
214-706-104-101	95	6500 pounds
1730-EG-100	95	7500 pounds

1-7.3 Features. All models have **two** wheels on eccentric axles, a cradle structure with quick release pins, two hydraulic rams, two hydraulic hose assemblies, and a hand operated hydraulic pump.

1-8. LOCATION AND DESCRIPTION OF MAJOR COMPONENTS.

The major components of the Ground Handling Wheels Assembly are identified in Figure 1-4 and described in the following table.

Key	**Item**	**Purpose/function**
1	Cradle **Assembly**	Machined aluminum casting **for mounting eccentric axles, wheels, and pump**
2	**Axle Set Assembly**	Eccentric axles, rotated by hydraulic **rams to** lift helicopter.
3	**Hydraulic** Hand **Pump**	Power **source for hydraulic rams, to** rotate axles
4	Hand **Pump** Handle	**Transfers** manual **energy** to hydraulic energy.
5	Hydraulic Rams	**Pressurized** to rotate eccentric axles.
6	Wheel Assembly	Rims **and tires provide** rolling capability.
7	Release **Pin**	Connects cradle to helicopter skid.
8	Guard	**Protects nose pin** and hydraulic fittings.
9	Fixed (Nose) **Pin**	Connects cradle to helicopter **skid.**
10	Hose Assembly	Connect **hydraulic pump** to hydraulic rams.

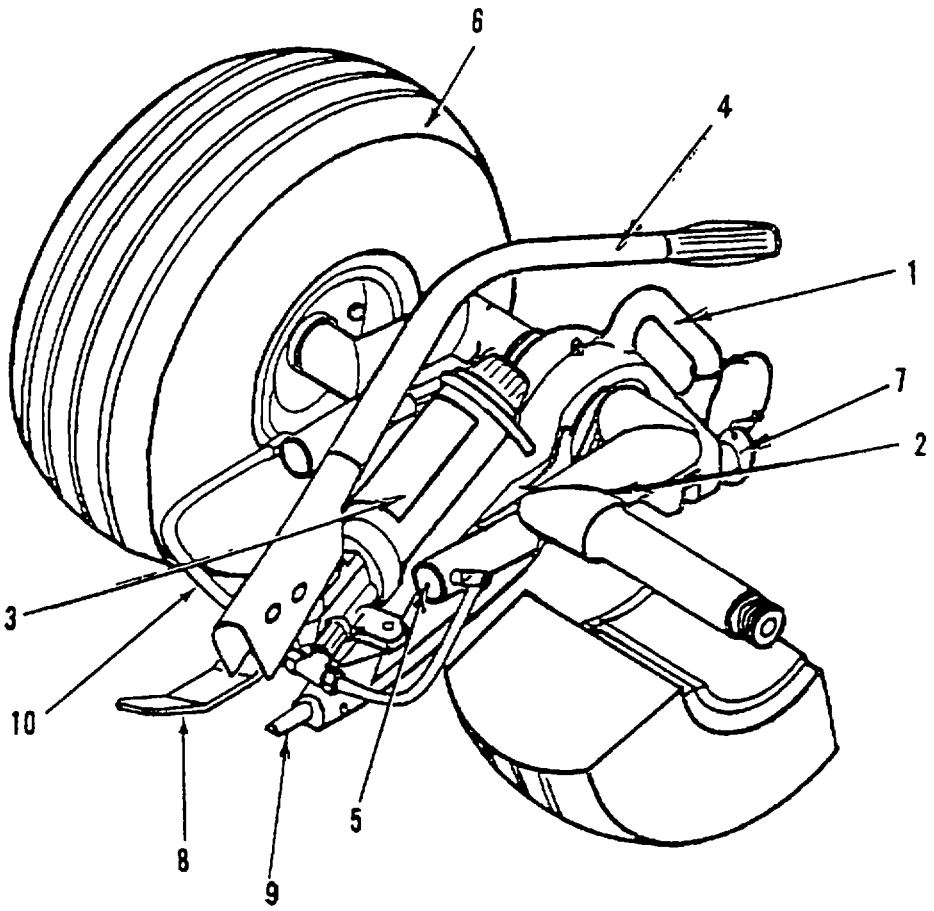

1. CRADLE ASSEMBLY
2. AXLE SET ASSEMBLY
3. HYDRAULIC HAND PUMP
4. HYDRAULIC HAND PUMP HANDLE
5 HYDRAULIC RAM CYLINDER
6. WHEEL ASSEMBLY
7. RELEASE PIN
8. GUARD
9. FIXED (NOSE) PIN
10 HOSE ASSEMBLY

Figure 1-4. Ground Handling Wheels Assembly (Typical)

1-9. DIFFERENCES IN MODELS.

The major differences in the three models is the maximum load capacity of the assembly. There are minor differences in the nose pins and release pins The appearance of cradles, hydraulic pumps, hydraulic hoses, and hydraulic rams may differ, but the function of the parts is identical.

1-10. LOCATION AND CONTENTS OF STENCIL MARKING, DECALS, AND PLATES

There are four markings on the Ground handling wheels assembly as indicated in Figure 1-5. The WARNING label is attached to the hand pump. The Model number label is attached to the hand pump handle. The tire inflation label and wheel identification/WARNING label are attached to the wheel nm

1-11. EQUIPMENT CONFIGURATIONS.

All three models of **the Ground** Handling Wheels Assembly **are** configured with **two** wheels, **a** hydraulic hand pump, hydraulically **actuated eccentric** axles, **and a mechanism for** attachment **to a helicopter. Of** these, only the **attachment mechanism is** configured differently **on the three models. The Ground** Handling Wheels Assembly, Model 204-950-200-5, is configured for attachment **to helicopter OH-58D. The other two** Ground Handling **Wheels** Assemblies, Model 214-706-104-101 and Model 1730-EG-100, are configured for attachment **to either** AH-1 or UH-1 helicopters.

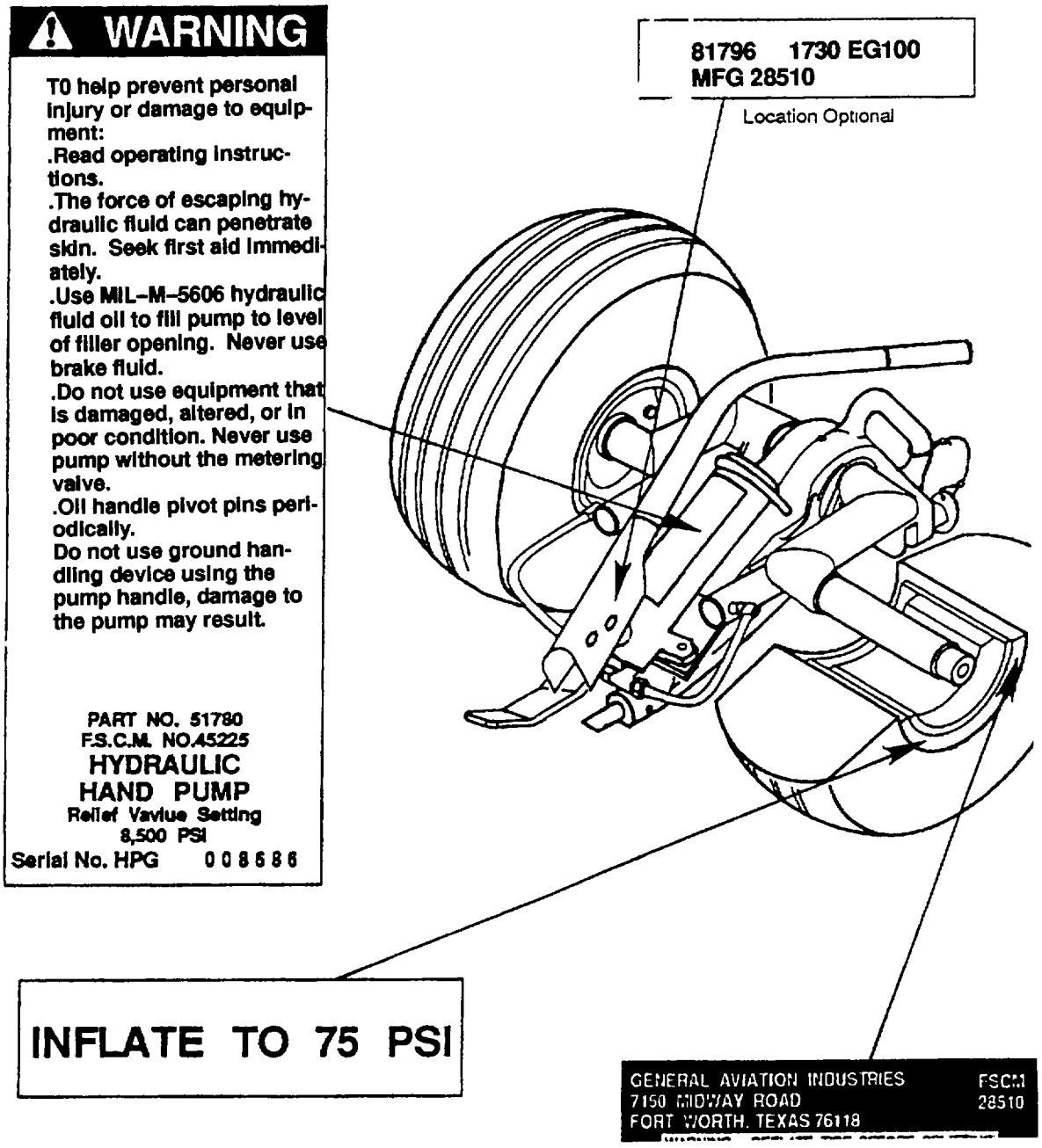
WARNING
T0 help prevent personal injury or damage to equipment:
.Read operating instructions.
.The force of escaping hydraulic fluid can penetrate skin. Seek first aid immediately.
.Use MIL-M-5606 hydraulic fluid oil to fill pump to level of filler opening. Never use brake fluid.
.Do not use equipment that is damaged, altered, or in poor condition. Never use pump without the metering valve.
.Oil handle pivot pins periodically.
Do not use ground handling device using the pump handle, damage to the pump may result.
PART NO. 51780
F.S.C.M. NO.45225
HYDRAULIC
HAND PUMP
Relief Vavlue Setting
8,500 PSI
Serial No. HPG 008686
81796 1730 EG100
MFG 28510
Location Optional
INFLATE TO 75 PSI
GENERAL AVIATION INDUSTRIES
7150 MIDWAY ROAD
FORT WORTH, TEXAS 76118
FSCM
28510

SECTION III TECHNICAL PRINCIPLES OF OPERATION

1-12. GENERAL OPERATION.

General operation consists of positioning the Ground Handling Wheels Assemblies over the skids, attaching the cradle to the helicopter with a nose pin or quick release pin, lifting the helicopter with the hand operated hydraulic pump, and moving the helicopter.

1-12.1 Positioning. The Ground Handling Wheels Assemblies are positioned over the left and right landing skid lifting lugs, which are located aft and forward of the helicopter center. The lug locations provide a "near balance" condition for ground handling or moving **the helicopter by hand.** The cradles are aligned and attached to the skid lugs by nose pins at the front and quick release pins at the rear.

1-12.2 Lifting. Two **Ground** Handling Wheels Assemblies **are used to** lift the helicopter **off** the ground. Each Ground Handling Wheels Assembly has **a hand operated hydraulic pump.** Operating the hand pump provides hydraulic force to hydraulic rams**,** which rotate the eccentric axles mounted in the cradle assembly. This action lifts the cradle sufficiently to raise the helicopter landing skids off the ground.

1-12.3 Moving. Once lifted, the helicopter is supported by hydraulic pressure It can be moved by balancing, rolling, and maneuvering into desired position manually.

WARNING

Personnel injury may result when operating the hydraulic pump, If the metering valve Is not mounted properly In the pump outlet. This valve controls the rate of descent, and any attempt to use the control valve release knob to control descent of the helicopter, may prevent the metering valve from activating properly.

1-13. HYDRAULIC HAND PUMP OPERATION.

The hydraulic hand pump will function **in the horizontal, vertical, or any intermediate positions of the Ground Handling Wheels Assembly. The hydraulic pump is operated as follows:**

1-13.1 Metering Valve. The metering valve Is installed in **the pump outlet, to restrict the flow of hydraulic fluid when pressure is released. This ensures that** the **helicopter** is **lowered at a slow and safe rate, when the pressure is released through** the **pressure control valve. The valve release knob must be rapidly turned, to ensure proper operation of** the metering valve.

1-13.2 Release Knob. The release knob is part of the pressure control valve in the **pump body. The control valve must be closed when pumping up pressure to lift the helicopter and must be opened, by the release knob, to lower the helicopter. The control valve release knob must be rapidly turned to ensure proper operation of the metering** valve.

1-13.3 Pump Handle. The pump handle operates the pump piston to produce pressure and move a volume of fluid to the hydraulic rams. The hydraulic rams extend and mechanically rotate the eccentric axles to lift **the helicopter. The** control **valve** must be closed by **the** release knob before operating the pump handle.

CHAPTER 2

OPERATING INSTRUCTIONS

SECTION I DESCRIPTION AND USE OF OPERATOR'S CONTROLS AND INDICATORS

2-1. GENERAL OPERATOR INFORMATION.
The Ground Handling Wheels Assembly operator's controls and indicators are described in this section. The functional use of each control and indicator is explained.

2-2. DESCRIPTION OF OPERATOR'S CONTROLS AND INDICATORS.
The Ground Handling Wheels Assembly operator's controls consist of the hydraulic hand pump handle, pressure control valve knob, and removable quick release **pin. A fillport /hydraulic** fluid **level** indicator is located under the reservoir cap. Figure 2-1 shows the location of **each control and** indicator The metering valve operates automatically, but is included In this description. **A** model number Is included with the title of a description, unless the description applies to **all** models covered In this manual.

2-2.1 Hydraulic Hand Pump Handle Description. The hydraulic hand pump handle has a curved design to minimize equipment damage or personnel injury. It is attached to the pump piston and pump housing with pivot pins. A hand grip is provided to ensure safe operation in all weather conditions

2-2.2 Hydraulic **Pressure Control Valve Knob Description. The knob is** attached to the hydraulic hand pump control **valve shaft** with a setscrew. When **the knob is moved** fully clockwise, the control ball check-valve is closed. When the knob is moved fully counterclockwise, the control valve is open.

2-2.3 Hydraulic **Pressure Metering Valve Description. The metering valve** is installed in the pump outlet and looks like a common fitting. **A reducer and tee fitting are installed in** the **metering** valve outlet. **The** purpose of the valve is to control the **descent rate of the helicopter, when lowering it to the ground.**

2-2.4 Quick Release Pin Description, Model 204-050-200-5. A quick release pin is **mechanically connected to the support** pin. **The release pin is pushed to engage or disengage the support** pin with **the helicopter skid. An** internal spring **returns the pins to the extended position.**

2-2.5 Quick Release Pin Description, Model 214-706-104-101 and Model 1730-EG-100. The quick release pin has an internal spring, **two** locking balls, **and** a **release button. The spring applies pressure to the** locking **balls whenever the release button Is extended. When the release button Is pressed**, spring **pressure Is relaxed** and **the locking balls retract Into** the pin. **The** pin cannot **be Installed In or removed from the cradle clevis unless the release button Is pressed and held. A** lanyard connects **the** pin to **the cradle, to prevent loss** when **the pin is removed from the cradle clevis.**

2-2.6 Fluid Level Indicator Description. The fluid level indicator in installed in the end of the hydraulic pump **reservoir, under the reservoir** cap. **A sight glass allows visual** verification of **the** fluid **level.**

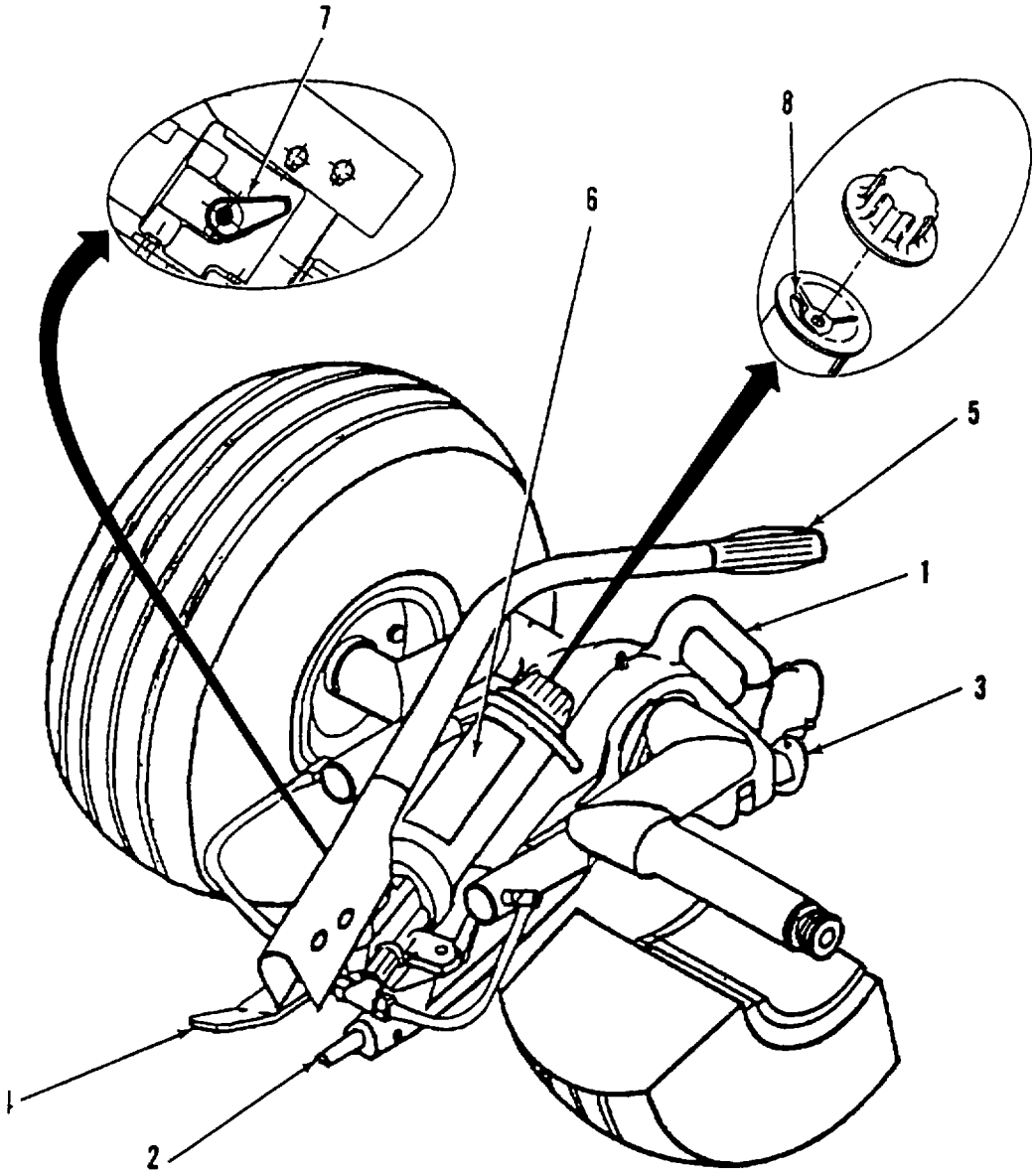

Figure 2-1. Operator's Controls and Indicators

2-3. USE OF OPERATOR'S CONTROLS AND INDICATORS.

The Ground Handling **Wheels Assembly** controls and indicators are used as described below

2-3.1. Hydraulic Hand Pump Handle Use. The hydraulic hand pump will function in the horizontal, vertical, or any intermediate position of the Ground Handling Wheels Assembly. The pressure control valve must be closed by turning the pressure release knob before operating the pump handle. The pump handle operates the pump piston to produce pressure and move a volume of fluid to the hydraulic rams. The rams extend and mechanically rotate the eccentric axles to lift the helicopter.

WARNING

Ensure that no personnel or obstructions are under helicopter skids prior to lowering. Do not attempt to use the pressure release knob to control descent of the helicopter. Personnel Injury or equipment damage may occur if the metering valve, which controls the rate of descent, is not activated. Never operate the hydraulic pump If the metering valve Is not Installed in the pump outlet.

2-3.2. Hydraulic Pressure Control Valve Knob Use. The pressure release knob is part of the pressure control valve In the pump body. The control valve must be closed when pumping up pressure to lift the helicopter, and must be opened to lower the helicopter. The control valve pressure release knob must be rapidly turned to ensure proper operation of the metering valve. Refer to figure 2-2.

1. A spring holds the poppet open to provide unrestricted flow of hydraulic fluid, while installing a Ground Handling Wheels Assembly on a helicopter.
2. To raise the helicopter, turn the pressure control valve knob clockwise, to the closed(seated) position. Work the pump handle up and down to build hydraulic pressure. This extends the two hydraulic rams, which rotate the eccentric axles and raise the helicopter
3. To lower the helicopter, release the hydraulic pressure by opening the control valve. This is done by rapidly turning the control valve knob counter clockwise, to the full open position.

2-3.3. Hydraulic Pressure Metering Valve Use. The metering valve Is installed in the pump outlet, to restrict the flow of hydraulic fluid from the rams to the pump when pressure is released. This ensures that the helicopter is lowered at a slow and safe rate. The pressure release knob must be rapidly turned to ensure proper operation of the metering valve. Refer to figure 2-2.

2-3 4. Quick Release Pin Use, Model 204 050-200-5. Procedures for engaging and disengaging the quick release pin are presented. Refer to figure 2-3

a. Engage Quick Release Pin. Engage the **quick release pin as** follows**:**

1. Position the wheels assembly over the lifting lugs on the helicopter skid and guide fixed nose pin into the rear lifting lug.
2. Rotate the cradle downward until the other lifting lug engages the support pin and snaps into position.

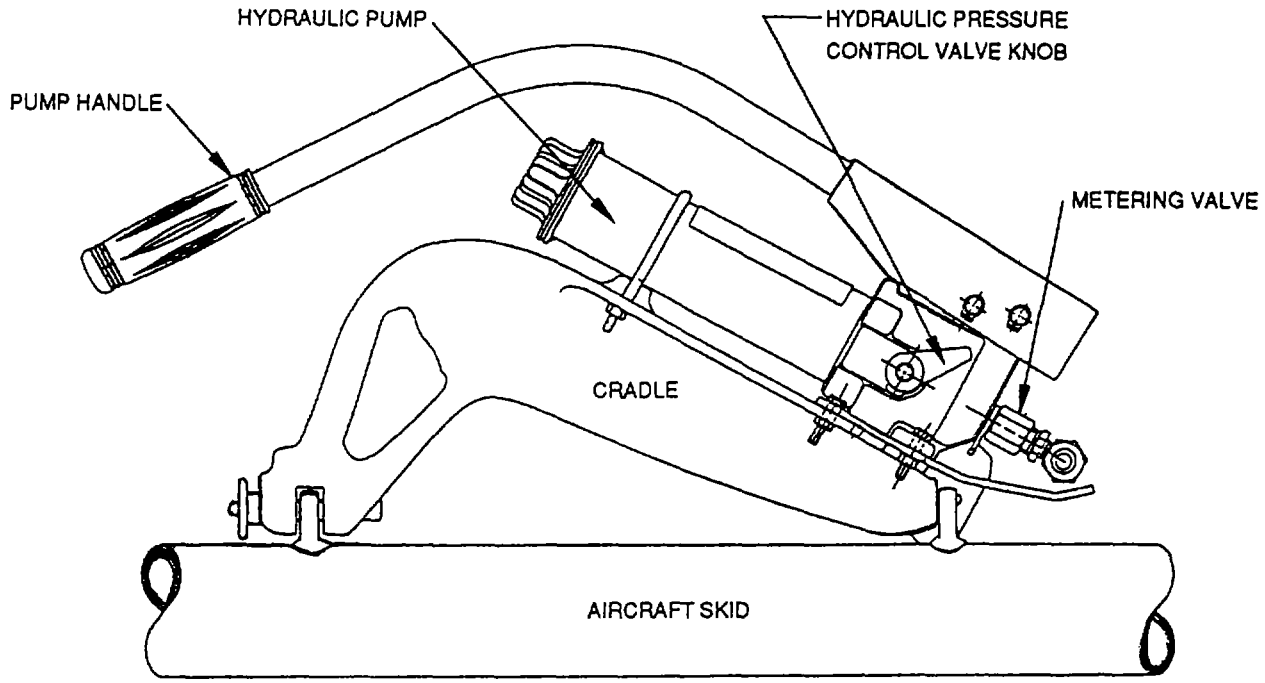

Figure 2-2. Hydraulic Control Components (Typical)

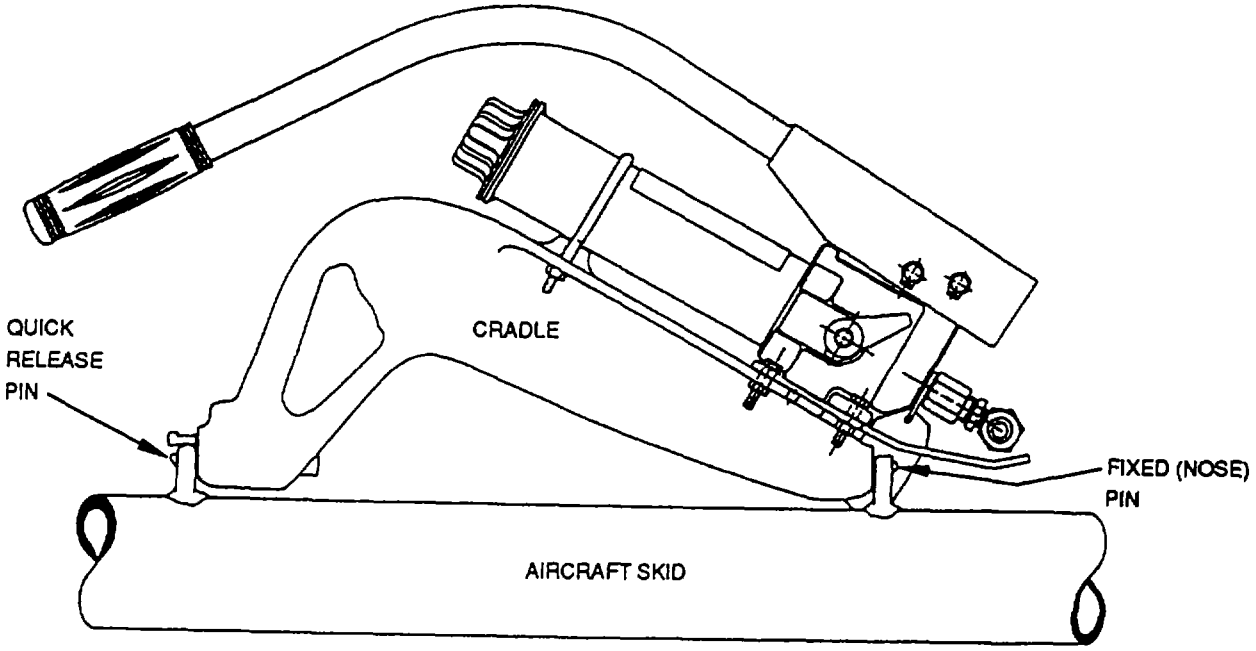

Figure 2-3. Mechanical Connection Components, Model 204-050-200-5

WARNING

Personnel injury or damage to the helicopter or ground handling equipment may result if an attempt is made to disengage the quick release pin before all hydraulic pressure has been released from the hydraulic pump, and the helicopter skid is resting on the ground.

b. Disengage Quick Release Pin. Disengage the quick release pin as follows:

1. Release hydraulic pressure from the hydraulic pump by rapidly moving the control valve pressure release knob counter clockwise
2. Ensure that the helicopter skid is resting on the ground.
3. Press the quick release pin and remove the support pin from the helicopter lifting lug.

2-3.5. Quick Release Pin Use, Model 214-706104-101 & 1730-EG-100. Procedures for engaging and disengaging the quick release pin are presented Refer to figure 2-4 and 2-5

a. Engage Quick Release Pin. Engage the quick release pin as follows:

1. Position the wheels assembly over the lifting lugs on the helicopter skid. Insert the fixed nose pin into the rear lifting lug and rotate the cradle downward until the forward lifting lug is fully seated in the rear cradle clevis.
2. Press and hold the quick release pin locking ball detent release button and insert pin through both sides of the clevis and the lifting lug. When the pin locking balls are visible outside the clevis, release the locking ball detent release button.

WARNING

Personnel injury or damage to the helicopter or ground handling equipment may result if an attempt is made to disengage the quick release pin before all hydraulic pressure has been released from the hydraulic pump, and the helicopter skid is resting on the ground.

b. Disengage Quick Release Pin. Disengage the quick release pin as follows:

1. Release hydraulic pressure from the hydraulic pump by rapidly moving the control valve pressure release knob counter clockwise.
2. Ensure that the helicopter skid is resting on the ground 3. Press the quick release pin locking button and remove the quick release pin from the cradle clevis and helicopter lifting lug.

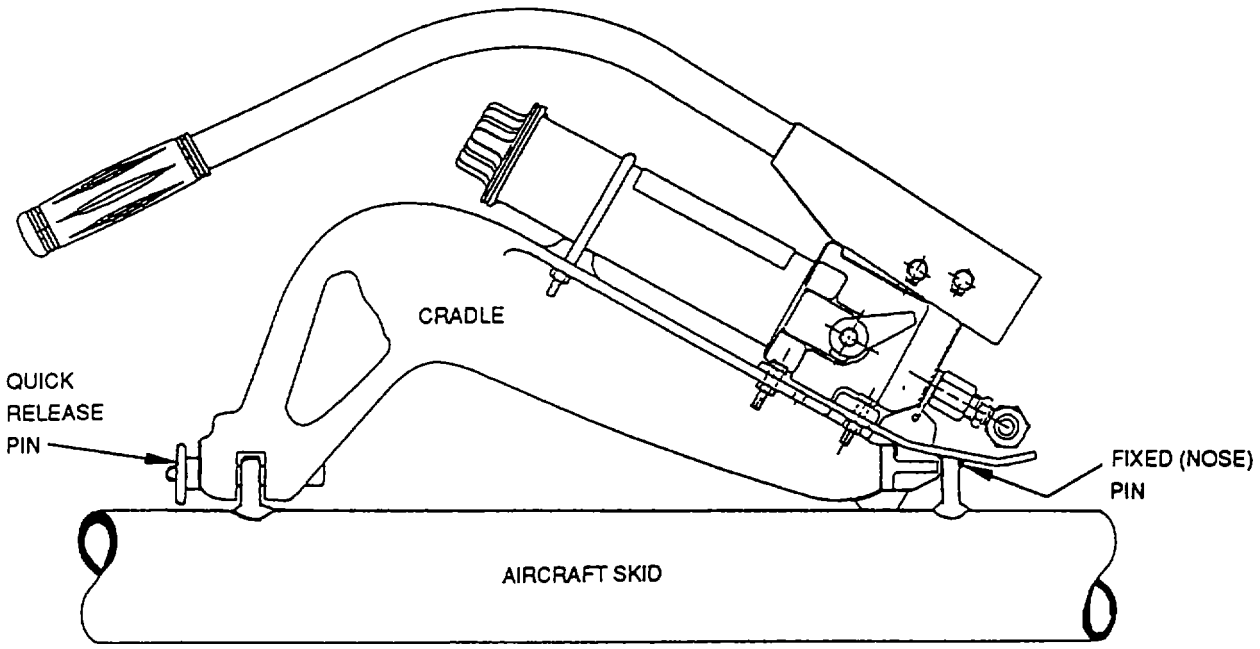

Figure 2-4. Mechanical Connection Components, Model 214-706-104-101

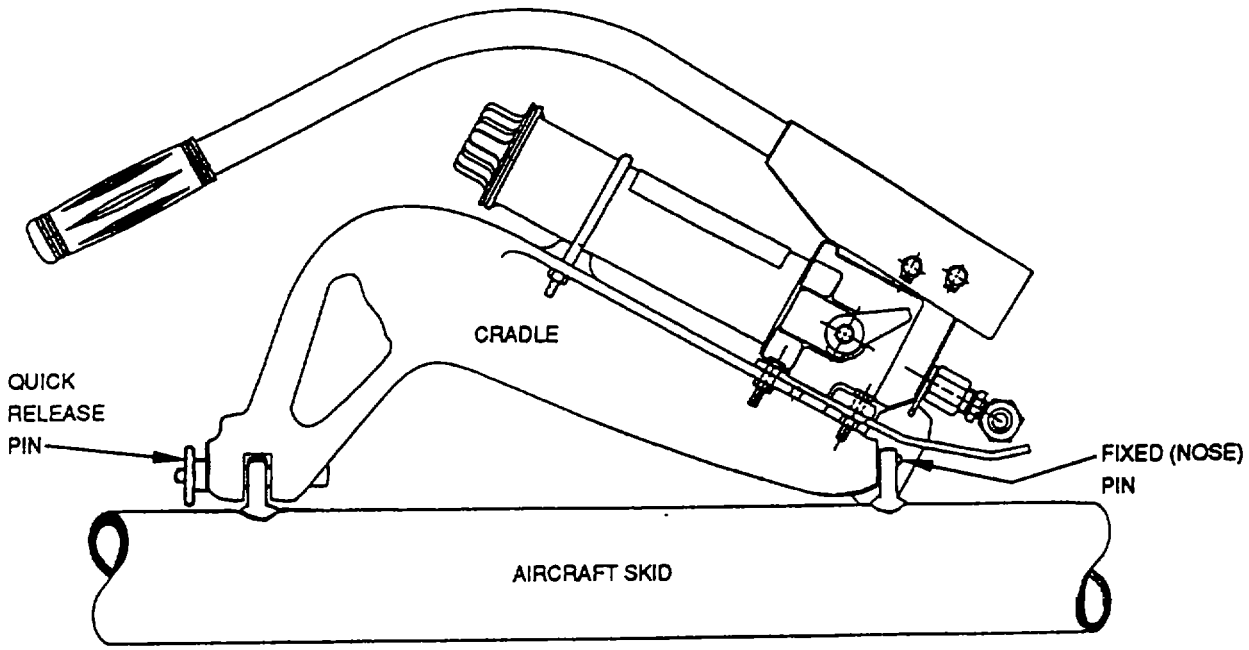

Figure 2-5. Mechanical Connection Components, Model 1730-EG-100

SECTION II PREVENTIVE MAINTENANCE CHECKS AND SERVICES

(PMCS)

2-4. GENERAL PMCS INFORMATION.

The Preventive Maintenance Checks and Services (PMCS) procedures are performed on a regular basis, to ensure operational readiness of the Ground Handling Wheels Assembly Defects should be found before they result In serious damage, equipment failure, or personnel injury. This section contains the PMCS procedures, authorized cleaning agents, and leakage definitions required by the equipment operator.

2-5. PMCS PROCEDURES.

Information about the general and specific PMCS procedures, and directions for using the Operator's PMCS Procedures table are presented in the following paragraphs.

2-5.1. General Operator's PMCS Procedures. General rules to follow while performing specific PMCS procedures are as follows:

a. Safety. Observe all WARNINGS and CAUTIONS while performing PMCS procedures. Ensure that items are correctly assembled, secured, serviceable, adequately lubricated, and not worn or leaking.

(1) An item is CORRECTLY ASSEMBLED when it is in proper position and all parts are present.

(2) Wires, nuts, hoses, fittings, or attaching hardware are SECURE when they cannot be easily removed by hand or wrench.

(3) An item is SERVICEABLE if it is not worn beyond repair or likely to fall before the next scheduled inspection.

(4) An item is ADEQUATELY LUBRICATED if it has been lubricated in accordance with standard or specified lubricating orders.

(5) An item should be checked for LEAKAGE. Definitions for leakage are presented in paragraph 2-7.

b. Defects. Ensure that welds, tubing, and hoses are free of defects as described below:

(1) Check for loose or chipped paint, rust, or gaps where parts are welded together If a bad weld is found, notify your supervisor immediately.

(2) Look for cracked, frayed, loose, or broken tubing and hoses. Repair or report unserviceable.

(3) Check for wear, damage, and leaks, and ensure that couplings and fittings are tight. Wet spots indicate leaks, but a stain around a coupling or fitting can also mean a leak in accordance with paragraph 2-7. If wear, damage, or leaks are found, notify your supervisor.

c. Cleaning. When the instruction "clean" appears in a procedure, use the guidelines found in paragraph 2-6. Even if a procedure does not specify cleaning, be aware of any buildup of dirt, grease, oil, or debris. Clean any such buildup using cleaning agents authorized by Appendix D.

2-5.2. Specific Operator PMCS Procedures.

The specific operator's PMCS procedures are presented in Table 2-1. Always perform PMCS procedures in the order listed, to establish a routine. If any defects are discovered while performing the PMCS procedures, perform the appropriate troubleshooting tasks in Chapter 3, Section III.

a. Serviceability. If any component or system is not serviceable, or if a given service does not correct the problem, notify your supervisor.

b. Intervals. The PMCS procedures in Table 2-1 are performed at specific intervals Before performing PMCS procedures, read all checks required for the applicable interval.

c. Cleaning Materials. Cleaning agents are discussed in paragraph 2-6. Have several clean rags (item 4, Appendix D) available when performing the PMCS procedures. All required Expendable Supplies and Materials are listed in Appendix D.

2-5.3. Using Operator's PMCS Procedures Table. The PMCS procedures are listed In Table 2-1 and the columns in the table are defined as follows:

a. ITEM NO. Column. A sequential item number is entered, indicating the order in which the procedures will be performed.

b. INTERVAL Column. The time interval entered in this column, indicates how often the procedure will be performed. A "Before" entry means that the procedure will be performed just before operating the wheels assemblies. A "Monthly" entry means that the procedure will be performed once each month.

c. ITEM TO BE CHECKED OR SERVICED Column. The item name that appears in the Maintenance Allocation Chart (MAC) is entered in this column.

d. PROCEDURE Column. The specific check or service instruction is entered in this column.

e. NOT FULLY MISSION CAPABLE IF: Column. The limiting condition, that prevents the item from being fully mission capable, is entered In this column.

Table 2-1. Preventive Maintenance Checks and Services for Ground Handling Wheels Assembly.

ITEM NO.	INTERVAL	ITEM TO BE CHECKED OR SERVICED	PROCEDURE	NOT FULLY MISSION CAPABLE IF:
			WARNING To prevent injury to personnel or damage to equipment, release all pressure from the hydraulic pump before starting any maintenance action. Release hydraulic pressure by rapidly rotating the pressure release knob counterclockwise. **NOTE** Perform these checks in the order listed, within the designated interval, as you inspect the Ground Handling Wheels Assembly. Perform the Before procedures each time the Ground Handling Wheels Assembly is used.	
1.	Before	Assembly Exterior	a. Check for fluid leakage or appearance of fluid leakage.	Any Class III leaks
			b. Visually check for damaged hoses, and loose, missing or damage parts.	Hoses are leaking or broken. Parts are missing or damaged.
			c. Visually Inspect the cradle for cracks or damage.	The cradle has visually apparent cracks or damage.
			d. Inspect the Quick Release Pin and attaching Lanyard to assure that the pin is not bent, broken, or damaged, and that it is securely fastened to the cradle, and that the lanyard is not frayed, broken, or damaged.	Quick Release Pin is bent or broken.

Table 2-1. Preventive Maintenance Checks and Services for Ground Handling Wheels Assembly. (continued)

ITEM NO.	INTERVAL	ITEM TO BE CHECKED OR SERVICED	PROCEDURE	NOT FULLY MISSION CAPABLE IF:
1 (cont)	Before	Assembly Exterior (continued)	e. Inspect the fixed pin to assure that it is not bent, broken, loose, or damaged.	Fixed pin is bent.
			f. Inspect the nose pin guard to assure that it is not damaged or bent, and that it is clear of the hydraulic fitting and the nose pin.	Nose pin guard is damaged, bent, or rubbing hydraulic fitting.
			g. Regularly apply lubricant to all pivot and rubbing points. Use a good grade of No. 10 motor oil or grease Do not use dry lubricants.	Pivot points are binding, or rubbing points are deteriorating.
2	Before	Tires	a. Check for excessive wear, cuts, cracks, abrasions, and low or flat tires.	Tires are damaged low, or flat.
			b. Ensure that tires are inflated to proper pressure. (50 psi (34.4 kPa) for 204; 75 psi (51.7 kPa for 214 & 1730)	Tires underinflated
			NOTE **The greatest single cause of failure in hydraulic pumps is dirt. Keep the pump and attached equipment clean to prevent foreign matter from entering the hydraulic system.**	
3	Monthly	Hydraulic Pump	Check hydraulic fluid level with assembly properly installed on an helicopter skid and the hydraulic rams in the fully retracted position:	Fluid level low.
			1. Remove reservoir cap.	Cap is damaged.
			2. Fluid should be level with level line in fillport.	Fluid level low.

Table 2-1. Preventive Maintenance Checks and Services for Ground Handling Wheels Assembly. (continued)

ITEM NO.	INTERVAL	ITEM TO BE CHECKED OR SERVICED	PROCEDURE	NOT FULLY MISSION CAPABLE IF:
3 (cont)	Monthly	Hydraulic Pump (continued)	3. If level is not OK, install reservoir cap and notify your supervisor.	Fluid level low.
			4. If fluid level is OK, install reservoir cap, and complete inspection.	Fluid level low

WARNING

Dry cleaning solvent P-D-680 is toxic and flammable. Always wear protective goggles and gloves, and use only in a well-ventilated area. Avoid contact with skin, eyes, and clothes, and DO NOT use near open flame or excessive heat. The solvent's flash point is 100°F 130°F (38°C 59°C). If you become dizzy while using cleaning solvent, immediately get fresh air and medical help. If solvent contacts eyes, immediately flush your eyes with clean water and get medical help.

2-6. CLEANING AGENTS.

Keeping the wheels assemblies clean is an important part of PMCS procedures. Equipment that is covered with surface dirt, grease, and oil cannot be property inspected. Keep excess lubricants away from exterior parts that do not require lubrication.

a. Authorization. Use only those authorized cleaning solvents or agents listed in Appendix D.

b. Application. Use a wiping rag (item 4, Appendix D) to clean grease, oil, or rust from metal parts. After parts are cleaned, rinse with dry cleaning solvent (item 6, Appendix D) and dry thoroughly.

c. Lubrication. Apply light lubricating oil (item 5, Appendix D) to all polished metal surfaces, such as clevis pins, to prevent rusting.

2-7. LEAKAGE DEFINITIONS FOR OPERATOR PMCS.

The knowledge of how fluid leakage affects the status of the Ground Handling Wheels Assembly is important. Review the classes of leaks, acceptable leaks, and unacceptable leaks discussed below.

a. Classes of Leaks. An operator must know the following types/classes of leaks in order to determine whether the assembly is operational Learn these leakage definitions. When in doubt, notify your supervisor.

Class I	Seepage of fluid, not great enough to form drops, is indicated by wetness or discoloration.
Class II	Leakage of fluid great enough to form drops, but not great enough to cause continuous dripping from the item being inspected.
Class III	Leakage of fluid great enough to form drops that continuously drip from the item being inspected.

b. Acceptable Leakage. Equipment operation is allowed with minor Class I or II leakage. Fluid levels in an item/system, affected with such leakage, must be checked more frequently than required in PMCS When in doubt, notify your supervisor.

c. Unacceptable Leakage. Class III leaks render the item unserviceable.

2-8. REPORTING REPAIRS.

All defects that cannot be fixed by the operator must be reported Immediately after completing PMCS. The defects are reported on DA Form 2404, Equipment Inspection and Maintenance Worksheet.

SECTION III OPERATION UNDER USUAL CONDITIONS

2-9. GENERAL INFORMATION FOR USUAL OPERATION.

This section contains Instructions for the safe use of the Ground Handling Wheels Assembly under usual conditions. The instructions presented in this section include preparation for use, installing wheels assembly on helicopter, lifting the helicopter, lowering the helicopter, and removal of wheels assembly from helicopter. Unusual operating conditions are defined and described in Section IV of this Chapter.

2-10. PREPARATION FOR USE.

Perform all Before PMCS procedures in Table 2-1 before using the Ground Handling Wheels Assembly. The DA Form 2258, attached to the assembly, contains the checklist of items that must be accomplished before the Ground Handling Wheels Assembly can be safely used to raise a helicopter off the ground.

2-11. INSTALLING GROUND HANDLING WHEELS ASSEMBLY ON A HELICOPTER.

The Ground Handling Wheels Assembly is installed on a helicopter as follows:

NOTE

The lifting lugs are located on the helicopter skids just aft and forward of the center of gravity of the helicopter, to provide a "near balance" condition for ground handling and/or moving the helicopter.

1. Position the Ground Handling Wheels Assembly over the helicopter skid tube, and insert the nose pin into rear lifting lug.
2. Rotate the cradle downward until the forward helicopter lifting lug is fully seated in the rear cradle clevis.
3. Press and hold in the locking button of the quick release pin. Insert the pin into the cradle making sure the pin passes through both sides of the rear clevis and the helicopter lifting lug. When locking balls are visible, release the locking button.

2-12. LIFTING THE HELICOPTER FOR GROUND HANDLING.

The Ground Handling Wheels Assembly is used to lift the helicopter as follows:

WARNING

Grip only the pump handle when operating the hand pump. Never operate the hydraulic pump without the metering valve installed in the pump outlet. This valve controls the rate of descent when lowering a helicopter after use Lack of a metering valve could cause damage to the helicopter and/or injury to personnel.

CAUTION

To ensure even lifting and prevent damaging torque to helicopter skids, both Ground Handling Wheels Assemblies should be operated at the same time by two ground operators.

1. Turn the hydraulic release valve knobs clockwise to a closed (seated) position on each wheels assembly
2. Simultaneously work the pump handles up and down to build hydraulic pressure.
3. Continue pumping the handles until the hydraulic rams start to rotate the eccentric axles.
4. Constantly check that the movement of both skids is even as they are lifted.
5. Continue lifting the helicopter until the skids are off the ground an equal amount.

2-13. LOWERING THE HELICOPTER.

The Ground Handling Wheels Assembly is used to lower the helicopter as follows'

WARNING

Ensure that no personnel or obstructions are under helicopter skids prior to lowering. Do not attempt to use the pressure release knob to control descent of the helicopter. This may prevent the metering valve from activating and could cause damage to the helicopter and/or injury to personnel.

CAUTION

To ensure even lowering and prevent damaging torque to helicopter skids, both Ground Handling Wheels Assemblies should be operated at the same time by two ground operators.

1. Clear non-essential personnel from the area and announce that the helicopter is to be lowered.
2. Using two operators, simultaneously and rapidly turn the control valve release knobs counter clockwise.
3. Verify that both skids are firmly resting on the ground.
4. If descent of skids was not equal, there may be a defective metering valve installed In one of the wheels assemblies. Troubleshoot in accordance with procedures in Chapter 3, Section III.

2-14. REMOVING GROUND HANDLING WHEELS ASSEMBLY FROM A HELICOPTER.

The Ground Handling Wheels Assembly is removed from the helicopter as follows:

1. Ensure that the helicopter skids are firmly on the ground.
2. Verify that control valve release knob is in fully counter clockwise and that there is no hydraulic pressure in the system.
3. Press and hold the quick release pin locking button.
4. Remove the quick release pin from the rear cradle clevis and helicopter lifting lug
5. Rotate the Ground Handling Wheels Assembly upward to disengage the nose pin
6. Remove the Ground Handling Wheels Assembly to the storage area

SECTION IV OPERATION UNDER UNUSUAL CONDITIONS

2-15. GENERAL INFORMATION FOR UNUSUAL OPERATION.

This section contains instructions for safely operating the Ground Handling Wheels Assembly under unusual conditions Special care must be taken to keep the Ground Handling Wheels Assembly operational in extreme temperatures and other environmental conditions. The instructions presented In this section include operation in dust or sand, snow or mud, salt air or sea spray, and emergency conditions.

2-16. OPERATION IN DUSTY OR SANDY AREAS OR EXTREME DRY HEAT.

Operation of the Ground Handling Wheels Assembly in dust, sand, or extremely dry heat is as follows:

a. **Protection**. Place a protective cover over the assembly when not in use, to prevent dust or sand from getting into the assembly.

b. **Lubrication**. Wipe clean, and properly lubricate the hydraulic rams clevis, hydraulic pump handle pivot pins, hydraulic pump piston assembly, and axles more often.

c. **Fluid Change**. Change hydraulic fluid more often and maintain the proper hydraulic fluid level.

d. **Notification and Authorization**. Notify your supervisor for authorization before lubricating or changing fluid more frequently than normal.

2-17. OPERATION IN EXTREME COLD, SNOW, OR MUD.

Operation of the Ground Handling Wheels Assembly in snow, mud, or extreme cold is as follows:

a. **Protection**. Place a protective cover over the assembly when not in use, to prevent snow or mud from getting into the assembly.

b. **Lubrication**. Wipe clean, and properly lubricate the hydraulic rams clevis, hydraulic pump handle pivot pins, hydraulic pump piston assembly, and axles more often.

c. **Fluid Change**. Change hydraulic fluid more often and maintain the proper hydraulic fluid level.

d. **Notification and Authorization**. Notify your supervisor for authorization before lubricating or changing fluid more frequently than normal.

2-18. OPERATION IN SALT AIR OR SEA SPRAY.

Operation of the Ground Handling Wheels Assembly in salt air or sea spray is as follows:

a. **Corrosion**. Operations in salt air and sea spray can be damaging to the unit due to corrosive effects of saltwater. The wheels should be removed and inspected more often.

Be particularly aware of the potential for rust.

b. **Contamination**. Check regularly for water in the hydraulic fluid.

c. **Lubrication**. Wipe clean, and properly lubricate the hydraulic rams clevis, hydraulic pump handle pivot pins, hydraulic pump piston assembly, and axles more often

d. **Notification and Authorization**. Notify your Supervisor for authorization before lubricating or changing fluid more frequently than normal or to have the wheels removed and the axles cleaned and lubricated more often.

2-19. EMERGENCY OPERATIONS.

a. **Minor Damage**. In an emergency, the Ground Handling Wheels Assembly can be used with minor damage to the cradle, and other hardware.

b. **Major Damage**. The Ground Handling Wheels Assembly cannot be used, even in an emergency, if the pump is leaking, hydraulic rams are leaking, wheels are distorted, or tires are flat or leaking air.

c. **Nose Pin and Quick Release Pin Damage**. The Ground Handling Wheels Assembly cannot be used, even in an emergency, if the nose pin or quick release pin is damaged.

CHAPTER 3

AVIATION UNIT MAINTENANCE (AVUM) INSTRUCTIONS

SECTION I

AVUM REPAIR PARTS AND SPECIAL TOOLS, TMDE, AND SUPPORT EQUIPMENT

3-1. COMMON TOOLS AND EQUIPMENT (AVUM).

For authorized common tools and equipment, refer to the Modified Table of Organization and Equipment (MTOE), CTA 50-970 or CTA 8-100, as applicable to your unit. The following common tool kits are required to support the Ground Handling Wheels Assembly at the Aviation Unit Maintenance (AVUM) level.

Tool Number	Nomenclature	NSN
SC 5180-99-A01	Tool Kit, General Mechanics	5180-00-323-4692
SC 4920-99-A92	Tool Set, AVUM	4920-00-567-0476

3-2. SPECIAL TOOLS, TMDE, AND SUPPORT EQUIPMENT (AVUM).

No special tools, TMDE, or support equipment are required to maintain the Ground Handling Wheels Assembly at the Aviation Unit Maintenance Level.

3-3. REPAIR PARTS (AVUM).

The repair parts are listed and illustrated in the Repair Parts and Special Tools List (RPSTL), in Appendix C.

SECTION II

AVUM SERVICE UPON RECEIPT

3-4. INSPECTION UPON RECEIPT (AVUM).

The following inspections shall be performed upon receipt of the Ground Handling Wheels Assembly.

a. Check the equipment against the packing list, to ensure that the assembly is complete. Report all DISCREPANCIES in accordance with the instructions of DA Pam 738-750, or DA Pam 738-751 as applicable

b. Inspect the assembly for any damage incurred during shipping Report any defects immediately on SF 364, Report of Discrepancy.

c. Perform all "Before" operation checks in accordance with Chapter 2, Section II, Table 2-1, Preventive Maintenance Checks and Services for Ground Handling Wheels Assembly.

CAUTION

The Ground Handling Wheels Assembly is shipped from the manufacturer fully lubricated. The hydraulic pump was filled to the proper level with the correct type and grade of hydraulic fluid (item 1, Appendix D). Ensure that the following preliminary servicing and lubrication is performed upon receipt.

3-5. PRELIMINARY SERVICING AND LUBRICATION (AVUM).

The following preliminary servicing and lubrication shall be performed upon receipt of the Ground Handling Wheels Assembly.

3-5.1. Service. The hydraulic fluid level and tire pressure must be checked before the Wheels Assembly can be operated. Refer to Chapter 2, Section II, Table 2-1, Preventive Maintenance Checks and Services for Ground Handling Wheels Assembly, to perform the following checks.

1. Check the hydraulic fluid level and service as necessary.

WARNING

Never inflate wheel assembly without first checking wheel locknut torques, to insure wheel locknuts are tightened to specifications. An assembly with missing washers, bolts, nuts or improperly tightened locknuts could separate under pressure, causing serious injury or death.

2. Check air pressure with tire pressure gauge and inflate or deflate tires to proper pressure. Proper pressure is 50 psi (34 5 kPa) for Model 204, and 75 psi (51.7 kPa) for Model 214 and Model 1730.

3-5.2. Lubrication. Grease fittings are installed on the two ram clevis pins and at all point requiring lubrication on the cradle assembly. Check all lubrication points and use a grease gun to lubricate any points that appear dry.

3-6. OPERATIONAL TEST (AVUM).

The Ground Handling Wheels Assembly is inspected and serviced upon receipt. After inspection and servicing, perform an operational test in accordance with procedures In Chapter 2, Section III, Operation Under Usual Conditions.

SECTION III

AVUM PREVENTIVE MAINTENANCE CHECKS AND SERVICES (PMCS)

3-7. GENERAL PMCS INFORMATION (AVUM).

The Preventive Maintenance Checks and Services (PMCS) procedures are performed on a regular basis at the AVUM level, to ensure operational readiness of the Ground Handling Wheels Assembly. Defects should be found before they result In serious damage, equipment failure, or personnel injury. Systematic instructions presented in this section, allow the operator to perform Inspections, adjustments, and corrections. The AVIM level may perform all AVUM level PMCS procedures.

3-8. PMCS PROCEDURES (AVUM).

The general and specific AVUM PMCS procedures, and directions for using the procedures, are presented in the following paragraphs.

3-8.1. General PMCS Procedures (AVUM). General rules to follow while performing specific AVUM PMCS procedures are as follows:

a. Safety. Observe all WARNINGS and CAUTIONS while performing AVUM PMCS procedures Ensure that Items are correctly assembled, secured, serviceable, adequately lubricated, and not worn or leaking.

(1) An item is CORRECTLY ASSEMBLED when all parts are present and in proper position.

(2) Wires, nuts, hoses, fittings, or attaching hardware are SECURE when they cannot be easily removed by hand or wrench.

(3) An Item is SERVICEABLE if it is not worn beyond repair or likely to fail before the next scheduled inspection.

(4) An item is ADEQUATELY LUBRICATED if it has been lubricated in accordance with standard or specified lubricating orders.

(5) An Item should be checked for LEAKAGE. Definitions for leakage are presented in paragraph 3-10.

b. Defects. Ensure that welds, tubing, and hoses are free of defects as described below:.

(1) Check for loose or chipped paint, rust, or gaps where parts are welded together. If a bad weld is found, notify your supervisor immediately

(2) Look for cracked, frayed, loose, or broken hose assemblies. Replace or report an unserviceable hose assembly.

(3) Check for wear, damage, and leaks. Ensure that couplings and fittings are tight. Wet spots indicate leaks, but a stain around a coupling or fitting can also mean a leak in accordance with paragraph 3-10 If wear, damage, or leaks are found, notify supervisor.

c. Cleaning. When the instruction "clean" appears in a procedure, use the guidelines found in paragraph 3-9. Even if a procedure does not specify cleaning, be aware of any buildup of dirt, grease, oil, or debris. Clean any such buildup using cleaning agents authorized by Appendix D.

NOTE

The AVUM shall perform the General PMCS procedures upon completion of any unscheduled maintenance tasks and before returning the assembly to inventory or operation.

3-8.2 Specific PMCS Procedures (AVUM). The specific AVUM PMCS procedures are presented in Table 3-1. Always perform AVUM PMCS procedures in the order listed, to establish a routine. If any defects are discovered while performing the PMCS procedures, perform the appropriate troubleshooting tasks In Chapter 3, Section III.

a. Serviceability. If any component or system is not serviceable, or if a given service does not correct the problem, notify your supervisor.

b. Intervals. The AVUM PMCS procedures in Table 3-1 are performed at three intervals: Quarterly, Semiannually, and Hours. Before performing AVUM PMCS procedures, read all checks required for the applicable interval.

c. Cleaning Material. Cleaning agents are discussed in paragraph 3-9. Have several clean rags (item 4, Appendix D) available when performing the AVUM PMCS procedures. All required Expendable Supplies and Materials are listed in Appendix D.

3-8.3 Using AVUM PMCS Procedures Table. The AVUM PMCS procedures are listed in Table 3-1 and the columns in the table are defined as follows:

a. ITEM NO. Column. A sequential item number is entered, indicating the logical order in which the AVUM PMCS procedures will be performed. It is also used as a source number when recording PMCS results on DA Form 2404, Equipment Inspection and Maintenance Worksheet.

b. INTERVAL Column. The time interval entered in this column, specifies how often the AVUM PMCS procedure will be performed. A 'Quarterly" entry means that the procedure will be performed every three months A "Semiannually" entry means that the procedure will be performed every six months. An "Hours" entry means that the procedure will be performed when the number of specified operating hours are accumulated, since the last time the procedure was performed.

c. ITEM TO BE CHECKED OR SERVICED Column. The item name that appears in the Maintenance Allocation Chart (MAC) is entered in this column.

d. PROCEDURE Column. The specific check or service instruction is entered in this column. The maintenance procedure may direct personnel to inspect, service, replace, or repair an item.

e. NOT FULLY MISSION CAPABLE IF: Column. The limiting condition, that prevents the item from being fully mission capable, is entered in this column.

Table 3-1. AVUM Preventive Maintenance Checks and Services for Ground Handling Wheels Assembly.

ITEM NO.	INTERVAL	ITEM TO BE CHECKED OR SERVICED	PROCEDURE	NOT FULLY MISSION CAPABLE IF:
1	36 MONTHS	HYDRAULIC PUMP	SERVICE FLUID RESERVOIR	Fluid reservoir is cracked and leaking.
			WARNING To prevent injury to personnel or damage to equipment, all pressure must be released from the pump before staring any maintenance action	
			CAUTION To prevent contamination from entering the pump, the exterior of the pump should be cleaned before beginning this procedure.	
			NOTE Refer to Figure 3-1 for parts identification.	
	36 MONTHS		1. Drain pump reservoir of hydraulic fluid.	Hydraulic fluid is contaminated.
			a. Remove hydraulic pressure by rapidly turning control valve pressure release knob counterclockwise.	Control valve is defective.
			b. Remove filler cap (1) and packing ring (2).	Cap or ring damaged.
			c. Stand Wheel Assembly on end, with the pump filler hole down. to drain fluid from the pump. Rotate axle to assure that the rams are fully retracted	Rams do not fully retract
			d. Disconnect hoses (3) from tees and drain the hoses and hydraulic rams on both sides of the pump Ensure hydraulic rams are fully retracted	Hoses or rams damaged
			e. Reinstall hoses (3).	Hose is defective.

Table 3-1. AVUM Preventive Maintenance Checks and Services for Ground Handling Wheels Assembly. (continued)

ITEM NO.	INTERVAL	ITEM TO BE CHECKED OR SERVICED	PROCEDURE	NOT FULLY MISSION CAPABLE IF:
1 continued	36 MONTHS	HYDRAULIC PUMP	SERVICE FLUID RESERVOIR	Fluid reservoir is cracked and leaking
			f. Remove nut (4) located on the end of the. pump and separate pump body (5), and packing ring (6) ring damaged from reservoir (7).	Nut, pump body, or packing
			g. Clean fluid filter (8), and reservoir (7), with nonflammable cleaning fluid	Filter is dogged
			h. Reassemble pump with new packing rings and (2)	(6) Packing rings leak
			i. Drain and clean the other hydraulic system components (hoses, hydraulic rams, fittings) before reconnecting them to the pump	Hoses, rams, or fittings damaged or contaminated
	36 MONTHS		2. Fill pump reservoir with hydraulic fluid. (Item 1, Appendix D)	Fluid leaks from reservoir
			CAUTION **The reservoir is protected by a gasket in the filler cap, which will extrude and blow if more oil is contained in the system than the reservoir can handle. To prevent damage to the reservoir gasket, the rams must be fully retracted before refilling the reservoir**	
			a. Fully retract hydraulic rams.	Rams won't fully retract
			b. Clean the entire area around filler cap	Area around filter cap damaged
			c. Insert a clean funnel and filter into the filler hole Add MIL-H-5606 fluid to the level indicated in Figure 3-1	Fluid is not filled to proper level

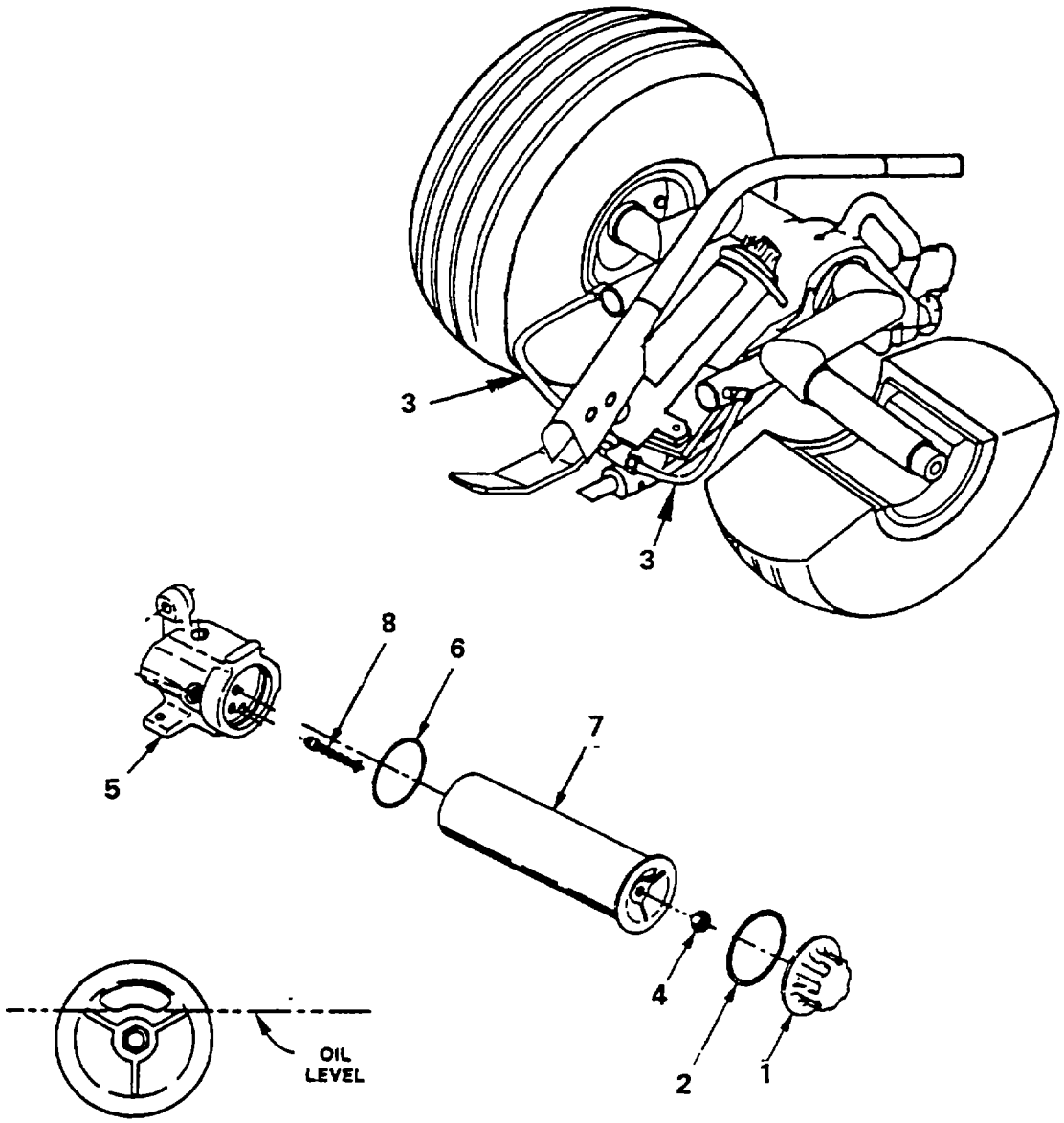

Figure 3-1. GROUND HANDLING WHEELS ASSEMBLY (TYPICAL)

WARNING

Dry cleaning solvent P-D-680 is toxic and flammable. Always wear protective goggles and gloves, and use only in a well-ventilated area. Avoid contact with skin, eyes, and clothes, and DO NOT use near open flame or excessive heat. The solvent's flash point is 100°F 130°F (38°C-59°C). If you become dizzy while using cleaning solvent, immediately get fresh air and medical help. If solvent contacts eyes, Immediately flush your eyes with clean water and get medical help.

3-9. CLEANING AGENTS (AVUM).

Keeping the wheels assemblies clean is an Important part of PMCS procedures. Equipment that is covered with surface dirt, grease, and oil cannot be properly inspected. Keep excess lubricants away from exterior parts that do not require lubrication.

a. Authorization. Use only those authorized cleaning solvents or agents listed in Appendix D

b. Application. Use a wiping rag (item 4, Appendix D) to clean grease, oil, or rust from metal parts. After parts are cleaned, rinse with dry cleaning solvent (item 6, Appendix D) and dry thoroughly.

c. Lubrication. Apply light lubricating oil (item 5, Appendix D) to all polished metal surfaces, such as clevis pins, to prevent rusting.

3-10. LEAKAGE DEFINITIONS (AVUM).

The knowledge of how fluid leakage affects the status of the Ground Handling Wheels Assembly is important. Review the classes of leaks, acceptable leaks, and unacceptable leaks discussed below

a. Classes of Leaks. An operator must know the following classes of leaks, in order to determine whether the assembly is operational. Learn these leakage definitions. When in doubt, notify your supervisor

Class I	Seepage of fluid, not great enough to form drops, Is indicated by wetness or discoloration.
Class II	Leakage of fluid great enough to form drops, but not great enough to cause continuous dripping from the item being inspected.
Class III	Leakage of fluid great enough to form drops that continuously drip from the item being inspected.

b. Acceptable Leakage. Equipment operation is allowed with minor Class I or II leakage. Fluid levels in an item/system, affected with such leakage, must be checked more frequently than required in PMCS. When in doubt, notify your supervisor.

c. Unacceptable Leakage. Class III leaks render the item unserviceable and must be reported to your supervisor immediately.

3-11. REPORTING REPAIRS (AVUM). All defects found while performing AVUM PMCS procedures shall be reported on DA Form 2404, Equipment Inspection and Maintenance Worksheet, immediately after completing PMCS. All defects shall be reported before taking corrective action, and shall be entered in the equipment log.

SECTION IV
AVUM TROUBLESHOOTING

3-12. INTRODUCTION TO TROUBLESHOOTING (AVUM).

The information required to identify and correct most mechanical malfunctions, which may occur on the Ground Handling Wheels Assembly, is contained in this section. Component replacement is referenced to Maintenance Section V of this chapter, but component repair is referenced to Chapter 4, Section V, unless otherwise noted. Refer to Chapter 2 for a better understanding of how a system operates. If the location of an Item mentioned in troubleshooting IS unknown, see illustrated parts breakdown in Appendix C. The AVUM troubleshooting procedures are provided in Table 3-2.

3-13. TROUBLESHOOTING PROCEDURES (AVUM).

The AVUM troubleshooting procedures in Table 3-2 contain checks and corrective actions required to isolate defects which can be corrected by performance of maintenance allocated to AVUM, by the Maintenance Allocation Chart (MAC).

Table 3-2. TROUBLESHOOTING PROCEDURES

MALFUNCTION
TEST OR INSPECTION
CORRECTIVE ACTION

1. PUMP NOT DELIVERING OIL

Step 1. Inspect for low oil level in reservoir.

Check oil level, and fill reservoir as necessary

Step 2. Inspect for dirt in pump body.

Disassemble pump body and clean all parts. Refer to Chapter 4, AVIM.

Step 3. Inspect for worn seats and proper seating.

Replace worn seats or reseat seats in casting. Refer to Chapter 4, AVIM.

Step 4 Inspect for overfilled reservoir.

Drain excess oil from reservoir.

2. PUMP LOSING PRESSURE

Step 1. Inspect for oil leaking past outlet ball seats.

Reseat and/or replace balls and seats. Refer to Chapter 4, AVIM.

Step 2. Inspect for oil leaking past unloading valve piston. Refer to Chapter 4, AVIM.

Replace o-ring on valve unloading piston. Refer to Chapter 4, AVIM.

Step 3. Check for loose connections.

Tighten connections as necessary.

Step 4. Check two-way valve for leaks or correct adjustment.

Reseat/replace ball check; adjust two-way valve handle. Refer to Chapter 4, AVIM.

3. PUMP DOES NOT REACH FULL PRESSURE

Step 1. Check for low oil level.

Fill reservoir as necessary

Table 3-2. TROUBLESHOOTING PROCEDURES (cont)

MALFUNCTION TEST OR INSPECTION CORRECTIVE ACTION
3. PUMP DOES NOT REACH FULL PRESSURE (cont)
Step 2. Check if relief valve is set too low.
Test pump. Refer to Chapter 4, AVIM. If test fails, replace pump. Refer to para. 3-15.4.
Step 3. Check for oil leaking past unloading valve piston.
Replace o-ring on valve unloading piston. Refer to Chapter 4, AVIM.
4. PUMP HANDLE RISES AFTER EACH STROKE
Step 1. Check for oil leaking past outlet ball seats.
Check for dirt, replace ball and/or reseat valve. Refer to Chapter 4, AVIM.
5. PUMP HANDLE CAN BE PUSHED DOWN (SLOWLY) WITHOUT RAISING THE LOAD
Step 1 Check rf inlet ball is not seating
Check for dirt, replace ball and/or reseat valve. Refer to Chapter 4, AVIM.
Step 2. Check for damaged piston assembly.
Replace piston assembly. Refer to Chapter 4, AVIM.
Step 3. Check for scored cylinder wall or pump body.
Replace pump body and assembly. Refer to Chapter 4, AVIM.
6. PUMP HANDLE OPERATES WITH SPONGY ACTION.
Step 1. Check for air trapped in the system.
Bleed hydraulic system.
Step 2. Check for too much oil in reservoir.
Check oil level and drain oil as necessary.

Table 3-2. TROUBLESHOOTING PROCEDURES (cont)

MALFUNCTION TEST OR INSPECTION CORRECTIVE ACTION

7. WHEEL DOES NOT TURN EASILY.

Step 1. Check for tire rubbing hydraulic hose.

Reposition hydraulic hose.

Step 2. Check for binding wheel bearing.

Replace wheel bearing. Refer to para. 3-15.7 (Model 204), 3-16.7 (Model 214), or 3-17.7 (Model 1730)

Step 3. Check for bent wheel assembly.

Replace wheel assembly. Refer to para. 3-15.6 (Model 204), 3-16.6 (Model 214), or 3-17.6 (Model 1730).

8. HYDRAULIC RAM LEAKING.

Step 1. Check for loose fitting.

Tighten fitting.

Step 2. Check for leakage around ram piston.

Replace hydraulic ram. Refer to para. 3-15.5 (Model 204), 3-16.5 (Model 214), or 3-17.5 (Model 1730).

9. CRADLE AXLE BINDING.

Step 1. Check for left bent axle.

Replace left axle half. Refer to Chapter 4, AVIM.

Step 2. Check for right bent axle.

Replace right axle half. Refer to Chapter 4, AVIM.

Step 3. Check for broken clevis or clevis pin.

Replace broken clevis or clevis pin. Refer to para. 3-15.5 (Model 204), 3-16.5 (Model 214), or 3-17.5 (Model 1730).

SECTION V
AVUM MAINTENANCE PROCEDURES

3-14. INTRODUCTION TO MAINTENANCE PROCEDURES (AVUM).

This section provides inspection, replacement and repair procedures for the Ground Handling Wheels Assembly, at the Aviation Unit Maintenance (AVUM) level, authorized by the Maintenance Allocation Chart (MAC) provided in Appendix B. A model number is included with the title of a procedure, unless the procedure applies to all models covered In this manual. Defective items discovered during inspection, are replaced at AVUM level and repaired at AVIM level, unless otherwise noted. The Repair Parts and Special Tools List (RPSTL), in Appendix C, may be referenced to aid in identifying assemblies and component parts.

3-15. GROUND HANDLING WHEELS ASSEMBLY MAINTENANCE, Model 204-050-200-5 (AVUM).

The Ground Handling Wheels Assembly is group number 00 in the MAC. Maintenance performed on Ground Handling Wheels Assembly, Model 204-050-200-5, at the AVUM level, consists of inspection, replacement and repair procedures. Inspection procedures are presented for the hydraulic system, cradle assembly, and wheel assembly. Replacement procedures are presented for the hydraulic pump assembly, hydraulic ram assembly, and wheel assembly Repair procedures for the wheel assembly are presented In this section, but repair procedures for the hydraulic pump assembly and cradle assembly are contained in Chapter 4, Section V Refer to Appendix C, Figure C-1-1, to identify assemblies of Ground Handling Wheels Assembly, Model 204-050-200-5.

3-15.1 Hydraulic System Inspection, Model 204-050200-5 (AVUM) .

The Hydraulic System is group number 01 in the MAC, and consists of a hydraulic pump assembly, two hydraulic ram assemblies, two hydraulic hoses, and connection fittings. This procedure is applicable to Ground Handling Wheels Assembly, Model 204-050-200-5. The numbers in parenthesis refer to accompanying figure 3-2. Inspect the hydraulic system as follows:

1. Check hydraulic hose assemblies (8 or 9) and fittings (27 & 28) for leakage. If a hose assembly or fitting is leaking, tighten; if defective, replace defective components.

2. Check hydraulic rams (6) for leakage. If a hydraulic ram assembly is leaking, tighten hose (8 or 9) or fitting (27 or 28); if defective, replace hydraulic ram using procedures in paragraph 3-15.5.

NOTE

Two types of hydraulic pump may be Installed on this model of the Ground Handling Wheels Assembly. The older version pump with part number BU0953B is not repairable and will be replaced by pump with part number 61780 upon failure. The pump with part number 61780 is repairable.

3. Check hydraulic pump (4 or 5) for damage and leaks. If pump is leaking, tighten connections; if defective, replace hydraulic pump using procedures in paragraph 3-15.4.

4. Check hydraulic system components for cleanliness. If a component is dirty, wipe clean with dry cleaning solvent (item 6, Appendix D). Observe all WARNINGS relative to the use of cleaning agents.

END OF TASK

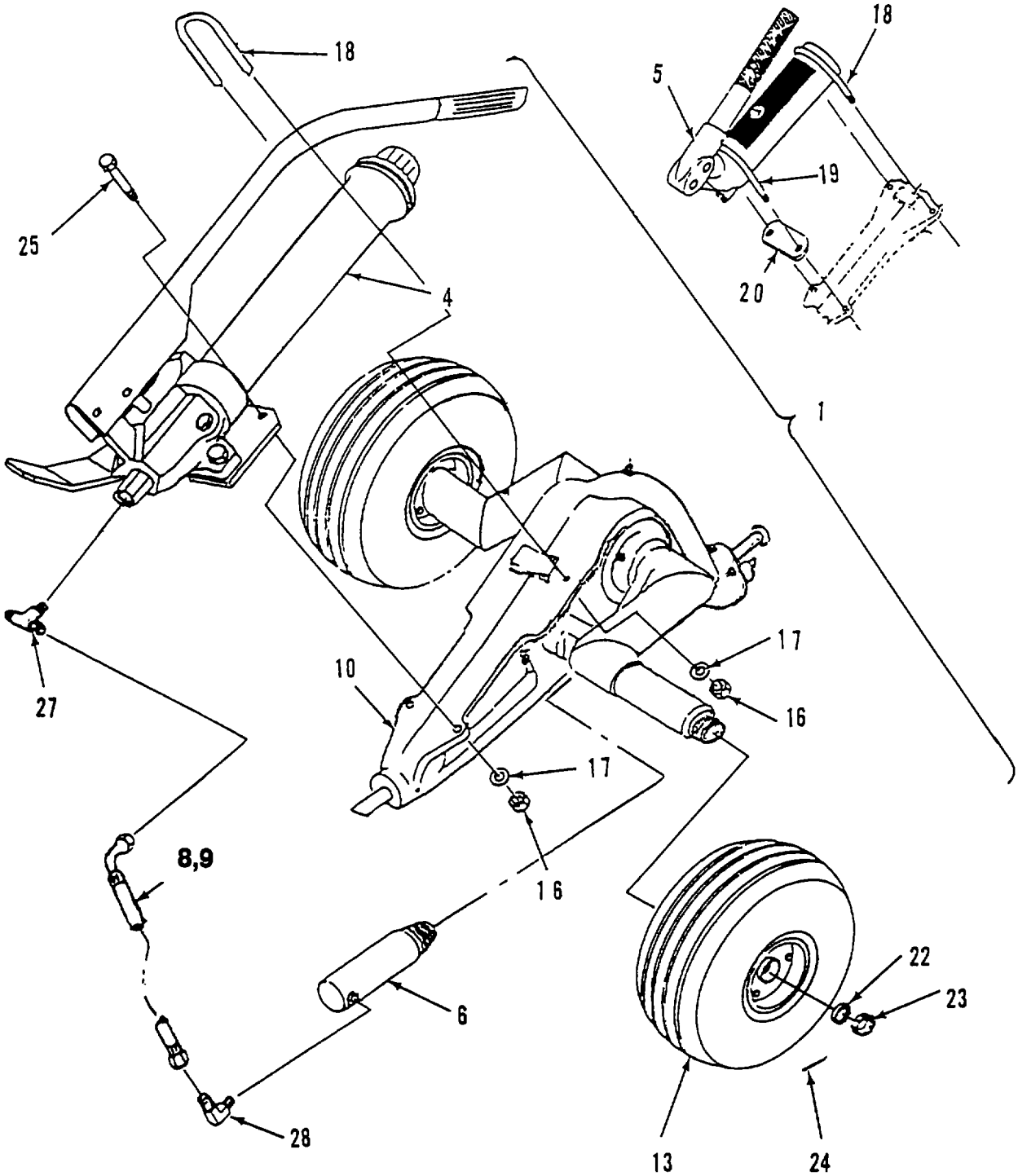

Figure 3-2. Ground Handling Wheels Assembly, Model 204-050-200-5

3-15.2 Cradle Assembly Inspection, Model 204-050-200-5 (AVUM).

The Cradle Assembly is group number 02 in the MAC. This procedure is applicable to Ground Handling Wheels Assembly, Model 204-050-200-5 The numbers in parenthesis refer to figure 3-3. Inspect the cradle assembly as follows:

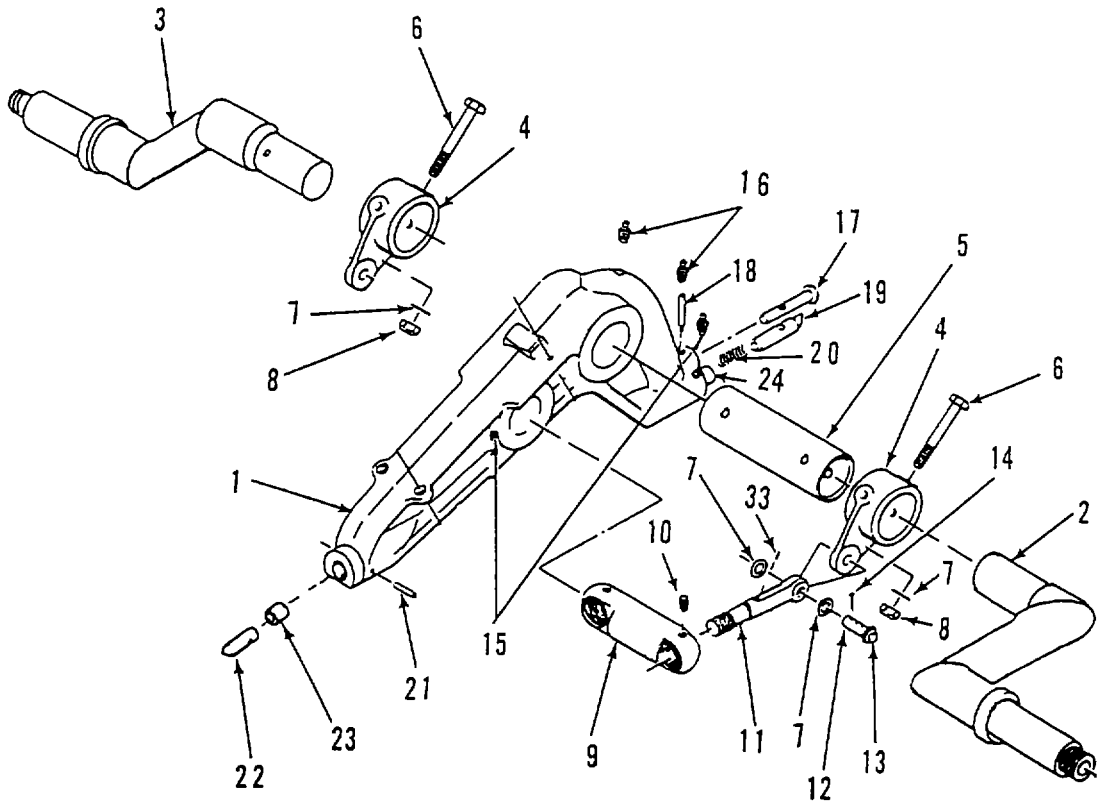

Figure 3-3. Cradle Assembly for Model 204-050-200-5

1. Check for broken, bent, cracked, or damaged cradle assembly (1). If cradle assembly is damaged, return the Ground Handling Wheels Assembly to AVIM for repair.

2. Check for broken, bent, cracked, or damaged axles assemblies (2 & 3). If an axle assembly is damaged, return the Ground Handling Wheels Assembly to AVIM for repair.

3. Check for loose, bent, worn, or broken fixed support (nose) pin (22). If nose pin is damaged, return the Ground Handling Wheels Assembly to AVIM for repair.

4. Check for loose, bent, worn, or broken rear support pin (5). If rear support pin is damaged, return the Ground Handling Wheels Assembly to AVIM for repair.

END OF TASK

3-15.3 Wheel Assembly Inspection, Model 204-050-200-5 (AVUM).

The Wheel Assembly is group number 03 in the MAC. This procedure is applicable to Ground Handling Wheels Assembly, Model 204-050-200-5 The numbers in parenthesis refer to figure 3-4 Inspect the wheel assembly as follows:

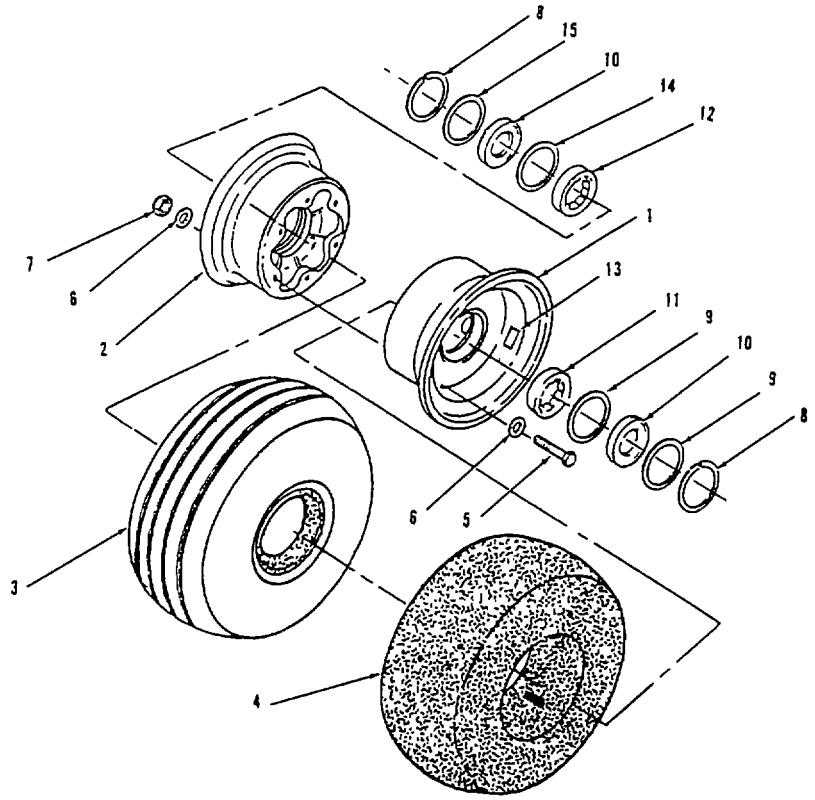

Figure 3-4. Wheel Assembly for Model 204-050-200-5

1. Check for cracked rims (1 & 2) and missing parts (5, 6, 7) on wheel assembly. If damaged, replace wheel assembly using procedures in paragraph 3-15.6 or repair wheel assembly using procedures in paragraph 3-15.7. Replace any missing parts.

2. Check for cut, worn, or frayed tires (3). If a tire is defective, replace wheel assembly using procedures in paragraph 3-15.6 or repair wheel assembly using procedures in paragraph 3-15.7.

3. Check for grease leaking from wheel assembly bearing packing retainers (4 or 5). If leaking grease, replace wheel assembly using procedures in paragraph 3-15.6 or repair wheel assembly using procedures in paragraph 3-15.7.

4. Check that wheel rotates freely on axle. If wheel rotation is sluggish, replace wheel assembly using procedures in paragraph 3-15.6 or repair wheel assembly using procedures in paragraph 3-15.7.

5. Check tire air pressure with tire pressure gauge for 50 psi (34.5 kPa). Inflate if necessary, using available air source or deflate to proper pressure.

END OF TASK

3-15.4 Hydraulic Pump Replacement, Model 204-050-200-5 (AVUM)-Continued

The Hydraulic Pump Assembly is group number 0101 in the MAC. This procedure is applicable to Ground Handling Wheels Assembly, Model 204-050-200-5. Two types of hydraulic pump may be installed on this model of Ground Handling Wheels Assembly. The older version pump has part number BU0953B and is not repairable The new version pump has part number 61780 and is repairable. An older version pump that is defective, will be replaced with the new version upon failure An older version pump, that is removed as part of a disassembly procedure, may be reinstalled if not defective. The numbers in parenthesis refer to accompanying illustration.

This task covers:

a. Removal **b. Install** **c. Service**

INITIAL SETUP

Tools
Tool Kit, Aircraft Mechanics General, NSN 5180-00-323-4692
Drip Pan

Materials
Teflon Tape.....P/N MIL-T-27730

Repair Parts
Pump, Hydraulic.....P/N 61780

Personnel Required
MOS 67

WARNING

To prevent injury to personnel or damage to equipment, release all pressure from the hydraulic pump before starting any maintenance action. Release hydraulic pressure by rapidly rotating the pressure release knob counterclockwise.

GO TO NEXT PAGE

3-15.4 Hydraulic Pump Replacement, Model 204-050-200-5 (AVUM)-Continued

A. REMOVE

Remove a Hydraulic Pump as follows:

1. Place drip pan under wheels assembly.
2. Remove hydraulic pressure from system by rapidly rotating the release valve knob counterclockwise
3. Disconnect both hose assemblies from tee fitting (27) installed In pump metering valve and, drain fluid into drip pan.
4. Remove tee fitting (27) from reducer/metering valve in pump, and retain for Installation In replacement pump.
5. Remove hydraulic pump (5), with part number BU0953B, using following steps
   a. Remove four nuts (16) and four washers (17) from the U-bolts (18 & 19).
   b. Remove two U-bolts (18 & 19) and plate spacer (20).
   c. Grasp pump (5) and lift from cradle assembly (10).
   d. If pump was removed as part of a disassembly procedure, retain pump and attaching hardware for reinstallation
   e. If pump was removed because it is defective, send to AVIM for disposal, replace with hydraulic pump part number 61780.

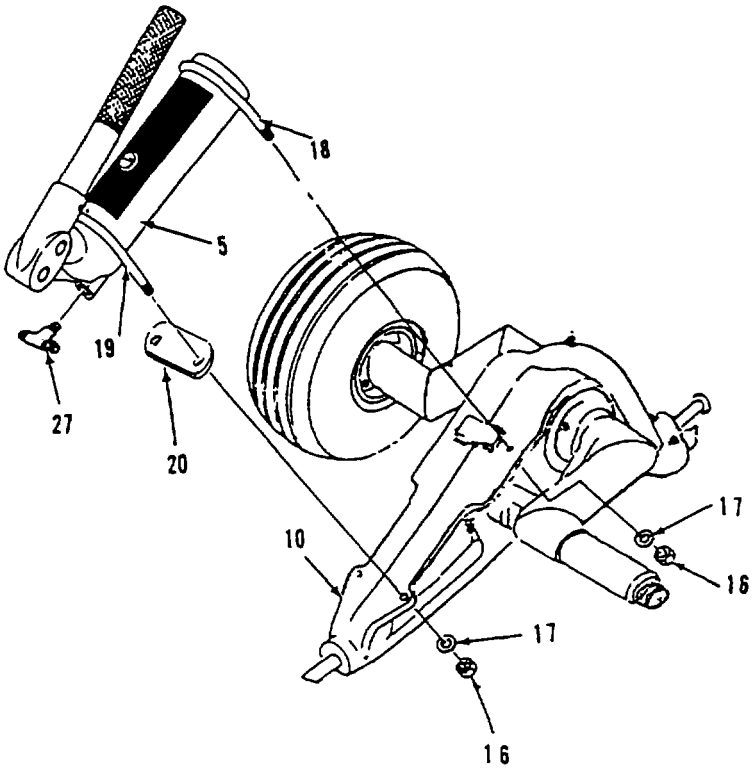

Figure 3-5. Hydraulic Pump, Part No BU0953B

GO TO NEXT PAGE

3-15.4 Hydraulic Pump Replacement, Model 204-050-200-5 (AVUM)-Continued

6. Remove hydraulic pump (4), with part number 61780, using following steps.

a. Remove two nuts (16) and washers (17) from U-bolt (18).

b. Remove U-bolt (18).

c. Remove two nuts (26), washers (17), and bolts (25).

d. Grasp pump (4) and lift from cradle assembly (10).

e. If pump was removed as part of a disassembly procedure, retain pump and attaching hardware for reinstallation.

f. If pump was removed because it Is defective, send to AVIM for repair. See Chapter 4, Section V, paragraph 4-15.1.

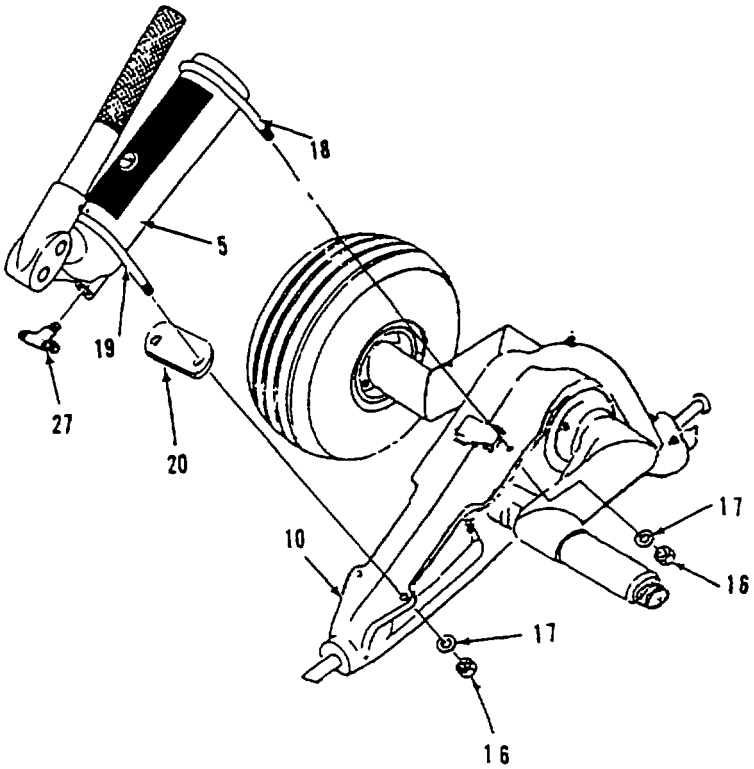

Figure 3-6. Hydraulic Pump, Part No. 61780

GO TO NEXT PAGE

NOTE

Only hydraulic pump assembly with part number 61780 can be used to replace either defective pump removed above. A mounting plate and hydraulic fitting guard are already Installed on the replacement pump assembly

B. INSTALL

Install a hydraulic pump as follows:

1. Refer to figure3-6 and install Hydraulic Pump (4), with part number 61780.

a. Position hydraulic pump (4) on cradle assembly (10) and align mounting holes

b. Insert bolts (25) through holes in pump mounting plate and hydraulic fitting guard; attach with washers (17) and nuts (26).

c. Install bolt (18) over pump (4) body and insert through holes in cradle, attach with washers (17) and nuts (16).

d. Install tee fitting (27), wrapped with Teflon Tape (item 8, Appendix D), In reducer/metering valve in pump.

e. Connect hose assemblies to both sides of tee fitting (27), but do not tighten completely at this time. Ensure that hoses do not rub on wheels.

f. Perform fill and bleed procedure of hydraulic system in accordance with service procedure in C below..

NOTE

If an older version pump (BU0953B) was removed as part of a disassembly procedure, it will be reinstalled using following procedure.

2. Refer to figure 3-5 and install Hydraulic Pump (5), with part number BU0953B.

a. Position hydraulic pump (5) on cradle assembly (10) until It is centered over four mounting holes in cradle.

b. Install spacer (20) under pump at front, install U-bolt (19) over pump body (5) and insert through holes in spacer and cradle; attach U-bolt with washers (17) and nuts (16).

c. Install bolt (18) over pump body (5) and insert through holes in cradle; install washers (17) and nuts (16).

d. Install tee fitting (27), wrapped with Teflon Tape (item 8, Appendix D), in reducer/metering valve in pump.

e. Connect hose assemblies to both sides of tee fitting (27), but do not tighten completely at this time. Ensure that hoses do not rub on wheels.

f. Perform fill and bleed procedure of hydraulic system in accordance with service procedure in C below.

GO TO NEXT PAGE

3-154.4 Hydraulic Pump Replacement, Model 204-050-200-5 (AVUM)-Continued

C. SERVICE

Refer to figure 3-5 or 3-6 and perform fill and bleed procedure of hydraulic system as follows:

1. Loosen flared fitting nuts on both hoses at tee (27).
2. Rotate axles until hydraulic rams are fully retracted.
3. Tighten flared nuts on hoses at tee (27); check fluid level in pump.
4. Refill pump with fluid if necessary, and install cap.
5. Rotate the pump release valve knob clockwise.
6. Activate pump until axles are fully extended.
7. Release hydraulic pressure from system by rapidly rotating the release valve knob counterclockwise.
8. Rotate axles until the hydraulic rams are fully retracted and recheck fluid level in pump.
9. If fluid level Is Incorrect, repeat steps 1 through 7; if fluid level Is correct, Install cap and gasket; procedure is completed.

END OF TASK

3-15.5 Hydraulic Pump Replacement, Model 204-050-200-5 (AVUM)-Continued

The Hydraulic Ram Assembly is group number 0102 in the MAC. This procedure is applicable to Ground Handling Wheels Assembly, Model 204-050-200-5. The Hydraulic Ram Assembly is non-repairable and is discarded upon failure. The numbers in parenthesis refer to figure 3-7.

This task covers:

a. Removal **b. Install** **c. Service**

INITIAL SETUP

Tools
Tool Kit, Aircraft Mechanics General, NSN 5180-00-323-4692
Drip Pan

Repair Parts
Ram Assembly, Hydraulic .....P/N 3040-UH1-155

Personnel Required
MOS 67

WARNING

To prevent injury to personnel or damage to equipment, release all pressure from the hydraulic pump before starting any maintenance action. Release hydraulic pressure by rapidly rotating the pressure release knob counterclockwise.

A. REMOVE

Refer to figure 3-7 and remove the Hydraulic Ram Assembly as follows:

1. Place drip pan under wheels assembly.
2. Remove hydraulic pressure from system by rapidly rotating the pump release valve knob counterclockwise.
3. Remove Wheel assembly.
   a. Remove cotter pin (1).
   b. Remove castle nut (2), and retainer (3).
   c. Remove wheel assembly (4) from axle hub (5).

GO TO NEXT PAGE

3-15.5 Hydraulic Pump Replacement, Model 204-050-200-5 (AVUM)-Continued

A. REMOVE - Continued

NOTE
Both devises must be disconnected in next step

4. Disconnect hydraulic ram clevis by removing cotter pin (6), two flat washers (7), and clevis pin (8) Retain parts for connecting replacement ram clevis

5. Rotate axle to see clevis set screw (9) and loosen set screw.

6. Rotate axle to clear clevis, unthread clevis (10) from hydraulic ram piston (17), and retain clevis for installation in replacement ram

7. Disconnect hose assembly (15) from elbow (16) installed in ram assembly (11) and drain fluid into drip pan.

8. Remove elbow (16) from ram assembly (11) and retain for installation in replacement ram.

9. Remove setscrew (13) from trunnion (14), and retain for installation of replacement ram.

10. Unscrew ram assembly (11) from trunnion (14).

11. Install new ram assembly in accordance with B below.

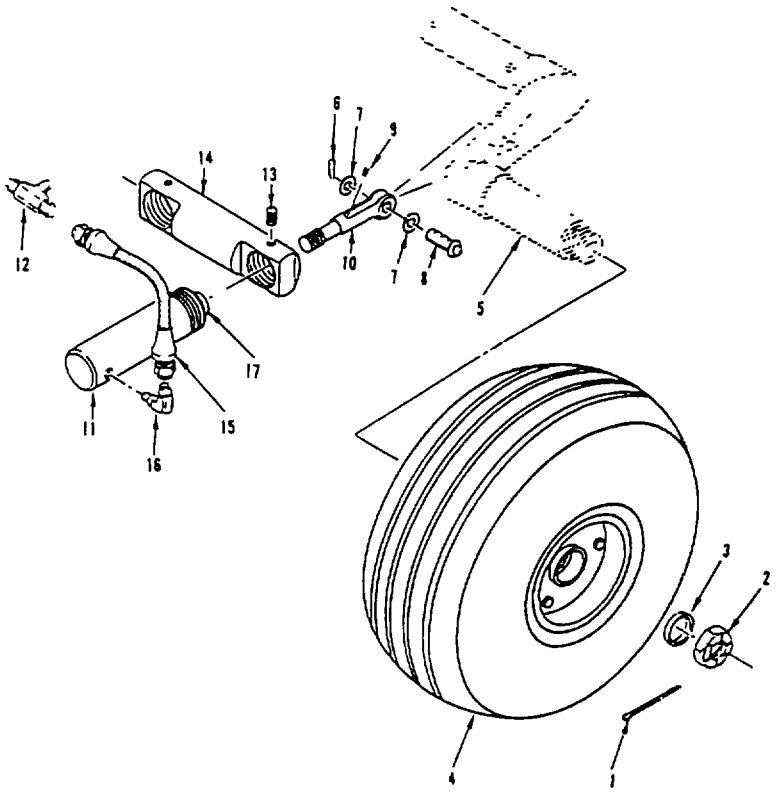

Figure 3-7. Hydraulic Ram Assembly, Model 204-050-200-5

GO TO NEXT PAGE

B. INSTALL

Refer to figure 3-7 and install the Hydraulic Ram Assembly as follows:

1. Arrange replacement ram assembly and attaching parts retained during removal.
2. Thread ram assembly (11) into trunnion (14) until It bottoms out, back off until the hydraulic Inlet hole is facing outward from the cradle and slightly above parallel with the trunnion.

CAUTION

Over tightening the ram assembly setscrew can prevent the ram from operating properly.

3. Install the ram assembly setscrew (13), and only tighten until snug.
4. Thread clevis (10) into the hydraulic ram piston (17) and fully extend the ram.

NOTE

To ensure proper operation, the clevis must be threaded into ram piston until distance from trunnion to centerline of hole in clevis Is 3.915 inches (9.94 cm). The clevis should be configured with the long length of slot facing up and the short side facing down.

5. Measure the distance from the face of trunnion (14) (inboard side) to centerline of holes in clevis (10), measurement should be 3.915 inches (9 94 cm) when piston in bottomed In ram.

CAUTION

Over tightening the ram assembly setscrew can crack or dent Interior surface of hollow piston shaft and prevent the ram from operating properly.

NOTE

If measurement is incorrect, the clevis to piston relationship must be adjusted. To maintain clevis configuration, the ram piston is rotated rather than the clevis, until proper measurement is attained.

6. Hold clevis (10) and rotate ram piston (17) until 3.915 inches (9 94 cm) measurement is achieved; tighten the clevis setscrew (13).
7. Rotate the axle down and align each clevis with an axle arm.

GO TO NEXT PAGE

3-15.5 Hydraulic Ram Replacement, Model 204-050-200-5 (AVUM) - Continued

WARNING

Operator injury or death and equipment damage may occur if the clevis pin mandatory configuration is not implemented. Mandatory configuration requires one washer (7) under head of clevis pin (8) and one on other end of clevis pin (8), between clevis and cotter pin (6). A fracture or stress of clevis pin may occur under hoses helical weighted load.

8. Connect ram clevis (10) to arm on axle (5) as follows:
   a. Install a washer (7) on head end of clevis pin (8).
   b. Insert clevis pin (8) through holes in clevis (10) and clevis arm of axle (5).
   c. Install washer (7) and cotter pin (6) on clevis pin (8).
   d. Install lubrication fitting (18) in clevis pin (8), unless already Installed.
   e. Repeat steps 8a thru 8d for other axle, if necessary.
9. Install elbow fitting (16) in replacement ram assembly (11), using Teflon Tape (item 8, Appendix D).
10. Connect hose assembly (15) to elbow (16) installed in ram assembly (11) and tighten.
11. Install Wheel assembly.
   a. Install wheel assembly (4) on axle hub (5).
   b. Install retainer (3) and castle nut (2).
   c. Install cotter pin (1).

NOTE

Ensure freedom of hose movement throughout full travel of rams and axles, without rubbing on wheel tire. If any interference with movement occurs, reconfigure hose routing to alleviate the problem.

12. Perform service fill and bleed procedure in C below.

C. SERVICE

Refer to figure 3-7 and perform fill and bleed procedure of hydraulic system as follows:

1. Loosen flared fitting nuts on both hoses (15) at tee
2. Rotate axles until hydraulic rams (11) are fully retracted.
3. Tighten flared fitting nuts on both hoses (15) at tee and check fluid level in pump.
4. Refill pump with fluid if necessary, and install cap.
5. Rotate the pump release valve knob clockwise to close valve.
6. Activate pump until axles are fully extended, ensuring freedom of hoses movement without rubbing.
7. Release hydraulic pressure from system by rapidly rotating the pump release valve knob counterclockwise.
8. Rotate axles until the hydraulic rams are fully retracted and recheck fluid level in pump.
9. If fluid level is incorrect, repeat steps 1 through 8; if correct, install cap and procedure is completed.

END OF TASK

3-15.6 Wheel Assembly Replacement, Model 204-050-200-5 (AVUM).

The Wheel Assembly is group number 03 in the MAC. This procedure is applicable to Ground Handling Wheels Assembly, Model 204-050-200-5. The numbers in parenthesis refer to figure 3-8 Observe all WARNINGS and CAUTIONS while performing the following inspections.

This task covers:

a. Remove **b. Install** **c. Service**

INITIAL SETUP

Tools
Tool Kit, Aircraft Mechanics General, NSN 5180-00-323-4692
Tire Pressure Gauge

Materials
Lubricating Oil ..... P/N VV-L-800 (item 5, Appendix D)

Repair Parts
Wheel Assembly ..... P/N 40-76-1

Personnel Required
MOS 67

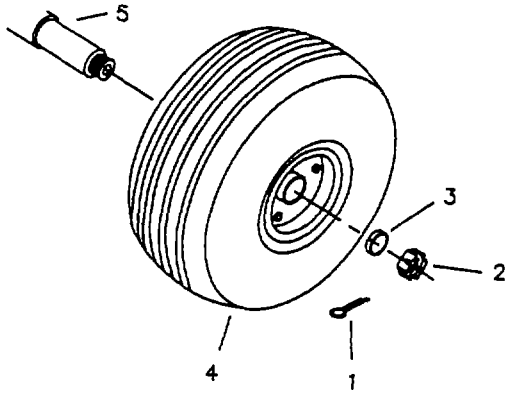

Figure 3-8. Wheel Assembly, Model 204-050-200-5

GO TO NEXT PAGE

3-15.6 Wheel Assembly Replacement, Model 204-050-200-5 (AVUM) - Continued

A. REMOVE

Refer to figure 3-8 and remove the Wheel Assembly as follows:

1. Remove cotter pin (1), castle nut (2), and retainer (3).
2. Remove damaged wheel assembly (4) from axle (5).
3. Inspect axle to assure that It is clean. Lubricate machined surfaces lightly with lubricating oil (item 5, Appendix D).
4. If wheel assembly is removed as part of a disassembly procedure, retain for reinstallation.
5. If wheel assembly is removed because it is defective, repair using procedures in paragraph 3-15.7.

B. INSTALL

Refer to figure 3-8 and install new or repaired Wheel Assembly as follows:

1. Install wheel assembly (4) on axle.
2. Install retainer (3), castle nut (2), and hand tighten castle nut until snug.
3. Back off castle nut until first slot aligns with hole in axle.
4. Install cotter pin (1) in slot of nut and hole in axle.
5. Perform service procedure In C below.

C. SERVICE

Service the Wheel Assembly as follows:

1. Check tire pressure with tire pressure gauge for 50 psi (34.5 kPa).

WARNING

Never inflate wheel assembly without first checking wheel locknut torques, to insure wheel locknuts are tightened to specifications. An assembly with missing washers, bolts, nuts or improperly tightened locknuts could separate under pressure, causing serious injury or death.

2. If pressure is incorrect, inflate or deflate tire to 50 psi (34.5 kPa); if pressure is correct, procedure is completed.

END OF TASK

3-15.7 Wheel Assembly Repair, Model 204-050-200-5 (AVUM).

The Wheel Assembly is group number 03 in the MAC. This procedure is applicable to wheel assembly with part number 40-76-1, used on Ground Handling Wheels Assembly, Model 204-050-200-5. The numbers in parenthesis refer to figure 3-9. Observe all WARNINGS and CAUTIONS while performing the following Inspections.

This task covers:

a. Repair

INITIAL SETUP

Tools

Tool Kit, Aircraft Mechanics General, NSN 5180-00-323-4692
Tire Pressure Gauge

Materials

Grease ..... MIL-G-10924 (item 7, Appendix D)

Repair Parts

Wheel Half, Outer ..... P/N 162-27
Wheel Half, Inner ..... P/N 161-30
Tire P/N 7.00 X 6-6 PLY
Tube, Pneumatic ..... P/N 7.00 X 6
Ring, Retaining ..... P/N 155-1
Retainer, Packing ..... P/N 153-15
Bearing ..... P/N 214-1 and 214-2
Seal . P/N 153-3
Felt, Mechanical ..... P/N 154-01300

Personnel Required

MOS 67

GO TO NEXT PAGE

3-15.7 Wheel Assembly Repair, Model 204-050-200-5 (AVUM) - Continued

WARNING

To prevent injury, the tire and tube must be completely deflated, and the valve stem cores removed, before attempting to separate the wheel halves.

A. Repair. Repair wheel assembly 40-76-1 as follows:

1. Remove the tire and tube (Figure 3-9).
   a. Press valve stem core to vent air from tube(4) and deflate tire completely.
   b. Remove valve stem core from tube stem.
   c. Remove nuts(7), washers (6), and bolts (5) from wheel halves at three locations.
   d. Separate wheel halves (2) and (1) and remove tire (3) and tube (4).
2. Remove bearings and grease seals from outer wheel half.
   a. Remove lockring (8), washer (9), felt packing (10), washer (9), and bearing (11) from outer wheel half (1).
   b. Clean bearing race and inspect for damage. If race is damaged, replace outer bearing (11) or wheel half (1).
3. Install bearings and grease seals in outer wheel half.
   a. Pack new bearing by dipping in grease (item 7, Appendix D) and working between balls and cage with fingers.
   b. Install new bearing (11), washer (9), felt packing (10), flat washer (9), and lock ring (8).
4. Remove bearings and grease seals from inner wheel half.
   a. Remove lockring (8), ring grease seal (14), felt packing (10), washer (15), and bearing (12) from inner wheel half (2).
   b. Clean bearing race and inspect for damage. If race is damaged, replace inner wheel half (2).
5. Install bearings and grease seals in inner wheel half.
   a. Pack new bearing by dipping in grease (item 7, Appendix D) and working between balls and cage with fingers.
   b. Install new bearing (12), washer (15), felt packing (10), ring grease seal (14), and lockring (8) in inner wheel half (2).
6. Install tire and tube.
   a. Inflate new tube slightly to provide shape, and insert tube (4) into tire (3).
   b. Nest tire (3), tube (2) on wheel halves (2 and 1).
   c. Align tube valve stem and insert through hole in outer wheel half (2).
   d. Install washers (6) on bolts (5) through outer wheel half and inner wheel half at three places.
   e. Install washers (6) and nuts (7) on bolts (5); torque nuts to 140-150 in. lbs.

GO TO NEXT PAGE

3-15.7 Wheel Assembly Repair, Model 204-050-200-5 (AVUM) - Continued

A. REPAIR - Continued

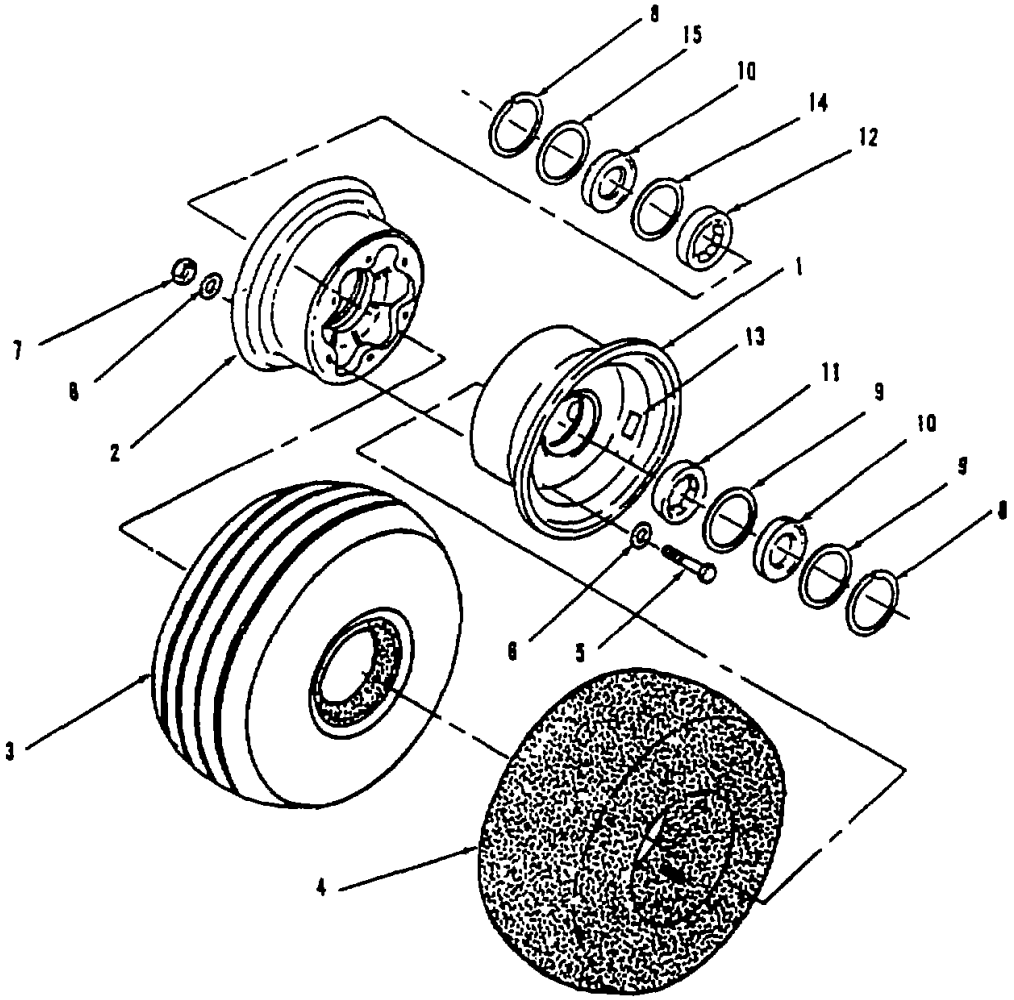

Figure 3-9. Wheel Assembly, Model 204-050-200-5

GO TO NEXT PAGE

3-15.7 Wheel Assembly Repair, Model 204-050-200-5 (AVUM) - Continued

A. REPAIR - Continued

WARNING

Never inflate wheel assembly without first checking wheel locknut torques, to insure wheel locknuts are tightened to specifications. An assembly with missing washers, bolts, nuts or improperly tightened locknuts could separate under pressure, causing serious injury or death.

f. Install valve stem core and inflate tube.

g. Check tire pressure with tire pressure gauge for 50 psi (34.5 kPa). If pressure is incorrect, inflate or deflate tire to 50 psi (34.5 kPa); if pressure is correct, procedure is completed.

END OF TASK

3-16. GROUND HANDLING WHEELS ASSEMBLY MAINTENANCE, Model 214-706-104-101 (AVUM).

The Ground Handling Wheels Assembly is group number 00 in the MAC Maintenance performed on Model 214706-104-101, at the AVUM level, includes inspection, replacement and repair procedures. Inspection procedures are presented for the hydraulic system, cradle assembly, and wheel assembly Replacement procedures are presented for the hydraulic pump assembly, hydraulic ram assembly, and wheel assembly. Repair procedures for the wheel assembly are presented In this section and repair procedures for the hydraulic pump assembly, hydraulic ram assembly, and cradle assembly, are contained in Chapter 4, Section V.

3-16.1 Hydraulic System Inspection, Model 214-706-104-101 (AVUM).

The Hydraulic System is group number 01 in the MAC, and consists of a hydraulic pump assembly, two hydraulic ram assemblies, two hydraulic hoses, and connection fittings. This procedure is applicable to Ground Handling Wheels Assembly, Model 214-706-104-101. The numbers In parenthesis refer to figure 3-10. Inspect the hydraulic system as follows:

1. Check hydraulic hose assemblies (8 or 9) and fittings (27 & 28) for leakage. If a hose assembly or fitting is leaking, tighten; if defective, replace.

2. Check hydraulic rams (7) for leakage. If a hydraulic ram assembly is leaking, tighten hose (8 or 9) or fitting (28); If defective, replace hydraulic ram using procedures in paragraph 3-16.5.

NOTE

Two types of hydraulic pump may be installed on this model of the Ground Handling Wheels Assembly The older version pump with part number BU0953B is not repairable and will be replaced by pump with part number 61780 upon failure. The pump with part number 61780 is repairable.

3. Check hydraulic pump (4 or 5) for damage and leaks. If pump is leaking, tighten connections; if defective, replace hydraulic pump using procedures in paragraph 3-16.4.

4. Check hydraulic system components for cleanliness. If a component is dirty, wipe clean with dry cleaning solvent (item 6, Appendix D). Observe all WARNINGS relative to the use of cleaning agents.

END OF TASK

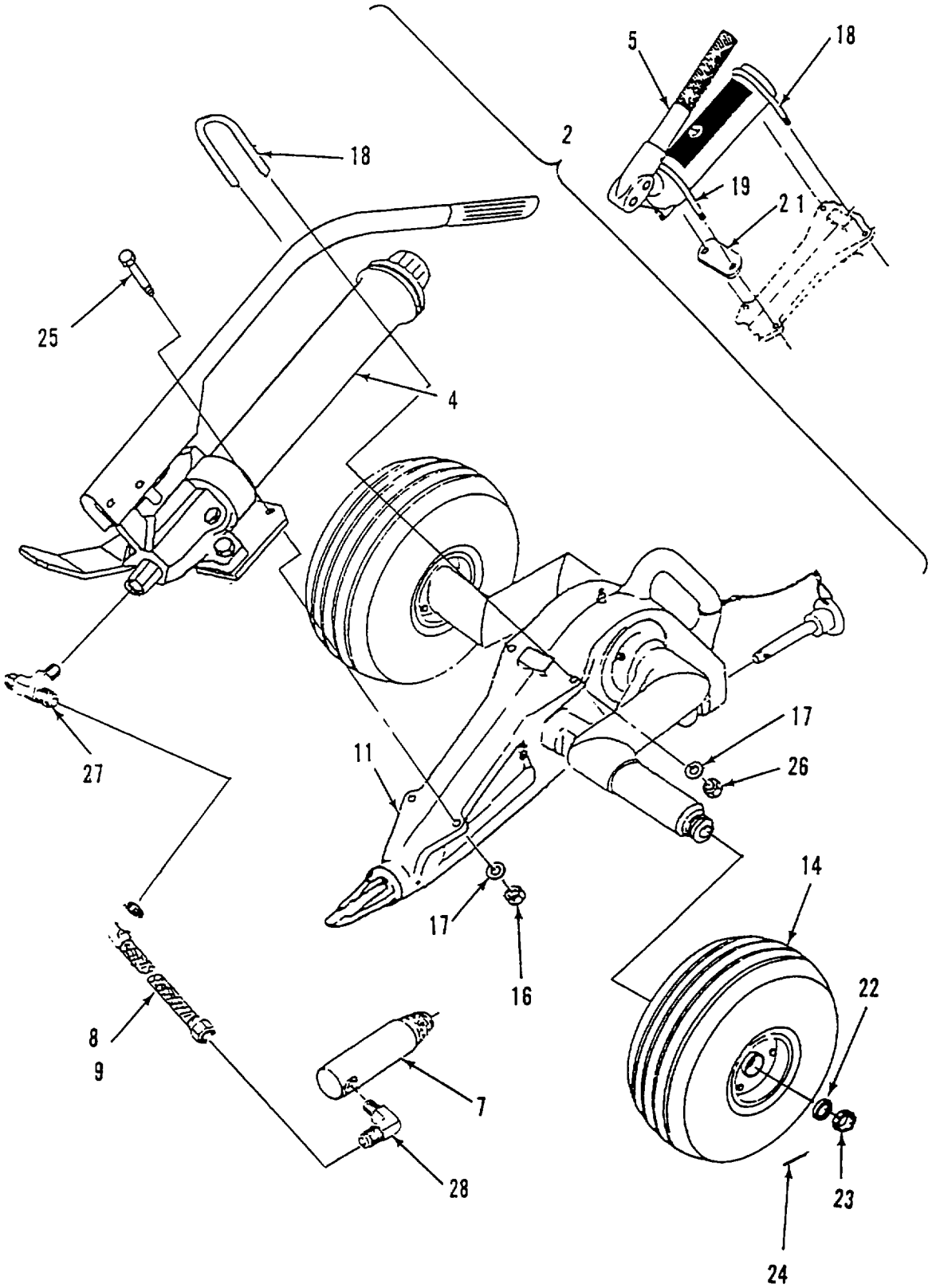

Figure 3-10. Ground Handling Wheel Assembly, Model 214-706-104-101

3-16.2 Cradle Assembly Inspection, Model 214-706-104-101 (AVUM).

The Cradle Assembly is group number 02 in the MAC. This procedure is applicable to Ground Handling Wheels Assembly, Model 214-706-104-101. The numbers in parenthesis refer to figure 3-11. Inspect the cradle assembly as follows:

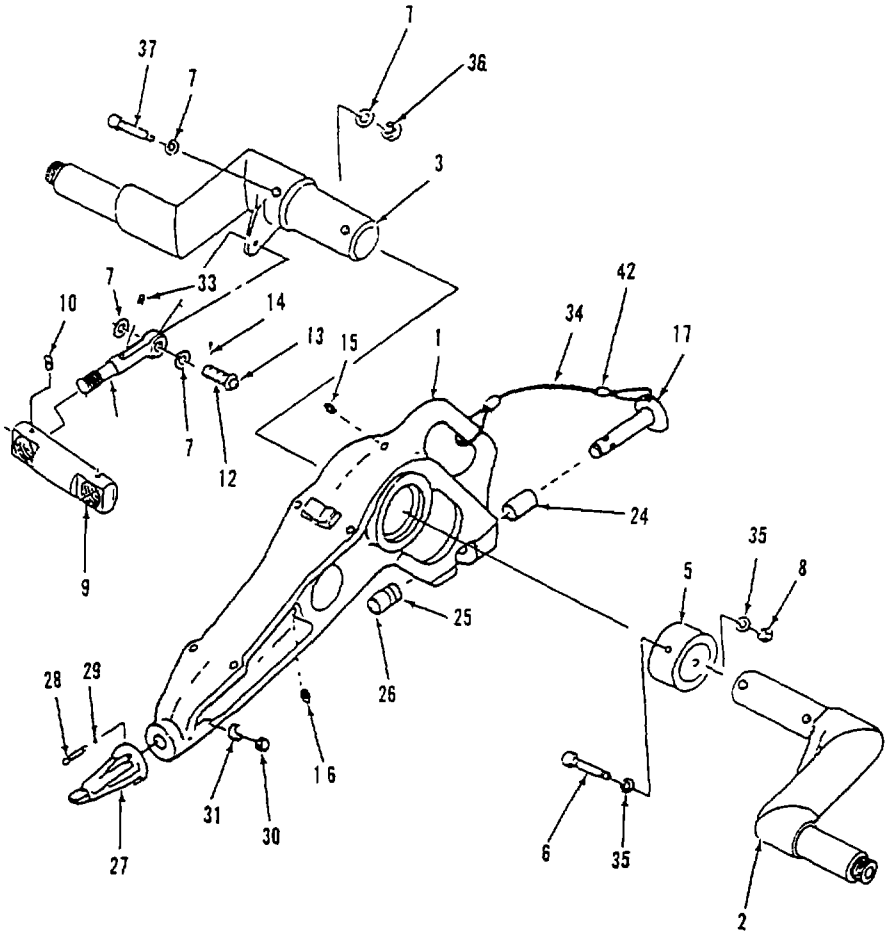

Figure 3-11. Cradle Assembly, Model 214-706-104-101

1. Check for loose, bent, worn, or broken nose pin adapter (27) and attaching hardware (28 thru 31). If nose pin adapter is damaged, replace.
2. Check for loose, bent, worn, or broken quick release pin (17). If quick release pin (17) is damaged, return the Ground Handling Wheels Assembly to AVIM for repair.
3. Check for broken, bent, cracked, or damaged cradle assembly (1). If cradle assembly is damaged, return the Ground Handling Wheels Assembly to AVIM and replace cradle assembly.
4. Check for broken, bent, cracked, or damaged axles assemblies (2 & 3). If an axle assembly is damaged, return the Ground Handling Wheels Assembly to AVIM for repair.

END OF TASK

3-16.3 Wheel Assembly Inspection, Model 214-706-104-101 (AVUM).

The Wheel Assembly is group number 03 in the MAC. This procedure is applicable to Ground Handling Wheels Assembly, Model 214-706-104-101. The numbers in parenthesis refer to figure 3-12. Inspect the wheel assembly as follows:

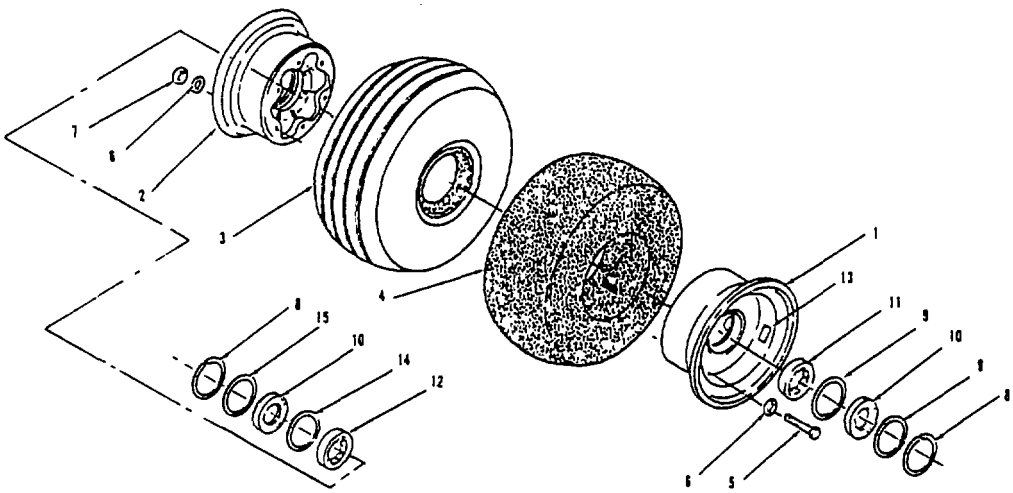

Figure 3-12. Wheel Assembly, Model 214-706-104-101

1. Check for cracked/damaged rims (1 & 2), missing parts (6 thru 9), on wheel assembly. If damaged, replace wheel assembly using procedures in paragraph 3-16.6 or repair wheel assembly using procedures in paragraph 3-16.7. Replace any missing parts.
2. Check for cut, worn, or frayed tires (3). If a tire is defective, replace wheel assembly using procedures in paragraph 3-16.6 or repair wheel assembly using procedures in paragraph 3-16.7.
3. Check for grease leaking from wheel assembly bearings packing retainers (4 or 5). If leaking grease, replace wheel assembly using procedures in paragraph 3-16.6 or repair wheel assembly using procedures in paragraph 3-16.7.
4. Check that wheel rotates freely on axle. If wheel rotation is sluggish and axle is good, replace damaged wheel assembly using procedures in paragraph 3-16.6 or repair wheel assembly using procedures in paragraph 3-16.7.

WARNING

Never inflate wheel assembly without first checking wheel locknut torques, to insure wheel locknuts are tightened to specifications. An assembly with missing washers, bolts, nuts or improperly tightened locknuts could separate under pressure, causing serious injury or death.

5. Check tire air pressure with tire pressure gauge for 75 psi (51.7 kPa). Inflate if necessary, using available air source or deflate to proper pressure.

END OF TASK

3-16.4 Hydraulic Pump Replacement, Model 214-706-104-101 (AVUM).

The Hydraulic Pump Assembly is group number 0101 in the MAC. This procedure is applicable to Ground Handling Wheels Assembly, Model 214-706-104-101. Two types of hydraulic pump may be installed on this model of the Ground Handling Wheels Assembly. The older version pump has part number BU0953B and is not repairable. The new version pump has part number 61780 and is repairable. An older version pump that is defective, will be replaced with the new version upon failure. An older version pump, that is removed as part of a disassembly procedure, will be reinstalled if not defective. The numbers in parenthesis refer to figure 3-13 or 3-14.

This task covers:

a. Remove **b. Install** **c. Service**

INITIAL SETUP

Tools
Tool Kit, Aircraft Mechanics General, NSN 5180-00-323-4692
Drip Pan

Materials
Teflon Tape..... P/N MIL-T-27730 (item 8, Appendix D)

Repair Parts
Pump, Hydraulic..... P/N 61780

Personnel Required
MOS 67

WARNING

To prevent injury to personnel or damage to equipment, release all pressure from the hydraulic pump before starting any maintenance action. Release hydraulic pressure by rapidly rotating the pressure release knob counterclockwise.

GO TO NEXT PAGE

3-16.4 Hydraulic Pump Replacement, Model 214-706-104-101 (AVUM) - Continued

A. REMOVE

1. Place drip pan under wheels assembly.
2. Remove hydraulic pressure from system by rapidly rotating the pump release valve knob counterclockwise.
3. Disconnect both hose assemblies from tee fitting (27) installed in pump metering valve, and drain fluid into drip pan.
4. Remove tee fitting (27) from reducer/metering valve in pump, and retain for installation in replacement pump.
5. Refer to figure 3-13 and remove pump (5), with part number BU0953B, as follows:

   a. Remove four nuts (16) and four washers (17) from the U-bolts (18 & 19).

   b. Remove two U-bolts (18 & 19) and plate spacer (21).

   c. Grasp pump (5) and lift from cradle assembly (11).

   d. If pump was removed as part of a disassembly procedure, retain pump and attaching hardware for reinstallation.

   e. If pump was removed because it is defective, send to AVIM for disposal.

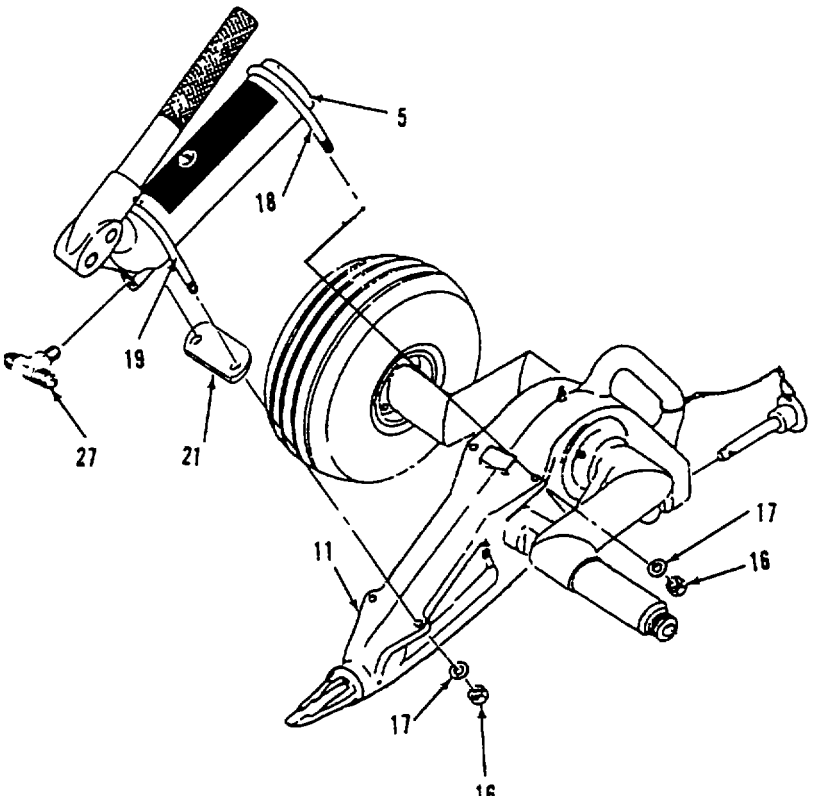

Figure 3-13. Hydraulic Pump, Part No. BU0953B

GO TO NEXT PAGE

3-16.4 Hydraulic Pump Replacement, Model 214-706-104-101 (AVUM)- Continued

6. Refer to figure 3-14 and remove pump (4), with part number 61780, as follows:
   a. Remove two nuts (16) and washers (17) from U-bolt (18).
   b. Remove U-bolt (18).
   c. Remove two nuts (26), washers (17), and bolts (25).
   d. Grasp pump (4) and lift from cradle assembly (11).
   e. If pump was removed as part of a disassembly procedure, retain pump and attaching hardware for reinstallation.
   f. If pump was removed because it Is defective, send to AVIM See Chapter 4, Section V, paragraph 4-16.1.

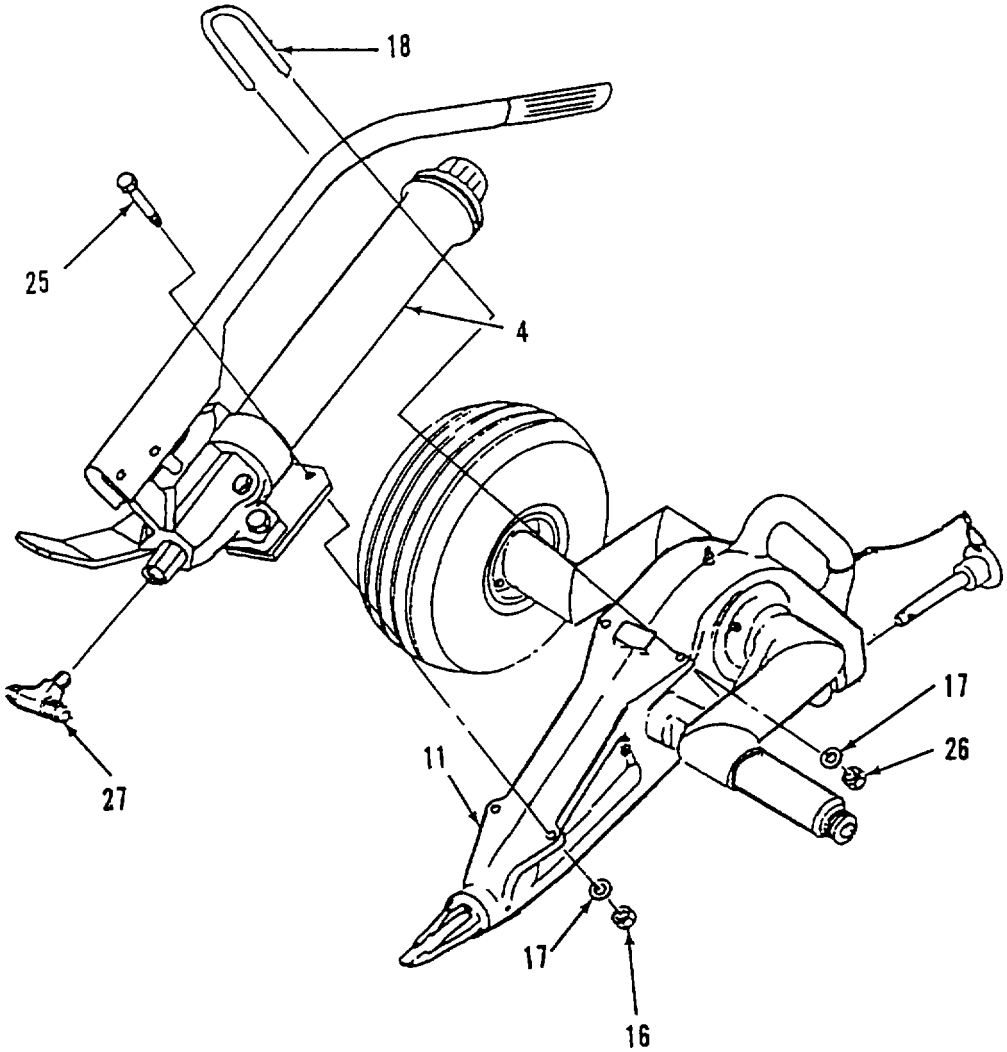

Figure 3-14. Hydraulic Pump, Part No. 61780

GO TO NEXT PAGE

3-16.4 Hydraulic Pump Replacement, Model 214-706-104-101 (AVUM)- Continued

NOTE

Only hydraulic pump assembly with part number 61780 can be used to replace either defective pump removed above. A mounting plate and hydraulic fitting guard are already installed on the replacement pump assembly.

B. INSTALL

Refer to figure 3-14 and Install a hydraulic pump as follows:

1. Install the Hydraulic Pump (4), with part number 61780, using following steps.
   a. Position hydraulic pump (4) on cradle assembly (11) and align mounting holes.
   b. Insert bolts (25) through holes in pump mounting plate and hydraulic fitting guard; attach with washers (17) and nuts (26).
   c. Install U-bolt (18) over pump (4) body and insert through holes in cradle, attach with washers (17) and nuts (16) Torque to snug only, do not over torque or indent pump reservoir with u-bolt. Maximum torque is no more than four inch pounds above run-on torque
   d. Install tee fitting (27), wrapped with Teflon Tape (item 8, Appendix D), In reducer/metering valve in pump.
   e. Connect hose assemblies to both sides of tee fitting (27), but do not tighten completely at this time.
   f. Perform fill and bleed procedure of hydraulic system in accordance with service procedure in C below.

NOTE

If an older version pump, with part number BU0953B, was removed as part of a disassembly procedure, it will be reinstalled using following procedure.

2. Refer to figure 3-13 and Install the Hydraulic Pump (5), with part number BU09538, using following steps.
   a. Position hydraulic pump (5) on cradle assembly (11) until it is centered over four mounting holes in cradle.
   b. Install spacer (21) under pump at front, install U-bolt (19) over pump body (5) and insert through holes in spacer and cradle; attach U-bolt with washers (17) and nuts (16).
   c. Install U-bolt (18) over pump body (5) and Insert through holes in cradle; attach U-bolt with washers (17) and nuts (16).
   d. Install tee fitting (27), wrapped with Teflon Tape (item 8, Appendix D), in reducer/metering valve in pump.
   e. Connect hose assemblies to both sides of tee fitting (27), but do not tighten completely at this time.
   f. Perform fill and bleed procedure of hydraulic system in accordance with service procedure in C below.

GO TO NEXT PAGE

3-16.4 Hydraulic Pump Replacement, Model 214-706-104-101 (AVUM)- Continued

C. SERVICE

Refer to figure 3-13 or 3-14 and perform fill and bleed procedure of hydraulic system as follows:

1. Loosen flared fitting nuts on both hoses at tee (27).
2. Rotate axles until hydraulic rams are fully retracted.
3. Tighten flared fitting nuts on both hoses at tee (27) and check fluid level in pump.
4. Refill pump with fluid i necessary, and install cap.
5. Activate pump until axles are fully extended.
6. Release hydraulic pressure from system by rapidly rotating the release valve knob counterclockwise.
7. Rotate axles until the hydraulic rams are fully retracted and recheck fluid level in pump.
8. If fluid level is incorrect, repeat steps 4 through 7; if correct, install cap and gasket; procedure is completed.

END OF TASK

3-16.5 Hydraulic Ram Replacement, Model 214-706-104-101 (AVUM).

The Hydraulic Ram Assembly is group number 0102 in the MAC. This procedure is applicable to Ground Handling Wheels Assembly, Model 214-706-104-101. The Hydraulic Ram Assembly is non-repairable and is discarded upon failure. The numbers in parenthesis refer to figure 3-15.

This task covers:

a. Remove **b. Install** **c. Service**

INITIAL SETUP

Tools
Tool Kit, Aircraft Mechanics General, NSN 5180-00-323-4692
Drip Pan

Repair Parts
Hydraulic Fluid ..... PIN MIL-H-5606 (item 1, Appendix D)

Repair Parts
Ram Assembly, Hydraulic ..... PIN 1730-EG-119

Personnel Required
MOS 67

WARNING

To prevent Injury to personnel or damage to equipment, release all pressure from the hydraulic pump before starting any maintenance action. Release hydraulic pressure by rapidly rotating the pressure release knob counterclockwise.

GO TO NEXT PAGE

3-16.5 Hydraulic Ram Replacement, Model 214-706-104-101 (AVUM) - Continued.

A. REMOVE

Refer to figure 3-15 and remove the Hydraulic Ram Assembly as follows:

1. Place drip pan under wheels assembly.
2. Remove hydraulic pressure from system by rapidly rotating the pump release valve knob 1/4 turn counterclockwise nominally.

WARNING

If removal of castle nut from axle requires any appreciable torque, immediately check condition and security of each split rim attaching bolt and nut. Assure that they are securely holding Inner and outer wheel rim halves together. If not, removal of the castle nut from axle may result in explosive separation of rims with resultant damage, injury or death.

3. Remove wheel assembly.
   a. Remove cotter pin (1).
   b. Remove castle nut (2), and retainer (3).
   c. Remove wheel assembly (4) from axle hub (5).
4. Disconnect hydraulic ram clevis (10) by removing cotter pin (6), two flat washers (7), and clevis pin (8). Retain parts for connecting replacement ram clevis.
5. Rotate axle to see clevis set screw (9) and loosen set screw.
6. Rotate axle to clear clevis, unthread clevis (10) from hydraulic ram piston (17), and retain clevis for installation In replacement ram.
7. Disconnect hose assembly (15) from elbow (16) Installed In ram assembly (11) and drain fluid into drip pan.
8. Remove elbow (16) from ram assembly (11) and retain for installation in replacement ram.
9. Remove setscrew (13) and plug from trunnion (14), and retain for installation of replacement ram.
10. Unthread clevis (10) from ram piston (17).
11. Unscrew ram assembly (11) from trunnion (14).
12. Install new ram assembly in accordance with B below.

GO TO NEXT PAGE

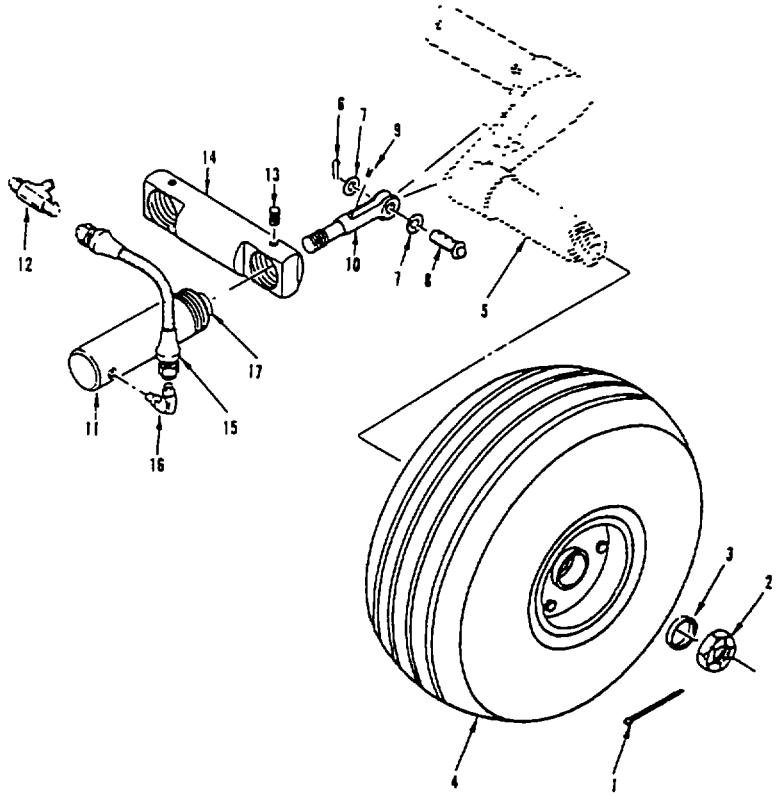

Figure 3-15. Hydraulic Ram, Model 214-706-104-101

GO TO NEXT PAGE

3-16.5 Hydraulic Ram Replacement, Model 214-706-104-101 (AVUM) - Continued.

B. INSTALL

Refer to figure 3-15 and install the Hydraulic Ram Assembly as follows.

1. Arrange replacement ram assembly and attaching parts retained during removal
2. Thread ram assembly (11) into trunnion (14) until it bottoms out; back off until the hydraulic inlet hole is facing outward from the cradle and slightly above parallel with the trunnion.

CAUTION

Over tightening the ram assembly setscrew can prevent the ram from operating properly

3. Install the ram assembly setscrew (13), and only tighten until snug
4. Thread clevis (10) into the hydraulic ram piston (17) and fully extend the ram

NOTE

To ensure proper operation, the clevis must be threaded into ram piston until distance from trunnion to centerline of hole in clevis is 3.915 inches (9 94 cm). The clevis should be configured with the long length of slot facing up and the short side facing down.

5. Measure the distance from the face of trunnion (14) (inboard side) to centerline of holes in clevis (10); measurement should be 3 915 inches (9.94 cm) when piston in bottomed in ram.

CAUTION

Over tightening the ram assembly setscrew can crack or dent interior surface of hollow piston shaft and prevent the ram from operating properly

NOTE

If measurement is incorrect, the clevis to piston relationship must be adjusted. To maintain clevis configuration, the ram piston is rotated rather than the clevis, until proper measurement is attained.

6. Hold clevis (10) and rotate ram piston (17) until 3.915 inches (9.94 cm) measurement is achieved; tighten the clevis setscrew (13).
7. Rotate the axle down and align each clevis with an axle arm.

GO TO NEXT PAGE

WARNING

Operator injury or death and equipment damage may occur if the clevis pin mandatory configuration is not Implemented. Mandatory configuration requires one washer (7) under head of clevis pin (8) and one on other end of clevis pin (8), between clevis and cotter pin (6). A fracture or stress of clevis pin may occur under hoses helical weighted load.

8. Connect ram clevis (10) to arm on axle (5) as follows:
   a. Install a washer (7) on head end of clevis pin (8).
   b. Insert clevis pin (8) through holes in clevis (10) and clevis arm of axle (5).
   c. Install washer (7) and cotter pin (6) on clevis pin (8).
   d. Install lubrication fitting in clevis pin (8), unless already Installed.
   e. Repeat steps 8a thru 8d for other axle, If necessary.
9. Install elbow fitting (16) In replacement ram assembly (11), using Teflon Tape (item 8, Appendix D).
10. Connect hose assembly (15) to elbow (16) installed In ram assembly (11) and tighten.
11. Install Wheel assembly.
   a. Install wheel assembly (4) on axle hub (5).
   b. Install retainer (3) and castle nut (2).
   c. Install cotter pin (1).

NOTE

Ensure freedom of hose movement throughout full travel of rams and axles, without rubbing on wheel tire. If any interference with movement occurs, reconfigure hose routing to alleviate the problem.

12. Perform service fill and bleed procedure in C below.

C. SERVICE

Perform fill and bleed procedure of hydraulic system as follows:

1. Loosen flared fitting nuts on both hoses (15) at tee
2. Rotate axles until hydraulic rams (11) are fully retracted.
3. Tighten flared fitting nuts on both hoses (15) at tee and check fluid level in pump.
4. Refill pump with fluid if necessary, and install cap.
5. Rotate the pump release valve knob clockwise to close valve.
6. Activate pump until axles are fully extended, ensuring freedom of hoses movement without rubbing.
7. Release hydraulic pressure from system by rapidly rotating the pump release valve knob counterclockwise.
8. Rotate axles until the hydraulic rams are fully retracted and recheck fluid level in pump.
9. If fluid level Is incorrect, repeat steps 1 through 8; if correct, install cap and procedure is completed.

END OF TASK

3-16.6 Wheel Assembly Replacement, Model 214-706-104-101 (AVUM).

The Wheel Assembly is group number 03 in the MAC. This procedure is applicable to Ground Handling Wheels Assembly, Model 214-706-104-101. The numbers in parenthesis refer to figure 3-16 Observe all WARNINGS and CAUTIONS while performing the following Inspections.

This task covers:

a. Remove **b. Install** **c. Service**

INITIAL SETUP

Tools
Tool Kit, Aircraft Mechanics General, NSN 5180-00-323-4692
Tire Pressure Gauge

Materials
Lubricating Oil..... P/N VV-L-800 (item 5, Appendix D)

Repair Parts
Wheel Assembly . ..... P/N 40-117A

Personnel Required
MOS 67

A. REMOVE

Refer to figure 3-16 and remove the Wheel Assembly as follows:

1. Remove cotter pin (1), castle nut (2), and retainer (3).
2. Remove damaged wheel assembly (4) from axle (5).
3. Inspect axle to assure that it. is clean. Lubricate machined surfaces lightly with lubricating oil (item 5, Appendix D).
4. If wheel assembly is removed as part of a disassembly procedure, retain for reinstallation.
5. If wheel assembly is removed because it is defective, repair using procedures in paragraph 3-16.7.

GO TO NEXT PAGE

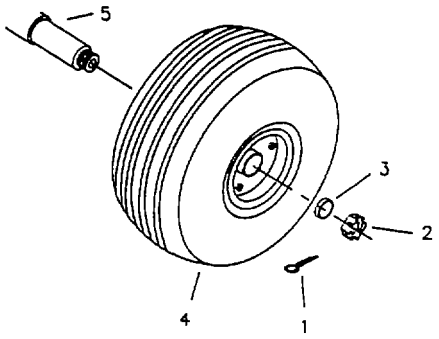

Figure 3-16. Wheel Assembly, Model 214-706-104-101

B. INSTALL

Refer to figure 3-16 and install new or repaired Wheel Assembly as follows'

1. Install wheel assembly (4) on axle (5), after cleaning and lubricating.
2. Install retainer (3) and castle nut (2); hand tighten castle nut until snug
3. Back off castle nut until first slot aligns with hole In axle.
4. Install cotter pin (1) in slot of nut and hole in axle, and secure by bending both tangs.
5. Perform service procedure in C below.

C. SERVICE

Service the Wheel Assembly as follows:

1. Check condition, security, and torque (150-225 inch pounds) on six split rim connector bolts and nuts. Replace as required H unserviceable.
2. Check tire pressure with tire pressure gauge for 75 psi (51 7 kPa).

WARNING

Never inflate wheel assembly without first checking wheel locknut torques, to insure wheel locknuts are tightened to specifications. An assembly with missing washers, bolts, nuts or improperly tightened locknuts could separate under pressure, causing serious injury or death.

3. If pressure is incorrect, inflate or deflate tire to 75 psi (51.7 kPa); if pressure is correct, procedure is completed.

END OF TASK

3-16.7 Wheel Assembly Replacement, Model 214-706-104-101 (AVUM).

The Wheel Assembly is group number 03 in the MAC. This procedure is applicable to wheel assembly with part number 40-117A, used on Ground Handling Wheels Assembly, Model 214-706-104-101. The numbers in parenthesis refer to figure 3-17. Observe all WARNINGS and CAUTIONS while performing the following inspections.

This task covers:

a. Remove

INITIAL SETUP

Tools
Tool Kit, Aircraft Mechanics General, NSN 5180-00-323-4692
Tire Pressure Gauge

Materials
Grease P/N MIL-G-10924 (item 7, Appendix D)

Repair Parts
Wheel Half, Outer ..... P/N 162-48
Wheel Half, Inner. ..... P/N 161-23
Tire ..... P/N MS26535-2
Tube, Pneumatic ..... P/N ZZ-1-550/G5/5.70/5.00-8/OFFCTR
Ring, Retaining. ..... P/N 155-1
Washer, Flat ..... P/N 153-4
Retainer, Packing..... P/N 153-15
Bearing ..... P/N 214-1 and 214-2
Seal ..... P/N 153-3
Felt, Mechanical..... P/N 154-01300

Personnel Required
MOS 67

A. REPAIR

WARNING

To prevent personnel injury, the tire and tube must be completely deflated, and the valve stem cores removed, before attempting to separate the wheel halves in the following procedures.

GO TO NEXT PAGE

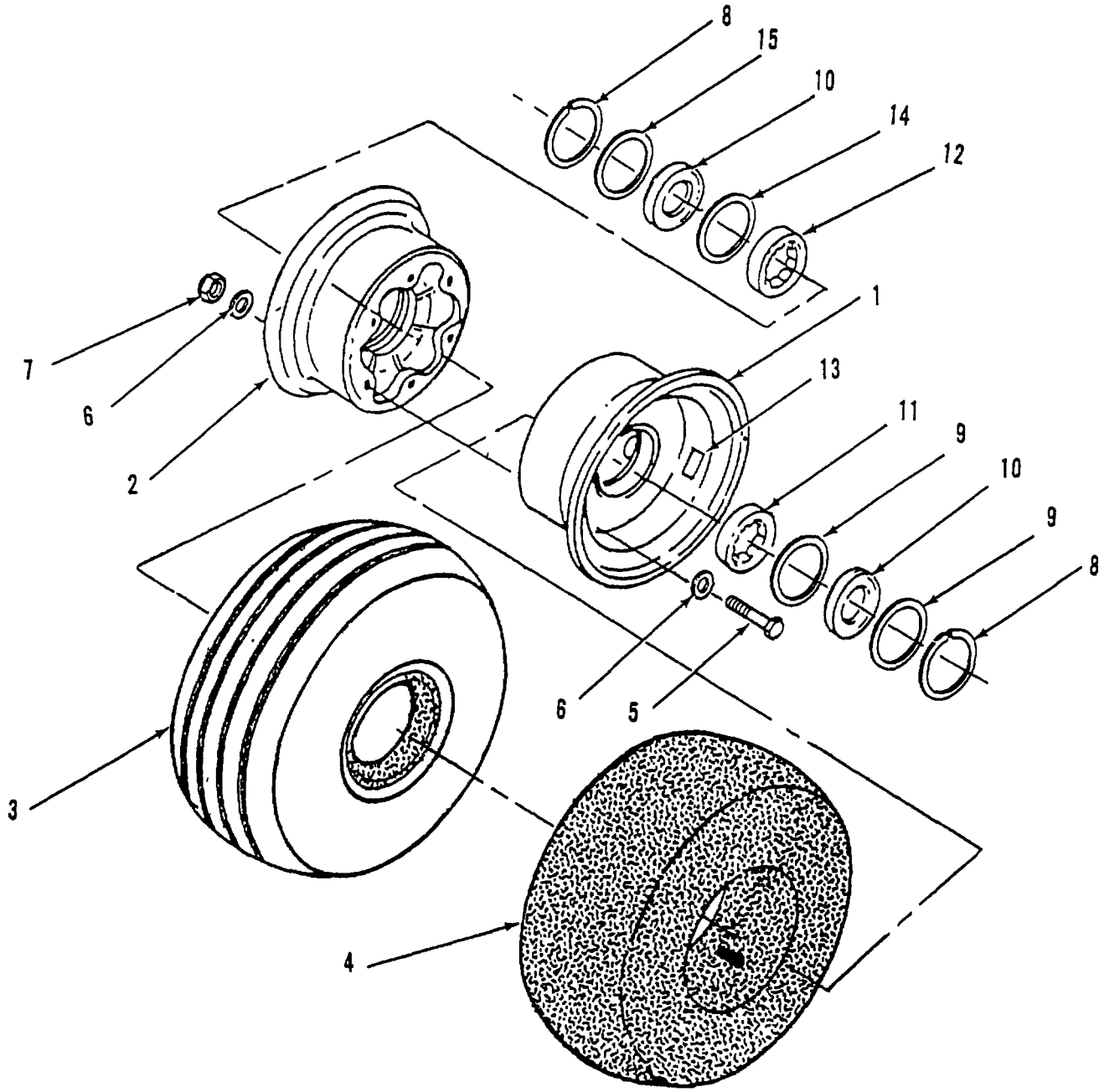

Figure 3-17. Wheel Assembly for Model 214-706-104-101

GO TO NEXT PAGE

3-16.7 Wheel Assembly Repair, Model 214-706-104-101 (AVUM) - Continued

Refer to figure 3-17 and repair wheel assembly 40-117A as follows

1. Remove tire and tube.
   a. Press valve stem core to vent air from tube(4) and deflate tire completely
   b. Remove valve stem core from tube stem.
   c. Remove nuts(7), washers (6), and bolts (5) from wheel halves at three locations.
   d. Separate wheel halves (2) and (1) and remove tire (3) and tube (4)
2. Remove bearings and grease seals from outer wheel half.
   a. Remove lockring (8), washer (9), felt packing (10), washer (9), and bearing (11) from outer wheel half (1).
   b. Clean bearing race and inspect for damage. If race is damaged, replace outer bearing (11) or wheel half (1)
3. Install bearings and grease seals in outer wheel half
   a. Pack new bearing by dipping in grease (Item 7, Appendix D) and working between balls and cage with fingers.
   b. Install new bearing (11), washer (9), felt packing (10), flat washer (9), and lock ring (8).
4. Remove bearings and grease seals from Inner wheel half
   a. Remove lockring (8), ring grease seal (14), felt packing (10), washer (15), and bearing (12) from inner wheel half (2).
   b. Clean bearing race and inspect for damage. If race is damaged, replace Inner wheel half (2).
5. Install bearings and grease seals in inner wheel half
   a. Pack new bearing by dipping in grease (item 7, Appendix D) and working between balls and cage with fingers.
   b. Install new bearing (12), washer (15), felt packing (10), ring grease seal (14) and lockring (8) in inner wheel half (2).
6. Install tire and tube.
   a. Inflate new tube slightly to provide shape, and insert tube (4) into tire (3)
   b. Nest tire (3), tube (4) on wheel halves (2 and 1).
   c. Align tube valve stem and insert through hole in outer wheel half (2)
   d. Install washers (6) on bolts (5) through outer wheel half and inner wheel half at six places.
   e. Install washers (6) and nuts (7) on bolts (5), torque nuts to 140-150 in lbs
   f. Install valve stem core and inflate tube.
   g. Check tire pressure with tire pressure gauge for 75 psi (51.7 kPa). If pressure is incorrect, inflate or deflate tire to 75 psi (51.7 kPa); if pressure is correct, procedure is completed.

END OF TASK

3-17. GROUND HANDLING WHEELS ASSEMBLY MAINTENANCE, Model 1730-EG-100 (AVUM).

The Ground Handling Wheels Assembly is group number 00 in the MAC. Maintenance performed on Model 1730-EG-100, at the AVUM level, includes inspection, replacement and repair procedures. Inspection procedures are presented for the hydraulic system, cradle assembly, and wheel assembly. Replacement procedures are presented for the hydraulic pump assembly, hydraulic ram assembly, and wheel assembly. Repair procedures for the wheel assembly are presented in this section and repair procedures for the hydraulic pump assembly, hydraulic ram assembly, and cradle assembly, are contained in Chapter 4, Section V. Refer to Appendix C, Figure C-1-3, to identify assemblies in the following procedures.

3-17.1 Hydraulic System Inspection, Model 1730-EG-100 (AVUM).

The Hydraulic System is group number 01 in the MAC, and consists of a hydraulic pump assembly, two hydraulic ram assemblies, two hydraulic hoses, and connection fittings. This procedure is applicable to Ground Handling Wheels Assembly, Model 1730-EG-100. Refer to figure 3-18 and inspect the hydraulic system as follows:

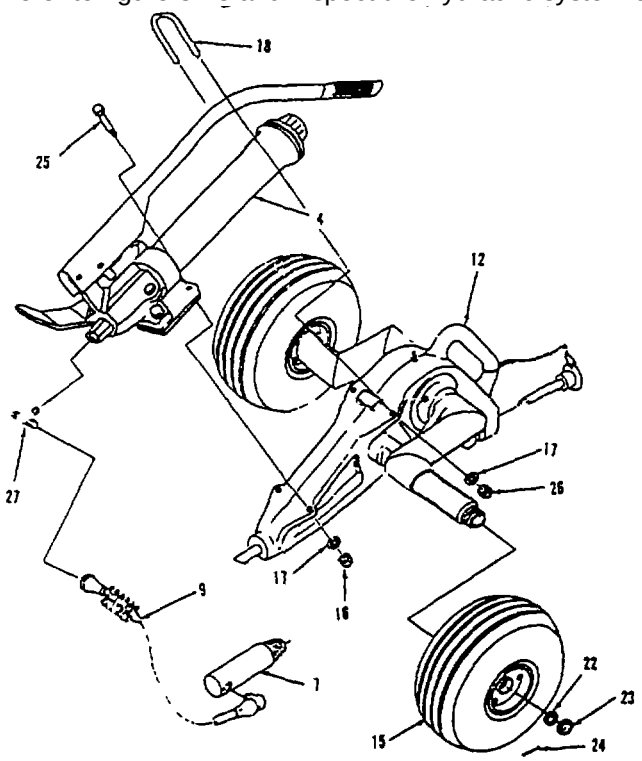

Figure 3-18. Ground Handling Wheels Assembly, Model 1730-EG-100

1. Check hydraulic hose assemblies (9) and fittings for leakage. If a hose assembly or fitting is leaking, tighten; if defective, return Ground Handling Wheels Assembly to AVIM for repair.

2. Check hydraulic rams (1) for leakage. If a hydraulic ram assembly is leaking at hose fitting, tighten hose fitting; if defective, replace hydraulic ram using procedures in paragraph 3-17.5.

3. Check hydraulic pump (4) for damage and leaks. If pump is leaking, tighten connections; if defective, replace hydraulic pump using procedures in paragraph 3-17.4.

4. Check hydraulic system components for cleanliness. If a component is dirty, wipe clean with dry cleaning solvent (item 6, Appendix D). Observe all WARNINGS relative to the use of cleaning agents.

END OF TASK

3-17.2 Cradle Assembly Inspection, Model 1730-EG-100 (AVUM).

The Cradle Assembly Is group number 02 In the MAC. This procedure is applicable to Ground Handling Wheels Assembly, Model 1730-EG-100 Inspect the cradle assembly as follows:

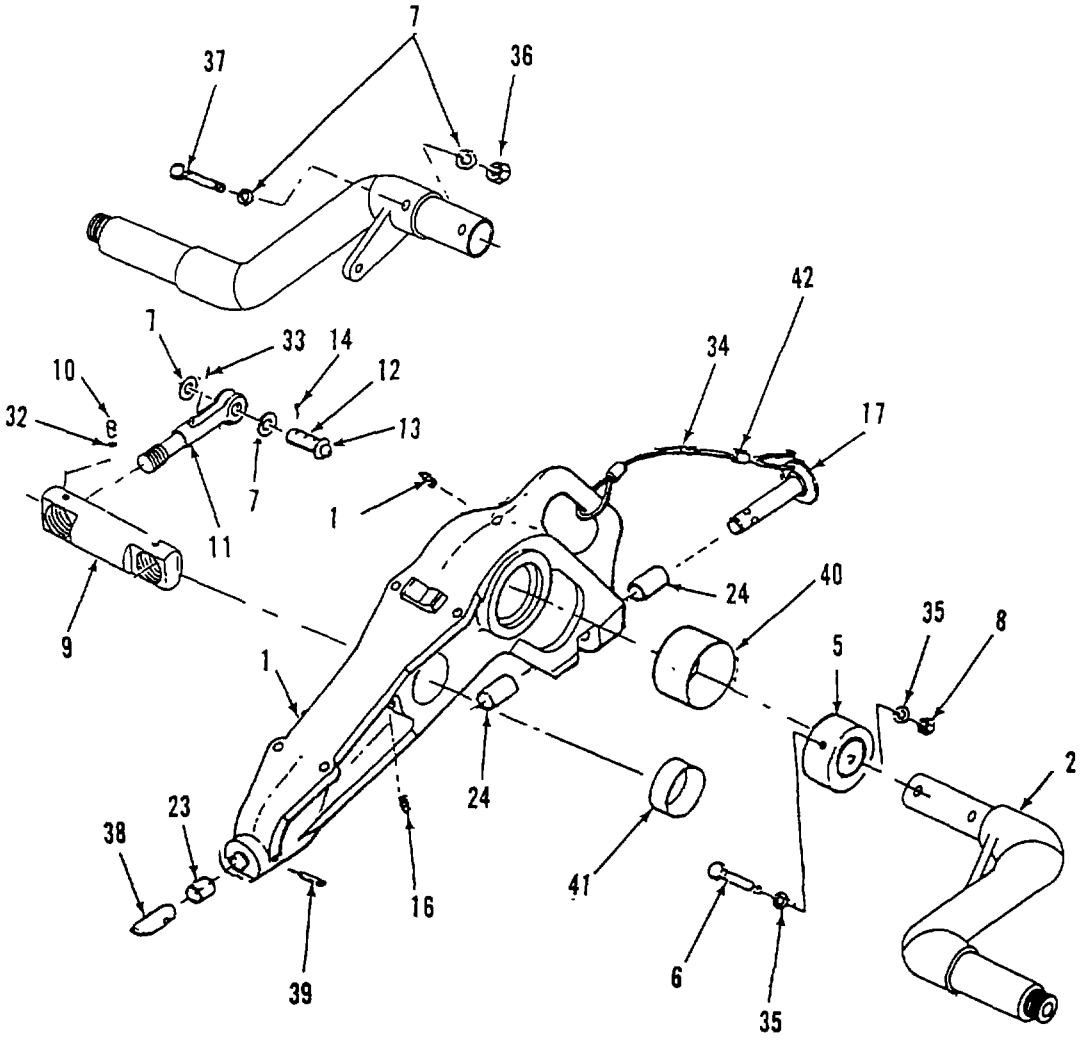

Figure 3-19. Cradle Assembly, Model 1730-EG-100

1. Check for loose, bent, worn, or broken nose pin (38). If nose pin is damaged, replace.

2. Check for loose, bent, worn, or broken rear support pin (17). If rear support pin is damaged, replace.

3. Check for broken, missing parts, excessive wear, cracked, or damaged Cradle Assembly (1). If cradle assembly is damaged, return the Ground Handling Wheels Assembly to AVIM for repair.

END OF TASK

3-17.2 Wheel Assembly Inspection, Model 1730-EG-100 (AVUM).

The Wheel Assembly is group number 03 in the MAC This procedure is applicable to Ground Handling Wheels Assembly, Model 1730-EG-100. Inspect the wheel assembly as follows,

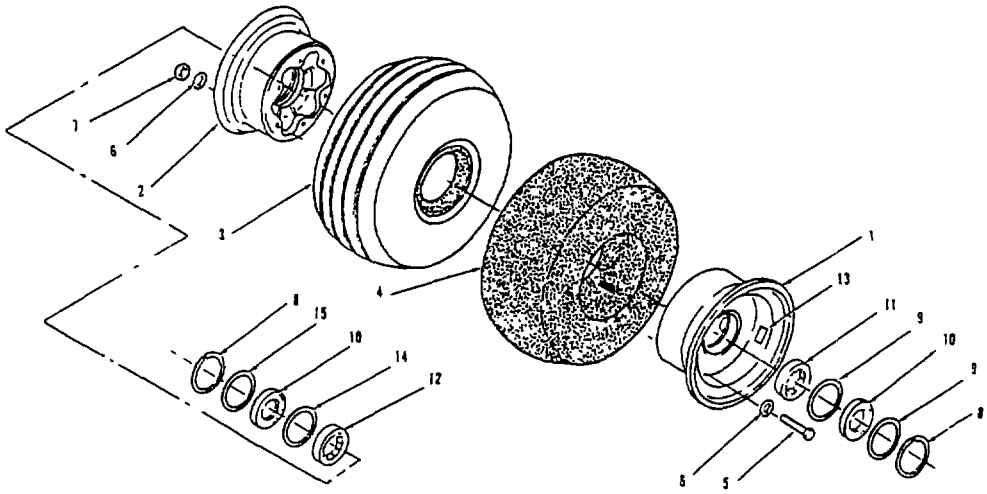

Figure 3-20. Wheel Assembly for Model 1730-EG-100

1. Check for cracked rims (1 & 2), missing parts, or damage to wheel assembly. If damaged, replace wheel assembly using procedures in paragraph 3-17.6 or repair wheel assembly using procedures in paragraph 3-17. 7.

2. Check for cut, worn, or frayed tires (3). If a tire is defective, replace wheel assembly using procedures in paragraph 3-17.6 or repair wheel assembly using procedures in paragraph 3-17.7.

3. Check for grease leaking from wheel assembly bearings (11 & 12). If leaking grease, replace wheel assembly using procedures in paragraph 3-17.6 or repair wheel assembly using procedures in paragraph 3-17.7.

4. Check that wheel rotates freely on axle. If wheel rotation is sluggish and the axle is okay, replace wheel assembly using procedures In paragraph 3-17.6 or repair wheel assembly using procedures in paragraph 3-17.7.

WARNING

Never inflate wheel assembly without first checking wheel locknut torques, to insure wheel locknuts are tightened to specifications. An assembly with missing washers, bolts, nuts or improperly tightened locknuts could separate under pressure, causing serious injury or death.

5. Check tire air pressure with tire pressure gauge for 75 psi (51.7 kPa). Inflate tube (4) if necessary, using available air source or deflate to proper pressure.

END OF TASK

3-17.4 Hydraulic Pump Replacement, Model 173G0EG-100 (AVUM).

The Hydraulic Pump Assembly is group number 0101 in the MAC. This procedure is applicable to Ground Handling Wheels Assembly, Model 1730-EG-100. The hydraulic pump Installed on this model has part number 61780 and is repairable. A pump that is removed as part of a disassembly procedure, will be reinstalled rf not defective The numbers in parenthesis refer to figure 3-21. Observe all WARNINGS and CAUTIONS while performing the following procedure.

This task covers:

a. Remove **b. Install** **c. Service**

INITIAL SETUP

Tools
Tool Kit, Aircraft Mechanics General, NSN 5180-00-323-4692
Drip Pan

Materials
Teflon Tape ..... P/N MIL-T-27730 (item 8, Appendix D)
Hydraulic Fluid . ..... P/N MIL-H-5606 (item 1, Appendix D)

Repair Parts
Pump, Hydraulic ..... P/N 61780

Personnel Required
MOS 67

WARNING

To prevent injury to personnel or damage to equipment, release all pressure from the hydraulic pump before starting any maintenance action. Release hydraulic pressure by rapidly rotating the pressure release knob counterclockwise.

GO TO NEXT PAGE

3-17.4 Hydraulic Pump Replacement, Model 1730-EG-100 (AVUM) - Continued.

A. REMOVE

Refer to figure 3-21 and remove hydraulic pump from cradle assembly as follows:

1. Place drip pan under wheels assembly.
2. Remove hydraulic pressure from system by rapidly rotating the pump release valve knob counterclockwise.
3. Disconnect both hose assemblies from tee fitting (27) installed in pump reducer/metering valve, and drain fluid into drip pan.
4. Remove tee fitting (27) from reducer/metering valve in pump, and retain for Installation In replacement pump.
5. Remove pump (4) as follows.
   a. Remove two nuts (16) and washers (17) from U-bolt (18).
   b. Remove U-bolt (18).
   c. Remove two nuts (26), washers (17), and bolts (25).
   d. Grasp pump (4) and lift from cradle assembly (12).
   e. If pump was removed as part of a disassembly procedure, retain pump and attaching hardware for reinstallation.
   f. If pump was removed because it is defective, send to AVIM for repair

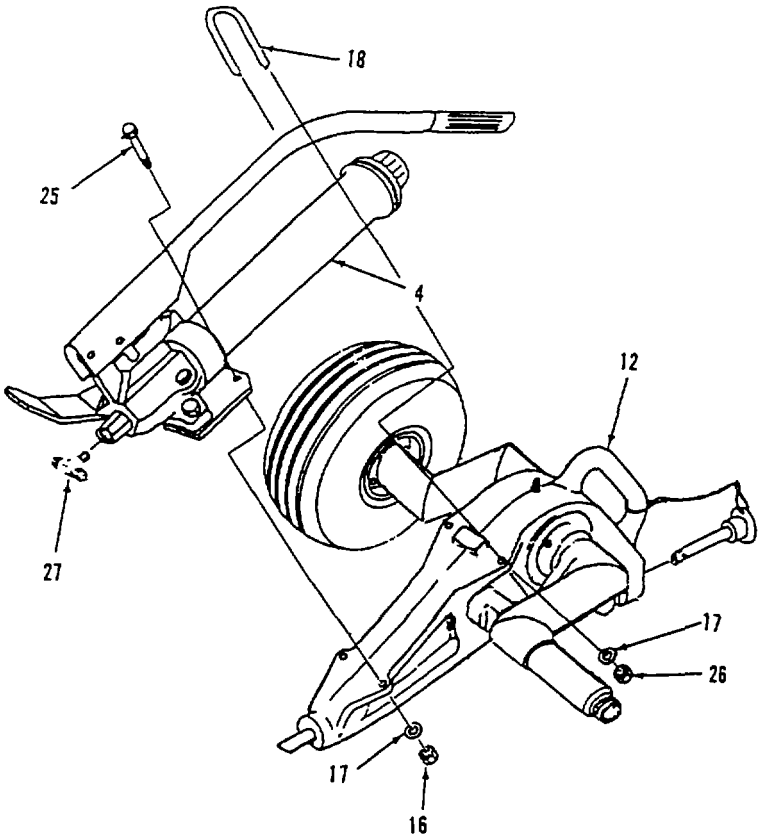

Figure 3-21. Hydraulic Pump, Part No. 61780

GO TO NEXT PAGE

NOTE

Only hydraulic pump assembly with part number 61780 can be used to replace the defective pump removed above. A mounting plate and hydraulic fitting guard are already installed on an assembled pump.

B. INSTALL

Refer to figure 3-21 and Install the hydraulic pump on cradle assembly as follows:

1. Position hydraulic pump (4) on cradle assembly (12) and align mounting holes.
2. Insert two bolts (25) through holes in pump mounting plate and hydraulic fitting guard; attach with washers (17) and nuts (26).
3. Install U-bolt (18) over pump (4) body and insert through holes in cradle; attach with washers (17) and nuts (16).
4. Install tee fitting (27), wrapped with Teflon Tape (item 8, Appendix D), in reducer/metering valve in pump.
5. Connect hose assemblies to both sides of tee fitting (27), but do not tighten completely at this time.
6. Perform service fill and bleed procedure in C below.

C. SERVICE

Refer to figure 3-21 and perform fill and bleed procedure of hydraulic system as follows:

1. Loosen flared fitting nuts on both hoses at tee fitting (27).
2. Rotate axle until hydraulic rams are fully retracted.
3. Tighten flared fitting nuts on both hoses at tee fitting (27) and check fluid level in pump.
4. Refill pump with hydraulic fluid (Item 1, Appendix D) if necessary, and install cap.
5. Activate pump until axles are fully extended.
6. Release hydraulic pressure from system by rapidly rotating the pressure release valve knob counterclockwise.
7. Rotate axles until the hydraulic rams are fully retracted and recheck fluid level in pump.
8. If fluid level is incorrect, repeat steps 1 through 7; if correct, install cap and procedure is completed.

END OF TASK

3-17.5 Hydraulic Ram Replacement, Model 1730-EG-100 (AVUM).

The Hydraulic Ram Assembly is group number 0102 in the MAC. This procedure is applicable to Ground Handling Wheels Assembly, Model 1730-EG-100. The Hydraulic Ram Assembly is non-repairable and is discarded upon failure. The numbers In parenthesis refer to figure 3-22.

This task covers:

a. Remove **b. Install** **c. Service**

INITIAL SETUP

Tools
Tool Kit, Aircraft Mechanics General, NSN 5180-00-323-4692
Drip Pan

Materials
Hydraulic Fluid ..... P/N MIL-H-5606 (item 1, Appendix D)

Repair Parts
Ram Assembly, Hydraulic ..... P/N 1730-EG-119

Personnel Required
MOS 67

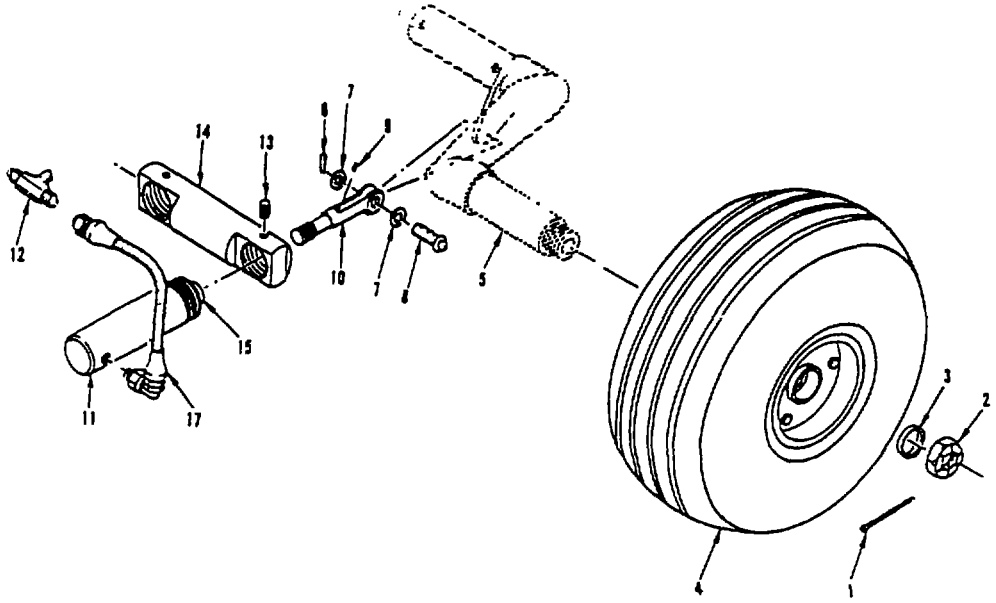

Figure 3-22. Hydraulic Ram for Model 1730-EG-100

GO TO NEXT PAGE

WARNING

To prevent injury to personnel or damage to equipment, release all pressure from the hydraulic pump before starting any maintenance action. Release hydraulic pressure by rapidly rotating the pressure release knob counterclockwise.

A. REMOVE

Refer to figure 3-22 and remove the Hydraulic Ram Assembly as follows:

1. Place drip pan under wheels assembly.
2. Remove hydraulic pressure from system by rapidly rotating the pump release valve knob counterclockwise.
3. Remove wheel assembly.

    a. Remove cotter pin (1).
    b. Remove castle nut (2), and retainer (3).
    c. Remove wheel assembly (4) from axle hub (5).

NOTE

Both devises must be disconnected in next step.

4. Disconnect hydraulic ram clevis (10) by removing cotter pin (6), two flat washers (7), and clevis pin (8). Retain parts for connecting replacement ram clevis.
5. Rotate axle to see clevis set screw (9) and loosen set screw.
6. Rotate axle to clear clevis, unthread clevis (10) from hydraulic ram piston (15), and retain clevis for Installation in replacement ram.
7. Disconnect hose assembly (17) from ram assembly (11) and drain fluid Into drip pan.
8. Remove setscrew (13) and plug from trunnion (14), and retain for installation of replacement ram.
9. Unscrew ram assembly (11) from trunnion (14).
10. Install new ram assembly in accordance with B below.

GO TO NEXT PAGE

B. INSTALL

Refer to figure 3-22 and install the Hydraulic Ram Assembly as follows:

1. Arrange replacement ram assembly and attaching parts retained during removal.
2. Thread ram assembly (11) into trunnion (14) until it bottoms out; back off until the hydraulic inlet hole is facing outward from the cradle and slightly above parallel with the trunnion.

CAUTION

Over tightening the ram assembly setscrew can prevent the ram from operating properly.

3. Install the ram assembly setscrew (13) and plug; only tighten until snug.
4. Thread clevis (10) into the hydraulic ram pistol(15) and fully extend the ram.

NOTE

To ensure proper operation, the clevis must be threaded into ram piston until distance from trunnion to centerline of hole in clevis is 3.915 inches (9.94 cm). The clevis should be configured with the long length of slot facing up and the short side facing down.

5. Measure the distance from the face of trunnion (14) (inboard side) to centerline of holes in clevis (10); measurement should be 3.915 inches (9.94 cm) when piston in bottomed in ram.

CAUTION

Over tightening the ram assembly setscrew can crack or dent interior surface of hollow piston shaft and prevent the ram from operating properly.

NOTE

If measurement is incorrect, the clevis to piston relationship must be adjusted. To maintain clevis configuration, the ram piston is rotated rather than the clevis, until proper measurement is attained.

6. Hold clevis (10) and rotate ram piston (15)until 3.915 inches (9.94 cm) measurement is achieved; tighten the clevis setscrew (13).
7. Rotate the axle down and align each clevis with an axle arm.

GO TO NEXT PAGE

WARNING

Operator injury or death and equipment damage may occur If the clevis pin mandatory configuration is not implemented. Mandatory configuration requires one washer (7) under head of clevis pin (8) and one on other end of clevis pin (8), between clevis and cotter pin (6). A fracture or stress of clevis pin may occur under hoses helical weighted load.

8. Connect ram clevis (10) to arm on axle (5) as follows:
   a. Install a washer (7) on head end of clevis pin (8).
   b. Insert clevis pin (8) through holes in clevis (10) and clevis arm of axle (5).
   c. Install washer (7) and cotter pin (6) on clevis pin (8).
   d. Install lubrication fitting (18) In clevis pin (8), unless already Installed.
   e. Repeat steps 8a thru 8d for other axle, if necessary.
9. Install hose assembly (17) in replacement ram assembly (11), using Teflon Tape (item 8, Appendix D) and tighten.
10 Install Wheel assembly.
   a. Install wheel assembly (4) on axle hub (5).
   b. Install retainer (3) and castle nut (2).
   c. Install cotter pin (1).

NOTE

Ensure freedom of hose movement throughout full travel of rams and axles, without rubbing on wheel tire. If any interference with movement occurs, reconfigure hose routing to alleviate the problem.

12. Perform service fill and bleed procedure in C below.

GO TO NEXT PAGE

3-17.5 Hydraulic Ram Replacement, Model 1730-EG-100 (AVUM) - Continued.

C. SERVICE

Refer to figure 3-22 and perform fill and bleed procedure of hydraulic system as follows:

1. Loosen flared fitting nuts on both hoses (17)at tee fitting
2. Rotate axles in cradle until hydraulic rams pistons (15)are fully retracted into ram (11).
3. Tighten flared fitting nuts on both hoses (17) at tee fitting and check fluid level in pump.
4. Refill pump with hydraulic fluid (item 1, Appendix D) if necessary, and install cap.
5. Activate pump until ram pistons/axles are fully extended and bottomed out in trunnion.
6. Release hydraulic pressure from system by rapidly rotating the pump pressure release valve knob counterclockwise.
7. Rotate axles until the hydraulic rams are fully retracted and recheck fluid level in pump.
8. If fluid level is incorrect, repeat steps 1 through 7; if correct, install Cap and procedure is Completed.

END OF TASK

3-17.6 Wheel Assembly Replacement, Model 1730-EG-100 (AVUM).

The Wheel Assembly is group number 03 in the MAC. This procedure is applicable to Ground Handling Wheels Assembly, Model 1730-EG-100. The numbers in parenthesis refer to figure 3-23. Observe all WARNINGS and CAUTIONS while performing the following Inspections.

This task covers:

a. Remove **b. Install** **c. Service**

INITIAL SETUP

Tools
Tool Kit, Aircraft Mechanics General, NSN 5180-00-323-4692
Tire Pressure Gauge

Materials
Lubricating Oil..... P/N VV-L-800 (item 5, Appendix D)

Repair Parts
Wheel Assembly ..... P/N 1730-EG-116

Personnel Required
MOS 67

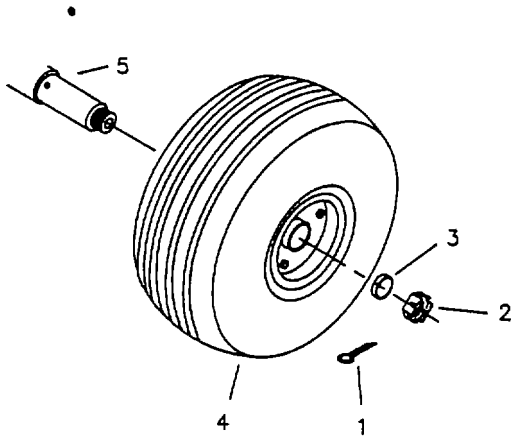

Figure 3-23. Wheel Assembly for Model 1730-EG-100

GO TO NEXT PAGE

A. REMOVE

Refer to figure 3-23 and remove the Wheel Assembly as follows:

1. Remove cotter pin (1), castle nut (2), and retainer (3).
2. Remove wheel assembly (4) from axle (5).
3. inspect axle to assure that it is clean. Lubricate machined surfaces lightly with lubricating oil (item 5, Appendix D).
4. If wheel assembly is removed as part of a disassembly procedure, retain for reinstallation.
5. If wheel assembly is removed because it is defective, repair using procedures in paragraph 3-16.7.

B. INSTALL

Refer to figure 3-23 and install new or repaired Wheel Assembly as follows:

1. Install wheel assembly (4) on axle (5).
2. Install retainer (3), castle nut (2), and hand tighten castle nut until snug.
3. Back off castle nut until first slot aligns with hole in axle.
4. Install cotter pin (1) in slot of nut and hole In axle and bend both tangs.
5. Perform service procedure in C below.

C. SERVICE

Service the Wheel Assembly as follows:

1. Check tire pressure with tire pressure gauge for 75 psi (51.7 kPa).

WARNING

Never inflate wheel assembly without first checking wheel locknut torques, to insure wheel locknuts are tightened to specifications. An assembly with missing washers, bolts, nuts or improperly, tightened locknuts could separate under pressure, causing serious injury or death.

2. If pressure is incorrect, inflate or deflate tire to 75 psi (51.7 kPa); if pressure is correct, procedure is completed.

END OF TASK

3-17.7 Wheel Assembly Repair, Model 1730-EG-100 (AVUM).

The Wheel Assembly is group number 03 in the MAC. This procedure is applicable to wheel assembly with part number 1730-EG-116, used on Ground Handling Wheels Assembly, Model 1730-EG-100. The numbers in parenthesis refer to figure 3-24. Observe all WARNINGS and CAUTIONS while performing the following inspections.

This task covers: A. Repair

INITIAL SETUP

Tools
Tool Kit, Aircraft Mechanics General, NSN 5180-00-323-4692
Tire Pressure Gauge
Materials
Grease ..... P/N MIL-G-10924 (item 7, Appendix D)

Repair Parts
Wheel Half, Outer ..... P/N 162-48
Wheel Half, Inner. ..... P/N 161-23
Tire ..... P/N MS26535-2
Tube, Pneumatic ..... P/N ZZ-1-550/G5/5.70/5.00-8/OFFCTR
Ring, Retaining ..... P/N 155-1
Washer, Flat ..... P/N 153-4
Retainer, Packing ..... P/N 153-15
Bearing ..... P/N 214-1 and 214-2
Seal ..... P/N 153-3
Felt, Mechanical ..... P/N 154-01300

Personnel Required
MOS 67

GO TO NEXT PAGE

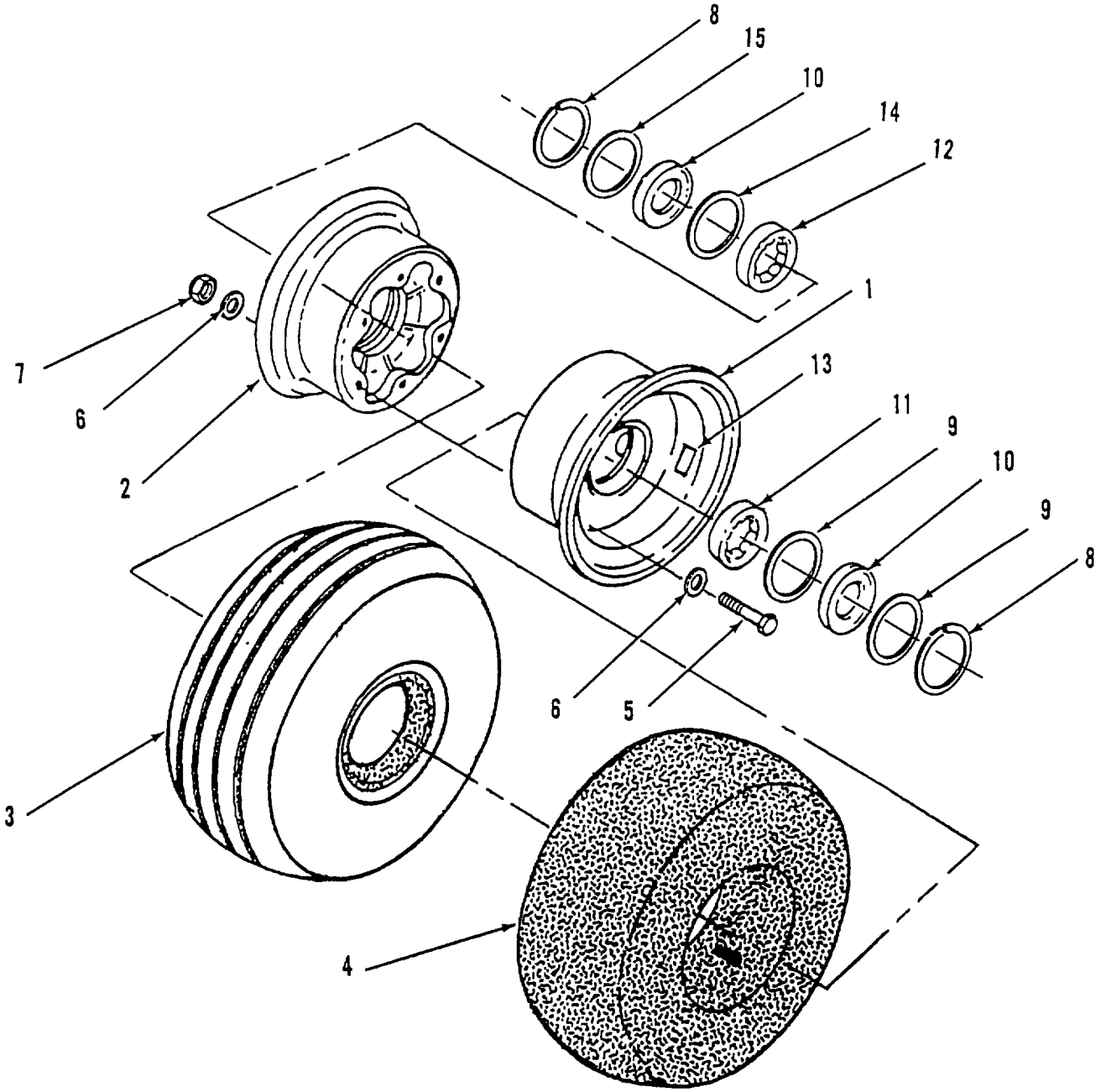

Figure 3-24. Wheel Assembly for Model 1730-EG-100

GO TO NEXT PAGE

3-17.7 Wheel Assembly Repair, Model 1730-EG-100 (AVUM) - Continued

A. REPAIR

WARNING

To prevent personnel Injury, the tire and tube must be completely deflated, and the valve stem cores removed, before attempting to separate the wheel halves In the following procedures.

Repair wheel assembly 1730-EG-1 16 as follows;

1. Remove tire and tube.

   a. Press valve stem core to vent air from tube and deflate tire completely.
   b. Remove valve stem core from tube stem.
   c. Remove nuts (7), washers (6), and bolts (5), from wheel halves at six locations.
   d. Separate wheel halves (1 and 2) and remove tire (3) and tube (4).

2. Remove bearings and grease seals from outer wheel half.

   a. Remove lock ring (8), washer (9), felt packing (10), washer (9), and bearing (11) from outer wheel half (1).
   b. Clean bearing race and Inspect for damage. If race is damaged replace outer wheel half (1).

3. Install bearings and grease seals in outer wheel half.

   a. Pack new bearing by dipping In grease (item 7, Appendix D) and working between balls and cage with fingers.
   b. Install new bearing (11), washer (9), felt packing (10), flat washer (9), and lock ring (8).

4. Remove bearings and grease seals from inner wheel half.

   a. Remove lock ring (8), ring grease seal (15), felt packing (10), washer (14), and bearing (12) from the inner wheel half (2).
   b. Clean bearing race and Inspect for damage. If race is damaged replace inner wheel half (2).

5. Install bearings and grease seals in inner wheel half.

   a. Pack new bearing by dipping in grease (item 7, Appendix D) and working between balls and cage with fingers.
   b. Install new bearing (12), washer (14), felt packing (10) ring grease seal (15), and lock ring (8) in Inner wheel half (2).

6. Install tire and tube.

   a. Inflate new tube slightly to provide shape, and insert tube (4) Into tire (3).
   b. Nest tire (3), tube (4) on wheel halves (1 and 2).
   c. Align tube valve stem and insert through hole In outer wheel half (1).
   d. Place a washer (6) on each bolt (5), and insert bolts (5) through outer wheel half and inner wheel half at three places.
   e. Install washers (6) and nuts (7) on bolts (5); torque nuts to 150-225 in. lbs.

GO TO NEXT PAGE

3-17.7 Wheel Assembly Repair, Model 1730-EG-100 (AVUM)- Continued

WARNING

Never inflate wheel assembly without first checking wheel locknut torques, to insure wheel locknuts are tightened to specifications. An assembly with missing washers, bolts, nuts or improperly tightened locknuts could separate under pressure, causing serious injury or death.

f. Install valve stem core and inflate tube.
g. Check tire pressure with tire pressure gauge for 75 psi (51.7 kPa). If pressure is incorrect, inflate or deflate tire to 75 psi (51 7 kPa); if pressure is correct, procedure is completed.

END OF TASK

SECTION VI
AVUM PREPARATION FOR STORAGE OR SHIPMENT

3-18. PREPARATION FOR STORAGE (AVUM).

Preservation procedures for extended storage of the Wheels Assembly are contained in TM 1-1500-204-23 (Series).

3-19. PREPARATION FOR SHIPMENT (AVUM).

Packaging procedures for shipping the Wheels Assembly are contained in TM 1-1500-204-23 (Series).

CHAPTER 4
AVIATION INTERMEDIATE MAINTENANCE (AVIM) INSTRUCTIONS

SECTION I
AVIM REPAIR PARTS, SPECIAL TOOLS, TMDE, AND SUPPORT EQUIPMENT

4-1. COMMON TOOLS AND EQUIPMENT (AVIM).

For authorized common Tools and equipment, refer to the Modified Table of Organization and Equipment (MTOE), CTA 50-970, or CTA 8-100, as applicable to your unit. The following common tool kits are required to support the Ground Handling Wheels Assembly at the Aviation Intermediate Maintenance (AVIM) level

Tool Number	Nomenclature	NSN
SC 5180-99-A01	Tool Kit, General Mechanics	5180-00-323-4692
SC 4920-99-A81	Shop Set, AVIM, Hydraulic	4920-00-165-1454

4-2. SPECIAL TOOLS, TMDE, AND SUPPORT EQUIPMENT (AVIM).

No special Tools, TMDE, or support equipment are required to maintain the Ground Handling Wheels Assembly at the Aviation Intermediate Maintenance (AVIM) level.

4-3. REPAIR PARTS (AVIM).

The Repair Parts used at the AVIM level are listed and illustrated in the Repair Parts and Special Tools List (RPSTL), contained in Appendix C of this manual.

SECTION II
AVIM SERVICE UPON RECEIPT

4-4. INSPECTION UPON RECEIPT (AVIM).

The required Inspections to be performed upon receipt of the Ground Handling Wheels Assembly are presented in Chapter 3, Section II. The newly received equipment should be checked against the packing list to ensure that the assembly is complete, and inspected for any damage incurred during shipping.

4-5. PRELIMINARY SERVICING AND LUBRICATION (AVIM).

The preliminary servicing and lubrication procedures to be performed upon receipt of the Ground Handling Wheels Assembly are presented in Chapter 3, Section II.

4-6. OPERATIONAL TEST (AVIM).

After the Ground Handling Wheels Assembly is inspected and serviced upon receipt, an operational test is performed in accordance with procedures in Chapter 2, Section III, Operation Under Usual Conditions.

SECTION III
AVIM PREVENTIVE MAINTENANCE CHECKS AND SERVICES (PMCS)

4-7. GENERAL PMCS INFORMATION (AVIM).

The Preventive Maintenance Checks and Services (PMCS) procedures are performed on a regular basis at the AVUM level, to ensure operational readiness of the Ground Handling Wheels Assembly. The instructions presented in Chapter 3, Section III, allow the operator to find defects before they result in serious damage, equipment failure, or personnel injury. The AVUM level instructions can be used at AVIM level to perform inspections, adjustments, and corrections.

4-8. PMCS PROCEDURES (AVIM).

No specific PMCS procedures are apparent or assigned to the AVIM level The general and specific AVUM PMCS procedures, and directions for using the procedures, are presented in Chapter 3, Section III.

WARNING

Dry cleaning solvent P-D-680 is toxic and flammable. Always wear protective goggles and gloves, and use only In a well-ventilated area. Avoid contact with skin, eyes, and clothes, and DO NOT use near open flame or excessive heat. The solvents flash point is 100°F - 130°F (38°C 59°C). If you become dizzy while using cleaning solvent, immediately get fresh air and medical help. If solvent contacts eyes, immediately flush your eyes with clean water and get medical help.

4-9. CLEANING AGENTS (AVIM).

An important part of the PMCS procedures is keeping the wheels assemblies clean. Equipment that is covered with surface dirt, grease, and oil cannot be properly inspected. Keep excess lubricants away from exterior parts that do not require lubrication.

a. Authorization. Use only those authorized cleaning solvents or agents listed in Appendix D.

b. Application. Use dry cleaning solvent (item 6, Appendix D) on a wiping rag (item 4, Appendix D) to clean grease, oil, or rust from metal parts. After parts are cleaned, rinse and dry thoroughly.

c. Lubrication. Apply light lubricating oil (item 5, Appendix D)to all polished metal surfaces to inhibit corrosion.

4-10. LEAKAGE DEFINITIONS (AVIM).

It is important to know how fluid leakage affects the status of the Ground Handling Wheels Assembly. Review the classes of leaks, acceptable leaks, and unacceptable leaks discussed below.

a. **Classes of Leaks**. Maintenance personnel must know the following types/classes of leaks in order to determine whether the assembly is operational. Learn these leakage definitions. When in doubt, notify your supervisor.

Class I Seepage of fluid, not great enough to form drops, is indicated by wetness or discoloration.

Class II Leakage of fluid great enough to form drops, but not great enough to cause continuous dripping from the Item being Inspected.

Class III Leakage of fluid great enough to form drops that continuously drip from the Item being Inspected.

b. **Acceptable Leakage**. Equipment operation is allowed with minor Class I or II leakage. Fluid levels in an item/system, affected with such leakage, must be checked more frequently than required In PMCS. When in doubt, notify your supervisor.

c. **Unacceptable Leakage**. Class III leaks render the Item unserviceable and must be reported to your supervisor immediately.

4-11. REPORTING REPAIRS (AVIM).

Immediately after completing AVUM PMCS procedures, if preformed at the AVIM level, report all defects found on DA Form 2404, Equipment Inspection and Maintenance Worksheet. All defects shall be reported before taking corrective action, and shall also be entered in the equipment log.

SECTION IV
AVIM TROUBLESHOOTING

4-12. INTRODUCTION TO TROUBLESHOOTING (AVIM).

Troubleshooting procedures for the AVUM level and AVIM level are identical. The information required to identify and correct most mechanical malfunctions of the Ground Handling Wheels Assembly, is contained in Chapter 3, Section IV. Component replacement procedures are referenced to Chapter 3, Section V, but repair procedures are referenced to Chapter 4, Section V. Refer to Chapter 2 for a better understanding of how a system operates. If the location of an item mentioned in troubleshooting is not is known, see Appendix C to identify locations.

4-13. TROUBLESHOOTING PROCEDURES (AVIM).

The troubleshooting procedures at the AVIM level are identical to the troubleshooting procedures at the AVUM level. Since AVIM can perform any task performed at AVUM level, the procedures are presented in Chapter 3, Section IV, and not duplicated in this section. The AVUM level troubleshooting procedures, used at the AVIM level, are provided in Table 3-2.

SECTION V
AVIM MAINTENANCE PROCEDURES

4-14. INTRODUCTION TO MAINTENANCE PROCEDURES (AVIM).

This section provides repair procedures for the Ground Handling Wheels Assembly, at the Aviation Intermediate Maintenance (AVIM) level, authorized by the Maintenance Allocation Chart (MAC) provided in Appendix B. A model number is included with the title of a procedure, unless the procedure applies to all models covered in this manual. The Repair Parts and Special Tools List (RPSTL), in Appendix C, may be referenced to aid in identifying assemblies and component parts.

4-15. GROUND HANDLING WHEELS ASSEMBLY MAINTENANCE, Model 204-050-200-5 (AVIM).

The Ground Handling Wheels Assembly is group number 00 in the MAC. Maintenance performed on Ground Handling Wheels Assembly, Model 204-050-200-5, at the AVIM level, consists of repair procedures. Repair procedures are presented for the hydraulic pump assembly and cradle assembly. The wheel assembly is repaired at the AVUM level. The inspection, replacement, and repair procedures at the AVUM level are contained In Chapter 3, Section V. Observe all WARNINGS and CAUTIONS while performing the following repair procedures

4-15.1 Hydraulic Pump Repair, Model 204-050-200-5 (AVIM).

The Hydraulic Pump Assembly is group number 0101 in the MAC. Two types of hydraulic pump may be installed on Ground Handling Wheels Assembly, Model 204-050-200-5. If an older version pump with part number BU0953B fails, it is not repairable, but upon failure, shall be replaced by a pump with part number 61780. If the newer version pump with part number 61780 fails, refer to paragraph 4-17.1 for repair procedures.

4-15.2 Cradle Assembly Repair, Model 204-050-2005 (AVIM).

The Cradle Assembly is group number 02 in the MAC. The cradle assembly is the mounting point for all other components or assemblies installed on Ground Handling Wheels Assembly, Model 204-050-200-5. The cradle assembly need not be disassembled to replace the fixed nose pin, rear support pin, or lubrication fittings. It must be disassembled to replace an axle, axle arm, sleeve bushing, trunnion, or clevis. Disassembly may require the removal of the wheels, hydraulic pump, hydraulic hoses, and hydraulic rams. Refer to Figure 4-1 while performing the following repair procedures.

This task covers: A. Replace B. Disassemble C. Assemble

INITIAL SETUP

Tools

Tool Kit, Aircraft Mechanics General NSN 5180-00-323-4692
Shop Set, AVIM, Hydraulic NSN 4920-00-165-1454

Materials

Grease .....P/N MIL-G-10924 (item 7, Appendix D)

Repair Parts

(1) Cradle 204-050-157-7
(2) Axle 205-050-158-11
(3) Axle 205-050-158-12
(4) Arm 204-050-160-1
(5) Bushing, Sleeve..... 204-050-159-1
(6) Bolt..... 204-050-167-1
(7) Washer AN960-616L
(8) Nut..... MS21042L6
(9) Trunnion 204-050-161-1
(10) Setscrew MS51964-94
(11) Clevis, Rod End, LH..... 204-050-170-1
(12) Pin, Clevis 204-050-200-13
(13) Fitting, Lubrication MS15001-4
(14) Pin, Cotter MS242665-300
(15) Fitting..... MS15002-1
(16) Fitting MS15001-2
(17) Pin, Release 204-050-163-3
(18) Pin, Connection 204-050-154-1
(19) Pin, Support 204-050-164-1
(20) Spring 204-050-133-1
(21) Pin..... MS171598
(22) Pin, Support, Nose 1730-EG-103
(23) Bushing, Sleeve 21-010B15-5-51
(24) Bushing, Support Pin 204-050-166-3
(33) Setscrew MS51964-55

Personnel Required

MOS 67

GO TO NEXT PAGE

4-15.2 Cradle Assembly Repair, Model 204-050-200-5 (AVIM) Continued

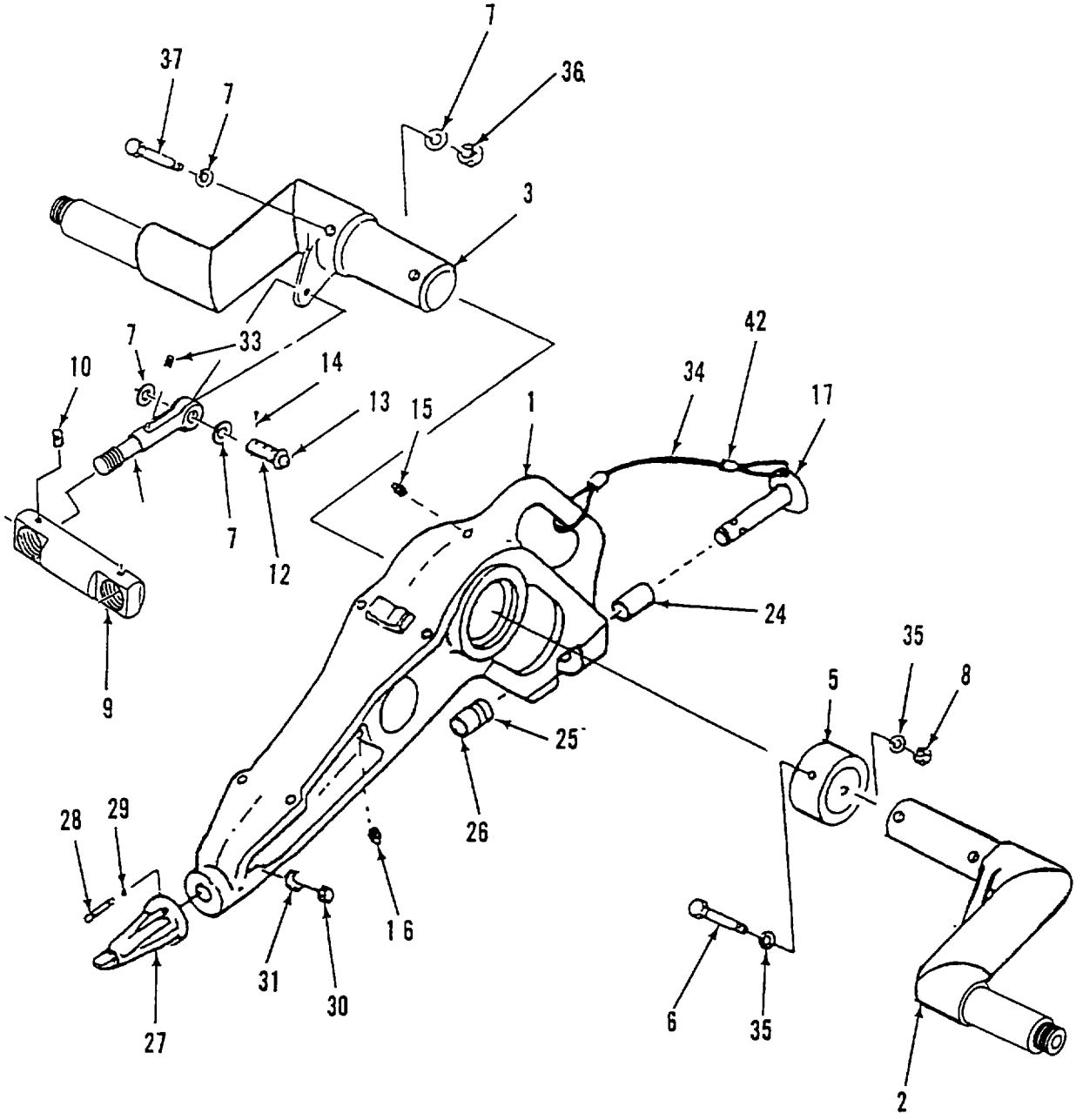

Figure 4-1. Cradle Assembly Repair, Model 204-050-200-5 (AVIM).

GO TO NEXT PAGE

4-15.2 Cradle Assembly Repair, Model 204-050-200-5 (AVIM) Continued

A. REPLACE CRADLE ASSEMBLY COMPONENTS

The fixed nose pin, rear support pin, and lubrication fittings can be removed and installed, without disassembling the cradle assembly

1. Replace fixed nose pin as follows
    a. Remove the spring pin (21).
    b. Remove fixed nose pin (22).
    c. Remove sleeve bushing (23).
    d. Install new sleeve bushing (23).
    e. Install new fixed nose pin, with chamfer facing out and down, in hole of cradle making sure pin seats fully
    f. Line drill new fixed nose pin with a 0.187 Inch diameter drill.
    g. Install new spring pin (21).

2. Replace rear support pin as follows

    a. Remove top (vertical) lubrication fitting (16) and screw-out connection pin (18) from cradle.
    b. Slide release pin (17) from cradle.
    c. Slide support pin (19) from cradle and retrieve spring (20), for use when installing new support pin.
    d. Remove support pin bushing (24), if end hole is excessively worn.
    e. Install new support pin bushing (24), if required.
    f. Slide spring (20) and new support pin (19) into lower hole in cradle.
    g. Slide release pin (17) into upper hole of cradle
    h. Insert and screw-in connection pin (18) in top hole of cradle; move release pin (17) and support pin (19) until connection pin drops into holes in the release pin and support pin.
    i. Install lubrication fitting (16) in top hole of cradle, where connection pin (18) is installed.

3. Replace lubrication fittings as follows:

    a. Remove broken or damaged lubrication fittings (15) or (16) from cradle.
    b. Install new lubrication fitting (15) or (16) In cradle and tighten.
    c. Remove broken or damaged lubrication fittings (13) from clevis pin (12).
    d. Install new lubrication fitting (13) in clevis pin (12).
    e. Apply grease (item 7, Appendix D) to lubrication fitting with a grease gun.

4. To replace other cradle components, or entire cradle, disassemble cradle assembly as presented below.

GO TO NEXT PAGE

B. DISASSEMBLE CRADLE ASSEMBLY

NOTE

Cradle disassembly requires removal of the wheels, hydraulic pump, hoses, and rams. The required removal procedures are referenced to appropriate paragraphs

Disassemble cradle assembly as follows:

1. Prepare Ground Handling Wheels Assembly for cradle disassembly.

    a. Remove all hydraulic pressure from the hydraulic system by rotating the hydraulic pump control handle counterclockwise.
    b. It is not necessary to drain the hydraulic reservoir.

2. Remove both wheel assemblies in accordance with procedure in Chapter 3, Section V, paragraph 3-15.6.

3 Remove two hydraulic hoses from tee fitting and hydraulic ram assemblies; drain hydraulic fluid Into drip pan or suitable container.

4. Remove hydraulic pump assembly in accordance with procedure in Chapter 3, Section V, paragraph 3-15.4.

5. Remove hydraulic ram assemblies in accordance with procedure in Chapter 3, Section V, paragraph 3-15.5.

6. Remove trunnion (9) from cradle (1), with one ram still installed on trunnion, by sliding from cradle.

7. Remove axle (2) as follows:

    a. Remove axle nuts (8), washers (7), and bolts (6) from arm (4).
    b. Remove axle (2) and axle arm (4) by sliding from sleeve bushing (5).
    c. Discard damaged axle (2) or arm (4) and replace with new axle or arm.

8. Remove axle (3) as follows:

    a. Remove axle nuts (8), washers (7), and bolts (6), from arm (4).
    b. Remove axle (3) and axle arm (4) by sliding from axle sleeve bushing (5).
    c. Discard damaged axle (3) or arm (4) and replace with new axle or arm

9. Remove axle sleeve bushing (5) by sliding from cradle (1).

GO TO NEXT PAGE

C. ASSEMBLE CRADLE ASSEMBLY

Assemble cradle assembly as follows.

1. Install steel axle sleeve bushing (5) by sliding into aluminum cradle (1)

2. Install axle (3) as follows:

    a. Slide axle (3) and axle arm (4) over axle sleeve bushing (5).
    b. Align holes and insert bolts (6) through holes in axle arm (4), axle (3), and axle sleeve bushing (5)
    c. Install washers (7), and nuts (8) on bolts (6); tighten.

NOTE

The axle arms must point in the same direction before Installing attaching hardware in following step.

3. Install axle (2) as follows:

    a. Slide axle (2) and axle arm (4) over axle sleeve bushing (5).
    b. Ensure that axle arms point in the same direction.
    c. Align holes and insert bolts (6) through holes in axle arm (4), axle (3), and axle sleeve bushing (5).
    d. Install washers (7), and nuts (8) on bolts (6); tighten.

NOTE

Depending on degree of disassembly, the trunnion may or may not have one ram already installed.

4. Install trunnion (9) by sliding into cradle (1).

NOTE

If no ram is installed in trunnion, perform the following step on both rams.

5. Install a hydraulic ram assembly in accordance with procedure in Chapter 3, Section V, paragraph 3-15.5.

6. Install hydraulic pump assembly in accordance with procedure in Chapter 3, Section V, paragraph 3-15.4.

7. Install both wheel assemblies in accordance with procedure in Chapter 3, Section V, paragraph 3-15.6.

END OF TASK

4-16. GROUND HANDLING WHEELS ASSEMBLY MAINTENANCE, Model 214-706-104-101 (AVIM).

The Ground Handling Wheels Assembly is group number 00 In the MAC. Maintenance performed on Ground Handling Wheels Assembly, Model 214-706-104-101, at the AVIM level, consists of repair procedures. Repair procedures are presented for the hydraulic pump assembly and cradle assembly. The wheel assembly is repaired at the AVUM level. The inspection, replacement, and repair procedures at the AVUM level are contained in Chapter 3, Section V. Observe all WARNINGS and CAUTIONS while performing the following repair procedures.

4-16.1 Hydraulic Pump Repair, Model 214-706-104-101 (AVIM).

The Hydraulic Pump Assembly is group number 0101 in the MAC. Two types of hydraulic pump may be installed on Ground Handling Wheels Assembly, Model 214-706-104-101. If the older version pump with part number BU0953B fails, it is not repairable and shall be replaced by pump with part number 61780 upon failure. If the newer version pump with part number 61780 fails, refer to paragraph 4-17.1 for repair procedures.

4-16.2 Cradle Assembly Repair, Model 214-706-104-101 (AVIM).

The Cradle Assembly is group number 02 in the MAC. The cradle assembly is the mounting point for all other components or assemblies Installed on Ground Handling Wheels Assembly, Model 214-706-104-101 The cradle assembly need not be disassembled to replace the fixed nose pin adapter, quick release pin, or lubrication fittings. The cradle assembly must be disassembled to replace an axle, sleeve bushing, trunnion, or clevis Disassembly may require the removal of the wheels, hydraulic pump, hydraulic hoses, and hydraulic rams Refer to Figure 4-2 while performing the following repair procedures.

This task covers: A. Replace B. Disassemble C. Assemble

INITIAL SETUP

Tools

Tool Kit, Aircraft Mechanics General NSN 5180-00-323-4692
Shop Set, AVIM, Hydraulic NSN 4920-00-165-1454

Materials

Grease.....P/N MIL-G-10924 (item 7, Appendix D)

Repair Parts

(1) Cradle 214-050-011-103
(2) Axle 214-050-022-1
(3) Axle 214-050-022-3
(5) Spacer, Sleeve 214-050-014-001
(6) Bolt LWB22-5-34
(7) Washer AN960-616L
(8) Nut, Locking MS21042L5
(9) Trunnion. 214-050-012-1
(10) Set Screw MS51964-94
(11) Clevis 204-050-170-1
(12 Pin, Clevis 204-050-200-13
(13) Fitting, Lubrication MS15001-4
(14) Pin, Cotter..... MS24665-283
(15) Fitting MS1500 2-1
(16) Fitting MS15001-2
(17) Pin, Release MS17984C824
(24) Bushing, Clevis 214-050-011-5
(25) Bushing, Clevis 214-050-011-7
(26) Bushing, Clevis 214-050-011-9
(27) Adapter, Support 209-050-129-101
(28) Bolt..... MS20004H24
(29) Washer..... 140-007-17S14D5
(30) Nut NAS577B4A
(31) Retainer, Nut NAS578-4B
(33) Setscrew MS51964-55
(34) Rope, Wire SE2939-1455
(35) Washer..... AN960-516L
(36) Nut, Locking MS21042L6
(37) Bolt..... MS21250-06030
(42) Sleeve, Wire Rope 2842687-3

Personnel Required

MOS 67

GO TO NEXT PAGE

4-16.2 Cradle Assembly Repair, Model 214-706-104-101 (AVIM)- Continued

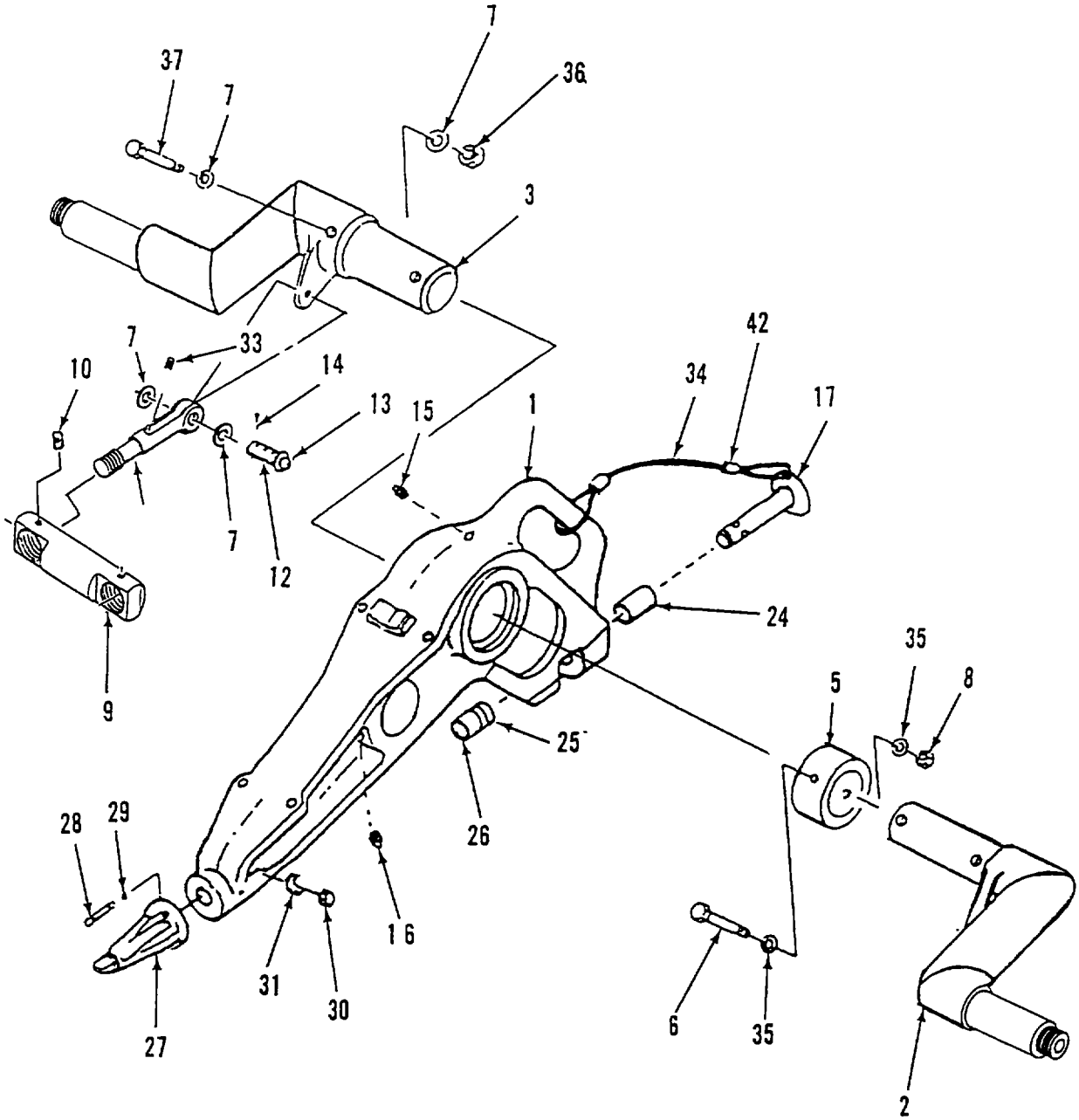

Figure 4-2. Cradle Assembly Repair, Model 214-706-104-101 (AVIM).

GO TO NEXT PAGE

4-16.2 Cradle Assembly Repair, Model 214-706-104-101 (AVIM) - Continued

A. REPLACE CRADLE ASSEMBLY COMPONENTS

The fixed nose pin adapter, quick release pin, and lubrication fittings can be removed and installed, without disassembling the cradle assembly

1. Replace fixed nose pin adapter as follows:

   a. Unscrew both bolts (28) from support pin adapter (27) and cradle (1).

   b. Pull support pin adapter (27) from cradle nose.

   c Remove two nut retainers (31).

   d. Attach support pin adapter (27) to cradle (1) by installing two nut retainers (31), nuts (30), washers (29), and bolts (28).

2. Replace quick release pin as follows

   a. Remove quick release pin (17) by cutting wire rope (34) from handle of cradle assembly (1).

   b. Prepare 8 inches of wire rope (34), by sliding two wire sleeve swages (42) onto wire rope and moving to center.

   c. Pass wire rope (34) through hole in quick release pin (17) and form a i-inch diameter loop.

   d. Slide a wire sleeve swage (42) over end of wire rope until flush; crimp wire sleeve swage (42) until tight.

   e. Pass wire rope (34) through handle of cradle assembly (1) and form a 1 7 inch diameter loop.

   f. Slide a wire sleeve swage (42) over end of wire rope until flush; crimp wire sleeve swage (42) until tight.

3. Replace bushings.

   a. Remove bushings (24),(25),(26).

   b. Install new bushings (24),(25),(26).

4. Replace lubrication fittings as follows:

   a. Remove broken or damaged lubrication fittings (15) or (16) from cradle.

   b. Install new lubrication fitting (15) or (16) in cradle and tighten

   c. Remove broken or damaged lubrication fittings (13) from clevis pin (12).

   d. Install new lubrication fitting (13) in clevis pin (12).

   e. Apply grease (item 7, Appendix D) to lubrication fitting with a grease gun.

5. To replace other cradle components or entire cradle, disassemble cradle assembly as presented in B below.

GO TO NEXT PAGE

B. DISASSEMBLE CRADLE ASSEMBLY

NOTE

Cradle disassembly requires removal of the wheels, hydraulic pump, hoses, and rams. The required removal procedures are referenced to appropriate paragraphs.

Disassemble cradle assembly as follows:

1. Prepare Ground Handling Wheels Assembly for cradle disassembly.

   a. Remove all hydraulic pressure from the hydraulic system by rotating the hydraulic pump control handle counterclockwise.

   b. It is not necessary to drain the hydraulic reservoir.

2. Remove both wheel assemblies in accordance with procedure in Chapter 3, Section V, paragraph 316.6.

3. Remove two hydraulic hoses from tee fitting and hydraulic ram assemblies, drain hydraulic fluid into drip pan or suitable container.

4. Remove hydraulic pump assembly in accordance with procedure in Chapter 3, Section V, paragraph 3-16.4.

5. Remove hydraulic ram assemblies in accordance with procedure in Chapter 3, Section V, paragraph 3-16.5.

6. Remove trunnion (9) from cradle (1), with one ram still installed on trunnion, by sliding from cradle

7. Remove axle (2) and axle (3) as follows:

   a. Remove axle nuts (8), washers (35), and bolts (6) from sleeve spacer (5).

   b. Remove axle nuts (36), washers (7), and bolts (37) from axle (3).

   c. Remove axle (2) and sleeve spacer (5) by sliding from axle (3).

   d. Remove axle (3) by sliding from cradle (1).

   e. Discard damaged axle (2) or sleeve spacer (5) and replace with new axle or sleeve spacer.

   f. Discard damaged axle (3) and replace with new axle.

GO TO NEXT PAGE

C. ASSEMBLE CRADLE ASSEMBLY

Assemble cradle assembly as follows:

NOTE
The axle arms must point in the same direction before Installing attaching hardware in following step.

1. Install axle (2) and axle (3) as follows:

   a. Install axle (3) by sliding into cradle (1).

   b. Install sleeve spacer (5) by sliding onto axle (3).

   c. Install axle (2) by sliding into axle (3).

   d. Ensure that axle arms point in the same direction

   e. Align bolt holes and ream holes, in the side without the spacer, to 0.378 to 0.384 inches, if necessary.

   f. Insert bolt (37) through holes in axle (3) and axle (2).

   g. Install washers (7) and nut (36) on bolts (37); tighten.

   h. Align bolt holes in axles (3), axle (2), and sleeve spacer (5) Ream holes to 0.316 to 0 322 inches, if necessary.

   i. Insert bolt (6) through holes in sleeve spacer (5), axle (3) and axle (2).

   j. Install washers (35) and nut (8) on bolt (6); tighten.

NOTE
Trunnion may or may not have a one ram already Installed.

2. Install trunnion (9) by sliding into cradle (1).

NOTE
If no ram is installed in trunnion, perform the following step on both rams.

3. Install a hydraulic ram assembly in accordance with procedure in Chapter 3, Section V, paragraph 316.5.

4. Install hydraulic pump assembly in accordance with procedure in Chapter 3, Section V, paragraph 316.4.

5. Install both wheel assemblies in accordance with procedure in Chapter 3, Section V, paragraph 3-16.6.

END OF TASK

4-17. GROUND HANDLING WHEELS ASSEMBLY MAINTENANCE, Model 1730-EG-100 (AVIM).

The Ground Handling Wheels Assembly is group number 00 in the MAC. Maintenance performed on Ground Handling Wheels Assembly, Model 1730-EG-100, at the AVIM level, consists of repair procedures. Repair procedures are presented for the hydraulic pump assembly and cradle assembly The wheel assembly is repaired at the AVUM level. The inspection, replacement, and repair procedures at the AVUM level are contained in Chapter 3, Section V Observe all WARNINGS and CAUTIONS while performing the following repair procedures.

4-17.1 Hydraulic Pump Repair (Typical - All Wheel Assembly Models).

The Hydraulic Pump Assembly is group number 0101 In the MAC. A defective pump removed from any model Ground Handling Wheels Assembly, can only be replaced with a hydraulic pump with part number 61780. This repair procedure applies to pump part number 61780 and may be referenced from paragraphs 4-15-1 and 4-16-1. A mounting plate and hydraulic fitting guard are part of the pump assembly. Refer to Figure 4-3 while performing the repair procedures.

This task covers:

a. Repair **b. Test**

INITIAL SETUP

Tools

Tool Kit, Aircraft Mechanics General, NSN 5180-00-323-4692
Shop Set, AVIM, Hydraulic, NSN 4920-00-165-1454
Gauge, 10,000 PSI

Materials

Goggles and Gloves
Teflon Tape (item 8, Appendix D)
Cleaning Solvent (item 6, Appendix D)
Hydraulic Fluid (Item 1, Appendix D)

Repair Parts		Part No.	Repair Parts		Part No
	Kit, Repair Parts	300487	(21)	Body., Pump	61295
(1)	Ring, Retaining	211743	(22)	Valve, Relief, Press	21278-80
(2)	Pin, Straight	211742	(23)	Filter, Stick	12205
(3)	Handle, Manual	61813-GR12	(24)	O-Ring	211495
(4)	Grip, Handle	206731	(25)	Screw, Set	10556
(5)	Valve Screw	305975	(26)	Knob	21643-NP
(6)	Bushing, Pipe	10676	(27)	Reservoir Assembly	307601
(7)	Valve, Metering .	305993	(28)	Tie Rod .	213847
(8)	Piston, Assembly .	211468	(29)	Cap, Dust	52711
(9)	Washer, Backup	213987	(30	Gasket	212739
(10)	O-Ring	10271	(31)	Nut	10204
(11)	Ball, Steel	10378	(32)	Decal 'Do Not Remove'.	215907
(12)	Ball	12223	(33)	Ball, Nylon	15528
(13)	Valve, Release.	308617	(34)	O-Ring	12557
(14)	O-Ring	10267	(35)	Plug, Pipe	10970
(15)	Washer, Backup	15085	(36)	Decal, Warning	308473
(16)	Washer, Copper	14874	(38)	Plate, Mounting	47139-GR12
(17)	Spring, Compression	10444	(39)	Guard, Hyd Fitting	420094-GR12
(18)	Spacer	297S2	(40)	Bolt	MS9072510
(19)	Spring, Compression	211797	(41)	Nut	MS51967-2
(20)	Ball, Steel .	10375			

Personnel Required

MOS 67

GO TO NEXT PAGE

4-17.1 Hydraulic Pump Repair (Typical - All Wheel Assembly Models) - Continued

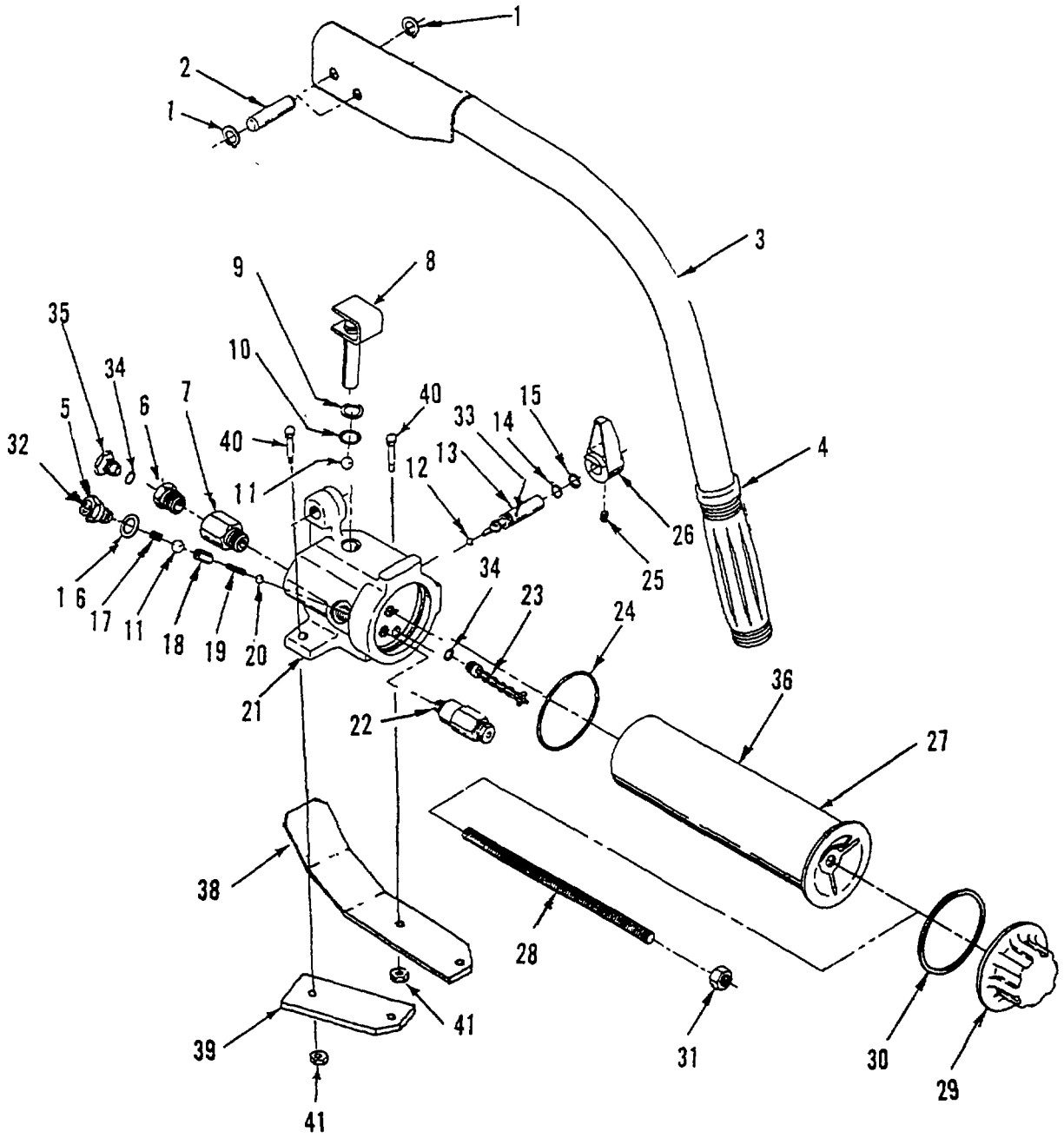

Figure 4-3. Hydraulic Pump Assembly Repair, Part Number 61780

GO TO NEXT PAGE

4-17.1 Hydraulic Pump Repair (Typical - All Wheel Assembly Models) - Continued

A. REPAIR HYDRAULIC PUMP

Repair of the hydraulic pump assembly, with part number 61780, consists of disassembly and assembly New components parts from repair kit 300487 are Installed during assembly.

1. Disassemble hydraulic pump.

CAUTION

A free floating steel ball is located under the piston assembly in the pump body. To prevent losing or damaging the steel ball, ensure that pump body is flat on the workbench before removing the manual control handle or piston assembly.

a. Remove retaining rings (1), straight pins (2), and detach handle assembly (3) from pump body (21).

b. Remove piston assembly (8), backup washer (9), and O-Ring (10) from pump body (21).

c. Place hand over hole in pump body, where piston assembly was just removed, and rotate pump body 180 degrees. Catch the steel ball (11) and check it for corrosion or damage

d. Remove dust protective cap (29) and gasket (30), and drain hydraulic fluid from reservoir assembly (27).

e. Remove nut (31), tie rod (28), reservoir assembly (27), and O-Ring (24).

f. Remove stick filter (23) and O-Ring (34) from pump body (21).

g. Remove pressure relief valve (22) from pump body (21).

h. Loosen setscrew (25) and remove safety release valve knob (26).

i. Unscrew safety release valve (13), backup washer (15), O-Ring (14), nylon ball (33), and ball (12) from pump body (21).

j. Remove pipe bushing (6) and metering valve (7) from pump body (21).

k. Remove valve screw (5), copper washer (16), compression spring (17), steel ball (11), spacer (18), compression spring (19), and steel ball (20).

l. Remove nut (41), bolt (40), and mounting plate (38) from pump body.

m. Remove nut (41), bolt (40), and hydraulic fitting guard (39) from pump body.

2. Clean hydraulic pump components.

WARNING

Dry cleaning solvent P-D-680 is toxic and flammable. Always wear protective goggles and gloves, and use only In a well-ventilated area. Avoid contact with skin, eyes, and clothes, and DO NOT use near open flame or excessive heat. The solvents flash point is 100 ℉ 130 ℉ (38 ℃ 59 ℃) if you become dizzy while using cleaning solvent, immediately get fresh air and medical help. If solvent contacts eyes, immediately flush your eyes with clean water and get medical help.

GO TO NEXT PAGE

a. Thoroughly clean exterior and interior of pump body (21), using dry cleaning solvent (item 6, Appendix D). Inspect to verify serviceability and replace pump body if defective.

b. Clean all removed components that are to be reinstalled. Inspect to verify serviceability and replace components if defective.

3. Assemble hydraulic pump, using new parts from repair kit 300487.

a. Install hydraulic fitting guard (39) on pump body with bolt (40) and nut (41).

b. Install mounting plate (38) on pump body with bolt (40) and NUT (41).

c. Install steel ball (20). Install compression spring (19) in spacer (18) and install into pump body Install steel ball (11), compression spring (17), copper washer (16), and valve screw (5). Torque to 300/370 Inch pounds.

d. Install metering valve (7) in pump body (21), pipe bushing (6) in metering valve (7), and pipe plug (35) and O-Ring (34) in pipe bushing (6). Use Teflon Tape (item 8, Appendix D).

e. Install ball (12), safety release valve (13), nylon ball (33), O-Ring (14), backup washer (15), in pump body (21).

f. Install safety release valve knob (26) and tighten setscrew (25).

NOTE

The pressure relief valve is factory set in the range of 8300 to 8800 psi. If pressure is outside this range during test in B below, the pump must be disassembled and the pressure relief valve replaced.

g. Install pressure relief valve (22) in pump body (21).

h. Install stick filter (23) and O-Ring (34) (as an assemble) in pump body (21).

i. Install tie rod (28) in pump body (21); seat O-Ring (24) and reservoir assembly (27) in pump body and attach with nut (31). Torque to 250 inch pounds j. Fill reservoir assembly (27) with hydraulic fluid (item 1, Appendix D) and install gasket (30) and dust protective cap (29).

k. Drop ball (11) in top hole of pump body (21).

l. Install O-Ring (10), backup washer (9), and piston assembly (8) in top hole of pump body (21).

m. Attach handle assembly (3) to pump body (21), by installing two straight pins (2) and four retaining rings (1).

B. TEST HYDRAULIC PUMP

NOTE

The pressure relief valve is inside the hydraulic pump. If unloading pressure is incorrect during test, the pump must be disassembled to replace pressure relief valve.

1. Testing Hydraulic Pump.

a. Fill hydraulic pump reservoir to proper level with hydraulic fluid (item 1, Appendix D).

b. Connect a 10,000 psi gage to outlet hole in the end of the pump.

c. Operate the pump until pressure builds up and pressure relief valve unloads between 8300 to 8800 psi.

d. If setting incorrect, disassemble pump and replace pressure relief valve.

END OF TASK

4-17.2 Cradle Assembly Repair, Model 1730-EG-100 (AVIM).

The Cradle Assembly is group number 02 in the MAC. The cradle assembly is the mounting point for all other components or assemblies installed on Ground Handling Wheels Assembly, Model 1730-EG-100. The cradle assembly need not be disassembled to replace the fixed nose pin, quick release pin, or lubrication fittings The cradle assembly must be disassembled to replace an axle, sleeve bushing, trunnion, or clevis. Disassembly may require the removal of the wheels, hydraulic pump, hydraulic hoses, and hydraulic rams. Refer to Figure 4-4 while performing the following repair procedures.

This task covers:

a. Repair **b. Disassemble** **c. Assemble**

INITIAL SETUP

Tools

Tool Kit, Aircraft Mechanics General NSN 5180-00-323-4692
Shop Set, AVIM, Hydraulic NSN 4920-00-165-1454
Drip Pan

Materials

Grease (item 7, Appendix D)

Repair Parts

(1) Cradle..... 1730-EG-101-1
(2) Axle, Outer. 1730-EG-107
(3) Axle, inner 1730-EG-109
(5) Spacer, Sleeve. 1730-EG-108
(6) Bolt MS21250-05036
(7) Washer AN960-616L
(8) Nut, Locking MS21042L6
(9) Trunnion 1730-EG-111
(10) Set Screw MS51964-94
(11) Clevis 1730-EG-112
(12) Pin, Clevis. 1730-EG-110
(13) Fitting, Lubrication MS15001-4
(14) Pin, Cotter MS24665-283
(15 Fitting MS15002-1
(16) Fitting MS15001-2
(17) Pin, Release..... MS17984C824
(23) Bushing, Pin NAS77A8-144
(24) Bushing, Clevis NAS77A8-070P
(32) Plug, Alum or Brass 0.19DIAX0.13
(33) Setscrew MS51964-55
(34) Rope, Wire SE2939-1455
(35) Washer AN960-516L
(36) Nut, Locking MS21042L6
(37) Bolt MS21250-06030
38) Pin 1730-EG-103
39) Pin, Spring MS171598
(40)Bushing..... 1730-EG-101-2
(41) Bushing 1730-EG-101-3
(42) Swaging Sleeve, Wire Rope..... 2842687-3

Personnel Required

MOS 67

GO TO NEXT PAGE

4-17.2 Cradle Assembly Repair, Model 1730-EG-100 (AVIM) - Continued

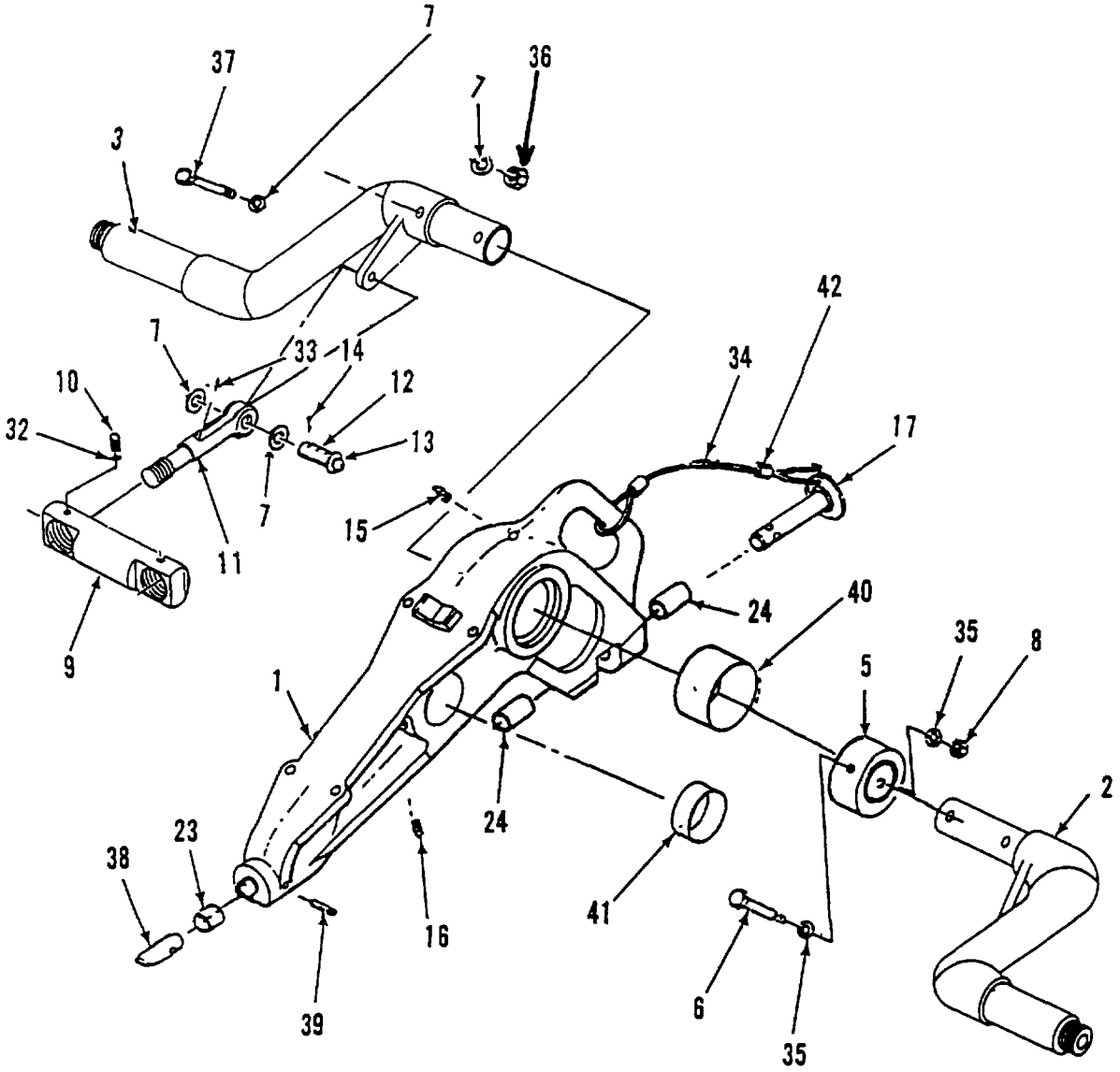

Figure 4-4. Cradle Assembly Repair, Model 1730-EG-100 (AVIM).

GO TO NEXT PAGE

A. REPLACE CRADLE ASSEMBLY COMPONENTS

The fixed nose pin, quick release pin, and lubrication fittings can be removed and installed, without disassembling the cradle assembly.

1. Replace fixed nose pin as follows:

   a. Remove the spring pin (39).

   b. Remove fixed nose pin (38).

   c. Remove sleeve bushing (23).

   d. Install new sleeve bushing (23).

   e. Install new fixed nose pin (38), with chamfer out and down, making sure pin seats fully In the hole.

   f. Line drill new fixed nose pin with a 0 187 inch diameter drill g Install new spring pin (39).

2. Replace quick release pin as follows:

   a. Remove quick release pin (17) by cutting wire rope (34) from handle of cradle assembly (1)

   b. Prepare 8 inches of wire rope (34), by sliding two wire sleeve swages (42) onto wire rope and moving to center

   c. Pass wire rope (34) through hole in quick release pin (17) and form a 2-inch diameter loop.

   d. Slide a wire sleeve swage (42) over end of wire rope until flush; crimp wire sleeve swage (42) until tight.

   e. Pass wire rope (34) through handle of cradle assembly (1) and form a 1 7 inch diameter loop.

   f. Slide a wire sleeve swage (42) over end of wire rope until flush, crimp wire sleeve swage (42) until tight

3. Replace bushings.

   a. Remove two clevis bushings (24) from cradle (1)

   b. Install two new clevis bushings (24) in cradle (1).

4. Replace lubrication fittings as follows:

   a. Remove broken or damaged lubrication fittings (15) or (16) from cradle.

   b. Install new lubrication fitting (15) or (16) in cradle and tighten.

   c. Remove broken or damaged lubrication fittings (13) from clevis pin (12).

   d. Install new lubrication fitting (13) in clevis pin (12).

   e. Apply grease (item 7, Appendix D) to lubrication fitting with a grease gun.

5. To replace other cradle components or entire cradle, disassemble cradle assembly as presented below

GO TO NEXT PAGE

B. DISASSEMBLE CRADLE ASSEMBLY

NOTE

Cradle disassembly requires removal of the wheels, hydraulic pump, hoses, and rams. Required removal procedures are referenced to appropriate paragraphs

Disassemble cradle assembly as follows:

1. Prepare Ground Handling Assembly for cradle disassembly.

   a. Remove all hydraulic pressure from the hydraulic system by rotating the hydraulic pump control handle counterclockwise.

   b. It is not necessary to drain the hydraulic reservoir.

2. Remove both wheel assemblies In accordance with procedure in Chapter 3, Section V, paragraph 3-17.6.

3. Remove two hydraulic hoses from tee fitting and hydraulic ram assemblies; drain hydraulic fluid into drip pan or suitable container.

4. Remove hydraulic pump assembly in accordance with procedure in Chapter 3, Section V, paragraph 3-17.4.

5. Remove hydraulic ram assemblies in accordance with procedure in Chapter 3, Section V, paragraph 3-17.5.

6. Remove axle (2) or axle (3) as follows:

   a. Remove axle nuts (8), washers (35), and bolts (6) from sleeve spacer (5).

   b. Remove axle nuts (36), washers (7), and bolts (37) from axle (3).

   c. Remove axle (2) and sleeve spacer (5) by sliding from axle (3).

   d. Remove axle (3) by sliding from cradle (1).

   e. Discard damaged axle (2) or sleeve spacer (5) and replace with new axle or sleeve spacer.

   f. Discard damaged axle (3) and replace with new axle.

7. Remove bushing (40) from cradle (1).

GO TO NEXT PAGE

C. ASSEMBLE CRADLE ASSEMBLY

Assemble cradle assembly as follows

1. Install bushing (40) into cradle (1).

NOTE
The axle arms must point in the same direction before installing attaching hardware in following step.

2. Install axle (2) and axle (3) as follows:

   a. Install axle (3) by sliding into bushing (40).

   b. Install sleeve spacer (5) by sliding onto axle (3).

   c. Install axle (2) by sliding into axle (3)

   d. Ensure that axle arms point in the same direction.

   e. Align bolt (37) holes and line ream holes, in the side without the spacer (5), to 0.378 to 0.384 Inches, if necessary.

   f. Install washer (35) on bolt (37). Insert bolt (37) through holes in axle (3) and axle (2).

   g. Install washer (7) and nut (36) on bolt (37); tighten.

   h. Align bolt holes In axle (3), axle (2), and sleeve spacer (5). Line ream holes to 0.316 to 0.322 inches, if necessary.

   i. Install washer (35) on bolt (6). Insert bolt (6) through holes in sleeve spacer (5), axle (3) and axle (2).

   j. Install washer (35) and nut (8) on bolt (6); tighten.

NOTE
Trunnion may or may not have a one ram already Installed.

3. Install bushing (41) into cradle (1).

4. Install trunnion (9) by sliding into bushing (41).

NOTE
If no ram is installed in trunnion, perform the following step on both rams.

5. Install a hydraulic ram assembly in accordance with procedure in Chapter 3, Section V, paragraph 3-17.5, subparagraph B.

6. Install Hydraulic Pump Assembly In accordance with procedure in Chapter 3, Section V, paragraph 3-17.4, subparagraph B.

7. Install both Wheel Assemblies in accordance with procedure in Chapter 3, Section V, paragraph 3-17.6.

8. Service the Wheel Assemblies, in accordance with procedures in Chapter 3, Section V, paragraph 3-17.6, subparagraph C.

9. Service the Hydraulic Pump in accordance with procedure In Chapter 3, Section V, paragraph 3-17 4, subparagraph C.

END OF TASK

SECTION VI

AVIM PREPARATION FOR STORAGE OR SHIPMENT

4-18. PREPARATION FOR STORAGE (AVIM).

Preservation procedures for extended storage of the Ground Handling wheels Assembly are contained in TM 1-1500-204-23 (Series).

4-19. PREPARATION FOR SHIPMENT (AVIM).

Packaging procedures for shipping the Ground Handling Wheels Assembly are contained in TM 1-1500-204-23 (Series).

APPENDIX A
REFERENCES

A-1. SCOPE.

This appendix list forms, field manuals, technical manuals, and other publications referenced in this manual. The referenced publications apply to operation, organizational maintenance, direct support and general support maintenance of the Ground Handling Wheels Assembly.

A-2. DEPARTMENT OF THE ARMY PAMPHLETS.

DA Pam 25-30	Consolidated Index of Army Publications and Blank Forms
DA Pam 738-750	The Army Maintenance Management Systems (TAMMS)
DA Pam 738-751	Functional Users Manual for the Army Maintenance Management Systems - Aviation (TAMMS-A)

A-3. SUPPLY CATALOGS.

None.

A-4. FORMS.

DA Form 1222	Routing Slip
DA Form 2028	Recommended Changes to Publications and Blank Forms
DA Form 2028-2	Recommended Changes to Equipment Technical Manuals
DA Form 2258	De-preservation Guide for Vehicles and Equipment
DA Form 2404	Equipment Inspections and Maintenance Worksheet
DA Form 2408-9	Equipment Control Record
DD Form 2407	Maintenance Request
SF 368	Product Quality Deficiency Report

A-5. ARMY REGULATIONS.

AR 310-25	Dictionary of United States Army Terms
AR 310-50	Authorized Abbreviations and Brevity Codes

APPENDIX A
REFERENCES-cont

A-6. TECHNICAL MANUALS.

TM 9-214	Procedures for Destruction of Army Equipment to Prevent Enemy Use Inspection, Care, and Maintenance of Anti-friction Bearings
TM 9-2610-200-14	Operator, Organizational, Direct Support, and General Support Maintenance Care Maintenance, Repair, and Inspection of Pneumatic Tires and Inner Tubes
TM 38-230-2	Packing of Materiel: Preservation (Volume 1 and Volume 2)
TM-1-1500-204-23 (Series)	General Aircraft Maintenance Manual

APPENDIX B
MAINTENANCE ALLOCATION CHART

SECTION I INTRODUCTION

B-1. AVIATION MAINTENANCE ALLOCATION CHART.

The Maintenance Allocation Chart (MAC) assigns maintenance functions in accordance with the Aviation Maintenance concept for Army aviation. The maintenance levels are Aviation Unit Maintenance (AVUM), Aviation Intermediate Maintenance (AVIM), and Depot Maintenance, described below. These maintenance levels are column headings in Maintenance Allocation Chart, Table B-1.

AVUM	corresponds to an O code in 3rd position of SMR code in the Repair Parts and Special Tools List (RPSTL).
AVIM	corresponds to an F code in 3rd position of SMR code in the Repair Parts and Special Tools List (RPSTL).
DEPOT	corresponds to a D code in 3rd position of SMR code in the Repair Parts and Special Tools List (RPSTL).

a. Aviation Unit Maintenance (AVUM). The AVUM activities are staffed and equipped to perform high frequency "On-Aircraft" maintenance tasks required to keep aircraft systems or support systems In a serviceable condition. Assignment of maintenance tasks to divisional company size aviation units depends on the overall maintenance capability of the division, the requirement to conserve personnel and equipment resources, and air mobility requirements.

(1) Maintenance Capability. The maintenance capability of the AVUM is governed by the Maintenance Allocation Chart (MAC). The maintenance capability is limited by the amount and complexity of ground support equipment (GSE), facilities required, authorized manning strength, and critical skills available.

(2) Authorized Spares. The range and quantity of authorized spare modules/components will be consistent with the mobility requirements dictated by the air mobility concept.

(3) Task Assignment to Company Size Aviation Units. Company size units perform preventive maintenance, maintenance repair, and replacement tasks necessary to sustain a high level of aircraft operational readiness.

(a) The maintenance inspections and servicing tasks include preflight, daily, intermediate, periodic or phased, and special inspections authorized by the MAC or higher headquarters.

(b) Applicable technical manual troubleshooting tasks identify the cause of equipment or system malfunctions. Test, measurement, and diagnostic equipment (TMDE) is used as required.

(c) If no complex adjustments or system alignment is required, removal/installation tasks are used to replace worn or damaged modules/components. All tasks are performed with available skills, tools, and ground support equipment.

(d) The hydraulic system is inspected, serviced, and checked for operation, capacity, and pressure requirement.

(e) The manufacture of parts is limited to those items which can be fabricated with tools and equipment found in current air mobile tool and shop sets.

(f) Unserviceable modules/components, and end items beyond the repair capability of AVUM, are sent to the support AVIM.

(4) Tasks Assigned to Less than Company Size Aviation Units. Aviation elements organic to brigade, group, battalion headquarters, and detachment size units are normally small and have less than 10 aircraft assigned.

(a) Maintenance tasks performed by these units will be those which can be accomplished by the aircraft crew chief or assigned aircraft repairman.

(b) Tasks will normally be limited to preventive maintenance, inspections, servicing, spot painting, module/component fault diagnosis, and replacement of selected modules/components.

(c) Repair tasks will normally be accomplished by the support AVIM unit.

b. Aviation Intermediate Maintenance (AVIM). The AVIM activities are staffed and equipped to perform mobile, responsive "One-Stop" maintenance support. The AVIM activities may perform all maintenance functions authorized at the AVUM level. Authorized maintenance includes replacement and repair of components or end items, which can be accomplished efficiently with available skills, tools, and equipment. Maintenance functions which are not conducive to sustaining air mobility will be assigned to depot maintenance. Repair of equipment for return to user will emphasize support or operational readiness requirements.

(1) Maintenance Capability. The maintenance capability of the AVIM is governed by the Maintenance Allocation Chart (MAC) and limited by the amount and complexity of ground support equipment (GSE), facilities required, authorized manning strength, and critical skills available.

(2) Authorized Spares. The range and quantity of authorized spare components will be consistent with the mobility requirements dictated by the air mobility concept.

(3) Direct Exchange. Repairs selected items for return to stock and establishes the Direct Exchange (DX) program for AVUM units, when such repairs cannot be accomplished at the AVUM level.

(4) Serviceability. The AVIM units will have capability to determine the serviceability of specified components removed prior to the expiration of the Time Between Overhaul (TBO) or finite life. The AVIM inspects, troubleshoots, performs diagnostic tests, repairs, adjusts, calibrates, and aligns aircraft support system components. Component disassembly and repair will support the DX program and will normally be limited to tasks requiring cleaning and the replacement of seals, fittings, and items of common hardware. Unserviceable repairable components and end items, which are beyond the capability of AVIM to repair, will be evacuated to Depot Maintenance.

(5) Weight and Balance. Performs aircraft weight and balance inspections and other special inspections which exceed AVUM capability.

(6) Quick Response. Provides quick response maintenance support, including aircraft recovery and air evacuation, on the-job training, and technical assistance through the use of mobile maintenance contact teams.

(7) Operational Readiness. Maintains authorized operational readiness float aircraft.

(8) Material Classification. Provides collection and classification services for serviceable/unserviceable material.

(9) Cannibalization. Operates a cannibalization activity in accordance with AR 750-50. The aircraft maintenance company within the maintenance battalion of a division will perform AVIM functions consistent with air mobility requirements and conservation of personnel and equipment resources Additional intermediate maintenance support will be provided by the supporting non-divisional AVIM unit.)

SECTION II
USE OF THE MAINTENANCE ALLOCATION CHART

B-2. GENERAL INFORMATION.

The Maintenance Allocation Chart is used to assign and authorize maintenance functions as follows.

NOTE

Approved item names are used throughout this MAC. Generic terms or nomenclatures, if used, are expressed in parentheses and are not to be considered as official terminology.

a. Maintenance Function Assignment. The Maintenance Allocation Chart assigns maintenance functions to the lowest level of maintenance, based on past experience and the following considerations:

(1) Skills available.

(2) Work time required.

(3) Tools and test equipment required and/or available.

b. Maintenance Level Authorization. Only the lowest level of maintenance authorized to perform a maintenance function is indicated. If the lowest maintenance level cannot perform all tasks of a single maintenance function (e.g., test, repair), then the higher maintenance level(s) will also be indicated to accomplish additional tasks.

(1) A maintenance function assigned to a maintenance level will automatically be authorized to be performed at any higher maintenance level.

(2) A maintenance function that cannot be performed at the assigned level of maintenance, for any reason, may be evacuated to the next higher maintenance level. Higher maintenance levels will perform the maintenance functions of lower maintenance levels, when required, by the commander who has the authority to direct such tasking.

(3) The assignment of a maintenance function will not be construed as authorization to carry the related repair parts or spares in stock. Information to requisition, or otherwise secure the necessary repair parts, will be as specified in the associated Repair Parts and Special Tools List (RPSTL).

(4) Normally, there will be no deviation from the assigned level of maintenance. In cases of operational necessity, requests for a lower maintenance level may be authorized on a one-time basis. To transfer maintenance functions to the lower level, specific authorization by the maintenance officer at the higher level of maintenance is required. The special tools and equipment required by the lower level of maintenance will be furnished by the maintenance level to which the function is assigned. The transfer of a maintenance function to a lower maintenance level does not relieve the higher maintenance level of the responsibility for the function. The higher level of maintenance will provide technical supervision and inspection of the function being performed at the lower level.

B-3. MAINTENANCE FUNCTIONS.

Maintenance functions will be limited to and defined as follows:

a. Inspect. Inspection determines the serviceability of an item by comparing its physical and mechanical characteristics with established standards The examination is conducted by using sight, sound, and feel.

b. Test. Testing verifies the serviceability by measuring the mechanical and hydraulic characteristics of the item and comparing the measurements with prescribed standards.

c. Service. Servicing operations are required periodically to keep an item in proper operating condition. Servicing tasks include cleaning, decontamination, preservation, draining, painting, and replenishment of fuel, lubricants, chemical fluids, or gases.

d. Adjust. Adjustments set the prescribed operating limits of an item. Adjustments maintain or regulate specified parameters, or bring components into proper or exact position.

e. Align. Alignment brings specified variable elements of an item in line, to ensure optimum or desired performance.

f. Calibrate. Calibration is required on instruments or TMDE used for precision measurement. Calibration compares a certified standard of known accuracy, to the instrument to be checked. Discrepancies in the accuracy of the instrument being compared, are corrected by adjustment.

g. Remove/Install. Removal and installation of the same item is required when an item must be removed to perform service or other maintenance functions.

h. Replace. To remove an unserviceable item and install a serviceable counterpart in Its place. "Replace" is authorized by the MAC and the assigned maintenance level is shown as the 3rd position code of the SMR code.

i. Repair. The application of maintenance services to identity troubles and restore serviceability to an item by correcting specific damage, fault, malfunction, or failure in a part, subassembly, end item, or system. The services include fault location and troubleshooting procedures, removal and installation procedures, and disassembly and assembly procedures.

j. Overhaul. That maintenance effort (service/action) prescribed to restore an item to a completely serviceable/operational condition as required by maintenance standards in appropriate technical publications (I.e., DMWR). Overhaul is normally the highest degree of maintenance performed by the Army. Overhaul does not normally return an item to like new condition.

k. Rebuild. Those services/actions necessary for the restoration of unserviceable equipment to a like new condition in accordance with original manufacturing standards. Rebuild is the highest degree of materiel maintenance applied to Army equipment. The rebuild operation includes the act of returning to zero those age measurements (e.g., hours/miles) considered in classifying Army equipment/components.

B-4. EXPLANATION OF COLUMNS IN THE MAC.

Explanations of the columns used in the Maintenance Allocation Chart in Table B-1, are as follows:

a. Group Number (Column 1). Column 1 lists the group number of the end item and assemblies of the end item. This manual uses Group codes 00 thru 03.

b. Component/Assembly (Columns 2). Column 2 lists the name of the component or assembly assigned to the group number listed in column 1.

c. Maintenance Function (Column 3). Column 3 lists the maintenance functions to be performed on the items listed in column 2. This manual uses maintenance functions INSPECT, REPLACE, and REPAIR.

d. Maintenance Levels (Column 4). The maintenance levels AVUM, AVIM, and DEPOT are listed on the Maintenance Allocation Chart in individual columns. The work times are entered for the maintenance functions authorized at each maintenance level. Work times are presented in whole hours and/or decimal portions of hours. If a work time has not been established, the columnar presentation will indicate '--." Maintenance levels higher than the level of maintenance indicated, are authorized to perform the indicated function.

e. Tools and Equipment Reference Code (Column 5). Column 5 specifies, by code, those common tool sets (not individual tools), common TMDE, and special tools, special TMDE, and special support equipment required to perform the designated function.

f. Remarks Code (Column 6). This column contains a numerical code, which is keyed to the remarks contained in Section IV, Table B-3.

Table B-1. Maintenance Allocation Chart (Aviation) for Ground Handling Wheels Assembly

(1) GROUP NUMBER	(2) COMPONENT/ ASSEMBLY	(3) MAINTENANCE FUNCTION	(4) MAINTENANCE LEVEL			(5) TOOLS & EQUIPMENT REF CODE	(6) REMARKS CODE
			AVUM(O)	AVIM(F)	DEPOT(D)		
00	WHEELS ASSEMBLY, GROUND HANDLING	INSPECT	0.50				1
		REPAIR		2.00		1,3	2
01	HYDRAULIC SYSTEM						
0101	PUMP ASSY, HYDRAULIC	REPLACE	1.00			1,2	3
		REPAIR		1.50		1,3	4
0102	RAM ASSY,	REPLACE	1.00			1,2	5
02	CRADLE ASSEMBLY	INSPECT	0.20				1
		REPAIR		1.50		1,3	6
03	WHEEL ASSEMBLY	INSPECT	0.10				1
		REPLACE	0.20			1,2	7
		REPAIR	1.00			1	8

SECTION III

TOOLS AND TEST EQUIPMENT REQUIREMENTS

The Tools and Test Equipment required to maintain and service the Ground Handling Wheels Assemblies are provided in Table B-2 of this Appendix.

B-5. EXPLANATION OF COLUMNS IN TOOLS AND TEST EQUIPMENT REQUIREMENTS

a. Column 1, Tools and Test Equipment Reference Code. The tool and test equipment reference code correlates with a code used in the MAC, Section II, Table B-1, Column 5.

b. Column 2, Maintenance Level. The lowest level of maintenance authorized to use the tool or test equipment.

c. Column 3, Nomenclature. Name or identification of the tool or test equipment.

d. Column 4, National Stock Number. The National Stock Number of the tool or test equipment.

e. Column 5, Tool Number. The manufacturers part number.

Table B-2. TOOLS AND TEST EQUIPMENT REQUIREMENTS

(1) Reference Code	(2) Maintenance Category	(3) Nomenclature	(4) National Stock Number (NSN)	(5) Tool Number
1	O	Tool Kit, General Mechanics	5180-00-323-4692	SC 5180-99-A01
2	O	Tool Set, AVUM	4920-00-567-0476	SC 4920-99-A92
3	F	Shop Set, AVIM Hydraulic, Divisional	4920-00-165-1454	SC 4920-99-A81

SECTION IV

REMARKS

B-6. EXPLANATION OF COLUMNS IN REMARKS TABLE.

Remarks code numbers are entered in Column 6 of MAC Table B-1, are referenced to code numbers and remarks in Table B-3 below.

a. Column 1, Remarks Code. The numerical code in this column is referenced in Column 6 of MAC Table B-1.

b. Column 2, Remark. This column contains pertinent Information required when performing a maintenance function listed in MAC Table B-1

Table B-3. Remarks for MAC Column 6

Remarks Code	Remarks
1	Visual inspection without detailed disassembly.
2	End item repair requires replacing a hydraulic system component, cradle assembly, or wheel assembly.
3	Hydraulic pump P/N BU0953B has UOC.GH1,GH2; hydraulic pump P/N 61780 has UOC:GH1,GH2,GH3; when hydraulic pump P/N BU0953B fails, it may be replaced by hydraulic pump P/N 61780.
4	Hydraulic pump P/N BU0953B is not repairable; hydraulic pump P/N 61780 is repaired upon failure.
5	Replacement procedures for ram assembly are the same for all models of the Ground Handling Wheels Assembly.
6	Repair allows replacement of axles, bushings, trunnion, release pins, clevis, or cradle.
7	Tire already mounted on rim and bearings installed.
8	Repair allows replacement of tire, tube, bearings, and split rims.

APPENDIX C

REPAIR PARTS AND SPECIAL TOOLS LIST

SECTION I INTRODUCTION

C-1. SCOPE

This appendix lists spare and repair parts; special tools; special test, measurement and diagnostic equipment (TM DE); and other special support equipment, required to maintain three models of the Ground Handling Wheels Assembly. It authorizes the requisitioning and Issue of spare parts and repair parts, as indicated by the source, maintenance, and recoverability (SMR) codes. The list is used when performing Aviation Unit Maintenance (AVUM) and Aviation Intermediate Maintenance (AVIM).

C-2. GENERAL

The Repair Parts and Special Tools list is divided into the following sections:

a. SECTION II REPAIR PARTS LIST. Section II lists the spare and repair parts authorized for use In the performance of maintenance Included are parts which must be removed for replacement of the authorized parts. The parts are listed by functional groups In numeric sequence, with the parts in each group listed in illustration figure and item number sequence.

b. SECTION III SPECIAL TOOLS LIST. Section III is provided to list special tools, special TMDE, and other special support equipment authorized for the performance of maintenance. Not applicable.

c. SECTION IV CROSS-REFERENCE INDEX. Section IV lists all part numbers appearing In the group lists in Section II. The part numbers are listed in alphanumeric sequence and are cross referenced to the national stock number (NSN), the commercial and government entity (CAGE) code, and the Illustration figure and item number.

C-3. EXPLANATION OF COLUMNS

Explanations are given for the columns in the Repair Parts List in Section II, Special Tools List in Section III, and the Cross-Reference Index in Section IV.

a. Columns In Section II and III. The columns in the Repair Parts List in Section II and the Special Tools List In Section III, are identified by a number in parenthesis ( ) and a column title. The explanations are as follows:

Column (1) ITEM NO. The item number refers to the number that appears with an arrow on the figure, which point to a specific part. The figure to use is identified at the top of the parts list.

Column (2) SMR CODE The entry in this column is a Source, Maintenance, and Recoverability (SMR) Code. Specific positions in the uniform code format are assigned for each type code.

EXAMPLE:	P	1st & 2nd Positions = Source Code (requisition)
	A	
	F	3rd Position = Maintenance Code (install/replace)
	Z	4th Position = Maintenance Code (complete repair)
	Z	5th Position = Recoverability Code (disposition)

1. Source Codes The source code tells personnel how to acquire items needed for maintenance, repair, or overhaul of an end item/equipment. Source codes are entered In the first and second positions of the uniform SMR Code format as follows:

Code	Application/Explanation **(1st and 2nd Positions)**
PA	Item procured and stocked for anticipated or known usage.
PB	Item procured and stocked for insurance purpose; essential that a minimum quantity be available in the supply system
PC	Item procured and stocked, which would otherwise be coded PA, but is deteriorative in nature.
PD	Support item procured for Initial issue or outfitting; excludes support equipment and Is stocked only for subsequent or additional initial Issues or out-fittings. Not subject to automatic replenishment.
PE	Support equipment procured and stocked for Initial issue or outfitting at specified maintenance repair activities.
PF	Support equipment which will not be stocked, but which will be centrally procured on demand.
FG	Item procured and stocked to provide sustained support for the life of the equipment. It is applied to an item peculiar to the equipment, which will probably be discontinued or out of production, and would prove uneconomical to reproduce at a later time
KD	An item in a depot overhaul repair kit and not purchased separately.
KF	An item in a maintenance kit and not purchased separately. Maintenance kits items can be replaced at organizational or intermediate levels of maintenance
KB	Item included in both depot overhaul repair kit and maintenance kit.
MD	Item to be manufactured or fabricated at organizational level.
MF	Item to be manufactured or fabricated at the direct support maintenance level.
MH	Item to be manufactured or fabricated at the general support maintenance level.
MD	Item to be manufactured or fabricated at the depot maintenance level.
AD	Item to be assembled at organizational level.
AF	Item to be assembled at direct support maintenance level.
AH	Item to be assembled at general support maintenance level.
AD	Item to be assembled at depot maintenance level.
XA	Item is not procured or stocked; requirements for the item results in replacement of the next higher assembly.
XB	Item is not procured or stocked; it is not available through salvage or requisition.
XC	Installation drawing, diagram, instruction sheet, field service drawing, identified by manufacturers part number.
XD	A support item that Is not stocked. When required, item will be procured through normal supply channels.

NOTE

Cannibalization or controlled exchange, when authorized, may be used as a source of supply for items with the above source codes, except for those coded XA or aircraft support items restricted by AR 750-1.

2. Maintenance Code. Maintenance codes are assigned to indicate the levels of maintenance authorized to USE and REPAIR support items. The maintenance code entered in the third position will indicate the lowest maintenance level authorized to remove, replace, and use the support item. The maintenance code entered in the fourth position indicates whether the item is to be repaired and Identifies the lowest maintenance level with the capability to perform complete repair. The maintenance codes are entered in the third and fourth positions of the uniform SMR code format as follows:

Code Application/Explanation **(3rd Position Codes)**

C Crew or operator maintenance performed within organizational maintenance
O Support item Is removed, replaced, used at the organizational level.
F Support item Is removed, replaced, used at the direct support level.
H Support item is removed, replaced, used at the general support level.
L Support items that are removed, replaced, used at the depot, mobile depot, or specialized repair activity only.

Code Application/Explanation **(4th Position Codes)**

O The lowest maintenance level capable of complete repair of the support item is the organizational level.
F The lowest maintenance level capable of complete repair of the support item is the direct support level.
H The lowest maintenance level capable of complete repair of the support item is the general support level.
D The lowest maintenance level capable of complete repair of the support item is the depot level.
L Repair restricted to a Specialized Repair Activity.
Z Non-repairable. No repair is authorized.
B No repair is authorized. The item may be reconditioned by adjusting, lubricating, etc., at the user level. No parts or special tools are procured for the maintenance of this Item.

3. Recoverability Code. Recoverability codes are assigned to support items to indicate the disposition action on unserviceable items. The recoverability code is entered in the fifth position of the uniform SMR code format as follows:

Code Application/Explanation **(5th Position Codes)**

Z Non-repairable item. When unserviceable, condemn and dispose at the level indicated in position three of SMR code.
O Repairable Item. When uneconomically repairable, condemn and dispose at organizational level or aviation unit level.
F Repairable Item. When uneconomically repairable, condemn and dispose at the direct support level or aviation intermediate level.
H Repairable item. When uneconomically repairable, condemn and dispose at the general support level.
D Repairable item. When beyond lower level repair capability, return to depot. Condemnation and disposal not authorized below depot level.
L Repairable item. Condemnation and disposal not authorized below depot specialized repair activity level.
A Item requires special handling or condemnation procedures because of specific reasons (i.e., precious metal content, high dollar value, critical material or hazardous material). Refer to appropriate manuals/directives for specific instructions.

Column (3) NSN. The National Stock Number (NSN) for the item is listed In this column and used to requisition the part.

Column (4) CAGE CODE. The Commercial and Government Entity (CAGE) code is a 5character code used to identify the manufacturer, distributor, or Government agency/activity that supplies the part.

Column (5) PART NUMBER. The part number indicates the primary number used by the manufacturer (individual, company, firm, corporation, or Government activity), which controls the design and characteristics of the item by means of its engineering drawings, specifications, standards, and inspection requirements to identify an item or range of items.

NOTE

When an NSN is used to requisition an item, the item received may have a different part number than the item listed.

Column (6) DESCRIPTION AND USABLE ON CODE. This column can contain the following information:

The Federal item name and a minimum description to identity the item, if required;

part numbers of bulk materials, referenced to a line entry in which it is used for manufacture or fabrication;

the Useable On Code (UOC) identifies the functional group on which the part is used and appears on last line of item description.

the statement END OF FIGURE is entered just below the last item description in the column for a given figure.

Column (7) QUANTITY The quantity Indicates the amount of the item used In the breakout shown on the illustration figure, which Is prepared for a functional group, sub-functional group, or an assembly. A 'V" appearing in this column Instead of a quantity number Indicates that the quantity is variable and may vary from application to application.

b. Columns In Section IV. The Cross-Reference Index In Section IV consists of two lists. One list Is the National Stock Number Index and the other list Is the Part Number Index.

(1) NATIONAL STOCK NUMBER (NSN) INDEX. The NSN Index has three columns as follows:

STOCK NUMBER Column. Contains the NSN in national item Identification number (NIIN) sequence. The NIIN consists of the last nine digits of the NSN.

FIG. Column. Contains the number of the figure where the item is identified/located.

ITEM Column. Contains the item number associated with the figure number in the adjacent column.

(2) PART NUMBER INDEX. The Part Number Index has three columns as follows:

PART NUMBER Column. Contains the part number assigned to the item.

FIG. Column. Contains the number of the figure where the item is identified/located.

ITEM Column. Contains the item number associated with the figure number in the adjacent column.

C-4. SPECIAL INFORMATION

a. Usable On Code. A usable on code (UOC) is assigned to each different model of an end item. The usable on code is shown as "UOC: ", justified left on the last line of the description column, when required. Uncoded items are applicable to all models. Identification of usable on codes used in this RPSTL are:

UOC	Used On
GH1	Model 204-050-200-5
GH2	Model 214-706-104-101
GH3	Model 1730-EG-100

b. Illustrations-Listings. Only illustrations containing organizational authorized items appear in this appendix. Only those parts assigned the third position SMR maintenance code C or 0 are listed in the tabular listing: therefore, there may be a break In the item number sequence.

C-5. HOW TO LOCATE REPAIR PARTS

a. When National Stock Number or part Number is Unknown.

(1) Using the Table of Contents, determine the assembly or subassembly group to which the item belongs.

(2) Find the figure covering the functional group to which the item belongs.

(3) Identify the item on the figure and note the number of the item.

(4) Look up the Repair Parts List for the figure and item number. The NSN and part number is on the same line as the item number.

b. When National Stock Number or Part Number is Known.

(1) Using the Index of National Stock Numbers and Part Numbers, find the pertinent National stock number or part number. The NSN index is in NIIN sequence. The part number index is in alphanumeric sequence, cross-referenced to the Illustration figure number and item number.

(2) Turn to the figure and locate the item number. Verify that the item is the one desired.

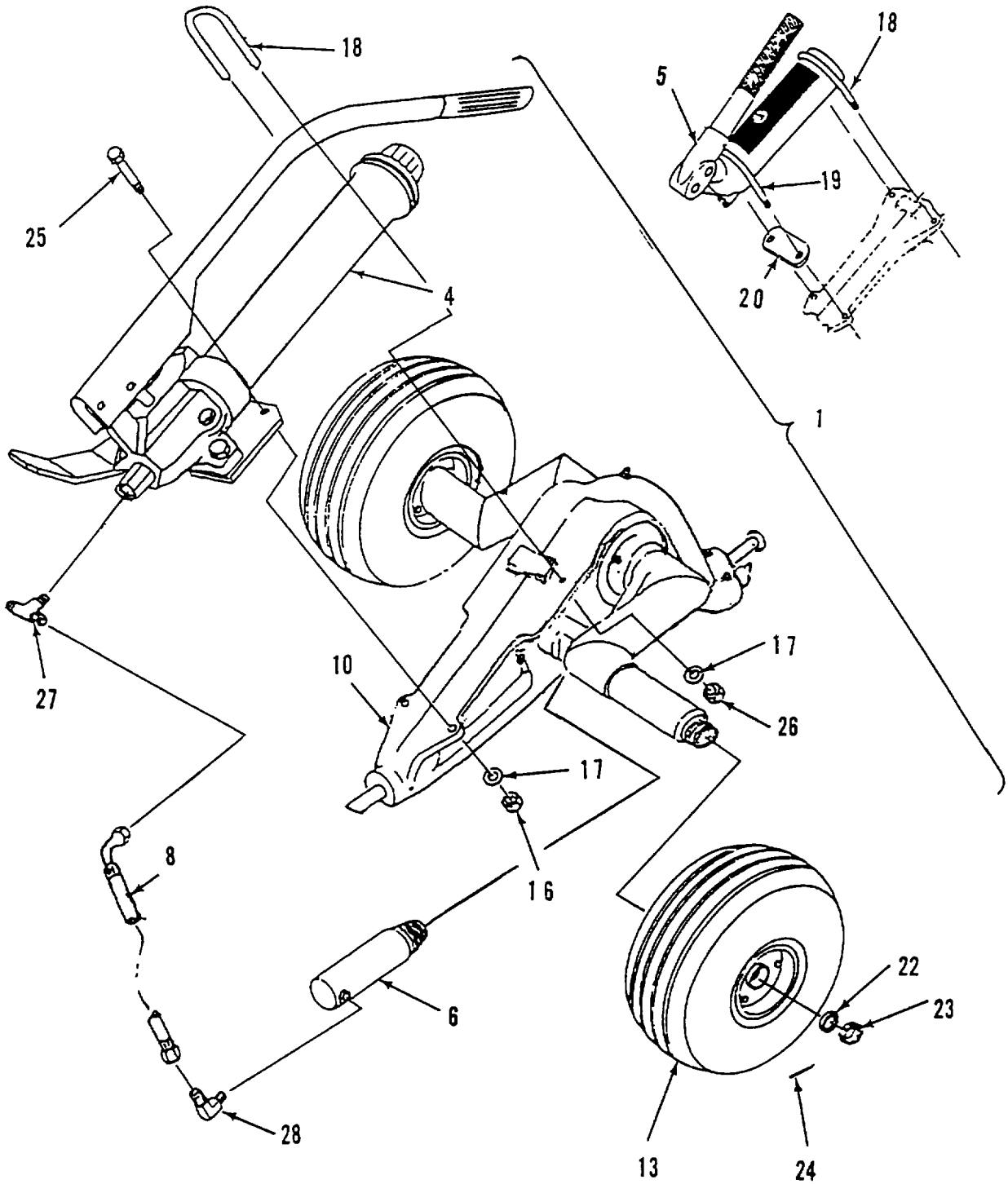

Figure C-1-1. Ground Handling Wheels Assembly, P/N 204-050-200-5

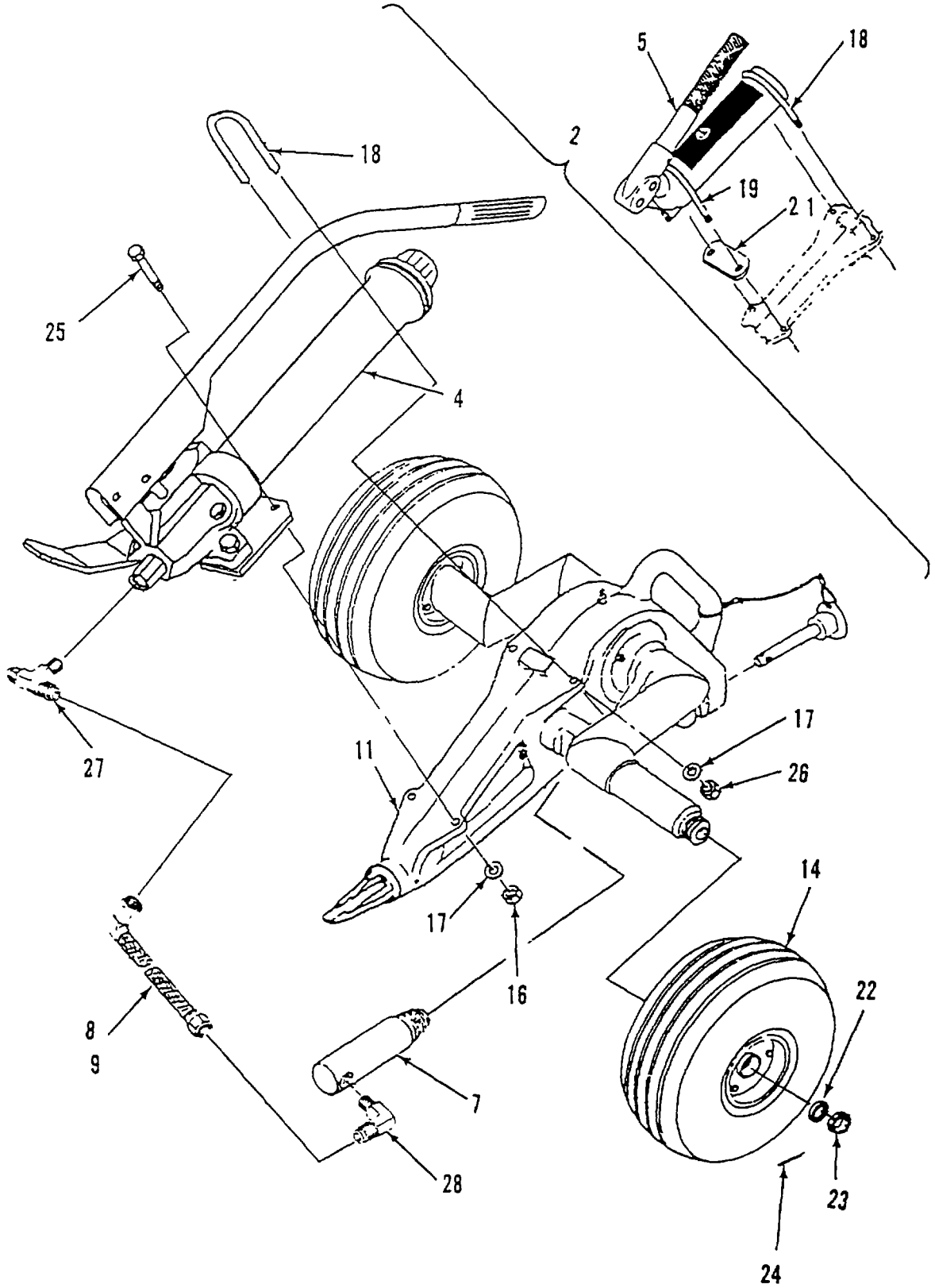

Figure C-1-2. Ground Handling Wheels Assembly, P/N 214-706-104-101

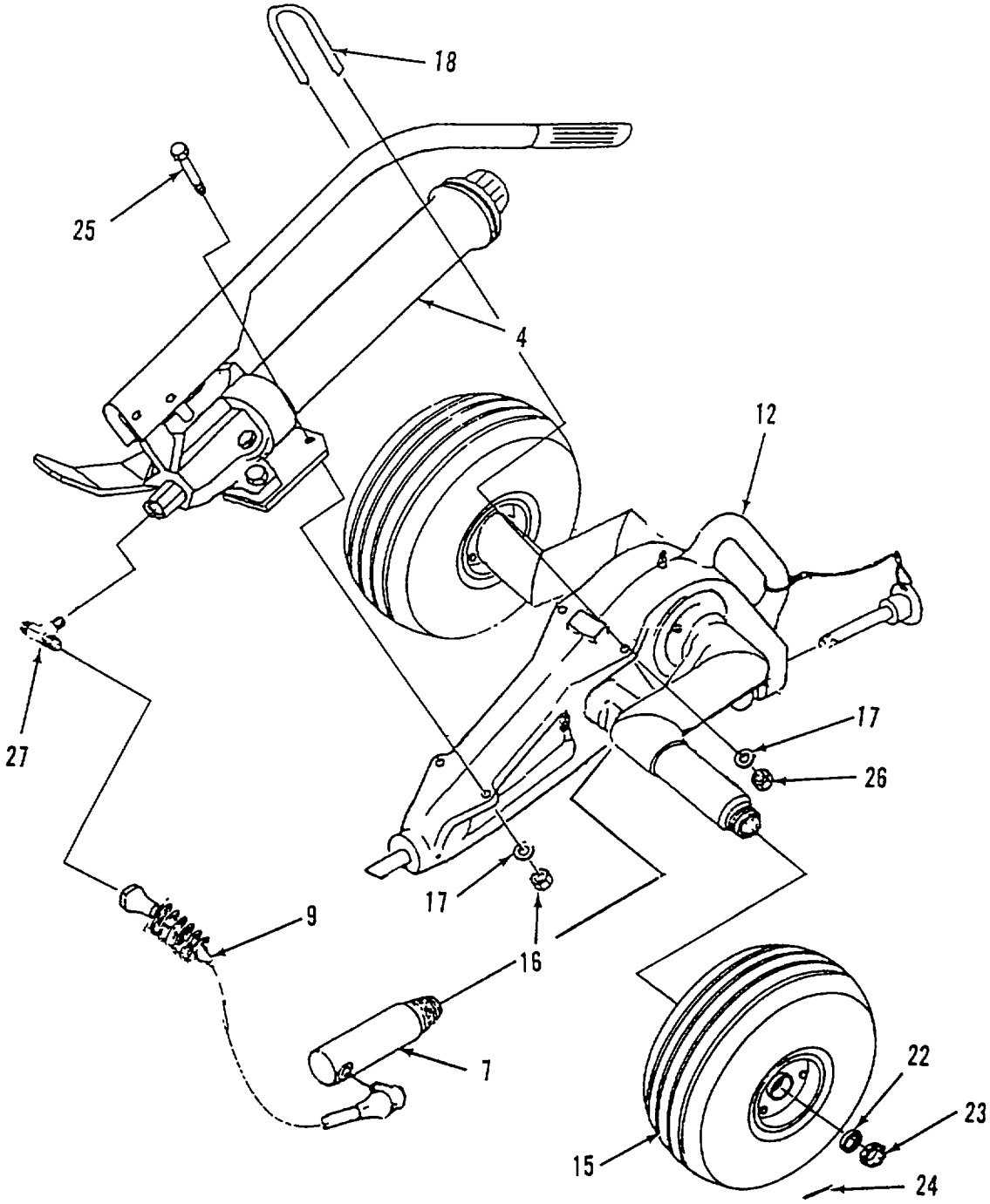

Figure C-1-3. Ground Handling Wheels Assembly, P/N 1730-EG-100

SECTION II REPAIR PARTS LIST

(1) ITEM NO.	(2) SMR CODE	(3) NSN	(4) CAGEC	(5) PART NUMBER	(6) DESCRIPTION AND USABLE ON CODE	(7) QTY
					GROUP 00 **GROUND HANDLING WHEELS ASSY** **FIG C-1-1 G H WHEELS ASSEMBLY** **(204-050-200-5)** **FIG C-1-2 G H WHEELS ASSEMBLY** **(214-706-104-101)** **FIG C-1-3 G H WHEELS ASSEMBLY** **(1730-EG-100)**	
1	XCOFF	1730-00-980-9552	97499	204-050-200-5	WHEELS ASSY, GROUND HANDLING . ..... UOC: GH 1	1
2	PAOFF	1730-01-133-9204	97499	214-706-104-101	WHEELS ASSY, GROUND HANDLING. UOC.GH2	1
3	PAOFF	1730-01-133-9204	81996	1730-EG-100	WHEELS ASSY, GROUND HANDLING, ... UOC:GH3	1
4	PAOFF	4320-01-287-9662	45225	61780	PUMP, HYDRAULIC RAM SEE FIG C-2 FOR BREAKDOWN..... UOC:GH1,GH2,GH3	1
5	XCOFF	4320-00-866-7750	77428	BU0953B	PUMP, HYDRAULIC RAM, ... UOC: GH 1,GH2	1
6	PAOZZ	3040-00-963-6853	81996	3040-UH1-155	RAM ASSY UOC:GH1	2
7	PAOZZ	4320-01 -332-5472	81996	1730-EG-119	RAM ASSY UOC:GH2,GH3	2
8	PAOZZ	4720-00-868-5779	98441	129241-1	HOSE ASSY RAM, ... UOC:GH1,GH2	2
9	PAOZZ	4720-01-341-2337	81996	1730-EG-12-1	HOSE ASSY RAM..... UOC:GH1,GH2,GH3	2
10	PAOZZ	1?30-01-333-5964	1JD86	1730-UH-1001	CRADLE ASSY SEE FIG C-3-1 FOR BREAKDOWN..... UOC:GH1	1
11	PAOFF	1730-01-147-8581	97499	214-050-011-101	CRADLE ASSY SEE FIG C-3-2 FOR BREAKDOWN UOC:GH2	1
12	PAOFF	1730-01-147-8581	81996	1730-EG-101	CRADLE ASSY SEE FIG C-3-3 FOR BREAKDOWN..... UOC:GH3	1
13	PAOOO	1630-00-895-9348	33269	40-76-1	WHEEL ASSY SEE FIG C - 1 FOR BREAKDOWN..... UOC:GH1	2

(1) ITEM NO.	(2) SMR CODE	(3) NSN	(4) CAGEC	(5) PART NUMBER	(6) DESCRIPTION AND USABLE ON CODE	(7) QTY
14	PAOOO	1630-01-153-7185	33269	40-117A	WHEEL ASSY SEE FIG C-4-2 FOR BREAKDOWN..... UOC:GH2	2
15	PAOOO	1630-01 -153-7185	81996	1730-EG-116	WHEEL ASSY SEE FIG C--3 FOR BREAKDOWN UOC:GH3	2
16	PAOZZ	5310-00-807-1475	96906	MS21042L4	NUT . ..... UOC.GH1, GH2 (USQ with item 5)	4
	PAOZZ	5310-00-807-1475	96906	MS21042L4	NUT ..... UOC:GH1.GH2 (use with item 4)	2
	PAOZZ	5310-00-400-5503	96906	MS35650-3254	NUT UOC:GH3	2
17	PAOZZ	5310-00-167-0835	88044	AN960416L	WASHER ..... UOC: GH 1, GH2, GH3	4
18	PAOZZ	5306-01-238-3828	81996	1730-EG-025-1	U-BOLT..... UOC.GH2, GH3	1
	PAOZZ	5306-01-238-3829	81996	1730-EG-025-2	U-BOLT ..... UOC:GH1 (use with item 4)	1
	PAOZZ	5306-00-889-3003	0FUR2	330570	U-BOLT..... UOC GH1 (use with item 5)	1
19	PAOZZ	5306-01-238-3829	81996	1730-EG-025-2	U-BOLT ..... UOC:GH2 (use with item 5)	1
	PAOZZ	5306-00-911-4180	OFUP.2	330571	U-BOLT ..... UOC:GH1 (use w-h item 5)	1
20	PAOZZ	5365-00-368-9131	24434	ALS55	SPACER, PLATE, ... UOC:GH1	1
21	PAOZZ	5365-01-265-9019	09986	ALS-57	SPACER, PLATE UOC:-;H2	1
22	PAOZZ	5365-00-845-2200	97499	204-050-165-1	RETAINER UOC:GH1, GH2	2
	PAOZZ	5365-00-298-3184	81996	1730-EG-114	RETAINER UOC:GH3	2
23	PAOZZ	5310-00-176-8118	88044	AN320-20	NUT . ..... UOC: GH 1, GH2, GH3	2
24	PAOZZ	5315-00-200-4545	96906	MS24665426	COTTER PIN,..... UOC:GH1, GH2, GH3	2
25	PAOZZ	5305-00-088-0509	96906	MS90725-10	BOLT . ..... UOC:GH1.GH2, GH3 (use with item 4)	2
26	PAOZZ	5310-00-761-6882	96906	MS51967-2	NUT, ... UOC:GH1 GH2, GH3 (use with item 4)	2
27	PAOZZ	4730-00-277-9305	96906	MS208254	TEE,..... UOC:GH1, GH2, GH3	1
28	PAOZZ	4730-00-231-4010	96906	MS208224-4	ELBOW, ... UOC.GH1, GH2	2

(PAGE INTENTIONALLY LEFT BLANK)

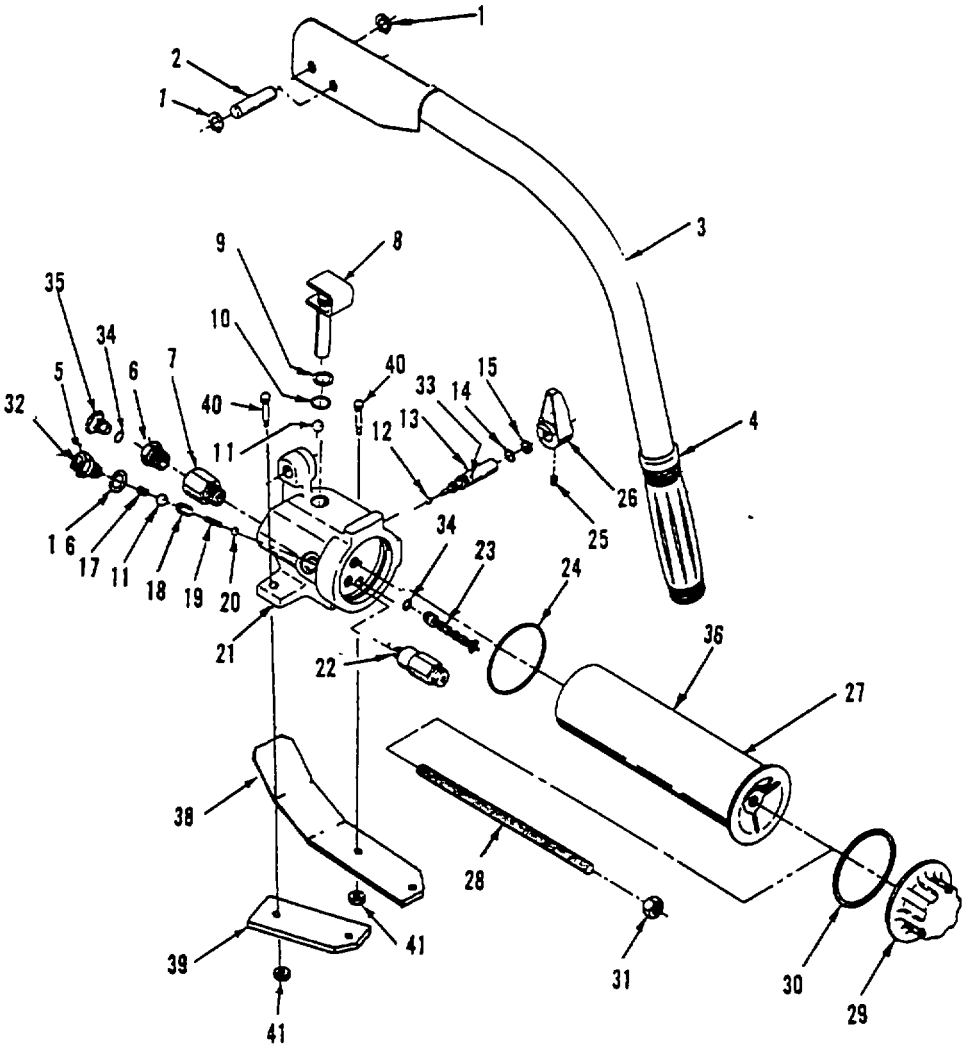

Figure C-2. Hydraulic Ram Pump, P/N 61780

(1) ITEM NO.	(2) SMR CODE	(3) NSN	(4) CAGEC	(5) PART NUMBER	(6) DESCRIPTION AND USABLE ON CODE	(7) QTY
					GROUP 01 **HYDRAULIC SYSTEM**	
					GROUP 0101 **PUMP, HYDRAULIC RAM**	
					FIG C-2 PUMP, HYDRAULIC RAM **(61780)**	
1	XDFZZ	5365-01-296-2700	45225	211743	RING, RETAINING	4
2	XDFZZ	5315-01-297-2681	45225	211742	PIN, STRAIGHT	2
3	XDFZZ	5340-01-299-6751	45225	61813-GR12	HANDLE, MANUAL CONTROL	1
4	XDFZZ	5340-01-296-3658	45225	206731	GRIP, HANDLE,	1
5	XDFZZ	5305-01-296-7763	45225	305975	VALVE SCREW	1
6	XDFZZ	4730-01-268-4007	45225	10676	BUSHING, PIPE	1
7	XDFZZ	4820-01-297-9050	45225	305993	VALVE, METERING	1
8	PAFZZ	4820-01-299-5762	45225	211468	PISTON, ASSEMBLY	1
9	XDFZZ		45225	213987	WASHER, BACKUP	1
10	XDFZZ	5330-01-292-7144	45225	10271	O'RING.	1
11	XDFZZ		45225	10378	BALL, STEEL	2
12	XDFZZ		45225	12223	BALL, .	1
13	XDFZZ	4810-01-297-5037	45225	308617	VALVE, SAFETY RELEASE	1
14	XDFZZ		45225	10267	O'RING	1
15	XDFZZ		45225	15085	WASHER, BACKUP	1
16	XDFZZ		45225	14874	WASHER, COPPER,	1
17	XDFZZ		45225	10444	SPRING, COMPRESSION,	1
18	XDFZZ		45225	29782	SPACER .	1
19	XDFZZ		45225	211797	SPRING, COMPRESSION	1
20	XDFZZ		45225	10375	BALL, STEEL	1
21	XDFZZ		45225	61295	BODY, PUMP	1
22	XDFZZ	4820-01-297-4506	45225	21278-80	VALVE, RELIEF, PRESSURE	1
23	PAFZZ		45225	12205	FILTER, STICK	1
24	PAFZZ	5330-01-296-2657	45225	211495	O'RING	1
25	XDFZZ		45225	10556	SCREW, SET.,	1
26	XDFZZ		45225	21643-NP	KNOB	1
27	XDFZZ		45225	307601	RESERVOIR ASSEMBLY,	1
23	XDFZZ		45225	213847	TIE ROD	1
29	PAFZZ	5340-01-296-6523	45225	52711	CAP, PROTECTIVE, DUST	1
30	XDFZZ	5330-01-296-2658	45225	212739	GASKET	1
31	XDFZZ		45225	10204	NUT	1
32	XDFZZ		45225	215907	DECAL ADO NOT REMOVE	1
33	XDFZZ		45225	15529	BALL NYLON	1
34	XDFZZ		45225	12557	O'RING	1

(1) ITEM NO.	(2) SMR CODE	(3) NSN	(4) CAGEC	(5) PART NUMBER	(6) DESCRIPTION AND USABLE ON CODE	(7) QTY
35	XDFZZ		45225	10970	PLUG, PIPE	1
36	XDFZZ		45225	308473	DECAL, WARNING, .,	1
37	XDFZZ	4320-01-287-5348	45225	300437	KIT, REPAIR PARTS	1
38	XDOZZ		45225	47139-GR12	PLATE, MOUNTING	1
39	XDFZZ		45225	420094-GR12	GUARD, HYDRAULIC FITTING	1
40	PAOZZ	5305-00-088-0509	96906	MS90725-10	BOLT .	2
41	PAOZZ	5310-00-761-6882	96906	MS51967-2	NUT .	2

(PAGE INTENTIONALLY LEFT BLANK)

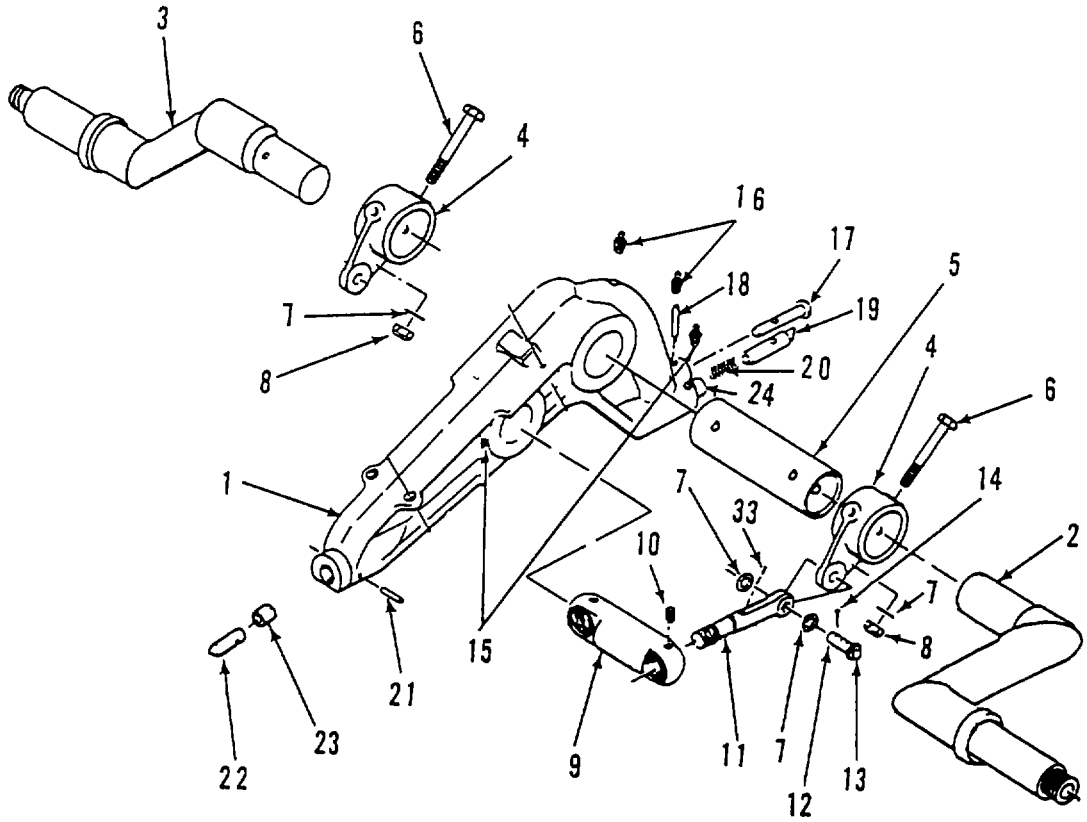

Figure C-3-1. Cradle Assembly, P/N 1730-UH-1001

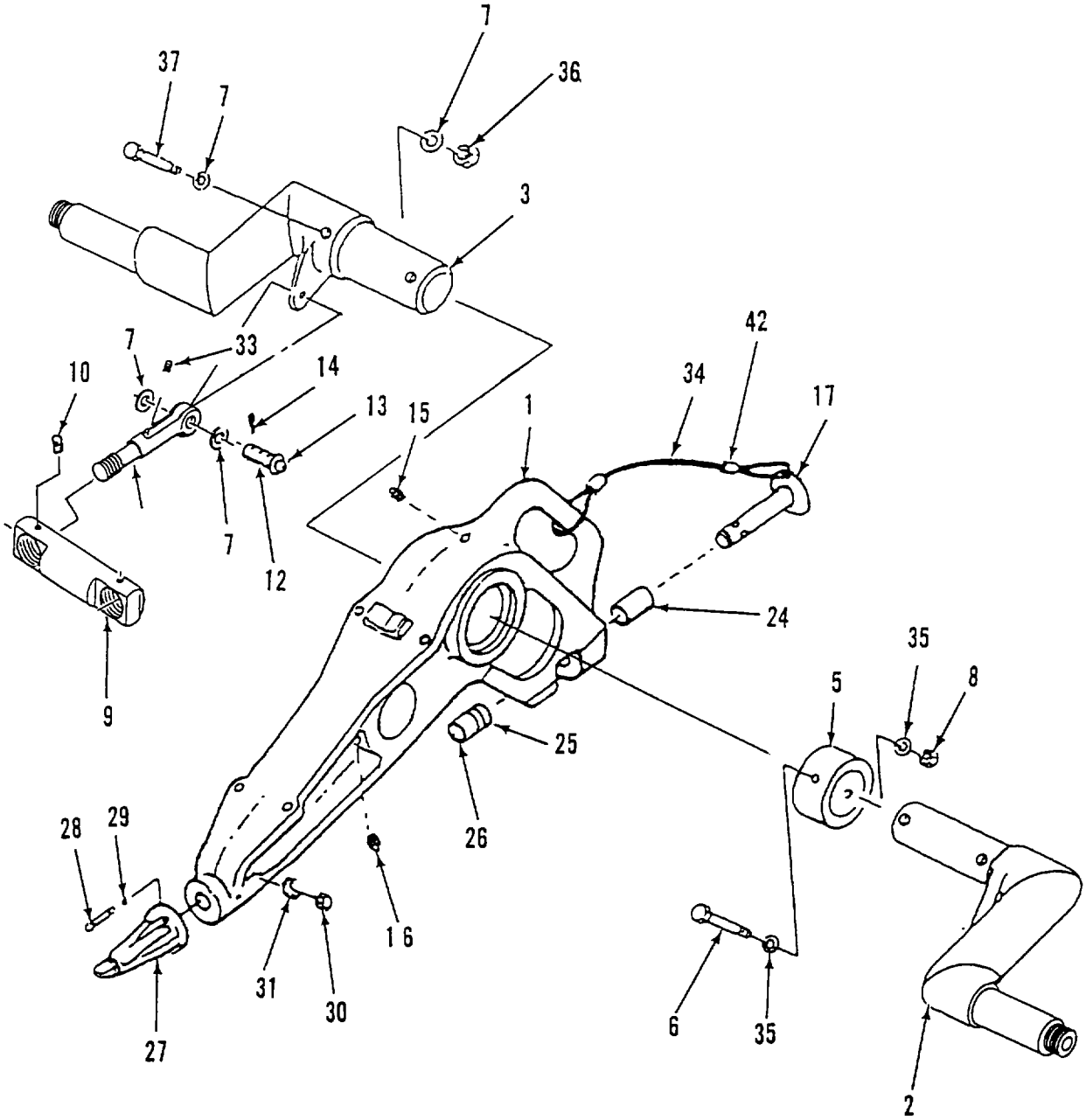

Figure C-3-2. Cradle Assembly, P/N 214-050-011-101

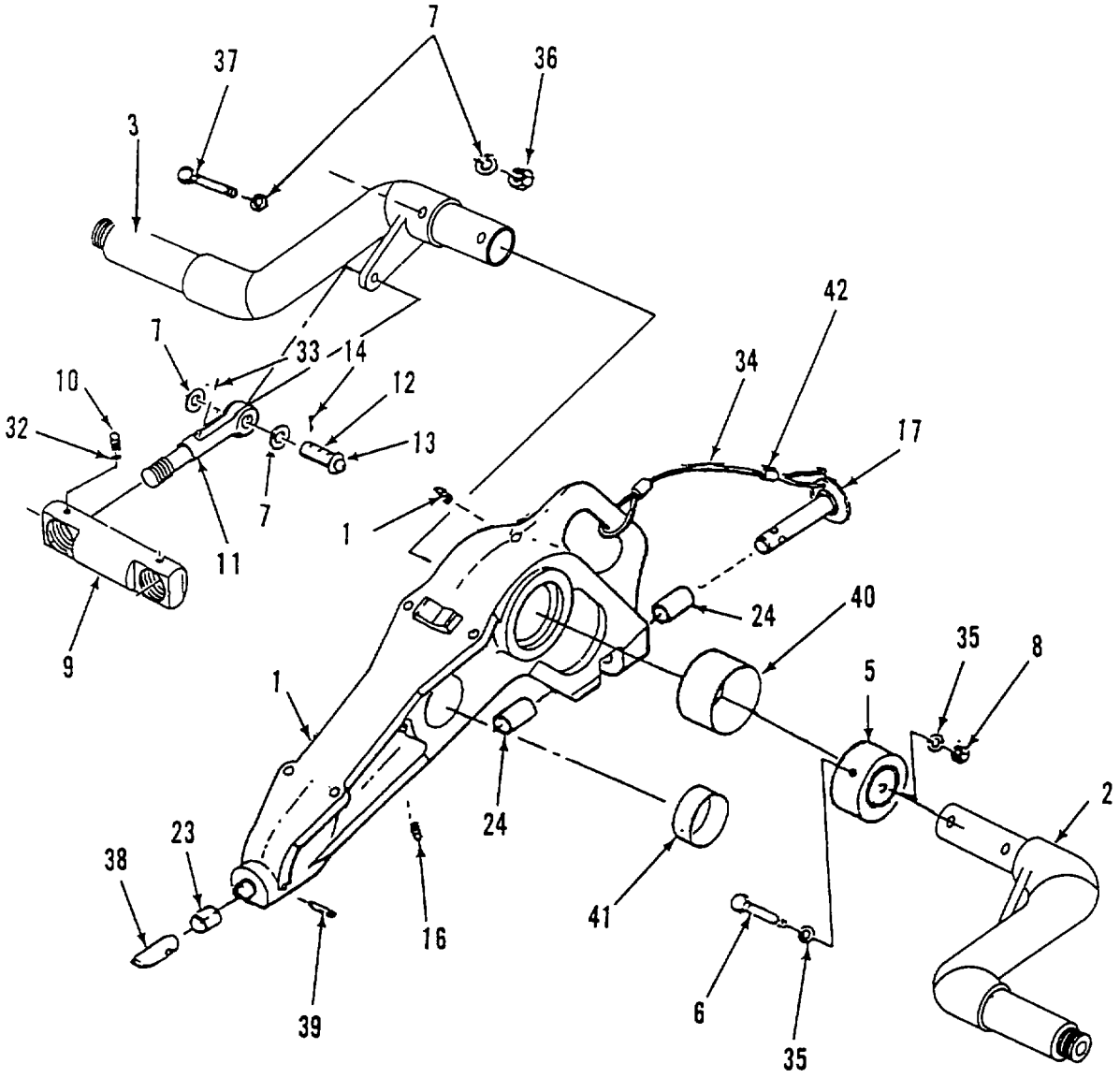

Figure C-3-3. Cradle Assembly, P/N 1730-EG-101

(1) ITEM NO.	(2) SMR CODE	(3) NSN	(4) CAGEC	(5) PART NUMBER	(6) DESCRIPTION AND USABLE ON CODE	(7) QTY
					GROUP 02 **CRADLE ASSEMBLY**	
					FIG C-3-1 CRADLE ASSEMBLY **(1730-UH-1001)**	
					FIG C-3-2 CRADLE ASSEMBLY **(214-050-011-101)**	
					FIG C-3-3 CRADLE ASSEMBLY **(1730-EG-101)**	
1	PAOZZ	1730-00-691-0552	97449	204-050-157-7	CRADLE UOC:GH1	1
	XDFZZ		97499	214-050-011-103	CRADLE UOC:GH2	1
	XAFZZ		81996	1730-EG- 101-1	CRADLE UOC.GH3	1
2	PAOZZ	1730-00-066-0294	97499	205-050-158-11	AXLE..... UOC:GH1	1
	PAOZZ	1730-01-147-8578	97499	214-050-022-1	AXLE, OUTER..... UOC:GH2	1
	PAOZZ	1730-01-310-6429	81996	1730-EG-107	AXLE, OUTER UOC:GH3	1
3	PAOZZ	1730-00-077-1766	97499	205-050-158-12	AXLE UOC:GH1	1
	PAOZZ	1730-01-147-8579	97499	214-050-022-3	AXLE, INNER UOC:GH2	1
	XDOZZ	1730-01-310-0412	81996	1730-EG-109	AXLE, INNER UOC:GH3	1
4	PAOZZ	1730-00-895-9343	97499	204-050-160-1	ARM UOC:GH1	2
5	PAOZZ	3120-00-897-5184	97499	204-050-159-1	BUSHING, SLEEVE..... UOC:GH1	1
	PAOZZ	5365-00-529-1585	97499	214-050-014-001	SPACER, SLEEVE UOC:GH2	1
	PAOZZ	3102-01-312-0730	81996	1730-EG-108	SPACER, SLEEVE..... UOC:GH3	1
6	PAOZZ	5306-00-846-1655	97499	204-050-167-1	BOLT UOC:GH1	4
	PAOZZ	5306-00-548-2543	13689	LWB22-5-34	BOLT UOC.GH2	1
	PAOZZ	5306-00-097-4662	96906	MS21250-05036	BOLT. UOC.GH3	1

(1) ITEM NO.	(2) SMR CODE	(3) NSN	(4) CAGEC	(5) PART NUMBER	(6) DESCRIPTION AND USABLE ON CODE	(7) QTY
7	PAOZZ	5310-00-167-0837	88044	AN960-616L	WASHER UOC:GH1,GH2,GH3	6
8	PAOZZ	5310-00-807-1477	96906	MS21042L6	NUT UOC:GH1,GH3	2
	PAOZZ	5310-00-807-1476	96906	MS21042L5	NUT, LOCKING UOC:GH2	1
9	PAOZZ	1730-00-895-9344	97499	204-050-161-1	TRUNNION UOC:GH1	1
	PAOZZ	1730-01-147-580	97499	214-050-012-1	TRUNNION UOC:GH2	1
	XDOZZ		81996	1730-EG-111	TRUNNION UOC:GH3	1
10	PAOZZ	5305-00-725-3511	96906	MS51964-94	SET SCREW UOC:GH1,GH2,GH3	2
11	PAOZZ	5340-00-895-9345	97499	204-050-170-1	CLEVIS. UOC:GH1,GH2	2
	PAOZZ	5340-01-311-2832	81996	1730-EG-112	CLEVIS UOC:GH3	2
12	PAOZZ	1730-00-895-9347	97499	204-050-200-13	PIN, CLEVIS ..... UOC:GH 1,GH2	2
	PAOZZ	1730-00-895-9347	81996	1730-EG-110	PIN UOC:GH3	2
13	PAOZZ	4730-00-050-4207	96906	MS15001-4	FITTING, LUBRICATION ..... UOC:GH 1,GH2,GH3	1
14	PAOZZ	5310-00-234-1863	88644	MS242665-300	PIN, COTTER..... UOC:GH1	2
	PAOZZ	5315-00-842-3044	96906	MS24665-283	PIN, COTTER UOC:GH2,GH3	2
15	PAOZZ	4730-0)-172-0010	96906	MS15002-1	FITTING..... UOC:GH1	2
	PAOZZ	4730-00-172-0010	96906	MS15002-1	FITTING..... UOC:GH2	1
16	PAOZZ	4730-00-172-0001	96906	MS15001-2	FITTING..... UOC:GH1,GH3	2
	PAOZZ	4730-00-172-0001	96906	MS15001-2	FITTING UOC.GH2	1
17	PAOZZ	5315-01-016-0446	97499	204050-163-3	PIN, RELEASE UOC:GH1	1
	PAOZZ	5340-00-575-5740	96906	MS17984C824	PIN, RELEASE UOC:GH2,GH3	1
18	PAOZZ	5315-00-895-6797	97499	204-050-154-1	PIN, CONNECTION UOC:GH1	1

(1) ITEM NO.	(2) SMR CODE	(3) NSN	(4) CAGEC	(5) PART NUMBER	(6) DESCRIPTION AND USABLE ON CODE	(7) QTY
19	PAOZZ	5315-00-895-6799	97499	204-050-164-1	PIN, SUPPORT UOC:GH1	1
20	PAOZZ	5360-00-675-3229	97499	204-050-133-1	SPRING UOC:GH1	1
21	PAOZZ	5315-00-200-3183	96906	MS171598	PIN UOC:GH1	1
22	PAOZZ	5315-01-310-6174	81996	1730-EG-103	PIN, SUPPORT, FWD ..... UOC:GH 1	1
23	PAFZZ	3120-00-179-7201	97499	21-010B15-5-51	BUSHING, SLEEVE UOC:GH1	1
	XDFZZ		80205	NAS77A8-144	BUSHING, PIN UOC:GH3	1
24	PAFZZ	5365-00-898-0003	97499	204-050-166-3	BUSHING, SUPPORT PIN UOC:GH1	1
	XDFZZ	3120-00-529-1538	97499	214-050-011-5	BUSHING, CLEVIS UOC:GH2	1
	PAOZZ	3120-01-309-4842	96906	NAS77A8-070P	BUSHING, CLEVIS UOC:GH3	2
25	XDFZZ	3120-00-537-3945	97499	214-050-011-7	BUSHING, CLEVIS UOC:GH2	1
26	XDFZZ	3120-00-529-1555	97499	214-050-011-9	BUSHING, CLEVIS, ... UOC:GH2	1
27	XDOZZ	4730-01-257-5769	97499	209-050-129-101	ADAPTER, SUPPORT UOC:GH2	1
28	PAOZZ	5306-00-584-5141	96906	MS20004H24	BOLT UOC:GH2	2
29	PAOZZ	5365-01-164-1719	97499	140-007-17S14D5	WASHER UOC:GH2	2
30	PAOZZ	5310-01-232-3542	80205	NAS57784A	NUT UOC:GH2	2
31	PAOZZ	5340-00-948-9787	80205	NAS578-4B	RETAINER, NUT UOC:GH2	2
32	XDOZZ		28510	0.19DI1AX0.13	PLUG, Alum or Brass UOC:GH3	2
33	PAOZZ	5305-00-724-6791	96906	MS51964-55	SETSCREW ..... UOC:GH1 ,GH2,GH3	2
34	PAOZZ	4010-00-222-4482	81755	SE2939-1455	ROPE,WIRE..... UOC:GH2,GH3	1
35	PAOZZ	5310-00-167-0836	88044	AN960-516L	WASHER UOC:GH2,GH3	2
36	PAOZZ	5310-00-807-1477	96906	MS21042L6	NUT, LOCKING	1

(1) ITEM NO.	(2) SMR CODE	(3) NSN	(4) CAGEC	(5) PART NUMBER	(6) DESCRIPTION AND USABLE ON CODE	(7) QTY
					UOC:GH2,GH3	
37	PAOZZ	5306-00-489-3503	96906	MS21250-06030	BOLT	1
					UOC.GH2,GH3	
38	PAOZZ	5315-01-310-6174	81996	1730-EG-103	PIN	1
					UOC:GH3	
39	PAOZZ	5315-00-200-3183	96906	MS171598	PIN, SPRING	1
					UOC:GH3	
40	XDFZZ		81996	1730-EG-101-2	BUSHING	1
					UOC:GH3	
41	XDFZZ		81996	1730-EG-101-3	BUSHING	1
					UOC:GH3	
42	PAOZZ	4030-01-021-6339	30003	2842687-3	SWAGING SLEEVE, WIRE	2
					UOC:GH2,GH3	

THIS PAGE LEFT INTENTIONALLY BLANK

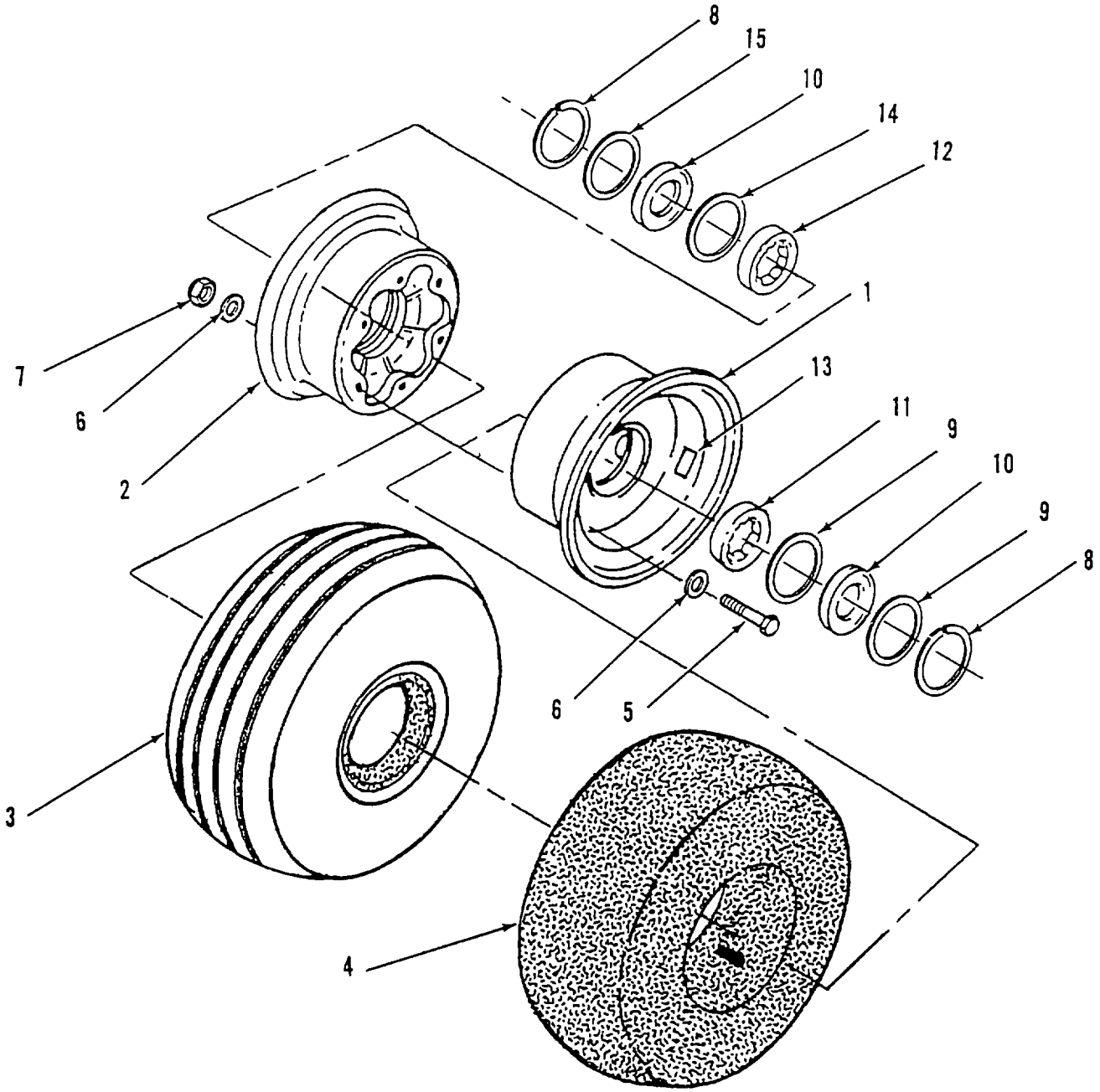

Figure C-4-1. Wheel Assembly, P/N 40-76-1

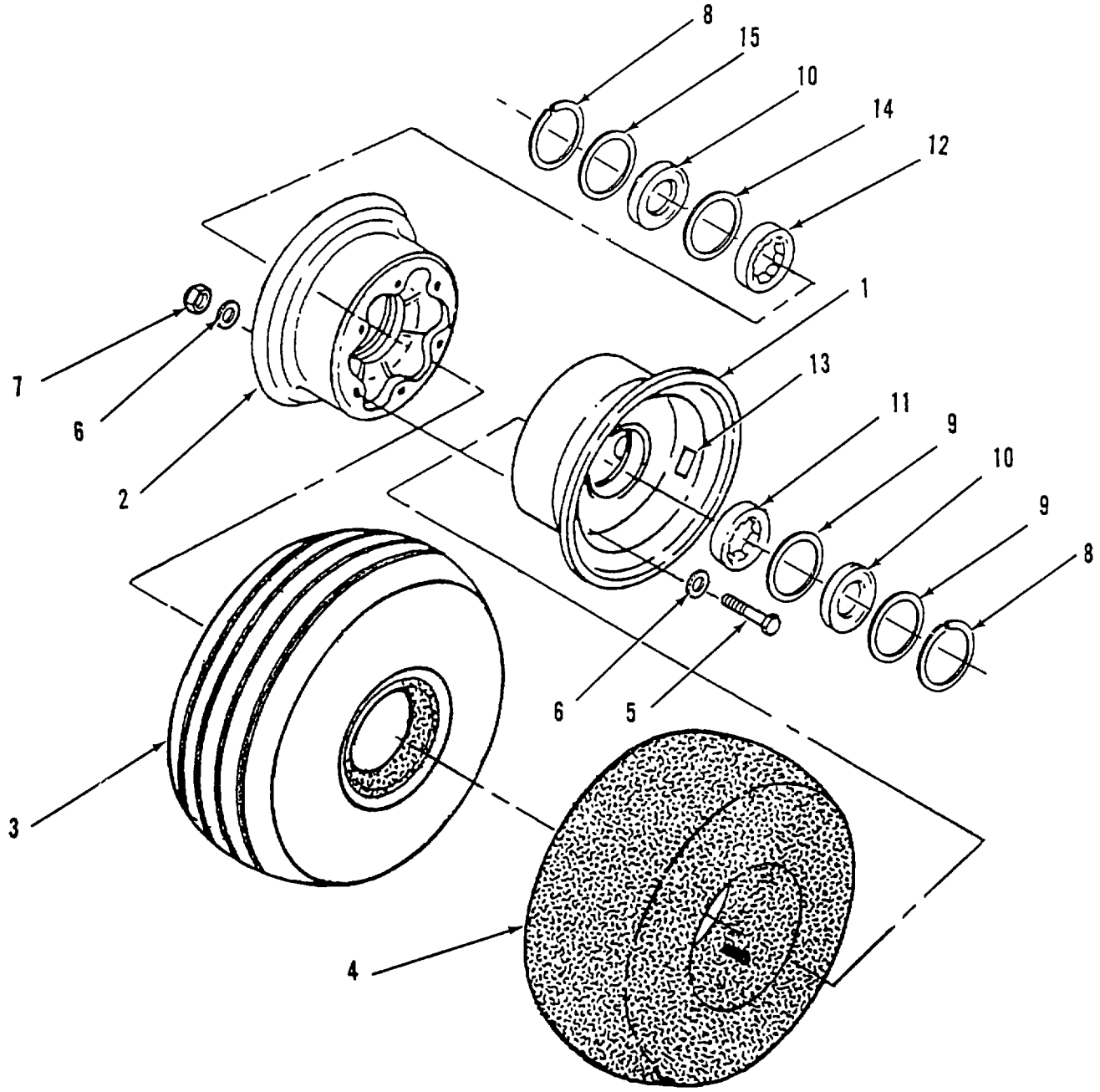

Figure C-4-2. Wheel Assembly, P/N 40-117A

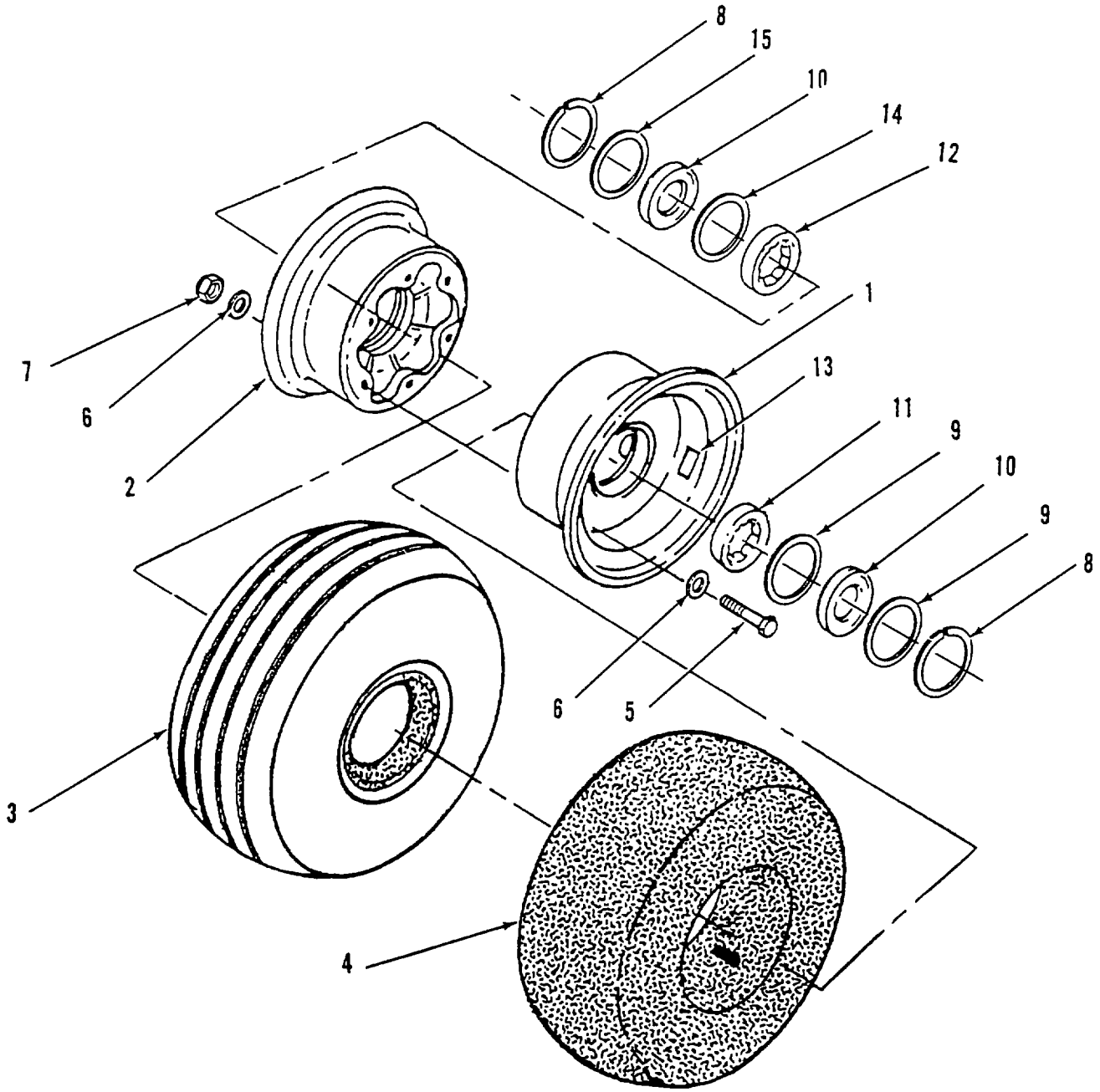

Figure C-4-3. Wheel Assembly, P/N 1730-EG-116

(1) ITEM NO.	(2) SMR CODE	(3) NSN	(4) CAGEC	(5) PART NUMBER	(6) DESCRIPTION AND USABLE ON CODE	(7) QTY
					GROUP 03 **WHEEL ASSEMBLY** **FIG C-4-1 WHEEL ASSEMBLY** **(40-76-1)** **FIG C-4-2 WHEEL ASSEMBLY** **(40-117A)** **FIG C-4-3 WHEEL ASSEMBLY** **(1 730-EG-1 16)**	
1	XDOOO		33269	162-27	WHEEL HALF, OUTER UOC:GH1	1
	XDOOO		33269	162-48	WHEEL HALF, OUTER UOC:GH2,GH3	1
2	XDOOO		33269	161-30	WHEEL HALF, INNER..... UOC:GH1	1
	XDOOO		33269	161-23	WHEEL HALF, INNER UOC:GH2,GH3	1
3	PAOZZ	2620-00-269-7553	D2501	7 00 X 6-6 PLY	TIRE UOC:GH1	1
	PAOZZ	2620-00-277-5398	96906	MS26535-2	TIRE..... UOC GH2,GH3	1
4	PAOZZ	2620-00-269-7267	73842	7.00 X 6	TUBE UOC:GH1	1
	PAOZZ	2610-00-528-7798	81348	ZZ-I-550/G5/5.70/ 5.00-8/OFFCTR	TUBE UOC:GH2,GH3	1
5	PAOZZ	5306-00-151-1421	88044	AN4-13A	BOLT, MACHINE UOC:GH1	3
	PAOZZ	5306-00-150-9237	88044	ANS-35A	BOLT, MACHINE UOC:GH2,GH3	6
6	PAOZZ	5310-00-141-1795	88044	AN960-416	WASHER, FLAT UOC:GH1	6
	PAOZZ	5310-00-187-2399	88044	AN960-516	WASHER,FLAT UOC:GH2,GH3	12
7	PAOZZ	5310-00-061-7325	96906	MS21045-4	NUT,SELF-LOCKING..... UOC:GH1	3
	PAOZZ	5310-00-982-4912	96906	MS21045-5	NUT, SELF-LOCKING..... UOC:GH2,GH3	6
8	PAOZZ	5365-00-869-2429	33269	155-1	RING, RETAINING..... UOC:GH1,GH2,GH3	2

(1) ITEM NO.	(2) SMR CODE	(3) NSN	(4) CAGEC	(5) PART NUMBER	(6) DESCRIPTION AND USABLE ON CODE	(7) QTY
9	PAOZZ	5330-00-869-9014	33269	153-15	RETAINER, PACKING UOC:GH1	1
	PAOZZ	5310-00-868-4828	33269	153-4	WASHER, FLAT..... UOC:GH2,GH3	2
10	PAOZZ	5330-00-868-5764	33269	154-01300	FELT, MECHANICAL UOC:GH1	1
	PAOZZ	5365-00-923-5114	33269	154-3	RING, MAIN LANDING UOC:GH2,GH3	1
11	PAOZZ	3110-00-100-3137	33269	214-2	BEARING UOC.GH1,GH2,GH3	1
12	PAOZZ	3120-01-063-5777	33269	214-1	BEARING UOC.GH1,GH2,GH3	1
13	XDOZZ		33269	166-64	NAMEPLATE UOC:GH1,GH2,GH3	1
14	PAOZZ	5330-00-442-4830	33269	153-3	SEAL..... UOC:GH1,GH3	2
	PAOZZ	5330-00-442-4830	33269	153-3	SEAL UOC:GH2	1
15	PAOZZ	5330-00-869-9014	33269	153-15	RETAINER, PACKING UOC:GH1,GH2,GH3	1
16	PAOZZ	5330-00-868-5764	33269	154-01300	FELT, MECHANICAL, PREFORMED..... UOC:GH1,GH2,GH3	1

SECTION IV CROSS REFERENCE INDEX

National Stock Number

NSN	FIGURE	ITEM
4730-00-050-4207	C-3-1	13
4730-00-050-4207	C-3-2	13
4730-00-050-4207	C-3-3	13
5310-00-061-7325	C-4-1	7
1730-00-066-0294	C-3-1	2
1730-00-077-1766	C-3-1	3
5305-00-088-0509	C-1-1	25
5305-00-088-0509	C-1-2	25
5305-00-088-0509	C-1-3	25
5305-00-088-0509	C-2	40
5306-00-097-4662	C-3-3	6
3110-00-100-3137	C-4-1	11
3110-00-100-3137	C-4-2	11
3110-00-100-3137	C-4-3	11
5310-00-141-1795	C-4-1	6
5306-00-150-9237	C-4-2	5
5306-00-150-9237	C-4-3	5
5306-00-151-1421	C-4-1	5
5310-00-167--837	C-3-2	7
5310-00-167-0835	C-1-1	17
5310-00-167-0835	C-1-2	17
5310-00-167-0835	C-1-3	17
5310-00-167-0836	C-3-2	35
5310-00-167-0836	C-3-3	35
5310-00-167-0837	C-3-1	7
5310-00-167-0837	C-3-3	7
4730-00-172-0001	C-3-1	16
4730-00-172-0001	C-3-3	16
4730-00-172-0001	C-3-2	16
4730-00-172-0010	C-3-1	15
4730-00-172-0010	C-3-2	15
5310-00-176-8118	C-1-1	23
5310-00-176-8118	C-1-2	23
5310-00-176-8118	C-1-3	23
3120-00-179-7201	C-3-1	23
5310-00-187-2399	C-4-2	6
5310-00-187-2399	C-4-3	6
5315-00-200-3183	C-3-1	21
5315-00-200-3183	C-3-3	39
5315-00-200-4545	C-1-1	24
5315-00-200-4545	C-1-2	24
5315-00-200-4545	C-1-3	24
4010-00-222-4482	C-3-2	34
4010-00-222-4482	C-3-3	34
4730-00-231-4010	C-1-1	28

National Stock Number

NSN	FIGURE	ITEM
4730-00-231-4010	C-1-2	28
5315-00-234-1863	C-3-1	14
2620-00-269-7267	C-4-1	4
2620-00-269-7553	C-4-1	3
2620-00-277-5398	C-4-2	3
2620-00-277-5398	C-4-3	3
4730-00-277-9305	C-1-1	27
4730-00-277-9305	C-1-2	27
4730-00-277-9305	C-1-3	27
5365-00-298-3184	C-1-3	22
5365-00-368-9131	C-1-1	20
5310-00-400-5503	C-1-3	16
5330-00-442-4830	C-4-1	14
5330-00-442-4830	C-4-3	14
5330-00-442-4830	C-4-2	14
5306-00-489-3503	C-3-2	37
5306-00-489-3503	C-3-3	37
2610-00-528-7798	C-4-2	4
2610-00-528-7798	C-4-3	4
3120-00-529-1538	C-3-2	24
3120-00-529-1555	C-3-2	26
5365-00-529-1585	C-3-2	5
3120-00-537-3945	C-3-2	25
5306-00-548-2543	C-3-2	6
5340-00-575-5740	C-3-2	17
5340-00-575-5740	C-3-3	17
5306-00-584-5141	C-3-2	28
5360-00-675-3329	C-3-1	20
1730-00-691-0552	C-3-1	1
5305-00-724-6791	C-3-1	33
5305-00-724-6791	C-3-2	33
5305-00-724-6791	C-3-3	33
5305-00-725-3511	C-3-1	10
5305-00-725-3511	C-3-2	10
5305-00-725-3511	C-3-3	10
5310-00-761-6882	C-1-1	26
5310-00-761-6882	C-1-2	26
5310-00-761-6882	C-1-3	26
5310-00-761-6882	C-2	41
5310-00-807-1475	C-1-1	16
5310-00-807-1475	C-1-2	16
5310-00-807-1475	C-1-2	
5310-00-807-1476	C-3-2	8
5310-00-807-1477	C-3-1	8
5310-00-807-1477	C-3-3	8

National Stock Number

NSN	FIGURE	ITEM
5310-00-807-1477	C-3-2	36
5310-00-807-1477	C-3-3	36
5315-00-842-3044	C-3-2	14
5315-00-842-3044	C-3-3	14
5365-00-845-2200	C-1-1	22
5365-00-845-2200	C-1-2	22
5306-00-846-1655	C-3-1	6
4320-00-866-7750	C-1-1	5
4320-00-866-7750	C-1-2	5
5310-00-868-4828	C-4-2	9
5310-00-868-4828	C-4-3	9
5330-00-868-5764	C-4-1	10
5330-00-868-5764	C-4-1	16
5330-00-868-5764	C-4-2	16
5330-00-868-5764	C-4-3	16
4720-00-868-5779	C-1-1	8
4720-00-868-5779	C-1-2	8
5365-00-869-2429	C-4-1	8
5365-00-869-2429	C-4-2	8
5365-00-869-2429	C-4-3	8
5330-00-869-9014	C-4-1	9
5330-00-869-9014	C-4-1	15
5330-00-869-9014	C-4-2	15
5330-00-869-9014	C-4-3	15
5306-00-889-3003	C-1-1	18
5315-00-895-6797	C-3-1	18
5315-00-895-6799	C-3-1	19
1730-00-895-9343	C-3-1	4
1730-00-895-9344	C-3-1	9
1730-00-895-9347	C-3-1	12
1730-00-895-9347	C-3-2	12
1730-00-895-9347	C-3-3	12
1630-00-895-9348	C-1-1	13
5340-00-895-9349	C-3-1	11
5340-00-895-9349	C-3-2	11
3120-00-897-5184	C-3-1	5
5365-00-898-0003	C-3-1	24
5306-00-911-4180	C-1-1	19
5365-00-923-5114	C-4-2	10
5365-00-923-5114	C-4-3	10
5340-00-948-9787	C-3-2	31
3040-00-963-6853	C-1-1	6
1730-00-980-9552	C-1-1	1
5310-00-982-4912	C-4-2	7
5310-00-982-4912	C-4-3	7

National Stock Number

NSN	FIGURE	ITEM
5315-01-016-0466	C-3-1	17
4030-01-021-6339	C-3-2	42
4030-01-021-6339	C-3-3	42
3120-01-063-5777	C-4-1	12
3120-01-063-5777	C-4-2	12
3120-01-063-5777	C-4-3	12
1730-01-133-9204	C-1-2	2
1730-01-133-9204	C-1-3	3
1730-01-147-8578	C-3-2	2
1730-01-147-8579	C-3-2	3
1730-01-147-8580	C-3-2	9
1730-01-147-8581	C-1-2	11
1730-01-147-8581	C-1-3	12
1630-01-153-7185	C-1-2	14
1630-01-153-7185	C-1-3	15
5365-01-164-1719	C-3-2	29
5310-01-232-3542	C-3-2	30
5306-01-238-3828	C-1-2	18
5306-01-238-3828	C-1-3	18
5306-01-238-3829	C-1-1	18
5306-01-238-3829	C-1-2	19
4730-01-257-5769	C-3-2	27
5365-01-265-9019	C-1-2	21
4730-01-268-4007	C-2	6
4320-01-287-5348	C-2	37
4320-01-287-9662	C-1-1	4
4320-01-287-9662	C-1-2	4
4320-01-287-9662	C-1-3	4
5330-01-292-7144	C-2	10
5330-01-296-2657	C-2	24
5330-01-296-2658	C-2	30
5365-01-296-2700	C-2	1
5340-01-296-3658	C-2	4
5340-01-296-6523	C-2	29
5305-01-296-7763	C-2	5
5315-01-297-2681	C-2	2
4820-01-297-4506	C-2	22
4810-01-297-5037	C-2	13
4820-01-297-9050	C-2	7
4820-01-299-5762	C-2	8
5340-01-299-6751	C-2	3
3120-01-309-4824	C-3-3	24
1730-01-310-0412	C-3-3	3
5315-01-310-6174	C-3-1	22
5315-01-310-6174	C-3-3	38

National Stock Number

NSN	FIGURE	ITEM
1730-01-310-6429	C-3-3	2
5340-01-311-2832	C-3-3	11
3120-01-312-0730	C-3-3	5
4320-01-332-5472	C-1-2	7
4320-01-332-5472	C-1-3	7
1730-01-333-5964	C-1-1	10
4720-01-341-2337	C-1-1	9
4720-01-341-2337	C-1-2	9
4720-01-341-2337	C-1-3	9

Part Number Index

CAGEC	PART NUMBER	NSN	FIGURE	ITEM
28510	0.19DIAX0.13		C-3-3	32
45225	10204		C-2	31
45225	10267		C-2	14
45225	10271	5330-01-292-7144	C-2	10
45225	10375		C-2	20
45225	10378		C-2	11
45255	10444		C-2	17
45225	10556		C-2	25
45225	10676	4730-01-268-4007	C-2	6
45225	10970		C-2	35
45225	12205		C-2	23
45225	12223		C-2	12
45225	12557		C-2	34
98441	129241-1	4720-00-868-5779	C-1-1	8
98441	129241-1	4720-00-868-5779	C-1-2	8
97499	140-007-17S14D5	5365-01-164-1719	C-3-2	29
45225	14874		C-2	16
45225	15085		C-2	15
33269	153-15	5330-00-869-9014	C-4-1	9
33269	153-15	5330-00-869-9014	C-4-1	15
33269	153-15	5330-00-869-9014	C-4-2	15
33269	153-15	5330-00-869-9014	C-4-3	15
33269	153-3	5330-00-442-4830	C-4-1	14
33269	153-3	5330-00-442-4830	C-4-3	14
33269	153-3	5330-00-442-4830	C-4-2	14
33269	153-4	5310-00-868-4828	C-4-2	9
33269	153-4	5310-00-868-4828	C-4-3	9
33269	154-01300	5330-00-868-5764	C-4-1	10
33269	154-01300	5330-00-868-5764	C-4-1	16
33269	154-01300	5330-00-868-5764	C-4-2	16
33269	154-01300	5330-00-868-5764	C-4-3	16
33269	154-3	5365-00-923-5114	C-4-2	10
33269	154-3	5365-00-923-5114	C-4-3	10
33269	155-1	5365-00-869-2429	C-4-1	8
33269	155-1	5365-00-869-2429	C-4-2	8
33269	155-1	5365-00-869-2429	C-4-3	8
45225	15528		C-2	33
33269	161-23		C-4-2	2
33269	161-23		C-4-3	2
33269	161-30		C-4-1	2
33269	162-27		C-4-1	1
33269	162-48		C-4-2	1
33269	162-48		C-4-3	1
33269	166-64		C-4-1	13
33269	166-64		C-4-2	13

Part Number Index

CAGEC	PART NUMBER	NSN	FIGURE	ITEM
33269	166-64		C-4-3	13
81996	1730-EG-025-1	5306-01-238-3828	C-1-2	18
81996	1730-EG-025-2	5306-01-238-3829	C-1-1	18
81996	1730-EG-025-2	5306-01-238-3829	C-1-2	19
81996	1730-EG-02501	5306-01-238-3828	C-1-3	18
81996	1730-EG-100	1730-01-133-9204	C-1-3	3
81996	1730-EG-101	1730-01-147-8581	C-1-3	12
81996	1730-EG-101-1		C-3-3	1
81996	1730-EG-101-2		C-3-3	40
81996	1730-EG-101-3		C-3-3	41
81996	1730-EG-103	5315-01-310-6174	C-3-1	22
81996	1730-EG-103	5315-01-310-6174	C-3-3	38
81996	1730-EG-107	1730-01-310-6429	C-3-3	2
81996	1730-EG-108	3120-01-312-0730	C-3-3	5
81996	1730-EG-109	1730-01-310-0412	C-3-3	3
81996	1730-EG-110	1730-00-895-9347	C-3-3	12
81996	1730-EG-111		C-3-3	9
81996	1730-EG-112	5340-01-311-2832	C-3-3	11
81996	1730-EG-114	5365-00-298-3184	C-1-3	22
81996	1730-EG-116	1630-01-153-7185	C-1-3	15
81996	1730-EG-119	4320-01-332-5472	C-1-2	7
81996	1730-EG-119	4320-01-332-5472	C-1-3	7
81996	1730-EG-120-1	4720-01-341-2337	C-1-1	9
81996	1730-EG-120-1	4720-01-341-2337	C-1-2	9
81996	1730-EG-120-1	4720-01-341-2337	C-1-3	9
1JD86	1730-UH-1001	1730-01-333-5964	C-1-1	10
97499	204--050-154-1	5315-00-895-6797	C-3-1	18
97449	204-050-157-7	1730-00-691-0552	C-3-1	1
97499	204-050-159-1	3120-00-897-5184	C-3-1	5
97499	204-050-161-1	1730-00-895-9344	C-3-1	9
97499	204-050-163-3	5315-01-016-0466	C-3-1	17
97499	204-050-164-1	5315-00-895-6799	C-3-1	19
97499	204-050-165-1	5365-00-845-2200	C-1-1	22
97499	204-050-165-1	5365-00-845-2200	C-1-2	22
97499	204-050-166-3	5365-00-898-0003	C-3-1	24
97499	204-050-167-1	5306-00-846-1655	C-3-1	6
97499	204-050-170-1	5340-00-895-9349	C-3-1	11
97499	204-050-170-1	5340-00-895-9349	C-3-2	11
97499	204-050-200-13	1730-00-895-9347	C-3-1	12
97499	204-050-200-13	1730-00-895-9347	C-3-2	12
97499	204-050-200-5	1730-00-980-9552	C-1-1	1
97499	2040050-133-1	5360-00-675-3329	C-3-1	20
97499	205-050-158-11	1730-00-066-0294	C-3-1	2
97499	205-050-158-12	1730-00-077-1766	C-3-1	3
45225	206731	5340-01-296-3658	C-2	4

Part Number Index

CAGEC	PART NUMBER	NSN	FIGURE	ITEM
97499	209-050-129-0101	4730-01-257-5769	C-3-2	27
97499	21-010B15-5-51	3120-00-179-7201	C-3-1	23
45225	211468	4820-01-299-5762	C-2	8
45225	211495	5330-01-296-2657	C-2	24
45225	211742	5315-01-297-2681	C-2	2
45225	211743	5365-01-296-2700	C-2	1
45225	211797		C-2	19
45225	212739	5330-01-296-2658	C-2	30
45225	21278-80	4820-01-297-4506	C-2	22
45225	213847		C-2	28
45225	213987		C-2	9
97499	214-050-011-101	1730-01-147-8581	C-1-2	11
97499	214-050-011-103		C-3-2	1
97499	214-050-011-5	3120-00-529-1538	C-3-2	24
97499	214-050-011-7	3120-00-537-3945	C-3-2	25
97499	214-050-011-9	3120-00-529-1555	C-3-2	26
97499	214-050-012-1	1730-01-147-8580	C-3-2	9
97499	214-050-014-001	5365-00-529-1585	C-3-2	5
97499	214-050-022-1	1730-01-147-8578	C-3-2	2
97499	214-050-022-3	1730-01-147-8579	C-3-2	3
33269	214-1	3120-01-063-5777	C-4-1	12
33269	214-1	3120-01-063-5777	C-4-2	12
33269	214-1	3120-01-063-5777	C-4-3	12
33269	214-2	3110-00-100-3137	C-4-1	11
33269	214-2	3110-00-100-3137	C-4-2	11
33269	214-2	3110-00-100-3137	C-4-3	11
97499	214-706-104-101	1730-01-133-9204	C-1-2	2
45225	215907		C-2	32
45225	21643-NP		C-2	26
30003	2842687-3	4030-01-021-6339	C-3-2	42
30003	2842687-3	4030-01-021-6339	C-3-3	42
45225	29782		C-2	18
45225	300437	4320-01-287-5348	C-2	37
81996	3040-UH1-155	3040-00-963-6853	C-1-1	6
45225	305975	5305-01-296-7763	C-2	5
45225	305993	4820-01-297-9050	C-2	7
45225	307601		C-2	27
45225	308473		C-2	36
45225	308617	4810-01-297-5037	C-2	13
0FUR2	330570	5306-00-889-3003	C-1-1	18
0FUR2	330571	5306-00-911-4180	C-1-1	19
33269	40-117A	1630-01-153-7185	C-1-2	14
33269	40-76-1	1630-00-895-9348	C-1-1	13
97499	404-050-160-1	1730-00-895-9343	C-3-1	4
45225	420094-GR12		C-2	39

Part Number Index

CAGEC	PART NUMBER	NSN	FIGURE	ITEM
45225	47139-GR12		C-2	38
45225	52711	5340-01-296-6523	C-2	29
45225	61295		C-2	21
45225	61780	4320-01-287-9662	C-1-1	4
45225	61780	4320-01-287-9662	C-1-2	4
45225	61780	4320-01-287-9662	C-1-3	4
45225	61813-GR12	5340-01-299-6751	C-2	3
73842	7.00X6	2620-00-269-7267	C-4-1	4
D2501	7.00X6-6PLY	2620-00-269-7553	C-4-1	3
09986	ALS-57	5365-01-265-9019	C-1-2	21
24434	ALS55	5365-00-368-9131	C-1-1	20
88044	AN320-20	5310-00-176-8118	C-1-1	23
88044	AN320-20	5310-00-176-8118	C-1-2	23
88044	AN320-20	5310-00-176-8118	C-1-3	23
88044	AN4-13A	5306-00-151-1421	C-4-1	5
88044	AN5-35A	5306-00-150-9237	C-4-2	5
88044	AN5-35A	5306-00-150-9237	C-4-3	5
88044	AN960-416	5310-00-141-1795	C-4-1	6
88044	AN960-416L	5310-00-167-0835	C-1-1	17
88044	AN960-416L	5310-00-167-0835	C-1-2	17
88044	AN960-416L	5310-00-167-0835	C-1-3	17
88044	AN960-516	5310-00-187-2399	C-4-2	6
88044	AN960-516	5310-00-187-2399	C-4-3	6
88044	AN960-516L	5310-00-167-0836	C-3-2	35
88044	AN960-516L	5310-00-167-0836	C-3-3	35
88044	AN960-616L	5310-00-167-0837	C-3-1	7
88044	AN960-616L	5310-00-167--837	C-3-2	7
88044	AN960-616L	5310-00-167-0837	C-3-3	7
77428	BU0953B	4320-00-866-7750	C-1-1	5
77428	BU0953B	4320-00-866-7750	C-1-2	5
13689	LWB22-5-34	5306-00-548-2543	C-3-2	6
96906	MS15001-2	4730-00-172-0001	C-3-1	16
96906	MS15001-2	4730-00-172-0001	C-3-3	16
96906	MS15001-2	4730-00-172-0001	C-3-2	16
96906	MS15001-4	4730-00-050-4207	C-3-1	13
96906	MS15001-4	4730-00-050-4207	C-3-2	13
96906	MS15001-4	4730-00-050-4207	C-3-3	13
96906	MS15002-1	4730-00-172-0010	C-3-1	15
96906	MS15002-1	4730-00-172-0010	C-3-2	15
96906	MS171598	5315-00-200-3183	C-3-1	21
96906	MS171598	5315-00-200-3183	C-3-3	39
96906	MS17984C824	5340-00-575-5740	C-3-2	17
96906	MS17984C824	5340-00-575-5740	C-3-3	17
96906	MS20004H24	5306-00-584-5141	C-3-2	28
96906	MS20822-4-4	4730-00-231-4010	C-1-1	28

Part Number Index

CAGEC	PART NUMBER	NSN	FIGURE	ITEM
28	MS20822-4-4	4730-00-231-4010	C-1-2	28
96906	MS20825-4	4730-00-277-9305	C-1-1	27
96906	MS20825-4	4730-00-277-9305	C-1-2	27
96906	MS20825-4	4730-00-277-9305	C-1-3	27
96906	MS21042L4	5310-00-807-1475	C-1-1	16
96906	MS21042L4	5310-00-807-1475	C-1-2	16
96906	MS21042L4	5310-00-807-1475	C-1-2	
96906	MS21042L5	5310-00-807-1476	C-3-2	8
96906	MS21042L6	5310-00-807-1477	C-3-1	8
96906	MS21042L6	5310-00-807-1477	C-3-3	8
96906	MS21042L6	5310-00-807-1477	C-3-2	36
96906	MS21042L6	5310-00-807-1477	C-3-3	36
96906	MS21045-4	5310-00-061-7325	C-4-1	7
96906	MS21045-5	5310-00-982-4912	C-4-2	7
96906	MS21045-5	5310-00-982-4912	C-4-3	7
96906	MS21250-05036	5306-00-097-4662	C-3-3	6
96906	MS21250-06030	5306-00-489-3503	C-3-2	37
96906	MS21250-06030	5306-00-489-3503	C-3-3	37
96906	MS242665-300	5315-00-234-1863	C-3-1	14
96906	MS24665-283	5315-00-842-3044	C-3-2	14
96906	MS24665-283	5315-00-842-3044	C-3-3	14
96906	MS24665-426	5315-00-200-4545	C-1-1	24
96906	MS24665-426	5315-00-200-4545	C-1-2	24
96906	MS24665-426	5315-00-200-4545	C-1-3	24
96906	MS26535-2	2620-00-277-5398	C-4-2	3
96906	MS26535-2	2620-00-277-5398	C-4-3	3
96906	MS35650-3254	5310-00-400-5503	C-1-3	16
96906	MS51964-55	5305-00-724-6791	C-3-1	33
96906	MS51964-55	5305-00-724-6791	C-3-2	33
96906	MS51964-55	5305-00-724-6791	C-3-3	33
96906	MS51964-94	5305-00-725-3511	C-3-1	10
96906	MS51964-94	5305-00-725-3511	C-3-2	10
96906	MS51964-94	5305-00-725-3511	C-3-3	10
96906	MS51967-2	5310-00-761-6882	C-1-1	26
96906	MS51967-2	5310-00-761-6882	C-1-2	26
96906	MS51967-2	5310-00-761-6882	C-1-3	26
96906	MS51967-2	5310-00-761-6882	C-2	41
96906	MS90725-10	5305-00-088-0509	C-1-1	25
96906	MS90725-10	5305-00-088-0509	C-1-2	25
96906	MS90725-10	5305-00-088-0509	C-1-3	25
96906	MS90725-10	5305-00-088-0509	C-2	40
80205	NAS577B4A	5310-01-232-3542	C-3-2	30
80205	NAS578-4B	5340-00-948-9787	C-3-2	31
96906	NAS77A8-070P	3120-01-309-4824	C-3-3	24
80205	NAS77A8-144		C-3-3	23

Part Number Index

CAGEC	PART NUMBER	NSN	FIGURE	ITEM
81755	SE2939-1455	4010-00-222-4482	C-3-2	34
81755	SE2939-1455	4010-00-222-4482	C-3-3	34
81348	ZZ-I-550/G5/5.70/5-8	2610-00-528-7798	C-4-2	4
81348	ZZ-I-550/G5/5.70/5-8	2610-00-528-7798	C-4-3	4

APPENDIX D
EXPENDABLE SUPPLIES AND MATERIALS LIST

D-1. SCOPE.

This appendix lists expendable/durable supplies and materials needed to operate and maintain the Ground Handling Wheels Assembly. These items are authorized by CTA 50-970, Expendable/Durable Items (Except Medical, Class V, Repair Parts, and Heraldic Items).

D-2. EXPLANATION OF COLUMNS.

a. Column (1), Item Number. This number is assigned to the entry in this listing

b. Column (2), Level. This column identifies the lowest level of maintenance that requires the listed item.

C Crew/Operator
0 Organizational Maintenance/Aviation Unit Maintenance (AVUM)
I Intermediate Maintenance/Aviation Intermediate Maintenance (AVIM)

c. Column (3), National Stock Number. This is the National Stock Number assigned to the item. Use it to request or requisition the item.

d. Column (4), Description. Indicates the Federal Item name and, if required, a description to identify the item. The last line for each Item indicates the Commercial and Government Entity (CAGE) Code in parenthesis followed by the part number.

e. Column (5), Unit of Measure (U/M). Indicates the measure used in performing the actual maintenance function. This measure is expressed by a two character alphabetical abbreviation (e. g. , ea, in, pr). If the unit of measure differs from the unit of issue, requisition the lowest unit of issue that will satisfy your requirements.

Table D-1. EXPENDABLE/DURABLE SUPPLIES AND MATERIALS LIST

(1) Item Number	(2) Level	(3) National Stock Number	(4) Description	(5) U/M
1	C,O,I	9150-00-180-6181	Hydraulic Fluid (81349) MIL-H-5606	gallon
2	O, I	2620-00-269-7553	Tire (D2501) 7.00 X 6-6PLY (used with Model 204)	
	O,1	2620-00-277-5398	Tire 18 X 5.5, Type VII, 8 PLY (96906) MS 26535-1 (used with Model 214; Model 1730	each
3	O,1	2620-00-269-7267	Tube (73842) 7.00 X 6 (used with Model 204)	
	O,1	2610-00-104-1178	Tube 18 X 5.5, Type VII, CL I each (71513) ZZ-1-550/G5/5.70/5.00-8/OFFCTR (used with Model 214; Model 1730)	
4	O,1	7920-00-205-1711	Rag, wiping 50 lb Bale (58836) A-A-531	pound
5	O,1	9150-00-231-9062	Lubricating Oil, General Purpose 5 gal can (81348) W-L-800	gallon
6	C,O,I	6850-00-264-9037	Dry Cleaning Solvent 55 gl dr (81348) P-D-680	gallon
7	O,1	9150-00-190-0907	Grease, Automotive 35 lb cn (81349) MIL-G-10924	pound
8	1	8030-00-761-1584	Tape, Teflon (81349) MIL-T-27730	roll

APPENDIX E
ILLUSTRATED LIST OF MANUFACTURED ITEMS

No manufactured items have been identified for the Ground Handling Wheels Assembly.

APPENDIX F
TORQUE LIMITS

F-1. GENERAL TORQUE INFORMATION.

The following information may be helpful, to assure proper torque on bolts and nuts.

1. Wet threads and seating area with lubricating oil before fitting nuts.

2. Screw the bolts in until they are squarely seated, using a socket wrench without handle extension or a box or ordinary wrench without making use of the leverage.

3. Pre-load the bolts by holding the handle extension so that both hands are in contact with the wrench. When using a box or ordinary wrench for pre-loading, the tip of your straight thumb holding the wrench must touch the head of the bolt.

4. Tighten the bolts according to the appropriate torquing table, if necessary in stages, in conformity with the tightening angles specified.

Table F-1. GENERAL TIGHTENING TORQUES FOR BOLTS AND NUTS

ITEM DESCRIPTION	ITEM SIZE	PART NUMBER	IN. LB.
NUT	1/4-INCH	MS21045-4	50-70
NUT	5/16-INCH	MS21045-5	100-140

F-2. SPECIFIC TORQUES.

The only specific torques required for the Ground Handling Wheels Assembly are provided for the wheel assemblies.

Table F-2. SPECIFIC TORQUE REQUIREMENTS

FIGURE NUMBER	ITEM NUMBER	ITEM DESCRIPTION	BOLT SIZE	PART NUMBER	IN. LB.
C-4-1	5	Wheel Assembly Bolts	1/4	AN4-13A	50-70
C-4-1	5	Wheel Assembly Bolts	5/16	AN5-35A	125-225

GLOSSARY

SECTION I ABBREVIATIONS

AH-1	Type of Helicopter
AVIM	Aviation Intermediate Maintenance
AVUM	Aviation Unit Maintenance
CAGEC	Commercial and Government Entity Code
CPC	Corrosion Prevention and Control
EIR	Equipment Improvement Recommendations
FSC	Federal Stock Class
GSE	Ground Support Equipment
MTOE	Modified Table of Organization and Equipment
NSN	National Stock Number
OH-58D	Type of Helicopter
PMCS.	Preventive Maintenance Checks and Services
RPSTL	Repair Parts and Special Tools List
SMR	Source, Maintenance and Recoverability
TAMMS	Army Maintenance Management System - Aviation
TBO	Time Between Overhaul
TMDE .	Test, Measurement and Diagnostic Equipment
UH-1	Type of Helicopter
UOC	Usable On Code

SECTION II. DEFINITION OF UNUSUAL TERMS

There are no definitions of unusual terms.

By Order of the Secretary of the Army:

Official-

JOEL B. HUDSON
Acting Administrative Assistant to the
Secretary of the Army
00547

DENNIS J. REIMER
General, United States Army
Chief of Staff

DISTRIBUTION:
To be distributed in accordance with DA Form 12-25-E, block no.1703, requirements for TM 1-1730-232-13&P.

RECOMMENDED CHANGES TO EQUIPMENT TECHNICAL PUBLICATIONS

SOMETHING WRONG WITH PUBLICATION

FROM: (PRINT YOUR UNIT'S COMPLETE ADDRESS)

DATE SENT

PUBLICATION NUMBER	PUBLICATION DATE	PUBLICATION TITLE

BE EXACT PIN-POINT WHERE IT IS

PAGE NO.	PARA-GRAPH	FIGURE NO.	TABLE NO.

IN THIS SPACE, TELL WHAT IS WRONG AND WHAT SHOULD BE DONE ABOUT IT.

PRINTED NAME, GRADE OR TITLE AND TELEPHONE NUMBER	SIGN HERE

TEAR ALONG PERFORATED LINE

DA FORM 1 JUL 79 2028-2

PREVIOUS EDITIONS ARE OBSOLETE.

P.S.--IF YOUR OUTFIT WANTS TO KNOW ABOUT YOUR RECOMMENDATION MAKE A CARBON COPY OF THIS AND GIVE IT TO YOUR HEADQUARTERS.

THE METRIC SYSTEM AND EQUIVALENTS

Linear Measure

1 centimeter = 10 millimeters = .39 inch
1 decimeter = 10 centimeters = 3.94 inches
1 meter = 10 decimeters = 39.37 inches
1 dekameter = 10 meters = 32.8 feet
1 hectometer = 10 dekameters = 328.08 feet
1 kilometer = 10 hectometers = 3.2808.8 feet

Weights

1 centigram = 10 milligrams = .15 grain
1 decigram = 10 centigrams = 1.54 grains
1 gram = 10 decigram = .035 ounce
1 dekagram = 10 grams = .35 ounce
1 hectogram = 10 dekagrams = 3.52 ounces
1 kilogram = 10 hectograms = 2.2 pounds
1 quintal = 100 kilograms = 220.46 pounds
1 metric ton = 10 quintals = 1.1 short tons

Cubic Measure

1 cu. centimeter = 1000 cu. millimeters = .06 cu. inch
1 cu. decimeter = 1000 cu. centimeters = 61.02 cu in.
1 cu. meter = 1000 cu. decimeters = 35.31 cu. feet

Square measure

1 sq. centimeter = 100 sq. millimeters =.155 sq. in.
1 sq. decimeter = 100 sq. centimeters = 15.5 inches
1 sq. meter (centare) = 100 sq. decimeters = 10.76 feet
1 sq. dekameter (are) = 100 sq. meters = 1.076.4 sq. ft.
1 sq. hectometer (hectare) = 100 sq. dekameters = 2.47 acres
1 sq. kilometer = 100 hectometers = .386 sq. miles

Liquid Measure

1 dekaliter = 10 liters = 2.64 gallons
1 hectoliter = 10 dekaliters = 26.42 gallons
1 kiloliter = 10 hectoliters = 264.18 gallons
1 liter = 10 deciliters = 33.81 fl. ounces
1 centiliter = 10 milliliters = .34 fl. ounce
1 deciliter = 10 centiliters = 3 38 fl. ounces
1 metric ton = 10 quintals = 1.1 short tons

Approximate Conversion Factors

To change	To	Multiply by
inches	centimeters	2.540
feet	meters	.305
yards	meters	.914
miles	kilometers	1.609
sq. inches	sq. centimeters	6.451
sq. feet	sq. meters	.093
sq. yards	sq. meters	.836
sq. miles	sq. kilometers	2.590
acres	sq. hectometers	.405
cubic feet	cubic meters	.028
cubic yards	cubic meters	.765
fluid ounces	milliliters	29.573
pints	liters	.472
quarts	liters	.946
gallons	liters	3.785
ounces	grams	28.349
pounds	kilograms	.454
short tons	metric tons	.907
pound inches	newton-meters	.11296

To change	To	Multiply by
ounce inches	newton-meters	.0070062
centimeters	inches	.394
meters	feet	3.280
meters	yards	1.094
kilometers	miles	.621
sq. centimeters	sq. inches	.155
sq. meters	sq. yards	10.764
sq. kilometers	sq. miles	1.196
sq. hectometers	acres	2.471
cubic meters	cubic feet	35.315
milliliters	fluid ounces	.034
liters	pints	2.113
liters	quarts	1.057
grams	ounces	.035
kilograms	pounds	2.205
metric tons	short tons	1.102
pound-feet	newton-meters	1.356

Temperature (Exact)

°F Fahrenheit temperature — 5/9 (after subtracting 32) — Celsius Temperature °C