TECHNICAL MANUAL **TM 55-1905-223-24P-1**

UNIT AND INTERMEDIATE DIRECT AND GENERAL SUPPORT MAINTENANCE REPAIR PARTS AND SPECIAL TOOLS LIST

FOR

LANDING CRAFT UTILITY
(LCU 2000)
(NSN 1905-01-154-1191)

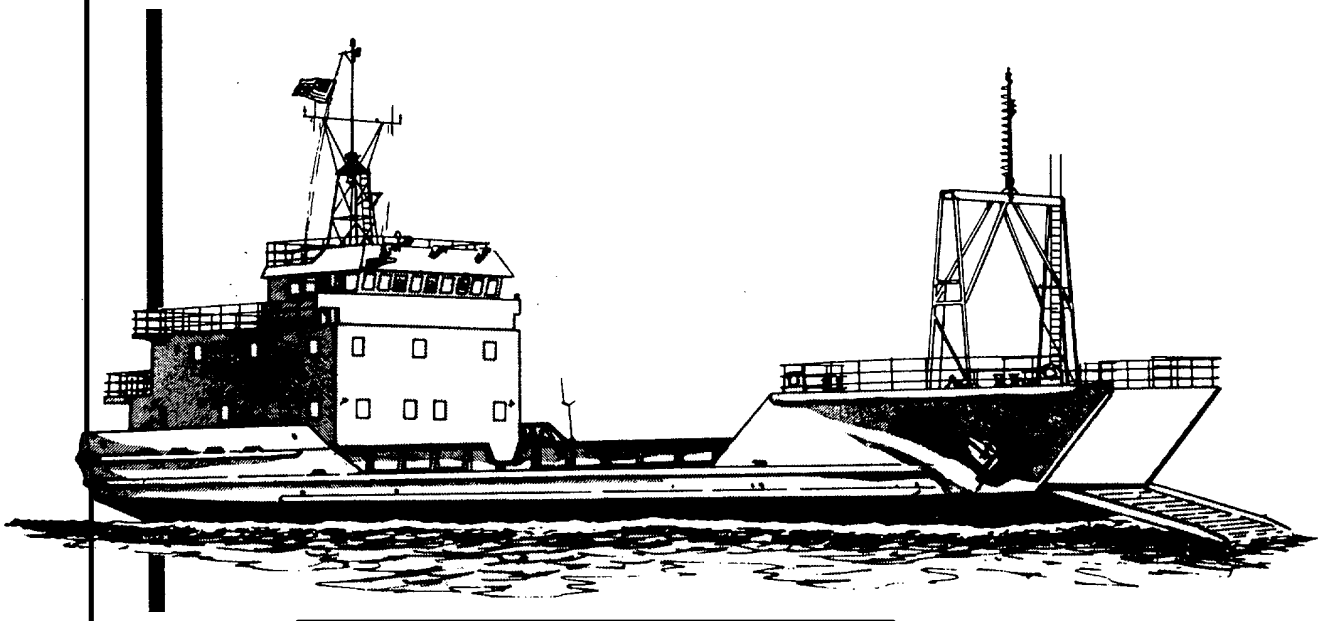

This copy is a reprint which includes current pages from Change 1.

Approved for public release; distribution is unlimited.

HEADQUARTERS, DEPARTMENT OF THE ARMY

10 OCTOBER 1989

CHANGE

NO. 1

HEADQUARTERS
DEPARTMENT OF THE ARMY
WASHINGTON, D.C., 3 JULY 1992

Unit and Intermediate Direct and General Support
Maintenance Repair Parts and Special Tools List

LANDING CRAFT UTILITY
(LCU 2000)
(NSN 1905-01-154-1191)

Approved for public release; distribution is unlimited

TM 55-1905-223-24P-1, 10 October 1989, is changed as follows:

1. Remove and insert pages as indicated below. New or changed text material is indicated by a vertical bar in the margin. An illustration change is indicated by a miniature pointing hand.

Remove pages	Insert pages
7-1 and fig 8	7-1 and fig 8
8-1 and fig 9	8-1 and fig 9
11-1 and 11-2	11-1 and 11-2
14-1	14-1
I-61 and I-62	I-61 and I-62
I-75 and I-76	I-75 and I-76
I-83 and I-84	I-83 and I-84
I-109 and I-110	I-109 and I-110
I-113 and I-114	I-113 and I-114

2. Retain this sheet in front of manual for reference purposes.

By Order of the Secretary of the Army:

GORDON R. SULLIVAN
General, United States Army
Chief of Staff

Official:

MILTON H. HAMILTON
Administrative Assistant to the
Secretary of the Army
01876

DISTRIBUTION:
To be distributed in accordance with DA Form 12-25E, qty rqr block no. 4424.

HEADQUARTERS
DEPARTMENT OF THE ARMY
WASHINGTON, D.C., 10 October 1989

UNIT AND INTERMEDIATE DIRECT AND GENERAL SUPPORT MAINTENANCE REPAIR PARTS AND SPECIAL TOOLS LIST FOR LANDING CRAFT UTILITY (LCU 2000) (NSN 1905-01-154-1191)

(CURRENT AS OF 20 MARCH 1989)

NOTE: This manual is printed in four volumes as follows:
TM 55-1905-223-24P-1, consisting of Table of Contents, Section I Section II (Functional Groups 01 thru 07), and Section IV.
TM 55-1905-223-24P-2, consisting of Table of Contents, Section II (Functional Groups 08 thru 17), and Section IV.
TM 55-1905-223-24P-3, consisting of Table of Contents, Section II (Functional Group 1801 thru 1811), and Section IV.
TM 55-1905-223-24P-4, consisting of Table of Contents, Section II (Functional Groups 1812 thru 1820), Section III and Section IV.
The Table of Contents and Section I are applicable to the -1 thru -4.

REPORTING ERRORS AND RECOMMENDING IMPROVEMENTS

You can help improve this manual. If you find any mistake or if you know of a way to improve the procedures, please let us know. Mail your letter. DA Form 2028 (Recommended Changes to Publications and Blank Forms), or DA Form 2028-2 located in the back of this manual direct to: Commander, U.S. Army Troop Support Command, ATTN: AMSTR-MCTS. 4300 Goodfellow Boulevard. St. Louis, MO 63120-1798. A reply will be furnished directly to you.

Approved for public release; distribution is unlimited.

TABLE OF CONTENTS

			ILLUSTRATIONS PAGE	FIGURE
Section	I	INTRODUCTION	1	
Section	II	REPAIR PARTS LIST		
Group	00	Landing Craft Utility		
Group	01	Main Propulsion Engine	1-1	1
0101		Engine Air Starter Assembly	2-1	2
0102		Instrument Panel Group	3-1	3
0103		Water Filter Group	4-1	4
010301		Water Filter Head	4-1	4
0104		Thermostat Housing/Water Transfer Tube Group	5-1	5
0105		Air Cleaner Group	6-1	6
0106		Turbocharger Group	7-1	7
0107		Fuel Filter Group	8-1	8
010701		Fuel Filter Assembly	8-1	8

TABLE OF CONTENTS - Continued

0108	Sump Pump Group	9-1	9
0109	Water Pump Group	10-1	10
010901	Engine Cooling System Pump	10-1	10
010902	Engine Accessory Bracket	10-2	10
0110	Lubricating Oil Filter Group	11-1	11
0110	Lubricating Oil Bypass Filter Group	12-1	12
011101	Lube Oil Bypass Filter Assembly	12-1	12
01110101	Fluid Filter Head	12-1	12
0112	Cold Starting Aid Group	13-1	13
0113	Shut Down Valve Group	14-1	14
011301	Shut Down Valve Assembly	14-1	14
0114	Fuel Pump Group	15-1	15
011401	Cam Actuated Fuel Pump	15-1	15
0115	Rocker Housing Cover/Rocker Lever Housing Group	16-1	16
0116	Injector Group	17-1	17
0117	Air Intake Manifold Group	18-1	18
0118	Lubricating Oil Cooler Group	19-1	19
0119	Exhaust Manifold Group	20-1	20
0120	Cylinder Head Group	21-1	21
012001	Diesel Engine Cylinder Head	21-1	21
0121	Fuel Manifold Group	22-1	22
0122	Handhole Cover Group	23-1	23
0123	Cam Follower and Housing Group	24-1	24
012301	Needle Bearing Cam Follower	24-1	24
012302	Remote Control Lever	24-1	24
012303	Straight Shaft	24-1	24
0124	Vibration Damper/Bearings/Crankshaft Group	25-1	25
012401	Crankshaft Assembly	25-1	25
0125	Engine Support Group	26-1	26
0126	Pulley Shields and Front Gear Housing Group	27-1	27
0127	Oil Pan and Adapter Group	28-1	28
0128	Lubricating Oil Pump Group	29-1	29
012801	Engine Oil Pump Assembly	29-2	29
0129	Camshaft and Gear Group	30-1	30
0130	Connecting Rod and Piston Group	31-1	31
013001	Connecting Rod Assembly	31-1	31
013002	Internal Combustion Engine Piston	31-1	31
0131	Flywheel Housing Group	32-1	32
013101	Flywheel and Ring Gear Assembly	32-1	32
013102	Barring Mechanism Assembly	32-1	32
0132	Cylinder Block Assembly	33-1	33
013201	Fluid Pressure Regulating Valve	33-2	33
0133	Fresh Water Expansion Tank Group	34-1	34
Group 02	Main Reduction Gear	35-1	35
0201	External Hardware Parts	36-1	36
020101	Non-Metallic Hose Assembly	37-1	37

TABLE OF CONTENTS - Continued

0202	Fluid Transmission Cooler	38-1	38
0203	Double Changeover Filter	39-1	39
0204	Control Valve	40-1	40
0205	Torsional Coupling	41-1	41
0206	External Input/Intermediate Shaft Parts	42-1	42
0207	Housing/Input Shaft Group	43-1	43
020701	Housing Assembly	43-1	43
020702	Input Shaft Assembly	43-2	43
0208	Intermediate Shaft Parts	44-1	44
0209	Output Shaft Parts	45-1	45
Group 03	Ship Service Generator Set	46-1	46
0301	Generator Assembly	47-1	47
0302	Diesel Engine Assembly	48-1	48
030201	Engine Starter - Air	49-1	49
030202	Electric Starting Motor/Magnetic Switch Group	50-1	50
030203	Instrument Panel Assembly	51-1	51
03020301	Terminal Board	51-2	51
030204	Water Filter Assembly	52-1	52
030205	Thermostat Housing Group	53-1	53
030206	Air Cleaner Group	54-1	54
030207	Turbocharger and Exhaust Group	55-1	55
030208	Fuel Filter Group	56-1	56
030209	Sump Pump Group	57-1	57
030210	Water Pump and Idler Group	58-1	58
03021001	Belt-Chain Tension Adjusting Device	58-1	58
03021002	Engine Cooling System Pump	58-2	58
030211	Lubricating Oil Cooler/Filter Group	59-1	59
03021101	Lubricating Oil Cooler Assembly	59-1	59
0302110101	Transmission Fluid Cooler	59-2	59
030212	Lubricating Oil Bypass Filter Group	60-1	60
030213	Coolant Heater Group	61-1	61
030214	Metering and Distributing Fuel Pump Assembly	62-1	62
03021401	Fluid Pressure Dampener	62-5	62
03021402	Fuel Pump Gear Assembly	62-5	62
03021403	Shutoff Valve Assembly	62-6	62
030215	Fuel Tubing Group	63-1	63
030216	Rocker Lever Housing Group	64-1	64
03021601	Rocker Lever Housing	64-2	64
0302160101	Engine Poppet Valve Rocker Arm	64-2	64
0302160102	Engine Poppet Valve Rocker Arm	64-2	64
0302160103	Injector Rocker Lever	64-2	64
030217	Injector Group	65-1	65
030218	Aftercooler Group	66-1	66
030219	Exhaust Manifold Group	67-1	67
030220	Cylinder Head Group	68-1	68
03022001	Diesel Engine Cylinder Head	68-1	68
03022002	Crosshead Valve Assembly	68-2	68

TABLE OF CONTENTS - Continued

030221	Cam Follower Housing Group	69-1	69
03022101	Cam Follower Housing	69-1	69
0302210101	Engine Poppet Valve Rocker Arm	69-1	69
0302210102	Engine Poppet Valve Rocker Arm	69-1	69
030222	Accessory Drive and Pulley Group	70-1	70
03022201	Flat Pulley Assembly	70-1	70
03022202	Transmission Power Take Off	70-1	70
0302220201	Constant Speed Mechanical Drive	70-1	70
030223	Gear Cover and Support Group	71-1	71
03022301	Gear Cover	71-1	71
030224	Oil Pan Group	72-1	72
030225	Engine Oil Pump Assembly	73-1	73
030226	Camshaft and Gear Group	74-1	74
03022601	Camshaft	74-1	74
030227	Connecting Rod and Piston Group	75-1	75
03022701	Piston Connecting Rod	75-1	75
03022702	Internal Combustion Engine Piston	75-1	75
030228	Flywheel and Housing Group	76-1	76
03022801	Engine Flywheel Assembly	76-1	76
030229	Crankshaft Group	77-1	77
030230	Cylinder Block Group	78-1	78
03023001	Diesel Engine Block	78-1	78
0302300101	Piston Cooling Nozzle Assembly	78-2	78
0303	Sub-Base Group	79-1	79
Group 04	Emergency Generator Set	80-1	80
0401	Control Housing Assembly	81-1	81
0402	Instrument Panel Assembly	82-1	82
040201	Resistor Assembly	82-1	82
040202	Door Assembly	82-2	82
040203	Door Assembly	82-2	82
040204	Resistor Assembly	82-3	82
0403	Electric Governor Assembly	83-1	83
0404	Generator Heater Assembly	84-1	84
040401	Cable Assembly	84-1	84
0405	Overspeed Assembly	85-1	85
0406	Radiator Assembly	86-1	86
0407	Generator Assembly	87-1	87
0408	Diesel Engine	88-1	88
040801	Starting Motor Group	89-1	89
040802	Alternating Mounting Group	90-1	90
040803	Alternator Support Group	91-1	91
040804	Alternator Group	92-1	92
040805	Thermostat and Housing Group	93-1	93
040805	Water Inlet Connection Group	94-1	94
040806	Water Inlet Connection Group	94-1	94
040807	Air Cleaner Assembly	95-1	95
040808	Turbocharger Group	96-1	96
040809	Exhaust Connection Group	97-1	97
040810	Fan Drive Group	98-1	98
040811	Fuel Filter Group	99-1	99

TABLE OF CONTENTS - Continued

040812	Fuel Plumbing Group	100-1	100
040813	Fuel System Accessory Group	101-1	101
040814	Metering and Distributing Fuel Pump Assembly	102-1	102
040815	Fuel Pump Coupling Group	103-1	103
040816	Sump Pump Assembly	104-1	104
040817	Water Pump Group	105-1	105
040818	Lubricating Oil Cooler Group	106-1	106
040819	Valve Cover Group	107-1	107
040820	Rocker Lever Group	108-1	108
040821	Fuel Injector Group	109-1	109
040822	Cylinder Head Group	110-1	110
04082201	Diesel Cylinder Head	110-1	110
040823	Cam Follower Cover Group	111-1	111
040824	Front Gear Cover Group	112-1	112
040825	Oil Pan Group	113-1	113
040826	Lubricating Oil Pump Group	114-1	114
040827	Camshaft and Gear Group	115-1	115
040828	Connecting Rod and Piston Group	116-1	116
040829	Flywheel Housing Group	117-1	117
040830	Flywheel Group	118-1	118
04083001	Engine Flywheel	118-2	118
040831	Crankshaft and Main Bearing Group	119-1	119
04083101	Crankshaft	119-1	119
040832	Cylinder Block Group	120-1	120
0409	Chassis Assembly	121-1	121
Group 05	Bow Thruster Engine	122-1	122
0501	Starting Motor/Magnetic Switch Group	123-1	123
0502	Instrument Panel Group	124-1	124
0503	Water Filter Group	125-1	125
050301	Water Filter Assembly	125-1	125
0504	Thermostat Housing Group	126-1	126
0505	Air Cleaner Group	127-1	127
050501	Air Cleaner	127-1	127
0506	Turbocharger Group	128-1	128
0507	Fuel Filter Group	129-1	129
0508	Sump Pump Group	130-1	130
0509	Water Pump and Idler/Belt Guard Group	131-1	131
050901	Belt-Chain Tension Adjusting Device	131-1	131
050902	Engine Cooling System Pump	131-2	131
0510	Lubricating Oil Cooler/Filter Group	132-1	132
051001	Oil Cooler Assembly	132-2	132
05100101	Industrial Fluid Cooler	132-3	132
0511	Lubricating Oil Bypass Filter Group	133-1	133
0512	Coolant Heater Group	134-1	134
0513	Fuel Tubing, Shutdown Valve and Fuel Pump Group	135-1	135
051301	Solenoid Valve	135-2	135
051302	Metering and Distributing Fuel Pump	135-3	135

TABLE OF CONTENTS - Continued

0514	Rocker Lever Housing/Cover Group	136-1	136
051401	Rocker Lever Housing	136-1	136
05140101	Engine Poppet Valve Rocker Arm	136-2	136
05140102	Injector Rocker Lever	136-2	136
05140103	Engine Poppet Valve Rocker Arm	136-2	136
0515	Injector Group	137-1	137
0516	Expansion Tank Group	138-1	138
0517	Seawater Pump/Belt Guard Group	139-1	139
051701	Engine Cooling System Pump	139-2	139
0518	Heat Exchanger Group	140-1	140
051801	Heat Exchanger	140-2	140
0519	Air Intake Manifold Group	141-1	141
0520	Exhaust Manifold Group	142-1	142
0521	Cylinder Head Group	143-1	143
052101	Crossover Valve	143-1	143
052102	Diesel Engine Cylinder Head	143-1	143
0522	Cam Follower Housing Group	144-1	144
052201	Cam Follower Housing	144-1	144
052202	Engine Poppet Valve Rocker Arm	144-1	144
052203	Engine Poppet Valve Rocker Arm	144-1	144
0523	Accessory Drive and Pulley Group	145-1	145
052301	Transmission Power Takeoff	145-1	145
0524	Gear Cover Group	146-1	146
052401	Gear Cover	146-1	146
0525	Power Take-Off Assembly	147-1	147
052501	Nonmetallic Hose Assembly	147-1	147
052502	Collar Assembly	147-2	147
0526	Clutch Assembly - Friction	148-1	148
052601	Nonmetallic Hose Assembly	148-1	148
052602	Clutch Assembly	148-1	148
05260201	Sleeve Assembly	148-2	148
0526020101	Shaft Collar Assembly	148-2	148
0527	Oil Pan Group	149-1	149
0528	Lubricating Oil Pump Group	150-1	150
052801	Oil Lubricating Pump	150-1	150
05280101	Hydraulic Drive Housing	150-1	150
05280102	Spur Gear	150-1	150
05280103	Lube Oil Pump Body	150-1	150
0529	Camshaft Group	151-1	151
052901	Camshaft	151-1	151
0530	Connecting Rod and Piston Group	152-1	152
053001	Piston Connecting Rod Assembly	152-1	152
053002	Engine Piston Set	152-2	152
0531	Flywheel and Flywheel Housing Group	153-1	153
053101	Engine Flywheel	153-1	153
0532	Crankshaft Group	154-1	154
0533	Cylinder Block Group	155-1	155
053301	Piston Cooling Nozzle	155-1	155
053302	Diesel Engine Cylinder Block	155-1	155
0534	Bow Thruster Subbase Group	156-1	156

TABLE OF CONTENTS - Continued

Group 06	SPJ 55 Bow Thruster Waterjet	157-1	157
0601	Pump Assembly Complete	158-1	158
060101	Vane Pump	158-1	158
060102	Alternating Current Motor	158-1	158
0602	Oil Tank Assembly	159-1	159
0603	Hydraulic Aggregate	160-1	160
060301	Hydraulic Aggregate Base Assembly	161-1	161
060302	Return Oil Filter Assembly	162-1	162
0604	Feedback Unit	163-1	163
060401	Rudder Angle Transmitter	163-1	163
0605	Steering Gear Assembly (Right)	164-1	164
0606	Steering Gear Assembly (Left)	164-1	164
0607	Steering Assembly	165-1	165
060701	Hy-Motor	165-1	165
060702	Brake	165-1	165
0608	Upper Gear Assembly	166-1	166
060801	Flange Assembly	166-1	166
060802	Cover Assembly	166-1	166
0609	Water Jet Assembly	167-1	167
060901	Adjusting Device	167-1	167
0610	Oil Evacuation Pump	168-1	168
0611	Drive Shaft	169-1	169
0612	Waterjet Plumbing	170-1	170
Group 07	Reverse Osmosis Water Maker Assembly - Model PW800	171-1	171
0701	Sediment Strainer Assembly	172-1	172
0702	Micron Filter Assembly	173-1	173
0703	Air/Oil Separator Assembly	174-1	174
0704	Low Pressure Pump Assembly	175-1	175
0705	Motor and Pump Assembly	176-1	176
070501	High Pressure Hose Assembly	176-1	176
070502	Alternating Current Motor	176-2	176
070503	Axial Pistons Pump	176-2	176
0706	Magnetic Starter Assembly	177-1	177
0707	Dash Panel Assembly	178-1	178
070701	Water Quality Monitor Assembly	178-2	178
070702	Product Flowmeter Assembly	178-2	178
070703	Brine Flowmeter Assembly	178-2	178
070704	High Pressure Regulator Assembly	178-3	178
0708	Solenoid Valve Assembly	179-1	179
070801	Solenoid Valve	179-1	179
0709	Brine Manifold Assembly	180-1	180
0710	Cleaning Valve Assembly	181-1	181
0711	Pressure Vessel Assembly	182-1	182
0712	Louvered Panel Assembly	183-1	183
0713	Main Frame Assembly	184-1	184
Group 08	Air Compressor Assembly	185-1	185
0801	Alternating Current Motor	186-1	186
0802	Hydraulic Underloader Assembly	187-1	187

TABLE OF CONTENTS - Continued

0803	Cylinder Block and Head Assembly	188-1	188
080301	Cylinder Head Assembly	188-2	188
08030102	Valve Assembly	188-3	188
08030103	Valve Assembly Compressor	188-3	188
08030104	Valve Assembly Compressor	188-4	188
08030105	Unloader Assembly	188-4	188
08030106	Valve Assembly	188-5	188
0804	Connecting Rod and Low Pressure Piston Assembly	189-1	189
080401	Connecting Rod Assembly	189-1	189
0805	Connecting Rod and High Pressure Piston Assembly	190-1	190
080501	Connecting Rod Assembly	190-1	190
0806	Bearing Carrier Group	191-1	191
080601	Bearing Carrier Assembly	191-1	191
080602	Bearing Carrier	191-2	191
0807	Crankshaft Group	192-1	192
080701	Pulley Assembly	192-1	192
080702	Crankshaft Assembly	192-1	192
0808	Crankcase Assembly	193-1	193
080801	Gauge Rod-Cap Liquid Level	193-1	193
Group 09	Steering Gear System	194-1	194
0901	Follow Up Unit	195-1	195
0902	Hydraulic Cylinder Assembly	196-1	196
0903	Jockey Bar Assembly	197-1	197
0904	Tiller Arm Assembly	198-1	198
0905	Rudder Assembly	199-1	199
0906	Helm Pump	200-1	200
0907	Header Tank	201-1	201
0908	Twin Pump Assembly	202-1	202
090801	Electric Motor	202-3	202
090802	Hydraulic Pump Assembly	203-1	203
090803	Uniblock 2A Assembly	204-1	204
09080301	Coil Assembly	204-1	204
090804	Inlet Filter Assembly	205-1	205
0909	Relief Bypass and Shut-Off Valve	206-1	206
090901	Cartridge Relief	206-1	206
Group 10	Bow Ramp Assembly	207-1	207
1001	Hydraulic Power Pack Assembly	208-1	208
100101	Electric Motor	209-1	209
100102	Piston Pump Assembly	210-1	210
100103	Directional Control Valve	211-1	211
100104	Modular Relief/Crossport Relief Valve	212-1	212
1002	Hydraulic System Accessories Manifold	213-1	213
1003	Hydraulic Winch Assembly	214-1	214
100301	Hydraulic Hand Pump	215-1	215
100302	Emergency Hand Crank	216-1	216
100303	Hydraulic Motor	217-1	217
100304	Failsafe Hydraulic Brake	218-1	218
100305	Gear Reducer Assembly	219-1	219
10030501	Planet Carrier	219-1	219

TABLE OF CONTENTS - Continued

100306	Bow Ramp Winch	220-1	220
1004	Bow Ramp Lifting Assembly	221-1	221
100401	Pulley Sheave Assembly	222-1	222
100402	Wildcat Foundation Assembly	223-1	223
10040201	Chain Stopper Assembly	223-1	223
10040202	Wildcat Sheave Assembly	223-1	223
10040203	Locking Assembly	223-2	223
100403	Bow Ramp Hinge Assembly	224-1	224
100404	Bow Ramp Sealing	225-1	225
100405	Turnbuckle Assembly	226-1	226
100406	Gland Assembly	226-1	226
Group 11	Marine Sanitation System	227-1	227
1101	Sewage Treatment Unit Assembly	228-1	228
110101	End-Sediment Tank Cover Assembly	229-1	229
110102	Mid-Sediment Tank Cover Assembly	230-1	230
110103	Screen Assembly	231-1	231
110104	Impact Sprinkler	232-1	232
110105	Sewage Treatment Unit Sub-Assembly	233-1	233
110106	Control Module Assembly	234-1	234
110107	Cable Equipment Routing Assembly	235-1	235
110108	Level Sensor Assembly	236-1	236
110109	Discharge Pump System	237-1	237
110110	Flow Pump System	238-1	238
110111	Sludge Pump System	239-1	239
110112	Macerator Assembly	240-1	240
11011201	Motor Assembly	240-2	240
110113	Marine Sanitation System Piping	241-1	241
110114	Bleach Tank Assembly	242-1	242
110115	Commode Warning Light Assembly	243-1	243
Group 12	Fire Pump Subsystem		
1201	Auxiliary Fire Pump Assembly	244-1	244
120101	Flexible Coupling Assembly	244-2	244
1202	Centrifugal Pump Unit	245-1	245
120201	Alternating Current Motor	246-1	246
120202	Centrifugal Pump	247-1	247
Group 13	Bilge/Ballast Pump Assembly	248-1	248
1301	Alternating Current Motor	249-1	249
1302	Centrifugal Pump	250-1	250
Group 14	Gyro and Magnetic Compass System	251-1	251
1401	Mk 27 Mod 1 Gyrocompass	252-1	252
140101	Gyro Compass	252-1	252
140102	Gyro Control and Power Assembly	252-1	252
140103	Switching Unit	252-1	252
1402	Relay Transmitter Mk 37 Mod E	252-1	252
1403	Open Scale Repeater	252-1	252
1404	Bearing Repeater	252-1	252
1405	Bulkhead Mounting Bracket	252-1	252
1406	Pelorus Stand	252-2	252
1407	Power Converter	252-2	252

TABLE OF CONTENTS - Continued

1408	Power Transfer Unit	252-2	252
1409	Binnacle and Compass Assembly	253-1	253
Group 15	Bow Anchor Windlass Subsystem	254-1	254
1501	Bow Anchor Windlass Assembly	255-1	255
150101	Hydraulic Valve Assembly	256-1	256
150102	Failsafe Brake Assembly	257-1	257
150103	Hydraulic Motor Assembly	258-1	258
150104	Gear Reducer Assembly	259-1	259
1502	Hydraulic Power Pack Assembly	260-1	260
150201	Alternating Current Motor	261-1	261
150202	Hydraulic Pump	262-1	262
15020201	Pump Shaft	262-1	262
150203	Directional Control Valve	263-1	263
Group 16	Stern Anchor Winch Subsystem	264-1	264
1601	Stern Anchor Winch Assembly	265-1	265
160101	Hydraulic Valve Assembly	266-1	266
160102	Hydraulic Motor Assembly	267-1	267
160103	Failsafe Brake Assembly	268-1	268
160104	Gear Reducer Assembly	269-1	269
1602	Hydraulic Power Pack Assembly	270-1	270
160201	Alternating Current Motor	271-1	271
160202	Hydraulic Pump Assembly	272-1	272
16020201	Pump Shaft	272-1	272
160203	Directional Control Valve	273-1	273
Group 17	Environmental Control Subsystems	274-1	274
1701	Duct Heater # DH 1	275-1	275
1702	Duct Heater # DH 2	276-1	276
1703	Duct Heater # DH 3	277-1	277
1704	Duct Heater # DH 4	278-1	278
1705	Duct Heater # DH 5	279-1	279
1706	Duct Heater # DH 6	280-1	280
1707	Duct Heater # DH 7	281-1	281
1708	Duct Heater # DH 8	282-1	282
1709	Duct Heater # DH 9	283-1	283
1710	Duct Heater # DH 10	284-1	284
1711	Duct Heater # DH 11	285-1	285
1712	Duct Heater # DH 12	286-1	286
1713	Duct Heater # DH 12A	287-1	287
1714	Duct Heater # DH 13	288-1	288
1715	Duct Heater # DH 14	289-1	289
1716	Duct Heater # DH 15	290-1	290
1717	Duct Heater # DH 16	291-1	291
1718	Duct Heater # DH 17	292-1	292
1719	Unit Heater # UH 1 & 2	293-1	293
1720	Unit Heater # UH 4 & 10	294-1	294
1721	Unit Heater # UH 9 & 11	295-1	295
1722	Unit Heater # UH 3 & 5	296-1	296
1723	Unit Heater # UH 6	297-1	297
1724	Unit Heater # UH 7	298-1	298
1725	Unit Heater # UH 8 & 8A	299-1	299

TABLE OF CONTENTS - Continued

1726	Convection Heater # CH 1	300-1	300
1727	Convection Heater # 2, 3, 4	301-1	301
1728	Ventilating Fan # EF 1 & 2	302-1	302
172801	Ventilating Fan Motor # EF 1 & 2	302-1	302
1729	Ventilating Fan # SF 1 & 2	303-2	303
172901	Ventilating Fan Motor # SF 1 & 2	303-2	303
1730	Ventilating Fan # SF 3	304-1	304
173001	Ventilating Fan Motor # SF 4	304-1	304
1731	Ventilating Fan # SF 4	305-1	305
173101	Ventilating Fan Motor # SF 4	305-2	305
1732	Ventilating Fan # SF 5	306-1	306
173201	Ventilating Fan Motor # SF 5	306-1	306
1733	Ventilating Fan # SF 6	307-1	307
173301	Ventilating Fan Motor # SF 6	307-2	307
1734	Ventilating Fan # EF 3	308-1	308
173401	Ventilating Fan Motor # EF 3	308-1	308
1735	Ventilating Fan #EF 4	309-1	309
173501	Ventilating Fan Motor # EF 4	309-1	309
1736	Ventilating Fan #EF 6	310-1	310
173601	Ventilating Fan Motor # EF 6	310-1	310
1737	ventilating Fan #EF 7	311-1	311
173701	Ventilating Fan Motor # EF 7	311-1	311
1738	Air Conditioner Unit # AC 1	312-1	312
1739	Air Conditioner Assembly # AC 2	313-1	313
173901	Air Conditioner Motor # AC 2	313-1	313
173902	Air Conditioner Blower # AC 2	313-1	313
173903	Liquid Refrigerant Receiver # AC 2	313-1	313
173904	Refrigerating Water Cooled Condenser	314-1	314
173905	Refrigeration Compressor	315-1	315
1740	Air Conditioner Unit # AC 3	316-1	316
Group 18	Basic Craft	317	317
Group 1801	Halon System	318	318
180101	Halon Subsystem-Paint Locker	319	319
180102	Halon Subsystem-Machinery Room	320	320
Group 1802	Furniture/Fixtures Group	321-1	321
Group 1803	Entertainment System	322-1	322
1801	Antenna, OMNI Directional Television	323-1	323
Group 1804	Purifiers and Separators	324-1	324
180401	Lube Oil Purifier	325-1	325
18040101	Alternating Current Motor	326-1	326
18040102	Pump Connection Assembly	327-1	327
18040103	Double Gear Pump	328-1	328
18040104	Hood Assembly	329-1	329
18040105	Bowl Assembly	330-1	330
18040106	Vertical Gear Assembly	331-1	331
18040107	Horizontal Gear Assembly	332-1	332
18040108	Frame Assembly	333-1	333
18040109	Circulation Heater	334-1	334
18040110	Sediment Strainer	335-1	335

TABLE OF CONTENTS - Continued

18040111	Pressure Switch Assembly	336-1	336
180402	Diesel Fuel Oil Filter/Separator	337-1	337
180403	Oil/Water Separator	338-1	338
18040301	Motor Control Box Assembly	339-1	339
18040302	Gage Panel Assembly	340-1	340
18040303	Control Module Assembly	341-1	341
18040304	Vessel Subassembly (1st Stage)	342-1	342
18040305	Plate Assembly	343-1	343
18040306	Vessel Subassembly (3rd Stage)	344-1	344
18040307	Vessel Subassembly (2nd Stage)	345-1	345
18040308	Oil Pump/Motor Assembly	346-1	346
18040309	Water Pump/Motor Assembly	347-1	347
18040310	Sensing Module Assembly	348-1	348
Group 1805	Sound Powered Telephone System	349-1	349
180501	Sound Powered Telephone SER (MOD)-19	350-1	350
180502	Sound Powered Telephone SELR (MOD)-19	351-1	351
180503	Sound Powered Telephone SER (MOD)-8	352-1	352
180504	Sound Powered Telephone SELR(MOD)-8	353-1	353
180505	Sound Powered Telephone MWT-R-19	354-1	354
180506	Sound Powered Telephone MWT-R-8	355-1	355
180507	Sound Powered Telephone SFLR (MOD)-19	356-1	356
Group 1806	Tank Level Indicator System		
180601	Level Sight Indicator	357-1	357
180602	Level Sight Indicator	358-1	358
180603	Level Sight Indicator	359-1	359
180604	Level Sight Indicator	360-1	360
180605	Float Switch Assembly	361-1	361
180606	Float Switch Assembly	362-1	362
180607	Float Switch Assembly	363-1	363
180608	Float Switch Assembly	364-1	364
180609	Float Switch Assembly	365-1	365
180610	Float Switch Assembly	366-1	366
180611	Float Switch Assembly	367-1	367
180612	Receiver Module	368-1	368
180613	Receiver Module	369-1	369
180614	Receiver Module	370-1	370
Group 1807	Navigation Signal and Searchlights		
180701	Marine Navigation Light (Forward)	371-1	371
180702	Marine Navigation Light (Forward)	372-1	372
180703	Marine Navigation Light (Aft)	373-1	373
180704	Marine Navigation Light	374-1	374
180705	Marine Navigation Light	375-1	375
180706	Marine Navigation Light (Green)	376-1	376
180707	Marine Navigation Light (Red)	377-1	377
180708	Marine Navigation Light (Aft)	378-1	378
180709	Marine Navigation Light	379-1	379
180710	Blinker Light	380-1	380
180711	Indicator Panel	381-1	381
180712	Searchlight	382-1	382
18071201	Drum Assembly	383-1	383

TABLE OF CONTENTS - Continued

18071202	Starter Assembly	384-1	384
18071203	Power Supply	385-1	385
18071204	Manual Lever Control	386-1	386
18071205	Level Gear Assembly	387-1	387
18071206	Control Station	388-1	388
180713	Electrical Horn and Controls	389-1	389
18071301	Electrical Horn	390-1	390
18071302	Power Supply	391-1	391
18071303	Sequential Timer	392-1	392
18071304	Rotary Switch	393-1	393
18071305	Oscillator Unit	394-1	394
180714	Ships Bell	395-1	395
180715	Fog Gong	395-1	395
Group 1808	Machinery Ship Equipment		
180801	Machine, Electric Welding	396-1	396
18080101	S.C.R. Assembly	396-1	396
18080102	High Frequency Assembly	396-2	396
18080103	Electronic Module Assembly	396-2	396
1808010301	Interface Board Assembly	396-3	396
Group 1809	Commissary and Laundry Vent Hood	397-1	397
	Electric Fry Kettle	398-1	398
	Bakers Scale	399-1	399
	Microwave Oven	400-1	400
	Can Opener, Electric	401-1	401
	Toaster, Electronic	402-1	402
	Coffee Maker, Percolator	403-1	403
	Coffee Maker	404-1	404
	Beverage Dispenser	405-1	405
	Milk Dispenser	406-1	406
	Electric Food Mixer Accessories	407-1	407
180901	Electric Range Assembly	408-1	408
180902	Griddle, Self-Heating	409-1	409
180903	Electric Food Mixing Machine	410-1	410
18090301	Transmission, Mechanical	410-2	410
1809030101	Intermediate Shaft Assembly	410-4	410
1809030102	Sun Shaft Group	410-5	410
1809030103	Shifter Yoke Assembly	410-6	410
1809030104	Pinion Shaft Group	410-7	410
18090302	Column and Base Assembly	410-8	410
180904	Meat Slicing Machine	411-1	411
18090401	Carriage Unit Assembly	411-1	411
18090402	Knife Unit Assembly	411-1	411
18090403	Gage Plate and Indexing Mechanism	411-2	411
18090404	Base Unit Assembly	411-2	411
18090405	Motor Parts	411-3	411
18090406	Electrical Unit Assembly	411-3	411
18090407	Knife Sharpener Unit Assembly	411-4	411
180905	Refrigerator, Mechanical, Food	412-1	412
18090501	Condenser, Refrigeration	412-2	412
18090502	Evaporator Coil, Refrigeration	412-3	412
180906	Freezer, Mechanical, Food	413-1	413
18090601	Condenser, Refrigeration	413-1	413

TABLE OF CONTENTS - Continued

18090602	Evaporator Coil, Refrigeration	413-2	413
180907	Garbage, Disposal (Modified)	414-1	414
180908	Solid Waste Compactor	415-1	415
180909	Refrigerator, Mechanical Food	416-2	416
18090901	Condenser, Refrigeration	416-1	416
18090902	Evaporator Coil, Refrigeration	416-1	416
180910	Freezer, Mechanical, Food	417-1	417
18091001	Condenser, Refrigeration	417-1	417
18091002	Evaporator Coil, Refrigeration	417-2	417
180911	Dishwasher	418-1	418
18091101	Pump and Motor Assembly	418-3	418
180912	Washer Machine, Laundry Commercial	419-1	419
18091201	Valve, Water Mixing	420-1	420
18091202	Agitator Post Assembly	421-1	421
18091203	Outer Tub, Cover and Pressure Hose	422-1	422
18091204	Lint Filter, Washtub and Hub Group	423-1	423
18091205	Bearing Housing, Brake, Pulley and Pivot Dome Group	424-1	424
18091206	Transmission Group	425-1	425
1809120601	Transmission, Mechanical	425-1	425
18091207	Pump and Hoses Group	426-1	426
1809120701	Pump, Centrifugal	426-1	426
18091208	Motor and Idler Group	427-1	427
180913	Dryer Tumbler, Laundry, Commercial	428-1	428
18091301	Front Bulkhead and Cylinder Roller Group	429-1	429
18091302	Rear Bulkhead and Cylinder Roller Group	430-1	430
18091303	Heater Box Group	431-1	431
18091304	Motor and Exhaust Fan Group	432-1	432
18091305	Cabinet, Exhaust Duct and Base Group	433-1	433
	Clothes Wringer	434-1	434
Group 1810	Miscellaneous Pumps/Motors		
181001	Pump Unit, Centrifugal (Fresh Water)	435-1	435
181002	Pump Unit, Centrifugal (Fresh Water Booster)	436-1	436
181003	Pump Unit, Centrifugal (Auxiliary Sea Water Cooling)	437-1	437
181004	Pump Unit, Rotary (Fuel Oil Transfer)	438-1	438
181005	Pump Unit, Rotary (Prelube Oil Transfer)	439-1	439
18100501	Pump, Rotary	440-1	440
18100502	Motor, Alternating Current	441-1	441
181006	Pump Unit, Rotary (Dirty Lube Oil)	442-1	442
181007	Pump Unit, Centrifugal	443-1	443
18100701	Pump, Rotary	443-1	443
18100702	Motor, Alternating Current	443-2	443
181008	Pump Assembly (Cooling Water, Reduction Gear)	443-1	443
18100801	Motor, Alternating Current	443-1	443
Group 1811	Controls System		
181101	Steering Control and Autopilot System	444-1	444

TABLE OF CONTENTS - Continued

	Gyro Interface Assembly	445-1	445
	Helm Unit, Wheel Controller	446-1	446
18110101	Panel Assembly Steering Control	447-1	447
18110102	Autopilot Control Assembly	448-1	448
18110103	Indicator, Rudder	449-1	449
18110104	Junction Box Assembly	450-1	450
18110105	Isolator Control Unit	451-1	451
181102	Two Station Twin Engine with Bow Thruster and Fire Control System	452-1	452
	Venturi Meter	453-1	453
18110201	Valve, Linear Directional	454-1	454
	Venturi Meter	455-1	455
	Valve, Directional, Four-Way	456-1	456
18110202	Control Station, Pilot House	457-1	457
	Control Station, Engine Room	458-1	458
18110203	Gearmate Control System	459-1	459
1811020301	Panel, Gearmate Control	459-1	459
1811020302	Throttle Interlock	459-1	459
18110204	Gearmate Control System	460-1	460
1811020401	Panel Gearmate Control	460-1	460
1811020402	Throttle Interlock	460-1	460
18110205	Air preparation System	461-1	461
18110206	Valve Regulating System Pressure	462-1	462
18110207	Governor Acuator Assembly	463-1	463
1811020701	Manual Override, Governor Actuator	463-1	463
18110208	Valve, Linear Directional Control	464-1	464
18110209	Bow Thruster/Fire Pump Valve Pump	465-1	465
1811020901	Cylinder Assembly	466-1	466
181103	Machinery Plant Monitoring and and Alarm System	467-1	467
	Monitor, Video	468-1	468
18110301	Panel Assembly, Engine Room	469-1	469
18110302	Multi-Remote Module, Engine Room	470-1	470
18110303	Remote Module, Port Engine	471-]	471
18110304	Panel, Annunciator, Engineers Quarters	472-1	472
18110305	Panel, Annunciator, Galley	473-1	473
18110306	Interface Unit Assembly	474-1	474
18110307	Remote Module, Starboard Engine	475-1	475
18110308	Interface Unit Assembly	476-1	476
18110309	Panel Assembly, Bridge	477-1	477
18110310	Central Processing Unit	478-1	478
18110311	Analog Remote Module Assembly	479-1	479
18110312	Remote Module, Generators	480-1	480
18110313	Interface Unit Assembly	481-1	481
18110314	Interface Unit Assembly	482-1	482
18110315	Interface Unit Assembly	483-1	483
18110316	Multi-Remote Module Motor Controllers	484-1	484
181104	Engine Order Telegraph System	485-1	485
18110401	Panel Assembly, Bridge	486-1	486
18110402	Multi-Remote Module, Bridge	487-1	487

TABLE OF CONTENTS - Continued

18110403	Central Processing Unit	488-1	488
18110404	Multi-Remote Module, Engine Room	489-1	489
18110405	Panel Assembly, Engine Room	490-1	490
181105	Bow Ramp Control System	491-1	491
18110501	Panel, Control Winch Room	492-1	492
18110502	Panel, Control Pilot House	493-1	493
18110503	Panel, Control Forecastle	494-1	494
18110504	Motor Controller, Bow Ramp	495-1	495
181106	Fire Detection System	496-1	496
18110601	Control Panel with Thermostats	497-1	497
18110602	Panel, Alarm, Switchboards	498-1	498
181107	Bowthruster Control	499-1	499
18110701	Panel Assembly, Steering Control	500-1	500
18110702	Control Unit Assembly	501-1	501
Group 1812	Electrical System		
181201	Power Distribution 240 Volts	502-1	502
18120101	Shore Power Supply Assembly	503-1	503
18120102	Power Panel P201 Distribution	504-1	504
18120103	Power Panel P202 Distribution	505-1	505
18120104	Power Panel P203 Distribution	506-1	506
18120105	Power Panel P204 Distribution	507-1	507
18120106	Auxiliary Machinery Motor Control Center Power Distribution	508-1	508
18120107	Forward Deck Machinery Motor Control Center Power Distribution	509-1	509
18120108	Fire Pump Number Two Power Distribution	510-1	510
18120109	Engine Room Vent Motor Control Center Power Distribution	511-1	511
18120110	Power Panel P211 Distribution	512-1	512
18120111	Pilot House Air Conditioner Power Distribution	513-1	513
18120112	Accommodation Air Condition Power Distribution	514-1	514
18120113	Engine Room Air Condition Power Distribution	515-1	515
18120114	Water Heater Power Distribution	516-1	516
18120115	Fresh Water Pump No. One Power Distribution	517-1	517
18120116	Fresh Water Pump No. Two Power Distribution	518-1	518
18120117	Stern Anchor Winch Power Distribution	519-1	519
18120118	Boat Davit Power Distribution	520-1	520
18120119	Bilge/Ballast Pump Power Distribution	521-1	521
18120120	Welder Power Distribution	522-1	522
18120121	Steering Gear Port Power Distribution	523-1	523
18120122	Fire Pump No. One Power Distribution	524-1	524
18120123	Winch Bow Ramp Power Distribution	525-1	525
181202	Power Distribution 120 Volts	526-1	526

TABLE OF CONTENTS - Continued

18120201	Power Panel P101 Distribution	527-1	527
18120202	Power Panel L102 Distribution	528-1	528
18120203	Power Panel L104 Distribution	529-1	529
18120204	Power Panel L105 Distribution	530-1	530
18120205	Power Panel P106 Distribution	531-1	531
181203	Emergency Power Distribution 240 Volts	532-1	532
181204	Emergency Power Distribution 120 Volts	533-1	533
18120401	Power Panel EL102 Distribution	534-1	534
18120402	Power Panel EP103 Distribution	535-1	535
181205	Emergency Power Lighting	536-1	536
181206	Emergency Power 24 Volt Distribution	537-1	537
18120601	Power Panel EP024-1 Distribution	538-1	538
18120602	Power Panel EP024 Section B Distribution	539-1	539
181207	Storage Battery Group	540-1	540
18120701	Emergency Switchboard Battery Assembly	541-1	541
18120702	Pilot House Battery Assembly	542-1	542
18120703	Emergency Generator Battery Assembly	543-1	543
18120704	Generator No. One Battery Assembly	544-1	544
18120705	Bowthruster Battery Assembly	545-1	545
Group 1813	Doors, Hatches and Manholes/Windows Group		
	Bolted Plate Manhole	546-1	546
	Flush Bolted Plate Manhole	547-1	547
	Flush Bolted Plate Manhole	548-1	548
	Raised Bolted Plate Manhole	549-1	549
	Flush Bolted Plate Manhole	550-1	550
	Single Bolt Flush Manhole With Inside T-Handle	551-1	551
181301	Watertight Door	552-1	552
181302	Watertight Door	553-1	553
181303	Watertight Door	554-1	554
181304	Watertight Door (Quick Action, Left-Hand)	555-1	555
181305	Watertight Door	556-1	556
181306	Watertight Door	557-1	557
181307	Watertight Door	558-1	558
181308	Watertight Hatch (Quick Action)	559-1	559
181309	Watertight Scuttle (Quick Action, Flush)	560-1	560
181310	Watertight Scuttle (Quick Action, Raised)	561-1	561
181311	Fixed Window (Heat Treated)	562-1	562
181312	Fixed Window with Rotary Window	563-1	563
181313	Fixed Window, Right Hand	564-1	564
181314	Fixed Window, Left Hand	565-1	565
181315	Fixed Window	566-1	566
Group 1814	Lashing Gear Group		
181401	Lashing Gear Equipment	567-1	567
Group 1815	Work Boat/Davit Group		
181501	Workboat	568-1	568
181502	Outboard Motor	569-1	569

TABLE OF CONTENTS - Continued

181503	Liferaft/Container Group	570-1	570
181504	Boat Davit	571-1	571
181505	Portable Davit Assembly	572-1	*572*
Group 1816	Control Centers/Switchboards		
181601	Motor Control Center Auxiliary Machinery Room Vent No. 1	573-1	573
18160101	Motor Controller (Emergency Lube Oil Prelube Pump)	574-1	574
18160102	Controller SSDG Water Jacket Heater No. 1 and No. 2	575-1	575
18160103	Motor Controller (Air Compressor No. 1 and 2)	576-1	576
18160104	Motor Controller (Dirty Lube Oil Pump)	577-1	577
18160105	Controller (Main Engine No. 1 and 2 Jacket Water Heater)	578-1	578
181602	Motor Control Center Auxiliary Machinery Room Vent No. 2	579-1	579
18160201	Motor Controller (Auxiliary Seawater Cooling Pump)	580-1	580
18160202	Motor Controller (Fuel Oil Transfer Pump No. 1)	581-1	581
18160203	Motor Controller (Lube Oil Purifier Heater)	582-1	582
18160204	Motor Controller (Lube Oil Purifier)	583-1	583
18160205	Motor Controller (Reducing Gear Cooling Water Pump No. 1 and 2)	584-1	584
18160206	Motor Controller (Clear Lube Oil Pump)	585-1	585
181603	Motor Control Center (Engine Room Vent)	586-1	586
18160301	Motor Controller (Engine Room Exhaust Fan)	587-1	587
18160302	Motor Controller (Engine Room Supply Fan)	588-1	588
181604	Motor Control Center Forward Deck Machinery	589-1	589
18160401	Motor Controller (Bow Windlass 1 and 2)	590-1	590
18160402	Motor Controller (Bowthruster Steering Motor)	591-1	591
18160403	Controller (Bowthruster Jacket Water Heater)	592-1	592
181605	Motor Controller (Stern Windlass)	593-1	593
181606	Motor Controller (Fire Pump)	594-1	594
181607	Motor Controller (Steering Gear Hydraulic Pump)	595-1	595
181608	Motor Controller (Fresh Water Pump No. 1 and 2)	596-1	596
181609	Motor Controller (Bilge and Ballast Pump)	597-1	597

TABLE OF CONTENTS - Continued

181610	Motor Controller (Fuel Oil Transfer Pump No. 2)	598-1	598
181611	Motor Controller (Gallery Exhaust Fan)	599-1	599
181612	Motor Controller (Lavatory Exhaust Fan)	600-1	600
181613	Motor Controller (Steering Gear Exhaust Fan)	601-1	601
181614	Motor Controller (Tunnel Supply Fan)	602-1	602
181615	Motor Controller (Bowthruster Supply Fan)	603-1	603
181616	Motor Controller (Emergency Generator Room Supply Fan)	604-1	604
181617	Motor Controller (Gallery Makeup Supply Fan)	605-1	605
181618	Motor Controller (Gallery Vent Hood Fan)	606-1	606
181619	Motor Controller (Gallery Duct Heater)	607-1	607
181620	Ship Service Switchboard	608-1	608
181621	Emergency Switchboard	609-1	609
Group 1817	Propeller Shaft Assembly		
181701	Propeller Shafting Assembly	610-1	610
181702	Shaft Brake Assembly	611-1	611
181703	Shaft Tachometer	612-1	612
Group 1818	Valves and Strainers		
181801	Angle Stop Check Valve 2-1/2"	613-1	613
181802	Three Way Ball Valve 4"	614-1	614
181803	Three Way Ball Valve 4-1/2"	615-1	615
181804	Three Way Ball Valve 5"	616-1	616
181805	Swing Check Valve	617-1	617
181806	Strainer Simplex 5"	618-1	618
181807	Duplex Strainer 3"	619-1	619
181808	Simplex Strainer 8"	620-1	620
181809	Basket Strainer 4"	621-1	621
181810	Basket Strainer 5"	622-1	622
181811	Basket Strainer 2-1/2	623-1	623
Group 1819	Piping System		
181901	Piping System-Potable Water	624-1	624
18190101	Hot Water Heater	625-1	625
181902	Piping System-Bilge, Ballast and Firemain	626-1	626
181903	Piping System-Seawater Cooling	627-1	627
181904	Piping System-Fresh Water Cooling	628-1	628
181905	Piping System-Compressed Air	629-1	629
181906	Piping System-Fire Monitor and Washdown	630-1	630
181907	Piping System-Lube Oil Transfer/Dirty Oil Discharge	631-1	631
181908	Piping System-Hydraulic Oil	632-1	632
181909	Piping System-Oily Water Separator	633-1	633
181910	Piping System Bilge Manifold Unit Assembly	634-1	634

TABLE OF CONTENTS - Continued

	181911	Piping System Fuel Transfer Pump Unit Assembly	635-1	635
	181912	Piping System-Sewage and Plumbing	636-1	636
	181913	Piping System-Bow Thruster	637-1	637
	181914	Piping System-Steering Gear	638-1	638
	181915	Piping System-Emergency Generator	639-1	639
	181916	Piping System-Foam Proportioners	640-1	640
	181917	Piping System-Fire Pump Unit Assembly	641-1	641
	Group 1820	Hull/Miscellaneous		
	182001	Ladders and Handrails	642-1	642
	18200101	Pilot Housetop Ladders and Handrails	643-1	643
	18200102	Ladders and Handrails (02 Level)	644-1	644
	18200103	Forecastle Deck Ladders and Handrails	645-1	645
	18200104	Main Deck Ladders and Handrails	646-1	646
	182002	Tank Arrangement	647-1	647
	182003	Miscellaneous Independent Tanks	648-1	648
	18200301	Tank, Day, Emergency Diesel Generator	649-1	649
	18200302	Tank, Day, Bowthruster Engine	650-1	650
	18200303	Tank, Storage, Hydraulic Oil	651-1	651
Section III		Special Tools and Test Measurements/ Diagnostic Equipment		
	Group 19	Special Tools	652-1	652
Section IV		CROSS-REFERENCE INDEXES (Each volume contains indexes specific to that volume.,		
		National Stock Number Index	I-1	
		Part Number Index	I-6	
		Figure and Item Number Index	I-93	

UNIT AND INTERMEDIATE DIRECT AND GENERAL SUPPORT MAINTENANCE REPAIR PARTS AND SPECIAL TOOLS LIST FOR LANDING CRAFT UTILITY (LCU 2000) (NSN 1905-01-154-1191)

SECTION I. INTRODUCTION

1. SCOPE. This RPSTL lists and authorizes spares and repair parts; special tools; special test, measurement, and diagnostic equipment (TMDE); and other special support equipment required for performance of organizational, direct support, general support maintenance of the Landing Craft Utility (LCU 2000). It authorizes the requisitioning, issue, and disposition of spares, repair parts and special tools as indicated by the source, maintenance and recoverability (SMR) codes.

2. GENERAL. In addition to this section, Introduction, this Repair Parts and Special Tools List is divided into the following sections:

a. Section II. Repair Parts List. A list of spares and repair parts authorized by this RPSTL for use in the performance of maintenance. The list also includes parts which must be removed for replacement of the authorized parts. Parts lists are composed of functional groups in ascending alphanumeric sequence, with the parts in each group listed in ascending figure and item number sequence. Bulk materials are listed in item name sequence. Repair parts kits are listed separately in their own functional group within Section II. Repair parts for repairable special tools are also listed in this section. Items listed are shown on the associated illustration(s)/figure(s).

b. Section III. Special Tools List. A list of special tools, special TMDE, and other special support equipment authorized by this RPSTL (as indicated by Basis of Issue (BOI) information in DESCRIPTION AND USABLE ON CODE column) for the performance of maintenance.

c. Section IV. Cross-references Indexes. A list, in National Item Identification Number (NIIN) sequence, of all National stock numbered items appearing in the listing, followed by a list in alphanumeric sequence of all part numbers appearing in the listings. National stock numbers and part numbers are cross-referenced to each illustration figure and item number appearance. The figure and item number index lists figure and item number in alphanumeric sequence and cross-references NSN, FSCM and part number.

3. EXPLANATION OF COLUMNS (SECTIONS II AND III).

a. ITEM NO. (Column (1)). Indicates the number used to identify items called out in the illustration.

b. SMR Code (Column (2)). The Source, Maintenance, and Recoverability (SMR) code is a 5-position code containing supply/requisitioning information, maintenance category authorization criteria, and disposition instruction, as shown in the following breakout:

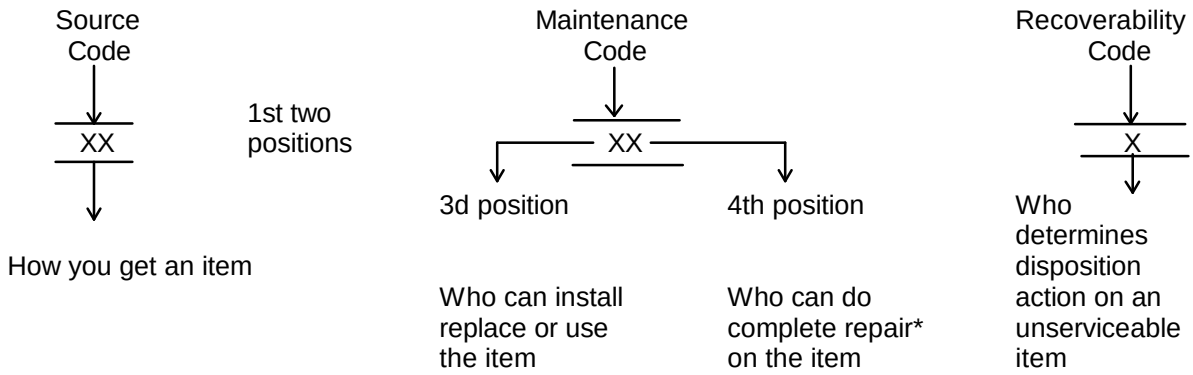

*Complete Repair: Maintenance capacity, capability, and authority to perform all corrective maintenance tasks of the "Repair" function in a use/user environment in order to restore serviceability to a failed item.

(**1**) **Source Code.** The source code tells you how to get an item needed for maintenance, repair, or overhaul of an end item/equipment. Explanations of source codes follows:

Code	Explanation
PA PB PC** PD PE PF PG	Stocked items; use the applicable NSN to request/requisition items with these source codes. They are authorized to the category indicated by the code entered in the 3d position of the SMR code. **NOTE: Items coded PC are subject to deterioration.
KD KF KB	Items with these codes are not to be requested/requisitioned individually. They are part-of a kit which is authorized to the maintenance category indicated in the 3d position of the SMR code. The complete kit must be requisitioned and applied.

	Explanation
MO--(Made at org. AVUM Level MF--(Made at DS/ AVUM Level MH--(Made at GS Level) ML--Made at Specialized Repair Activity (SRA)) MD--(Made at Depot)	Items with these codes are not to be requested/requisitioned individually. They must be made from bulk material which is identified by the part number in the DESCRIPTION and USABLE ON CODE (UOC) column and listed in the Bulk Material group of the repair parts list in this RPSTL. If the item is authorized to you by the 3d position code of the SMR code, but the source code indicates it is made at a higher level, order the item from the higher level of maintenance.

	Explanation
AO--(Assembled by org/AVUM Level) AF--(Assembled by DS/AVIM Level) AH--(Assembled by GS Category) AL--(Assembled by SRA) AD--(Assembled by Depot)	Items with these codes are not to be requested/requisitioned individually. The parts that make up the assembled item must be requisitioned or fabricated and assembled at the level of maintenance indicated by the source code. If the 3d position code of the SMR code authorizes you to replace the item, but the source code indicates the items are assembled at a higher level, order the item from the higher level of maintenance.

Explanation

Code

XA-- Do not requisition an "XA"-coded item. Order its next higher assembly. (Also, refer to the NOTE below.)

XB-- If an "XB" item is not available from salvage, order it using the FSCM and part number given.

XC-- Installation drawing, diagram, instruction sheet, field service drawing, that is identified by manufacturer's part number.

XD-- Item is not stocked. Order an "XD"-coded item through normal supply channels using the FSCM and part number given, if no NSN is available.

NOTE

Cannibalization or controlled exchange, when authorized, may be used as a source of supply for items with the above source codes, except for those source coded "XA" or those aircraft support items restricted by requirements of AR750-1.

(2) Maintenance Code. Maintenance codes tells you the level(s) of maintenance authorized to USE and REPAIR support items. The maintenance codes are entered in the third and fourth positions of the SMR code as follows:

(a) The maintenance code entered in the third position tells you the lowest maintenance level authorized to remove, replace, and use an item. The maintenance code entered in the third position will indicate authorization to one of the following levels of maintenance.

Code	Application/Explanation
C	--Crew or operator maintenance done within organizational or aviation unit maintenance.
O	--Organizational or aviation unit category can remove, replace, and use the item.
F	--Direct support or aviation intermediate level can remove, replace, and use the item.

H --General support level can remove, replace, and use the item.

L --Specialized repair activity can remove, replace, and use the item.

D --Depot level can remove, replace, and use the item.

(b) The maintenance code entered in the fourth position tells whether or not the item is to be repaired and identifies the lowest maintenance level with the capability to do complete repair (i.e., perform all authorized repair functions.) NOTE: Some limited repair may be done on the item at a lower level of maintenance, if authorized by the Maintenance Allocation Chart (MAC) and SMR codes. This position will contain one of the following maintenance codes.

Code	Application/Explanation
O	--Organizational or (aviation unit) is the lowest level that can do complete repair of the item.
F	--Direct support or aviation intermediate is the lowest level that can do complete repair of the item.
H	--General Support is the lowest level that can do complete repair of the item.
L	--Specialized repair activity is the lowest level that can do complete repair of the item.
D	--Depot is the lowest level that can do complete repair of the item.
Z	--Nonreparable. No repair is authorized.
B	--No repair is authorized. (No parts or special tools are authorized for the maintenance of a "B" coded item). However, the item may be reconditioned by adjusting, lubricating, etc., at the user level.

(3) Recoverability Code. Recoverability codes are assigned to items to indicate the disposition action on unserviceable items. The recoverability code is entered in the fifth position of the SMR Code as follows:

Recoverability Codes	Application/Explanation
Z	--Nonreparable item. When unserviceable, condemn and dispose of the item at the level of maintenance shown in 3d position of SMR Code.

Recoverability Codes	Application/Explanation
O	--Reparable item. When uneconomically reparable, condemn and dispose of the item at organizational or aviation unit level.
F	--Reparable item. When uneconomically reparable, condemn and dispose of the item at the direct support or aviation intermediate level.
H	--Reparable item. When uneconomically reparable, condemn and dispose of the item at the general support level.
D	--Reparable item. When beyond lower level repair capability, return to depot. Condemnation and disposal of item not authorized below depot level.
L	--Reparable item. Condemnation and disposal not authorized below specialized repair activity (SRA).
A	--Item requires special handling or condemnation procedures because of specific reasons (e.g., precious metal content, high dollar value, critical material, or hazardous material). Refer to appropriate manuals/directive for specific instructions

c. FSCM (Column (3)). The Federal Supply Code for Manufacturer (FSCM) is a 5-digit numeric code which is used to identify the manufacturer, distributor, or Government agency, etc., that supplies the item.

d. PART NUMBER (Column (4)). Indicates the primary number used by the manufacturer, (individual, company, firm, corporation, or Government activity), which controls the design and characteristics of the item by means of its engineering drawings, specifications standards, and inspection requirements to identify an item or range of items.

NOTE

When you use an NSN to requisition an item, the item you receive may have a different part number from the part ordered.

e. DESCRIPTION AND USABLE ON CODE (UOC) (Column (5)). This column includes the following information:

(1) The Federal item name and, when required, a minimum description to identify the item.

(2) The physical security classification of the item is indicated by the parenthetical entry, e.g., Phy Sec C1 - Confidential, Phy Sec C1 (S) - Secret, Phy Sec C1 (T) - Top Secret.

(3) Items that are included in kits and sets are listed below the name of the kit or set.

(4) Spare/repair parts that make up an assembled item are listed immediately following the assembled item line entry.

(5) Part numbers for bulk materials are referenced in this column in the line item entry for the item to be manufactured/fabricated.

(6) When the item is not used with all serial numbers of the same model, the effective serial numbers are shown on the last line(s) of the description (before UOC).

(7) The usable on code, when applicable (see paragraph 5, Special Information).

(8) In the Special Tools List section, the basis of issue (BOI) appears as the last line(s) in the entry for each special tool, special TMDE, and other special support equipment. When density of equipments supported exceeds density spread indicated in the basis of issue, the total authorization is increased proportionately.

(9) The statement "END OF FIGURE" appears just below the last item description in Column 5 for a given figure in both Section II and Section III.

(10) The indenture, shown as dots appearing before the repair part, indicates that the item is a repair part of the next higher assembly.

f. QTY (Column (6)). The QTY (quantity per figure column) indicates the quantity of the item used in the breakout shown on the illustration figure, which is prepared for a functional group, subfunctional group, or an assembly. A "V" appearing in this column in lieu of a quantity indicates that the quantity is variable and may vary from application to application.

4. EXPLANATION OF COLUMNS (Section IV).

a. NATIONAL STOCK NUMBER (NSN) INDEX.

(1) STOCK NUMBER column. This column lists the NSN by National item identification number.

(NIIN) sequence. The NIIN consists of the last nine digits of the NSN, i.e. (5305-01-574-1467).

NSN

NIIN

When using this column to locate an item, ignore the first 4 digits of the NSN. However, the complete NSN should be used when ordering items by stock number.

(2) FIG. column. This column lists the number of the figure where the item is identified/located. The figures are in numerical order in Section II and Section III.

(**3**) **ITEM column.** The item number identifies the item associated with the figure listed in the adjacent FIG. column. This item is also identified by the NSN listed on the same line.

b. **PART NUMBER INDEX.** Part numbers in this index are listed by part number in ascending alphanumeric sequence (i.e., vertical arrangement of letter and number combination which places the first letter or digit of each group in order A through Z, followed by the numbers 0 through 9 and each following letter or digit in like order).

(1) **FSCM column.** The Federal Supply Code for Manufacturer (FSCM) is a 5-digit numeric code used to identify the manufacturer, distributor, or Government agency, etc., that supplies the item.

(2) **PART NUMBER column.** Indicates the primary number used by the manufacturer (individual, firm, corporation, or Government activity), which controls the design and characteristics of the item by means of its engineering drawings, specifications standards, and inspection requirements to identify an item or range of items.

(3) **STOCK NUMBER column.** This column lists the NSN for the associated part number and manufacturer identified in the PART NUMBER and FSCM columns to the left.

(**4**) **FIG. column.** This column lists the number of the figure where the item is identified/located in Sections II and III.

(5) **ITEM column.** The item number is that number assigned to the item as it appears in the figure referenced in adjacent figure number column.

c. **FIGURE AND ITEM NUMBER INDEX.**

(1) **FIG. column.** This column lists the number of the figure where the item is identified/located in Section II and III.

(2) **ITEM column.** The item number is that number assigned to the item as it appears in the figure referenced in the adjacent figure number column.

(3) **STOCK NUMBER column.** This column lists the NSN for the item.

(4) **FSCM column.** The Federal Supply Code for Manufacturer (FSCM) is a 5-digit numeric code used to identify the manufacturer, distributor, or Government agency, etc., that supplies the item.

(5) **PART NUMBER column.** Indicates the primary number used by the manufacturer (individual, firm, corporation, or Government activity), which controls the design and characteristics of the item by means of its engineering drawings, specifications standards, and inspection requirements to identify an item or range of items.

5. SPECIAL INFORMATION.

a. USABLE ON CODE. The usable on code appears in the lower left corner of the Description column heading. Usable on codes are shown as "UOC: ....." in the Description Column (justified left) on the last line applicable item description/nomenclature. Uncoded items are applicable to all models.

b. ASSOCIATED PUBLICATIONS. The publications listed below pertains to the LCU 2000 and its components and its components.

Publication	Short Title
TM 55-1905-223-24P-1	Basic Craft Maintenance Manual (LCU 2000)
LO 55-1905-223-24-12	Lubrication Order (LCU-2000)
TM 55-1905-223-24-1	Main Engine (LCU-2000)
TM 55-1905-223-24-2	Reduction Gear
TM 55-1905-223-24-3	Ships Service Generator
TM 55-1905-223-24-4	Emergency Generator Set
TM 55-1905-223-24-5	Bowthruster Engine
TM 55-1905-223-24-6	Bowthruster Waterjet
TM 55-1905-223-24-7	Reverse Osmosis Watermaker
TM 55-1905-223-24-8	Air Compressor
TM 55-1905-223-24-9	Steering Gear System
TM 55-1905-223- 24-10	Bow Ramp Assembly
TM 55-1905-223-24-11	Marine Sanitation
TM 55-1905-223-24-12	Fire Pump Subsystem
TM 55-1905-223-24-13	Bilge/Ballast Pumps
TM 55-1905-223-24-14	Gyro and Magnetic Compass Systems
TM 55-1905-223-24-15	Bow Anchor Windlass System
TM 55-1905-223-24-16	Stern Anchor Winch
TM 55-1905-223-24-17	Environmental Control Subsystem
TM 55-1905-223-24-18A	Basic Craft
TM 55-1905-223-24-18B	Basic Craft

6. HOW TO LOCATE REPAIR PARTS.

a. When National Stock Number or Part Number is NOT Known.

(1) First. Using the table of contents, determine the assembly group for subassembly group to which the item belongs. This is necessary since figures are prepared for assembly groups and subassembly groups, and listings are divided into the same groups.

(**2**) **Second.** Find the figure covering the assembly group or subassembly group to which the item belongs.

(3) Third. Identify the item on the figure and note the item number.

(4) Fourth. Refer to the Repair Parts List for the figure to find the part number for the item number noted on the figure.

(5) Fifth. Refer to the Part Number Index to find the NSN, if assigned.

b. When National Stock Number or Part Number is Known:

(1) First. Using the Index of National Stock Numbers and Part Numbers, find the pertinent National Stock Number or Part Number. The NSN index is in National Item Identification Number (NIIN) sequence (see 4a(1)). The part numbers in the Part Number index are listed in ascending alphanumeric sequence (see paragraph 4b). Both indexes cross-reference you to the illustration figure and item number of the item you are looking for.

(2) Second. After finding the figure and item number, verify that the item is the one you are looking for, then locate the item number in the repair parts list for the figure.

7. ABBREVIATIONS. Abbreviations used in this manual are listed in MIL-STD-12.

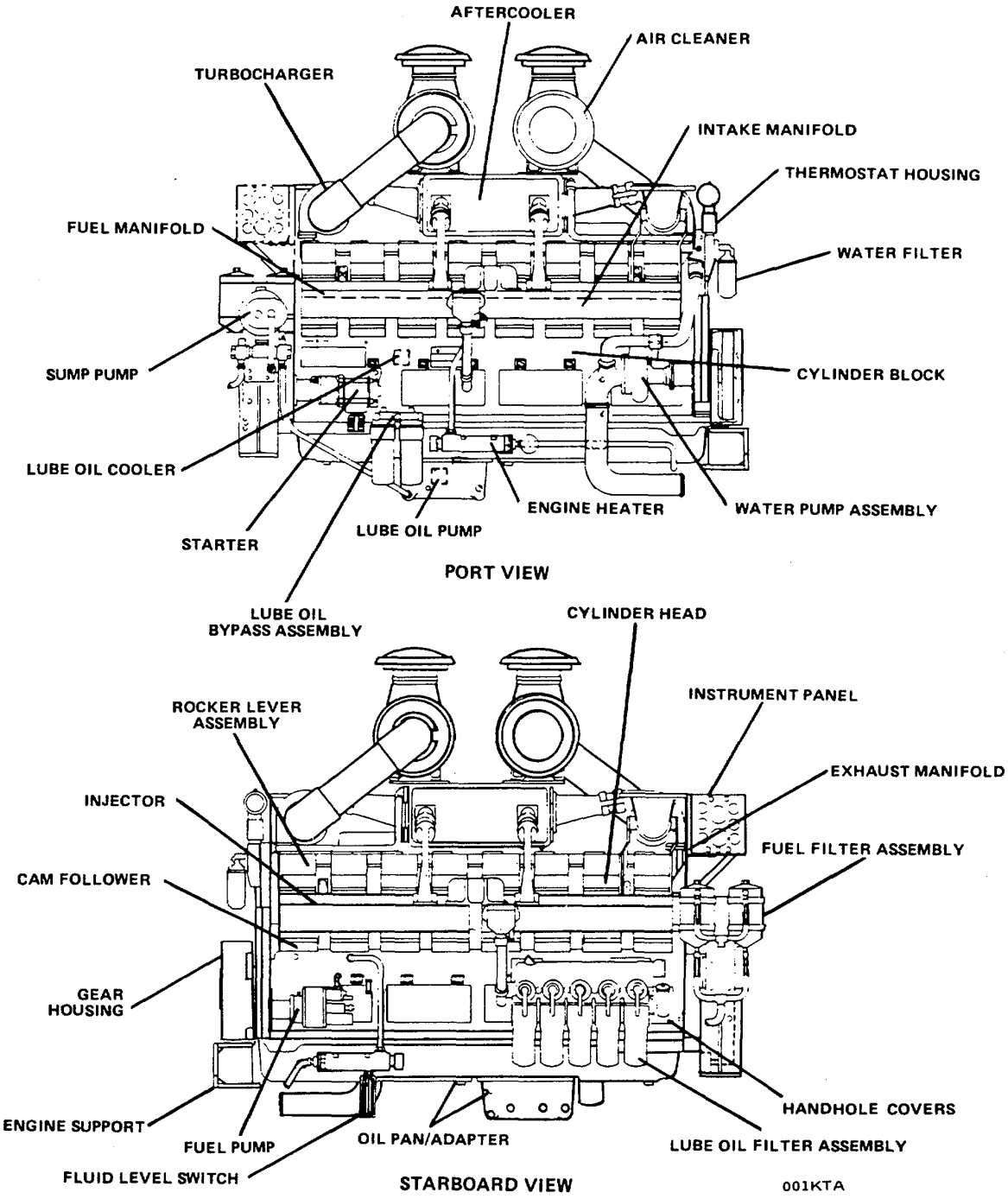

FIGURE 1. Main Propulsion Engine (Sheet 1 of 2).

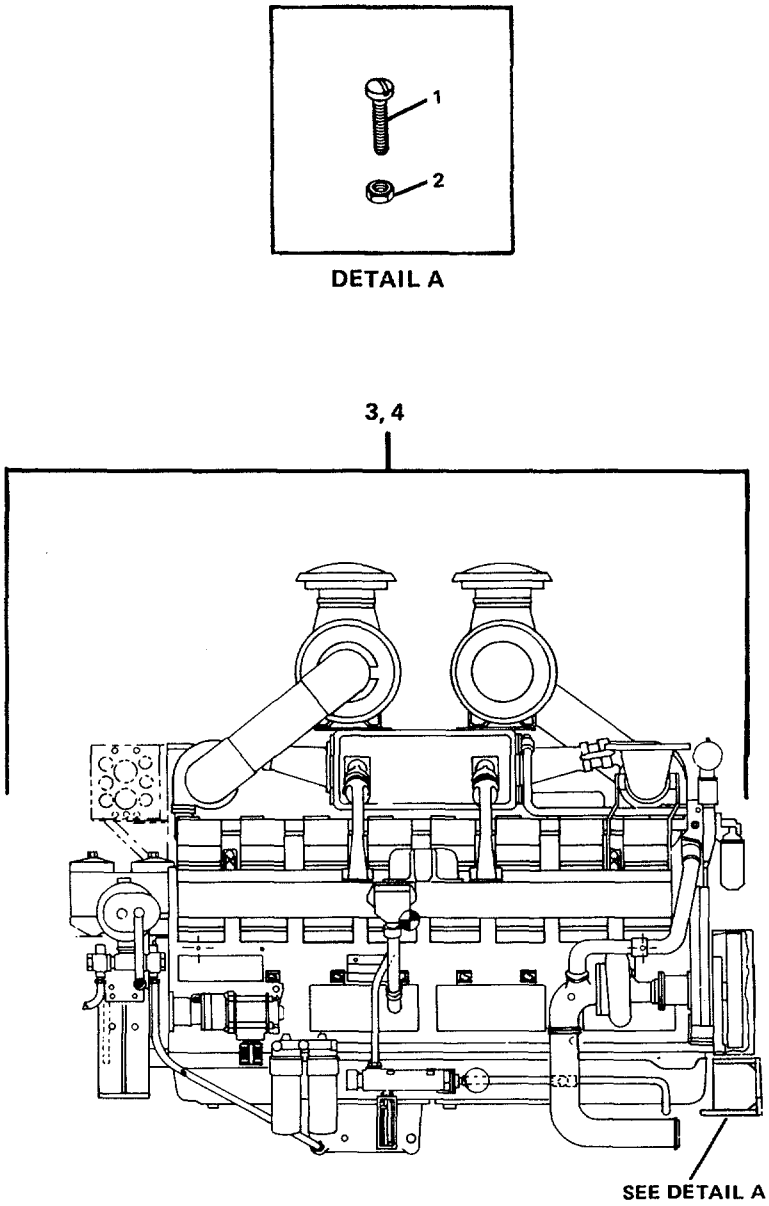

FIGURE 1. Main Propulsion Engine (Sheet 2 of 2).

(1) ITEM NO	(2) SMR CODE	(3) FSCM	(4) PART NUMBER	(5) DESCRIPTION AND USABLE ON CODES(UOC)	(6) QTY
				GROUP 01 MAIN PROPULSION ENGINE	
				FIG. 1 MAIN PROPULSION ENGINE	
1	XDFZZ	77408	40-2905-1821	BOLT, MACHINE	8
2	XDFZZ	77408	40-3017-8049	NUT, SELF-LOCKING, HE	8
3	PBFHH	15434	S.0.51165-KTA50M	ENGINE, DIESEL (STARBOARD)	1
4	PBFHH	15434	S.0.51180-KTA50M	ENGINE, DIESEL (PORT)	1

END OF FIGURE

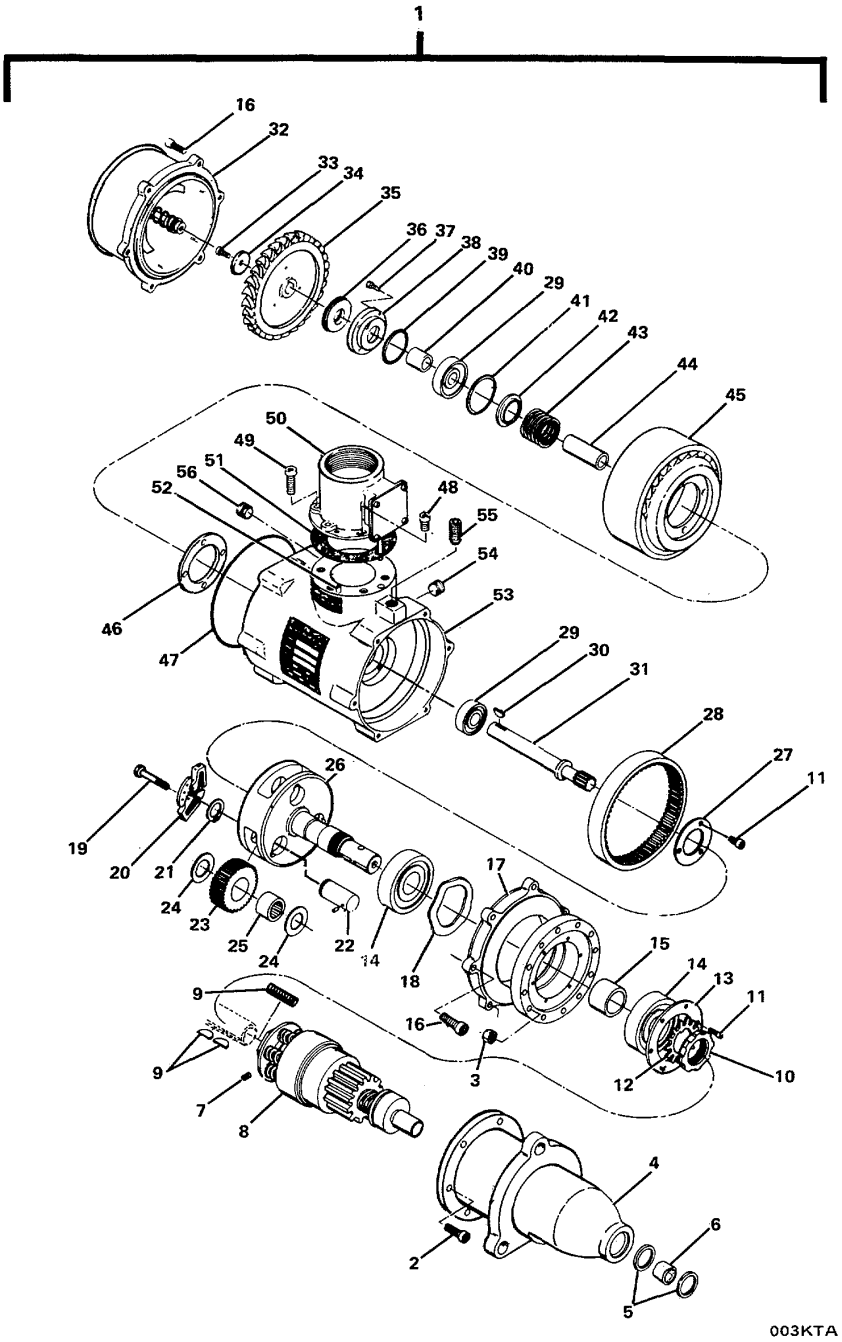

FIGURE 2. Engine Air Starter Assembly.

(1) ITEM NO	(2) SMR CODE	(3) FSCM	(4) PART NUMBER	(5) DESCRIPTION AND USABLE ON CODES(UOC)	(6) QTY
				GROUP 01 MAIN PROPULSION ENGINE	
				FIG. 2 ENGINE AIR STARTER ASSEMBLY	
1	PBCFZ	57301	52447-12	.STARTER, ENGINE, AIR	1
2	XDFZZ	57301	11F-031218-24	..SCREW, MACHINE	6
3	XDFZZ	57301	92107-15	..NUT, PLAIN, HEXAGON	6
4	XDFZZ	57301	18822	..HOUSING	1
5	XDFZZ	57301	22685	..SEAL, LIP	2
6	XDFZZ	57301	91005	..BEARING	1
7	XDFZZ	57301	92527	..SETSCREW	1
8	XDFZZ	57301	18828	..GEAR, BENDIX	1
9	XDFZZ	57301	90209-19	..KEY AND SPRING PART OF KIT P/N 52-029	2
10	XDFZZ	57301	92127-07	..NUT, RETAINER	1
11	XDFZZ	57301	14F-019024-08	..SCREW, MACHINE PART OF KIT P/N 52-029	9
12	XDFZZ	57301	93061-07	..WASHER, LOCK PART OF KIT P/N 52-029	1
13	XDFZZ	57301	18817	..PLATE, RETAINING	1
14	XDFZZ	57301	91003	..BEARING	2
15	XDFZZ	57301	93007	..SPACER, SLEEVE	1
16	XDFZZ	57301	14F-025020-16	..SCREW, MACHINE PART OF KIT P/N 52-029	12
17	XDFZZ	57301	18810	..HOUSING	1
18	XDFZZ	57301	90402-25	..WASHER, SPRING TENSI	1
19	XDFZZ	57301	14F-012540-08	..SCREW, MACHINE PART OF KIT P/N 52-034	2
20	XDFZZ	57301	2P20862-02	..HAMMER UNIT PART OF KIT P/N 52-034	1
21	XDFZZ	57301	92001-01	..RING, RETAINING	3
22	XDFZZ	57301	2P20182	..SHAFT	3
23	XDFZZ	57301	18779	..GEAR	3
24	XDFZZ	57301	93004	..WASHER, FLAT	6
25	XDFZZ	57301	91004-01	..BEARING	3
26	XDFZZ	57301	2P20156-01	..SHAFT	1
27	XDFZZ	57301	18801	..PLATE, RETAINING	1
28	XDFZZ	57301	18780	..GEAR	1
29	XDFZZ	57301	91281	..BEARING PART OF KIT P/N 52-029	2
30	XDFZZ	57301	90211-09	..KEY, WOODRUFF PART OF KIT P/N 52-029	1
31	XDFZZ	57301	18830	..SHAFT	1
32	XDFZZ	57301	1P20195	..PLATE ASSEMBLY PART OF KIT P/N 52-405	1
33	XDFZZ	57301	16F-025028-12	..SCREW, MACHINE PART OF KIT P/N 52-029	1
34	XDFZZ	57301	93047	..WASHER, FLAT PART OF KIT P/N 52-056	1
35	XDFZZ	57301	2P20252	..WHEEL, TURBINE PART OF KIT P/N 52-056	1
36	XDFZZ	57301	22376	..SEAL, LIP PART OF KIT P/N 52-043	1
37	XDFZZ	57301	16F-025020-20	..SCREW, MACHINE PART OF KIT P/N 52-029	4
38	XDFZZ	57301	22318	..RETAINER, PACKING PART OF KIT P/N 52-043	1

(1) ITEM NO	(2) SMR CODE	(3) FSCM	(4) PART NUMBER	(5) DESCRIPTION AND USABLE ON CODES(UOC)	(6) QTY
39	XDFZZ	57301	90001-034	..PACKING, PREFORMED PART OF KIT P/N..... 52-043.....	1
40	XDFZZ	57301	93050	..SPACER, SLEEVE PART OF KIT P/N 52-..... 043.....	1
41	XDFZZ	57301	90001-030	..PACKING, PREFORMED	1
42	XDFZZ	57301	20903	..SEAT, SPRING	1
43	XDFZZ	57301	90401	..SPRING PART OF KIT P/N 52-029	1
44	XDFZZ	57301	93005-01	..SPACER, SLEEVE	1
45	XDFZZ	57301	2P22235-06	..NOZZLE/LINER	1
46	XDFZZ	57301	22165	..GASKET	1
47	XDFZZ	57301	90001-161	..PACKING, PREFORMED	1
48	XDFZZ	57301	14F-031218-08	..SCREW, MACHINE PART OF KIT P/N 52-..... 017.....	2
49	XDFZZ	57301	14F-031218-16	..SCREW, MACHINE PART OF KIT P/N 52-..... 017.....	4
50	XDFZZ	57301	1P20468	..VALVE, AUTOMATIC TRI PART OF KIT ..... P/N 52-017.....	1
51	XDFZZ	57301	21880	..GASKET PART OF KIT P/N 52-029	1
52	XDFZZ	57301	91502-0612	..PIN, STRAIGHT, HEADLE PART OF KIT ..... P/N 52-017.....	2
53	XDFZZ	57301	2P22239-01	..HOUSING	1
54	XDFZZ	57301	93501-04	..PLUG, VENT	1
55	XDFZZ	57301	82F-050013-16	..SETSCREW	1
56	XDFZZ	57301	93556-4	..PLUG, PRESSURE	1
	PAFZZ	57301	52-029	STARTER REBUILD KIT (NEEDED FOR ..... COMPLETE REPAIR OF MAIN ENGINE STARTER).....	
				BEARING (2) 2-29	
				GASKET (1) 2-51	
				KEY AND SPRING (2) 2-9	
				KEY, WOODRUFF (1) 2-30	
				SCREW, MACHINE (9) 2-11	
				SCREW, MACHINE (12) 2-16	
				SCREW, MACHINE (1) 2-33	
				SCREW, MACHINE (4) 2-37	
				SPRING (1) 2-43	
				WASHER, LOCK (1) 2-12	
	PAFZZ	57301	52-034	KIT, AUTOMATIC TRIP VALVE, HAMMER ..... ASSY(NEEDED FOR COMPLETE REPAIR OF MAIN ENGINE).....	1
				HAMMER UNIT (1) 2-20	
				SCREW, MACHINE (2) 2-19	
	PAFZZ	57301	52-405	PARTS KIT, EXHAUST M (NEEDED FOR..... COMPLETE REPAIR OF MAIN ENGINE).....	1
				PLATE ASSEMBLY (1) 2-32	
	PAFZZ	57301	52-056	PARTS KIT, TURBOSUPE (NEEDED FOR ..... COMPLETE REPAIR OF MAIN ENGINE).....	1
				WASHER, FLAT (1) 2-34	
				WHEEL, TURBINE (1) 2-35	
	PAFZZ	57301	52-043	PARTS KIT, SEAL REPL (NEEDED FOR ..... COMPLETE REPAIR OF MAIN ENGINE).....	1
				PACKING, PREFORMED (1) 2-39	

(1) ITEM NO	(2) SMR CODE	(3) FSCM	(4) PART NUMBER	(5) DESCRIPTION AND USABLE ON CODES(UOC)	(6) QTY
				RETAINER, PACKING.....(1) 2-38	
				SEAL, LIP .....(1) 2-36	
				SPACER, SLEEVE .....(1) 2-40	
	PAFZZ	57301	52-017	PARTS KIT, VALVE AIR INLET ASSY (NEEDED FOR COMPLETE REPAIR OF MAIN ENGINE).....	1
				PIN, STRAIGHT, HEADLE (2) 2-52	
				SCREW, MACHINE (2) 2-48	
				SCREW, MACHINE (4) 2-49	
				VALVE, AUTOMATIC TRI (1) 2-50	

END OF FIGURE

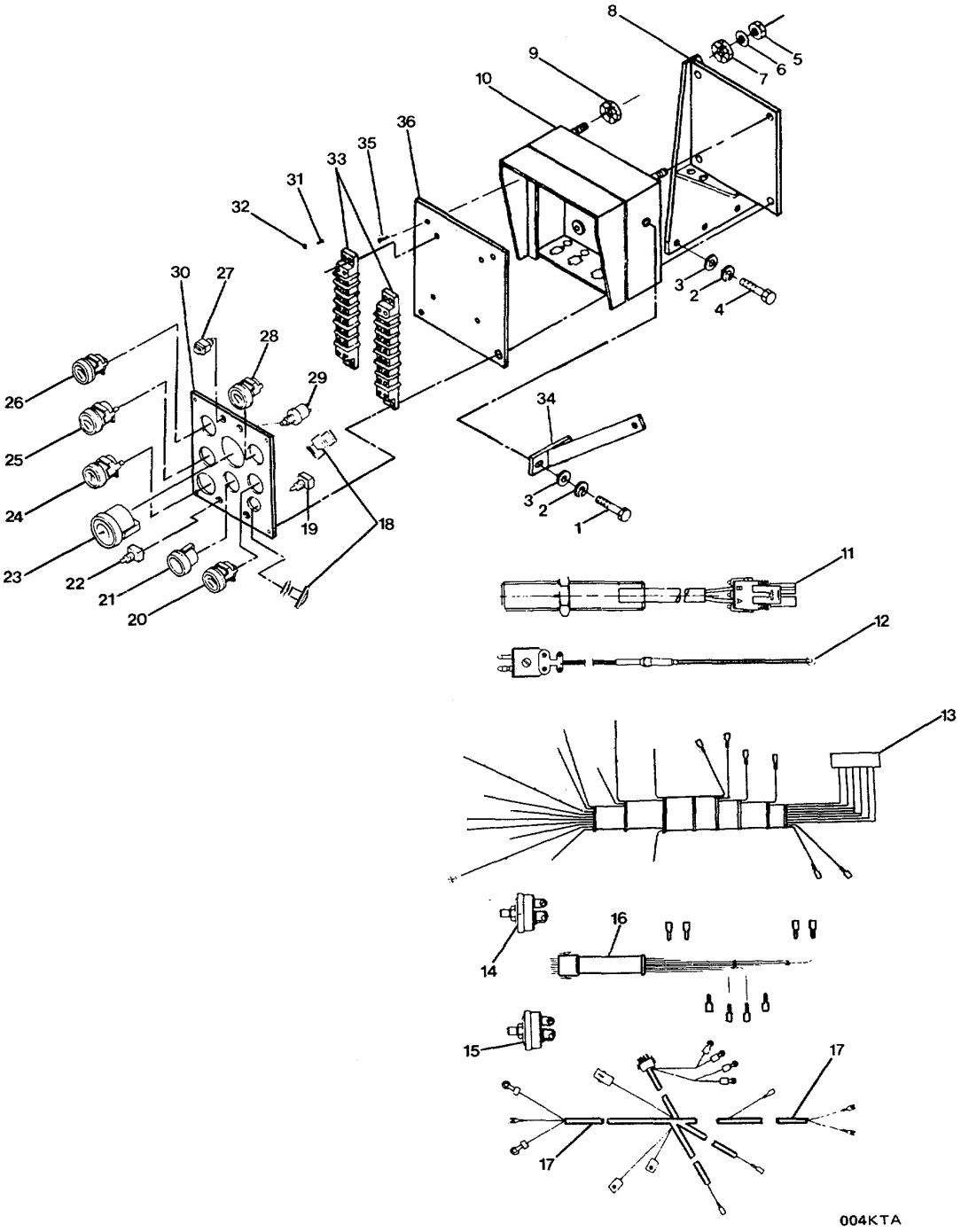

FIGURE 3. Instrument Panel Group.

(1) ITEM NO	(2) SMR CODE	(3) FSCM	(4) PART NUMBER	(5) DESCRIPTION AND USABLE ON CODES(UOC)	(6) QTY
				GROUP 01 MAIN PROPULSION ENGINE	
				FIG. 3 INSTRUMENT PANEL GROUP	
	XCOOO	15434	15.08-01	...INSTRUMENT PANEL GR...	1
1	XDOZZ	96906	MS35295-87	...SCREW, CAP, HEXAGON H	2
2	XDOZZ	96906	MS35338-47	...WASHER, LO	4
3	XDOZZ	15434	S-622	...WASHER, FLAT	4
4	XDOZZ	15434	03023	...SCREW, CAP, HEXAGON H	2
5	XDOZZ	15434	3175239	...NUT	4
6	XDOZZ	15434	3033800	...WASHER, FLAT	4
7	XDOZZ	15434	3035084	...MOUNT, RESILIENT	4
8	XDOZZ	15434	3036517	...BRACKET, INSTRUMENT	1
9	XDOZZ	15434	3035083.	...MOUNT, RESILIENT	4
10	XDOZZ	15434	3034162	...CABINET, INSTRUMENT..	1
11	PAOZZ	15434	3034571	...OIL, ELECTRICAL	1
12	PAOZZ	15434	3036575	...THERMOCOUPLE, HEATIN.	1
13	PBOZZ	15434	3035719	...WIRING HARNESS	1
14	PAOZZ	15434	3038248	...SWITCH, PRESSURE	1
15	PAOZZ	15434	3038249	...SWITCH, PRESSURE	1
16	PBOZZ	15434	3035718	...WIRING HARNESS	1
17	PBOZZ	15434	3035727	...WIRING HARNESS	1
18	PAOZZ	15434	154706	...VALVE, AIR	1
19	PAOZZ	96906	MS35058-23	...SWITCH, TOGGLE	1
20	PAOZZ	15434	3057448	...SWITCH, PRESSURE	1
21	PBOZZ	15434	3036577	...PYROMETER, INDICATIN	1
22	PAOZZ	96906	MS35058-22	...SWITCH, TOGGLE	1
23	PBOZZ	15434	3049555	...TACHOMETER, ELECTRIC.	1
24	PAOZZ	15434	3010649	...SWITCH, PRESSURE	1
25	PAOZZ	15434	3010653	...SWITCH, ENGINE TEMPE	1
26	PAOZZ	15434	3010647	...SWITCH, PRESSURE	1
27	PAOZZ	15434	3022279	...LIGHT, INDICATOR	1
28	PBOZZ	15434	3057440	...GAGE, PRESSURE, DIAL	1
29	PAOZZ	15434	3034953	...CIRCUIT BREAKER	1
30	XDOZZ	15434	3057438	...PANEL, BLANK	1
31	XDOZZ	15434	70310	...SCREW, MACHINE	4
32	XDOZZ	15434	S-256	...NUT, PLAIN, HEXAGON	4
33	XDOZZ	15434	3036306	...BLOCK, TERMINAL	2
34	XDOZZ	15434	3035763	...BRACE, INSTRUMENT PA	1
35	XDOZZ	15434	127814	...SCREW, CAP, HEXAGON H..	4
36	XDOZZ	15434	3031707	...PANEL, BLANK	1

END OF FIGURE

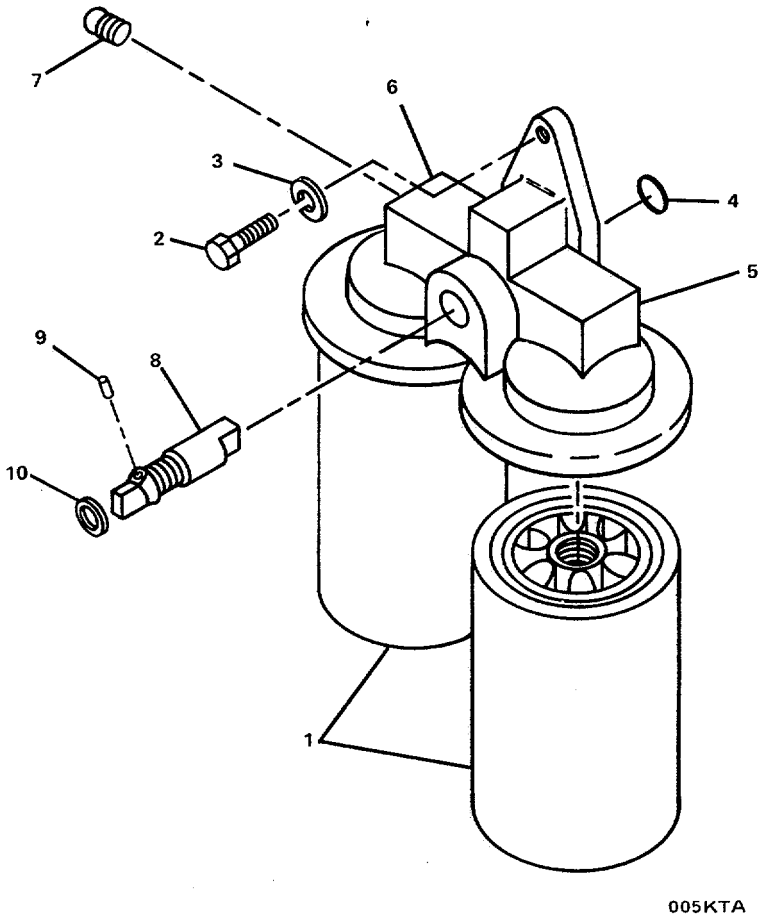

FIGURE 4. Water Filter Group.

(1) ITEM NO	(2) SMR CODE	(3) FSCM	(4) PART NUMBER	(5) DESCRIPTION AND USABLE ON CODES(UOC)	(6) QTY
				GROUP 01 MAIN PROPULSION ENGINE	
				FIG. 4 WATER FILTER GROUP	
	XCOOO	15434	08.08-01	....WATER FILTER GROUP.....	1
1	PACZZ	15434	3318318	.....ELEMENT, RESISTOR.....	4
2	XDOZZ	15434	S-197	.....SCREW, CAP, HEXAGON H	4
3	XDOZZ	96906	MS35338-8	.....WASHER, LOCK	4
4	XDOZZ	15434	145528	PACKING, PREFORMED PART OF KIT P/N. 3801717.....	4
5	XDOOO	15434	3175452	.....HEAD, WATER FILTER A	2
6	XDOZZ	15434	3175453	.....HEAD, WATER FILTER.....	2
7	XDOZZ	15434	3025460	.....PLUG, PIPE.....	2
8	XDOZZ	15434	3177040	.....SHAFT, SHUT OFF VALV.....	2
9	XDOZZ	1543	8306	.....PIN, SPRING.	2
10	XDOZZ	15434	70415	.....PACKING, PREFORMED PART OF KIT P/N 3801717.....	2

END OF FIGURE

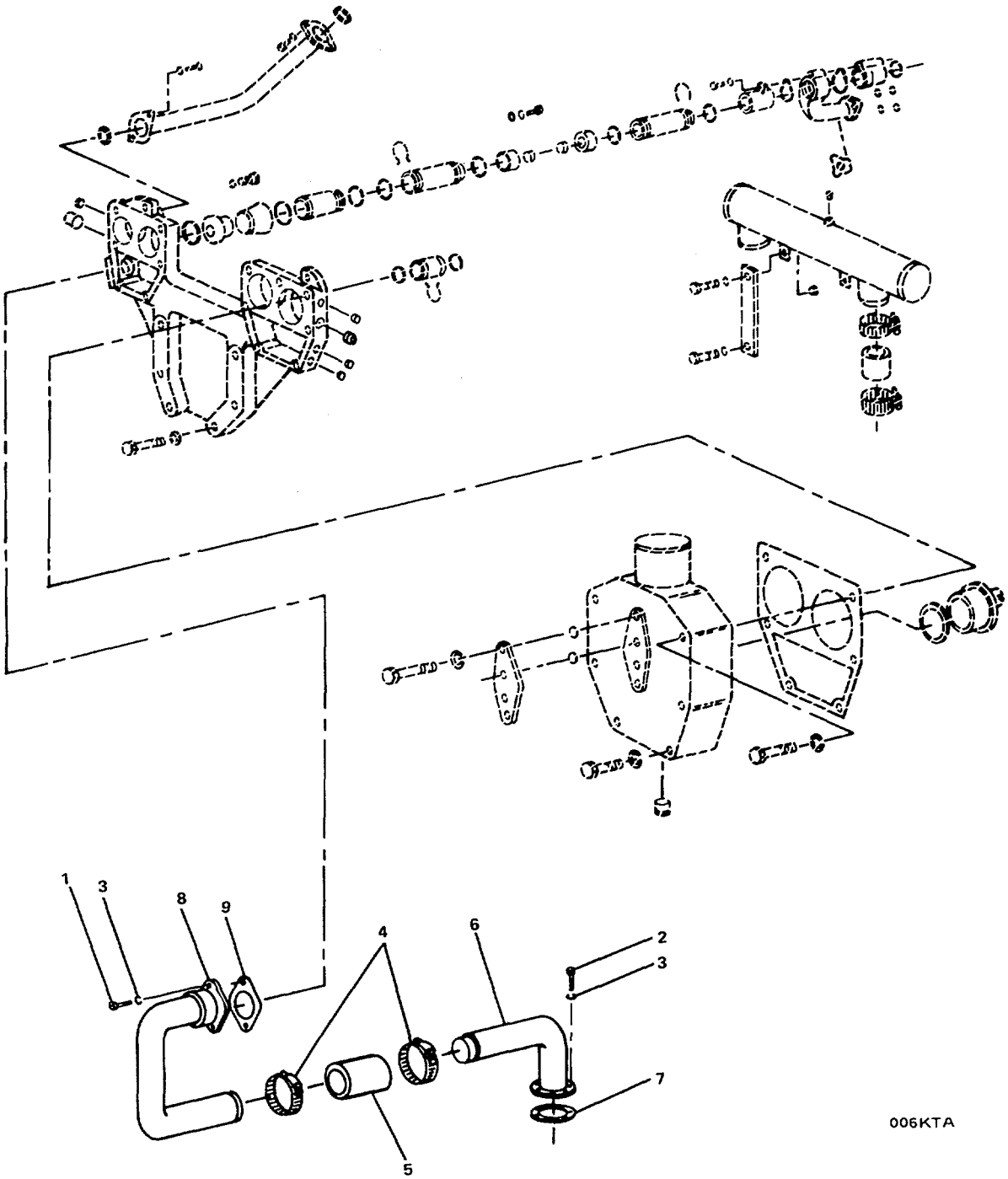

FIGURE 5. Thermostat Housing/Water Transfer Tube Group (Sheet 1of 5).

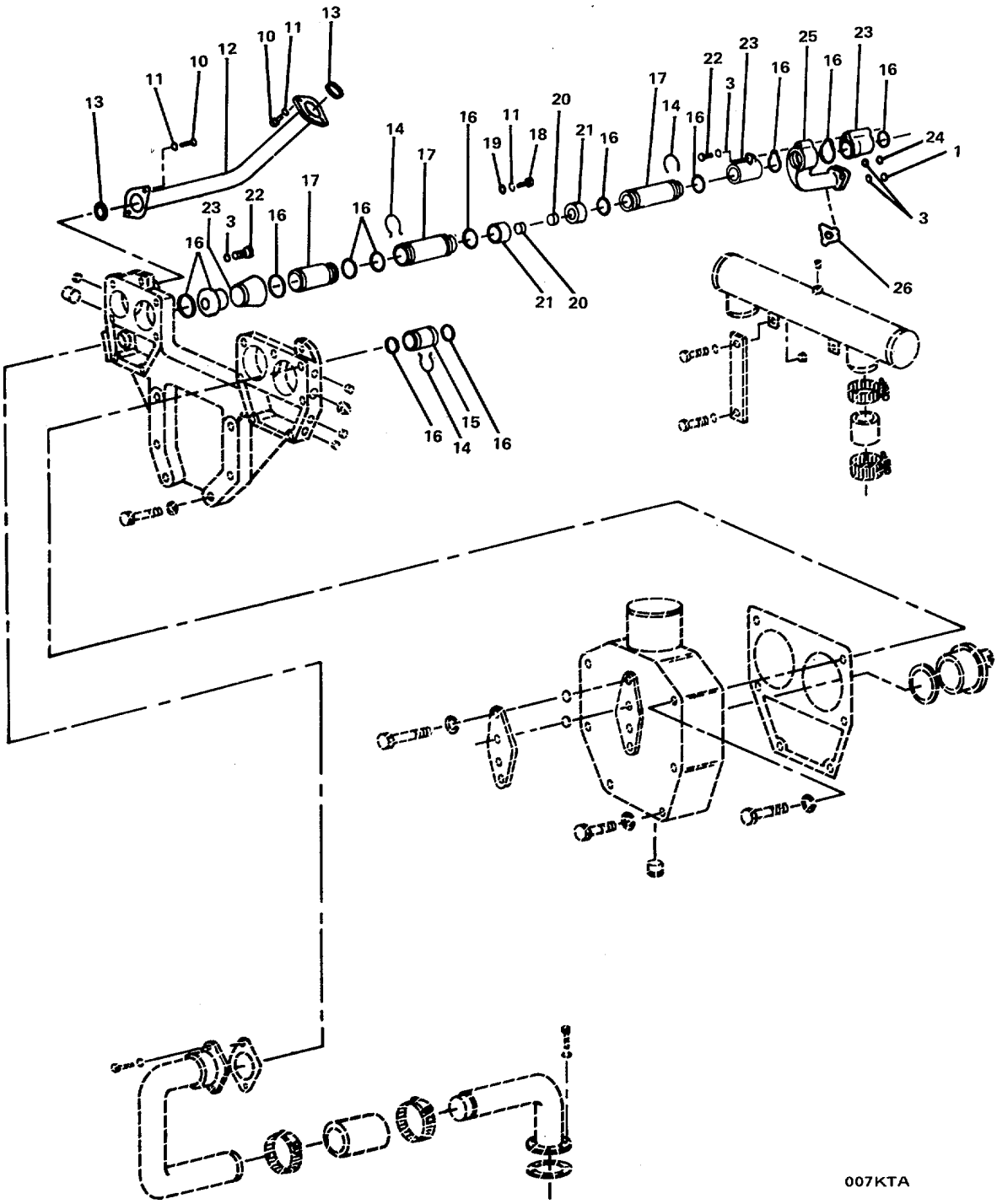

FIGURE 5. Thermostat Housing/Water Transfer Tube Group (Sheet 2 of 5).

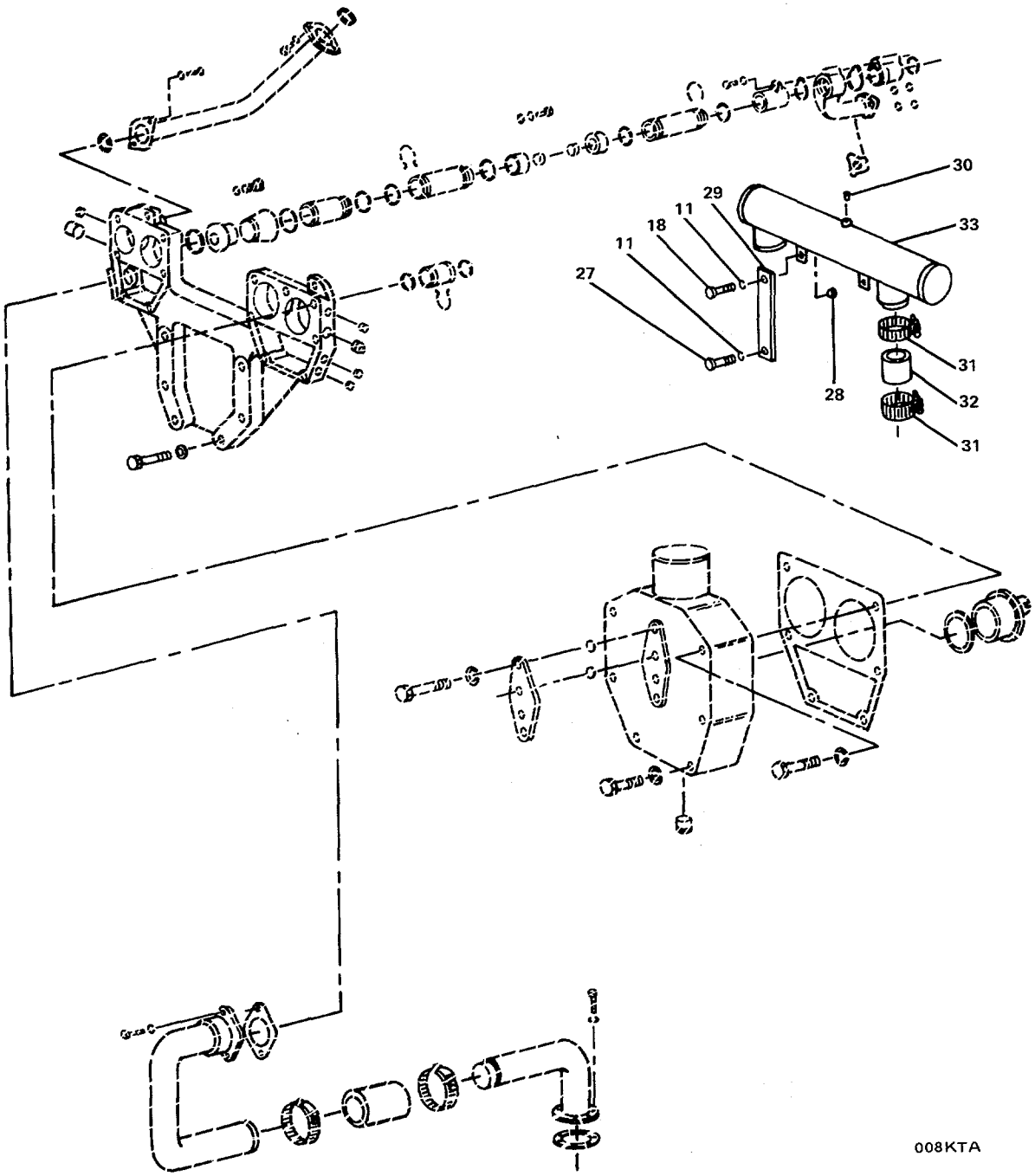

FIGURE 5. Thermostat Housing/Water Transfer Tube Group (Sheet 3 of 5).

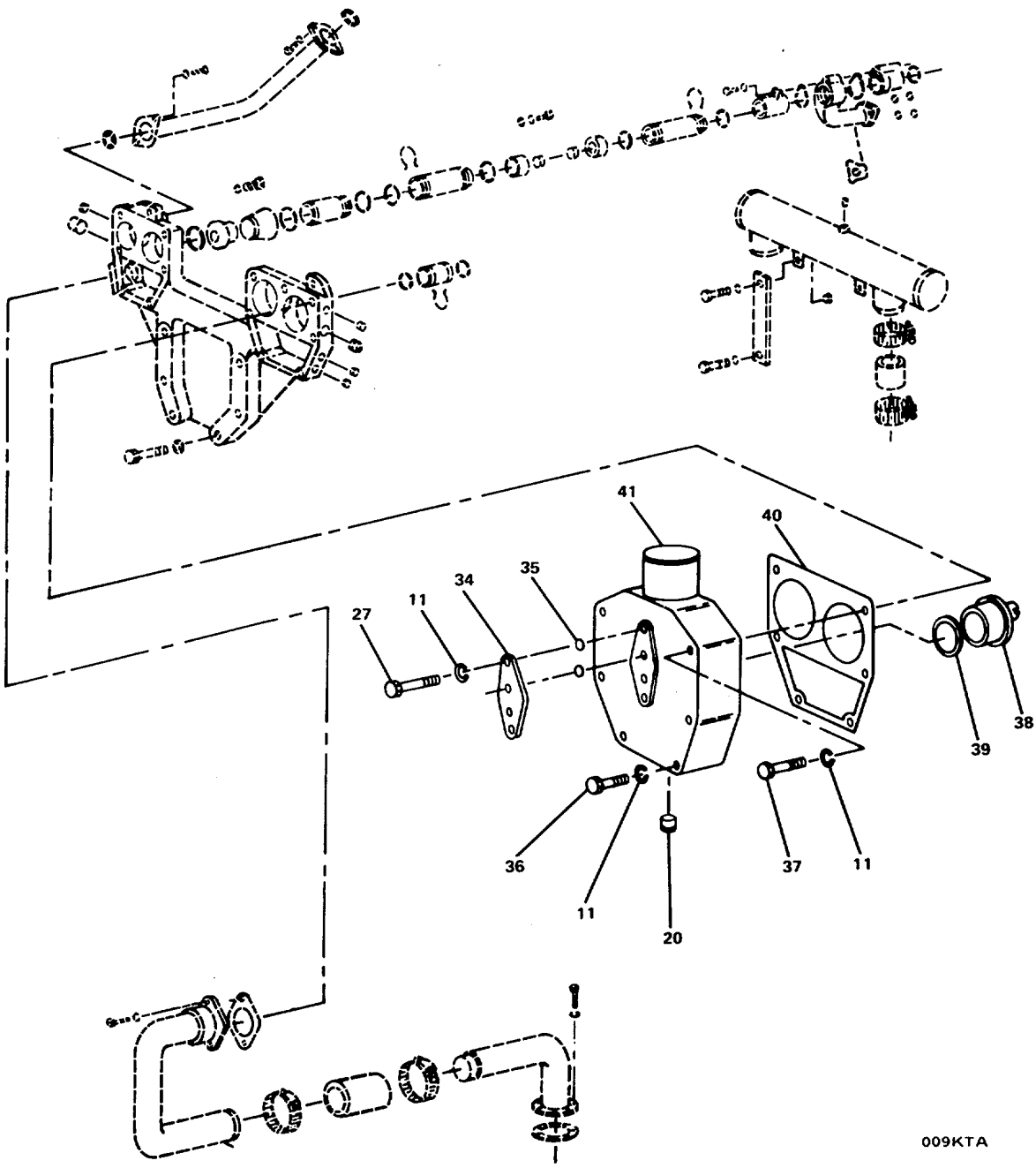

FIGURE 5. Thermostat Housing/Water Transfer Tube Group (Sheet 4 of 5).

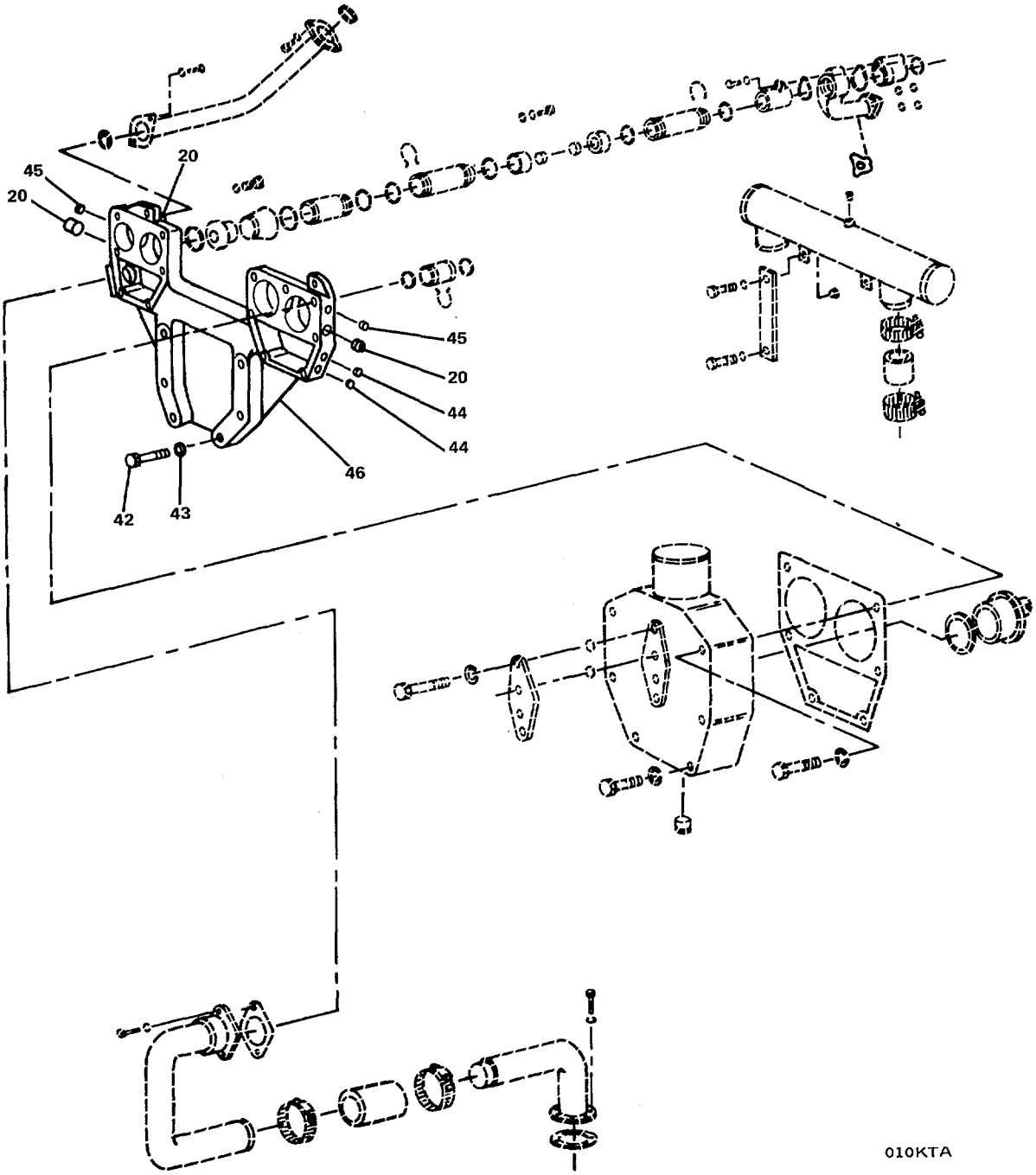

FIGURE 5. Thermostat Housing/Water Transfer Tube Group (Sheet 5 of 5).

(1) ITEM NO	(2) SMR CODE	(3) FSCM	(4) PART NUMBER	(5)(6) DESCRIPTION AND USABLE ON CODES(UOC)	QTY
				GROUP 01 MAIN PROPULSION ENGINE	
				FIG. 5 THERMOSTAT HOUSING/WATER TRANSFER TUBE GROUP	
	XCOOO	15434	08.07-01	.THERMOSTAT HOUSING/	1
1	XDOZZ	96906	MS35295-62	...SCREW, CAP, HEXAGON H	6
2	XDOZZ	15434	S-112	...SCREW, CAP, HEXAGON H	2
3	XDOZZ	15434	S-606-A	...WASHER, LOCK	18
4	XDOZZ	15434	43828-E	...CLAMP, HOSE	2
5	XDOZZ	15434	67369	...HOSE, NONMETALLIC	1
6	XDOZZ	15434	3026694	...TUBE ASSEMBLY, METAL	1
7	PAOZZ	15434	206460	...GASKET (THERMOSTAT HOUSING COVER). PART OF KIT P/N 3801718	1
8	XDOZZ	15434	3026693	...TUBE ASSEMBLY, METAL	1
9	PAOZZ	15434	207515	...GASKET PART OF KIT P/N 3801718	1
10	XDOZZ	15434	205354	...SCREW CAP	8
11	XDOZZ	96906	MS35338-8	...WASHER, LOCK	32
12	XDOZZ	15434	3175543	...TUBE ASSEMBLY, METAL	2
13	PAOZZ	15434	3008710	...PACKING, PREFORMED PART OF KIT P/N 3801718	4
14	XDOZZ	15434	205976	...RING, RETAINING	14
15	XDOZZ	15434	3002956	...TUBE ASSEMBLY, METAL	1
16	PAOZZ	15434	3028291	...PACKING, PREFORMED	34
17	XDOZZ	15434	206709	...TUBE ASSEMBLY, METAL	6
18	XDOZZ	15434	S-109	...SCREW, CAP, HEXAGON H	4
19	XDOZZ	15434	62279	...SPACER, RING.	2
20	XDOZZ	15434	3008469	...PLUG, PIPE	7
21	XDOZZ	15434	3001375	...PLUG, EXPANSION	2
22	XDOZZ	15434	206527	...BOLT, MACHINE	6
23	XDOZZ	15434	206559	...TUBE ASSEMBLY, METAL	6
24	XDOZZ	15434	S-126	...SCREW, CAP, HEXAGON H	4
25	XDOZZ	15434	206555	...CONNECTION	2
26	PAOZZ	15434	206556	...GASKET	2
27	XDOZZ	15434	S-105	...SCREW, CAP, HEXAGON H	8
28	XDOZZ	15434	S-223	...NUT, PLAIN, HEXAGON	2
29	XDOZZ	15434	3014159	...BRACE, TUBE	2
30	XDOZZ	15434	217632	...PLUG, PIPE	1
31	XDOZZ	15434	43828-F	...CLAMP, LOOP	4
32	XDOZZ	15434	63223	...HOSE, NONMETALLIC	2
33	XDOZZ	15434	3014157	...CONNECTION, WATER, TR.	1
34	XDOZZ	15434	3003379	...COVER, ACCESS	2
35	PAOZZ	15434	70861	...PACKING, PREFORMED	4
36	XDOZZ	15434	205323	...BOLT, MACHINE	4
37	XDOZZ	15434	205377	...BOLT, MACHINE	8
38	PAOZZ	15434	3022299	...THERMOSTAT, FLOW CON	4
39	PAOZZ	15434	3042759	...PACKING, PREFORMED PART OF KIT P/N 3801718	4
40	PAOZZ	15434	206443	...GASKET	2
41	XDOZZ	15434	3035844	...HOUSING, THERMOSTAT.	2
42	XDOZZ	15434	205669	...SCREW, CAP	6
43	XDOZZ	15434	S-611	...WASHER, LOCK	6

(1) ITEM NO	(2) SMR CODE	(3) FSCM	(4) PART NUMBER	(5) DESCRIPTION AND USABLE ON CODES(UOC)	(6) QTY
44	XDOZZ	15434	3013786	..PLUG, PIPE.....	2
45	DOZZ	15434	3008466	..PLUG, PIPE.....	2
46	XDOZZ	15434	3028863	..SUPPORT, THERMOSTAT	1

END OF FIGURE

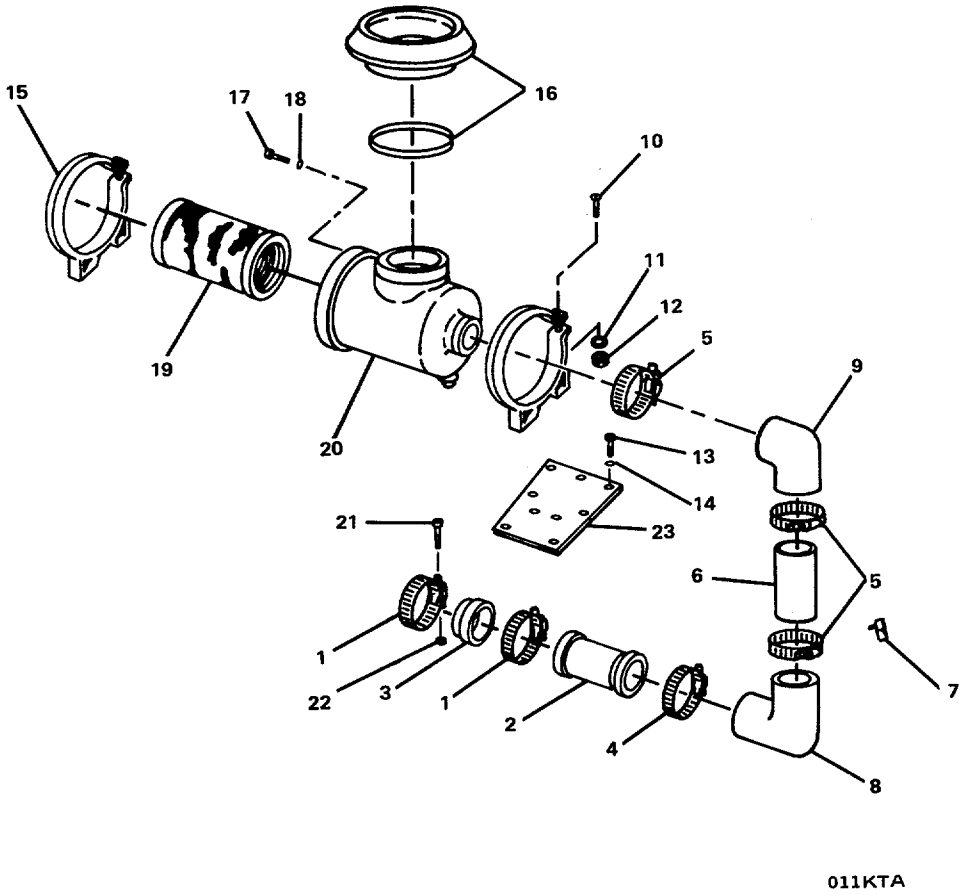

FIGURE 6. Air Cleaner Group.

(1) ITEM NO	(2) SMR CODE	(3) FSCM	(4) PART NUMBER	(5) DESCRIPTION AND USABLE ON CODES(UOC)	(6) QTY
				GROUP 01 MAIN PROPULSION ENGINE	
				FIG. 6 AIR CLEANER GROUP	
	XCOOO	15434	10.04-01	.AIR CLEANER GROUP	1
1	XDOZZ	15434	125741	..CLAMP, HOSE	4
2	XDOZZ	15434	112836	..TUBE ASSEMBLY, META	2
3	XDOZZ	15434	3030790	..HOSE, PREFORMED	2
4	XDOZZ	15434	140313	..CLAMP, HOSE	2
5	XDOZZ	15434	140314	..CLAMP, HOSE	6
6	XDOZZ	15434	3032468	..TUBE ASSEMBLY, METAL	2
7	PAOZZ	15434	178957	..INDICATOR, FILTER WA	2
8	XDOZZ	15434	3030514	..ELBOW, TUBE	2
9	XDOZZ	15434	3030774	..ELBOW, TUBE	2
10	XDOZZ	15434	S-119	..SCREW, CAP, HEXAGON H	4
11	XDOZZ	96906	MS35338-7	..WASHER, LOCK	4
12	XDOZZ	15434	3175239	..NUT	4
13	XDOZZ	15434	S-117	..SCREW, CAP, HEXAGON H	8
14	XDOZZ	96906	MS35338-8	..WASHER, LOCK.	8
15	XDOZZ	15434	197221	..STRAP, RETAINING	4
16	XDOZZ	15434	3017003	..CAP WITH CLAMP	2
17	XDOZZ	15434	S-111	..BOLT, MACHINE	12
18	XDOZZ	96906	M535338-7	..WASHER, LOCK	12
19	PACZZ	15434	3018042	..FILTER ELEMENT, INTA	2
20	XDOZZ	15434	3017002	..AIR CLEANER, INTAKE	2
21	XDOZZ	96906	MS35295-87	..SCREW, CAP, HEXAGON H	10
22	XDOZZ	96906	MS35338-47	..WASHER, LOCK	10
23	XDOZZ	15434	3017004	..BRACKET, INTAKE AIR	2

END OF FIGURE

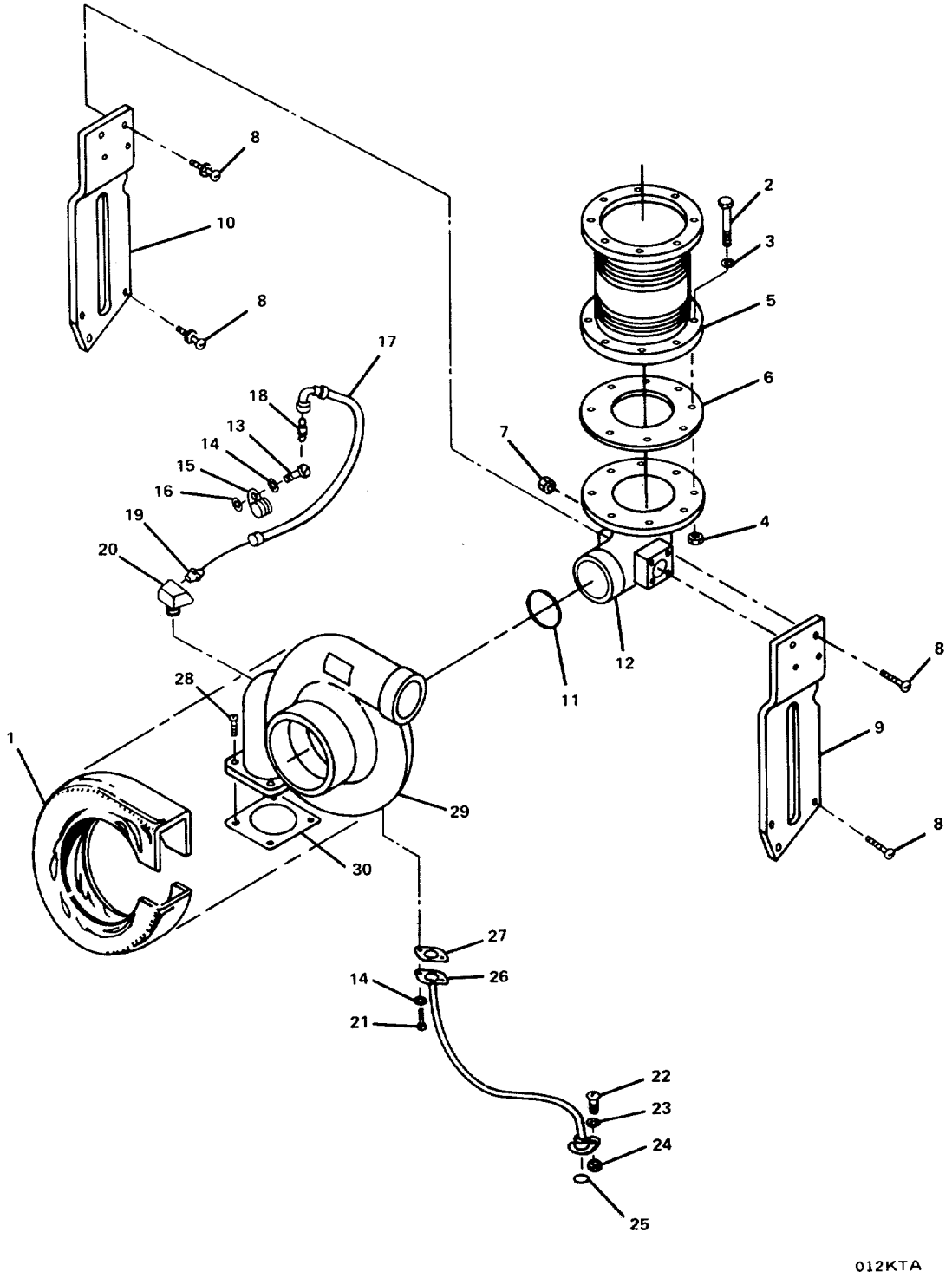

FIGURE 7. Turbocharger Group.

(1) ITEM NO	(2) SMR CODE	(3) FSCM	(4) PART NUMBER	(5) DESCRIPTION AND USABLE ON CODES(UOC)	(6) QTY
				GROUP 01 MAIN PROPULSION ENGINE	
				FIG. 7 TURBOCHARGER GROUP	
	XCCOO	15434	12.01-01	.TURBOCHARGER GROUP	2
1	PACZZ	15434	3003697	..INSULATION BLANKET	2
2	XDCZZ	15434	S-137-A	..SCREW, CAP, HEXAGON H	32
3	XDCZZ	96906	MS35338-14	..WASHER, LOCK	32
4	XDCZZ	15434	112501	..NUT, PLAIN, HEXAGON	32
5	XDCZZ	15434	3033783	..EXHAUST CONNECTOR	2
6	PACZZ	15434	3033784	..GASKET	2
7	XDCZZ	15434	S-910-B	..PLUG, PIPE	2
8	XDCZZ	15434	3010595	..SCREW, MACHINE	16
9	XDCZZ	15434	3027630	..BRACE, EXHAUST CONNE	1
10	XDCZZ	15434	3027631	..BRACE, EXHAUST CONNE	1
11	XDCZZ	15434	3016306	..CLAMP, LOOP	2
12	XDCZZ	15434	3027629	..CONNECTION, EXHAUST	2
13	XDCZZ	15434	3012475	..SCREW	2
14	XDCZZ	96906	MS35338-8	..WASHER, LOCK	6
15	XDCZZ	15434	108722	..CLAMP, LOOP	2
16	XDCZZ	96906	MS27183-14	..WASHER, FLAT	2
17	PACZZ	15434	3019035	..HOSE ASSEMBLY, NONME	2
18	XDCZZ	15434	118346	..ADAPTER, STRAIGHT, PI	2
19	XDCZZ	15434	S-1039-A	..ADAPTER, STRAIGHT, PI	2
20	XDCZZ	15434	S-955	..BUSHING, PIPE	2
21	XDCZZ	15434	S-112	..SCREW, CAP, HEXAGON H	4
22	XDCZZ	96906	MS18154-10	..SCREW, CAP, HEXAGON H	2
23	XDCZZ	96906	MS122032	..WASHER, LOCK	2
24	XDCZZ	15434	3177195	..SPACER, RING	2
25	PACZZ	15434	216187	..PACKING, PREFORMED PART OF KIT P/N 3801718	2
26	XDCZZ	15434	3177338	..HOSE ASSEMBLY, METAL	2
27	PACZZ	15434	201048	..GASKET PART OF KIT P/N 3801718	2
28	XDCZZ	15434	3275479	..SCREW, CAP, HEXAGON H	8
29	PACZZ	15434	3524648	..TURBO SUPERCHARGER,	2
30	PACZZ	15434	206576	..GASKET (TURBOCHARGER) PART OF KIT P/N 3801718	2
	XCOOO	15434	06.04-01	.FUEL FILTER GROUP	1

END OF FIGURE

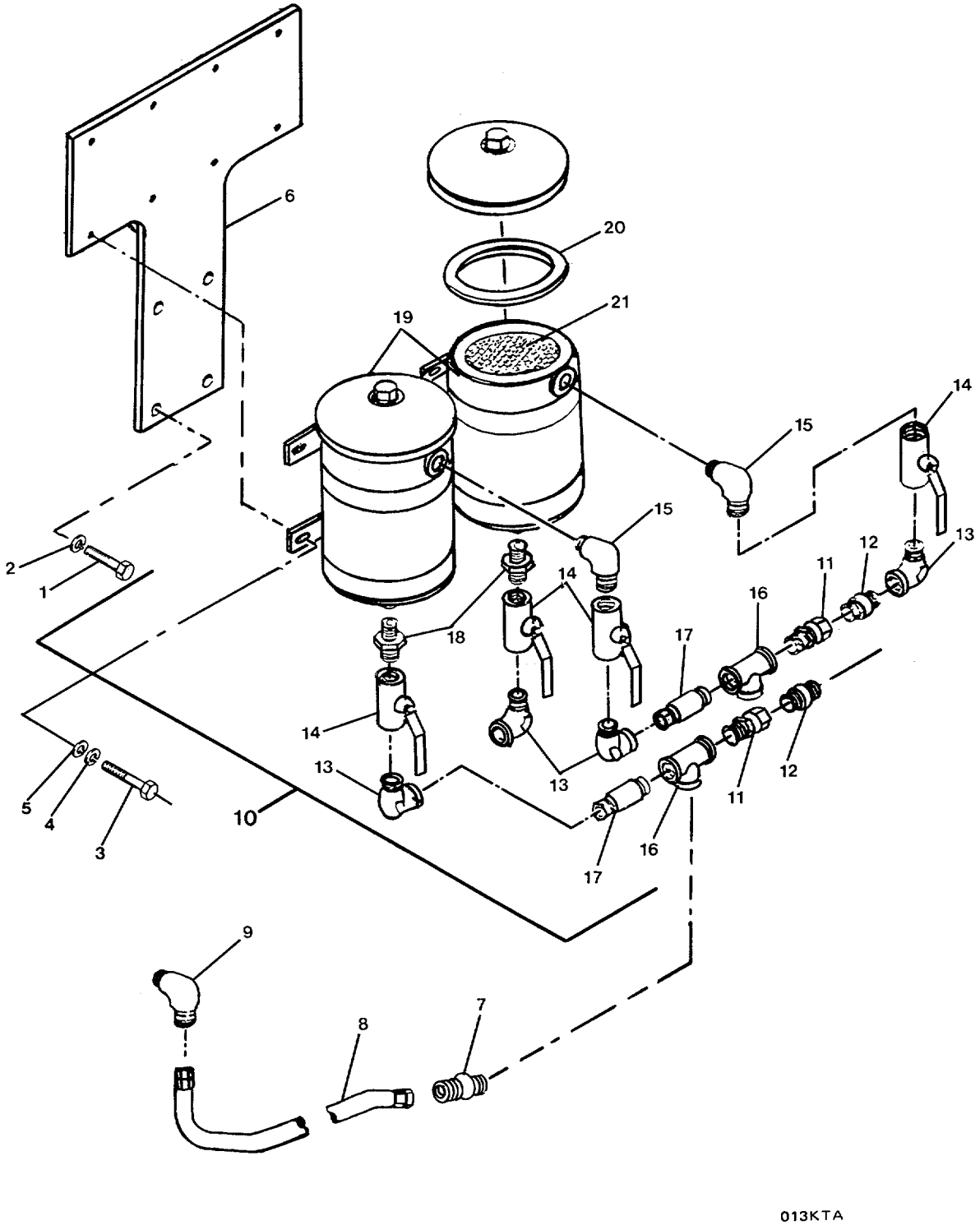

FIGURE 8. Fuel Filter Group.

(1) ITEM NO	(2) SMR CODE QTY	(3) FSCM	(4) PART NUMBER	(5) DESCRIPTION AND USABLE ON CODES (UOC)	(6)
				GROUP 01 MAIN PROPULSION ENGINE	
				FIG. 8 FUEL FILTER GROUP	
1	XDOZZ	15434	S-123	...SCREW, CAP, HEXAGON H	4
2	XDOZZ	15434	S-611	...WASHER, LOCK	4
3	XDOZZ	15434	S-117	...SCREW, CAP, HEXAGON H	8
4	XDOZZ	96906	MS35338-8	...WASHER, LOCK	8
5	XDOZZ	96906	MS27183-14	...WASHER, FLAT	8
6	XDOZZ	15434	3033596	...BRACKET, FILTER.	1
7	XDOZZ	15434	3032627	...UNION, PIPE	1
8	PAOZA	15434	AM12034SS	...HOSE ASSEMBLY, NONME	1
9	XDOZZ	15434	3032628	...ELBOW, ADAPTER, STRAI	1
10	XDOOO	15434	3033614	...FILTER ASSEMBLY, FUE	1
11	XDOZZ	15434	3033598	.....ADAPTER, PIPE	2
12	XDOZZ	15434	109753	.....NIPPLE, PIPE	2
13	XDOZZ	15434	S-988	.....ELBOW, PIPE	4
14	XDOZZ	15434	3033597	.....VALVE, SHUTOFF	4
15	XDOZZ	15434	199616	.....ELBOW, PIPE, REDUCING	2
16	XDOZZ	15434	S-981	.....TEE, PIPE	2
17	XDOZZ	15434	S-960-D	.....NIPPLE, PIPE	2
18	XDOZZ	15434	193498	.....NIPPLE, PIPE, REDUCIN	2
19	XDOZZ	15434	252193	.....FILTER BODY, FLUID	2
20	PAOZZ	15434	252598	.....GASKET	2
21	PACZZ	15434	256835	.....FILTER ELEMENT, FLUI	2
22	XDOZZ	15434	2521598	.....SPRING	1

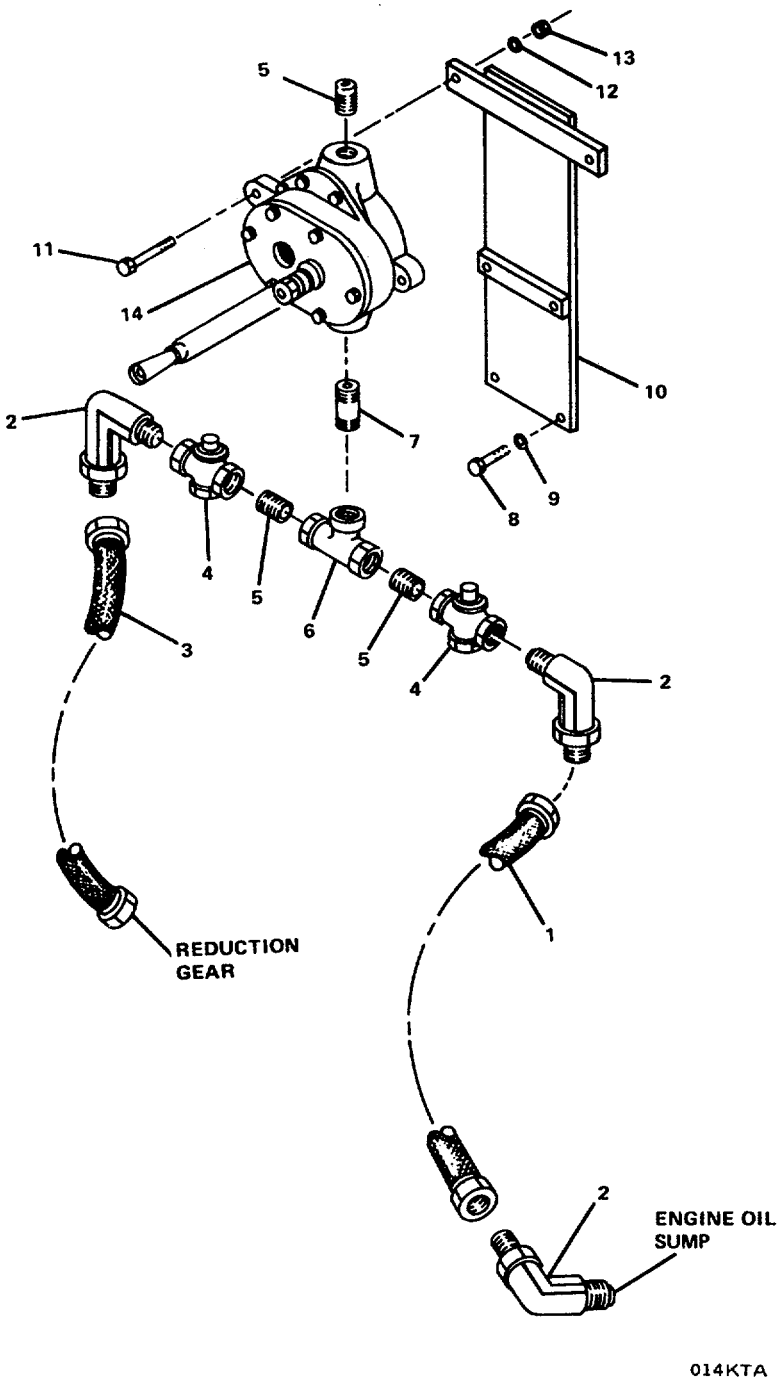

FIGURE 9. Sump Pump Group.

(1) ITEM NO	(2) SMR CODE	(3) FSCM	(4) PART NUMBER	(5) DESCRIPTION AND USABLE ON CODES(UOC)	(6) QTY
				GROUP 01 MAIN PROPULSION ENGINE	
				FIG. 9 SUMP PUMP GROUP	
	XCOOO	15434	07.01.2-01	.SUMP PUMP GROUP	1
1	XDOZZ	15434	AD20052SS	...HOSE ASSEMBLY, NONME	1
2	XDOZZ	15434	S-963-B	...ELBOW, PIPE.....	3
3	XDOZZ	15434	AD20077SS	...HOSE ASSEMBLY, NONME.....	1
4	XDOZZ	15434	3014283	...VALVE, STOP-CHECK	2
5	XDOZZ	15434	S-937-C	...NIPPLE, PIPE	3
6	XDOZZ	15434	151441	...TEE, PIPE.....	1
7	XDOZZ	15434	166112	...NIPPLE, PIPE.....	1
8	XDOZZ	15434	S-123	...SCREW, CAP, HEXAGON H.....	4
9	XDOZZ	15434	S-611	...WASHER, LOCK	4
10	XDOZZ	15434	3032870	...BRACKET.....	1
11	XDOZZ	15434	S-121-B	...BOLT, MACHINE	2
12	XDOZZ	96906	MS35338-47	...WASHER, LOCK	2
13	XDOZZ	15434	S-217	...NUT, PLAIN, HEXAGON.....	2
14	PBCZZ	15434	3032869	...PUMP, ROTARY.....	1

END OF FIGURE

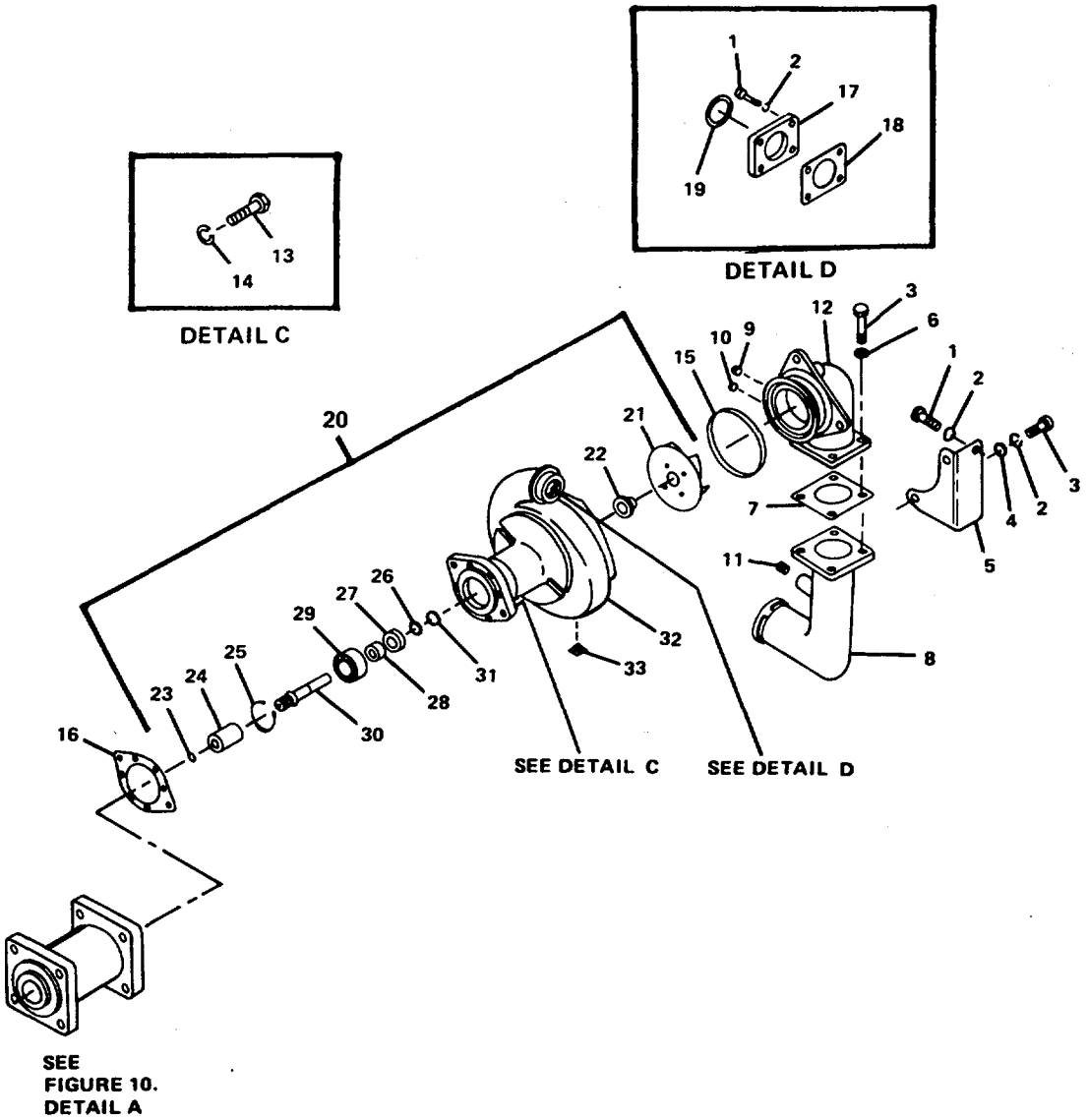

FIGURE 10. Water Pump Group (Sheet 1 of 2).

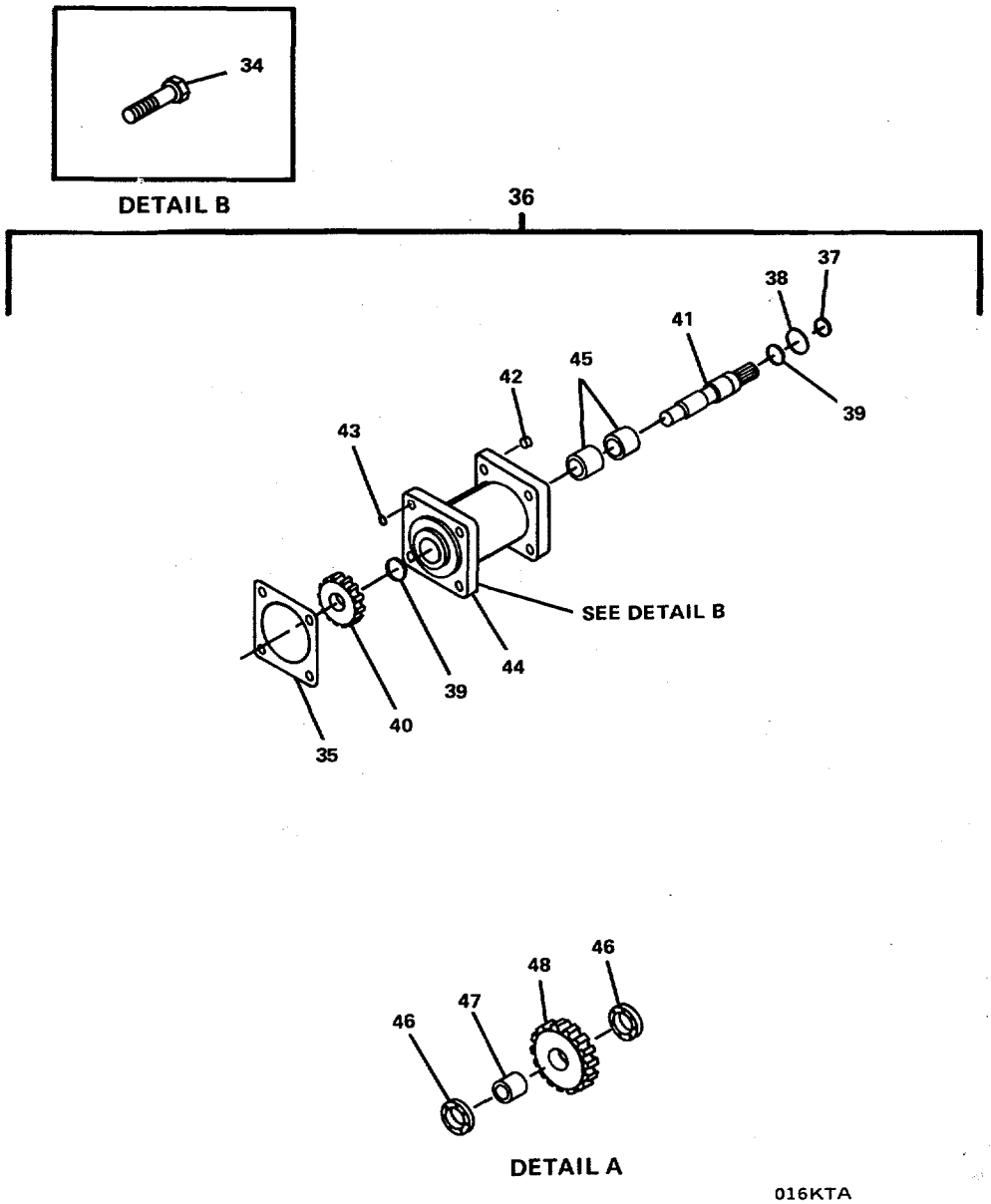

FIGURE 10. Water Pump Group (Sheet 2 of 2).

(1) ITEM NO	(2) SMR CODE	(3) FSCM	(4) PART NUMBER	(5) DESCRIPTION AND USABLE ON CODES(UOC)	(6) QTY
				GROUP 01 MAIN PROPULSION ENGINE	
				FIG. 10 WATER PUMP GROUP	
	XCCFF	15434	08.01-01	.WATER PUMP GROUP	1
1	XDCZZ	15434	199919	..BOLT, MACHINE	6
2	XDCZZ	96906	MS35338-8	..WASHER, LOCK	8
3	XDCZZ	15434	191772	..BOLT, MACHINE	6
4	XDCZZ	96906	MS27183-14	..WASHER, FLAT	4
5	XDCZZ	15434	3175857	..SUPPORT, WATER PUMP	1
6	XDCZZ	15434	S-606-A	..WASHER, LOCK	4
7	PACZZ	15434	207540	..GASKET PART OF KIT P/N 3801717	1
8	PBCZZ	15434	207539	..CONNECTOR, FLUID, PUM	1
9	XDCZZ	15434	3008468	..PLUG, PIPE	1
10	XDCZZ	15434	S-907-A	..PLUG, PIPE	1
11	XDCZZ	15434	3008470	..PLUG	1
12	XDCZZ	15434	3002108	..CONNECTION, WATER PU	1
13	XDCZZ	96906	MS35295-87	..SCREW, CAP, HEXAGON H	4
14	XDCZZ	96906	MS35338-47	..WASHER, LOCK	4
15	PACZZ	15434	206457	..PACKING, PREFORMED PART OF KIT P/N 3801717	1
16	PACZZ	15434	206193	..GASKET (WATER PUMP) PART OF KIT P/N 3801717	1
17	XDCZZ	15434	3008494	..PLATE, WATER PUMP AD	1
18	PACZZ	15434	206455	..GASKET (WATER PUMP ADAPTER) PART OF KIT P/N 3801717	1
19	PBCZZ	15434	3007512	..PACKING, PREFORMED PART OF KIT P/N 3801717	1
20	PBCFZ	15434	3050447	..PUMP, COOLING SYSTEM	1
21	PAFZZ	15434	3050454	...IMPELLER, PUMP, CENTR	1
22	PAFZZ	15434	206198	...SEAL	1
23	PAFZZ	15434	206196	...RING, RETAINING	1
24	XDFZZ	15434	206195	...COUPLING, SHAFT, RIGI	1
25	XDFZZ	15434	70183	...RING, PISTON	1
26	PAFZZ	15434	3175573	...RING, RETAINING	1
27	PAFZZ	15434	S-16054	...BEARING, BALL, ANNULA	1
28	XDFZZ	15434	3030487	...SPACER, SLEEVE	1
29	PAFZZ	15434	S-16069	...BEARING, BALL, ANNULA	1
30	XDFZZ	15434	3050442	...SHAFT, STRAIGHT	1
31	XDFZZ	15434	3035248	...SEAT, VALVE	1
32	XDFZZ	15434	3030490	...HOUSING, WATER PUMP	1
33	XDFZZ	15434	S-962-E	...COCK, DRAIN	1
34	XDFZZ	15434	S-162-A	..SCREW, CAP, HEXAGON H	3
35	PAFZZ	15434	206416	..GASKET PART OF KIT P/N 3801717	1
36	PBFFZ	15434	3024194	..BRACKET, ENGINE ACCE	1
37	XDFZZ	15434	205166	...RING, RETAINING	1
38	XDFZZ	15434	205168	...WASHER	1
39	XDFZZ	15434	3026556	...BEARING, WASHER, THRU	2
40	XDFZZ	15434	207251	...GEAR, SPUR	1
41	XDFZZ	15434	3175222	...SHAFT, STRAIGHT	1
42	XDFZZ	15434	206742	...SHIELD, EXPANSION	1
43	XDFZZ	15434	70295	...PLUG, PIPE	1

(1) ITEM NO	(2) SMR CODE	(3) FSCM	(4) PART NUMBER	(5) DESCRIPTION AND USABLE ON CODES(UOC)	(6) QTY
44	XDFZZ	15434	3024195	...SUPPORT	1
45	XDFZZ	15434	205156	...BUSHING, SLEEVE	2
46	XDFZZ	15434	130083	...BEARING, WASHER, THRU	2
47	XDFZZ	15434	3004686	...BUSHING, SLEEVE	1
48	XDFZZ	15434	3004682	...GEAR, SPUR	1

END OF FIGURE

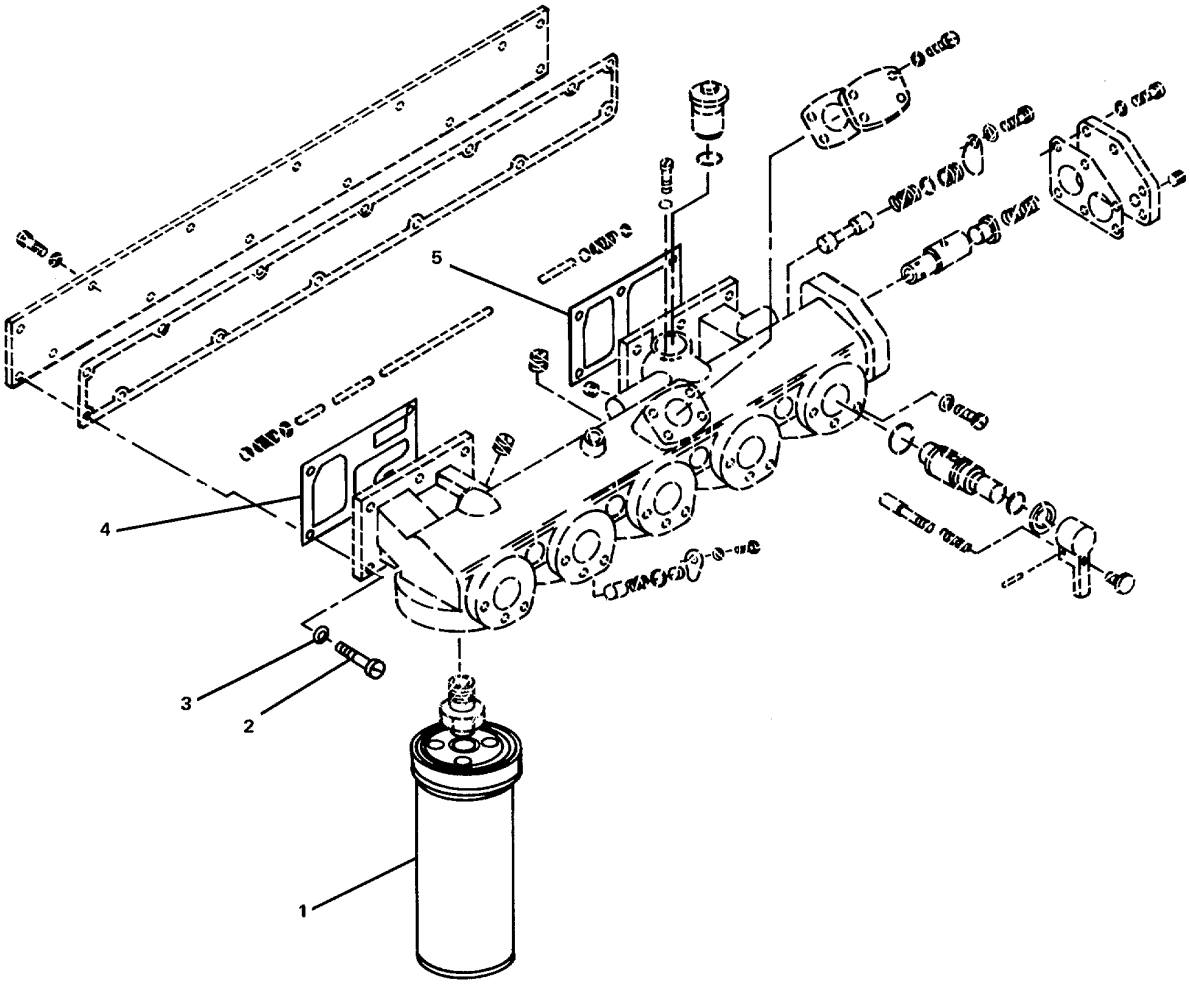

FIGURE 11. Lubricating Oil Filter Group (Sheet 1 of 2).

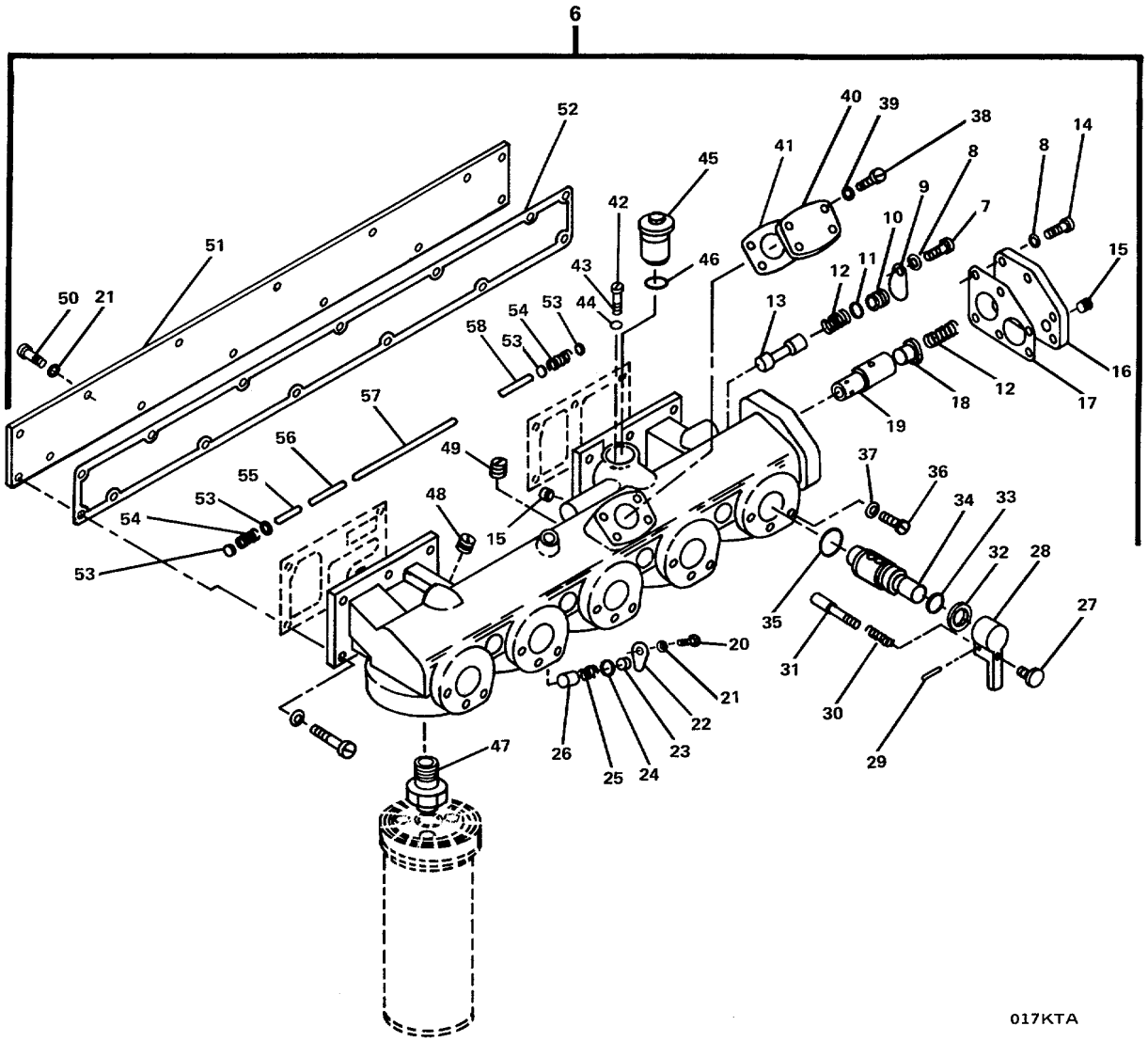

FIGURE 11. Lubricating Oil Filter Group (Sheet 2 of 2)

(1) ITEM NO	(2) SMR CODE	(3) FSCM	(4) PART NUMBER	(5) DESCRIPTION AND USABLE ON CODES (UOC)	(6) QTY
				GROUP 01 MAIN PROPULSION ENGINE	
				FIG. 11 LUBRICATIN OIL FILTER GROUP	
1	PAOZZ	15434	3313282	. FILTER ELEMENT, FLUI	20
2	XDOZZ	15434	191772	. BOLT, MACHINE	12
3	XDOZZ	15434	S-606-A	. WASHER, LOCK	12
4	PAOZZ	15434	3177108	. GASKET (FILTER HEAD) PART OF KIT P/N 3801717	1
5	PAOZZ	15434	3011650	. GASKET (LUBE OIL FILTER HEAD) PART OF KIT P/N 3801717	1
6	XDOFF	15434	3176104	. FILTER ASSEMBLY, LUB	1
7	XDFZZ	96906	MS35295-62	.. SCREW, CAP, HEXAGON H.	1
8	XDFZZ	96906	MS35338-8	.. WASHER, LOCK	7
9	XDFZZ	15434	170664	.. WASHER, FLAT.	1
10	XDFZZ	15434	3000911	.. COVER, ACCESS	1
11	PAFZZ	15434	145529	...SEAL, PLAIN ENCASED PART OF KIT P/N 3801717	1
12	PAFZZ	15434	205659	.. SPRING, HELICAL, COMP	2
13	PAFZZ	15434	3028888	.. PLUNGER, DETENT	1
14	XDFZZ	96906	MS90728-61	..SCREW, CAP, HEXAGON H.	6
15	XDFZZ	15434	3008465	.. PLUG, PIPE	2
16	XDFZZ	15434	3000909	.. COVER, ACCESS	1
17	PAFZZ	15434	3028890	.. GASKET (LUBE OIL FILTER COVER) PART OF KIT P/N 3801717	1
18	PAFZZ	15434	3021618	.. PISTON, REGULATOR	1
19	XDFZZ	15434	3028552	. VALVE	1
20	XDFZZ	15434	S-102-A	..SCREW, CAP, HEXAGON H	1
21	XDFZZ	96906	MS35338-7	. WASHER, LOCK	15
22	XDFZZ	15434	3036018	.. WASHER, SHOULDERED	1
23	XDFZZ	15434	205350	.. STEM, FLUID VALVE	1
24	PAFZZ	15434	3201125	.. PACKING, PREFORMED PART OF KIT P/N 3801717	1
25	PAFZZ	15434	205349	.. SPRING, HELICAL, COMP	1
26	PAFZZ	15434	205348	.. PISTON, VALVE	1
27	XDFZZ	15434	3015010	.. NUT, PLAIN, KNURLE	5
28	XDFZZ	15434	3015007	.. LEVER	5
29	PAFZZ	15434	148976	.. PIN, THROTTLE STOP	5
30	PAFZZ	15434	144195	.. SPRING, HELICAL, COMP	5
31	XDFZZ	15434	3015009	.. ROD, DETENT	5
32	XDFZZ	15434	3015202	.. PLATE, RETAINING, SHA	5
33	PAFZZ	15434	68910	.. PACKING, PREFORMED	5
34	XDFZZ	15434	3015008	.. PLUNGER, DETENT	5
35	PAFZZ	15434	3026393	.. PACKING, PREFORMED	10
36	XDFZZ	15434	3015086	.. SCREW, MACHINE	5
37	XDFZZ	15434	8078	.. WASHER, FLAT	5
38	XDFZZ	15434	S-113	SCREW, CAP, HEXAGON H	4
39	XDFZZ	15434	S-608	.. WASHER, LOCK	4
40	XDFZZ	15434	3015793	.. COVER, ACCESS	1
41	PAFZZ	15434	3015794	.. GASKET	1
42	XDFZZ	96906	MS90725-6	.. SCREW, CAP, HEXAGON H	1

(1) ITEM NO	(2) SMR CODE	(3) FSCM	(4) PART NUMBER	(5) DESCRIPTION AND USABLE ON CODES(UOC)	(6) QTY
43	XDFZZ	96906	MS122032	..WASHER, LOCK	1
44	XDFZZ	5434	62392	..WASHER, FLAT	1
45	XDFZZ	15434	3014996	..ROTOR	1
46	PAFZZ	15434	145578	..PACKING, PREFORMED	1
47	XDFZZ	15434	200308	..ADAPTER BUSHING	5
48	XDFZZ	15434	3008469	..PLUG, PIPE	1
49	XDFZZ	15434	3008466	..PLUG, PIPE	1
50	XDFZZ	15434	S-107	..SCREW, CAP, HEXAGON H	14
51	XDFZZ	15434	3015001	..COVER, ACCESS	1
52	PAFZZ	15434	3015029	..GASKET	1
53	XDFZZ	15434	S-1747	..BALL, BEARING	4
54	XDFZZ	15434	3015002	..SPRING	2
55	XDFZZ	15434	3015004	..CONNECTING LINK, RIG	1
56	XDFZZ	15434	3015005	..CONNECTING LINK, RIG	5
57	XDFZZ	15434	3015006	..CONNECTING LINK, RIG	4
58	XDFZZ	15434	3015003	..CONNECTING LINK, RIG	1

END OF FIGURE

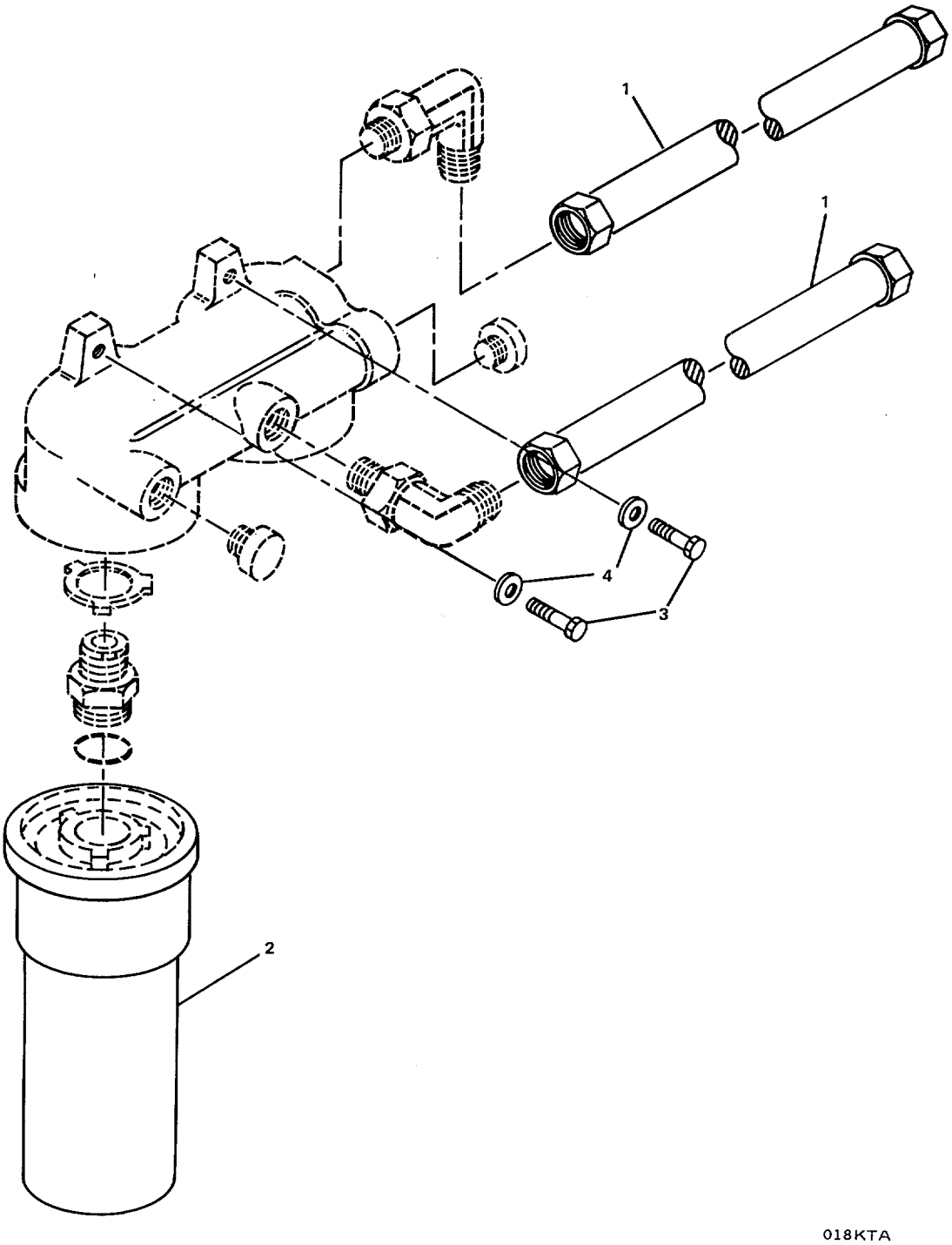

Figure 12. Lubricating Oil Bypass Filter Group (Sheet 1 of 2).

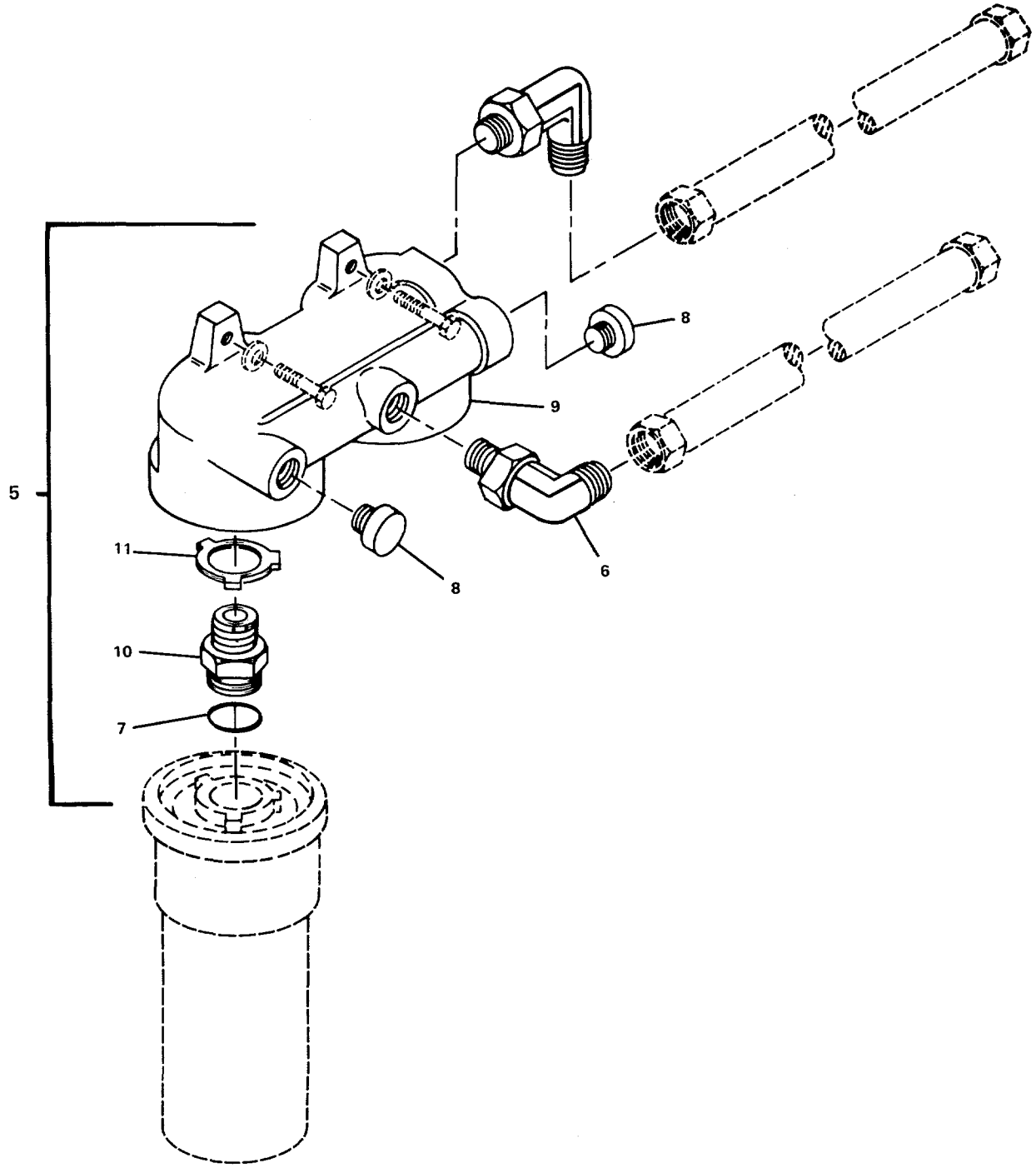

FIGURE 12. Lubricating Oil Bypass Filter Group (Sheet 2 of 2).

(1) ITEM NO	(2) SMR CODE	(3) FSCM	(4) PART NUMBER	(5) DESCRIPTION AND USABLE ON CODES(UOC)	(6) QTY
				GROUP 01 MAIN PROPULSION ENGINE	
				FIG. 12 LUBRICATING OIL BYPASS FILTER GROUP	
	XCOOO	15434	07.05-01	.LUBE OIL BY-PASS FI	1
1	PAOZZ	15434	AM06018SS	.. HOSE ASSEMBLY, NONME.....	2
2	XDCZZ	15434	3313283	..FILTER ELEMENT, FLUI	2
3	XDOZZ	96906	MS90728-91	..SCREW, CAP, HEXAGON H.....	2
4	XDOZZ	96906	MS35338-47	..WASHER, LOCK..	2
5	XDOOO	15434	3176127	..ASSY, FILTER HEAD	1
6	XDOZZ	15434	3177198	...ELBOW, PIPE	2
7	PAOZZ	96906	MS9021-116	...PACKING, PREFORMED PART OF KIT P/N..... 3801717	2
8	XDOZZ	15434	139473	...PLUG, MACHINE THREAD	2
9	XDOOO	15434	3033405	...HEAD, FLUID FILTER	2
10	XDOZZ	15434	3037219	....INSERT, FILTER HEAD	2
11	XDOZZ	15434	3004272	....WASHER, KEY.....	2

END OF FIGURE

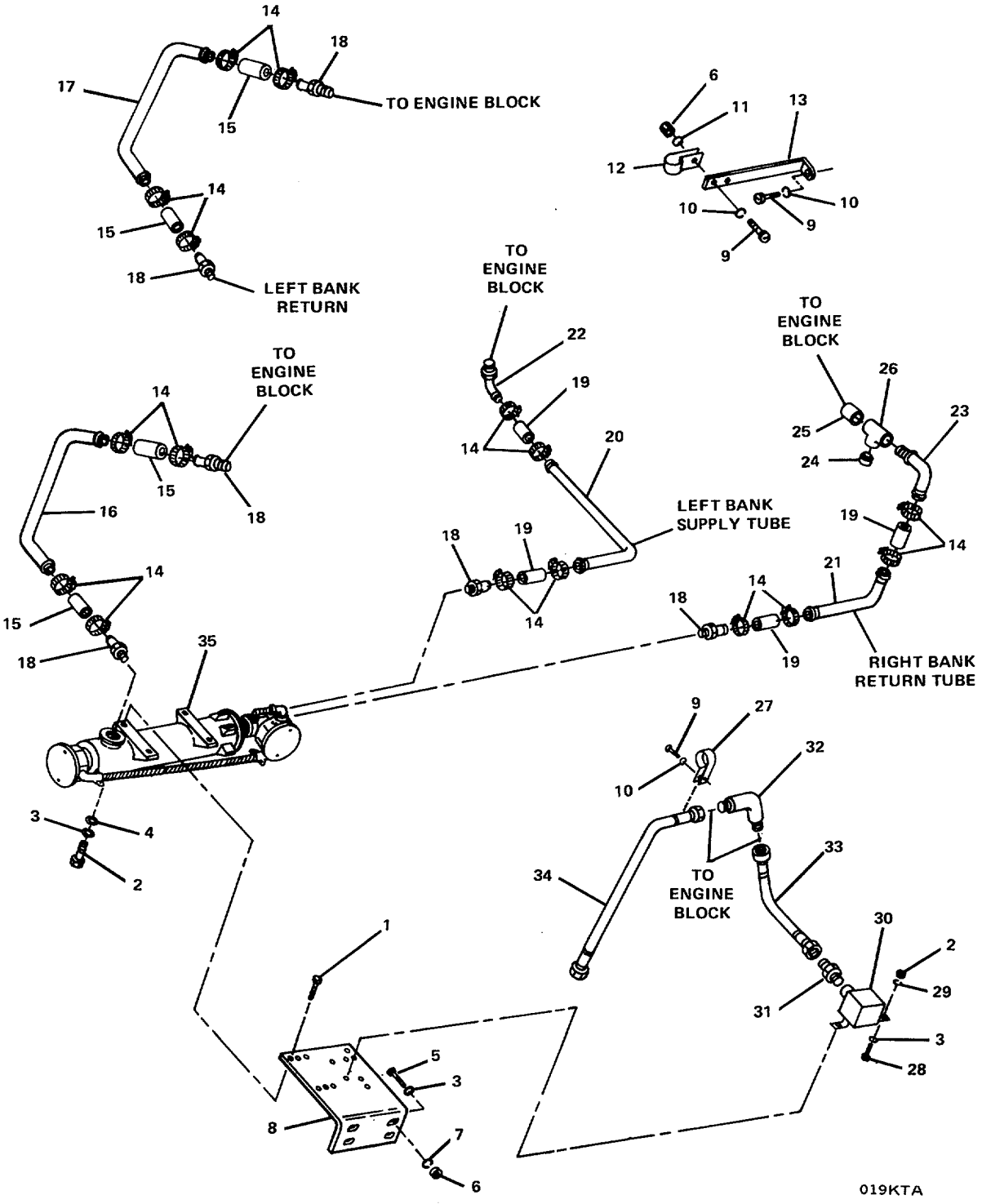

FIGURE 13. Cold Starting Aid Group.

(1) ITEM NO	(2) SMR CODE	(3) FSCM	(4) PART NUMBER	(5) DESCRIPTION AND USABLE ON CODES(UOC)	(6) QTY
				GROUP 01 MAIN PROPULSION ENGINE	
				FIG. 13 COLD STARTING AID GROUP	
	XCOOO	15434	10.02-01	.COLD STARTING AID G	1
1	XDOZZ	15434	S-186-C	..BOLT, MACHINE	8
2	XDOZZ	15434	S-224	..NUT, PLAIN, HEXAGON	12
3	XDOZZ	96906	MS122032	..WASHER, LOCK	20
4	XDOZZ	15434	146159	..WASHER, FLAT	8
5	XDOZZ	15434	108707	..SCREW, CAP, HEXAGON H	8
6	XDOZZ	15434	S-223	..NUT, PLAIN, HEXAGON	10
7	XDOZZ	15434	108330	..WASHER, FLAT	8
8	XDOZZ	15434	3026490	..BRACKET, ENGINE HEAT	2
9	XDOZZ	15434	S-109	..SCREW, CAP, HEXAGON H	6
10	XDOZZ	96906	MS35338-8	..WASHER, LOCK	6
11	XDOZZ	96906	MS27183-14	..WASHER, FLAT	2
12	XDOZZ	15434	107460	..CLAMP, LOOP	2
13	XDOZZ	15434	130489	..BRACE, CORNER	2
14	XDOZZ	96906	MS35842-13	..CLAMP, HOSE	16
15	PAOZZ	15434	3027706	..HOSE, PREFORMED	4
16	XDOZZ	15434	3006724	..TUBE, BENT, METALLIC	1
17	XDOZZ	15434	3006723	..TUBE, BENT, METALLIC	1
18	XDOZZ	15434	153408	..ADAPTER, STRAIGHT, PI	6
19	PAOZZ	15434	155789	..HOSE, NONMETALLIC	4
20	XDOZZ	15434	3003448	..TUBE, BENT, METALLIC	1
21	XDOZZ	15434	3016998	..TUBE, BENT, METALLIC	1
22	XDOZZ	15434	202839	..ELBOW, HOSE	1
23	XDOZZ	15434	3002718	..ELBOW, HOSE	1
24	XDOZZ	15434	S-924-C	..NIPPLE, PIPE	1
25	XDOZZ	15434	S-912-C	..NIPPLE, PIPE..	1
26	XDOZZ	15434	3006722	..TEE, TUBE TO HOSE	1
27	XDOZZ	15434	108722	..CLAMP, LOOP	2
28	XDOZZ	15434	S-167-A	..SCREW, CAP, HEXAGON H	4
29	XDOZZ	15434	114850	..SPACER, SPECIAL	4
30	PAOZZ	15434	196074	..SWITCH, PRESSURE	2
31	XDOZZ	15434	S-967	..REDUCER, PIPE	1
32	XDOZZ	15434	112105	..ELBOW, TUBE TO HOSE	4
33	PAOZZ	15434	AS04030SS	..HOSE, NONMETALLIC	1
34	PAOZZ	15434	AS04060SS	..HOSE, NONMETALLIC	1
35	PBOZZ	15434	212024	..HEATER, COOLANT, ENGI	2

END OF FIGURE

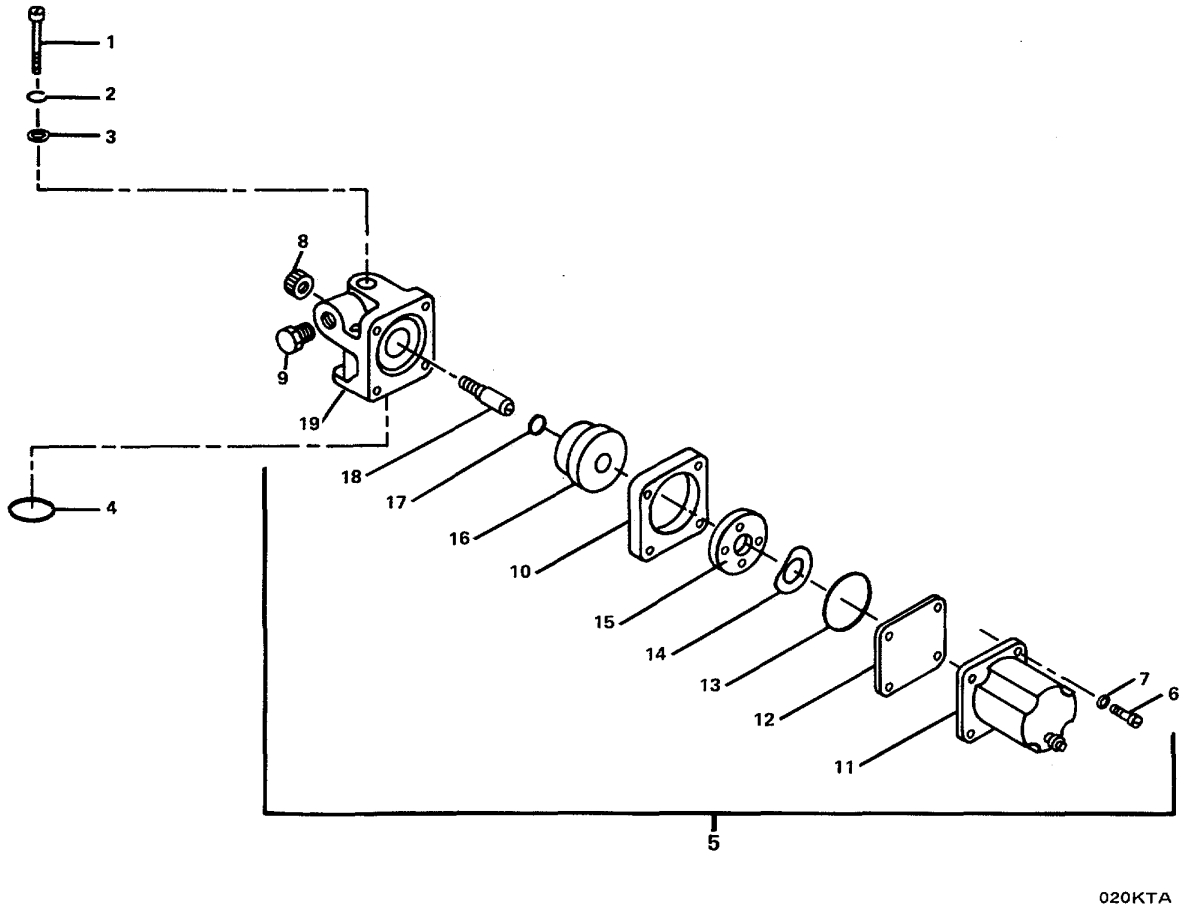

FIGURE 14. Shut Down Valve Group.

(1) ITEM NO	(2) SMR CODE	(3) FSCM	(4) PART NUMBER	(5) DESCRIPTION AND USABLE ON CODES(UOC)	(6) QTY
				GROUP 01 MAIN PROPULSION ENGINE	
				FIG. 14 COLD STARTING AID GROUP	
	XCCFF	15434	XPO5.06-01	. SHUTDOWN VALVE GROU	1
1	XDCZZ	15434	S-189-C	.. SCREW, CAP, SOCKET HE	2
2	XDCZZ	15434	181466	. WASHER, LOCK	2
3	XDCZZ	15434	67684	. WASHER, FLAT	2
4	PACZZ	15434	154087	.. GASKET	1
5	PBCFF	15434	3026610	.. VALVE, SOLENOID	1
6	XDFZZ	15434	3018047	... SCREW, CAP, HEXAGON H	4
7	XDFZZ	15434	S-607	... WASHER, LOCK	4
8	XDFZZ	15434	129838	... KNOB	1
9	XDFZZ	15434	195265	... PLUG, PIPE	1
10	XDFZZ	15434	3034451	... HOUSING, ACTUATOR	1
11	PAFZZ	15434	3026346	... SOLENOID, ELECTRICAL	1
12	XDFZZ	15434	129839	... COVER, ACCESS	1
13	PAFZZ	15434	129888	... PACKING, PREFORMED	1
14	XDFZZ	15434	129768	... WASHER, SPRING TENSI	1
15	XDFZZ	15434	196057	... DISK, VALVE	1
16	XDFZZ	15434	3034452	... DISK, ACTUATOR	1
17	PAFZZ	15434	190876	... PACKING, PREFORMED	1
18	XDFZZ	15434	3013036	... SHAFT, STRAIGHT	1
19	XDFZZ	15434	3014010	... BODY, VALVE	1

END OF FIGURE

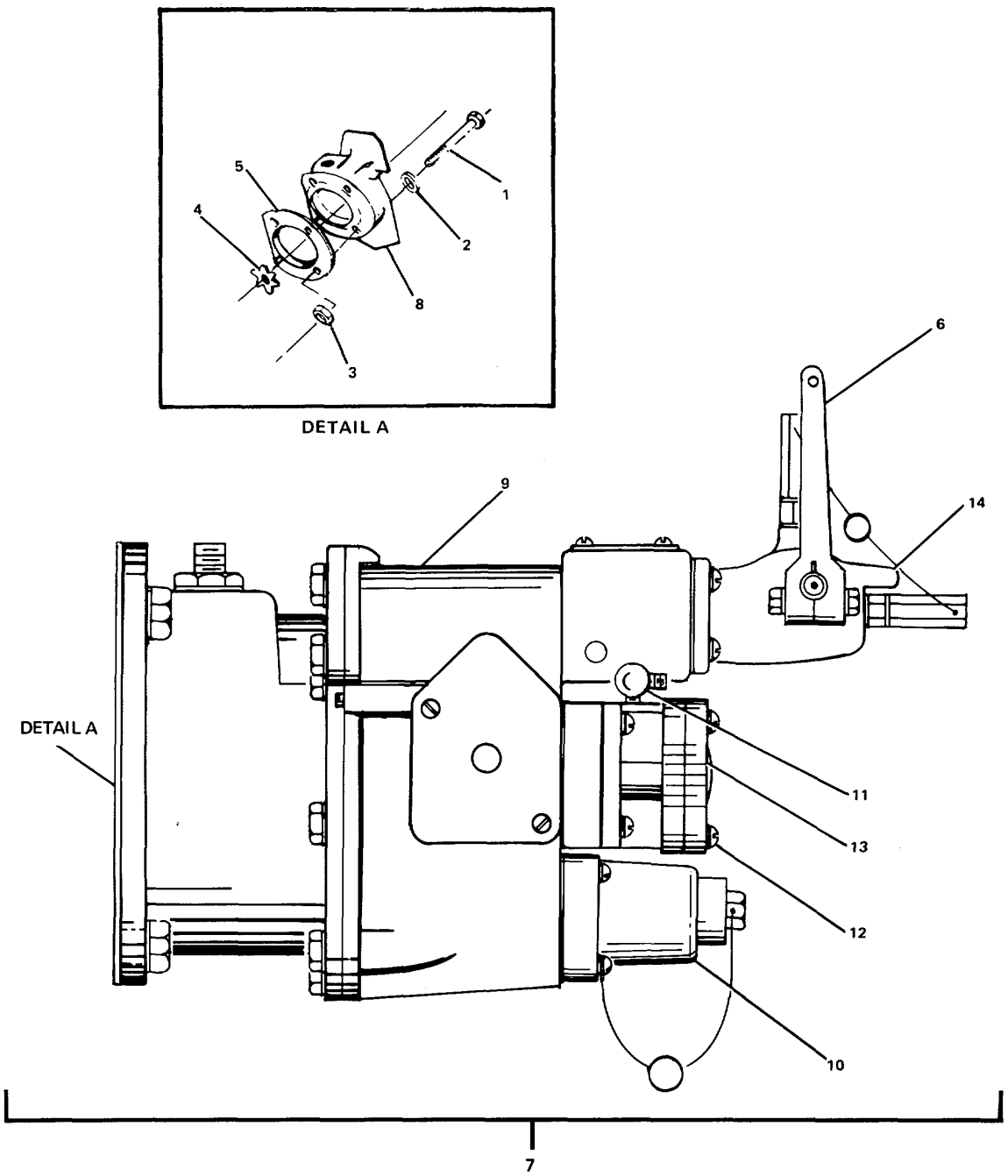

FIGURE 15. Fuel Pump Group (Sheet 1 of 6).

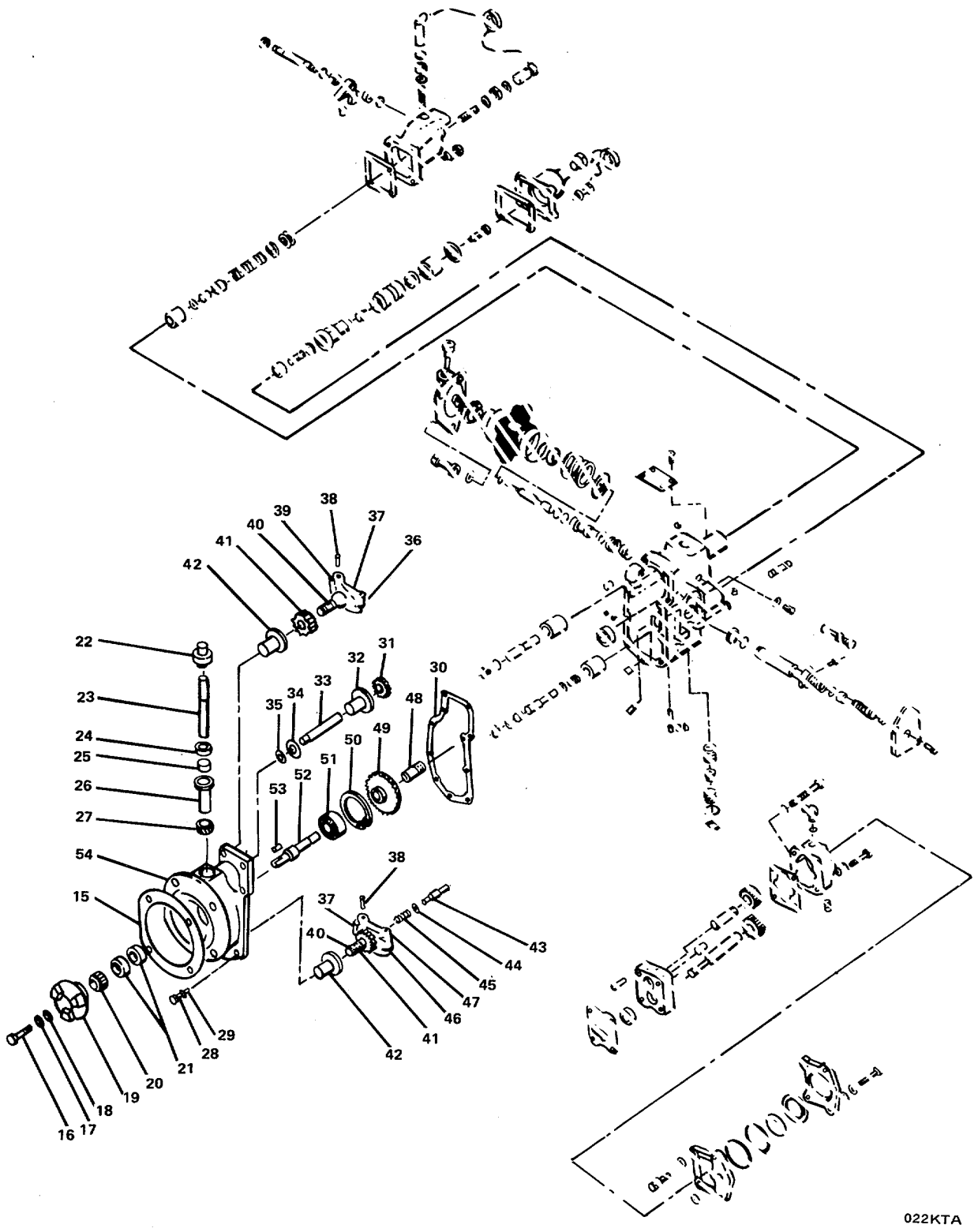

FIGURE 15. Fuel Pump Group (Sheet 2 of 6).

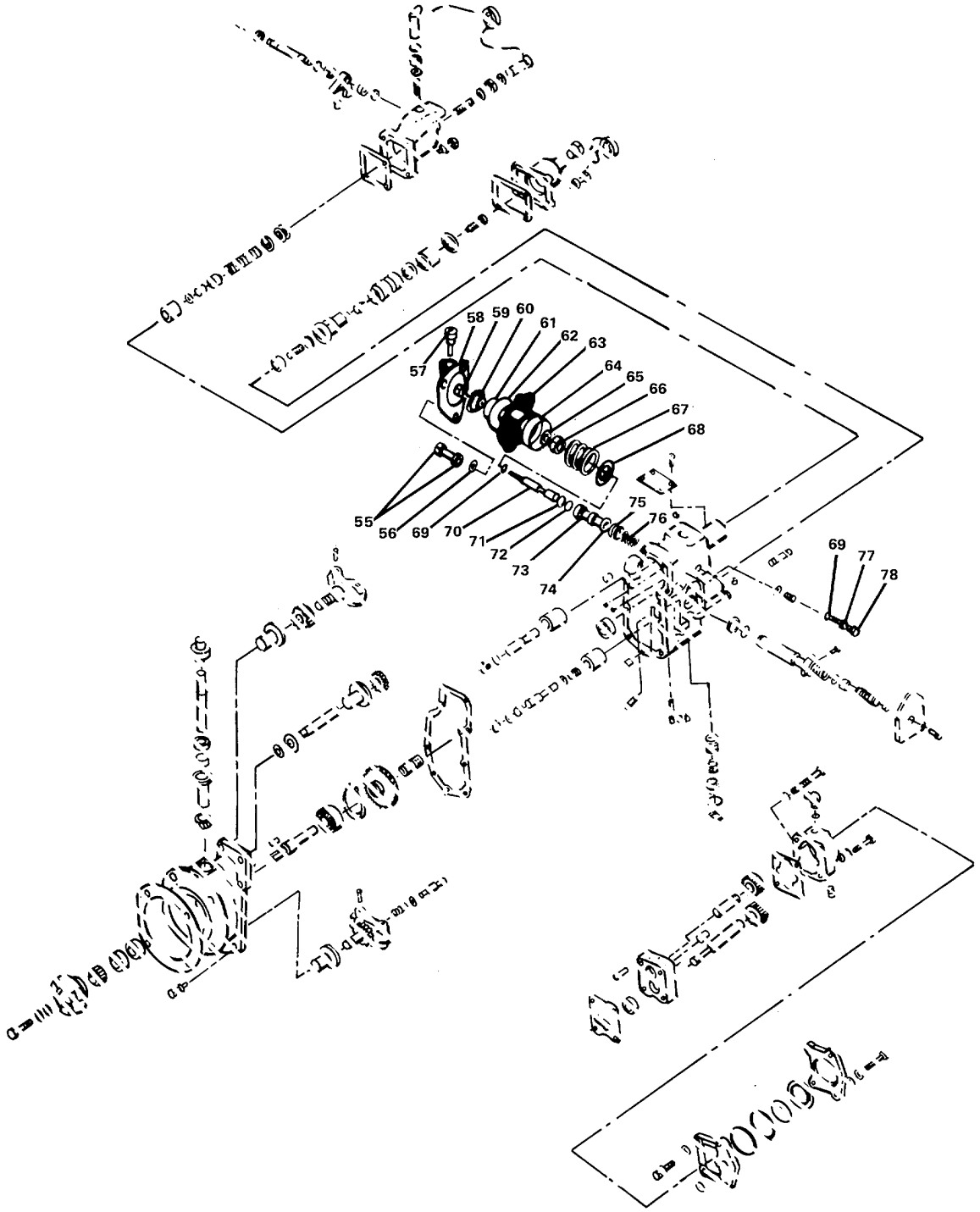

FIGURE 15. Fuel Pump Group (Sheet 3 of 6).

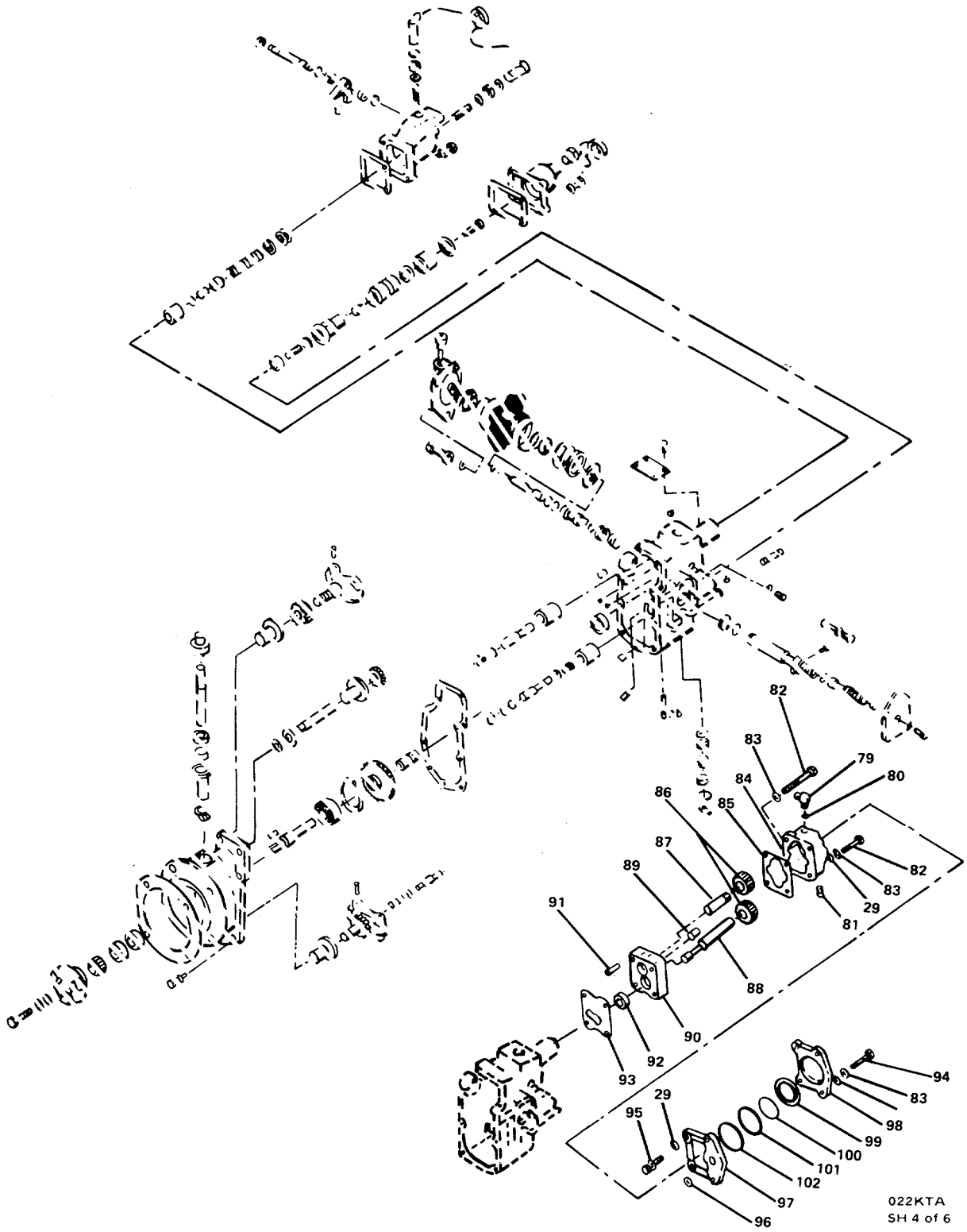

FIGURE 15. Fuel Pump Group (Sheet 4 of 6).

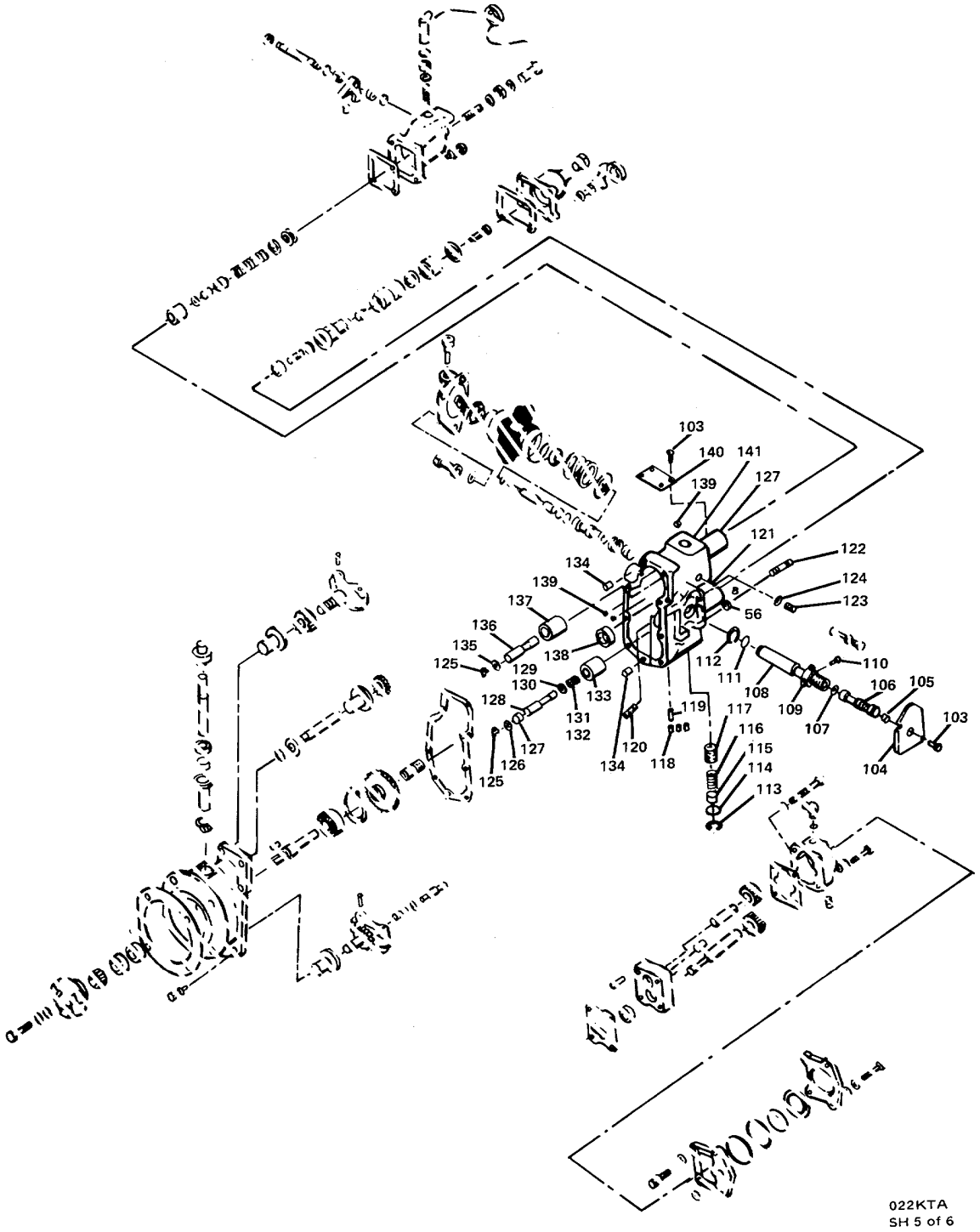

FIGURE 15. Fuel Pump Group (Sheet 5 of 6).

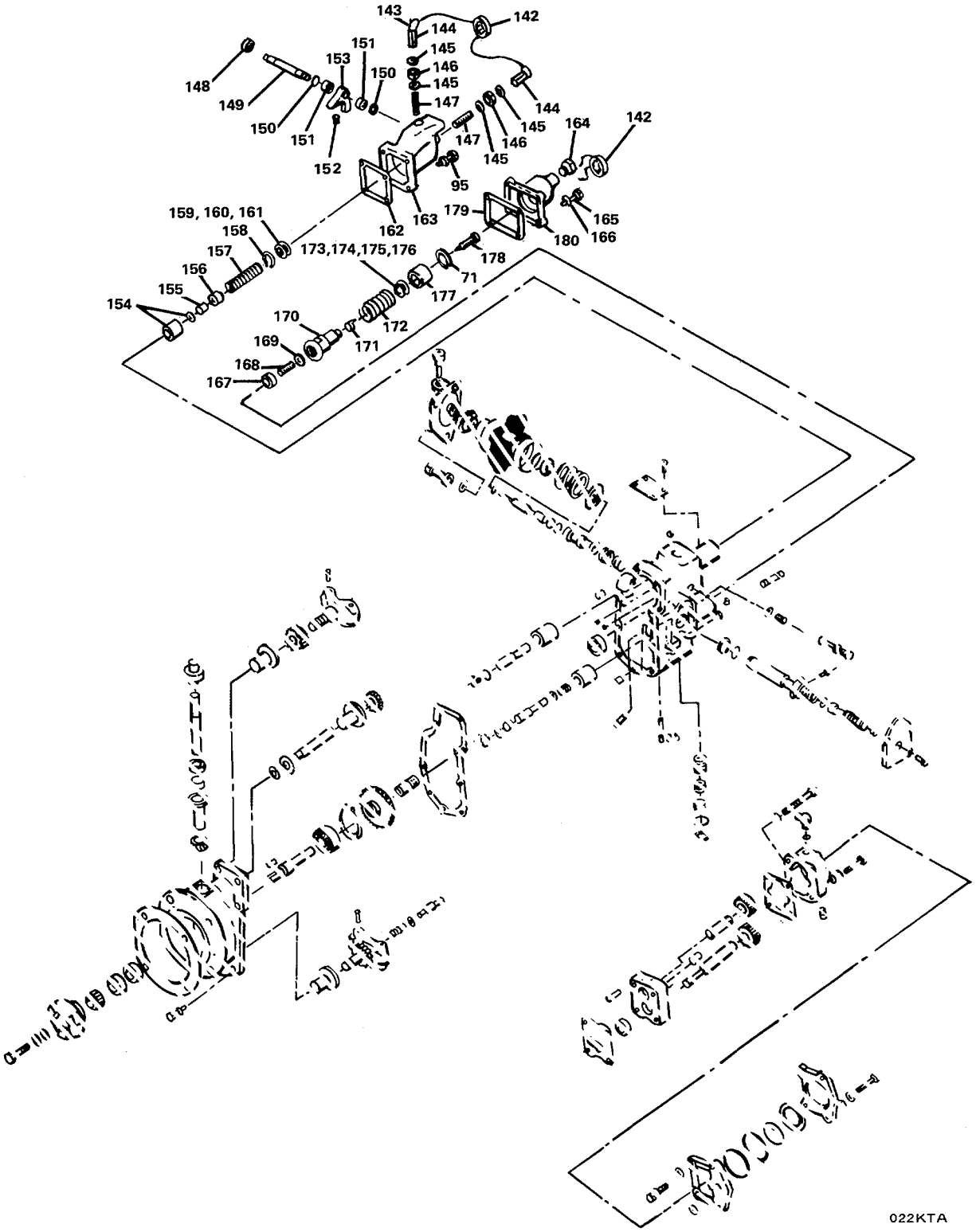

FIGURE 15. Fuel Pump Group (Sheet 6 of 6).

GROUP 01 MAIN PROPULSION ENGINE

FIG. 15 FUEL PUMP GROUP

(1) ITEM NO	(2) SMR CODE	(3) FSCM	(4) PART NUMBER	(5) DESCRIPTION AND USABLE ON CODES(UOC)	(6) QTY
	XCCFF	15434	05-01	FUEL PUMP GROUP	1
1	XDCZZ	15434	206326	SCREW, CAP, HEXAGON H	4
2	XDCZZ	96906	MS35338-47	WASHER, LOCK	4
3	XDCZZ	15434	S-217	NUT, PLAIN, HEXAGON	4
4	PACZZ	15434	3046200	INSERT, FLEXIBLE COU	1
5	PACZZ	15434	3035053	GASKET	1
6	XDCZZ	15434	BM-73108	LEVER, THROTTLE	1
7	PBCFF	15434	3279570-B644	PUMP, FUEL, CAM ACTUA	1
8	XAFZZ	15434	3279503	COVER AND WEIGHT	1
9	XAFZZ	15434	3279601	HOUSING, FUEL PUMP	1
10	XAFZZ	15434	BM-30245	IDLE, SPRING PACK	1
11	XAFZZ	15434	3032627	UNION, PIPE	1
12	XAFZF	15434	BM-76340	DAMPENER, FLUID PRES	1
13	XAFZZ	15434	3034221	PUMP, ROTARY .....1 ..	1
14	XAFZZ	15434	3015750	GOVERNOR, SPRING PAC	1
15	XAFZZ	15434	3048341	GASKET (FUEL PUMP) PART OF KIT P/N 3801717	1
16	XAFZZ	15434	S-110	SCREW, CAP, HEXAGON H	1
17	XAFZZ	96906	MS35338-7	WASHER, LOCK	1
18	XAFZZ	15434	146160	WASHER, FLAT	.1
19	XAFZZ	15434	212613	COUPLING HALF, SHAFT	1
20	XAFZZ	15434	212602	GEAR, HELICAL	1
21	XAFZZ	15434	3045173	SEAL, OIL	2
22	XAFZZ	15434	3002110	HOUSING, DRIVE ASSEM	1
23	XAFZZ	15434	212607	SHAFT, TACHOMETER DR	1
24	XAFZZ	15434	212603	SEAL	1
25	XAFZZ	15434	3004724	SPACER	1
26	XAFZZ	15434	212609	BEARING, SLEEVE	1
27	XAFZZ	15434	212610	GEAR, HELICAL	1
28	XAFZZ	15434	3017051	SCREW, CAP, HEXAGON H	15
29	XAFZZ	15434	70704	WASHER, FLAT	14
30	XAFZZ	15434	200998	GASKET	1
31	XAFZZ	15434	113244	GEAR, SPUR...	1
32	XAFZZ	15434	201010	BEARING, SLEEVE	1
33	XAFZZ	15434	201008	SHAFT	1
34	XAFZZ	15434	201745	WASHER, FLAT	1
35	XAFZZ	96906	MS16624-1050	RING, RETAINING	1
36	XAFZZ	15434	163826	WEIGHT, GOVERNOR	2
37	XAFZZ	15434	3006550	CARRIER	2
38	XAFZZ	15434	211635	PIN	3
39	XAFZZ	15434	3024989	WEIGHT, UPPER, ASSEMB	1
40	XAFZZ	15434	211633	SHAFT	2
41	XAFZZ	15434	211636	GEAR, SPUR....	2
42	XAFZZ	15434	163944	BUSHING, SLEEVE	2
43	XAFZZ	15434	144178	PIN, SHOULDER, HEADLE	1
44	XAFZZ	15434	144179	WASHER, FLAT	7
45	XAFZZ	15434	143848	SPRING, HELICAL, COMP	1
46	XAFZZ	15434	3024991	WEIGHT, LOWER, ASSEMB	1

(1) ITEM NO	(2) SMR CODE	(3) FSCM	(4) PART NUMBER	(5) DESCRIPTION AND USABLE ON CODES(UOC)	(6) QTY
47	XAFZZ	15434	146437	WEIGHT, LINKAGE, GOVE	2
48	XAFZZ	15434	212639	COUPLING, SHAFT, RIGI	1
49	XAFZZ	15434	212605	GEAR, SPUR	1
50	XAFZZ	15434	212604	RING, RETAINING	1
51	XAFZZ	15434	S-16052	BEARING, BALL, ANNULA	1
52	XAFZZ	15434	212601	SHAFT, SHOULDERED	1
53	XAFZZ	15434	212668	KEY, MACHINE	1
54	XAFZZ	15434	3023447	COVER, FRONT	1
55	XAFZZ	15434	70772-B	SCREW, CAP, HEXAGON H	3
56	XAFZZ	15434	S-631	WASHER, FLAT	3
57	XAFZZ	15434	3015522	VALVE, CHECK	1
58	XAFZZ	15434	3015520	COVER, FUEL CONTROL	1
59	XAFZZ	15434	S-251	NUT, PLAIN, HEXAGON	1
60	XAFZZ	15434	3023171	INSERT, PISTON	1
61	XAFZZ	15434	3023870	GASKET	1
62	XAFZZ	15434	214150	WASHER, FLAT	1
63	XAFZZ	15434	3013811	DIAPHRAGM, VALVE	1
64	XAFZZ	15434	3047276	PISTON, AIR FUEL CON	1
65	XAFZZ	15434	3023088	WASHER, FLAT	1
66	XAFZZ	15434	S-213-A	NUT, SELF-LOCKING HE	1
67	XAFZZ	15434	179822	SPRING, HELICAL, COMP	1
68	XAFZZ	15434	3001707	SHIM	1
69	XAFZZ	15434	68061-A	PACKING, PREFORMED	2
70	XAFZZ	15434	3048558	PLUNGER, AIR FUEL CO	1
71	XAFZZ	15434	S-16240	RING, RETAINING	2
72	XAFZZ	15434	145505	PACKING, PREFORMED	1
73	XAFZZ	15434	3048559	BARREL, AIR FUEL CON	1
74	XAFZZ	15434	70775	PACKING, PREFORMED	1
75	XAFZZ	15434	145504	PACKING, PREFORMED	1
76	XAFZZ	15434	3018655	SPRING, HELICAL, COMP	1
77	XAFZZ	15434	214144	VALVE, NEEDLE CARBUR	1
78	XAFZZ	15434	S-248	NUT, PLAIN, HEXAGON	1
79	XAFZZ	15434	3033740	VALVE, CHECK	1
80	XAFZZ	15434	3034412	PACKING, PREFORMED	1
81	XAFZZ	15434	3033742	PLUG, PIPE	1
82	XAFZZ	15434	70790	BOLT, MACHINE	8
83	XAFZZ	15434	181466	WASHER, LOCK	10
84	XAFZZ	15434	3033714	HOUSING	1
85	XAFZZ	15434	110855	GASKET	1
86	XAFZZ	15434	119364	GEAR SPUR	1
87	XAFZZ	15434	175865	SHAFT, STRAIGHT	1
88	XAFZZ	15434	100217	SHAFT, DRIVE	1
89	XAFZZ	15434	3044995	PLUG, INJECTOR ORIFI	1
90	XAFZZ	15434	3033723	COVER	1
91	XAFZZ	15434	70760	PIN, STRAIGHT, HEADLE	2
92	XAFZZ	15434	3033719	BUSHING, SLEEVE	1
93	XAFZZ	15434	3026163	GASKET	1
94	XAFZZ	15434	153346	SCREW, CAP, SOCKET HE	2
95	XAFZZ	15434	3017051	SCREW, CAP, HEXAGON H	2
96	XAFZZ	15434	151900	GASKET	1
97	XAFZZ	15434	153336	HOUSING, FUEL PUMP	1
98	XAFZZ	15434	153338	COVER, ACCESS	1

(1) ITEM NO	(2) SMR CODE	(3) FSCM	(4) PART NUMBER	(5) DESCRIPTION AND USABLE ON CODES(UOC)	(6) QTY
99	XAFZZ	15434	160514	SPACER, RING	1
100	XAFZZ	15434	100099	PACKING, PREFORMED	1
101	XAFZZ	15434	202897	DISK, SOLID, PLAIN	1
102	XAFZZ	15434	139988	PACKING, PREFORMED	1
103	XAFZZ	15434	S-2286	SCREW	6
104	XAFZZ	15434	3000446	COVER, ACCESS	1
105	XAFZZ	15434	213769	BALL, BEARING	1
106	XAFZZ	15434	3006175	SCREW	1
107	XAFZZ	15434	213768	PACKING, PREFORMED	1
108	XAFZZ	15434	3017140	SHAFT	1
109	XAFZZ	15434	3006343	END, CONTROL R	1
110	XAFZZ	15434	3006344	SETSCREW	1
111	XAFZZ	15434	100478	PACKING, PREFORMED PART OF KIT P/N . 3801643	1
112	XAFZZ	15434	163945	RING, RETAINING	1
113	XAFZZ	15434	128807	RING, RETAINING	1
114	XAFZZ	15434	3044942	PACKING, PREFORMED	1
115	XAFZZ	15434	201007	COVER, FLUID FILTER	1
116	XAFZZ	15434	70700	SPRING, HELICAL, COMP	1
117	XAFZZ	15434	146483	FILTER ELEMENT, FLUI	1
118	XAFZZ	15434	3025460	PLUG, PIPE	8
119	XAFZZ	15434	163733	. CLIP, GOVERNOR BARRE	1
120	XAFZZ	15434	109915	SETSCREW	2
121	XAFZZ	15434	202682	HOUSING, SPRING PACK	1
122	XAFZZ	15434	108384	HOLDER, SPRING	1
123	XAFZZ	15434	3000594	SETSCREW	1
124	XAFZZ	15434	70815	PACKING WITH RETAIN	1
125	XAFZZ	15434	70690	DRIVER, PLUNGER, GOVE	2
126	XAFZZ	15434	3027633	BEARING, SLEEVE	1
127	XAFZZ	15434	3048557	SPACER, BEARING	1
128	XAFZZ	15434	3009380	PLUNGER, GOVERNOR	1
129	XAFZZ	15434	101841	SHIM (.005)	1
130	XAFZZ	15434	101842	SHIM (.010)	1
131	XAFZZ	15434	101843	SPACER, RING (.020)	1
132	XAFZZ	15434	143848	SPRING, HELICAL, COMP	1
133	XAFZZ	15434	3045212	BARREL, GOVERNOR LOW	1
134	XAFZZ	15434	118227	PIN, HOLLOW	2
135	XAFZZ	15434	3035230	BEARING, WASHER, THRU	1
136	XAFZZ	15434	3018640	PLUNGER	1
137	XAFZZ	15434	3015592	BARREL, GOVERNOR UPP	1
138	XAFZZ	15434	100193	BEARING, SLEEVE	1
139	XAFZZ	15434	214139	BALL, PLUG BRASS	3
140	XAFZZ	15434	105375	PLATE, IDENTIFICATIO	1
141	XAFZZ	15434	3279602	HOUSING, FUEL PUMP	1
142	XAFZZ	15434	124019	SEAL, FUEL PUMP REGU	2
143	XAFZZ	15434	3003156	SEAL, SPECIAL	2
144	XAFZZ	15434	110058	POST, ELECTRICAL-MEC	2
145	XAFZZ	15434	112408	WASHER, FLAT	4
146	XAFZZ	15434	S-251	NUT, PLAIN, HEXAGON	2
147	XAFZZ	15434	3046407	SETSCREW	2
148	XAFZZ	15434	3010945	SEAL	1
149	XAFZZ	15434	3010943	SHAFT, THROTTLE	1

(1) ITEM NO	(2) SMR CODE	(3) FSCM	(4) PART NUMBER	(5) DESCRIPTION AND USABLE ON CODES(UOC)	(6) QTY
150	XAFZZ	15434	70415	PACKING, PREFORMED	2
151	XAFZZ	15434	3010941	BUSHING, SLEEVE	2
152	XAFZZ	15434	70813	SETSCREW	1
153	XAFZZ	15434	70834	STOP, THROTTLE LEVER	1
154	XAFZZ	15434	70820	PLUNGER, GOVERNOR SP	1
155	XAFZZ	15434	70778	SPRING, HELICAL, COMP	1
156	XAFZZ	15434	70798	SEAT, HELICAL COMPRE	1
157	XAFZZ	15434	109686	SPRING, HELICAL, COMP	1
158	XAFZZ	96906	MS16627-1093	RING, RETAINING	1
159	XAFZZ	15434	70811	WASHER, FLAT (.020)	1
160	XAFZZ	15434	70811-A	SHIM (.010)	1
161	XAFZZ	15434	70811-B	SHIM (.005)	1
162	XAFZZ	15434	3015224	GASKET	1
163	XAFZZ	15434	3025253	COVER	1
164	XAFZZ	15434	3025459	PLUG, COVER	1
165	XAFZZ	15434	203619	SCREW	4
166	XAFZZ	96906	MS122032	WASHER, LOCK	4
167	XAFZZ	15434	141632	PLUNGER, FUEL CONTRO	1
168	XAFZZ	15434	144195	SPRING, HELICAL, COMP	1
169	XAFZZ	15434	70715	WASHER,	1
170	XAFZZ	15434	3036472	RETAINER, HELICAL CO	1
171	XAFZZ	15434	3032014	SPRING, HELICAL COMP	1
172	XAFZZ	15434	3001160	GOVERNOR, SPRING	1
173	XAFZZ	15434	70717	SPACER, RING (.020)	1
174	XAFZZ	15434	70717-A	SHIM (.010)	1
175	XAFZZ	15434	70717-B	SHIM (.005)	1
176	XAFZZ	15434	189800	SHIM (.007)	1
177	XAFZZ	15434	203346	SPACER, SLEEVE	1
178	XAFZZ	15434	70716	SETSCREW	1
179	XAFZZ	15434	70705	GASKET	1
180	XAFZZ	15434	44678	COVER, SPRING PACK	1

END OF FIGURE

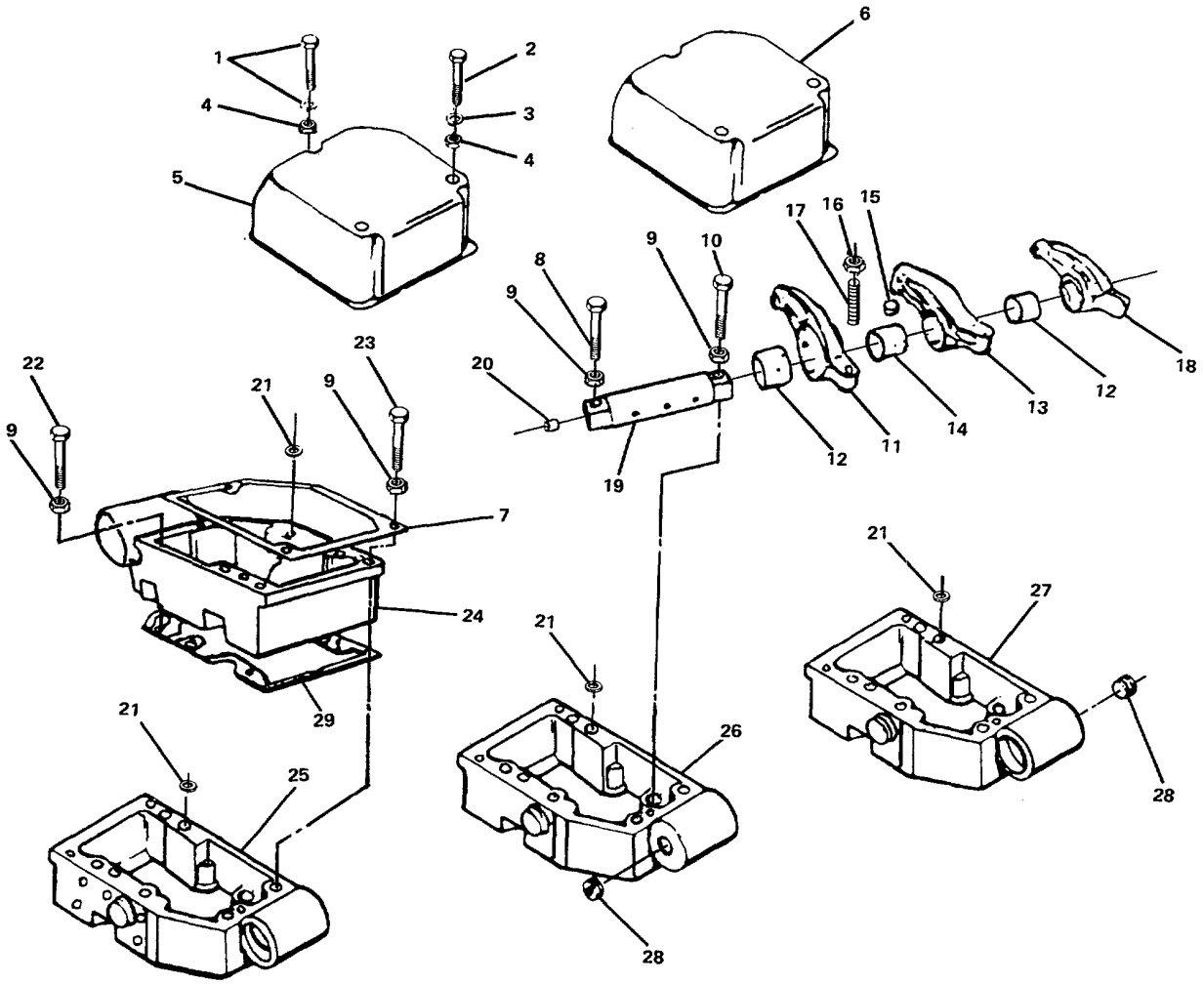

FIGURE 16. Rocker Housing Cover/Rocker Lever Housing Group

(1) ITEM NO	(2) SMR CODE	(3) FSCM	(4) PART NUMBER	(5) DESCRIPTION AND USABLE ON CODES(UOC)	(6) QTY
				GROUP 01 MAIN PROPULSION ENGINE	
				FIG. 16 ROCKER HOUSING COVER/ ROCKER LEVER HOUSING GROUP	
	XCCFF	15434	03.01/03.01.1-01 .	..... ROCKER LEVER HOUSIN	1
1	XDCZZ	15434	3012474	..... SCREW	16
2	XDCZZ	15434	S-169-A	..... SCREW, CAP, HEXAGON H.....	32
3	XDCZZ	96906	MS35338-8	. .... WASHER, LOCK	36
4	XDCZZ	96906	MS27183-14	. .... WASHER, ...	48
5	XDCZZ	15434	3010388	..... COVER, ENGINE POPPET	15
6	XDCZZ	15434	3038938	..... COVER, ENGINE POPPET	1
7	PACZZ	15434	3040720	..... GASKET (VALVE COVER) PART OF KIT . 16 P/N 3801718.....	
8	XDFZZ	15434	205393	..... SCREW	16
9	XDFZZ	15434	205128	..... WASHER.....	128
10	XDFZZ	15434	205394	..... SCREW	16
11	PAFZZ	15434	3047599	..... LEVER ASSEMBLY EXHA	16
12 P	PAFZZ	15434	207344	..... BUSHING, SLEEVE.....	32
13	PAFZZ	15434	3013300	..... LEVER ASSEMBLY, INJE	16
14	XAFZZ	15434	207226	..... BUSHING, SLEEVE.....	16
15	XAFZZ	15434	194037	..... SEAT, BALL SOCKET	16
16	PAFZZ	96906	MS51968-14	..... NUT, PLAIN, HEXAGON	48
17	PAFZZ	15434	168306	..... SETSCREW	48
18	PAFZZ	15434	205138	..... ROCKER ARM, ENGINE P.....	16
19	XAFZZ	15434	3176772	..... SHAFT, STRAIGHT	16
20	XAFZZ	15434	203933	..... PLUG, EXPANSION	16
21	XDFZZ	15434	205129	..... PIN	16
22	XDFZZ	15434	S-125	..... SCREW, CAP, HEXAGON H.....	16
23	XDFZZ	15434	108602	..... SCREW, CAP, HEXAGON H.....	90
24	XDFZZ	15434	3202193	..... HOUSING, ROCKER LEVE.....	7
25	XDFZZ	15434	3202192	..... HOUSING, ROCKER LEVE.....	4
26	XDFZZ	15434	3202197	..... HOUSING, ROCKER LEVE.....	2
27	XDFZZ	15434	3202202	..... HOUSING, ROCKER LEVE.....	3
28	XDFZZ	15434	3008469	..... PLUG, PIPE.....	2
29	PAFZZ	15434	3201517	..... GASKET (ROCKER LEVER HOUSING)..... PART OF KIT P/N 3801643.....	16

END OF FIGURE

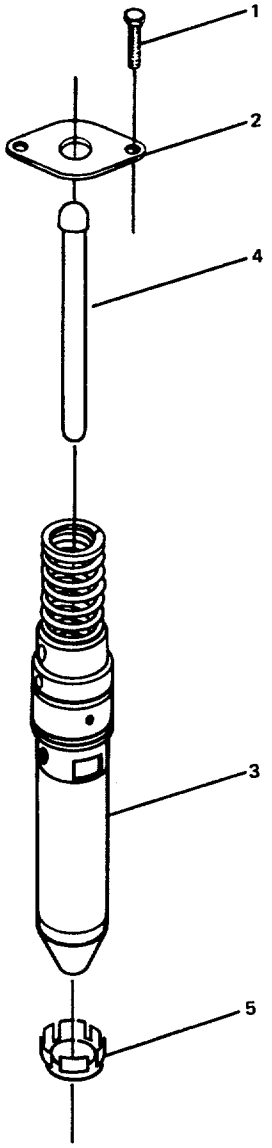

024KTA

FIGURE 17. Injector Group

(1) ITEM NO	(2) SMR CODE	(3) FSCM	(4) PART NUMBER	(5) DESCRIPTION AND USABLE ON CODES(UOC)	(6) QTY
				GROUP 01 MAIN PROPULSION ENGINE	
				FIG. 17 INJECTOR GROUP	
	XCCZZ	15434	06.01-01	.....INJECTOR GROUP	1
1	XDCZZ	15434	165006	.....SCREW, CAP, HEXAGON H	32
2	XDCZZ	15434	3006696	.....CLAMP, INJECTOR	16
3	PACZZ	15434	3053124	.....INJECTOR ASSEMBLY, F	16
4	PACZZ	15434	205462	.....LINK, INJECTOR PLUNG	16
5	PACZZ	15434	207244	.....RING, INJECTOR PART OF KIT P/N 3801643.....	16
	PAHZZ	15434	3801643	.....GASKET SET (NEEDED FOR COMPLETE REPAIR OF MAIN ENGINE)	1
				.....GASKET (16) 16-29	
				.....PACKING, PREFORMED (1) 15-111	
				.....RING, INJECTOR (16) 17-5	

END OF FIGURE

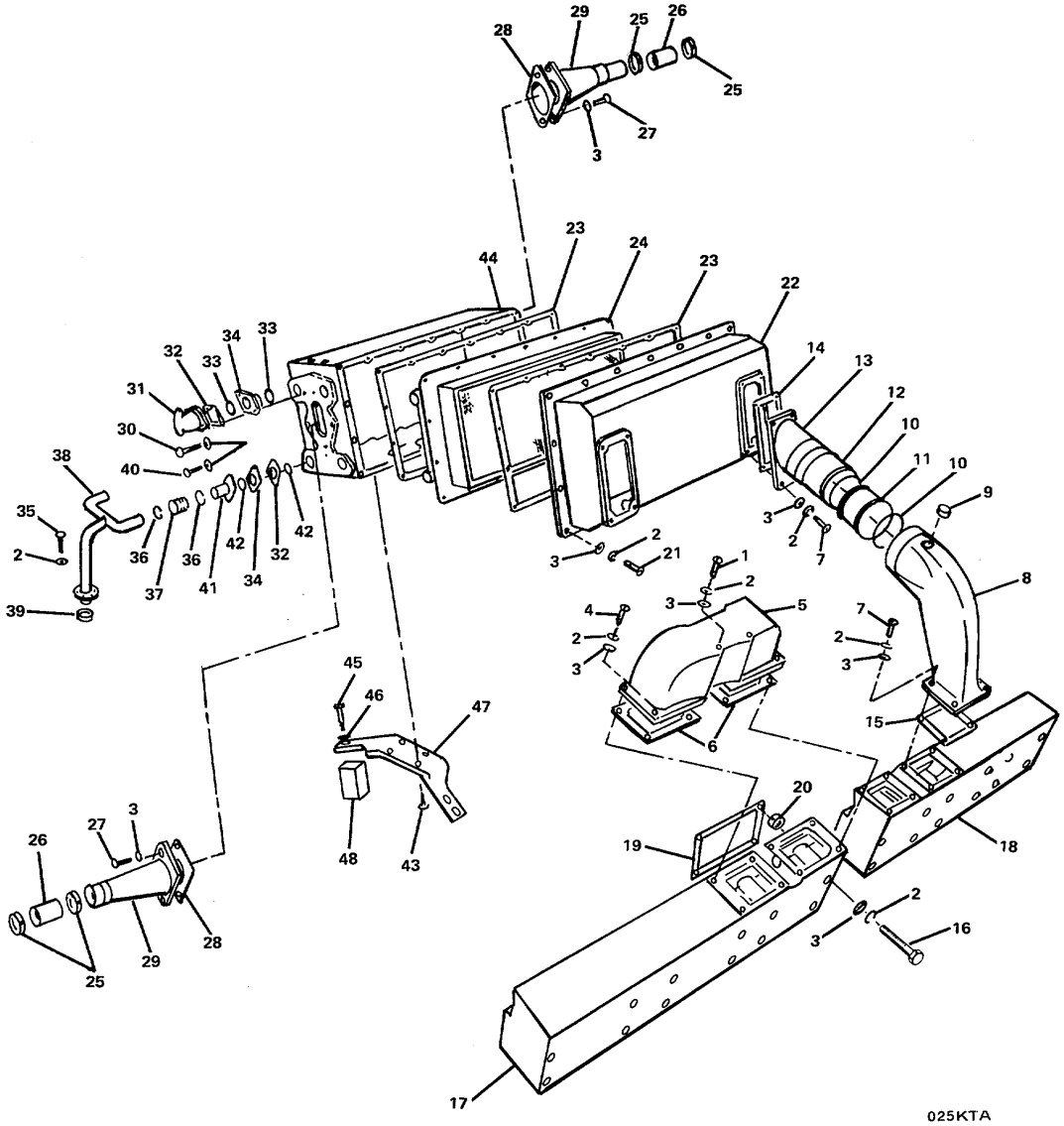

FIGURE 18. Air Intake Manifold Group

GROUP 01 MAIN PROPULSION ENGINE

FIG. 18 AIR INTAKE MANIFOLD GROUP

(1) ITEM NO	(2) SMR CODE	(3) FSCM	(4) PART NUMBER	(5) DESCRIPTION AND USABLE ON CODES(UOC)	(6) QTY
	XCCOO	15434	10.01-01	AIR INTAKE MANIFOLD	1
1	XDCZZ	15434	205314	SCREW	4
2	XDCZZ	96906	MS35338-8	WASHER, LOCK	148
3	XDCZZ	96906	MS27183-14	WASHER, FLAT	148
4	XDCZZ	15434	S-155	SCREW, CAP, HEXAGON H	12
5	XDCZZ	15434	3013114	CONNECTION, AIR INTA	2
6	PACZZ	15434	3028123	GASKET PART OF KIT P/N 3801718	4
7	XDCZZ	15434	199919	BOLT, MACHINE	32
8	XDCZZ	15434	206438	CONNECTION, AIR CROS	4
9	XDCZZ	15434	S-910-B	PLUG, PIPE	4
10	PACZZ	5434	3026421	PACKING, PREFORMED PART OF KIT P/N 3801718	8
11	XDCZZ	15434	206436	TUBE, METALLIC	4
12	PACZZ	15434	3023130	SEAL, PLAIN PART OF KIT P/N 3801718	4
13	XDCZZ	15434	206434	CONNECTION, AIR CROS	4
14	PACZZ	15434	206435	PACKING, PREFORMED PART OF KIT P/N 3801718	4
15	PACZZ	15434	3028123	GASKET	2
16	XDCZZ	15434	S-149-A	SCREW, CAP, HEXAGON H	64
17	XDCZZ	15434	3027574	MANIFOLD, INTAKE, AIR	2
18	XDCZZ	15434	3027575	MANIFOLD, INTAKE, AIR	2
19	PACZZ	15434	206277	GASKET (INTAKE MANIFOLD) PART OF KIT P/N 3801718	16
20	PACZZ	15434	3014304	BUSHING, RUBBER PART OF KIT P/N 3801718	24
21	XDOZZ	15434	3012475	SCREW	36
22	XDOZZ	15434	3021362	COVER, AFTERCOOLER H	2
23	PAOZZ	15434	3011580	GASKET (AFTERCOOLER) PART OF KIT P/N 3801718	4
24	PAOZZ	15434	3032030	CORE, RADIATOR	2
25	XDOZZ	15434	140315	CLIP, RETAINING	4
26	PAOZZ	15434	3016142	HOSE, NONMETALLIC	2
27	XDOZZ	96906	MS35295-62	SCREW, CAP, HEXAGON H	8
28	PAOZZ	15434	3016122	GASKET	2
29	PBOZZ	15434	3176834	ADAPTER, FLANGE TO T	2
30	XDOZZ	96906	MS35295-66	SCREW, CAP, HEXAGON H	4
31	PBOZZ	15434	3019620	CONNECTOR, FLUID, PUM	2
32	PAOZZ	15434	3014449	GASKET PART OF KIT P/N 3801717	4
33	PAOZZ	15434	3008710	PACKING, PREFORMED	4
34	XDOZZ	15434	3175528	CONNECTION, ADAPTER	4
35	XDOZZ	15434	S-109	SCREW, CAP, HEXAGON H	2
36	XDOZZ	15434	3008690	CLAMP, HOSE	8
37	PAOZZ	15434	3018060	HOSE, NONMETALLIC	2
38	XDOZZ	15434	3016633	HOUSING, WATER TRANS	1
39	PAOZZ	15434	3016631	PACKING, PREFORMED	1
40	XDOZZ	15434	172640	BOLT, MACHINE	4
41	XDOZZ	15434	3016632	CONNECTION, WATER TR	2
42	PAOZZ	15434	3175545	PACKING, PREFORMED PART OF KIT P/N	4

(1) ITEM NO	(2) SMR CODE	(3) FSCM	(4) PART NUMBER	(5) DESCRIPTION AND USABLE ON CODES(UOC)	(6) QTY
				3801718.....	
43	XDOZZ	15434	3019573	.....CREW, ASSEMBLED WAS	8
44	XDOZZ	15434	3176122	.....HOUSING, AFTERCOOLER	1
45	XDOZZ	15434	S-165-B	.....SCREW, CAP, HEXAGON H.....	8
46	XDOZZ	15434	S-608	.....WASHER, LOCK	8
47	XDOZZ	15434	3015261	.....BRACKET, AFTERCOOLER	2
48	XDOZZ	15434	3015262	.....SPACER, MOUNTING.....	4

END OF FIGURE

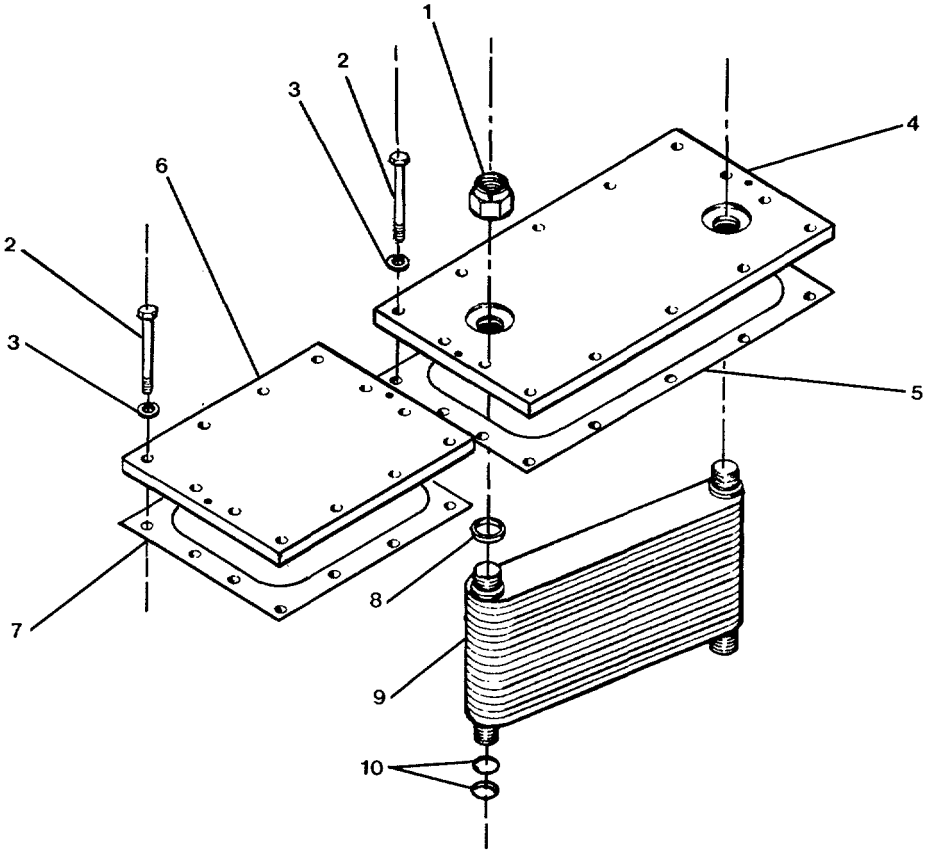

FIGURE. 19. Lubricating Oil Group.

(1) ITEM NO	(2) SMR CODE	(3) FSCM	(4) PART NUMBER	(5) DESCRIPTION AND USABLE ON CODES(UOC)	(6) QTY
				GROUP 01 MAIN PROPULSION ENGINE	
				FIG. 19 LUBRICATING OIL COOLER GROUP	
	XCFFF	15434	07.05.01-01	..... LUBRICATING OIL COO	1
1	XDFZZ	15434	3002126	..... NUT, SELF-LOCKING, HE	8
2	DFZZ	96906	MS35295-62	..... SCREW, CAP, HEXAGON H	68
3	XDFZZ	96906	MS35338-8	..... WASHER, LOCK	68
4	DFZZ	15434	3009322	..... COVER, ACCESS	4
5	AFZZ	15434	3009324	..... GASKET (WATER HEADER COVER) PART OF KIT P/N 3801717.....	4
6	DFZZ	15434	3009321	..... COVER, ACCESS	1
7	AFZZ	15434	3009323	..... GASKET (WATER HEADER COVER) PART OF KIT P/N 3801717.....	1
8	PAFZZ	15434	206021	..... PACKING, PREFORMED PART OF KIT P/N 3801717.....	8
9	AFZZ	15434	3177235	..... COOLER, ELEMENT, OIL	4
10	AFZZ	15434	212161	..... PACKING, PREFORMED PART OF KIT P/N 3801717.....	16

END OF FIGURE

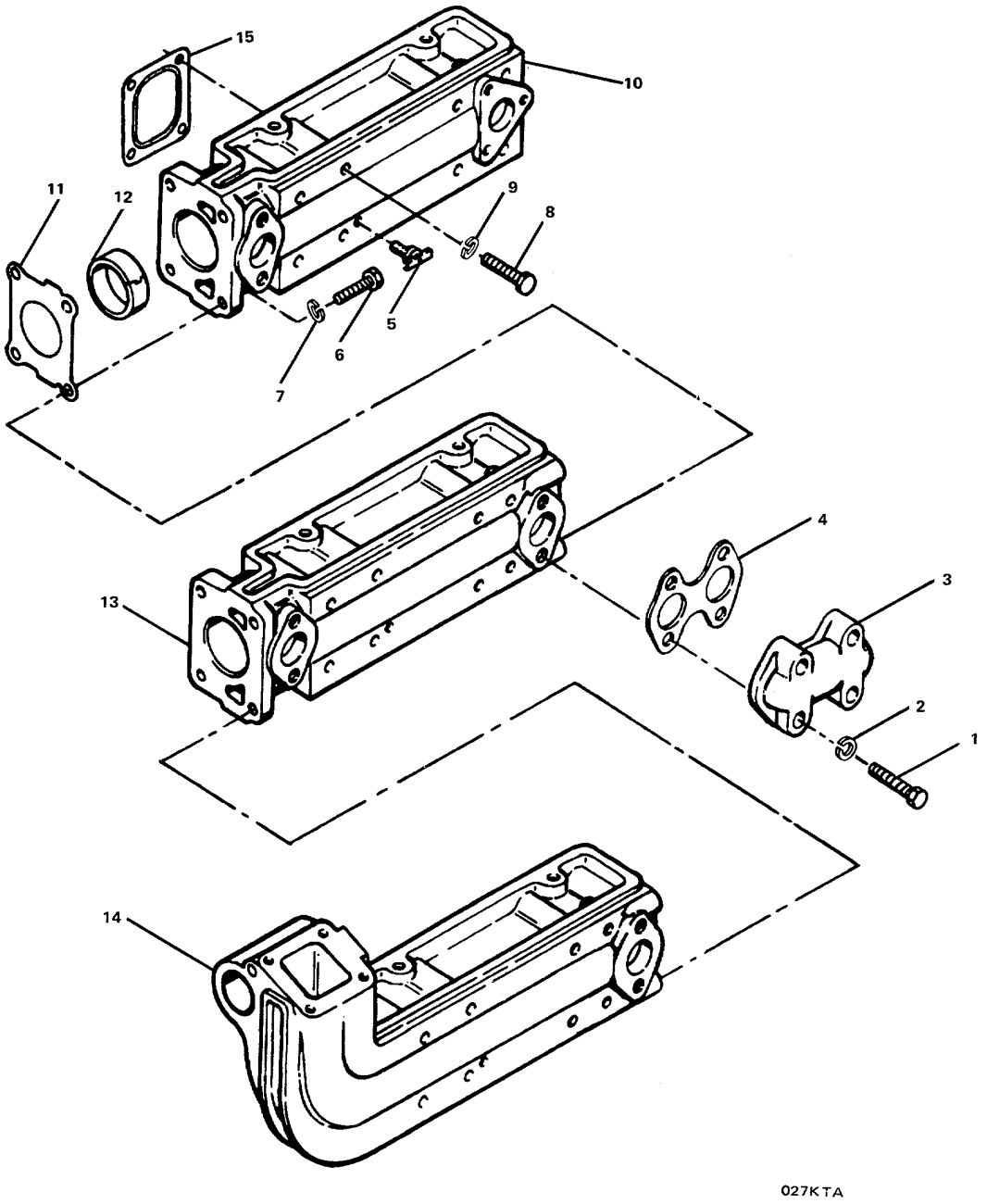

FIGURE 20. Exhaust Manifold Group.

(1) ITEM NO	(2) SMR CODE	(3) FSCM	(4) PART NUMBER	(5) DESCRIPTION AND USABLE ON CODES(UOC)	(6) QTY
				GROUP 01 MAIN PROPULSION ENGINE	
				FIG. 20 EXHAUST MANIFOLD GROUP	
	XCCFF	15434	11.01-01	..... EXHAUST MANIFOLD GR	1
1	XDFZZ	15434	S-104	..... SCREW, CAP, HEXAGON H	24
2	XDFZZ	96906	MS35338-8	..... WASHER, LOCK	24
3	XDFZZ	15434	3014500	..... CONNECTION, WATER TR	6
4	PAFZZ	15434	3015545	..... GASKET	6
5	XDFZZ	15434	S-962-E	..... COCK, DRAIN	8
6	XDFZZ	15434	206326	..... SCREW, CAP, HEXAGON H.....	24
7	XDFZZ	15434	135783	..... WASHER	24
8	XDFZZ	15434	S-153	..... SCREW, CAP, HEXAGON H	64
9	XDFZZ	15434	3176133	..... WASHER, FLAT	64
10	XDFZZ	15434	3015542	..... MANIFOLD, EXHAUST	2
11	PAFZZ	15434	3175908	..... GASKET	6
12	XDFZZ	15434	206557	..... BUSHING, SLEEVE	6
13	XDFZZ	15434	3015543	..... MANIFOLD, EXHAUST	4
14	XDFZZ	15434	3015544	..... MANIFOLD, EXHAUST.....	2
	PAFZZ	15434	3037821	..... GASKET (EXHAUST MANIFOLD) PART OF. KIT P/N 3801718.....	16

END OF FIGURE

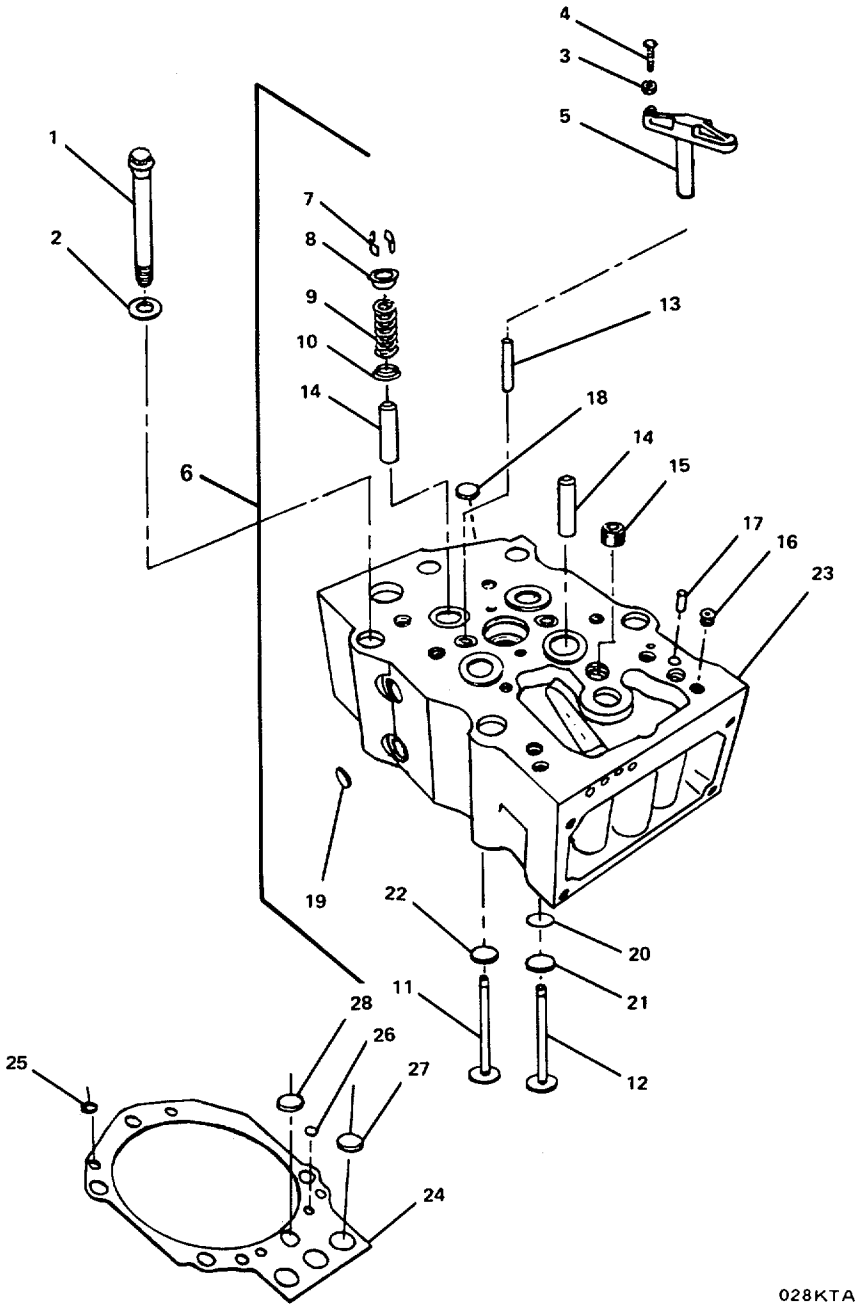

FIGURE 21. Cylinder Head Group.

GROUP 01 MAIN PROPULSION ENGINE

FIG. 21 CYLINDER HEAD GROUP

(1) ITEM NO	(2) SMR CODE	(3) FSCM	(4) PART NUMBER	(5) DESCRIPTION AND USABLE ON CODES(UOC)	(6) QTY
	XCCHH	15434	02.01-01	CYLINDER HEAD GROUP	1
1	XDCZZ	15434	3032633	CAPSCREW, CYLINDER H	96
2	XDCZZ	15434	205059	WASHER	96
3	XDCZZ	15434	203131	NUT, CROSS HD	32
4	XDCZZ	15434	3032697	SCREW, MACHINE	32
5	XDCZZ	15434	3048620	CROSS HEAD, VALVE	32
6	PACHF	15434	3021692	CYLINDER HEAD, DIESE	16
7	XDHZZ	5434	205091	LOCK, VALVE SPRING R	128
8	XDHZZ	15434	205094	SEAT, HELICAL COMPRE	64
9	XDHZZ	15434	205208	SPRING, HELICAL, COMP	64
10	XDHZZ	15434	3001663	GUIDE, VALVE SPRING	64
11	XDHZZ	15434	3035110	VALVE, POPPET, ENGINE	32
12	XDHZZ	15434	207241	VALVE, POPPET, ENGINE	32
13	XDHZZ	15434	205169	GUIDE, ENGINE POPPET	32
14	XDHZZ	15434	3201311	GUIDE, VALVE STEM	64
15	XDHZZ	15434	3013257	PLUG, PIPE	16
16	XDHZZ	15434	3002158	PLUG, PIPE	16
17	XDHZZ	15434	68445	PIN, GROOVED, HEADLES	32
18	XDHZZ	15434	206224	PLUG, EXPANSION	32
19	XDHZZ	15434	205401	PLUG, EXPANSION	128
20	XDHZZ	15434	3009109	DEFLECTOR, AIRFLOW	32
21	XDHZZ	15434	3026296	SEAT, VALVE	32
22	XDHZZ	15434	205093	SEAT, VALVE	32
23	XDHZZ	15434	3009089	HEAD, CYLINDER	16
24	PACZZ	15434	3022340	GASKET (CYLINDER HEAD) PART OF KIT P/N 3801718	16
25	PACZZ	15434	207448	PACKING, PREFORMED PART OF KIT P/N 3801718	64
26	PACZZ	15434	205852	PACKING, PREFORMED PART OF KIT P/N 3801718	16
27	PACZZ	15434	205855	PACKING, PREFORMED PART OF KIT P/N 3801718	48
28	PACZZ	15434	205858	PACKING, PREFORMED PART OF KIT P/N 3801718	16

END OF FIGURE

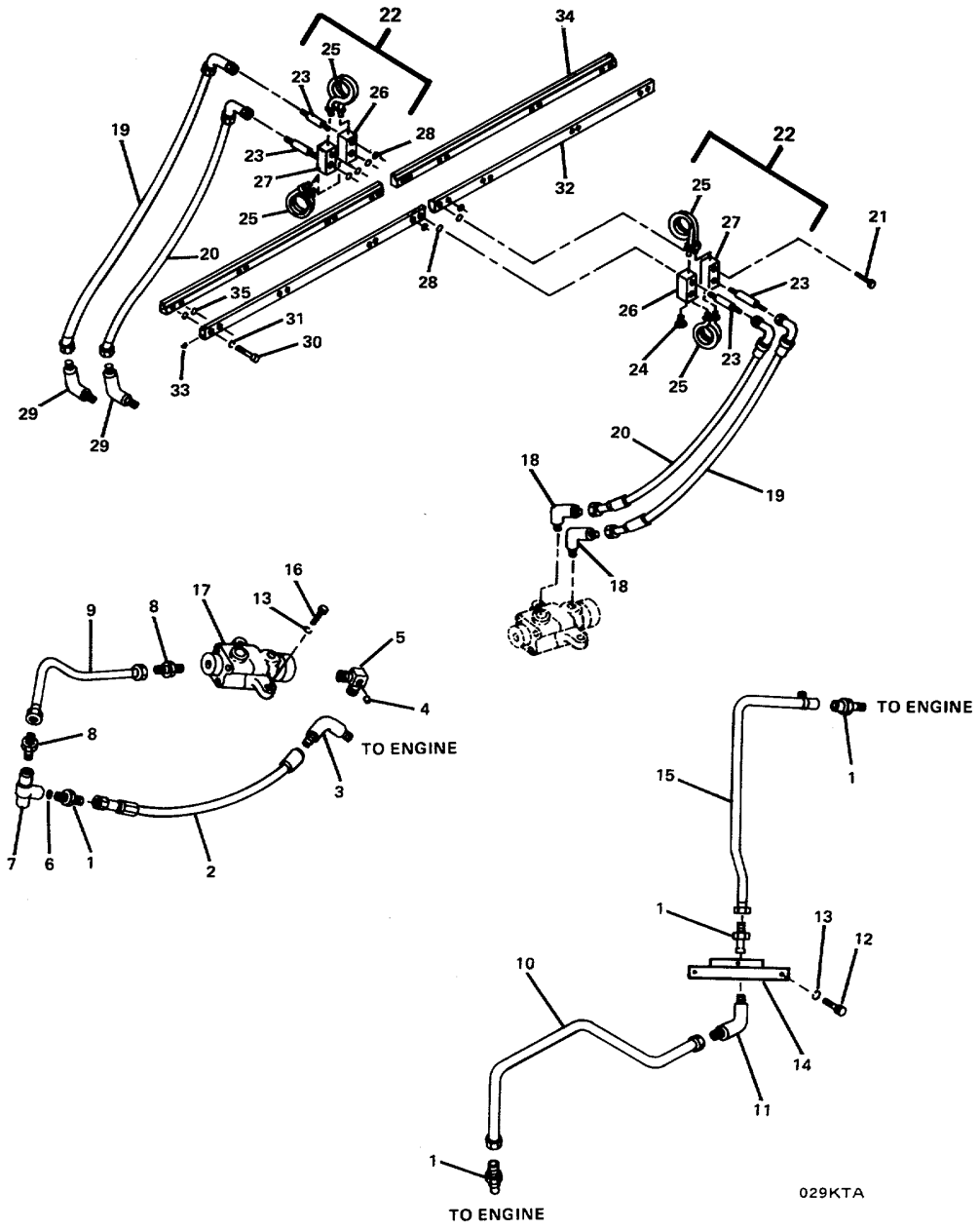

FIGURE 22. Fuel Manifold Group

(1) ITEM NO	(2) SMR CODE	(3) FSCM	(4) PART NUMBER	(5) DESCRIPTION AND USABLE ON CODES(UOC)	(6) QTY
				GROUP 01 MAIN PROPULSION ENGINE	
				FIG. 22 FUEL MANIFOLD GROUP	
	XCFFF	15434	06.03-01	FUEL MANIFOLD GROUP	1
1	XDFZZ	15434	68138	ADAPTER, STRAIGHT, PI	4
2	XDFZZ	15434	AS04010SS	HOSE ASSEMBLY, NONME	1
3	XDFZZ	15434	S-1047-A	ELBOW, PIPE TO TUBE	1
4	XDFZZ	15434	3008465	PLUG, PIPE	2
5	XDFZZ	15434	3175716	ELBOW, PIPE TO HOSE	1
6	XDFZZ	15434	S-910-B	PLUG, PIPE	1
7	XDFZZ	15434	3175687	TEE, PIPE	1
8	XDFZZ	15434	S-1008-A	ADAPTER, STRAIGHT, PI	2
9	XDFZZ	15434	3177708	PIPE, BENT, METALLIC	1
10	XDFZZ	15434	3175792	TUBE ASSEMBLY, METAL	1
11	XDFZZ	15434	3252444	ELBOW, TUBE CONNECTO	1
12	XDFZZ	15434	S-120	SCREW, CAP, HEXAGON H	2
13	XDFZZ	96906	MS35338-8	WASHER, LOCK	4
14	XDFZZ	15434	3175797	CONNECTION, FUEL BLO	1
15	XDFZZ	15434	3177554	TUBE ASSEMBLY, METAL	1
16	XDFZZ	15434	191772	BOLT, MACHINE	2
17	XDFZZ	15434	3177629	BLOCK, FUEL	1
18	XDFZZ	15434	121229	ELBOW, PIPE TO TUBE	2
19	PAFZZ	15434	AS06034SL	HOSE ASSEMBLY, NONME	2
20	PAFZZ	15434	AS06032SL	HOSE ASSEMBLY, NONME	2
21	XDFZZ	15434	3175074	SCREW, CAP, SOCKET HE	8
22	XDFFF	15434	3177918	FUEL BLOCK ASSEMBLY	2
23	XDFZZ	15434	3177366	FITTING, FUEL	4
24	XDFZZ	15434	3031404	COUPLING, TUBE	8
25	XDFZZ	15434	3176710	TUBE ASSEMBLY, METAL	4
26	XDFZZ	15434	3176708	BLOCK, FUEL	2
27	XDFZZ	15434	3176709	.BLOCK, FUEL	2
28	PAFZZ	15434	131026	PACKING, PREFORMED PART OF KIT P/N . 3801718	8
29	XDFZZ	15434	3177368	FITTING, FUEL	2
30	XDFZZ	15434	3001811	SCREW, CAP, SOCKET HE	32
31	XDFZZ	15434	127018	WASHER	32
32	XDFZZ	15434	3019583	MANIFOLD, FUEL	2
33	XDFZZ	15434	S-965-E	PLUG, MACHINE THREAD	16
34	XDFZZ	15434	3019584	MANIFOLD, FUEL	2
35	PAFZZ	15434	3001340	PACKING, PREFORMED PART OF KIT P/N 3801718	32
	PAHZZ	15434	3801718	GASKET SET (NEEDED FOR COMPLETE REPAIR OF MAIN ENGINE)	1
				BUSHING, RUBBER (24) 18-20	
				GASKET (1) 5-7	
				GASKET (1) 5-9	
				GASKET (2) 7-27	
				GASKET (2) 7-30	
				GASKET (16) 16-7	
				GASKET (4) 18-6	
				GASKET (16) 18-19	

(1) ITEM NO	(2) SMR CODE	(3) FSCM	(4) PART NUMBER	(5) DESCRIPTION AND USABLE ON CODES(UOC)	(6) QTY
				GASKET (4) 18-23	
				GASKET (16) 20-15	
				GASKET (16) 21-24	
				PACKING, PREFORMED (4) 5-13	
				PACKING, PREFORMED (4) 5-39	
				PACKING, PREFORMED (2) 7-25	
				PACKING, PREFORMED (8) 18-10	
				PACKING, PREFORMED (4) 18-14	
				PACKING, PREFORMED (4) 18-42	
				PACKING, PREFORMED (64) 21-25	
				PACKING, PREFORMED (16) 21-26	
				PACKING, PREFORMED (48) 21-27	
				PACKING, PREFORMED (16) 21-28	
				PACKING, PREFORMED (8) 22-28	
				PACKING, PREFORMED (32) 22-35	
				SEAL, PLAIN (4) 18-12	

END OF FIGURE

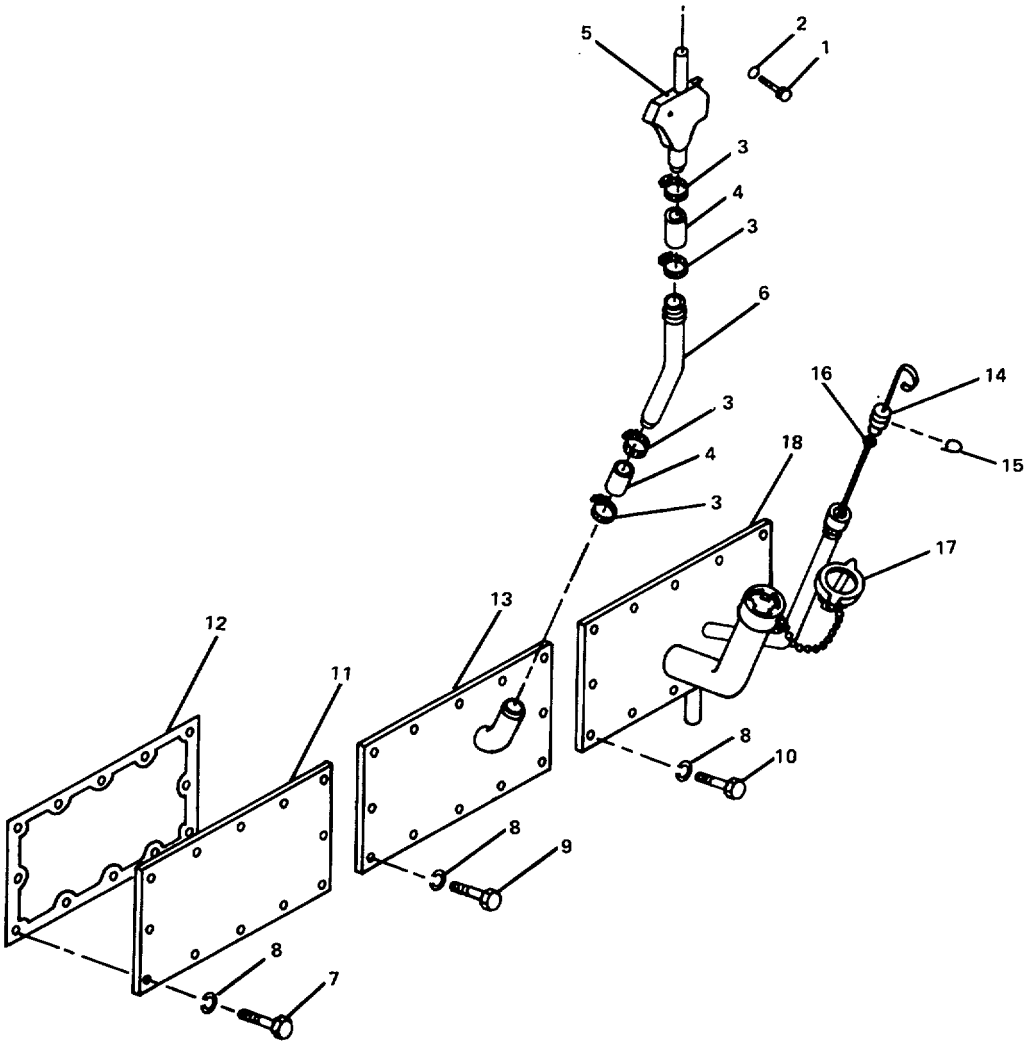

FIGURE 23. Handhole Cover Group

(1) ITEM NO	(2) SMR CODE	(3) FSCM	(4) PART NUMBER	(5) DESCRIPTION AND USABLE ON CODES(UOC)	(6) QTY
				GROUP 01 MAIN PROPULSION ENGINE	
				FIG. 23 HANDHOLE COVER GROUP	
	XCCOO	15434	01.08-01	..... HANDHOLE COVER GROU.....	1
1	XDOZZ	15434	106289	..... SCREW, CAP, HEXAGON H	4
2	XDOZZ	15434	S-608	..... WASHER, LOCK.....	4
3	XDOZZ	15434	43282-C	..... CLAMP, HOSE	8
4	XDOZZ	15434	3177530	..... HOSE, PREFORMED.....	4
5	XDOZZ	15434	3176608	..... BREATHER, CRANKCASE	2
6	XDOZZ	15434	3177039	..... TUBE, BENT, METALLLIC	2
7	XDOZZ	15434	S-109	..... SCREW, CAP, HEXAGON H.....	55
8	XDOZZ	96906	MS35338-8	..... WASHER, LOCK	96
9	XDOZZ	15434	205413	..... SCREW, CAP, HEXAGON H	5
10	XDOZZ	15434	205354	..... SCREW CAP.....	36
11	XDOZZ	15434	3175855	..... COVER, ACCESS	5
12	PAOZZ	15434	3175856	..... GASKET (HAND HOLE) PART OF KIT ..... P/N 3801717.....	8
13	XDOZZ	15434	3021438	..... COVER, ACCESS	2
14	XDOZZ	15434	3039434	..... GAGE ROD, LIQUID LEV	1
15	XDOZZ	15434	3030207	..... CLIP, RETAINING	1
16	PAOZZ	15434	108172	..... PACKING, PREFORMED PART OF KIT P/N 3801717.....	1
17	XDOZZ	15434	3176598	..... CAP, FILLER OPENING	1
18	XDOZZ	15434	3176590	..... COVER, HAND HOLE WIT	1

END OF FIGURE

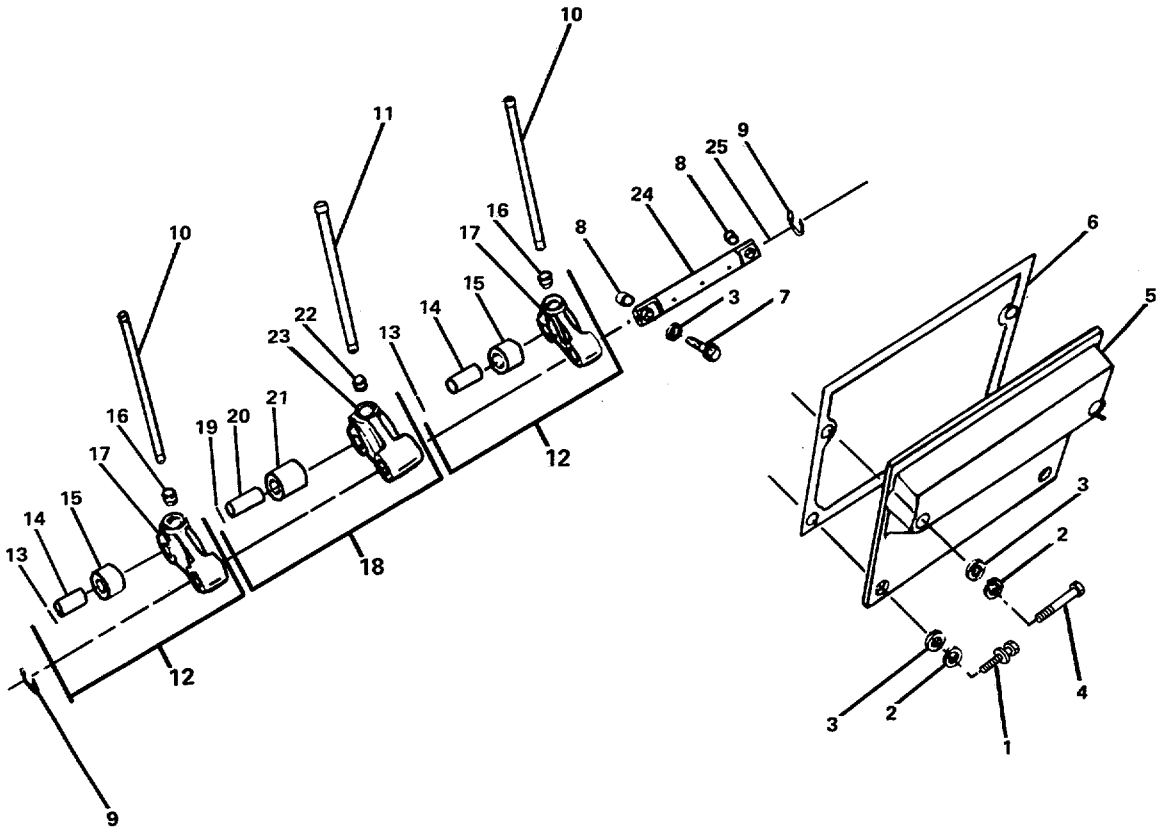

FIGURE 24. Cam Follower and Housing Group.

GROUP 01 MAIN PROPULSION ENGINE

FIG. 24 CAM FOLLOWER AND HOUSING GROUP

(1) ITEM NO	(2) SMR CODE	(3) FSCM	(4) PART NUMBER	(5) DESCRIPTION AND USABLE ON CODES(UOC)	(6) QTY
	XCHHH	15434	04.01-01	CAM FOLLOWER AND HO	1
1	XDHZZ	96906	MS35295-62	SCREW, CAP, HEXAGON H	32
2	XDHZZ	96906	MS35338-8	WASHER, LOCK	64
3	XDHZZ	96906	MS27183-14	WASHER, FLAT	96
4	XDHZZ	15434	S-126	SCREW, CAP, HEXAGON H	32
5	XDHZZ	15434	3009631	COVER, CAM FOLLOWER	16
6	PAHZZ	15434	3040721	GASKET PART OF KIT P/N 3801717	16
7	XDHZZ	15434	3002886	SCREW	32
8	XDHZZ	15434	3002993	BUSHING, SLEEVE	32
9	XDHZZ	15434	205439	RING, RETAINING	32
10	XDHZZ	15434	205492	PUSH ROD, ENGINE POP	32
11	XDHZZ	15434	3017961	ROD, PUSH, INJECTOR	16
12	XDHHZ	15434	3039164	CAM FOLLOWER, NEEDL	32
13	XAHZZ	15434	205438	PIN	32
14	XAHZZ	15434	205071	PIN, CAM FOLLOWER	32
15	XAHZZ	15434	3016826	ROLLER, LINEAR-ROTAR	32
16	XAHZZ	15434	213559	SOCKET, CAM FOLLOWER	32
17	XAHZZ	15434	205069	FOLLOWER, CAM	32
18	XDHHZ	15434	3039163	CAM FOLLOWER, NEEDLE	16
19	XAHZZ	15434	205438	PIN	16
20	XAHZZ	15434	205068	PIN, CAM FOLLOWER	16
21	XAHZZ	15434	3016825	ROLLER, LINEAR-ROTAR	16
22	XAHZZ	15434	213559	SOCKET, CAM FOLLOWER	16
23	XAHZZ	15434	206231	FOLLOWER, CAM	16
24	XDHHH	15434	AR-10627	SHAFT, STRAIGHT	16
25	XDHZZ	15434	205227	PLUG, CUP	32

END OF FIGURE

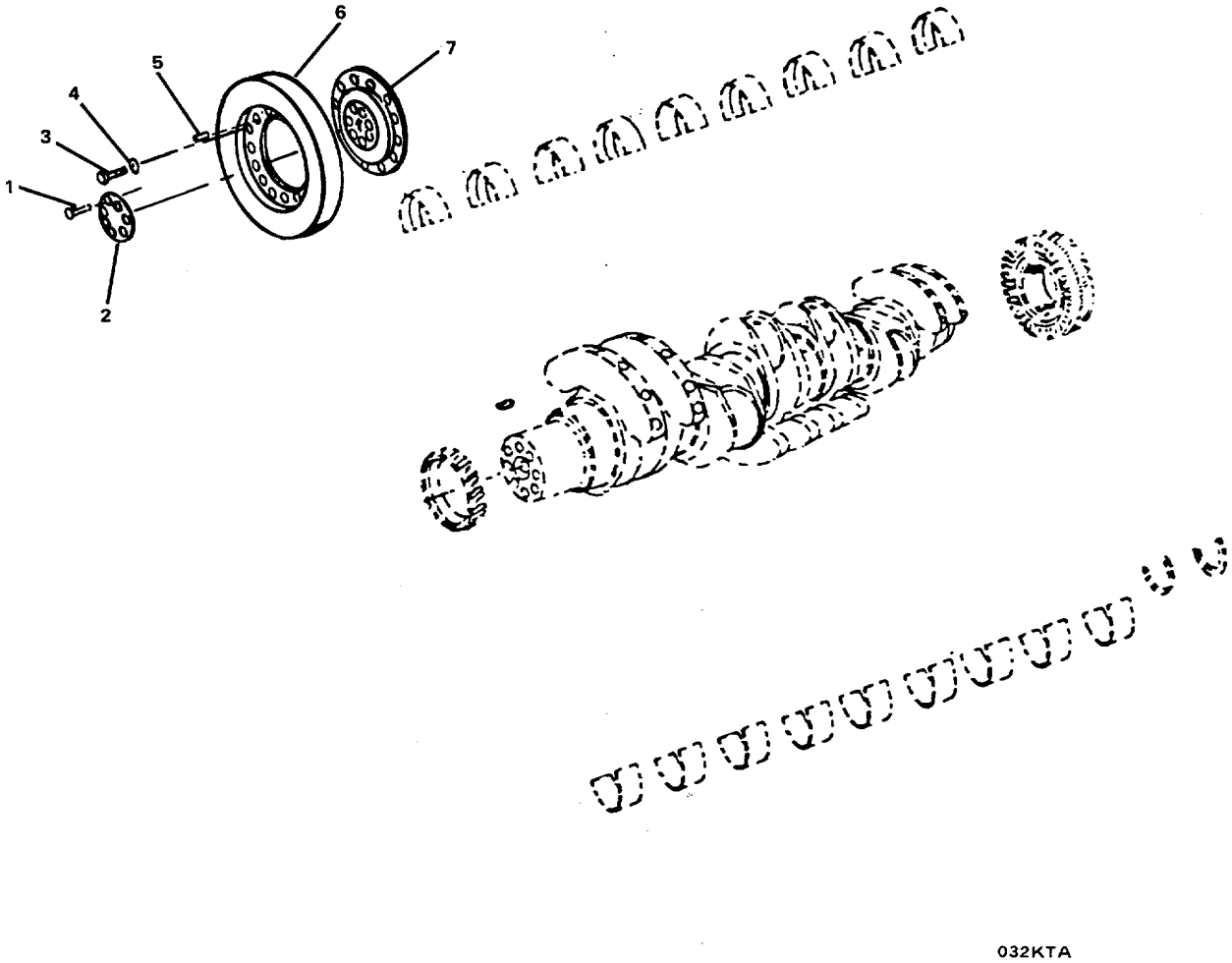

FIGURE 25. Vibration Damper/Bearing/Crankshaft Group (Sheet 1 of 3)

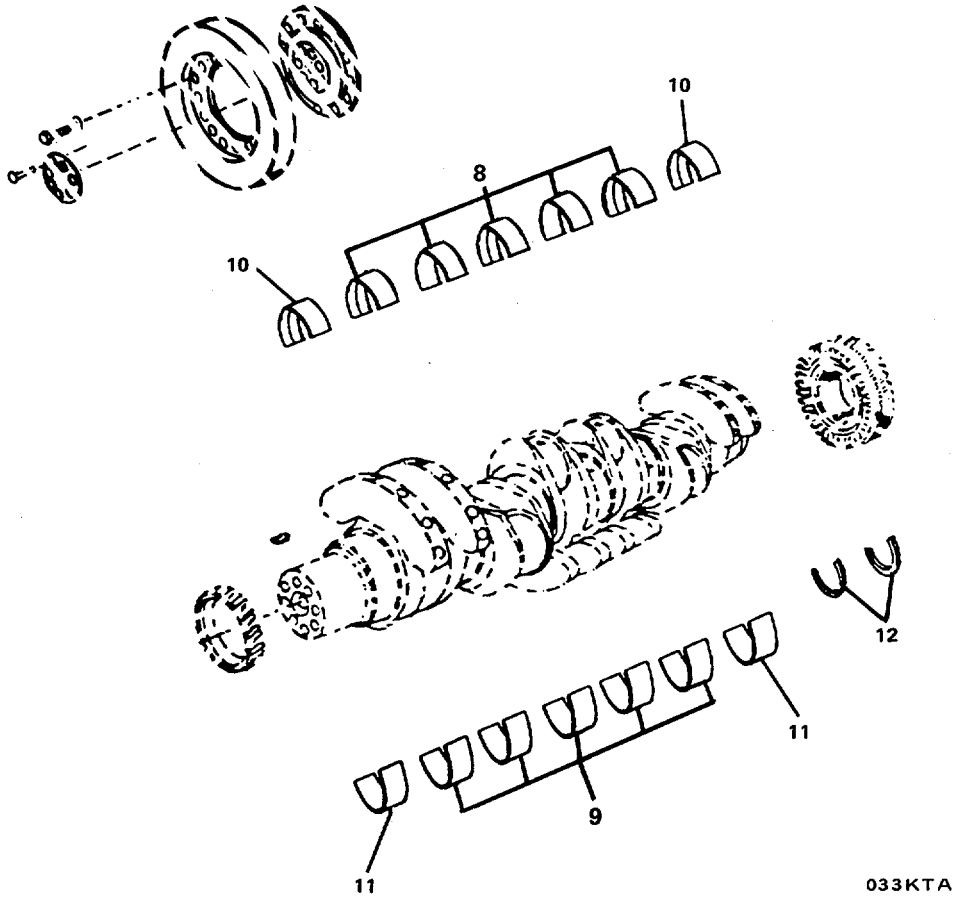

FIGURE 25. Vibration Damper/Bearing/Crankshaft Group (Sheet 2 of 3)

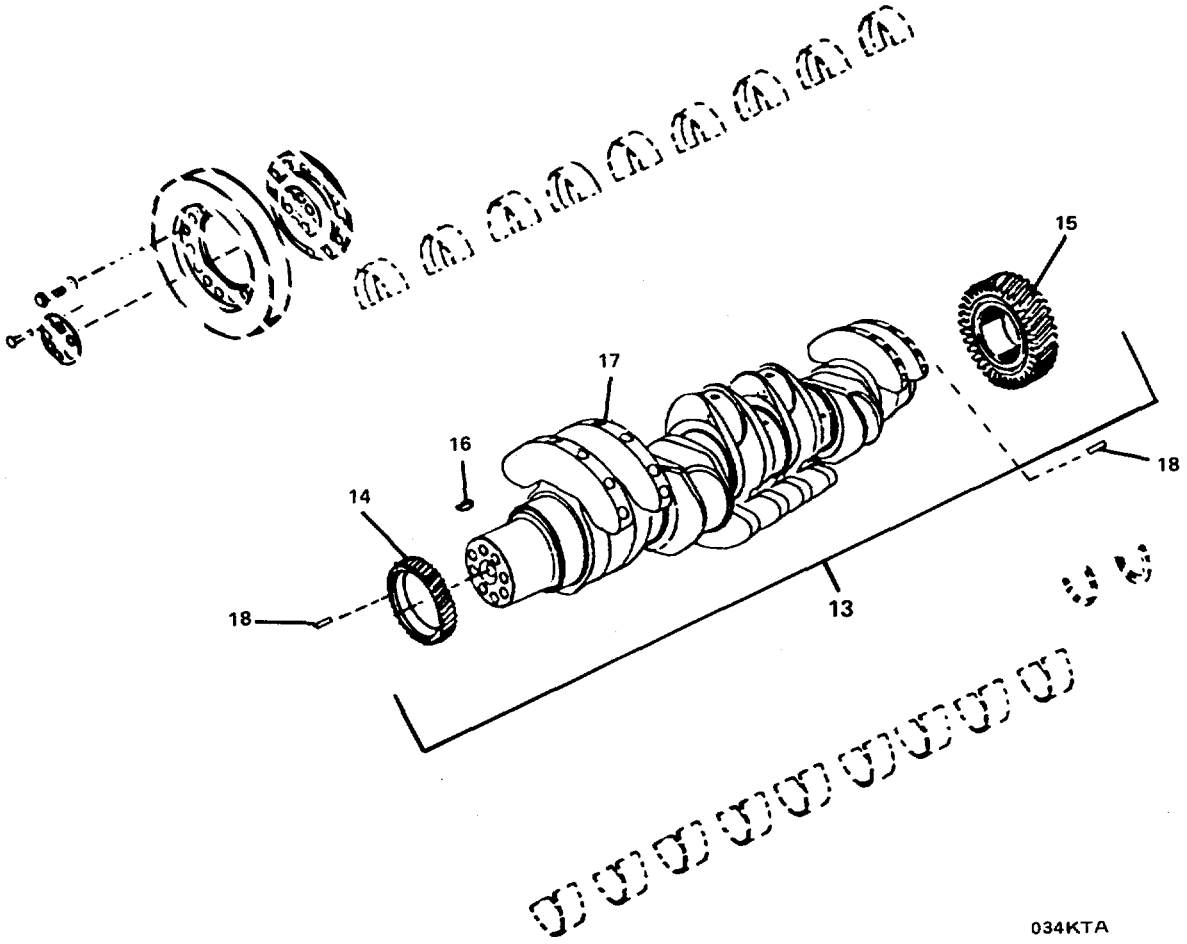

FIGURE 25. Vibration Damper/Bearing/Crankshaft Group (Sheet 3 of 3)

(1) ITEM NO	(2) SMR CODE	(3) FSCM	(4) PART NUMBER	(5) DESCRIPTION AND USABLE ON CODES(UOC)	(6) QTY
				GROUP 01 MAIN PROPULSION ENGINE	
				FIG. 25 VIBRATION DAMPER/BEARINGS/ CRANKSHAFT GROUP	
	XCHHH	15434	01.02-01	VIBRATION DAMPER/BE	1
1	XDHZZ	15434	3036845	.....BOLT, MACHINE	8
2	XDHZZ	15434	3037239	.....SPACER	1
3	XDHZZ	15434	3034574	.....BOLT, MACHINE	8
4	XDHZZ	15434	3033626	.....WASHER, FLAT	8
5	XDHZZ	15434	3033629	.....PIN, SPRING	1
6	XDHZZ	15434	3032731	.....DAMPENER, VIBRATION,	1
7	DHZZ	15434	3031736	.....ADAPTER, CRANK SHAFT	1
8	XDHZZ	15434	206580	.....BEARING HALF, SLEEVE	7
9	XDHZZ	15434	206590	.....BEARING HALF, SLEEVE	7
10	XDHZZ	15434	206600	.....BEARING HALF, SLEEVE	2
11	XDHZZ	15434	206610	.....BEARING HALF, SLEEVE	2
12	XDHZZ	15434	3000139	.....BEARING, WASHER, THRU	2
13	PBHHH	15434	3040705	.....CRANKSHAFT, ENGINE	1
14	XDHZZ	15434	3004262	.....GEAR, HELICAL	1
15	XDHZZ	15434	3175255	.....GEAR, HELICAL	1
16	XDHZZ	15434	206904	.....KEY	1
17	XAHZZ	15434	3176430	. .....CRANKSHAFT	1
18	XDHZZ	15434	131584	.....PIN, SPRING	2

END OF FIGURE

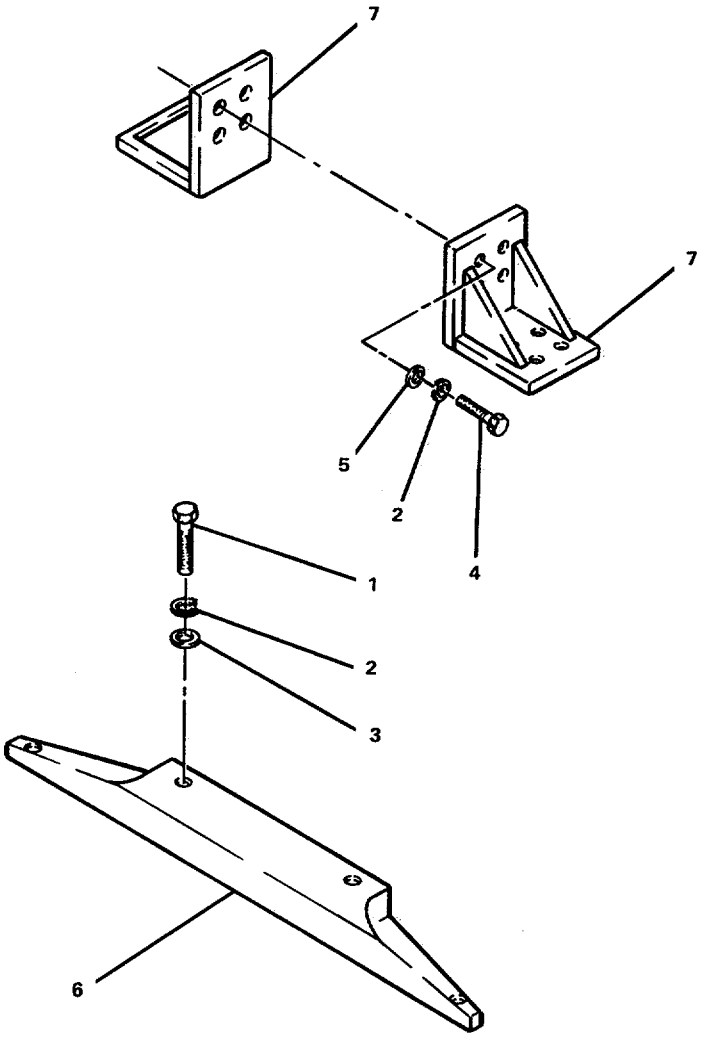

035KTA

FIGURE 26. Engine Support Group

(1) ITEM NO	(2) SMR CODE	(3) FSCM	(4) PART NUMBER	(5) DESCRIPTION AND USABLE ON CODES(UOC)	(6) QTY
				GROUP 01 MAIN PROPULSION ENGINE	
				FIG. 26 ENGINE SUPPORT GROUP	
	XCFFF	15434	16.03-01	ENGINE SUPPORT GROU.....	1
1	XDFZZ	15434	S-189	..... SCREW, CAP, HEXAGON H	2
2	XDFZZ	15434	S-611	..... WASHER, LOCK.....	16
3	XDFZZ	15434	S-204	..... NUT, PLAIN, HEXAGON H	2
4	XDFZZ	15434	S-152-A	..... SCREW, CAP, HEXAGON H.....	8
5	XDFZZ	15434	S-640	..... WASHER, FLAT	8
6	XDFZZ	15434	3057436	..... SUPPORT, FRONT ENGIN	1
7	XDFZZ	15434	3057437	..... SUPPORT, REAR ENGINE	2

END OF FIGURE

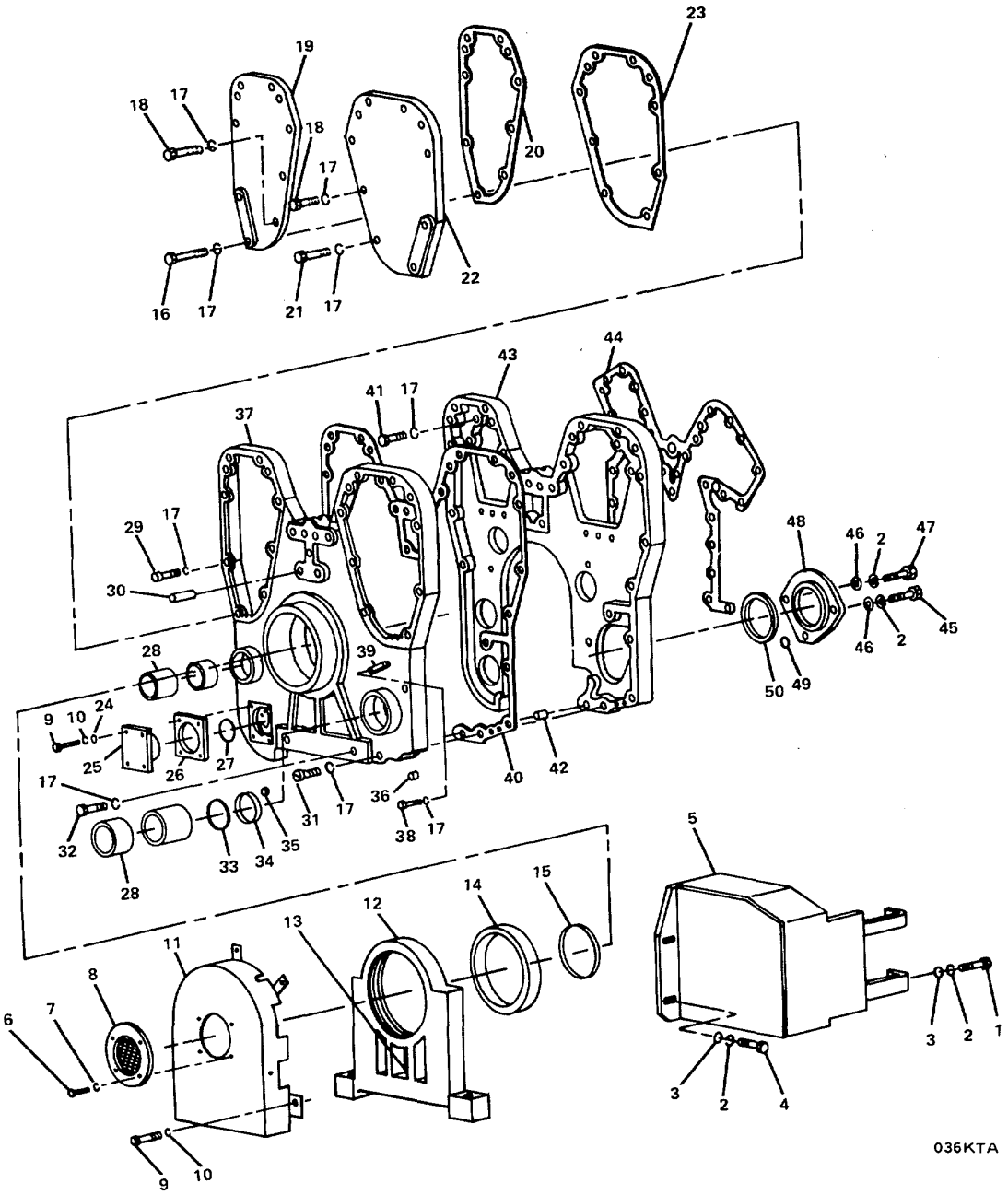

FIGURE 27. Pulley Shields and Front Gear Housing Group

GROUP 01 MAIN PROPULSION ENGINE

FIG. 27 PULLEY SHIELDS AND FRONT GEAR HOUSING GROUP

(1) ITEM NO	(2) SMR CODE	(3) FSCM	(4) PART NUMBER	(5) DESCRIPTION AND USABLE ON CODES(UOC)	(6) QTY
	XCFHH	15434	08.13.1/01.09-01	PULLEY SHIELD/FRONT	1
1	XDHZZ	15434	206451	SCREW, CAP, HEXAGON H	2
2	XDHZZ	15434	135783	WASHER	7
3	XDHZZ	15434	69324	WASHER, FLAT	4
4	XDHZZ	15434	206326	SCREW, CAP, HEXAGON H	2
5	XDHZZ	15434	3007668	GUARD, DAMPER	1
6	XDHZZ	15434	S-188-C	SCREW, CAP, HEXAGON H	4
7	XDHZZ	96906	MS122032	WASHER, LOCK	4
8	XDHZZ	15434	3001954	GUARD, DAMPER	1
9	XDHZZ	15434	S-145	SCREW, CAP, HEXAGON H	8
10	XDHZZ	15434	111445	WASHER, LOCK	8
11	XDHZZ	15434	3007667	GUARD, DAMPER	1
12	XDHZZ	15434	3177178	BRACKET, ENGINE MOUN	1
13	XDHZZ	15434	S-2268	FITTING, LUBRICATION	1
14	PBHZZ	15434	205683	BUSHING, SLEEVE	1
15	PBHZZ	15434	3016792	GASKET PART OF KIT P/N 3801717	1
16	XDHZZ	15434	185804	SCREW, CAP, HEXAGON H	4
17	XDHZZ	96906	MS35338-47	WASHER, LOCK	63
18	XDHZZ	96906	MS90728-95	SCREW, CAP, HEXAGON H	6
19	XDHZZ	15434	3007401	COVER, ACCESS	1
20	PBHZZ	15434	3007402	GASKET	1
21	XDHZZ	15434	108767	SCREW CAP	2
22	XDHZZ	15434	3007403	COVER, ACCESS	1
23	PBHZZ	15434	3007404	GASKET	1
24	XDHZZ	15434	127571	WASHER, FLAT	4
25	XDHZZ	15434	206406	COVER, ACCESS	1
26	PBHZZ	15434	206407	GASKET (FRONT HYDRAULIC HOLE) PART OF KIT P/N 3801717.	1 .
27	XDHZZ	15434	205133	BUSHING, SLEEVE	1
28	XDHZZ	15434	3026274	PLUG, GEAR COVER	2
29	XDHZZ	15434	102020	SCREW	6
30	XDHZZ	15434	3008468	PLUG, PIPE	1
31	XDHZZ	15434	S-127	SCREW, CAP, HEXAGON H	9
32	XDHZZ	15434	110266	SCREW, CAP, HEXAGON H	8
33	PBHZZ	15434	3016788	SEAL, PLAIN PART OF KIT P/N 3801717	2
34	XDHZZ	15434	132770	BEARING, SLEEVE	2
35	XDHZZ	15434	3008466	PLUG, PIPE	3
36	XDHZZ	15434	3002158	PLUG, PIPE	5
37	XDHZZ	15434	3177543	COVER, ACCESS	1
38	XDHZZ	15434	206527	BOLT, MACHINE	1
39	XDHZZ	15434	206526	POINTER, TIMING	1
40	PBHZZ	15434	3177160	GASKET	1
41	XDHZZ	96906	MS35295-87	SCREW, CAP, HEXAGON H	15
42	XDHZZ	15434	138912	PIN, STRAIGHT, HEADLE	1
43	XDHZZ	15434	3176918	HOUSING, FRONT GEAR	1
44	PBHZZ	15434	3178076	GASKET	1
45	XDHZZ	15434	S-162-A	SCREW, CAP, HEXAGON H	2

(1) ITEM NO	(2) SMR CODE	(3) FSCM	(4) PART NUMBER	(5) DESCRIPTION AND USABLE ON CODES(UOC)	(6) QTY
46	XDHZZ	15434	3175027	.....WASHER.....	3
47	XDHZZ	15434	103023	.....SCREW, CAP, HEXAGON H.....	1
48	XDHZZ	15434	206158	.....COVER, ACCESS	1
49	PBHZZ	15434	145600	.....PACKING, PREFORMED PART OF KIT P/N . 3801717.....	1
50	PBHZZ	15434	70861	.....PACKING, PREFORMED	1

END OF FIGURE

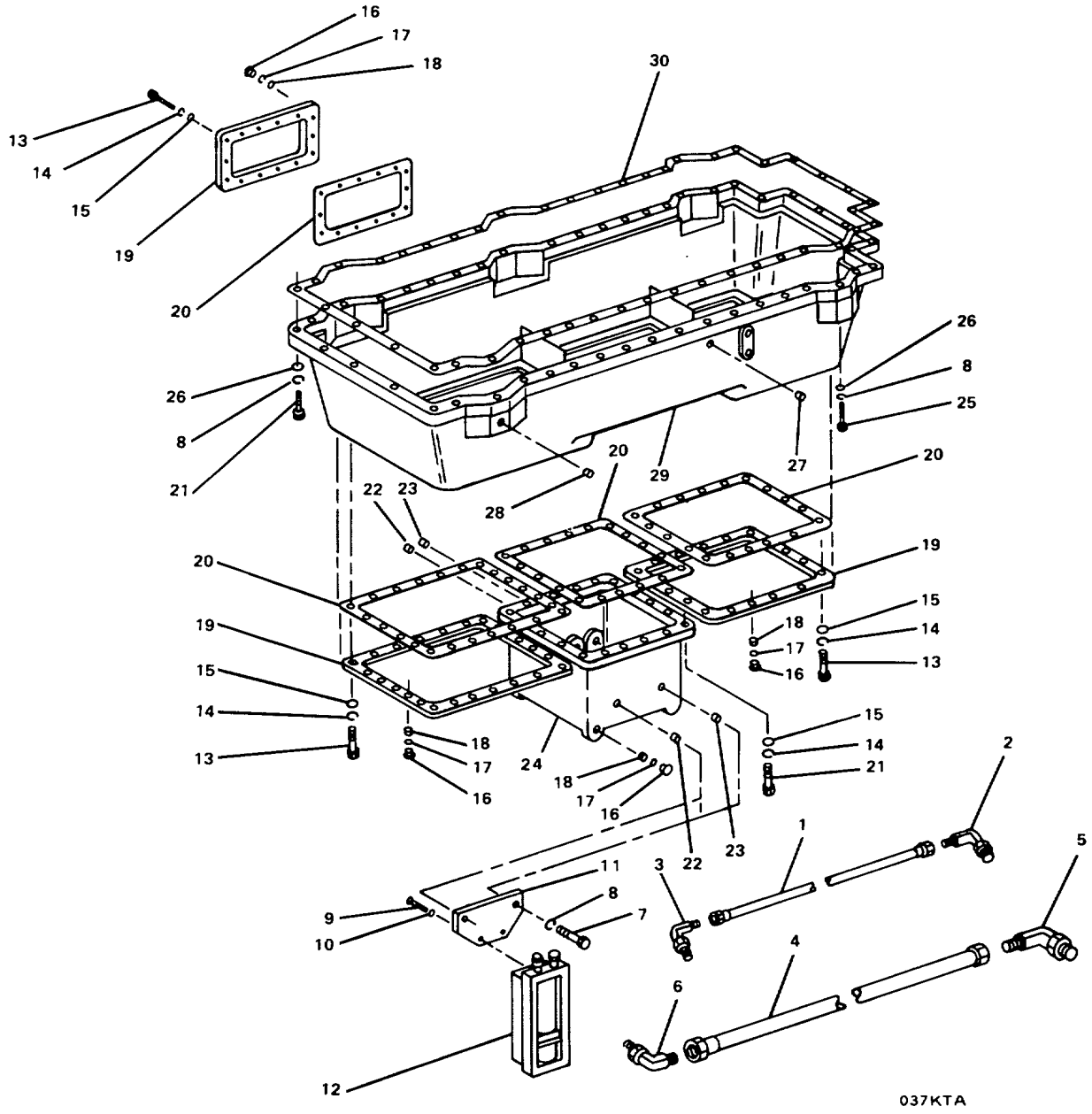

FIGURE 28. Oil Pan Adapter

GROUP 01 MAIN PROPULSION ENGINE

FIG. 28 OIL PAN AND ADAPTER GROUP

(1) ITEM NO	(2) SMR CODE	(3) FSCM	(4) PART NUMBER	(5) DESCRIPTION AND USABLE ON CODES(UOC)	(6) QTY
	XCOFF	15434	07.01-01	OIL PAN AND ADAPTER	1
1	PAFZZ	15434	AS04024SS	HOSE ASSEMBLY, NONME	1
2	XDFZZ	15434	68139	ELBOW, PIPE TO TUBE	1
3	XDFZZ	15434	S-1047-A	ELBOW, PIPE TO TUBE	1
4	PAFZZ	15434	AS10009SS	HOSE ASSEMBLY, NONME	1
5	XDFZZ	15434	111365	ELBOW, FUEL LINE	1
6	XDFZZ	15434	100501	ELBOW, ADAPTER, MALE	1
7	XDFZZ	15434	103023	SCREW, CAP, HEXAGON H	2
8	XDFZZ	96906	M535338-47	WASHER, LOCK	76
9	XDFZZ	15434	S-111	BOLT, MACHINE	2
10	XDFZZ	96906	MS27183-14	WASHER, FLAT	2
11	XDFZZ	15434	3059769	BRACKET, SWITCH	1
12	PBFZZ	15434	3057439	SWITCH, LIQUID LEVEL	1
13	XDFZZ	15434	206029	SCREW	66
14	XDFZZ	15434	135783	WASHER	88
15	XDFZZ	15434	3175027	WASHER	88
16	XDFZZ	15434	69962	PLUG, MACHINE THREAD	5
17	XDFZZ	15434	67946	SPACER, RING PART OF KIT P/N 3801717	5
18	XDFZZ	15434	200845	INSERT, SCREW THREAD	5
19	XDFZZ	15434	3028696	COVER	3
20	PAFZZ	15434	3043211	GASKET (OIL PAN) PART OF KIT P/N 3801717	4
21	XDFZZ	96906	MS90728-91	SCREW, CAP, HEXAGON H	68
22	XDFZZ	15434	3008468	PLUG, PIPE	2
23	XDFZZ	15434	3008470	PLUG	2
24	XDFZZ	15434	3036455	PAN, OIL	1
25	XDFZZ	15434	108767	SCREW CAP	28
26	XDFZZ	15434	3000082	WASHER, FLAT	74
27	XDFZZ	15434	3002158	PLUG, PIPE	2
28	XDFZZ	15434	3025460	PLUG, PIPE	1
29	XDFZZ	15434	3035728	ADAPTER, OIL PAN	1
30	PAFZZ	15434	3043213	GASKET PART OF KIT P/N 3801717	1

END OF FIGURE

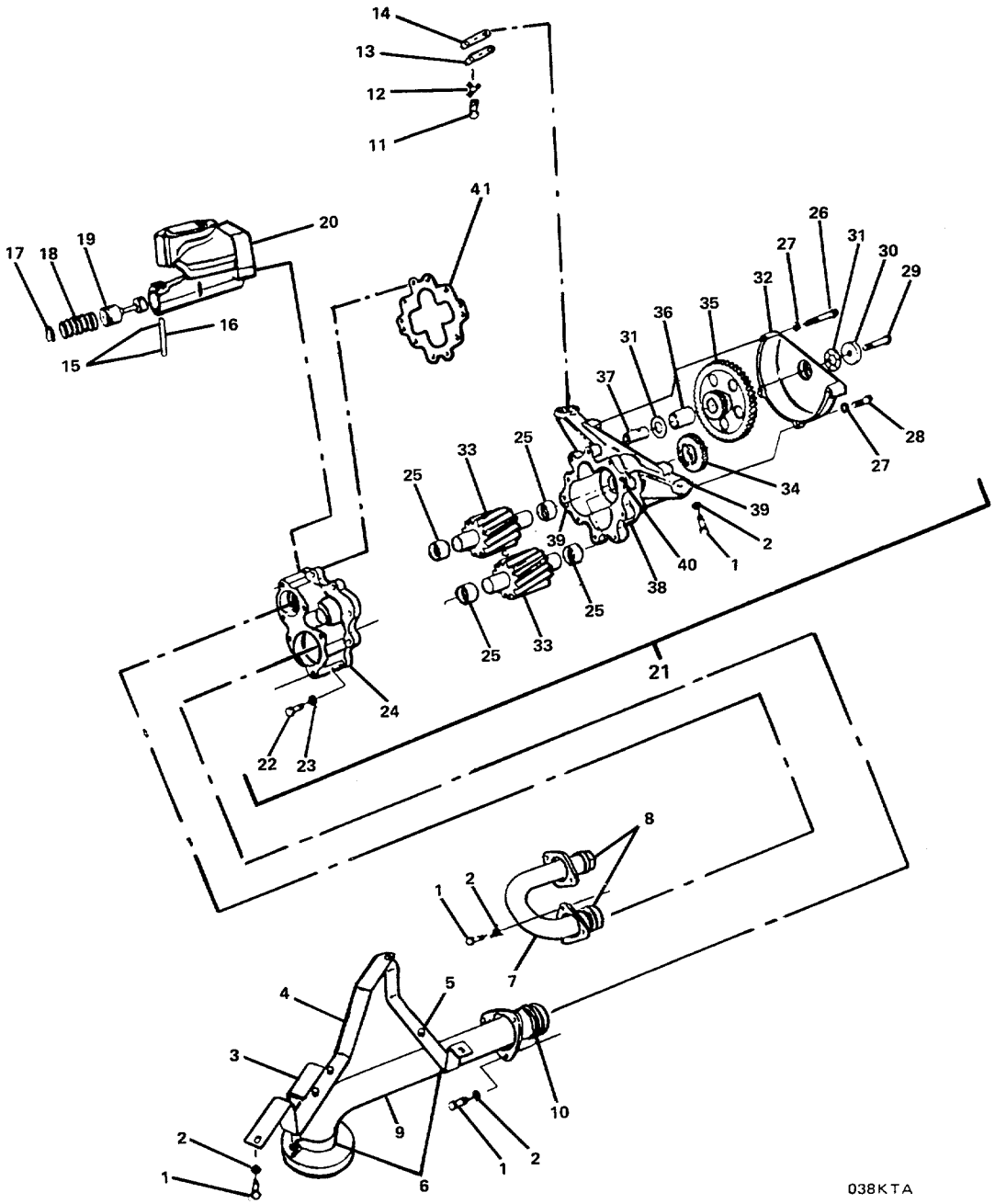

FIGURE 29. Lubricating Oil Pump Group

GROUP 01 MAIN PROPULSION ENGINE

FIG. 29 LUBRICATING OIL PUMP GROUP

(1) ITEM NO	(2) SMR CODE	(3) FSCM	(4) PART NUMBER	(5) DESCRIPTION AND USABLE ON CODES(UOC)	(6) QTY
XCFFF 15434 07.06-01			.	LUBRICATING OIL PUM	1
1	XDFZZ	15434	103023	SCREW, CAP, HEXAGON H	11
2	XDFZZ	15434	151355	LOCKING PLATE, NUT A PART OF KIT P/N 3801717	11
3	XDFZZ	15434	3031971	BRACKET, OIL TUBE	1
4	XDFZZ	15434	3033929	BRACKET, OIL TUBE	1
5	XDFZZ	15434	3031998	BRACKET, OIL TUBE	1
6	XDFZZ	15434	3031989	CLAMP, LOOP	2
7	XDFZZ	15434	3034999	TUBE ASSEMBLY, METAL	1
8	PAFZZ	15434	3028392	PACKING ASSEMBLY	2
9	XDFZZ	15434	3032397	TUBE ASSEMBLY, METAL	1
10	PAFZZ	15434	3031544	PACKING ASSEMBLY PART OF KIT P/N 3801717	1
11	XDFZZ	15434	S-113	SCREW, CAP, HEXAGON H	4
12	XDFZZ	15434	149134	PLATE, LOCK	4
13	XDFZZ	15434	3026312	SHIM	2
14	XDFZZ	15434	3026313	SHIM	2
15	XDFZZ	15434	107695	PIN, STRAIGHT, HEADLE	2
16	XDFZZ	15434	3001719	PIN, STRAIGHT, HEADED	1
17	XDFZZ	15434	127316	WASHER, RECESSED	1
18	PAFZZ	15434	3026926	SPRING, HELICAL, COMP	1
19	PAFZZ	15434	3026927	PLUNGER	1
20	XDFZZ	15434	3026925	VALVE, SAFETY RELIEF	1
21	PBFFF	15434	3038725	OIL PUMP ASSEMBLY, E	1
22	XDFZZ	15434	197032	SCREW, CAP, HEXAGON H	10
23	XDFZZ	96906	MS35338-47	WASHER, LOCK	10
24	XDFZZ	15434	3029678	COVER AND BUSHING	1
25	XDFZZ	15434	3029692	BUSHING	4
26	XDFZZ	15434	205377	BOLT, MACHINE	2
27	XDFZZ	96906	MS35338-8	WASHER, LOCK	4
28	XDFZZ	15434	199919	BOLT, MACHINE	2
29	XDFZZ	15434	3030518	SCREW, CAP, HEXAGON H	1
30	XDFZZ	15434	3029701	RETAINER, SHAFT	1
31	XDFZZ	15434	3029702	BEARING, THRUST	2
32	XDFZZ	15434	3029672	COVER, ACCESS	1
33	XDFZZ	15434	3029687	GEAR AND SHAFT	2
34	XDFZZ	15434	3029691	GEAR	1
35	XDFZZ	15434	3029696	GEAR	1
36	XDFZZ	15434	3029700	BUSHING	1
37	XDFZZ	15434	3029708	SHAFT, IDLER	1
38	XDFZZ	15434	3029683	BODY, LUBRICATING OI	1
39	XDFZZ	15434	107948	DOWEL	2
40	XDFZZ	15434	69519	PIN, STRAIGHT, HEADLE	2
41	PAFZZ	15434	3000632	GASKET (OIL CONNECTION) PART OF KIT P/N 3801717	1

END OF FIGURE

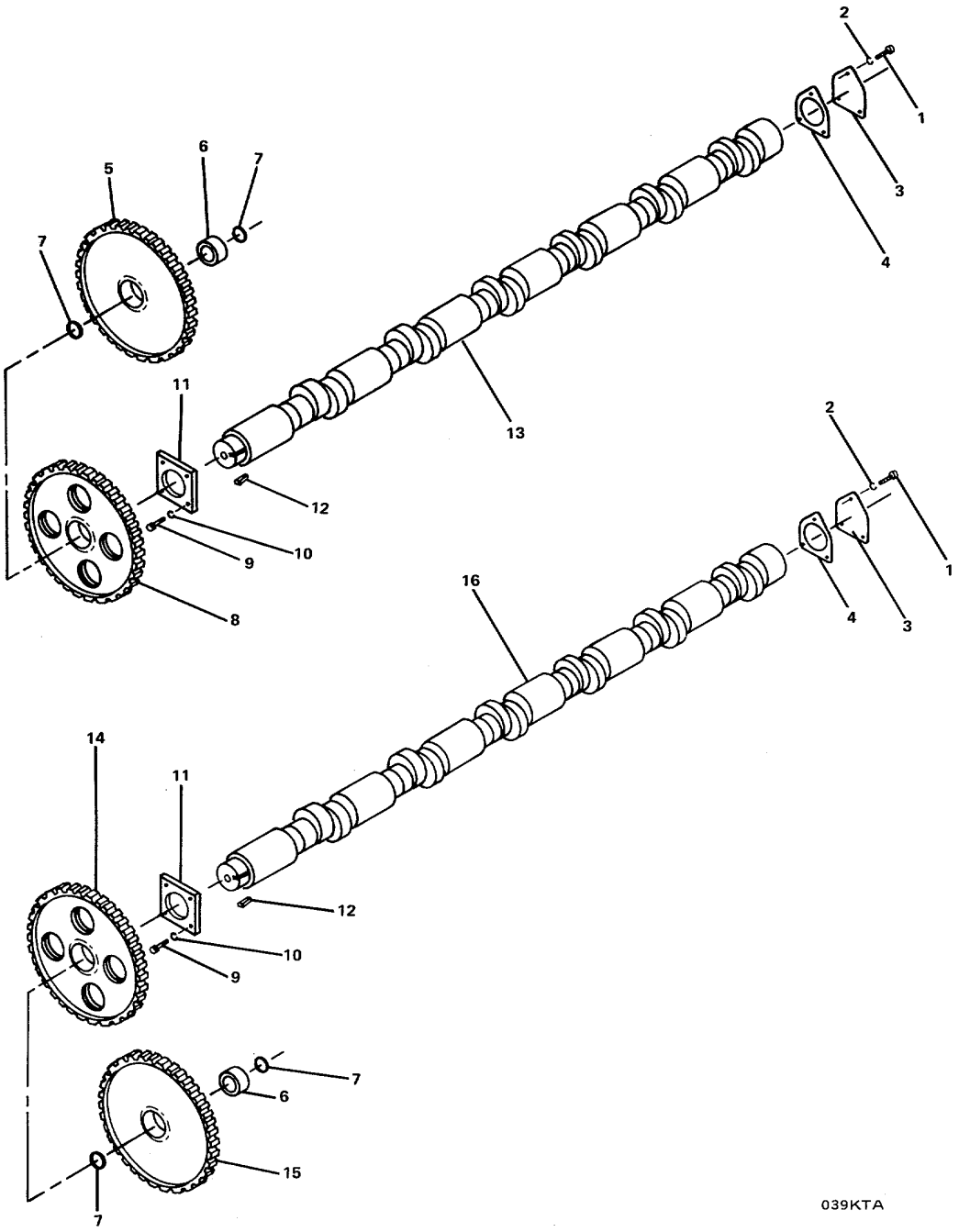

FIGURE 30. Camshaft and Gear Group

(1) ITEM NO	(2) SMR CODE	(3) FSCM	(4) PART NUMBER	(5) DESCRIPTION AND USABLE ON CODES(UOC)	(6) QTY
				GROUP 01 MAIN PROPULSION ENGINE	
				FIG. 30 CAMSHAFT AND GEAR GROUP	
	XCFHH	15434	01.07-01	.....CAMSHAFT AND GEAR G	1
1	XDFZZ	15434	3014766	.....SCREW, CAP, HEXAGON H	6
2	XDFZZ	96906	MS27183-14	.....WASHER, FLAT	6
3	XDFZZ	15434	207373	.....COVER, ACCESS	2
4	PBFZZ	15434	3040722	.....GASKET (CAM SHAFT COVER) PART OF... KIT P/N 3801717.....	2
5	PBHZZ	15434	3004681	.....GEAR, SPUR	1
6	XDHZZ	15434	3004686	.....BUSHING, SLEEVE.....	2
7	XDHZZ	15434	130083	.....BEARING, WASHER, THRU	
8	PAHZZ	15434	3008971	.....GEAR, HELICAL	1
9	XDHZZ	15434	S-112	.....SCREW, CAP, HEXAGON H.....	4
10	XDHZZ	15434	68908	.....LOCK PLATE, LUBRICAT	4
11	XDHZZ	15434	3007971	.....PLATE, RETAINING, SHA PART OF KIT ..... P/N 3801717.....	2
12	XDHZZ	15434	S-302	.....KEY, WOODRUFF	2
13	PBHZZ	15434	3006299	.....CAMSHAFT, ENGINE	1
14	PBHZZ	15434	3004683	.....GEAR, HELICAL.....	1
15	PAHZZ	15434	3008970	.....GEAR, SPUR	1
16	PBHZZ	15434	3006298	.....CAMSHAFT, ENGINE	1

END OF FIGURE

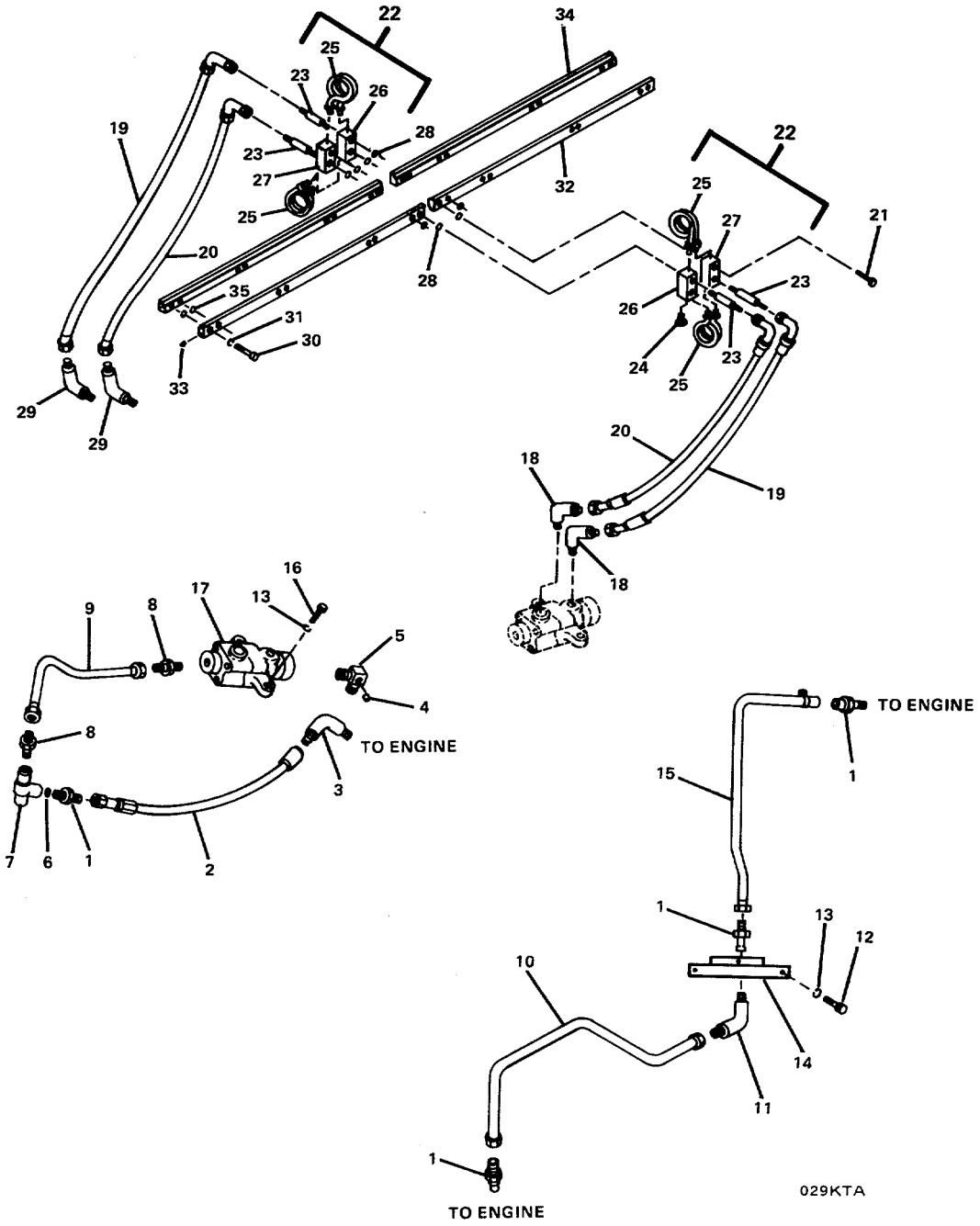

FIGURE 31. Connecting Rod and Piston Group

(1) ITEM NO	(2) SMR CODE	(3) FSCM	(4) PART NUMBER	(5) DESCRIPTION AND USABLE ON CODES(UOC)	(6) QTY
				GROUP 01 MAIN PROPULSION ENGINE	
				FIG. 31 CONNECTING ROD AND PISTON GROUP	
	XCFHH	15434	01.04-01	.CONNECTING ROD AND ...	1
1	PBFHZ	15434	3043910	..ROD, CONNECTING ...	16
2	XDFZZ	15434	3013266	...BOLT, MACHINE ...	32
3	XDFZZ	15434	205126	...WASHER, FLAT ...	32
4	XDHZZ	15434	69558	...PIN, STRAIGHT, HEADLE ...	64
5	XDHZZ	15434	3047390	...BEARING, CONNECTING.... ...	32
6	XDHZZ	15434	3043909	...BUSHING, PISTON PIN ...	16
7	XAHZZ	15434	3000573	...ROD, CONNECTING ...	16
8	PAHZZ	15434	3046227	...RING, PISTON ...	16
9	XDHZZ	15434	3026595	...RING, COMPRESSION ...	16
10	XDHZZ	15434	3025451	...RING, OIL CONTROL ...	16
11	PAFHZ	15434	3801436	..PISTON, INTERNAL COM	16
12	XDHZZ	15434	205269	...RING, RETAINING ...	16
13	XDHZZ	15434	205200	...PIN, PISTON ...	16
14	XDHZZ	15434	3036074	...PISTON, INTERNAL COM	16

END OF FIGURE

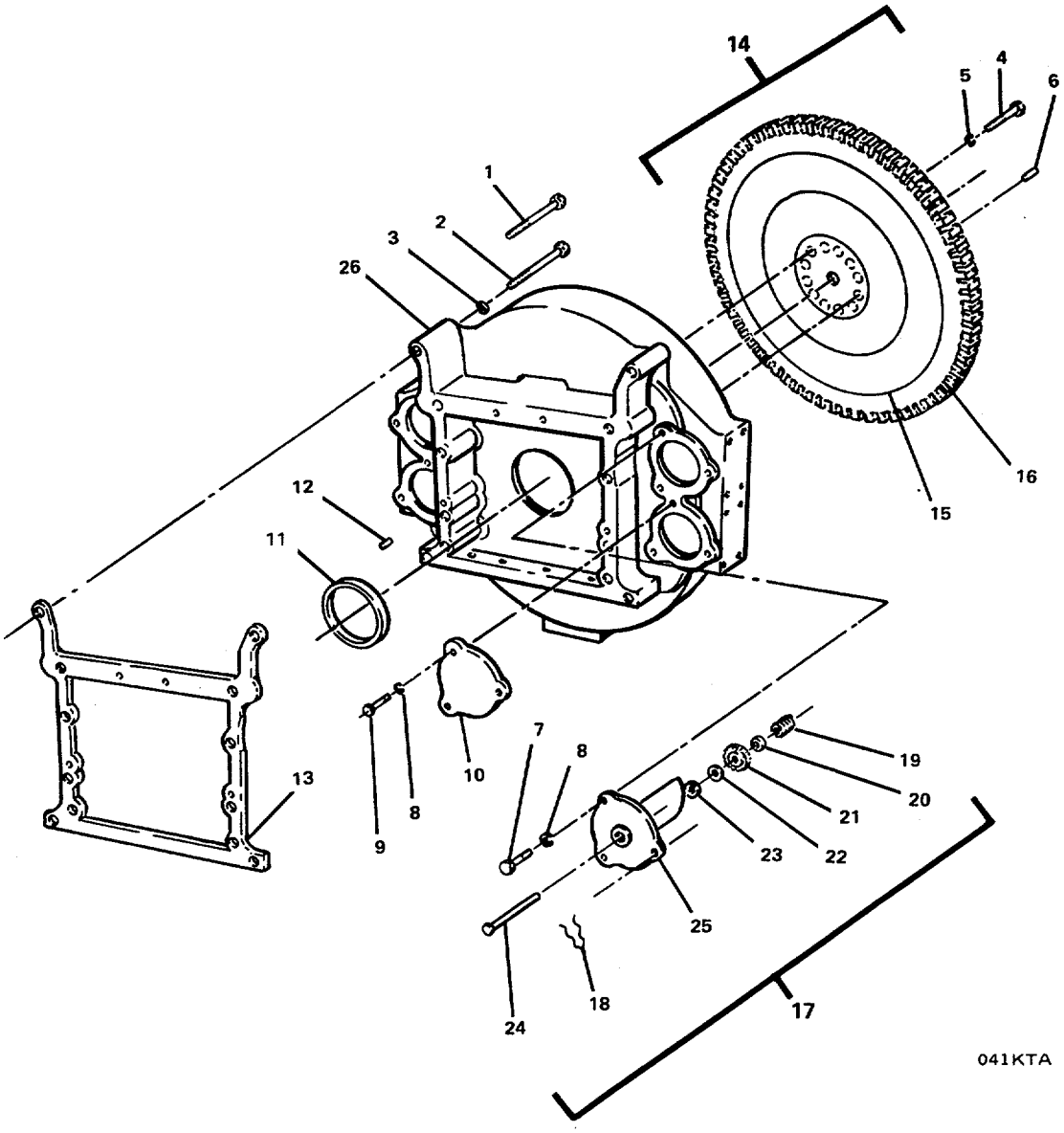

Figure 32. Flywheel Housing Group.

(1) ITEM NO	(2) SMR CODE	(3) FSCM	(4) PART NUMBER	(5) DESCRIPTION AND USABLE ON CODES(UOC)	(6) QTY
				GROUP 01 MAIN PROPULSION ENGINE	
				FIG. 32 FLYWHEEL HOUSING GROUP	
	XCFHH	15434	16.01-01	.FLYWHEEL HOUSING GR	1
1	XDFZZ	15434	205565	..SCREW	2
2	XDFZZ	15434	S-150-A	..SCREW	10
3	XDFZZ	15434	S-611	..WASHER, LOCK	12
4	XDFZZ	15434	3023536	..SCREW	2
5	XDFZZ	15434	205059	..WASHER	12
6	XDFZZ	15434	131584	..PIN, SPRING	1
7	XDFZZ	15434	S-116	..SCREW, CAP, HEXAGON H	3
8	XDFZZ	96906	MS35338-50	..WASHER, LOCK	9
9	XDFZZ	15434	S-181	..SCREW, CAP, HEXAGON H	6
10	XDFZZ	15434	62182	..COVER, STARTER FLANG	2
11	PAFZZ	15434	3016790	..SEAL, PLAIN	1
12	XDFZZ	15434	70662	..PIN, STRAIGHT, HEADLE	2
13	PAFZZ	15434	207551	..SEAL, DUST PART OF KIT P/N 3801717	1
14	PBFHH	15434	3017655	..FLYWHEEL, ENGINE	1
15	XAHZZ	15434	3013649	...FLYWHEEL	1
16	PAHZZ	15434	124507	...GEAR RING	1
17	XDFHH	15434	3201740	..BARRING MECHANISM A	1
18	XDFZZ	15434	169834	...CLIP, RETAINING	1
19	XDFZZ	15434	206092	...SPRING HELICAL	1
20	XDFZZ	15434	S-306	...KEY, WOODRUFF	1
21	XDHZZ	15434	206091	...GEAR	1
22	XDHZZ	15434	206090	...RING, RETAINING	1
23	PAHZZ	15434	102827	... GASKET PART OF KIT P/N 3801717	1
24	XDHZZ	15434	3201739	...SHAFT, STRAIGHT	1
25	XDHZZ	15434	206093	...HOUSING	1
26	XDHZZ	15434	3176637	..HOUSING, FLYWHEEL.	1

END OF FIGURE

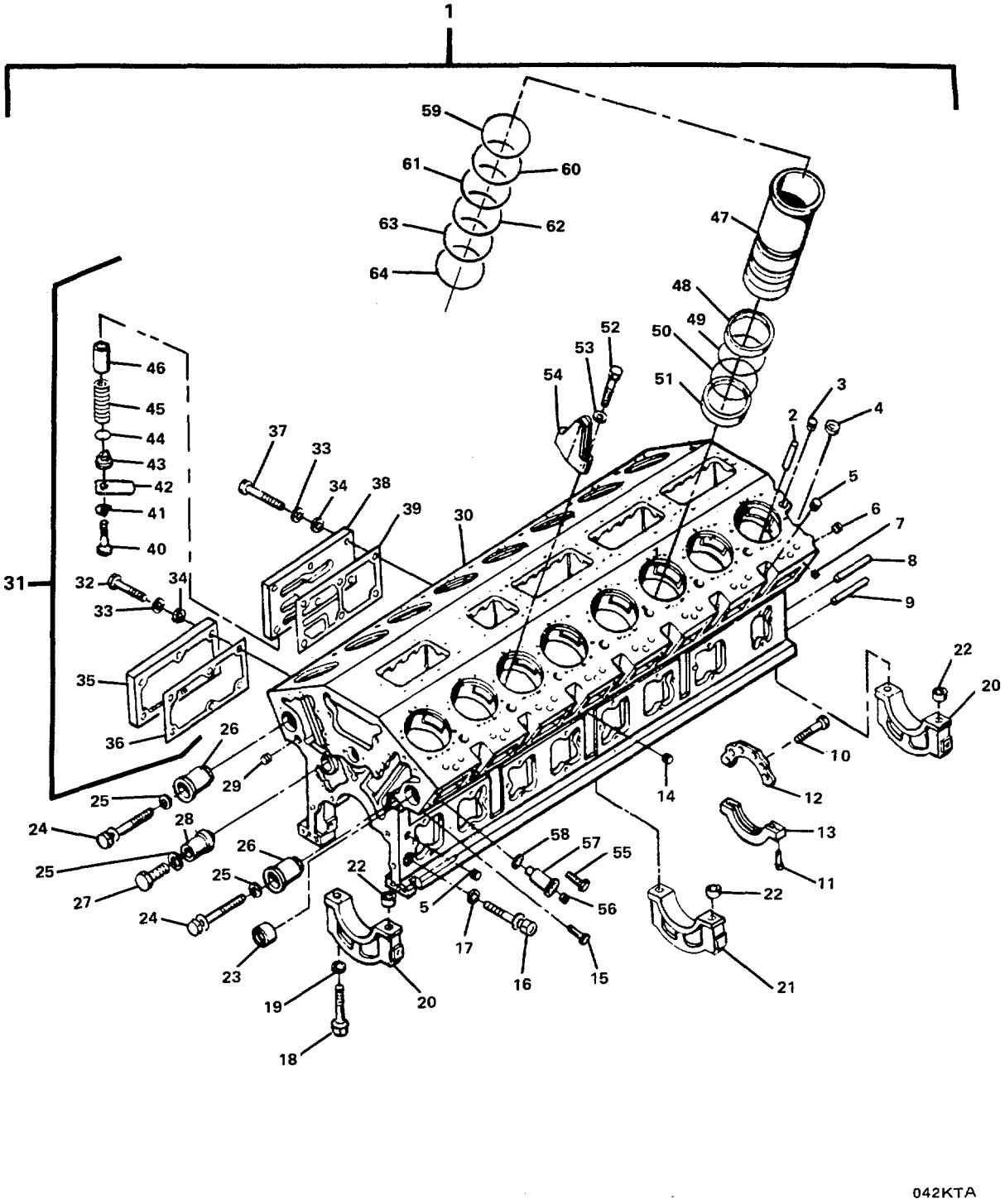

Figure 33. Cylinder Block Assembly.

(1) ITEM NO	(2) SMR CODE	(3) FSCM	(4) PART NUMBER	(5) DESCRIPTION AND USABLE ON CODES(UOC)	(6) QTY
				GROUP 01 MAIN PROPULSION ENGINE	
				FIG. 33 CYLINDER BLOCK ASSEMBLY	
1	XDHHH	15434	3040190	BLOCK ASSEMBLY, CYLI	1
2	XDHZZ	15434	68445	..PIN, GROOVED, HEADLES	32
3	XDHZZ	15434	206742	..SHIELD, EXPANSION	16
4	XDHZZ	15434	206224	..PLUG, EXPANSION	19
5	XDHZZ	15434	3008466	..PLUG, PIPE	22
6	XDHZZ	15434	3008468	..PLUG, PIPE	5
7	XDHZZ	15434	3002993	..BUSHING, SLEEVE	32
8	XDHZZ	15434	70662	..PIN, STRAIGHT, HEADLE	2
9	XDHZZ	15434	148582	..PIN, STRAIGHT, HEADLE	2
10	XDHZZ	96906	MS90728-91	..SCREW, CAP, HEXAGON H	6
11	XDHZZ	15434	205199	..BOLT, MACHINE	2
12	XDHZZ	15434	3000138	..PLATE, RETAINING, BEA	1
13	XDHZZ	15434	3175281	..PLATE, RETAINER	1
14	XDHZZ	15434	3008370	..PLUG, PIPE	4
15	XDHZZ	15434	176307	..COCK, DRAIN	4
16	XDHZZ	15434	205584	..BOLT, MACHINE	18
17	XDHZZ	15434	139990	..WASHER, LOCK	18
18	XDHZZ	15434	205573	..BOLT, MACHINE	18
19	XDHZZ	15434	3025485	.. WASHER	18
20	XAHZZ	15434	206588	..CAP, PILLOW BLOCK	2
21	XAHZZ	15434	206587	..CAP, PILLOW BLOCK	7
22	XDHZZ	15434	205149	..BUSHING, SLEEVE	9
23	XDHZZ	15434	205230	..BUSHING, SLEEVE	34
24	XDHZZ	15434	3177945	..BOLT, MACHINE	2
25	XDHZZ	15434	3176916	..WASHER, FLAT	3
26	XDHZZ	15434	3033853	..SHAFT, IDLER CAMSHAF	2
27	XDHZZ	15434	180261	..SCREW	1
28	XDHZZ	15434	3176835	..SHAFT, IDLER	1
29	XDHZZ	15434	175830	..PLUG, EXPANSION	4
30	XAHZZ	15434	3040184	..BLOCK, CYLINDER	1
31	PBHHZ	15434	AR-11509	..VALVE, REGULATING, FL	1
32	XDHZZ	15434	199919	... BOLT, MACHINE	6
33	XDHZZ	96906	MS35338-8	...WASHER, LOCK	12
34	XDHZZ	15434	127362	... WASHER, FLAT	12
35	XDHZZ	15434	3026316	... COVER, OIL JUMPER	1
36	PAHZZ	15434	3011651	... GASKET (LUBE OIL JUMPER) PART OF KIT P/N 3801717	1
37	XDHZZ	15434	191772	... BOLT, MACHINE	6
38	XDHZZ	15434	3033922	... BODY, VALVE	1
39	PAHZZ	15434	3177108	...GASKET (FILTER HEAD)	1
40	XDHZZ	15434	S-110	... SCREW, CAP, HEXAGON H	1
41	XDHZZ	96906	MS35338-7	... WASHER, LOCK	1
42	XDHZZ	15434	3036018	... WASHER, SHOULDERED	1
43	XDHZZ	15434	205350	...STEM, FLUID VALVE	1
44	PAHZZ	15434	3201125	...PACKING, PREFORMED	1
45	PBHZZ	15434	205349	... SPRING, HELICAL, COMP	1
46	XDHZZ	15434	205348	... PISTON, VALVE	1
47	XDHZZ	15434	3022157	..LINER, CYLINDER	16

(1) ITEM NO	(2) SMR CODE	(3) FSCM	(4) PART NUMBER	(5) DESCRIPTION AND USABLE ON CODES(UOC)	(6) QTY
48	PAHZZ	15434	205115	..SEAL, PLAIN	16
49	PAHZZ	15434	3014668	..PACKING, PREFORMED	16
50	PAHZZ	15434	3011076	..PACKING, PREFORMED	16
51	XDHZZ	15434	3011884	..RING, SPECIAL	16
52	XDHZZ	15434	206028	..SCREW CAP	4
53	XDHZZ	15434	205059	..WASHER	4
54	XDHZZ	15434	205684	..BRACKET, ENGINE ACCE	4
55	XDHZZ	15434	152364	..SCREW, SELF-LOCKING	16
56	XDHZZ	15434	3008465	..PLUG, PIPE	16
57	XDHZZ	15434	3044464	..NOZZLE, FUEL INJECTI	16
58	XDHZZ	15434	3007441	..PACKING, PREFORMED PART OF KIT P/N 3801717	16
59	XDHZZ	15434	205741	..SHIM (.007)	1
60	XDHZZ	15434	205742	..SHIM (.008)	1
61	XDHZZ	15434	205743	..SHIM (.009)	1
62	XDHZZ	15434	205744	..SHIM (.020)	1
63	XDHZZ	15434	205745	..SHIM (.031)	1
64	XDHZZ	15434	205746	..SHIM (.062)	1
	PAHZZ	15434	3007525	..CYLINDER SLEEVE/HEA (NEEDED FOR COMPLETE REPAIR OF BLOCK ASSY CYLINDER)	1
	PAHZZ	15434	3801717	.GASKET SET (NEEDED FOR COMPLETE REPAIR OF MAIN ENGINE)	1
				GASKET (1) 10-7	
				GASKET (1) 10-16	
				GASKET (1) 10-18	
				GASKET (1) 10-35	
				GASKET (1) 11-4	
				GASKET (1) 11-5	
				GASKET (1) 11-17	
				GASKET (1) 15-15	
				GASKET (4) 18-32	
				GASKET (4) 19-5	
				GASKET (1) 19-7	
				GASKET (8) 23-12	
				GASKET (16) 24-6	
				GASKET (1) 27-15	
				GASKET (1) 27-26	
				GASKET (4) 28-20	
				GASKET (1) 28-30	
				GASKET (1) 29-41	
				GASKET (2) 30-4	
				GASKET (1) 32-23	
				GASKET (1) 33-36	
				LOCKING PLATE, NUT A (11) 29-2	
				PACKING ASSEMBLY (1) 29-10	
				PACKING, PREFORMED (4)4-4	
				PACKING, PREFORMED (2)4-10	
				PACKING, PREFORMED (1) 10-15	
				PACKING, PREFORMED (1) 10-19	
				PACKING, PREFORMED (1) 11-24	
				PACKING, PREFORMED (2) 12-7	

(1) ITEM NO	(2) SMR CODE	(3) FSCM	(4) PART NUMBER	(5) DESCRIPTION AND USABLE ON CODES(UOC)	(6) QTY
				PACKING, PREFORMED (8) 19-8	
				PACKING, PREFORMED (16) 19-10	
				PACKING, PREFORMED (1) 23-16	
				PACKING, PREFORMED (1) 27-49	
				PACKING, PREFORMED (16) 33-58	
				PLATE, RETAINING, SHA (2) 30-11	
				SEAL, DUST (1) 32-13	
				SEAL, PLAIN ENCASED (1) 11-11	
				SEAL, PLAIN (2) 27-33	
				SPACER, RING (5) 28-17	

END OF FIGURE

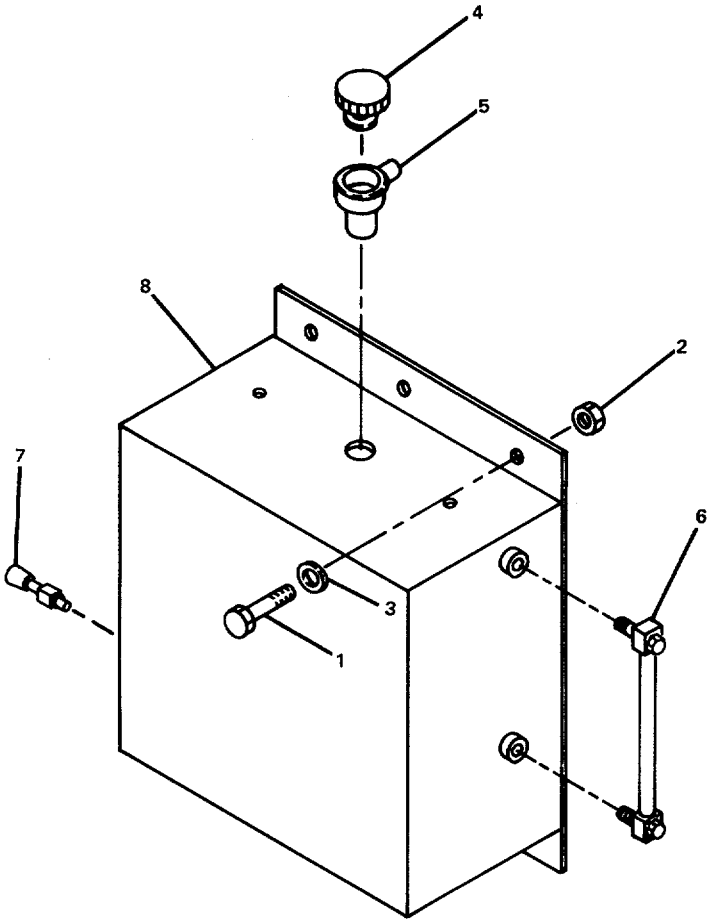

043KTA

Figure 34. Fresh Water Expansion Tank Group.

(1) ITEM NO	(2) SMR CODE	(3) FSCM	(4) PART NUMBER	(5) DESCRIPTION AND USABLE ON CODES(UOC)	(6) QTY
				GROUP 01 MAIN PROPULSION ENGINE	
				FIG. 34 FRESH WATER EXPANSION TANK GROUP	
	XCOOO	15434	08.12-01	.EXPANSION TANK GROU	1
1	XDOZZ	15434	S-111	BOLT, MACHINE	6
2	XDOZZ	15434	S-221	..NUT, PLAIN, HEXAGON.....	6
3	XDOZZ	15434	S-609	..WASHER, LOCK	6
4	XDOZZ	15434	119665	..CAP, FILLER OPENING	1
5	XDOZZ	15434	67279	..CONNECTION, FILLER 0	1
6	PBOZZ	15434	3057445	..GAGE ROD, LIQUID LEV	1
7	PBOZZ	15434	3057444	..SWITCH, PRESSURE	1
8	XDOZZ	15434	3057442	..TANK, LIQUID STORAGE (EXPANSION).....	1
	PAFZZ	15434	BM-68356	..GASKET SET (NEEDED FOR COMPLETE REPAIR OF MAIN ENGINE)	1
	PAFZZ	15434	3010242	..GASKET SET (NEEDED FOR COMPLETE REPAIR OF MAIN ENGINE)	1
	PAHZZ	15434	3018210	..BEARING SET, SLEEVE (NEEDED FOR COMPLETE REPAIR OF MAIN ENGINE)	1
	PAFZZ	57301	52-021	..PARTS KIT, BEARING R (NEEDED FOR COMPLETE REPAIR OF MAIN ENGINE).....	1

END OF FIGURE

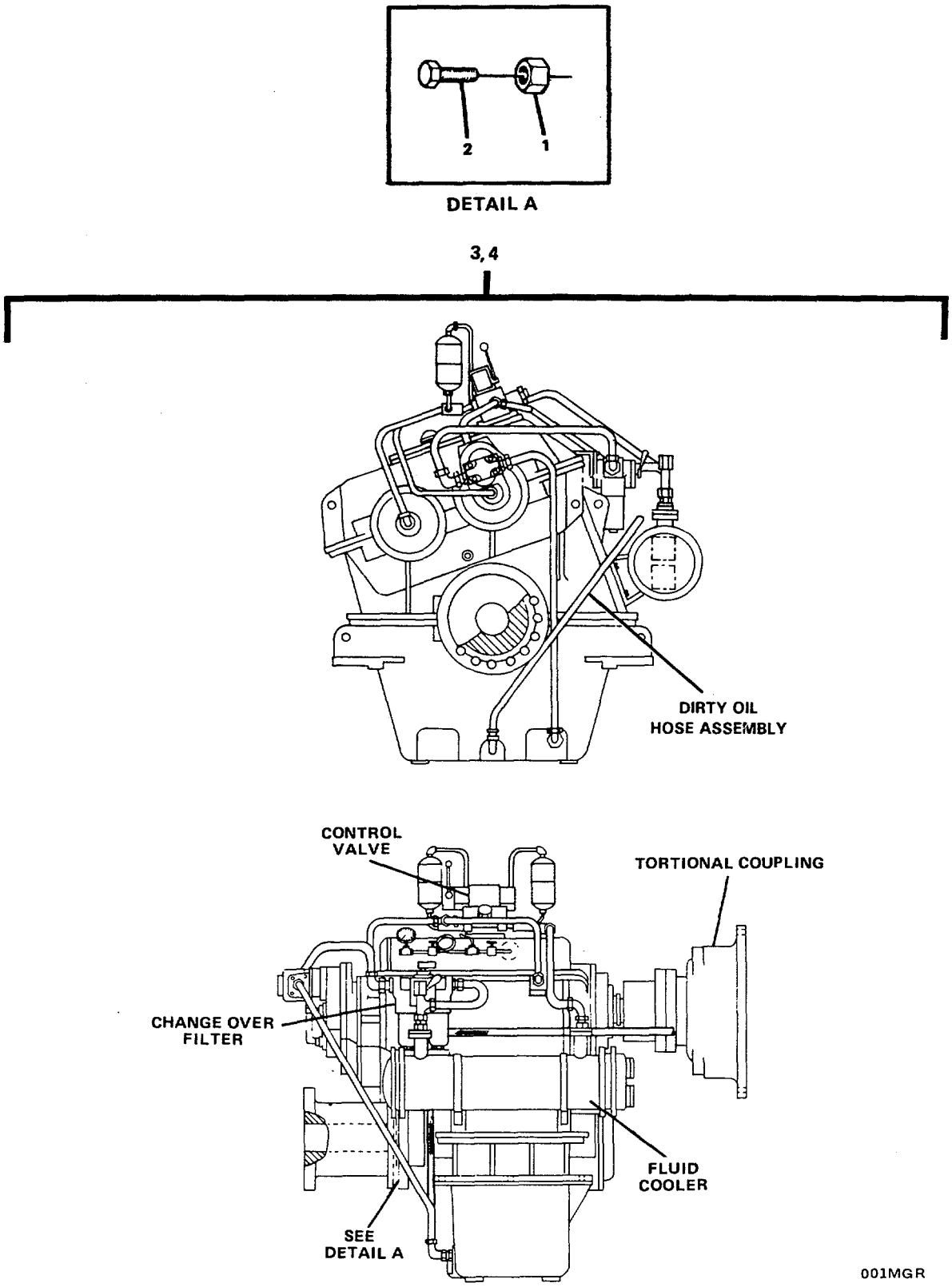

Figure 35. Main Reduction Gear.

(1) ITEM NO	(2) SMR CODE	(3) FSCM	(4) PART NUMBER	(5) DESCRIPTION AND USABLE ON CODES(UOC)	(6) QTY
				GROUP 02 MAIN REDUCTION GEAR	
				FIG. 35 MAIN REDUCTION GEAR	
1	XDFZZ	77408	40-2719-8068	NUT, SELF-LOCKING, HE.....	12
2	XDFZZ	77408	40-2951-2149	BOLT, MACHINE	12
3	PBFHH	68225	WAV850PT	TRANSMISSION, MECHAN PORT (WHEN ORDERING UNIT, P/N MUST BE PRECEDED BY COMMISSION NO.)	1
4	PBFHH	68225	WAV850SB	TRANSMISSION, MECHAN STBD (WHEN ORDERING UNIT, P/N MUST BE PRECEDED BY COMMISSION NO.)	1

END OF FIGURE

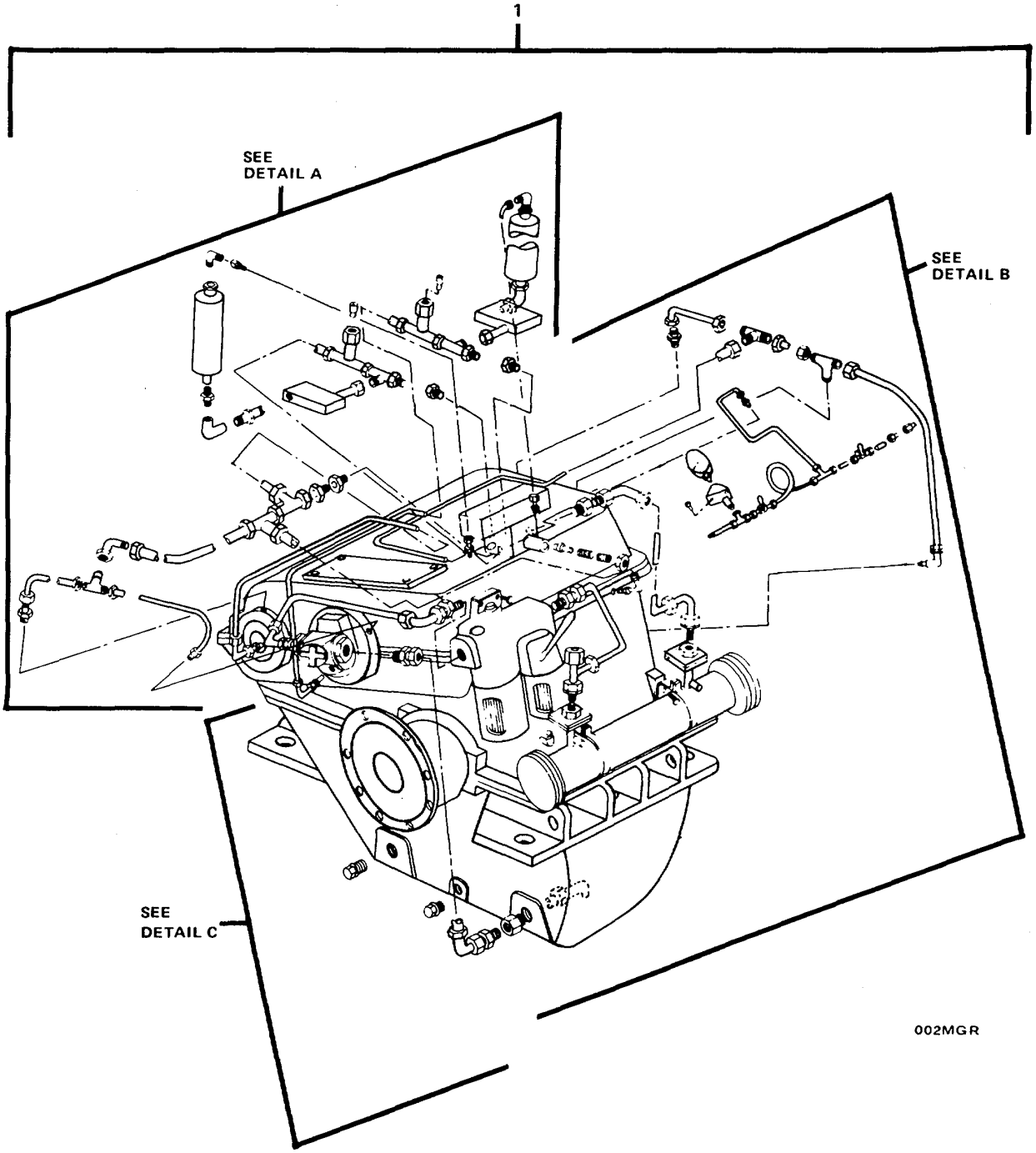

Figure 36. External Hardware Parts (Sheet 1 of 4).

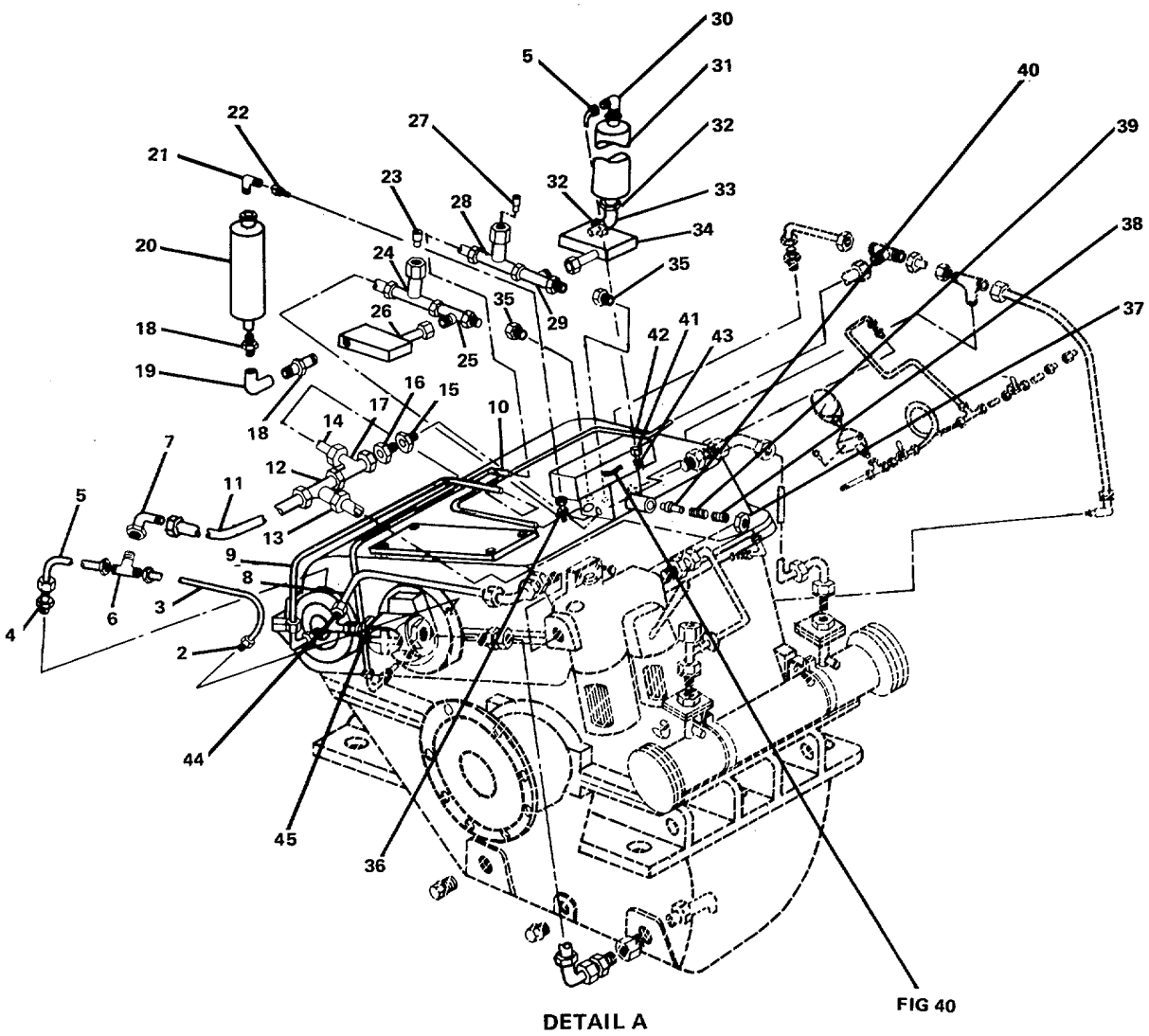

Figure 36. External Hardware Parts (Sheet 2 of 4).

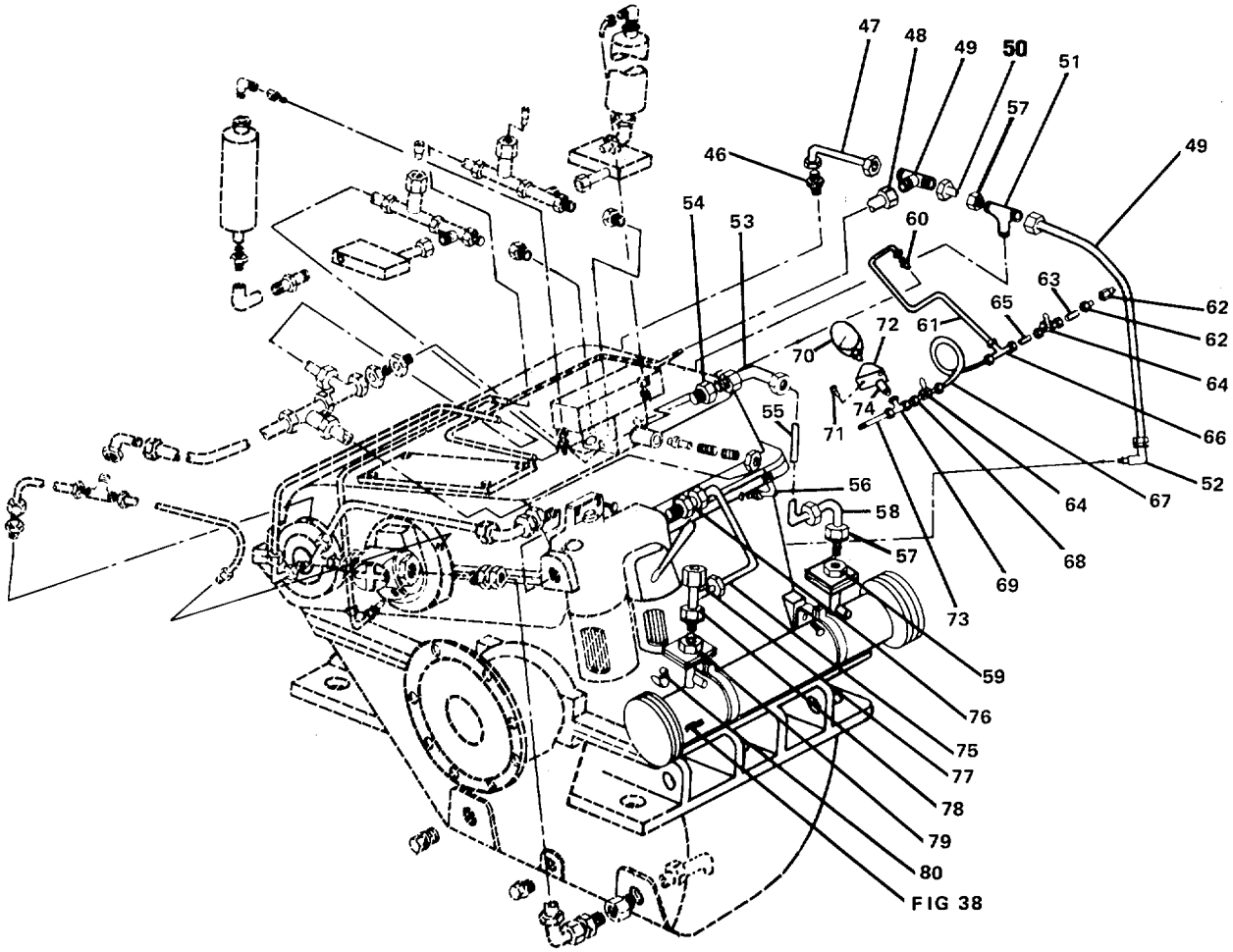

DETAIL B

004MGR

Figure 36. External Hardware Parts (Sheet 3 of 4).

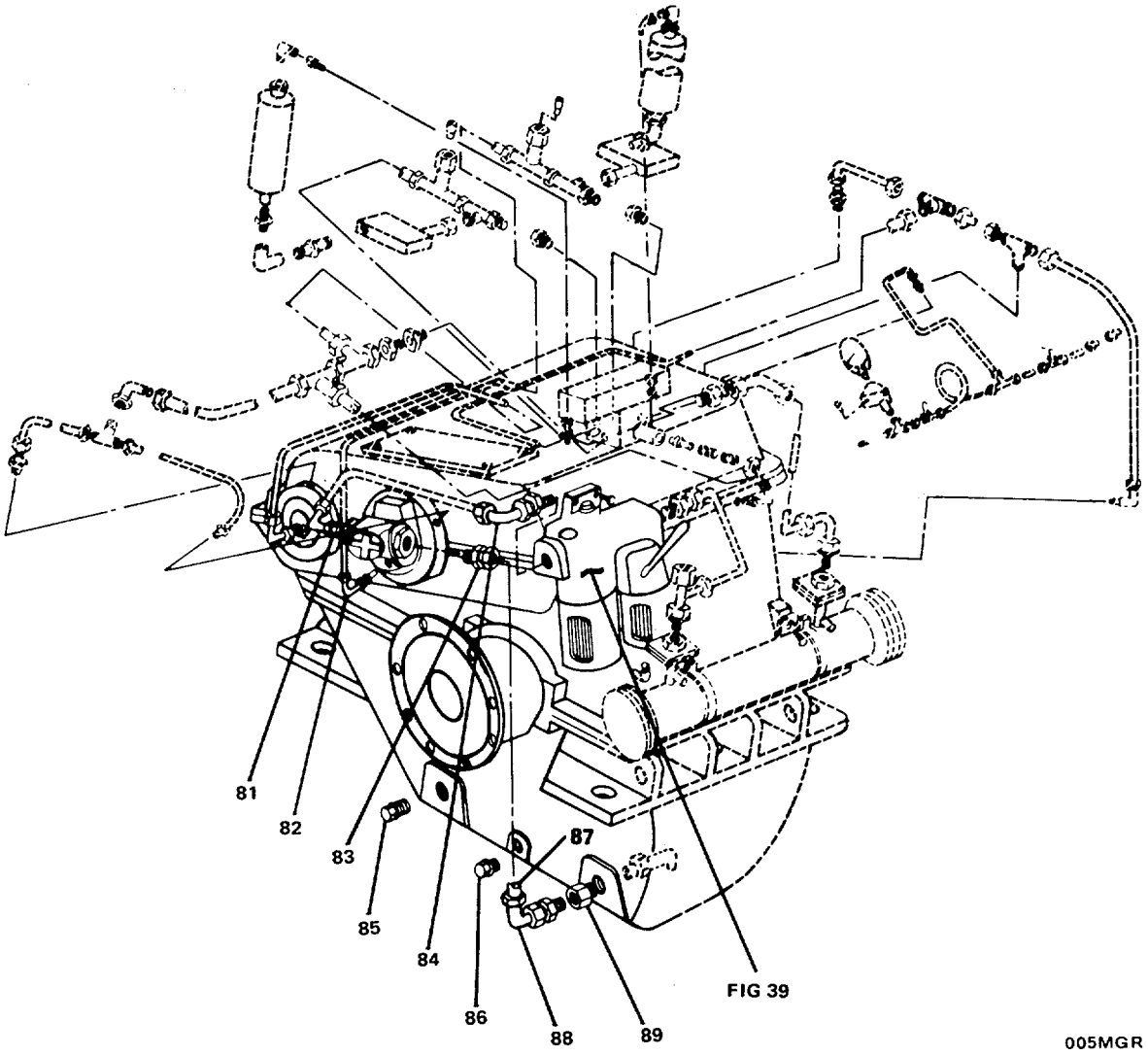

DETAIL C

Figure 36. External Hardware Parts (Sheet 4 of 4).

(1) ITEM NO	(2) SMR CODE	(3) FSCM	(4) PART NUMBER	(5) DESCRIPTION AND USABLE ON CODES(UOC)	(6) QTY
				GROUP 02 MAIN REDUCTION GEAR	
				FIG. 36 EXTERNAL HARDWARE PARTS	
1	XCOOO	D8835	FIGURE 36 24P1	.EXTERNAL HARDWARE	1
2	XDOZZ	D8835	WAV850-H39	..UNION, PIPE	1
3	XDOZZ	D8835	WAV850-H38	..PIPE, METALLIC	1
4	XDOZZ	D8835	WAV850-H41	..UNION, PIPE	1
5	XDOZZ	D8835	WAV850-H140	..PIPE, METALLIC	2
6	XDOZZ	D8835	WAV850-H24	..UNION, PIPE	1
7	XDOZZ	D8835	WAV850-H24A	..UNION, PIPE	1
8	XDOZZ	D8835	WAV850-H6	..PIPE, METALLIC	1
9	XDOZZ	D8835	WAV850-H20	..PIPE, METALLIC	1
10	XDOZZ	D8835	WAV850-H16	..PIPE, METALLIC	1
11	XDOZZ	D8835	WAV850-H23	..PIPE, METALLIC	1
12	XDOZZ	D8835	WAV850-H26	..UNION, PIPE	1
13	XDOZZ	D8835	WAV850-H25	..PIPE, METALLIC	1
14	XDOZZ	D8835	WAV850-H128	..PIPE, METALLIC	1
15	XDOZZ	D8835	WAV850-H22A	..REDUCER, PIPE	1
16	XDOZZ	D8835	WAV850-H22B	..UNION, PIPE	1
17	XDOZZ	D8835	WAV850-H312	..UNION, PIPE	1
18	XDOZZ	D8835	WAV850-H101A	..NIPPLE, DOUBLE, PIPE	2
19	XDOZZ	D8835	WAV850-H101B	..ELBOW, PIPE	1
20	XDCZZ	D8835	WAV850-H19	..TANK, OPERATION DELA	1
21	XDOZZ	D8835	WAV850-H142	..UNION, PIPE	1
22	XDOZZ	D8835	WAV850-H143	..PIPE, METALLIC	1
23	XDOZZ	D8835	WAV850-H18C	..REDUCER, PIPE	1
24	XDOZZ	D8835	WAV850-H18B	..UNION, PIPE	1
25	XDOZZ	D8835	WAV850-H18	..UNION, PIPE	1
26	PBCZZ	68225	125364	..VALVE, PRELOADED	2
27	XDOZZ	D8835	WAV850-H14C	..REDUCER, PIPE	1
28	XDOZZ	D8835	WAV850-H14B	..UNION, PIPE	1
29	XDOZZ	D8835	WAV850-H14	..UNION, PIPE	1
30	XDOZZ	D8835	WAV850-H139	..UNION, PIPE	1
31	XDCZZ	D8835	WAV850-H15	..TANK, OPERATION DELA	1
32	XDOZZ	D8835	WAV850-H100A	..NIPPLE, DOUBLE, PIPE	2
33	XDOZZ	D8835	WAV850-H100B	..ELBOW, PIPE	1
34	XDOZZ	D8835	WAV850-H18A	..REDUCER, PIPE	1
35	XDOZZ	D8835	WAV850-H14A	..REDUCER, PIPE	1
36	XDOZZ	D8835	WAV850-H144	..UNION, PIPE	1
37	XDOZZ	D8835	WAV850-V12	..NUT, PLAIN, HEXAGON	1
38	XDOZZ	D8835	WAV850-V13	..SETSCREW	1
39	XDOZZ	D8835	WAV850-V21	..SPRING, HELICAL, COMP	1
40	XDOZZ	D8835	WAV850-V20	..SLIDE, VALVE	1
41	XDOZZ	D8835	WAV850-H141	..UNION, PIPE	1
42	XDOZZ	D8835	WAV850-V34	..PLATE, INTERMEDIATE	1
43	XDOZZ	D8835	WAV850-H33	..UNION, PIPE	1
44	XDOZZ	D8835	WAV850-H32	..PIPE, METALLIC	1
45	XDOZZ	D8835	WAV850-H28	..PIPE, METALLIC	1
46	XDOZZ	D8835	WAV850-H29	..UNION, PIPE	1
47	XDOZZ	D8835	WAV850-H30	..PIPE, METALLIC	1
48	XDOZZ	D8835	WAV850-H31A	..UNION, PIPE	1

(1) ITEM NO	(2) SMR CODE	(3) FSCM	(4)(5) PART NUMBER	(6) DESCRIPTION AND USABLE ON CODES(UOC)	QTY
49	XDOZZ	D8835	WAV850-H34	..PIPE, METALLIC	1
50	XDOZZ	D8835	WAV850-H35	..UNION, PIPE	1
51	XDOZZ	D8835	WAV850-H13A	..REDUCER, PIPE	1
52	XDOZZ	D8835	WAV850-H13	..UNION, PIPE	1
53	XDOZZ	D8835	WAV850-H12	..PIPE, METALLIC	1
54	XDOZZ	D8835	WAV850-H25A	..UNION, PIPE	1
55	XDOZZ	D8835	WAV850-H11B	..UNION, PIPE	1
56	XDOZZ	D8835	WAV850-H11A	..REDUCER, PIPE	1
57	XDOZZ	D8835	WAV850-H42	..UNION, PIPE	1
58	XDOZZ	D8835	WAV850-H43	..PIPE, METALLIC	1
59	XDOZZ	D8835	WAV850-H161B	..REDUCER, PIPE	1
60	XDOZZ	D8835	WAV850-H161A	..UNION, PIPE	1
61	XDOZZ	D8835	WAV850-H160	..PIPE, METALLIC	1
62	PBCZZ	68225	158186	..VALVE	2
63	XDOZZ	D8835	WAV850-H75	..PIPE, METALLIC	1
64	XDOZZ	D8835	WAV850-H129	..UNION, PIPE	1
65	XDOZZ	D8835	WAV850-H164	..PIPE, METALLIC	1
66	XDOZZ	D8835	WAV850-H128	..PIPE, METALLIC	1
67	XDOZZ	D8835	WAV850-H44	..UNION, PIPE	1
68	XDOZZ	D8835	WAV850-H73	..PIPE, METALLIC	1
69	XDOZZ	D8835	WAV850-H46B	..SCREW, MACHINE	2
70	PACZZ	68225	121156	..GAGE, PRESSURE, DIAL	1
71	XDOZZ	D8835	WAV850-H46A	..PLATE, RETAINING	1
72	XDOZZ	D8835	WAV850-H45	..PIECE, INTERMEDIATE	1
73	XDOZZ	D8835	WAV850-H9	..PIPE, METALLIC	1
74	XDOZZ	D8835	WAV850-H8	..UNION, PIPE	1
75	XDOZZ	D8835	WAV850-H100	..CONNECTOR, TEMPERATU	1
76	XDOZZ	D8835	WAV850-H10A	..UNION, PIPE	1
77	XDOZZ	D8835	WAV850-H10B	..REDUCER, PIPE	1
78	XDOZZ	D8835	WAV850-E23	..GAGE ROD, LIQUID LEV	1
79	XDOZZ	D8835	WAV850-H21	..UNION, PIPE	1
80	XDOZZ	D8835	WAV850-H5B	..UNION, PIPE	1
81	XDOZZ	D8835	WAV850-H5A	..REDUCER, PIPE	1
82	XDOZZ	D8835	WAV850-H17	..UNION, PIPE	1
83	XDOZZ	D8835	WAV850-H4	..UNION, PIPE	1
84	XDOZZ	D8835	WAV850-H7	..UNION, PIPE	1
85	XDOZZ	D8835	WAV850-G43	..PLUG, PIPE	2
86	XDOZZ	D8835	WAV850-G3	..PLUG, OIL DRAIN	1
87	XDOZZ	D8835	WAV850-H3	..PIPE, METALLIC	1
88	XDOZZ	D8835	WAV850-H2B	..UNION, PIPE	1
89	XDOZZ	D8835	WAV850-H2A	..REDUCER, PIPE	1

END OF FIGURE

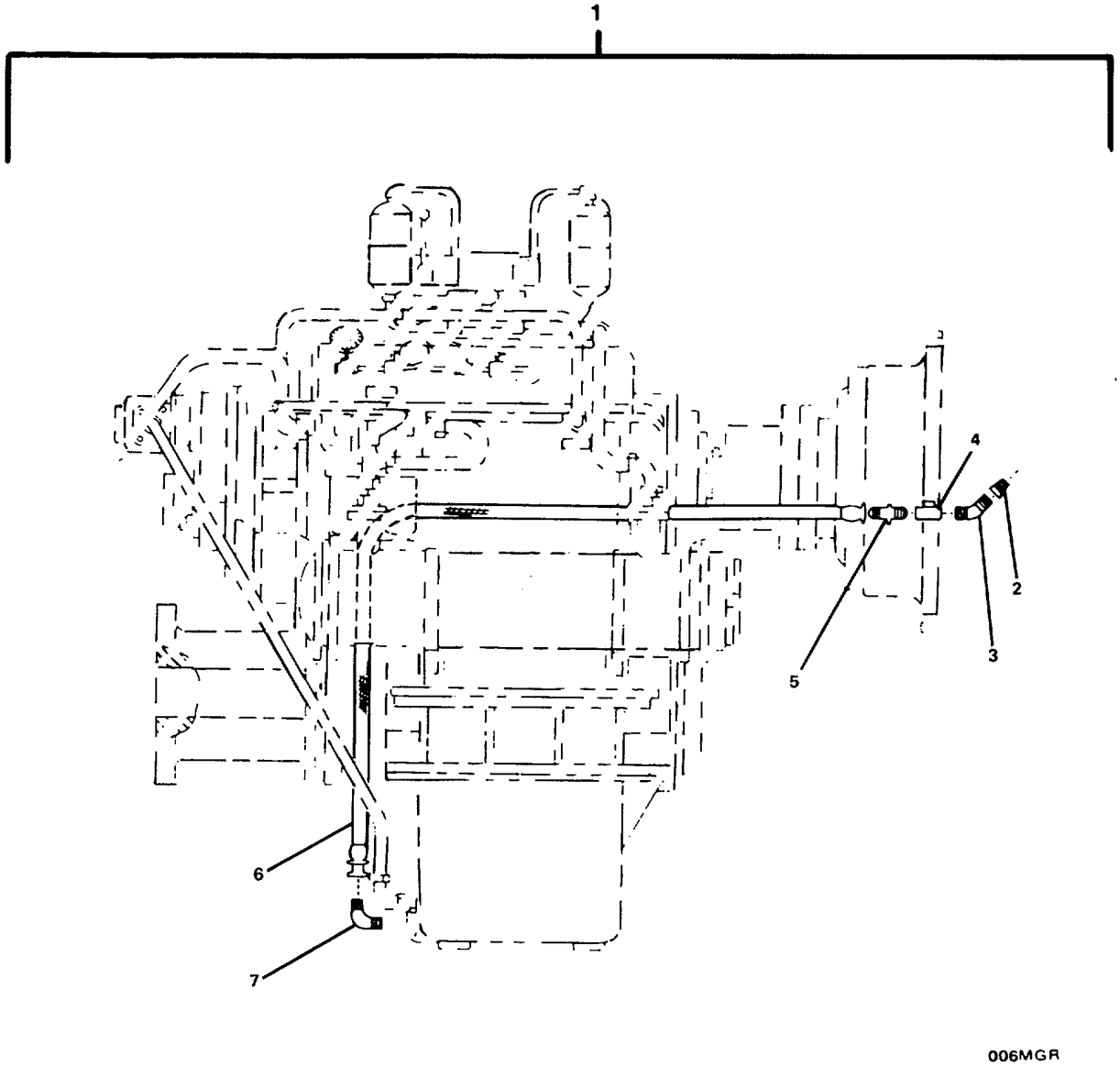

Figure 37. Nonmetallic Hose Assembly.

(1) ITEM NO	(2) SMR CODE	(3) FSCM	(4) PART NUMBER	(5) DESCRIPTION AND USABLE ON CODES(UOC)	(6) QTY
				GROUP 02 MAIN REDUCTION GEAR	
				FIG. 37 NONMETALLIC HOSE ASSEMBLY	
1	PACOZ	68225	D0H-1000	..HOSE ASSEMBLY, NONME	1
2	XDCZZ	68225	D0H2081	...REDUCER, PIPE	1
3	XDCZZ	68225	D0H2247	...ELBOW, PIPE	1
4	PACZZ	68225	D0H435	...VALVE, CHECK	1
5	XDCZZ	68225	D0H2021	...CONNECTOR, MALE	1
6	PACZZ	68225	D0H234-84	...HOSE ASSEMBLY, NONME	1
7	XDCZZ	68225	D0H2024	...ELBOW, PIPE	1

END OF FIGURE

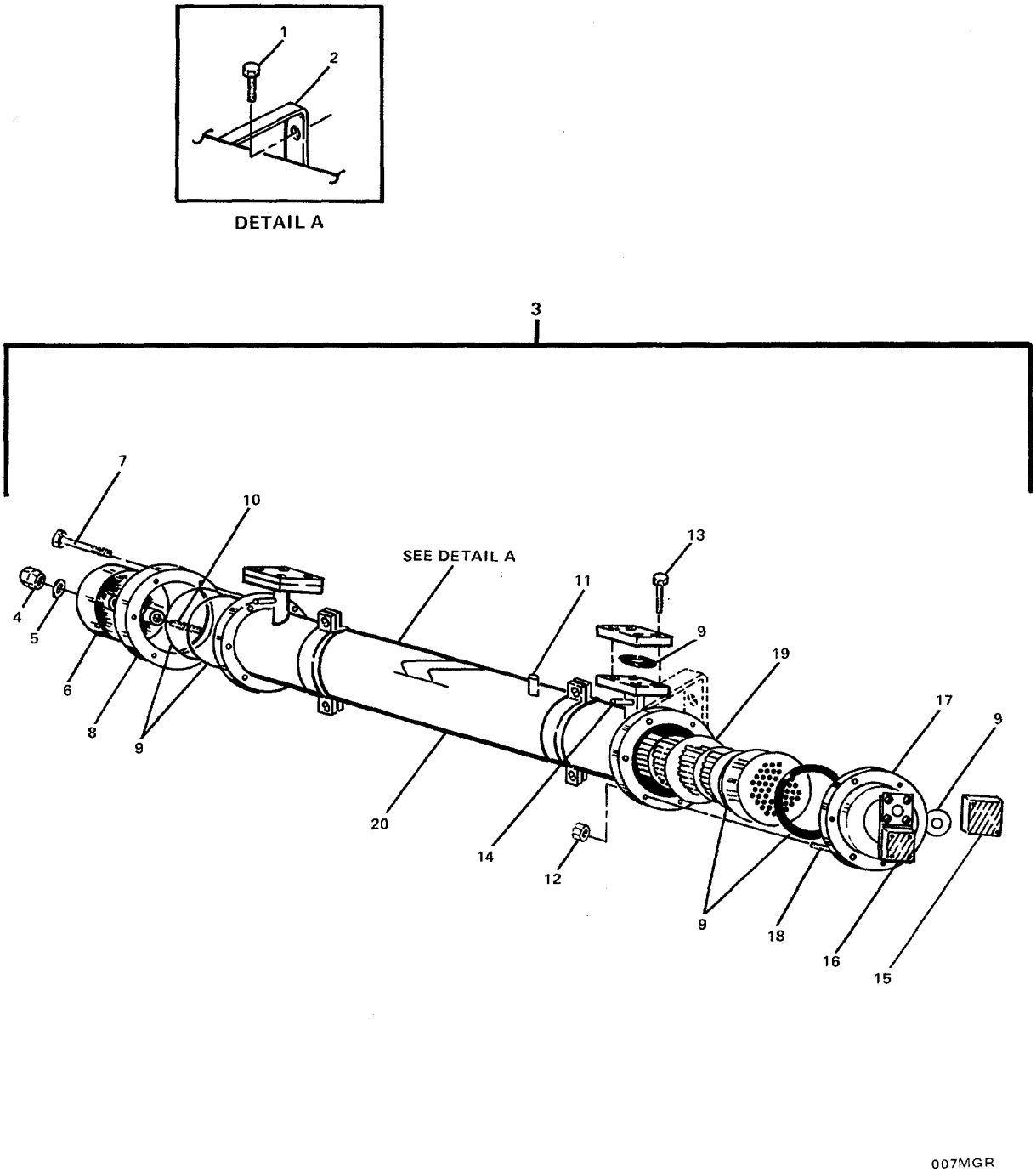

Figure 38. Fluid Transmission Cooler.

(1) ITEM NO	(2) SMR CODE	(3) FSCM	(4) PART NUMBER	(5) DESCRIPTION AND USABLE ON CODES(UOC)	(6) QTY
				GROUP 02 MAIN REDUCTION GEAR	
				FIG. 38 FLUID TRANSMISSION COOLER	
1	XDCZZ	D8835	WAV850-A2	.SCREW, CAP, HEXAGON H	4
2	XDCZZ	D8835	WAV850-A2A	.BRACKET WITH STRAP	2
3	PBCOZ	68225	45C101	.COOLER FLUID, TRANSM	1
4	XDOZZ	68225	45C123	..NUT, DOME	6
5	XDOZZ	68225	45C125	..WASHER, FLAT	6
6	XDOZZ	68225	45C106	..COVER, ACCESS	1
7	XDOZZ	68225	45C121	..BOLT, MACHINE WITH N	8
8	XDOZZ	68225	45C112	..RING, SUPPORT	1
9	PAOZZ	68225	45C109	..GASKET SET	1
10	XDOZZ	68225	45C119	..STUD, PLAIN	6
11	XDOZZ	68225	45C306	..PLUG, MACHINE THREAD	2
12	XDOZZ	68225	45C118	..NUT, PLAIN, HEXAGON	8
13	XDOZZ	68225	45C117	..BOLT, MACHINE	8
14	XDOZZ	68225	45C305	..PLUG, MACHINE THREAD	2
15	XDOZZ	68225	45C128	..COVER, ACCESS	4
16	XDOZZ	68225	45C115	..STUD WITH NUT	8
17	XDOZZ	68225	45C107	..COVER, ACCESS	1
18	XDOZZ	68225	45C116	..STUD, PLAIN	8
19	PBOZZ	68225	45C105	..CORE ASSEMBLY, FLUID	1
20	XDOZZ	68225	45C103	..CASING	1

END OF FIGURE

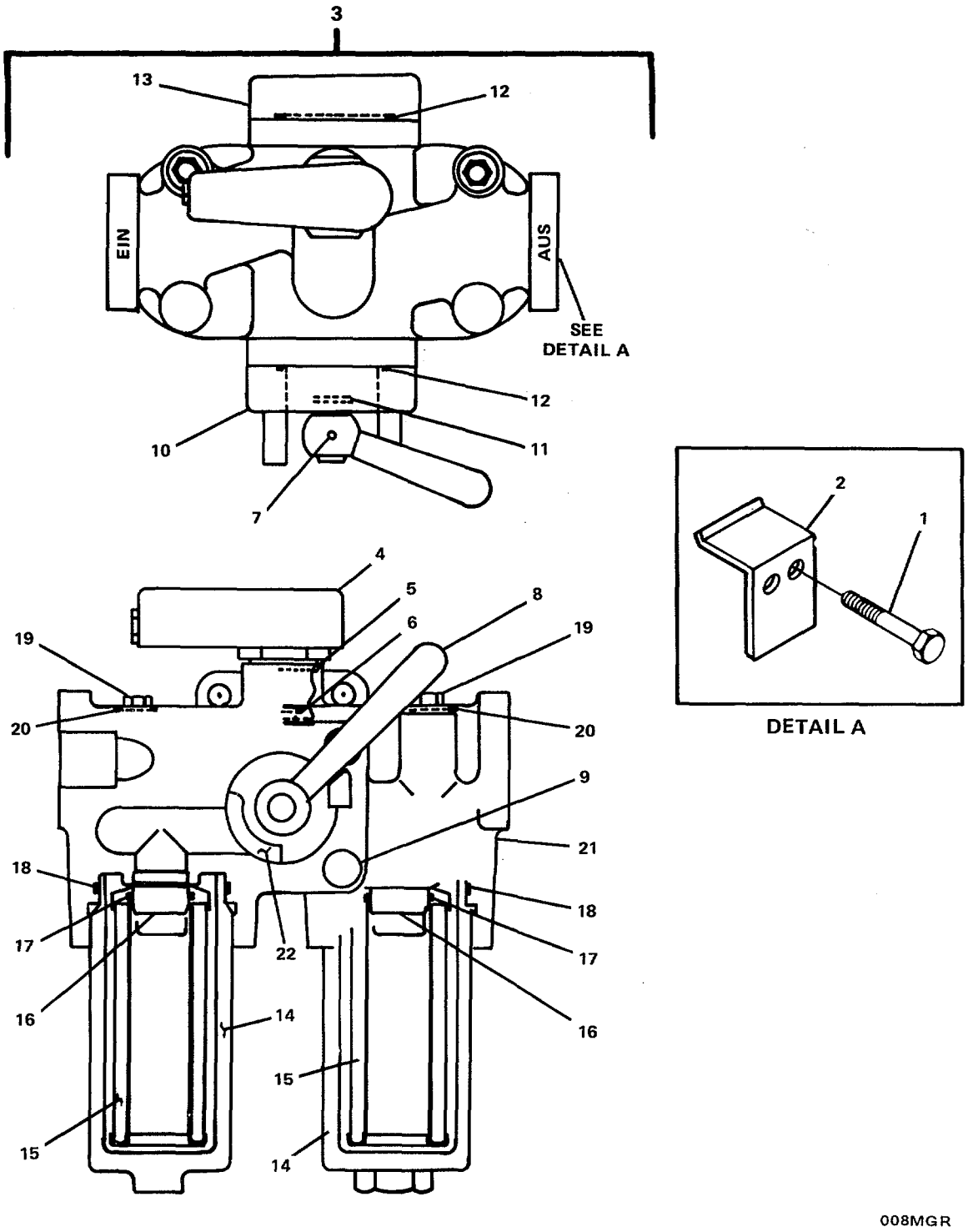

Figure 39. Double Changeover Filter.

(1) ITEM NO	(2) SMR CODE	(3) FSCM	(4) PART NUMBER	(5) DESCRIPTION AND USABLE ON CODES(UOC)	(6) QTY
				GROUP 02 MAIN REDUCTION GEAR	
				FIG. 39 DOUBLE CHANGEOVER FILTER	
1	XDCZZ	D8835	WAV850-A83	.SCREW, CAP, HEXAGON H	2
2	XDCZZ	D8835	WAV850-A80	.BRACKET, FILTER	1
3	PBCOZ	68225	3A4040	.FILTER ASSEMBLY, FLU	1
4	XDOZZ	D8835	WAV850-A82	..SWITCH, CONTAMINATIO	1
5	PAOZZ	68225	3A404019	..PACKING, PREFORMED	1
6	PAOZZ	68225	3A404020	..PACKING, PREFORMED PART OF KIT P/N 3A40404.....	1
7	XDOZZ	68225	3A40409	..PIN, STRAIGHT, HEADED	1
8	XDOZZ	68225	3A40408	..HANDLE, SWITCH	1
9	XDOZZ	68225	3A404012	..SCREW, CAP, SOCKET HE	4
10	XDOZZ	68225	3A40407	..COVER, ACCESS	1
11	PAOZZ	68225	3A404016	..PACKING, PREFORMED PART OF KIT P/N 3A40404.....	1
12	PAOZZ	68225	3A404015	..PACKING, PREFORMED PART OF KIT P/N 3A40404.....	2
13	XDOZZ	68225	3A40402	..CAP	1
14	XDOZZ	D8835	WAV850-A38	..FILTER BODY, FLUID	2
15	PACZZ	68225	37A126	..FILTER ELEMENT, FLUI	2
16	XDOZZ	68225	3A404010	..NIPPLE, PIPE	2
17	PAOZZ	68225	37A12601	..PACKING, PREFORMED PART OF KIT P/N 3A40404.....	2
18	PAOZZ	68225	3A404017	..PACKING, PREFORMED PART OF KIT P/N 3A40404	2
19	XDOZZ	68225	3A404011	..PLUG, MACHINE THREAD	2
20	XDOZZ	68225	3A404018	..RING, RETAINING COPPER	2
21	XDOZZ	68225	3A40401	..HEAD, FILTER	1
22	XDOZZ	D8835	WAV850-A36	..LEVER, CHANGEOVER.....	1
	PBCZZ	68225	3A40404	..PARTS KIT, SEAL REPL (NEEDED FOR COMPLETE REPAIR OF MAIN REDUCTION GEAR)	1
				PACKING, PREFORMED (1) 39-6	
				PACKING, PREFORMED (1) 39-11	
				PACKING, PREFORMED (2) 39-12	
				PACKING, PREFORMED (2) 39-17	
				PACKING, PREFORMED (2) 39-18	

END OF FIGURE

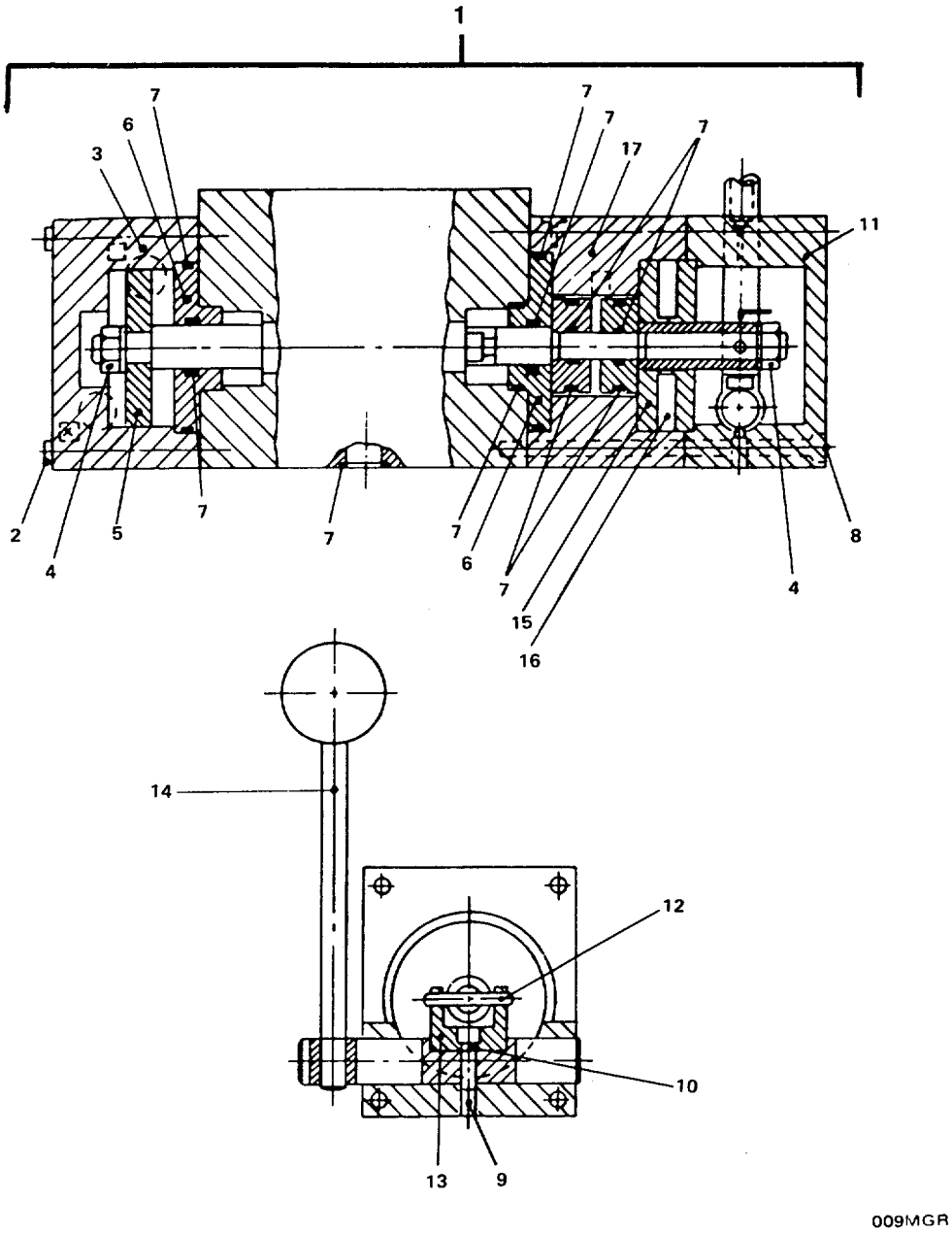

Figure 40. Control Valve.

(1) ITEM NO	(2) SMR CODE	(3) FSCM	(4) PART NUMBER	(5) DESCRIPTION AND USABLE ON CODES(UOC)	(6) QTY
				GROUP 02 MAIN REDUCTION GEAR	
				FIG. 40 CONTROL VALVE	
1	PBCFF	68225	1V5101	.VALVE, CONTROL	1
2	XDFZZ	68225	510-710-20	..SCREW, ASSEMBLED WAS	4
3	XDFZZ	68225	510-710-1	..CYLINDER, ACTUATING, ...	1
4	XDFZZ	68225	510-710-15	..NUT, SELF-LOCKING, HE	2
5	XDFZZ	68225	510-710-5	..PISTON, LINEAR ACTUA	1
6	PAFZZ	68225	510-710-6	..DISK, VALVE	2
7	PAFZZ	68225	1V5105	..PACKING, PREFORMED (ITEM SUPPLIED AS KIT)	1
8	XDFZZ	68225	510-710-21	..SCREW, ASSEMBLED WAS	4
9	XDFZZ	68225	510-710-19	..SETSCREW	1
10	XDFZZ	68225	510-710-18	..SCREW, CAP, SOCKET HE	1
11	XDFZZ	68225	510-710-2	..CYLINDER, ACTUATING, ...	1
12	XDFZZ	68225	510-710-16	..PIN, SPRING	1
13	XDFZZ	68225	510-710-17	..FORK, SHIFTING	1
14	XDFZZ	68225	510-710-3	..HANDLE	1
15	PAFZZ	68225	510-710-11	..DISK, SOLID, PLAIN	1
16	PAFZZ	68225	510-710-12	..SPRING, HELICAL, COMP	4
17	XDFZZ	68225	510-710-4	..CYLINDER, ACTUATING, ...	1

END OF FIGURE

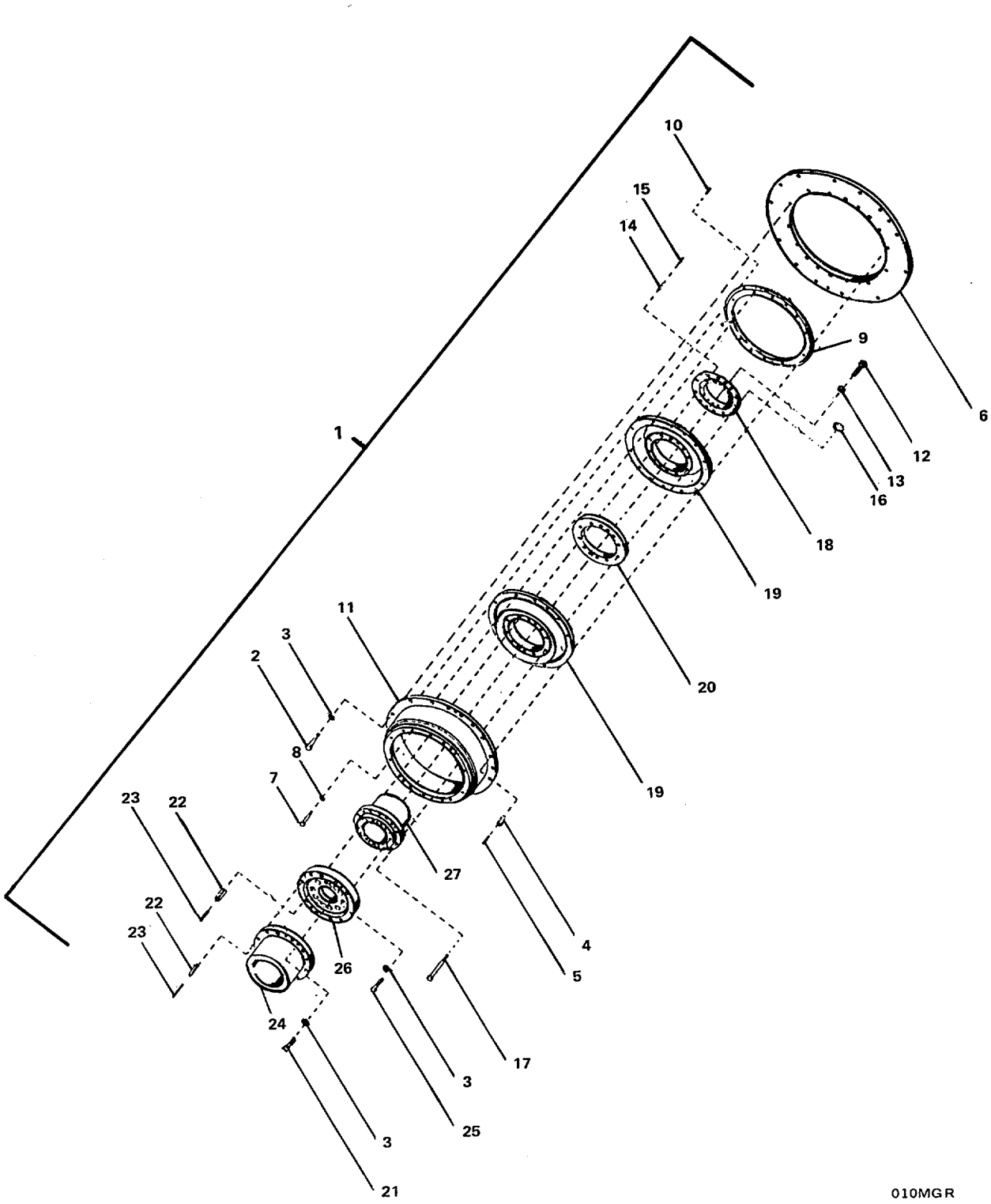

Figure 41. Tortional Coupling.

(1) ITEM NO	(2) SMR CODE	(3) FSCM	(4) PART NUMBER	(5) DESCRIPTION AND USABLE ON CODES(UOC)	(6) QTY
				GROUP 02 MAIN REDUCTION GEAR	
				FIG. 41 TORTIONAL COUPLING	
1	PBCFZ	60248	EZR1022-1300/1110	.COUPLING, TORTIONAL	1
2	XDFZZ	60248	7001014040	..BOLT, MACHINE	8
3	XDFZZ	60248	7032014000	..WASHER, FLAT	14
4	PAFZZ	60248	7040117040	..PIN, SPRING	8
5	PAFZZ	60248	7040110040	..PIN, SPRING	8
6	XDFZZ	60248	311032005N	..COUPLING, SHAFT, RIGI.	1
7	XDFZZ	60248	7000212085	..BOLT, MACHINE	12
8	XDFZZ	60248	7032012000	..WASHER, FLAT	12
9	XDFZZ	60248	3110320181	..RING, RETAINING	1
10	PAFZZ	60248	7040010032	..PIN, SPRING	8
11	XDFZZ	60248	3110320062	..HOUSING	1
12	XDFZZ	60248	7001010045	..BOLT, MACHINE	3
13	XDFZZ	60248	7032010000	..WASHER, FLAT	3
14	PAFZZ	60248	7040014045	..PIN, SPRING	6
15	PAFZZ	60248	7040008045	..PIN, SPRING	6
16	XDFZZ	60248	7022016000	..NUT, SELF-LOCKING, HE	12
17	XDFZZ	60248	7000216150	..BOLT, MACHINE	12
18	XDFZZ	60248	3110320241	..RING, RETAINING	1
19	PAFZZ	60248	EZR-1022	..INSERT, FLEXIBLE COU	1
20	XDFZZ	60248	3110320222	..RING, SPACER	1
21	XDFZZ	60248	7000014060	..BOLT, MACHINE	3
22	PAFZZ	60248	7040120055	..PIN	15
23	PAFZZ	60248	7040111055	..PIN	15
24	XDFZZ	60248	3110320082	..HUB	1
25	XDFZZ	60248	7000014050	..BOLT, MACHINE	3
26	XDFZZ	60248	3110321163	..FLANGE, CONNECTOR	1
27	XDFZZ	60248	3110330112	..HUB	1

END OF FIGURE

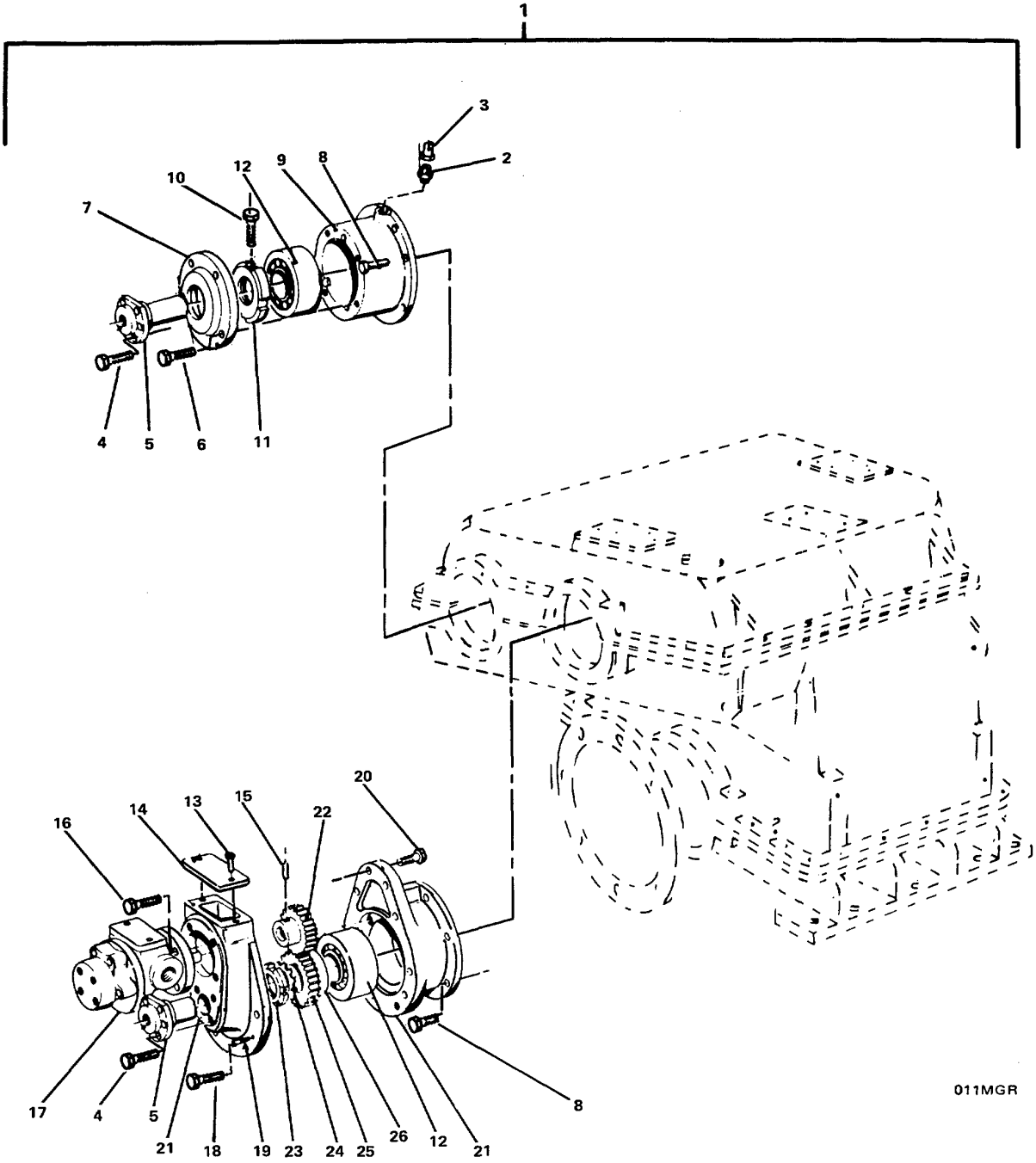

Figure 42. External Input/Intermediate Shaft Parts.

(1) ITEM NO	(2) SMR CODE	(3) FSCM	(4) PART NUMBER	(5) DESCRIPTION AND USABLE ON CODES(UOC)	(6) QTY
				GROUP 02 MAIN REDUCTION GEAR	
				FIG. 42 EXTERNAL INPUT/ INTERMEDIATE SHAFT PARTS	
1	XCFFF	D8835	FIGURE 42 24P1	.EXTERNAL INPUT/INTE	1
2	XDFZZ	D8835	WAV850-H41	..UNION, PIPE	1
3	XDFZZ	D8835	WAV850-H40	..PIPE, METALLIC	1
4	XDFZZ	D8835	WAV850-E46	..SCREW, CAP, HEXAGON H	8
5	PBFZZ	68225	28E1736	..VALVE, CALIBRATED FL	2
6	XDFZZ	D8835	WAV850-E14	..SCREW, CAP, HEXAGON H	8
7	XDFZZ	D8835	WAV850-E40	..COVER, ACCESS	1
8	XDFZZ	D8835	WAV850-E3	..SCREW, CAP, HEXAGON H	12
9	XDFZZ	D8835	WAV850-E32	..CASING, BEARING	1
10	XDFZZ	D8835	WAV850-W204	..PIN, STRAIGHT, THREAD	1
11	XDFZZ	D8835	WAV850-W203	..NUT, PLAIN, ROUND	1
12	PAFZZ	68225	8127	..BEARING, BALL, ANNULA	2
13	XDFZZ	D8835	WAV850-E108	..SCREW, CAP, HEXAGON H	4
14	XDFZZ	D8835	WAV850-E97	..COVER, ACCESS	1
15	XDFZZ	D8835	WAV850-E44	..PIN, STRAIGHT, THREAD	1
16	XDFZZ	D8835	WAV850-E143	..SCREW, CAP, HEXAGON H	4
17	PBFZZ	68225	91E240-03	..PUMP, ROTARY	1
18	XDFZZ	D8835	WAV850-E45	..SCREW, CAP, HEXAGON H	4
19	XDFZZ	D8835	WAV850-E49	..PIN, TAPERED WITH NU	2
20	XDFZZ	D8835	WAV850-E150	..SCREW, CAP, HEXAGON H	4
21	XDFZZ	D8835	WAV850-E41	..CASING, PUMP DRIVE (P/N INCLUDES P/N E12. CASINGS ARE MACHINE FIT AND MUST BE ORDERED)	1
22	XDFZZ	D8835	WAV850-E42	..GEAR, PUMP	1
23	XDFZZ	D8835	WAV850-W4	..NUT, PLAIN, ROUND	1
24	XDFZZ	D8835	WAV850-W5	..PLATE, LOCKING	1
25	XDFZZ	D8835	WAV850-E43	..GEAR, SHAFT PUMP DRI	1
26	XDFZZ	D8835	WAV850-E131	..SPACER, RING	1

END OF FIGURE

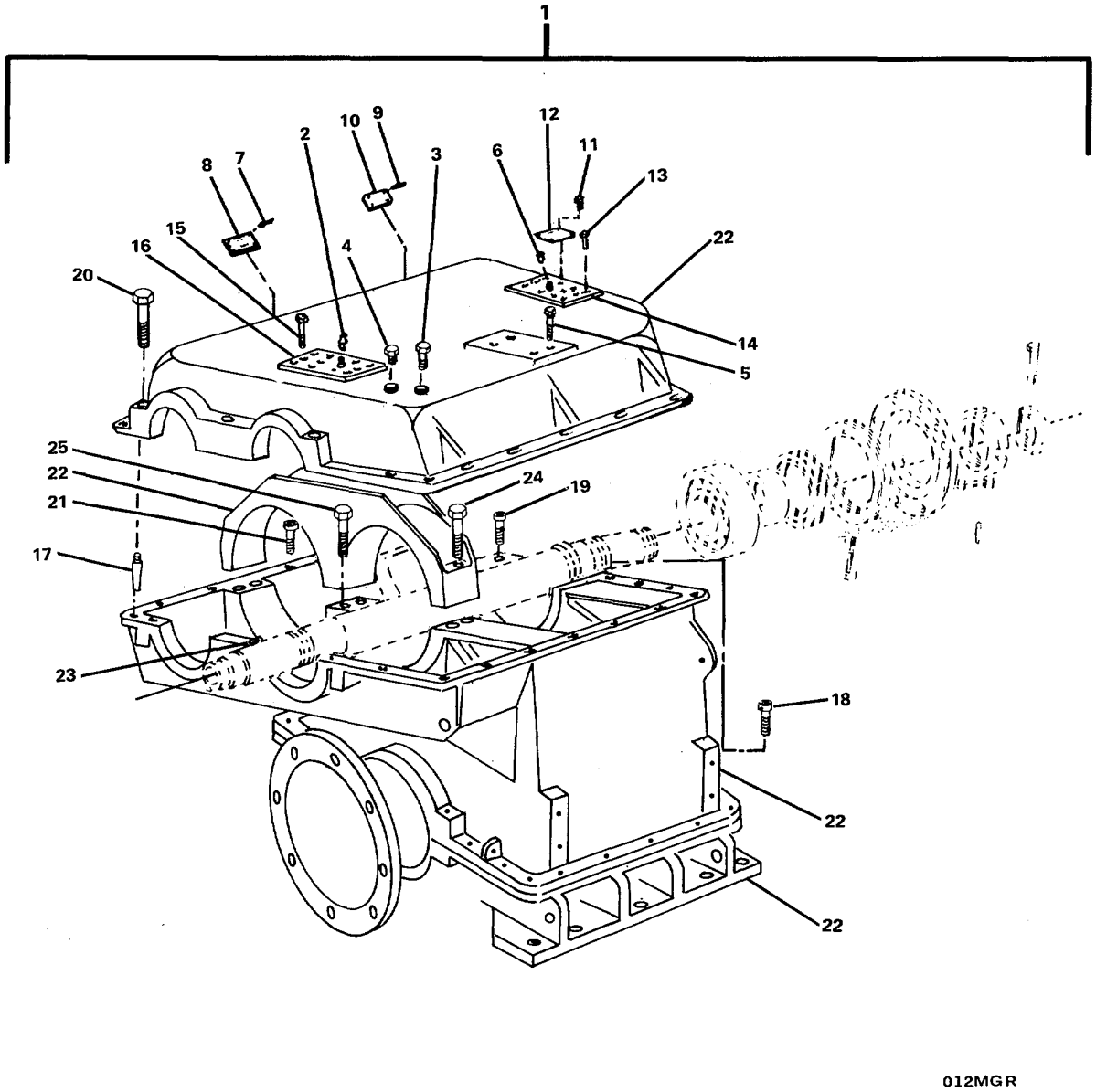

Figure 43. Housing/Input Shaft Group (Sheet 1 of 2).

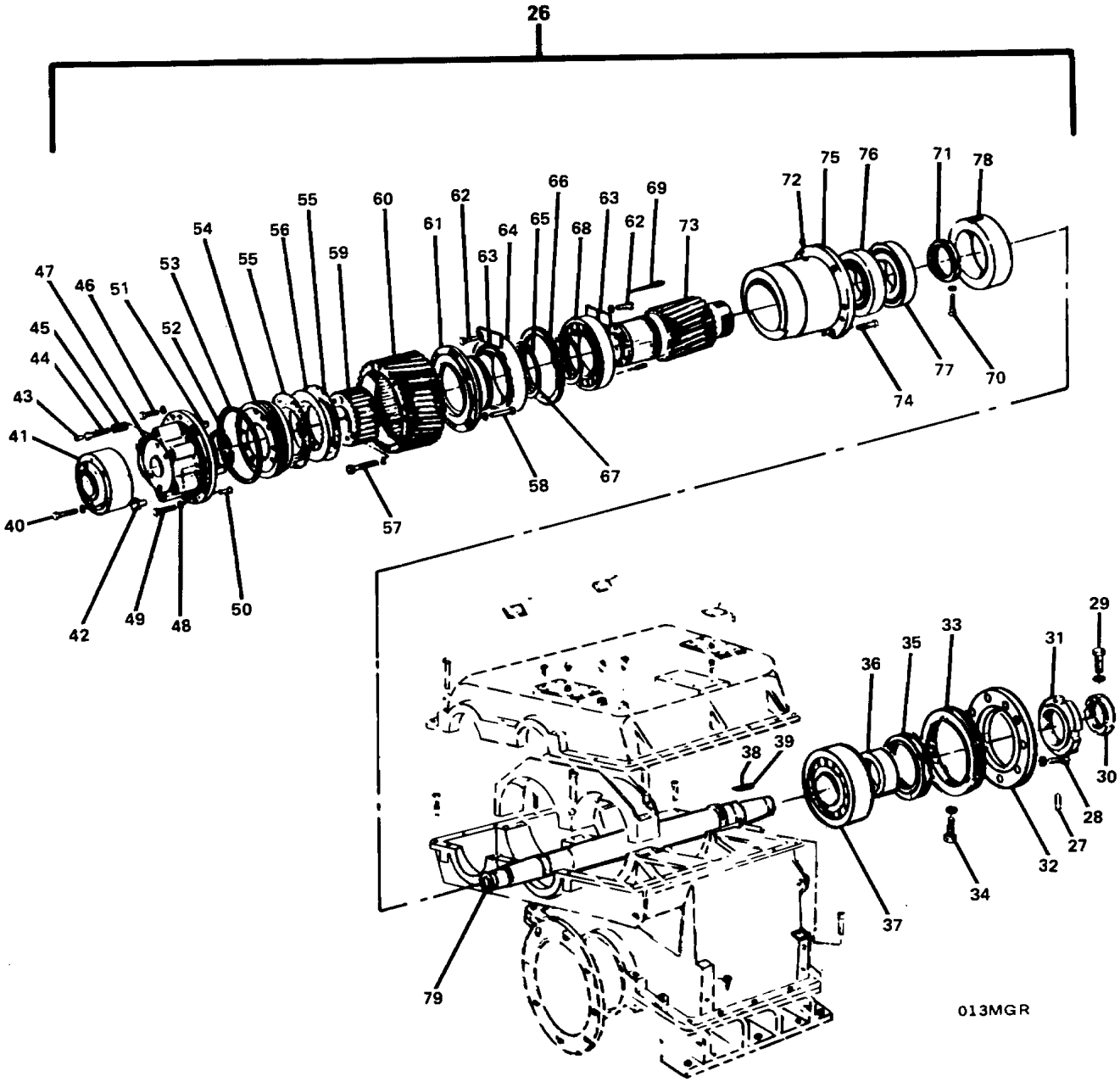

Figure 43. Housing /Input Shaft Group (Sheet 2 of 2).

(1) ITEM NO	(2) SMR CODE	(3) FSCM	(4) PART NUMBER	(5) DESCRIPTION AND USABLE ON CODES(UOC)	(6) QTY
				GROUP 02 MAIN REDUCTION GEAR FIG. 43 HOUSING/INPUT SHAFT GEAR	
	XCHHH	D8835	FIGURE 43 P1	.HOUSING/INPUT SHAFT	1
1	XCHHH	D8835	FIGURE 43 22P1	.HOUSING ASSEMBLY	1
2	XDHZZ	D8835	WAV850-E107	...CAP, VENT	1
3	XDHZZ	D8835	WAV850-G13	...SCREW, CAP, HEXAGON H	2
4	XDHZZ	D8835	WAV850-G43	...PLUG, PIPE	1
5	XDHZZ	D8835	WAV850-V10	...SCREW, CAP, HEXAGON H	4
6	XDHZZ	D8835	WAV850-E29	...PLUG, PIPE	1
7	XDHZZ	D8835	WAV850-G48	...RIVET, GROOVED	4
8	XDHZZ	D8835	WAV850-G47	...PLATE, IDENTIFICATIO	1
9	XDHZZ	D8835	WAV850-G48A	...SCREW, TAPPING, THREA	4
10	XDHZZ	D8835	WAV850-G47A	...PLATE, IDENTIFICATIO	1
11	XDHZZ	D8835	WAV850-G48B	...SCREW, TAPPING, THREA	4
12	XDHZZ	D8835	WAV850-G47B	...PLATE, INSTRUCTION	1
13	XDHZZ	D8835	WAV850-E63	...SCREW, CAP, HEXAGON H	10
14	XDHZZ	D8835	WAV850-E57	...COVER, ACCESS	1
15	XDHZZ	D8835	WAV850-E4	...SCREW, CAP, HEXAGON H	10
16	XDHZZ	D8835	WAV850-E2	...COVER, ACCESS	1
17	XDHZZ	D8835	WAV850-G6	...PIN, TAPERED WITH	4
18	XDHZZ	D8835	WAV850-G8A	...SCREW, HEXAGON WITH	2
19	XDHZZ	D8835	WAV850-G8B	...SCREW, HEXAGON WITH	1
20	XDHZZ	D8835	WAV850-G8D	...SCREW, CAP, HEXAGON	3
21	XDHZZ	D8835	WAV850-G24	...SCREW, HEXAGON WITH	15
22	XDHZZ	D8835	WAV850-G2	...CASING, COMPLETE (P/N INCLUDES P./NS G98, G82, G1. CASINGS ARE MACHINE FIT AND MUST BE ORDERED AND REPLACED AS A UNIT)	1
23	XDHZZ	D8835	WAV850-W42	...KEY, MACHINE	1
24	XDHZZ	D8835	WAV850-G198A	...SCREW, CAP, HEXAGON	4
25	XDHZZ	D8835	WAV850-G198B	...SCREW, CAP, HEXAGON	2
26	XCHHH	D8835 26P	WAV850-FIGURE 43	INPUT SHAFT ASSEMBL	1
27	XDHZZ	D8835	WAV850-W8	...PIN, STRAIGHT, THREAD	1
28	XDHZZ	D8835	WAV850-E205	...SCREW, CAP, HEXAGON	6
29	XDHZZ	D8835	WAV850-W13A	...SCREW, ASSEMBLED WAS	1
30	XDHZZ	D8835	WAV850-W13	...NUT, PLAIN, ROUND	1
31	XDHZZ	D8835	WAV850-W7	...NUT, PLAIN, ROUND	1
32	XDHZZ	D8835	WAV850-E7	...COVER, ACCESS	1
33	XDHZZ	D8835	WAV850-E98	...NUT, BEARING	1
34	XDHZZ	D8835	WAV850-E9	...SCREW, ASSEMBLED WAS	1
35	XDHZZ	D8835	WAV850-E11	...RING, SHAFT SEALING	1
36	XDHZZ	D8835	WAV850-W12	...SPACER, RING	1
37	PAHZZ	68225	7524	...BEARING, BALL, ANNULA	1
38	XDHZZ	D8835	WAV850-ZW3	...SLEEVE, TIGHTENING	1
39	XDHZZ	D8835	WAV850-W3	...KEY, MACHINE	1
40	XDHZZ	08835	WAV850-K31	...SCREW, ASSEMBLED WAS	16
41	XDHZZ	D8835	WAV850-W9	...SPACER, RING	1
42	PBHZZ	68222	10K2912	...VALVE, CHECK	2
43	XDHZZ	D8835	WAV850-K4	·PLUG, MACHINE THREAD	8

(1) ITEM NO	(2) SMR CODE	(3) FSCM	(4) PART NUMBER	(5) DESCRIPTION AND USABLE ON CODES(UOC)	(6) QTY
44	XDHZZ	D8835	WAV850-K5	.. .SCREW, CAP, HEXAGON H	8
45	XDHZZ	D8835	WAV850-K6	.. .SPRING, HELICAL, COMP	8
46	XDHZZ	D8835	WAV850-K13	...SCREW, CAP, HEXAGON H	16
47	XDHZZ	D8835	WAV850-K3	...COVER, CLUTCH	1
48	XDHZZ	D8835	WAV850-K9	...NUT, PLAIN, HEXAGON	4
49	XDHZZ	D8835	WAV850-K8	...SCREW, CAP, HEXAGON H	4
50	XDHZZ	D8835	WAV850-K32	...SLEEVE, TIGHTENING	6
51	XDHZZ	D8835	WAV850-K24	...PIN, CARRIER	4
52	XDHZZ	D8835	WAV850-K7	...RING, RECTANGULAR	1
53	XDHZZ	D8835	WAV850-K18	...RING, RECTANGULAR	1
54	XDHZZ	D8835	WAV850-K17	...PISTON, ANNULAR	1
55	XDHZZ	D8835	WAV850-K23	...DISK, VALVE	12
56	XDHZZ	D8835	WAV850-K22	...DISK, VALVE	11
57	XDHZZ	D8835	WAV850-R18	...SCREW, ASSEMBLED WAS	3
58	XDHZZ	D8835	WAV850-K47	...SCREW, CAP, HEXAGON H	16
59	XDHZZ	D8835	WAV850-K30	...CARRIER	1
60	XDHZZ	D8835	WAV850-K15	...CASING, CLUTCH (LEFT HAND PITCH)	1
61	XDHZZ	D8835	WAV850-K1	...CARRIER, CLUTCH	1
62	XDHZZ	D8835	WAV850-G17	...SCREW, MACHINE	8
63	XDHZZ	D8835	WAV850-G16	...PLATE, LOCKING	4
64	PAHZZ	68225	7736	...BEARING, BALL, ANNULA	1
65	XDHZZ	D8835	WAV850-K2	...CLIP, SPRING TENSION	1
66	XDHZZ	D8835	WAV850-G25	...RING, RETAINING	1
67	XDHZZ	D8835	WAV850-R16	...CLIP, SPRING TENSION	1
68	PAHZZ	68225	7706	...BEARING, BALL, ANNULA	1
69	XDHZZ	D8835	WAV850-R17	.. .SLEEVE, TIGHTENING	9
70	XDHZZ	D8835	WAV850-R11	...SCREW, ASSEMBLED WAS	1
71	XDHZZ	D8835	WAV850-R10	...NUT, PLAIN, ROUND	1
72	XDHZZ	D8835	WAV850-E10	... PIN, STRAIGHT, THREAD	1
73	XDHZZ	D8835	WAV850-R1	...GEAR, SPUR (WHEN ORDERING, P/N MUST BE PRECEDED BY COMMISSION NO. FROM DATA PLATE)	1
74	XDHZZ	D8835	WAV850-G4	...SCREW, CAP, HEXAGON H	6
75	XDHZZ	D8835	WAV850-E5	...CASING, BEARING	1
76	PAHZZ	68225	8013	...BEARING, BALL, ANNULA	1
77	PAHZZ	68225	7704	...BEARING, BALL, ANNULA	1
78	XDHZZ	D8835	WAV850-E6	...SPACER, RING	1
79	XDHZZ	D8835	WAV850-W1	...SHAFT, INPUT	1

END OF FIGURE

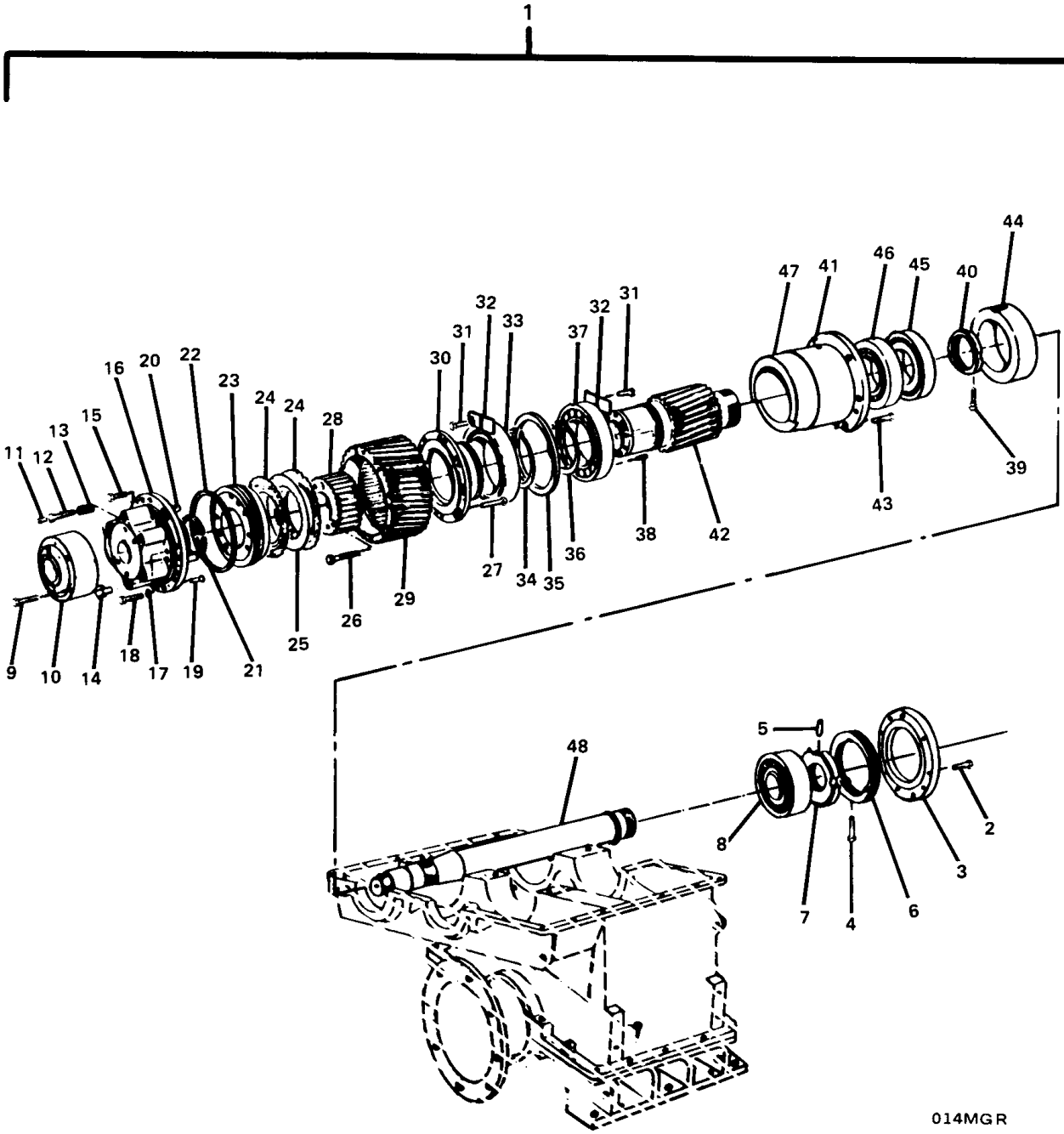

Figure 44. Intermediate Shaft Parts.

(1) ITEM NO	(2) SMR CODE	(3) FSCM	(4) PART NUMBER	(5) DESCRIPTION AND USABLE ON CODES(UOC)	(6) QTY
				GROUP 02 MAIN REDUCTION GEAR	
				FIG. 44 INTERMEDIATE SHAFT GEAR	
1	XCHHH	D8835	FIGURE 44 24P1	.INTERMEDIATE SHAFT	1
2	XDHZZ	D8835	WAV850-E708	..SCREW, CAP, HEXAGON	6
3	XDHZZ	D8835	WAV850-E8	..COVER, ACCESS	1
4	XDHZZ	D8835	WAV850-E9	..SCREW, ASSEMBLED WAS	1
5	XDHZZ	D8835	WAV850-W8	..PIN, STRAIGHT, THREAD	1
6	XDHZZ	D8835	WAV850-E98	..NUT, BEARING	1
7	XDHZZ	D8835	WAV850-W7	..NUT, PLAIN, ROUND	1
8	PAHZZ	68225	7524	..BEARING, BALL, ANNULA	1
9	XDHZZ	D8835	WAV850-K31	..SCREW ,ASSEMBLED WAS	4
10	XDHZZ	D8835	WAV850-W9	..SPACER, RING	1
11	XDHZZ	D8835	WAV850-K4	..PLUG, MACHINE THREAD	8
12	XDHZZ	D8835	WAV850-K5	..SCREW, CAP, HEXAGON	8
13	XDHZZ	D8835	WAV850-K6	..SPRING, HELICAL, COMP	8
14	PBHZZ	68225	10K2912	..VALVE, CHECK	1
15	XDHZZ	D8835	WAV850-K13	..SCREW, CAP, HEXAGON	16
16	XDHZZ	D8835	WAV850-K3	..COVER, CLUTCH	1
17	XDHZZ	D8835	WAV850-K9	..NUT, PLAIN, HEXAGON	4
18	XDHZZ	D8835	WAV850-K8	..SCREW, CAP, HEXAGON	4
19	XDHZZ	D8835	WAV850-K32	..SLEEVE, TIGHTENING	6
20	XDHZZ	D8835	WAV850-K24	..PIN, CARRIER	4
21	XDHZZ	D8835	WAV850-K7	..RING, RECTANGULAR	1
22	XDHZZ	D8835	WAV850-K18	..RING, RECTANGULAR	1
23	XDHZZ	D8835	WAV850-K17	..PISTON, ANNULAR	1
24	XDHZZ	D8835	WAV850-K23	..DISK, VALVE	12
25	XDHZZ	D8835	WAV850-K22	..DISK, VALVE	11
26	XDHZZ	D8835	WAV850-R18	..SCREW, ASSEMBLED WAS	3
27	XDHZZ	D8835	WAV850-K47	..SCREW, CAP, HEXAGON	16
28	XDHZZ	D8835	WAV850-K30	..CARRIER	1
29	XDHZZ	D8835	WAV850-K16	..CASING, CLUTCH (RIGHT HAND PITCH).	1
30	XDHZZ	D8835	WAV850-K1	..CARRIER, CLUTCH	1
31	XDHZZ	D8835	WAV850-G17	..SCREW, MACHINE	8
32	XDHZZ	D8835	WAV850-G16	..PLATE, LOCKING	4
33	PAHZZ	68225	7736	..BEARING, BALL, ANNULA	1
34	XDHZZ	D8835	WAV850-K2	..CLIP, SPRING TENSION	1
35	XDHZZ	D8835	WAV850-G25	..RING, RETAINING	1
36	XDHZZ	D8835	WAV850-R16	..CLIP, SPRING TENSION	1
37	PAHZZ	68225	7706	..BEARING, BALL, ANNULA	1
38	XDHZZ	D8835	WAV850-R17	..SLEEVE, TIGHTENING	9
39	XDHZZ	D8835	WAV850-R11	..SCREW, ASSEMBLED WAS	1
40	XDHZZ	D8835	WAV850-R10	..NUT, PLAIN, ROUND	1
41	XDHZZ	D8835	WAV850-E10	..PIN, STRAIGHT, THREAD	1
42	XDHZZ	D8835	WAV850-R1	..GEAR, SPUR (WHEN ORDERING, P/N 1 MUST BE PRECEDED BY COMMISSION NO. FROM DATA PLATE)	
43	XDHZZ	D8835	WAV850-G4	..SCREW, CAP, HEXAGON H	6
44	XDHZZ	D8835	WAV850-E6	..SPACER, RING	1
45	PAHZZ	68225	7704	..BEARING, BALL, ANNULA	1
46	PAHZZ	68225	8013	..BEARING, BALL, ANNULA	1

(1) ITEM NO	(2) SMR CODE	(3) FSCM	(4) PART NUMBER	(5) DESCRIPTION AND USABLE ON CODES(UOC)	(6) QTY
47	XDHZZ	D8835	WAV850-E31	..CASING, BEARING	1
48	XDHZZ	D8835	WAV850-W17	..SHAFT, INTERMEDIATE	1

END OF FIGURE

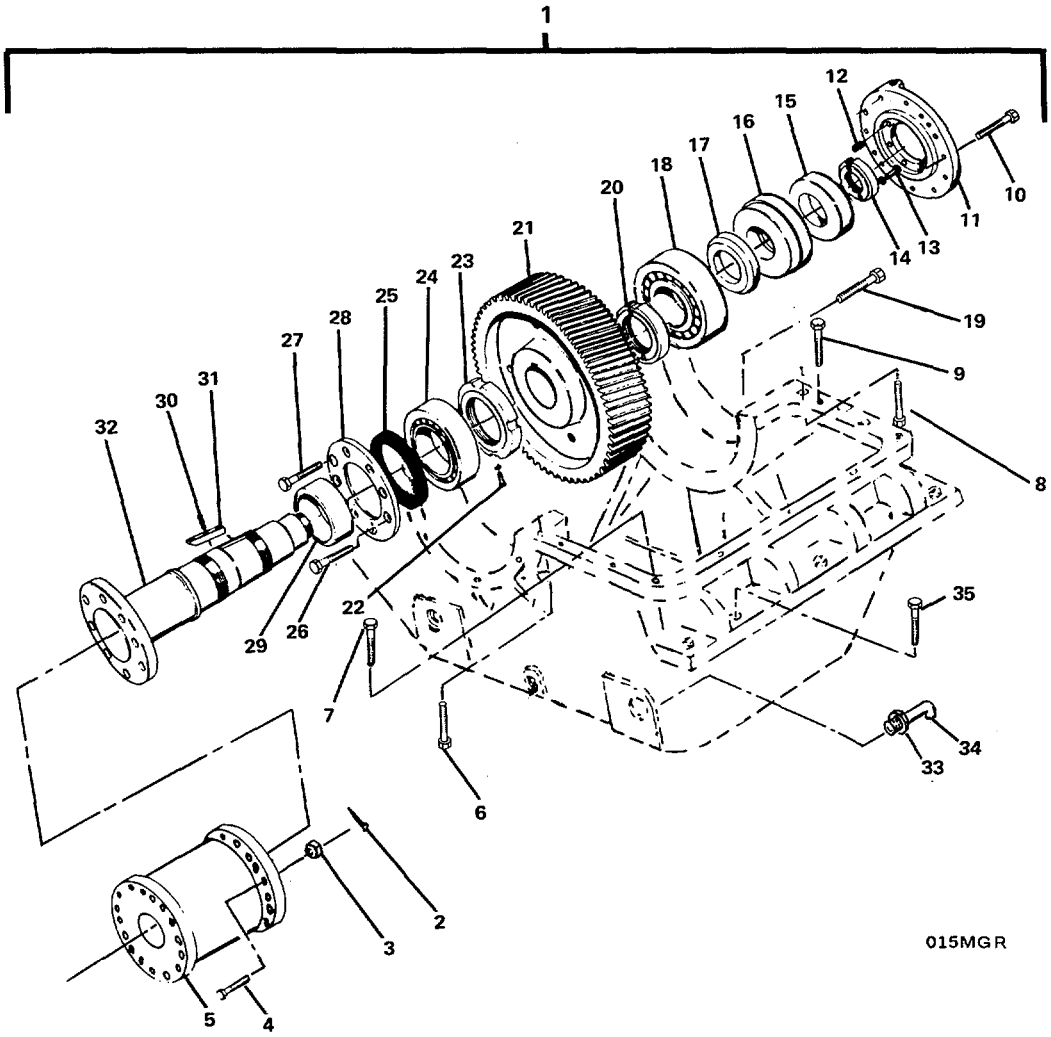

Figure 45. Output Shaft Parts.

(1) ITEM NO	(2) SMR CODE	(3) FSCM	(4) PART NUMBER	(5) DESCRIPTION AND USABLE ON CODES(UOC)	(6) QTY
				GROUP 02 MAIN REDUCTION GEAR	
				FIG. 45 OUTPUT SHAFT PARTS	
1	XCHHH	D8835	FIGURE 45 24P1	.OUTPUT SHAFT	1
2	XDHZZ	D8835	WAV850-ZP93	..PIN, COTTER	16
3	XDHZZ	D8835	WAV850-P93	..NUT, PLAIN, CASTELLAT	16
4	XDHZZ	D8835	WAV850-P92	..BOLT, MACHINE	16
5	XDHZZ	D8835	WAV850-P91	..COUPLING, SHAFT RIGI	1
6	XDHZZ	D8835	WAV850-G8A	..SCREW, HEXAGON WITH	2
7	XDHZZ	D8835	WAV850-G24	..SCREW, HEXAGON WITH	15
8	XDHZZ	D8835	WAV850-G200	..SCREW, CAP, HEXAGON H	4
9	XDHZZ	D8835	WAV850-G6	..PIN, TAPERED WITH NU	4
10	XDHZZ	D8835	WAV850-G30	..SCREW, CAP, HEXAGON H	12
11	XDHZZ	D8835	WAV850-G27	..COVER, ACCESS	1
12	PBHZZ	68225	28G2360	..SPRING, HELICAL, COMP	6
13	XDHZZ	D8835	WAV850-P7	..SCREW, ASSEMBLED WAS	2
14	XDHZZ	D8835	WAV850-P8	..NUT, PLAIN, ROUND	1
15	XDHZZ	D8835	WAV850-ZP23	..SPACER, RING	1
16	PAHZZ	68225	7830	..BEARING, BALL, ANNULA	1
17	XDHZZ	D8835	WAV850-P23	..SPACER, RING	1
18	PAHZZ	68225	7534	..BEARING, BALL, ANNULA	1
19	XDHZZ	D8835	WAV850-P5	..SCREW, ASSEMBLED WAS	1
20	XDHZZ	D8835	WAV850-P6	..NUT, PLAIN, ROUND	1
21	XDHZZ	D8835	WAV850-R2	..GEAR, SPUR (WHEN ORDERING P/N MUST BE PRECEDED BY COMMISSION NO. FROM DATA PLATE)	1
22	XDHZZ	D8835	WAV850-P3	..PIN, STRAIGHT, THREAD	1
23	XDHZZ	D8835	WAV850-P4	..NUT, PLAIN, ROUND	1
24	PAHZZ	68225	7621	..BEARING, BALL, ANNULA	1
25	XDHZZ	D8835	WAV850-G20	..RING, SHAFT SEALING	1
26	XDHZZ	D8835	WAV850-G29	..SCREW, CAP, HEXAGON H	3
27	XDHZZ	D8835	WAV850-G29A	..SCREW, CAP, HEXAGON H	1
28	XDHZZ	D8835	WAV850-G31	..COVER	1
29	XDHZZ	D8835	WAV850-P2	..SPACER, RING	1
30	XDHZZ	D8835	WAV850-ZP9	..SLEEVE, CLAMPING	1
31	XDHZZ	D8835	WAV850-P9	..KEY, MACHINE	1
32	XDHZZ	D8835	WAV850-P1	..SHAFT	1
33	XDHZZ	D8835	WAV850-H1B	..NIPPLE, DOUBLE, PIPE	1
34	XDHZZ	D8835	WAV850-H1A	..ELBOW, PIPE	1
35	XDHZZ	D8835	WAV850-E196	..SCREW, CAP, HEXAGON H	4
	PBCZZ	68225	MT2391-850	..TUBE ASSEMBLY, METAL (NEEDED FOR COMPLETE REPAIR OF MAIN REDUCTION GEAR)	1

END OF FIGURE

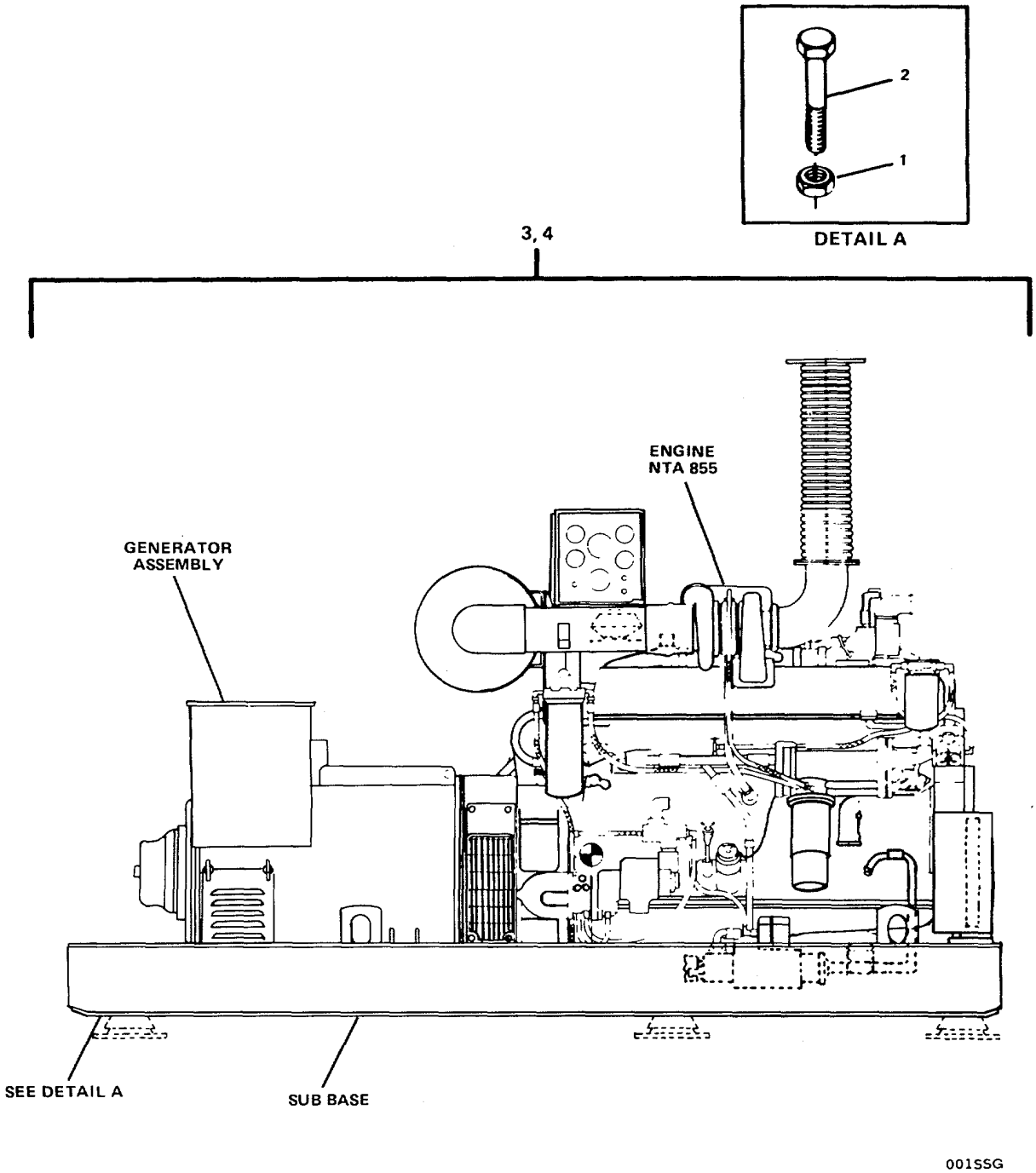

Figure 46. Ship Service Generator Set

(1) ITEM NO	(2) SMR CODE	(3) FSCM	(4) PART NUMBER	(5) DESCRIPTION AND USABLE ON CODES(UOC)	(6) QTY
				GROUP 03 SHIP SERVICE GENERATOR SET	
				FIG. 46 SHIP SERVICE GENERATOR SET	
1	XDFZZ	77408	40-3017-8043	NUT,SELF-LOCKING,HE	24
2	XDFZZ	77408	40-2905-1484	BOLT,MACHINE	24
3	PBFHH	15434	S.0.56419-NTA855 -GC	GENERATOR SET, DIESEL, ELECTRIC START	1
4	PBFHH	15434	S.0.56420-NTA855 -GC	GENERATOR SET, DIESEL, AIR START...	1

END OF FIGURE

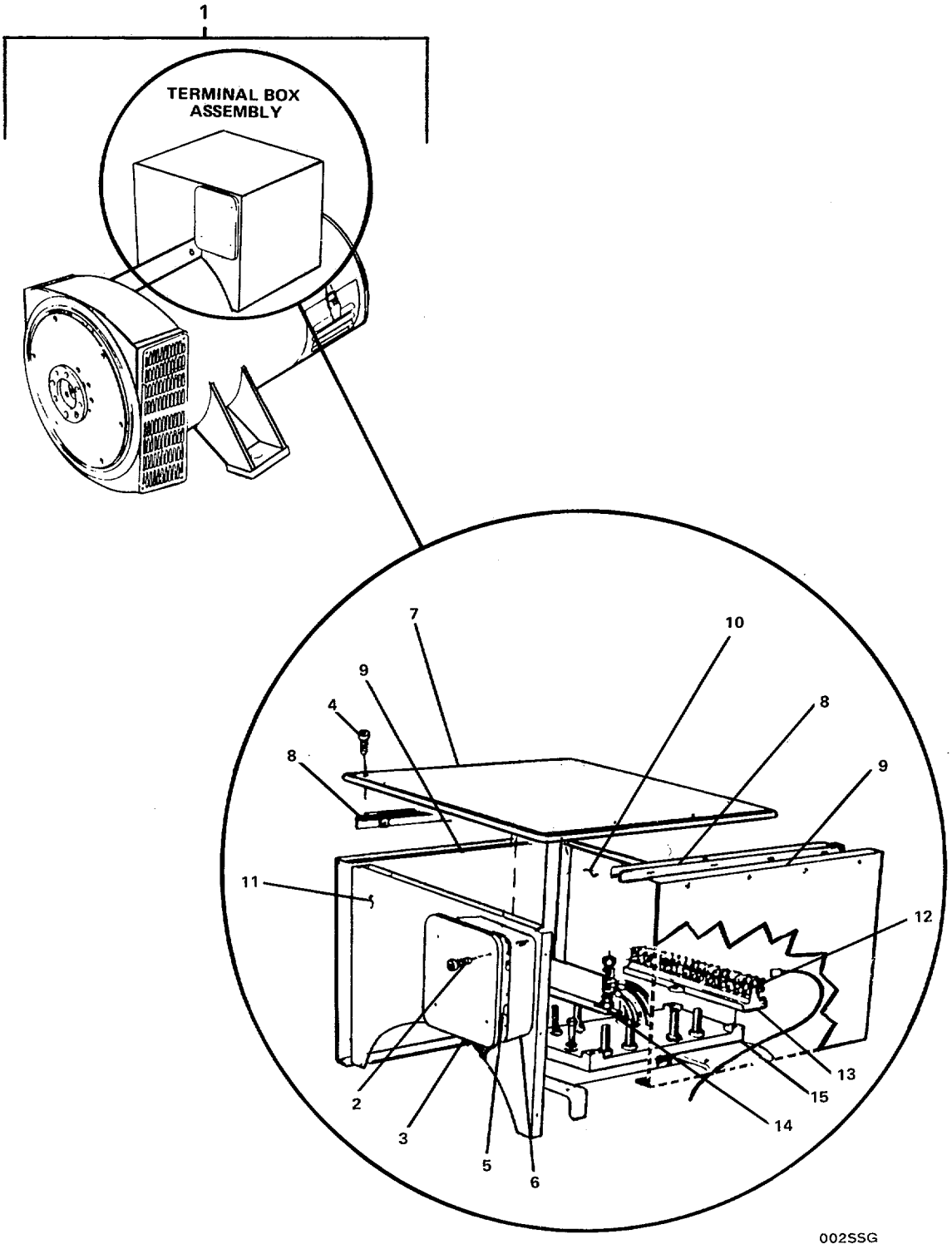

FIGURE 47. Generator Assembly (Sheet 1 of 3).

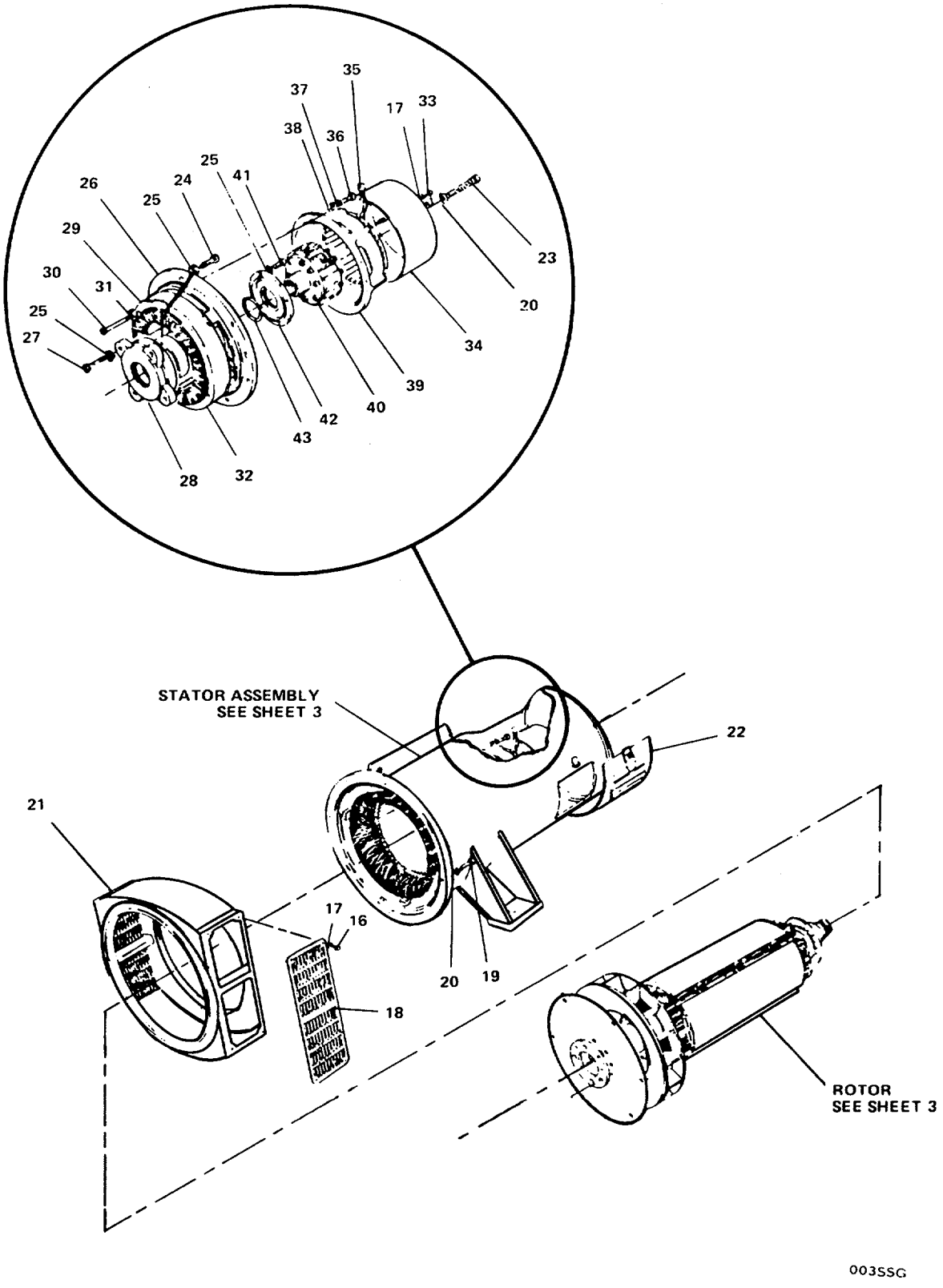

FIGURE 47. Generator Assembly (Sheet 2 of 3).

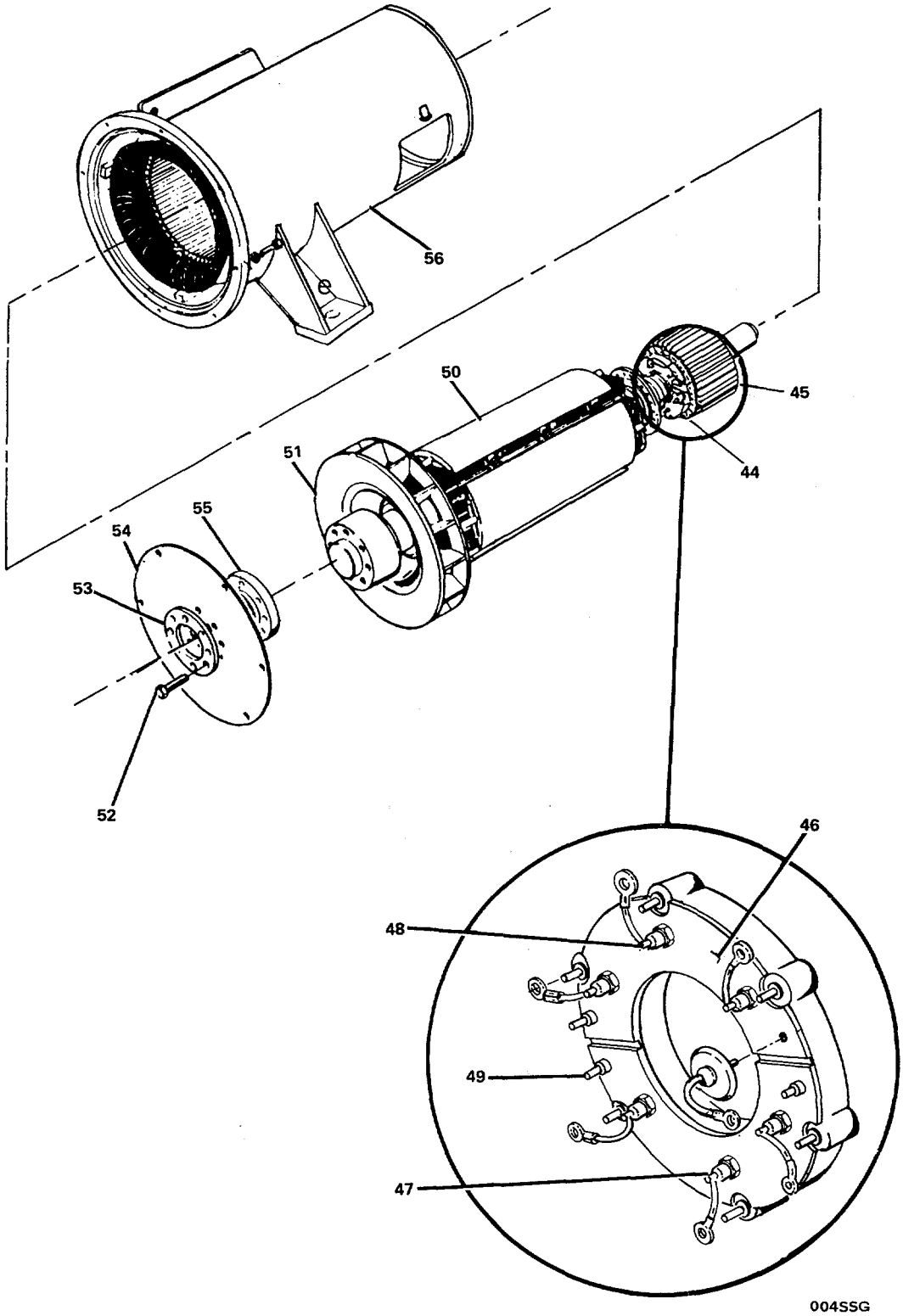

FIGURE 47. Generator Assembly (Sheet 3 of 3).

(1) ITEM NO	(2) SMR CODE	(3) FSCM	(4) PART NUMBER	(5) DESCRIPTION AND USABLE ON CODES(UOC)	(6) QTY
				GROUP 03 SHIP SERVICE GENERATOR SET	
				FIG. 47 GENERATOR ASSEMBLY	
1	XCFHH	44940	SC434E/L7561	.GENERATOR ASSEMBLY	1
2	XDOZZ	44940	7019-10000	..SCREW,MACHINE	4
3	XDOZZ	44940	450-13000	..COVER,ACCESS	1
4	XDOZZ	44940	350-14090	..SCREW,MACHINE	4
5	PBOZZ	44940	E000-23020	..ELECTRONIC COMPONEN	1
6	XDOZZ	44940	350-11340	..TERMINAL BOX	1
7	XDOZZ	44940	458-11840	..PANEL,BLANK	1
8	XDOZZ	44940	458-11850	..ANGLE,STRUCTURAL	2
9	XDOZZ	44940	458-11880	..PANEL,BLANK	2
10	XDOZZ	44940	458-11870	..PANEL,BLANK	1
11	XDOZZ	44940	458-11860	..PANEL,BLANK	1
12	XDOZZ	44940	003-14027	..TERMINAL BOARD	3
13	XDOZZ	44940	450-12860	..BASE,TERMINAL BOARD	1
14	XDOZZ	44940	358-13470	..STRIP,ELECTRICAL GR	4
15	XDOZZ	44940	358-13380	..TERMINAL PANEL	1
16	XDOZZ	44940	016-40616	..SCREW,CAP,HEXAGON H	8
17	XDOZZ	44940	028-31506	..WASHER,LOCK	8
18	XDOZZ	44940	410-10034	..SCREEN,WEATHER	2
19	XDHZZ	44940	016-41021	..SCREW,CAP,HEXAGON H	8
20	XDHZZ	44940	028-31510	..WASHER,LOCK	9
21	XDHZZ	44940	458-14460	..HOUSING	1
22	XDHZZ	44940	458-20200	..COVER,ACCESS	1
23	XDHZZ	44940	350-14950	..BOLT,MACHINE	1
24	XDHZZ	44940	016-40920	..SCREW,CAP,HEXAGON H	8
25	XDHZZ	44940	028-31509	..WASHER,LOCK	12
26	XDHZZ	44940	458-11160	..BRACKET,END	1
27	XDHZZ	44940	016-40923	..SCREW,CAP,HEXAGON H	4
28	XDHZZ	44940	458-12960	..CARTRIDGE,BEARING	1
29	XDHZZ	44940	051-01036	..BEARING,MOUNTED	1
30	XDHZZ	44940	015-41613	..SCREW,CAP,HEXAGON H	6
31	XDHZZ	44940	028-31507	..WASHER,LOCK	6
32	XDHZZ	44940	462-12400	..STATOR,EXCITER	1
33	XDHZZ	44940	016-40614	..SCREW,CAP,HEXAGON H	3
34	XDHZZ	44940	450-11910	..COVER,STATOR	1
35	XDHZZ	44940	450-11990	..PILLAR	3
36	XDHZZ	44940	016-40816	..SCREW,CAP,HEXAGON H	4
37	XDHZZ	44940	028-31508	..WASHER,LOCK	4
38	XDHZZ	44940	150-10710	..CLAMP	4
39	XDHZZ	44940	450-17400	..MOUNT,STATOR	1
40	XDHZZ	44940	450-21300	..ROTOR	1
41	XDHZZ	44940	016-40919	..SCREW,CAP,HEXAGON H	4
42	XDHZZ	44940	458-12970	..CAP,BEARING	1
43	XDHZZ	44940	050-11047	..CLIP	1
44	XDHZZ	44940	054-20505	..PIN,STRAIGHT,HEADLE	1
45	PBHZZ	44940	458-22800	..ROTOR,GENERATOR	1
46	PBHZZ	44940	362-12800	..RECTIFIER,METALLIC	1
47	PAFZZ	44940	364-10840	..SEMICONDUCTOR DEVIC	3
48	PAFZZ	44940	364-10850	..SEMICONDUCTOR DEVIC	3

(1) ITEM NO	(2) SMR CODE	(3) FSCM	(4) PART NUMBER	(5) DESCRIPTION AND USABLE ON CODES(UOC)	(6) QTY
49	PAHZZ	44940	450-11760	..RESISTOR,VARIABLE,.....	1
50	PBHZZ	44940	414ER03S27R12A	..ROTOR,GENERATOR.....	1
51	XDHZZ	44940	458-14150	..FAN.....	1
52	XDHZZ	44940	016-31249	..SCREW,CAP,HEXAGON H.....	8
53	XDHZZ	44940	350-11560	..COUPLING,PRESSURE	1
54	XDHZZ	44940	350-11580	..DISK,COUPLING	1
55	XDHZZ	44940	350-11510	..SPACER,COUPLING	1
56	PBHZZ	44940	414E115F1503A	..STATOR,GENERATOR	1

END OF FIGURE

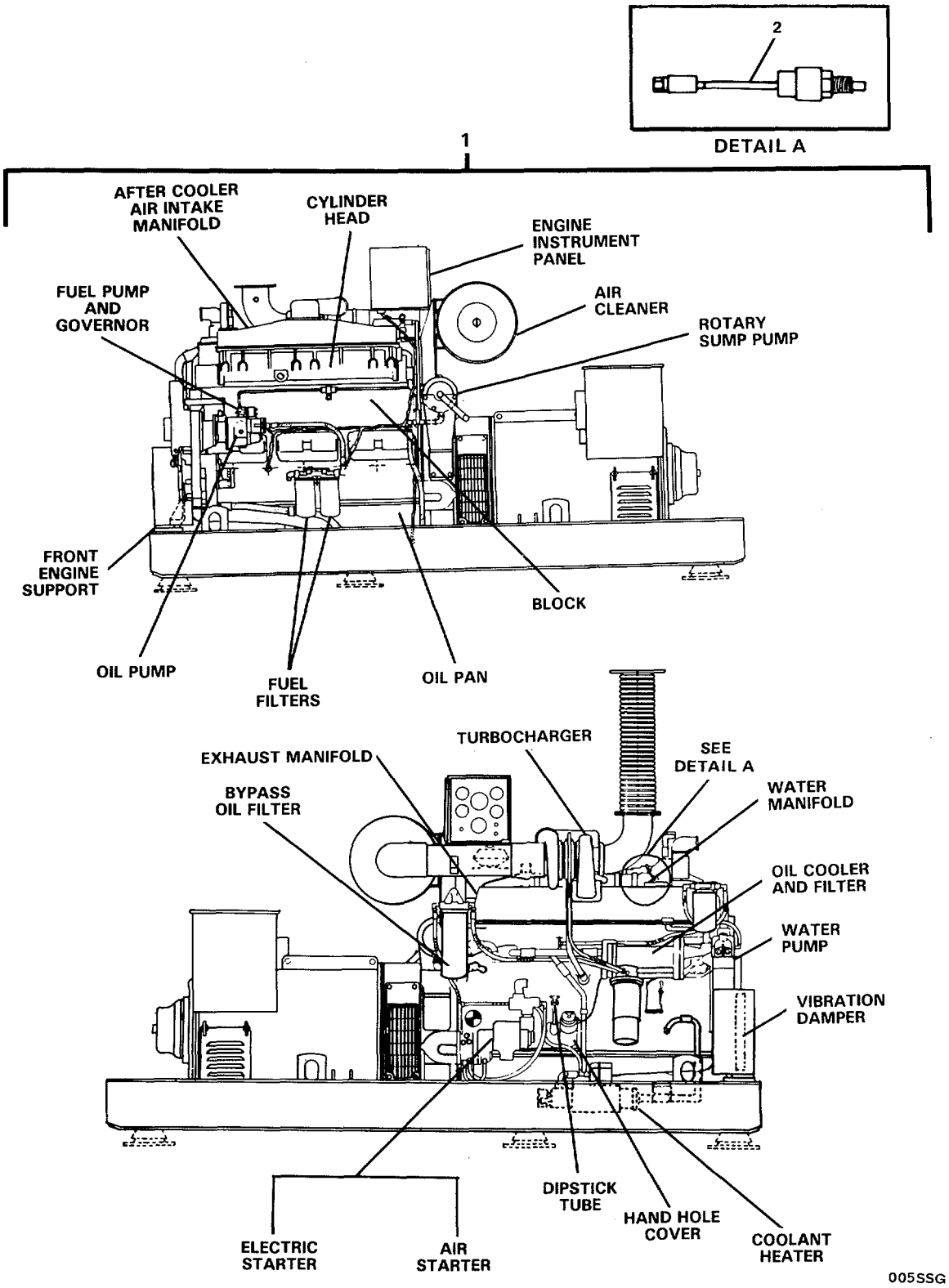

FIGURE 48. Diesel Engine Assembly.

(1) ITEM NO	(2) SMR CODE	(3) FSCM	(4) PART NUMBER	(5) DESCRIPTION AND USABLE ON CODES(UOC)	(6) QTY
				GROUP 03 SHIP SERVICE GENERATOR SET	
				FIG. 48 DIESEL ENGINE ASSEMBLY	
1	XCFHH	15434	NTA-855A	.ENGINE,DIESEL,AIR.....	1
1	XCFHH	15434	NTA-855E	.ENGINE,DIESEL,ELECT.....	1
2	PAOZZ	15434	3048725	..SWITCH,ENGINE TEMPE	1

END OF FIGURE

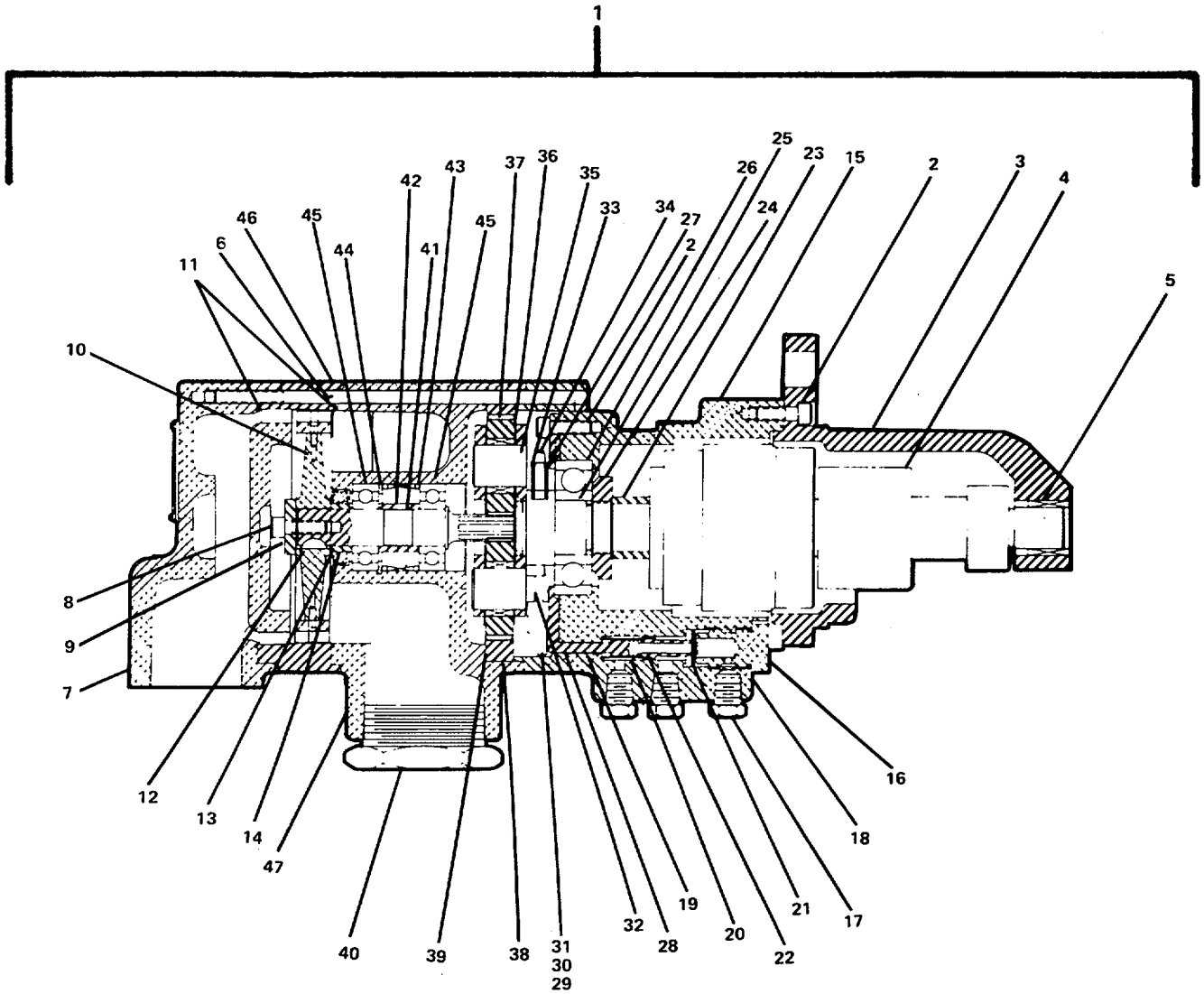

FIGURE 49. Engine Starter-Aid.

(1) ITEM NO	(2) SMR CODE	(3) FSCM	(4) PART NUMBER	(5) DESCRIPTION AND USABLE ON CODES(UOC)	(6) QTY
				GROUP 03 SHIP SERVICE GENERATOR SET	
				FIG. 49 ENGINE STARTER-AIR	
1	PBCFF	57301	42KG312-08-601	..STARTER,ENGINE,AIR	1
2	XDFZZ	57301	14F-025020-12	...SCREW,MACHINE	7
3	XDFZZ	57301	22172	...HOUSING,DRIVE	1
4	PAFZZ	57301	22148	...DRIVE,ENGINE,ELECTR	1
5	PAFZZ	57301	91380	...BEARING,NOSE BENDIX	1
6	XDFZZ	57301	92528	...BOLT,MACHINE	4
7	XDFZZ	57301	3P22800-04	...HOUSING	1
8	XDFZZ	57301	16F-025028-12	...SCREW,MACHINE	1
9	XDFZZ	57301	93047	...WASHER,FLAT	1
10	XDFZZ	57301	3P22341	...WHEEL,TURBINE	1
11	PAFZZ	57301	90001-046	...PACKING,PREFORMED	2
12	XDFZZ	57301	90211-09	...KEY,WOODRUFF	1
13	PAFZZ	57301	22376	...SEAL,PLAIN,ENCASED	1
14	XDFZZ	57301	93050-02	...SPACER,RING	1
15	XDFZZ	57301	22183	...HOUSING	1
16	XDFZZ	57301	22849	...PLUG,AIR VALVE	1
17	XDFZZ	57301	93502-13	...CAP-PLUG,PROTECTIVE	3
18	PAFZZ	57301	90001-016	...PACKING,PREFORMED	1
19	PAFZZ	57301	21927	...PLUNGER,DETENT	1
20	PAFZZ	57301	90408-08	...SPRING,HELICAL,COMP	1
21	XDFZZ	57301	21929	...SEAT,AIR VALVE	1
22	PAFZZ	57301	90002-010	...PACKING,PREFORMED	1
23	XDFZZ	57301	93066	...SPACER,DRIVE	1
24	XDFZZ	57301	92105-06	...NUT,BEARING RETAINE	1
25	XDFZZ	57301	4P22204	...SHAFT	1
26	PAFZZ	57301	91394	...BEARING,BALL,ANNULA	1
27	XDFZZ	57301	93069-04	...WASHER,FLAT	1
28	XDFZZ	57301	22146	...PLATE,RETAINER	1
29	XDFZZ	57301	92531	...SCREW,MACHINE	1
30	PAFZZ	57301	90408-09	...SPRING,FLAT	1
31	XDFZZ	57301	22144	...LEVER ARM	1
32	XDFZZ	57301	4P22601	...TRIP HAMMER	1
33	PAFZZ	57301	90408-07	...SPRING,FLAT	1
34	XDFZZ	57301	91516	...PIN,STRAIGHT,HEADLE	1
35	XDFZZ	57301	22051	...SHAFT,PLANET GEAR	3
36	PAFZZ	57301	91389	...BEARING,BALL,ANNULA	3
37	XDFZZ	57301	21988	...GEAR,PLANET	3
38	PAFZZ	57301	21985	...GEAR,INTERNAL	1
39	PAFZZ	57301	93065	...SPACER,RING	6
40	XDFZZ	57301	1P22786	...FITTING,EXHAUST,SCR	1
41	XDFZZ	57301	21899	...SHAFT,TURBINE	1
42	XDFZZ	57301	93005-05	...SPACER,BEARING	1
43	PAFZZ	57301	90424	...SPRING,FLAT	1
44	PAFZ2	57301	92001-15	...RING,RETAINING	1
45	PAFZZ	57301	91281	...TURBINE BEARING	2
46	XDFZZ	57301	2P22673-02	...NOZZLE,TURBINE	1
47	XDFZZ	57301	22634	...HOUSING,TURBINE	1

END OF FIGURE

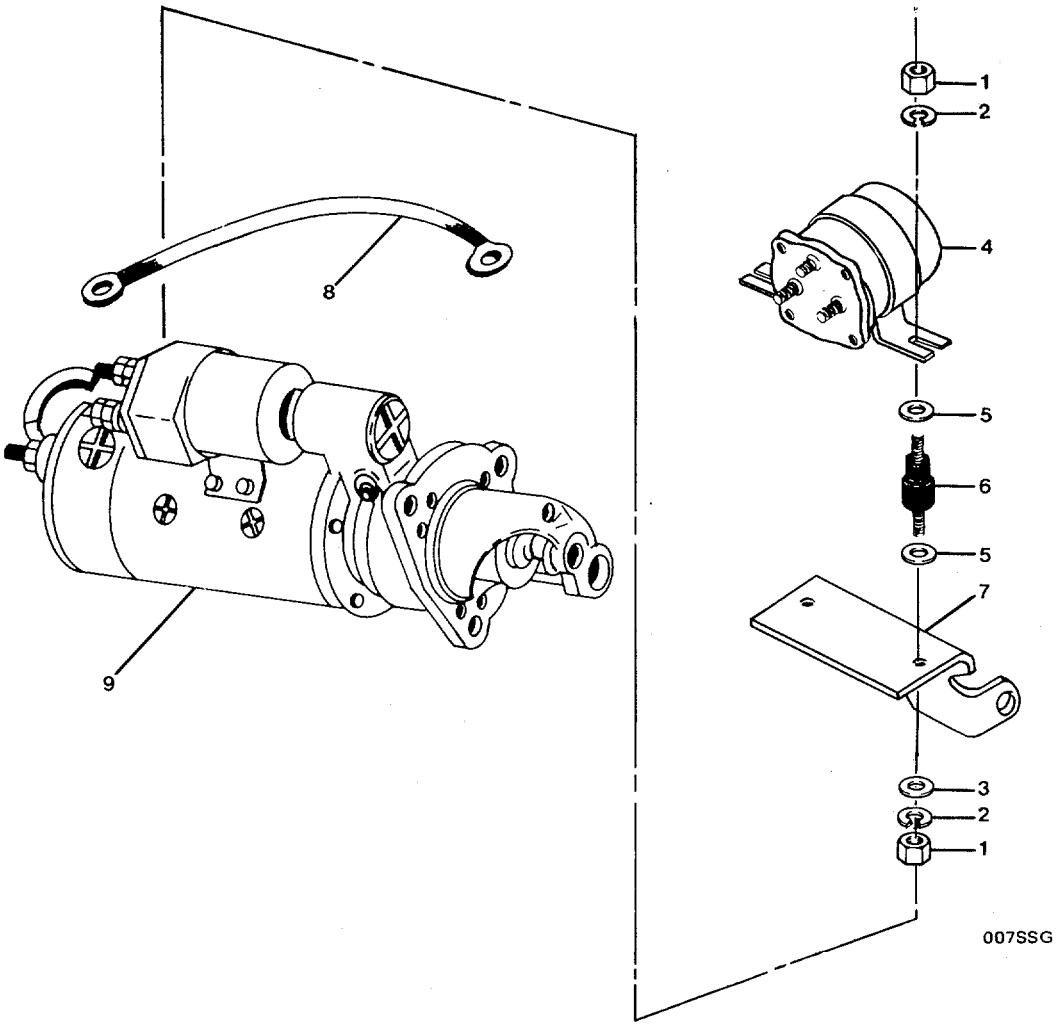

FIGURE 50. Electric Starting Motor/Magnet Switch Group.

(1) ITEM NO	(2) SMR CODE	(3) FSCM	(4) PART NUMBER	(5) DESCRIPTION AND USABLE ON CODES(UOC)	(6) QTY
				GROUP 03 SHIP SERVICE GENERATOR SET	
				FIG. 50 ELECTRIC STARTING MOTOR/ MAGNET SWITCH GROUP	
	XCCOO	15434	13.05/15.05-03	..ELECTRIC STARTING	1
1	XDOZZ	15434	S-224	...NUT,PLAIN,HEXAGON	4
2	XDOZZ	96906	MS122032	...WASHER,LOCK	4
3	XDOZZ	15434	S-631	...WASHER,FLAT	2
4	PBCZZ	15434	3050692	...SWITCH,SOLID STATE	1
5	XDOZZ	15434	70709	...WASHER,FLAT	4
6	XDOZZ	15434	204493	...ISOLATOR,VIBRATION	2
7	XDOZZ	15434	3050694	...BRACKET,MAGNETIC SW	1
8	XDOZZ	15434	3018924	...LEAD,ELECTRICAL	1
9	PACZZ	15434	3021036	...STARTER,ENGINE,ELEC	1

END OF FIGURE

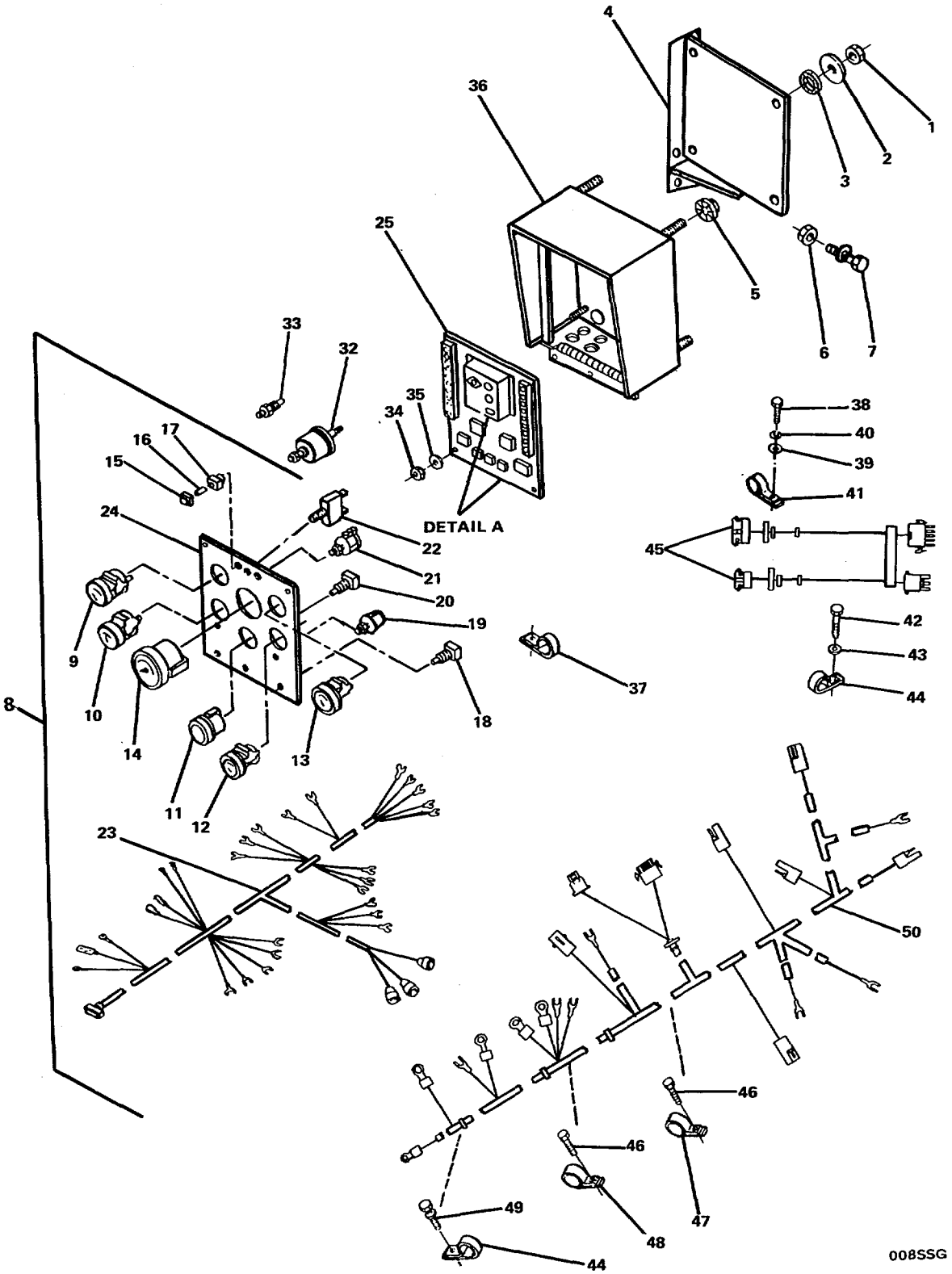

FIGURE 51. Instrument Panel Assembly (Sheet 1 of 2)

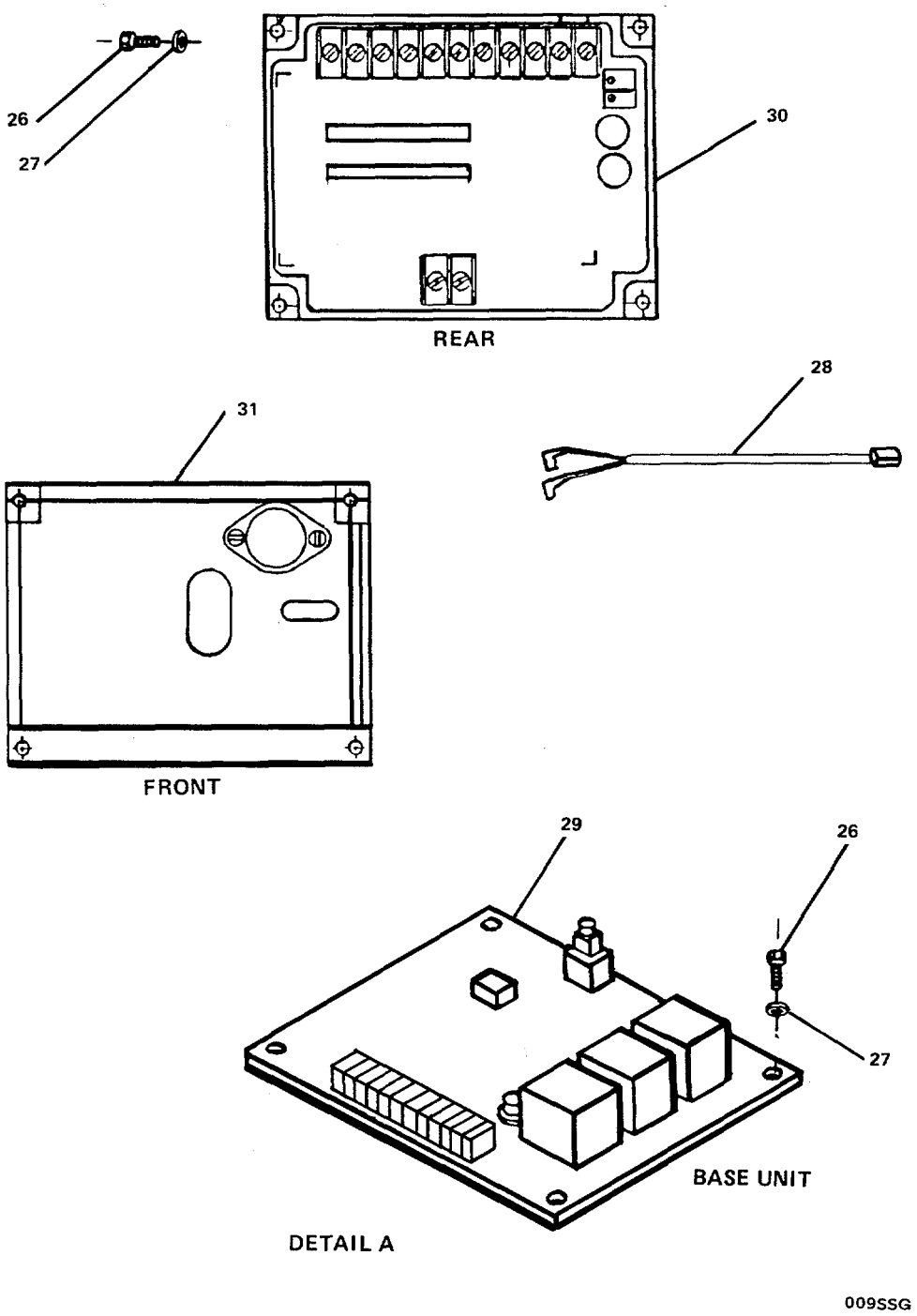

FIGURE 51. Instrument Panel Assembly (Sheet 2 of 2)

(1) ITEM NO	(2) SMR CODE	(3) FSCM	(4) PART NUMBER	(5) DESCRIPTION AND USABLE ON CODES(UOC)	(6) QTY
				GROUP 03 SHIP SERVICE GENERATOR SET	
				FIG. 51 INSTRUMENT PANEL ASSEMBLY	
1	XDOZZ	15434	3175239	..NUT	8
2	XDOZZ	15434	3033800	..WASHER,FLAT	8
3	XDOZZ	15434	3035083	..MOUNT,RESILIENT	8
4	XDOZZ	15434	3035796	..BRACKET,INSTRUMENT	1
5	XDOZZ	15434	3035084	..MOUNT,RESILIENT	8
6	XDOZZ	15434	S-223	..NUT,PLAIN,HEXAGON	4
7	XDOZZ	15434	3012471	..SCREW	4
8	XDOO0	15434	3037741	..INSTRUMENT PANEL AS	1
9	PAOZZ	15434	3015232	...GAGE,PRESSURE,DIAL	1
10	PAOZZ	15434	3015235	... VOLTMETER	1
11	PAOZZ	15434	3035766	... METER,TIME TOTALIZI	1
12	PAOZZ	15434	3015234	... THERMOMETER,INDICAT	1
13	PAOZZ	15434	3015233	... INDICATOR,ENGINE TE	1
14	PAOZZ	15434	3031734	...TACHOMETER,ELECTRIC	1
15	PAOZZ	15434	3018796	...CAPILENS,SPECIAL	3
16	PAOZZ	15434	3018799	...LAMP,INCANDESCENT	3
17	XDOZZ	15434	3018800	...LIGHT,INDICATOR	3
18	PAOZZ	96906	MS35058-23	...SWITCH,TOGGLE	1
19	PAOZZ	15434	3035150	...SWITCH,PUSH	1
20	PAOZZ	96906	MS35058-22	...SWITCH,TOGGLE	1
21	PAOZZ	15434	3015105	...RESISTOR,VARIABLE,N	1
22	PAOZZ	15434	3034953	...CIRCUIT BREAKER	1
23	XDOZZ	15434	3035126	...WIRING HARNESS,BRAN	1
24	XDOZZ	15434	3031698	...PANEL,INSTRUMENT	1
25	PAOOO	15434	3053065	...TERMINAL BOARD	1
26	XDOZZ	15434	70310	....SCREW,MACHINE	8
27	XDOZZ	15434	70262	....WASHER,LOCK	8
28	XDOZZ	15434	3052510	.... WIRING HARNESS	1
29	PAOZZ	15434	3036453	....SWITCH,CENTRIFUGAL	1
30	PAOZZ	15434	3044195	.... ELECTRONIC COMPONEN	1
31	PAOZZ	15434	3023534	....ELECTRONIC COMPONEN	1
32	PAOZZ	15434	3015237	..TRANSDUCER,MOTIONAL	1
33	PAOZZ	15434	3015238	..TRANSDUCER,MOTIONAL	1
34	XDOZZ	15434	70646	..NUT,SELF-LOCKING,HE	4
35	XDOZZ	15434	128006	..WASHER,FLAT	4
36	XDOZZ	15434	3053010	..CABINET,INSTRUMENT	1
3	XDOZZ	15434	108722	..CLAMP,LOOP	5
38	XDOZZ	15434	S-169	..SCREW,CAP,HEXAGON H	2
39	XDOZZ	15434	S-670	..WASHER,FLAT	2
40	XDOZZ	15434	S-608	..WASHER,LOCK	2
41	XDOZZ	15434	3002604	..CLAMP,LOOP	2
42	XDOZZ	15434	S-117	..SCREW,CAP,HEXAGON H	1
43	XDOZZ	15434	108330	..WASHER,FLAT	2
44	XDOZZ	15434	180372	..CLAMP,LOOP	2
45	XDOZZ	15434	3035132	..CABLE ASSEMBLY,POWE	1
46	XDOZZ	15434	S-129	..SCREW,CAP,HEXAGON H	5
47	XDOZZ	15434	68425	..CLAMP,LOOP	1
48	XDOZZ	15434	69911-A	..CLAMP,LOOP	3

(1) ITEM NO	(2) SMR CODE	(3) FSCM	(4) PART NUMBER	(5) DESCRIPTION AND USABLE ON CODES(UOC)	(6) QTY
49	XDOZZ	15434	3006182	..SCREW,CAP,HEXAGON H.....	1
50	XDOZZ	15434	3035120	..WIRING HARNESS.....	1

END OF FIGURE

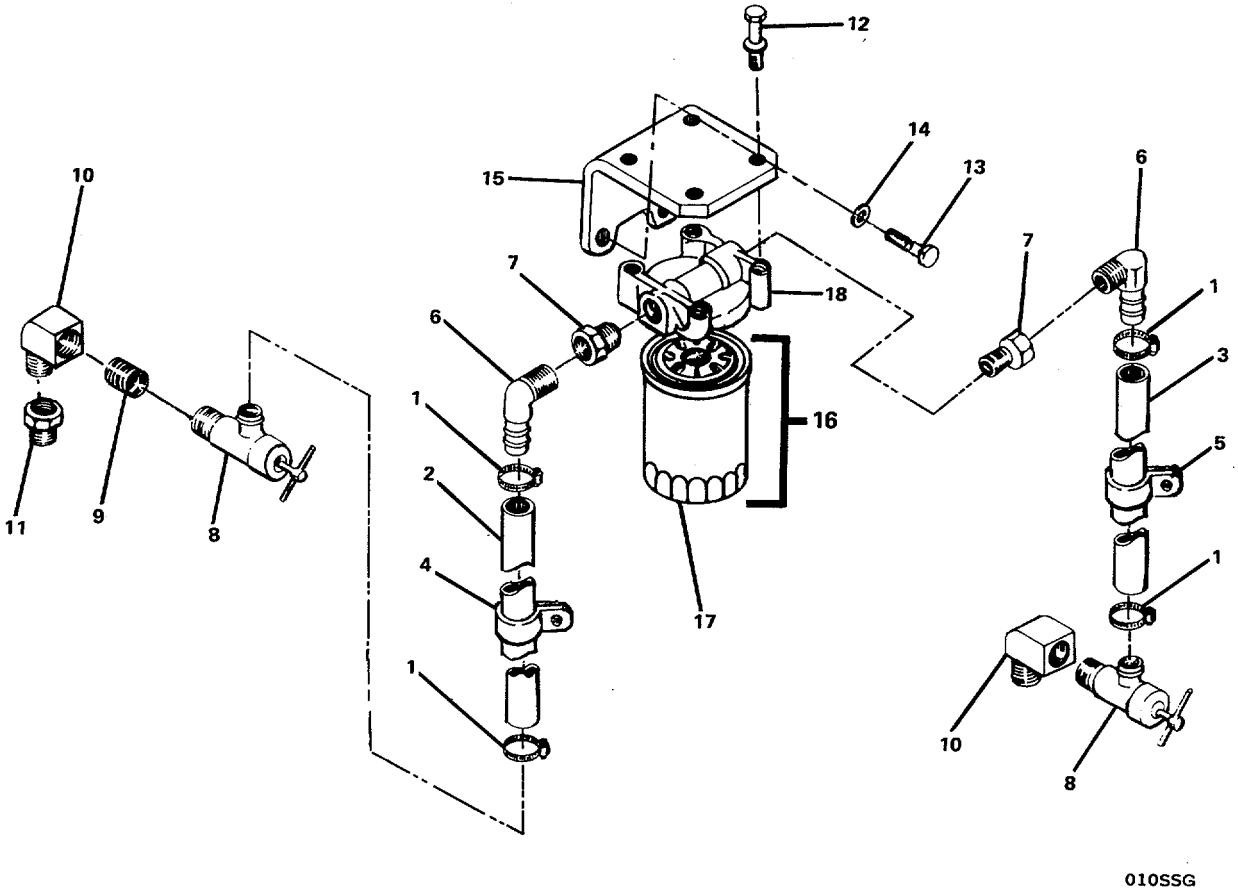

FIGURE 52. Water Filter Assembly.

(1) ITEM NO	(2) SMR CODE	(3) FSCM	(4) PART NUMBER	(5) DESCRIPTION AND USABLE ON CODES(UOC)	(6) QTY
				GROUP 03 SHIP SERVICE GENERATOR SET	
				FIG. 52 WATER FILTER ASSEMBLY	
1	XDOZZ	15434	179904	..CLAMP,HOSE	4
2	PAOZZ	15434	179930	..HOSE	1
3	PAOZZ	15434	179918	..HOSE,NONMETALLIC	1
4	XDOZZ	15434	152767	..CLAMP,LOOP	2
5	XDOZZ	15434	68425	..CLAMP,LOOP	1
6	XDOZZ	15434	179903	..ELBOW,PIPE TO HOSE	2
7	XDOZZ	15434	187317	..COUPLING,PIPE	2
8	XDOZZ	15434	179901	..VALVE,ANGLE	2
9	XDOZZ	15434	3048908	..REDUCER,PIPE	1
10	XDOZZ	15434	70470	..ELBOW,TUBE	2
11	XDOZZ	15434	S-921-D	..REDUCER,PIPE	1
12	XDOZZ	15434	3010596	..SCREW,ASSEMBLED WAS	4
13	XDOZZ	15434	190799	..SCREW,CAP,HEXAGON H	2
14	XDOZZ	96906	MS35338-47	..WASHER,LOCK	2
15	XDOZZ	15434	3010360	..BRACKET,ANGLE	1
16	XDOOO	15434	3827107	..WATER FILTER ASSEMB	1
17	PACZZ	15434	3318319	...FILTER,FLUID	1
18	XDOZZ	15434	204163	...HEAD,FLUID FILTER	1

END OF FIGURE

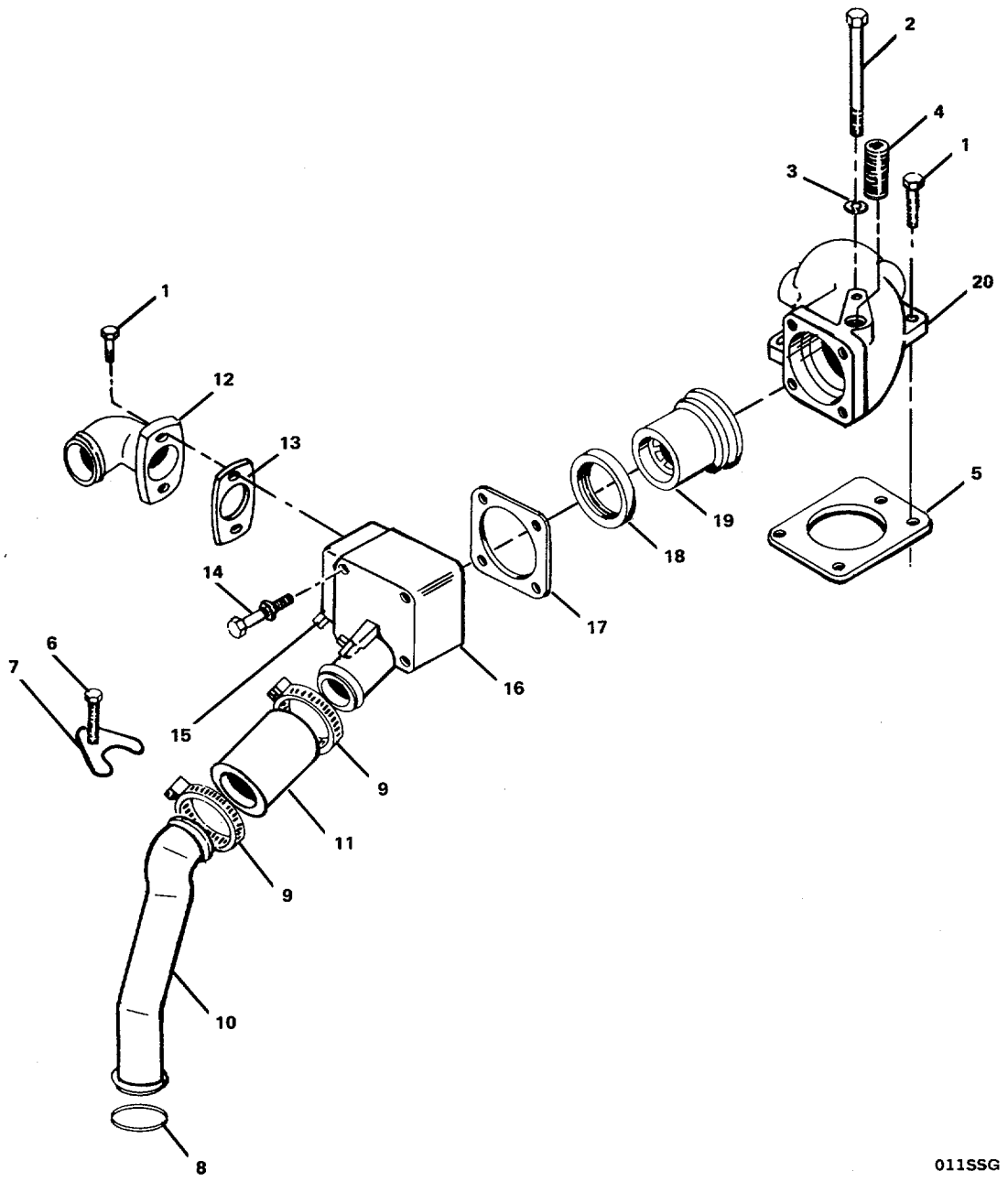

FIGURE 53. Thermostat Housing Group.

(1) ITEM NO	(2) SMR CODE	(3) FSCM	(4) PART NUMBER	(5) DESCRIPTION AND USABLE ON CODES(UOC)	(6) QTY
				GROUP 03 SHIP SERVICE GENERATOR SET	
				FIG. 53 THERMOSTAT HOUSING GROUP	
	XCCOO	15434	08.07-03	..THERMOSTAT HOUSING	1
1	XDOZZ	15434	3010595	...SCREW,MACHINE.....	5
2	XDOZZ	15434	S-199-A	...SCREW,CAP,HEXAGON H.....	1
3	XDOZZ	96906	MS35338-8	...WASHER,LOCK.....	1
4	XDOZZ	15434	S-995	...PLUG,PIPE	1
5	PAOZZ	15434	3009457	...GASKET.....	1
6	XDOZZ	15434	3022589	...BOLT,MACHINE.....	1
7	XDOZZ	15434	214617	...CLAMP,RIM CLENCHING	1
8	PAOZZ	15434	43463-A	...PACKING,PREFORMED PART OF KIT P/N 3801330	1
9	XDOZZ	96906	MS35842-13	...CLAMP,HOSE.....	2
10	XDOZZ	15434	213485	...TUBE,BENT,METALLIC	1
11	PAOZZ	15434	102522	...HOSE,NONMETALLIC	1
12	XDOZZ	15434	3018764	...CONNECTION,WATER OU	1
13	PAOZZ	15434	3019158	...GASKET (WATER OUTLET CONNECTION) PART OF KIT P/N 3801330.....	1
14	XDOZZ	15434	3010597	...SCREW.....	4
15	XDOZZ	15434	3013786	...PLUG,PIPE	1
16	XDOZZ	15434	3017748	...HOUSING	1
17	PACZZ	15434	208128	...GASKET PART OF KIT P/N 3801330.....	1
18	PACZZ	15434	186780	...SEAL,THERMO.....	1
19	PACZZ	15434	201737	...THERMOSTAT,FLOW CON.....	1
20	XDOZZ	15434	3009464	...SUPPORT,THERMOSTAT.....	1

END OF FIGURE

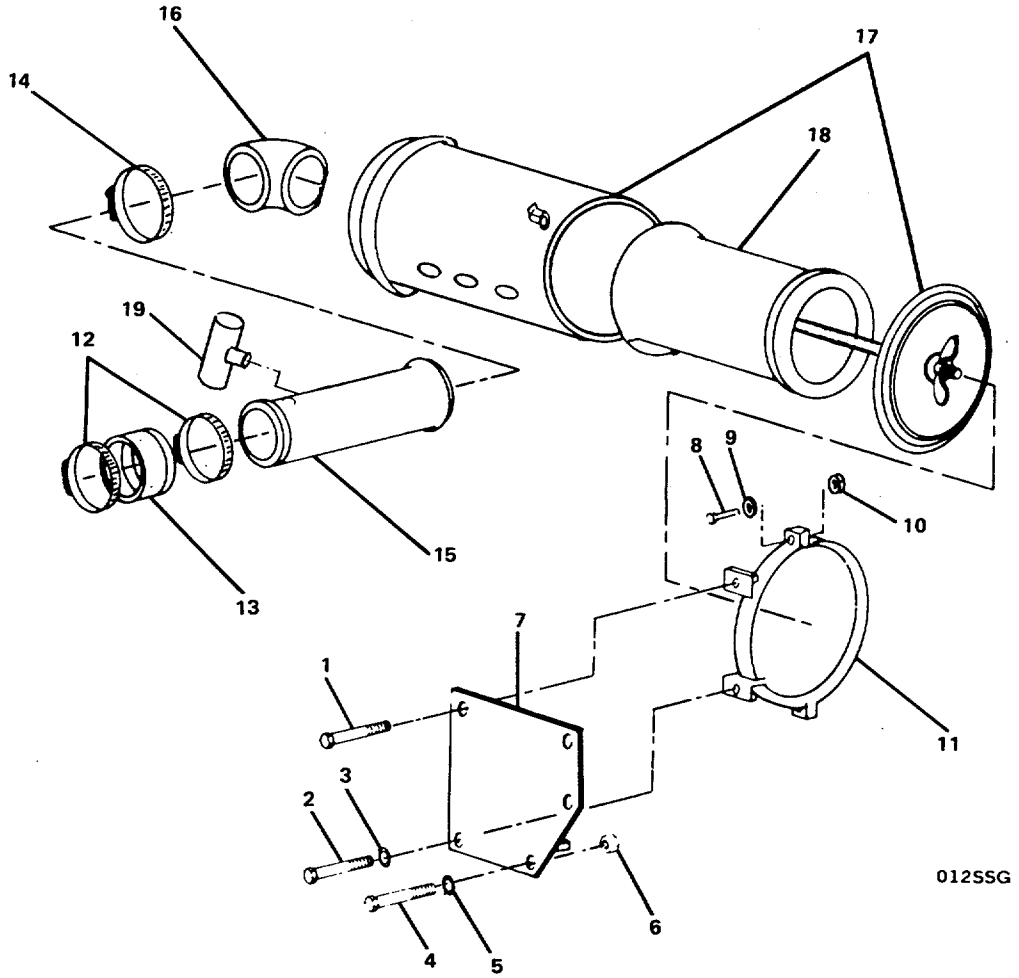

FIGURE 54. Air Cleaner Group.

(1) ITEM NO	(2) SMR CODE	(3) FSCM	(4) PART NUMBER	(5) DESCRIPTION AND USABLE ON CODES(UOC)	(6) QTY
				GROUP 03 SHIP SERVICE GENERATOR SET	
				FIG. 54 AIR CLEANER GROUP	
	XCOOO	15434	10.04-03	..AIR CLEANER GROUP	1
1	XDOZZ	15434	120516	...SCREW,CAP,HEXAGON H	2
2	XDOZZ	15434	S-186-A	...SCREW,CAP,HEXAGON H	2
3	XDOZZ	15434	127316	...WASHER,RECESSED	2
4	XDOZZ	15434	S-111	...BOLT,MACHINE	2
5	XDOZZ	96906	MS35338-7	...WASHER,LOCK	2
6	XDOZZ	15434	S-221	...NUT,PLAIN,HEXAGON	2
7	XDOZZ	15434	3044632	...BRACE,CORNER	1
8	XDOZZ	15434	S-112	...SCREW,CAP,HEXAGON H	4
9	XDOZZ	96906	MS35338-8	...WASHER,LOCK	4
10	XDOZZ	15434	S-223	...NUT,PLAIN,HEXAGON	4
11	XDOZZ	15434	112196	...STRAP,AIR CLEANER	2
12	XDOZZ	15434	125741	...CLAMP,HOSE	2
13	PAOZZ	15434	3030790	...HOSE,PREFORMED	1
14	XDOZZ	15434	140313	...CLAMP,HOSE	2
15	PBOZZ	15434	3000302	...TUBE,METALLIC	1
16	XDOZZ	15434	3030772	...ELBOW,NONMETALLIC	1
17	XDOOO	15434	3021644	...AIR CLEANER,INTAKE	1
18	PACZZ	15434	3022209	....FILTER ELEMENT,INTA	1
19	PAOZZ	15434	178957	...INDICATOR,FILTER WA	1

END OF FIGURE

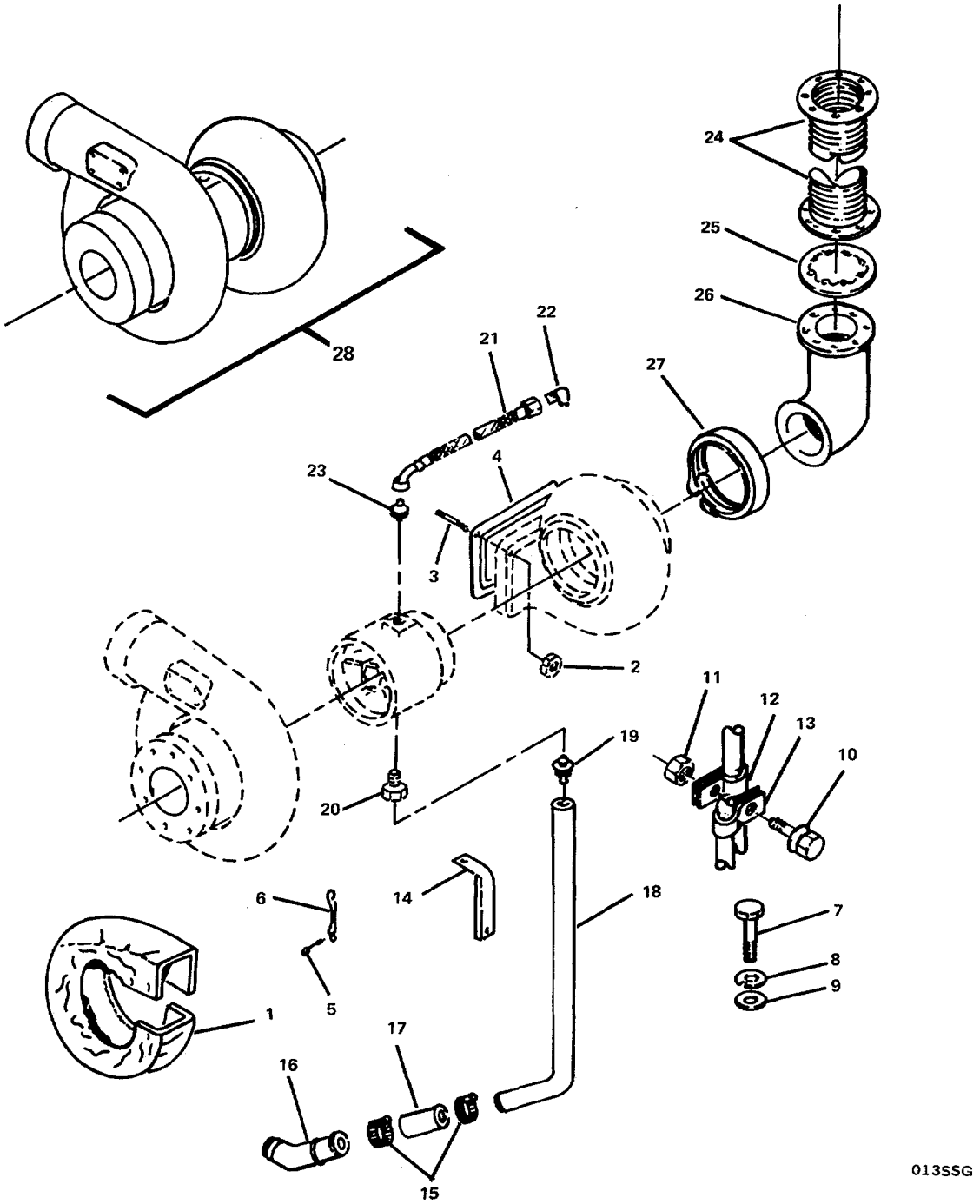

FIGURE 55. Turbocharger and Exhaust Group.

(1) ITEM NO	(2) SMR CODE	(3) FSCM	(4) PART NUMBER	(5) DESCRIPTION AND USABLE ON CODES(UOC)	(6) QTY
				GROUP 03 SHIP SERVICE GENERATOR SET	
				FIG. 55 TURBOCHARGER AND EXHAUST GROUP	
	XCCOO	15434	10.06-03	..TURBOCHARGER AND EX	1
1	PACZZ	15434	3002138	...COVER INSULATING TU	1
2	XDCZZ	15434	3056158	...NUT,SLEEVE	4
3	XDCZZ	15434	3056155	...STUD,PLAIN	4
4	PACZZ	15434	190849	...GASKET (EXHAUST OUTLET CONNECTION) PART OF KIT P/N 3801330.	1
5	XDCZZ	15434	110266	...SCREW,CAP,HEXAGON H	2
6	XDCZZ	15434	116982	... LOCKING PLATE,NUT PART OF KIT P/N 3801330	1
7	XDCZZ	15434	S-107	...SCREW,CAP,HEXAGON H	3
8	XDCZZ	96906	MS35338-7	...WASHER,LOCK	3
9	XDCZZ	15434	S-626	...WASHER,FLAT	3
10	XDCZZ	15434	3013904	...SCREW	1
11	XDCZZ	15434	S-221	...NUT,PLAIN,HEXAGON	2
12	XDCZZ	15434	69465	...CLAMP,LOOP	1
13	XDCZZ	15434	108722	...CLAMP,LOOP	2
14	XDCZZ	15434	3028616	...BRACKET,ANGLE	1
15	XDCZZ	15434	43828-A	...CLAMP,HOSE	2
16	XDCZZ	15434	3003536	...ELBOW,PIPE TO HOSE	1
17	PACZZ	15434	3035174	...HOSE,NONMETALLIC	1
18	PACZZ	15434	3022867	...TUBE,BENT,METALLIC	1
19	XDCZZ	15434	3014354	...ADAPTER,STRAIGHT,PI	1
20	XDCZZ	15434	3022865	...REDUCER,PIPE	1
21	PACZZ	15434	209959	...HOSE ASSEMBLY,NONME	1
22	XDCZZ	15434	142429	...ELBOW,PIPE TO TUBE	1
23	XDCZZ	15434	186918	...ADAPTER,EXHAUST	1
24	PACZZ	15434	203555	...CONNECTOR,EXHAUST	1
25	PACZZ	15434	106322	...GASKET	1
26	XDCZZ	15434	203432	...CONNECTION,EXHAUST	1
27	XDCZZ	15434	186917	...CLAMP,HOSE	1
28	PACZZ	15434	3801941	...TURBOSUPERCHARGER	1

END OF FIGURE

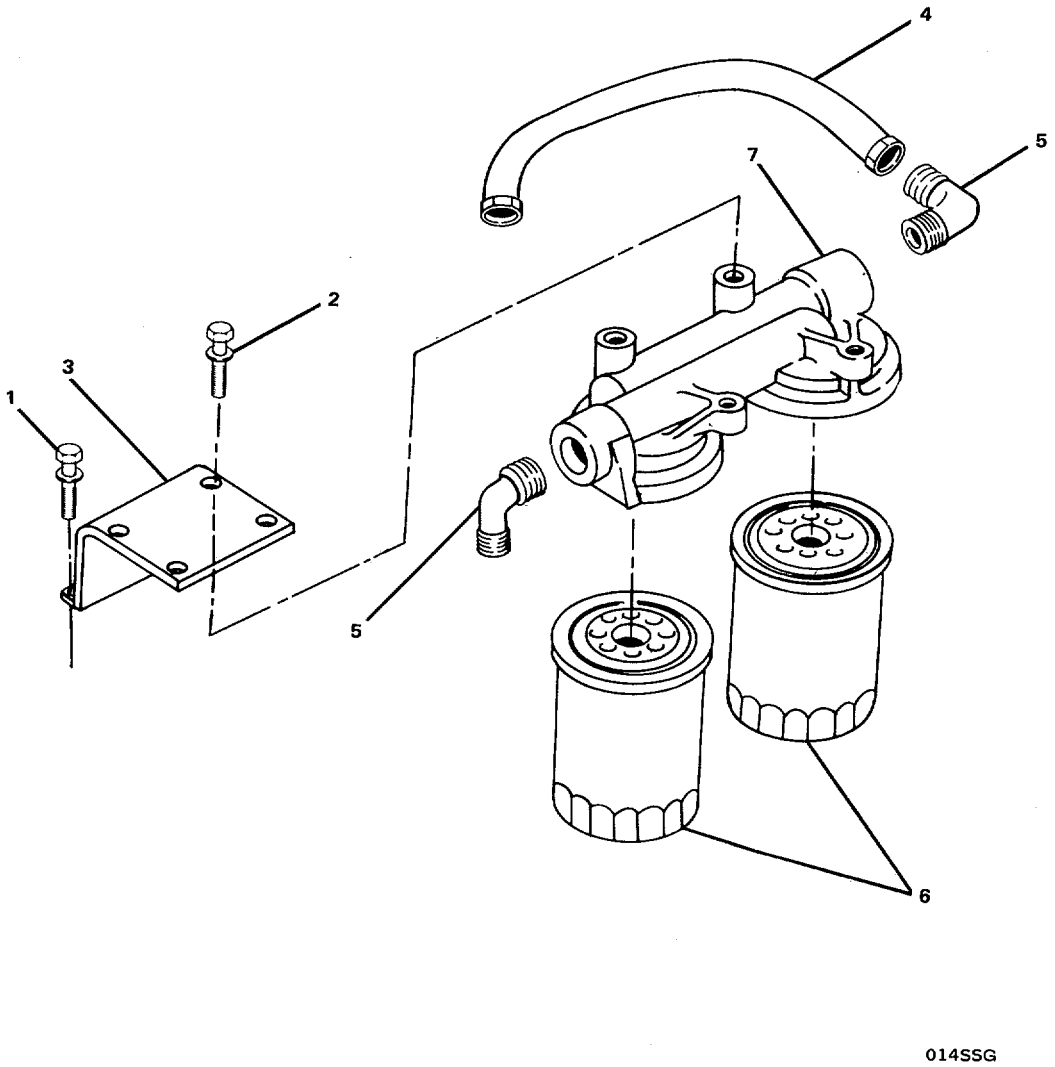

FIGURE 56. Fuel Filter Group.

(1) ITEM NO	(2) SMR CODE	(3) FSCM	(4) PART NUMBER	(5) DESCRIPTION AND USABLE ON CODES(UOC)	(6) QTY
				GROUP 03 SHIP SERVICE GENERATOR SET	
				FIG. 56 FUEL FILTER GROUP	
	XCOOO	15434	06.04-03	..FUEL FILTER GROUP	1
1	XDOZZ	15434	3034526	...SCREW,ASSEMBLED	2
2	XDOZZ	15434	3010596	...SCREW,ASSEMBLED	4
3	XDOZZ	15434	3011380	...BRACKET,ANGLE	1
4	PAOZZ	15434	AM1002200SS	...HOSE ASSEMBLY,NONME	1
5	XDOZZ	15434	129859	...ELBOW,TUBE TO BOSS	2
6	PACZZ	15434	3315847	...CARTRIDGE,FUEL	2
7	XDOZZ	15434	212013	...HEAD,FLUID FILTER	1

END OF FIGURE

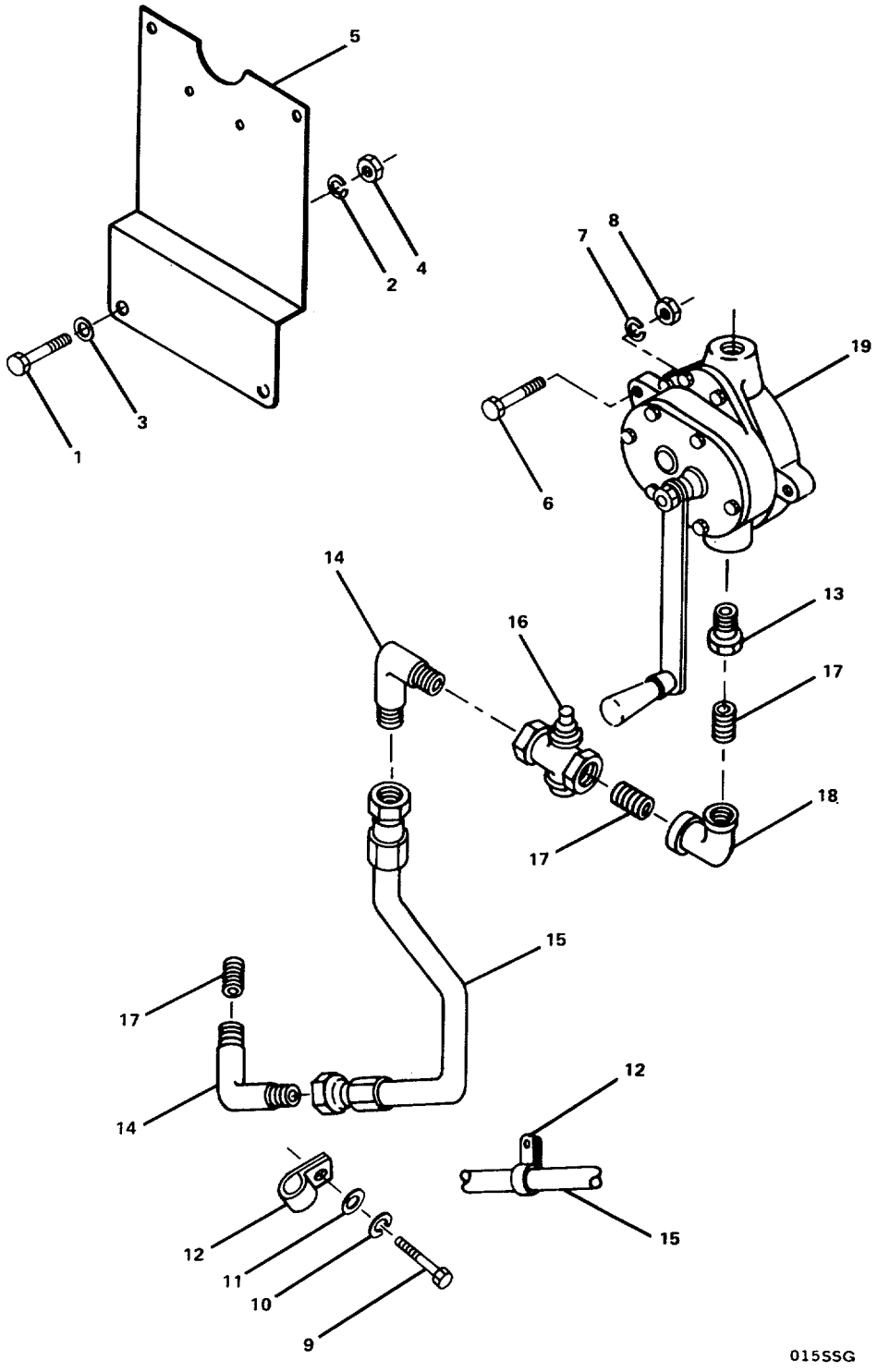

FIGURE 57. Sump Pump Group.

(1) ITEM NO	(2) SMR CODE	(3) PART FSCM	(4) NUMBER	(5) DESCRIPTION AND USABLE ON CODES(UOC)	(6) QTY
				GROUP 03 SHIP SERVICE GENERATOR SET	
				FIG. 57 SUMP PUMP GROUP	
	XCOOO	15434	12.01.2-03	..SUMP PUMP GROUP	1
1	XDOZZ	15434	106289	...SCREW,CAP,HEXAGON H	2
2	XDOZZ	15434	S-608	...WASHER LOCK	2
3	XDOZZ	15434	S-670	...WASHER,FLAT	2
4	XDOZZ	15434	S-200	...NUT,PLAIN,HEXAGON	2
5	XDOZZ	15434	3061846	...BRACKET,ANGLE	1
6	XDOZZ	15434	S-105-C	...SCREW,CAP,HEXAGON H	3
7	XDOZZ	96906	MS122032	...WASHER,LOCK	3
8	XDOZZ	15434	127018	...WASHER	3
9	XDOZZ	15434	S-181	...SCREW,CAP,HEXAGON H	2
10	XDOZZ	96906	MS35338-50	...WASHER,LOCK	2
11	XDOZZ	15434	S-658	...WASHER,FLAT	2
12	XDOZZ	15434	204263	...CLAMP,LOOP	2
13	XDOZZ	15434	S-910-C	...BUSHING,PIPE	2
14	XDOZZ	15434	100501	...ELBOW,ADAPTER,MALE	2
15	PAOZZ	15434	AM1005400SS	...HOSE ASSEMBLY,NONME	1
16	PAOZZ	15434	3200802	...COCK,SHUTOFF,SCREW	1
17	XDOZZ	15434	S-920	...NIPPLE,PIPE	2
18	XDOZZ	15434	S-980	...ELBOW,PIPE	1
19	PBOZZ	15434	123822	...PUMP,RECIPROCATING	1

END OF FIGURE

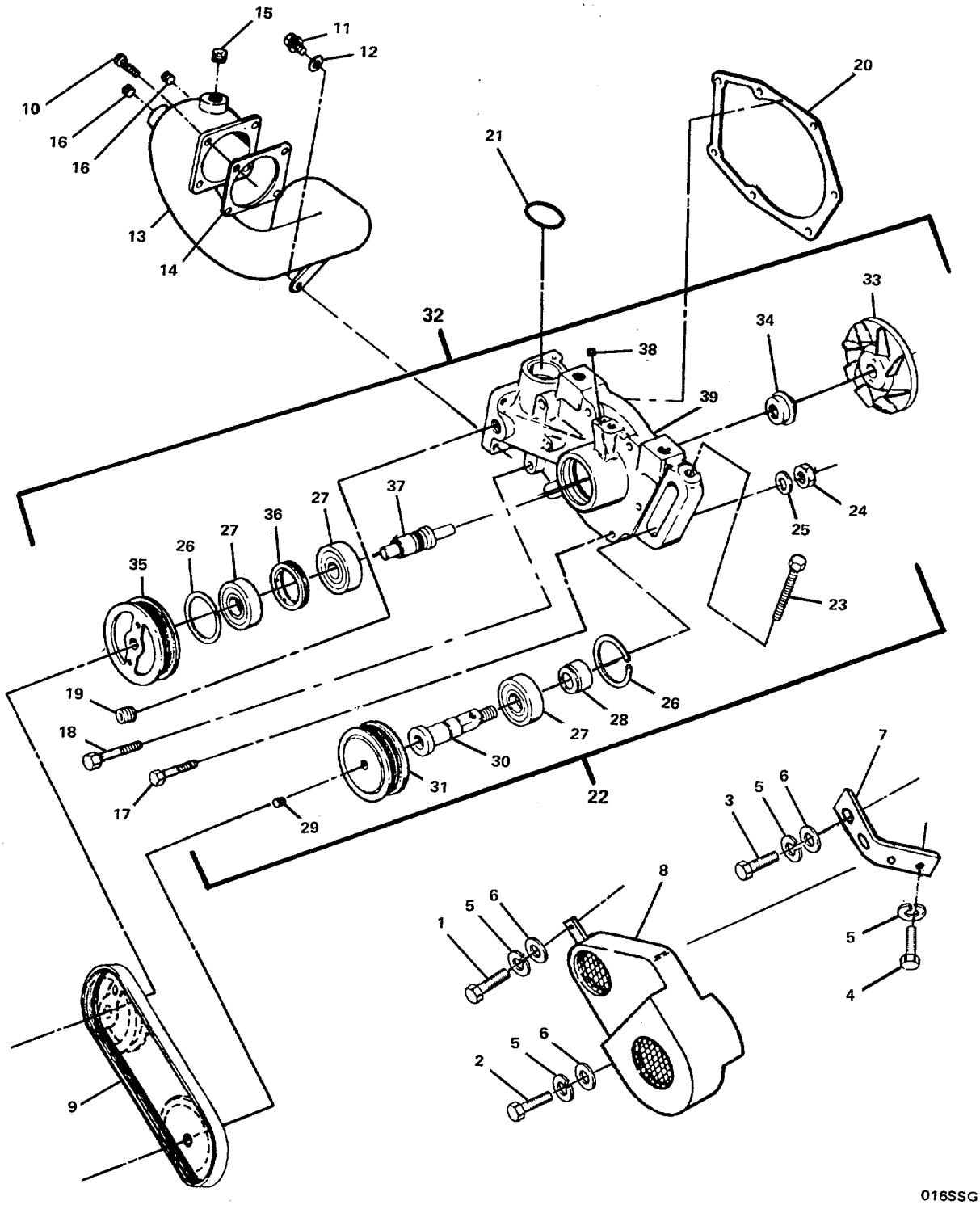

FIGURE 58. Water Pump and Idler Group.

(1) ITEM NO	(2) SMR CODE	(3) FSCM	(4) PART NUMBER	(5) DESCRIPTION AND USABLE ON CODES(UOC)	(6) QTY
				GROUP 03 SHIP SERVICE GENERATOR SET	
				FIG. 58 WATER PUMP AND IDLER GROUP	
	XCCOO	15434	08.01-03	..WATER PUMP/IDLER.....	1
1	XDCZZ	15434	137797	...SCREW,CAP,HEXAGON.....	1
2	XDCZZ	15434	108707	...SCREW,CAP,HEXAGON H	1
3	XDCZZ	15434	S-112	...SCREW,CAP,HEXAGON H	1
4	XDCZZ	15434	S-109	...SCREW,CAP,HEXAGON H	1
5	XDCZZ	96906	MS35338-8	...WASHER,LOCK	4
6	XDCZZ	96906	MS27183-14	...WASHER,FLAT	3
7	XDCZZ	15434	3022183	...BRACKET,ANGLE	1
8	XDCZZ	15434	3046110	...GUARD,MECHANICAL DR	1
9	PACZZ	15434	217638	...BELT,V	1
10	XDCZZ	15434	3010595	...SCREW,MACHINE	4
11	XDCZZ	15434	3012470	...SCREW,ASSEMBLED WAS	1
12	XDCZZ	15434	63842	...WASHER,FLAT	1
13	XDCZZ	15434	3028280	...WATER OUTLET,ENGINE	1
14	PACZZ	15434	3024960	...GASKET PART OF KIT P/N 3801468.....	1
15	XDCZZ	15434	3008470	...PLUG	1
16	XDCZZ	15434	3008468	...PLUG,PIPE	2
17	XDCZZ	15434	3012468	...SCREW,CAP,HEXAGON H	4
18	XDCZZ	15434	3012469	...SCREW,CAP,HEXAGON H	2
19	XDCZZ	15434	3013786	...PLUG,PIPE	1
20	PACZZ	15434	3002385	...GASKET (WATER PUMP) PART OF KIT P/N 3801468.....	1
21	PACZZ	15434	43463-A	...PACKING,PREFORMED	1
22	PACOO	15434	3050398	...ADJUSTING DEVICE,BE	1
23	XDCZZ	15434	182706	....SCREW,CAP,HEXAGON H.....	1
24	XDCZZ	15434	S-201	....NUT,PLAIN,HEXAGON	1
25	XDCZZ	15434	213082	....WASHER,FLAT	1
26	PACZZ	15434	S-16255	.... RING,BEARING RETAIN PART OF KIT P/N 3801710.....	2
27	PACZZ	15434	115519	....BEARING,BALL,ANNULA PART OF KIT P/N 3801710.....	3
28	PACZZ	15434	3050395	....SPACER,SLEEVE	1
29	XDCZZ	15434	S-965-E	....PLUG,MACHINE THREAD.....	1
30	XDCZZ	15434	3050396	....SHAFT,IDLER	1
31	XDCZZ	15434	215397	....PULLEY,GROOVE	1
32	PBCOO	15434	3801708	...PUMP,COOLING SYSTEM	1
33	PACZZ	15434	3000888	....IMPELLER,PUMP,CENTR PART OF KIT P/N 3801712.....	1
34	PACZZ	15434	3033677	....PACKING WITH RETAIN PART OF KIT P/N 3801710.....	1
35	XDCZZ	15434	3025861	....PULLEY,WATER PUMP.....	1
36	PACZZ	15434	196844	....SPACER PART OF KIT P/N 3801712	1
37	XDCZZ	15434	3050394	....SHAFT,SHOULDERED PART OF KIT P/N 3801712	1
38	XDCZZ	15434	S-911-B	....PLUG,PIPE	2
39	XDCZZ	15434	3045163	....BODY,WATER PUMP	1
	PACZZ	15434	3801710	....PARTS KIT,ENGINE WA (NEEDED FOR COMPLETE REPAIR OF WATER PUMP) ...	1

(1) ITEM NO	(2) SMR CODE	(3) FSCM	(4) PART NUMBER	(5) DESCRIPTION AND USABLE ON CODES(UOC)	(6) QTY
				BEARING,BALL,ANNULA(3) 58-27	
				PACKING WITH RETAIN(1) 58-34	
				RING,BEARING RETAIN(2) 58-26	
	PACZZ	15434	3801712	....PARTS KIT,ENGINE WA (NEEDED..... FOR COMPLETE REPAIR OF WATER PUMP)	1
				IMPELLER,PUMP,CENTR(1) 58-33	
				SHAFT,SHOULDERED (1) 58-37	
				SPACER (1) 58-36	

END OF FIGURE

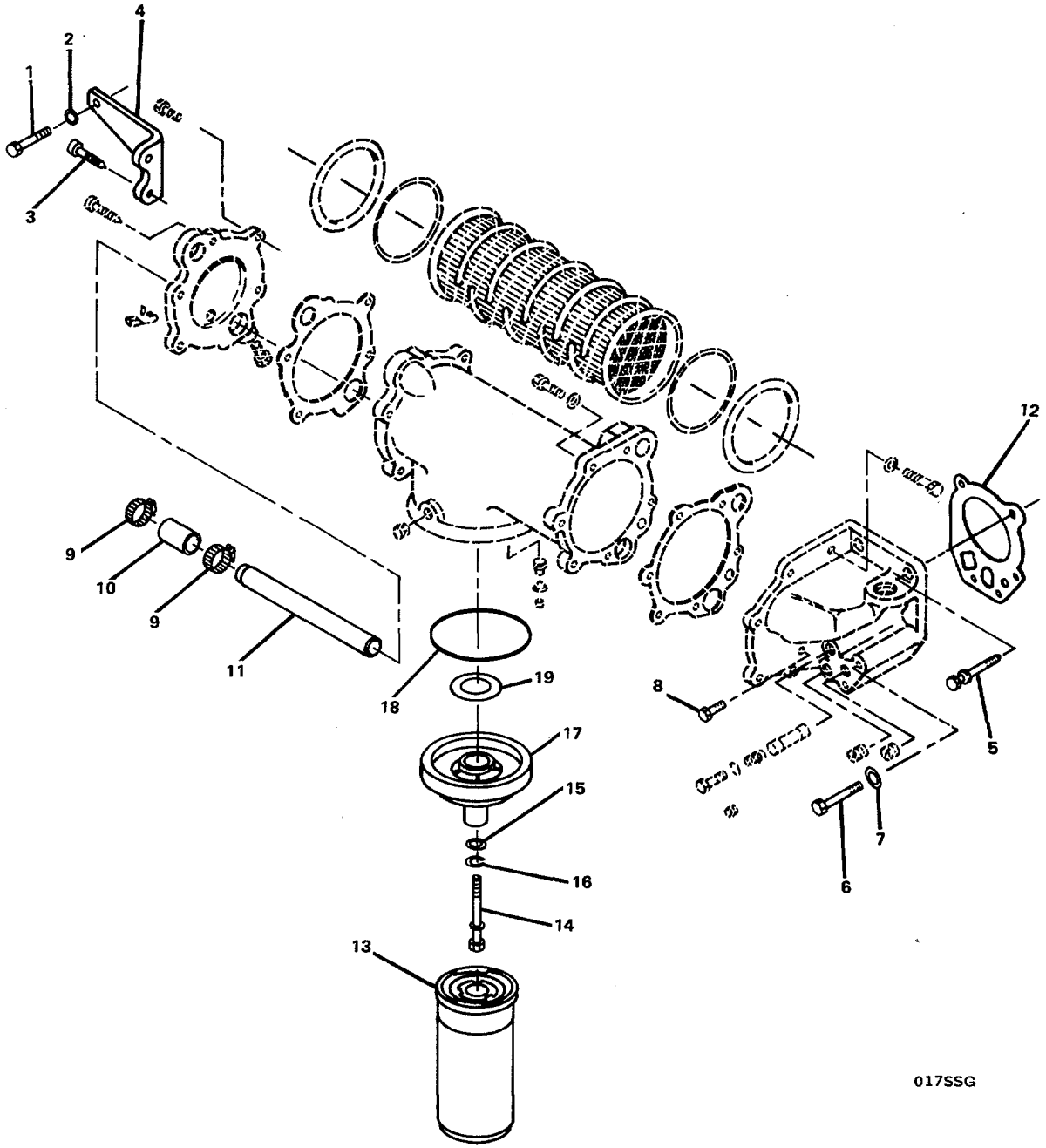

FIGURE 59. Lubricating Oil Cooler/Filter Group (Sheet 1 of 3).

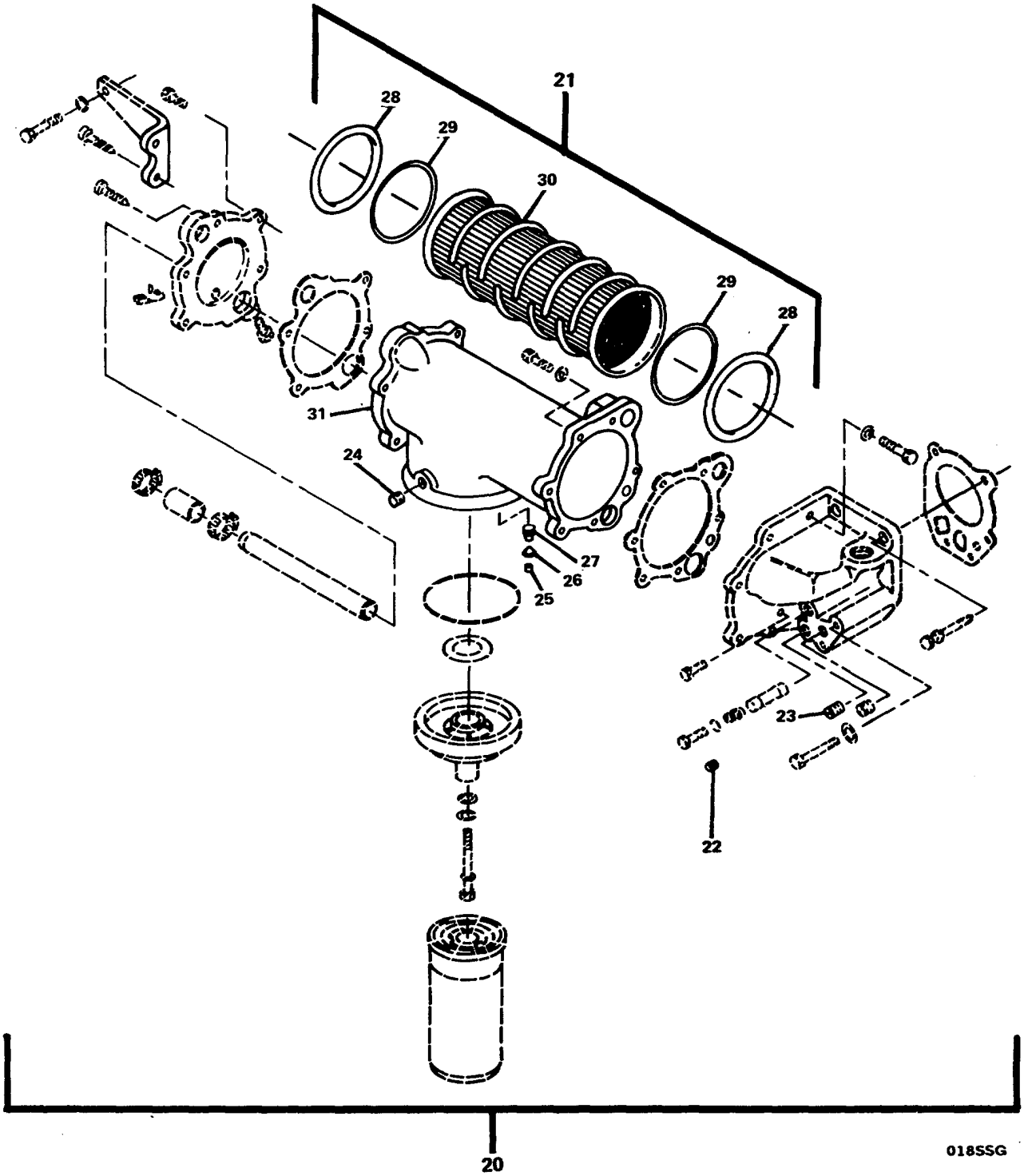

FIGURE 59. Lubricating Oil Cooler/Filter Group (Sheet 2 of 3).

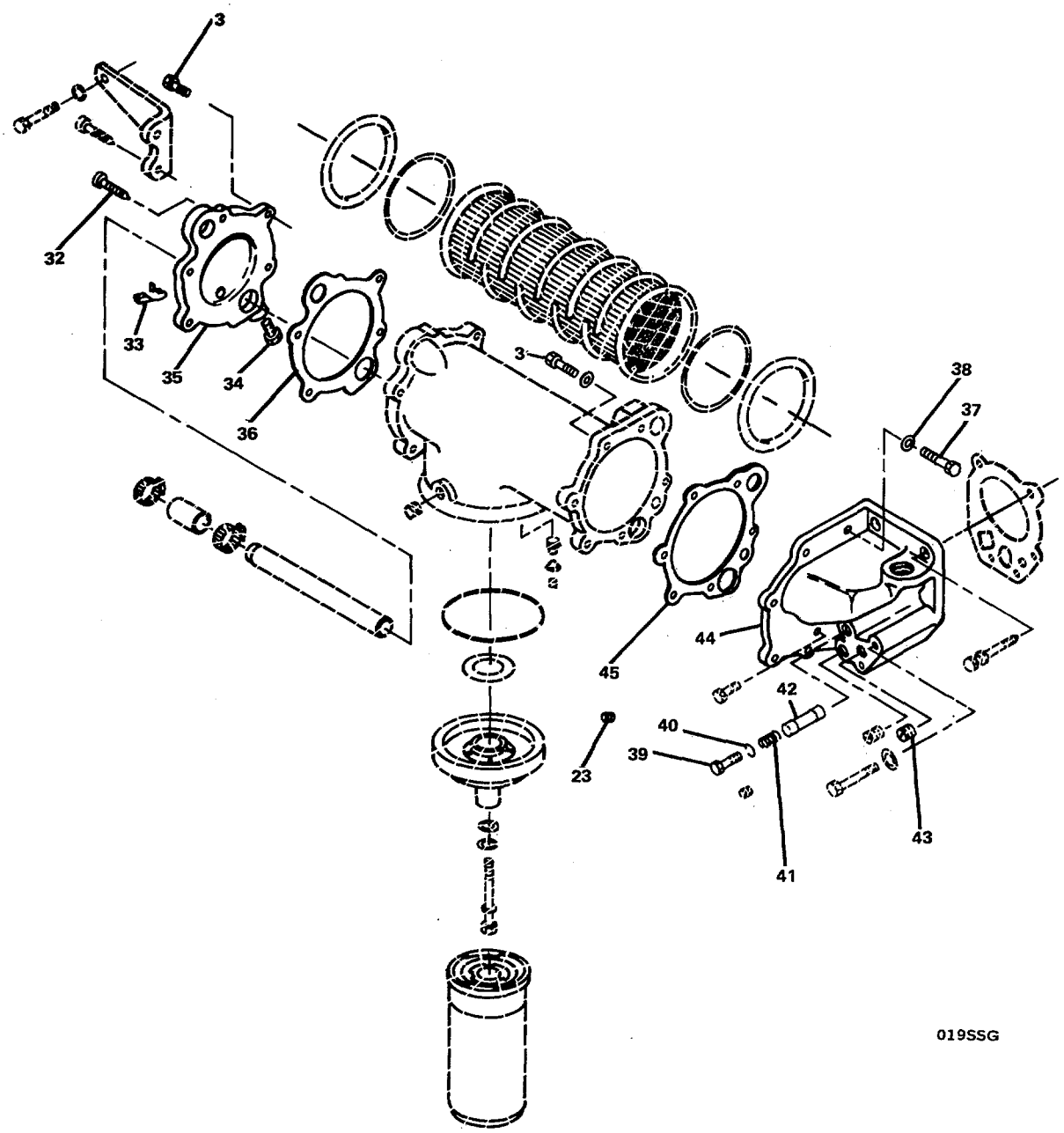

FIGURE 59. Lubricating Oil Cooler/Filter Group (Sheet 3 of 3).

(1) ITEM NO	(2) SMR CODE	(3) FSCM	(4) PART NUMBER	(5) DESCRIPTION AND USABLE ON CODES(UOC)	(6) QTY
				GROUP 03 SHIP SERVICE GENERATOR SET	
				FIG. 59 LUBRICATING OIL COOLER/ FILTER GROUP	
	XCOFF	15434	07.05-03	..LUBRICATING OIL COO	1
1	XDOZZ	15434	S-145	...SCREW,CAP,HEXAGON H	1
2	XDOZZ	15434	203310	...WASHER,FLAT	1
3	XDOZZ	15434	3010596	...SCREW,ASSEMBLED WAS	2
4	XDOZZ	15434	210966	...BRACKET,ANGLE	1
5	XDOZZ	15434	3010595	...SCREW,MACHINE	2
6	XDOZZ	15434	S-106-C	...SCREW,CAP,HEXAGON H	2
7	XDOZZ	96906	MS35338-8	...WASHER,LOCK	3
8	XDOZZ	15434	3010597	...SCREW	2
9	XDOZZ	96906	MS35842-13	...CLAMP,HOSE	2
10	PAOZZ	15434	3031560	...HOSE,PREFORMED	1
11	XDOZZ	15434	3000907	...TUBE,WATER TRANSFER	1
12	PAOZZ	15434	3008017	...GASKET (OIL COOLER) PART OF KIT P/N 3801468	1
13	PACZZ	15434	3313279	...FILTER ELEMENT,FLUI	1
14	XDOZZ	15434	138045	...SCREW,ASSEMBLED WAS	1
15	XDOZZ	15434	200861	...WASHER,FLAT	1
16	XDOZZ	96906	MS35338-50	...WASHER,LOCK	1
17	XDOZZ	15434	3300908	...HEAD,FLUID FILTER	1
18	PAOZZ	15434	3302630	...PACKING,PREFORMED	1
19	PAOZZ	15434	3308958	...GASKET	1
20	XDOFF	15434	3003814	...LUBRICATING OIL ASY	1
21	XDOFZ	15434	AR-9999	....COOLER, LUBRICATION	1
22	XDFZZ	15434	3008466	.....PLUG,PIPE	1
23	XDFZZ	15434	3013786	.....PLUG,PIPE	2
24	XDFZZ	15434	3025458	PLUG,PIPE	1
25	XDFZZ	15434	3023994	.....PLUG,RETAINER	1
26	PAFZZ	15434	3018673	.....DISK,VALVE	1
27	PAFZZ	15434	202128	.....SPRING,HELICAL,COMP	1
28	PAFZZ	15434	3006745	.....RING,RETAINING PART OF KIT P/N 3801468	2
29	PAFZZ	15434	3007713	.....PACKING,PREFORMED PART OF KIT P/N 3801468	2
30	PAFZZ	15434	3021581	.....FILTER ELEMENT,FLUI	2
31	XDFZZ	15434	210915	.....HOUSING,OIL COOLER	1
32	XDFZZ	15434	3012475	....SCREW	1
33	XDFZZ	15434	108307	....COCK,DRAIN	1
34	XDFZZ	15434	3008469	....PLUG,PIPE	1
35	XDFZZ	15434	217315	....COVER,ACCESS	1
36	PAFZZ	15434	218245	....GASKET (LUBE OIL CIRCLE COVER) PART OF KIT P/N 3801468	1
37	XDFZZ	15434	S-126	....SCREW,CAP,HEXAGON H	1
38	XDFZZ	96906	MS35338-8	....WASHER,LOCK	1
39	XDFZZ	15434	3022961	....PLUG,MACHINE THREAD	1
40	XDFZZ	15434	67946	....SPACER,RING PART OF KIT P/N 3801468	1
41	PAFZZ	15434	68274	....SPRING,HELICAL,COMP	1

(1) ITEM NO	(2) SMR CODE	(3) FSCM	(4) PART NUMBER	(5) DESCRIPTION AND USABLE ON CODES(UOC)	(6) QTY
42	PAFZZ	15434	127558	....PLUNGER,OIL PUMP	1
43	XDFZZ	15434	213394	....PLUG,EXPANSION	1
44	XDFZZ	15434	210967	....SUPPORT,OIL COOLER	1
45	PAFZZ	15434	3010030	....GASKET (LUBE OIL CIRCLE COVER) PART OF KIT P/N 3801468.....	1

END OF FIGURE

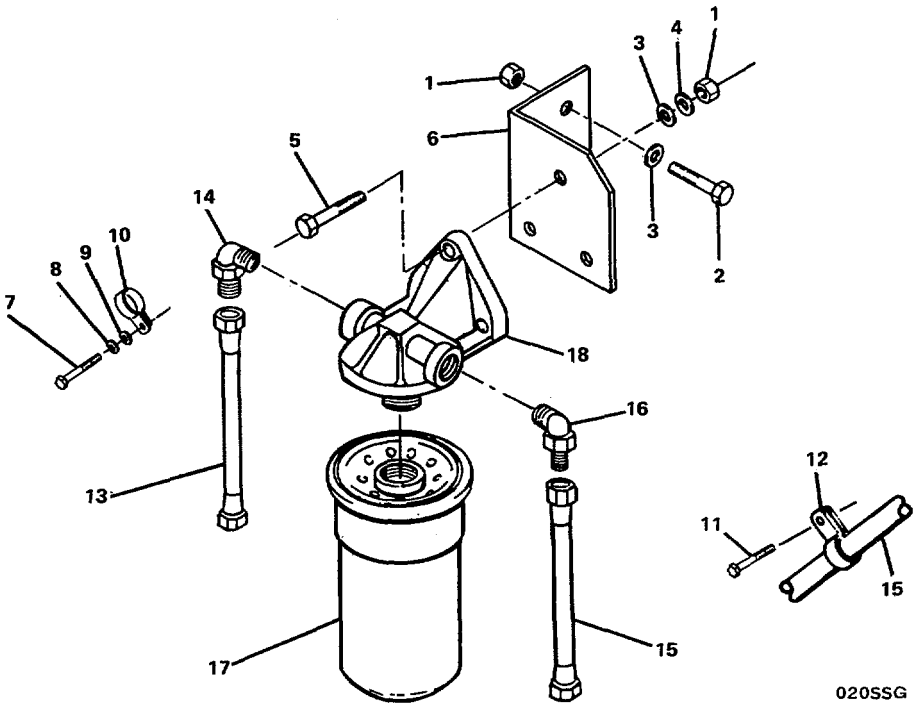

FIGURE 60. Lubricating Oil Bypass Filter Group.

(1) ITEM NO	(2) SMR CODE	(3) PART FSCM	(4) NUMBER	(5) DESCRIPTION AND USABLE ON CODES(UOC)	(6) QTY
				GROUP 03 SHIP SERVICE GENERATOR SET	
				FIG. 60 LUBRICATING OIL BYPASS FILTER GROUP	
	XCOOO	15434	07.03-03	..LUBE OIL BYPASS FIL	1
1	XDOZZ	15434	S-223	...NUT,PLAIN,HEXAGON	5
2	XDOZZ	15434	S-112	...SCREW,CAP,HEXAGON H	2
3	XDOZZ	96906	MS35338-8	...WASHER,LOCK	5
4	XDOZZ	96906	MS27183-14	...WASHER,FLAT	3
5	XDOZZ	15434	108707	...SCREW,CAP,HEXAGON H	3
6	XDOZZ	15434	3044633	...BRACKET,ANGLE	1
7	XDOZZ	15434	S-169	...SCREW,CAP,HEXAGON H	1
8	XDOZZ	15434	S-608	...WASHER,LOCK	1
9	XDOZZ	15434	S-670	...WASHER,FLAT	1
10	XDOZZ	15434	100269	...CLAMP,LOOP	1
11	XDOZZ	15434	137890	...SCREW,CAP,HEXAGON H	1
12	XDOZZ	15434	106221	...CLAMP,LOOP	1
13	PAOZZ	15434	AS0603200SS	...HOSE ASSEMBLY,NONME	1
14	XDOZZ	96906	MS39162-5	...ELBOW,PIPE TO TUBE	1
15	PAOZZ	15434	AS0603600SS	...HOSE ASSEMBLY,NONME	1
16	XDOZZ	15434	144378	...ELBOW,TUBE	1
17	PACZZ	15434	3313289	...FILTER ELEMENT,FLUI	1
18	XDOZZ	15434	3304173	...HEAD,FLUID FILTER	1

END OF FIGURE

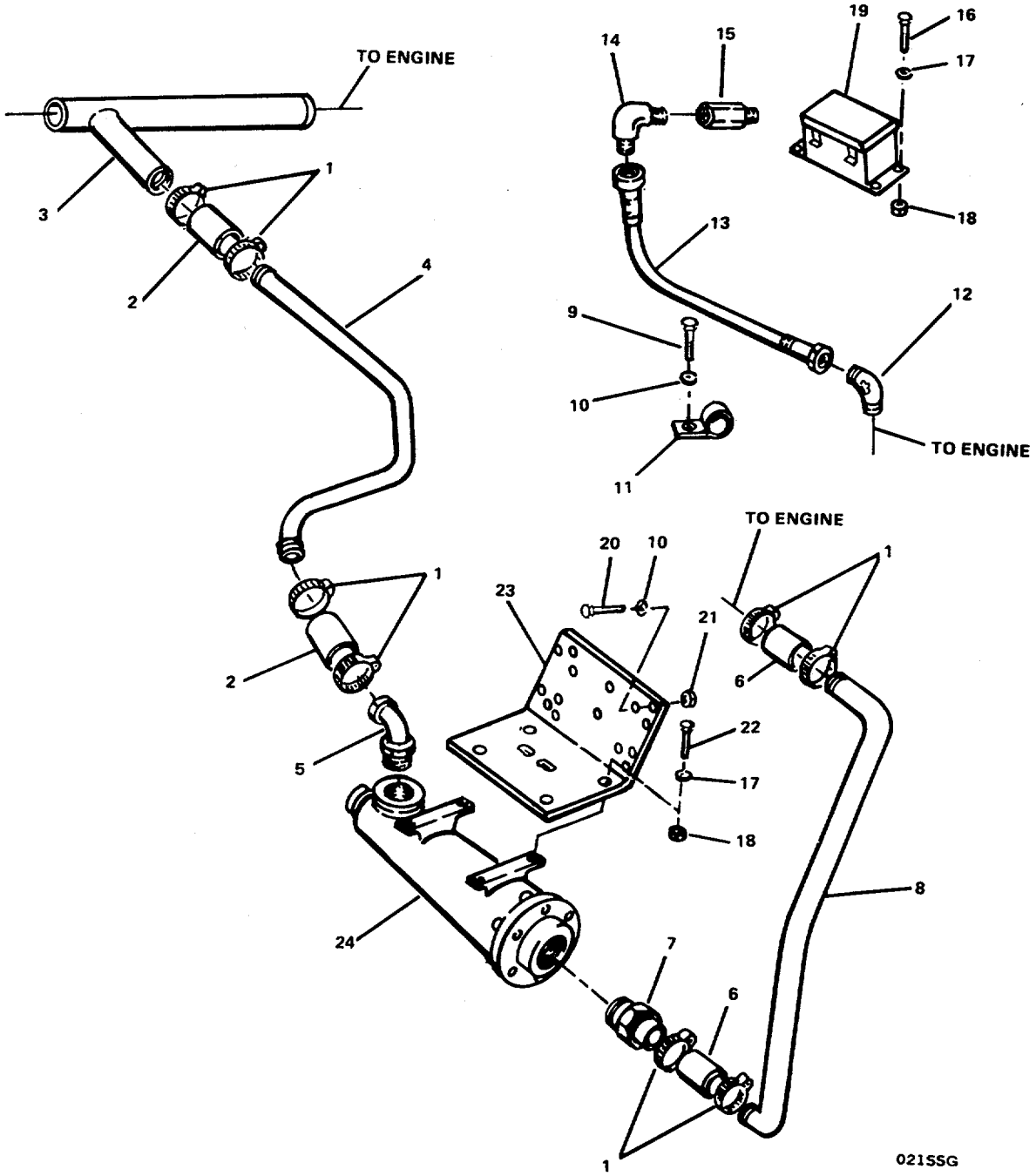

FIGURE 61. Coolant Heater Group.

(1) ITEM NO	(2) SMR CODE	(3) FSCM	(4) PART NUMBER	(5) DESCRIPTION AND USABLE ON CODES(UOC)	(6) QTY
				GROUP 03 SHIP SERVICE GENERATOR SET	
				FIGURE 61 COOLANT HEATER GROUP	
	XCOOO	15434	10.02-03	.....COOLANT HEATER GROU.....	1
1	XDOZZ	96906	MS35842-13	.....CLAMP, HOSE	8
2	PAOZZ	15434	3000270	.....HOSE, PREFORMED.....	2
3	XDOZZ	15434	3000264	.....TUBE, WATER TRANSFER.....	1
4	XDOZZ	15434	3000269	.....TUBE, BENT, METALLIC	1
5	XDOZZ	15434	152546	.....ELBOW, PIPE TO HOSE	1
6	PAOZZ	15434	155789	.....HOSE, NONMETALLIC	2
7	XDOZZ	15434	153408	.....ADAPTER, STRAIGHT, PI	1
8	XDOZZ	15434	3000263	.....TUBE, HEATER	1
9	XDOZZ	15434	S-109	.....SCREW, CAP, HEXAGON H.....	1
10	XDOZZ	96906	MS35338-8	.....WASHER, LOCK.....	5
11	XDOZZ	15434	68152	.....CLAMP, LOOP	1
12	XDOZZ	15434	112105	.....ELBOW, TUBE TO HOSE.....	1
13	PAOZZ	15434	AS0403000SS	.....HOSE ASSEMBLY, NONME	1
14	XDOZZ	15434	68139	.....ELBOW, PIPE TO TUBE.....	1
15	XDOZZ	15434	187368	.....ADAPTER, STRAIGHT, PI	1
16	XDOZZ	96906	MS90725-6	.....SCREW, CAP, HEXAGON H.....	2
17	XDOZZ	96906	MS122032	.....WASHER, LOCK.....	6
18	XDOZZ	15434	S-224	.....NUT, PLAIN, HEXAGON	1
19	PAOZZ	15434	196074	.....SWITCH, PRESSURE.....	1
20	XDOZZ	96906	MS35295-62	.....SCREW, CAP, HEXAGON H.....	4
21	XDOZZ	15434	S-223	.....NUT, PLAIN, HEXAGON	4
22	XDOZZ	15434	S-105-C	.....SCREW, CAP, HEXAGON H.....	4
23	XDOZZ	15434	3000268	.....BRACKET, ANGLE.....	1
24	PAOZZ	15434	212024	.....HEATER, COOLANT, ENGI	1

END OF FIGURE

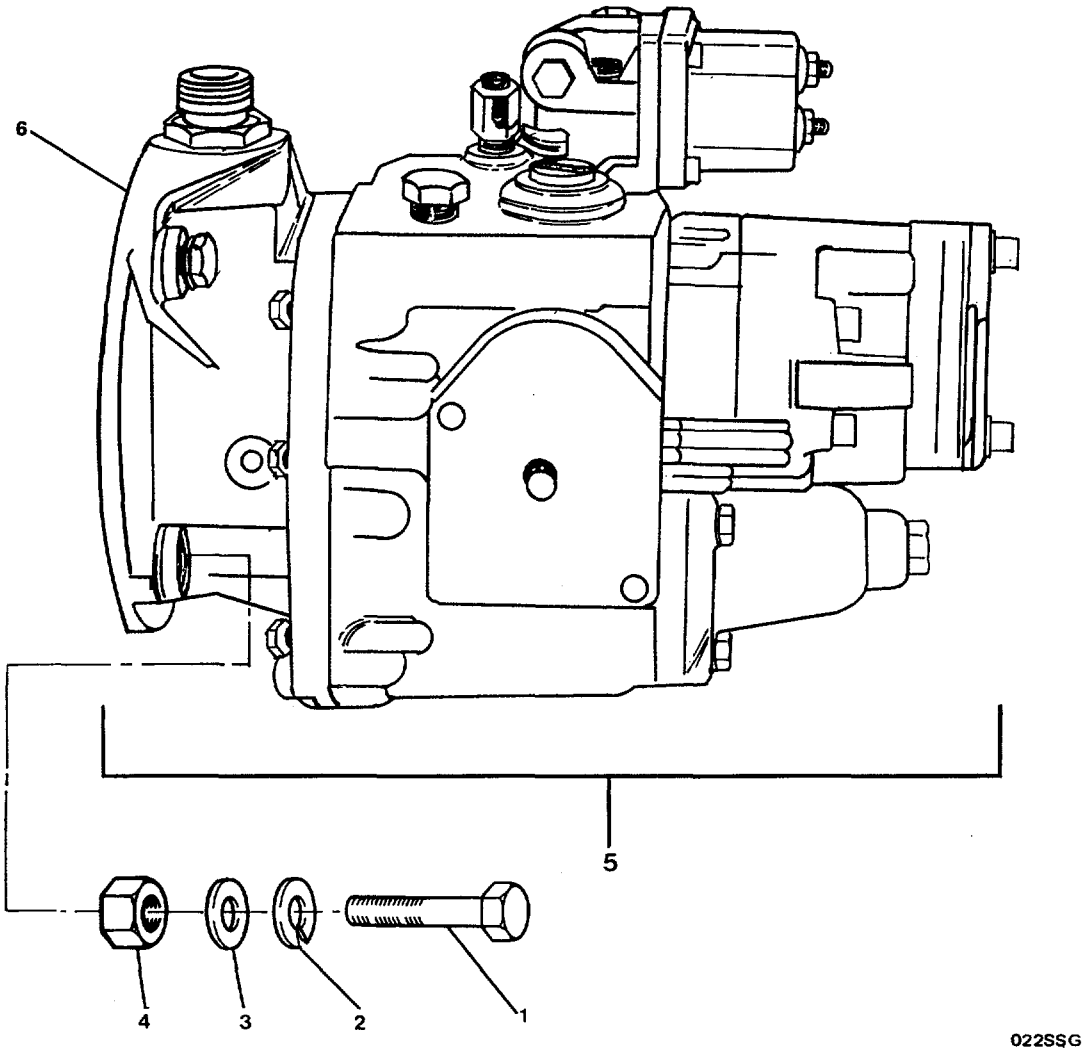

FIGURE 62. Metering and Distributing Fuel Pump Group (Sheet 1 of 7).

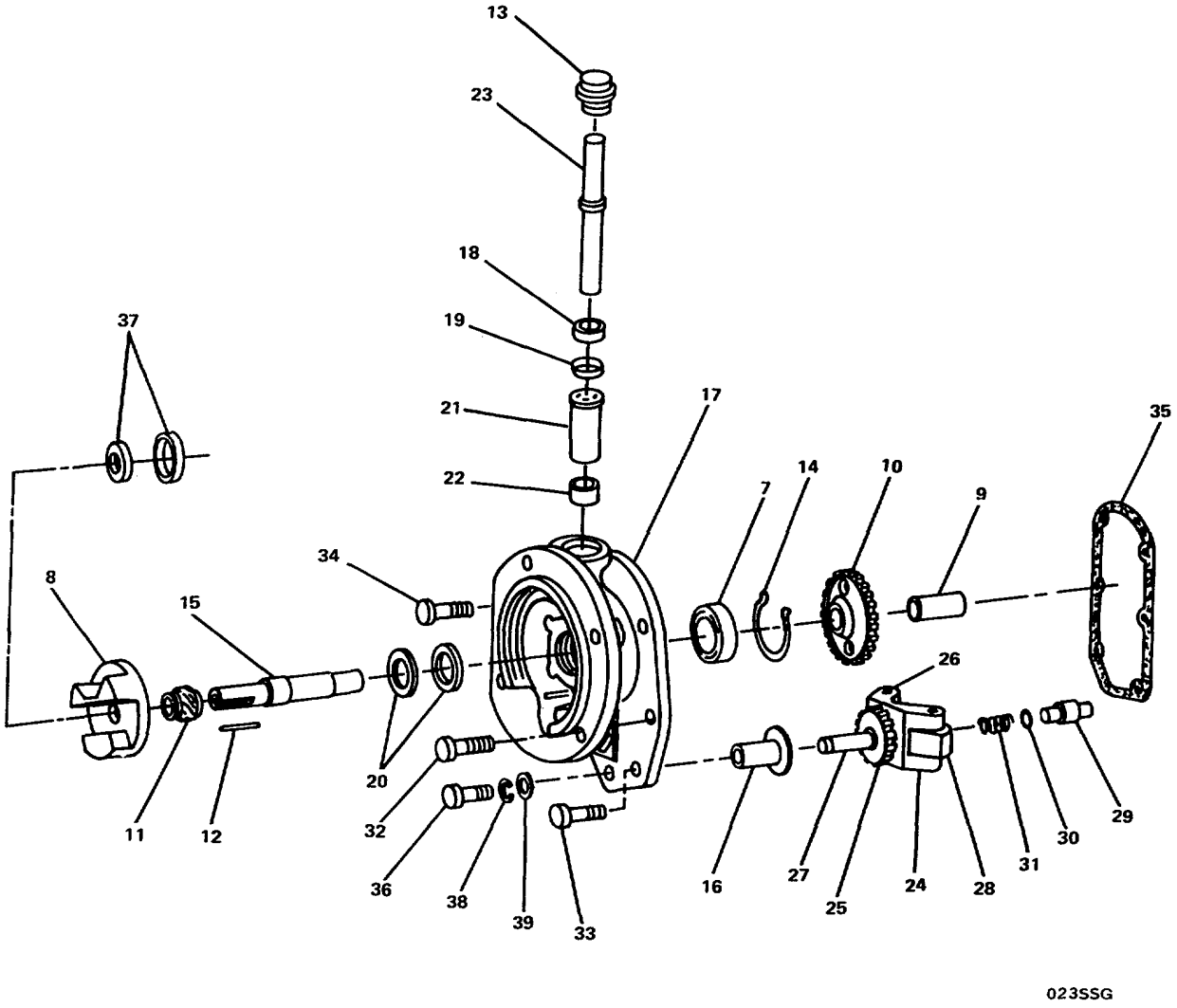

FIGURE 62. Metering and Distributing Fuel Pump Group (Sheet 2 of 7).

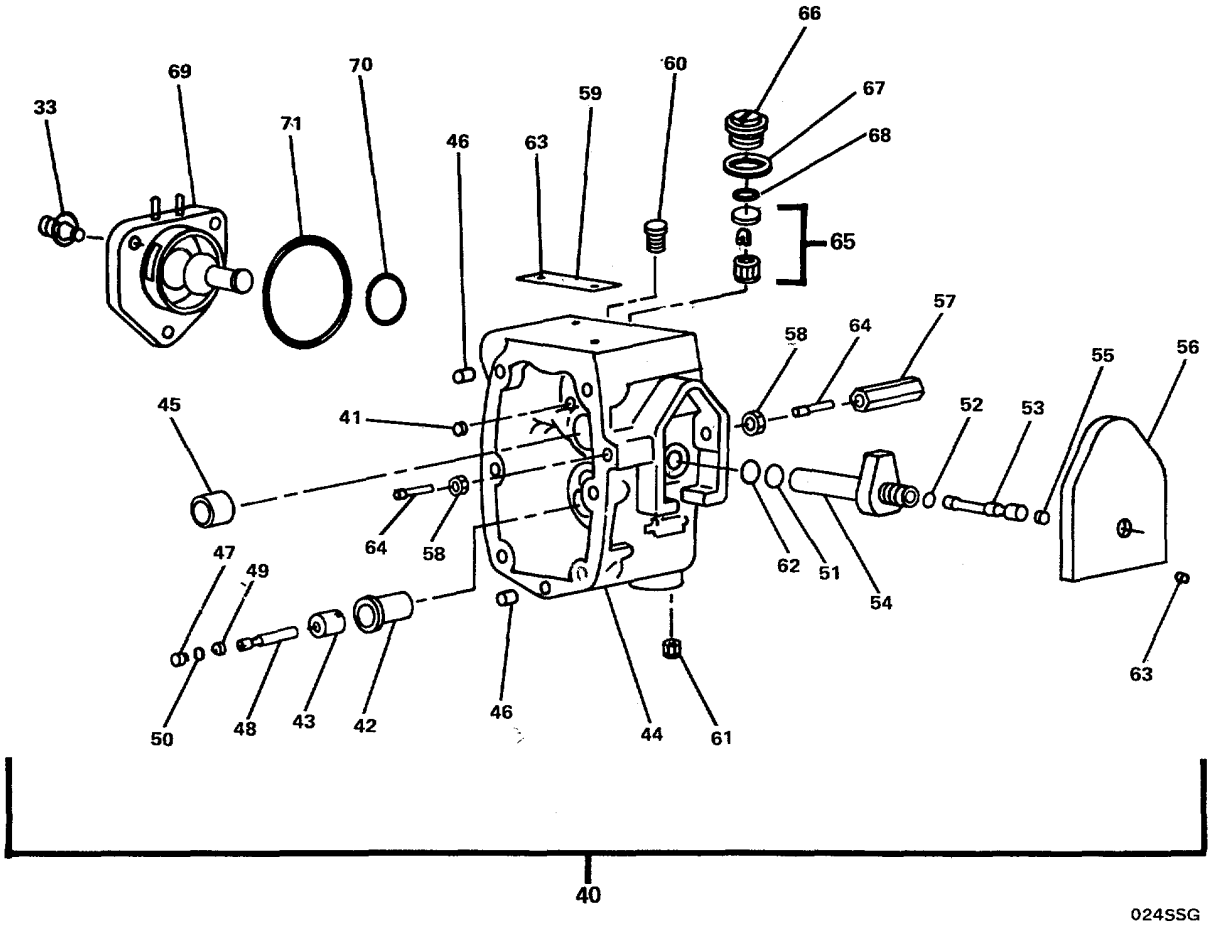

FIGURE 62. Metering and Distributing Fuel Pump Group (Sheet 3 of 7).

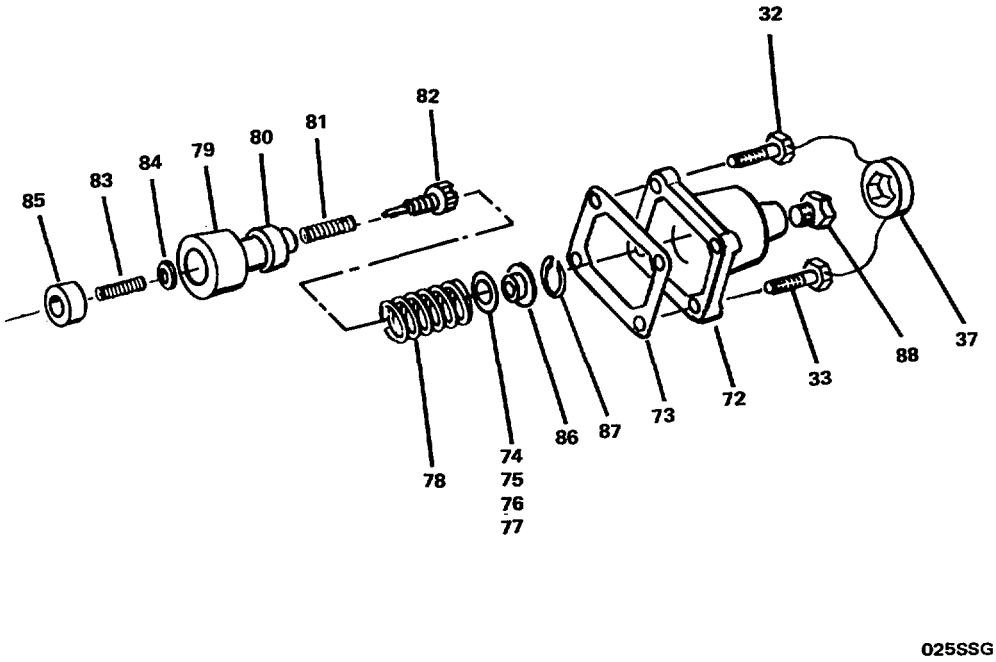

FIGURE 62. Metering and Distributing Fuel Pump Group (Sheet 4 of 7).

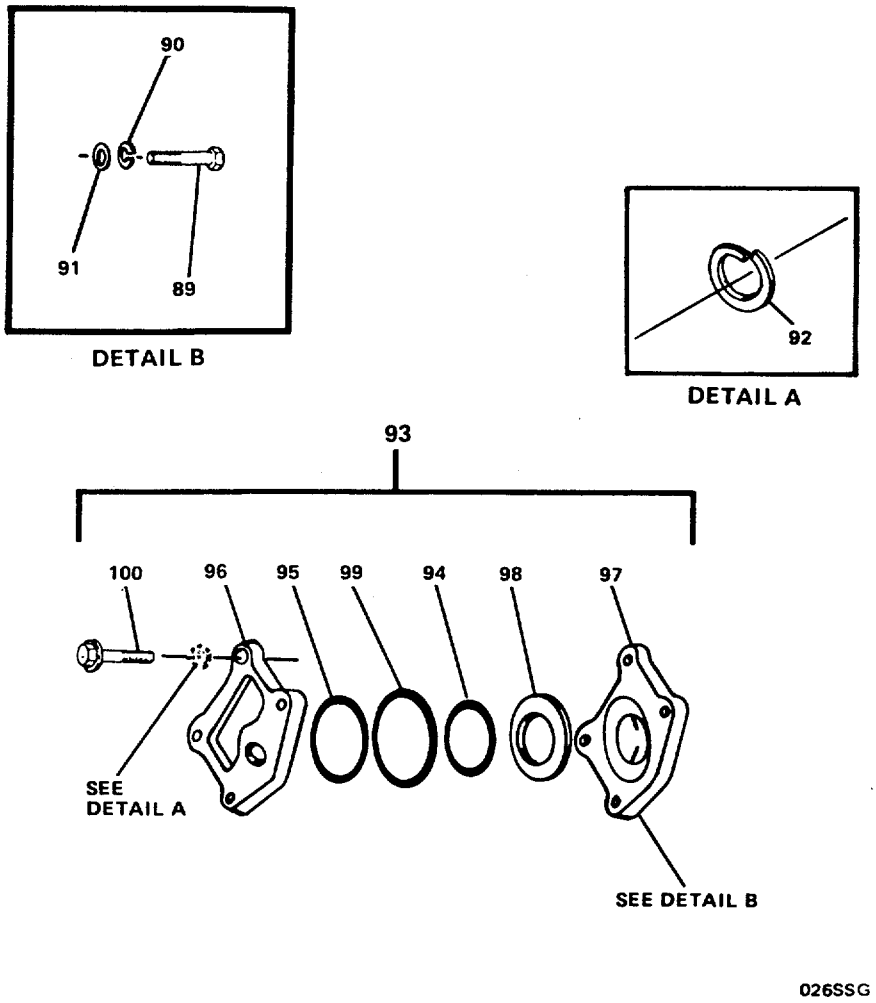

FIGURE 62. Metering and Distributing Fuel Pump Group (Sheet 5 of 7).

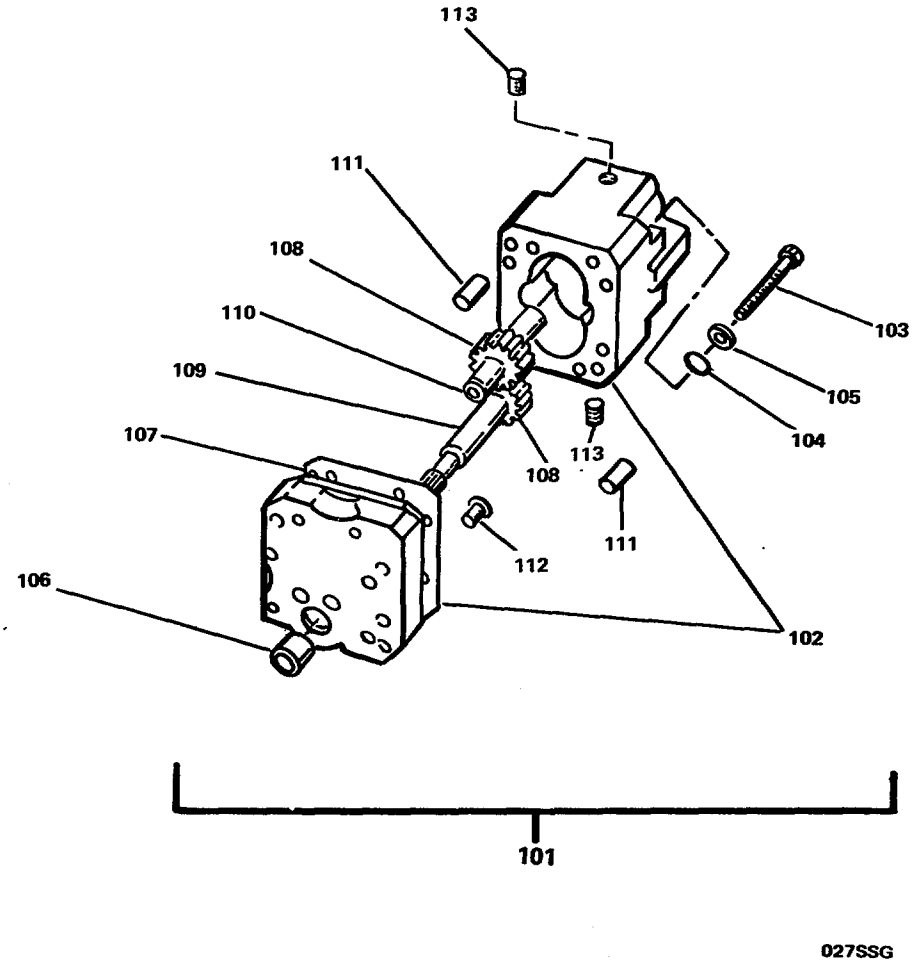

FIGURE 62. Metering and Distributing Fuel Pump Group (Sheet 6 of 7).

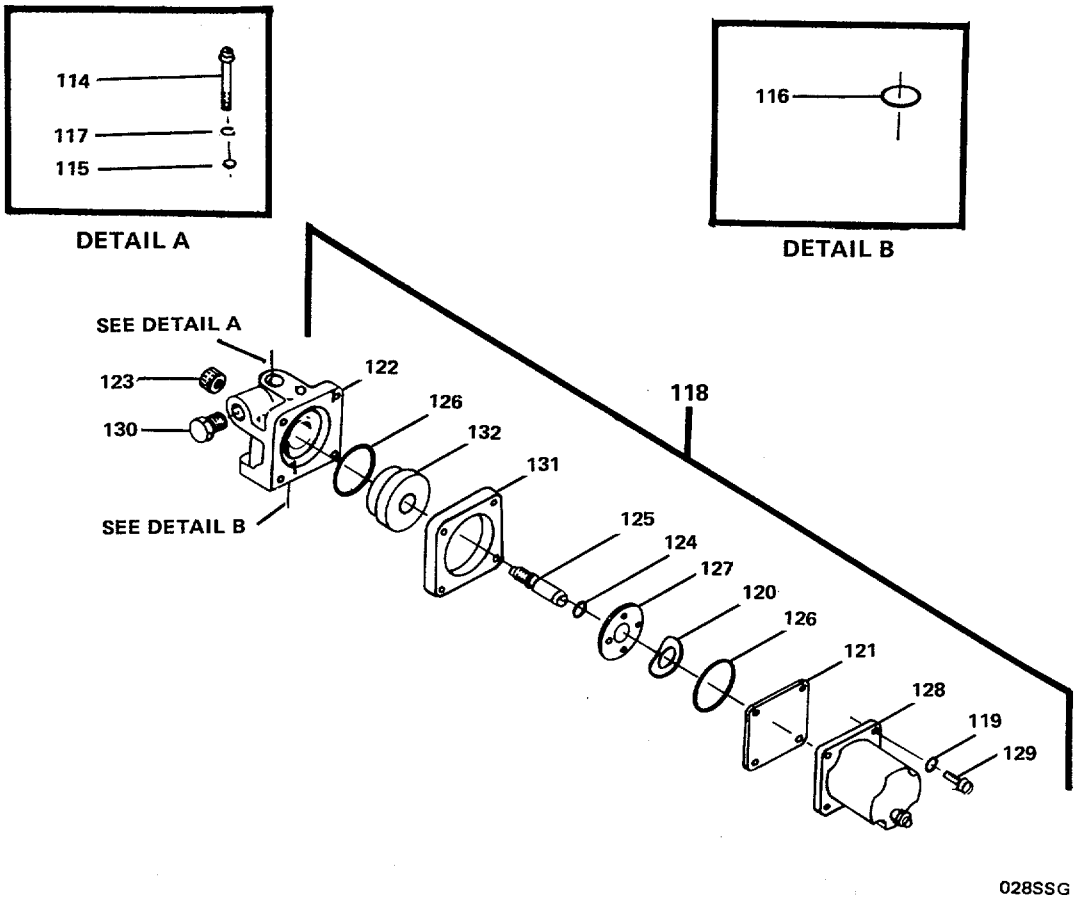

FIGURE 62. Metering and Distributing Fuel Pump Group (Sheet 7 of 7).

(1) ITEM NO	(2) SMR CODE	(3) FSCM	(4) PART NUMBER	(5) DESCRIPTION AND USABLE ON CODES(UOC)	(6) QTY
				GROUP 03 SHIP SERVICE GENERATOR SET	
				FIGURE 62 METERING AND DISTRIBUTING FUEL PUMP GROUP	
1	XDCZZ	15434	S-140	.....SCREW, CAP, HEXAGON H.....	4
2	XDCZZ	96906	MS35338-47	.....WASHER, LOCK	4
3	XDCZZ	15434	69324	.....WASHER, FLAT	4
4	XDCZZ	15434	S-274	.....NUT, PLAIN, HEXAGON	4
5	PBCFF	15434	3052770-9867	.....PUMP, FUEL, METERING	1
6	XAFZZ	15434	3030267	.....COVER AND TACHOMETE	1
7	XAFZZ	15434	S-16052	.....BEARING, BALL, ANNULA.....	1
8	XAFZZ	15434	212613	.....COUPLING HALF, SHAFT	1
9	XAFZZ	15434	212639	.....COUPLING, SHAFT, RIGI	1
10	XAFZZ	15434	212605	.....GEAR, SPUR	1
11	XAFZZ	15434	212602	.....GEAR, HELICAL.....	1
12	XAFZZ	15434	212668	.....KEY, MACHINE	1
13	XAFZZ	15434	3002110	.....HOUSING, DRIVE ASSEM.....	1
14	XAFZZ	15434	212604	.....RING, RETAINING	1
15	XAFZZ	15434	212601	.....SHAFT, SHOULDERED	1
16	XAFZZ	15434	163944	.....BUSHING, SLEEVE	1
17	XAFZZ	15434	3028302	.....COVER, FUEL PUMP.....	1
18	XAFZZ	15434	212603	.....SEAL	1
19	XAFZZ	15434	3004724	.....SPACER.....	1
20	XAFZZ	15434	3045173	.....SEAL, OIL	2
21	XAFZZ	15434	212609	.....BEARING, SLEEVE	1
22	XAFZZ	15434	212610	.....GEAR, HELICAL.....	1
23	XAFZZ	15434	212607	.....SHAFT, TACHOMETER DR	1
24	XAFZZ	15434	3006550	.....CARRIER	1
25	XAFZZ	15434	211636	.....GEAR, SPUR	1
26	XAFZZ	15434	211635	..... PIN	1
27	XAFZZ	15434	211633	.....SHAFT.....	1
28	XAFZZ	15434	146437	.....WEIGHT, LINKAGE, GOVE	1
29	XAFZZ	15434	144178	.....PIN, SHOULDER, HEADLE	1
30	XAFZZ	15434	144179	.....WASHER, FLAT.....	7
31	XAFZZ	15434	143847	.....SPRING, HELICAL, COMP.....	1
32	XAFZZ	15434	3017052	.....SCREW, CAP, HEXAGON H.....	2
33	XAFZZ	15434	3017051	.....SCREW, CAP, HEXAGON H.....	10
34	XAFZZ	15434	3018682	.....SCREW, CAP, HEXAGON	1
35	XAFZZ	15434	100764	.....GASKET.....	1
36	XAFZZ	15434	118226	..... SCREW	1
37	XAFZZ	15434	3003156	.....SEAL, SPECIAL	1
38	XAFZZ	15434	S-606	.....WASHER, LOCK	1
39	XAFZZ	96906	MS27183-42	.....WASHER, FLAT.....	1
40	XAFZZ	15434	3048241	.....BODY, FUEL PUMP	1
41	XAFZZ	15434	214139	.....BALL, PLUG BRASS.....	2
42	XAFZZ	15434	3036970	.....HOUSING, SPRING PACK.....	1
43	XAFZZ	15434	3045207	.....BARREL, GOVERNOR	1
44	XAFZZ	15434	3048228	.....BODY, FUEL PUMP	1
45	XAFZZ	15434	100193	.....BEARING, SLEEVE.....	1
46	XAFZZ	15434	118227	.....PIN, HOLLOW	2
47	XAFZZ	15434	70690	.....DRIVER, PLUNGER, GOVE.....	1

(1) ITEM NO	(2) SMR CODE	(3) FSCM	(4) PART NUMBER	(5) DESCRIPTION AND USABLE ON CODES(UOC)	(6) QTY
48	XAFZZ	15434	3009380	PLUNGER, GOVERNOR	1
49	XAFZZ	15434	3048557	SPACER, BEARING	1
50	XAFZZ	15434	3027633	BEARING, SLEEVE	1
51	XAFZZ	15434	100478	PACKING, PREFORMED	1
52	XAFZZ	15434	213768	PACKING, PREFORMED	1
53	XAFZZ	15434	3006175	SCREW	1
54	XAFZZ	15434	3006430	THROTTLE ASSEMBLY	1
55	XAFZZ	15434	213769	BALL, BEARING	1
56	XAFZZ	15434	3000446	COVER, ACCESS.	1
57	XAFZZ	15434	110058	POST, ELECTRICAL-MEC	1
58	XAFZZ	15434	S-270	NUT, PLAIN, HEXAGON	2
59	XAFZZ	15434	105375	PLATE, IDENTIFICATIO	1
60	XAFZZ	15434	112076	PLUG, FUEL OUTLET	1
61	XAFZZ	15434	3025460	PLUG, PIPE	4
62	XAFZZ	96906	MS16632-1050	RING, RETAINING	1
63	XAFZZ	15434	S-2286	SCREW	4
64	XAFZZ	15434	3046407	SETSCREW	2
65	XAFZZ	15434	146483	FILTER ELEMENT, FLUI	1
66	XAFZZ	15434	157088	PLUG, M-ACHINE THREAD	1
67	XAFZZ	15434	154088	GASKET	1
68	XAFZZ	15434	70700	SPRING, HELICAL, COMP	1
69	XAFZZ	15434	3044189	ACTUATOR, ELECTRIC G	1
70	XAFZZ	15434	145505	PACKING, PREFORMED	2
71	XAFZZ	15434	3048182	PACKING, PREFORMED	1
72	XAFZZ	15434	44678	COVER, SPRING PACK	1
73	XAFZZ	15434	70705	GASKET	1
74	XAFZZ	15434	70717	SPACER, RING (0.020	1
75	XAFZZ	15434	70717-A	SHIM (0.010)	1
76	XAFZZ	15434	70717-B	SHIM (0.005)	1
77	XAFZZ	15434	189800	SHIM (0.007)	1
78	XAFZZ	15434	143251	SPRING, HELICAL, COMP	1
79	XAFZH	15434	3038215	SPRING GUIDE, ASSEMB	1
80	XAFZZ	15434	3036472	RETAINER, HELICAL CO	1
81	XAFZZ	15434	3032014	SPRING, HELICAL, COMP	1
82	XAFZZ	15434	70716	SETSCREW	1
83	XAFZZ	15434	144195	SPRING, HELICAL, COMP	1
84	XAFZZ	15434	70715	WASHER, FLAT	1
85	XAFZZ	15434	141629	PLUNGER, IDLE SPRING	1
86	XAFZZ	15434	70713	RING RETAINING	1
87	XAFZZ	15434	S-16240	RING, RETAINING	1
88	XAFZZ	15434	3025459	PLUG, COVER	1
89	XDFZZ	15434	S-174-C	SCREW, CAP, SOCKET HE	2
90	XDFZZ	15434	181466	WASHER, LOCK	2
91	XDFZZ	15434	70704	WASHER, FLAT	2
92	PAFZZ	16954	691-10014	GASKET	1
93	PAFFF	15434	BM-76340	DAMPENER, FLUID PRES	1
94	XDFZZ	15434	100099	PACKING, PREFORMED	1
95	XDFZZ	15434	139988	PACKING, PREFORMED	1
96	XDFZZ	15434	153336	HOUSING, FUEL PUMP	1
97	XDFZZ	15434	153338	COVER, ACCESS	1
98	XDFZZ	15434	160514	SPACER, RING	1
99	XDFZZ	15434	202897	DISK, SOLID, PLAIN	1

(1) ITEM NO	(2) SMR CODE	(3) FSCM	(4) PART NUMBER	(5) DESCRIPTION AND USABLE ON CODES(UOC)	(6) QTY
100	XDFZZ	15434	3017051	SCREW, CAP, HEXAGON H	2
101	PAFFF	15434	3034209	PUMP, ROTARY	1
102	XDFZZ	15434	3033730	ASSEMBLY, FUEL PUMP	1
103	XDFZZ	15434	70790	BOLT, MACHINE	2
104	XDFZZ	15434	70704	WASHER, FLAT	2
105	XDFZZ	15434	181466	WASHER, LOCK	2
106	XDFZZ	15434	3033719	BUSHING, SLEEVE	1
107	XDFZZ	15434	110855	GASKET	1
108	XDFZZ	15434	119363	GEAR, SPUR	2
109	XDFZZ	15434	100215	SHAFT, SHOULDERED	1
110	XDFZZ	15434	100133	SHAFT, FUEL PUMP	1
111	XDFZZ	15434	3029857	PIN, STRAIGHT, HEADLE	2
112	XDFZZ	15434	3050624	VALVE, REGULATING, FL	1
113	XDFZZ	15434	3033742	PLUG, PIPE	2
114	XDFZZ	15434	S-189-C	SCREW, CAP, SOCKET HE	2
115	XDFZZ	15434	67684	WASHER, FLAT	2
116	XDFZZ	15434	154087	GASKET	1
117	XDFZZ	15434	181466	WASHER, LOCK	2
118	PAFFF	15434	3018453	VALVE, SOLENOID	1
119	XDFZZ	15434	S-607	WASHER, LOCK	4
120	XDFZZ	15434	129768	WASHER, SPRING TENSI	1
121	XDFZZ	15434	129839	COVER, ACCESS	1
122	XDFZZ	15434	129886	VALVE, SHUT-OFF, MANU	1
123	XDFZZ	15434	129838	KNOB	1
124	PAFZZ	15434	190876	PACKING, PREFORMED	1
125	XDFZZ	15434	3000266	SHAFT, SHOULDERED	1
126	PAFZZ	15434	129888	PACKING, PREFORMED	2
127	PAFZZ	15434	196057	DISK, VALVE	1
128	PAFZZ	15434	3054609	SOLENOID, ELECTRICAL	1
129	XDFZZ	15434	3018047	SCREW, CAP, HEXAGON H	4
130	XDFZZ	15434	3025458	PLUG, PIPE	1
131	XDFZZ	15434	3034451	HOUSING, ACTUATOR	1
132	XDFZZ	15434	3034452	DISK, ACTUATOR	1

END OF FIGURE

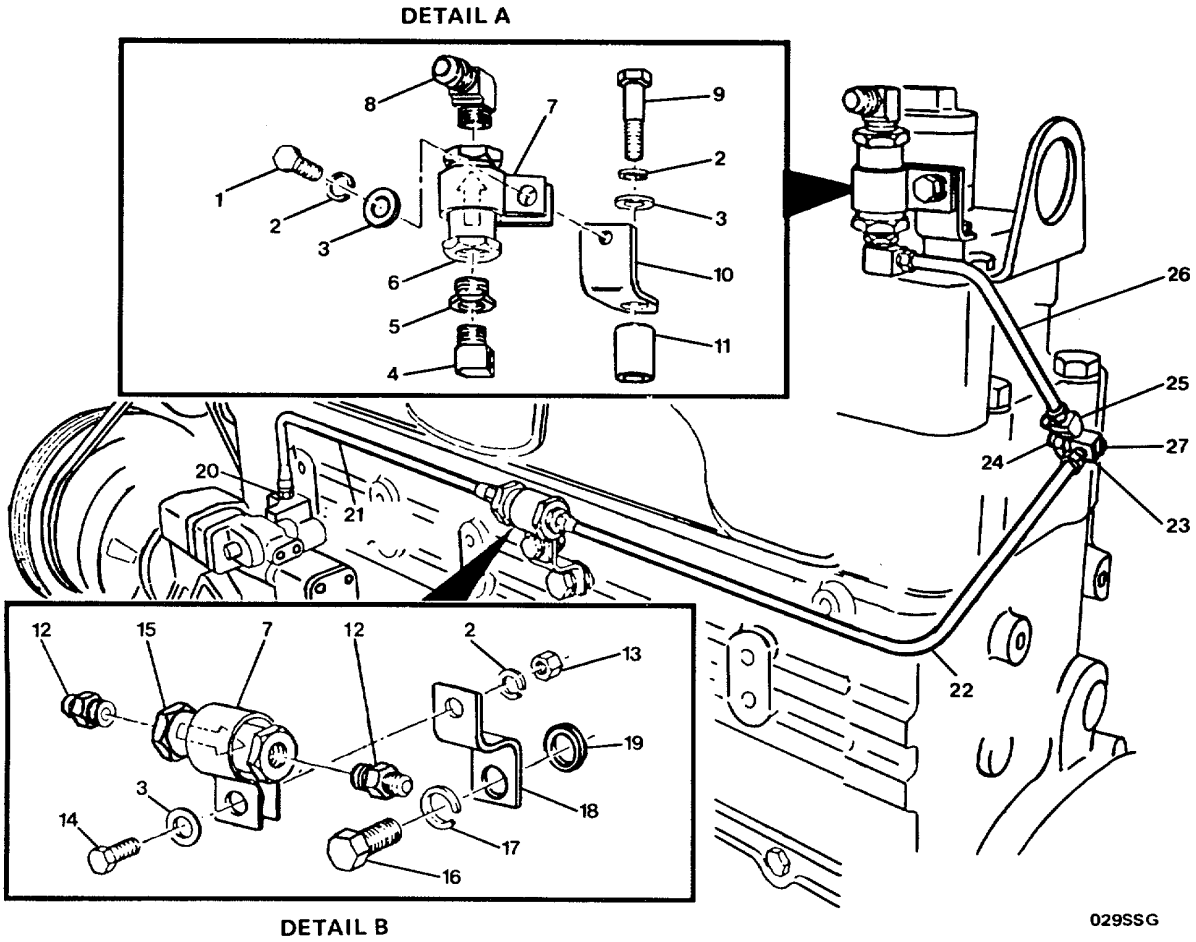

FIGURE 63. Fuel Tubing Group.

(1) ITEM NO	(2) SMR CODE	(3) FSCM	(4) PART NUMBER	(5) DESCRIPTION AND USABLE ON CODES(UOC)	(6) QTY
				GROUP 03 SHIP SERVICE GENERATOR SET	
				FIGURE 63 FUEL TUBING GROUP	
	XCOOO	15434	06.03-03	.....FUEL TUBING GROUP	1
1	XDOZZ	15434	S-117	.....SCREW, CAP, HEXAGON H.....	1
2	XDOZZ	96906	MS35338-8	.....WASHER, LOCK	3
3	XDOZZ	96906	MS27183-14	.....WASHER, FLAT	3
4	XDOZZ	15434	185347	.....ELBOW, PIPE TO TUBE.....	1
5	XDOZZ	15434	S-964	.....REDUCER, PIPE.....	1
6	PAOZZ	15434	178079	.....VALVE, CHECK	1
7	XDOZZ	15434	107460	.....CLAMP, LOOP	2
8	XDOZZ	15434	43765	.....ELBOW, PIPE TO TUBE.....	1
9	XDOZZ	15434	S-104	.....SCREW, CAP, HEXAGON H.....	1
10	XDOZZ	15434	101476	.....BRACKET, ANGLE.....	1
11	XDOZZ	15434	145782	.....SPACER, SLEEVE	1
12	XDOZZ	15434	3032872	.....UNION, PIPE	2
13	XDOZZ	15434	S-205	..... NUT.....	1
14	XDOZZ	15434	69793	.....BOLT, MACHINE.....	1
15	PAOZZ	15434	3028325	.....VALVE, CHECK.....	1
16	XDOZZ	15434	S-151-C	.....SCREW, CAP, HEXAGON H.....	1
17	XDOZZ	15434	S-609	.....WASHER, LOCK	1
18	XDOZZ	15434	113710	.....BRACKET, ANGLE.....	1
19	PAOZZ	15434	65434	.....SPACER, RING	1
20	XDOZZ	15434	116935	.....ADAPTER, STRAIGHT, PI	1
21	XDOZZ	15434	3033007	.....TUBE, METALLIC.....	1
22	XDOZZ	15434	3033005	.....TUBE, BENT, METALLIC	1
23	XDOZZ	15434	S-1049	.....TEE, PIPE	1
24	XDOZZ	15434	139969	.....NIPPLE, PIPE.....	1
25	XDOZZ	15434	181213	.....ELBOW, PIPE TO TUBE.....	1
26	XDOZZ	15434	3010755	.....TUBE, BENT, METALLIC	1
27	XDOZZ	15434	68606	.....PLUG, MACHINE THREAD	1

END OF FIGURE

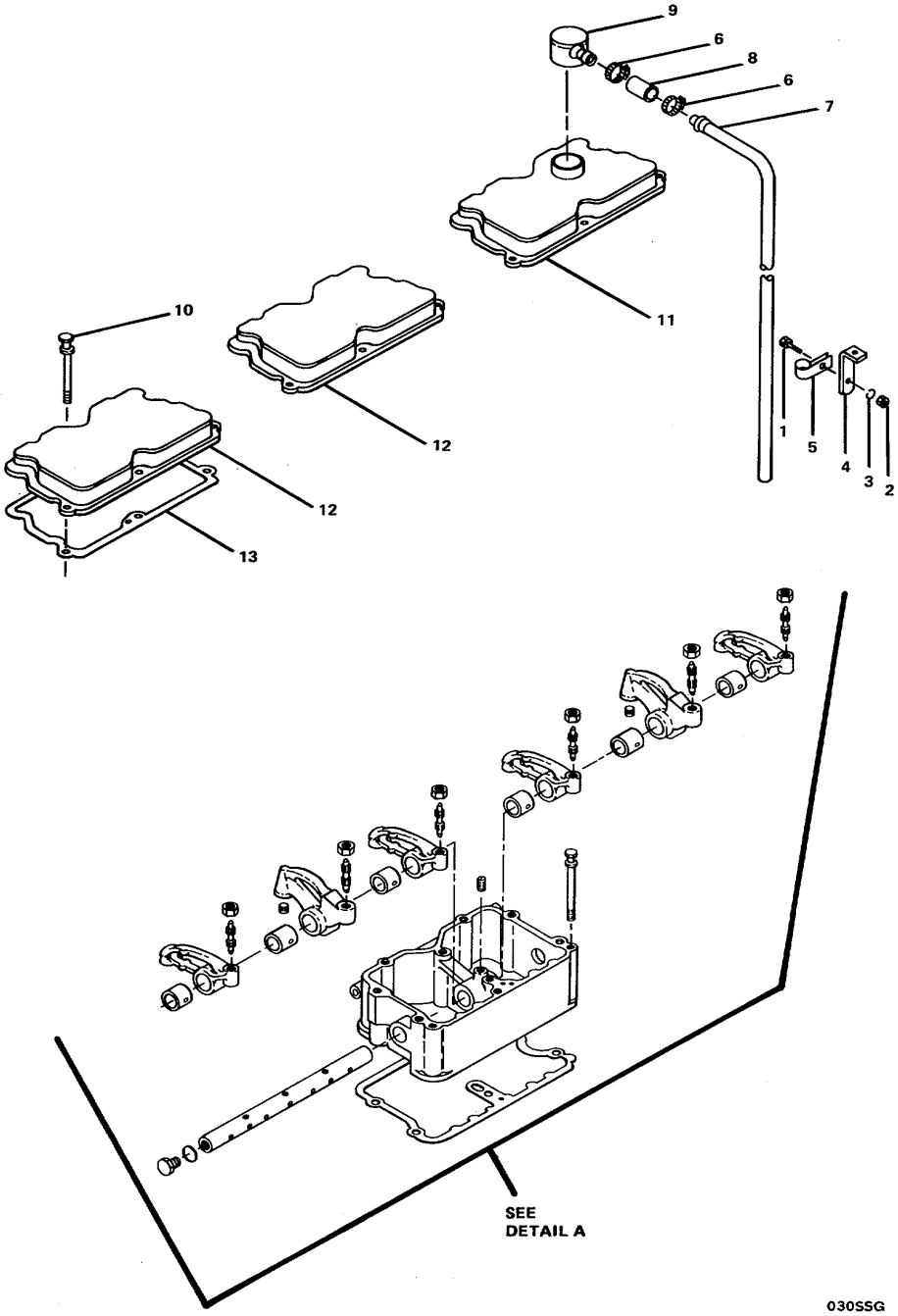

FIGURE 64. Rocker Lever Housing Group (Sheet 1 of 2).

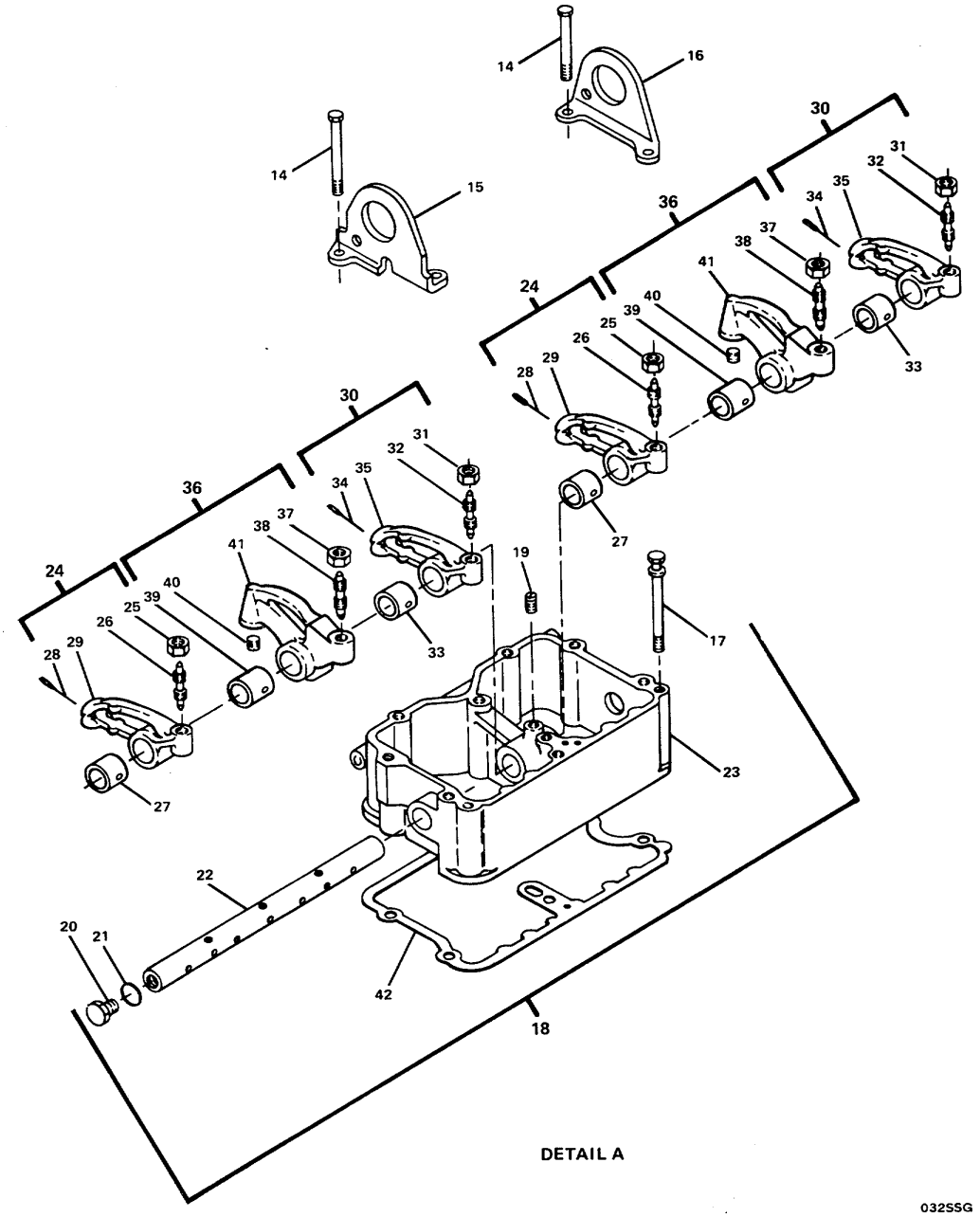

FIGURE 64. Rocker Lever Housing Group (Sheet 2 of 2).

(1) ITEM NO	(2) SMR CODE	(3) FSCM	(4) PART NUMBER	(5) DESCRIPTION AND USABLE ON CODES(UOC)	(6) QTY
				GROUP 03 SHIP SERVICE GENERATOR SET	
				FIGURE 64 ROCKER LEVER HOUSING	
	XCCFF	15434	03.01/03.01.1-03	.....ROCKER LEVER HOUSIN	1
1	XDCZZ	15434	69793	.....BOLT, MACHINE	1
2	XDCZZ	15434	S-205	.....NUT	1
3	XDCZZ	96906	MS35338-8	..... WASHER, LOCK	1
4	XDCZZ	15434	111670	.....SUPPORT, OIL LUBE	1
5	XDCZZ	15434	68425	.....CLAMP, LOOP	1
6	XDCZZ	15434	3008596	.....CLAMP, HOSE	2
7	XDCZZ	15434	142486	.....TUBE, BENT, METALLIC	1
8	PACZZ	28835	2CA647	.....HOSE, NONMETALLIC	1
9	XDCZZ	15434	255180	.....BREATHER	1
10	XDCZZ	15434	3038076	.....SCREW, ASSEMBLED WAS	14
11	XDCZZ	15434	3006358	.....COVER, ENGINE POPPET	1
12	XDCZZ	15434	3006183	.....COVER, ENGINE POPPET	2
13	PACZZ	15434	3054841	.....GASKET (VALVE COVER) PART OF KIT ..... P/N 3801330.....	3
14	XDCZZ	15434	S-176	.....SCREW, CAP, HEXAGON H	4
15	XDCZZ	15434	170226	.....BRACKET, ENGINE LIFT	1
16	XDCZZ	15434	3001726	.....BRACKET, ENGINE LIFT	1
17	XDCZZ	15434	3010589	.....SCREW, ASSEMBLED WAS.....	18
18	PACFZ	15434	3044788	.....ROCKER ARM, ENGINE	3
19	XAFZZ	15434	168319	.....SETSCREW	3
20	XAFZZ	15434	3038903	.....PLUG, MACHINE THREAD	6
21	XAFZZ	15434	3046364	.....PACKING, PREFORMED	6
22	XAFZZ	15434	3038904	.....SHAFT, STRAIGHT	3
23	XAFZZ	15434	3044787	.....HOUSING, ROCKER LEVE.....	3
24	PACFZ	15434	BM-95162	.....ROCKER ARM, ENGINE P.....	6
25	PAFZZ	96906	MS51968-14	..... NUT, PLAIN, HEXAGON	6
26	PAFZZ	15434	168306	..... SETSCREW	6
27	XAFZZ	15434	140330	..... BUSHING, SLEEVE	6
28	XAFZZ	15434	208084	..... RIVET, BLIND	6
29	XAFZZ	15434	169705	..... ROCKER ARM, ENGINE P	6
30	PACFF	15434	BM-95161	.....ROCKER ARM, ENGINE P	6
31	PAFZZ	96906	MS51968-14	..... NUT, PLAIN, HEXAGON	6
32	PAFZZ	15434	168306	..... SETSCREW	6
33	XAFZZ	15434	140330	..... BUSHING, SLEEVE	6
34	XAFZZ	15434	208084	..... RIVET, BLIND	6
35	XAFZZ	15434	169704	..... ROCKER, ENGINE POPPE	6
36	PACFZ	15434	AR-2308	.....LEVER, INJECTOR, FUEL	6
37	PAFZZ	96906	MS51968-14	..... NUT, PLAIN, HEXAGON	6
38	PAFZZ	15434	168306	..... SETSCREW.....	6
39	XAFZZ	15434	218153	..... BUSHING, SLEEVE	6
40	XAFZZ	15434	194037	..... SEAT, BALL SOCKET.....	6
41	XAFZZ	15434	218152	..... LEVER, INJECTOR ROCK	6
42	PACZZ	15434	3017750	..... GASKET (ROCKER LEVER HOUSING) ..... PART OF KIT P/N 3801330.....	3

END OF FIGURE

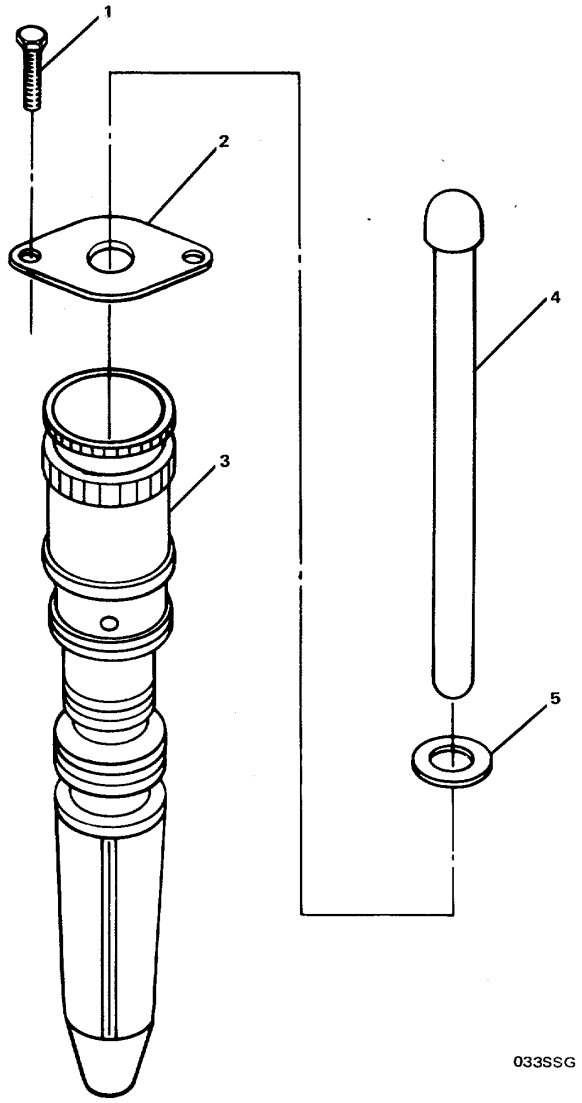

FIGURE 65. Injector Group.

(1) ITEM NO	(2) SMR CODE	(3) FSCM	(4) PART NUMBER	(5) DESCRIPTION AND USABLE ON CODES(UOC)	(6) QTY
				GROUP 03 SHIP SERVICE GENERATOR SET	
				FIGURE 65 ROCKER LEVER HOUSING	
	XCCOO	15434	06.01-03	.....INJECTOR GROUP	1
1	XDCZZ	15434	3028279	.....SCREW, CAP, HEXAGON H.....	12
2	XCDZZ	15434	30331137	.....CLAMP, INJECTOR MOUN	6
3	PACZZ	15434	3054219	.....NOZZLE, FUEL INJECTI	6
4	PACZZ	15434	180626	.....PLUNGER, DETENT	6
5	PACZZ	15434	180626	.....WASHER, LOCK	6

END OF FIGURE

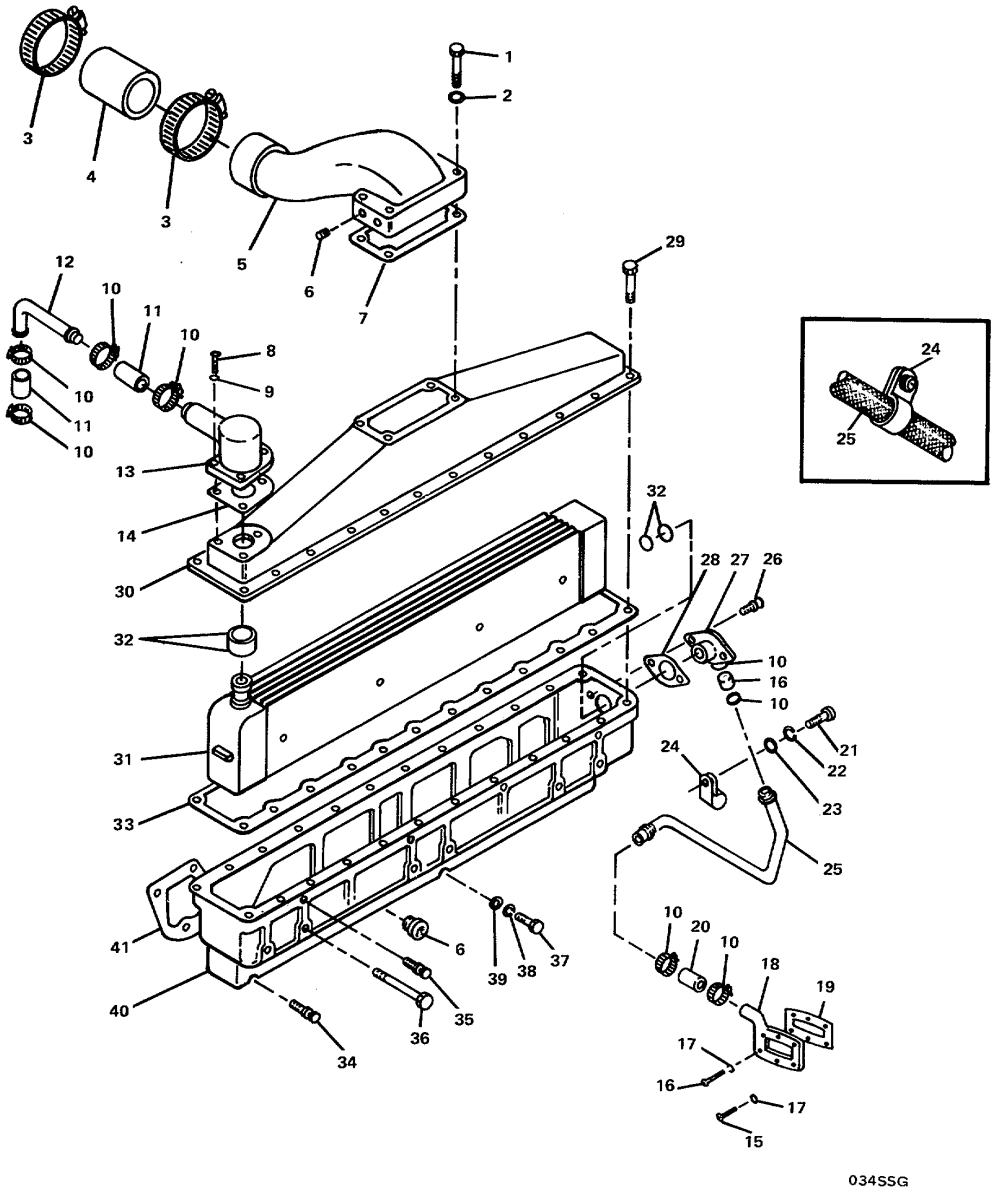

FIGURE 66. Aftercooler Group.

(1) ITEM NO	(2) SMR CODE	(3) FSCM	(4) PART NUMBER	(5) DESCRIPTION AND USABLE ON CODES(UOC)	(6) QTY
				GROUP 03 SHIP SERVICE GENERATOR SET	
				FIGURE 66 AFTERCOOLER GROUP	
	XCOOO	15434	10.01-03	...AFTERCOOLER GROUP	1
1	XDOZZ	96906	MS35295-62	.....SCREW, CAP, HEXAGON H	4
2	XDOZZ	15434	S-679	.....WASHER, FLAT	4
3	XDOZZ	15434	208326	.....CLAMP, HOSE	2
4	PAOZZ	15434	202994	.....HOSE, PREFORMED	1
5	XDOZZ	15434	211657	.....CONNECTION, AIR CROS	1
6	XDOZZ	15434	70295	.....PLUG, PIPE	2
7	PAOZZ	15434	216487	.....GASKET PART OF KIT P/N 3801330	1
8	XDOZZ	15434	S-102	.....BOLT, MACHINE	3
9	PAOZZ	15434	S-684	.....GASKET	3
10	XDOZZ	15434	43828-A	.....CLAMP, HOSE	4
11	PAOZZ	15434	3025874	.....HOSE, PREFORMED	2
12	XDOZZ	15434	215041	.....TUBE, BENT, METALLIC	1
13	XDOZZ	15434	3013295	.....ELBOW, FLANGE TO HOS	1
14	PAOZZ	15434	215044	.....GASKET (WATER OUTLET) PART OF KIT P/N 3801330	1
15	XDOZZ	96906	MS35295-8	.....SCREW, CAP, HEXAGON H	2
16	XDOZZ	15434	S-141-A	.....SCREW, CAP, HEXAGON H	4
17	XDOZZ	96906	MS122032	.....WASHER, LOCK	6
18	XDOZZ	15434	3001939	.....CONNECTION, WATER OU	1
19	PAOZZ	15434	70089-1	.....GASKET PART OF KIT P/N 3801468	1
20	PAOZZ	15434	3041968	.....HOSE, NONMETALLIC	2
21	XDOZZ	96906	MS35308-458	.....SCREW, CAP, HEXAGON H	1
22	XDOZZ	96906	MS35338-50	.....WASHER, LOCK	1
23	XDOZZ	15434	S-658	.....WASHER, FLAT	1
24	XDOZZ	15434	204263	.....CLAMP, LOOP	1
25	XDOZZ	15434	3001169	.....TUBE, BENT, METALLIC	1
26	XDOZZ	15434	3012471	.....SCREW	2
27	XDOZZ	15434	3028282	.....CONNECTION, WATER IN	1
28	PAOZZ	15434	3032348	.....GASKET PART OF KIT P/N 3801330	1
29	XDOZZ	15434	3005508	.....SCREW, CAP, HEXAGON H	24
30	XDOZZ	15434	3046170	.....COVER, AFTERCOOLER	1
31	PAOZZ	15434	3028997	.....CORE, AFTERCOOLER	1
32	PAOZZ	15434	195952	.....PACKING, PREFORMED PART OF KIT P/N 3801330	4
33	PAOZZ	15434	216486	.....GASKET	1
34	XDOZZ	15434	3011716	.....SCREW, ASSEMBLED WAS	2
35	XDOZZ	15434	3030286	.....SCREW, ASSEMBLED WAS	8
36	XDOZZ	15434	3028967	.....SCREW, CAP, HEXAGON H	6
37	XDOZZ	15434	69047-A	.....SCREW, CAP, SOCKET HE	1
38	XDOZZ	96906	MS35338-8	.....WASHER, LOCK	1
39	XDOZZ	15434	63842	.....WASHER, FLAT	1
40	XDOZZ	15434	3036811	.....MANIFOLD, AIR INTAKE	1
41	PAOZZ	15434	3008591	.....GASKET (INTAKE MANIFOLD) PART OF KIT P/N 3801330	3

END OF FIGURE

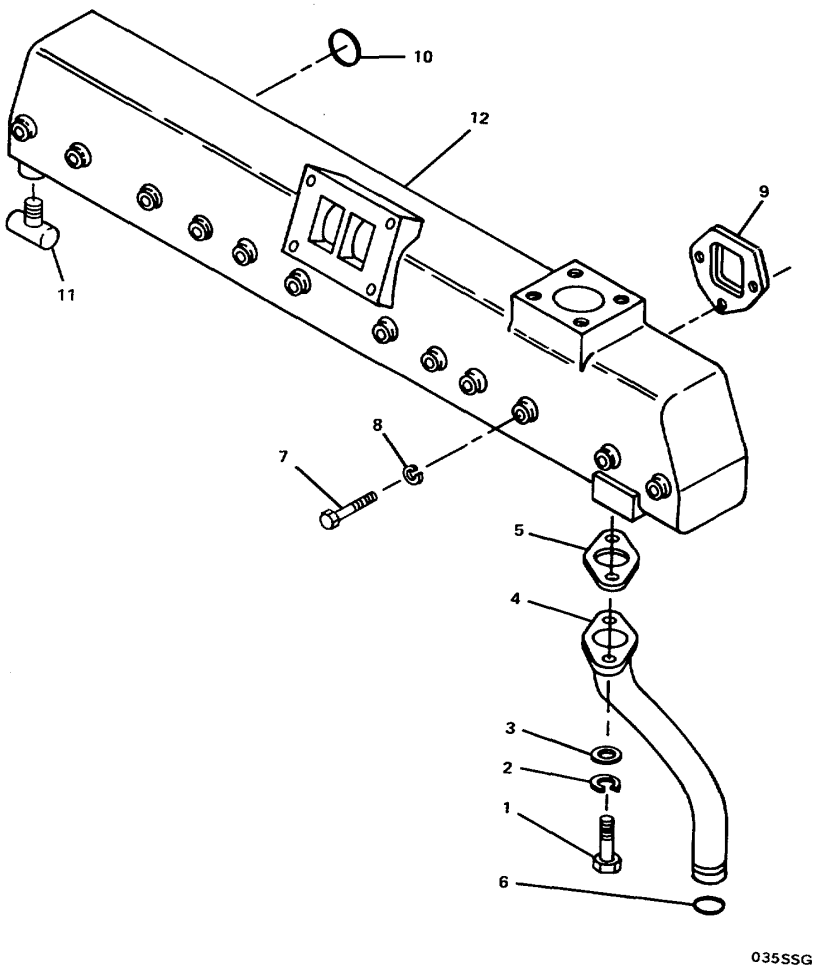

FIGURE 67. Exhaust Manifold Group.

(1) ITEM NO	(2) SMR CODE	(3) FSCM	(4) PART NUMBER	(5) DESCRIPTION AND USABLE ON CODES(UOC)	(6) QTY
				GROUP 03 SHIP SERVICE GENERATOR SET	
				FIGURE 67 EXHAUST MANIFOLD GROUP	
	XCOOO	15434	11.01-03	.....EXHAUST MANIFOLD GR.....	1
1	XDOZZ	15434	S-109	.....SCREW, CAP, HEXAGON H	2
2	XDOZZ	96906	MS35338-8	.....WASHER, LOCK	2
3	XDOZZ	96906	MS27183-14	.....WASHER, FLAT.....	2
4	XDOZZ	15434	3009459	.....CONNECTION, WATER TR	1
5	PAOZZ	15434	3029032	.....GASKET.....	1
6	PBOZZ	15434	212161	.....PACKING, PREFORMED PART OF KIT P/N . 3801330.	1
7	XDOZZ	15434	137890	.....SCREW, CAP, HEXAGON H	12
8	XDOZZ	96906	MS35338-47	.....WASHER, LOCK	12
9	PAOZZ	15434	3020943	.....GASKET (EXHAUST MANIFOLD) PART..... OF KIT P/N 3801330	6
10	PAOZZ	15434	178937	.....PACKING.PREFORMED	6
11	XDOZZ	15434	S-923-E	.....COCK, DRAIN	1
12	XDOZZ	15434	3008590	.....MANIFOLD, EXHAUST.....	1

END OF FIGURE

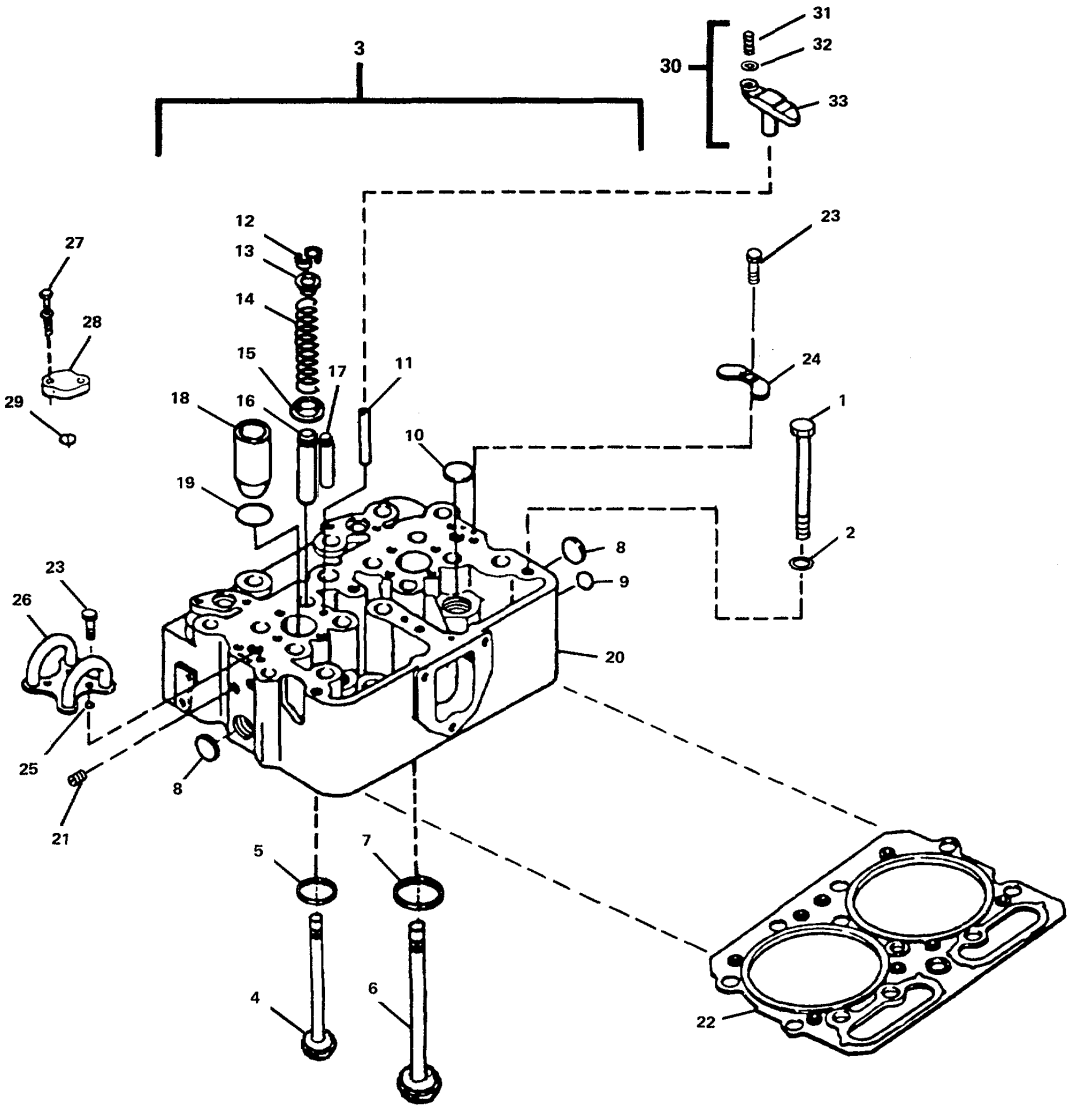

FIGURE 68. Cylinder Head Group.

(1) ITEM NO	(2) SMR CODE	(3) FSCM	(4) PART NUMBER	(5) DESCRIPTION AND USABLE ON CODES(UOC)	(6) QTY
				GROUP 03 SHIP SERVICE GENERATOR SET	
				FIGURE 68 CYLINDER HEAD GROUP	
	XCCHH	15434	02.01-03	.....CYLINDER HEAD GROUP	1
1	XDCZZ	15434	3013623	..... SCREW, CAP, HEXAGON H.	36
2	XDCZZ	15434	69699	..... WASHER, FLAT.....	36
3	PBCHD	15434	3041993	..... CYLINDER HEAD, DIESE.....	3
4	PAHZZ	15434	135957	..... VALVE, POPPET, ENGINE.....	12
5	PAHZZ	15434	200354	..... SEAT, VALVE.....	12
6	PAHZZ	15434	3040830	..... VALVE, POPPET, ENGINE.....	12
7	PAHZZ	15434	3017759	..... SEAT, VALVE.....	12
8	XDHZZ	15434	3007636	..... PLUG, EXPANSION.....	6
9	XDHZZ	15434	3007634	..... PLUG, EXPANSION.....	6
10	XDHZZ	15434	3007635	..... PLUG, EXPANSION	18
11	XDHZZ	15434	123558	..... PIN, STRAIGHT, HEADLE.....	12
12	PAHZZ	15434	127554	..... HALF-COLLET	48
13	PAHZZ	15434	170296	..... SEAT, HELICAL COMPRE.....	12
14	PAHZZ	15434	211999	..... SPRING, HELICAL, COMP.....	24
15	PAHZZ	15434	3202144	..... SEAT, HELICAL COMPRE.....	12
16	PAHZZ	15434	3050369	..... GUIDE, VALVE STEM.....	12
17	PAHZZ	15434	3006456	..... GUIDE, VALVE STEM.....	12
18	PAHZZ	15434	3011934	..... SLEEVE, COOLING, FUEL	6
19	PAHZZ	15434	3007759	..... PACKING, PREFORMED	6
20	XAHZZ	15434	3041991	..... HEAD, CYLINDER	3
21	XDHZZ	15434	S-911-B	..... PLUG, PIPE	10
22	PACZZ	15434	3047402	..... GASKET (CYLINDER HEAD) PART OF..... KIT P/N 3801330.....	3
23	XDHZZ	15434	70772	..... SCREW, ASSEMBLED WAS.....	12
24	XDHZZ	15434	135308	..... PLATE, FUEL CROSSOVE.....	2
25	PAHZZ	15434	131026	..... PACKING, PREFORMED PART OF KIT P/N ... 3801330.....	12
26	XDHZZ	15434	147100	..... CROSSOVER, FUEL	2
27	XDHZZ	15434	3012470	..... SCREW, ASSEMBLED WAS.....	12
28	XDHZZ	15434	3009461	..... PLATE, COVER	6
29	XDHZZ	15434	3024709	..... GASKET PART OF KIT P/N 3801330	6
30	PAHHZ	15434	3030038	..... VALVE, CROSSHEAD ASS.....	12
31	PAHZZ	15434	147389	..... SETSCREW	12
32	PAHZZ	15434	203131	..... NUT, CROSS HD	12
33	XAHZZ	15434	3028293	..... CROSSHEAD, VALVE	2

END OF FIGURE

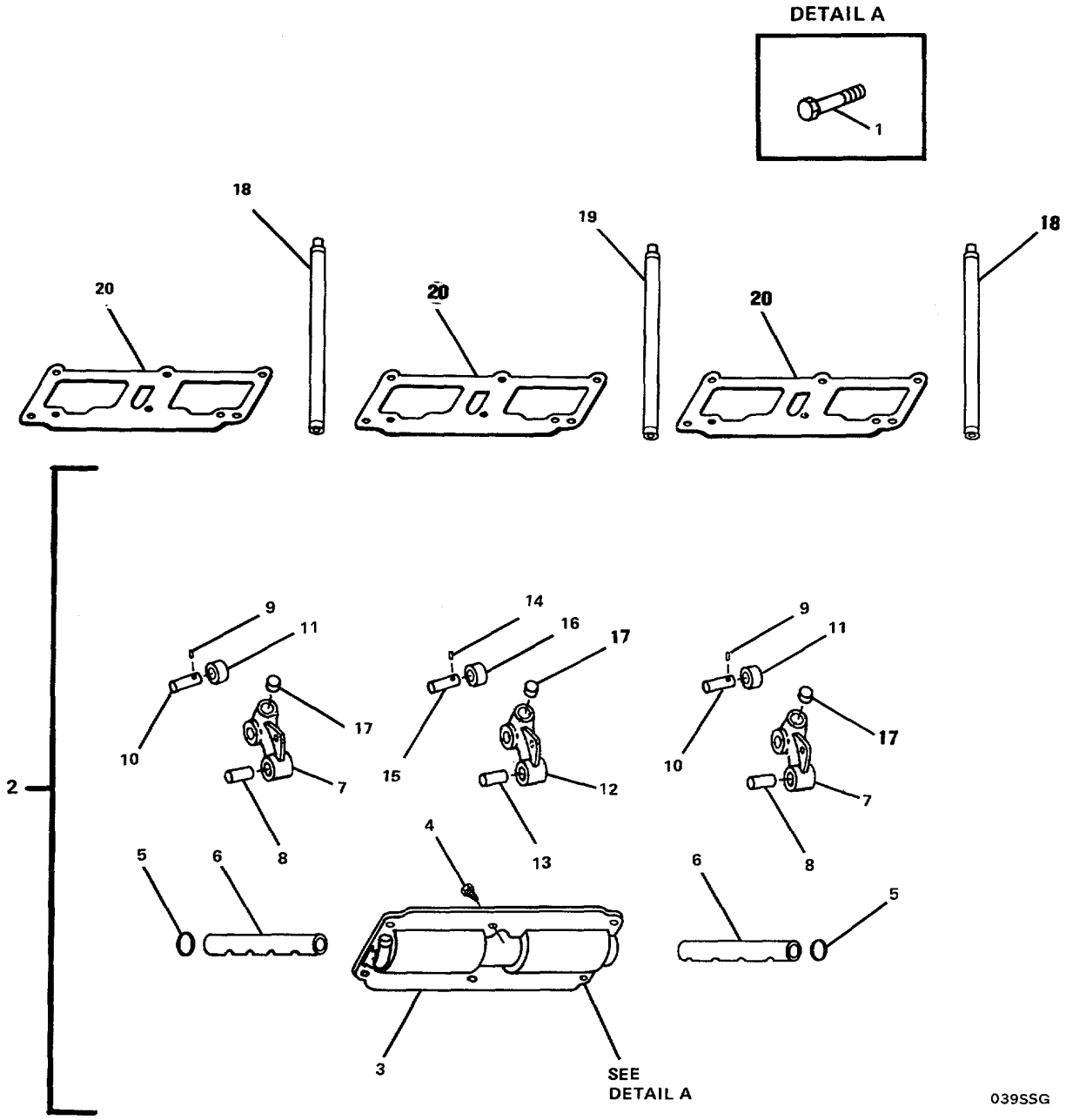

FIGURE 69. Cam Follower Housing Group.

(1) ITEM NO	(2) SMR CODE	(3) FSCM	(4) PART NUMBER	(5) DESCRIPTION AND USABLE ON CODES(UOC)	(6) QTY
				GROUP 03 SHIP SERVICE GENERATOR SET	
				FIGURE 69 CAM FOLLOWER HOUSING GROUP	
	XCFHH	15434	04.01-03	CAM FOLLOWER HOUSIN	1
1	XDFZZ	15434	S-129	SCREW, CAP, HEXAGON H	18
2	PBFHZ	15434	3036939	HOUSING ASSEMBLY, CA	3
3	XDHZZ	15434	3016887	COVER, ENGINE POPPE	3
4	XDHZZ	15434	69736	SCREW, MACHINE	6
5	XDHZZ	15434	175831	PLUG, EXPANSION	6
6	XDHZZ	15434	3017031	SHAFT, SHOULDERED	6
7	PAHHZ	15434	3036935	ROCKER ARM, ENGINE P	12
8	XAHZZ	15434	118378	BEARING, SLEEVE	12
9	XAHZZ	15434	118939	PIN, STRAIGHT, HEADLE	18
10	XAHZZ	15434	3013331	PIN, STRAIGHT, HEADED	12
11	XAHZZ	15434	3036933	ROLLER, LINEAR-ROTAR	12
12	XDHHZ	15434	3036937	LEVER, CAM FOLLOWER	6
13	XAHZZ	15434	118377	BEARING, SLEEVE	6
14	XAHZZ	15434	118939	PIN, STRAIGHT, HEADLE	6
15	XAHZZ	15434	3013330	PIN, STRAIGHT HEADED	6
16	XAHZZ	15434	3036934	ROLLER, LINEAR-ROTAR	6
17	XAHZZ	15434	213559	SOCKET, CAM FOLLOWER	6
18	PAHZZ	15434	3046420	PUSH ROD, INTERNAL	12
19	PAHZZ	15434	3046430	PUSH ROD, INJECTOR	6
20	PAFZZ	15434	3020000	GASKET (CAM FOLLOWER) .030 THK PART OF KIT P/N 3801468	3
20	PAFZZ	15434	3020002	GASKET (CAM FOLLOWER) .017 THK PART OF KIT P/N 3801468	3
20	PAFZZ	15434	3020003	GASKET .022 THK	3

END OF FIGURE

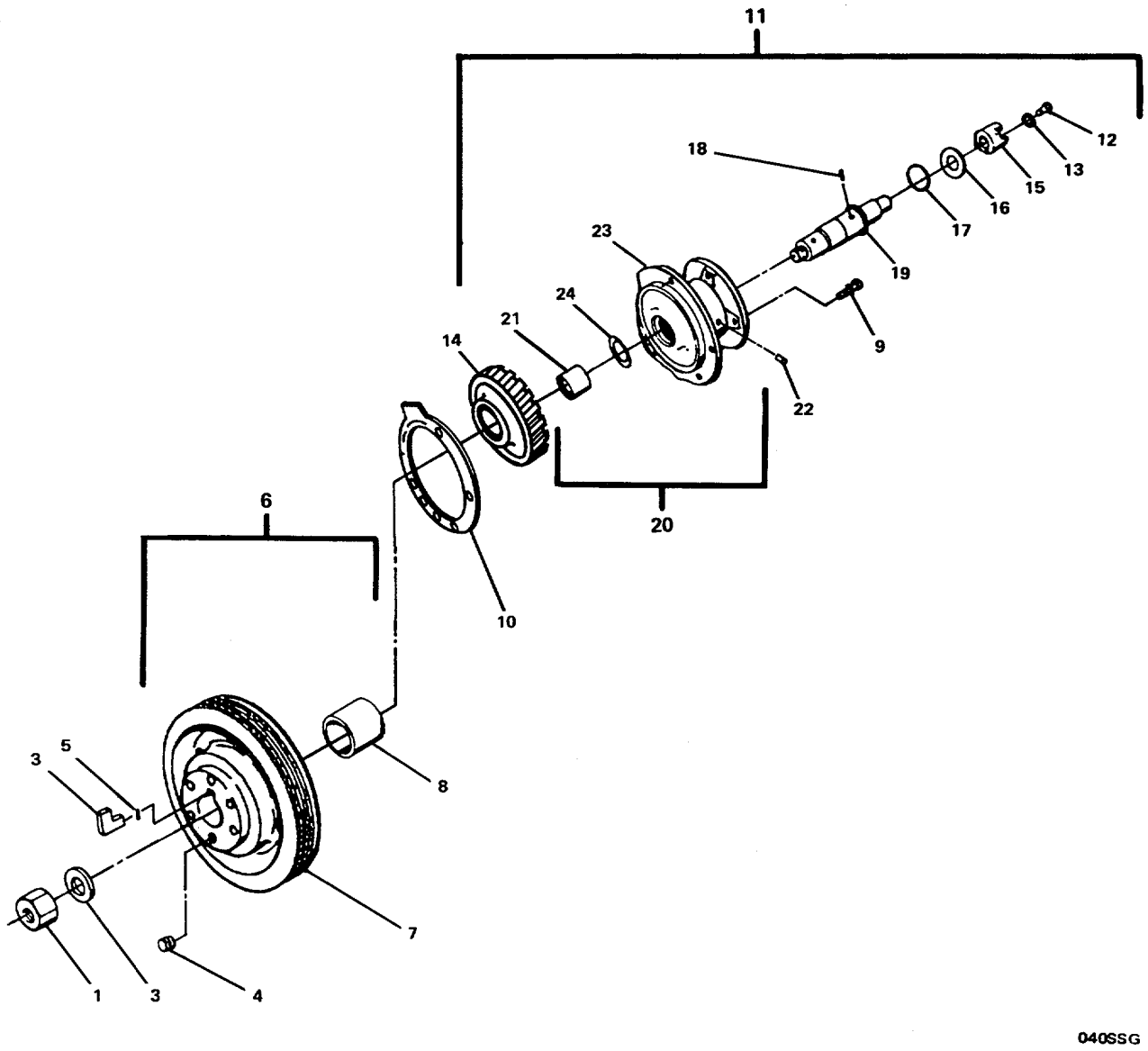

FIGURE 70. Accessory Drive and Pulley Group.

(1) ITEM NO	(2) SMR CODE	(3) FSCM	(4) PART NUMBER	(5) DESCRIPTION AND USABLE ON CODES(UOC)	(6) QTY
				GROUP 03 SHIP SERVICE GENERATOR SET	
				FIGURE 70 ACCESSORY DRIVE AND PULLEY GROUP	
	XCFFF	15434	09.03-03	.....ACCESSORY DRIVE/PUL.....	1
1	XDFZZ	15434	3012526	.....NUT, SELF-LUCKING, HE.....	1
2	XDFZZ	15434	193136	.....WASHER, FLAT.....	1
3	PAFZZ	15434	3008947	.....RUBBER STRIP.....	1
4	XDFZZ	15434	3013786	.....PLUG, PIPE.....	1
5	XDFZZ	15434	70550	.....PIN, PISTON.....	1
6	XDFFZ	15434	3023473	.....PULLEY, FLAT.....	1
7	XAFZZ	15434	3013335	.....PULLEY, FLAT.....	1
8	PAFZZ	15434	190397	.....SLEEVE, PULLEY, PUMP.....	1
9	XDFZZ	15434	3010590	.....SCREW.....	5
10	PAFZZ	15434	200809	.....GASKET (ACCESSORY DRIVE SUPPORT).	1
				PART OF KIT P/N 3801468.....	
11	PBFFZ	15434	3005131	.....POWER TAKEOFF, TRANS.....	1
12	XDFZZ	15434	129510	.....BOLT, SELF-LOCKING.....	1
13	XDFZZ	15434	170664	.....WASHER, FLAT.....	1
14	PAFZZ	15434	142689	.....GEAR, HELICAL.....	1
15	PAFZZ	15434	3000175	.....COUPLING, DRIVE, PULL.....	1
16	XDFZZ	15434	3014103	.....WASHER, FLAT.....	1
17	PAFZZ	15434	3026557	.....BEARING, WASHER, THRU.....	1
18	PAFZZ	15434	3034438	.....PIN, STRAIGHT, HEADLE.....	1
19	PAFZZ	15434	3000171	.....SHAFT, AIR COMPRESSO.....	1
20	PAFFZ	15434	AR-45728	.....DRIVE, CONSTANT.....	1
21	PAFZZ	15434	116391	.....BEARING, SLEEVE.....	1
22	XDFZZ	15434	S-911-B	.....PLUG, PIPE.....	1
23	XAFZZ	15434	3002170	.....SUPPORT, FUEL PUMP.....	1
24	PAFZZ	15434	3026556	.....BEARING, WASHER, THRU.....	1

END OF FIGURE

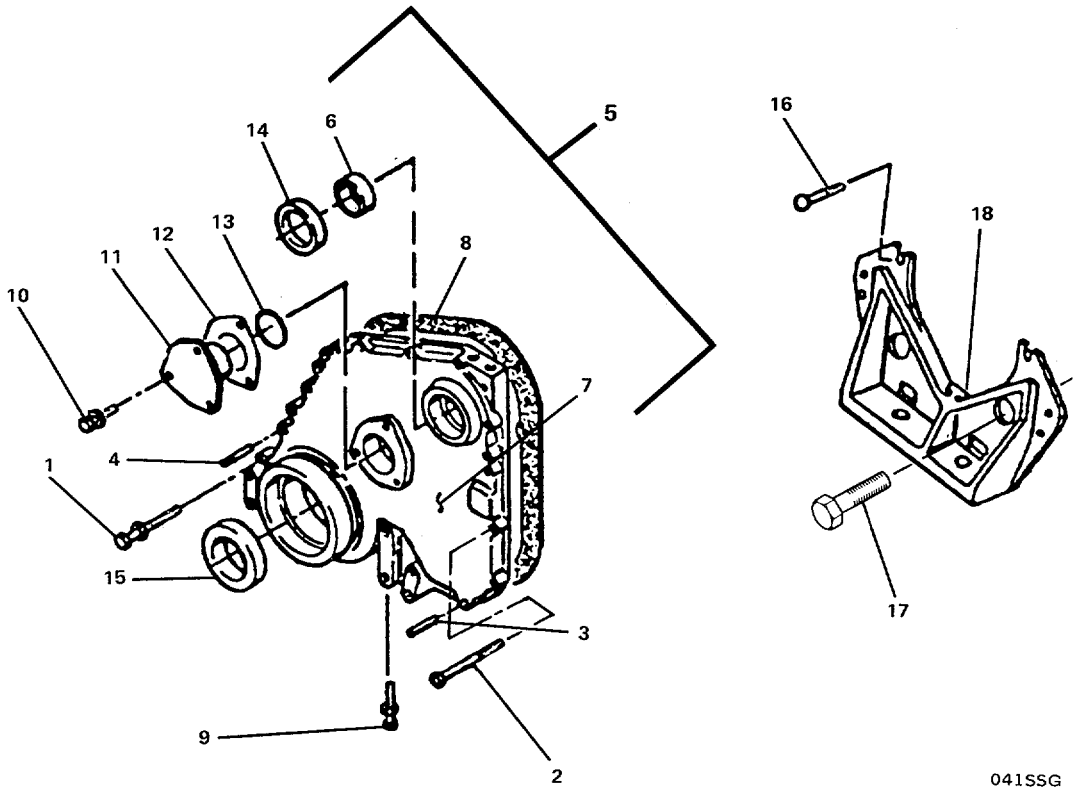

FIGURE 71. Gear Cover and Support Group.

(1) ITEM NO	(2) SMR CODE	(3) FSCM	(4) PART NUMBER	(5) DESCRIPTION AND USABLE ON CODES(UOC)	(6) QTY
				GROUP 03 SHIP SERVICE GENERATOR SET	
				FIGURE 71 GEAR COVER AND SUPPORT GROUP	
	XCFFF	15434	01.09-03	..... GEAR COVER AND SUPP	1
1	XDFZZ	15434	3011714	..... SCREW, ASSEMBLED WAS	13
2	XDFZZ	15434	3011713	..... SCREW, CAP, HEXAGON H	1
3	XDFZZ	15434	60408	..... PIN, STRAIGHT, HEADLE.....	1
4	XDFZZ	15434	70653	..... DOWEL, METALL1C.....	1
5	XDFFF	15434	3052534	..... COVER, GEAR.....	1
6	PAFZZ	15434	132770	..... BEARING , SLEEVE.....	1
7	XAFZZ	15434	3048033	..... COVER, GEAR.....	1
8	PAFZZ	15434	3021704	..... GASKET.....	1
9	XDFZZ	15434	3011712	..... SCREW, ASSEMBLED WAS	11
10	XDFZZ	15434	3011715	..... SCREW.....	3
11	XDFZZ	15434	3008530	..... SUPPORT, CAMSHAFT TH	1
12	PAFZZ	15434	AR-1176	..... SHIM, SET	1
13	PAFZZ	15434	215705	..... PACKING, PREFORMED PART OF KIT P/N . 3801468.....	1
14	PAFZZ	15434	3020185	..... SEAL.....	1
15	PAFZZ	15434	3020183	..... SEAL, PLAIN ENCASED.....	1
16	XDFZZ	15434	212754	..... BOLT, MACHINE.....	2
17	XDFZZ	15434	3054889	..... SCREW, CAP, HEXAGON H.....	6
18	XDFZZ	15434	212301	..... BRACKET, ENGINE MOUN	1

END OF FIGURE

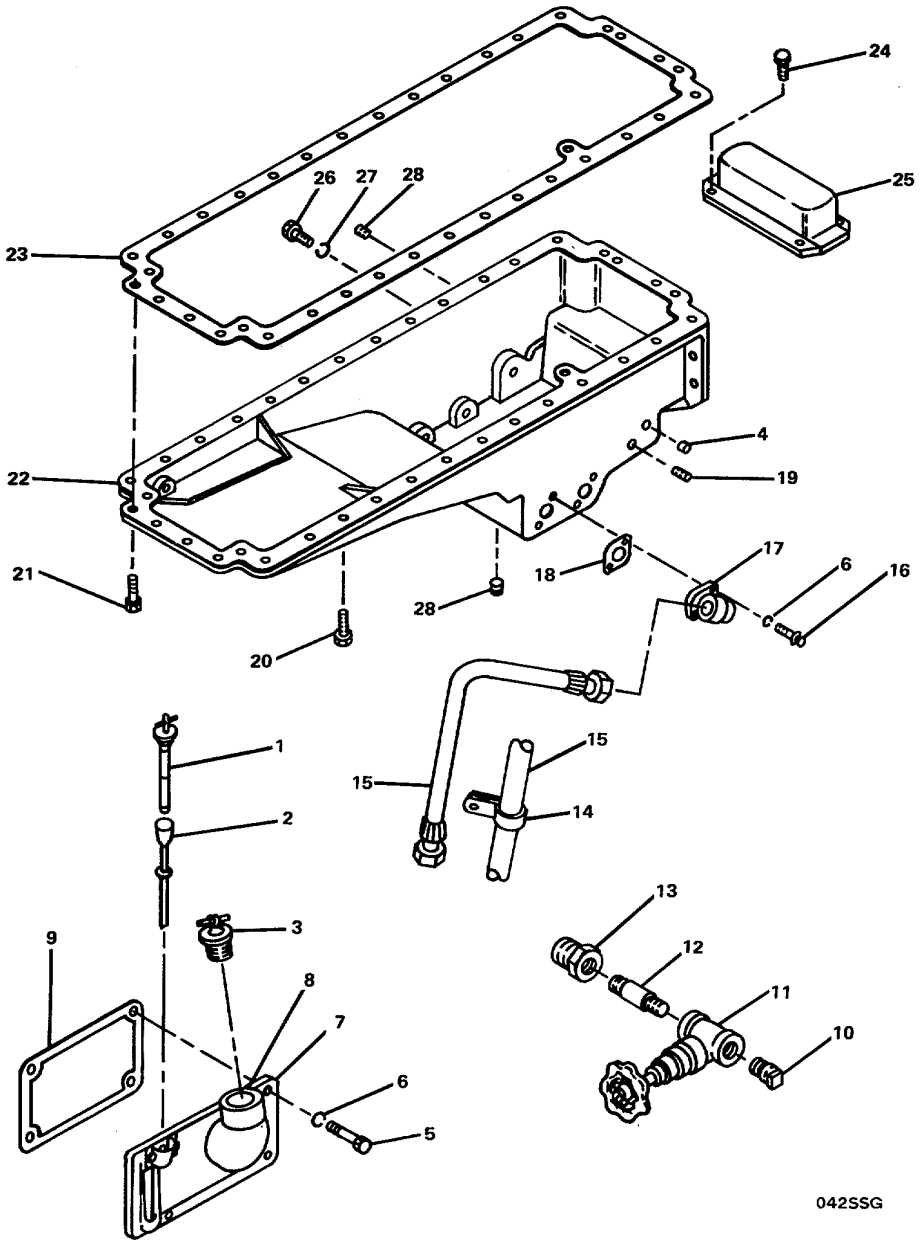

FIGURE 72. Oil Pan Group.

(1) ITEM NO	(2) SMR CODE	(3) FSCM	(4) PART NUMBER	(5) DESCRIPTION AND USABLE ON CODES(UOC)	(6) QTY
				GROUP 03 SHIP SERVICE GENERATOR SET	
				FIGURE 72 OIL PAN GROUP	
	XCFFF	15434	07.01-03	.....OIL PAN GROUP	1
1	XDFZZ	15434	216484	.....GAGE ROD-CAP, LIQUI	1
2	XDFZZ	15434	101814	.....TUBE, DIPSTICK	1
3	XDFZZ	15434	107981	.....CAP, FILLER OPENING	1
4	XDFZZ	15434	3008468	.....PLUG, PIPE.....	3
5	XDFZZ	15434	3010595	.....SCREW, MACHINE	4
6	XDFZZ	96906	MS27183-14	.....WASHER, FLAT	8
7	XDFZZ	15434	115590	.....PLATE OIL SPOUT	1
8	XDFZZ	15434	101264	.....INSERT, TUBE FITTING PART OF KIT ..... P/N 3801468.....	1
9	PAFZZ	15434	65274	.....GASKET (HAND HOLE) PART OF KIT ..... P/N 3801468.....	1
10	XDFZZ	15434	S-915-A	.....PLUG, PIPE.....	1
11	PAFZZ	15434	3023067	.....VALVE, SHUTOFF	1
12	XDFZZ	15434	S-920	.....NIPPLE, PIPE	1
13	XDFZZ	15434	123824	.....PLUG, MACHINE THREAD	1
14	XDFZZ	15434	3016478	.....CLAMP, LOOP	1
15	PAFZZ	15434	3017963	.....HOSE ASSEMBLY, NONME	1
16	XDFZZ	15434	3012478	.....SCREW, ASSEMBLED WAS	2
17	XDFZZ	15434	3013980	.....ELBOW, FLANGE TO TUB	1
18	PAFZZ	15434	157551	.....GASKET (LUBE OIL PUMP) PART OF ..... KIT P/N 3801468.....	1
19	XDFZZ	15434	3013786	.....PLUG, PIPE	1
20	XDFZZ	15434	3008069	.....SCREW, CAP, HEXAGON H	28
21	XDFZZ	15434	3017050	.....SCREW, CAP, HEXAGON H	4
22	XDFZZ	15434	193631	.....OIL PAN	1
23	PAFZZ	15434	3032861	.....GASKET	1
24	XDFZZ	15434	S-1354	.....SCREW, TAPPING, THREA	4
25	PAFZZ	15434	20622	.....STRAINER ELEMENT, SE	1
26	XDFZZ	15434	3055069	.....PLUG, MACHINE THREAD	1
27	XDFZZ	15434	67946	.....SPACER, RING	1
28	XDFZZ	15434	3008470	.....PLUG.....	2

END OF FIGURE

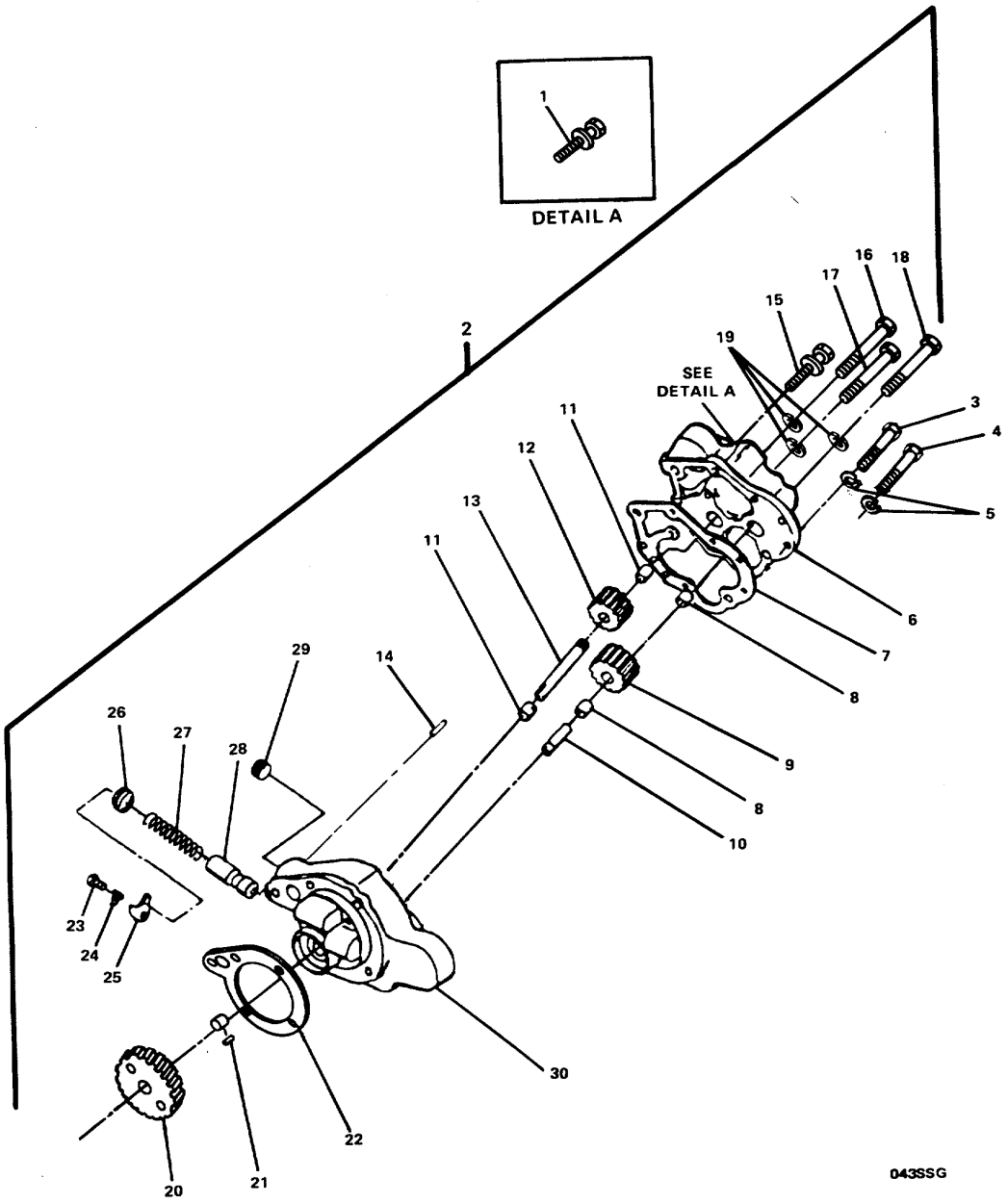

FIGURE 73. Engine Oil Pump Assembly.

(1) ITEM NO	(2) SMR CODE	(3) FSCM	(4) PART NUMBER	(5) DESCRIPTION AND USABLE ON CODES(UOC)	(6) QTY
				GROUP 03 SHIP SERVICE GENERATOR SET	
				FIGURE 73 ENGINE OIL PUMP ASSEMBLY	
1	XDFZZ	15434	3022590	.....SCREW, CAPTIVE	6
2	PBFFF	15434	AR-9834	.....OIL PUMP ASSEMBLY, E	1
3	XDFZZ	15434	S-103	.....BOLT, MACHINE.....	1
4	XDFZZ	15434	S-il11	.....BOLT, MACHINE	1
5	XDFZZ	96906	MS35338-7	.....WASHER, LOCK.....	2
6	XDFZZ	15434	AR-4258	.....COVER.....	1
7	PAFZZ	15434	203145	.....GASKET (LUBE OIL PUMP) PART OF ..... KIT P/N 3801468.....	1
8	PAFZZ	15434	68365	.....BUSHING, SLEEVE.....	2
9	XDFZZ	15/434	3045622	..... GEAR	1
10	XDFZZ	15434	177419	.....SHAFT, SHOULDERED	1
11	PAFZZ	15434	69521	.....BEARING, SLEEVE.....	2
12	XDFZZ	15434	3025281	.....GEAR, HELICAL.....	1
13	XDFZZ	15434	177417	.....SHAFT, STRAIGHT.....	1
14	XDFZZ	15434	69519	.....PIN, STRAIGHT, HEADLE.....	1
15	XDFZZ	15434	3012479	.....BOLT, ASSEMBLED WASH	2
16	XDFZZ	15434	S-119-C	.....SCREW, CAP, HEXAGON H	1
17	XDFZZ	15434	S-140-C	.....SCREW, CAP, HEXAGON H	1
18	XDFZZ	15434	S-136-B	.....SCREW, CAP, HEXAGON H	1
19	XDFZZ	96906	MS35338-47	.....WASHER, LOCK.....	3
20	XDFZZ	15434	3045617	.....GEAR	1
21	XDFZZ	96906	MS35756-34	.....KEY, WOODRUFF	1
22	PAFZZ	15434	3031434	.....GASKET (LUBE OIL PUMP) PART OF ..... KIT P/N 3801468.....	1
23	XDFZZ	15434	S-109	.....SCREW, CAP, HEXAGON H	1
24	XDFZZ	15434	109319	.....LOCK PLATE	1
25	XDFZZ	15434	126304	.....CLAMP, RETAINING	1
26	XDFZZ	15434	134596	.....PLUG, VENT	1
27	PAFZZ	15434	211939	.....SPRING, HELICAL, COMP.....	1
28	PAFZZ	15434	109333	.....PLUNGER, PRESSURE RE.....	1
29	XDFZZ	15434	3008469	.....PLUG, PIPE.....	2
30	XDFZZ	15434	AR-9832	.....BODY, LUBE OIL PUMP	1

END OF FIGURE

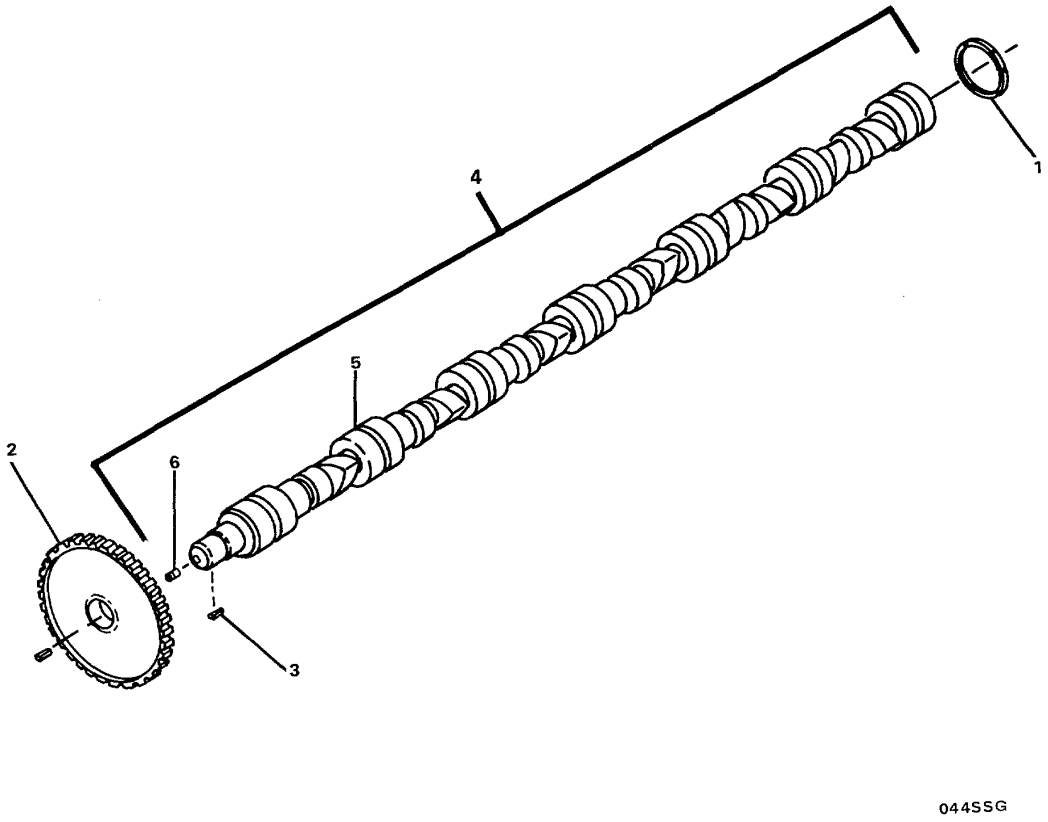

FIGURE 74. Camshaft and Gear Group.

(1) ITEM NO	(2) SMR CODE	(3) FSCM	(4) PART NUMBER	(5) DESCRIPTION AND USABLE ON CODES(UOC)	(6) QTY
				GROUP 03 SHIP SERVICE GENERATOR SET	
				FIGURE 74 CAMSHAFT AND GEAR GROUP	
	XCFHH	15434	01.07-03	.....CAMSHAFT AND GEAR	1
1	PAHZZ	15434	215233	..... BEARING, WASHER, THRU	1
2	PAHZZ	15434	3035195	..... GEAR, HELICAL.....	1
3	XDHZZ	15434	3021600	..... KEY, WOODRUFF	1
4	PBHHZ	15434	3049024	..... CAMSHAFT, ENGINE	1
5	XAHZZ	15434	3042568	..... CAMSHAFT.....	1
6	XDHZZ	15434	68193	..... PLUG, VENT	1

END OF FIGURE

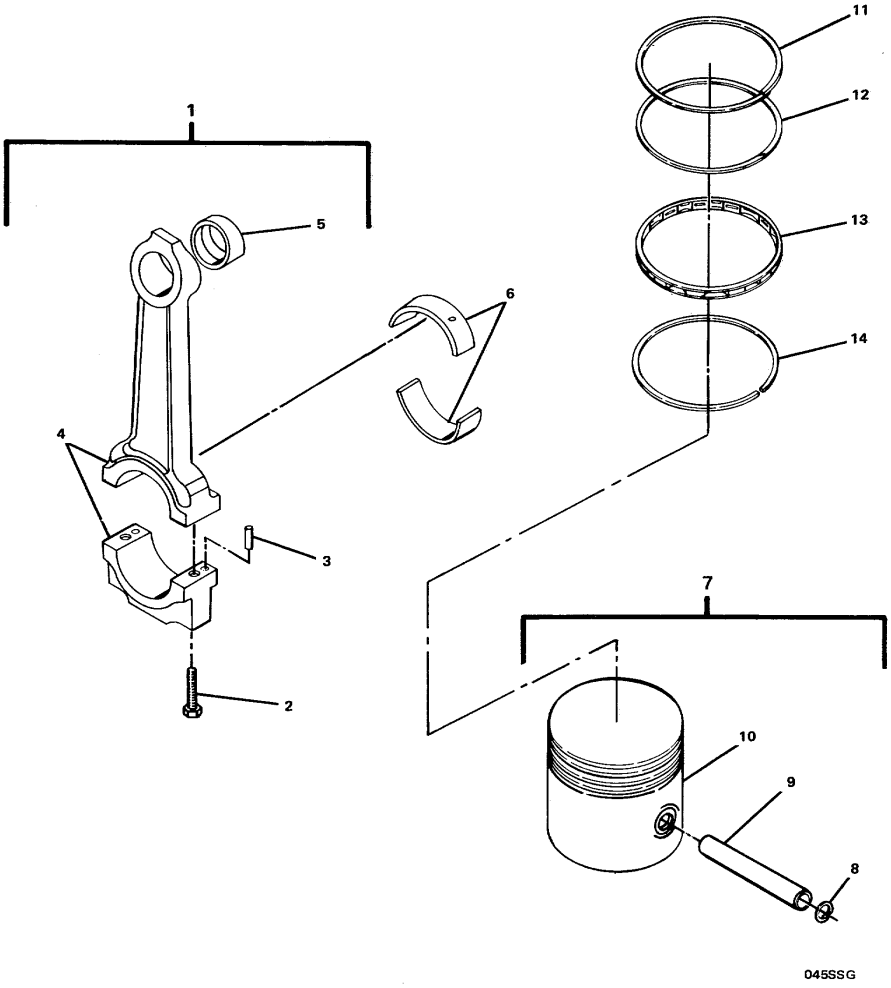

FIGURE 75. Connecting Rod and Piston Group.

(1) ITEM NO	(2) SMR CODE	(3) FSCM	(4) PART NUMBER	(5) DESCRIPTION AND USABLE ON CODES(UOC)	(6) QTY
				GROUP 03 SHIP SERVICE GENERATOR SET	
				FIGURE 75 CONNECTING ROD AND PISTON GROUP	
	XCFHH	15434	01.04/01.05-03	.....CONNECTING ROD AND.....	1
1	PBFHH	15434	3013930	..... CONNECTING ROD, PIST	6
2	XDHZZ	15434	219153	..... BOLT, MACHINE.....	12
3	PAHZZ	15434	70550	..... PIN, PISTON	12
4	XAHZZ	15434	218808	..... ROD, CONNECTING ENGI	6
5	PAHZZ	15434	187420	..... BUSHING, PISTON PIN	6
6	PAHZZ	15434	214950	..... BEARING.....	12
7	PBFHZ	15434	3801876	..... PISTON, INTERNAL COM	6
8	PAHZZ	15434	175755	..... RING, RETAINING	12
9	PAHZZ	15434	191970	..... PIN, PISTON	6
10	XAHZZ	15434	3051554	..... PISTON, ENGINE.....	6
11	XDHZZ	15434	3012331	..... RING, PISTON.....	6
12	XDHZZ	15434	3012332	..... RING, PISTON.....	6
13	XDHZZ	15434	214730	..... RING, PISTON.....	6
14	XDHZZ	15434	218732	..... RING, PISTON	6
	PAHZZ	15434	3801056	..... RING SET, PISTON (NEEDED FOR COMPLETE REPAIR OF S.S.GENERATOR SET ENGINE	6
	PAHZZ	15434	3801260	.... BEARING SET, SLEEVE (NEEDED FOR COMPLETE REPAIR OF S.S.GENERATOR SET ENGINE)	1

END OF FIGURE

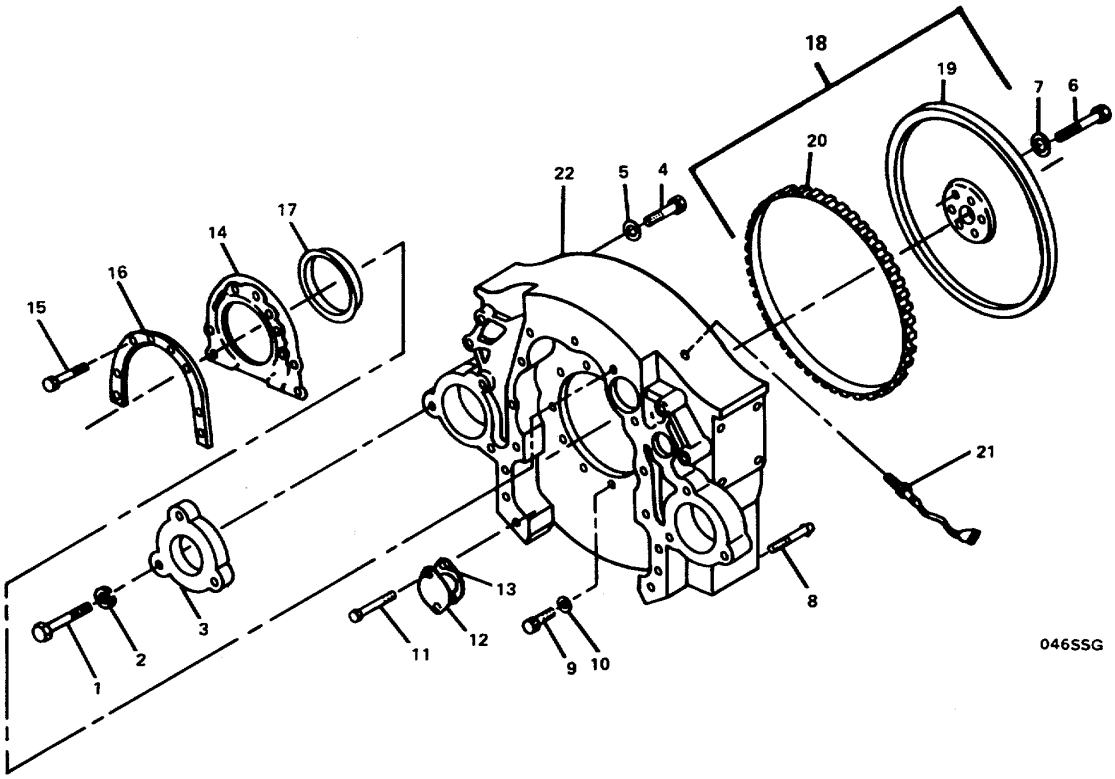

FIGURE 76. Flywheel and Housing Group.

(1) ITEM NO	(2) SMR CODE	(3) FSCM	(4) PART NUMBER	(5) DESCRIPTION AND USABLE ON CODES(UOC)	(6) QTY
				GROUP 03 SHIP SERVICE GENERATOR SET	
				FIG. 76 FLYWHEEL AND HOUSING GROUP	
	XCFHH	15434	16.01-03	...FLYWHEEL AND HOUSIN	1
1	XDFZZ	15434	153581	...SCREW,CAP,HEXAGON H	3
2	XDFZZ	96906	MS35338-50	...WASHER,LOCK	3
3	XDFZZ	15434	9245	...SPACER,STARTING MOT	1
4	XDFZZ	15434	3048351	...SCREW,CAP,HEXAGON H	9
5	XDFZZ	15434	127316	...WASHER,RECESSED.	9
6	XDFZZ	15434	204165	...SCREW,CAP.	6
7	XDFZZ	15434	200861	...WASHER, FLAT	6
8	XDFZZ	15434	60408	...PIN,STRAIGHT,HEADLE	2
9	XDFZZ	15434	163086	...PLUG,MACHINE THREAD	1
10	XDFZZ	15434	8265	...WASHER,FLAT	1
11	XDFZZ	15434	3001646	...SCREW,TAPPING,THREA	2
12	XDFZZ	15434	70657	...COVER,ACCESS	1
13	PAFZZ	15434	3021735	...GASKET	1
14	XDFZZ	15434	3049018	...COVER,REAR	1
15	XDFZZ	15434	3010594	...SCREW,CAP,HEXAGON H	8
16	PAFZZ	15434	40662-A	...GASKET PART OF KIT P/N 3801468	1
17	PAFZZ	15434	3006737	...SEAL PART OF KIT P/N 3801468	1
18	PBFHZ	15434	3023510	...FLYWHEEL,ENGINE	1
19	XAHZZ	15434	2965	...FLYWHEEL.ENG INE	1
20	PAHZZ	15434	4851	...GEAR,SPUR	1
21	PAHZZ	15434	3034572	...COIL,ELECTRICAL	1
22	XDHZZ	15434	3005557	...HOUSING,MECHANICAL	1

END OF FIGURE

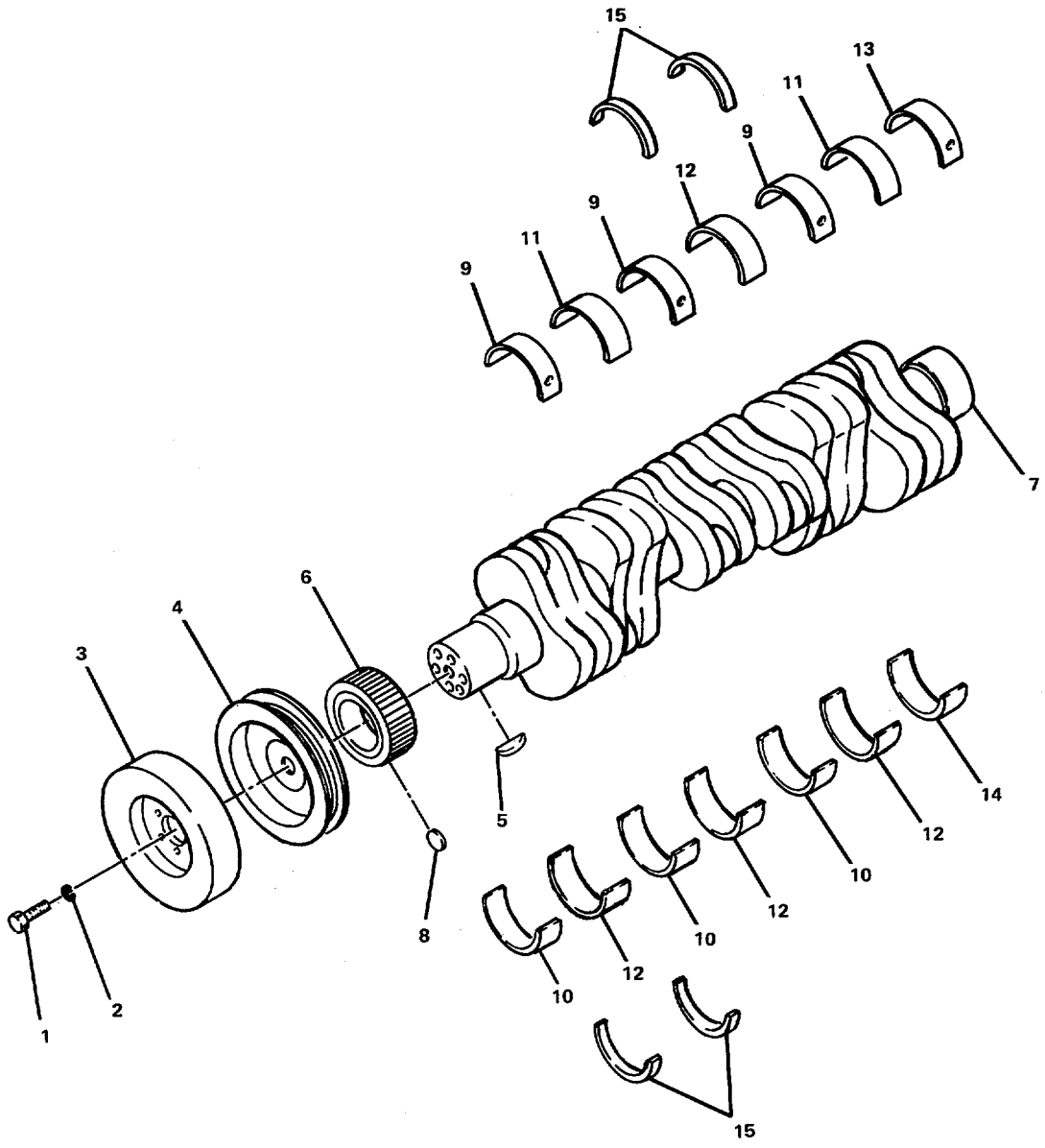

FIGURE 77. Crankshaft Group.

(1) ITEM NO	(2) SMR CODE	(3) FSCM	(4) PART NUMBER	(5) DESCRIPTION AND USABLE ON CODES(UOC)	(6) QTY
				GROUP 03 SHIP SERVICE GENERATOR SET	
				FIG. 77 CRANKSHAFT GROUP	
	XCHHH	15434	01.02-03	.CRANKSHAFT GROUP	1
1	XDFZZ	15434	204165	...SCREW,CAP	6
2	XDFZZ	15434	127316	...WASHER ,RECESSED	6
3	PAFZZ	15434	217323	...DAMPENER,FLUID PRES	1
4	XDFZZ	15434	211918	...PULLEY,GROOVE	1
5	XDHZZ	15434	210179	...KEY,MACHINE	1
6	XDHZZ	15434	3014614	...GEAR,HELICAL	1
7	PBHZZ	15434	3608833	...CRANKSHAFT, ENGINE	1
8	PAHZZ	15434	3037045	...RING,RETAINING	7
9	XDHZZ	15434	3019174	...BEARING HALF, SLEEVE	3
10	XDHZZ	15434	3019180	...BEARING HALF, SLEEVE	3
11	XDHZZ	15434	3019186	...BEARING HALF, SLEEVE	3
12	XDHZZ	15434	3019192	...BEARING HALF,SLEEVE	3
13	XDHZZ	15434	3019198	...BEARING HALF, SLEEVE	1
14	XDHZZ	15434	3019204	...BEARING HALF,SLEEVE	1
15	XDHZZ	15434	3019218	...BEARING,WASHER,THRU	4

END OF FIGURE

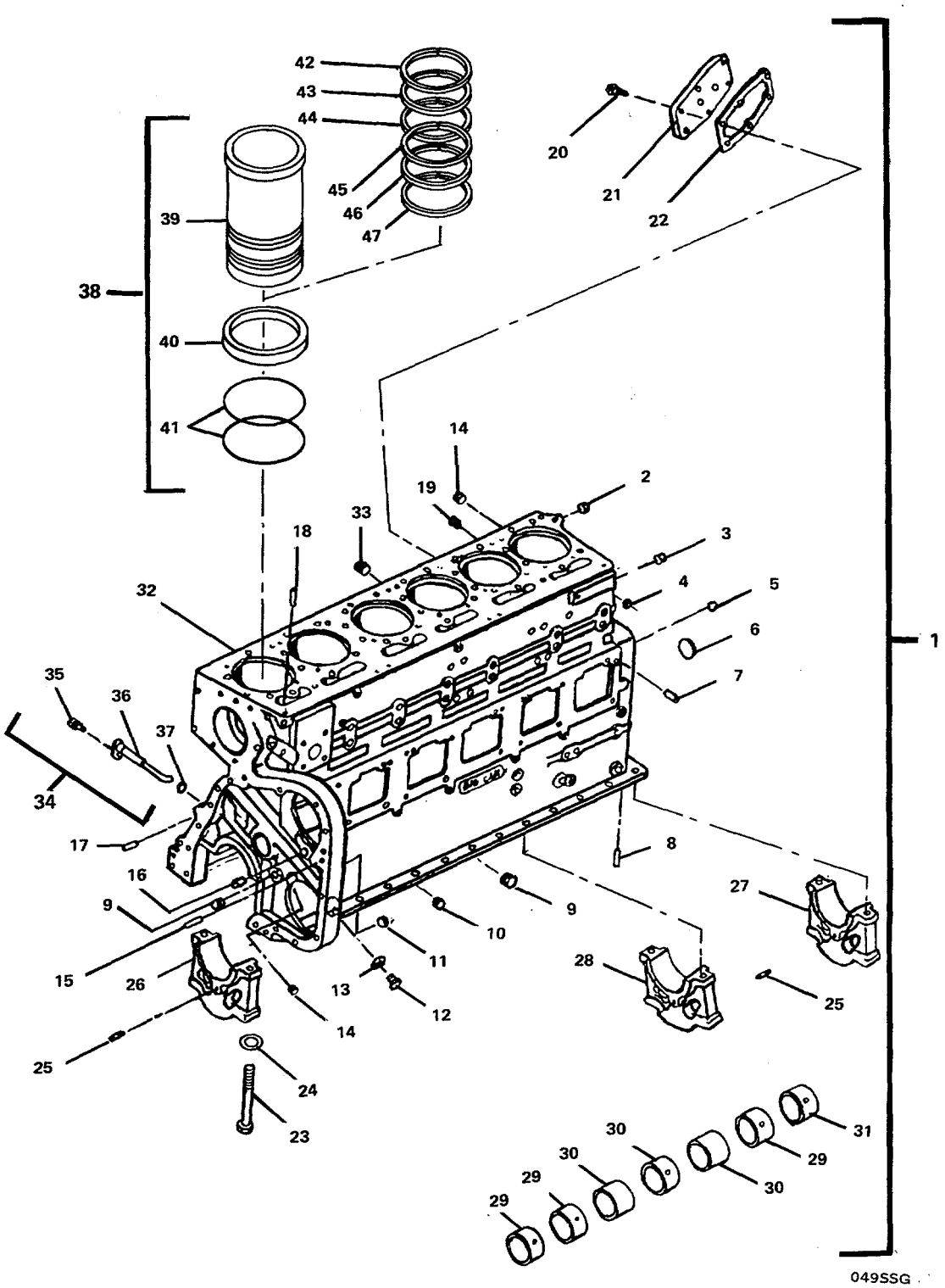

FIGURE 78. Cylinder Block Group.

(1) ITEM NO	(2) SMR CODE	(3) FSCM	(4) PART NUMBER	(5) DESCRIPTION AND USABLE ON CODES(UOC)	(6) QTY
				GROUP 03 SHIP SERVICE GENERATOR SET	
				FIG. 78 CYLINDER BLOCK GROUP	
	XCFHH	15434	01.01-03	.CYLINDER BLOCK GROU	1
1	PBFHH	15434	3801592	...ENGINE BLOCK,DIESEL	1
2	XDHZZ	15434	S-966-E	....PLUG,PIPE	1
3	XDHZZ	15434	S-719	....PLUG,EXPANSION	1
4	XDHZZ	15434	S-679	....WASHER,FLAT	1
5	XDHZZ	15434	3008466	....PLUG,PIPE	2
6	PAHZZ	15434	3011952	....CAP,PROTECTIVE,DUST	1
7	XDHZZ	15434	68585	....PIN,STRAIGHT,HEADLE	6
8	XDHZZ	15434	67211	....PIN,STRAIGHT,HEADLE	2
9	XDHZZ	15434	3013786	....PLUG,PIPE	6
10	XDHZZ	96906	MS35648-8	....PLUG,EXPANSION	1
11	XDHZZ	15434	3008469	....PLUG,PIPE	1
12	XDHZZ	15434	210884	....PLUG,MACHINE THREAD	1
13	XDHZZ	15434	66292	....WASHER,FLAT	1
14	XDHZZ	15434	3008468	....PLUG,PIPE	2
15	XDHZZ	15434	70653	....DOWEL,METALLIC	1
16	XDHZZ	15434	S-911-B	....PLUG,PIPE	2
17	XDHZZ	15434	60408	....PIN,STRAIGHT,HEADLE	3
18	XDHZZ	15434	68445	....PIN,GROOVED,HEADLES	6
19	XDHZZ	15434	69901	....PLUG,PIPE	7
20	XDHZZ	15434	3013904	....SCREW	6
21	XDHZZ	15434	132019	....COVER,ACCESS	1
22	PAHZZ	15434	70089-1	....GASKET	1
23	XDHZZ	15434	208346	....SCREW,CAP,HEXAGON H	14
24	XDHZZ	15434	3046246	....WASHER,FLAT	14
25	PAHZZ	15434	202903	....PIN STRAIGHT HEXAGO	2
26	XAHZZ	15434	3008047	....CAP,PILLOW BLOCK	3
27	XAHZZ	15434	3008048	....CAP,PILLOW BLOCK	3
28	XAHZZ	15434	3008049	....CAP,PILLOW BLOCK	1
29	PAHZZ	15434	3028075	....BUSHING,SLEEVE	4
30	PAHZZ	15434	3028269	....BUSHING,SLEEVE	2
31	PAHZZ	15434	3011951	....BEARING,SLEEVE	1
32	XAHZZ	15434	3031158	....BLOCK,CYLINDER	1
33	XDHZZ	15434	S-901	....PLUG,PIPE	1
34	PAHHH	15434	3014404	....NOZZLE,PISTON	6
35	XDHZZ	15434	3033822	.....SCREW,SELF-LOCKING	6
36	XDHZZ	15434	3013591	.....NOZZLE,PISTON COOLI	6
37	XDHZZ	15434	3007442	.....PACKING,PREFORMED PART OF KIT P/N 3801468	6
38	PBHZH	15434	3801826	....CYLINDER SLEEVE	6
39	XAHZZ	15434	3055099	....LINER,CYLINDER	6
40	XDHZZ	15434	215090	....GASKET	6
41	XDHZZ	15434	3032874	....PACKING,PREFORMED	12
42	XDHZZ	15434	3019955	....SHIM (0.007)	1
43	XDHZZ	15434	3019956	....SPACER,RING (0.008)	1
44	XDHZZ	15434	3019957	....SHIM (0.009)	1
45	XDHZZ	15434	3054948	....SHIM (0.020)	1
46	XDHZZ	15434	3019959	....SHIM (0.031)	1

(1) ITEM NO	(2) SMR CODE	(3) FSCM	(4) PART NUMBER	(5) DESCRIPTION AND USABLE ON CODES(UOC)			(6) QTY
47	XDHZZ	15434	3019960	....SHIM (0.062)			1
	PAHZZ	15434	3801328	..PARTS KIT,CYLINDER HEAD,DIESEL (NEEDED FOR COMPLETE REPAIR OF S.S. GENERATOR ENGINE).....			1
	PAFZZ	15434	3801330	..GASKET AND SEAL SET (NEEDED FOR COMPLETE REPAIR OF S.S. GENERATOR ENGINE SET).....			1
				GASKET	(1)	53-13	
				GASKET	(1)	53-17	
				GASKET	(1)	55-4	
				GASKET	(3)	64-13	
				GASKET	(3)	64-42	
				GASKET	(1)	66-7	
				GASKET	(1)	66-14	
				GASKET	(1)	66-28	
				GASKET	(3)	66-41	
				GASKET	(6)	67-9	
				GASKET	(3)	68-22	
				GASKET	(6)	68-29	
				LOCKING PLATE,NUT	(1)	55-6	
				PACKING,PREFORMED	(1)	53-8	
				PACKING,PREFORMED	(4)	66-32	
				PACKING,PREFORMED	(1)	67-6	
				PACKING,PREFORMED	(12)	68-25	
	PAHZZ	15434	3801468	..GASKET SET			1
				GASKET	(1)	58-14	
				GASKET	(1)	58-20	
				GASKET	(1)	59-12	
				GASKET	(1)	59-36	
				GASKET	(1)	59-45	
				GASKET	(1)	66-19	
				GASKET	(3)	69-20	
				GASKET	(3)	69-20	
				GASKET	(1)	70-10	
				GASKET	(1)	72-9	
				GASKET	(1)	72-18	
				GASKET	(1)	73-7	
				GASKET	(1)	73-22	
				GASKET	(1)	76-16	
				INSERT,TUBE FITTING	(1)	72-8	
				PACKING,PREFORMED	(2)	59-29	
				PACKING,PREFORMED	(1)	71-13	
				PACKING,PREFORMED	(6)	78-37	
				RING,RETAINING	(2)	59-28	
				SEAL	(1)	76-17	
				SPACER,RING	(1)	59-40	

END OF FIGURE

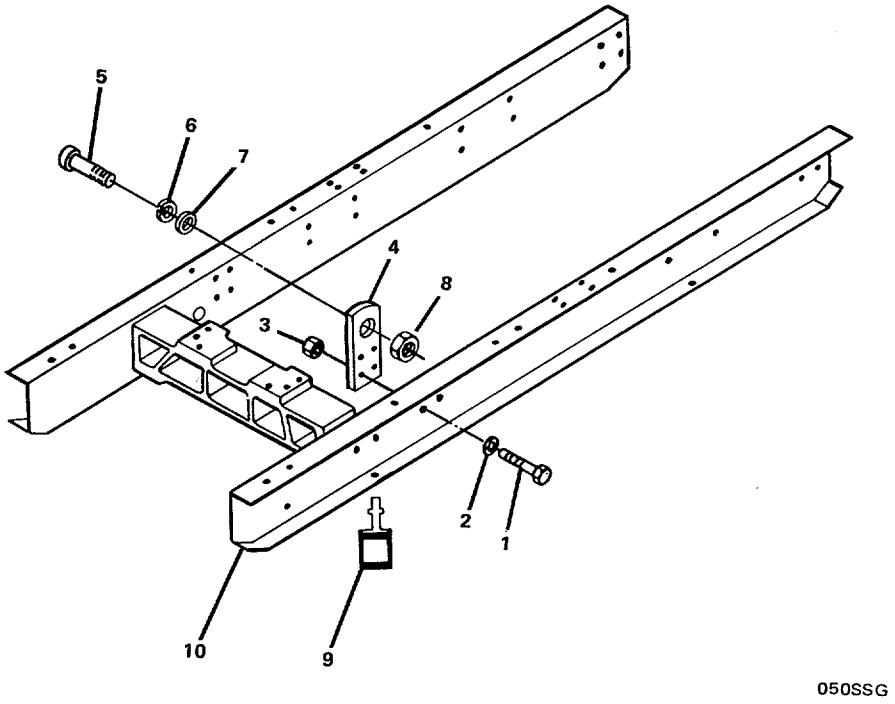

FIGURE 79. Sub-Base Group.

(1) ITEM NO	(2) SMR CODE	(3) FSCM	(4) PART NUMBER	(5) DESCRIPTION AND USABLE ON CODES(UOC)	(6) QTY
				GROUP 03 SHIP SERVICE GENERATOR SET	
				FIG. 79 SUB-BASE GROUP	
	XCFFF	15434	21.01.2-03	SUBBASE GROUP	1
1	XDFZZ	15434	S-113	..SCREW,CAP,HEXAGON H	16
2	XDFZZ	15434	S-608	..WASHER,LOCK	16
3	XDFZZ	15434	S-200	..NUT,PLAIN,HEXAGON	16
4	XDFZZ	15434	3000248	..PAD EYE	4
5	XDFZZ	15434	S-149	..SCREW,CAP,HEXAGON H	2
6	XDFZZ	96906	MS35338-50	..WASHER,LOCK	2
7	XDFZZ	15434	127316	..WASHER,RECESSED	2
8	XDFZZ	15434	S-201	..NUT,PLAIN,HEXAGON	2
9	PAFZZ	15434	3056517	..MOUNT,RESILIENT	6
10	XDFZZ	15434	3056509	..SUBBASE	1

END OF FIGURE

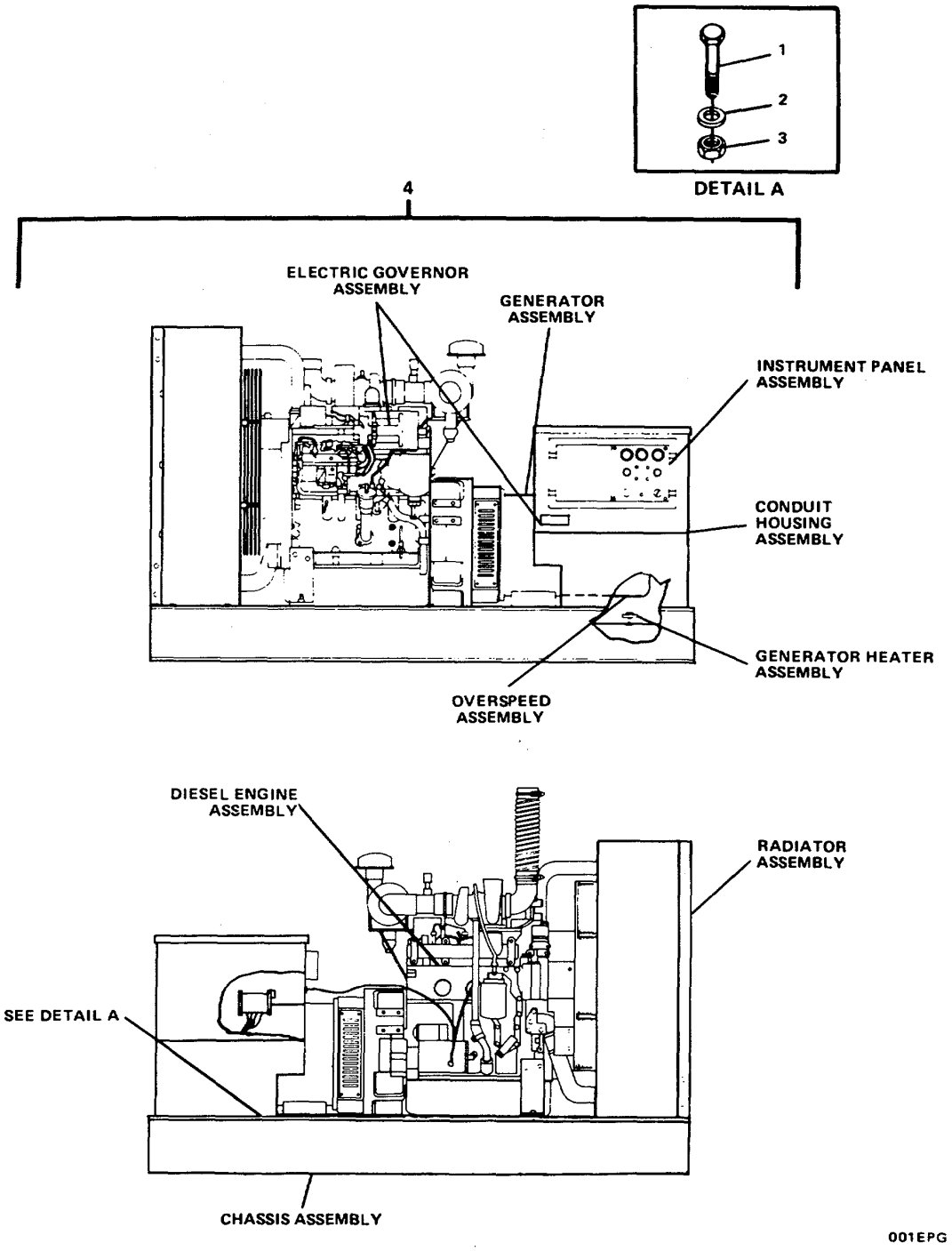

FIGURE 80. Emergency Generator Set.

(1) ITEM NO	(2) SMR CODE	(3) FSCM	(4) PART NUMBER	(5) DESCRIPTION AND USABLE ON CODES(UOC)	(6) QTY
				GROUP 04 EMERGENCY GENERATOR SET	
				FIG. 80 EMERGENCY GENERATOR SET	
1	XDOZZ	77408	DO-2907-1691	BOLT,MACHINE	4
2	XDOZZ	77408	D0-5950-8047	WASHER,LOCK	4
3	XDOZZ	77408	D0-3010-8047	NUT,PLAIN,HEXAGON	4
4	PBFHH	15434	S.0.41727-4BT3.9 -GC	GENERATOR SET,DIESE	1

END OF FIGURE

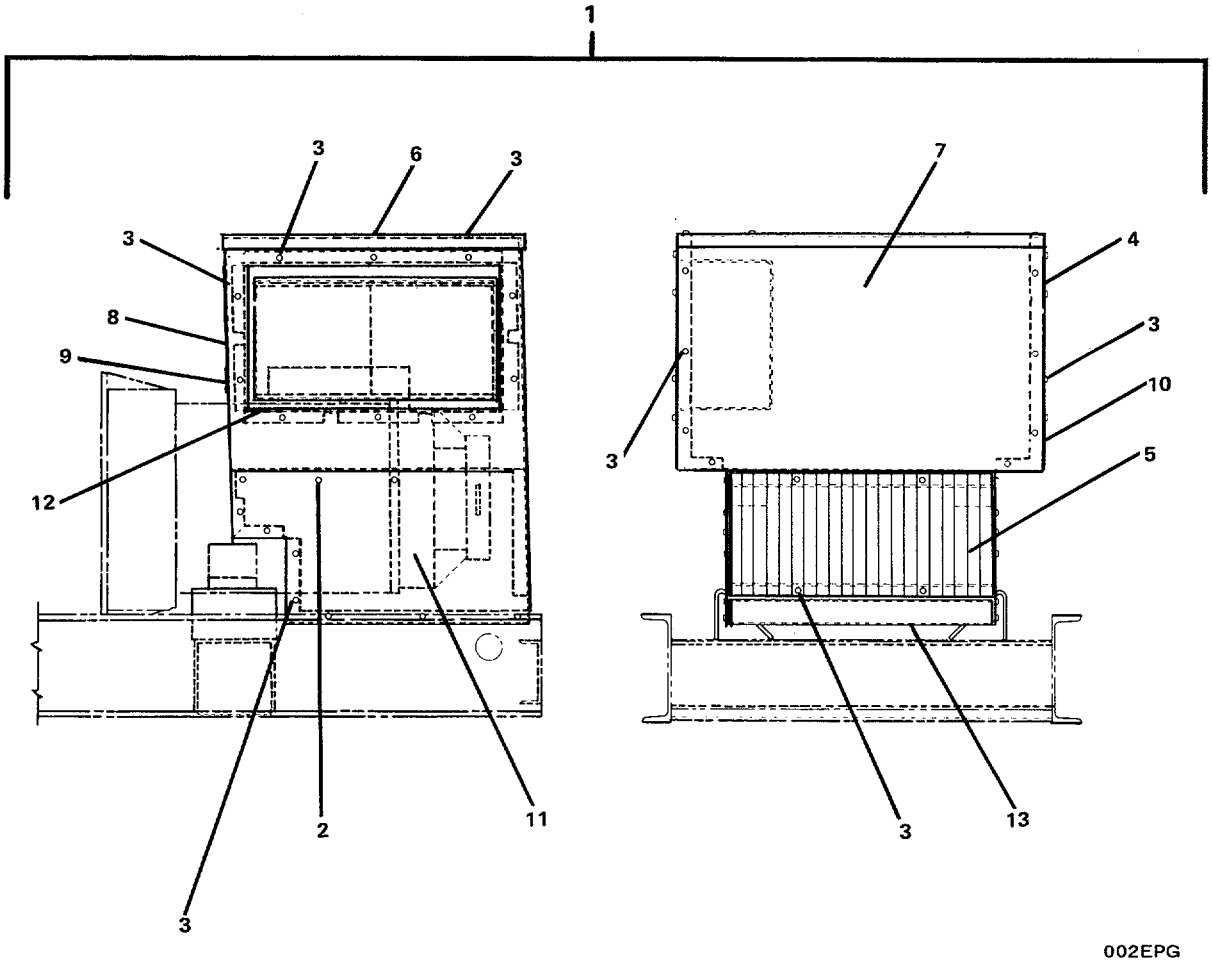

FIGURE 81. Control Housing Assembly.

(1) ITEM NO	(2) SMR CODE	(3) FSCM	(4) PART NUMBER	(5) DESCRIPTION AND USABLE ON CODES(UOC)	(6) QTY
				GROUP 04 EMERGENCY GENERATOR SET	
				FIG. 81 CONTROL HOUSING ASSEMBLY	
1	XDFFF	44940	300-3197	HOUSING ASSEMBLY,CO	1
2	XDFZZ	44940	800-2056	..SCREW,CAP,HEXAGON H	6
3	XDFZZ	44940	821-0018	..SCREW,CAP,HEXAGON H	48
4	XDFZZ	44940	319-0044	..COVER,ACCESS	1
5	XDFZZ	44940	234-0845	..GRILLE	1
6	XDFZZ	44940	319-0042	..COVER,ACCESS	1
7	XDFZZ	44940	319-0040	..PANEL,BLANK	1
8	XDFZZ	44940	319-0041	..PANEL,BLANK	1
9	XDFZZ	44940	508-0001	..GROMMET,NONMETALLIC	1
10	XDFZZ	44940	319-0039-02	..PANEL,BLANK	1
11	XDFZZ	44940	319-0039-01	..PANEL,BLANK	1
12	XDFZZ	44940	319-0125	..HOUSING,CONTROL	1
13	XDFZZ	44940	319-0043	..PANEL,BLANK	1

END OF FIGURE

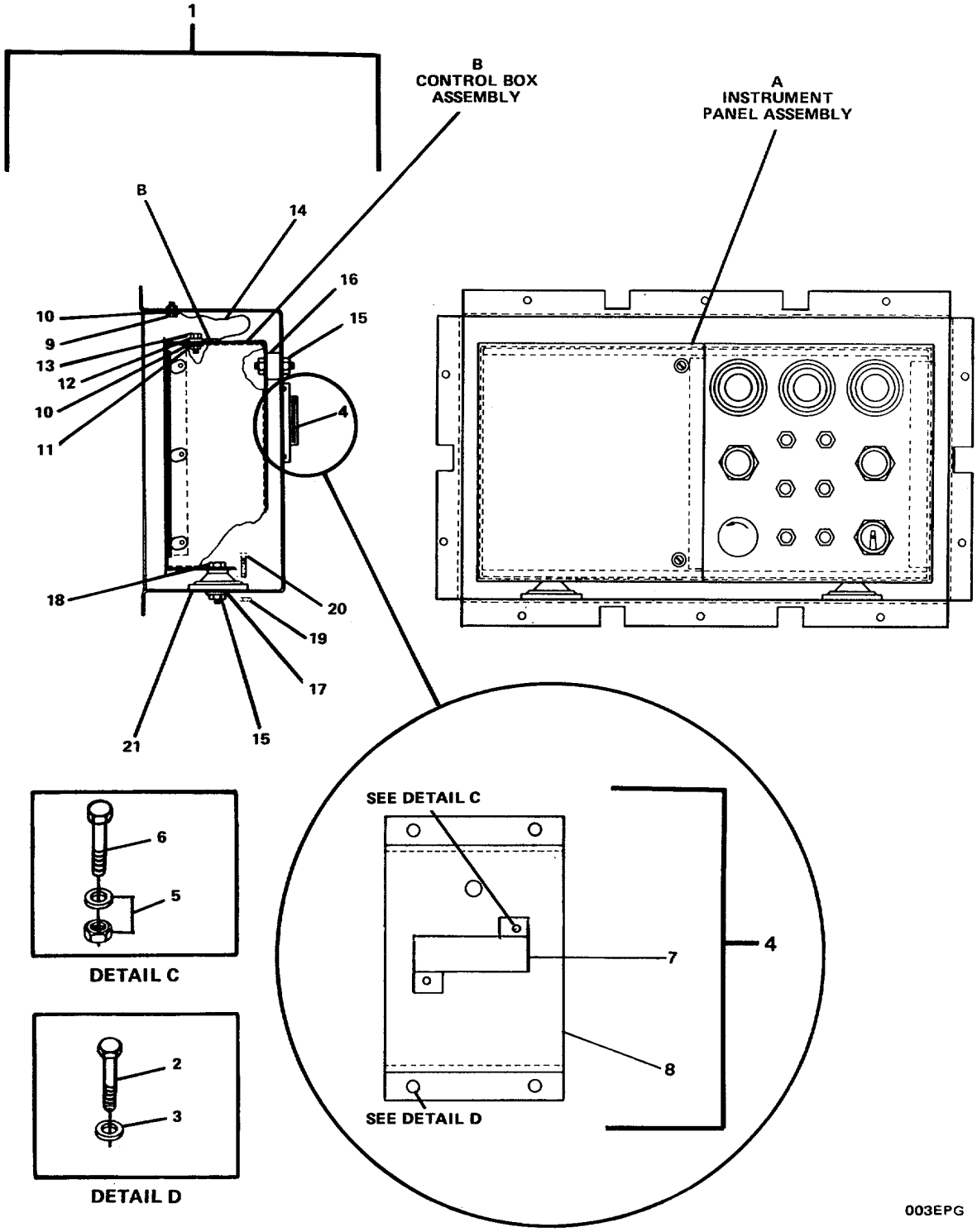

FIGURE 82. Instrument Panel Assembly (Sheet 1 of 6)

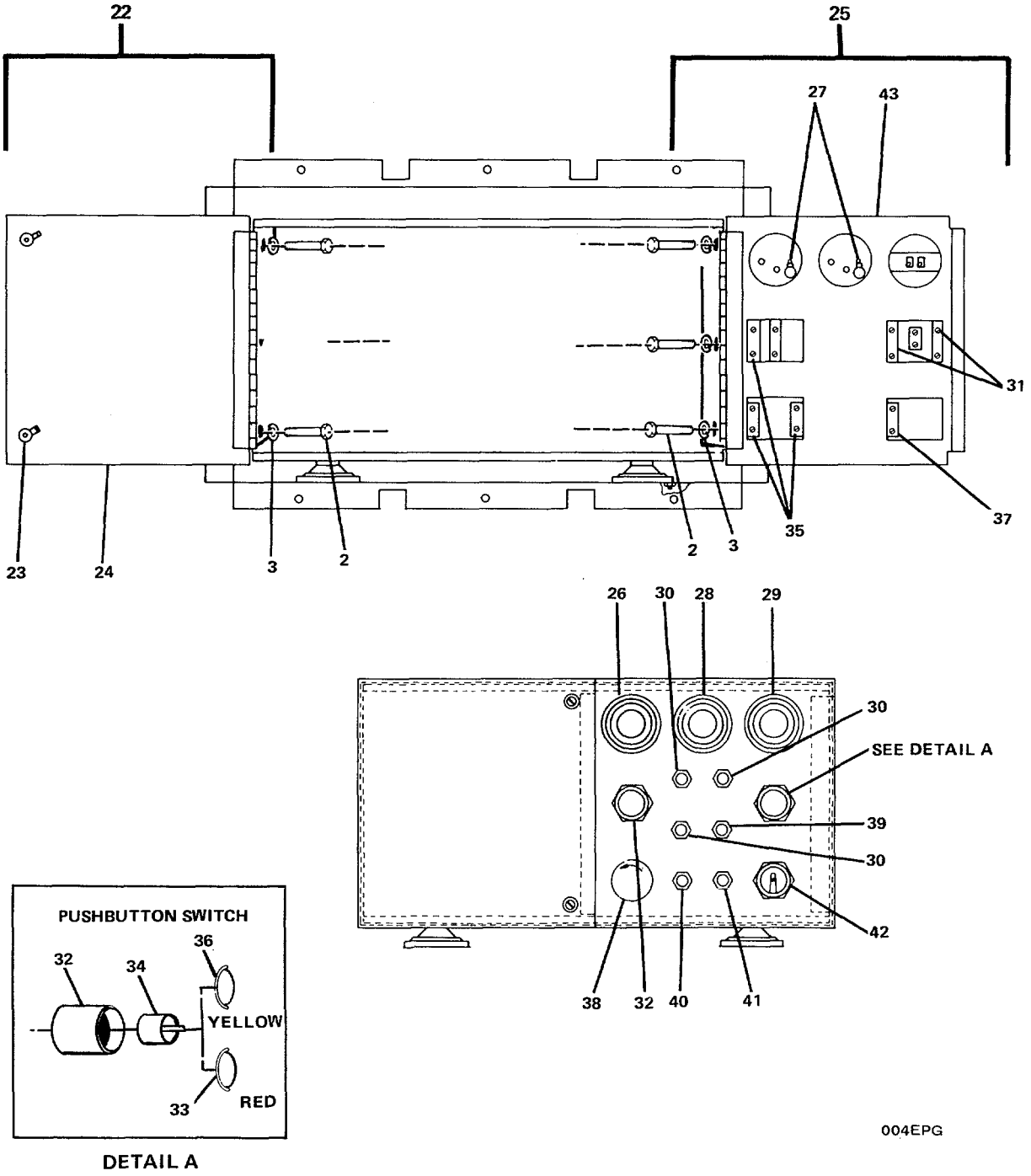

FIGURE 82. Instrument Panel Assembly (Sheet 2 of 6).

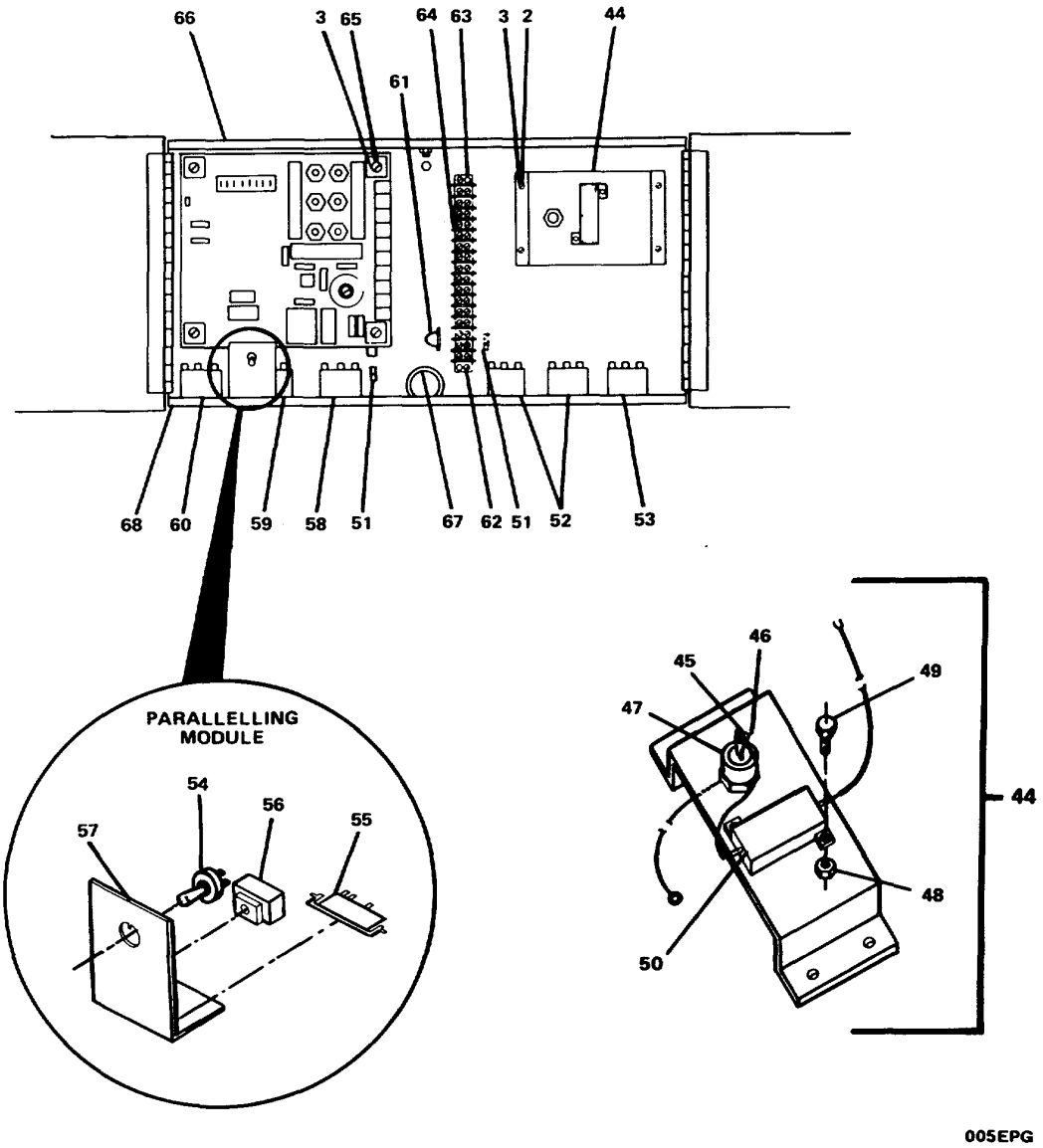

DETAIL B

FIGURE 82. Instrument Panel Assembly (Sheet 3 of 6).

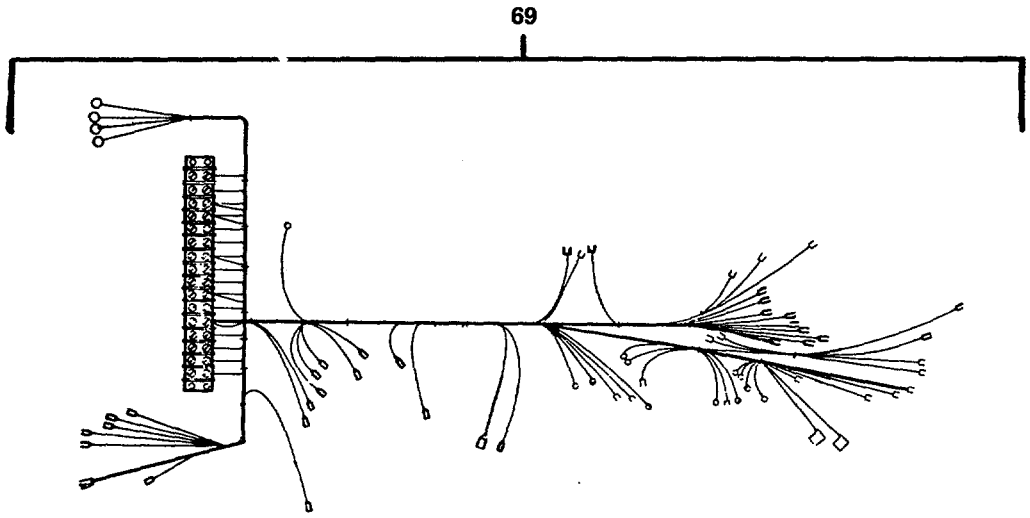

006EPG

FIGURE 82. Instrument Panel Assembly (Sheet 4 of 6).

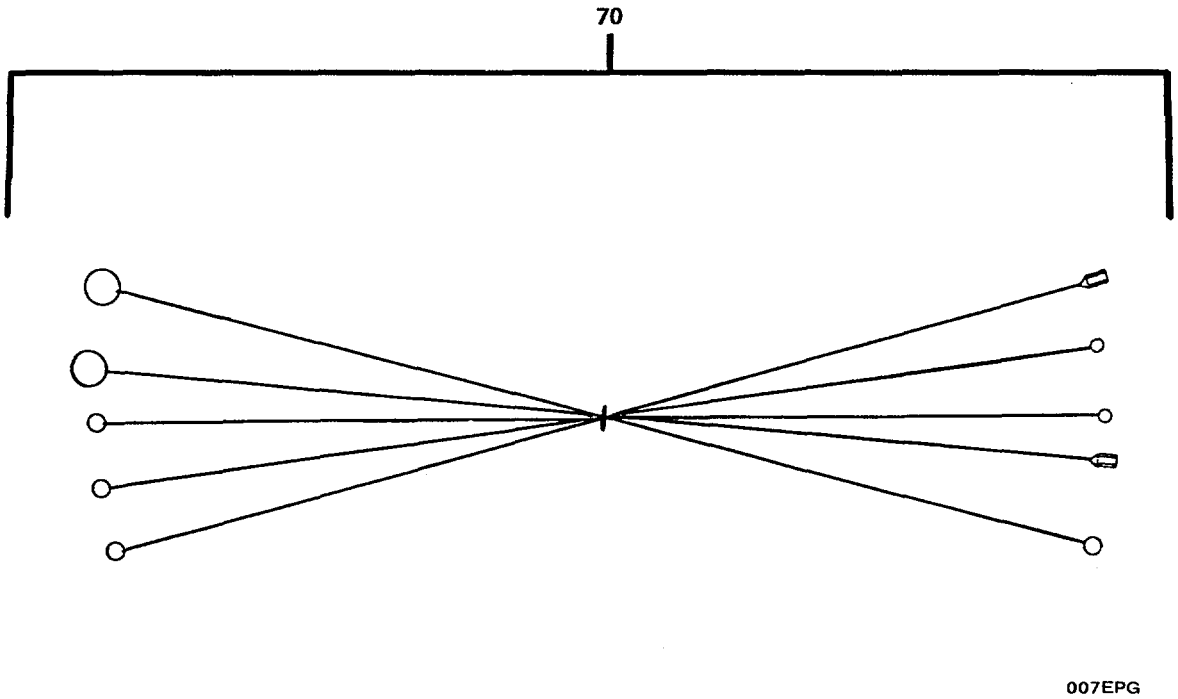

FIGURE 82. Instrument Panel Assembly (Sheet 5 of 6).

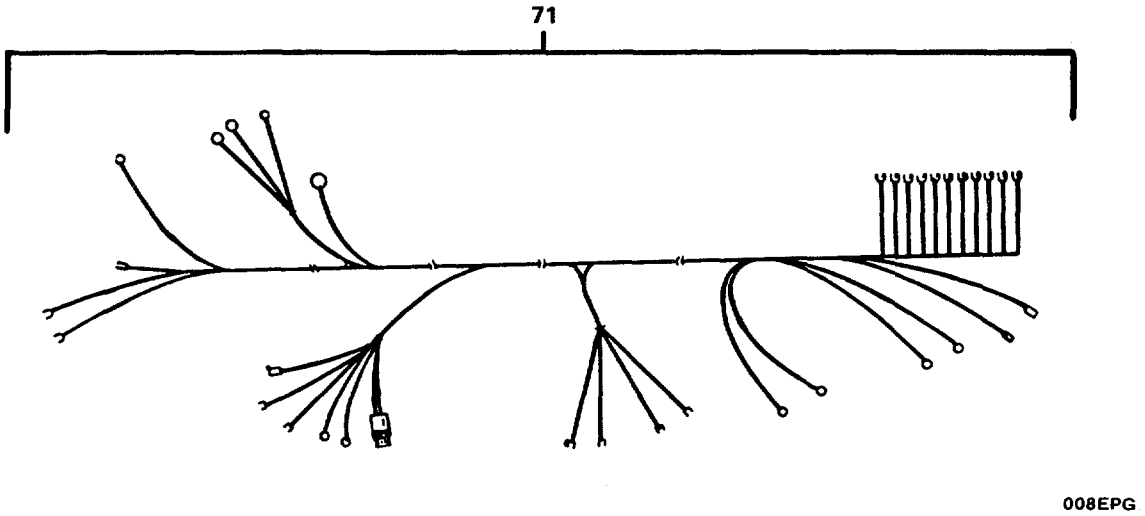

FIGURE 82. Instrument Panel Assembly (Sheet 6 of 6).

GROUP 04 EMERGENCY GENERATOR SET

FIG. 82 INSTRUMENT PANEL ASSEMBLY

(1) ITEM NO	(2) SMR CODE	(3) FSCM	(4) PART NUMBER	(5) DESCRIPTION AND USABLE ON CODES(UOC)	(6) QTY
1	PBOFF	44940	612-6459	PANEL,VEHICULAR OPE .....1.....	1
2	XDOZZ	44940	813-0096	..SCREW,MACHINE	14
3	XDOZZ	44940	853-0008	..WASHER,LOCK.....	18
4	XDOOO	44940	304-0790	..RESISTOR ASSEMBLY	1
5	XDOZZ	44940	870-1220	...NUT,PLAIN,ASSEMBLED	4
6	XDOZZ	44940	812-0029	...SCREW,MACHINE (25 OHMS 50 WATT).	4
7	PBOZZ	44940	304-0789-02	...RESISTOR,FIXED,FILM	1
8	XDOZZ	44940	319-0070	...BRACKET,RESISTOR	1
9	XDOZZ	44940	800-0024	..SCREW,CAP,HEXAGON H	1
10	XDOZZ	44940	858-0008	..WASHER,LOCK	5
11	XDOZZ	44940	862-0015	..NUT,PLAIN,HEXAGON	1
12	XDOZZ	44940	526-0022	..WASHER,FLAT	2
13	XDOZZ	44940	800-0028	..SCREW,CAP,HEXAGON H	1
14	XDOZZ	44940	337-0049	..STRAP,GROUND.....	1
15	XDOZZ	44940	870-0212	..NUT.....	2
16	XDOZZ	44940	402-0603	..MOUNT,RESILIENT	1
17	XDOZZ	44940	526-0018	..WASHER,LOCK	4
18	XDOZZ	44940	800-0008-	..SCREW,CAP,HEXAGON H	2
19	XDOZZ	96906	MS21042-08	..NUT,SELF-LOCKING, ...	4
20	XDOZZ	44940	812-0079	..SCREW,SELF-LOCKING, ...	4
21	XDOZZ	44940	402-0604	..MOUNT,RESILIENT	2
22	XDOOO	44940	319-0050	..DOOR ASSEMBLY (LEFT HAND)	1
23	XDOZZ	44940	406-0633	...LATCH	2
24	XDOZZ	44940	319-0048	...DOOR	1
25	PBOFF	44940	319-0049	..DOOR,ACCESS (RIGHT HAND).....	1
26	PAFZZ	44940	302-1836	...METER,TIME TOTALIZI	1
27	PAFZZ	44940	193-0250	...RESISTOR,FIXED,FILM.....	2
28	PAFZZ	44940	193-0351	...INDICATOR,TEMPERATU	1
29	PAFZZ	44940	193-0352	...INDICATOR,PRESSURE	1
30	PAFZZ	44940	320-1586	...CIRCUIT BREAKER (.4 AMP)	3
31	PAFZZ	44940	308-0566	...CONTACT,ELECTRICAL	2
32	PAFZZ	44940	308-0578	...SWITCH,PUSH.....	2
33	PAOZZ	44940	308-0561	...LENS,LIGHT RED	1
34	PAOZZ	44940	308-0546	...LAMPHOLDER	2
35	PAFZZ	44940	308-0579	...CONTACT,ELECTRICAL	3
36	PAOZZ	44940	308-0563	...LENS,LIGHT YELLOW	1
37	PAFZZ	44940	308-0580	...CONTACT,ELECTRICAL	1
38	PAFZZ	44940	308-0813-01	...SWITCH,PUSH	1
39	PAFZZ	44940	320-1442	...CIRCUIT,BREAKER (.5 AMP)	1
40	PAFZZ	44940	320-1587	...CIRCUIT BREAKER (5 AMP)	1
41	PAFZZ	44940	320-1588	...CIRCUIT BREAKER (20 AMP).....	1
42	PAFZZ	44940	308-0569	...SWITCH,PUSH	1
43	XDFZZ	44940	319-0047	...DOOR	1
44	XDFFF	44940	304-0788	..RESISTOR ASSEMBLY.....	1
45	XDFZZ	44940	870-0183	...NUT,PLAIN,HEXAGON 1	
46	XDFZZ	44940	812-0061	...SCREW,MACHINE.....	1
47	PAOZZ	44940	359-0082	...SEMICONDUCTOR DEVIC.....	1
48	XDFZZ	44940	870-1220	...NUT,PLAIN,ASSEMBLED.....	4

(1) ITEM NO	(2) SMR CODE	(3) FSCM	(4) PART NUMBER	(5) DESCRIPTION AND USABLE ON CODES(UOC)	(6) QTY
49	XDFZZ	44940	812-0029	...SCREW,MACHINE	4
50	PAFZZ	44940	304-0789-01	...RESISTOR,FIXED,FILM 50 OHMS,50 WATTS	1
51	XDFZZ	44940	815-0549	..SCREW,PANHEAD	12
52	PAFZZ	44940	307-2613	..RELAY,ELECTROMAGNET (24 VDC)	2
53	PAFZZ	44940	307-2612	..RELAY,ELECTROMAGNET (24 VDC)	1
54	PAFZZ	44940	308-0069	..SWITCH,TOGGLE	1
55	PAFZZ	44940	304-0787	..RESISTOR,FIXED,FILM	1
56	PAFZZ	44940	302-1837	..TRANSFORMER,CURRENT	1
57	XDFZZ	44940	319-0069	..BRACKET,CROSS-CURRE	1
58	PAFZZ	44940	307-2615	..RELAY,ELECTROMAGNET (24 VDC)	1
59	PAFZZ	44940	307-2614	..RELAY,ELECTROMAGNET (24 VDC)	1
60	PAFZZ	44940	307-2611	..RELAY,ELECTROMAGNET (240 V)	1
61	XDFZZ	44940	332-1043	..JUMPER,TERMINAL BOA	1
62	XDFZZ	44940	815-0544	..SCREW,MACHINE	2
63	XDFZZ	44940	332-0796	..MARKER STRIP	1
64	XDFZZ	44940	332-0795	..TERMINAL BOARD	1
65	XDFZZ	44940	813-0105	..SCREW,MACHINE	4
66	PAFZZ	44940	305-0770	..REGULATOR,VOLTAGE	1
67	PBFZZ	44940	508-0117	..GROMMET, RUBBER	1
68	XDFZZ	44940	319-0046	..BOX ASSEMBLY CONTRO	1
69	PBFZZ	44940	338-2202	..WIRING HARNESS	1
70	PBFZZ	44940	338-2203	..WIRING,HARNESS	1
71	PBFZZ	44940	338-2182	..WIRING HARNESS	1

END OF FIGURE

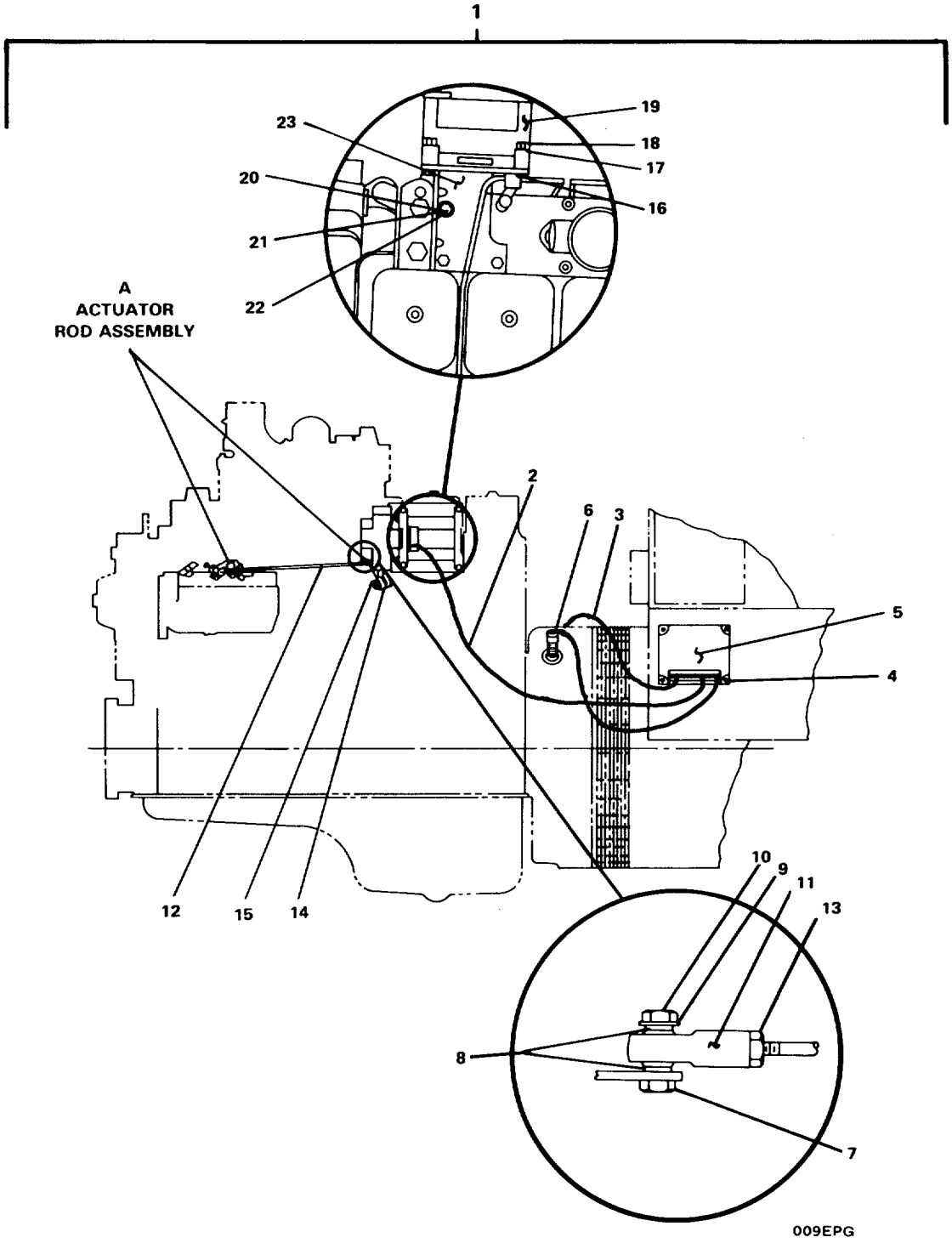

FIGURE 83. Electric Governor Assembly.

(1) ITEM NO	(2) SMR CODE	(3) FSCM	(4) PART NUMBER	(5) DESCRIPTION AND USABLE ON CODES(UOC)	(6) QTY
				GROUP 04 EMERGENCY GENERATOR SET	
				FIG. 83 ELECTRIC GOVERNOR ASSEMBLY	
1	XCFFF	44940	539-0923	ELECTRIC GOVERNOR A	1
2	PAFZZ	44940	226-3290	..LEAD	2
3	PAFZZ	44940	226-3705-01	..LEAD	2
4	XDFZZ	44940	813-0103	..SCREW	4
5	PBFZZ	44940	151-0611	..GOVERNOR,DIESEL ENG	1
6	PBFZZ	44940	150-2201	..SPEED SENSOR MAG	1
7	XDFZZ	44940	870-0131	..NUT,PLAIN,ASSEMBLED	2
8	XDFZZ	44940	526-0008	..WASHER,FLAT	4
9	XDFZZ	44940	526-0327	..WASHER,FLAT	2
10	XDFZZ	44940	815-0180	..SCREW,MACHINE	2
11	XDFZZ	44940	150-2200	..ROD END	2
12	XDFZZ	44940	520-0923-01	..STUD,PLAIN	1
13	XDFZZ	44940	870-0053	..NUT,PLAIN,HEXAGON	2
14	PAFZZ	44940	150-2203	..LEVER,GOVERNOR ACTU	1
15	XDFZZ	44940	150-2202	..SPRING	1
16	XDFZZ	44940	870-0212	..NUT	4
17	XDFZZ	44940	526-0018	..WASHER,LOCK	4
18	XDFZZ	44940	800-0012	..SCREW,CAP,HEXAGON H	4
19	PAFZZ	44940	151-0632	..ACTUATOR,GOVERNOR	1
20	XDFZZ	44940	800-2060	..SCREW,CAP,HEXAGON H	3
21	XDFZZ	44940	850-2008	..WASHER,LOCK	3
22	XDFZZ	44940	526-0115	..WASHER,FLAT	3
23	XDFZZ	44940	150-2187	..BRACKET,GOVERNOR	1

END OF FIGURE

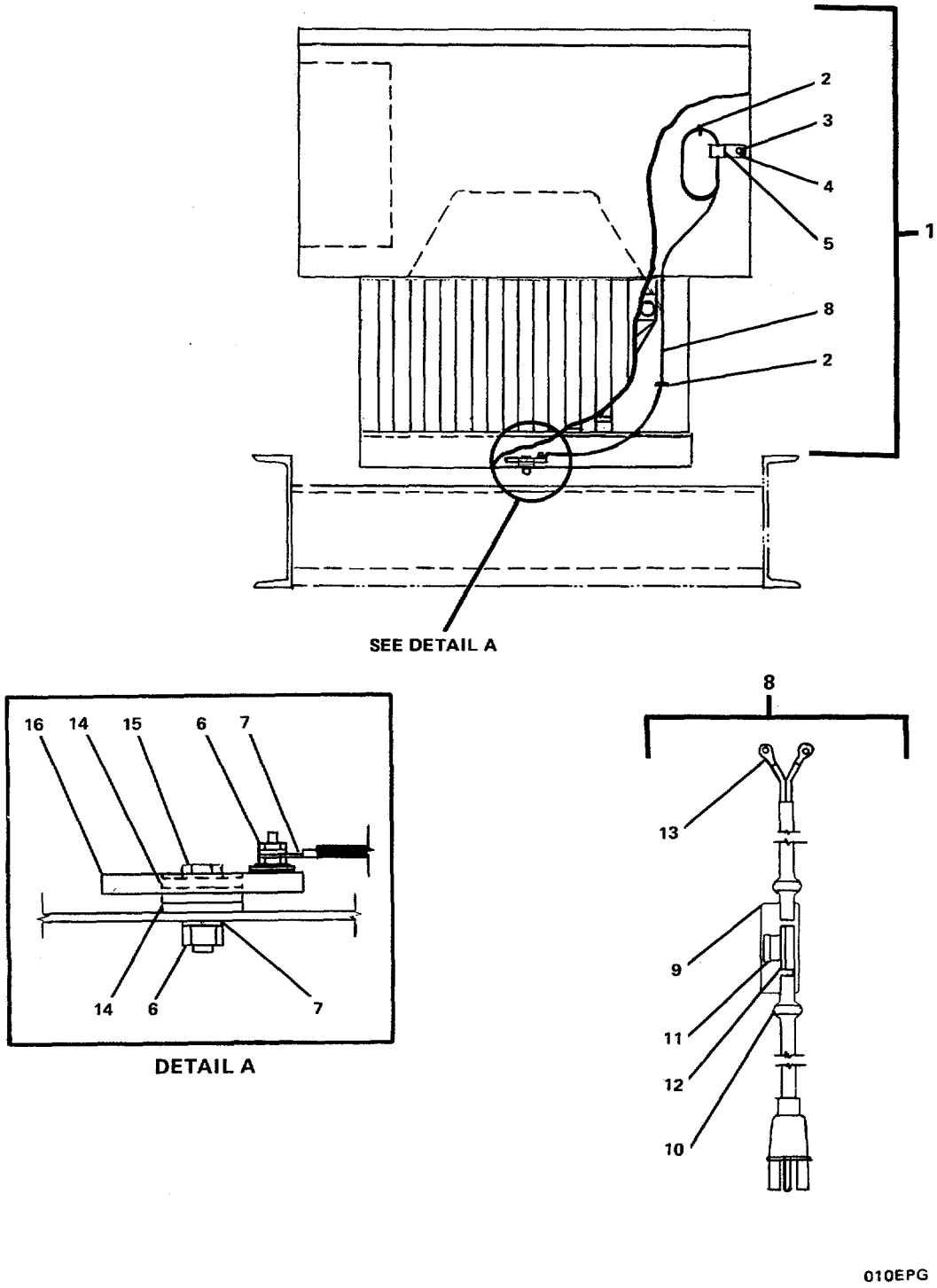

FIGURE 84. Generator Heater Assembly.

(1) ITEM NO	(2) SMR CODE	(3) FSCM	(4) PART NUMBER	(5) DESCRIPTION AND USABLE ON CODES(UOC)	(6) QTY
				GROUP 04 EMERGENCY GENERATOR SET	
				FIG. 84 GENERATOR HEATER ASSEMBLY	
1	XCOOO	44940	179-2264	HEATER ASSEMBLY,GEN	1
2	XDOZZ	44940	332-1794	..TIE,LOCKING,CABLE	3
3	XDOZZ	44940	870-0212	..NUT	1
4	XDOZZ	44940	821-0013	..SCREW,SELF-LOCKING	1
5	XDOZZ	44940	332-2634	..CLAMP,J	1
6	XDOZZ	44940	862-0001	..NUT,PLAIN,HEXAGON	2
7	XDOZZ	44940	850-0038	..WASHER,LOCK	2
8	PAOOZ	44940	335-0143	..CABLE ASSEMBLY,POWE	1
9	XDOZZ	44940	898-0863	...SLEEVE,INSULATION	1
10	XDOZZ	44940	508-0114	...GROMMET,NONMETALLIC	2
11	PAOZZ	44940	309-0258	...THERMOSTAT,FLOW CON	1
12	XDOZZ	44940	332-1506	.. CONNECTOR	1
13	XDOZZ	44940	226-0090	...LEAD ASSEMBLY	2
14	XDOZZ	44940	526-0158	..WASHER,FLAT	3
15	XDOZZ	44940	800-0006	..SCREW,CAP,HEXAGON H	1
16	PAOZZ	44940	333-0192	..ELEMENT,HEATER	1

END OF FIGURE

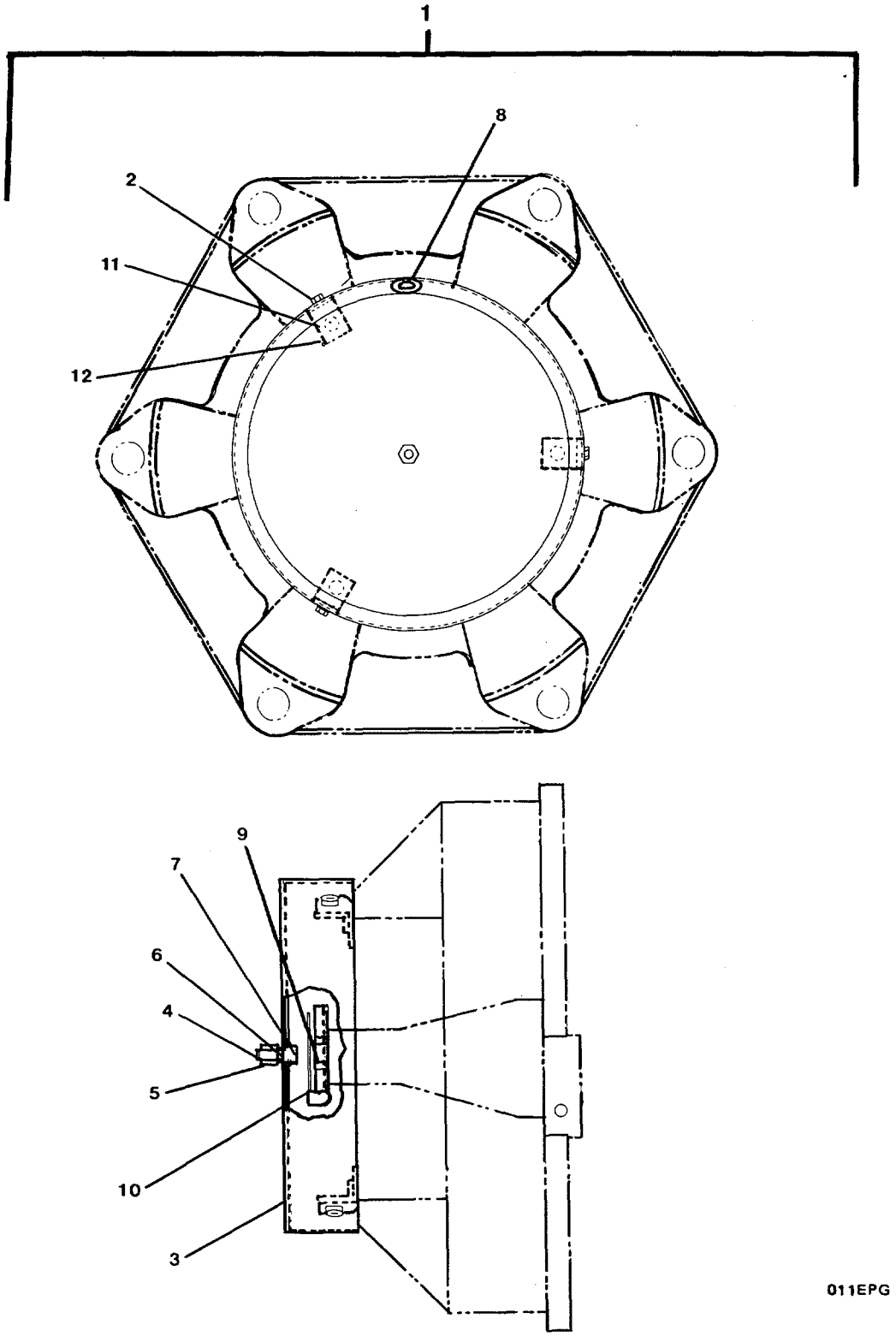

FIGURE 85. Overspeed Assembly.

(1) ITEM NO	(2) SMR CODE	(3) FSCM	(4) PART NUMBER	(5) DESCRIPTION AND USABLE ON CODES(UOC)	(6) QTY
				GROUP 04 EMERGENCY GENERATOR SET	
				FIG. 85 OVERSPEED ASSEMBLY	
1	XDOFF	44940	539-0922	OVERSPEED ASSEMBLY	1
2	XDFZZ	44940	800-0048	..SCREW,CAP,HEXAGON H	3
3	XDFZZ	44940	150-2198	..COVER ASSEMBLY	1
4	XDFZZ	44940	862-0001	..NUT,PLAIN,HEXAGON	2
5	XDFZZ	44940	853-0013	..WASHER,LOCK	1
6	XDFZZ	44940	870-0250	..NUT,INSULATING	1
7	PBFZZ	44940	150-0723	..POINT ASSEMBLY	1
8	XDFZZ	44940	508-0071	..GROMMET,NONMETALLIC	1
9	XDFZZ	44940	856-0010	..WASHER,LOCK	1
10	PBFZZ	44940	150-0716	..SWITCH,PRESSURE	1
11	XDFZZ	44940	800-2008	..SCREW,CAP,HEXAGON H	3
12	XDFZZ	44940	150-2199	..BRACKET,MOUNTING	3

END OF FIGURE

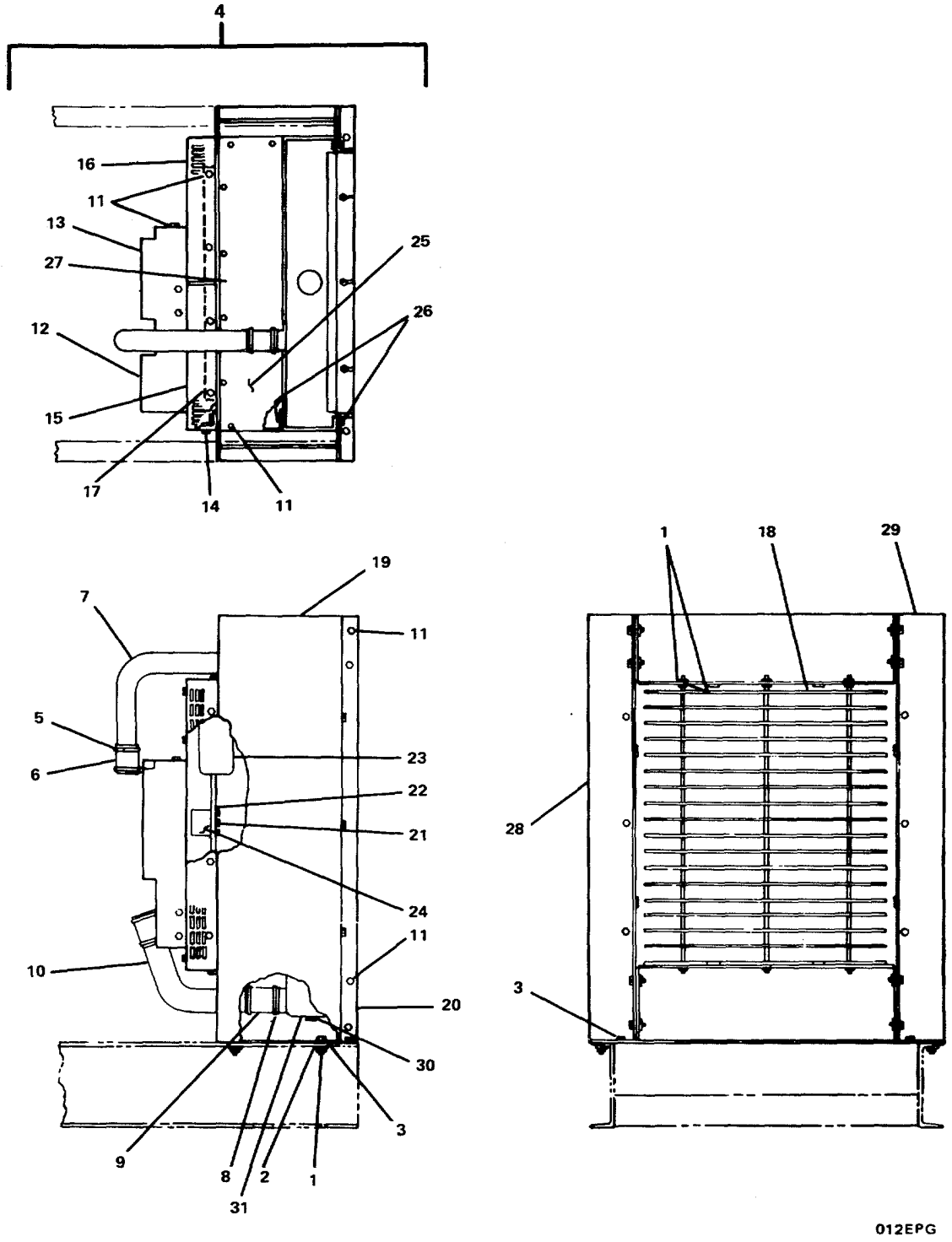

FIGURE 86. Radiator Assembly.

(1) ITEM NO	(2) SMR CODE	(3) FSCM	(4) PART NUMBER	(5) DESCRIPTION AND USABLE ON CODES(UOC)	(6) QTY
				GROUP 04 EMERGENCY GENERATOR SET	
				FIG. 86 RADIATOR ASSEMBLY	
1	XDCZZ	44940	870-0281	.NUT,SELF-LOCKING,HE	13
2	XDCZZ	44940	526-0280	.WASHER,BEVEL	4
3	XDCZZ	44940	821-0030	.SCREW,CAP,HEXAGON H	6
4	XDFFF	44940	179-1284	.RADIATOR ASSEMBLY	1
5	XDCZZ	44940	503-0365	..CLAMP,HOSE	4
6	PACZZ	44940	503-1391-01	..HOSE,NONMETALLIC	2
7	XDCZZ	44940	130-3083	..TUBE,INLET,METALLIC	1
8	XDCZZ	44940	503-0354	..CLAMP,HOSE.	4
9	PACZZ	44940	503-1379-01	..HOSE,NONMETALLIC	2
10	XDOZZ	44940	130-3084	..TUBE,OUTLET,METALLI	1
11	XDOZZ	44940	821-0018	..SCREW,CAP,HEXAGON H	58
12	XDOZZ	44940	130-3086	..GUARD,MECHANICAL DR	1
13	XDOZZ	44940	130-3085	..GUARD,MECHANICAL DR	1
14	XDOZZ	44940	821-0029	..BOLT,MACHINE	6
15	XDOZZ	44940	130-3141	..GUARD,FAN	1
16	XDOZZ	44940	130-3140	..GUARD,FAN	1
17	XDOZZ	44940	130-3102	..BRACKET,FAN GUARD	4
18	XDFZZ	44940	130-3088	..GRILLE ASSEMBLY	1
19	XDFZZ	44940	130-3089	..SUPPORT,GRILLE	1
20	XDFZZ	44940	130-3090	..SUPPORT,GRILLE	1
21	XDFZZ	44940	800-2068	..SCREW,CAP,HEXAGON H	4
22	XDFZZ	44940	850-2008	..WASHER,LOCK	4
23	XDFZZ	44940	130-3080	..FAN	1
24	XDFZZ	44940	130-3082	..SPACER	1
25	XDFZZ	44940	130-3092	..SHROUD,FAN	1
26	XDFZZ	44940	821-0028	..SCREW,CAP,HEXAGON H	12
27	XDFZZ	44940	130-3091	..WRAPPER,FAN SHROUD	1
28	XDFZZ	44940	130-3087-02	..GUARD,RADIATOR	1
29	XDFZZ	44940	130-3087-01	..GUARD,RADIATOR	1
30	PBFZZ	44940	504-0028	..COCK,DRAIN	1
31	PBFZZ	44940	130-3064	..RADIATOR	1

END OF FIGURE

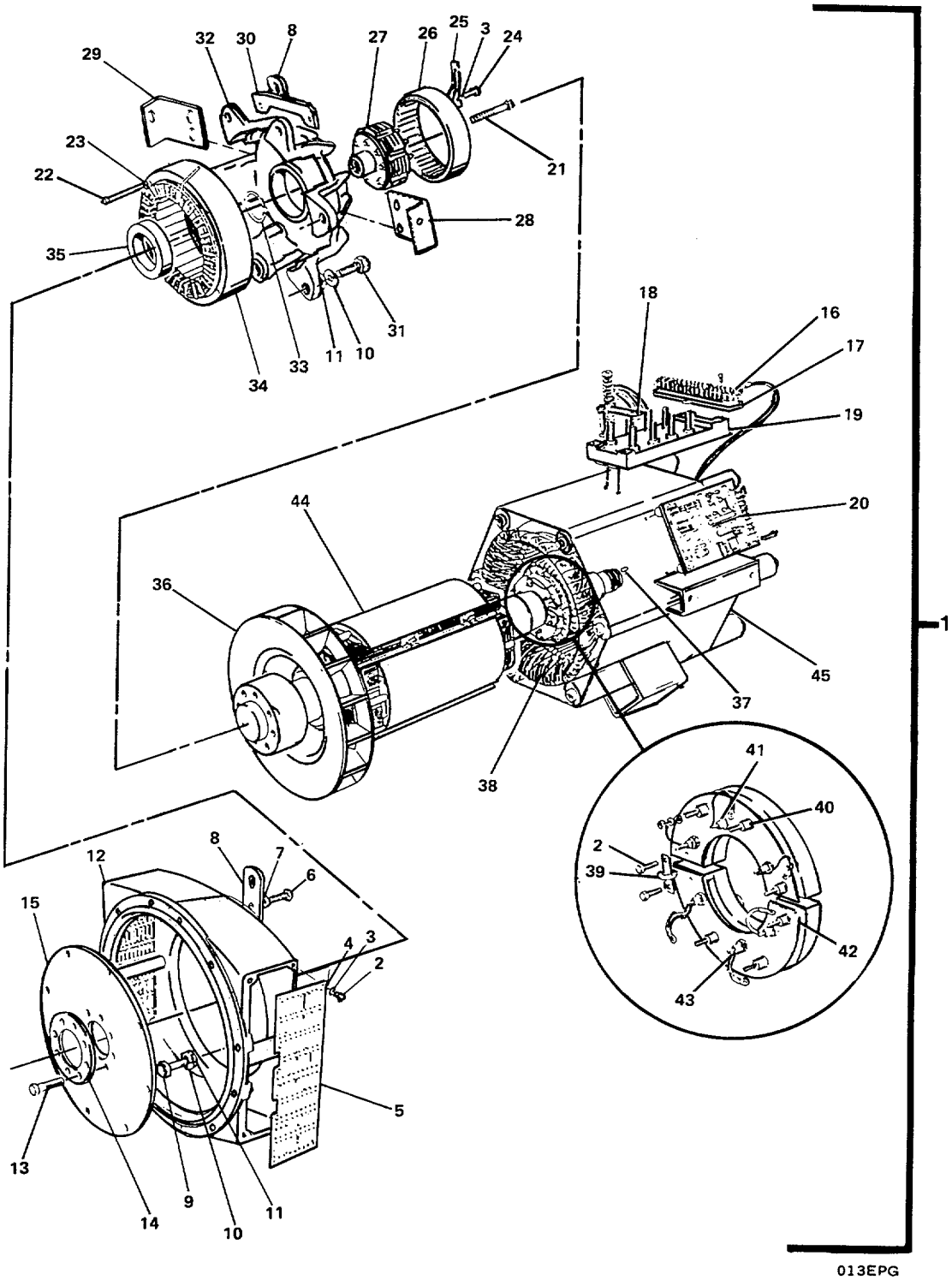

FIGURE 87. Generator Assembly.

(1) ITEM NO	(2) SMR CODE	(3) FSCM	(4) PART NUMBER	(5) DESCRIPTION AND USABLE ON CODES(UOC)	(6) QTY
				GROUP 04 EMERGENCY GENERATOR SET	
				FIG. 87 GENERATOR ASSEMBLY	
1	XDFHH	44940	BC234C	GENERATOR ASSEMBLY	1
2	XDFZZ	44940	016-40614	..SCREW,CAP,HEXAGON H	10
3	XDFZZ	44940	028-31506	..WASHER,LOCK	11
4	XDFZZ	44940	029-61106	..WASHER,FLAT	8
5	XDFZZ	44940	210-10422	..SCREEN	2
6	XDFZZ	44940	016-41018	..SCREW,CAP,HEXAGON H	2
7	XDFZZ	44940	028-31510	..WASHER,LOCK	2
8	XDFZZ	44940	210-10450	..PAD EYE	2
9	XDFZZ	44940	016-40918	..SCREW,CAP,HEXAGON H	6
10	XDFZZ	44940	028-31509	..WASHER,LOCK	12
11	XDFZZ	44940	210-10423	..WASHER,FLAT	12
12	XDFZZ	44940	210-10403	..ADAPTER	1
13	XDFZZ	44940	016-31115	..SCREW,MACHINE	8
14	XDFZZ	44940	354-13010	..PLATE,PRESSURE	1
15	XDFZZ	44940	210-10264	..DISK,COUPLING	2
16	XDFZZ	44940	003-14027	..BLOCK,TERMINAL	3
17	XDFZZ	44940	450-12860	..BASE,TERMINAL BOARD	1
18	PAFZZ	44940	354-13460	..LINK,TERMINAL	4
19	XDFZZ	44940	354-13480	..PANEL,MAIN TERMINAL	1
20	PBFZZ	44940	350-11700	..REGULATOR,VOLTAGE	1
21	XDFZZ	44940	450-14950	..BOLT,MACHINE	1
22	XDFZZ	44940	016-40721	..SCREW,CAP,HEXAGON H	4
23	XDFZZ	44940	028-31507	..WASHER,LOCK	4
24	XDFZZ	44940	016-40616	..SCREW,CAP,HEXAGON H	3
25	XDFZZ	44940	210-10443	..CLAMP	3
26	PBHZZ	44940	450-17200	..STATOR	1
27	PBHZZ	44940	210-10442	..ROTOR	1
28	XDHZZ	44940	210-10419	..BRACKET,MOUNTING	1
29	XDHZZ	44940	210-10418	..BRACKET,MOUNTING	1
30	XDHZZ	44940	210-10421	..BRACKET,MOUNTING	1
31	XDHZZ	44940	016-40618	..SCREW,CAP,HEXAGON H	6
32	XDHZZ	44940	210-10406	..BRACKET,END	1
33	XDHZZ	44940	050-11035	..CLIP	1
34	PBHZZ	44940	210-1032	..EXCITER STATOR	1
35	PBHZZ	44940	051-01032	..BEARING,BALL,ANNULA	1
36	XDHZZ	44940	210-10057	..FAN	1
37	XDHZZ	44940	054-20505	..KEY,MACHINE	1
38	PBHZZ	44940	210-1036	..EXCITER ROTOR	1
39	PBFZZ	44940	073-08059	..VARISTOR	1
40	PAFZZ	44940	210-1068	..RECTIFIER,METALLIC	1
41	PAFZZ	44940	210-10143/3	..SEMICONDUCTOR DEVIC	3
42	PAFZZ	44940	210-1067	..RECTIFIER,METALLIC	1
43	PAFZZ	44940	210-10142/3	..DIODE,FOREWARD POLA	3
44	PBHZZ	44940	224CR01S21R11A	..ROTOR ASSEMBLY	1
45	PBHZZ	44940	224C111F1501A	..STATOR ASSEMBLY	1

END OF FIGURE

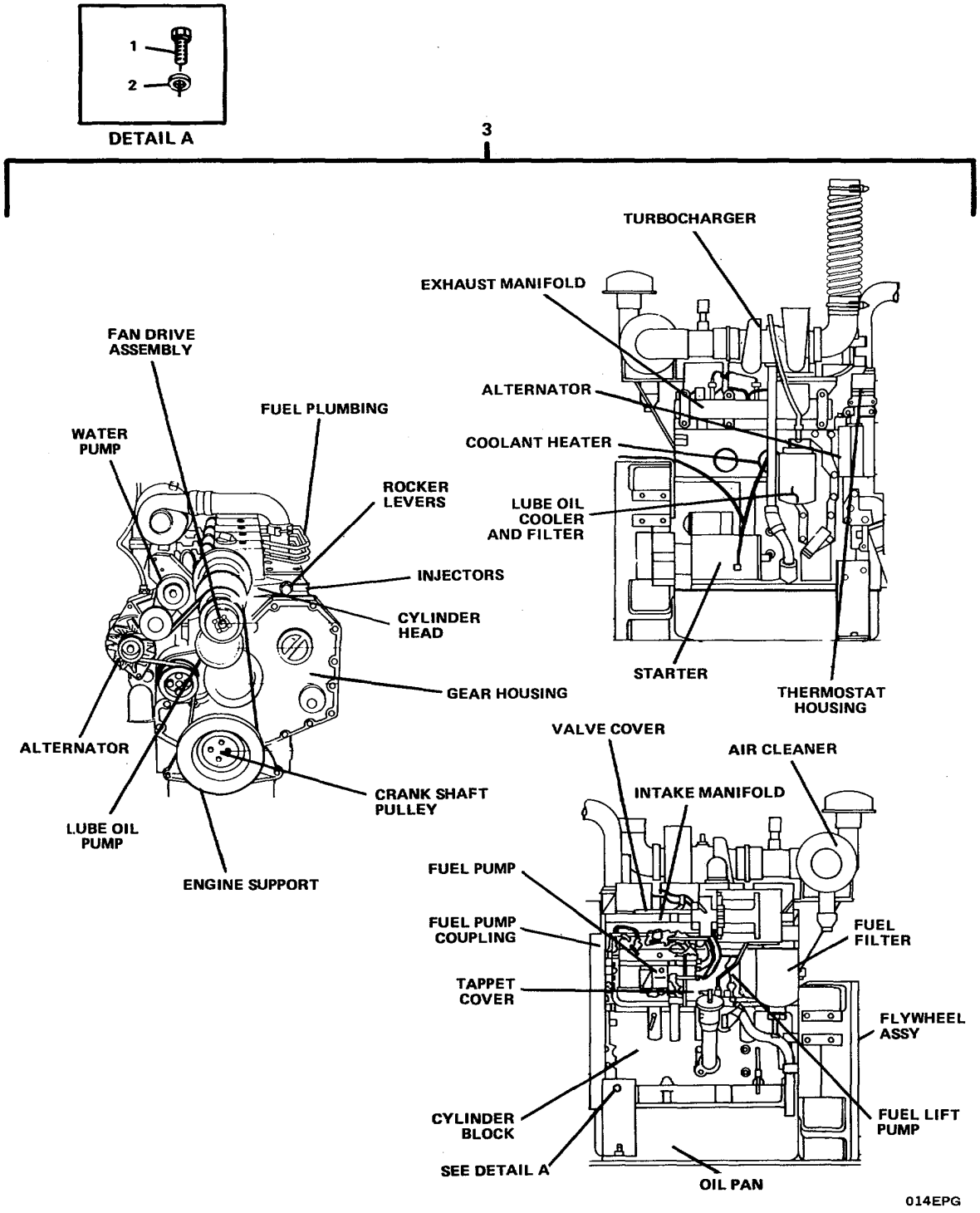

FIGURE 88. Diesel Engine (Sheet 1 of 2).

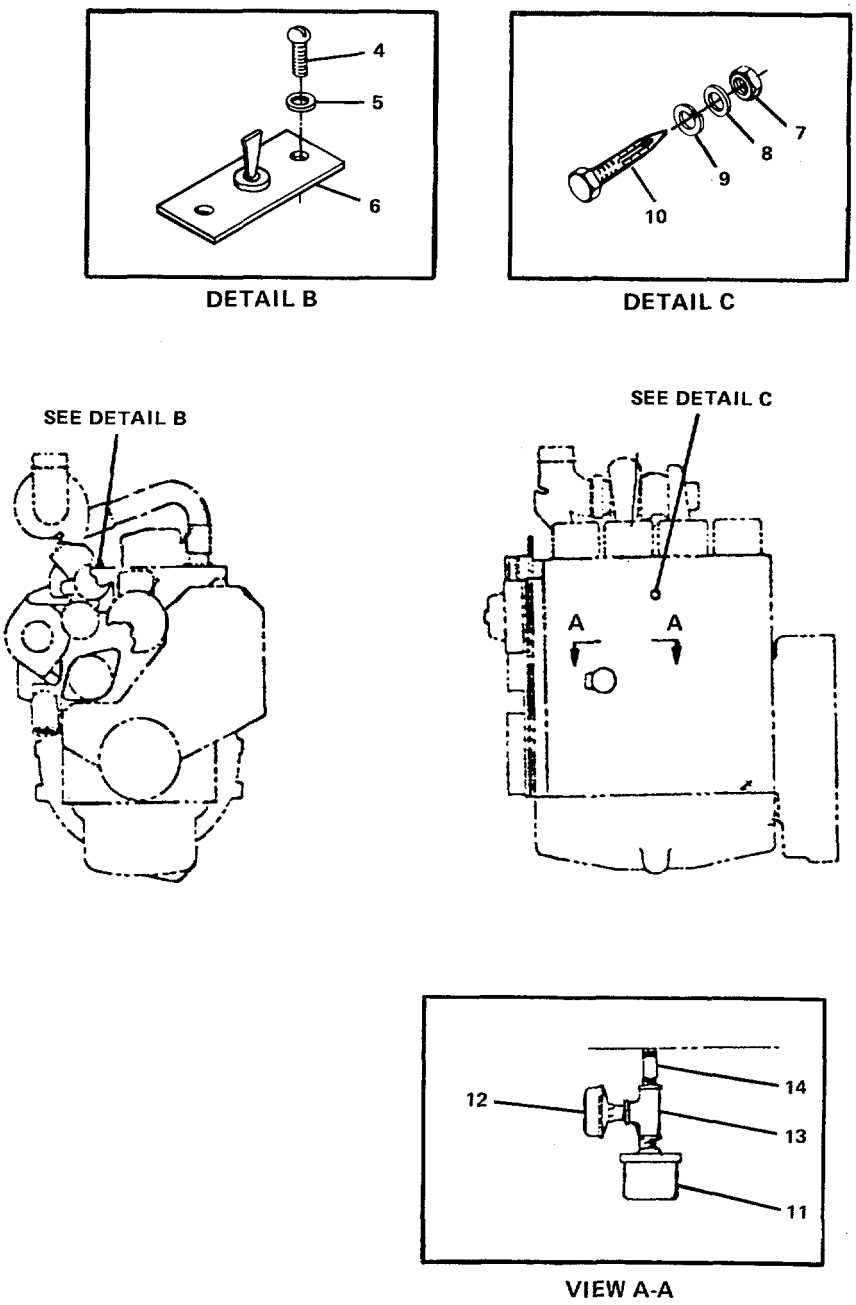

FIGURE 88. Diesel Engine (Sheet 2 of 2).

(1) ITEM NO	(2) SMR CODE	(3) FSCM	(4) PART NUMBER	(5) DESCRIPTION AND USABLE ON CODES(UOC)	(6) QTY
				GROUP 04 EMERGENCY GENERATOR SET	
				FIG. 88 DIESEL ENGINE	
1	XDFZZ	44940	800-2111	SCREW,CAP,HEXAGON H	5
2	XDFZZ	44940	850-0060	WASHER,LOCK	5
3	XDFHH	15434	4BT3.9	ENGINE,DIESEL	1
4	XDCZZ	44940	812-0075	..SCREW	2
5	XDCZZ	44940	850-0025	..WASHER,LOCK	2
6	XDCZZ	44940	309-0556	..SWITCH,THERMOSTATIC	1
7	XDCZZ	44940	871-0010	..NUT,PLAIN,HEXAGON	1
8	XDCZZ	44940	850-0030	..WASHER,LOCK	1
9	XDCZZ	44940	825-0008	..WASHER,FLAT	1
10	PACZZ	44940	193-0375	..TRANSMITTER,TEMPERA	1
11	PACZZ	44940	193-0244	..TRANSMITTER,PRESSUR	1
12	PACZZ	44940	309-0557	..SWITCH,PRESSURE	1
13	XDCZZ	44940	508-0059	..TEE	1
14	XDCZZ	44940	506-0104	..NIPPLE	1

END OF FIGURE

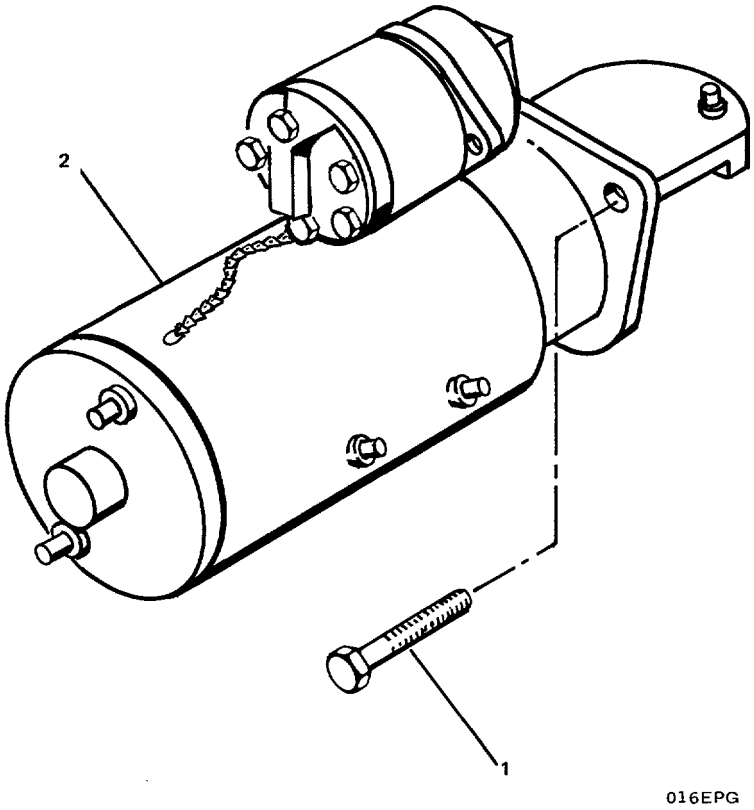

FIGURE 89. Starting Motor Group.

(1) ITEM NO	(2) SMR CODE	(3) FSCM	(4) PART NUMBER	(5) DESCRIPTION AND USABLE ON CODES(UOC)	(6) QTY
				GROUP 04 EMERGENCY GENERATOR SET	
				FIG. 89 STARTING MOTOR GROUP	
	XCCOO	15434	13.05-04	STARTING MOTOR GROU	1
1	XDCZZ	15434	3903834	...BOLT,MACHINE	2
2	PBCZZ	15434	3904057	...STARTER,ENGINE,ELEC	1
				END OF FIGURE	

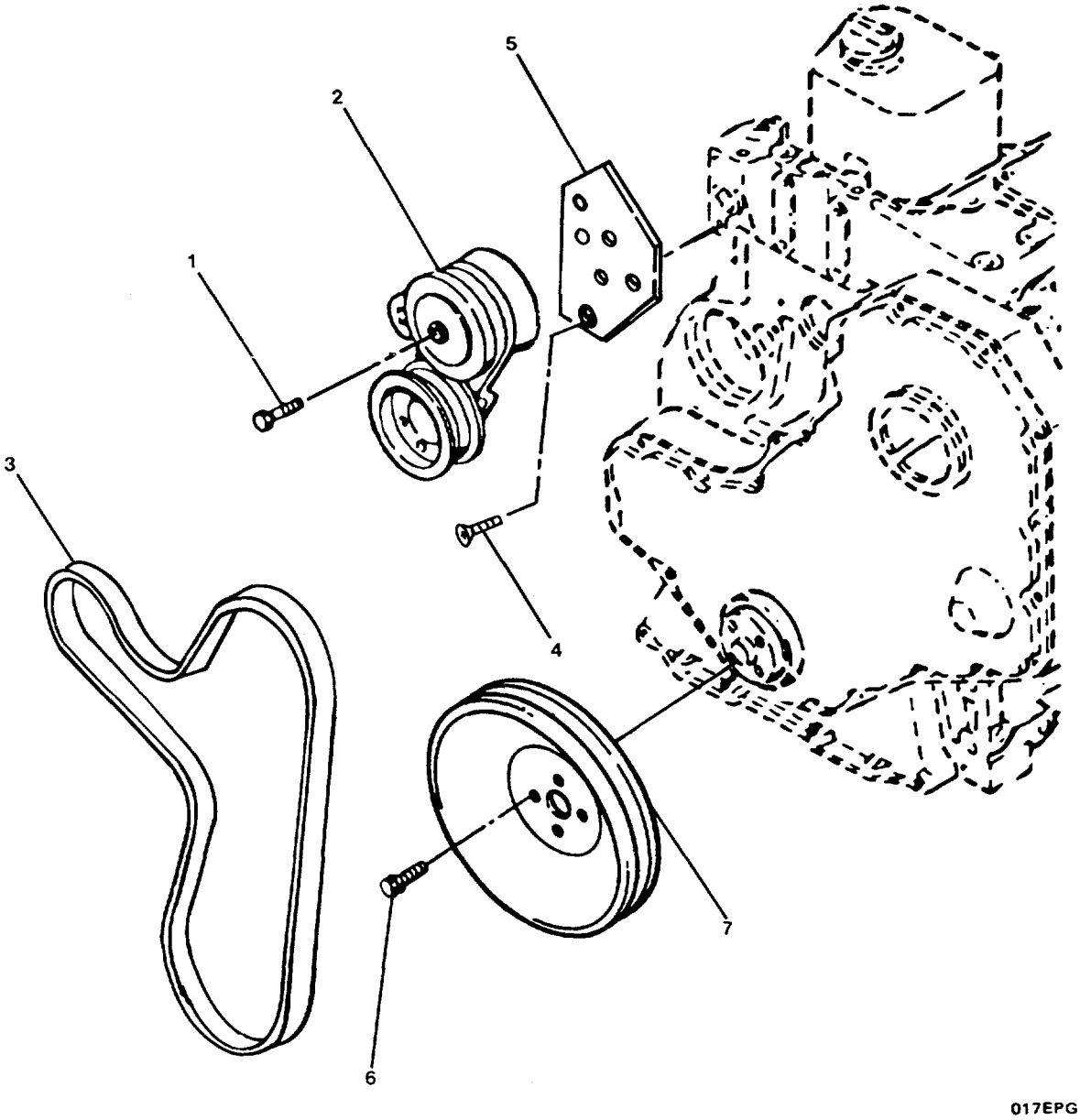

FIGURE 90. Alternating Mounting Group.

(1) ITEM NO	(2) SMR CODE	(3) FSCM	(4) PART NUMBER	(5) DESCRIPTION AND USABLE ON CODES(UOC)	(6) QTY
				GROUP 04 EMERGENCY GENERATOR SET	
				FIG. 90 ALTERNATING MOUNTING GROUP	
	XCCFF	15434	13.02.03.01-04	.ALTERNATOR MOUNTING	1
1	XDFZZ	15434	3905426	...SCREW,CAP,HEXAGON H	1
2	XDFZZ	15434	3911315	...TENSIONER BELT	1
3	PACZZ	15434	3903090	...BELT,V	1
4	XDFZZ	15434	3903095	...SCREW,CAP,SOCKET HE	2
5	XDFZZ	15434	3904549	...BRACKET,ENGINE ACCE	1
6	XDFZZ	77408	3903857	...SCREW,HEXAGON HEAD	4
7	XDFZZ	77408	3903858	...PULLEY,CRANK	1

END OF FIGURE

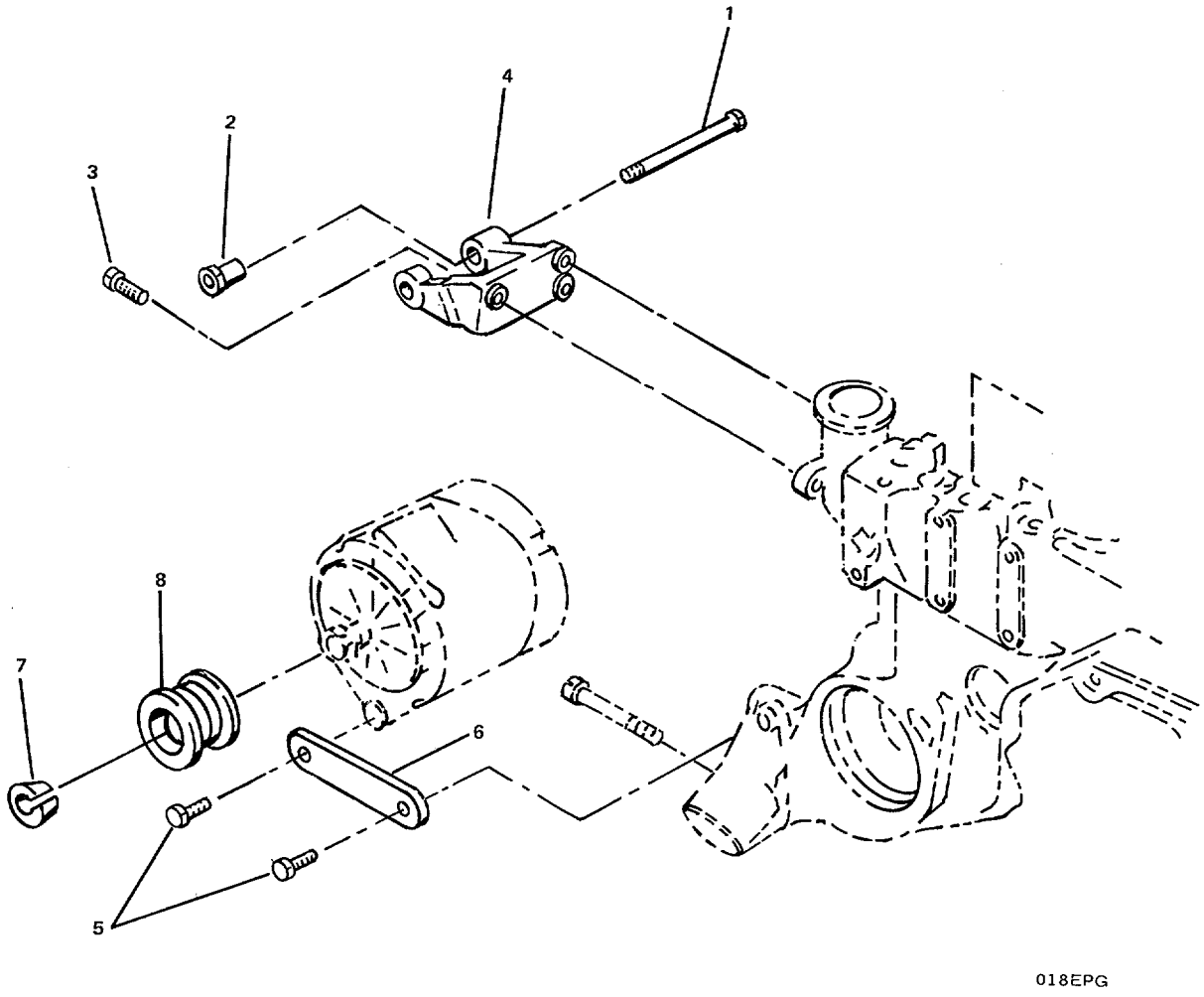

FIGURE 91. Alternator Support Group.

(1) ITEM NO	(2) SMR CODE	(3) FSCM	(4) PART NUMBER	(5) DESCRIPTION AND USABLE ON CODES(UOC)	(6) QTY
				GROUP 04 EMERGENCY GENERATOR SET	
				FIG. 91 ALTERNATOR SUPPORT GROUP	
	XCCFF	15434	13.02.03	..ALTERNATOR SUPPORT	1
1	XDFZZ	15434	3910527	...BOLT, MACHINE	1
2	XDFZZ	15434	3910715	...SPACER, SLEEVE	1
3	XDFZZ	15434	3900621	...SCREW, CAP, HEXAGON H.....	3
4	XDFZZ	15434	3910713	...SUPPORT, ALTERNATOR	1
5	XDFZZ	15434	3900620	...SCREW, CAP, HEXAGON H	2
6	XDFZZ	15434	3903089	...BRACE, ALTERNATOR.....	1
7	XDFZZ	15434	3908563	...RETAINER, PULLEY	1
8	XDFZZ	15434	3908560	...PULLEY, ALTERNATOR.....	1

END OF FIGURE

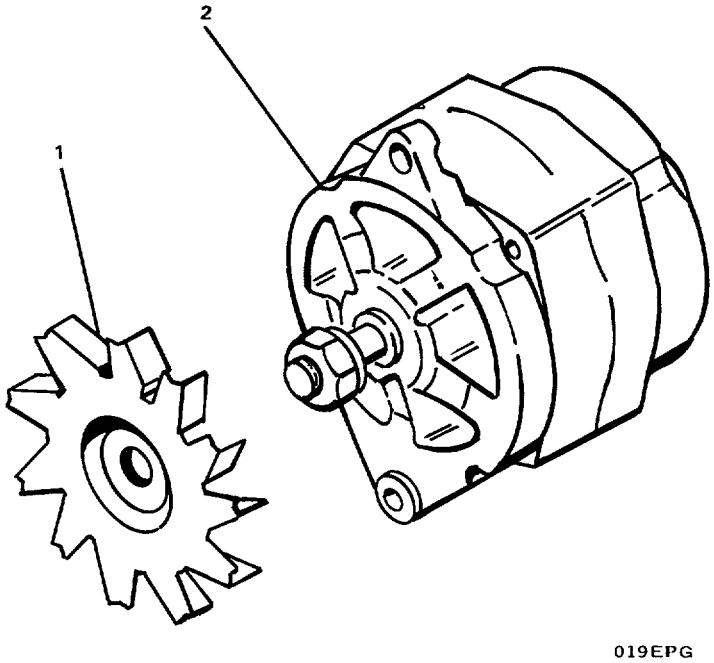

FIGURE 92. Alternator Group.

(1) ITEM NO	(2) SMR CODE	(3) FSCM	(4) PART NUMBER	(5) DESCRIPTION AND USABLE ON CODES(UOC)	(6) QTY
				GROUP 04 EMERGENCY GENERATOR SET	
				FIG. 92 ALTERNATOR GROUP	
	XCCFF	15434	13.02.02-04	..ALTERNATOR GROUP	1
1	XDFZZ	15434	3904981	...FAN, ALTERNATOR	1
2	PBFZZ	15434	3911462	...GENERATOR, ENGINE AC	1

END OF FIGURE

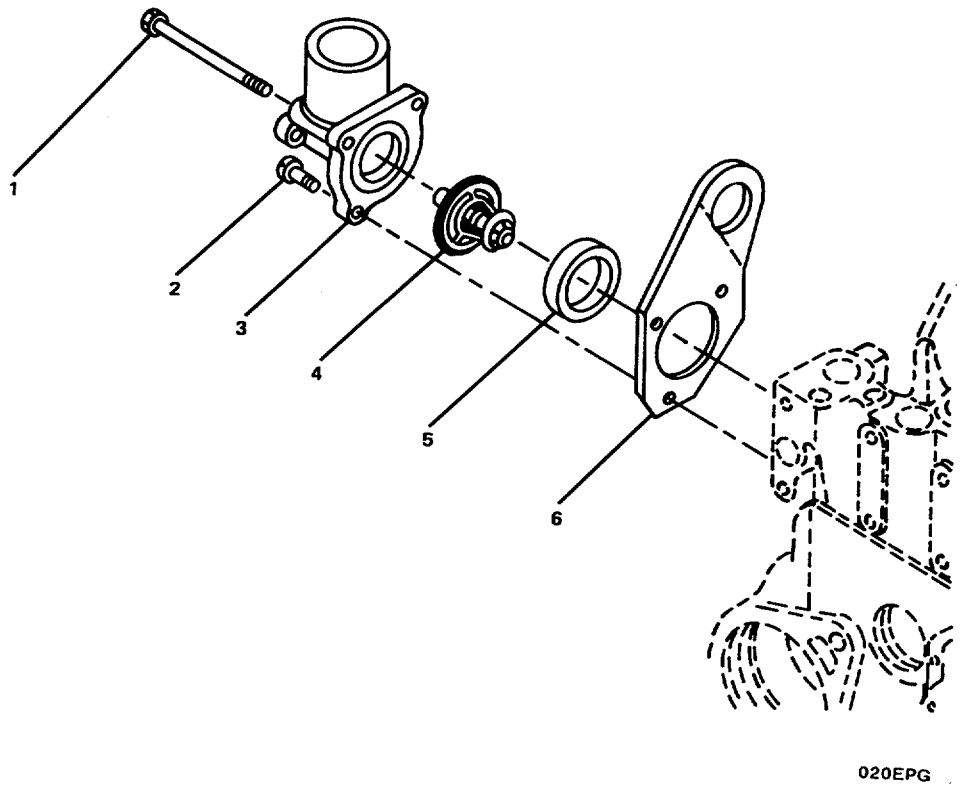

FIGURE 93. Thermostat and Housing Group

(1) ITEM NO	(2) SMR CODE	(3) FSCM	(4) PART NUMBER	(5) DESCRIPTION AND USABLE ON CODES(UOC)	(6) QTY
				GROUP 04 EMERGENCY GENERATOR SET	
				FIG. 93 THERMOSTAT AND HOUSING GROUP	
	XCCOO	1543	08.07-04	..THERMOSTAT AND HOUS	1
1	XDCZZ	15434	3903096	...BOLT, MACHINE	2
2	XDCZZ	15434	3900632	...SCREW, CAP, HEXAGON H.....	1
3	XDCZZ	15434	3903756	...WATER OUTLET, ENGINE.	1
4	PACZZ	15434	3912587	...THERMOSTAT, FLOW CON	1
5	PACZZ	15434	3903301	...GASKET (THERMOSTAT HOUSING COVER) PART OF KIT P/N 3802007.....	1
6	XDCZZ	15434	3903757	...BRACKET, LIFTING	1

END OF FIGURE

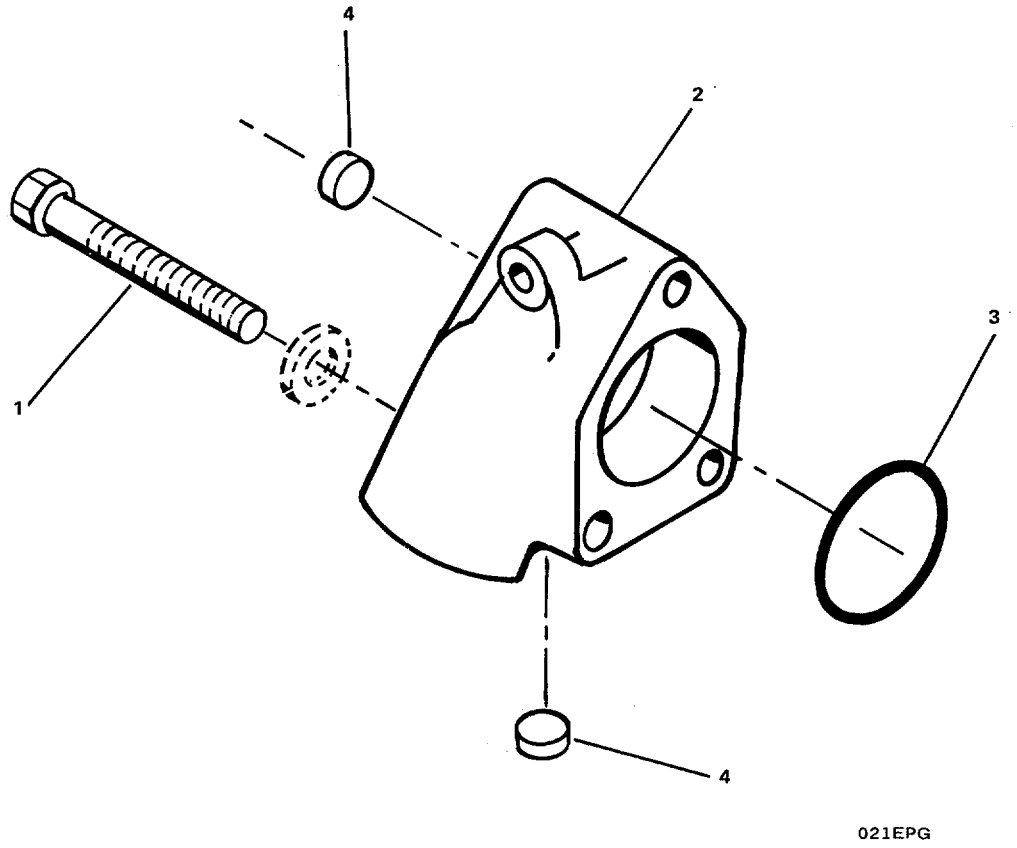

FIGURE 94. Water Inlet Connection Group.

(1) ITEM NO	(2) SMR CODE	(3) FSCM	(4) PART NUMBER	(5) DESCRIPTION AND USABLE ON CODES(UOC)	(6) QTY
				GROUP 04 EMERGENCY GENERATOR SET	
				FIG. 94 WATER INLET CONNECTION GROUP	
	XCCOO	15434	08.07.1-04	..WATER INLET CONNECT	1
1	XDOZZ	15434	3901757	...BOLT, MACHINE	3
2	XDOZZ	15434	3903103	...WATER INLET, ENGINE	1
3	PBOZZ	15434	3906697	...PACKING, PREFORMED	1
4	XDOZZ	15434	3008468	...PLUG, PIPE PART OF KIT P/N 3904991.....	2

END OF FIGURE

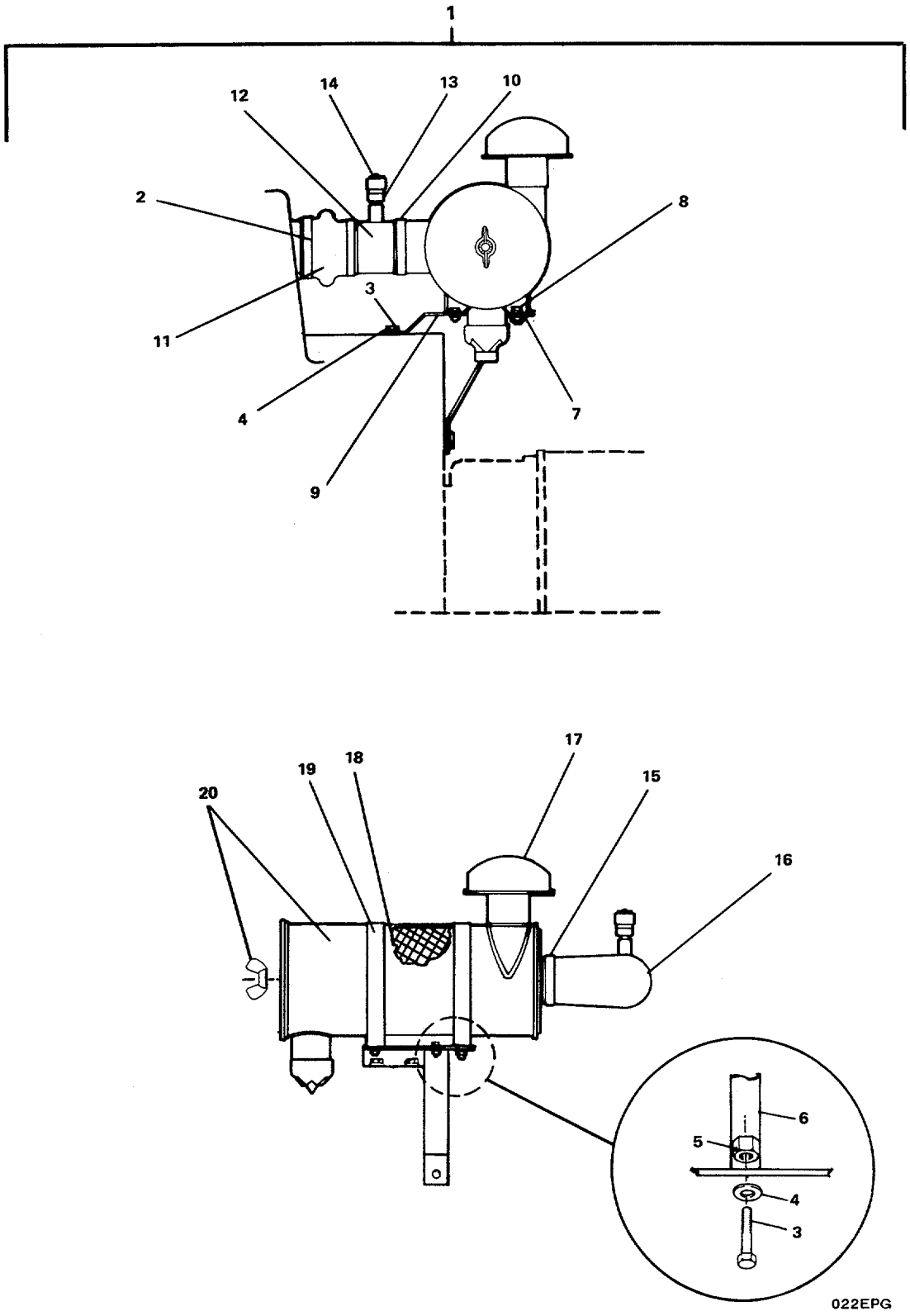

FIGURE 95. Air Cleaner Assembly.

GROUP 04 EMERGENCY GENERATOR SET

FIG. 95 AIR CLEANER ASSEMBLY

(1) ITEM NO	(2) SMR CODE	(3) FSCM	(4) PART NUMBER	(5) DESCRIPTION AND USABLE ON CODES(UOC)	(6) QTY
1	XDOOO	44940	140-2169	..AIR CLEANER ASSEMBL.....	1
2	XDOZZ	44940	503-0868	...CLAMP, HOSE	1
3	XDOZZ	44940	800-2110	...BOLT, MACHINE	4
4	XDOZZ	44940	850-2012	...WASHER, LOCK	4
5	XDOZZ	44940	750-1010	...NUT, PLAIN, HEXAGON.....	1
6	XDOZZ	44940	140-2163	...BRACKET	1
7	XDOZZ	44940	870-0281	...NUT, SELF-LOCKING, HE.....	4
8	XDOZZ	44940	821-0029	...BOLT, MACHINE	4
9	XDOZZ	44940	140-2164	...BRACKET.....	1
10	XDOZZ	44940	503-0998	...CLAMP, HOSE	2
11	PAOZZ	44940	503-1543	...HOSE, NONMETALLIC	1
12	XDOZZ	44940	140-2166	...TUBE ASSEMBLY, METAL.....	1
13	XDOZZ	44940	140-1260	...RESTRICTOR, FLUID FL	1
14	PBOZZ	44940	140-1548	...INDICATOR, FILTER WA	1
15	XDOZZ	44940	503-0999	...CLAMP, HOSE	1
16	XDOZZ	44940	503-1542	...ELBOW, TUBE	1
17	XDOZZ	44940	140-2157	...CAP WITH CLAMP	1
18	PACZZ	44940	140-2159	...FILTER ELEMENT, INTA.....	1
19	XDOZZ	44940	140-0078	...CLAMP	2
20	XDCZZ	44940	140-2158	...AIR CLEANER, INTAKE	1

END OF FIGURE

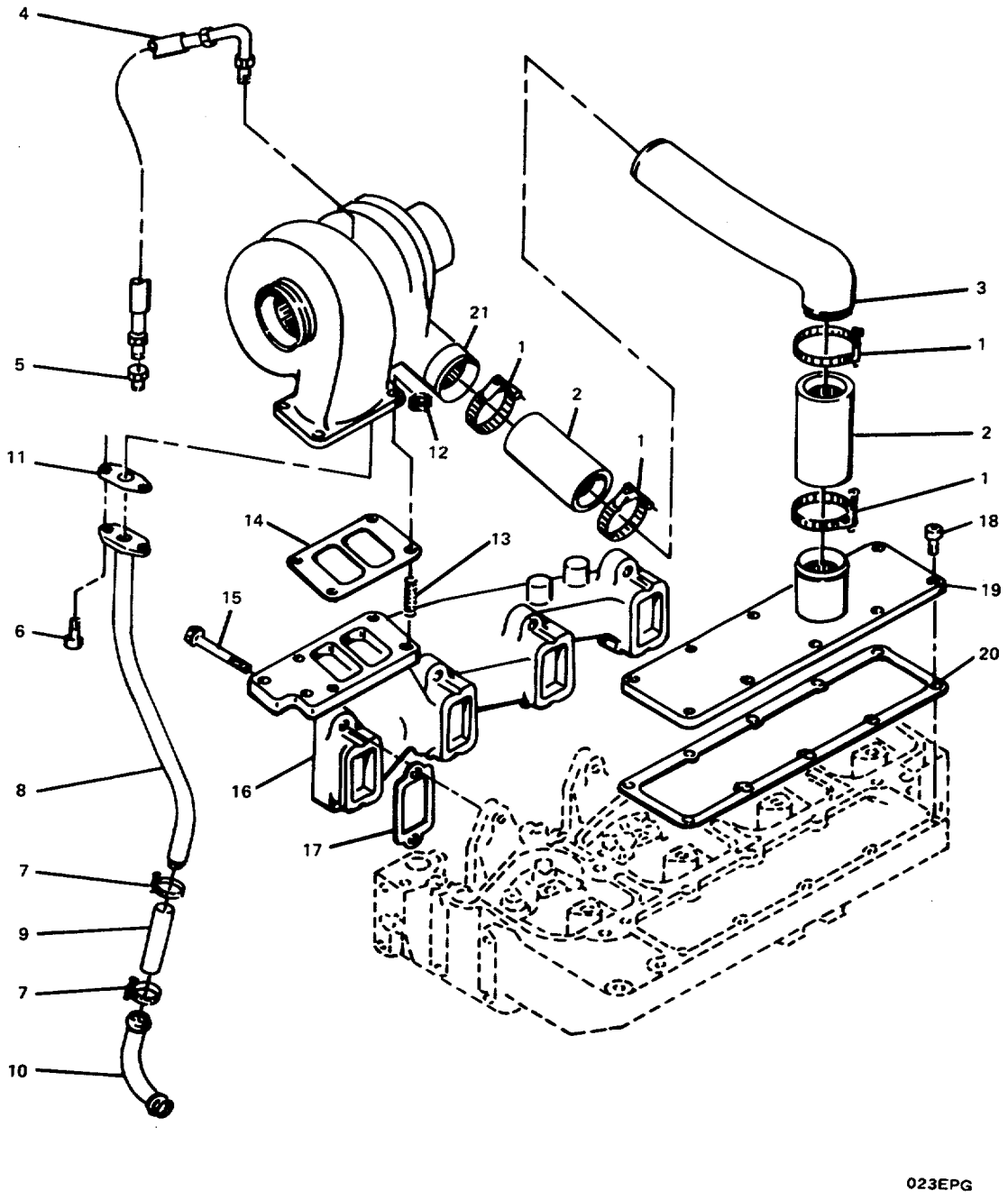

FIGURE 96. Turbocharger Group.

(1) ITEM NO	(2) SMR CODE	(3) FSCM	(4) PART NUMBER	(5) DESCRIPTION AND USABLE ON CODES(UOC)	(6) QTY
				GROUP 04 EMERGENCY GENERATOR SET	
				FIG. 96 TURBOCHARGER GROUP	
	XCCFF	15434	10.06-04	..TURBOCHARGER GROUP	1
1	XDCZZ	15434	3008690	...CLAMP, HOSE	4
2	PBCZZ	15434	3901804	...HOSE, NONMETALLIC	2
3	PBCZZ	15434	3906623	...TUBE, BENT, METALLIC	1
4	PBCZZ	15434	3909546	...TUBE, FLEXIBLE	1
5	XDCZZ	96906	MS51875-6	...ADAPTER, STRAIGHT, PI	1
6	XDCZZ	15434	3900630	...SCREW, CAP, HEXAGON H	2
7	XDCZZ	15434	43828-A	...CLAMP, HOSE	2
8	PBCZZ	15434	3903740	...TUBE, METALLIC	1
9	PACZZ	15434	3903745	...HOSE, NONMETALLIC	1
10	PACZZ	15434	3903744	...TUBE, BENT, METALLIC	1
11	PACZZ	15434	3901805	...GASKET (OIL DRAIN) PART OF KIT P/N 3802007	1
12	XDCZZ	15434	3901961	...NUT, PLAIN, HEXAGON	4
13	XDCZZ	15434	3905417	...STUD, PLAIN	4
14	PACZZ	15434	3901356	...GASKET (TURBOCHARGER) PART OF KIT P/N 3802007	1
15	XDFZZ	15434	3904446	...SCREW, CAP, HEXAGON H	8
16	XDFZZ	15434	3901919	...MANIFOLD, EXHAUST	1
17	PACZZ	15434	3905443	...GASKET (WATER MANIFOLD) PART OF KIT P/N 3802007	4
18	XDCZZ	15434	3904341	...SCREW, CAP, HEXAGON H	8
19	XDCZZ	15434	3908082	...COVER, ACCESS	1
20	PACZZ	15434	3901999	...GASKET PART OF KIT P/N 3802007	1
21	PACZZ	15434	3802113	...TURBOSUPERCHARGER, N	1

END OF FIGURE

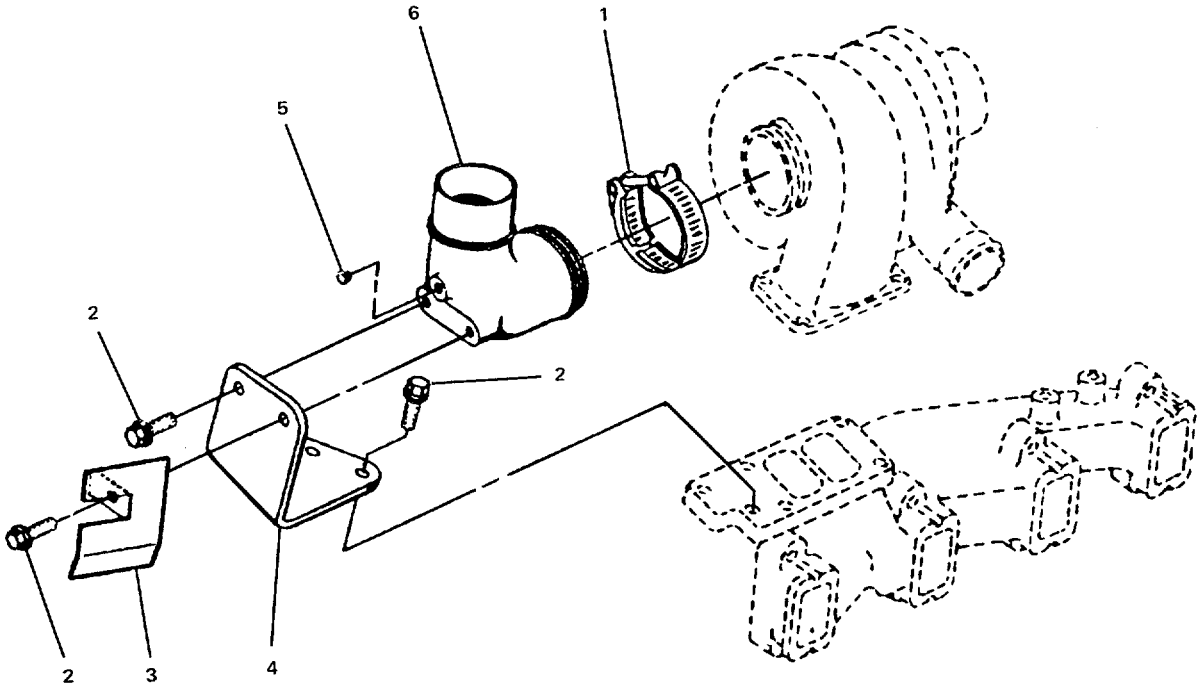

FIGURE 97. Exhaust Connection Group

(1) ITEM NO	(2) SMR CODE	(3) FSCM	(4) PART NUMBER	(5) DESCRIPTION AND USABLE ON CODES(UOC)	(6) QTY
				GROUP 04 EMERGENCY GENERATOR SET	
				FIG. 97 EXHAUST CONNECTION GROUP	
	XCCFF	15434	11.01.01-04	..EXHAUST CONNECTION	1
1	XDCZZ	15434	3903652	...CLAMP, LOOP	1
2	XDCZZ	15434	3902460	...SCREW, CAP, HEXAGON H.....	4
3	XDFZZ	15434	3907172	...SHIELD, HEAT	1
4	XDFZZ	15434	3904986	...BRACKET, ANGLE.....	1
5	XDCZZ	15434	S-910-B	...PLUG, PIPE.....	1
6	XDCZZ	15434	3910992	...CONNECTION, EXHAUST	1

END OF FIGURE

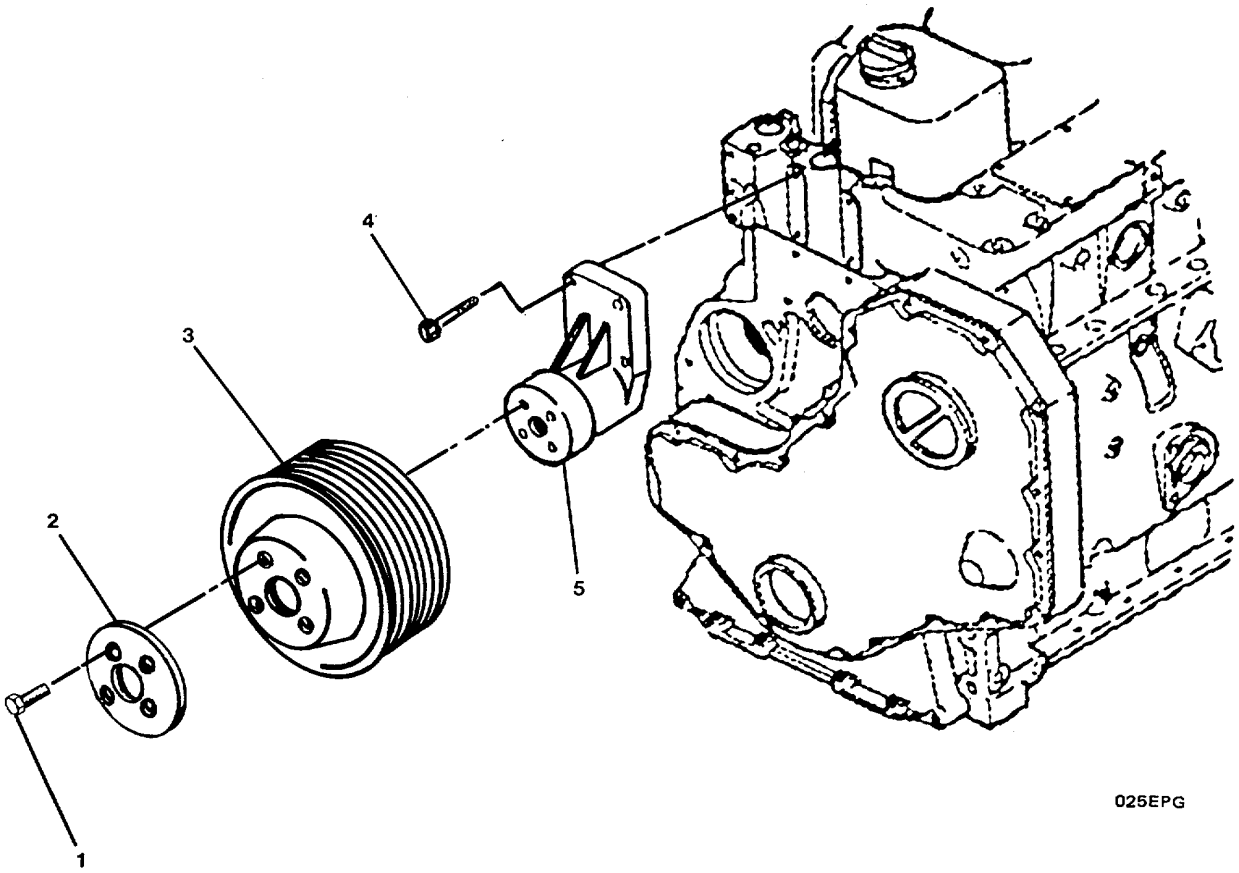

FIGURE 98. Fan Drive Group

(1) ITEM NO	(2) SMR CODE	(3) FSCM	(4) PART NUMBER	(5) DESCRIPTION AND USABLE ON CODES(UOC)	(6) QTY
				GROUP 04 EMERGENCY GENERATOR SET	
				FIG. 98 FAN DRIVE GROUP	
	XCOOO	15434	08.04-04	..FAN DRIVE GROUP	1
1	XDOZZ	15434	3900227	...SCREW, CAP, HEXAGON H	4
2	XDOZZ	15434	3904690	...PLATE, CLAMPING	1
3	XDOZZ	15434	3902709	...PULLEY, GROOVE	1
4	XDOZZ	15434	3900678	...SCREW, CAP, HEXAGON H	4
5	XDOZZ	15434	3909888	...SUPPORT, FAN	1

END OF FIGURE

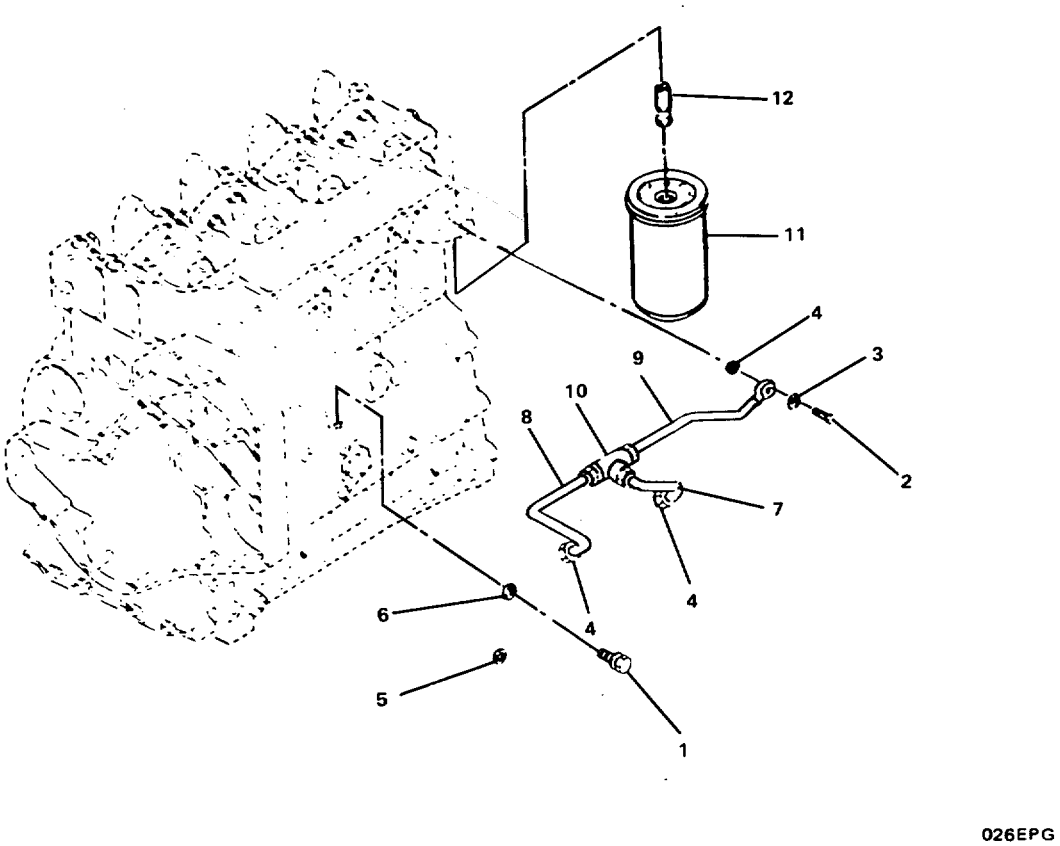

FIGURE 99. Fuel Filter Group.

(1) ITEM NO	(2) SMR CODE	(3) FSCM	(4) PART NUMBER	(5) DESCRIPTION AND USABLE ON CODES(UOC)	(6) QTY
				GROUP 04 EMERGENCY GENERATOR SET	
				FIG. 99 FUEL FILTER GROUP	
	XCOOO	15434	06.04-04	..FUEL FILTER GROUP.....	1
1	XDOZZ	15434	3905403	...SCREW, ASSEMBLY PANE	1
2	XDOZZ	15434	3905405	...SCREW, MACHINE	1
3	XDOZZ	15434	3903037	...WASHER, FLAT PART OF KIT P/N 3802007.....	2
4	XDOZZ	15434	S-1069	...NUT, TUBE.....	3
5	XDOZZ	15434	3903381	...NUT, TUBE.....	2
6	PAOZZ	15434	3905351	...SEAL, GROMMET	3
7	XDOZZ	15434	3905375	...TUBE ASSEMBLY, METAL.....	1
8	XDOZZ	15434	3905364	...TUBE ASSEMBLY, METAL.....	1
9	XDOZZ	15434	3905363	...TUBE ASSEMBLY, METAL.....	1
10	XDOZZ	15434	3905353	...TEE, PIPE	1
11	PACZZ	15434	3903202	...FILTER, FLUID	1
12	XDOZZ	15434	3903845	...ADAPTER, FILTER HEAD	1

END OF FIGURE

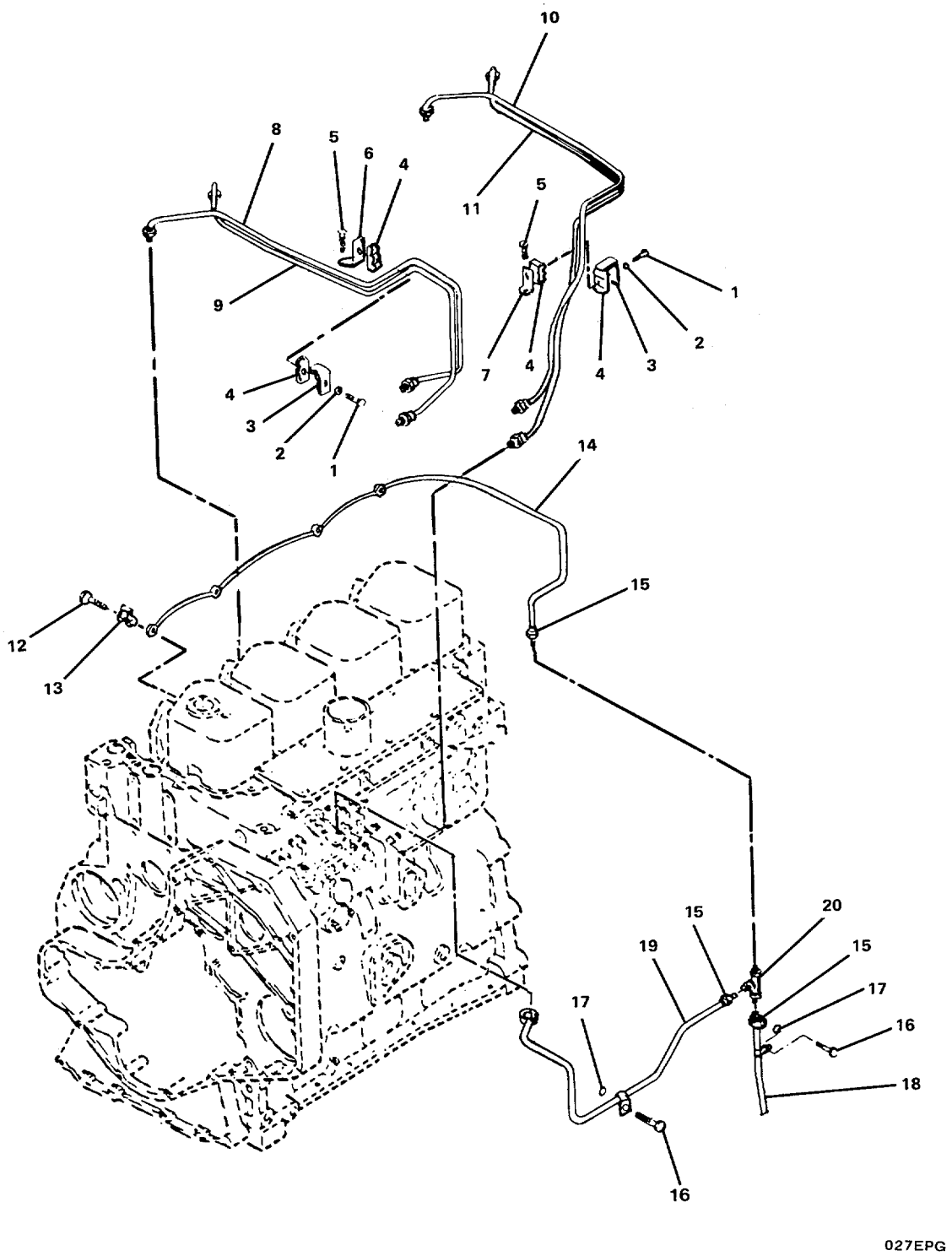

FIGURE 100. Fuel Plumbing Group.

(1) ITEM NO	(2) SMR CODE	(3) FSCM	(4) PART NUMBER	(5) DESCRIPTION AND USABLE ON CODES(UOC)	(6) QTY
				GROUP 04 EMERGENCY GENERATOR SET	
				FIG. 100 FUEL PLUMBING GROUP	
	XCOOO	15434	06.03-04	..FUEL PLUMBING GROUP	1
1	XDOZZ	15434	3903609	...SCREW, CAP, HEXAGON H	2
2	XDOZZ	15434	3903723	...WASHER, FLAT	2
3	XDOZZ	15434	3904711	...BRACKET, ANGLE	2
4	XDOZZ	15434	3904712	...STRAP, RETAINING	4
5	XDOZZ	15434	3904341	...SCREW, CAP, HEXAGON H	2
6	XDOZZ	15434	3904344	...BRACKET, ANGLE	1
7	XDOZZ	15434	3904345	...BRACKET, ANGLE	1
8	XDOZZ	15434	3906029	...TUBE ASSEMBLY, METAL	1
9	XDOZZ	15434	3906030	...TUBE ASSEMBLY, METAL	1
10	XDOZZ	15434	3906031	...TUBE ASSEMBLY, METAL	1
11	XDOZZ	15434	3906032	...TUBE ASSEMBLY, METAL	1
12	XDOZZ	15434	3905307	...BOLT, FLUID PASSAGE	4
13	XDOZZ	15434	3903380	...SEAL, BANJO CONNECTO PART OF KIT P/N 3802007	4
14	XDOZZ	15434	3909695	...TUBE ASSEMBLY, METAL	1
15	PAOZZ	15434	3905391	...GROMMET, NONMETALLIC	3
16	XDOZZ	15434	3900629	...BOLT, MACHINE	2
17	PAOZZ	15434	3900267	...GROMMET	2
18	XDOZZ	15434	3905692	...TUBE ASSEMBLY, METAL	1
19	XDOZZ	15434	3905703	...TUBE ASSEMBLY, METAL	1
20	XDOZZ	15434	3905388	...TEE, TUBE	1

END OF FIGURE

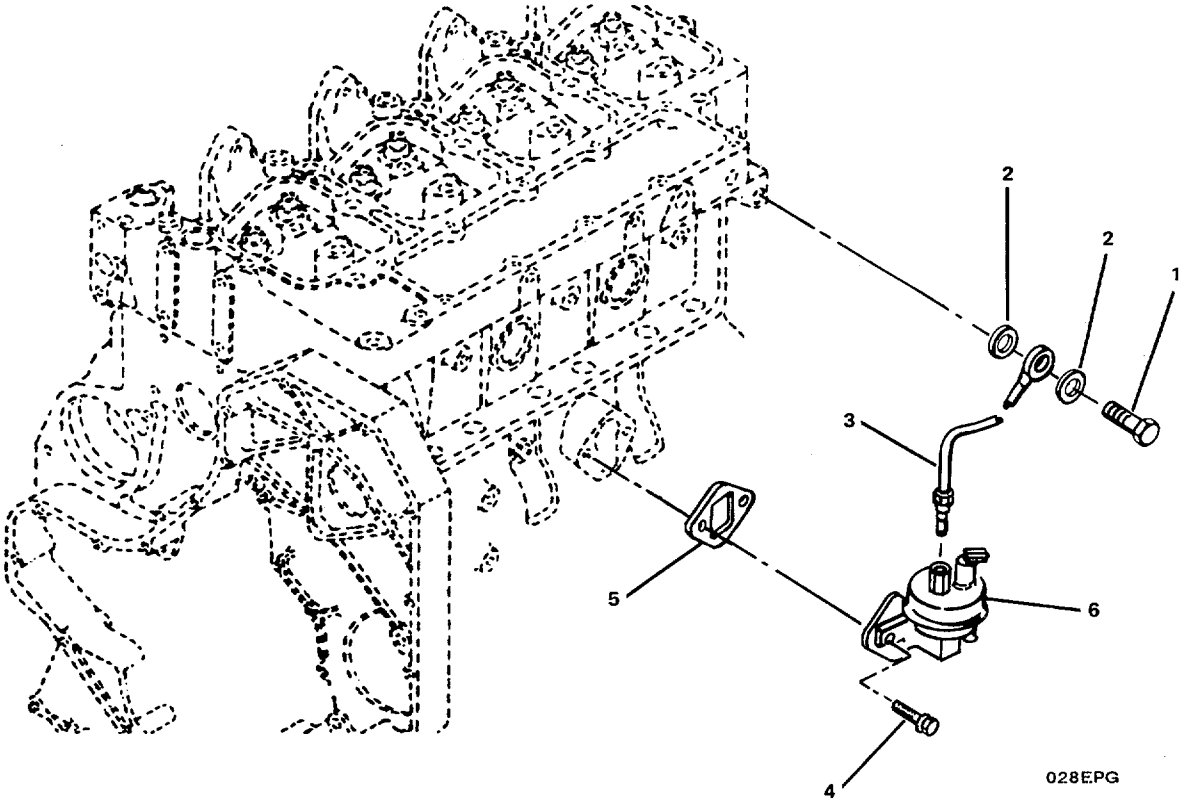

FIGURE 101. Fuel System Accessory Group.

(1) ITEM NO	(2) SMR CODE	(3) FSCM	(4) PART NUMBER	(5) DESCRIPTION AND USABLE ON CODES(UOC)	(6) QTY
				GROUP 04 EMERGENCY GENERATOR SET	
				FIG. 101 FUEL SYSTEM ACCESSORY GROUP	
	XCOOO	15434	05.19-04	..FUEL SYSTEM ACCESSO	1
1	XDOZZ	15434	3903035	...SCREW	1
2	XDOZZ	15434	3903037	...WASHER, FLAT	2
3	XDOZZ	15434	3905649	...TUBE ASSEMBLY, METAL.....	1
4	XDCZZ	15434	3900631	...SCREW, CAP, HEXAGON H	2
5	PAOZZ	15434	3904044	...GASKET	1
6	XDOZZ	15434	3904374	...PUMP, FUEL, CAM ACTUA	1

END OF FIGURE

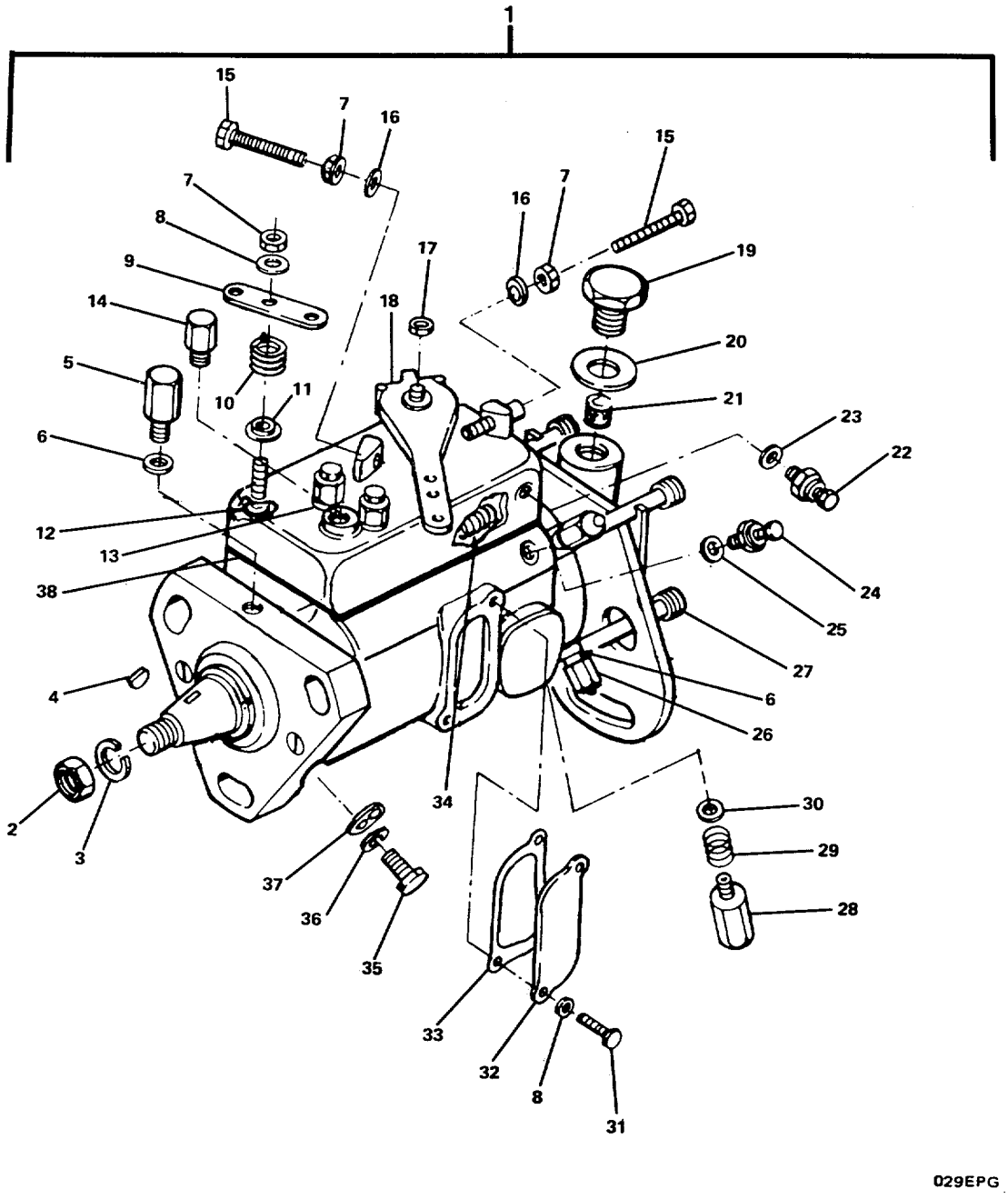

FIGURE 102. Metering and Distributing Fuel Pump Assembly.

(1) ITEM NO	(2) SMR CODE	(3) FSCM	(4) PART NUMBER	(5) DESCRIPTION AND USABLE ON CODES(UOC)	(6) QTY
				GROUP 04 EMERGENCY GENERATOR SET	
				FIG. 102 METERING AND DISTRIBUTING FUEL PUMP ASSEMBLY	
1	PBCFF	15434	3912852-1890	PUMP, FUEL, METERING	1
2	XAFZZ	15434	S-203-A	...NUT	1
3	XAFZZ	15434	S-609	...WASHER, LOCK	1
4	XAFZZ	15434	3902332	...KEY, WOODRUFF	1
5	XAFZZ	15434	3904643	...ADAPTER, STRAIGHT, PI	1
6	XAFZZ	15434	3904644	...WASHER	9
7	XAFZZ	15434	3904634	...NUT	3
8	XAFZZ	15434	3904636	...WASHER, FLAT	3
9	XAFZZ	15434	3904632	...LEVER, REMOTE CONTRO	1
10	XAFZZ	15434	3904633	...SPRING, SHUT OFF	1
11	XAFZZ	15434	3904781	...SPRING.	1
12	XAFZZ	15434	3907487	...PACKING, PREFORMED	4
13	XAFZZ	15434	3907485	...WASHER, FLAT	2
14	XAFZZ	15434	3904640	...RESTRICTOR, FLUID FL	1
15	XAFZZ	15434	3904637	...SCREW	2
16	XAFZZ	15434	3904638	...WASHER, FLAT	2
17	XAFZZ	15434	3904639	...NUT	1
18	XAFZZ	15434	3904631	...PARTS KIT, THROTTLE	1
19	XAFZZ	15434	3904641	...FITTING, INLET	1
20	XAFZZ	15434	3904642	...WASHER, INLET	1
21	XAFZZ	15434	3904652	...FILTER ELEMENT, FLUI.	1
22	XAFZZ	15434	3904651	...SCREW	1
23	XAFZZ	15434	3904653	...WASHER	1
24	XAFZZ	15434	3904650	...SCREW	2
25	XAFZZ	15434	3904654	...WASHER	1
26	XAFZZ	15434	3904646	...BOLT	4
27	XACZZ	15434	3904645	...CONNECTOR, MULTIPLE,	4
28	XAFZZ	15434	3904630	...SOLENOID, ELECTRICAL	1
29	XAFZZ	15434	3904777	...SPRING	1
30	XAFZZ	15434	3904635	...PACKING, PREFORMED	1
31	XAFZZ	15434	3904649	...BOLT, COVER	2
32	XAFZZ	15434	3904647	...COVER, ACCESS	1
33	XAFZZ	15434	3904648	...GASKET	1
34	XAFZZ	15434	3907493	...SPRING, HELICAL, COMP	1
35	XAFZZ	15434	3904778	...SCREW, CAP LOCKED TIMING	1
36	XAFZZ	15434	3904779	...WASHER LOCKED TIMING	1
37	XAFZZ	15434	3904780	...GASKET	1
38	XAFZZ	15434	3907486	...GASKET	1

END OF FIGURE

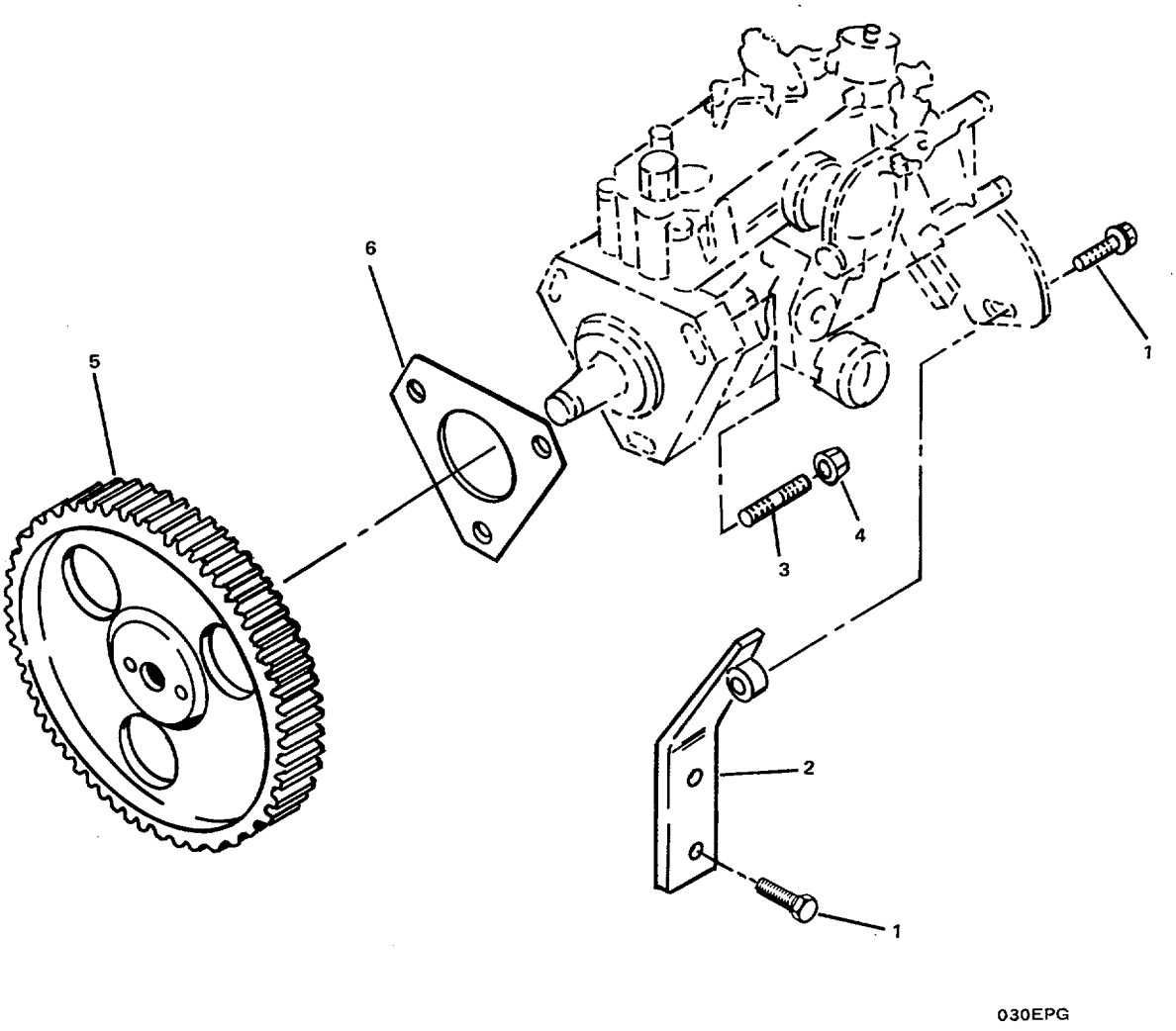

FIGURE 103. Fuel Pump Coupling Group.

(1) ITEM NO	(2) SMR CODE	(3) FSCM	(4) PART NUMBER	(5) DESCRIPTION AND USABLE ON CODES(UOC)	(6) QTY
				GROUP 04 EMERGENCY GENERATOR SET	
				FIG. 103 FUEL PUMP COUPLING GROUP	
	XCOOO	15434	09.01-04	..FUEL PUMP COUPLING	1
1	XDOZZ	15434	3900630	...SCREW, CAP, HEXAGON H.....	3
2	XDOZZ	15434	3905387	...BRACE, FUEL PUMP	1
3	XDOZZ	15434	3902501	...STUD, PLAIN	1
4	XDOZZ	15434	3900589	...NUT, PLAIN, HEXAGON	3
5	PBOZZ	15434	3911331	...GEAR, SPUR	1
6	PAOZZ	15434	3905685	...GASKET (FUEL PUMP)	1

END OF FIGURE

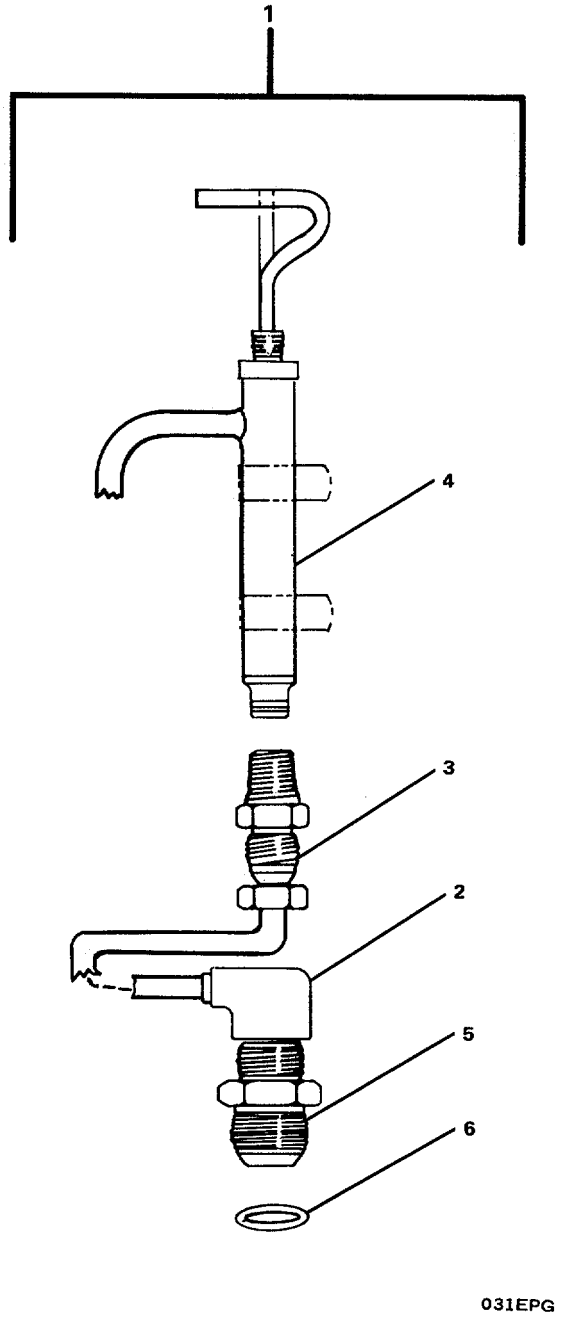

FIGURE 104. Sump Pump Assembly.

(1) ITEM NO	(2) SMR CODE	(3) FSCM	(4) PART NUMBER	(5) DESCRIPTION AND USABLE ON CODES(UOC)	(6) QTY
				GROUP 04 EMERGENCY GENERATOR SET	
				FIG. 104 SUMP PUMP ASSEMBLY	
1	PBOOO	44940	539-0953	..SUMP PUMP ASSEMBLY	1
2	PBOZZ	44940	501-0532	...HOSE ASSEMBLY, NONME	1
3	PAOZZ	44940	502-1035	...ADAPTER, STRAIGHT, PI	1
4	PBOZZ	44940	120-1200	...OIL PUMP ASSEMBLY, E	1
5	PAOZZ	44940	502-1036	...ADAPTER, STRAIGHT, PI	1
6	PAOZZ	44940	102-1147	...GASKET	..1

END OF FIGURE

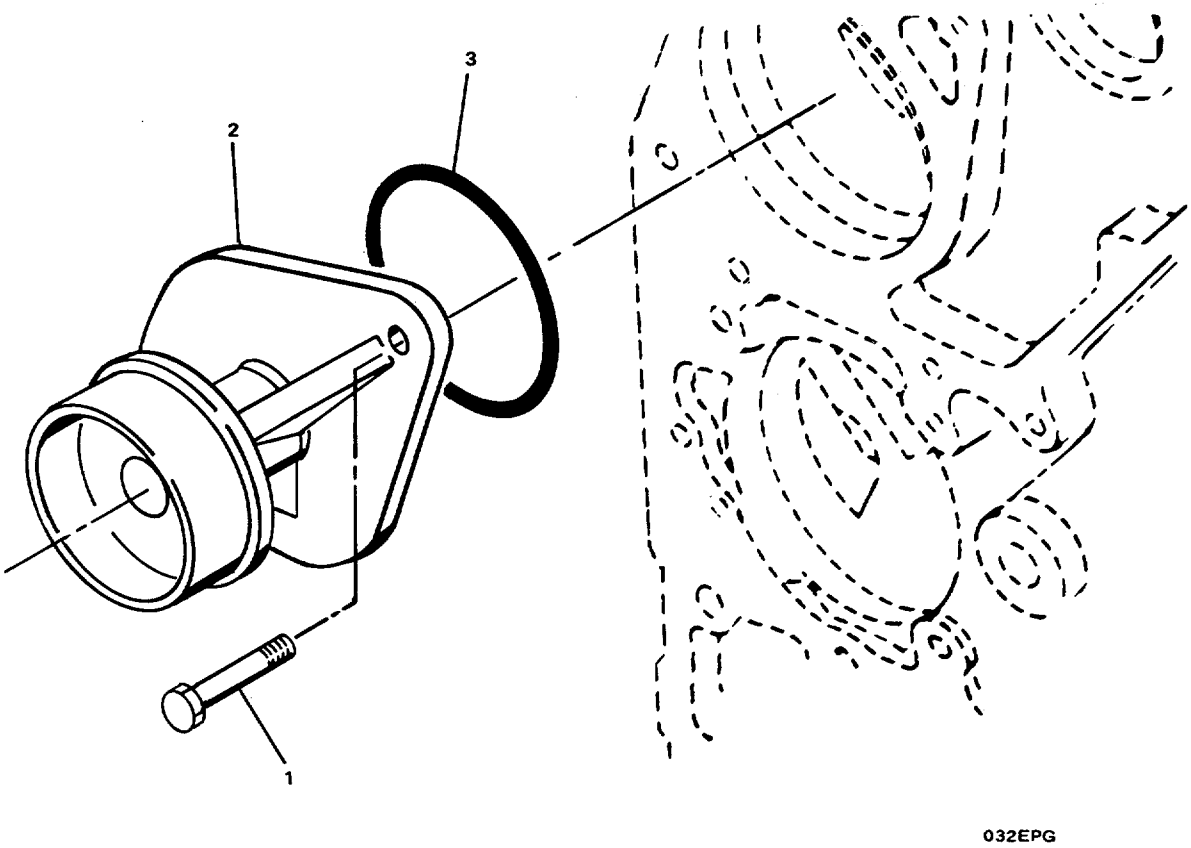

FIGURE 105. Water Pump Group.

(1) ITEM NO	(2) SMR CODE	(3) FSCM	(4) PART NUMBER	(5) DESCRIPTION AND USABLE ON CODES(UOC)	(6) QTY
				GROUP 04 EMERGENCY GENERATOR SET	
				FIG. 105 WATER PUMP GROUP	
	XCCOO	15434	08.01-04	..WATER PUMP GROUP.....	1
1	XDCZZ	15434	3900227	...SCREW, CAP, HEXAGON H.....	2
2	PACZZ	15434	3802004	...PARTS KIT, ENGINE WA.....	1
3	PACZZ	15434	3906698	...PACKING, PREFORMED	1

END OF FIGURE

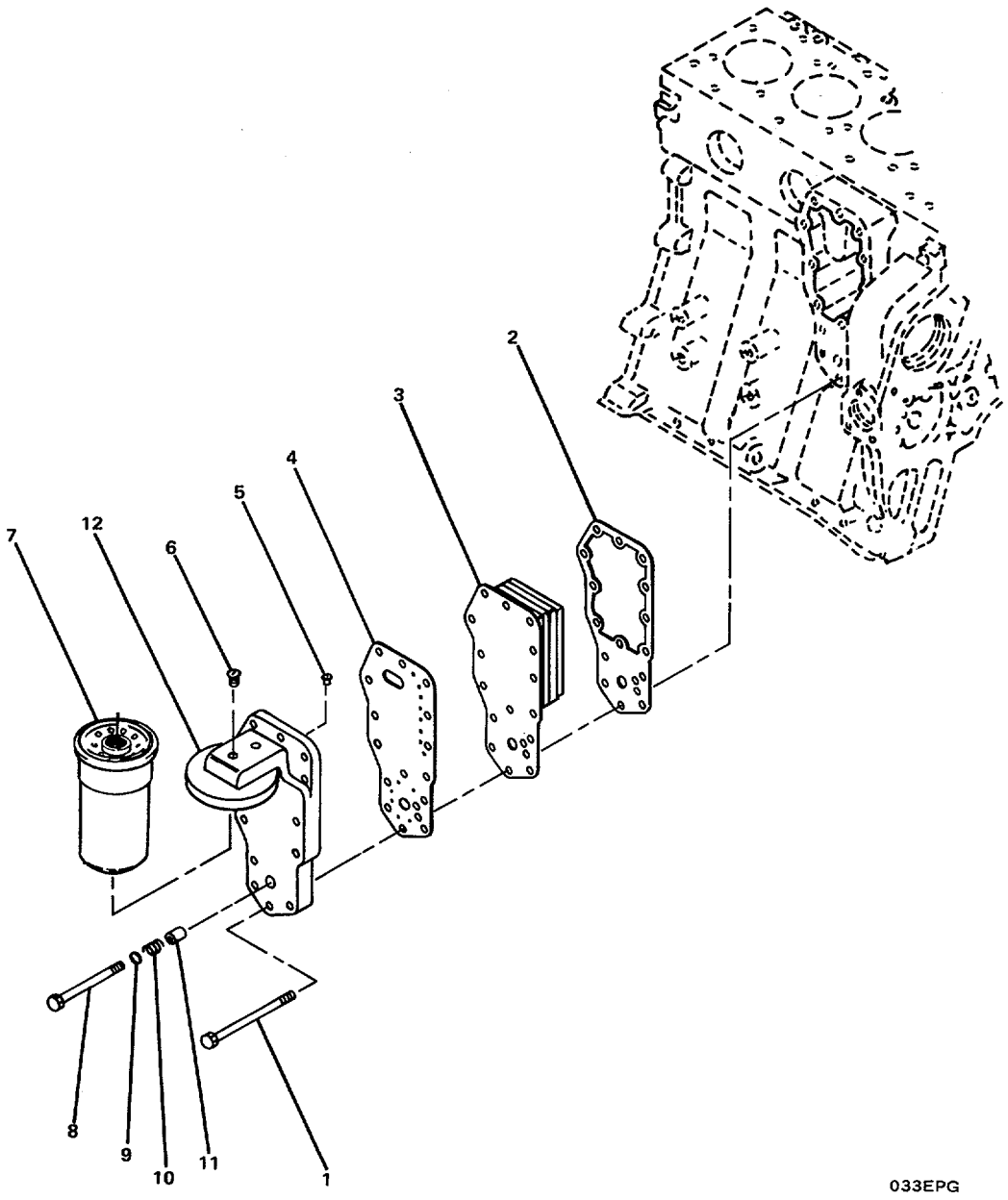

FIGURE 106. Lubricating Oil Cooler Group.

(1) ITEM NO	(2) SMR CODE	(3) FSCM	(4) PART NUMBER	(5) DESCRIPTION AND USABLE ON CODES(UOC)	(6) QTY
				GROUP 04 EMERGENCY GENERATOR SET	
				FIG. 106 LUBRICATING OIL COOLER GROUP	
	XCOFF	15434	07.03-04	..LUBE OIL COOLER GRO	1
1	XDFZZ	15434	3900632	...SCREW, CAP, HEXAGON H	14
2	PAFZZ	15434	3904427	...GASKET (OIL COOLER COVER)	1
3	XDFZZ	15434	3904320	...CORE, COOLER	1
4	PAFZZ	15434	3912638	...GASKET	1
5	PBFZZ	15434	3902338	...VALVE PRESSURE RELI	1
6	XDFZZ	15434	3906619	...PLUG, PIPE PART OF KIT P/N 3904991.....	1
7	PACZZ	15434	3908616	...FILTER ELEMENT, FLUI	1
8	XDFZZ	15434	3904386	...PLUG, MACHINE THREAD	1
9	XDFZZ	15434	3902425	...WASHER, FLAT PART OF KIT P/N..... 3802007.....	1
10	PAFZZ	15434	3903261	...SPRING, HELICAL, COMP	1
11	PAFZZ	15434	3909376	...PLUNGER, DETENT	1
12	XDFZZ	15434	3902295	...HEAD, FLUID FILTER	1

END OF FIGURE

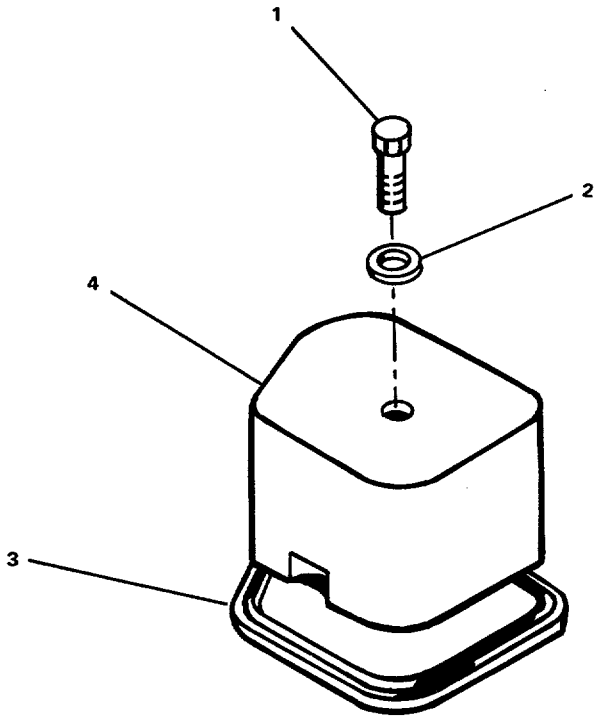

034EPG

FIGURE 107. Valve Cover Group.

(1) ITEM NO	(2) SMR CODE	(3) FSCM	(4) PART NUMBER	(5) DESCRIPTION AND USABLE ON CODES(UOC)	(6) QTY
				GROUP 04 EMERGENCY GENERATOR SET	
				FIG. 107 VALVE COVER GROUP	
	XCCOO	15434	03.01.1-04	VALVE COVER GROUP	1
1	XDCZZ	15434	3907049	...SCREW, CAP, HEXAGON H	4
2	PACZZ	15434	3910824	...PACKING, PREFORMED PART OF KIT P/N 3802007.....	4
3	PACZZ	15434	3902666	...GASKET (VALVE, COVER) PART OF KIT P/N 3802007.....	4
4	XDCZZ	15434	3902604	...COVER, VALVE	4

END OF FIGURE

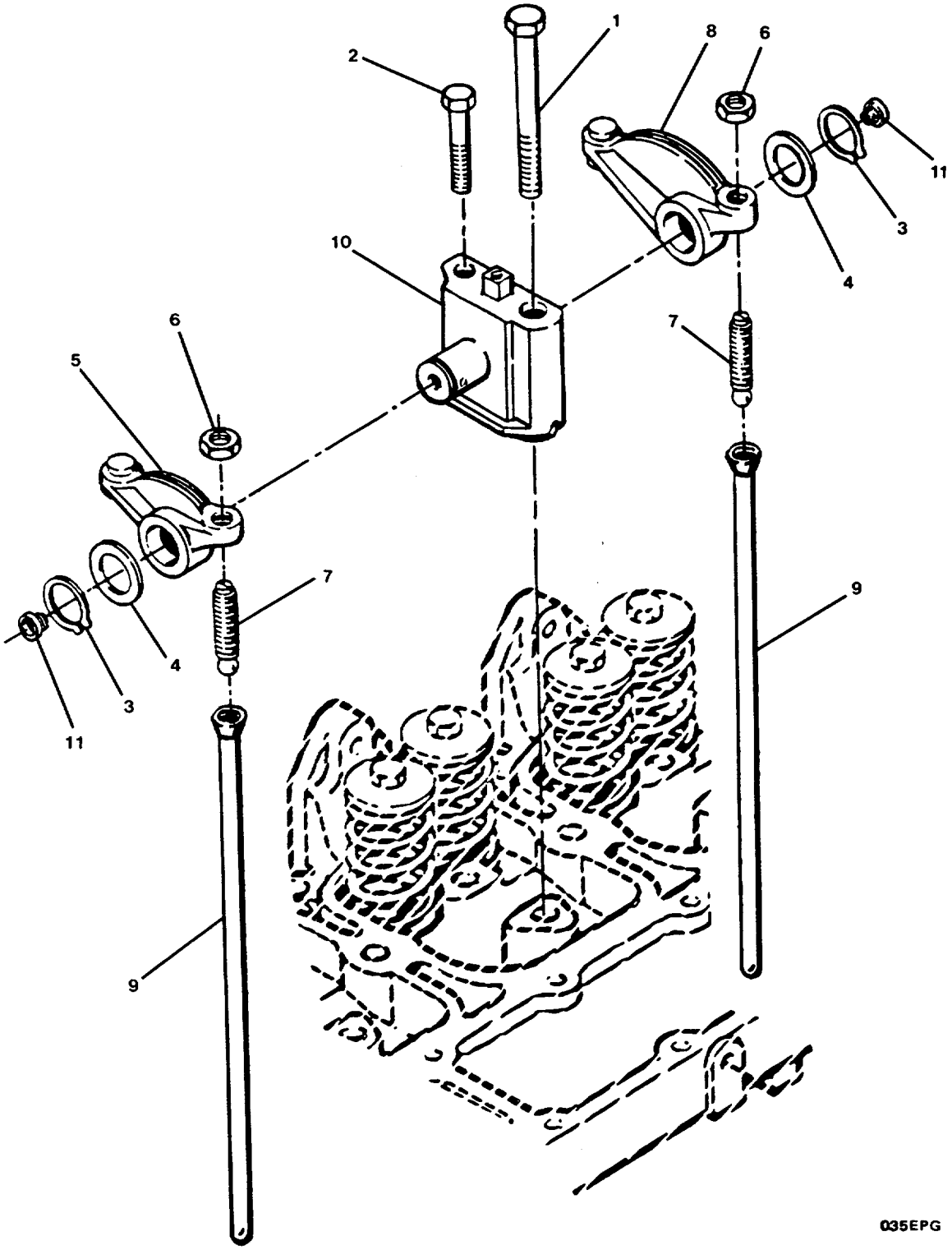

FIGURE 108. Rocker Lever Group.

(1) ITEM NO	(2) SMR CODE	(3) FSCM	(4) PART NUMBER	(5) DESCRIPTION AND USABLE ON CODES(UOC)	(6) QTY
				GROUP 04 EMERGENCY GENERATOR SET	
				FIG. 108 ROCKER LEVER GROUP	
	XCCFF	15434	03.01-04	..ROCKER LEVER GROUP	1
1	XDCZZ	15434	3903940	...SCREW, CAP, HEXAGON H.....	4
2	XDCZZ	15434	3901221	...SCREW, CAP, HEXAGON H.....	4
3	XDFZZ	15434	3900242	...RING, RETAINING	8
4	XDFZZ	15434	3900245	...WASHER, FLAT	8
5	XDFZZ	15434	3910811	...ROCKER ARM, ENGINE P	4
6	PAFZZ	15434	S-205	..NUT.....	8
7	PAFZZ	15434	3900706	...SCREW, MACHINE	.8
8	XAFZZ	15434	3910810	...LEVER, ROCKER	4
9	XDFZZ	15434	3904679	...PUSH ROD, ENGINE POP	8
10	XDFZZ	15434	3910814	...SUPPORT, ROCKER LEVE	4
11	XDFZZ	15434	3907555	...PLUG, EXPANSION	8

END OF FIGURE

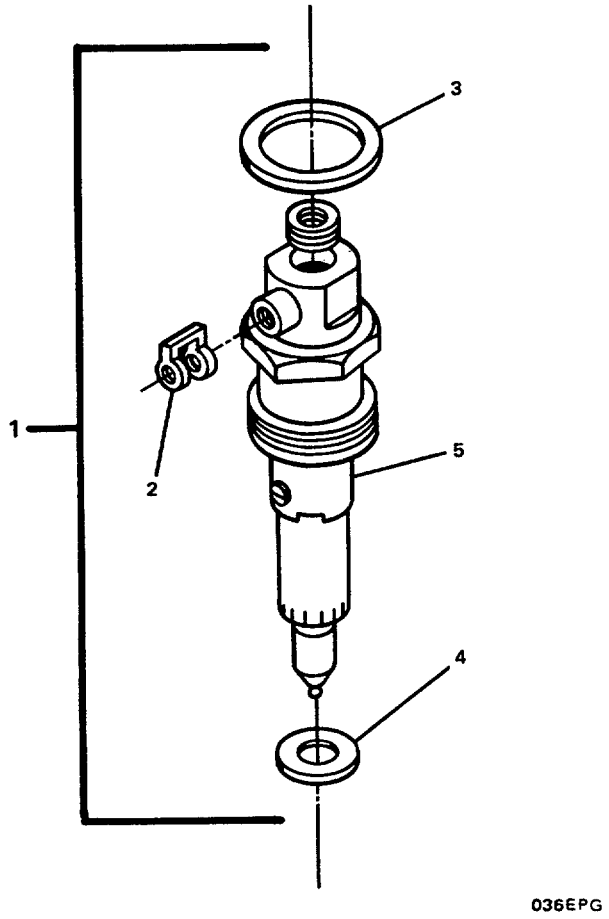

FIGURE 109. Fuel injector Group.

(1) ITEM NO	(2) SMR CODE	(3) FSCM	(4) PART NUMBER	(5) DESCRIPTION AND USABLE ON CODES(UOC)	(6) QTY
				GROUP 04 EMERGENCY GENERATOR SET	
				FIG. 109 FUEL INJECTOR GROUP	
	XCCOO	15434	06.01-04	..FUEL INJECTOR GROUP	1
1	PACZZ	15434	3802061	...INJECTOR	4
2	PACZZ	15434	3903380	...SEAL, BANJO CONNECTO	4
3	PACZZ	15434	3909356	...GASKET	4
4	PACZZ	15434	3900808	...WASHER PART OF KIT P/N 3802007.....	4
5	PACZZ	15434	3911185	...INJECTOR ASSEMBLY, F	4

END OF FIGURE

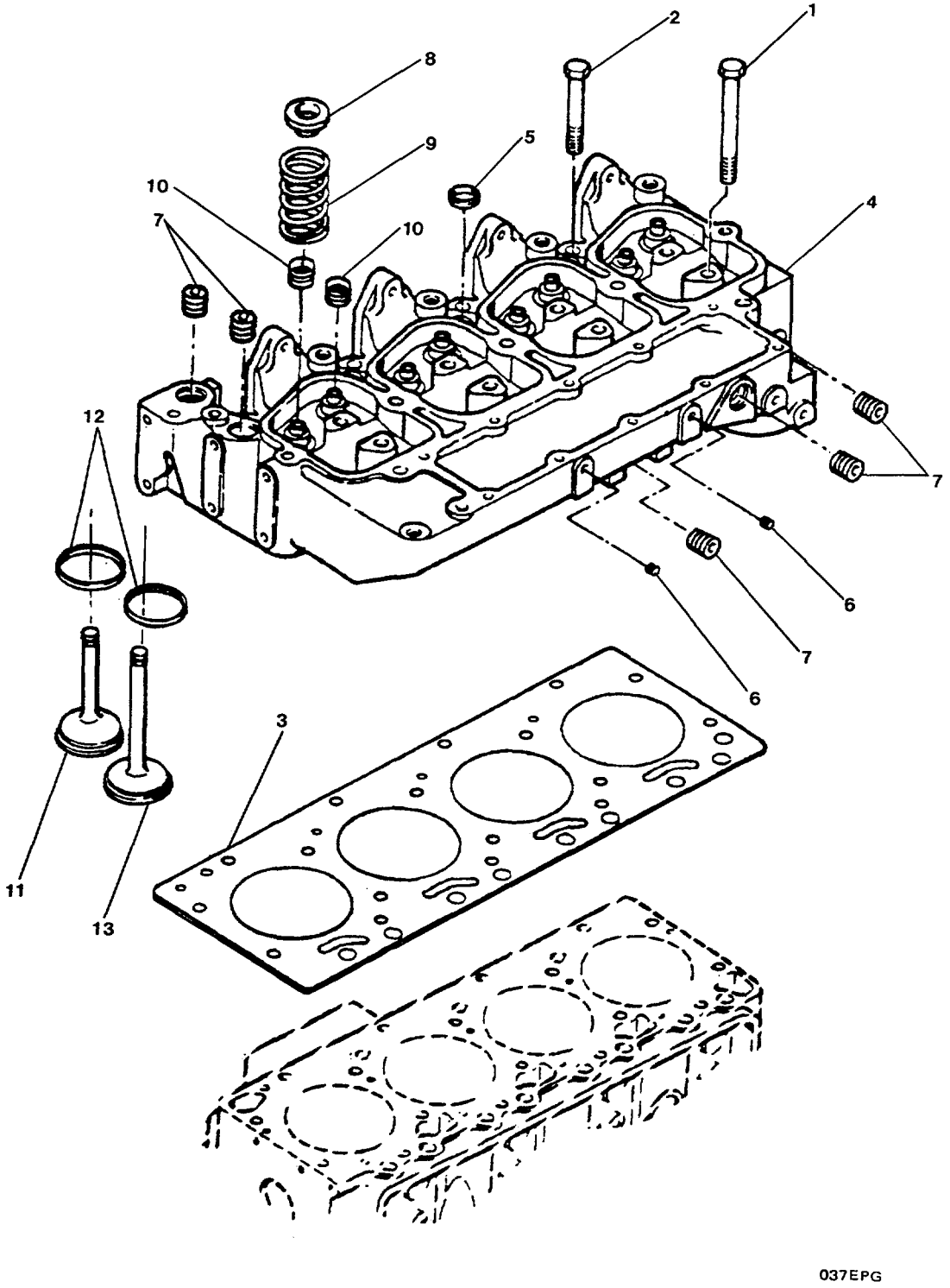

FIGURE 110. Cylinder Head Group.

(1) ITEM NO	(2) SMR CODE	(3) FSCM	(4) PART NUMBER	(5) DESCRIPTION AND USABLE ON CODES(UOC)	(6) QTY
				GROUP 04 EMERGENCY GENERATOR SET	
				FIG. 110 CYLINDER HEAD GROUP	
	XCCHH	15434	02.01-04	CYLINDER HEAD GROUP	1
1	XDCZZ	15434	3903939	...SCREW, CAP, HEXAGON H	10
2	XDCZZ	15434	3903938	...SCREW, CAP, HEXAGON H	4
3	PACZZ	15434	3907054	...GASKET (CYLINDER HEAD) PART OF KIT P/N 3802007.....	1
4	XDCHH	15434	3910275	...CYLINDER HEAD, DIESE	1
5	XDHZZ	15434	3902606	....PLUG, EXPANSION	3
6	XDHZZ	15434	3008465	....PLUG, PIPE	2
7	XDHZZ	15434	3008468	....PLUG, PIPE	5
8	PBHZZ	15434	3900299	....RETAINER, VALVE SPRI	8
9	PBHZZ	15434	3900276	....SPRING, HELICAL, COMP	8
10	PBHZZ	15434	3901097	....SEAL, VALVE STEM PART OF KIT P/N 3802007.....	8
11	PBHZZ	15434	3802005	....VALVE, POPPET, ENGINE	4
12	PBHZZ	15434	3900250	....COLLECT, VALVE	16
13	PBHZZ	15434	3802006	....VALVE, POPPET, ENGINE	4
	PACZZ	15434	3802007	...KIT, TURBOSUPERCHARG (NEED FOR COMPLETE REPAIR OF TURBOCHARGER)....	1
				GASKET (1) 93-5	
				GASKET (1) 96-11	
				GASKET (1) 96-14	
				GASKET (4) 96-17	
				GASKET (1) 96-20	
				GASKET (4) 107-3	
				GASKET (1) 110-3	
				PACKING, PREFORMED (4) 107-2	
				SEAL, BANJO CONNECTO (4) 100-13	
				SEAL, VALVE STEM (8) 110-10	
				WASHER (4) 109-4	
				WASHER, FLAT (2) 99-3	
				WASHER, FLAT (1) 106-9	

END OF FIGURE

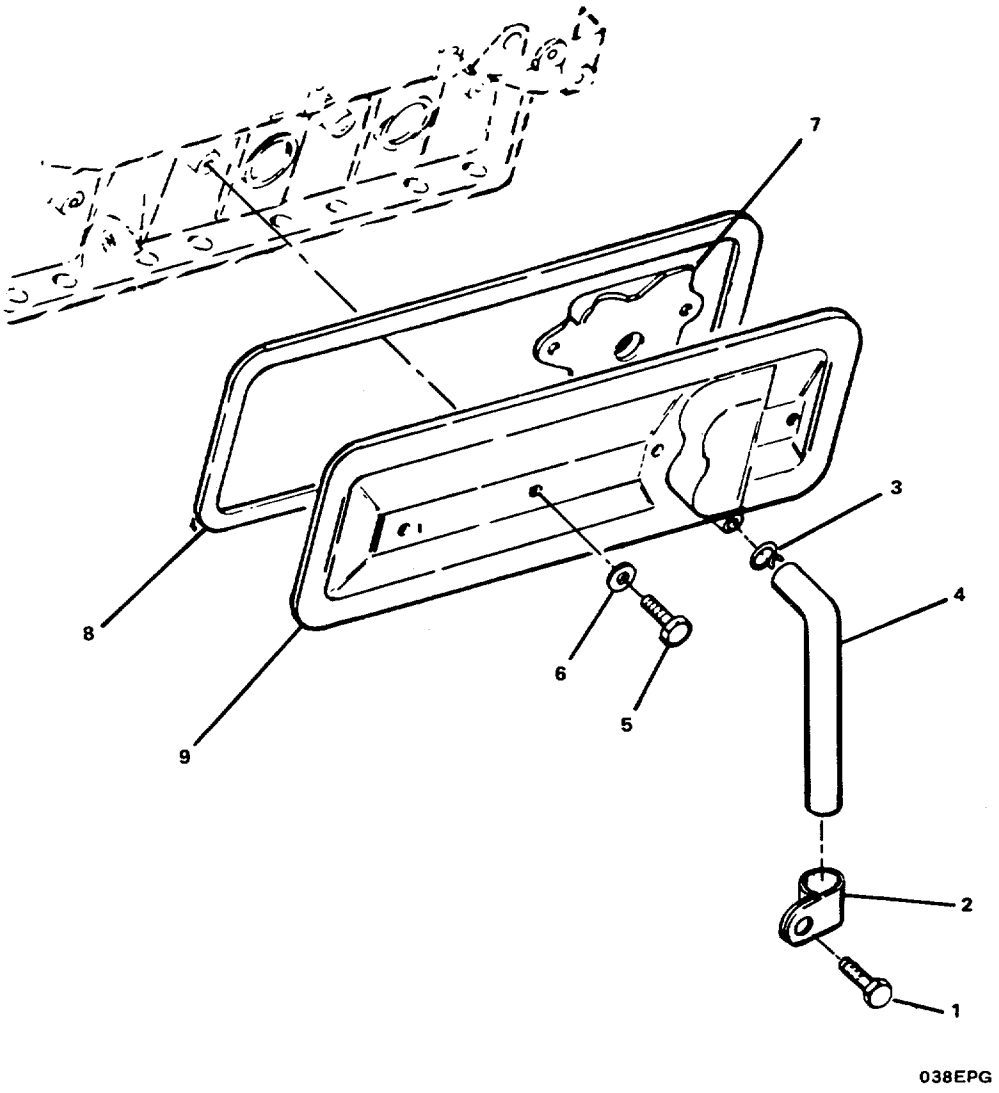

FIGURE 111. Cam Follower Cover Group.

(1) ITEM NO	(2) SMR CODE	(3) FSCM	(4) PART NUMBER	(5) DESCRIPTION AND USABLE ON CODES(UOC)	(6) QTY
				GROUP 04 EMERGENCY GENERATOR SET	
				FIG. 111 CAM FOLLOWER COVER GROUP	
	XCFFF	15434	04.03-04	.....CAMFOLLOWER COVER.....	1
1	XDFZZ	15434	3912072	...SCREW, CAP, HEXAGON H	1
2	XDFZZ	15434	3909670	.....CLAMP, LOOP	1
3	XDFZZ	15434	3904230	.....CLAMP, HOSE	1
4	PAFZZ	15434	3906593	.....HOSE PREFO RMED.....	1
5	XDFZZ	15434	3900629	...BOLT, MACHINE.....	2
6	PAFZZ	15434	3900267	...GROMMET....	2
7	PBFZZ	15434	3907586	...BAFFLE, AIRFLOW, ENGI	1
8	PAFZZ	15434	3904056	...GASKET	1
9	XDFZZ	15434	3905023	...COVER, ENGINE POPPE	1

END OF FIGURE

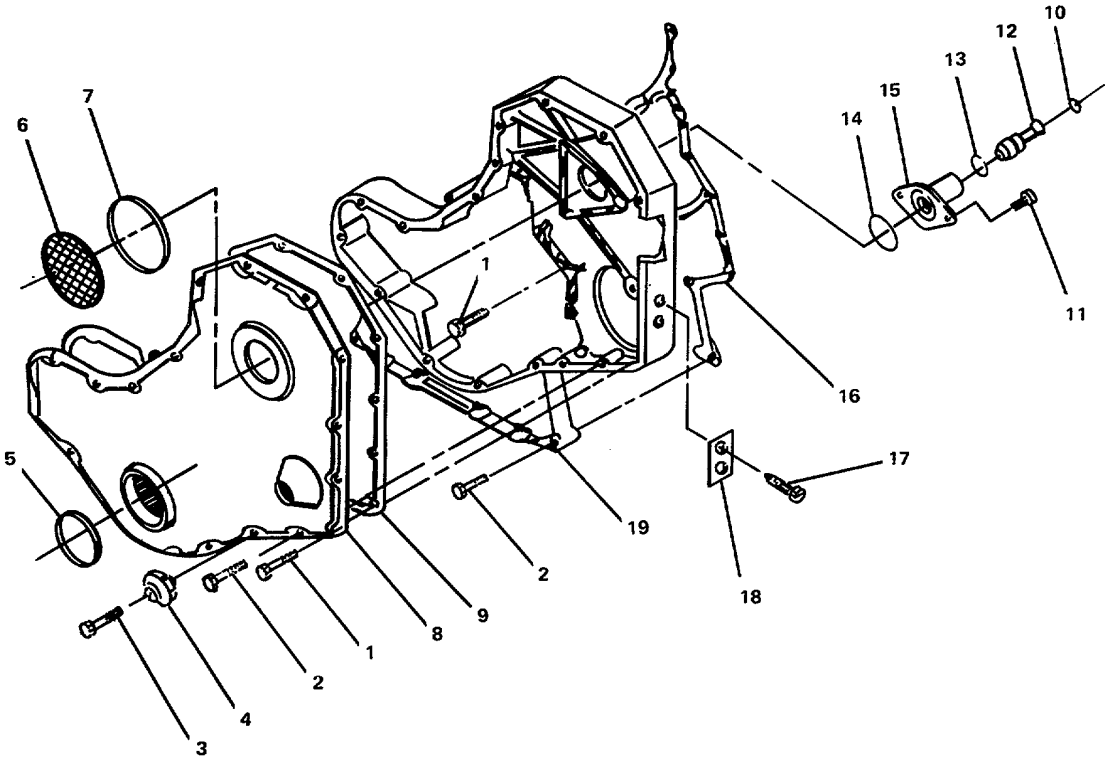

FIGURE 112. Front Gear Cover Group.

(1) ITEM NO	(2) SMR CODE	(3) FSCM	(4) PART NUMBER	(5) DESCRIPTION AND USABLE ON CODES(UOC)	(6) QTY
				GROUP 04 EMERGENCY GENERATOR SET	
				FIG. 112 FRONT GEAR COVER GROUP	
	XCFFF	15434	01.06-04	FRONT GEAR COVER GR	1
1	XDFZZ	15434	3900629	...BOLT, MACHINE	16
2	XDFZZ	15434	3900633	...BOLT, MACHINE	10
3	XDFZZ	15434	3901446	...SCREW, CAP, HEXAGON H	1
4	XDFZZ	15434	3912772	...RETAINER, BELT	1
5	PBFZZ	15434	3904353	... SEAL	1
6	XDFZZ	15434	3903463	...COVER, ACCESS	1
7	PAFZZ	15434	3903475	...GASKET	1
8	XDFZZ	15434	3903794	...HOUSING, GEAR	1
9	PAFZZ	15434	3910500	...GASKET (GEAR HOUSING)	1
10	XDFZZ	15434	3904849	...RING, RETAINING	1
11	XDFZZ	15434	3907998	...SCREW, MACHINE	2
12	PBFZZ	15434	3903924	...PIN, ENGINE TIMING	1
13	PAFZZ	15434	3903927	...RETAINER, PACKING	1
14	PAFZZ	15434	3906693	...GASKET	1
15	XDFZZ	15434	3905933	...HOUSING, TIMING PIN	1
16	PAFZZ	15434	3907836	...GASKET (GEAR HOUSING	1
17	XDFZZ	15434	3908612	...SCREW, DRIVE	2
18	XDFZZ	15434	3906610	...PLATE, IDENTIFICATIO	1
19	XDFZZ	15434	3910411	...HOUSING, GEAR	1

END OF FIGURE

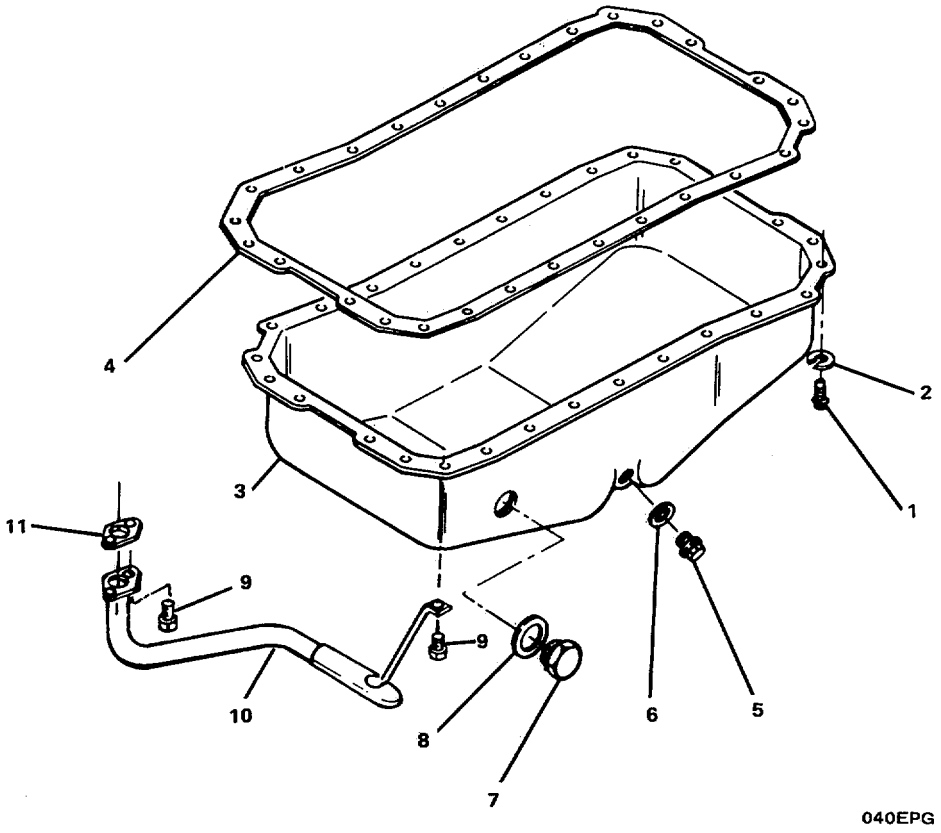

FIGURE 113. Oil Pan Group.

(1) ITEM NO	(2) SMR CODE	(3) FSCM	(4) PART NUMBER	(5) DESCRIPTION AND USABLE ON CODES(UOC)	(6) QTY
				GROUP 04 EMERGENCY GENERATOR SET	
				FIG. 113 OIL PAN GROUP	
	XCFFF	15434	07.01-04	..... OIL PAN GROUP	1
1	XDFZZ	15434	3907860	..... SCREW, CAP, HEXAGON H	28
2	XDFZZ	15434	3907537	..... WASHER, LOCK	28
3	XDFZZ	15434	3907570	..... PAN, OIL	1
4	PAFZZ	15434	3911535	..... GASKET (OIL PAN)	1
5	XDFZZ	15434	3900215	..... PLUG, MACHINE THREAD	1
6	XDFZZ	15434	3900216	..... WASHER, FLAT	1
7	XDFZZ	15434	3904386	..... PLUG, MACHINE THREAD	1
8	XDFZZ	15434	3902425	..... WASHER, FLAT	1
9	XDFZZ	15434	3900629	..... BOLT, MACHINE	3
10	XDFZZ	15434	3905223	..... TUBE AND FITTINGS	1
11	PAFZZ	15434	3905468	..... GASKET (FLANGE)	1

END OF FIGURE

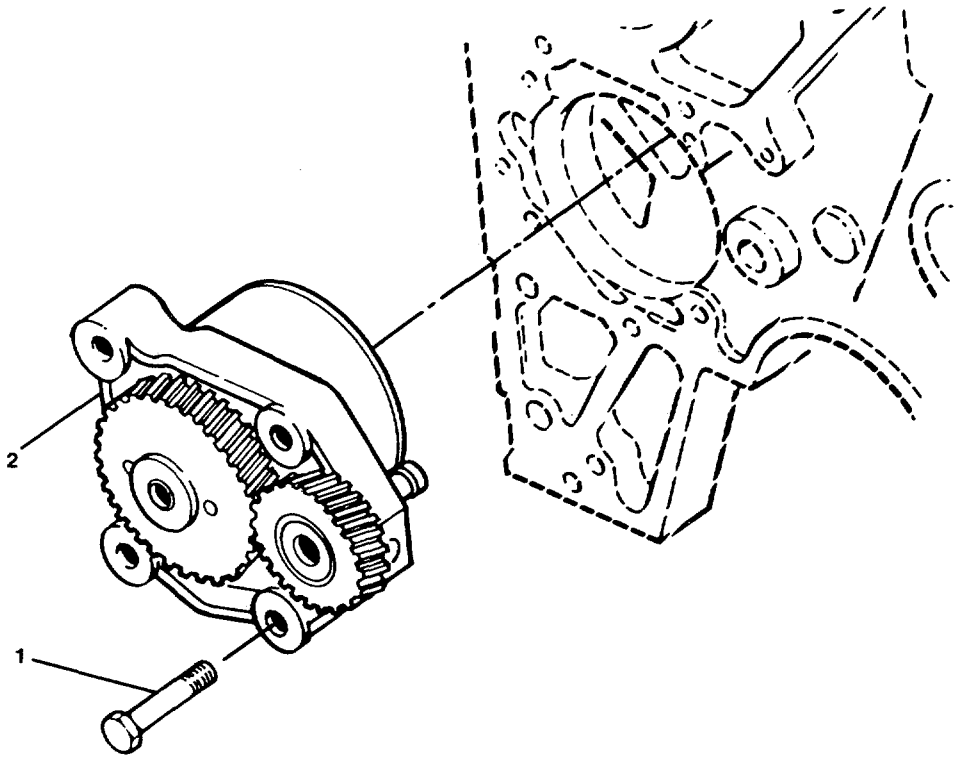

041EPG

FIGURE 114. Lubricating Oil Pump Group.

(1) ITEM NO	(2) SMR CODE	(3) FSCM	(4) PART NUMBER	(5) DESCRIPTION AND USABLE ON CODES(UOC)	(6) QTY
				GROUP 04 EMERGENCY GENERATOR SET	
				FIG. 114 LUBRICATING OIL PUMP GROUP	
	XCFFF	15434	07.06-04	..... LUBE OIL PUMP GROUP	1
1	XDFZZ	15434	3900677	..... SCREW, CAP, HEXAGON H.....	4
2	PBFZZ	15434	3906413	..... OIL PUMP ASSEMBLY, E	1

END OF FIGURE

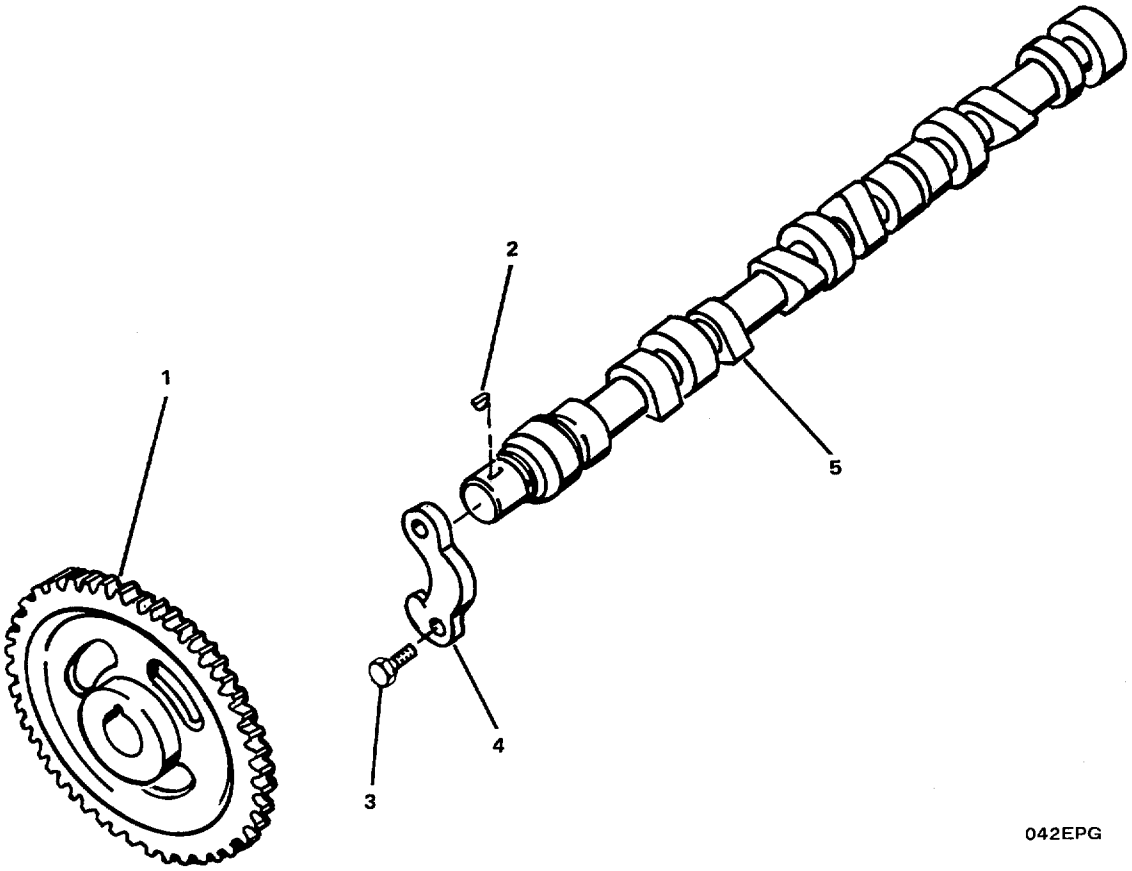

FIGURE 115. Camshaft and Gear Group.

(1) ITEM NO	(2) SMR CODE	(3) FSCM	(4) PART NUMBER	(5) DESCRIPTION AND USABLE ON CODES(UOC)	(6) QTY
				GROUP 04 EMERGENCY GENERATOR SET	
				FIG. 115 CAMSHAFT AND GEAR GROUP	
	XCFHH	15434	01.07-04	..... CAMSHAFT GEAR GROUP	1
1	PBHZZ	15434	3907431	..... GEAR, SPUR	1
2	XDHZZ	15434	3902332	..... KEY, WOODRUFF	1
3	XDHZZ	15434	3900620	..... SCREWPCAP, HEXAGON H	2
4	XDHZZ	15434	3901761	..... SUPPORT, CAMSHAFT TH	1
5	PBHZZ	15434	3907446	..... CAMSHAFT, ENGINE	1

END OF FIGURE

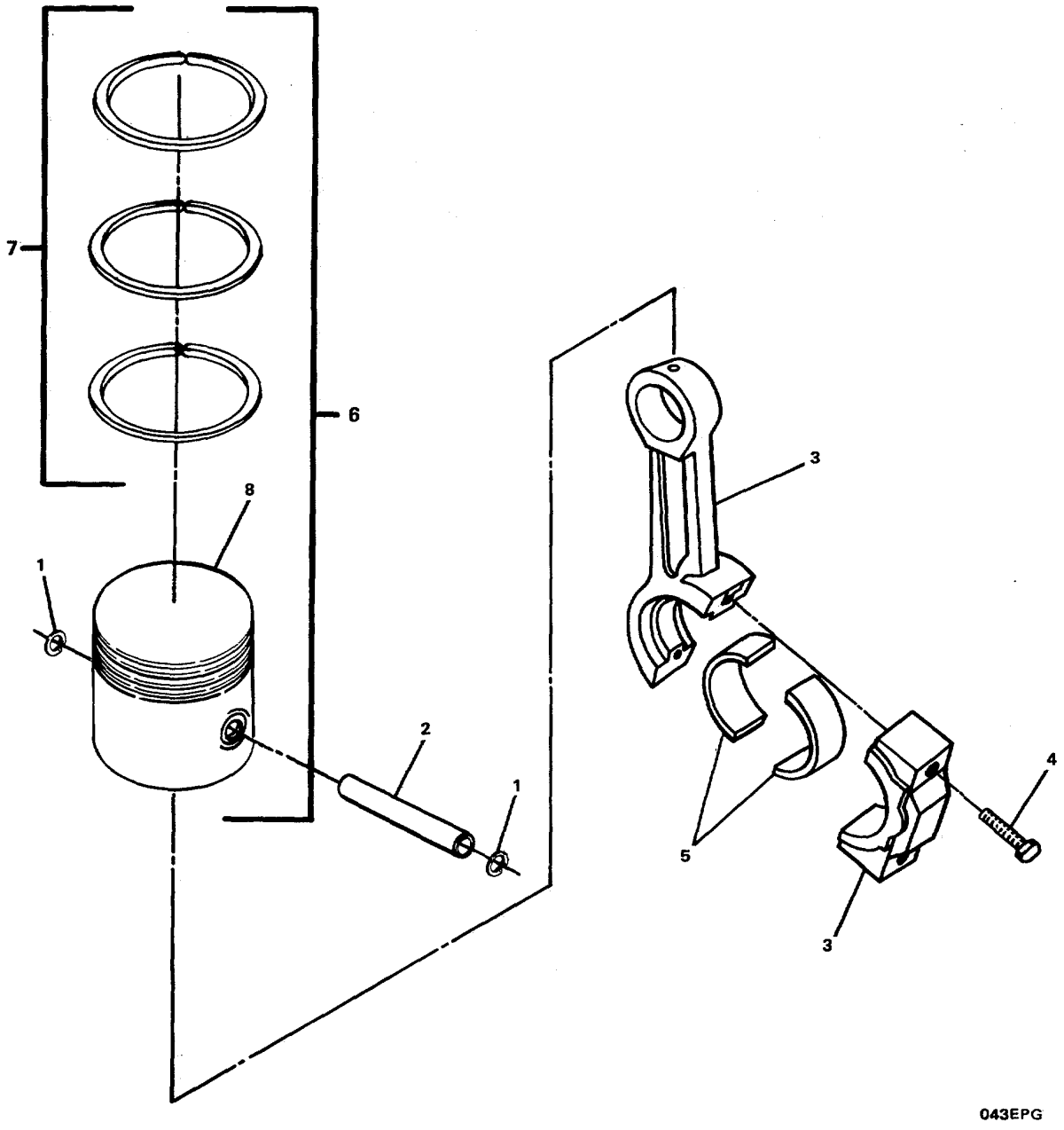

FIGURE 116. Connecting Rod and Piston Group.

(1) ITEM NO	(2) SMR CODE	(3) FSCM	(4) PART NUMBER	(5) DESCRIPTION AND USABLE ON CODES(UOC)	(6) QTY
				GROUP 04 EMERGENCY GENERATOR SET	
				FIG. 116 CONNECTING ROD AND PISTON	
	XCFHH	15434	01.04-04	..... CONNECTING ROD AND	1
1	PBHZZ	15434	3901706	..... RING, RETAINING	16
2	PBHZZ	15434	3901793	..... PIN, PISTON	4
3	PBHZH	15434	3901569	..... ROD, ENGINE CONNECTI	4
4	PBHZZ	15434	3900919	..... SCREW	8
5	PBHZZ	15434	3901170	..... BEARING, SLEEVE	8
6	PBHZZ	15434	3802100	..... ENGINE PISTON ASSEM	4
7	PAHZZ	15434	3802050	..... RING SET, PISTON	4
8	XDHZZ	15434	3907156	..... PISTON, ENGINE	4

END OF FIGURE

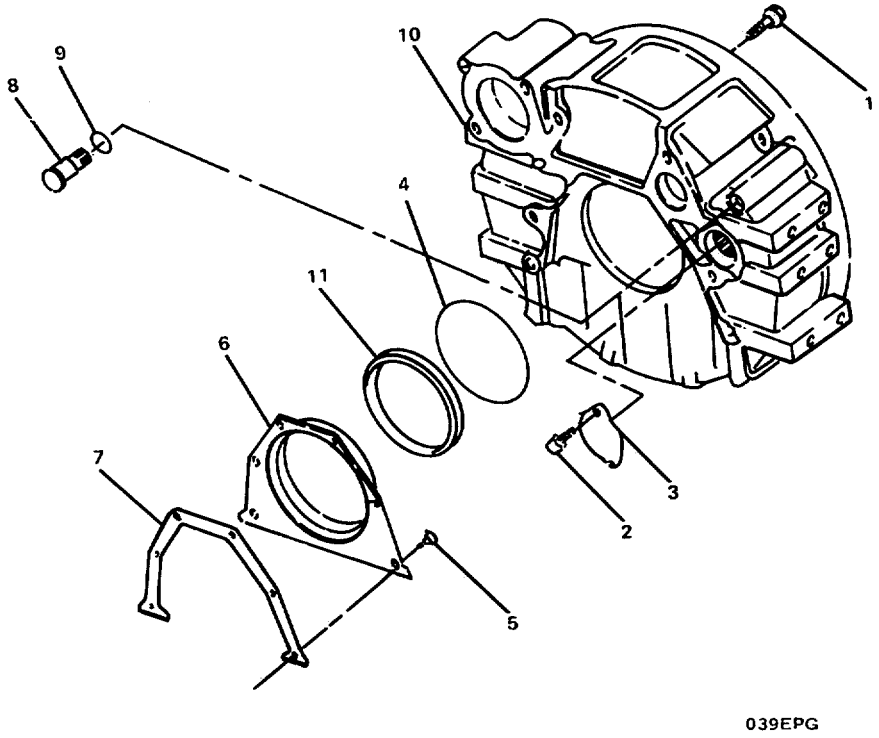

FIGURE 117. Flywheel Housing Group.

(1) ITEM NO	(2) SMR CODE	(3) FSCM	(4) PART NUMBER	(5) DESCRIPTION AND USABLE ON CODES(UOC)	(6) QTY
				GROUP 04 EMERGENCY GENERATOR SET	
				FIG. 117 FLYWHEEL HOUSING GROUP	
	XCFHH	15434	16.01-04	..... FLYWHEEL HOUSING GR	1
1	XDHZZ	15434	3910540	..... SCREW, CAP, HEXAGON H.....	8
2	XDHZZ	15434	3912072	..... SCREW, CAP, HEXAGON H.....	2
3	XDHZZ	15434	3908095	..... PLATE, COVER.....	1
4	PAHZZ	15434	3912473	..... PACKING, PREFORMED	1
5	XDHZZ	15434	3900627	..... SCREW, CAP, HEXAGON H.....	6
6	XDHZZ	15434	3906526	..... COVER, TIMING GEAR	, I1
7	PAHZZ	15434	3901019	..... GASKET	1
8	XDHZZ	15434	3910248	..... PLUG, PIPE.....	1
9	PAHZZ	15434	3910260	..... PACKING, PREFORMED	1
10	XDHZZ	15434	3903282	..... HOUSING, FLYWHEEL.....	1
11	PAHZZ	15434	3909410	..... SEAL	1

END OF FIGURE

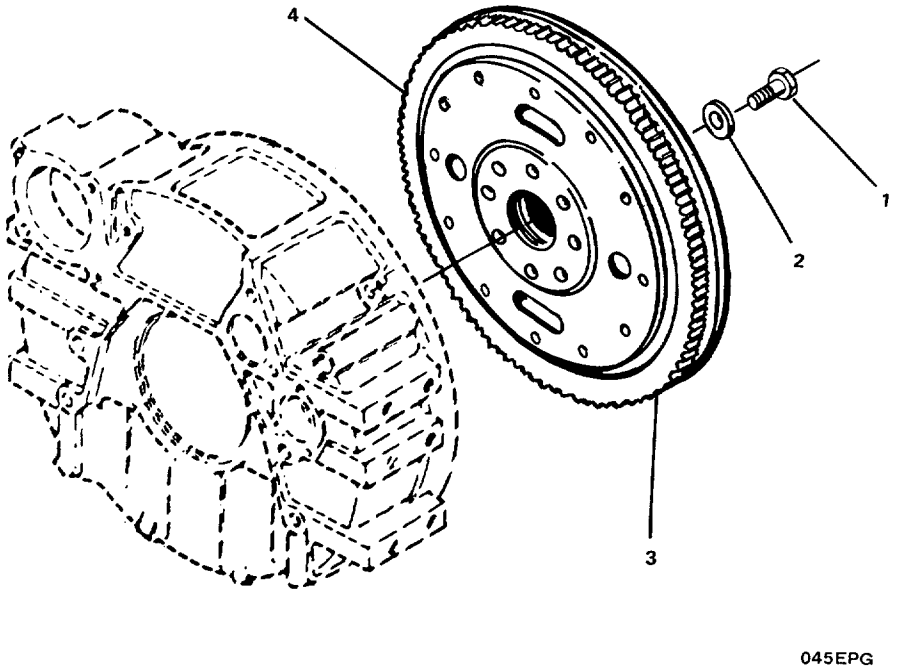

FIGURE 118. Flywheel Group.

(1) ITEM NO	(2) SMR CODE	(3) FSCM	(4) PART NUMBER	(5) DESCRIPTION AND USABLE ON CODES(UOC)	(6) QTY
				GROUP 04 EMERGENCY GENERATOR SET	
				FIG. 118 FLYWHEEL GROUP	
	XCFHH	15434	16.02-04	..... FLYWHEEL GROUP	1
1	XDFZZ	15434	3901395	..... SCREW, CAP, HEXAGON H.....	8
2	XDFZZ	15434	3900269	..... WASHER, FLAT	8
3	PBFHH	15434	3905831	..... FLYWHEEL, ENGINE.....	1
4	PBHZZ	15434	3901774	..... GEAR, INTERNAL	1

END OF FIGURE

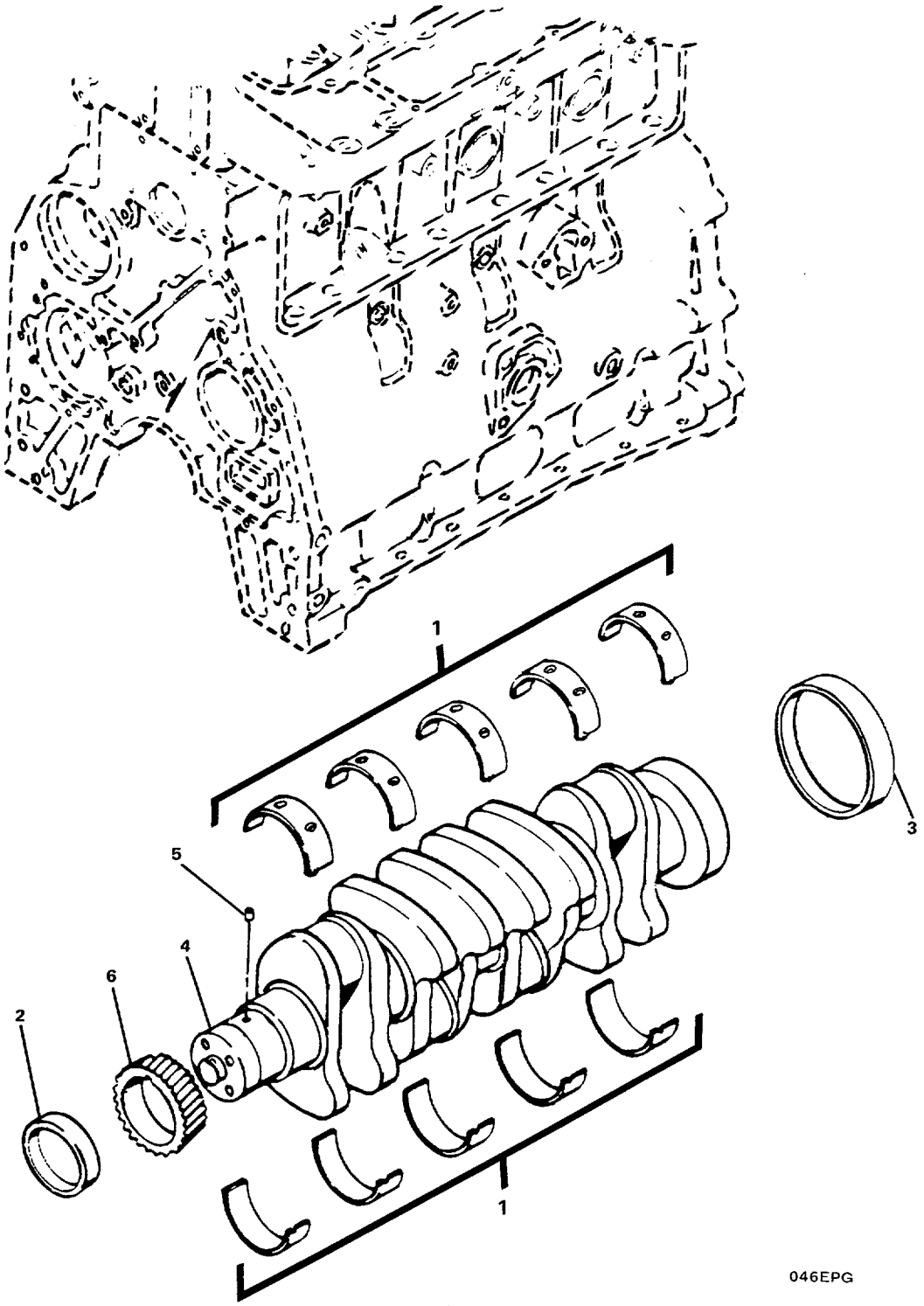

FIGURE 119. Crankshaft and Main Bearing Group.

(1) ITEM NO	(2) SMR CODE	(3) FSCM	(4) PART NUMBER	(5) DESCRIPTION AND USABLE ON CODES(UOC)	(6) QTY
				GROUP 04 EMERGENCY GENERATOR SET	
				FIG. 119 CRANKSHAFT AND MAIN BEARING GROUP	
	XCHHH	15434	01.02-04	..... CRANKSHAFT AND MAIN	1
1	PBHZZ	15434	3802010	..... BEARING HALF SET, SL	1
2	XDHZZ	15434	3906080	..... BEARING, SLEEVE	1
3	XDHZZ	15434	3906081	..... BEARING, SLEEVE.....	1
4	PBHHZ	15434	3908031	..... CRANKSHAFT, ENGINE.....	1
5	XDHZZ	15434	3904483	..... PIN, STRAIGHT, HEADLE.....	1
6	XDHZZ	15434	3901258	..... GEAR, SPUR	1

END OF FIGURE

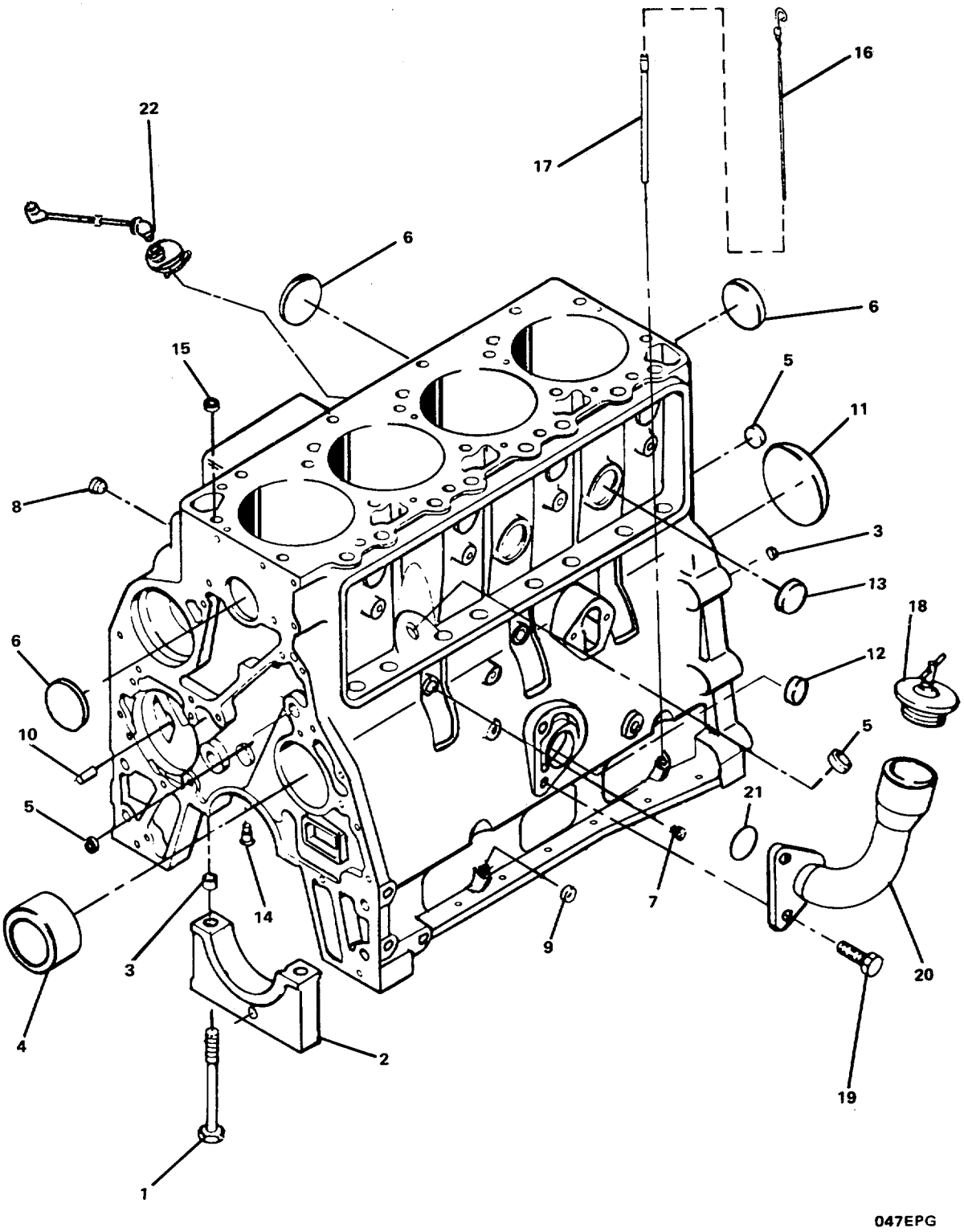

FIGURE 120. Cylinder Block Group.

(1) ITEM NO	(2) SMR CODE	(3) FSCM	(4) PART NUMBER	(5) DESCRIPTION AND USABLE ON CODES(UOC)	(6) QTY
				GROUP 04 EMERGENCY GENERATOR SET	
				FIG. 120 CYLINDER BLOCK GROUP	
	XCFHH	15434	04.01/07.02/07.02.01-04	.....CYLINDER BLOCK GROU	1
1	XDHZZ	15434	3904217	.....SCREW, CAP, HEXAGON H.....	10
2	XAHZZ	15434	3900967	.....CAP, MAIN BEARING	5
3	PBHZZ	15434	3900068	.....PIN, STRAIGHT, HEADLE PART OF KIT P/N 3904991.....	1
4	PBHZZ	15434	3901306	.....CAMBEARING.....	1
5	XDHZZ	15434	3900956	.....PLUG, EXPANSION	3
6	XDHZZ	15434	3900965	.....PLUG, EXPANSION	4
7	XDHZZ	15434	3906619	.....PLUG, PIPE.....	2
8	XDHZZ	15434	3008468	.....PLUG, PIPE.....	1
9	XDHZZ	15434	3900955	.....PLUG, EXPANSION PART OF KIT P/N 3904991.....	1
10	XDHZZ	15434	3900257	.....PIN, STRAIGHT, HEADLE PART OF KIT P/N 3904991.....	2
11	XDHZZ	15434	3900687	.....PLUG, EXPANSION PART OF KIT P/N 3904991.....	1
12	XDHZZ	15434	3900958	.....PLUG, EXPANSION PART OF KIT P/N 3904991	1
13	XDHZZ	15434	007635	.....PLUG, EXPA NSION	2
14	PBHZZ	15434	3901020	.....NOZZLE, LUBE	4
15	XDHZZ	15434	3902343	.....PIN, STRAIGHT, HEADLE PART OF KIT P/N 3904991.....	2
16	XDCZZ	15434	3904294	.....GAGE ROD, LIQUID LEV	1
17	XDHZZ	15434	3905425	.....TUBE, LIQUID LEVEL G	1
18	XDCZZ	15434	101322	.....CAP, FILLER OPENING	1
19	XDCZZ	15434	3901249	.....SCREW, CAP, HEXAGON H.....	2
20	XDHZZ	15434	3905440	.....FILLER NECK.....	1
21	PBHZZ	15434	3906704	.....PACKING, PREFORMED	1
22	PBHZZ	44940	333-0293	.....HEATER, COOLANT.....	1
	PAHZZ	15434	3802016	.....GASKET SET (NEEDED FOR COMPLETE REPAIR OF EMERGENCY GENERATOR ENGINE).....	1
	PAHZZ	15434	3802019	.....GASKET AND SEAL SET (NEEDED FOR COMPLETE REPAIR OF EMERGENCY GENERATOR ENGINE).....	1
	PAHZZ	15434	3904991	.....PARTS KIT, DIESEL EN (NEEDED FOR COMPLETE REPAIR OF CYLINDER BLOCK)..	1
				PIN, STRAIGHT, HEADLE(1) 120-3	
				PIN, STRAIGHT, HEADLE(2) 120-10	
				PIN, STRAIGHT, HEADLE(2) 120-15	
				PLUG, EXPANSION (1) 120-9	
				PLUG, EXPANSION (1) 120-11	
				PLUG, EXPANSION (1) 120-12	
				PLUG, PIPE (2) 94-4	
				PLUG, PIPE (1) 106-6	

END OF FIGURE

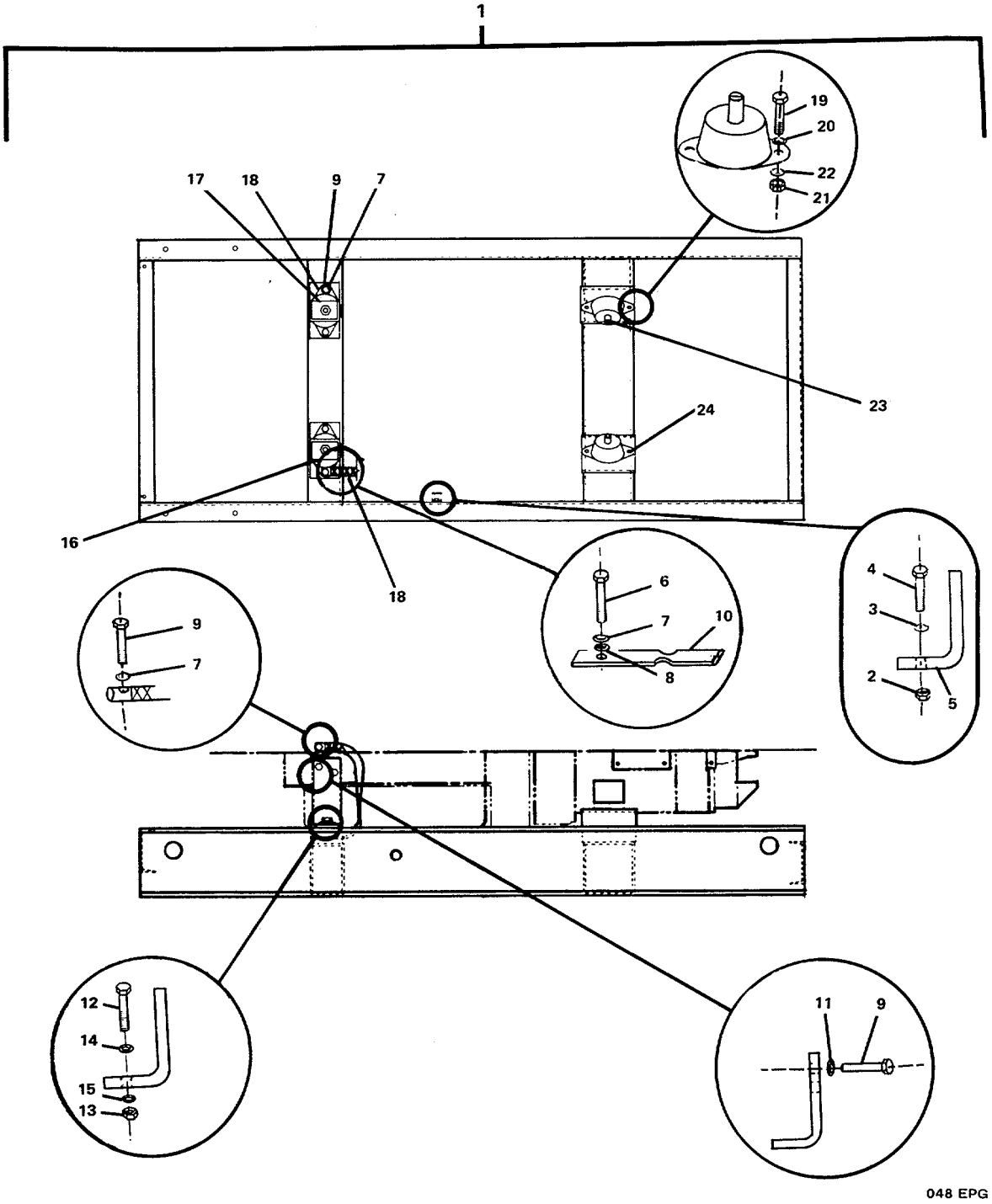

FIGURE 121. Chassis Assembly.

GROUP 04 EMERGENCY GENERATOR SET

FIG. 121 CHASIS ASSEMBLY

(1) ITEM NO	(2) SMR CODE	(3) FSCM	(4) PART NUMBER	(5) DESCRIPTION AND USABLE ON CODES(UOC)	(6) QTY
1	XDFFF	44940	403-2632	CHASSIS ASSEMBLY	1
2	XDFZZ	44940	870-0257	NUT, PLAIN, HEXAGON	1
3	XDFZZ	44940	856-0008	WASHER, LOCK	1
4	XDFZZ	44940	800-0026	SCREW, CAP, HEXAGON H	1
5	XDFZZ	44940	332-1473	LUG, SOLDERLESS	1
6	XDFZZ	44940	800-0090	SCREW, CAP, HEXAGON H	1
7	XDFZZ	44940	856-0013	WASHER, LOCK	3
8	XDFZZ	44940	526-0219	WASHER, FLAT	1
9	XDFZZ	44940	800-2111	SCREW, CAP, HEXAGON H	3
10	XDFZZ	44940	337-0090	STRAP, ELECTRICAL	1
11	XDFZZ	44940	850-0060	WASHER, LOCK	2
12	XDFZZ	44940	800-0153	SCREW, CAP, HEXAGON H	2
13	XDFZZ	44940	862-0008	NUT, PLAIN, HEXAGON	2
14	XDFZZ	44940	850-0079	WASHER, LOCK	2
15	XDFZZ	44940	526-0238	WASHER, FLAT	2
16	XDFZZ	44940	403-2631-01	BRACKET, MOUNTING	1
17	XDFZZ	44940	403-2631-02	BRACKET, MOUNTING	1
18	XDFZZ	44940	402-0030	MOUNT, RESILIENT	2
19	XDFZZ	44940	800-0071	SCREW, CAP, HEXAGON H	4
20	XDFZZ	44940	850-0055	WASHER, LOCK	4
21	XDFZZ	44940	862-0004	NUT, PLAIN, HEXAGON	4
22	XDFZZ	44940	526-0219	WASHER, FLAT	4
23	XDFZZ	44940	800-0520	SCREW, CAP, HEXAGON H	2
24	XDFZZ	44940	402-0568	MOUNT, RESILIENT	2

END OF FIGURE

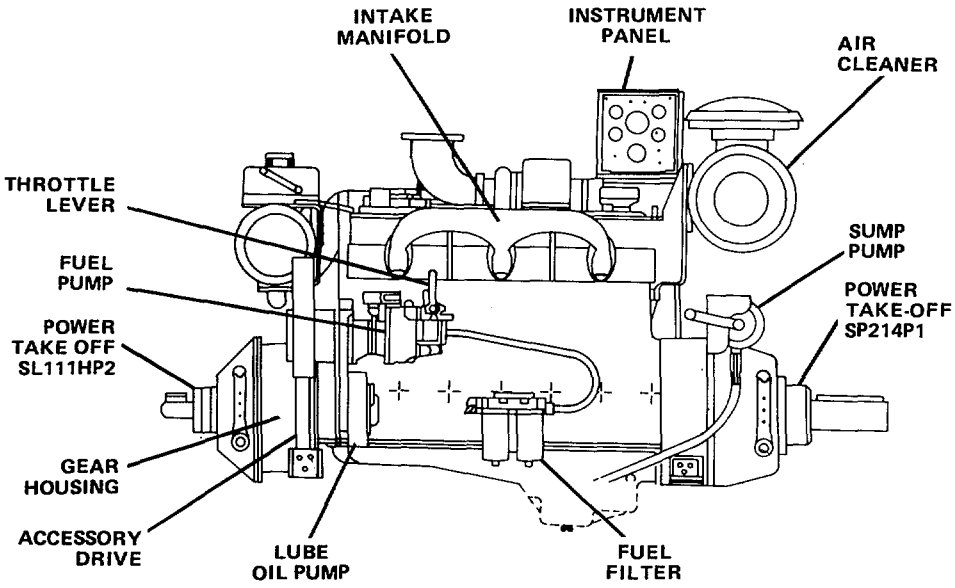

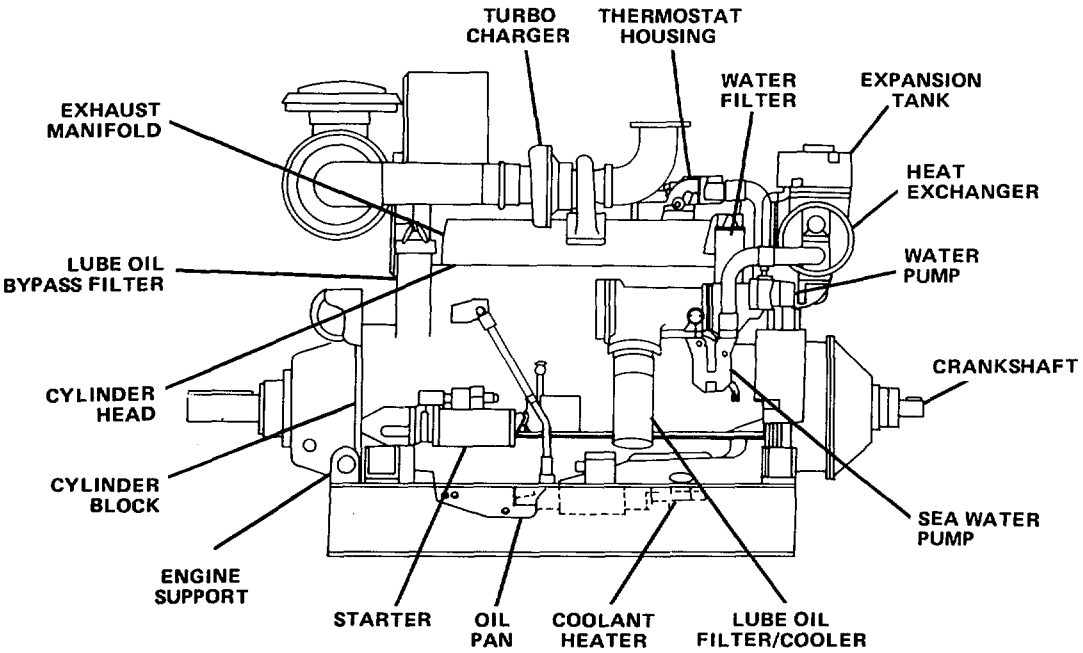

FIGURE 122. Bow Thruster Engine (Sheet 1 of 2).

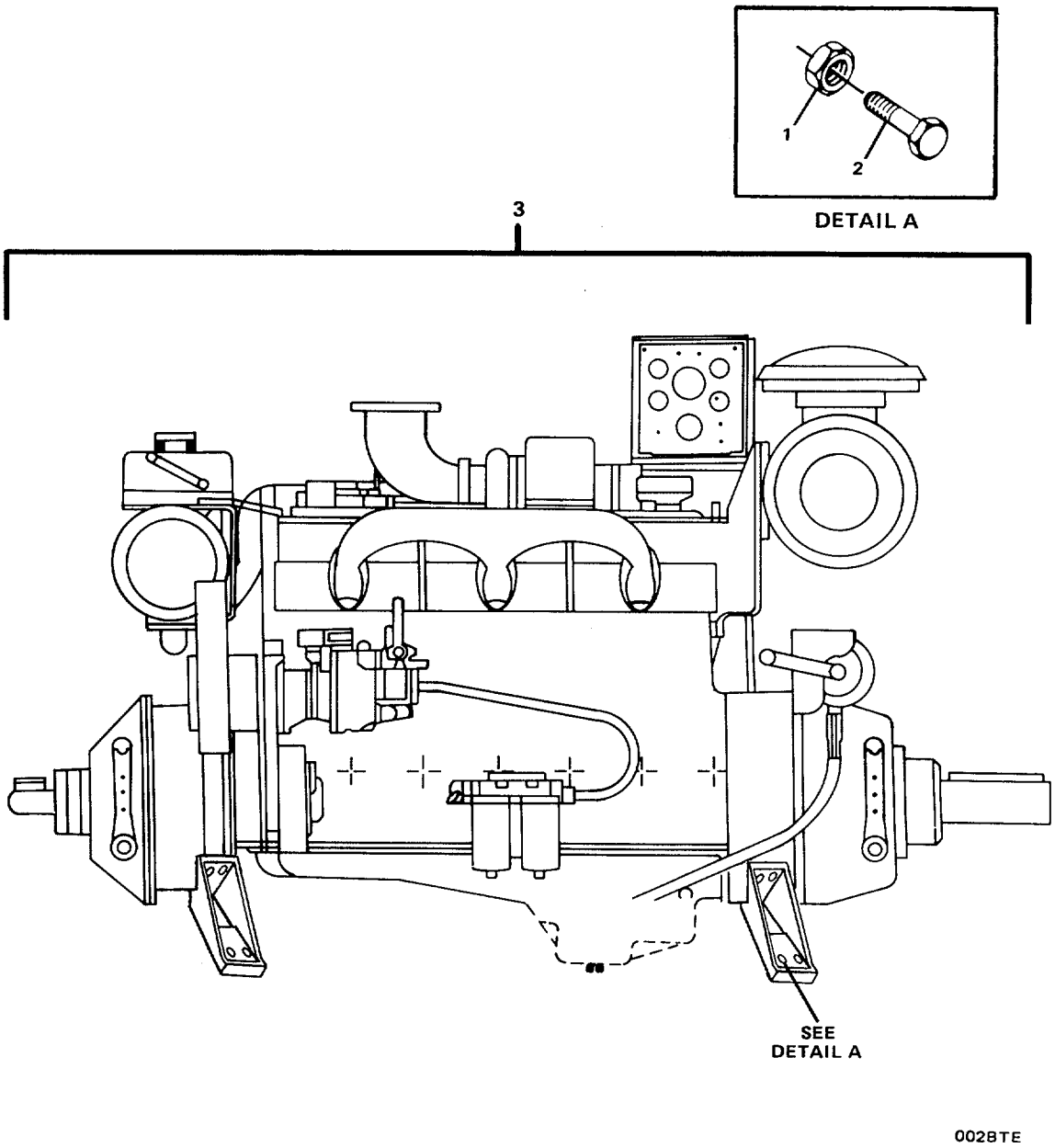

FIGURE 122. Bow Thruster Engine (Sheet 2 of 2)

(1) ITEM NO	(2) SMR CODE	(3) FSCM	(4) PART NUMBER	(5) DESCRIPTION AND USABLE ON CODES(UOC)	(6) QTY
				GROUP 05 BOW THRUSTER ENGINE	
				FIG. 122 BOW THRUSTER ENGINE	
1	XDFZZ	77408	D0-6800-8047	NUT, SELF-LOCKING, HE.....	8
2	XDFZZ	77408	D0-6150-1707	BOLT, MACHINE	8
3	PBFHH	15434	S.O.56421-NT855M	ENGINE, DIESEL.....	1

END OF FIGURE

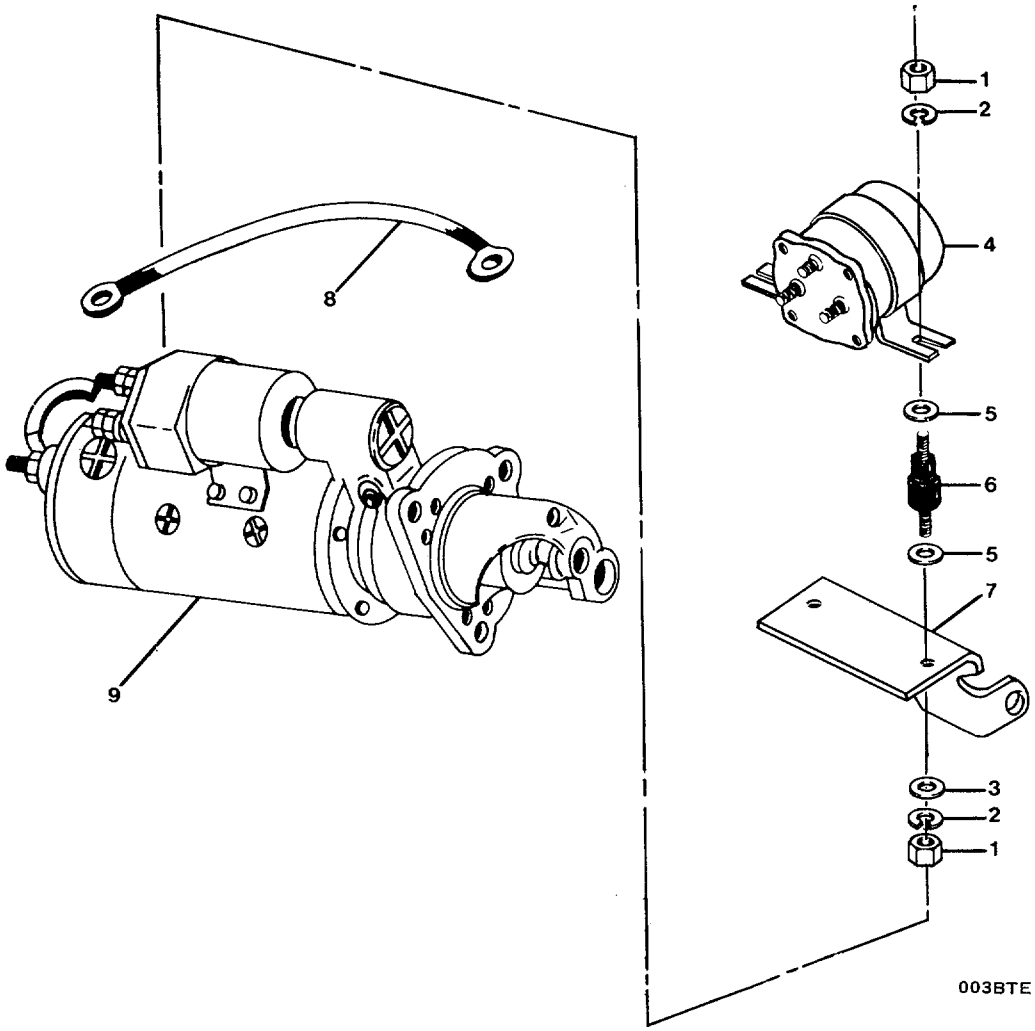

FIGURE 123. Starting Motor/Magnetic Switch Group.

(1) ITEM NO	(2) SMR CODE	(3) FSCM	(4) PART NUMBER	(5) DESCRIPTION AND USABLE ON CODES(UOC)	(6) QTY
				GROUP 05 BOW THRUSTER ENGINE	
				FIG. 123 STARTING MOTOR/MAGNETIC SWITCH GROUP	
	XCCOO	15434	13.05/15.05-05	..... STARTING MOTOR/MAGN	1
1	XDCZZ	15434	S-224	..... NUT, PLAIN, HEXAGON	4
2	XDCZZ	96906	MS122032	..... WASHER, LOCK	4
3	XDCZZ	15434	S-631	..... WASHER, FLAT	2
4	PACZZ	15434	3050692	..... SWITCH, SOLID STATE	1
5	XDCZZ	15434	70709	..... WASHER, FLAT	4
6	XDCZZ	15434	204493	..... ISOLATOR, VIBRATION	2
7	XDCZZ	15434	3050694	..... BRACKET, MAGNETIC SW	1
8	XDCZZ	15434	3018924	..... LEAD, ELECTRICAL	1
9	PACZZ	15434	3021036	..... STARTER, ENGINE, ELEC	1

END OF FIGURE

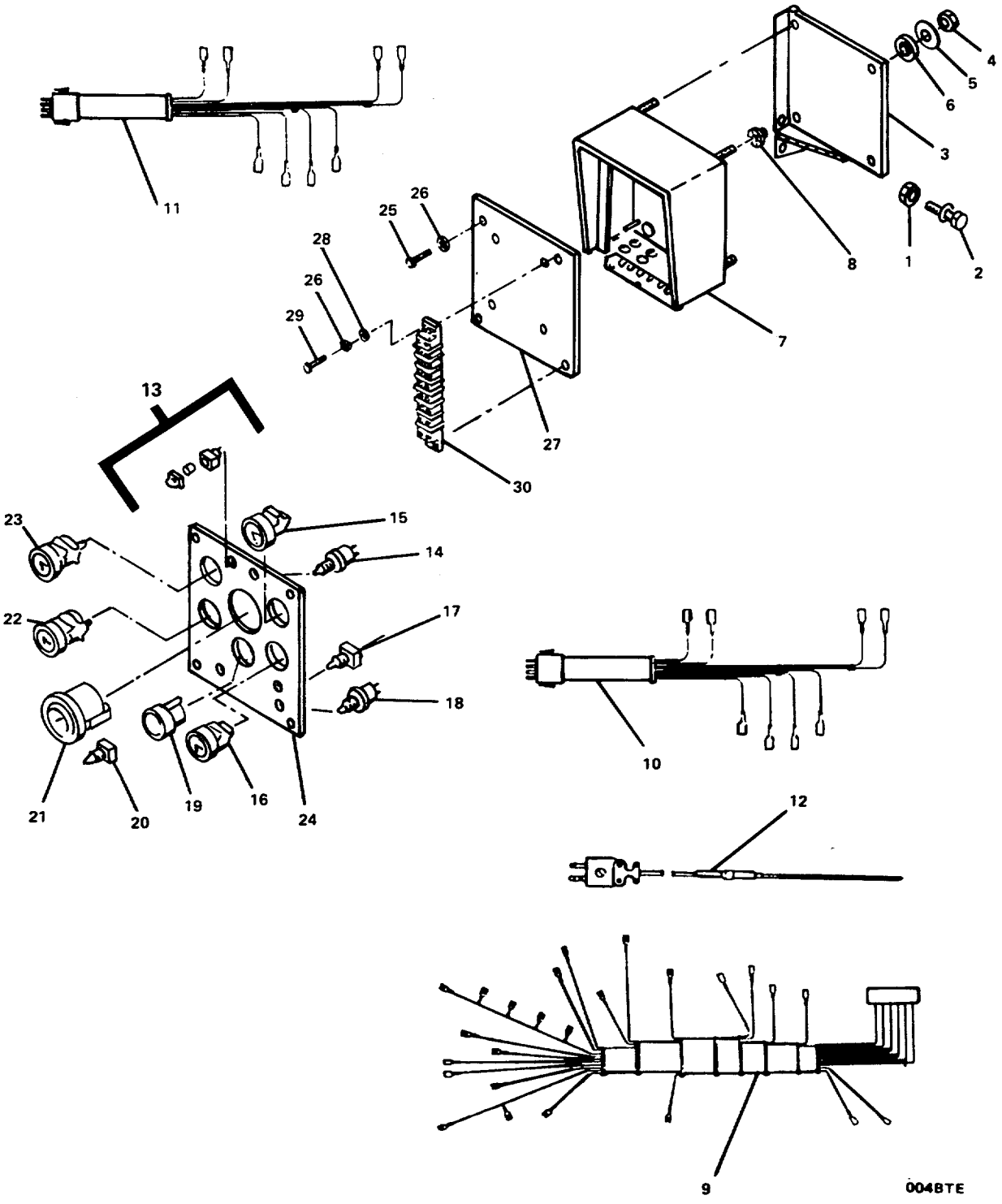

FIGURE 124. Instrument Panel Group.

GROUP 05 BOW THRUSTER ENGINE

FIG. 124 INSTRUMENT PANEL GROUP

(1) ITEM NO	(2) SMR CODE	(3) FSCM	(4) PART NUMBER	(5) DESCRIPTION AND USABLE ON CODES(UOC)	(6) QTY
	XCOOO	15434	15.08-05	INSTRUMENT PANEL GR	1
1	XDOZZ	15434	S-223	NUT, PLAIN, HEXAGON	4
2	XDOZZ	15434	3012471	SCREW	4
3	XDOZZ	15434	3035796	BRACKET, INSTRUMENT	1
4	XDOZZ	15434	3175239	NUT	4
5	XDOZZ	15434	3033800	WASHER, FLAT	4
6	XDOZZ	15434	3035083	MOUNT, RESILIENT	4
7	XDOZZ	15434	3034162	CABINET, INSTRUMENT	1
8	XDOZZ	15434	3035084	MOUNT, RESILIENT	4
9	PAOZZ	15434	3035720	WIRING HARNESS	1
10	PBOZZ	15434	3035719	WIRING HARNESS	1
11	PBOZZ	15434	3035718	WIRING HARNESS	1
12	PAOZZ	15434	3036575	THERMOCOUPLE, HEATIN	1
13	PAOZZ	15434	3022279	LIGHT, INDICATOR	1
14	PBOZZ	15434	3034953	CIRCUIT BREAKER	1
15	PAOZZ	15434	3034985	SWITCH, PRESSURE	1
16	PAOZZ	15434	3015235	VOLTMETER	1
17	PAOZZ	15434	3035150	SWITCH, PUSH	1
18	PAOZZ	96906	MS35058-23	SWITCH, TOGGLE	1
19	PAOZZ	15434	3036576	PYROMETER, I ND ICATIN	1
20	PAOZZ	96906	MS35058-22	SWITCH, TOGGLE	1
21	PAOZZ	15434	3049555	TACHOMETER, ELECTRIC	1
22	PAOZZ	15434	3010649	SWITCH, PRESSURE	1
23	PAOZZ	15434	3010647	SWITCH, PRESSURE	1
24	XDOZZ	15434	3031702	PANEL, INSTRUMENT	1
25	XDOZZ	15434	127814	SCREW, CAP, HEXAGON	4
26	XDOZZ	15434	70262	WASHER, LOCK	8
27	XDOZZ	15434	3031707	PANEL, BLANK	1
28	XDOZZ	15434	117102	NUT, PLAIN, HEXAGON	4
29	XDOZZ	15434	70310	SCREW, MACHINE	4
30	XDOZZ	15434	3036306	BLOCK, TERMINAL	1

END OF FIGURE

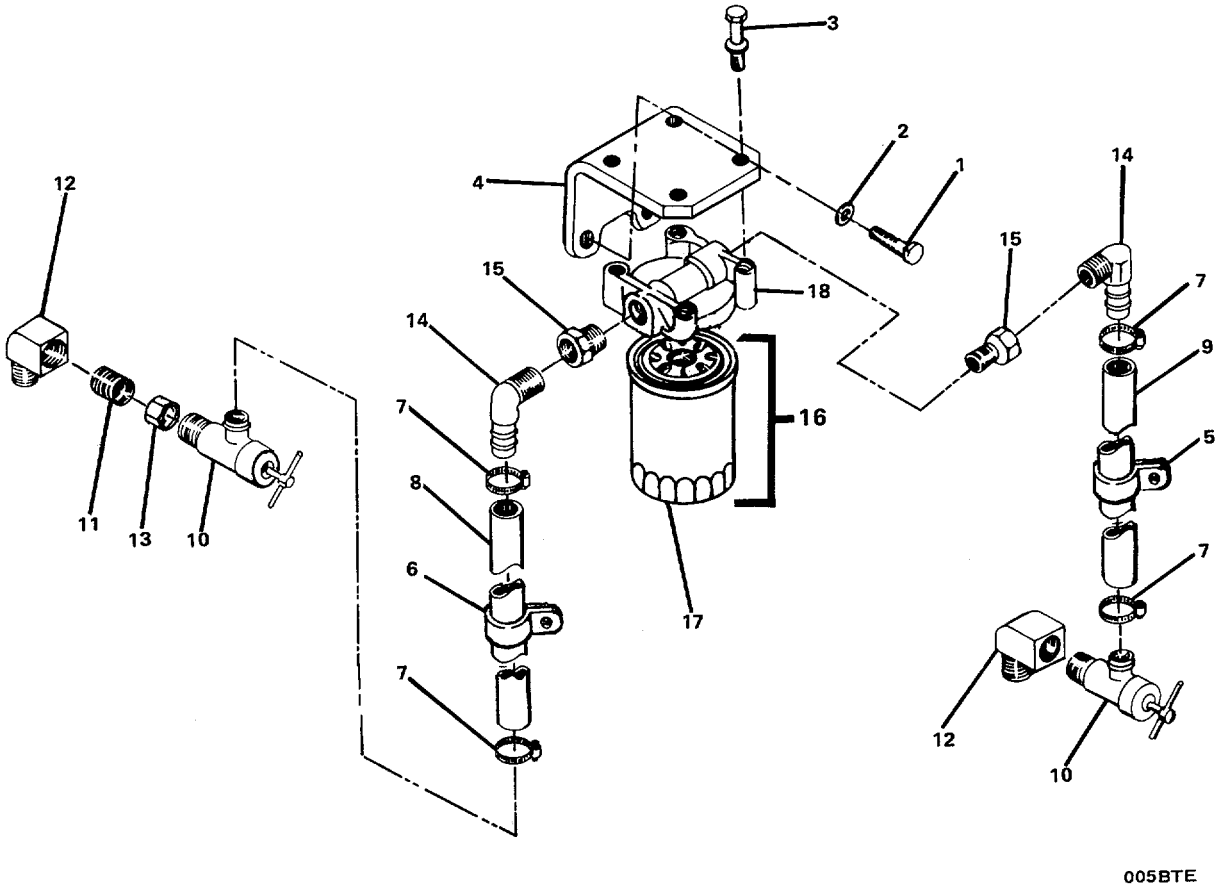

FIGURE 125. Water Filter Group.

GROUP 05 BOW THRUSTER ENGINE

FIG. 125 WATER FILTER GROUPGROUP

(1) ITEM NO	(2) SMR CODE	(3) FSCM	(4) PART NUMBER	(5) DESCRIPTION AND USABLE ON CODES(UOC)	(6) QTY
	XCOOO	15434	08.08-05	WATER FILTER GROUP	1
1	XDOZZ	15434	190799	SCREW, CAP, HEXAGON H	2
2	XDOZZ	96906	MS35338-47	WASHER, LOCK	2
3	XDOZZ	15434	3010596	SCREW, ASSEMBLED WAS	4
4	XDOZZ	15434	3010360	BRACKET, ANGLE	1
5	XDOZZ	15434	152767	CLAMP, LOOP	2
6	XDOZZ	15434	68425	CLAMP, LOOP	1
7	XDOZZ	15434	179904	CLAMP, HOSE	4
8	PAOZZ	15434	179930	HOSE	1
9	PAOZZ	15434	179918	HOSE, NONMETALLIC	1
10	PAOZZ	15434	179901	VALVE, ANGLE	2
11	XDOZZ	15434	3048908	BUSHING, PIPE	1
12	XDOZZ	15434	70470	ELBOW, TUBE	2
13	XDOZZ	15434	S-921-D	REDUCER, PIPE	1
14	XDOZZ	15434	179903	ELBOW, PIPE TO HOSE	2
15	XDOZZ	15434	187317	COUPLING, PIPE	2
16	XDOOO	15434	3827107	WATER FILTER ASSEMB	1
17	PACZZ	15434	3318319	FILTER, FLUID	1
18	XDOZZ	15434	204163	HEAD, FLUID FILTER	1

END OF FIGURE

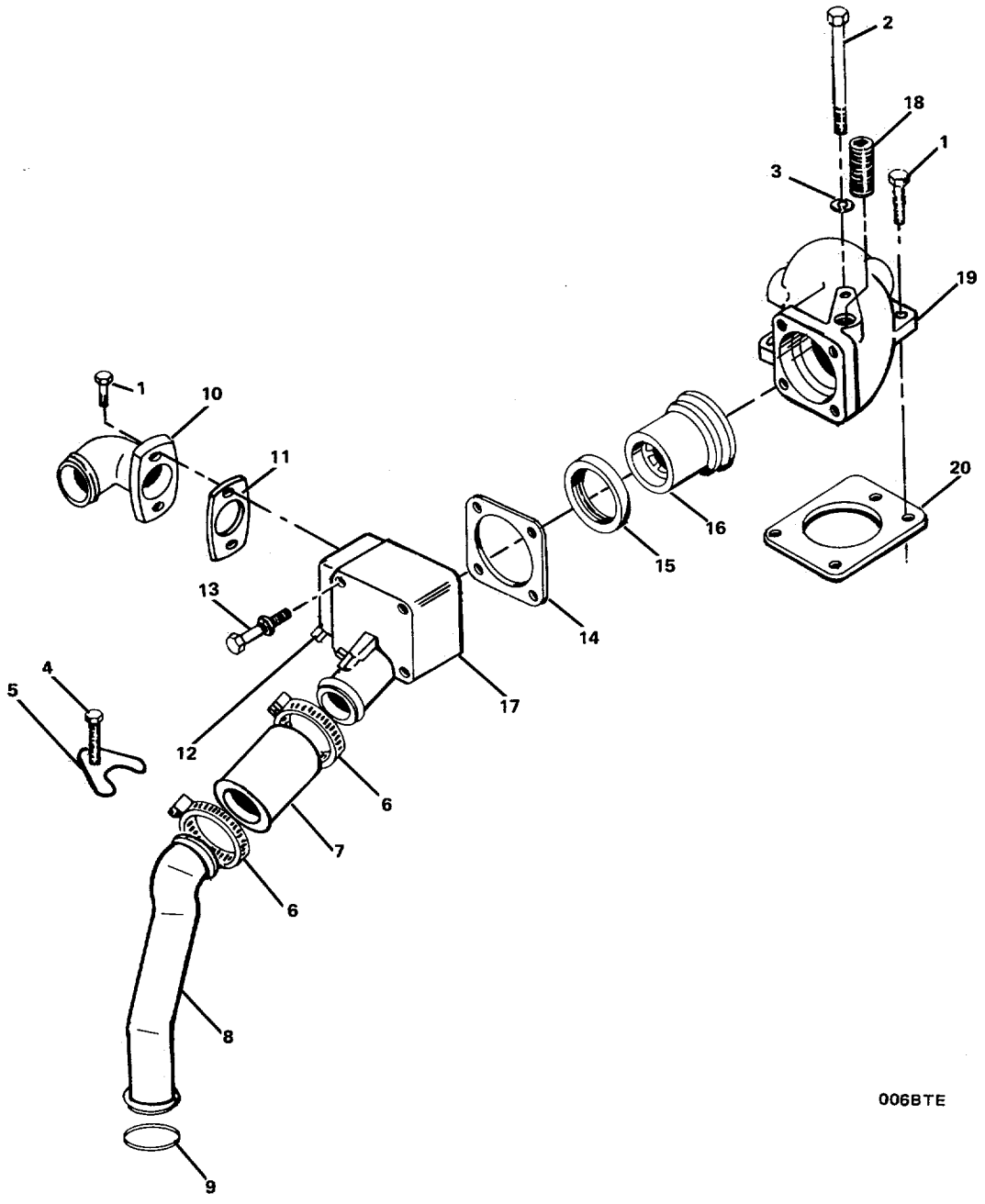

FIGURE 126. Thermostat Housing Group.

GROUP 05 BOW THRUSTER ENGINE

FIG. 126 THERMOSTAT HOUSING GROUP

(1) ITEM NO	(2) SMR CODE	(3) FSCM	(4) PART NUMBER	(5) DESCRIPTION AND USABLE ON CODES(UOC)	(6) QTY
	XCCOO	15434	08.07-05	..... THERMOSTAT HOUSING	1
1	XDCZZ	15434	3010595	..... SCREW, MACHINE	5
2	XDCZZ	15434	S-199-A	..... SCREW, CAP, HEXAGON H.....	1
3	XDCZZ	96906	MS35338-8	..... WASHER, LOCK.....	1
4	XDCZZ	15434	3022589	..... BOLT, MACHINE.....	1
5	XDCZZ	15434	214617	..... CLAMP, RIM CLENCHING	1
6	XDCZZ	96906	MS35842-13	..... CLAMP, HOSE	2
7	PACZZ	15434	3056139	..... HOSE, NONMETALLIC	1
8	XDCZZ	15434	213485	..... TUBE, BENT, METALLIC	1
9	PACZZ	15434	43463-A	..... PACKING, PREFORMED PART OF KIT P/N 3801330	1
10	XDCZZ	15434	3018764	..... CONNECTION, WATER OU	
11	PACZZ	15434	3019158	..... GASKET (WATER OUTLET CONNECTION) PART OF KIT P/N 3801330	1
12	XDCZZ	15434	3013786	..... PLUG, PIPE	1
13	XDCZZ	15434	3010597	..... SCREW	4
14	PACZZ	15434	208128	..... GASKET (THERMOSTAT HOUSING) PART OF KIT P/N 3801330.....	1
15	PACZZ	15434	186780	..... SEAL, THERMO.....	1
16	PACZZ	15434	201737	..... THERMOSTAT, FLOW CON.....	1
17	XDCZZ	15434	3021440	..... HOUSING, THERMOSTAT.....	1
18	XDCZZ	15434	S-995	..... PLUG, PIPE.....	1
19	XDCZZ	15434	3009464	..... SUPPORT, THERMOSTAT	1
20	PACZZ	15434	3009457	..... GASKET.....	1

END OF FIGURE

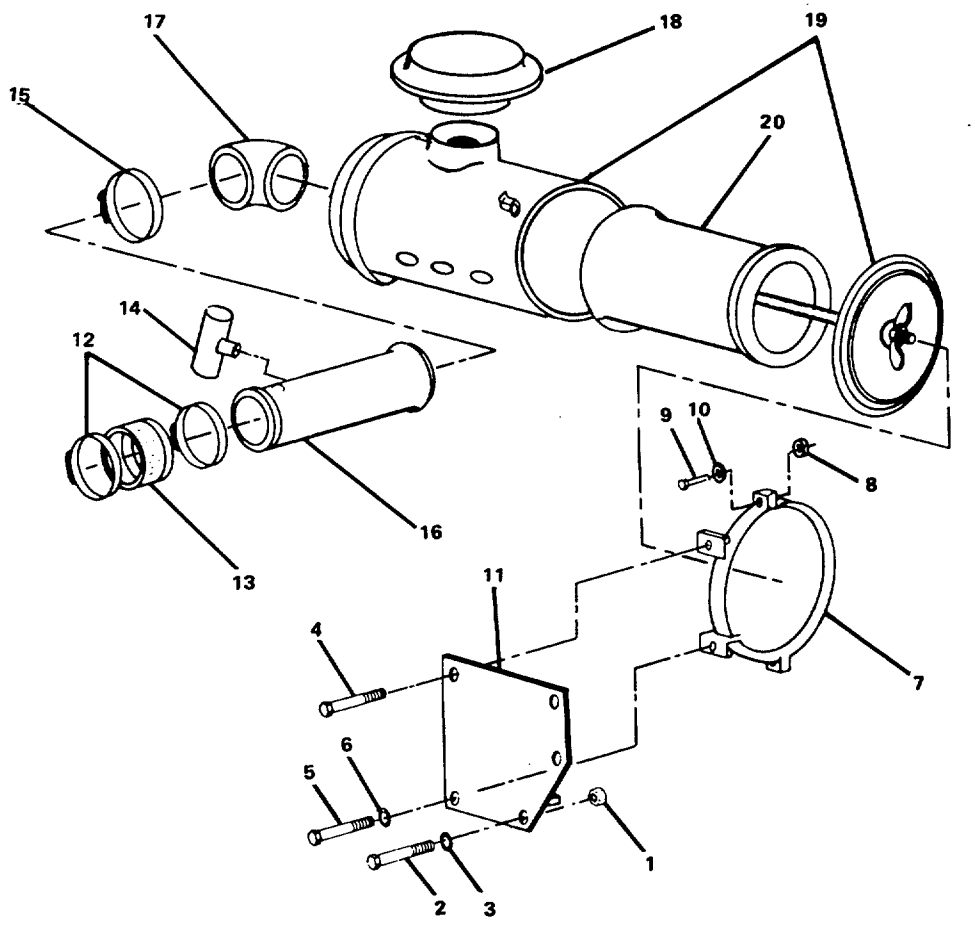

FIGURE 127. Air Cleaner Group.

GROUP 05 BOW THRUSTER ENGINE

FIG. 127 AIR CLEANER GROUP

(1) ITEM NO	(2) SMR CODE	(3) FSCM	(4) PART NUMBER	(5) DESCRIPTION AND USABLE ON CODES(UOC)	(6) QTY
	XCOOO	15434	10.04-05	AIR CLEANER GROUP	1
1	XDOZZ	15434	S-221	NUT, PLAIN, HEXAGON	2
2	XDOZZ	15434	S-111	BOLT, MACHINE	2
3	XDOZZ	15434	S-605	WASHER, LOCK	2
4	XDOZZ	15434	120516	SCREW, CAP, HEXAGON H	2
5	XDOZZ	15434	S-186-A	SCREW, CAP, HEXAGON H	2
6	XDOZZ	15434	127316	WASHER, RECESSED	2
7	XDOZZ	15434	112196	STRAP, AIR CLEANER	2
8	XDOZZ	15434	S-223	NUT, PLAIN, HEXAGON	4
9	XDOZZ	15434	S-112	SCREW, CAP, HEXAGON H	4
10	XDOZZ	96906	MS35338-8	WASHER, LOCK	4
11	XDOZZ	15434	3044632	BRACE, CORNER	1
12	XDOZZ	15434	125741	CLAMP, HOSE	2
13	PAOZZ	15434	3030790	HOSE, PREFORMED	1
14	PAOZZ	15434	178957	INDICATOR, FILTER WA	1
15	XDOZZ	15434	140313	CLAMP, HOSE	2
16	XDOZZ	15434	3000302	TUBE, METALLIC	1
17	XDOZZ	15434	3030772	ELBOW, NONMETALLIC	1
18	XDOZZ	15434	3013238	CAP WITH CLAMP	1
19	XDOOO	15434	3021645	CLEANER, AIR	1
20	PACZZ	15434	3022209	.FILTER ELEMENT, INTA	1

END OF FIGURE

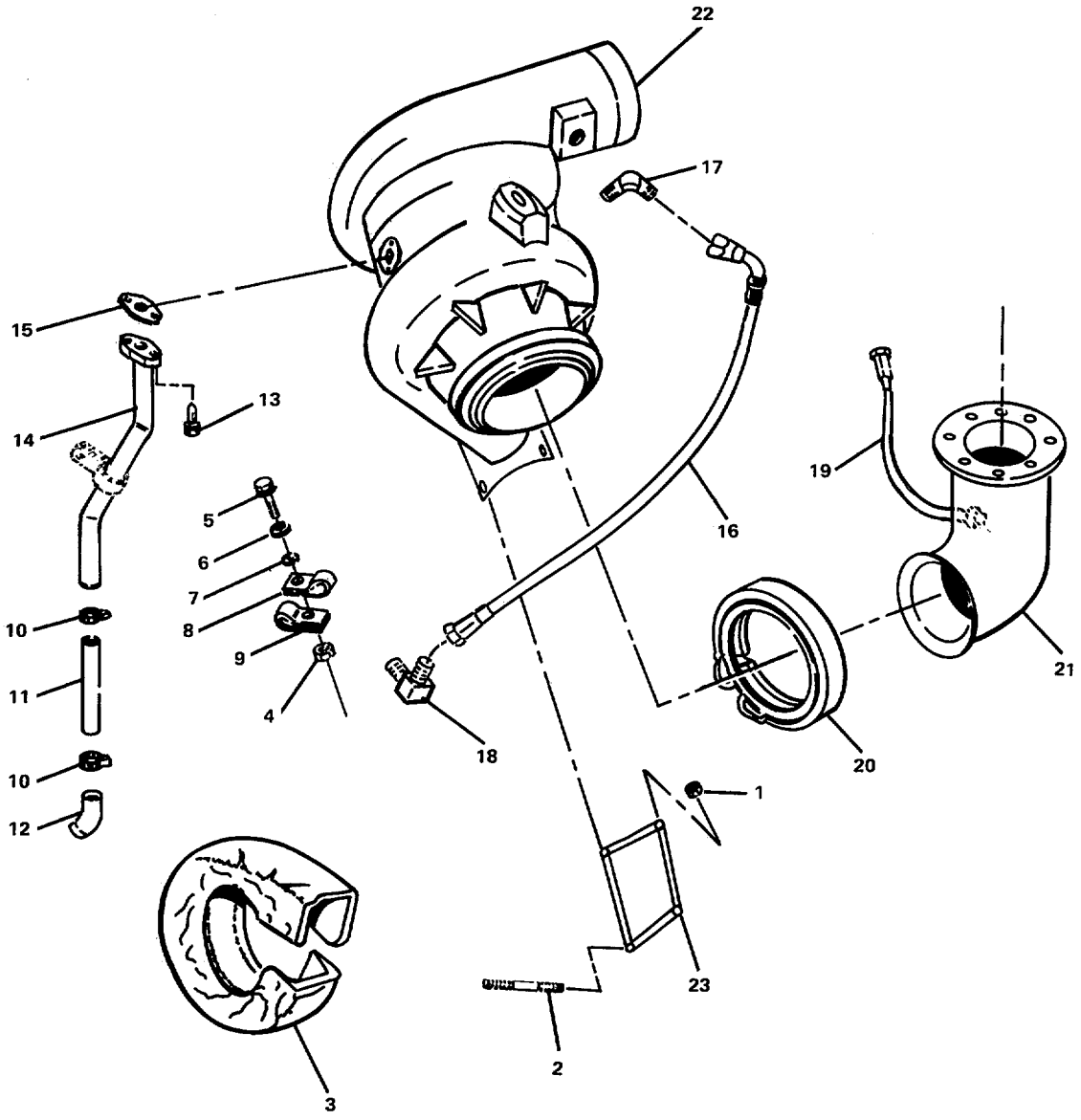

FIGURE 128. Turbocharger Group.

(1) ITEM NO	(2) SMR CODE	(3) FSCM	(4) PART NUMBER	(5) DESCRIPTION AND USABLE ON CODES(UOC)	(6) QTY
				GROUP 05 BOW THRUSTER ENGINE	
				FIG. 128 TURBOCHARGER GROUP	
	XCCOO	15434	10.06/10.06.1-05	..... TURBOCHARGER GROUP.....	1
1	XDCZZ	15434	3056158	..... NUT, SLEEVE	4
2	XDCZZ	15434	3056155	..... STUD, PLAIN	4
3	PACZZ	15434	3002138	..... COVER INSULATING TU	1
4	XDCZZ	15434	S-221	..... NUT, PLAIN, HEXAGON	1
5	XDCZZ	15434	S-107	..... SCREW, CAP, HEXAGON H.....	1
6	XDCZZ	15434	S-626	..... WASHER, FLAT	1
7	XDCZZ	15434	S-605	..... WASHER, LOCK.....	1
8	XDCZZ	15434	69465	..... CLAMP, LOOP	1
9	XDCZZ	15434	108722	..... CLAMP, LOOP	1
10	XDCZZ	15434	210753	..... CLAMP, HOSE	2
11	PACZZ	15434	AM1601806MC	..... HOSE, NONMETALLIC	1
12	XDCZZ	15434	S-969-E	..... ELBOW, PIPE	1
13	XDCZZ	15434	3010596	..... SCREW, ASSEMBLED WAS	2
14	PACZZ	15434	3044929	..... TUBE, BENT, METALLIC	1
15	PACZZ	15434	3202117	..... GASKET.....	1
16	PACZZ	15434	209956	..... HOSE ASSEMBLY, NONME	1
17	XDCZZ	15434	142429	..... ELBOW, PIPE TO TUBE	1
18	XDCZZ	15434	3037535	..... ELBOW, PIPE TO HOSE	1
19	PACZZ	15434	3036575	..... THERMOCOUPLE, HEATIN.....	1
20	XDCZZ	15434	186917	..... CLAMP, HOSE	1
21	XDCZZ	15434	203432	..... CONNECTION, EXHAUST	1
22	PACZZ	15434	3801614	..... TURBOSUPERCHARGER, N.....	1
23	PACZZ	15434	190849	..... GASKET (EXHAUST OUTLET CONNECTION) PART OF KIT P/N 3801330.	1
	PACZZ	15434	3801522	..... KIT, TURBOSUPERCHARG..... (SEAL)(NEEDED FOR COMPLETE REPAIR OF TURBOCHARGER)	1
	PACZZ	15434	3801523	..... KIT, TURBOSUPERCHARG..... (BEARING)(NEEDED FOR COMPLETE REPAIR OF TURBOCHARGER).....	1

END OF FIGURE

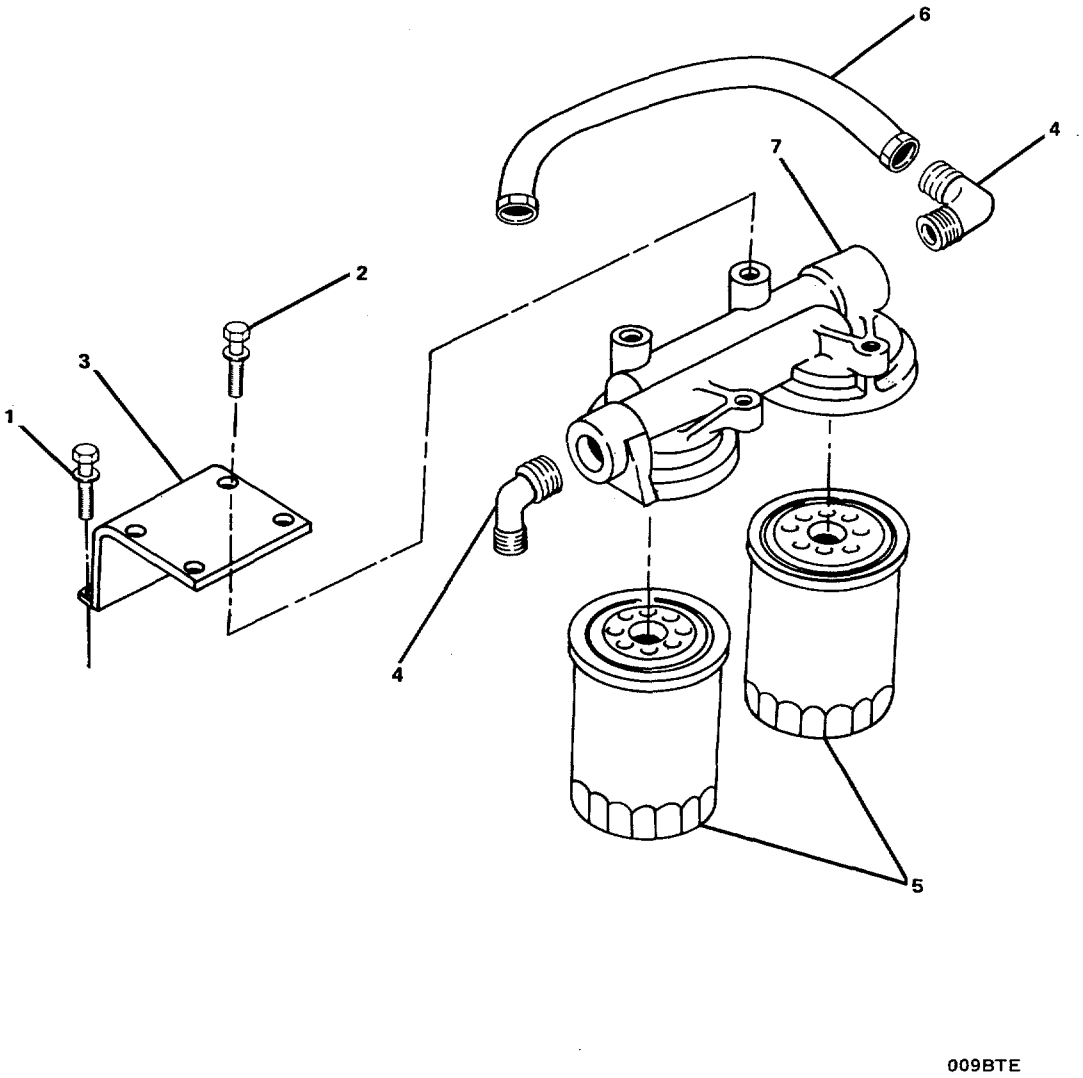

FIGURE 129. Fuel Filter Group.

(1) ITEM NO	(2) SMR CODE	(3) FSCM	(4) PART NUMBER	(5) DESCRIPTION AND USABLE ON CODES(UOC)	(6) QTY
				GROUP 05 BOW THRUSTER ENGINE	
				FIG. 129 FUEL FILTER GROUP	
	XCOOO	15434	06.04-05	..... FUEL FILTER GROUP	1
1	XDOZZ	15434	3034526	..... SCREW, ASSEMBLED WAS	2
2	XDOZZ	15434	3010596	..... SCREW, ASSEMBLED WAS	4
3	XDOZZ	15434	3011380	..... BRACKET, ANGLE	1
4	XDOZZ	15434	129859	..... ELBOW, TUBE TO BOSS	2
5	PACZZ	15434	3315847	..... CARTRIDGE, FUEL.....	2
6	PAOZZ	15434	AM1002200SS	..... HOSE ASSEMBLY, NONME	1
7	XDOZZ	15434	212013	..... HEAD, FLUID FILTER	1

END OF FIGURE

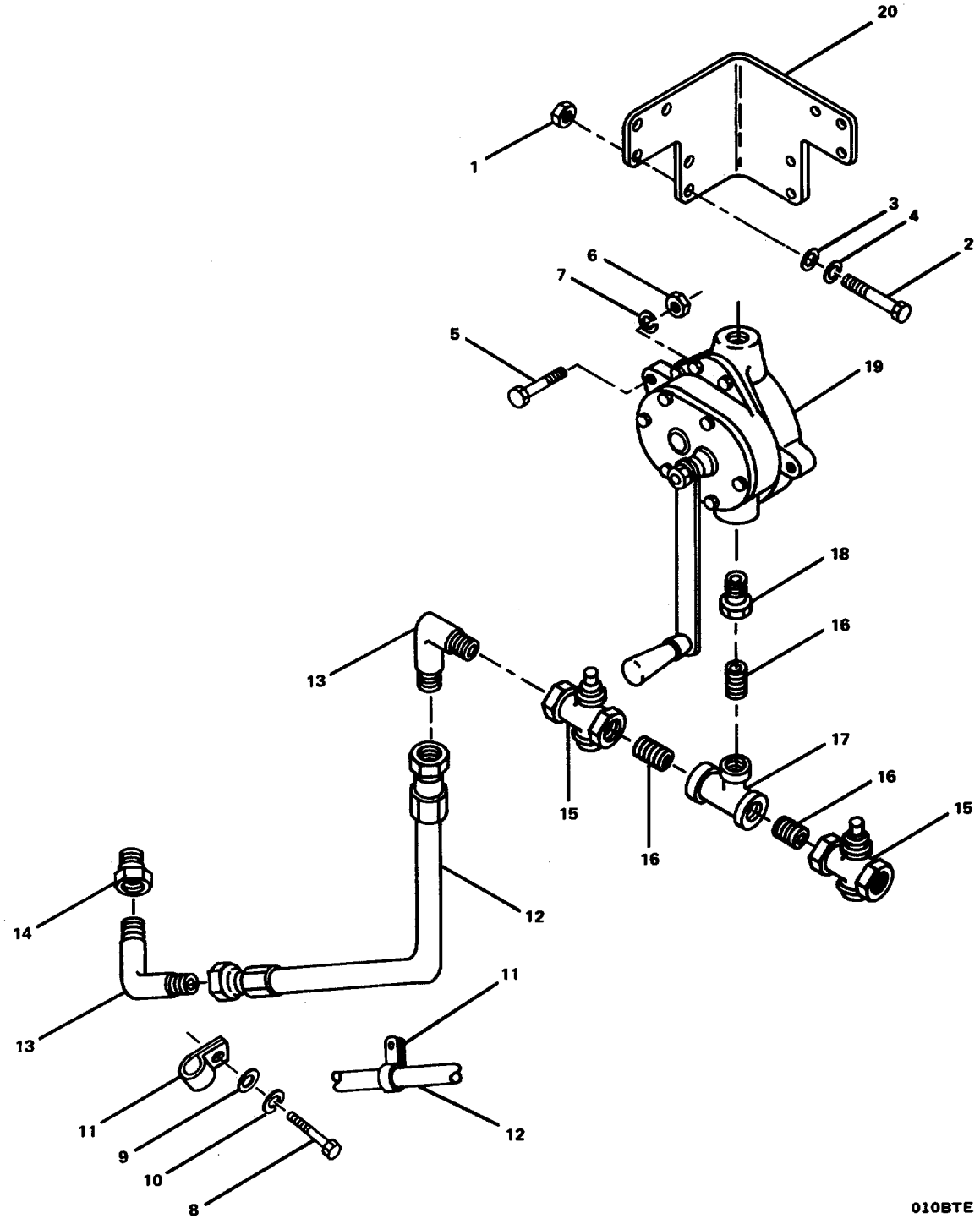

FIGURE 130. Sump Pump Group.

(1) ITEM NO	(2) SMR CODE	(3) FSCM	(4) PART NUMBER	(5) DESCRIPTION AND USABLE ON CODES(UOC)	(6) QTY
				GROUP 05 BOW THRUSTER ENGINE	
				FIG. 130 SUMP PUMP GROUP	
	XCOOO	15434	12.01.2-05	.SUMP PUMP GROUP	1
1	XDOZZ	15434	S-200	..NUT,PLAIN,HEXAGON	2
2	XDOZZ	15434	106289	..SCREW,CAP,HEXAGON H	2
3	XDOZZ	15434	S-670	..WASHER,FLAT	2
4	XDOZZ	15434	S-608	..WASHER,LOCK	2
5	XDOZZ	15434	S-105-C	..SCREW,CAP,HEXAGON H	3
6	XDOZZ	15434	127018	..WASHER	3
7	XDOZZ	96906	MS122032	..WASHER,LOCK	3
8	XDOZZ	15434	S-181	..SCREW,CAP,HEXAGON H	3
9	XDOZZ	15434	S-658	..WASHER,FLAT	3
10	XDOZZ	96906	MS35338-50	..WASHER,LOCK	3
11	XDOZZ	15434	204263	..CLAMP,LOOP	3
12	PAOZZ	15434	AM1005400SS	..HOSE ASSEMBLY,NONME	1
13	XDOZZ	15434	100501	..ELBOW,ADAPTER,MALE	2
14	XDOZZ	15434	S-910-C	..BUSHING,PIPE	1
15	PAOZZ	15434	3200802	..COCK,SHUTOFF,SCREW	2
16	XDOZZ	15434	S-920	..NIPPLE,PIPE	3
17	XDOZZ	15434	S-960	..TEE,PIPE	1
18	XDOZZ	15434	S-982	..BUSHING,PIPE	1
19	PBOZZ	15434	123822	..PUMP,RECIPROCATING	1
20	XDOZZ	15434	3032795	..BRACKET,ANGLE	1

END OF FIGURE

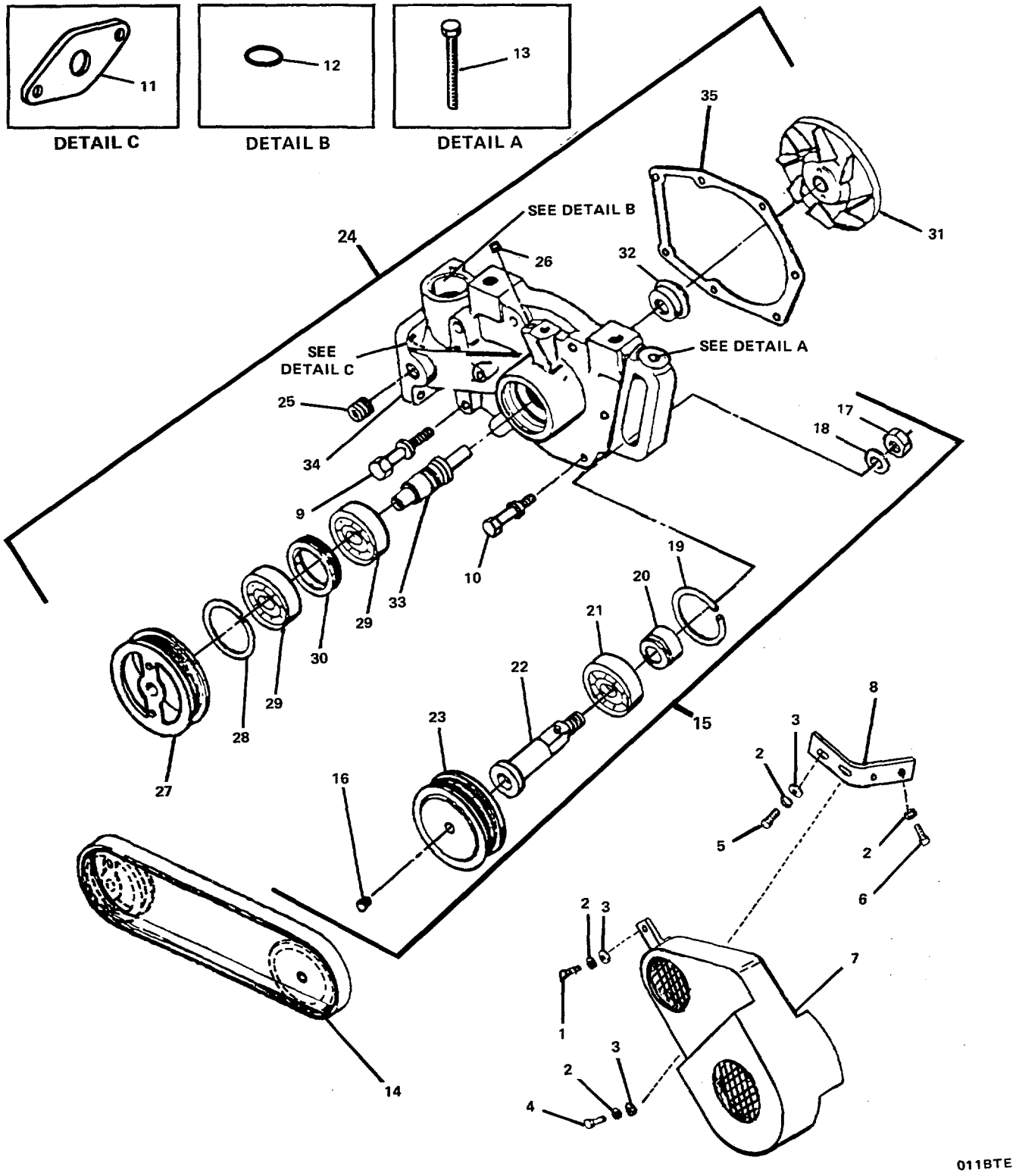

FIGURE 131. Water Pump and Idler/Belt Guard Group.

(1) ITEM NO	(2) SMR CODE	(3) FSCM	(4) PART NUMBER	(5) DESCRIPTION AND USABLE ON CODES(UOC)	(6) QTY
				GROUP 05 BOW THRUSTER ENGINE	
				FIG. 131 WATER PUMP AND IDLER/BELT GUARD GROUP	
	XCCOO	15434	08.01/08.16-05	.WATER PUMP AND IDLE	1
1	XDCZZ	15434	137797	..SCREW,CAP,HEXAGON H	1
2	XDCZZ	96906	MS35338-8	..WASHER,LOCK	6
3	XDCZZ	96906	MS27183-14	..WASHER,FLAT	4
4	XDCZZ	15434	108707	..SCREW,CAP,HEXAGON H	1
5	XDCZZ	15434	S-112	..SCREW,CAP,HEXAGON H	2
6	XDCZZ	15434	S-109	..SCREW,CAP,HEXAGON H	2
7	XDCZZ	15434	3046110	..GUARD,MECHANICAL DR	1
8	XDCZZ	15434	3022183	..BRACKET,ANGLE	1
9	XDCZZ	15434	3012469	..SCREW,CAP,HEXAGON H	2
10	XDCZZ	15434	3012468	..SCREW,CAP,HEXAGON H	4
11	PACZZ	15434	3024960	..GASKET	1
12	PACZZ	15434	43463-A	..PACKING,PREFORMED	1
13	XDCZZ	15434	182706	..SCREW,CAP,HEXAGON H	1
14	PACZZ	15434	217638	..BELT,V	1
15	PBCOO	15434	3050398	..ADJUSTING DEVICE,BE...	1
16	XDCZZ	15434	S-965-E	...PLUG,MACHINE THREAD	1
17	XDCZZ	15434	S-201	...NUT,PLAIN,HEXAGON	1
18	XDCZZ	15434	213082	...WASHER,FLAT	1
19	XDCZZ	15434	S-16255	...RING,BEARING RETAIN PART OF KIT P/N 3801710	1
20	XDCZZ	15434	3050395	...SPACER,RING	1
21	XDCZZ	15434	115519	...BEARING,BALL,ANNULA PART OF KIT P/N 3801710	1
22	XDCZZ	15434	3050396'	...SHAFT,IDLER	
23	XDCZZ	15434	215397	...PULLEY,GROOVE	1
24	PBCOO	15434	3801708	..PUMP,COOLING SYSTEM	1
25	XDCZZ	15434	3013786	...PLUG,PIPE	1
26	XDCZZ	15434	S-911-B	...PLUG,PIPE	1
27	XDCZZ	15434	3025861	...PULLEY,WATER PUMP	1
28	PACZZ	15434	S-16255	...RING,BEARING RETAIN	1
29	PACZZ	15434	115519	...BEARING,BALL,ANNULA	2
30	PACZZ	15434	196844	...SPACER PART OF KIT P/N 3801712...	1
31	PACZZ	15434	3000888	...IMPELLER,PUMP,CENTR PART OF KIT P/N 3801712	1
32	PACZZ	15434	3033677	...PACKING WITH RETAIN PART OF KIT P/N 3801710	1
33	PACZZ	15434	3050394	...SHAFT,SHOULDERED PART OF KIT P/N 3801712	1
34	XDCZZ	15434	3045163	...BODY,WATER PUMP	
35	PACZZ	15434	3002385	...GASKET (WATER PUMP)	1
	PACZZ	15434	3801712	...PARTS KIT,ENGINE WA (MAJOR) (NEEDED FOR COMPLETE REPAIR OF WATER PUMP)	1
				IMPELLER,PUMP,CENTR (1) 131-31	
				SHAFT,SHOULDERED (1) 131-33	
				SPACER (1) 131-30	

END OF FIGURE

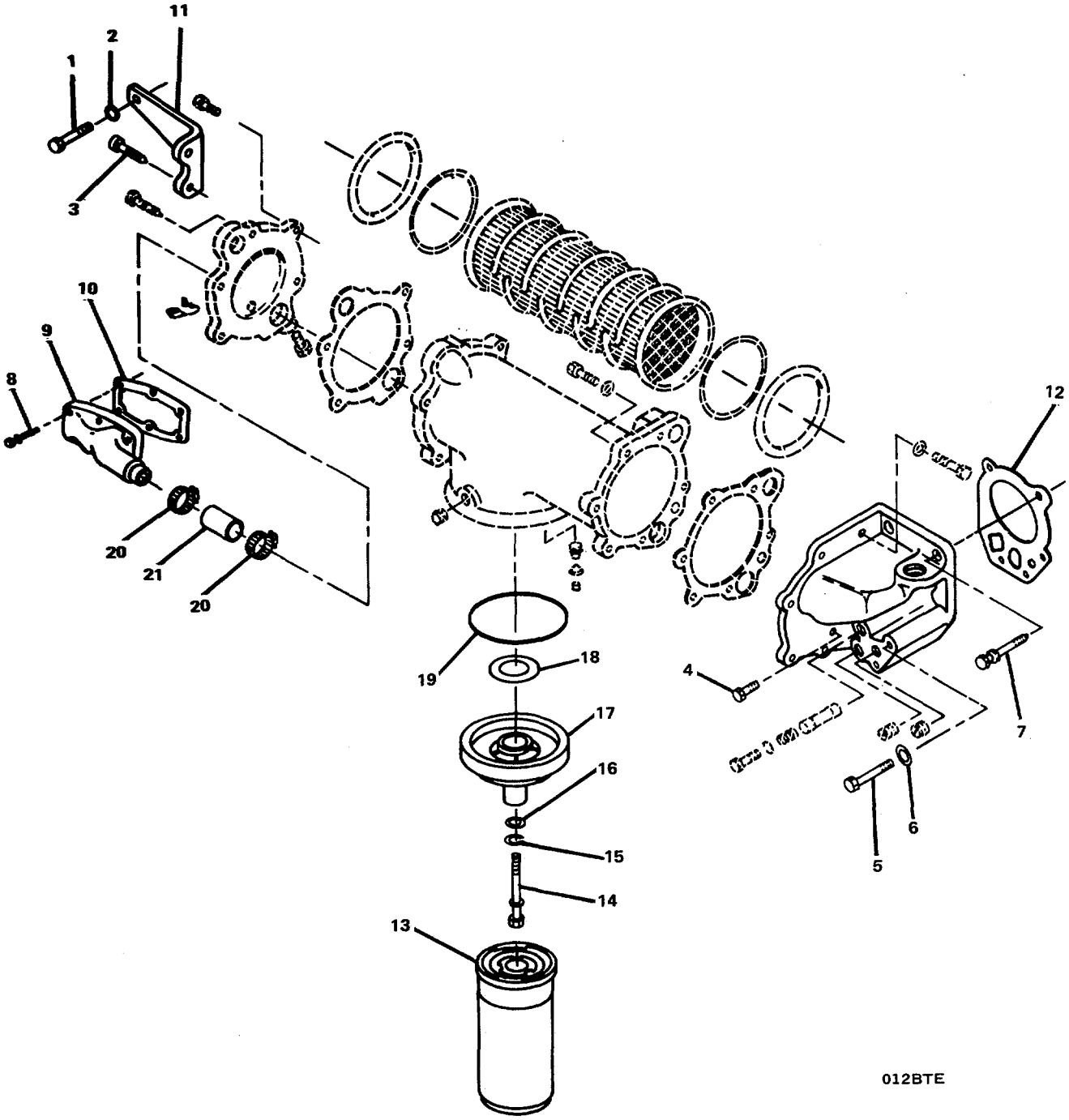

FIGURE 132. Lubricating Oil Cooler/Filter Group (Sheet 1 of 3).

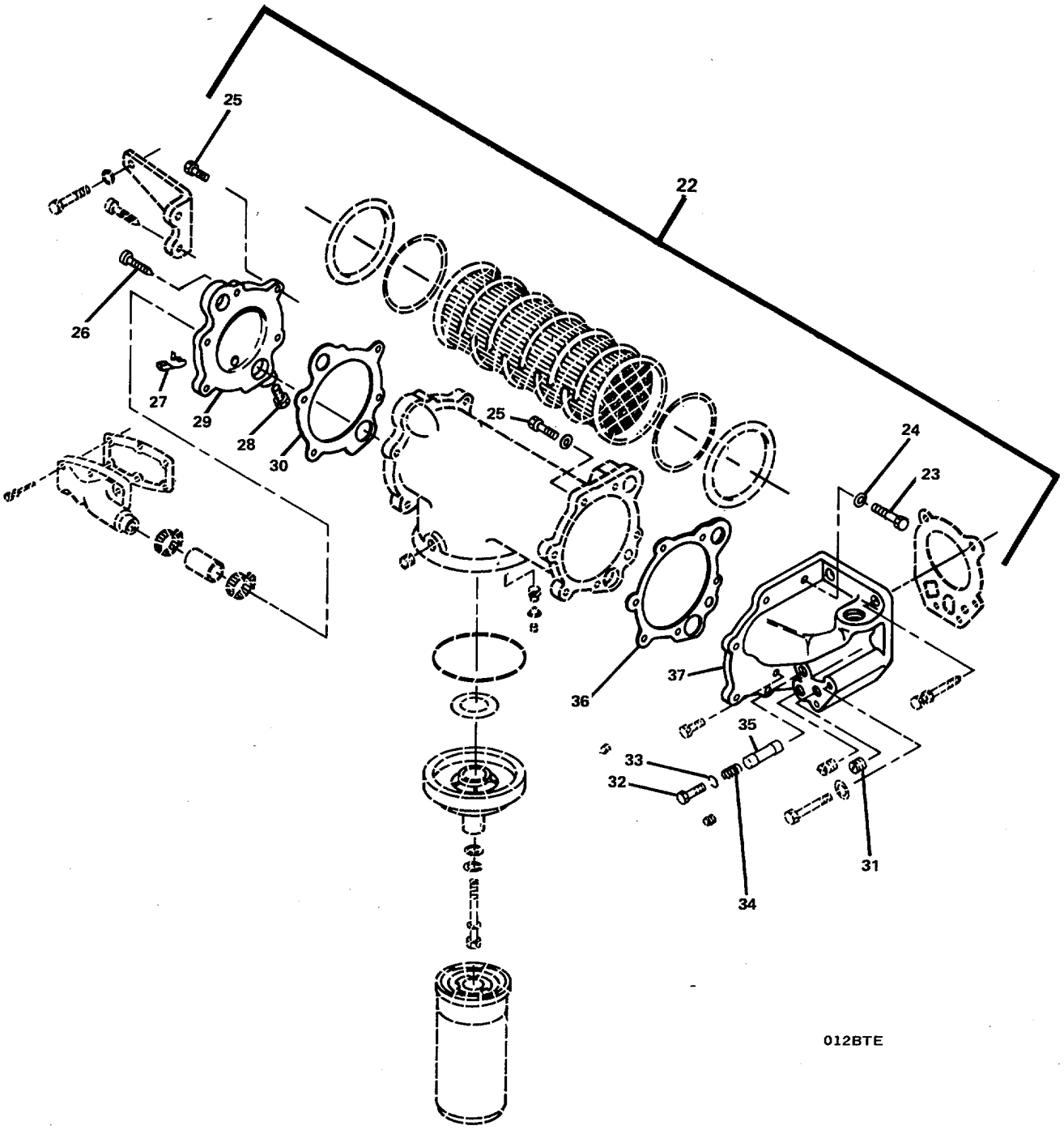

FIGURE 132. Lubricating Oil Cooler/Filter Group (Sheet 2 of 3).

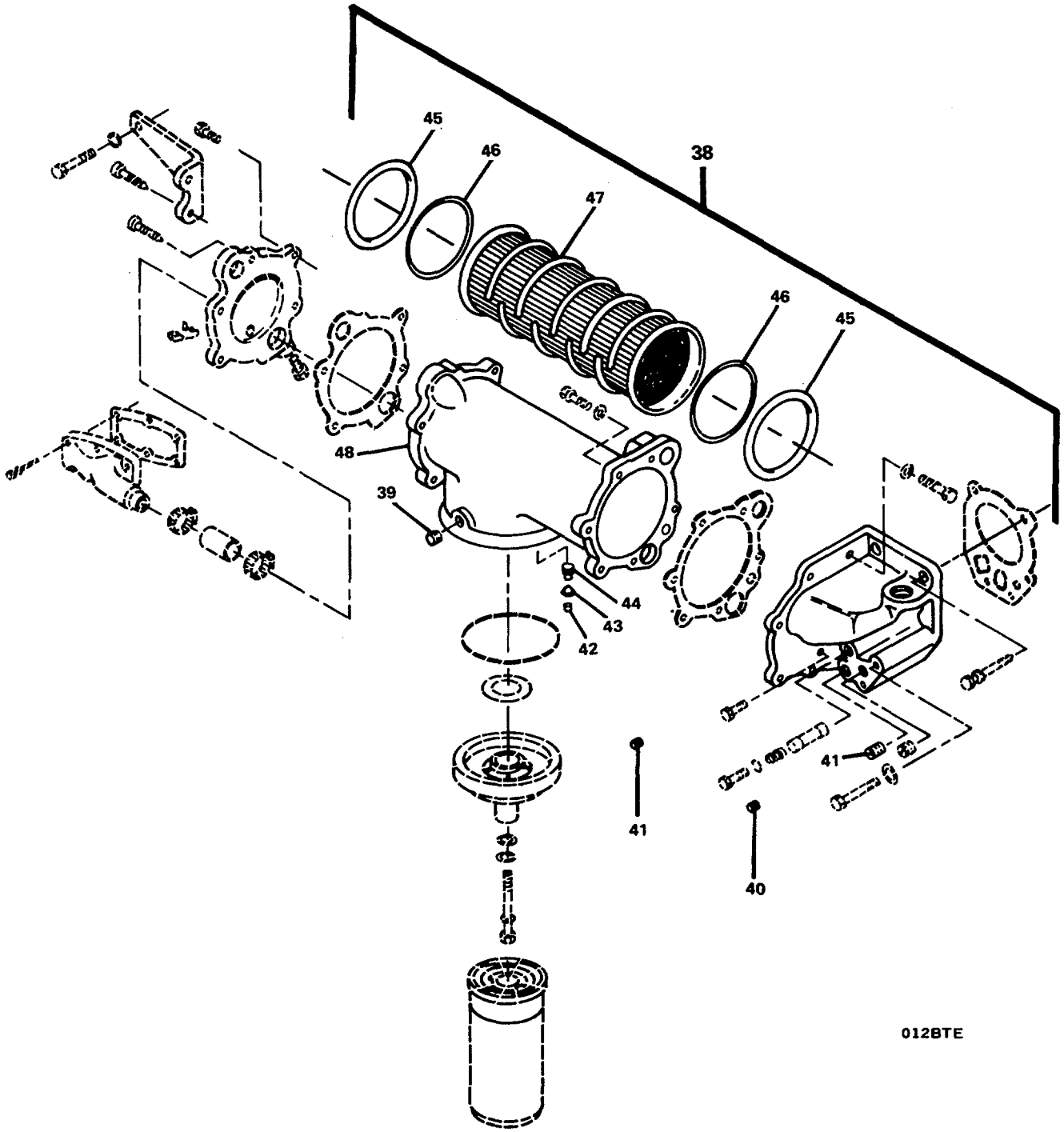

FIGURE 132. Lubricating Oil Cooler/Filter Group (Sheet 3 of 3).

(1) ITEM NO	(2) SMR CODE	(3) FSCM	(4) PART NUMBER	(5) DESCRIPTION AND USABLE ON CODES(UOC)	(6) QTY
				GROUP 05 BOW THRUSTER ENGINE	
				FIG. 132 LUBRICATING OIL COOLER/ FILTER GROUP	
	XCOFF	15434	07.05-05	.LUBRICATING OIL COO	1
1	XDOZZ	15434	S-145	..SCREW,CAP,HEXAGON H	1
2	XDOZZ	15434	203310	..WASHER,FLAT	1
3	XDOZZ	15434	3010596	..SCREW,ASSEMBLED WAS	2
4	XDOZZ	15434	3010597	..SCREW	2
5	XDOZZ	15434	S-106-C	..SCREW,CAP,HEXAGON H	2
6	XDOZZ	96906	MS35338-8	..WASHER,LOCK	2
7	XDOZZ	15434	3010595	..SCREW,MACHINE	2
8	XDOZZ	15434	3011342	..SCREW,ASSEMBLED WAS	6
9	XDOZZ	15434	3011233	..ELBOW,FLANGE TO HOS	1
10	PAOZZ	15434	70089-1	..GASKET	1
11	XDOZZ	15434	210966	..BRACKET,ANGLE	1
12	PAOZZ	15434	3008017	..GASKET (OIL COOLER)	1
13	PACZZ	15434	3313279	..FILTER ELEMENT,FLUI	1
14	XDOZZ	15434	138045	..SCREW,ASSEMBLED WAS	1
15	XDOZZ	96906	MS35338-50	..WASHER,LOCK	1
16	XDOZZ	15434	200861	..WASHER,FLAT	1
17	XDOZZ	15434	3300908	..HEAD,FLUID FILTER	1
18	PAOZZ	15434	3308958	..GASKET	1
19	PAOZZ	15434	3302630	..PACKING,PREFORMED	1
20	XDOZZ	15434	3043487	..CLAMP,HOSE	4
21	PAOZZ	15434	3051560	..HOSE,NONMETALLI C	2
22	XDOFF	15434	3003814	..COOLER ASSEMBLY,OIL	1
23	XDFZZ	15434	S-126	...SCREW,CAP,HEXAGON H	1
24	XDFZZ	96906	MS35338-8	...WASHERSLOCK	1
25	XDFZZ	15434	3010596	...SCREW,ASSEMBLED WAS	60
26	XDFZZ	15434	3012475	...SCREW	1
27	XDFZZ	15434	108307	...COCK,DRAIN	1
28	XDFZZ	15434	3008469	...PLUG,PIPE	1
29	XDFZZ	15434	217315	...COVER,ACCESS	1
30	PAFZZ	15434	218245	...GASKET (LUBE OIL CIRCLE COVER)	1
31	XDFZZ	15434	213394	...PLUG,EXPANSION	1
32	XDFZZ	15434	3022961	...PLUG,MACHINE THREAD	1
33	XDFZZ	15434	67946	...SPACER,RING	1
34	PAFZZ	15434	68274	...SPRING,HELICAL,COMP	1
35	PAFZZ	15434	127558	...PLUNGER,OIL PUMP RE	1
36	PAFZZ	15434	3010030	...GASKET (LUBE OIL CIRCLE COVER	1
37	XDFZZ	15434	210967	...SUPPORT,OIL COOLER	1
38	XDOFZ	15434	AR-9999	...COOLER,FLUID,INDUST	1
39	XDFZZ	15434	3025458	....PLUG, PI PE	1
40	XDFZZ	15434	3008466	....PLUG,PIPE	1
41	XDFZZ	15434	3013786	....PLUG,PIPE	1
42	XDFZZ	15434	3023994	....PLUG,RETAINER	1
43	PAFZZ	15434	3018673	....DISK,VALVE	1
44	PAFZZ	15434	202128	....SPRING,HELICAL,COMP	1
45	PAFZZ	15434	3006745	....RING,RETAINING	2
46	PAFZZ	15434	3007713	....PACKING,PREFORMED	2

(1) ITEM NO	(2) SMR CODE	(3) FSCM	(4) PART NUMBER	(5) DESCRIPTION AND USABLE ON CODES(UOC)	(6) QTY
47	PAFZZ	15434	3021581	....FILTER ELEMENT,FLUI.....	1
48	XDFZZ	15434	210915	....HOUSING,OIL COOLER	1

END OF FIGURE

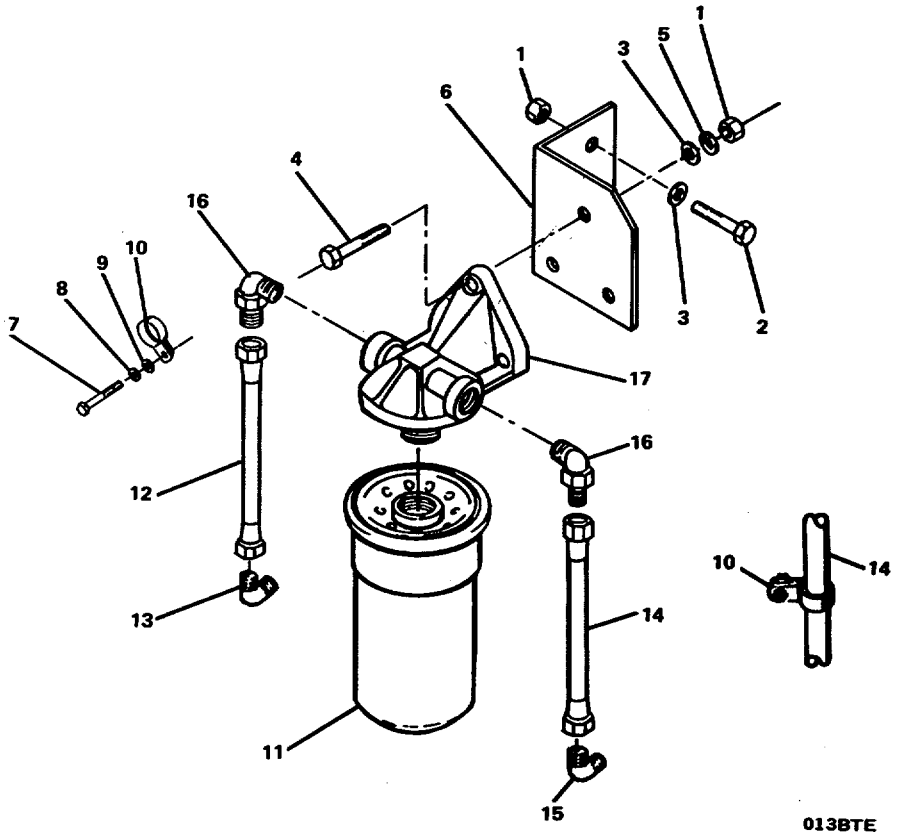

FIGURE 133. Lubricating Oil Bypass Filter Group.

(1) ITEM NO	(2) SMR CODE	(3) FSCM	(4) PART NUMBER	(5) DESCRIPTION AND USABLE ON CODES(UOC)	(6) QTY
				GROUP 05 BOW THRUSTER ENGINE	
				FIG. 133 LUBRICATING OIL BYPASS FILTER GROUP	
	XCOOO	15434	07.03-05	.LUBRICATING OIL BYP	1
1	XDOZZ	15434	S-223	..NUT,PLAIN,HEXAGON	5
2	XDOZZ	15434	S-112	..SCREW,CAP,HEXAGON H	2
3	XDOZZ	96906	MS27183-14	..WASHER,FLAT	2
4	XDOZZ	15434	108707	..SCREW,CAP,HEXAGON H	3
5	XDOZZ	96906	MS35338-8	..WASHER,LOCK	3
6	XDOZZ	15434	3044633	..BRACKET,ANGLE	1
7	XDOZZ	15434	S-169	..SCREW,CAP,HEXAGON H	2
8	XDOZZ	15434	S-608	..WASHER,LOCK	2
9	XDOZZ	15434	S-670	..WASHERFLAT	2
10	XDOZZ	15434	106221	..CLAMP,LOOP	2
11	PAOZZ	15434	3313289	..FILTER ELEMENT,FLUI	1
12	PAOZZ	15434	AM0603400SS	..HOSE ASSEMBLY,NONME	1
13	XDOZZ	15434	121229	..ELBOW,PIPE TO TUBE	1
14	PAOZZ	15434	AM0603600SS	..HOSE ASSEMBLY,NONME	1
15	XDOZZ	15434	144378	..ELBOW,TUBE	1
16	XDOZZ	15434	68645	..ELBOW,PIPE TO TUBE	2
17	XDOZZ	15434	3304173	..HEAD, FLUID FILTER	1

END OF FIGURE

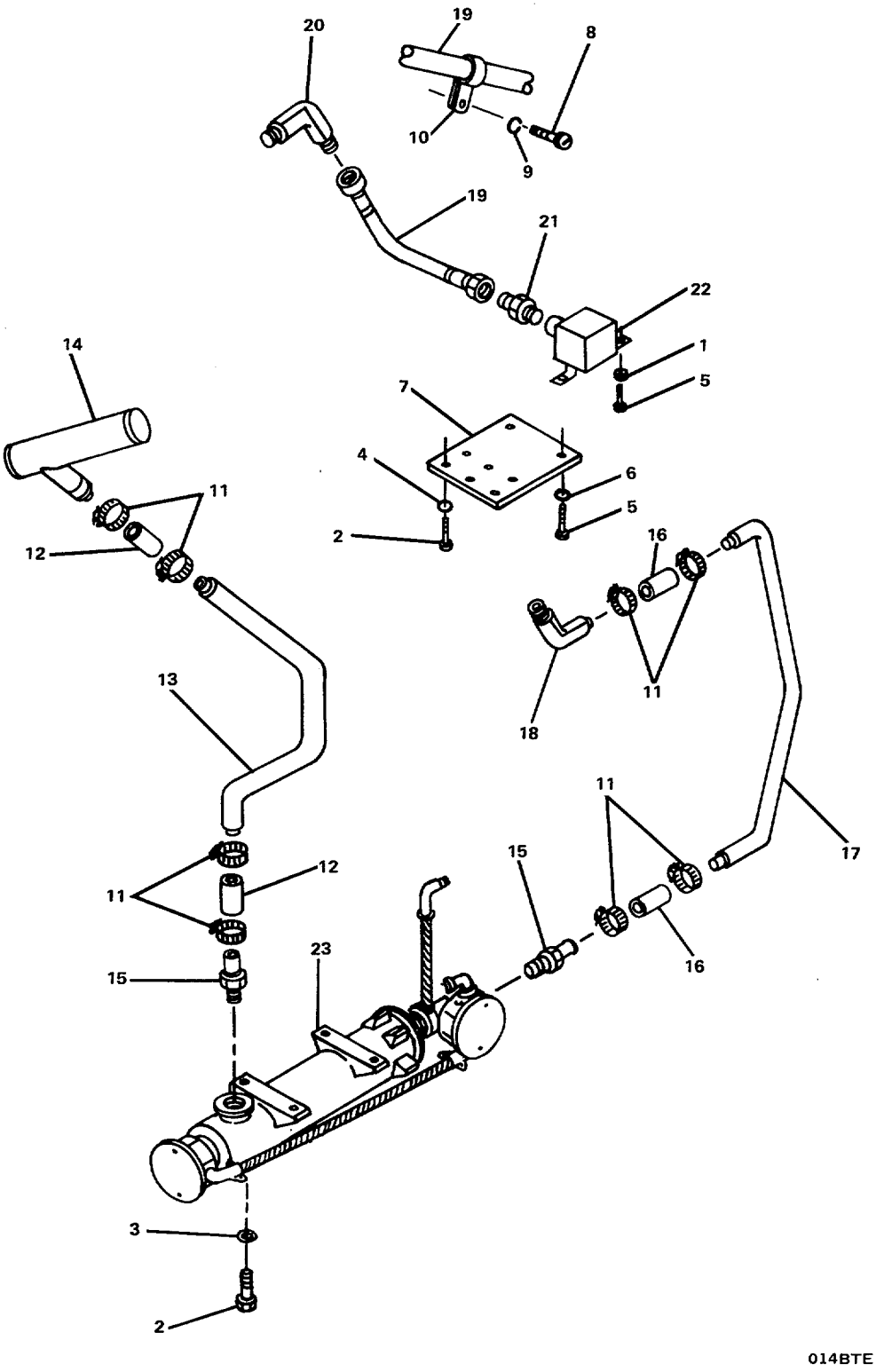

FIGURE 134. Coolant Heater Group.

(1) ITEM NO	(2) SMR CODE	(3) FSCM	(4) PART NUMBER	(5) DESCRIPTION AND USABLE ON CODES(UOC)	(6) QTY
				GROUP 05 BOW THRUSTER ENGINE	
				FIG. 134 COOLANT HEATER GROUP	
	XCOOO	15434	10.02-05	.COOLANT HEATER GROU	1
1	XDOZZ	15434	S-224	..NUT,PLAIN,HEXAGON	6
2	XDOZZ	15434	S-105-C	..SCREW,CAP,HEXAGON H	6
3	XDOZZ	15434	146159,	..WASHER,FLAT	4
4	XDOZZ	96906	MS122032	..WASHER,LOCK	4
5	XDOZZ	15434	108709	..SCREW,CAP,HEXAGON H	2
6	XDOZZ	96906	MS35338-47	..WASHER,LOCK	2
7	XDOZZ	15434	3010363	..BRACKET,HEATER,ENGI	1
8	XDOZZ	15434	S-109	..SCREW,CAP,HEXAGON H	1
9	XDOZZ	96906	MS35338-8	..WASHER,LOCK	1
10	XDOZZ	15434	68152	..CLAMP,LOOP	1
11	XDOZZ	96906	MS35842-13	..CLAMP,HOSE	8
12	PAOZZ	15434	3000270	..HOSE,PREFORMED	2
13	XDOZZ	15434	3010365	..TUBE,HEATER	1
14	XDOZZ	15434	3000264	..TUBE,WATER TRANSFER	1
15	XDOZZ	15434	153408	..ADAPTER,STRAIGHT,PI	2
16	PAOZZ	15434	155789	..HOSE,NONMETALLIC	2
17	XDOZZ	15434	3010361	..TUBE,HEATER	1
18	XDOZZ	15434	152547	..ELBOW,TUBE TO HOSE	1
19	PAOZZ	15434	AS0403000SS	..HOSE ASSEMBLY,NONME	1
20	XDOZZ	15434	112105	..ELBOW,TUBE TO HOSE	1
21	XDOZZ	96906	MS39158-3	..ADAPTER,STRAIGHT,PI	1
22	PAOZZ	15434	196074	..SWITCH,PRESSURE	1
23	PAOZZ	15434	212024	..HEATER,COOLANT,ENGI	1

END OF FIGURE

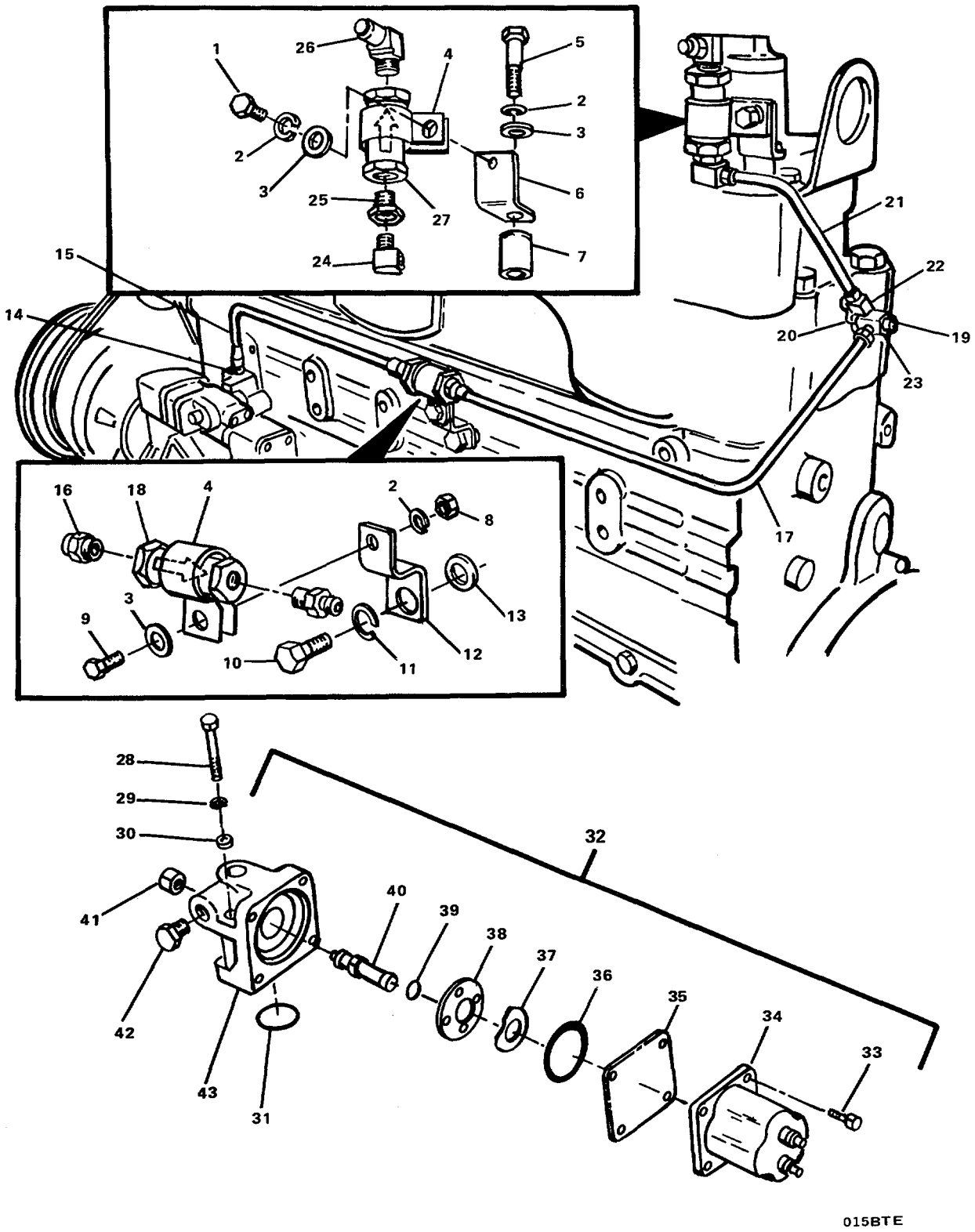

FIGURE 135. Fuel Tubing, Shutdown Valve and Fuel Pump Group (Sheet 1 of 8).

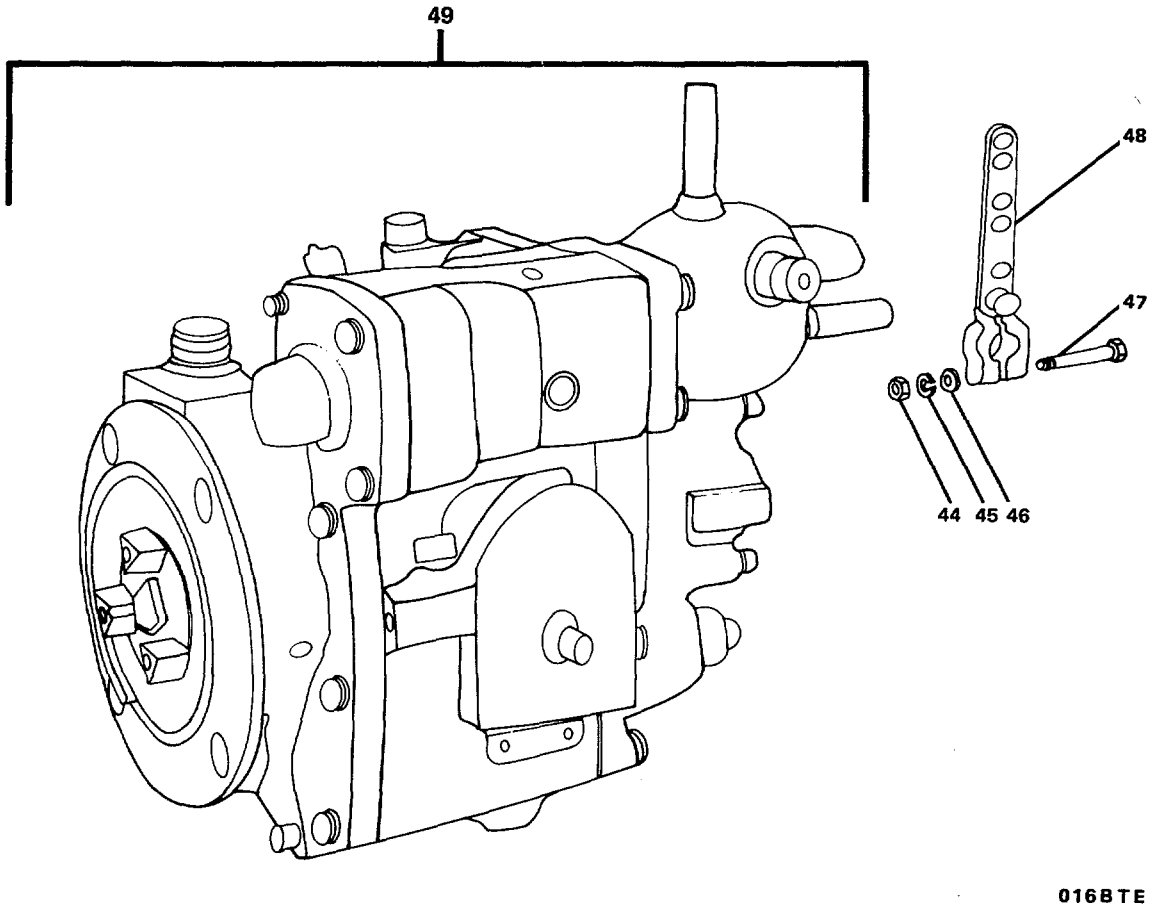

FIGURE 135. Fuel Tubing, Shutdown Valve and Fuel Pump Group (Sheet 2 of 8).

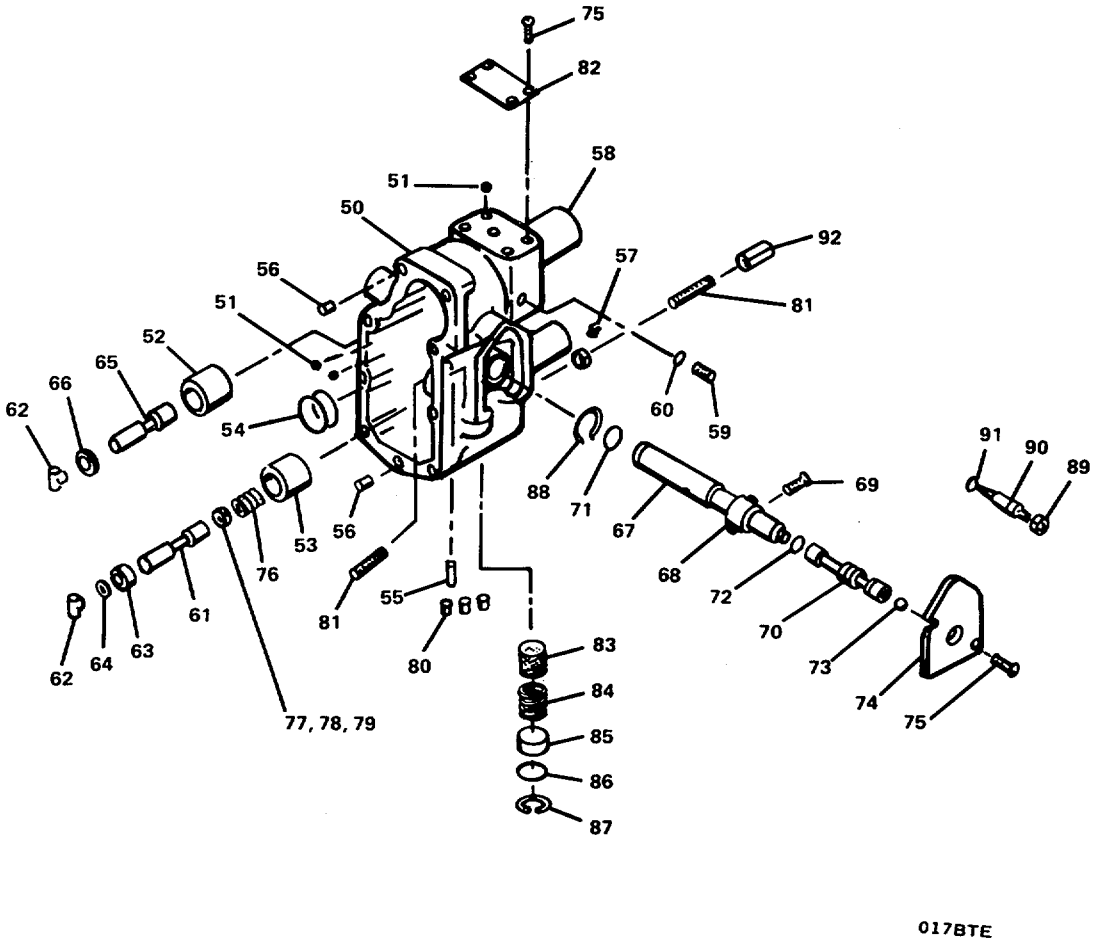

FIGURE 135. Fuel Tubing, Shutdown Valve and Fuel Pump Group (Sheet 3 of 8).

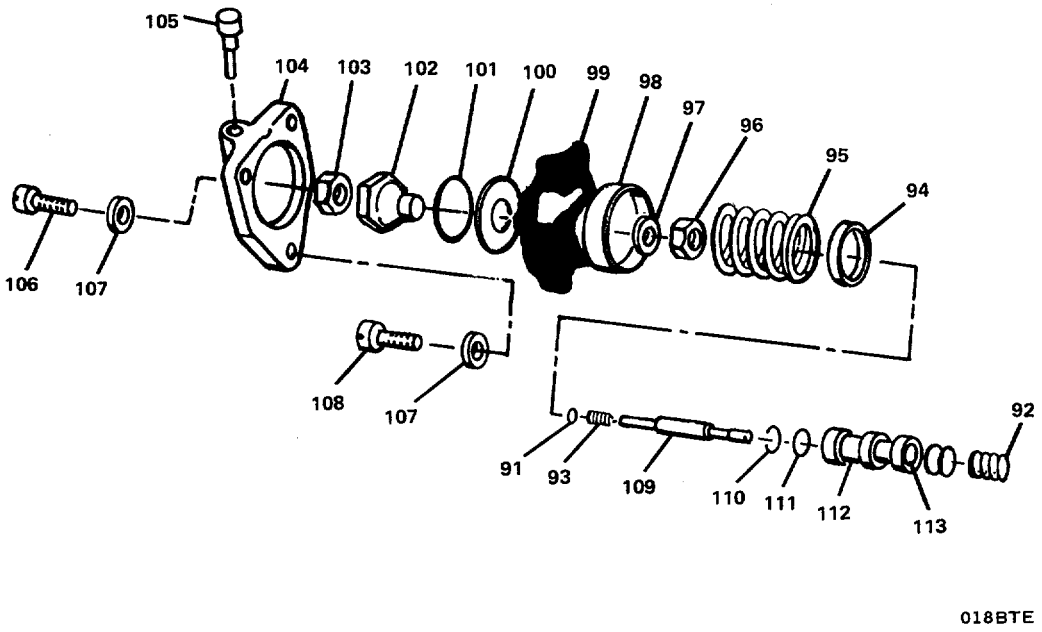

FIGURE 135. Fuel Tubing, Shutdown Valve and Fuel Pump Group (Sheet 4 of 8).

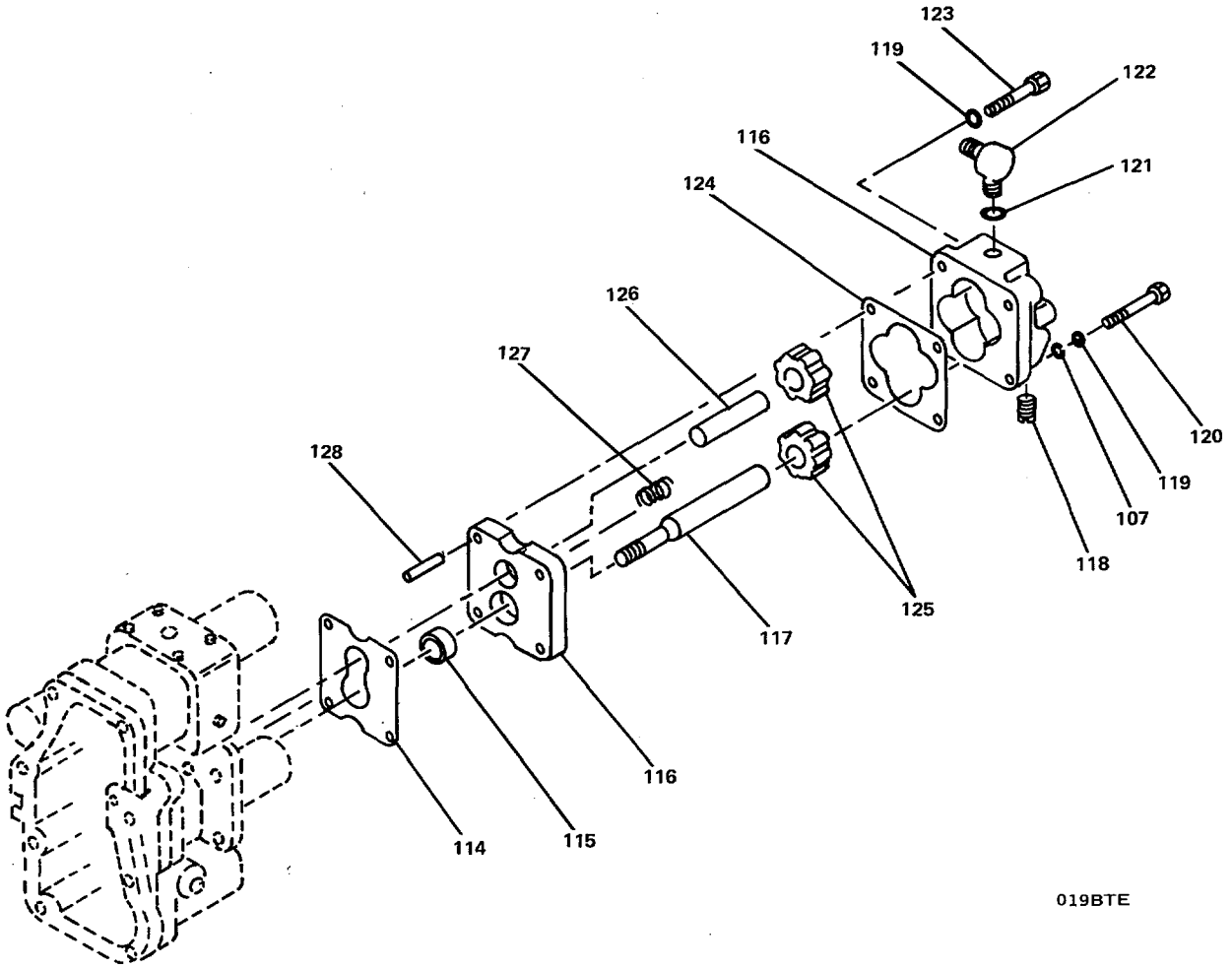

FIGURE 135. Fuel Tubing, Shutdown Valve and Fuel Pump Group (Sheet 5 of 8).

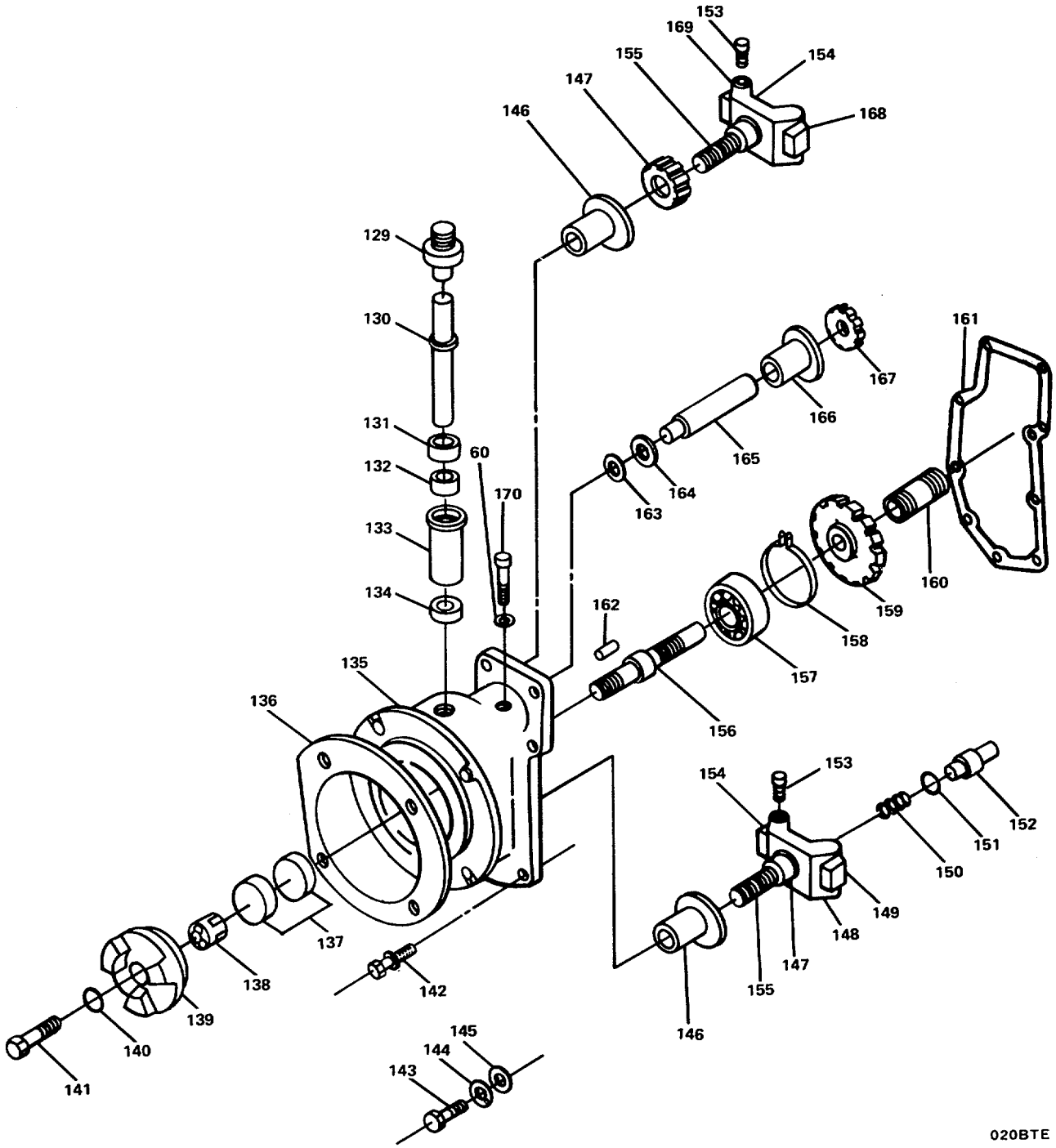

FIGURE 135. Fuel Tubing, Shutdown Valve and Fuel Pump Group (Sheet 6 of 8).

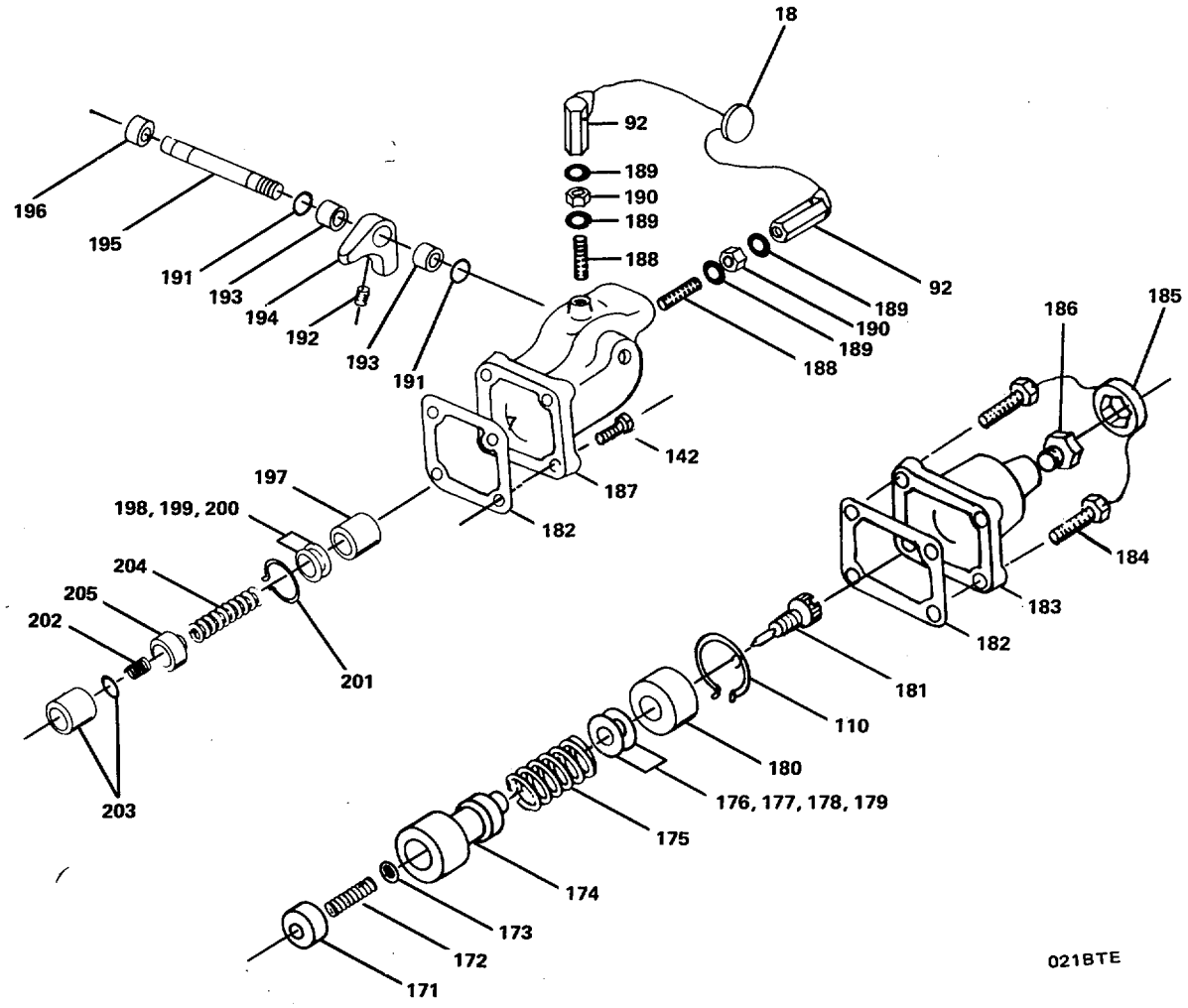

FIGURE 135. Fuel Tubing, Shutdown Valve and Fuel Pump Group (Sheet 7 of 8).

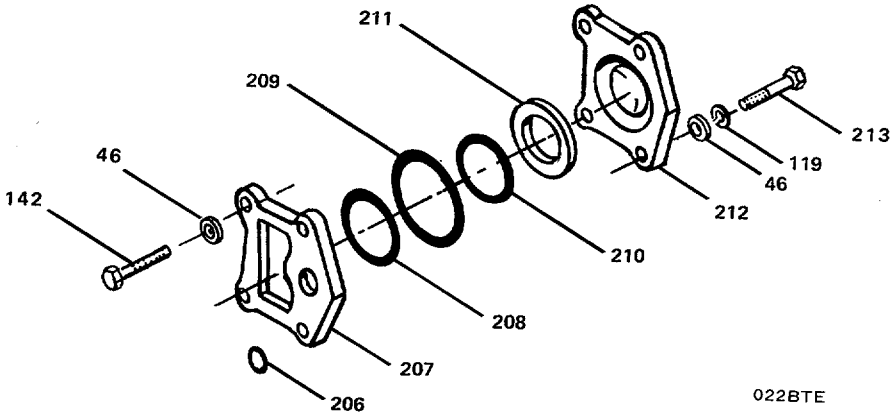

FIGURE 135. Fuel Tubing, Shutdown Valve and Fuel Pump Group (Sheet 8of 8).

(1) ITEM NO	(2) SMR CODE	(3) FSCM	(4) PART NUMBER	(5) DESCRIPTION AND USABLE ON CODES(UOC)	(6) QTY
				GROUP 05 BOW THRUSTER ENGINE	
				FIG. 135 FUEL TUBINGT SHUTDOWN VALVE AND FUEL GROUP	
	XCCFF	15434	06.03/05.06/05.01-05	.FUEL TUBING,SHUTDOW	1
1	XDFZZ	15434	S-117	..SCREW,CAP,HEXAGON H	1
2	XDFZZ	96906	MS35338-8	..WASHER,LOCK	3
3	XDFZZ	96906	MS27183-14	..WASHER,FLAT	3
4	XDFZZ	15434	107460	..CLAMP,LOOP	2
5	XDFZZ	15434	S-104	..SCREW,CAP,HEXAGON H	1
6	XDFZZ	15434	101476	..BRACKET,ANGLE	1
7	XDFZZ	15434	145782	..SPACER,SLEEVE	1
8	XDFZZ	15434	S-205	..NUT	1
9	XDFZZ	15434	69793	..BOLT,MACHINE	1
10	XDFZZ	15434	S-151-C	..SCREW,CAP,HEXAGON H	1
11	XDFZZ	15434	S-609	..WASHER,LOCK	1
12	XDFZZ	15434	113710	..BRACKET,ANGLE	1
13	XDFZZ	15434	65434	..SPACER,RING	1
14	XDFZZ	15434	3018889	..ADAPTER,STRAIGHT,PI	1
15	XDFZZ	15434	3033013	..HOSE ASSEMBLY,METAL	1
16	XDFZZ	15434	3032872	..UNION,PIPE	2
17	XDFZZ	15434	3033005	..TUBE,BENT,METALLIC	1
18	PACZZ	15434	3028325	..VALVE,CHECK	1
19	XDFZZ	15434	68606	..PLUG,MACHINE THREAD	1
20	XDFZZ	15434	139969	..NIPPLE,PIPE	1
21	XDFZZ	15434	3010755	..TUBE,BENT,METALLIC	1
22	XDFZZ	15434	181213	..ELBOW,PIPE TO TUBE	1
23	XDFZZ	15434	S-1049	..TEE,PIPE	1
24	XDFZZ	15434	185347	..ELBOW,PIPE TO TUBE	1
25	XDFZZ	15434	S-964	..REDUCER,PIPE	1
26	XDFZZ	15434	43765	..ELBOW,PIPE TO TUBE	1
27	PACZZ	15434	178079	..VALVE,CHECK	1
28	XDFZZ	15434	S-189-C	..SCREW,CAP,SOCKET HE	2
29	XDFZZ	15434	181466	..WASHER,LOCK	2
30	XDFZZ	15434	67684	..WASHER,FLAT	2
31	PAFZZ	15434	154087	..GASKET	1
32	PBCFZ	15434	3035346	..VALVE,SOLENOID	1
33	XDCZZ	15434	187556	...SCREW,MACHINE	4
34	XDCZZ	15434	134076	...COIL,FUEL PUMP	1
35	XDFZZ	15434	129839	...COVER,ACCESS	1
36	XDFZZ	15434	129888	...PACKING,PREFORMED	1
37	XDFZZ	15434	129768	...WASHER,SPRING TENSI	1
38	XDFZZ	15434	3030970	... DISK,VALVE	1
39	XDFZZ	15434	190876	...PACKING,PREFORMED	1
40	XDFZZ	15434	3000266	...SHAFT,SHOULDERED	1
41	XDFZZ	15434	129838	...KNOB	1
42	XDFZZ	15434	3025458	...PLUG,PIPE	1
43	XDFZZ	15434	129826	...HOUSING,SHUT OFF VA	1
44	XDFZZ	15434	S-251	..NUT,PLAIN,HEXAGON	2
45	XDFZZ	96906	MS122032	..WASHER,LOCK	1

(1) ITEM NO	(2) SMR CODE	(3) FSCM	(4) PART NUMBER	(5) DESCRIPTION AND USABLE ON CODES(UOC)	(6) QTY
46	XDFZZ	15434	70704	..WASHER,FLAT	9
47	XDFZZ	15434	S-159-B	..SCREW,CAP,HEXAGON H	1
48	XDFZZ	15434	110481	..LEVER,GOVERNOR CONT	1
49	PBCFF	15434	3057817-9348	..PUMP,FUEL,METERING	1
50	XAFZZ	15434	3058505	...HOUSING,FUEL PUMP	1
51	XAFZZ	15434	214139	...BALL,PLUG BRASS	3
52	XAFZZ	15434	3001737	...BARREL,GOVERNOR,UPP	1
53	XAFZZ	15434	218548	...BARREL,GOVERNOR,LOW	1
54	XAFZZ	15434	100193	...BEARING,SLEEVE	1
55	XAFZZ	15434	163733	...CLIP,GOVERNOR BARRE	1
56	XAFZZ	15434	118227	...PIN,HOLLOW	2
57	XAFZZ	15434	202682	...HOUSING, LOWER SPRI	1
58	XAFZZ	15434	108384	...HOLDER,SPRING	1
59	XAFZZ	15434	3000594	...SETSCREW	1
60	XAFZZ	15434	70815	...PACKING WITH RETAIN	2
61	XAFZZ	15434	3040750	...PLUNGER,GOVERNOR	1
62	XAFZZ	15434	70690	...DRIVER,PLUNGER,GOVE	2
63	XAFZZ	15434	3048557	...SPACER,BEARING	1
64	XAFZZ	15434	3027633	...BEARING,SLEEVE	1
65	XAFZZ	15434	212350	...PLUNGER,DETENT	1
66	XAFZZ	15434	3035230	...BEARING,WASHER,THRU	1
67	XAFZZ	15434	3046680	...SHAFT,SHOULDERED	1
68	XAFZZ	15434	3006343	...END,CONTROL R	1
69	XAFZZ	15434	3006344	...SETSCREW	1
70	XAFZZ	15434	3006175	...SCREW	1
71	XAFZZ	15434	100478	...PACKING,PREFORMED	1
72	XAFZZ	15434	213768	...PACKING,PREFORMED	1
73	XAFZZ	15434	213769	...BALL,BEARING	1
74	XAFZZ	15434	3000446	...COVER,ACCESS	1
75	XAFZZ	15434	S-2286	...SCREW	2
76	XAFZZ	15434	179816	...SPRING,HELICAL,COMP	1
77	XAFZZ	15434	101841	...SHIM (0.005)	1
78	XAFZZ	15434	101842	...SHIM (0.010)	1
79	XAFZZ	15434	101843	...SPACER,RING (0.020)	1
80	XAFZZ	15434	3025460	...PLUG,PIPE	4
81	XAFZZ	15434	3046407	...SETSCREW	2
82	XAFZZ	15434	105375	...PLATE,IDENTIFICATIO	1
83	XAFZZ	15434	146483	...FILTER ELEMENT,FLUI	1
84	XAFZZ	15434	70700	...SPRING,HELICAL,COMP	1
85	XAFZZ	15434	201007	...COVER,FLUID FILTER	1
86	XAFZZ	15434	145504	...PACKING,PREFORMED	1
87	XAFZZ	15434	128807	...RING,RETAINING	1
88	XAFZZ	96906	MS16632-1050	...RING,RETAINING	1
89	XAFZZ	15434	S-248	...NUT,PLAIN,HEXAGON	1
90	XAFZZ	15434	214144	...VALVE,NEEDLE CARBUR	1
91	XAFZZ	15434	68061-A	...PACKING,PREFORMED	2
92	XAFZZ	15434	110058	...POST,ELECTRICAL-MEC	3
93	XAFZZ	15434	3018655	...SPRING,HELICAL,COMP	1
94	XAFZZ	15434	3001707	...SHIM	1
95	XAFZZ	15434	138802	...SPRING,HELICAL,COMP	1
96	XAFZZ	15434	S-213-A	...NUT,SELF-LOCKING,HE	1
97	XAFZZ	15434	3023088	...WASHER,FLAT	1

(1) ITEM NO	(2) SMR CODE	(3) FSCM	(4) PART NUMBER	(5) DESCRIPTION AND USABLE ON CODES(UOC)	(6) QTY
98	XAFZZ	15434	3013810	...PISTON,AIR FUEL CON	1
99	XAFZZ	15434	3013811	...DIAPHRAGM,VALVE	1
100	XAFZZ	15434	214150	...WASHER,FLAT	1
101	XAFZZ	15434	3044942	...PACKING,PREFORMED	1
102	XAFZZ	15434	3023171	...INSERT,PISTON	1
103	XAFZZ	15434	S-251	...NUT,PLAIN,HEXAGON	1
104	XAFZZ	15434	3015520	...COVER,FUEL CONTROL	1
105	XAFZZ	15434	3015522	...VALVE,CHECK	1
106	XAFZZ	15434	70772-B	...SCREW,CAP,HEXAGON H	1
107	XAFZZ	15434	70704	...WASHER,FLAT	9
108	XAFZZ	15434	3012558	...SCREW,CAP,HEXAGON H	1
109	XAFZZ	15434	3036901	...PLUNGER,AIR FUEL CO	1
110	XAFZZ	15434	S-16240	...RING,RETAINING	2
111	XAFZZ	15434	145505	...PACKING,PREFORMED	1
112	XAFZZ	15434	3036903	...BARREL,AIR FUEL CON	1
113	XAFZZ	15434	70775	...PACKING,PREFORMED	1
114	XAFZZ	15434	3026163	...GASKET	1
115	XAFZZ	15434	3033719	...BUSHING,SLEEVE	1
116	XAFZZ	15434	3033732	...COVER AND HOUSING	2
11T	XAFZZ	15434	100215	...SHAFT,SHOULDERED	1
118	XAFZZ	15434	3033742	...PLUG,PIPE	1
119	XAFZZ	15434	181466	...WASHER,LOCK	6
120	XAFZZ	15434	70790	...BOLT,MACHINE	2
121	XAFZZ	15434	3034412	...PACKING,PREFORMED	1
122	XAFZZ	15434	3033740	...VALVE,CHECK	1
123	XAFZZ	15434	70791	...SCREW,CAP,SOCKET HE	4
124	XAFZZ	15434	110855	... .GASKET	1
125	XAFZZ	15434	119363	...GEAR,SPUR	2
126	XAFZZ	15434	175864	...SHAFT,IDLER,GEAR PU	1
127	XAFZZ	15434	3050624	...VALVE,REGULATING,FL	1
128	XAFZZ	15434	3029857	...PIN,STRAIGHT,HEADLE	2
129	XAFZZ	15434	3002110	...HOUSING,DRIVE ASSEM	1
130	XAFZZ	15434	212607	...SHAFT,TACHOMETER DR	1
131	XAFZZ	15434	212603	...SEAL	1
132	XAFZZ	15434	3004724	...SPACER	1
133	XAFZZ	15434	212609	...BEARING,SLEEVE	1
134	XAFZZ	15434	212610	...GEAR,HELICAL	1
135	XAFZZ	15434	3054292	...COVER,FRONT	1
136	XAFZZ	15434	3053805	...GASKET	1
137	XAFZZ	15434	3045173	...SEAL,OIL	2
138	XAFZZ	15434	212602	...GEAR,HELICAL	1
139	XAFZZ	15434	212613	...COUPLING HALF,SHAFT	1
140	XAFZZ	15434	146160	...WASHER,FLAT	1
141	XAFZZ	15434	S-110	...SCREW,CAP,HEXAGON H	1
142	XAFZZ	15434	3017051	...SCREW,CAP,HEXAGON H	14
143	XAFZZ	15434	118226	...SCREW	1
144	XAFZZ	15434	S-607	...WASHER,LOCK	1
145	XAFZZ	96906	MS27183-42	...WASHER,FLAT	1
146	XAFZZ	15434	163944	...BUSHING,SLEEVE	2
147	XAFZZ	15434	211636	...GEAR,SPUR	2
148	XAFZZ	15434	3024991	...WEIGHT,LOWER,ASSEMB	1
149	XAFZZ	15434	146437	...WEIGHT,LINKAGE,GOVE	2

(1) ITEM NO	(2) SMR CODE	(3) FSCM	(4) PART NUMBER	(5) DESCRIPTION AND USABLE ON CODES(UOC)	(6) QTY
150	XAFZZ	15434	143854	...SPRING,HELICAL,COMP	1
151	XAFZZ	15434	144179	...WASHER,FLAT	7
152	XAFZZ	15434	144178	...PIN,SHOULDER,HEADLE	1
153	XAFZZ	15434	211635	...PIN	4
154	XAFZZ	15434	3006550	...CARRIER	2
155	XAFZZ	15434	211633	...SHAFT	2
156	XAFZZ	15434	212601	...SHAFT,SHOULDERED	1
157	XAFZZ	15434	S-16052	...BEARING,BALL,ANNULA	1
158	XAFZZ	15434	212604	...RING,RETAINING	1
159	XAFZZ	15434	212605	...GEAR,SPUR	1
160	XAFZZ	15434	212639	...COUPLING,SHAFT,RIGI	1
161	XAFZZ	15434	200998	...GASKET	1
162	XAFZZ	15434	212668	...KEY,MACHINE	1
163	XAFZZ	15434	135169	...RING,RETAINING	1
164	XAFZZ	15434	201745	...WASHER,FLAT	1
165	XAFZZ	15434	201008	...SHAFT,IDLER	1
166	XAFZZ	15434	201010	...BEARING,SLEEVE	1
167	XAFZZ	15434	113244	...GEAR,SPUR	1
168	XAFZZ	15434	163826	...WEIGHT,GOVERNOR	2
169	XAFZZ	15434	3024989	...WEIGHT,UPPER,ASSEMB	1
170	XAFZZ	15434	S-188-C	...SCREW,CAP,HEXAGON H	1
171	XAFZZ	15434	140418	...PLUNGER	1
172	XAFZZ	15434	3032014	...SPRING,HELICAL,COMP	1
173	XAFZZ	15434	70715	...WASHER,FLAT	1
174	XAFZZ	15434	3036474	...SEAT,HELICAL COMPRE	1
175	XAFZZ	15434	3018767	...SPRING,HELICAL,COMP	1
176	XAFZZ	15434	70717	...SPACER,RING (0.020)	1
177	XAFZZ	15434	70717-A	...SHIM (0.010)	1
178	XAFZZ	15434	70717-B	...SHIM (0.005)	1
179	XAFZZ	15434	189800	...SHIM (0.007)	1
180	XAFZZ	15434	203346	...SPACER,SLEEVE	1
181	XAFZZ	15434	70716	...SETSCREW	1
182	XAFZZ	15434	70705	...GASKET	2
183	XAFZZ	15434	44678	...COVER,SPRING PACK	1
184	XAFZZ	15434	3017052	...SCREW,CAP,HEXAGON H	4
185	XAFZZ	15434	3003156	...SEAL,SPECIAL	2
186	XAFZZ	15434	3025459	...PLUG,COVER	1
187	XAFZZ	15434	3016021	...HOUSING,FUEL PUMP	1
188	XAFZZ	15434	109917	...SETSCREW	2
189	XAFZZ	15434	112408	...WASHER, FLAT	4
190	XAFZZ	15434	S-270	....NUT,PLAIN,HEXAGON	2
191	XAFZZ	15434	70415	...PACKING,PREFORMED	2
192	XAFZZ	15434	70813	...SETSCREW	1
193	XAFZZ	15434	3010941	...BUSHING,SLEEVE	2
194	XAFZZ	15434	70834	...STOP,THROTTLE LEVER	1
195	XAFZZ	15434	3010942	...SHAFT,STRAIGHT	1
196	XAFZZ	15434	3010945	...SEAL	2
197	XAFZZ	15434	70836	...PLUNGER,DETENT	1
198	XAFZZ	15434	70811	...WASHER,FLAT (0.020)	1
199	XAFZZ	15434	70811-A	...SHIM (0.010)	1
200	XAFZZ	15434	70811-B	...SHIM (0.005)	1
201	XAFZZ	15434	70823	...RING,RETAINING	1

(1) ITEM NO	(2) SMR CODE	(3) FSCM	(4) PART NUMBER	(5) DESCRIPTION AND USABLE ON CODES(UOC)	(6) QTY
				GROUP 05 BOW THRUSTER ENGINE	
202	XAFZZ	15434	109686	...SPRING,HELICAL,COMP	1
203	XAFZZ	15434	70798	...SEAT,HELICAL COMPRE.....	1
204	XAFZZ	15434	70778	...SPRING,HELICAL,COMP	1
205	XAFZZ	15434	70820	...PLUNGER,GOVERNOR S P.....	1
206	XAFZZ	15434	151900	...GASKET.....	1
207	XAFZZ	15434	153338	...COVER,ACCESS.....	1
208	XAFZZ	15434	139988	...PACKING,PREFORMED.....	1
209	XAFZZ	15434	202897	...DISK,SOLID,PLAIN	1
210	XAFZZ	15434	100099	...PACKING,PREFORMED.....	1
211	XAFZZ	15434	160514	...SPACER,RING.....	1
212	XAFZZ	15434	153336	...HOUSING,FUEL PUMP	1
213	XAFZZ	15434	S-174-C	...SCREW,CAP,SOCKET HE	2
	PAFZZ	15434	3010242	...GASKET SET (NEEDED FOR COMPLETE REPAIR OF BOW THRUSTER ENGINE FUEL PUMP).....	1

END OF FIGURE

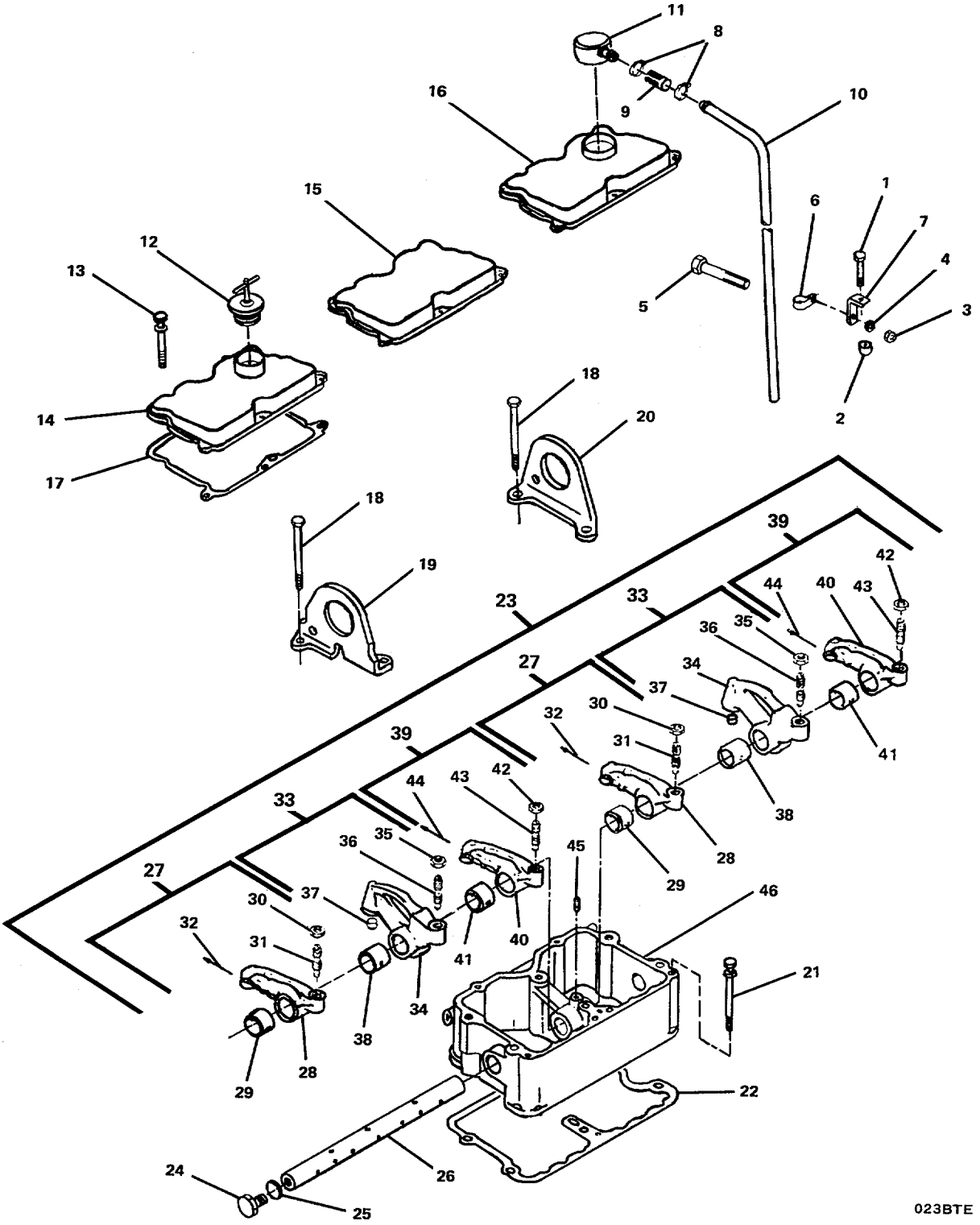

FIGURE 136. Rocker Lever Housing/Cover Group.

(1) ITEM NO	(2) SMR CODE	(3) FSCM	(4) PART NUMBER	(5) DESCRIPTION AND USABLE ON CODES(UOC)	(6) QTY
				GROUP 05 BOW THRUSTER ENGINE	
				FIG. 136 ROCKER LEVER HOUSING/ COVER GROUP	
	XCCFF	15434	03.01/03.01.1-05	.ROCKER LEVER HOUSIN	1
1	XDFZZ	15434	3012472	..SCREW,CAP,HEXAGON H	1
2	XDFZZ	15434	63385	..SPACER,SLEEVE	1
3	XDFZZ	15434	S-205	..NUT	1
4	XDFZZ	96906	MS35338-8	..WASHER,LOCK	1
5	XDFZZ	15434	69793	..BOLT,MACHINE	1
6	XDFZZ	15434	68425	..CLAMP,LOOP	1
7	XDFZZ	15434	111670	..SUPPORT,OIL TUBE	1
8	XDFZZ	15434	3008596	..CLAMP,HOSE	2
9	PAFZZ	28835	2CA647	..HOSE,NONMETALLIC	1
10	XDFZZ	15434	142486	..TUBE,BENT,METALLIC	1
11	XDFZZ	15434	255180	..BREATHER	1
12	XDFZZ	15434	107981	..CAP,FILLER OPENING	1
13	XDFZZ	15434	3038076	..SCREW,ASSEMBLED WAS	10
14	XDFZZ	15434	3006349	..COVER, ENGINE POPPE	1
15	XDFZZ	15434	3006183	..COVER, ENGINE POPPE	1
16	XDFZZ	15434	3006358	..COVER,ENGINE POPPET	1
17	PAFZZ	15434	3054841	..GASKET (VALVE COVER) PART OF KIT P/N 3801330	3
18	XDFZZ	15434	S-176	..SCREW,CAP,HEXAGON H	4
19	XDFZZ	15434	170226	..BRACKET,ENGINE LIFT	1
20	XDFZZ	15434	3001726	..BRACKET,ENGINE,LIFT	1
21	XDFZZ	15434	3010589	..SCREW,ASSEMBLED WAS	18
22	PAFZZ	15434	3017750	..GASKET (ROCKER LEVER HOUSING) PART OF KIT P/N 3801330	3
23	PBFFZ	15434	3044788	..ROCKER ARM,ENGINE H	3
24	XDFZZ	15434	3038903	...PLUG,MACHINE THREAD	6
25	PAFZZ	15434	3046364	...PACKING,PREFORMED	6
26	XDFZZ	15434	3038904	...SHAFT,STRAIGHT	3
27	PAFFZ	15434	BM-95162	...ROCKER ARM,ENGINE P	6
28	XAFZZ	15434	169705	....ROCKER ARM,ENGINE P	6
29	XAFZZ	15434	140330	....BUSHING,SLEEVE	6
30	PAFZZ	96906	MS51968-14	....NUT,PLAIN,HEXAGON	6
31	PAFZZ	15434	168306	....SETSCREW	6
32	XAFZZ	15434	208084	.....RIVET,BLIND	6
33	PAFFZ	15434	AR-2308	...LEVER,INJECTOR,FUEL	6
34	XAFZZ	15434	218152	....LEVER,INJECTOR,ROCK	6
35	PAFZZ	96906	MS51968-14	....NUT,PLAIN,HEXAGON	6
36	PAFZZ	15434	168306	....SETSCREW	6
37	XAFZZ	15434	194037	....SEAT,BALL SOCKET	6
38	XAFZZ	15434	218153	....BUSHING,SLEEVE	6
39	PAFFF	15434	BM-95161	...ROCKER ARM,ENGINE P	6
40	XAFZZ	15434	169704	....ROCKER,ENGINE POPPE	6
41	XAFZZ	15434	140330	....BUSHING,SLEEVE	6
42	PAFZZ	96906	MS51968-14	....NUT,PLAIN,HEXAGON	6
43	PAFZZ	15434	168306	....SETSCREW	6
44	XAFZZ	15434	208084	....RIVET,BLIND	6

(1) ITEM NO	(2) SMR CODE	(3) FSCM	(4) PART NUMBER	(5) DESCRIPTION AND USABLE ON CODES(UOC)	(6) QTY
45	XDFZZ	15434	168319	...SETSCREW.....	3
46	XAFZZ	15434	3044787	...HOUSING,ROCKER LEVE.....	3

END OF FIGURE

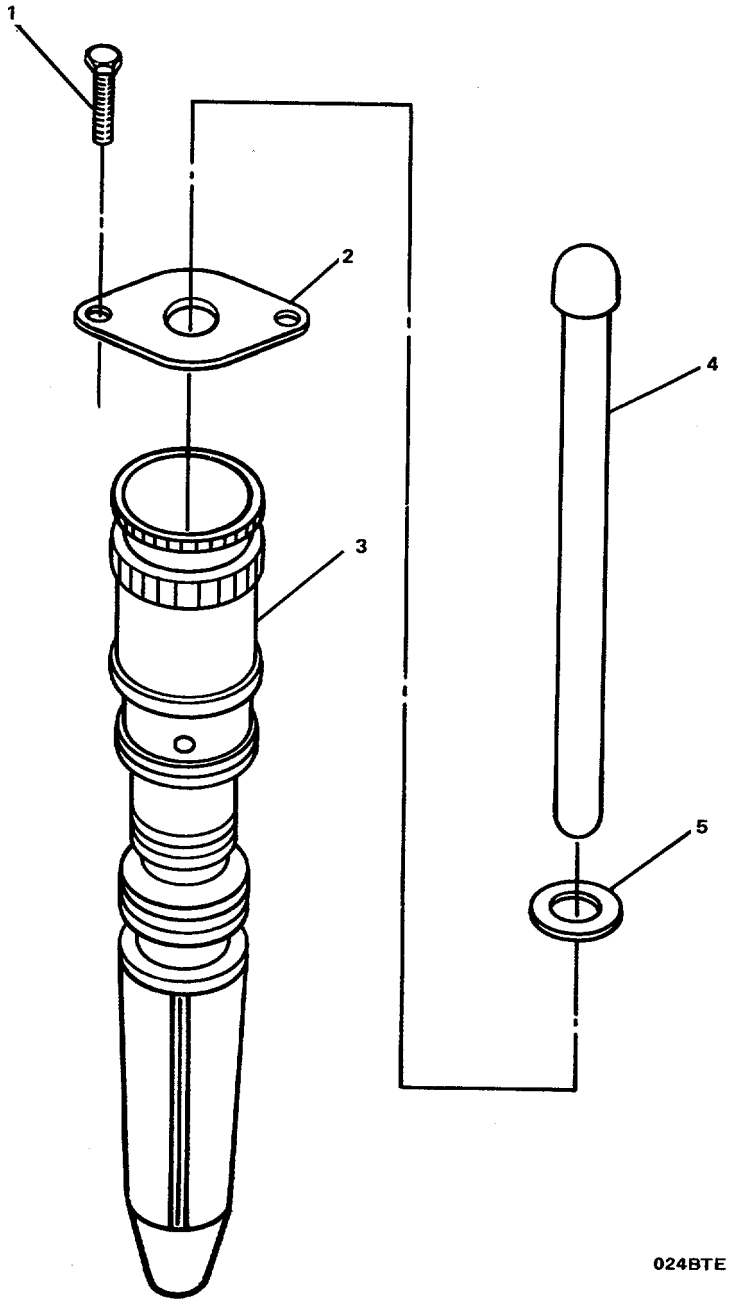

FIGURE 137. Injector Group.

(1) ITEM NO	(2) SMR CODE	(3) FSCM	(4) PART NUMBER	(5) DESCRIPTION AND USABLE ON CODES(UOC)	(6) QTY
				GROUP 05 BOW THRUSTER ENGINE	
				FIG. 137 INJECTOR GROUP	
	XCCOO	15434	06.01-05	.INJECTOR GROUP	1
1	XDCZZ	15434	3028279	..SCREW,CAP,HEXAGON H.....	12
2	XDCZZ	15434	3031137	..CLAMP,INJECTOR MOUN.....	6
3	PACZZ	15434	3054218	..NOZZLE,FUEL INJECTI.....	6
4	PACZZ	15434	191916	..PLUNGER,DETENT.....	6
5	PACZZ	15434	180626	..WASHER,LOCK.....	6

END OF FIGURE

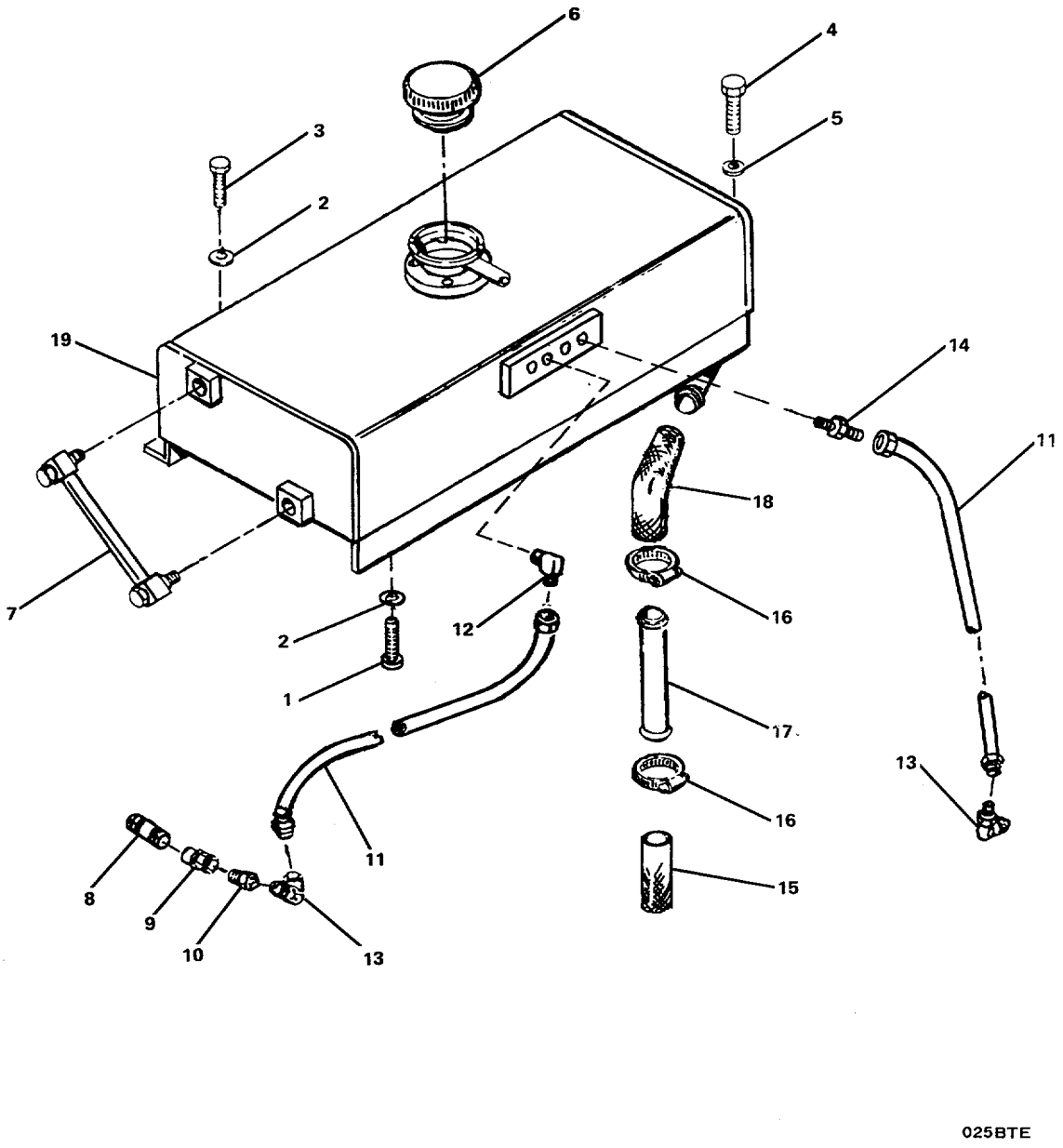

FIGURE 138. Expansion Tank Group.

(1) ITEM NO	(2) SMR CODE	(3) FSCM	(4) PART NUMBER	(5) DESCRIPTION AND USABLE ON CODES(UOC)	(6) QTY
				GROUP 05 BOW THRUSTER ENGINE	
				FIG. 138 EXPANSION TANK GROUP	
	XCOOO	15434	08.12-05	.EXPANSION TANK GROU.....	1
1	XDOZZ	15434	S-103-D	..SCREW,CAP,HEXAGON H.....	2
2	XDOZZ	15434	108330	..WASHER,FLAT.....	4
3	XDOZZ	15434	S-109	..SCREW,CAP,HEXAGON H.....	2
4	XDOZZ	15434	S-181-C	..SCREW,CAP,HEXAGON H.....	2
5	PAOZZ	15434	7274	..GASKET.....	2
6	XDOZZ	15434	119665	..CAP,FILLER OPENING.....	1
7	PAOZZ	15434	3008837	..GAGE,PRESSURE,DIAL.....	1
8	XDOZZ	15434	S-945	..NIPPLE,PIPE	1
9	XDOZZ	15434	S-1059	..COUPLING,PIPE.....	1
10	XDOZZ	15434	S-955	..BUSHING,PIPE.....	1
11	PAOZZ	15434	AS40120MS	..HOSE ASSEMBLY,NONME	2
12	XDOZZ	15434	68139	..ELBOW,PIPE TO TUBE.....	1
13	XDOZZ	15434	69318	..ELBOW,PIPE.....	2
14	XDOZZ	96906	MS39158-3	..ADAPTER,STRAIGHT,PI	1
15	PAOZZ	15434	200517	..HOSE,NONMETALLIC	1
16	XDOZZ	15434	43828-A	..CLAMP,HOSE.....	4
17	XDOZZ	15434	3013320	..TUBE,EXPANSION	1
18	XDOZZ	15434	170049	..HOSE,PREFORMED.....	1
19	XDOZZ	15434	3010323	..TANK,LIQUID STORAGE.....	1

END OF FIGURE

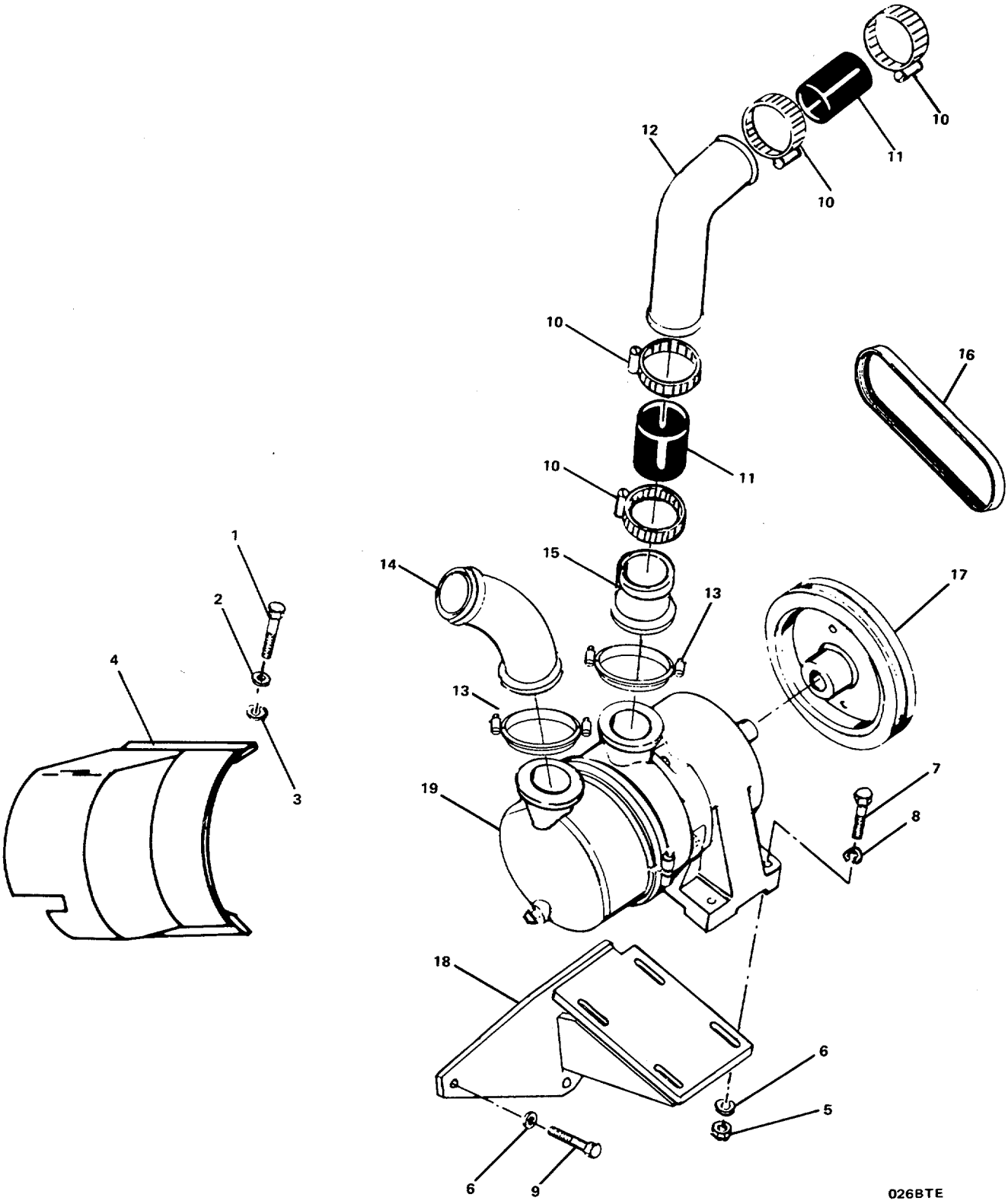

FIGURE 139. Seawater Pump/Belt Guard Group.

(1) ITEM NO	(2) SMR CODE	(3) FSCM	(4) PART NUMBER	(5) DESCRIPTION AND USABLE ON CODES(UOC)	(6) QTY
				GROUP 05 BOW THRUSTER ENGINE	
				FIG. 139 SEAWATER PUMP/BELT GUARD GROUP	
	XCOOO	15434	08.11/08.16-05	.SEA WATER PUMP/BELT	1
1	XDOZZ	96906	MS90725-6	..SCREW,CAP,HEXAGON H	4
2	XDOZZ	96906	MS122032	..WASHER,LOCK	4
3	XDOZZ	15434	146159	..WASHER,FLAT	4
4	XDOZZ	15434	3022194	..GUARD,MECHANICAL DR	1
5	XDOZZ	15434	S-223	..NUT,PLAIN,HEXAGON	4
6	XDOZZ	96906	MS35338-8	..WASHER,LOCK	7
7	XDOZZ	15434	108707	..SCREW,CAP,HEXAGON H	4
8	XDOZZ	96906	MS27183-14	..WASHER,FLAT	4
9	XDOZZ	15434	S-109	..SCREW,CAP,HEXAGON H	3
10	XDOZZ	15434	43828-D	..CLAMP,HOSE	4
11	PAOZZ	15434	67185	..HOSE,NONMETALLIC	2
12	XDOZZ	15434	3060827	..TUBE,WATER TRANSFER	1
13	XDOZZ	15434	3060824	..CLAMP,V	2
14	XDOZZ	15434	3060823	..CONNECTION,SEA WATE	1
15	XDOZZ	15434	3060820	..CONNECTION,SEA WATE	1
16	PAOZZ	15434	178691	..BELT,V	1
17	XDOZZ	15434	3010342	..PULLEY,SEA WATER PU	1
18	XDOZZ	15434	3010329	..BRACKET,SEA WATER P	1
19	PBOZZ	15434	3010328	..PUMP,COOLING SYSTEM	1

END OF FIGURE

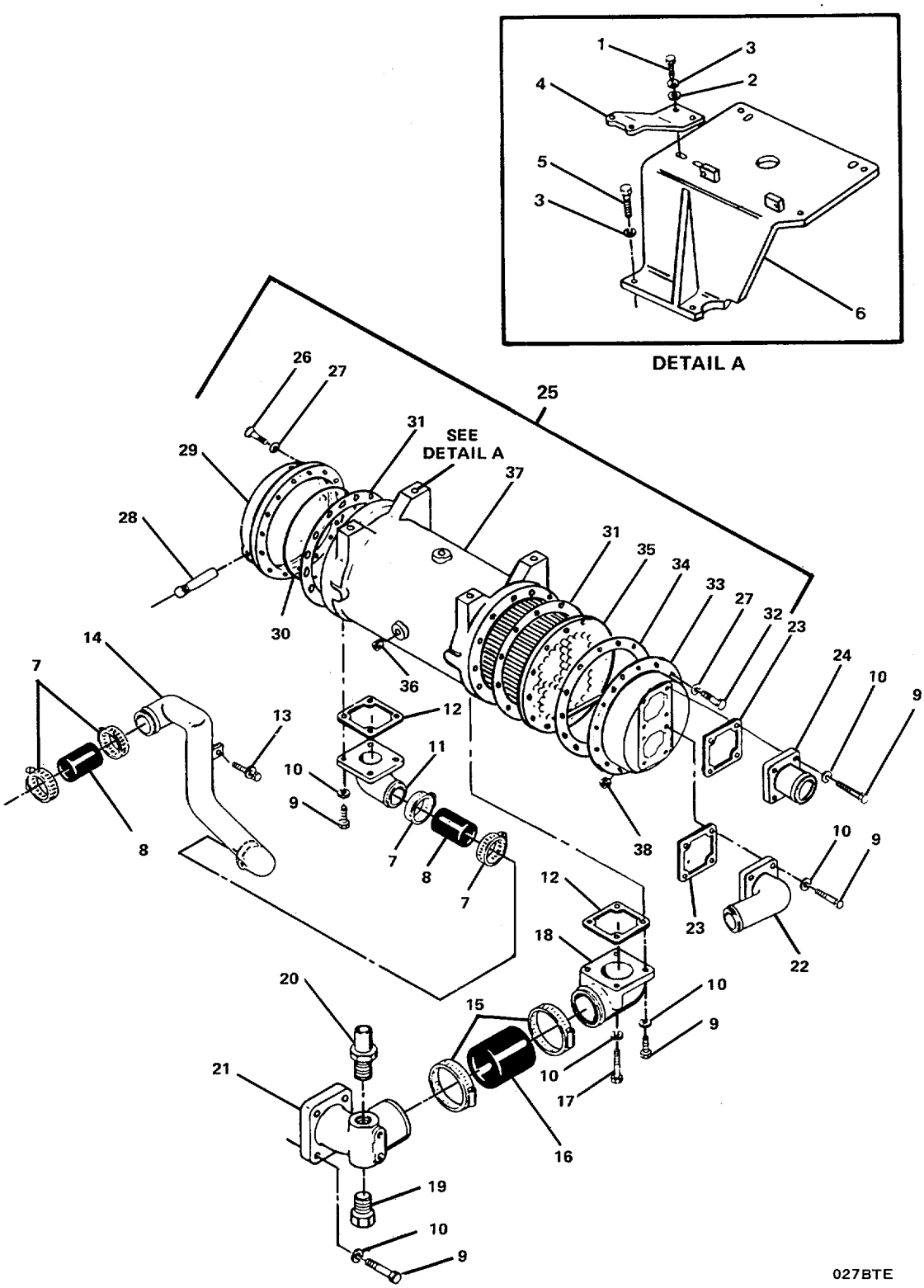

FIGURE 140. Heat Exchanger Group.

(1) ITEM NO	(2) SMR CODE	(3) FSCM	(4) PART NUMBER	(5) DESCRIPTION AND USABLE ON CODES(UOC)	(6) QTY
				GROUP 05 BOW THRUSTER ENGINE	
				FIG. 140 HEAT EXCHANGER GROUP	
	XCOFF	15434	08.10-05	.HEAT EXCHANGER GROU	1
1	XDOZZ	15434	S-176	..SCREW,CAP,HEXAGON H	4
2	XDOZZ	15434	S-608	..WASHER,LOCK	4
3	XDOZZ	15434	S-670	..WASHER,FLAT	6
4	.XDOZZ	15434	3010325	..BRACE,HEAT EXCHANGE	1
5	XDOZZ	15434	S-193	..SCREW,CAP,HEXAGON H	2
6	XDOZZ	15434	3010324	..BRACE,HEAT EXCHANGE	1
7	XDOZZ	15434	43828-0	..CLAMP,HOSE	4
8	PAOZZ	15434	67185	..HOSE,NONMETALLIC	2
9	XDOZZ	15434	S-172-B	..SCREW,CAP,HEXAGON H	18
10	XDOZZ	96906	MS35338-8	..WASHER,LOCK	16
11	XDOZZ	15434	3010376	..CONNECTION,WATER IN	1
12	PAOZZ	15434	3008832	..GASKET	2
13	XDOZZ	15434	3015283	..SCREW,ASSEMBLED WAS	1
14	XDOZZ	15434	3013305	..TUBE,METALLIC	1
15	XDOZZ	15434	43828-F	..CLAMP,LOOP	2
16	PAOZZ	15434	104296	..HOSE,NONMETALLIC	1
17	XDOZZ	15434	S-199-B	..SCREW,CAP,HEXAGON H	2
18	XDOZZ	15434	3010327	..CONNECTION,OUTLET	1
19	XDOZZ	15434	3008470	..PLUG	1
20	XDOZZ	15434	153408	..ADAPTER,STRAIGHT,PI	1
21	XDOZZ	15434	3010374	..WATER OUTLET,ENGINE	1
22	XDOZZ	15434	3060829	..CONNECTION,WATER OU	1
23	PAOZZ	15434	3055769	..GASKET	2
24	XDOZZ	15434	3060831	..CONNECTION,OUTLET	1
25	XDOFF	15434	3008844	..EXCHANGER,HEAT	1
26	XDOZZ	15434	3050863	...SCREW,CAP,SOCKET HE	12
27	XDFZZ	96906	MS35338-47	...WASHER,LOCK	24
28	PAFZZ	15434	68241	...PLUG, ELECTRODE	6
29	XDFZZ	15434	3011329	...COVER,HEAT EXCHANGE	1
30	PAFZZ	15434	3011337	...PACKING,PREFORMED	1
31	PAFZZ	15434	3011325	...GASKET	2
32	XDFZZ	15434	3050862	...SCREW,CAP,SOCKET HE	12
33	XDOZZ	15434	3011324	...COVER,HEAT EXCHANGE	1
34	PAFZZ	15434	3011332	...GASKET	1
35	PBFZZ	15434	3011327	...CORE ASSEMBLY,FLUID	1
36	XDFZZ	15434	S-910-B	...PLUG,PIPE	1
37	XDFZZ	15434	3011323	...HOUSING,HEAT EXCHAN	1
38	XDFZZ	15434	S-961-E	...PLUG,PIPE	1

END OF FIGURE

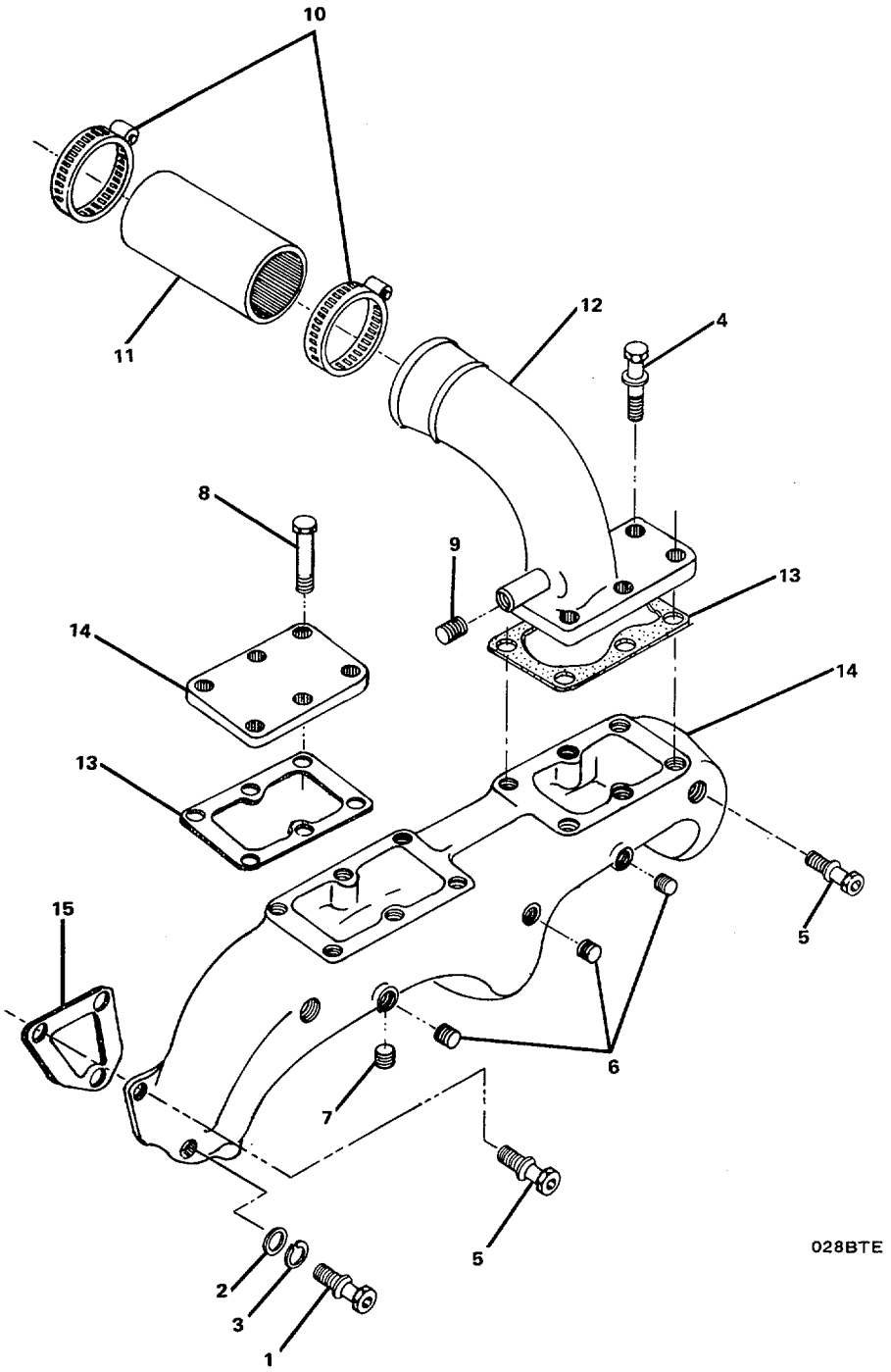

FIGURE 141. Air Intake Manifold Group.

(1) ITEM NO	(2) SMR CODE	(3) FSCM	(4) PART NUMBER	(5) DESCRIPTION AND USABLE ON CODES(UOC)	(6) QTY
				GROUP 05 BOW THRUSTER ENGINE	
				FIG. 141 AIR INTAKE MANIFOLD GROUP	
	XCOOO	15434	10.01-05	.AIR INTAKE MANIFOLD	1
1	XDOZZ	15434	69047-A	..SCREW,CAP,SOCKET HE	1
2	XDOZZ	15434	63842	..WASHER,FLAT.....	1
3	XDOZZ	96906	MS35338-8	..WASHER,LOCK.....	1
4	XDOZZ	15434	3011715	..SCREW.....	12
5	XDOZZ	15434	3011716	..SCREW,ASSEMBLED WAS	2
6	XDOZZ	15434	3008466	..PLUG,PIPE	3
7	XDOZZ	15434	3008470	..PLUG	1
8	XDOZZ	15434	3010595	..SCREW,MACHINE.....	6
9	XDOZZ	15434	70295	..PLUG,PIPE	1
10	XDOZZ	15434	208326	..CLAMP,HOSE.	2
11	PAOZZ	15434	3020996	..HOSE,NONMETALLIC	1
12	XDOZZ	15434	3026529	..CONNECTION,AIR CROS	1
13	PAOZZ	15434	3019227	..GASKET.....	2
14	XDOZZ	15434	141761	..MANIFOLD,INTAKE	1
15	PAOZZ	15434	3008591	..GASKET (INTAKE MANIFOLD) PART OF KIT P/N 3801330.....	3

END OF FIGURE

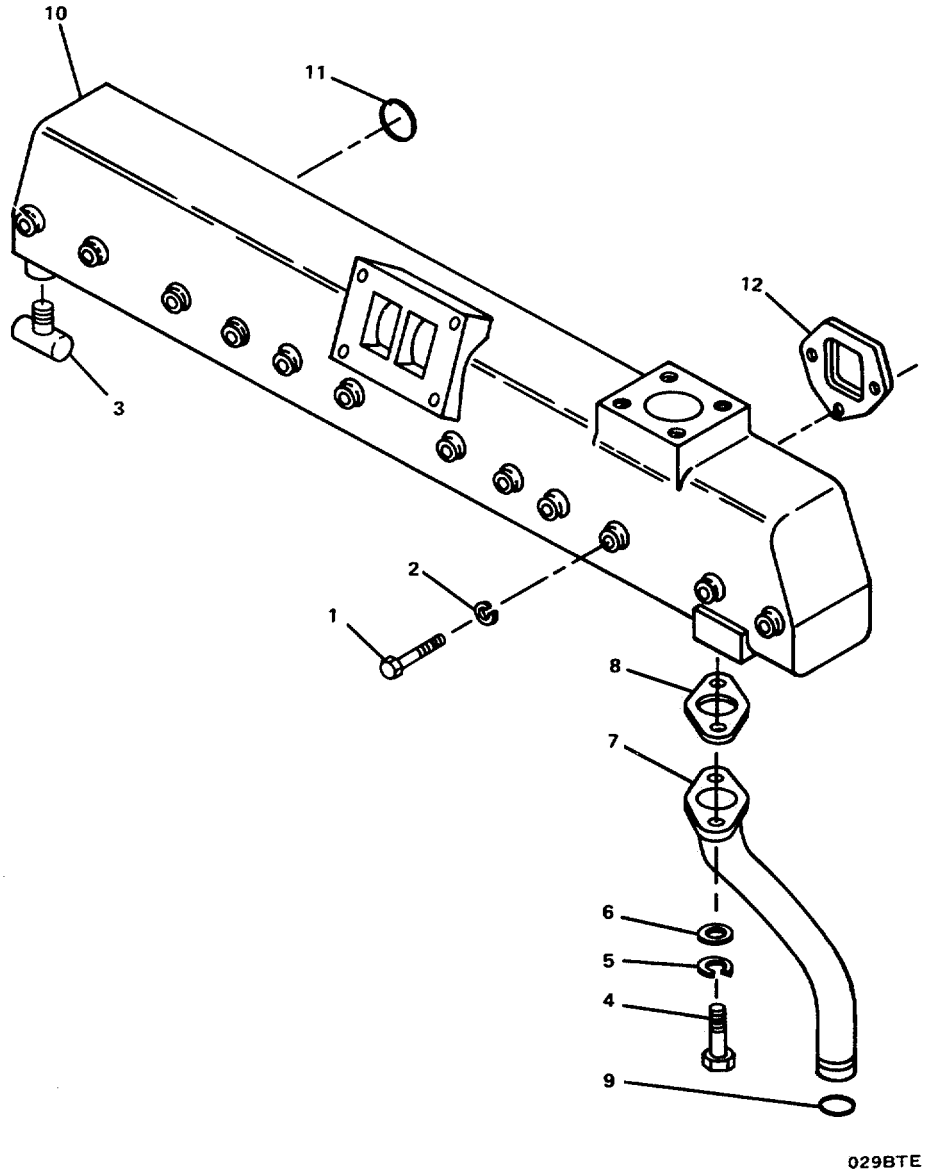

FIGURE 142. Exhaust Manifold Group.

(1) ITEM NO	(2) SMR CODE	(3) FSCM	(4) PART NUMBER	(5) DESCRIPTION AND USABLE ON CODES(UOC)	(6) QTY
				GROUP 05 BOW THRUSTER ENGINE	
				FIG. 142 EXHAUST MANIFOLD GROUP	
	XCCOO	15434	11.01-05	EXHAUST MANIFOLD GR.....	1
1	XDCZZ	15434	137890	SCREW, CAP, HEXAGON H.....	12
2	XDCZZ	96906	MS35338-47	WASHER, LOCK.....	12
3	XDCZZ	15434	S-923-E	COCK, DRAIN.....	1
4	XDCZZ	15434	S-109	SCREW, CAP, HEXAGON H.....	2
5	XDCZZ	96906	MS35338-8	WASHER, LOCK.....	2
6	XDCZZ	96906	MS27183-14	WASHER, FLAT.....	2
7	XDCZZ	15434	3009459	CONNECTION, WATER TR.....	1
8	XDCZZ	15434	3029032	GASKET	1
9	PACZZ	15434	212161	PACKING, PREFORMED PART OF KIT P/N 3801330	1
10	XDCZZ	15434	3008590	MANIFOLD, EXHUAST	1
11	PACZZ	15434	178937	PACKING, PREFORMED.....	6
12	PACZZ	15434	3020943	GASKET(EXHAUST MANIFOLD) PART OF ..... KIT P/N 3801330	6

END OF FIGURE

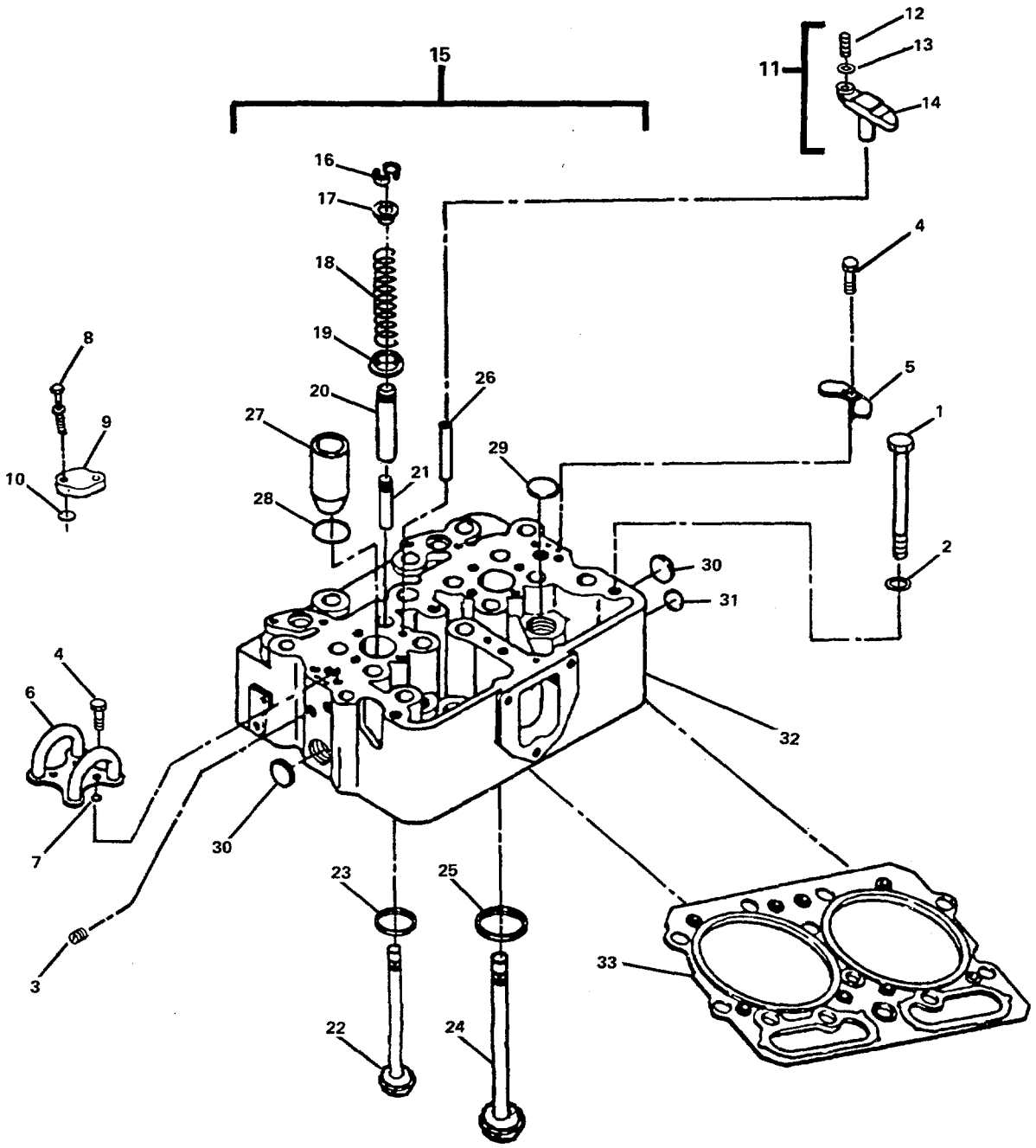

Figure 143. Cylinder Head Group.

(1) ITEM NO	(2) SMR CODE	(3) FSCM	(4) PART NUMBER	(5) DESCRIPTION AND USABLE ON CODES(UOC)	(6) QTY
				GROUP 05 BOW THRUSTER ENGINE	
				FIG. 143 CYLINDER HEAD GROUP	
	XCCHH	15434	02.01-05	.CYLINDER HEAD GROUP	1
1	XDCZZ	15434	3013623	..SCREW, CAP, HEXAGON H	36
2	XDCZZ	15434	69699	..WASHER, FLAT	36
3	XDHZZ	15434	S-911-B	..PLUG, PIPE	10
4	XDHZZ	15434	70772	..SCREW, ASSEMBLED WAS	12
5	XDHZZ	15434	135308	..PLATE, FUEL CROSSOVE	2
6	XDHZZ	15434	147100	..CROSSOVER, FUEL	2
7	PAHZZ	15434	131026	..PACKING, PREFORMED PART OF KIT P/N 3801330	12
8	XDHZZ	15434	3012470	..SCREW, ASSEMBLED WAS	12
9	XDHZZ	15434	3009461	..PLATE, COVER	6
10	PAHZZ	15434	3024709	..GASKET PART OF KIT P/N 3801330	6
11	PAHHZ	15434	3030038	..VALVE, CROSSHEAD ASS	12
12	XDHZZ	15434	147389	...SETSCREW	12
13	XDHZZ	15434	203131	...NUT, CROSS HD	12
14	XAHZZ	15434	3028293	...CROSSHEAD, VALVE	12
15	XDCHD	15434	3041993	..CYLINDER HEAD, DIESE	3
16	PAHZZ	15434	127554	...HALF-COLLET	48
17	PAHZZ	15434	170296	...SEAT, HELICAL COMPRE	24
18	PAHZZ	15434	211999	...SPRING, HELICAL, COMP	24
19	PAHZZ	15434	3202144	...SEAT, HELICAL COMPRE	12
20	PAHZZ	15434	3050369	...GUIDE, VALVE STEM	12
21	PAHZZ	15434	3006456	...GUIDE, VALVE STEM	12
22	PAHZZ	15434	3040830	...VALVE, POPPET, ENGINE	12
23	PAHZZ	15434	3017759	...SEAT, VALVE	12
24	PAHZZ	15434	135957	...VALVE, POPPET, ENGINE	12
25	PAHZZ	15434	200354	...SEAT, VALVE	12
26	XDHZZ	15434	123558	...PIN, STRAIGHT, HEADLE	12
27	PAHZZ	15434	3011934	...SLEEVE, COOLING, FUEL	6
28	PAHZZ	15434	3007759	...PACKING, PREFORMED	6
29	XDHZZ	15434	213395	...PLUG, EXPANSION	18
30	XDHZZ	15434	216524	...PLUG, EXPANSION	6
31	XDHZZ	15434	213394	...PLUG, EXPANSION	6
32	XAHZZ	15434	3041991	...HEAD, CYLINDER	3
33	PACZZ	15434	3047402	...GASKET (CYLINDER HEAD) PART OF KIT P/N 3801330	3
	PAHZZ	15434	3801330	.GASKET AND SEAL SET (NEEDED FOR COMPLETE REPAIR OF BOWTHRUSTER ENGINE)	1
				GASKET (1) 126-11	
				GASKET (1) 126-14	
				GASKET (1) 128-23	
				GASKET (3) 136-17	
				GASKET (3) 136-22	
				GASKET (3) 141-15	
				GASKET (6) 142-12	
				GASKET (6) 143-10	
				GASKET (3) 143-33	

(1) ITEM NO	(2) SMR CODE	(3) FSCM	(4) PART NUMBER	(5) DESCRIPTION AND USABLE ON CODES(UOC)	(6) QTY
				PACKING,PREFORMED (1) 126-9	
				PACKING,PREFORMED (1) 142-9	
				PACKING,PREFORMED (12) 143-7	
				END OF FIGURE	

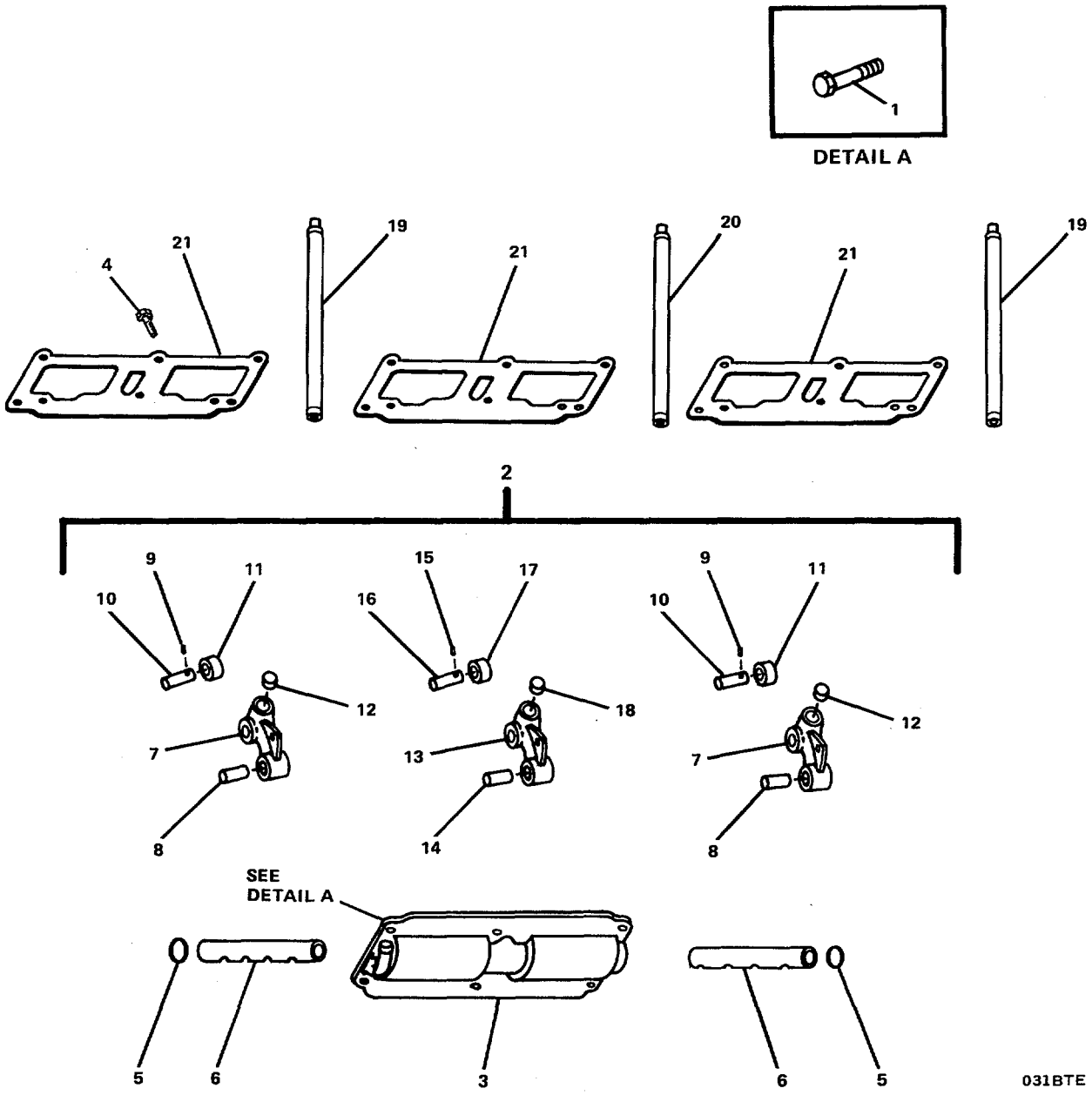

Figure 144. Cam Follower Housing Group

(1) ITEM NO	(2) SMR CODE	(3) FSCM	(4) PART NUMBER	(5) DESCRIPTION AND USABLE ON CODES(UOC)	(6) QTY
				GROUP 05 BOW THRUSTER ENGINE	
				FIG. 144 CAM FOLLOWER HOUSING GROUP	
	XCFHH	15434	04.01-05	.CAM FOLLOWER HOUSIN	1
1	XDFZZ	15434	S-129	..SCREW, CAP, HEXAGON H	18
2	PBFHZ	15434	3036939	..HOUSING ASSEMBLY, CA	3
3	XDHZZ	15434	3016887	...COVER, ENGINE POPPE	3
4	XDHZZ	15434	69736	...SCREW, MACHINE	6
5	XDHZZ	15434	175831	...PLUG, EXPANSION	6
6	XDHZZ	15434	3017031	...SHAFT, SHOULDERED	6
7	PAHHZ	15434	3036935	...ROCKER ARM, ENGINE P	12
8	PAHZZ	15434	118378	....BEARING, SLEEVE	12
9	PAHZZ	15434	118939	....PIN, STRAIGHT, HEADLE	12
10	PAHZZ	15434	3013331	....PIN, STRAIGHT, HEADED	12
11	PAHZZ	15434	3036933	....ROLLER, LINEAR-ROTAR	12
12	PAHZZ	15434	213559	....SOCKET, CAM FOLLOWER	12
13	XDHHZ	15434	3036937	...LEVER, CAM FOLLOWER	6
14	PAHZZ	15434	118377	....BEARING, SLEEVE	6
15	PAHZZ	15434	118939	....PIN, STRAIGHT, HEADLE	6
16	PAHZZ	15434	3013330	....PIN, STRAIGHT, HEADED	6
17	PAHZZ	15434	3036934	....ROLLER, LINEAR-ROTAR	6
18	PAHZZ	15434	213559	....SOCKET, CAM FOLLOWER	6
19	PAHZZ	15434	3046420	..PUSH ROD, INTERNAL	12
20	PAHZZ	15434	3046430	..PUSH ROD, INJECTOR	6
21	PAFZZ	15434	3020000	..GASKET (CAM FOLLOWER) .030 THK PART OF KIT P/N 3801710	3
21	PAFZZ	15434	3020002	..GASKET (CAM FOLLOWER) .017 THK	3
21	PAFZZ	15434	3020003	..GASKET .022 THK	3
	PACZZ	15434	3801710	...PARTS KIT, ENGINE WA (NEEDED FOR COMPLETE REPAIR OF WATER PUMP)	1
				BEARING, BALL, ANNULA (1) 131-21	
				GASKET (3) 144-21	
				PACKING WITH RETAIN (1) 131-32	
				RING, BEARING RETAIN (1) 131-19	

END OF FIGURE

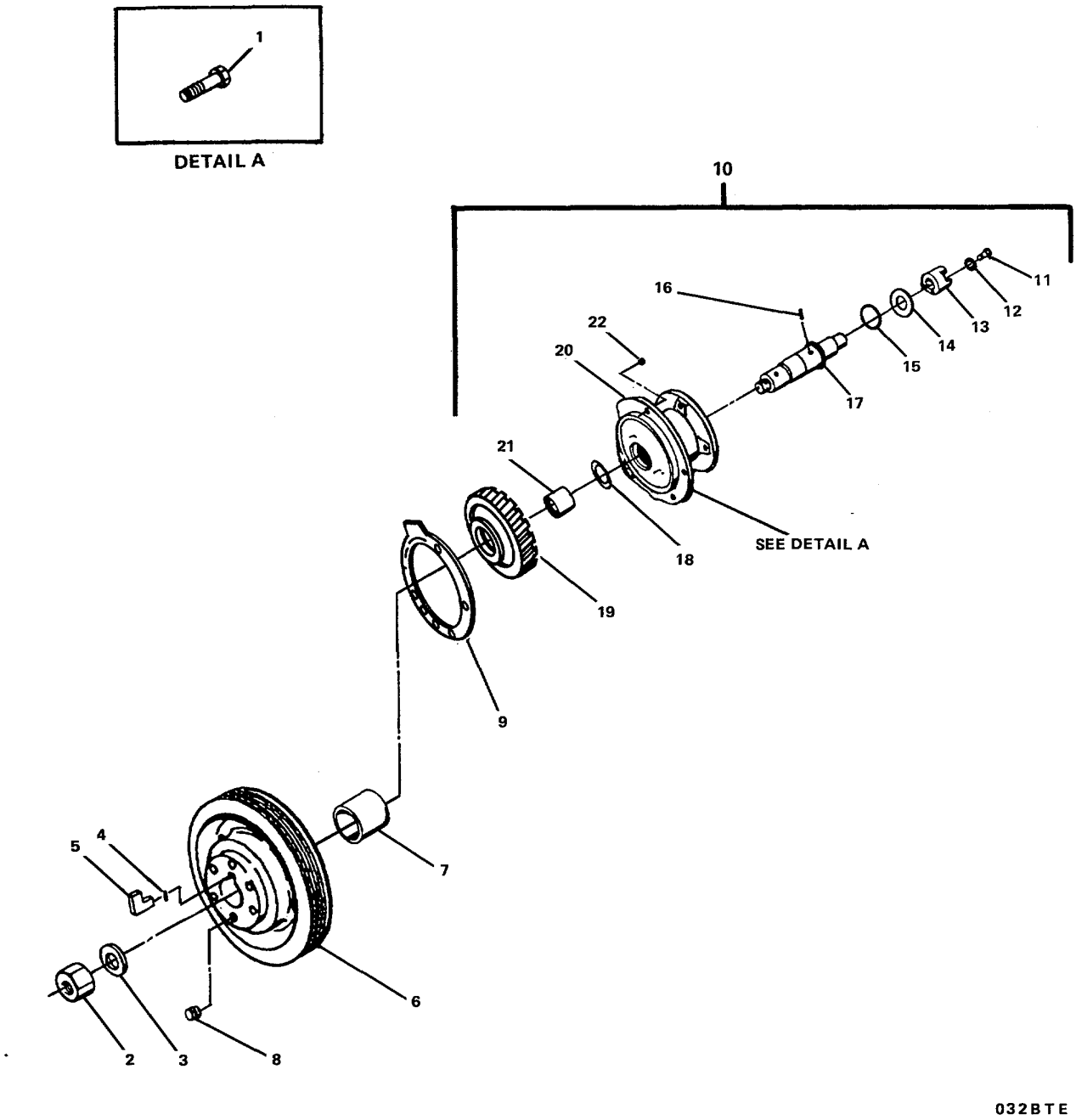

Figure 145. Accessory Drive and Pulley Drive.

(1) ITEM NO	(2) SMR CODE	(3) FSCM	(4) PART NUMBER	(5) DESCRIPTION AND USABLE ON CODES(UOC)	(6) QTY
				GROUP 05 BOW THRUSTER ENGINE	
				FIG. 145 ACCESSORY DRIVE AND PULLEY GROUP	
	XCFFF	15434	09.03-05	.ACCESSORY DRIVE AND.....	1
1	XDFZZ	15434	3010590	..SCREW	5
2	XDFZZ	15434	3012526	..NUT,SELF-LOCKING,HE.....	1
3	XDFZZ	15434	193136	..WASHER,FLAT.....	1
4	XDFZZ	15434	70550	..PIN,PISTON.....	1
5	PAFZZ	15434	3008947	..RUBBER STRIP.....	1
6	XDFZZ	15434	3023473	..PULLEY,FLAT.....	1
7	PAFZZ	15434	190397	..SLEEVE,PULLEY,PUMP.....	1
8	XDFZZ	15434	3013786	..PLUG,PIPE.....	1
9	PAFZZ	15434	200809	..GASKET(ACCESSORY DRIVE SUPPORT).....	1
10	PBFFZ	15434	3005131	..POWER TAKEOFF,TRANS.....	1
11	XDFZZ	15434	129510	...BOLT,SELF-LOCKING.....	1
12	XDFZZ	15434	170664	...WASHER,FLAT.....	1
13	PAFZZ	15434	3000175	...COUPLING,DRIVE,PULL.....	1
14	XDFZZ	15434	3014103	...WASHER,FLAT.....	1
15	PAFZZ	15434	3026557	...BEARING,WASHER,THRU.....	1
16	PAFZZ	15434	3034438	...PIN,STRAIGHT,HEADLE.....	1
17	PAFZZ	15434	3000171	...SHAFT,AIR COMPRESSO.....	1
18	PAFZZ	15434	3026556	...BEARING,WASHER,THRU.....	1
19	PAFZZ	15434	142689	...GEAR,HELICAL.....	1
20	PAFZZ	15434	AR-45728	...DRIVE,CONSTANT SPEE.....	1
21	PAFZZ	15434	116391	...BEARING,SLEEVE.....	1
22	XDFZZ	15434	S-911-B	...PLUG,PIPE.....	1

END OF FIGURE

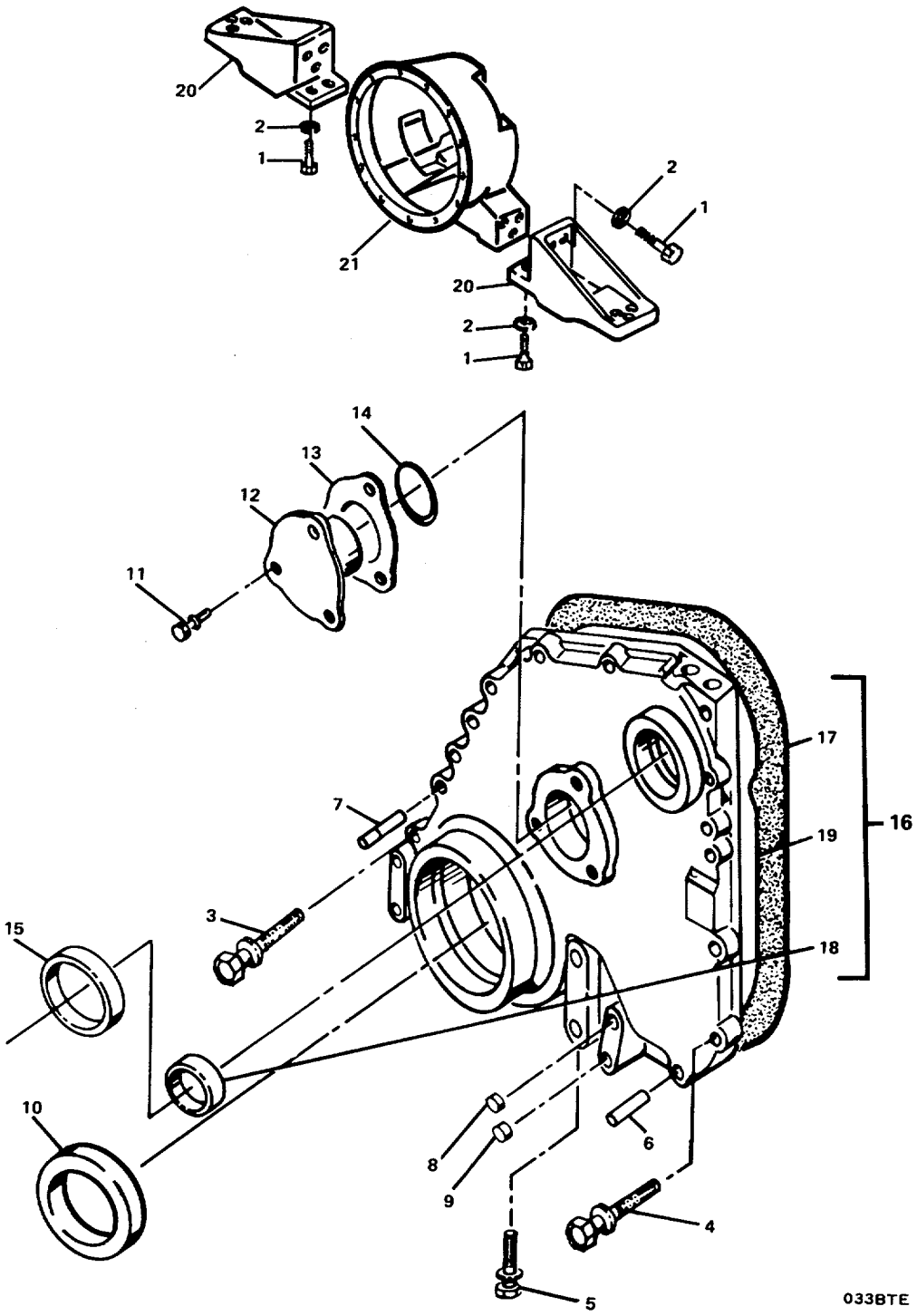

Figure 146. Gear Cover Group

(1) ITEM NO	(2) SMR CODE	(3) FSCM	(4) PART NUMBER	(5) DESCRIPTION AND USABLE ON CODES(UOC)	(6) QTY
				GROUP 05 BOW THRUSTER ENGINE	
				FIG. 146 GEAR COVER GROUP	
	XCFFF	15434	01.09-05	.GEAR COVER GROUP	1
1	XDFZZ	15434	S-127-C	..SCREW, CAP, HEXAGON H	20
2	XDFZZ	96906	MS35338-50	..WASHER, LOCK	20
3	XDFZZ	15434	3011714	..SCREW, ASSEMBLED WAS	13
4	XDFZZ	15434	3011713	..SCREW, CAP, HEXAGON, H	1
5	XDFZZ	15434	3011711	..SCREW, CAP, HEXAGON H	7
6	XDFZZ	15434	60408	..PIN, STRAIGHT, HEADLE	1
7	XDFZZ	15434	70653	..DOWEL, METALL1C	1
8	XDFZZ	15434	S-911-B	..PLUG, PIPE2	2
9	XDFZZ	15434	3013786	..PLUG, PIPE	1
10	PAFZZ	15434	3020183	..SEAL, PLAIN ENCASED	1
11	XDFZZ	15434	3011715	..SCREW	3
12	XDFZZ	15434	3008530	..SUPPORT, CAMSHAFT TH	1
13	PAFZZ	15434	AR-1176	..SHIM, SET	1
14	PAFZZ	15434	215705	..PACKING, PREFORMED	1
15	PAFZZ	15434	3020185	..SEAL	1
16	PBFFF	15434	3036125	..COVER, ACCESS	1
17	XAFZZ	15434	3351627	...COVER, GEAR	1
18	XDFZZ	15434	132770	...BEARING, SLEEVE	1
19	PAFZZ	15434	3021704	..GASKET	1
20	XDFZZ	15434	3010348	..SUPPORT, ENGINE	4
21	XDFZZ	15434	3010372	..HOUSING, POWER TAKEO	1

END OF FIGURE

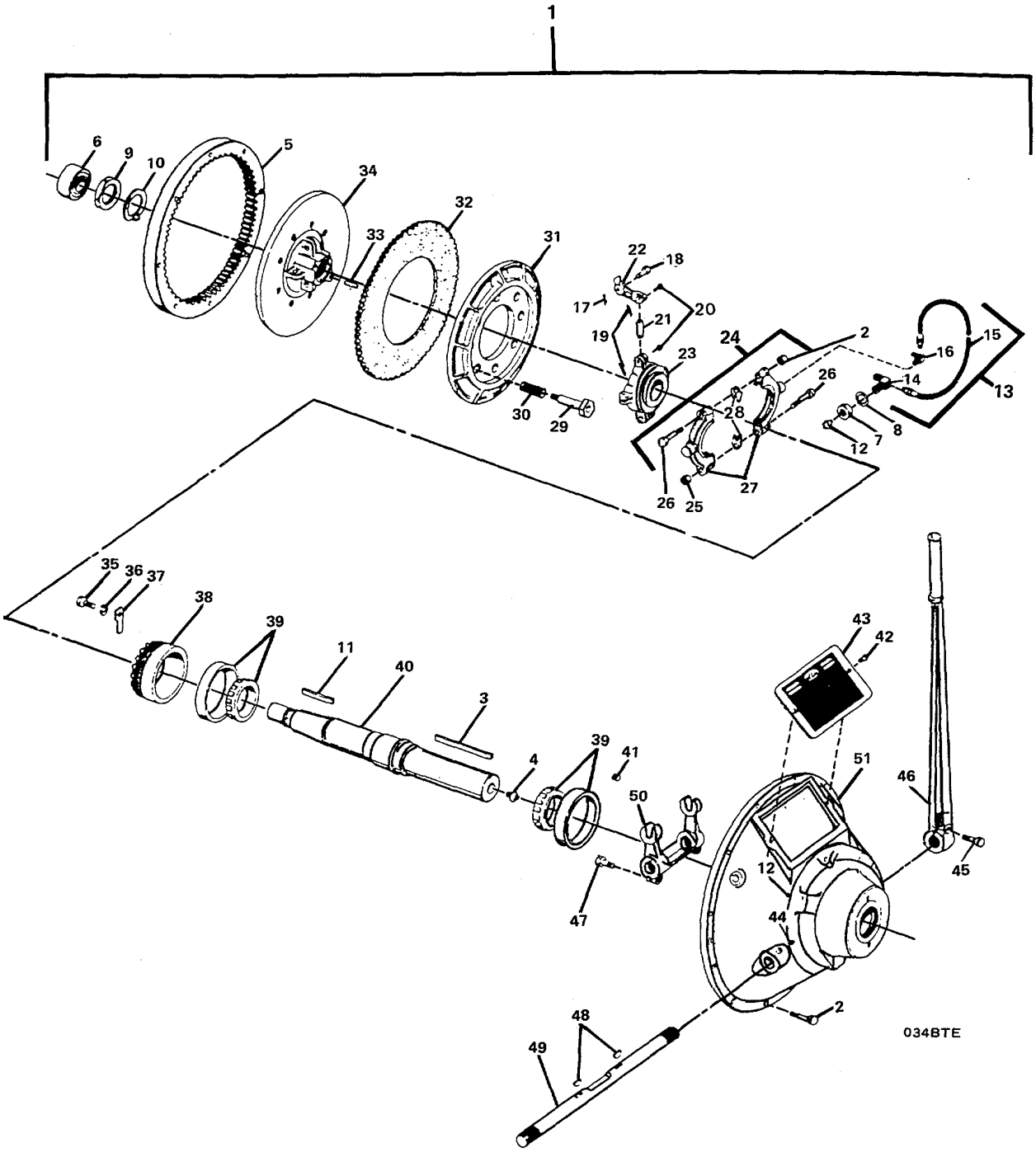

Figure 147. Power Take-Off Assembly.

(1) ITEM NO	(2) SMR CODE	(3) FSCM	(4) PART NUMBER	(5) DESCRIPTION AND USABLE ON CODES(UOC)	(6) QTY
				GROUP 05 BOW THRUSTER ENGINE	
				FIG. 147 POWER TAKE-OFF ASSEMBLY	
1	PBFHH	61208	SL111HP2	.POWER TAKEOFF, ENGIN	1
2	XDFZZ	15434	3010596	..SCREW, ASSEMBLED WAS	12
3	XDHZZ	61208	M2033BJ	..KEY, MACHINE	1
4	XDHZZ	61208	M287	..FITTING, LUBRICATION	1
5	PAHZZ	61208	6931	..GEAR, INTERNAL	1
6	PAHZZ	61208	M224	..BEARING, BALL, ANNULA	1
7	XDHZZ	61208	M2027AN	..NUT, PLAIN, HEXAGON	1
8	XDHZZ	61208	M2046AF	..WASHER, LOCK	1
9	XDHZZ	61208	1146	..NUT, HUB	1
10	XDHZZ	61208	A1588	..WASHER, LOCK	1
11	XDHZZ	61208	M2032Z	..KEY, MACHINE	1
12	XDHZZ	96906	MS15003-1	..FITTING, LUBRICATION	2
13	PAOFZ	61208	A1663	..HOSE ASSEMBLY, NONME	1
14	XDFZZ	61208	M1283	...ELBOW, TUBE	1
15	PAFZZ	61208	M1292A	...HOSE ASSEMBLY, NONME	1
16	XDFZZ	61208	M1284	...ELBOW, PIPE TO TUBE	1
17	XDFZZ	61208	B1535C	..PIN, COTTER	4
18	XDFZZ	61208	B1538C	..PIN, LEVER	4
19	XDFZZ	61208	B1535A	..PIN, COTTER	8
20	XDFZZ	61208	B1536B	..PIN, STRAIGHT, HEADED	8
21	XDFZZ	61208	A2913	..CONNECTING LINK, RIG	4
22	XDFZZ	61208	A3271A	..LEVER, REMOTE CONTRO	4
23	XDFZZ	61208	S567	..SLEEVE, SLIDING	1
24	XDOFF	61208	X117	..COLLAR ASSEMBLY	1
25	XDFZZ	61208	M1930F	...NUT, SELF-LOCKING, HE	2
26	XDFZZ	61208	M2002BB	...SCREW, CAP, HEXAGON H	2
27	XDFZZ	61208	117	...COLLAR	1
28	XDFZZ	61208	120	...SPACER, PLATE	2
29	XDFZZ	61208	A2836	..BOLT, MACHINE	8
30	PAFZZ	61208	A2709N	..SPRING, HELICAL, COMP	8
31	XDFZZ	61208	A6107A	..PLATE, FLOATING	1
32	XDFZZ	61208	6614F	..DISK, CLUTCH	1
33	XDFZZ	61208	A2987N	..PIN, GUIDE	2
34	XDFZZ	61208	9561	..PLATE, HUB AND BACK	1
35	XDFZZ	61208	M2001E	..SCREW	1
36	XDFZZ	61208	M2046L	..WASHER, LOCK	1
37	XDFZZ	61208	1216	..LOCK, BEARING RETAIN	1
38	XDFZZ	61208	B2147	..RETAINER, ROLLER, BEA	1
39	PAFZZ	61208	M207	..BEARING, ROLLER, TAPE RED.	2
40	XDFZZ	61208	B5469A	..SHAFT, CLUTCH	1
41	XDFZZ	61208	M2051B	..PLUG, PIPE	1
42	XDFZZ	61208	M2023F	..SCREW, CAP, HEXAGON H	2
43	XDFZZ	61208	2815AC	..PLATE, INSTRUCTION	1
44	XDFZZ	61208	M503	.FITTING, LUBRICATION	2
45	XDFZZ	61208	M2004R	..SCREW, CAP, HEXAGON H	1
46	XDFZZ	61208	7441A	..LEVER, HAND	1
47	XDFZZ	61208	M2002AG	..SCREW, CAP, HEXAGON H	2
48	XDFZZ	61208	M2022Z	..KEY, WOODRUFF	2

(1) ITEM NO	(2) SMR CODE	(3) FSCM	(4) PART NUMBER	(5) DESCRIPTION AND USABLE ON CODES(UOC)	(6) QTY
49	XDFZZ	61208	1144AL	..SHAFT,STRAIGHT	1
50	XDFZZ	61208	125B	..SHIFTER FORK	1
51	XDFZZ	61208	8247	..HOUSING,CLUTCH	1

END OF FIGURE

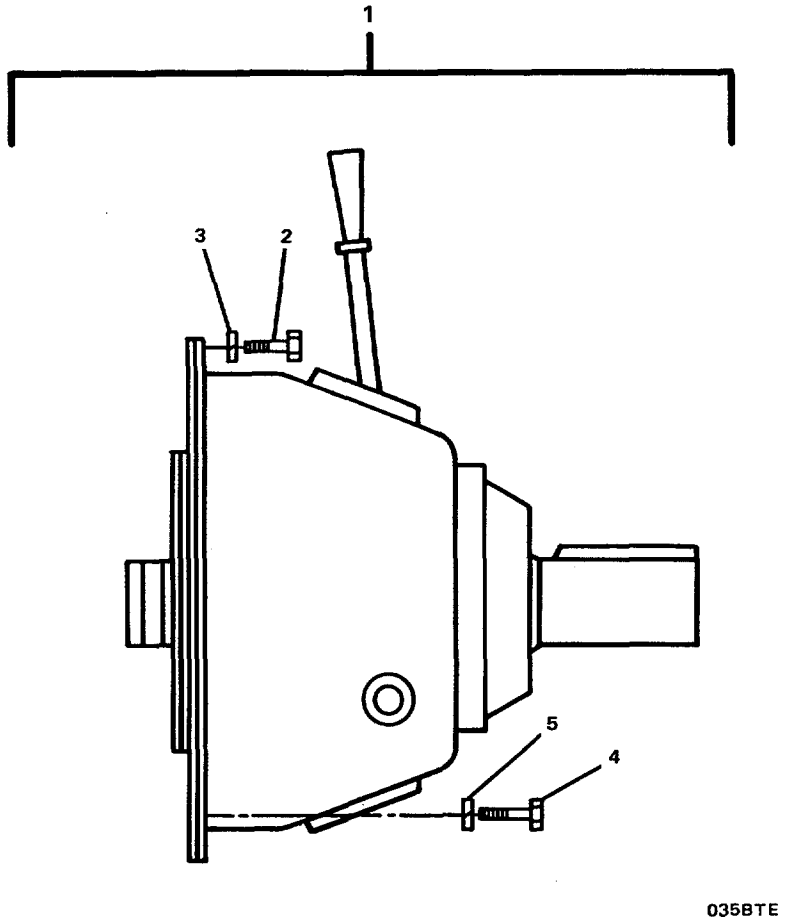

Figure 148. Clutch Assembly-Friction (Sheet 1 of 3).

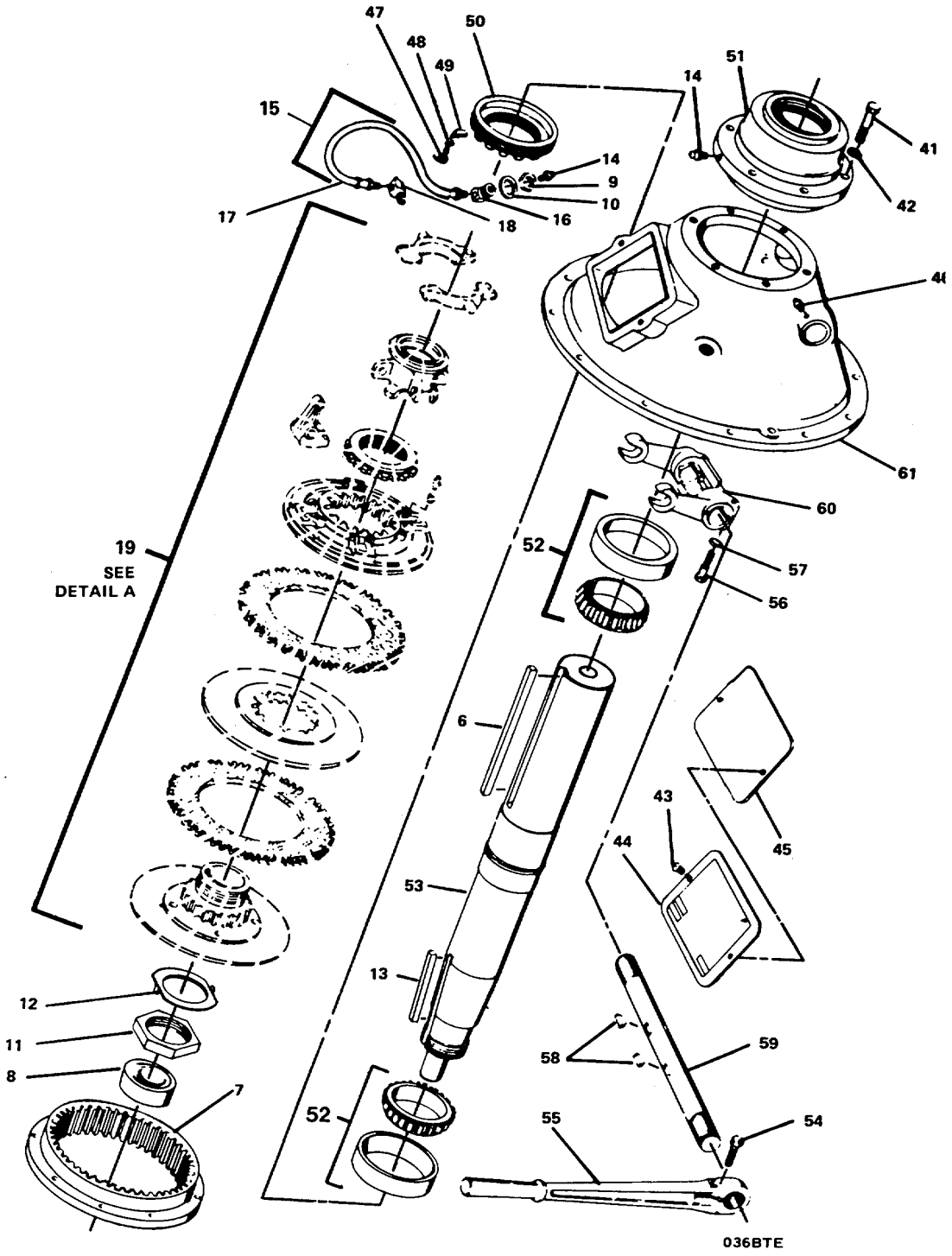

Figure 148. Clutch Assembly-Friction (Sheet 2 of 3).

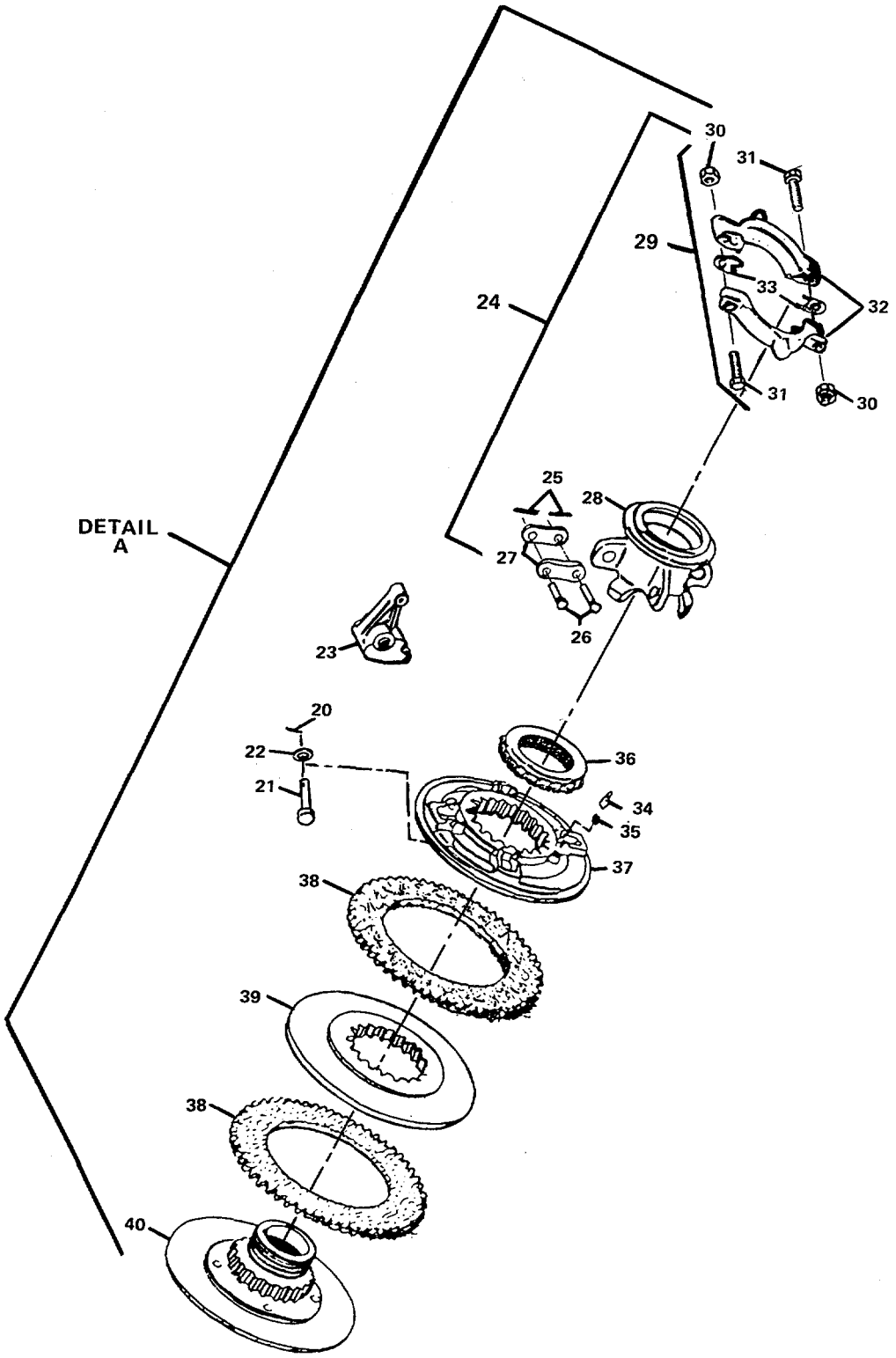

Figure 148. Clutch Assembly-Friction (Sheet 3 of 3).

(1) ITEM NO	(2) SMR CODE	(3) FSCM	(4) PART NUMBER	(5) DESCRIPTION AND USABLE ON CODES(UOC)	(6) QTY
				GROUP 05 BOW THRUSTER ENGINE	
				FIG. 148 CLUTCH ASSEMBLY-FRICTION	
1	PBFHZ	61208	SP214P1	.CLUTCH ASSEMBLY, FRI	1
2	XDFZZ	15434	103009	..SCREW, CAP, HEXAGON H	12
3	XDFZZ	96906	MS35338-47	..WASHER, LOCK	12
4	XDFZZ	15434	S-113	..SCREW, CAP, HEXAGON H	8
5	XDFZZ	15434	S-608	..WASHER, LOCK	8
6	XDHZZ	61208	M2034AL	..KEY, MACHINE	1
7	PAHZZ	61208	5713	..GEAR, INTERNAL	1
8	PAHZZ	21335	W307PP	..BEARING, BALL, ANNULA	1
9	XDHZZ	61208	M2027AN	..NUT, PLAIN, HEXAGON	1
10	XDHZZ	61208	M2046AF	..WASHER, LOCK	1
11	XDHZZ	61208	B1509T	..NUT, HUB, HEXAGON	1
12	XDHZZ	61208	B1511L	..WASHER, LOCK	1
13	XDHZZ	61208	M2035AC	..KEY BLANK	1
14	XDHZZ	96906	MS15003-1	..FITTING, LUBRICATION	2
15	PAOOZ	61208	A1663A	..HOSE ASSEMBLY, NONME	1
16	XDOZZ	61208	M1283	...ELBOW, TUBE	1
17	PAOZZ	61208	M1292B	...HOSE	1
18	XDOZZ	61208	M1284	...ELBOW, PIPE TO TUBE	1
19	PBOFZ	61208	X9586B	..CLUTCH ASSEMBLY, FRI	1
20	XDOZZ	61208	B1535D	...PIN, COTTER	4
21	XDOZZ	61208	B1540A	...PIN, STRAIGHT, HEADED	4
22	XDOZZ	61208	M2115D	...WASHER, SPRING	8
23	XDOZZ	61208	B1284	...LEVER	4
24	PBOFZ	61208	S-598	...SLEEVE, SYNCHRONIZER	1
25	XDOZZ	61208	B1535C	....PIN, COTTER	8
26	XDOZZ	61208	B1538B	....PIN, LEVER LINK	8
27	XDOZZ	61208	119B14	....PLATE, CHAIN LINK	8
28	XDOZZ	61208	A6514	....SLEEVE, SLIDING	1
29	XDOFF	61208	X117B14	....COLLAR, SHAFT, ASSEMB	1
30	XDFZZ	61208	M1930F	.....NUT, SELF-LOCKING, HE	2
31	XDFZZ	61208	M2002BB	.....SCREW, CAP, HEXAGON H	2
32	XDFZZ	61208	117B14	.....COLLAR, SPLIT	1
33	XDFZZ	61208	1293	.....SHIM	2
34	XDFZZ	61208	B2341	...PIN, LOCK	1
35	PAFZZ	61208	A2702BE	...SPRING, ADJUSTING	1
36	XDFZZ	61208	A4241	...RING, ADJUSTING	1
37	XDFZZ	61208	A6512C	...PLATE, FLOATING	1
38	XDFZZ	61208	5499E	...PLATE, DRIVING	2
39	XDFZZ	61208	A6513	...DISK, CLUTCH	1
40	XDFZZ	61208	ZA6519E	...PLATE, HUB AND BACK	1
41	XDFZZ	61208	M2004W	..SCREW, CAP, HEXAGON H	6
42	XDFZZ	61208	M2047AA	..WASHER, LOCK	6
43	XDFZZ	61208	M2023F	..SCREW, CAP, HEXAGON H	4
44	XDFZZ	61208	2815	..PLATE, INSTRUCTION	1
45	XDFZZ	61208	2816	..PLATE, COVER	1
46	XDFZZ	61208	M503	..FITTING, LUBRICATION	2
47	XDFZZ	61208	M2001H	..SCREW, CAP, HEXAGON H	1
48	XDFZZ	61208	M2046L	..WASHER, LOCK	1

(1) ITEM NO	(2) SMR CODE	(3) FSCM	(4) PART NUMBER	(5) DESCRIPTION AND USABLE ON CODES(UOC)	(6) QTY
49	XDFZZ	61208	A1983	..LOCK, RETAINER BEARI	1
50	XDFZZ	61208	A3308B	..RETAINER, BEARING	1
51	XDFZZ	61208	A5195	..CARRIER, BEARING	1
52	PAFZZ	61208	M215	..BEARING, ROLLER, TAPE RED	2
53	XDFZZ	61208	B5027A	..SHAFT, CLUTCH	1
54	XDFZZ	61208	M2004R	..SCREW, CAP, HEXAGON H	1
55	XDFZZ	61208	7441A	..LEVER, HAND	1
56	XDFZZ	61208	M2002AG	..SCREW, CAP, HEXAGON H	2
57	XDFZZ	61208	M2046S	..WASHER, LOCK	2
58	XDFZZ	61208	M2022Z	..KEY, WOODRUFF	2
59	XDFZZ	61208	1094C	..SHAFT, STRAIGHT	1
60	XDFZZ	61208	5091	..SHIFTER FORK	1
61	XDFZZ	61208	8718	..HOUSING, CLUTCH	1

END OF FIGURE

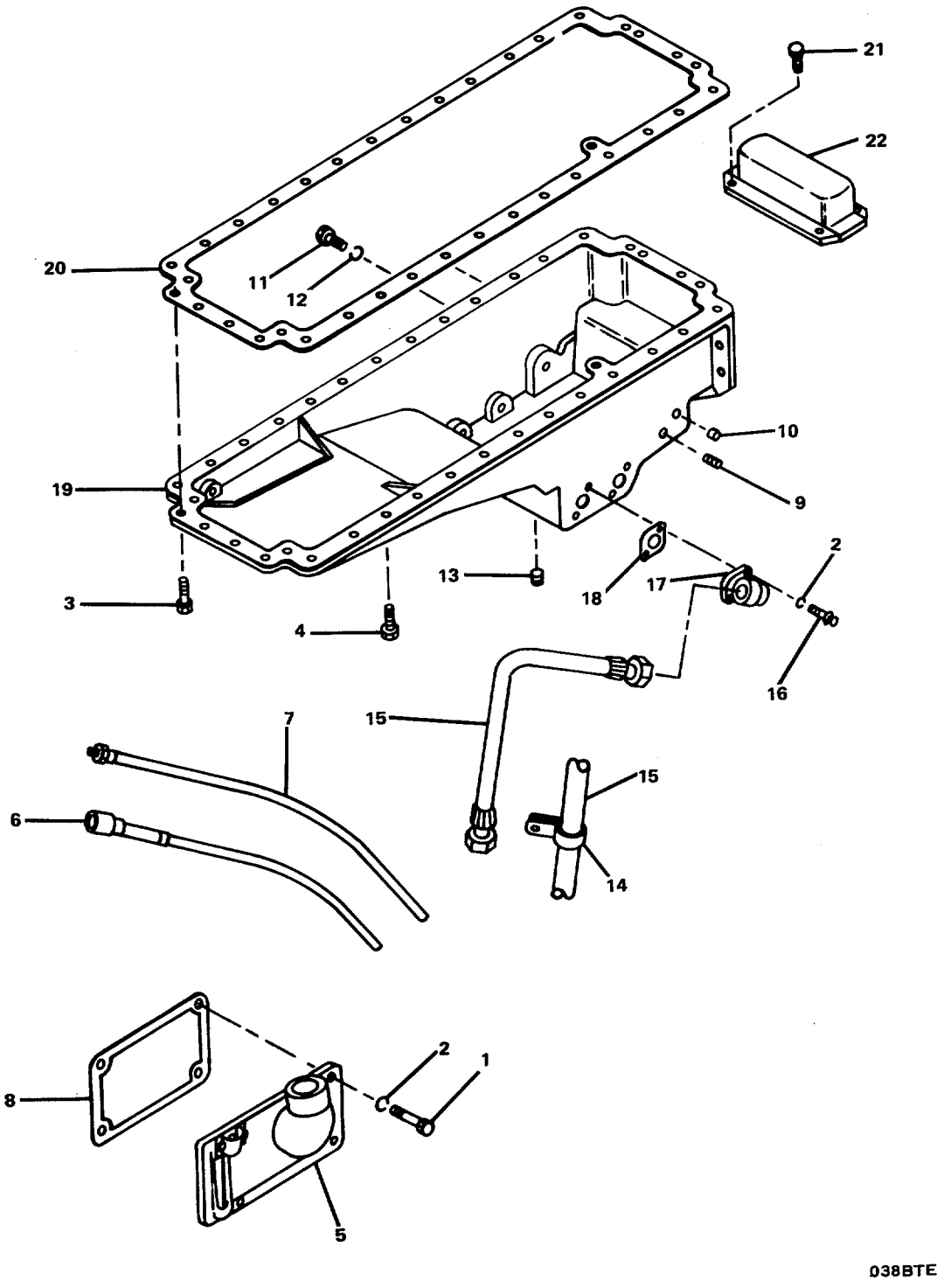

Figure 149. Oil Pan Group.

(1) ITEM NO	(2) SMR CODE	(3) FSCM	(4) PART NUMBER	(5) DESCRIPTION AND USABLE ON CODES(UOC)	(6) QTY
				GROUP 05 BOW THRUSTER ENGINE	
				FIG. 149 OIL PAN GROUP	
	XCOOO	15434	07.01-05	.OIL PAN GROUP	1
1	XDOZZ	15434	3010595	..SCREW, MACHINE	4
2	XDOZZ	96906	MS27183-14	..WASHER, FLAT	4
3	XDOZZ	15434	3017050	..SCREW, CAP, HEXAGON H	4
4	XDOZZ	15434	3008069	..SCREW, CAP, HEXAGON H	28
5	XDOZZ	15434	41044-1	..COVER, ACCESS	1
6	XDOZZ	15434	101814	..TUBE, DIP STICK	1
7	XDOZZ	15434	216484	..GAGE ROD-CAP, LIQUI	1
8	PAOZZ	15434	65274	..GASKET (HAND HOLE)	1
9	XDOZZ	15434	3013786	..PLUG, PIPE	1
10	XDOZZ	15434	3008468	..PLUG, PIPE	2
11	XDOZZ	15434	3055069	..PLUG, MACHINE THREAD	1
12	XDOZZ	15434	67946	..SPACER, RING	1
13	XDOZZ	15434	3008470	..PLUG	2
14	XDOZZ	15434	3016478	..CLAMP, LOOP	1
15	PAOZZ	15434	3017963	..HOSE ASSEMBLY, NONME	2
16	XDOZZ	15434	3012478	..SCREW, ASSEMBLED WAS	2
17	XDOZZ	15434	3013980	..ELBOW, FLANGE TO TUB	1
18	PAOZZ	15434	157551	..GASKET (LUBE OIL PUMP)	1
19	XDOZZ	15434	193631	..OIL PAN	1
20	PAOZZ	15434	3032861	..GASKET	1
21	XDOZZ	15434	S-1354	..SCREW, TAPPING, THREA	4
22	PAOZZ	15434	20622	..STRAINER ELEMENT, SE	1

END OF FIGURE

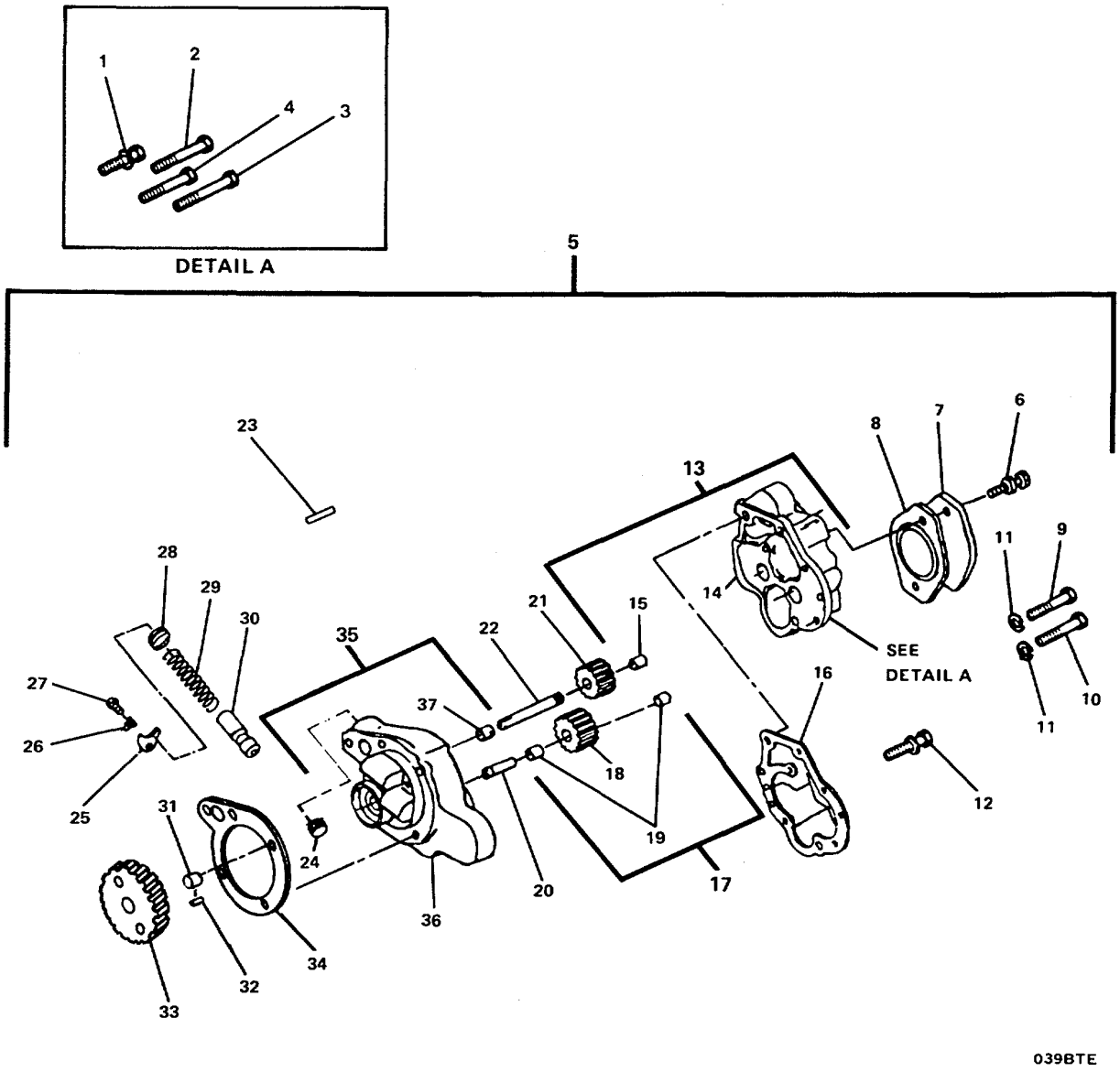

Figure 150. Lubrication Oil Pump Group

(1) ITEM NO	(2) SMR CODE	(3) FSCM	(4) PART NUMBER	(5) DESCRIPTION AND USABLE ON CODES(UOC)	(6) QTY
				GROUP 05 BOW THRUSTER ENGINE	
				FIG. 150 LUBRICATING OIL PUMP GROUP	
	XCFFF	15434	07.06-05	.LUBRICATING OIL PUM	1
1	XDFZZ	15434	3012479	..SCREW, ASSEMBLED WAS	2
2	XDFZZ	15434	S-169-B	..SCREW, CAP, HEXAGON H	1
3	XDFZZ	15434	117897	..SCREW, CAP, HEXAGON H	1
4	XDFZZ	15434	S-142-A	..SCREW, CAP, HEXAGON H	1
5	PBFFH	15434	AR-10172	..PUMP, OIL LUBRICATIN	1
6	XDFZZ	15434	3010595	...SCREW, MACHINE	2
7	XDFZZ	15434	204048	...COVER, ACCESS	1
8	PAFZZ	15434	3004242	...GASKET	1
9	XDFZZ	15434	S-119	...SCREW, CAP, HEXAGON H	1
10	XDFZZ	15434	S-147-B	...BOLT, MACHINE	1
11	XDFZZ	15434	S-605	...WASHER, LOCK	2
12	XDFZZ	15434	3022590	...SCREW, CAPTIVE	6
13	XDFFF	15434	AR-8667	...HOUSING, HYDRAULIC D	1
14	XAFZZ	15434	199592	....SUPPORT, HYDRAULIC P	1
15	PAFZZ	15434	69521	....BEARING, SLEEVE	1
16	PAFZZ	15434	203145	...GASKET (LUBE OIL PUMP)	1
17	PBFFZ	15434	3014965	...GEAR, SPUR	1
18	XAFZZ	15434	3014784	....GEAR, LUBE OIL PUMP	1
19	PAFZZ	15434	68365	....BUSHING, SLEEVE	2
20	XDFZZ	15434	177419	...SHAFT, SHOULDERED	1
21	XDFZZ	15434	3014783	...GEAR, SPUR	1
22	XDFZZ	15434	3021361	...GEARSHAFT, WORM WHEE	1
23	XDFZZ	15434	69519	...PIN, STRAIGHT, HEADLE	1
24	XDFZZ	15434	3008469	...PLUG, PIPE	2
25	XDFZZ	15434	126304	...CLAMP, RETAINING	1
26	XDFZZ	15434	109319	...LOCK PLATE	1
27	XDFZZ	15434	S-109	...SCREW, CAP, HEXAGON H	1
28	XDFZZ	15434	134596	...PLUG, VENT	1
29	PAFZZ	15434	211939	...SPRING, HELICAL, COMP	1
30	PAFZZ	15434	109333	...PLUNGER, PRESSURE RE	1
31	PAFZZ	15434	69521	...BEARING, SLEEVE	1
32	XDFZZ	96906	MS35756-34	...KEY, WOODRUFF	1
33	XDFZZ	15434	204832	...GEAR, HELICAL	1
34	PAFZZ	15434	3031434	...GASKET (LUBE OIL PUMP)	1
35	XDFFF	15434	AR-9832	...BODY, LUBE OIL PUMP	1
36	XAFZZ	15434	211929	....BODY, LUBE OIL PUMP	1
37	PAFZZ	15434	69521	....BEARING, SLEEVE.	1

END OF FIGURE

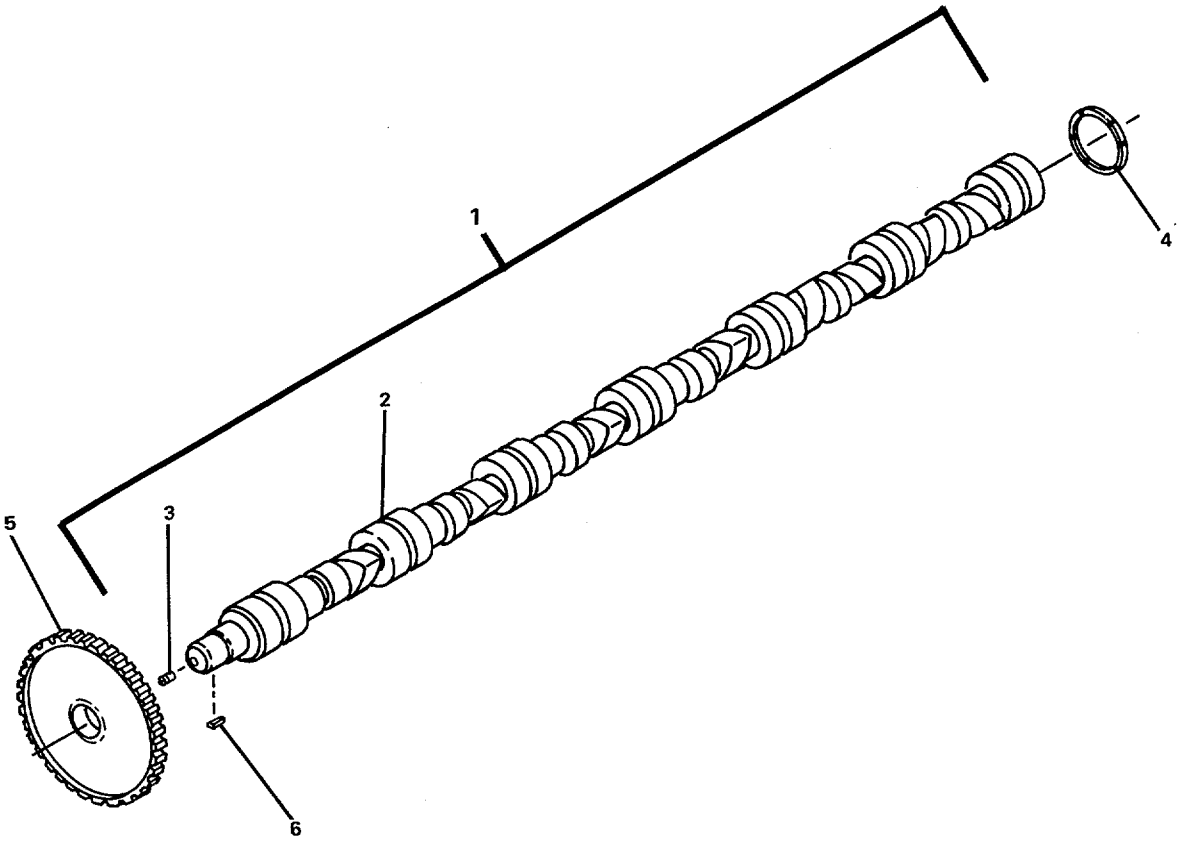

Figure 151. Camshaft Group

(1) ITEM NO	(2) SMR CODE	(3) FSCM	(4) PART NUMBER	(5) DESCRIPTION AND USABLE ON CODES(UOC)	(6) QTY
				GROUP 05 BOW THRUSTER ENGINE	
				FIG. 151 CAMSHAFT GROUP	
	XCFHH	15434	01.07-05	.CAMSHAFT GROUP.....	1
1	PBHHZ	15434	3049024	..CAMSHAFT, ENGINE.....	1
2	XAHZZ	15434	3042568	...CAMSHAFT	1
3	XDHZZ	15434	68193	...PLUG, VENT.....	1
4	PAHZZ	15434	215233	..BEARING, WASHER, THRU.....	1
5	PAHZZ	15434	3035195	..GEAR, HELICAL.....	1
6	XDHZZ	15434	3021601	..PIN, STRAIGHT, HEADLE.....	1

END OF FIGURE

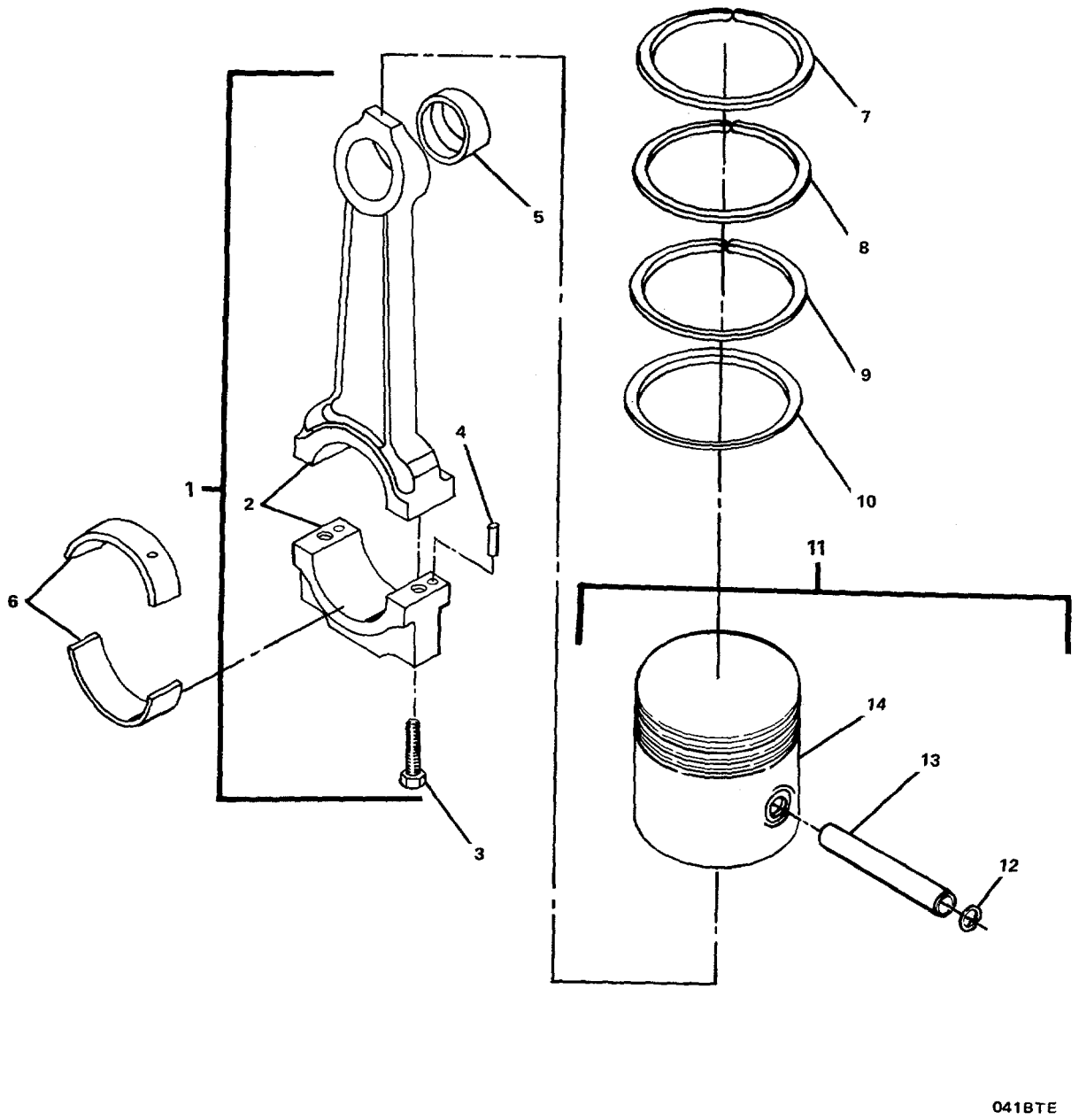

Figure 152. Connection Rod and Piston Group.

(1) ITEM NO	(2) SMR CODE	(3) FSCM	(4) PART NUMBER	(5) DESCRIPTION AND USABLE ON CODES(UOC)	(6) QTY
				GROUP 05 BOW THRUSTER ENGINE	
				FIG. 152 152 CONNECTING ROD AND PISTON GROUP	
	XCFHH	15434	01.04/01.05-05	.CONNECTING ROD AND	1
1	PBFHH	15434	3013930	..CONNECTING ROD, PIST	6
2	XAHZZ	15434	218808	...ROD, CONNECTING ENGI	6
3	PAHZZ	15434	219153	...BOLTMACHINE	12
4	PAHZZ	15434	70550	...PIN, PISTON	12
5	PAHZZ	15434	187420	...BUSHING, PISTON PIN	6
6	PAHZZ	15434	214950	...BEARING	12
7	XDHZZ	15434	218025	...RING, PISTON	6
8	XDHZZ	15434	3012332	...RING, PISTON	6
9	XDHZZ	15434	214730	...RING, PISTON	6
10	XDHZZ	15434	218732	...RING, PISTON	6
11	PBFHZ	15434	3801770	..PARTS KIT, PISTON AS	6
12	PAHZZ	15434	175755	...RING, RETAINING	12
13	PAHZZ	15434	191970	...PIN, PISTON	6
14	XAHZZ	15434	305'1555	...PISTON, ENGINE	6
	PAHZZ	15434	3016786	...RING SET, PISTON (NEED FOR COMPLETE REPAIR OF CONNECTING ROD, PISTON ASSEMBLY	6

END OF FIGURE

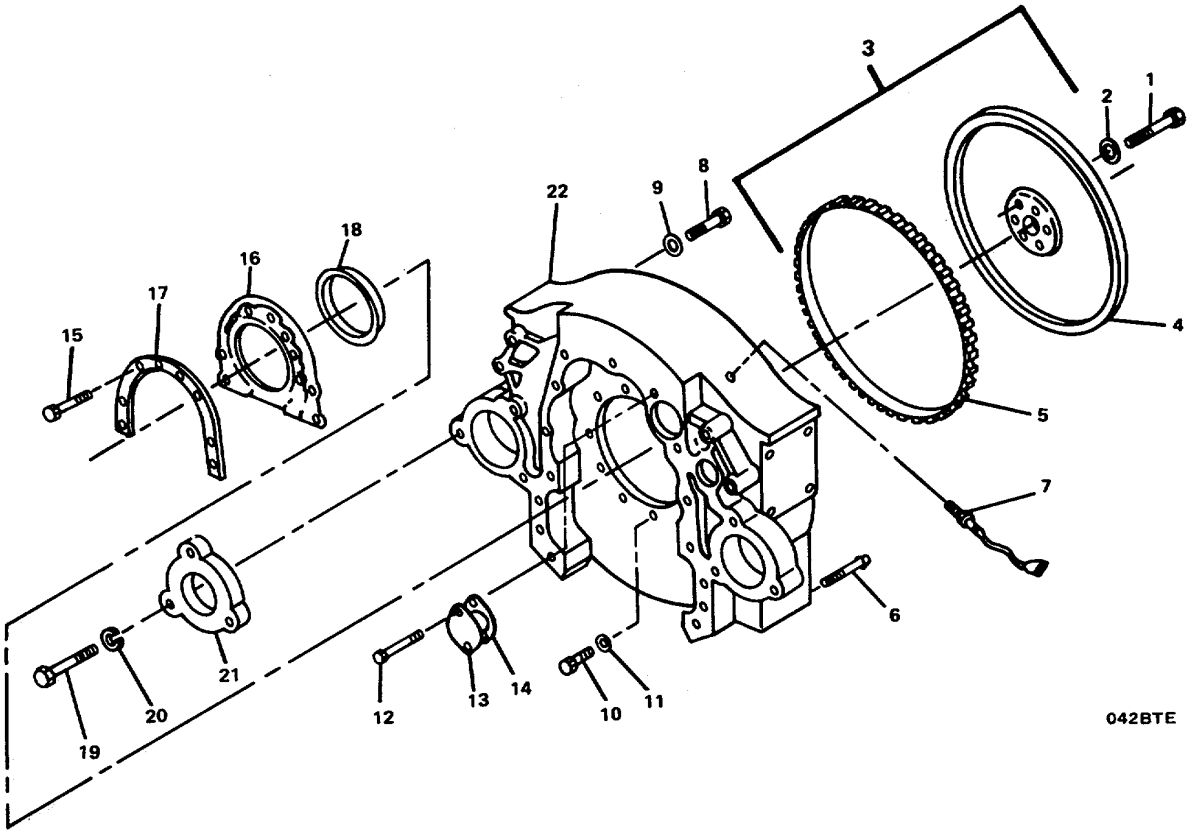

Figure 153. Flywheel and Flywheel Housing Group.

(1) ITEM NO	(2) SMR CODE	(3) FSCM	(4) PART NUMBER	(5) DESCRIPTION AND USABLE ON CODES(UOC)	(6) QTY
				GROUP 05 BOW THRUSTER ENGINE	
				FIG. 153 FLYWHEEL AND FLYWHEEL HOUSING GROUP	
	XCFHH	15434	16.01/16.02-05	.FLYWHEEL AND FLYWHE.....	1
1	XDFZZ	15434	204165	..SCREW, CAP	6
2	XDFZZ	15434	200861	..WASHER, FLAT.....	6
3	PBFHZ	15434	3023510	..FLYWHEEL, ENGINE	1
4	XAHZZ	15434	2965	...FLYWHEEL, ENGINE	1
5	PAHZZ	15434	4851	...GEAR, SPUR	1
6	XDFZZ	15434	60408	..PIN, STRAIGHT, HEADLE	2
7	PAFZZ	15434	3034572	..COIL, ELECTRICAL	1
8	XDFZZ	15434	3048351	..SCREW, CAP, HEXAGON H	9
9	XDFZZ	15434	127316	..WASHER, RECESSED.....	9
10	XDFZZ	15434	163086	..PLUG, MACHINE THREAD.....	1
11	XDFZZ	15434	8265	..WASHER, FLAT.....	1
12	XDFZZ	15434	3001646	..SCREW, TAPPING, THREA	2
13	XDFZZ	15434	70657	..COVER, ACCESS.....	1
14	PAFZZ	15434	3021735	..GASKET	1
15	XDFZZ	15434	3010594	..SCREW, CAP, HEXAGON H	8
16	XDFZZ	15434	3049018	..COVER, REAR	1
17	PAFZZ	15434	40662-A	..GASKET	1
18	PAFZZ	15434	3006737	..SEAL.....	1
19	XDFZZ	15434	153581	..SCREW, CAP, HEXAGON H	3
20	XDFZZ	96906	MS35338-50	..WASHER, LOCK.....	3
21	XDFZZ	15434	9245	..SPACER, STARTING MOT.....	1
22	XDFZZ	15434	3005557	..HOUSING, MECHANICAL	1

END OF FIGURE

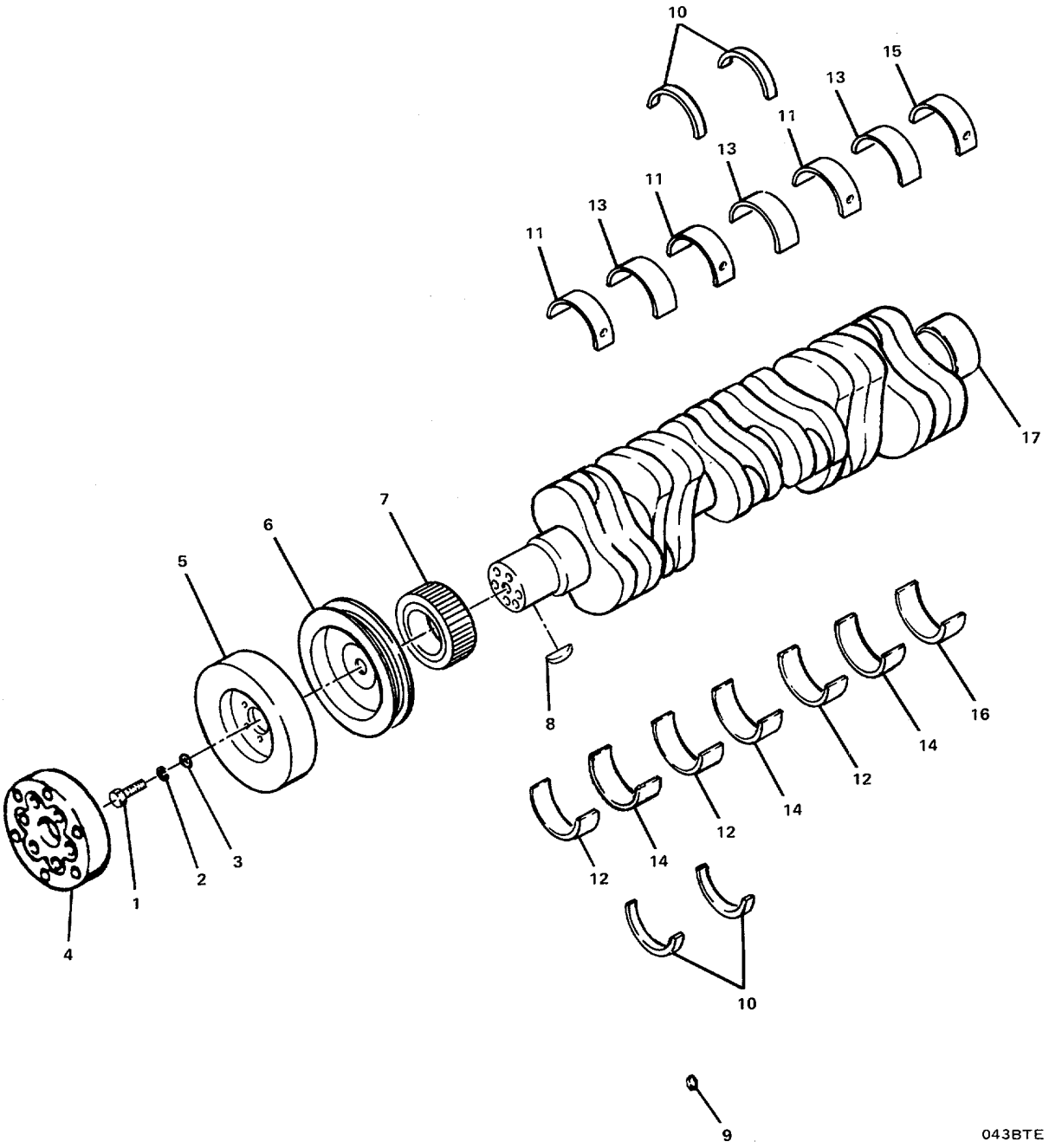

Figure 154. Crankshaft Group.

(1) ITEM NO	(2) SMR CODE	(3) FSCM	(4) PART NUMBER	(5) DESCRIPTION AND USABLE ON CODES(UOC)	(6) QTY
				GROUP 05 BOW THRUSTER ENGINE	
				FIG. 154 CRANKSHAFT GROUP	
	XCHHH	15434	01.02-05	.CRANKSHAFT GROUP	1
1	XDHZZ	15434	212113	..SCREW, CAP, HEXAGON H	6
2	XDHZZ	15434	127316	..WASHER, RECESSED	6
3	XDHZZ	15434	3009213	..WASHER, LOCK	14
4	XDHZZ	15434	212112	..ADAPTER, POWER TAKE-	1
5	XDHZZ	15434	217323	..DAMPENER, FLUID PRES	1
6	XDHZZ	15434	3010320	..PULLEY, CRANKSHAFT	1
7	XDHZZ	15434	3014614	..GEAR, HELICAL	1
8	XDHZZ	15434	210179	..KEY, MACHINE	1
9	XDHZZ	15434	3037045	..RING, RETAINING	7
10	XDHZZ	15434	3019218	..BEARING, WASHER, THRU PART OF KIT P/N 3801260	4
11	XDHZZ	15434	3019174	..BEARING HALF, SLEEVE PART OF KIT P/N 3801260	3
12	XDHZZ	15434	3019180	..BEARING HALF, SLEEVE PART OF KIT P/N 3801260	3
13	XDHZZ	15434	3019186	..BEARING HALF, SLEEVE PART OF KIT P/N 3801260	3
14	XDHZZ	15434	3019192	..BEARING HALF, SLEEVE PART OF KIT P/N 3801260	3
15	XDHZZ	15434	3019198	..BEARING HALF, SLEEVE PART OF KIT P/N 3801260	1
16	XDHZZ	15434	3019204	..BEARING HALF, SLEEVE PART OF KIT P/N 3801260	1
17	PBHZZ	15434	3608833	..CRANK SHAFT, ENGINE	1
	PAHZZ	15434	3801260	..BEARING SET, SLEEVE (NEEDED FOR COMPLETE REPAIR OF BOWTHRUSTER ENGINE CRANKSHAFT)	1
				BEARING HALF, SLEEVE(3) 154-11	
				BEARING HALF, SLEEVE(3) 154-12	
				BEARING HALF, SLEEVE(3) 154-13	
				BEARING HALF, SLEEVE(3) 154-14	
				BEARING HALF, SLEEVE(1) 154-15	
				BEARING HALF, SLEEVE(1) 154-16	
				BEARING, WASHER, THRU(4) 154-10	

END OF FIGURE

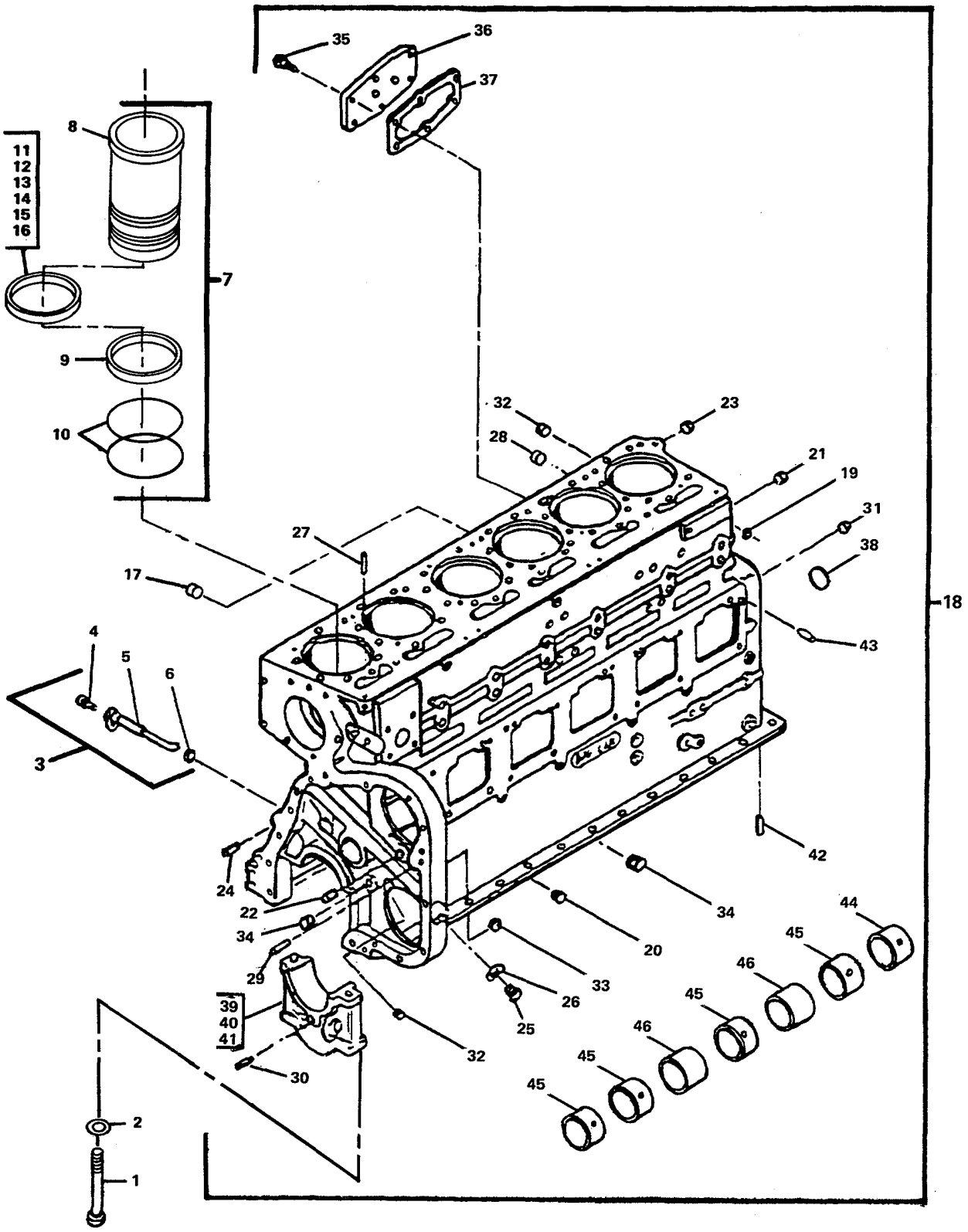

Figure 155. Cylinder Block Group.

(1) ITEM NO	(2) SMR CODE	(3) FSCM	(4) PART NUMBER	(5) DESCRIPTION AND USABLE ON CODES(UOC)	(6) QTY
				GROUP 05 BOW THRUSTER ENGINE	
				FIG. 155 CYLINDER BLOCK GROUP	
	XCFHH	15434	01.01-05	.CYLINDER BLOCK GROU	1
1	XDHZZ	15434	208346	..SCREW, CAP, HEXAGON H	14
2	XDHZZ	15434	3046246	..WASHER, FLAT	14
3	PBHHH	15434	3014404	..NOZZLE, PISTON	6
4	XDHZZ	15434	3033822	...SCREW, SELF-LOCKING	6
5	PAHZZ	15434	3013591	...NOZZLE, PISTON COOLI	6
6	PAHZZ	15434	3007442	...PACKING, PREFORMED	6
7	PBHZH	15434	3801826	..CYLINDER SLEEVE	6
8	XAHZZ	15434	3055099	...LINER, CYLINDER	6
9	XDHZZ	15434	215090	...GASKET	6
10	PAHZZ	15434	3032874	...PACKING, PREFORMED	12
11	XDHZZ	15434	3019955	..SHIM (0.007)	1
12	XDHZZ	15434	3019956	..SPACER, RING (0.008)	1
13	XDHZZ	15434	3019957	..SHIM (0.009)	1
14	XDHZZ	15434	3054948	..SHIM (0.020)	1
15	XDHZZ	15434	3019959	..SHIM (0.031)	1
16	XDHZZ	15434	3019960	..SHIM (0.062)	1
17	XDHZZ	15434	S-901	..PLUG, PIPE	1
18	PBHHH	15434	3801592	..ENGINE BLOCK, DIESEL	1
19	XDHZZ	15434	S-679	...WASHER, FLAT	1
20	XDHZZ	15434	S-716	...PLUG, EXPANSION	1
21	XDHZZ	15434	S-719	...PLUG, EXPANSION	1
22	XDHZZ	15434	S-911-B	...PLUG, PIPE	2
23	XDHZZ	96906	MS49005-16	...PLUG, PIPE	1
24	XDHZZ	15434	60408	...PIN, STRAIGHT, HEADLE	3
25	XDHZZ	15434	210884	...PLUG, MACHINE THREAD	1
26	XDHZZ	15434	66292	...WASHER, FLAT	1
27	XDHZZ	15434	68445	...PIN, GROOVED, HEADLES	6
28	XDHZZ	15434	69901	...PLUG, PIPE	7
29	XDHZZ	15434	70653	...DOWEL, METALL1C	1
30	XDHZZ	15434	202903	...PIN, STRAIGHT HEXAGO	2
31	XDHZZ	15434	3008466	...PLUG, PIPE	2
32	XDHZZ	15434	3008468	...PLUG, PIPE	2
33	XDHZZ	15434	3008469	...PLUG, PIPE	1
34	XDHZZ	15434	3013786	...PLUG, PIPE	6
35	XDHZZ	15434	3013904	...SCREW	6
36	XDHZZ	15434	132019	...COVER, ACCESS	1
37	PAHZZ	15434	70089-1	...GASKET	1
38	PAHZZ	15434	3011952	...CAP, PROTECTIVE, DUST	1
39	XAHZZ	15434	3008047	...CAP, PILLOW BLOCK	3
40	XAHZZ	15434	3008048	...CAP, PILLOW BLOCK	3
41	XAHZZ	15434	3008049	...CAP, PILLOW BLOCK	3
42	PAHZZ	64104	B2568	...PIN, STRAIGHT, HEADLE	2
43	PAHZZ	15434	68585	...PIN, STRAIGHT, HEADLE	6
44	PAHZZ	15434	3011951	...BEARING, SLEEVE	1
45	PAHZZ	15434	3028075	...BUSHING, SLEEVE	4
46	PAHZZ	15434	3028269	...BUSHING, SLEEVE	2
47	XDHZZ	15434	S-274	...NUT, PLAIN, HEXAGON	1

(1) ITEM NO	(2) SMR CODE	(3) FSCM	(4) PART NUMBER	(5) DESCRIPTION AND USABLE ON CODES(UOC)	(6) QTY
48	XDHZZ	96906	MS35338-47	...WASHER, LOCK.....	1
49	XDHZZ	15434	69324	...WASHER, FLAT.....	1
50	XDHZZ	15434	S-140	...SCREW, CAP, HEXAGON H	1
	PAHZZ	15434	3801779	..PARTS KIT, DIESEL EN (NEEDED FOR ..... COMPLETE REPAIR OF BOWTHRUSTER ENGINE CYL BLOCK)	1

END OF FIGURE

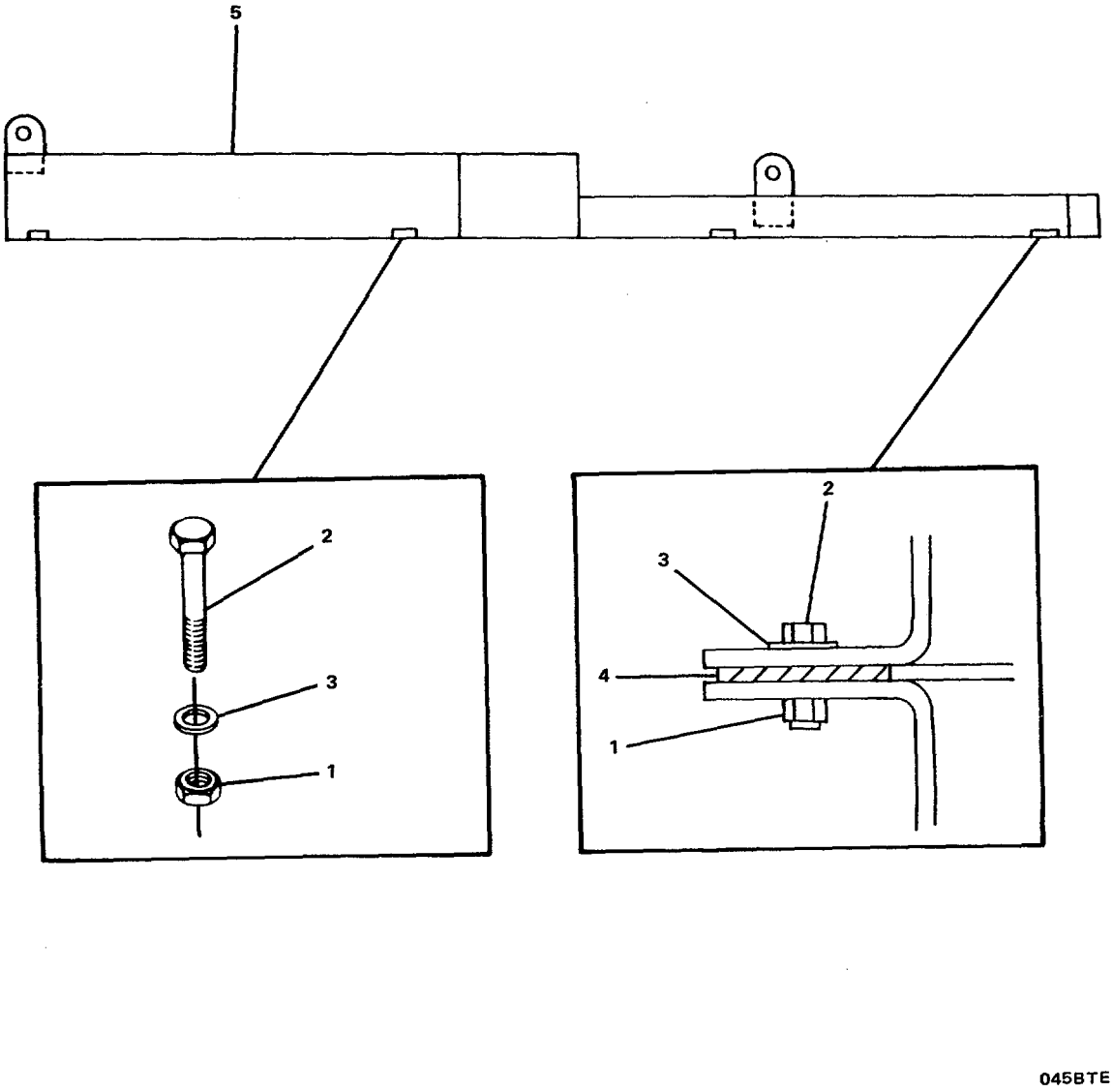

Figure 156. Bow Thruster Subbase Assembly

(1) ITEM NO	(2) SMR CODE	(3) FSCM	(4) PART NUMBER	(5) DESCRIPTION AND USABLE ON CODES(UOC)	(6) QTY
				GROUP 05 BOW THRUSTER ENGINE	
				FIG. 156 BOW THRUSTER SUBBASE ASSEMBLY	
1	XDFZZ	77408	41-5035-8047	.NUT, SELF-LOCKING, HE.....	6
2	XDFZZ	77408	41-4899-1699	.BOLT, MACHINE	6
3	XDFZZ	77408	DO-1860-8047	.WASHER, BEVEL.....	4
4	PAFZZ	77408	44-9500-0100	.MOUNT, RESILIENT.....	4
5	XDFZZ	15434	600-2887	.BOWTHRUSTER SUBBASE.....	1

END OF FIGURE

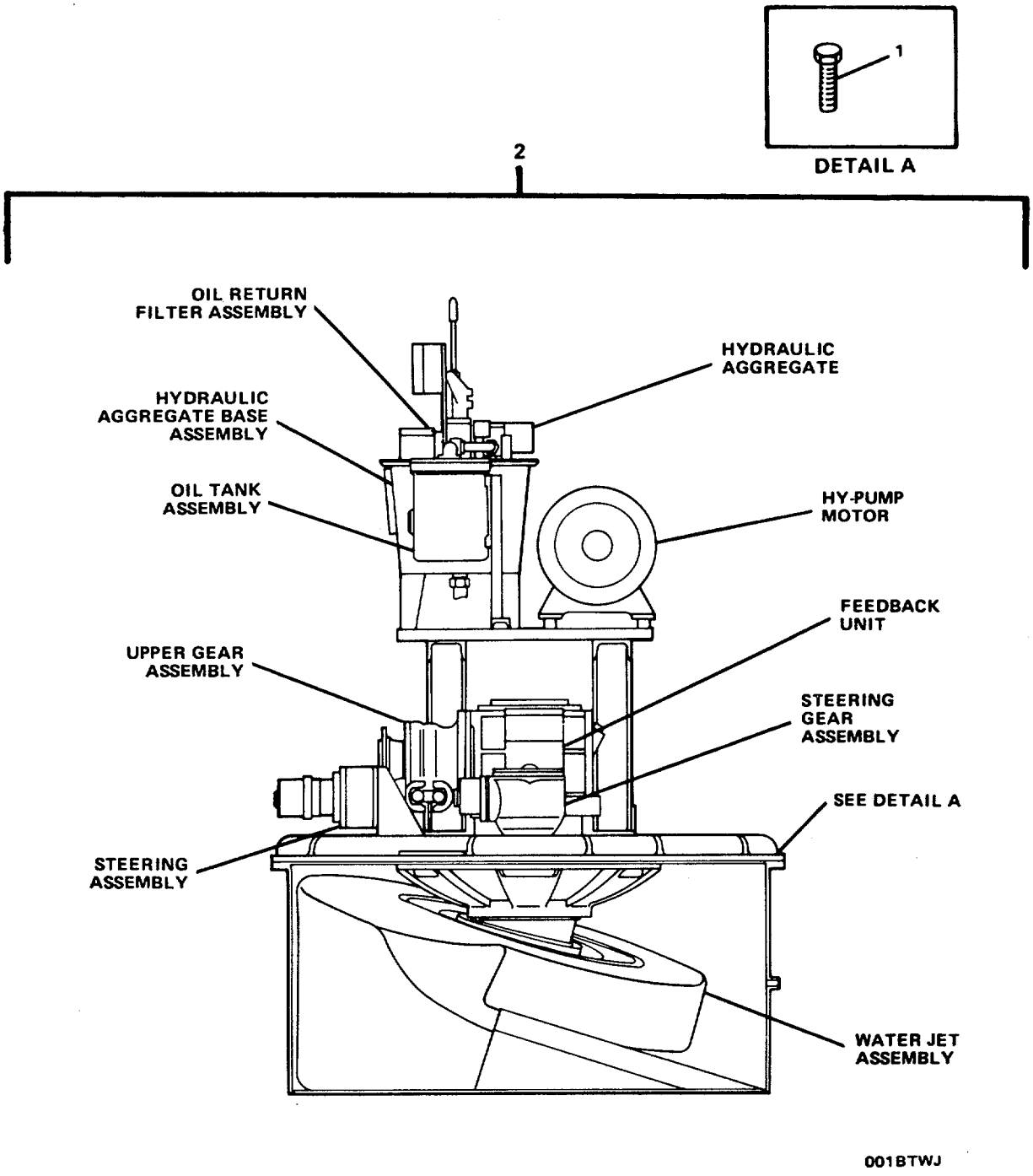

Figure 157. SPJ 55 Bow Thruster Water Jet

(1) ITEM NO	(2) SMR CODE	(3) FSCM	(4) PART NUMBER	(5) DESCRIPTION AND USABLE ON CODES(UOC)	(6) QTY
				GROUP 06 SPJ55 BOW THRUSTER WATER JET	
				FIG. 157 SPJ55 BOW THRUSTER WATER JET	
1	XDFZZ	77408	40-2898-1371	BOLT, SELF-LOCKING, H	40
2	PDFHH	32862	1079870	EJECTOR, JET	1

END OF FIGURE

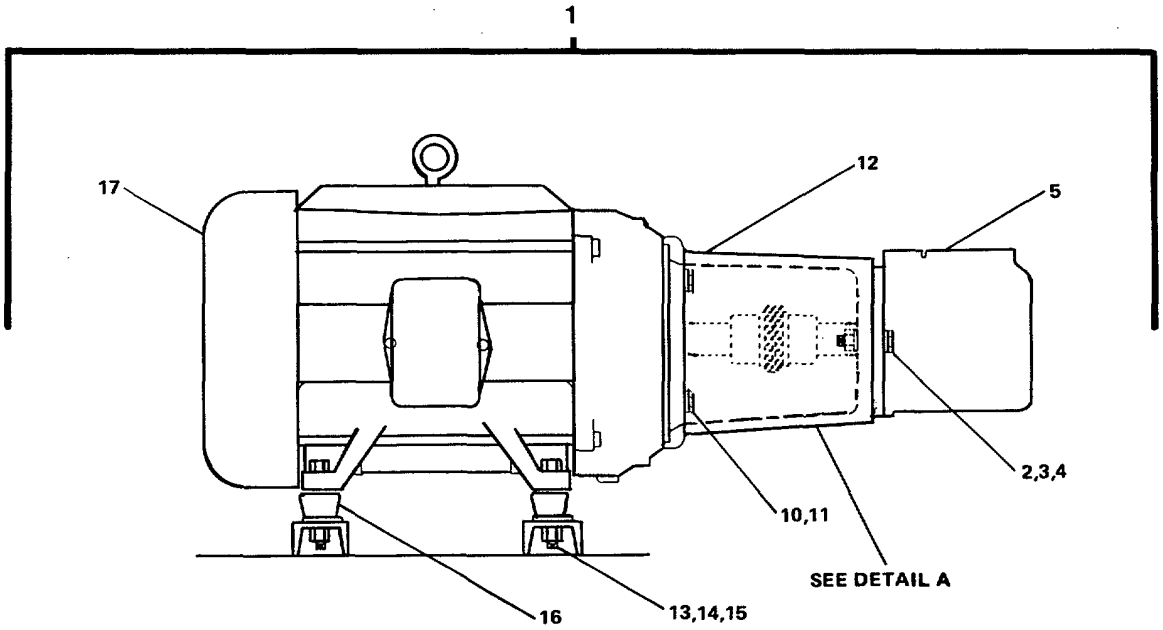

DETAIL A

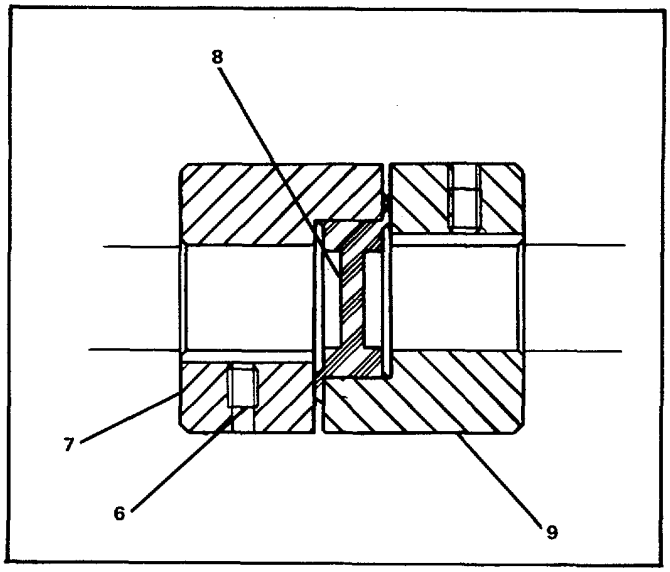

Figure 158. Pump Assembly Complete.

(1) ITEM NO	(2) SMR CODE	(3) FSCM	(4) PART NUMBER	(5) DESCRIPTION AND USABLE ON CODES(UOC)	(6) QTY
				GROUP 06 SPJ55 BOW THRUSTER	
				FIG. 158 PUMP ASSEMBLY COMPLETE	
1	PAFHH	32862	100904	.PUMP ASSEMBLY, COMPL	1
2	XDFZZ	32862	1/2-13X13/4	BOLT, MACHINE	2
3	XDFZZ	32862	1/2-13	..NUT, PLAIN, HEXAGON	2
4	XDFZZ	32862	1/2	..WASHER, LOCK	2
5	PBFZZ	17442	SD-01412D	..PUMP, VANE	1
6	XDHZZ	75665	3/8-16	..SETSCREW	2
7	XDHZZ	75665	520X00266	..BODY, JAW COUPLING	1
8	XDHZZ	75665	520X00718	..SPIDER	1
9	XDHZZ	75665	520X00290	..BODY, JAW COUPLING	1
10	XDHZZ	75665	1/2-13X3/4	..BOLT, MACHINE	4
11	XDHZZ	75665	1/2	..WASHER, LOCK	4
12	XDHZZ	05427	F2L-2B	..MOUNT, PUMP/MOTOR	1
13	XDHZZ	05427	1/2-13X31/2	..BOLT, MACHINE	4
14	XDHZZ	05427	1/2-13	..NUT, PLAIN, HEXAGON	4
15	XDHZZ	05427	1/2	..WASHER, LOCK	4
16	XDHZZ	76385	VBM-1473	..MOUNT, RESILIENT	4
17	PBFZZ	05427	309M	..MOTOR, ALTERNATING C	1

END OF FIGURE

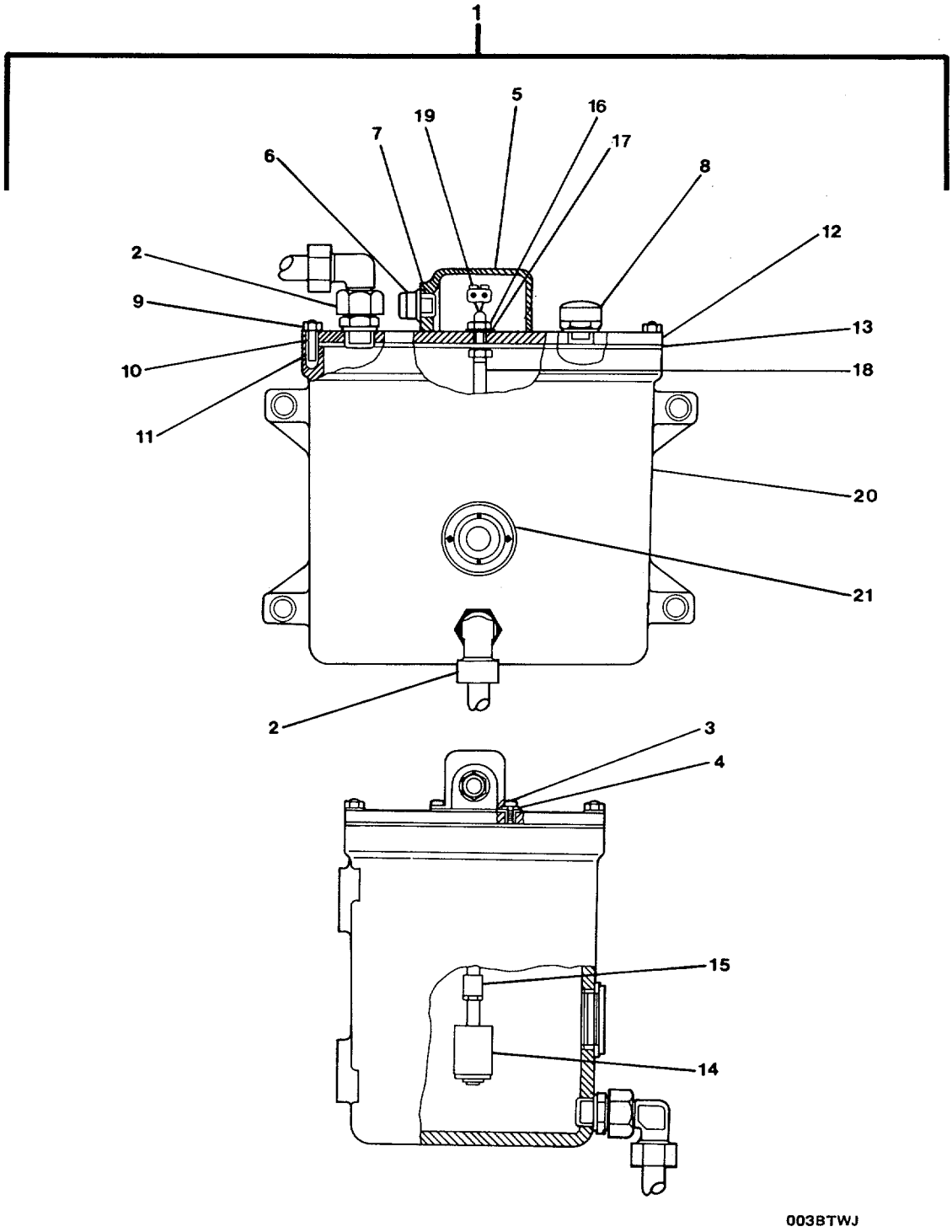

Figure 159. Oil Tank Assembly.

GROUP 06 SPJ55 BOW THRUSTER
WATER JET

FIG. 159 OIL TANK ASSEMBLY

(1) ITEM NO	(2) SMR CODE	(3) FSCM	(4) PART NUMBER	(5) DESCRIPTION AND USABLE ON CODES(UOC)	(6) QTY
1	XDOFF	32862	1048050	.TANK ASSEMBLY, OIL	1
2	XDOZZ	32862	1009199	..FITTING, PIPE, ELBOW	2
3	XDOZZ	32862	1000673	..SCREW, PANEL FASTENE	2
4	XDOZZ	32862	1002331	..WASHER, PANEL FASTEN	2
5	XDOZZ	32862	1001874	..CAP, FILLER OPENING	1
6	XDOZZ	32862	1017862	..CONNECTOR, THREADED	1
7	PAOZZ	32862	1002210	..PACKING, PREFORMED	1
8	PAOZZ	32862	1009813	..PLUG, VENT	1
9	XDFZZ	32862	1010940	..NUT, PLAIN, HEXAGON	6
10	XDFZZ	32862	1002332	..WASHER, LOCK	6
11	XDFZZ	32862	1004177	..STUD, PLAIN	6
12	XDFZZ	32862	1046348	..COVER, ACCESS	1
13	PAFZZ	32862	1046476	..GASKET	1
14	XDFZZ	32862	1012099	..SWITCH, FLOAT	1
15	XDFZZ	32862	1029745	..SLEEVE, PIPE	1
16	XDFZZ	32862	1000998	..NUT, PLAIN, HEXAGON	2
17	XDFZZ	32862	1007334	..WASHER, FLAT	2
18	XDFZZ	32862	1012580	..TUBE, METALLIC	1
19	XDFZZ	32862	1012569	..CONNECTOR, CABLE	1
20	XDFZZ	32862	1046346	..TANK, OIL	1
21	XDFZZ	32862	1012653	..GAGE, PRESSURE, DIA	1

END OF FIGURE

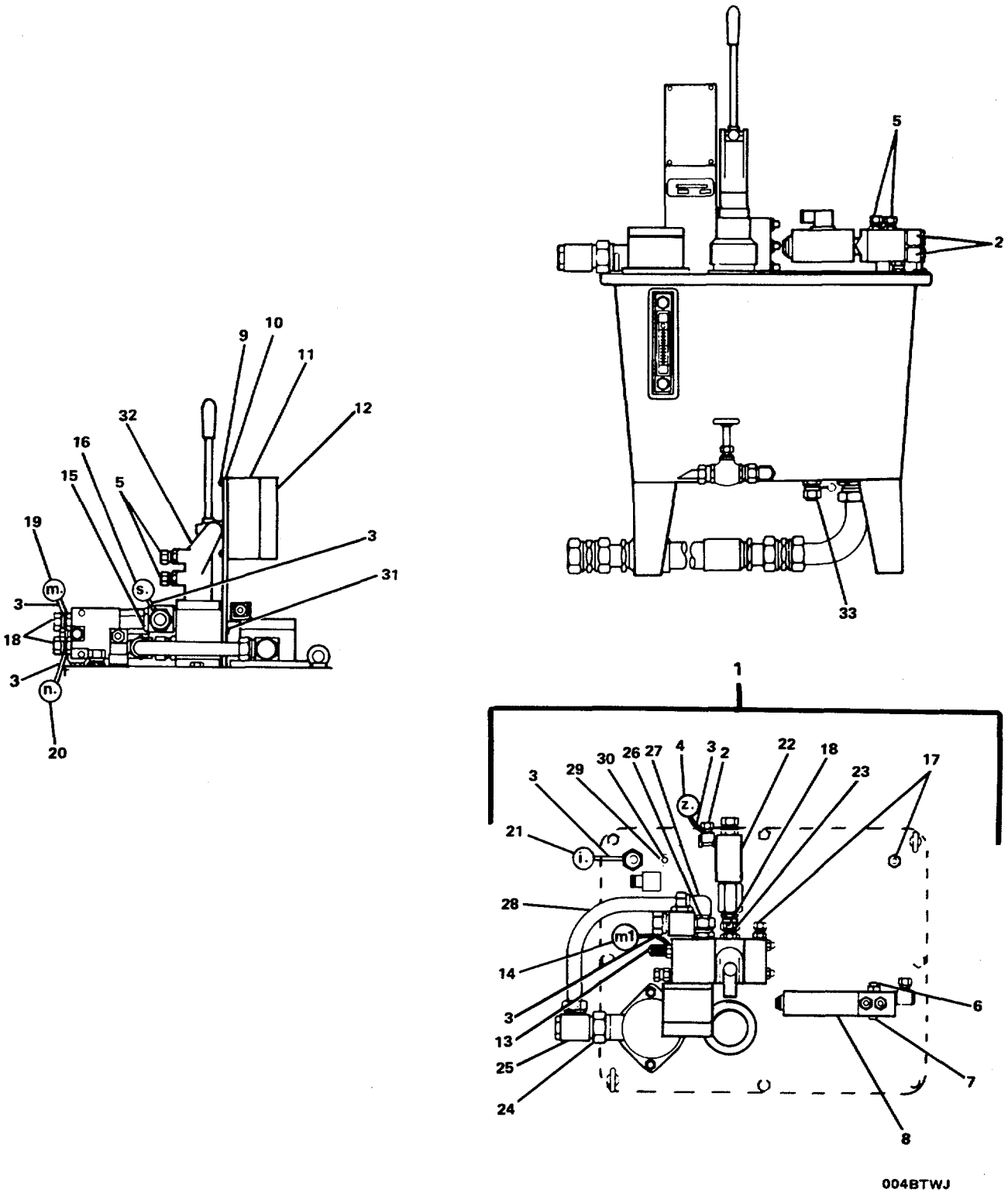

FIGURE 160. Hydraulic Aggregate

GROUP 06 SPJ55 BOW THRUSTER
WATER JET

FIG. 160 HYDRAULIC AGGREGATE

(1) ITEM NO	(2) SMR CODE	(3) FSCM	(4) PART NUMBER	(5) DESCRIPTION AND USABLE ON CODES(UOC)	(6) QTY
1	PBFFF	32862	1079993	.AGGREGATE, HYDRAULIC	1
2	XDFZZ	32862	1008660	..UNION, PIPE	3
3	XDFZZ	32862	1007832	..STRIP, TIE	6
4	XDFZZ	32862	1007433	..PLATE, IDENTIFICATIO (Z, SMALL)	1
5	XDFZZ	32862	1013353	..UNION, PIPE	4
6	XDFZZ	32862	1000984	..NUT, PLAIN, HEXAGON	2
7	XDFZZ	32862	1000494	..SCREW, CAP, HEXAGON H	2
8	PBFZZ	32862	1038480	..VALVE, PRESSURE REGU	1
9	XDFZZ	32862	1000981	..NUT, SELF-LOCKING, HE	4
10	XDFZZ	32862	1017834	..SCREW, CAP, HEXAGON, H	4
11	XDFZZ	32862	1011586	..TERMINAL BOX	1
12	XDFZZ	32862	1033823	..DIAPHRAGM, CONNECTIO	1
13	XDFZZ	32862	1008051	..FITTING, MINIMESS	1
14	XDFZZ	32862	1065849	..PLATE, IDENTIFICATIO (M1)	1
15	XDFZZ	32862	1046197	..UNION, PIPE	1
16	XDFZZ	32862	1007519	..PLATE, IDENTIFICATIO (S, SMALL)	1
17	XDFZZ	32862	1008099	..UNION, PIPE	3
18	XDFZZ	32862	1007800	..FITTING, STRAIGHT, MA	5
19	XDFZZ	32862	1007513	..PLATE, IDENTIFICATIO (M, SMALL)	1
20	XDFZZ	32862	1007514	..PLATE, IDENTIFICATIO (N, SMALL)	1
21	XDFZZ	32862	1007512	..PLATE, IDENTIFICATIO (I, SMALL)	1
22	XDFZZ	32862	1080850	..VALVE, LOAD HOLDING	1
23	XDFZZ	32862	1015927	..UNION, PIPE	2
24	XDFZZ	32862	1039613	..REDUCER, PIPE	1
25	XDFZZ	32862	1069278	..UNION, L-PIPE	1
26	XDFZZ	32862	1025656	..FITTING, STRAIGHT, MA	1
27	XDFZZ	32862	1008053	..FITTING, ELBOW, ADJUS	1
28	XDFZZ	32862	1012398	..PIPE, METALLIC	V
29	XDFZZ	32862	1002253	..PLUG, PIPE	1
30	PBFZZ	32862	1011624	..PACKING, PREFORMED	1
31	XDFZZ	32862	1000766	..SCREW, MACHINE	2
32	PBFZZ	32862	1080849	..VALVE, LINEAR, DIRECT	1
33	XDFZZ	32862	1018148	..PLUG, MACHINE- THREAD	1

END OF FIGURE

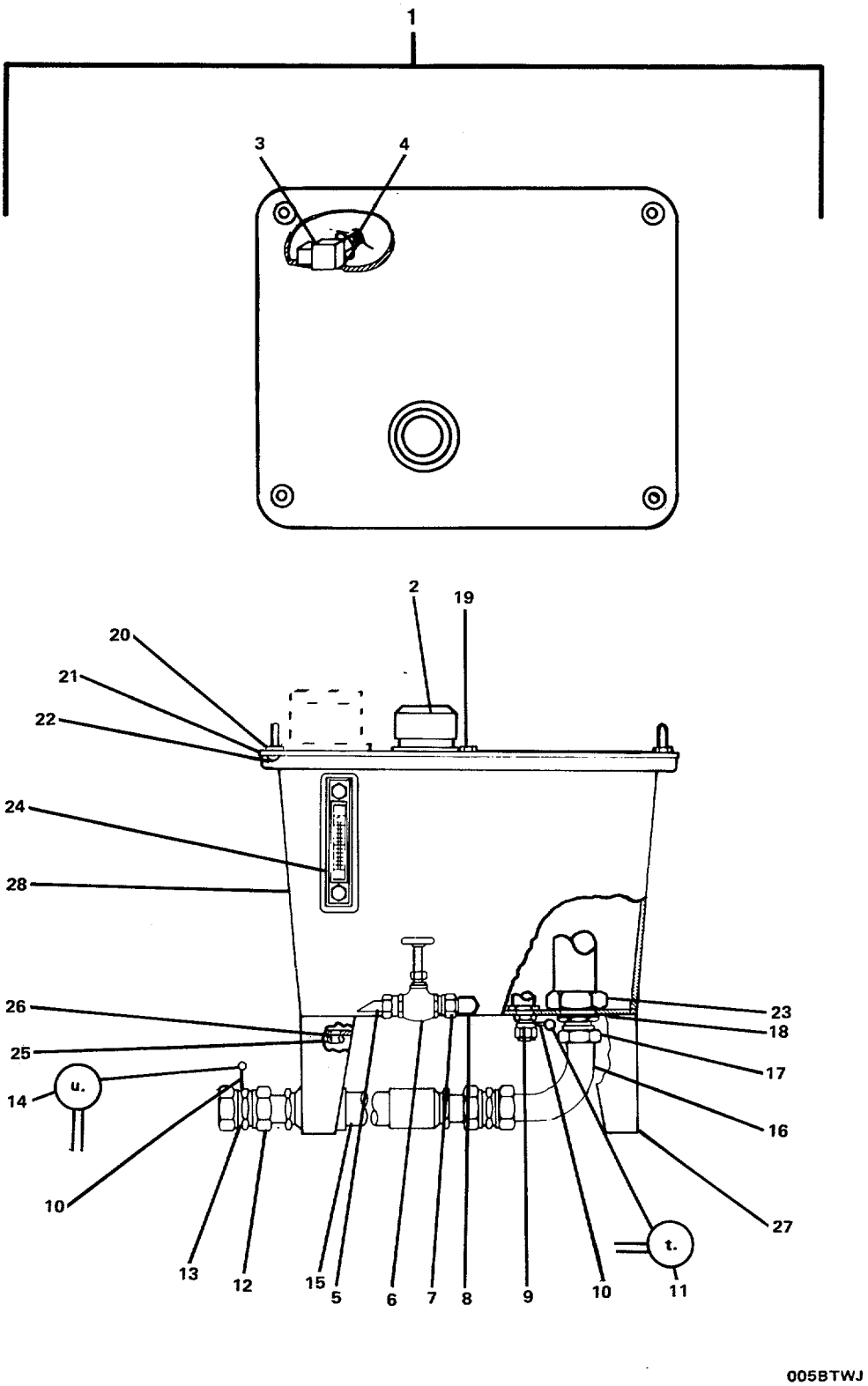

FIGURE 161. Hydraulic Aggregate Base Assembly.

GROUP 06 SPJ55 BOW THRUSTER
WATER JET

FIG. 161 HYDRAULIC AGGREGATE
BASE ASSEMBLY

(1) ITEM NO	(2) SMR CODE	(3) FSCM	(4) PART NUMBER	(5) DESCRIPTION AND USABLE ON CODES(UOC)	(6) QTY
1	XDFFF	32862	1080735	..BASE ASSEMBLY, HYDRA	1
2	XDFZZ	32862	1031833	...FILLER NECK	1
3	XDFZZ	32862	1026911	...SWITCH, LEVEL	1
4	PAFZZ	32862	1011651	...PACKING, PREFORMED	1
5	XDFZZ	32862	1008135	...PIPE, METALLIC	V
6	XDFZZ	32862	1008654	...VALVE, THREE-WAY	1
7	XDFZZ	32862	1015927	...UNION, PIPE	1
8	XDFZZ	32862	1007102	...ELBOW, PIPE	1
9	XDFZZ	32862	1007016	...UNION, PIPE	1
10	XDFZZ	32862	1007832	...STRIP, TIE	2
11	XDFZZ	32862	1007520	...PLATE, IDENTIFICATIO (T, SMALL)	1
12	XDFZZ	32862	1011616	...PACKING, PREFORMED	1
13	XDFZZ	32862	1008065	...UNION, PIPE	2
14	XDFZZ	32862	1007521	...PLATE, IDENTIFICATIO (U, SMALL)	1
15	PBFZZ	32862	1008062	...HOSE, NONMETALLIC	2
16	XDFZZ	32862	1008133	...PIPE, METALLIC	V
17	XDFZZ	32862	1007796	...UNION, PIPE	1
18	XDFZZ	32862	1005983	...PACKING, PREFORMED	1
19	XDFZZ	32862	1037190	...SCREW, MACHINE	6
20	XDFZZ	32862	1030488	...BOLT, EYE	2
21	XDFZZ	32862	1080734	...COVER, ACCESS	1
22	PAFZZ	32862	1033337	...PACKING MATERIAL	1
23	XDFZZ	32862	1008129	...SOCKET, SUCTION	1
24	XDFZZ	32862	1012538	...INDICATOR, LIQUID QU	1
25	XDFZZ	32862	1014647	...BOLT, MACHINE	4
26	XDFZZ	32862	1001559	...WASHER, SPRING TENSI	4
27	XDFZZ	32862	1008073	...LEG, TANK	4
28	XDFZZ	32862	1016503	...TANK, OIL	1

END OF FIGURE

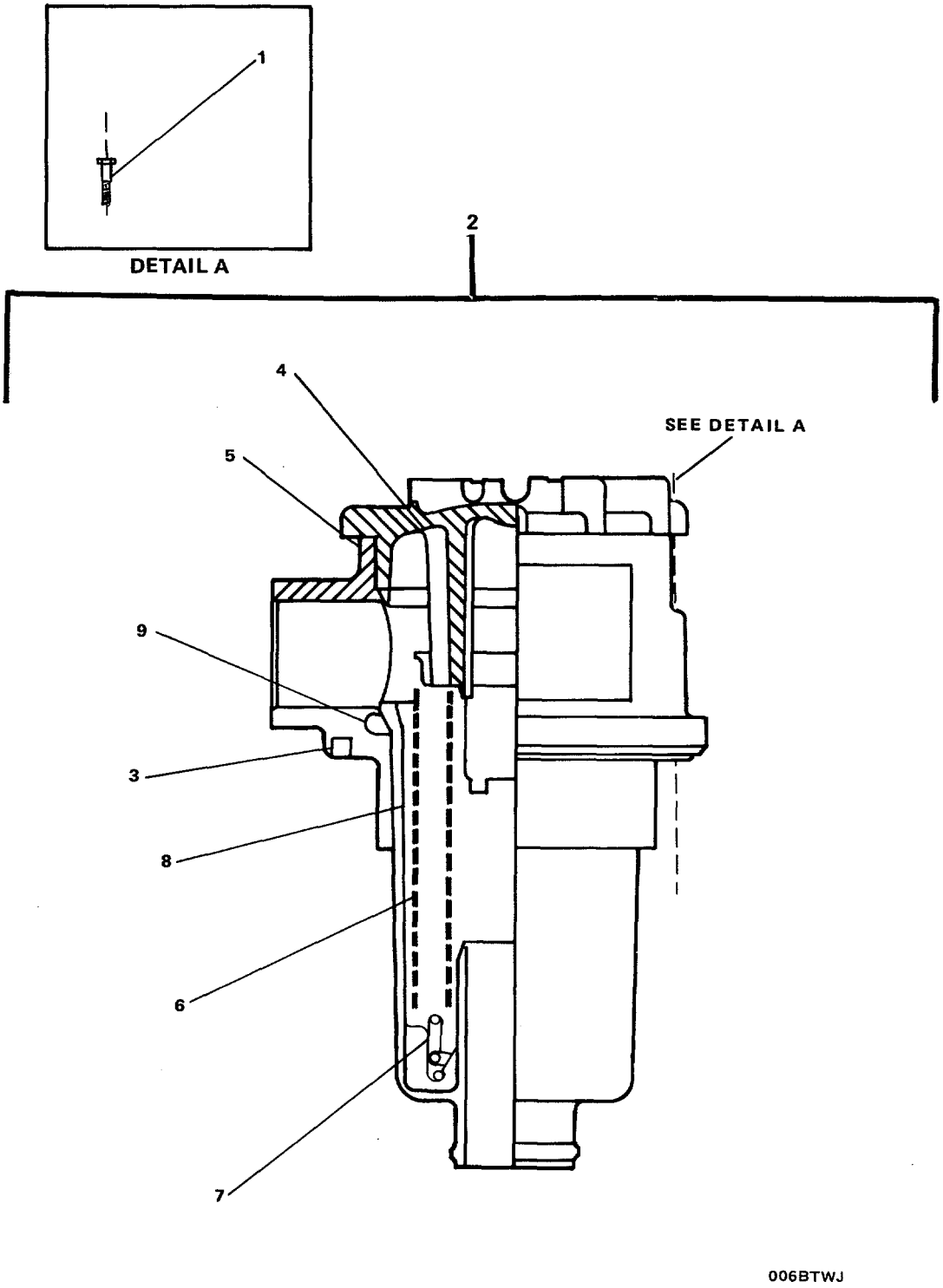

FIGURE 162. Oil Return Filter Assembly.

(1) ITEM NO	(2) SMR CODE	(3) FSCM	(4) PART NUMBER	(5) DESCRIPTION AND USABLE ON CODES(UOC)	(6) QTY
				GROUP 06 SPJ55 BOW THRUSTER WATER JET	
				FIG. 162 HYDRAULIC AGGREGATE BASE ASSEMBLY	
1	XDCZZ	32862	1000766	..SCREW, MACHINE	2
2	PBCOO	32862	6730162286	..FILTER, FLUID	1
3	PBCZZ	32862	0040141463	...PACKING, PREFORMED	1
4	XDCZZ	32862	6730217179	...COVER, ACCESS	1
5	PBCZZ	32862	2307632101	...PACKING, PREFORMED	1
6	PACZZ	32862	H68/1	...FILTER, ELEMENT, FLUI	1
7	XDCZZ	32862	2504251171	...SPRING	1
8	XDCZZ	32862	6730112129	...FILTERPOT	1
9	PBCZZ	32862	2307032151	...PACKING, PREFORMED	1

END OF FIGURE

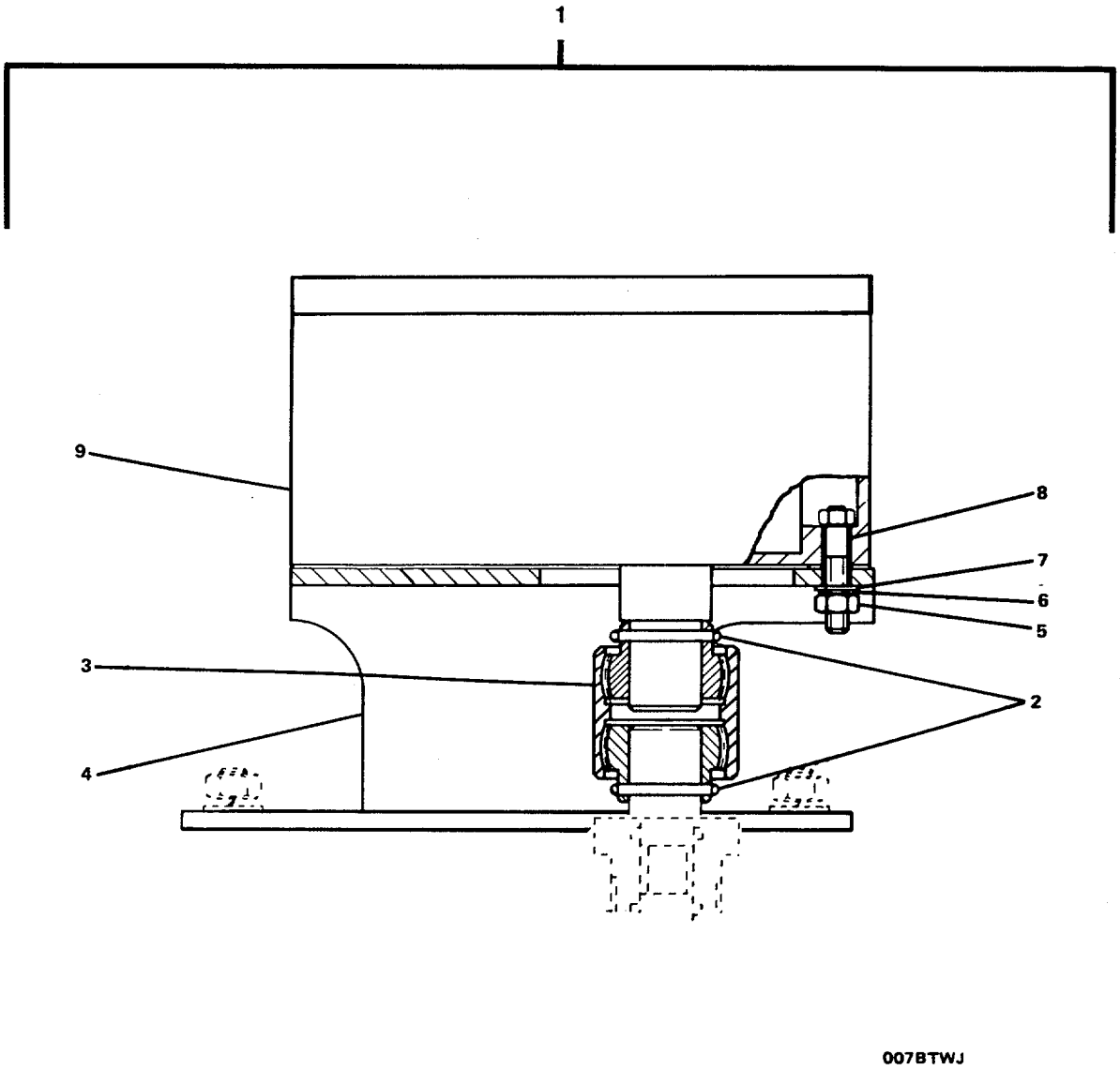

FIGURE 163. Feedback Unit.

(1) ITEM NO	(2) SMR CODE	(3) FSCM	(4) PART NUMBER	(5) DESCRIPTION AND USABLE ON CODES(UOC)	(6) QTY
				GROUP 06 SPJ55 BOW THRUSTER WATER JET	
				FIG. 163 FEEDBACK UNIT	
1	XDFHH	32862	1066805	.FEEDBACK UNIT	1
2	XDHZZ	32862	1005958	..SLEEVE, SPLIT	2
3	XDHZZ	32862	1066910	..COUPLING	1
4	XDHZZ	32862	1066804	..CONSOLE	1
5	XDHZZ	32862	1000985	..NUT, PLAIN, HEXAGON	4
6	XDHZZ	32862	1001578	..WASHER, SPRING	4
7	XDHZZ	32862	1007330	..WASHER, FLAT	4
8	PAOZZ	32862	1000811	..SCREW, CAP, HEXAGON H	4
9	PAOZZ	32862	1053070	..TRANSMITTER, RUDDER	1

END OF FIGURE

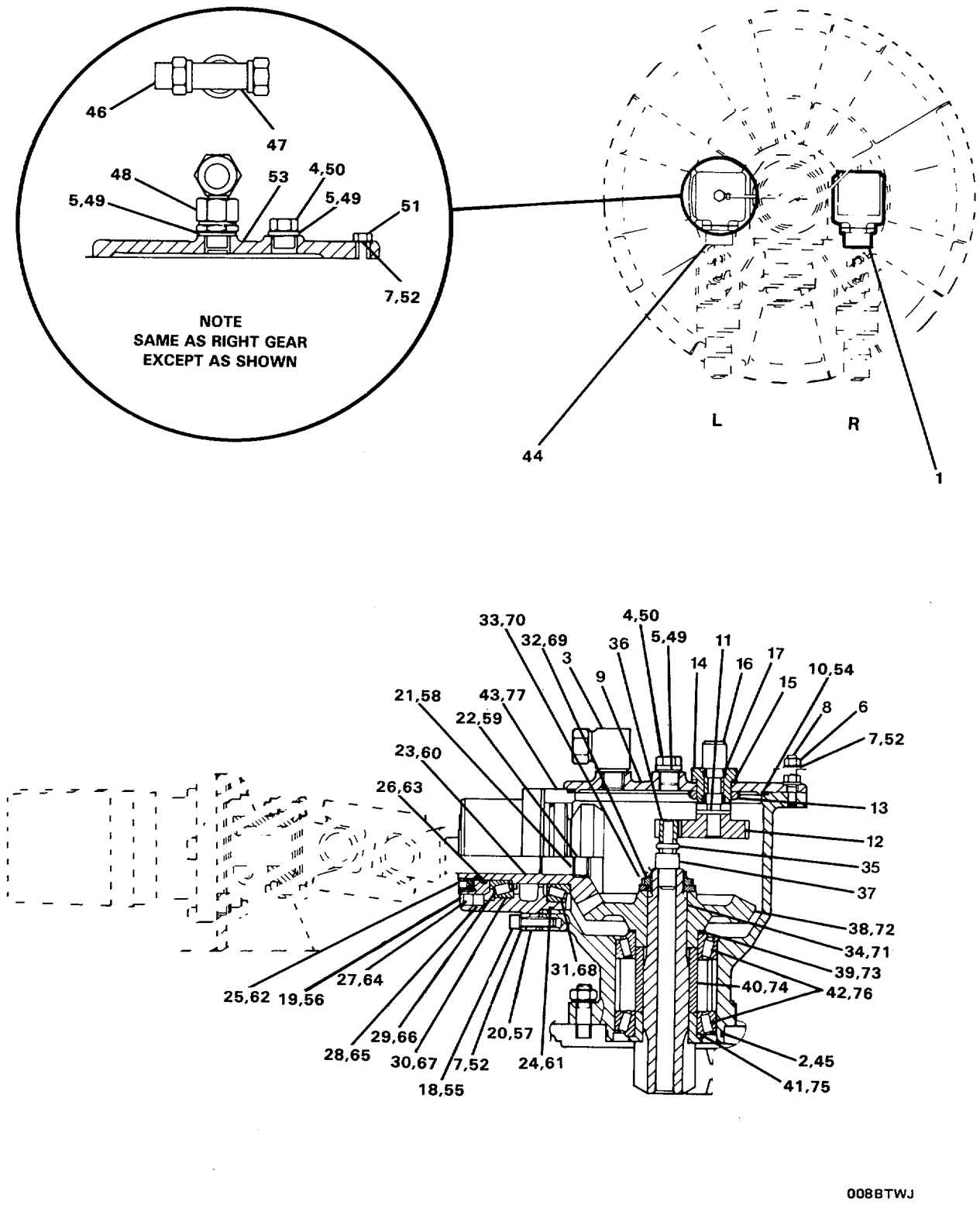

FIGURE 164. Steering Gear Assembly.

GROUP 06 SPJ55 BOW THRUSTER
WATER JET

FIG. 164 STEERING GEAR ASSEMBLY

(1) ITEM NO	(2) SMR CODE	(3) FSCM	(4) PART NUMBER	(5) DESCRIPTION AND USABLE ON CODES(UOC)	(6) QTY
1	PBFHH	32862	1074151	.STEERING GEAR	1
2	PBHZZ	32862	1001383	..PACKING, PREFORMED	1
3	XDHZZ	32862	1006994	..FITTING, BANJO, THROT	1
4	XDHZZ	32862	1002245	..PLUG, MACHINE THREAD	1
5	PBHZZ	32862	1006000	..PACKING, PREFORMED	1
6	XDHZZ	32862	1010940	..NUT, PLAIN, HEXAGON	4
7	XDHZZ	32862	1002332	..WASHER, LOCK	12
8	XDHZZ	32862	1004178	..STUD, PLAIN	4
9	XDHZZ	32862	1066806	..COVER, ACCESS	1
10	PBHZZ	32862	1001422	..PACKING, PREFORMED	1
11	XDHZZ	32862	1005958	..SLEEVE, SPLIT	1
12	XDHZZ	32862	1066657	..GEAR	1
13	XDHZZ	32862	1002057	..NUT, SELF-LOCKING, SL	1
14	PBHZZ	32862	1066809	..BUSHING, SLEEVE	1
15	PAHZZ	32862	1005980	..PACKING, PREFORMED	1
16	XDHZZ	32862	1066810	..SHAFT, DRIVE	1
17	PAHZZ	32862	1032497	..PACKING, PEFORMED	2
18	XDHZZ	32862	1000819	..SCREW, CAP, HEXAGON H	8
19	XDHZZ	32862	1051039	..HOUSING, DRIVE, STEER	1
20	XDHZZ	32862	1013490	..SPACER	1
21	XDHZZ	32862	1002345	..CIRCLIP	1
22	XDHZZ	32862	1013855	..COVER	1
23	XDHZZ	32862	1013476	..SHAFT, DRIVE, PINION	1
24	PBHZZ	32862	1001377	..SEAL RING, METAL	1
25	XDHZZ	32862	1013489	..NUT	1
26	PBHZZ	32862	1001483	..PACKING, PREFORMED	1
27	XDHZZ	32862	1013488	..BEARING, SLEEVE	1
28	PBHZZ	32862	1001138	..SEAL RING, METAL	1
29	XDHZZ	32862	1004146	..BEARING, ROLLER	1
30	XDHZZ	32862	1013565	..SHIM	1
31	XDHZZ	32862	1053312	..BEARING, ROLLER	1
32	XDHZZ	32862	1013482	..NUT, SELF-LOCKING, SL	1
33	XDHZZ	32862	1035460	..SPACER	1
34	XDHZZ	32862	1059812	..PINION	1
35	XDHZZ	32862	1021874	..SLEEVE, SPLIT	1
36	XDHZZ	32862	1066656	..GEAR, SPUR	1
37	XDHZZ	32862	1074152	..SHAFT	1
38	XDHZZ	32862	1013477	..GEAR, BEVEL	1
39	XDHZZ	32862	1035473	..SPACER	1
40	XDHZZ	32862	1036124	..SLEEVE, SPACER	1
41	XDHZZ	32862	1060092	..BEARING, SLEEVE	1
42	XDHZZ	32862	1036509	..BEARING, ROLLER	2
43	XDHZZ	32862	1060090	..HOUSING ASSEMBLY	1
44	PBFHH	32862	1075175	.STEERING GEAR	1
45	PBHZZ	32862	1001383	..PACKING, PREFORMED	1
46	XDHZZ	32862	1018148	..PLUG, MACHINE THREAD	1
47	XDHZZ	32862	1013731	..UNION, PIPE	1

(1) ITEM NO	(2) SMR CODE	(3) FSCM	(4) PART NUMBER	(5) DESCRIPTION AND USABLE ON CODES(UOC)	(6) QTY
48	XDHZZ	32862	1007790	..UNION, PIPE	1
49	PBHZZ	32862	1006000	..PACKING, PREFORMED	2
50	XDHZZ	32862	1002245	..PLUG, MACHINE THREAD	1
51	XDHZZ	32862	1000329	..SCREW, CAP, HEXAGON H	4
52	XDHZZ	32862	1002332	..WASHER, LOCK	12
53	XDHZZ	32862	1060416	..COVER, ACCESS	1
54	PBHZZ	32862	1001422	..PACKING, PREFORMED	1
55	XDHZZ	32862	1000819	..SCREW, CAP, HEXAGON H	8
56	XDHZZ	32862	1051039	..HOUSING, DRIVE, STEER	1
57	XDHZZ	32862	1013490	..SPACER	1
58	XDHZZ	32862	1002345	..CIRCLIP	1
59	XDHZZ	32862	1013855	..COVER	1
60	XDHZZ	32862	1013476	..SHAFT, DRIVE, PINION	1
61	PBHZZ	32862	1001377	..SEAL RING, METAL	1
62	XDHZZ	32862	1013489	..NUT	1
63	PBHZZ	32862	1001483	..PACKING, PREFORMED	1
64	XDHZZ	32862	1013488	..BEARING, SLEEVE	1
65	PBHZZ	32862	1001138	..SEAL RING, METAL	1
66	XDHZZ	32862	1004146	..BEARING, ROLLER	1
67	XDHZZ	32862	1013565	..SHIM	1
68	XDHZZ	32862	1053312	..BEARING, ROLLER	1
69	XDHZZ	32862	1013482	..NUT, SELF-LOCKING, SL	1
70	XDHZZ	32862	1035460	..SPACER	1
71	XDHZZ	32862	1059812	..PINION	1
72	XDHZZ	32862	1013477	..GEAR, BEVEL	1
73	XDHZZ	32862	1035473	..SPACER	1
74	XDHZZ	32862	1036124	..SLEEVE, SPACER	1
75	XDHZZ	32862	1060092	..BEARING, SLEEVE	1
76	XDHZZ	32862	1036509	..BEARING, ROLLER	2
77	XDHZZ	32862	1060090	..HOUSING ASSEMBLY	1

END OF FIGURE

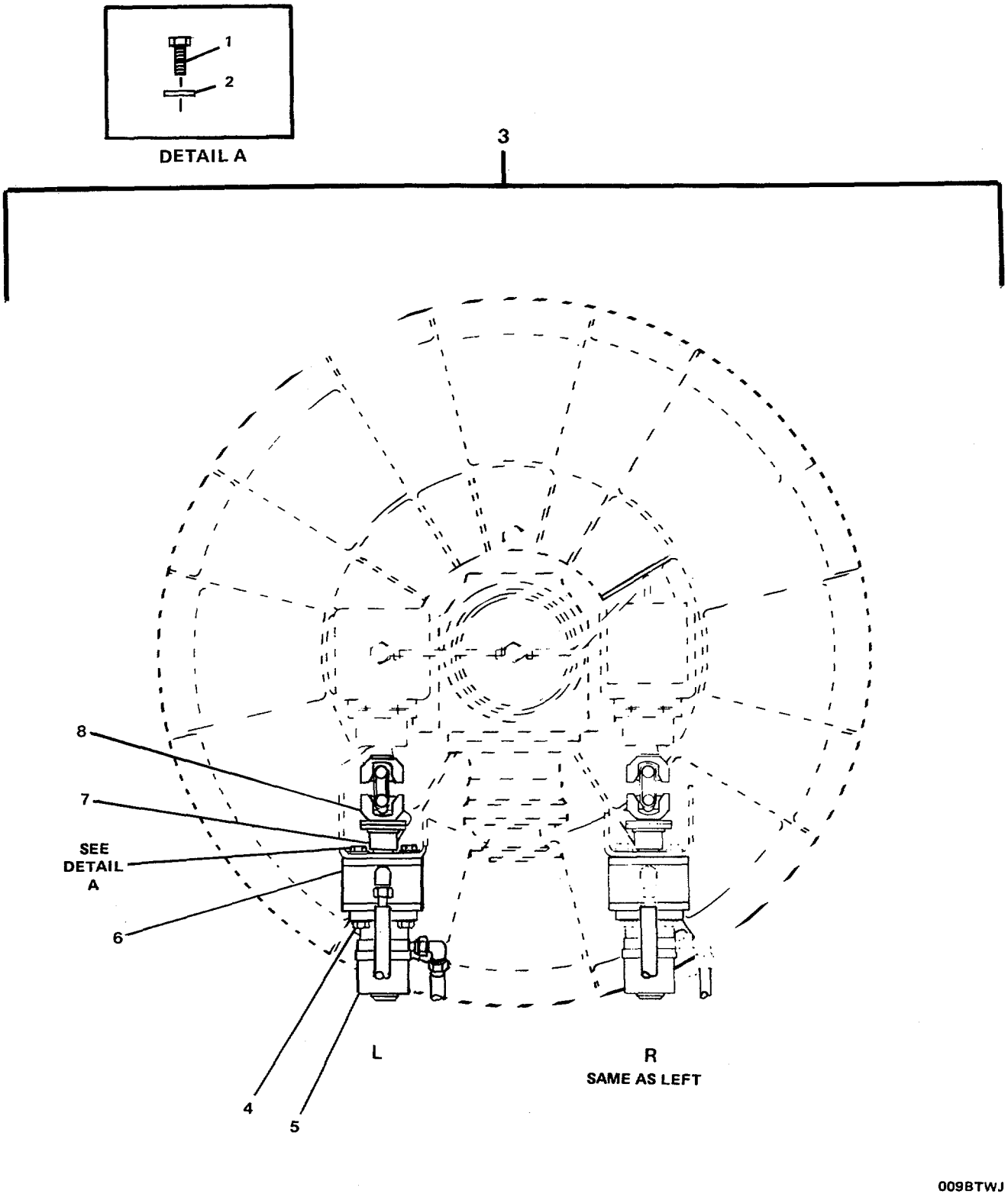

FIGURE 165. Steering Assembly.

(1) ITEM NO	(2) SMR CODE	(3) FSCM	(4) PART NUMBER	(5) DESCRIPTION AND USABLE ON CODES(UOC)	(6) QTY
				GROUP 06 SPJ55 BOW THRUSTER WATER JET	
				FIG. 165 STEERING ASSEMBLY	
1	XDFZZ	32862	1039753	.BOLT, MACHINE	4
2	XDFZZ	32862	1007336	.WASHER, FLAT	4
3	PBFFF	32862	1079995	.STEERING SYSTEM, MAR	1
4	XDFZZ	32862	1000778	..SCREW, CAP, HEXAGON H	4
5	XDFZZ	32862	1069156	..HY-MOTOR	2
6	XDFZZ	32862	1064129	..BRAKE	2
7	XDFZZ	32862	1073949	..COUPLING	1
8	XDFZZ	32862	1060418	..UNIVERSAL JOINT	1

END OF FIGURE

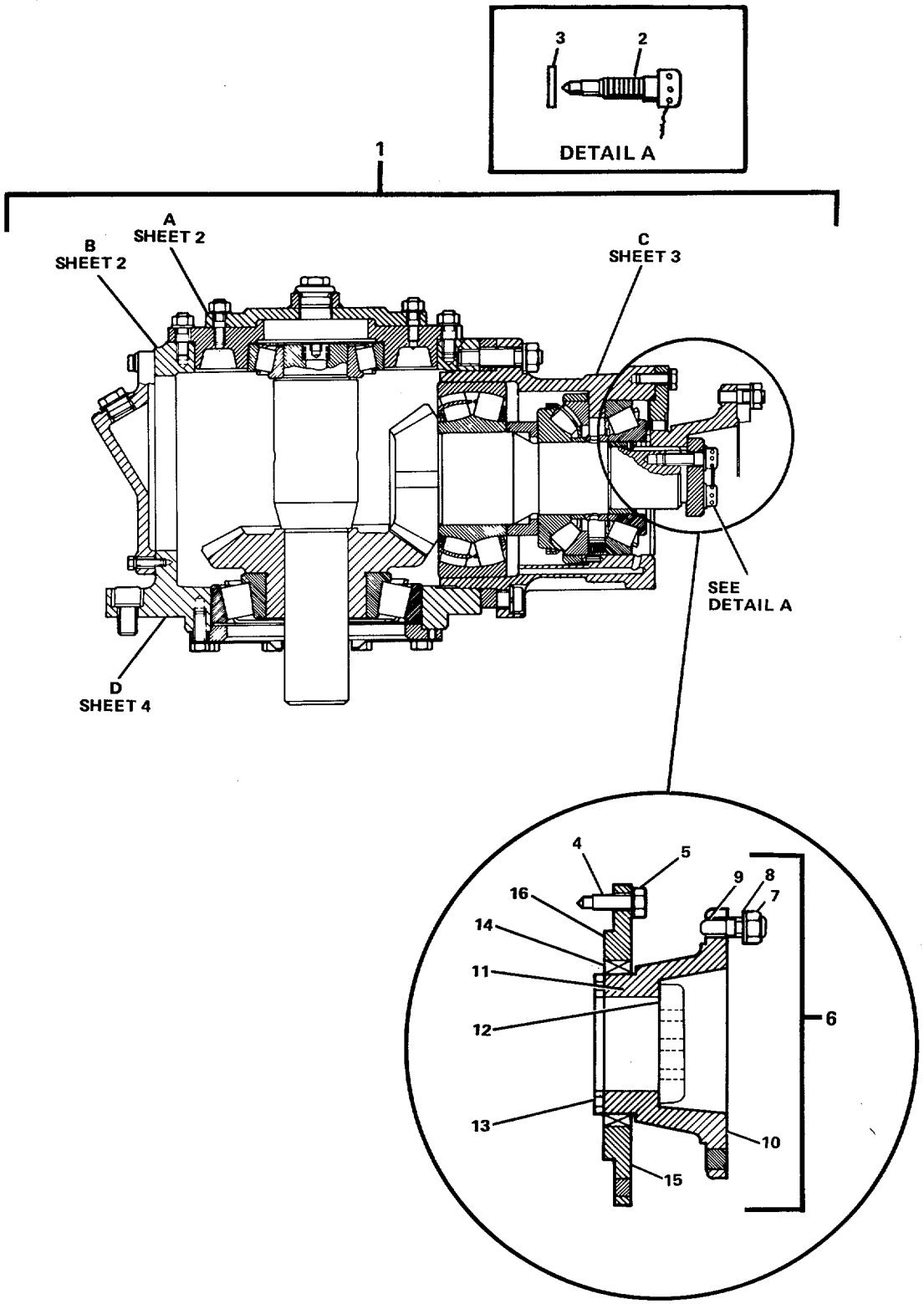

FIGURE 166. Upper Gear Assembly (Sheet 1 of 4).

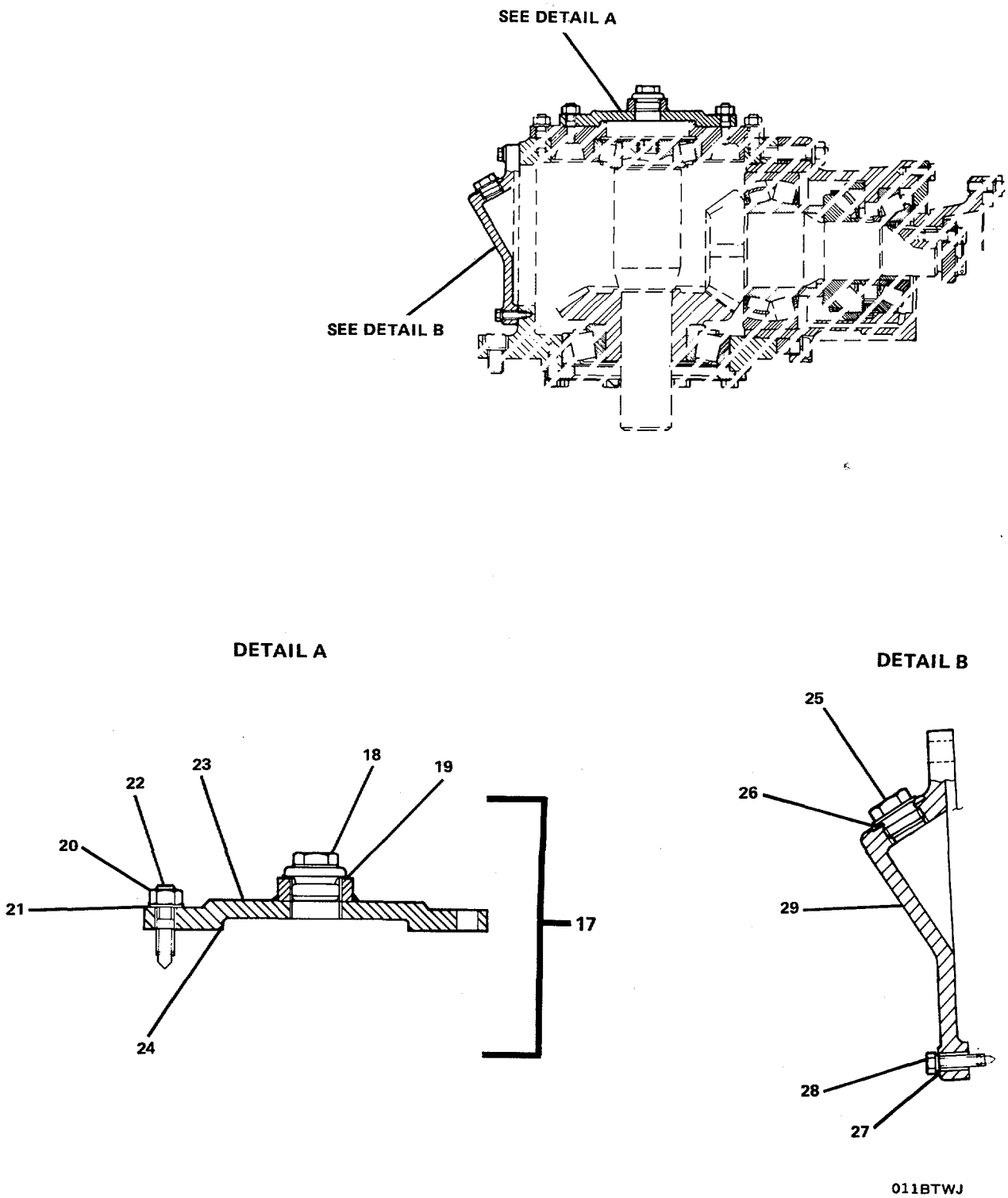

FIGURE 166. Upper Gear Assembly (Sheet 2 of 4).

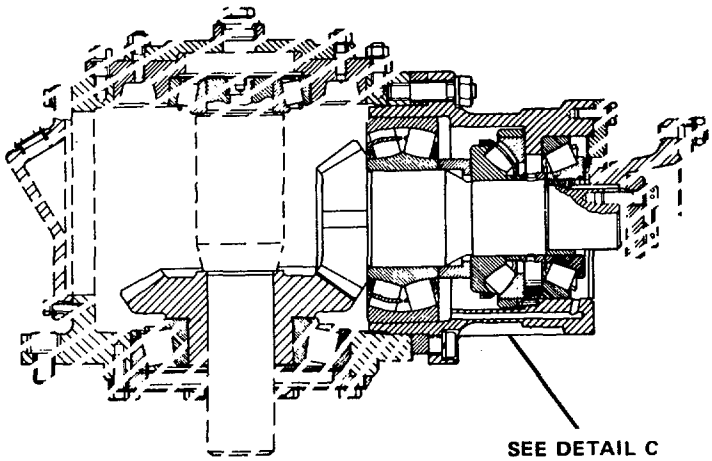

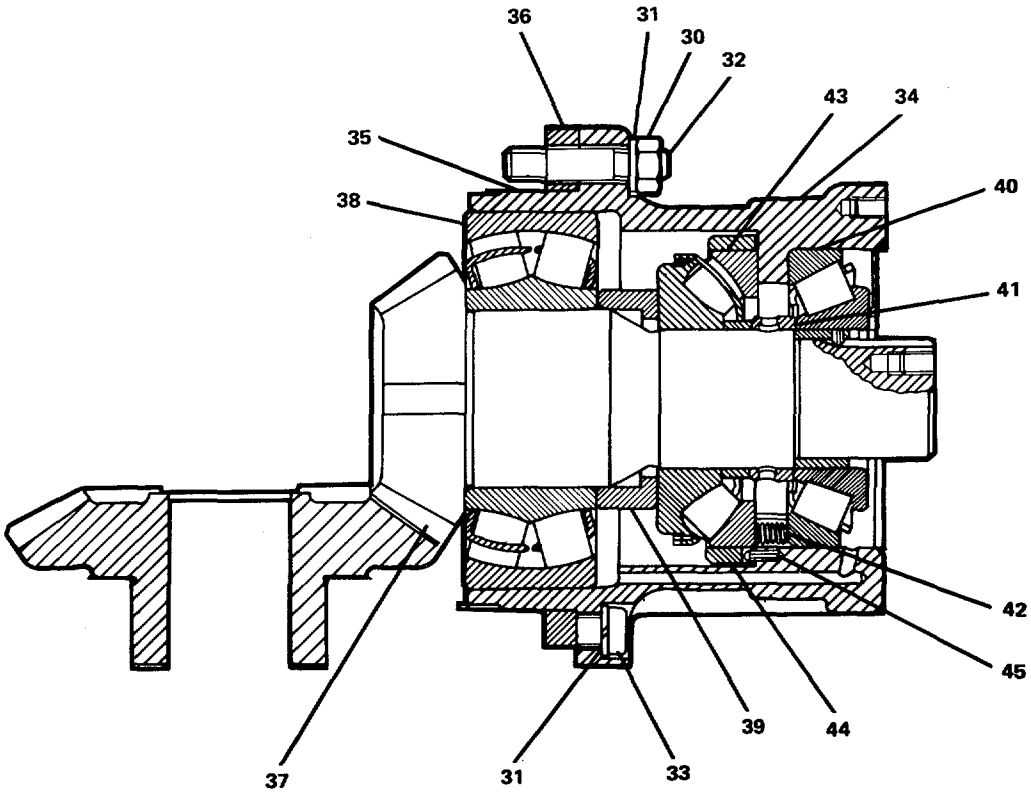

DETAIL C

012BTWJ

FIGURE 166. Upper Gear Assembly (Sheet 3 of 4).

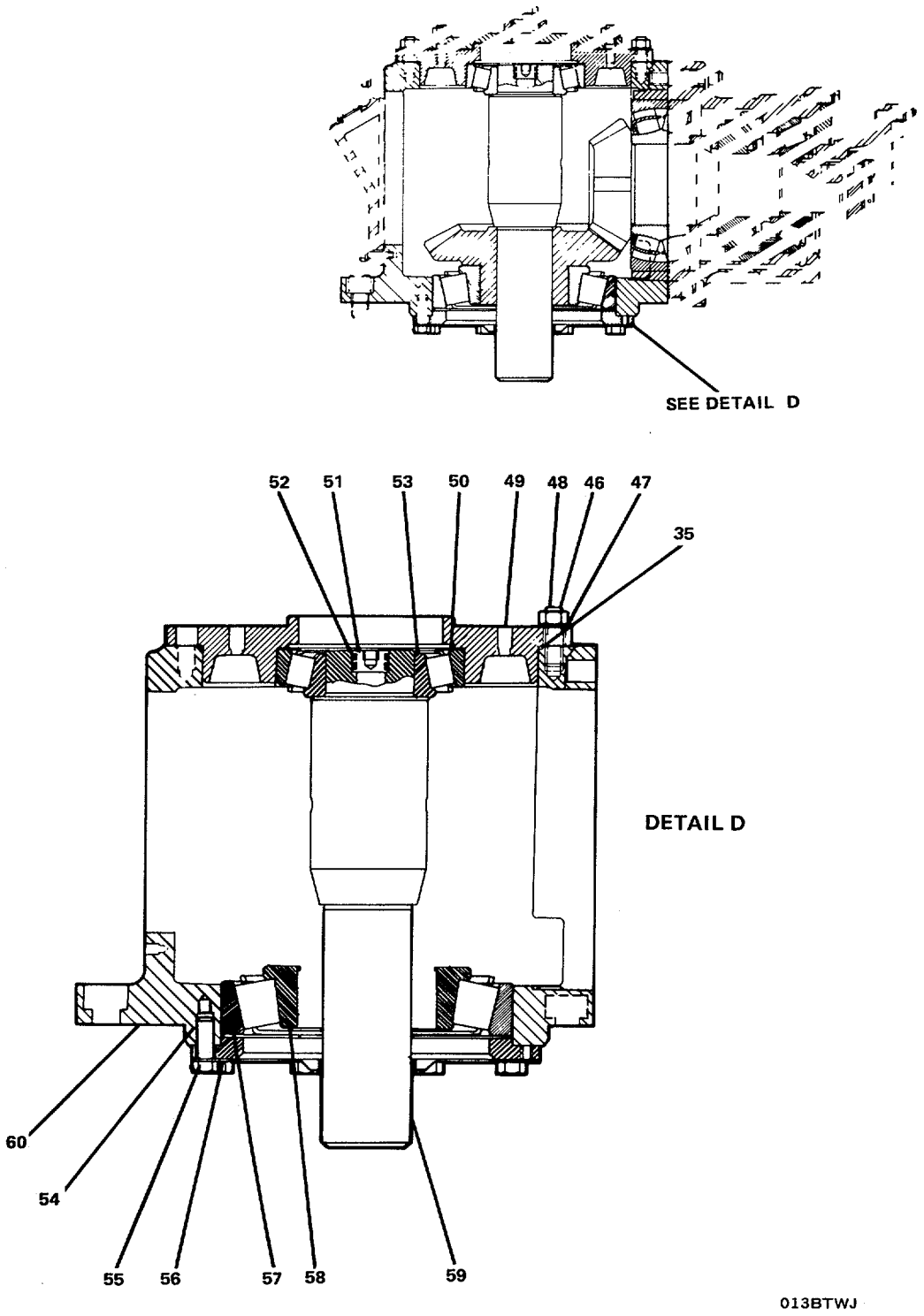

FIGURE 166. Upper Gear Assembly (Sheet 4 of 4).

GROUP 06 SPJ55 BOW THRUSTER
WATER JET

FIG. 166 UPPER GEAR ASSEMBLY

(1) ITEM NO	(2) SMR CODE	(3) FSCM	(4) PART NUMBER	(5) DESCRIPTION AND USABLE ON CODES(UOC)	(6) QTY
1	PBFHH	32862	1079853	.DRIVE UNIT, ANGLE	1
2	XDFZZ	32862	1001923	..SCREW, CAP, HEXAGON H.	3
3	XDFZZ	32862	1007336	..WASHER, FLAT	3
4	XDFZZ	32862	1000336	..SCREW, CAP, HEXAGON H.	8
5	XDFZZ	32862	1002325	..WASHER, SPRING	8
6	XDFFF	32862	1004587	..FLANGE ASSEMBLY	1
7	XDFZZ	32862	1012748	...NUT, PLAIN, HEXAGON	8
8	XDFZZ	32862	1002335	...WASHER, LOCK	8
9	XDFZZ	32862	1001082	...STUD, PLAIN	8
10	XDFZZ	32862	1007390	...FLANGE	1
11	PBFZZ	32862	1001484	...PACKING, PREFORMED	1
12	XDFZZ	32862	1003928	...RING	1
13	PBFZZ	32862	1001357	...PACKING, PREFORMED	1
14	PBFZZ	32862	1001735	...SEAL, PLAIN ENCASED	1
15	XDFZZ	32862	1004380	...COVER, BEARING	1
16	PBFZZ	32862	1001408	...PACKING, PREFORMED	1
17	XDFFF	32862	1011528	..COVER ASSEMBLY	1
18	XDFZZ	32862	1003690	...SCREW, MACHINE	1
19	XDFZZ	32862	1005988	...PACKING, PREFORMED	1
20	XDFZZ	32862	1001006	...NUT, PLAIN, HEXAGON	10
21	XDFZZ	32862	1002334	...WASHER, LOCK	10
22	XDFZZ	32862	1044688	...STUD, PLAIN	10
23	XDFZZ	32862	1004385	...COVER	1
24	PBFZZ	32862	1001392	...PACKING, PREFORMED	1
25	XDFZZ	32862	1007070	..PLUG	1
26	XDFZZ	32862	1011618	..PACKING, PREFORMED	1
27	XDHZZ	32862	1024145	..SCREW, CAP, HEXAGON H.	10
28	XDHZZ	32862	1002332	..WASHER, LOCK	10
29	XDHZZ	32862	1003211	..COVER	1
30	XDHZZ	32862	1010938	..NUT, PLAIN, HEXAGON	6
31	XDHZZ	32862	1002336	..WASHER, LOCK	8
32	XDHZZ	32862	1001202	..STUD, PLAIN	6
33	XDHZZ	32862	1000899	..SCREW, CAP, HEXAGON, H.	2
34	XDHZZ	32862	1006524	..SHELL, BEARING	1
35	PBHZZ	32862	1001438	..PACKING, PREFORMED	2
36	XDHZZ	32862	1006519	..SPACER	1
37	XDHZZ	32862	1079852	..GEAR, BEVEL, MATCHED (SET OF 2)	1
38	XDHZZ	32862	1005337	..BEARING, ROLLER	1
39	XDHZZ	32862	1079856	..SLEEVE	1
40	XDHZZ	32862	1004141	..BEARING, ROLLER	1
41	XDHZZ	32862	1002533	..SPACER	1
42	XDHZZ	32862	1002515	..SPRING	3
43	XDHZZ	32862	1005315	..BEARING, ROLLER	2
44	XDHZZ	32862	1002917	..RING, LOCK	1
45	XDHZZ	32862	1008962	..PIN, SPLINED	1
46	XDHZZ	32862	1001006	..NUT, PLAIN, HEXAGON	10
47	XDHZZ	32862	1002334	..WASHER, LOCK	10

(1) ITEM NO	(2) SMR CODE	(3) PART FSCM	(4) NUMBER	(5) DESCRIPTION AND USABLE ON CODES(UOC)	(6) QTY
48	XDHZZ	32862	1044688	..STUD, PLAIN	10
49	XDHZZ	32862	1006504	..RETAINER, BEARING	1
50	XDHZZ	32862	1010028	..SHIM (SET OF 3)	1
51	XDHZZ	32862	1001986	..PLUG	1
52	PBHZZ	32862	1001317	..PACKING, PREFORMED	2
53	PBHZZ	32862	1004121	..BEARING, ROLLER, CYLI	1
54	XDHZZ	32862	1000778	..SCREW, CAP, HEXAGON H	8
55	XDHZZ	32862	1002940	..WASHER, TAP (2 HOLE)	4
56	XDHZZ	32862	1004391	..RETAINER, BEARING	1
57	XDHZZ	32862	1011524	..SHIM (SET OF 3)	1
58	XDHZZ	32862	1004128	..BEARING, ROLLER	1
59	XDHZZ	32862	1004396	..SHAFT, HOLLOW	1
60	XDHZZ	32862	1069557	..HOUSING, GEARCASE	1

END OF FIGURE

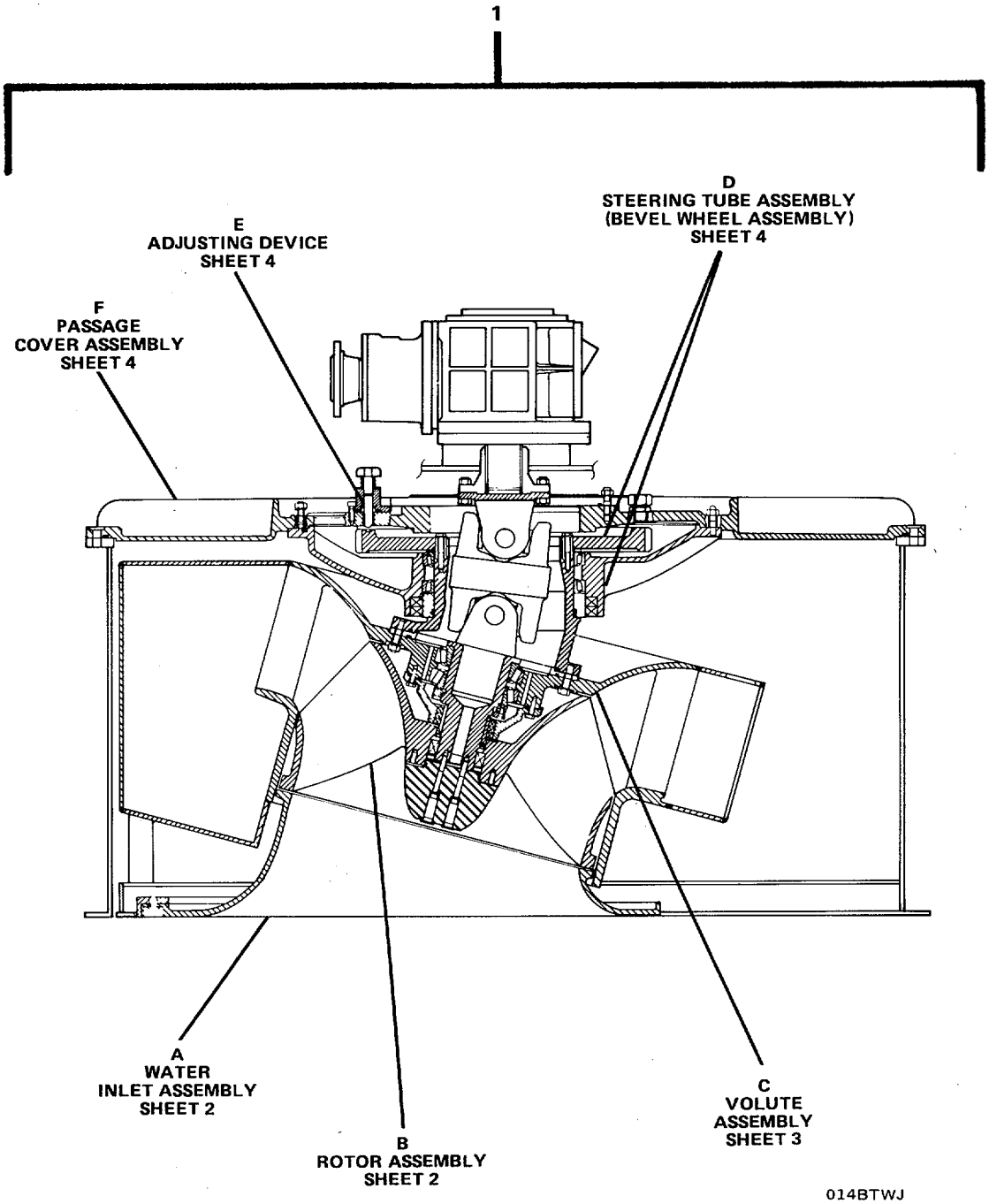

FIGURE 167. Water Jet Assembly (Sheet 1 of 4).

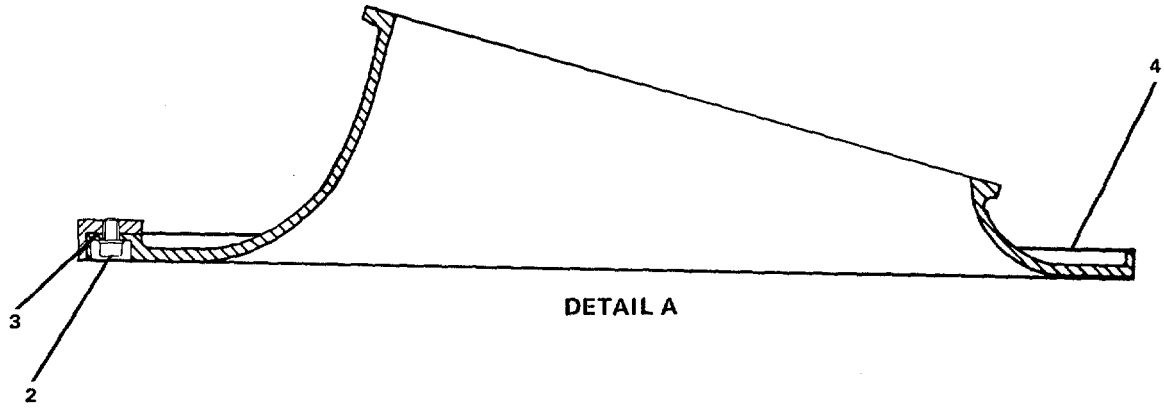

DETAIL A

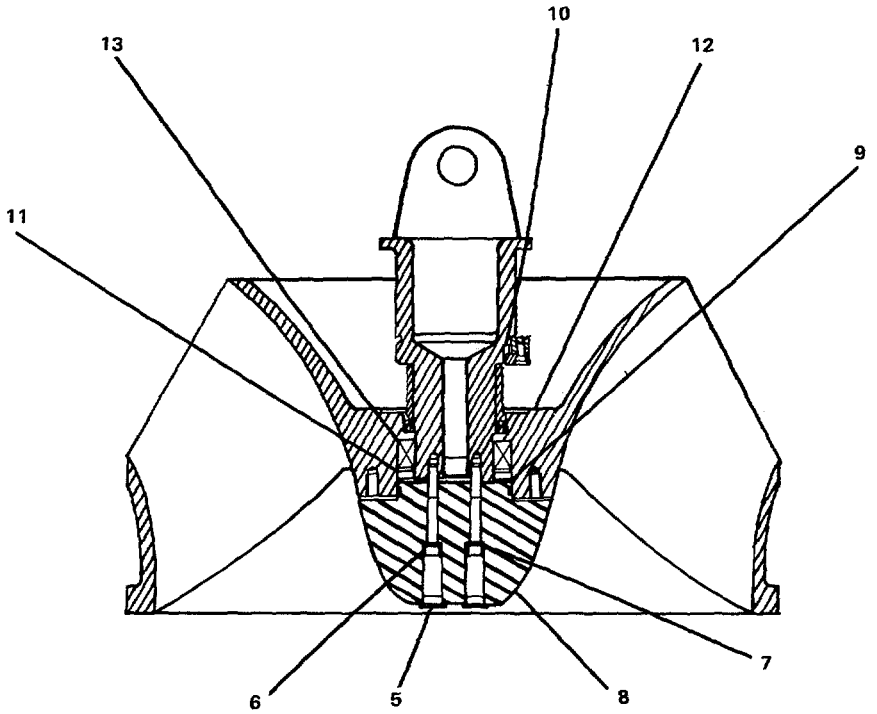

DETAIL B

015BTWJ

FIGURE 167. Water Jet Assembly (Sheet 2 of 4).

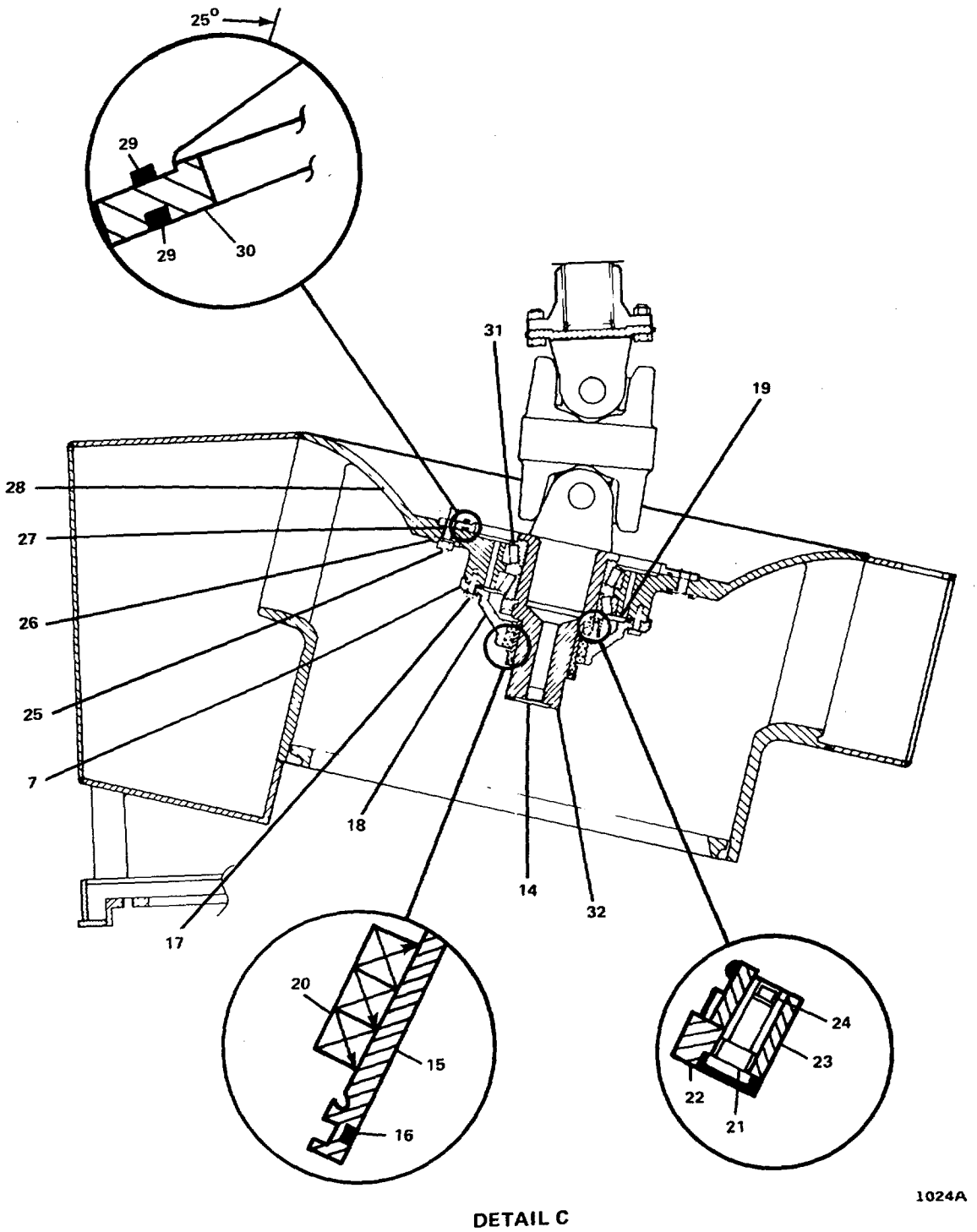

FIGURE 167. Water Jet Assembly (Sheet 3 of 4).

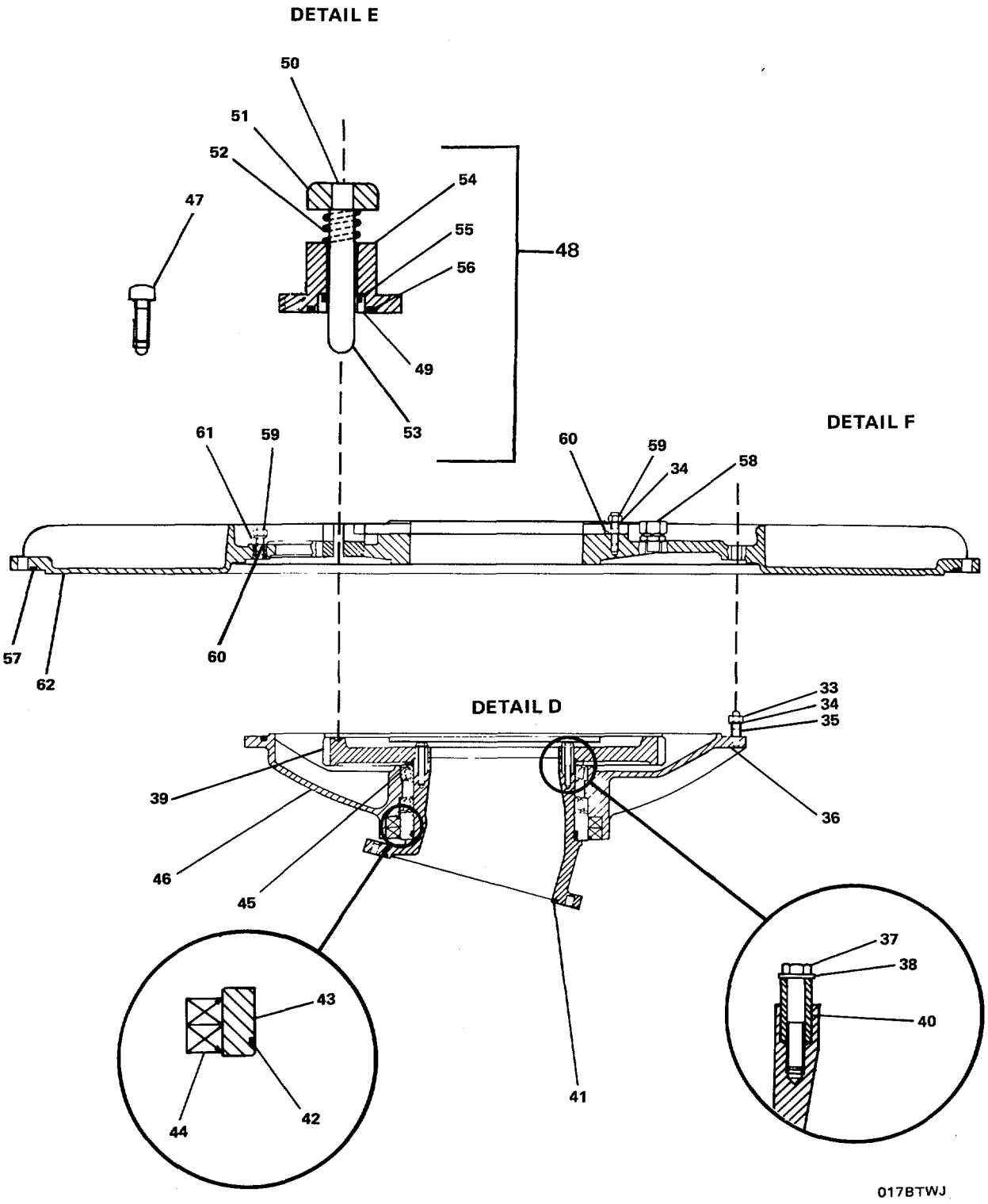

FIGURE 167. Water Jet Assembly (Sheet 4 of 4).

GROUP 06 SPJ55 BOW THRUSTER
WATER JET

FIG. 167 WATER JET ASSEMBLY

(1) ITEM NO	(2) SMR CODE	(3) PART FSCM	(4) NUMBER	(5) DESCRIPTION AND USABLE ON CODES(UOC)	(6) QTY
1	PBFHH	32862	1079871	.EJECTOR, JET	1
2	XDHZZ	32862	1000963	..SCREW, CAP, SOCKET HE	5
3	XDHZZ	32862	1002327	..WASHER, SPRING	5
4	XDHZZ	32862	1073947	..INLET ASSEMBLY, WATE	1
5	XDHZZ	32862	1009196	..PLUG	2
6	XDHZZ	32862	1000824	..SCREW, CAP, SOCKET HE	2
7	XDHZZ	32862	1002324	..WASHER, SPRING	8
8	XDHZZ	32862	1057593	..CAP, IMPELLER	1
9	PBHZZ	32862	1001377	..SEAL RING, METAL	1
10	PBHZZ	32862	1001343	..PACKING, PREFORMED	1
11	XDHZZ	32862	1061004	..CLAMP, RING, SPRING S	1
12	XDHZZ	32862	1068446	..WHEEL, ROTARY	1
13	PAHZZ	32862	1001367	..PACKING, PREFORMED	1
14	XDHZZ	32862	1043365	..PLUG	1
15	XDHZZ	32862	1023016	..BUSHING	1
16	PAHZZ	32862	1001361	..PACKING, PREFORMED	1
17	XDHZZ	32862	1000705	..SCREW	6
18	XDHZZ	32862	1068585	..HUB	1
19	PAHZZ	32862	1001428	..SEAL RING, METAL	1
20	PAHZZ	32862	1001147	..SEAL RING, METAL	3
21	XDHZZ	32862	1028927	..SCREW, SLOTTED, PAN H	1
22	XDHZZ	32862	1003587	..LOCKING PIECE	1
23	XDHZZ	32862	1003588	..LOCKING PIECE	1
24	XDHZZ	32862	1048381	..NUT, SELF-LOCKING, HE	1
25	XDHZZ	32862	1021602	..NUT, PLAIN, HEXAGON	12
26	XDHZZ	32862	1049041	..WASHER, SPRING	12
27	XDHZZ	32862	1001070	..STUD, PLAIN	12
28	XDHZZ	32862	1079956	..CASING, VOLUTE	1
29	PAHZZ	32862	1001449	..SEAL RING, METAL	2
30	XDHZZ	32862	1079954	..SPACER	1
31	PAHZZ	32862	1048902	..BEARING, ROLLER, CYLI	2
32	PAHZZ	32862	1079865	..SHAFT, STRAIGHT	1
33	XDHZZ	32862	1000996	..NUT, PLAIN, HEXAGON	24
34	XDHZZ	32862	1002325	..WASHER, SPRING	48
35	XDHZZ	32862	1001056	..STUD, PLAIN	24
36	PBHZZ	32862	1060407	..SEAL RING, METAL	1
37	XDHZZ	32862	1000305	..BOLT, MACHINE	24
38	XDHZZ	32862	1076169	..WASHER, FLAT	24
39	XDHZZ	32862	1079955	..WHEEL, BEVEL	1
40	XDHZZ	32862	1005969	..SLEEVE, CLAMPING	24
41	XDHZZ	32862	1073799	..STEERING TUBE	1
42	PAHZZ	32862	1001444	..PACKING, PREFORMED	1
43	XDHZZ	32862	1068583	..BUSHING	1
44	XDHZZ	32862	1063686	..SEAL, RING, METAL	2
45	PAHZZ	32862	1061005	..BEARING, ROLLER, CYLI	2
46	XDHZZ	32862	1072844	..SUPPORT	1
47	XDHZZ	32862	1000817	..SCREW, SELF-LOCKING	2

(1) ITEM NO	(2) SMR CODE	(3) PART FSCM	(4) NUMBER	(5) DESCRIPTION AND USABLE ON CODES(UOC)	(6) QTY
48	XDHHH	32862	1027410	..ADJUSTING DEVICE	1
49	PAHZZ	32862	1001324	...PACKING, PREFORMED	1
50	XDHZZ	32862	1005958	...SLEEVE, SPLIT	1
51	XDHZZ	32862	1027409	...DISK	1
52	XDHZZ	32862	1027422	...SPRING, TENSION	1
53	XDHZZ	32862	1027408	...BOLT	1
54	PAHZZ	32862	1034768	...SEAL RING, METAL	1
55	XDHZZ	32862	1021874	...SLEEVE, SPLIT	1
56	XDHZZ	32862	1027406	...FLANGE	1
57	PAHZZ	32862	1068806	..SEAL, RING, METAL	1
58	XDHZZ	32862	1007791	..FITTING, PIPE	1
59	XDHZZ	32862	1001006	..NUT, PLAIN, HEXAGON	31
60	XDHZZ	32862	1001069	..STUD, PLAIN	31
61	XDHZZ	32862	1002326	..WASHER, SPRING	7
62	XDHZZ	32862	1079858	..COVER, PASSAGE	1

END OF FIGURE

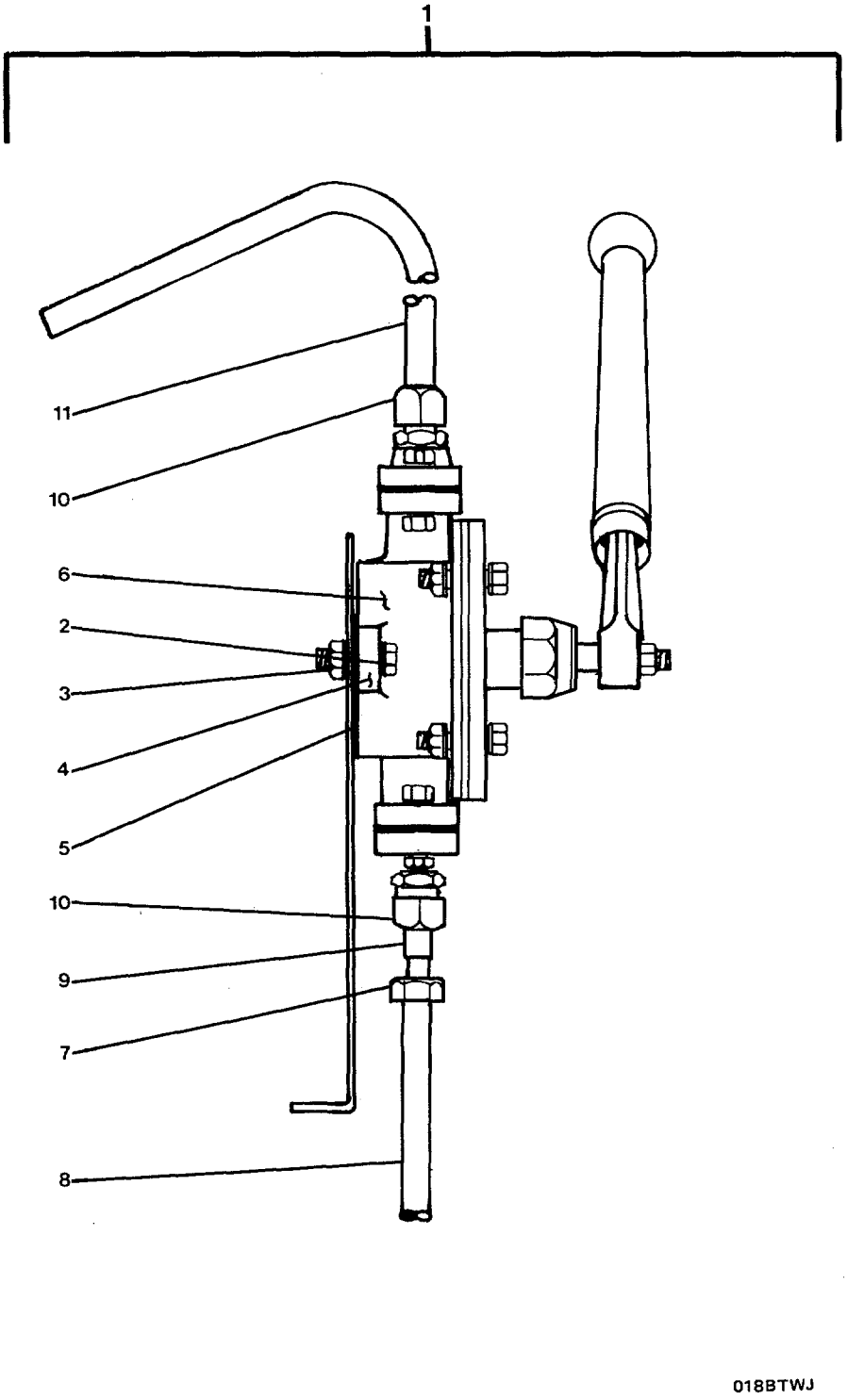

FIGURE 168. Oil Evacuation Pump.

GROUP 06 SPJ55 BOW THRUSTER
WATER JET

FIG. 168 OIL EVACUATION PUMP

(1) ITEM NO	(2) SMR CODE	(3) PART FSCM	(4) NUMBER	(5) DESCRIPTION AND USABLE ON CODES(UOC)	(6) QTY
1	PBCOO	32862	1009004E1	.PUMP, LUBRICANT, TRAN.....	1
2	XDCZZ	32862	1000337	..SCREW, CAP, HEXAGON H.....	1
3	XDCZZ	32862	1001559	..WASHER, SPRING TENSI.....	1
4	XDCZZ	32862	1000995	..NUT, PLAIN, HEXAGON	1
5	XDCZZ	32862	1003866	..BRACKET, MOUNTING	1
6	XDCZZ	32862	1009526	..PUMP, SEMI-ROTARY	1
7	XDCZZ	32862	1014630	..STRAP, HOSE	1
8	XDCZZ	32862	1023103	..HOSE,NONMETALLIC	1
9	XDCZZ	32862	1003867	..REDUCER, PIPE.....	1
10	XDCZZ	32862	1007800	..FITTING, STRAIGHT, MA	2
11	XDCZZ	32862	1004245	..TUBE, METALLIC	1

END OF FIGURE

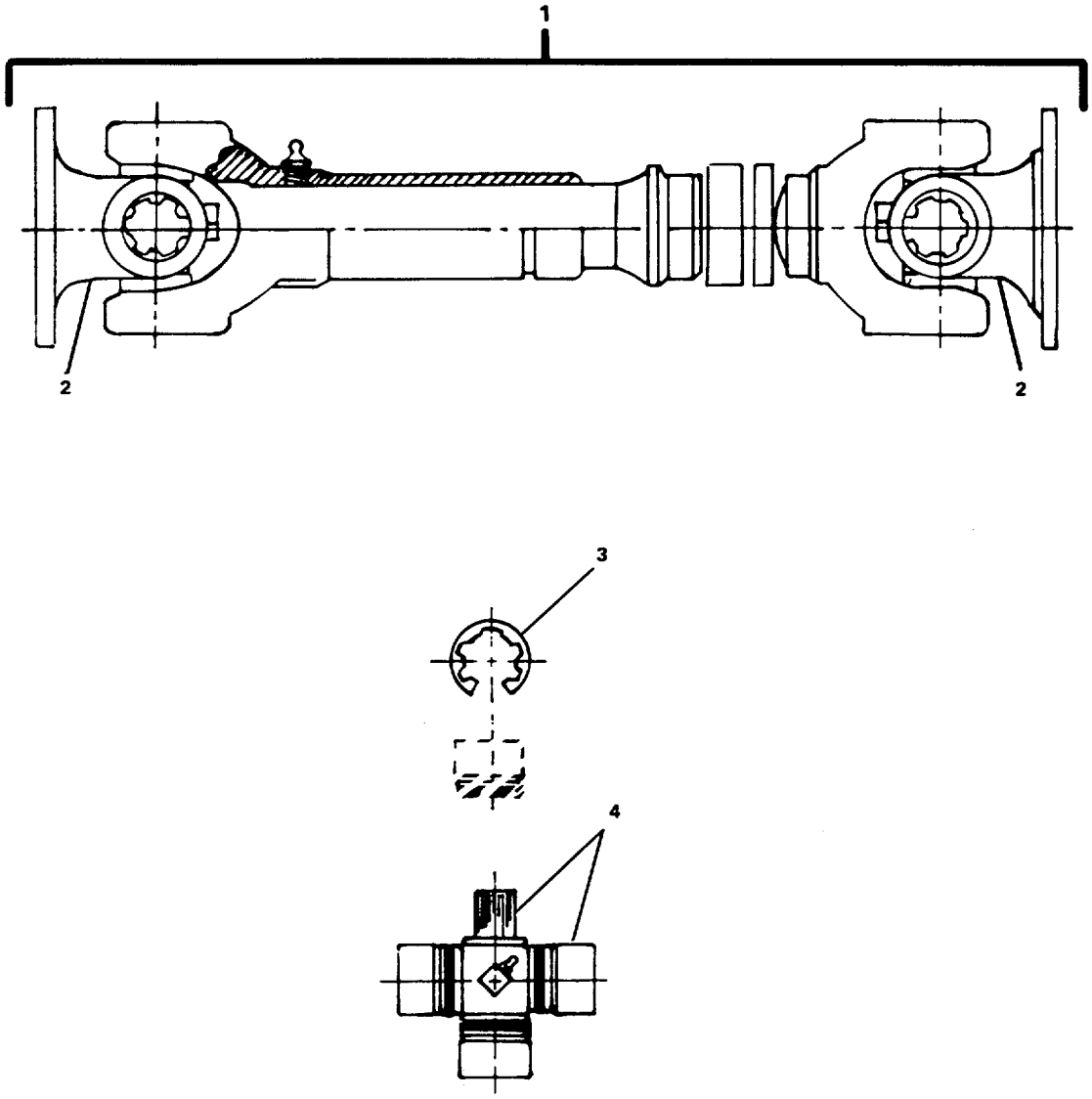

FIGURE 169. Drive Shaft.

(1) ITEM NO	(2) SMR CODE	(3) PART FSCM	(4) NUMBER	(5) DESCRIPTION AND USABLE ON CODES(UOC)	(6) QTY
				GROUP 06 SPJ55 BOW THRUSTER WATER JET	
				FIG. 169 DRIVE SHAFT	
1	PBCOZ	32862	287.00.0.05	.SHAFT, STRAIGHT	1
2	XDCZZ	32862	287.00.2079.060	..YOKE, FLANGE	2
3	XDCZZ	32862	287.00.67.00.000	..RING, RETAINING	8
4	XDCZZ	32862	287.00.06.01.010	..CROSS, BEARING ASSEM	2

END OF FIGURE

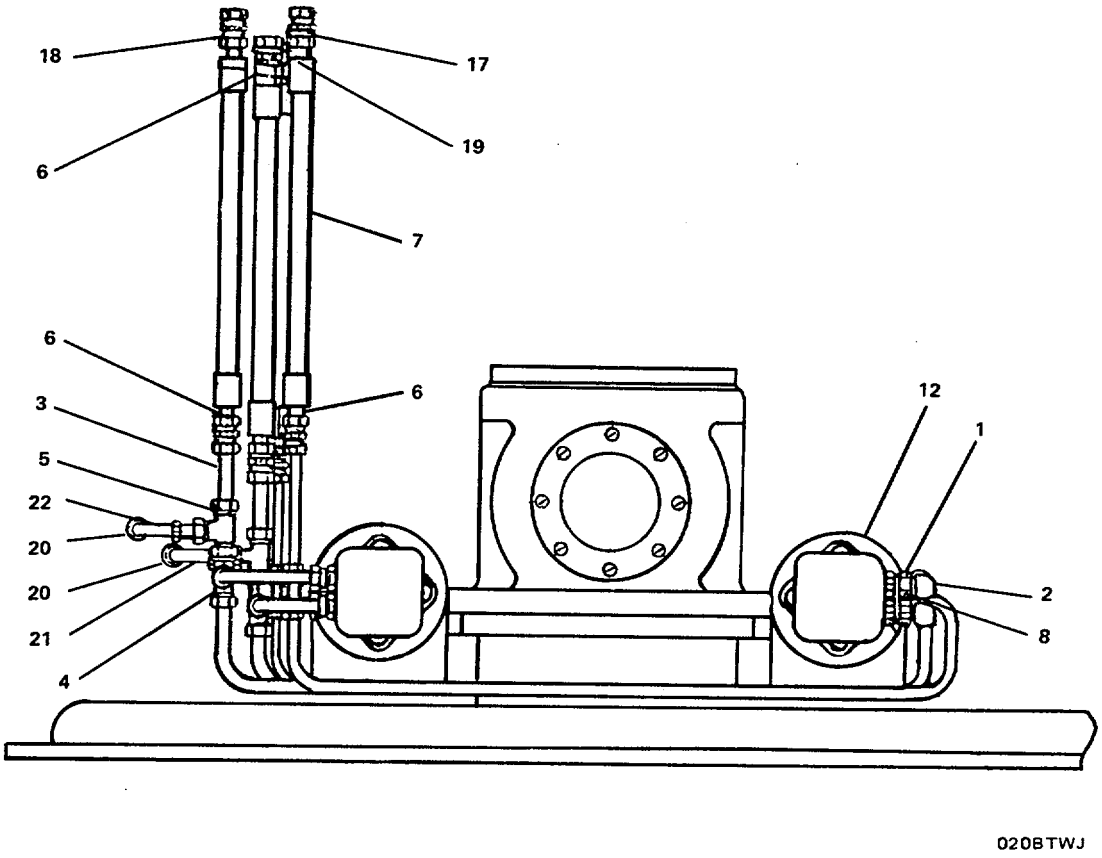

FIGURE 170. Waterjet Plumbing (Sheet 1 of 6).

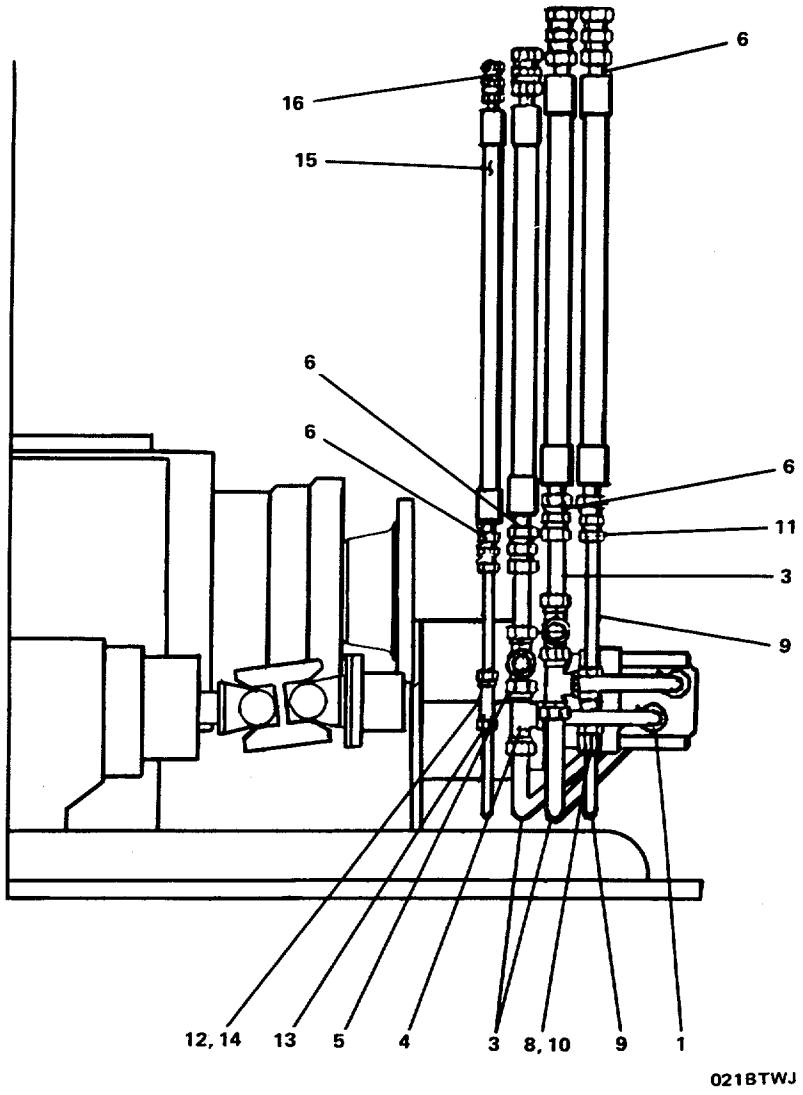

FIGURE 170. Waterjet Plumbing (Sheet 2 of 6).

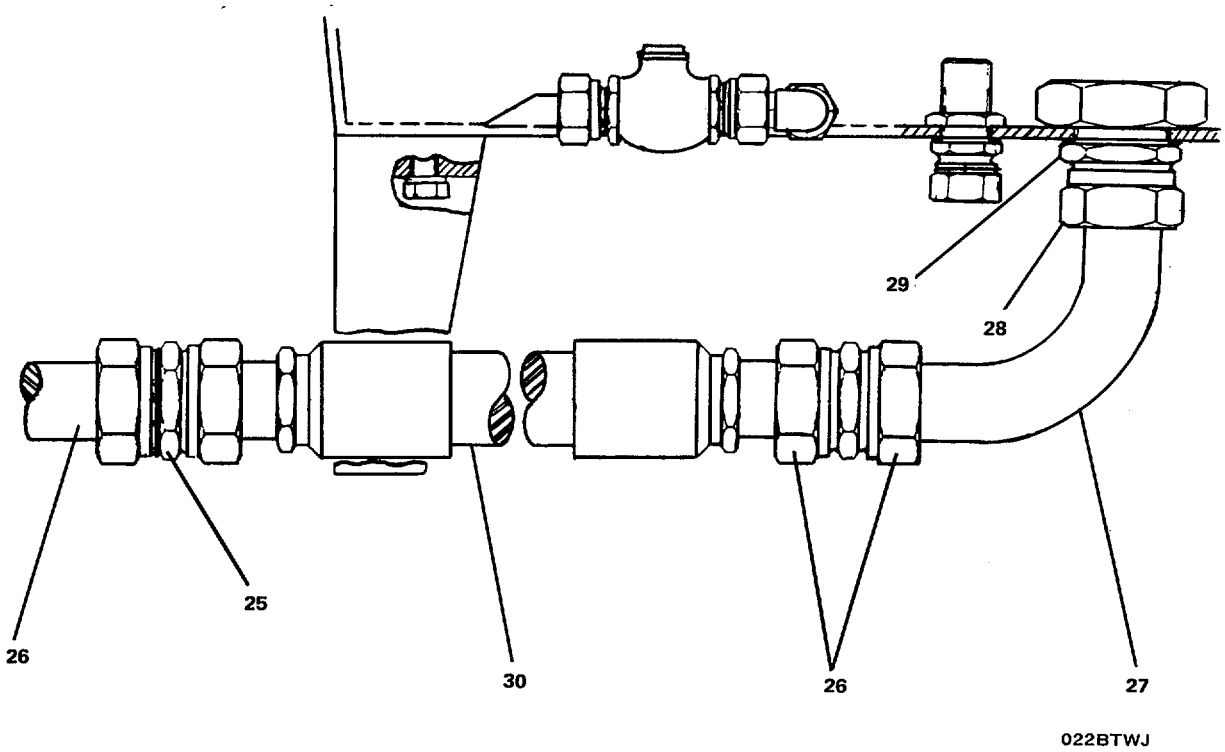

FIGURE 170. Waterjet Plumbing (Sheet 3 of 6).

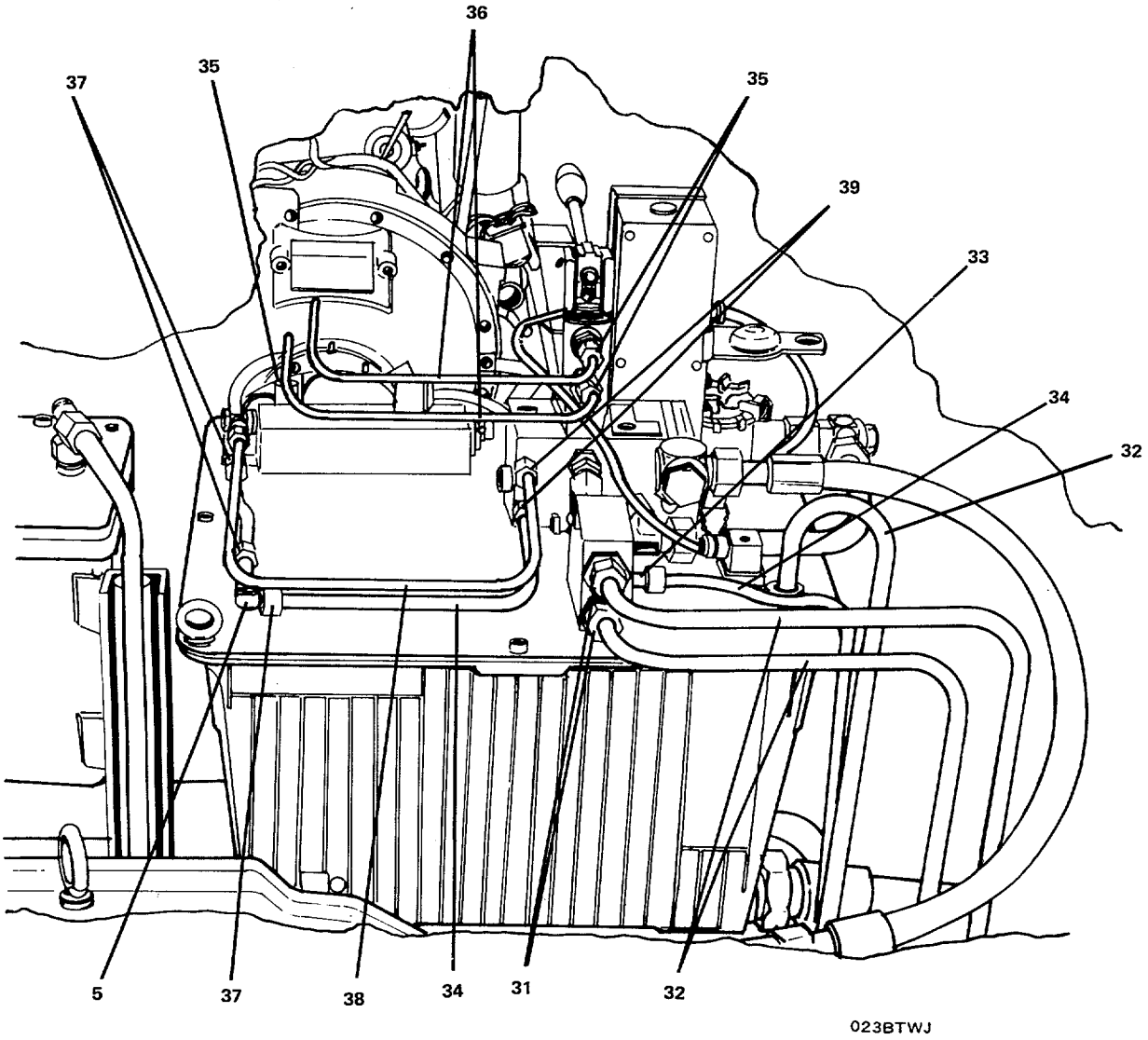

FIGURE 170. Waterjet Plumbing (Sheet 4 of 6).

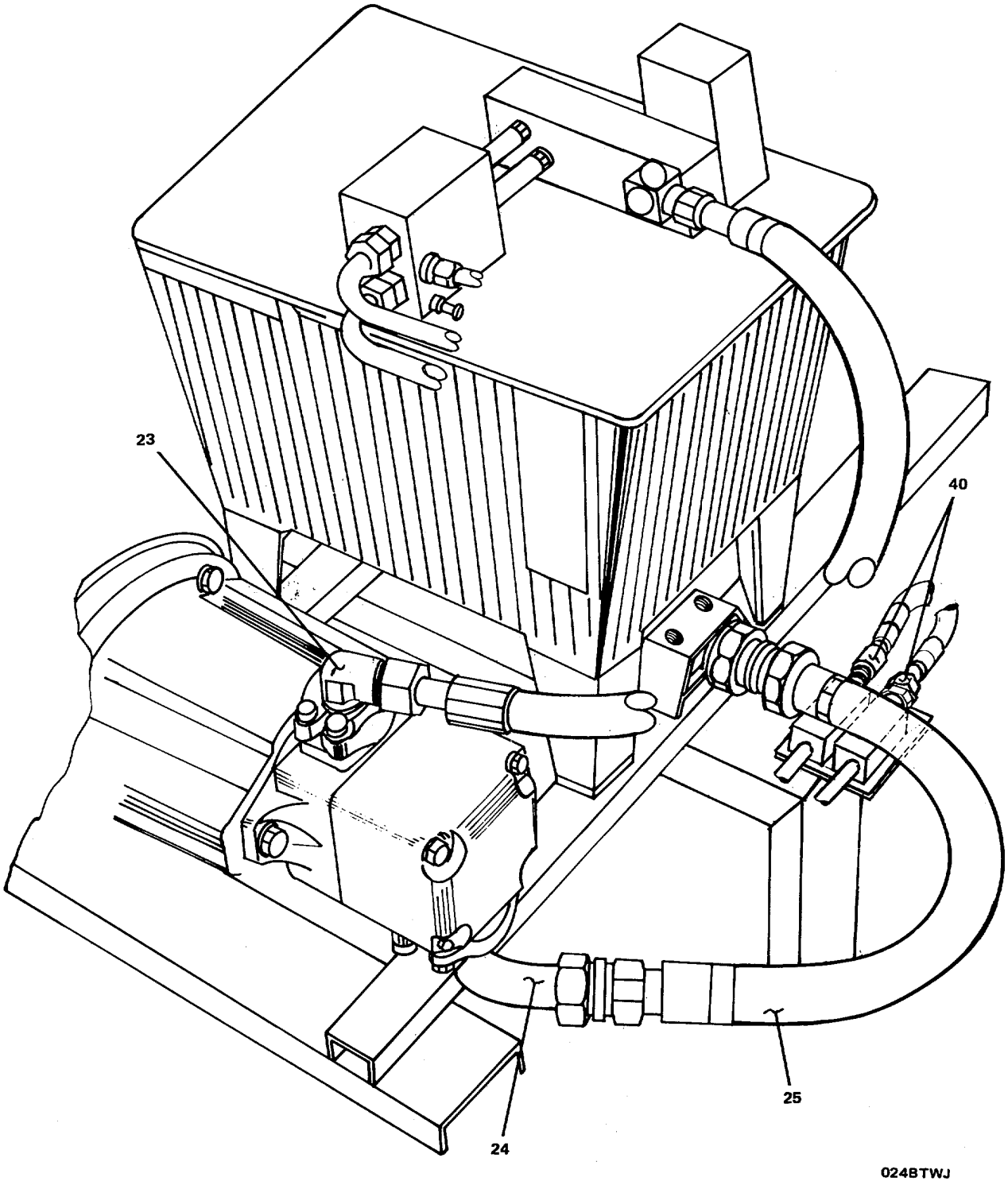

FIGURE 170. Waterjet Plumbing (Sheet 5 of 6).

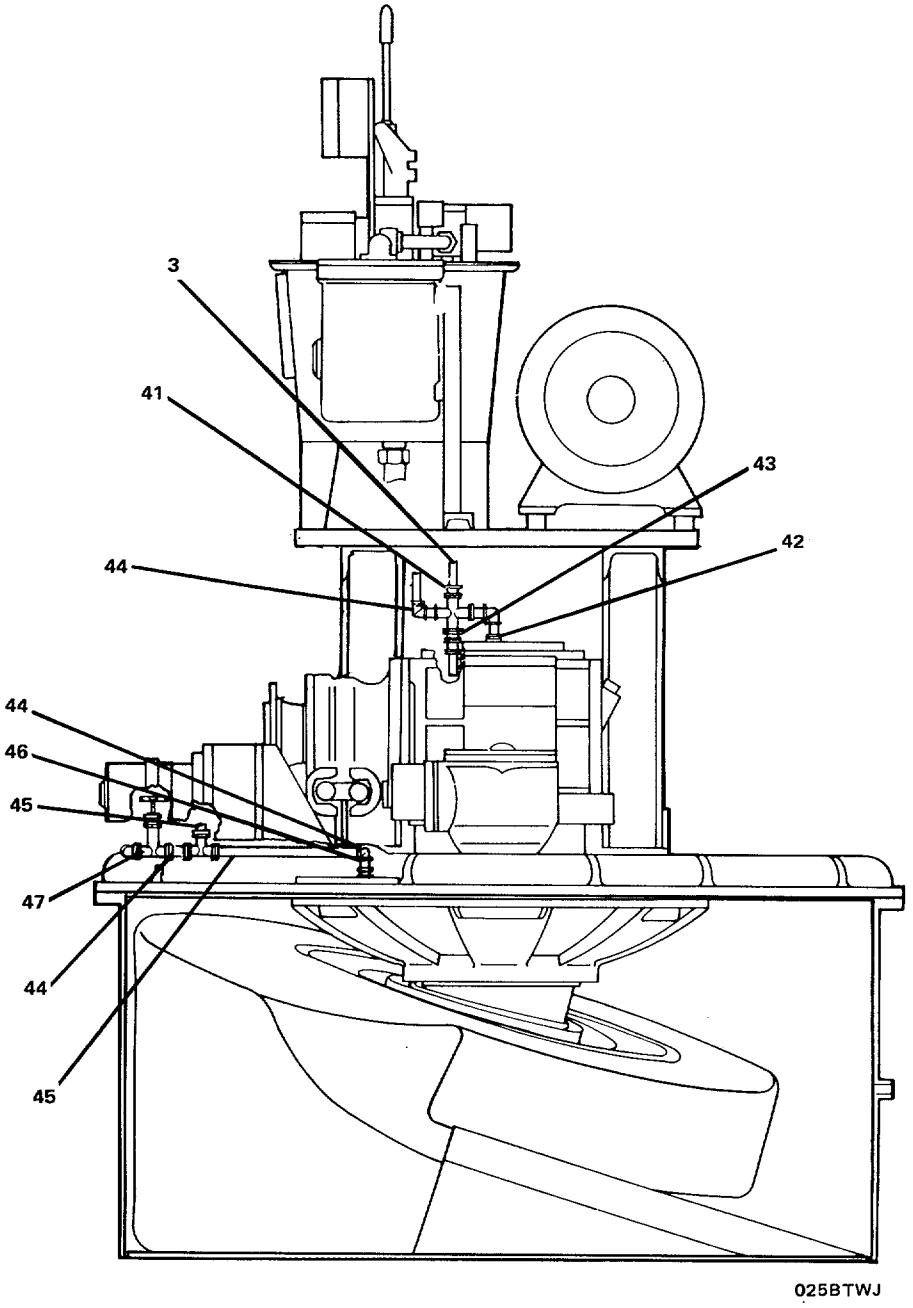

FIGURE 170. Waterjet Plumbing (Sheet 6 of 6).

GROUP 06 SPJ55 BOW THRUSTER
WATER JET

FIG. 170 WATER JET PLUMBING

(1) ITEM NO	(2) SMR CODE	(3) PART FSCM	(4) NUMBER	(5) DESCRIPTION AND USABLE ON CODES(UOC)	(6) QTY
1	XDFZZ	32862	1007800	.FITTING, STRAIGHT, MA	4
2	XDFZZ	32862	1007102	.ELBOW, PIPE	2
3	XDFZZ	32862	1012396	.PIPE, METALLIC	V
4	XDFZZ	32862	1007005	.TEE, PIPE	2
5	XDFZZ	32862	1012570	.TEE, PIPE	2
6	XDFZZ	32862	1007104	.FITTING, STRAIGHT, MA	8
7	XDFZZ	32862	1008084	.HOSE, NONMETALLIC	3
8	XDFZZ	32862	1015594	.FITTING, STRAIGHT, MA	2
9	XDFZZ	32862	1012395	.PIPE, METALLIC	V
10	XDFZZ	32862	1013725	.TEE, PIPE	1
11	XDFZZ	32862	1006999	.REDUCER, PIPE	1
12	XDFZZ	32862	1059330	.FITTING, STRAIGHT, MA	2
13	XDFZZ	32862	1012394	.PIPE, METALLIC	V
14	XDFZZ	32862	1013722	.TEE, PIPE	1
15	XDFZZ	32862	1008082	.HOSE, NONMETALLIC	1
16	XDFZZ	32862	1007524	.PLATE, IDENTIFICATIO	1
17	XDFZZ	32862	1007511	.PLATE, IDENTIFICATIO	1
18	XDFZZ	32862	1007510	.PLATE, IDENTIFICATIO	1
19	XDFZZ	32862	1007508	.PLATE, IDENTIFICATIO	1
20	XDFZZ	32862	1045443	.CONNECTION, MINIMES	2
21	XDFZZ	32862	1065951	.PLATE, IDENTIFICATIO	1
22	XDFZZ	32862	1065952	.PLATE, IDENTIFICATIO	1
23	XDFZZ	32862	1046197	.UNION, PIPE	1
24	XDFZZ	32862	20X2.5MM	.PIPE, METALLIC	V
25	XDFZZ	32862	1008062	.HOSE, NONMETALLIC	2
26	XDFZZ	32862	1008065	.UNION, PIPE	2
27	XDFZZ	32862	1008133	.PIPE, METALLIC	V
28	XDFZZ	32862	1007796	.UNION, PIPE	1
29	XDFZZ	32862	1005983	.PACKING, PREFORMED	1
30	XDFZZ	32862	35X2MM	.PIPE, METALLIC	V
31	XDFZZ	32862	1007800	.FITTING, STRAIGHT, MA	3
32	XDFZZ	32862	15X2MM	.PIPE, METALLIC	V
33	XDFZZ	32862	100710A	.FITTING, PIPE	1
34	XDFZZ	32862	10X1.5MM	.PIPE, METALLIC	V
35	XDFZZ	32862	1013353	.UNION, PIPE	4
36	XDFZZ	32862	8X1.5MM	.PIPE, METALLIC	V
37	XDFZZ	32862	1008660	.UNION, PIPE	2
38	XDFZZ	32862	20X2.5MM	.PIPE, METALLIC	V
39	XDFZZ	32862	1008099	.UNION, PIPE	1
40	XDFZZ	32862	1007106	.FITTING, PIPE	1
41	XDFZZ	32862	1013730	.FITTING, PIPE, REDUCT	2
42	XDFZZ	32862	1007116	.FITTING, PIPE, ELBOW	1
43	XDFZZ	32862	1049087	.FITTING, PIPE, CROSS	1
44	XDFZZ	32862	1007103	.FITTING, PIPE, ELBOW	2
45	XDFZZ	32862	1046548	.PIPE, METALLIC	V
46	XDFZZ	32862	1007791	.FITTING, PIPE	1
47	XDFZZ	32862	1009200	.VALVE, THREE-WAY	1

END OF FIGURE

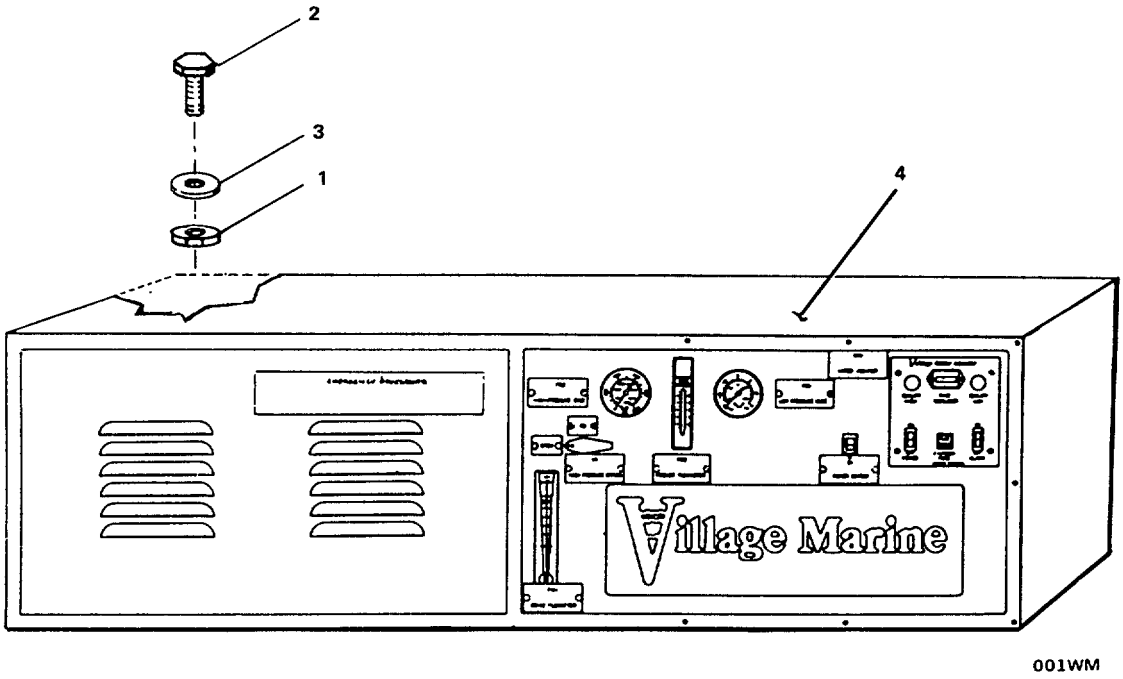

FIGURE 171. Reverse Osmosis Water Maker Assembly, Model PW800.

(1) ITEM NO	(2) SMR CODE	(3) PART FSCM	(4) NUMBER	(5) DESCRIPTION AND USABLE ON CODES(UOC)	(6) QTY
				GROUP 07 REVERSE OSMOSIS WATER MAKER ASSEMBLY-MODEL PW800	
				FIG. 171 REVERSE OSMOSIS WATER MAKER ASSEMBLY-MODEL PW800	
1	XDCZZ	77408	D0-7050-8036	NUT, SELF-LOCKING-HE	8
2	XDCZZ	77408	D0-2907-1176	BOLT, MACHINE	8
3	XDCZZ	77408	D0-5980-8036	WASHER, FLAT	8
4	PBOFF	62144	7375	WATER PURIFICATION MODEL PW800	2

END OF FIGURE

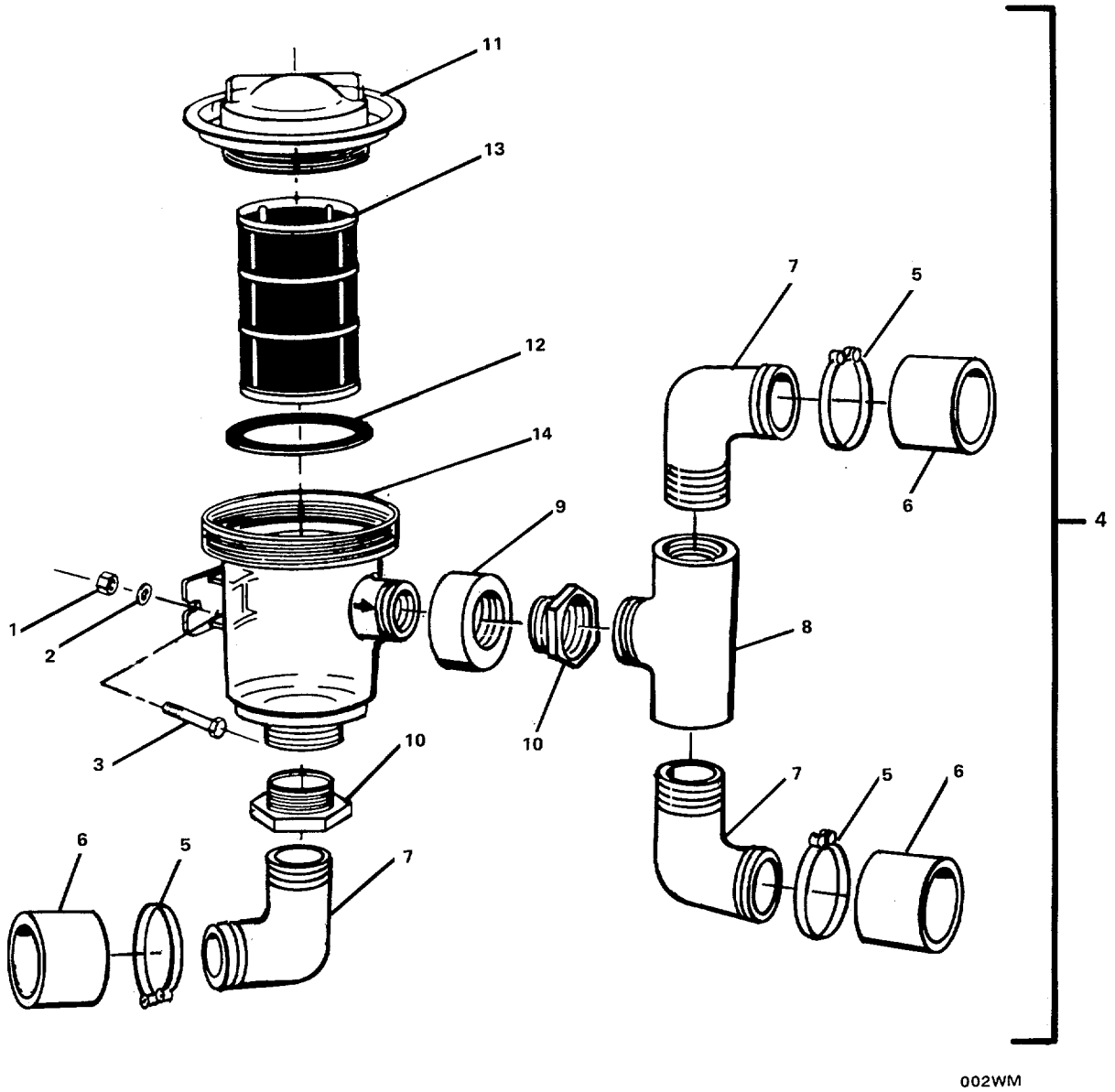

FIGURE 172. Sediment Strainer Assembly.

(1) ITEM NO	(2) SMR CODE	(3) FSCM	(4) PART NUMBER	(5) DESCRIPTION AND USABLE ON CODES(UOC)	(6) QTY
				GROUP 07 REVERSE OSMOSIS WATER MAKER ASSEMBLY-MODEL PW800	
				FIG. 172 SEDIMENT STRAINER ASSEMBLY	
1	XDOZZ	62144	05N-SS2431-001.	NUT, PLAIN, HEXAGON	2
2	XDOZZ	62144	05L-SS2441-001.	WASHER, LOCK	2
3	XDOZZ	62144	05F-SS2421-001.	SCREW, MACHINE	2
4	PBCOZ	21593	RWS	.STRAINER, SEDIMENT	1
5	XDOZZ	76599	HF10SS	..CLAMP, HOSE	3
6	PAOZZ	0ABC1	PVTBF075	..HOSE, NONMETALLIC	V
7	XDOZZ	20943	TE-101212	..ADAPTER, HOSE, ELBOW	3
8	XDOZZ	62531	805-007	..TEE, HOSE	1
9	XDOZZ	51671	3681-104	..NIPPLE, HOSE	1
10	XDOZZ	62531	839-210	..BUSHING, REDUCER	2
11	XDOZZ	25193	RWS-2	..COVER, ACCESS	1
12	PAOZZ	21593	RWS-5	..PACKING, PREFORMED	1
13	PBOZZ	21593	RWS-5B	..STRAINER ELEMENT, SE	1
14	XDOZZ	21593	RWS-1	..STRAINER BODY, SEDIM	1

END OF FIGURE

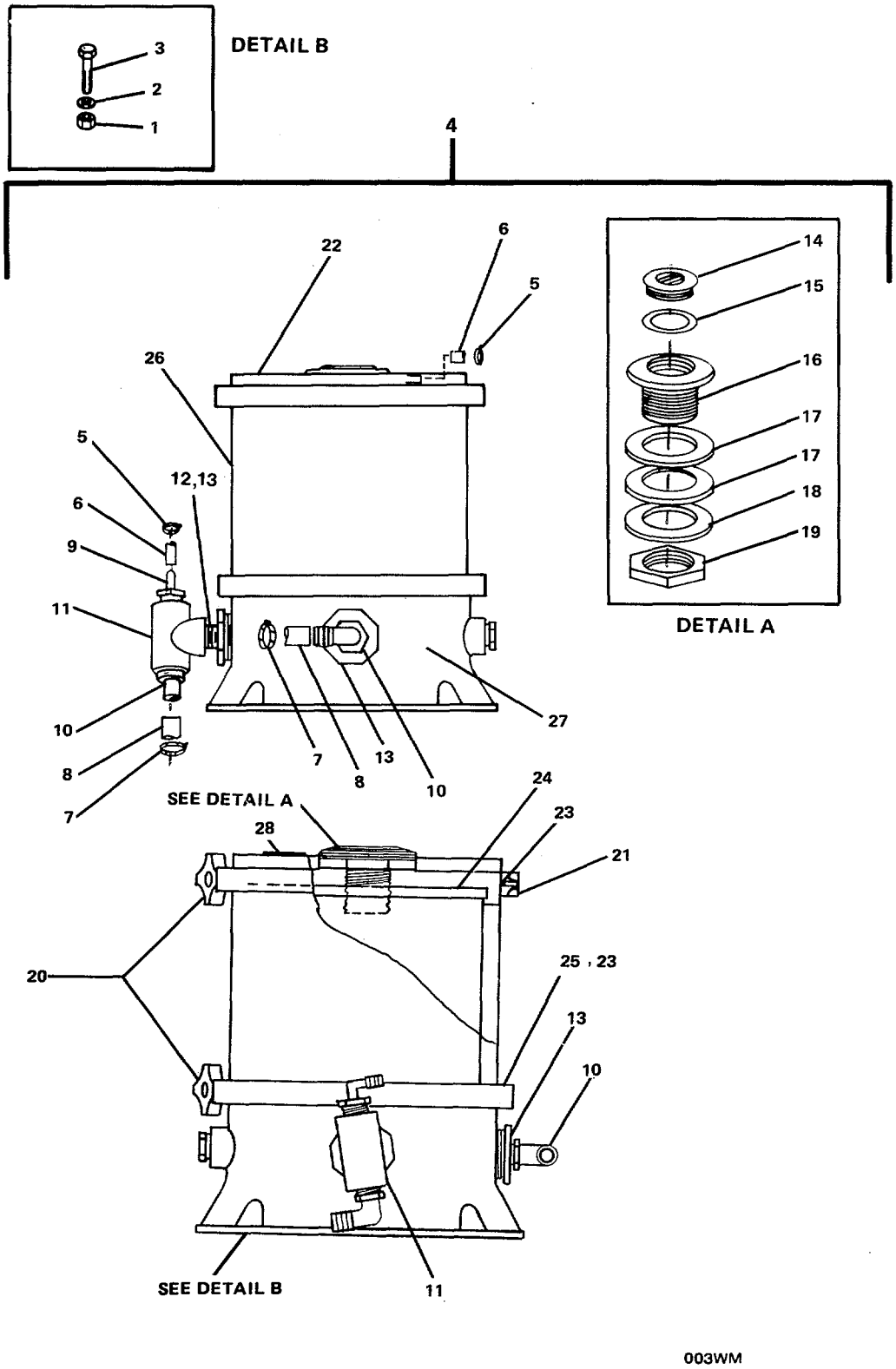

FIGURE 173. Micorn Filter Assembly.

(1) ITEM NO	(2) SMR CODE	(3) FSCM	(4) PART NUMBER	(5) DESCRIPTION AND USABLE ON CODES(UOC)	(6) QTY
				GROUP 07 REVERSE OSMOSIS WATER MAKER ASSEMBLY-MODEL PW800	
				FIG.. 173 MICRON FILTER ASSEMBLY	
1	XDOZZ	62144	05N-SS0O08-000	.NUT, PLAIN, HEXAGON	4
2	XDOZZ	62144	05L-SS0O08-000	.WASHER, LOCK	4
3	XDOZZ	62144	05B-SS0O8-075	.SCREW, MACHINE	4
4	PBCOO	62144	7156	.FILTER, FLUID	2
5	XDOZZ	76599	SSHF6	..CLAMP, HOSE	2
6	PAOZZ	0ABC1	PVTBF025	..HOSE, NONMETALLIC	V
7	XDOZZ	76599	HF1OSS	..CLAMP, HOSE	2
8	PAOZZ	0ABC1	PVTBF075	..HOSE, NONMETALLIC	V
9	XDOZZ	20943	TE-20124	..ADAPTER, HOSE, ELBOW	1
10	XDOZZ	20943	TE-101212	..ADAPTER, HOSE, ELBOW	2
11	XDOZZ	62531	805-007	..TEE, HOSE	1
12	XDOZZ	51671	3681-104	..NIPPLE, HOSE	1
13	XDOZZ	62531	839-167	..BUSHING, REDUCER	2
14	XDOZZ	73124	SP-1022C	..PLUG, MACHINE THREAD	1
15	PAOZZ	70127	2-224	..PACKING, PREFORMED	1
16	XDOZZ	73124	SP1025	..FITTING	1
17	PAOZZ	73124	SP25Z12	..GASKET	2
18	PAOZZ	73124	SP1025Z-3	..GASKET	1
19	XDOZZ	73124	SP1407-1	..NUT, PLAIN, HEXAGON	1
20	XDOZZ	94066	CVC36-22	..NUT, CLAMP	2
21	XDOZZ	63208	10387A	..CLAMP, RIM CLENCHING	1
22	XDOZZ	62144	04T-001259-030	..LID	1
23	PACZZ	94066	WC9-3	..PACKING, PREFORMED	2
24	PACZZ	62144	04E-OPF307-020	..FILTER ELEMENT, FLUI	1
25	XDOZZ	63208	10387	..CLAMP, RIM CLENCHING	1
26	XDOZZ	62144	04T-001261-030	..VESSEL	1
27	XDOZZ	94066	WC104-78P	..BASE	1
28	XDOZZ	62144	LP1261	..MARKER, IDENTIFICATI (CLEANING INSTRUCTIONS)	1

END OF FIGURE

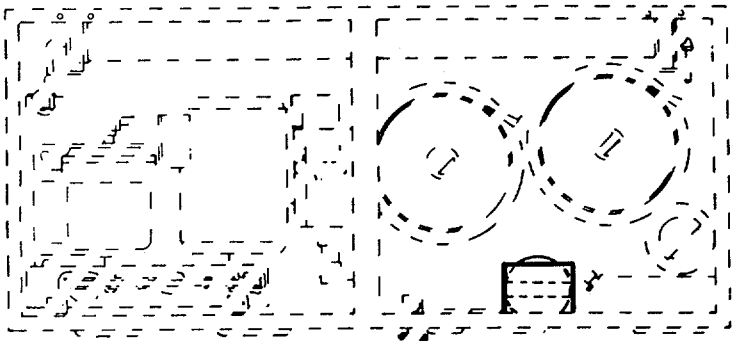

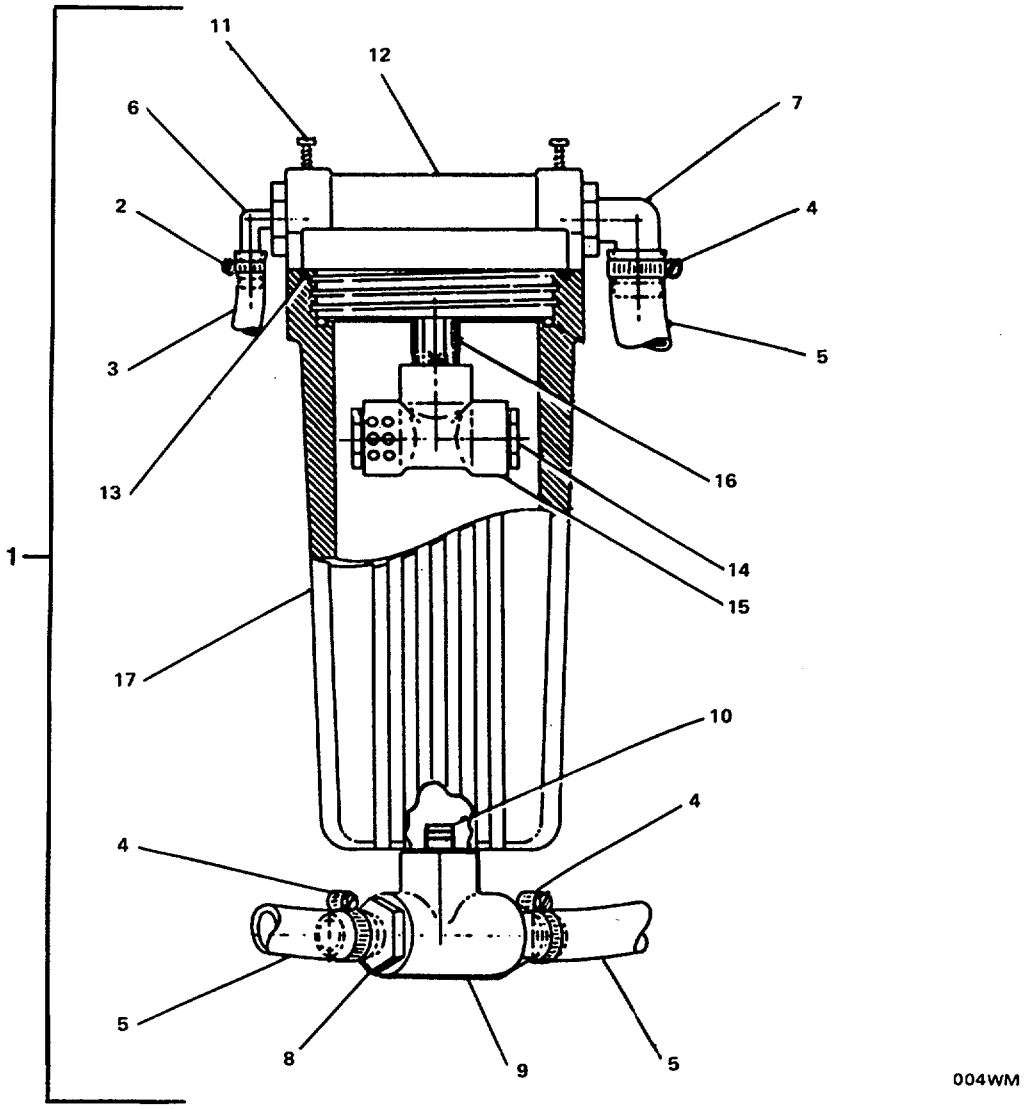

FIGURE 174. Air/Oil Separator Assembly.

(1) ITEM NO	(2) SMR CODE	(3) FSCM	(4) PART NUMBER	(5) DESCRIPTION AND USABLE ON CODES(UOC)	(6) QTY
				GROUP 07 REVERSE OSMOSIS WATER MAKER ASSEMBLY-MODEL PW800	
				FIG. 174 AIR/OIL SEPARATOR ASSEMBLY	
1	PBCOF	62144	7394	.SEPARATOR ASSEMBLY	1
2	XDOZZ	76599	SSHF4	..CLAMP, HOSE	1
3	PAOZZ	0ABC1	PVTBF025	..HOSE, NONMETALLIC	V
4	XDOZZ	76599	HF1OSS	..CLAM P , HOSE	3
5	PAOZZ	0ABC1	PVTBF075	..HOSE, NONMETALLIC	V
6	XDOZZ	20943	TE-20124	..ADAPTER, HOSE, ELBOW	1
7	XDOZZ	20943	TE-101212	..ADAPTER, HOSE, ELBOW	1
8	XDOZZ	20943	TA-101212	..ADAPTER, HOSE	2
9	XDOZZ	62531	805-007	..TEE, HOSE	1
10	XDOZZ	51671	3681-104	..NIPPLE, HOSE	1
11	XDOZZ	62144	05B-SSS#08-075	..SCREW, MACHINE	4
12	XDOZZ	62144	040-VM3005-020	..LID, SEPARATOR	1
13	PAOZZ	62144	040-VM3005-030	..PACKING, PREFORMED	1
14	XDOZZ	20943	TP-4012	..PLUG, HOSE	2
15	XDOZZ	62531	805-007-8	..TEE, HOSE	1
16	XDOZZ	51671	3681-106	..NIPPLE, HOSE	1
17	XDOZZ	62144	040-VM3005-010	..HOUSING, SEPARATOR	1

END OF FIGURE

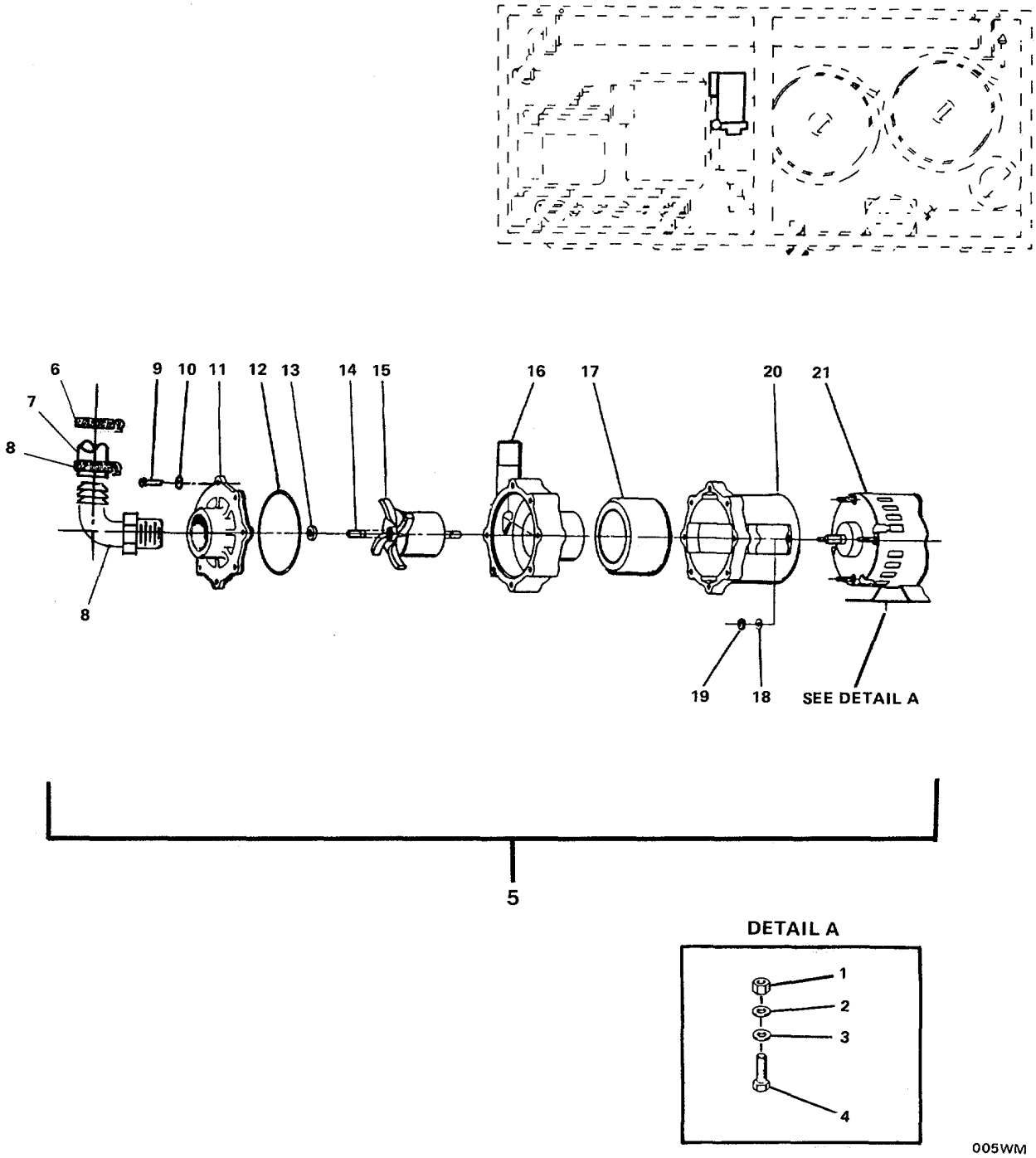

FIGURE 175. Low Pressure Pump Assembly.

(1) ITEM NO	(2) SMR CODE	(3) FSCM	(4) PART NUMBER	(5) DESCRIPTION AND USABLE ON CODES(UOC)	(6) QTY
				GROUP 07 REVERSE OSMOSIS WATER MAKER ASSEMBLY-MODEL PW800	
				FIG. 175 LOW PRESSURE PUMP ASSEMBLY	
1	XDOZZ	62144	05N-SS2431-001	.NUT, PLAIN, HEXAGON	4
2	XDOZZ	62144	05L-SS2441-001	.WASHER, LOCK	4
3	XDOZZ	62144	05W-SS2441-001	.WASHER, FLAT	4
4	XDOZZ	62144	05B-SS2421-001	.BOLT, MACHINE	4
5	PBCOF	21198	BC-4C-MD	.PUMP, CENTRIFUGAL	1
6	XDOZZ	76599	HF10SS	..CLAMP, HOSE	2
7	PAOZZ	0ABC1	PVTBF075	..HOSE, NONMETALLIC	V
8	XDOZZ	73651	1407-131	..ADAPTER, HOSE, ELBOW	1
9	XDOZZ	21198	150-021-10	..SCREW, MACHINE	7
10	XDOZZ	21198	135-016-20	..WASHER, FLAT	7
11	XDOZZ	21198	150-032-10	..COVER, ACCESS	1
12	PAOZZ	21198	135-023-10	..PACKING, PREFORMED	1
13	XDOZZ	21198	130-028-10	..BEARING, WASHER, THRU	1
14	XDOZZ	21198	130-024-10	..SPINDLE, CERAMIC	1
15	XDOZZ	21198	145-033-02	..IMPELLER, MAGNETIC	1
16	XDOZZ	21198	150-031-10	..HOUSING	1
17	XDOZZ	21198	145-027-01	..DRIVE ASSEMBLY, MAGN	1
18	XDOZZ	21198	858-001-10	..WASHER, FLAT	8
19	XDOZZ	21198	410-039-10	..NUT, PLAIN, HEXAGON	4
20	XDOZZ	21198	145-010-10	..BRACKET	1
21	PBOZZ	21198	145-035-10	..MOTOR, ALTERNATING C	1

END OF FIGURE

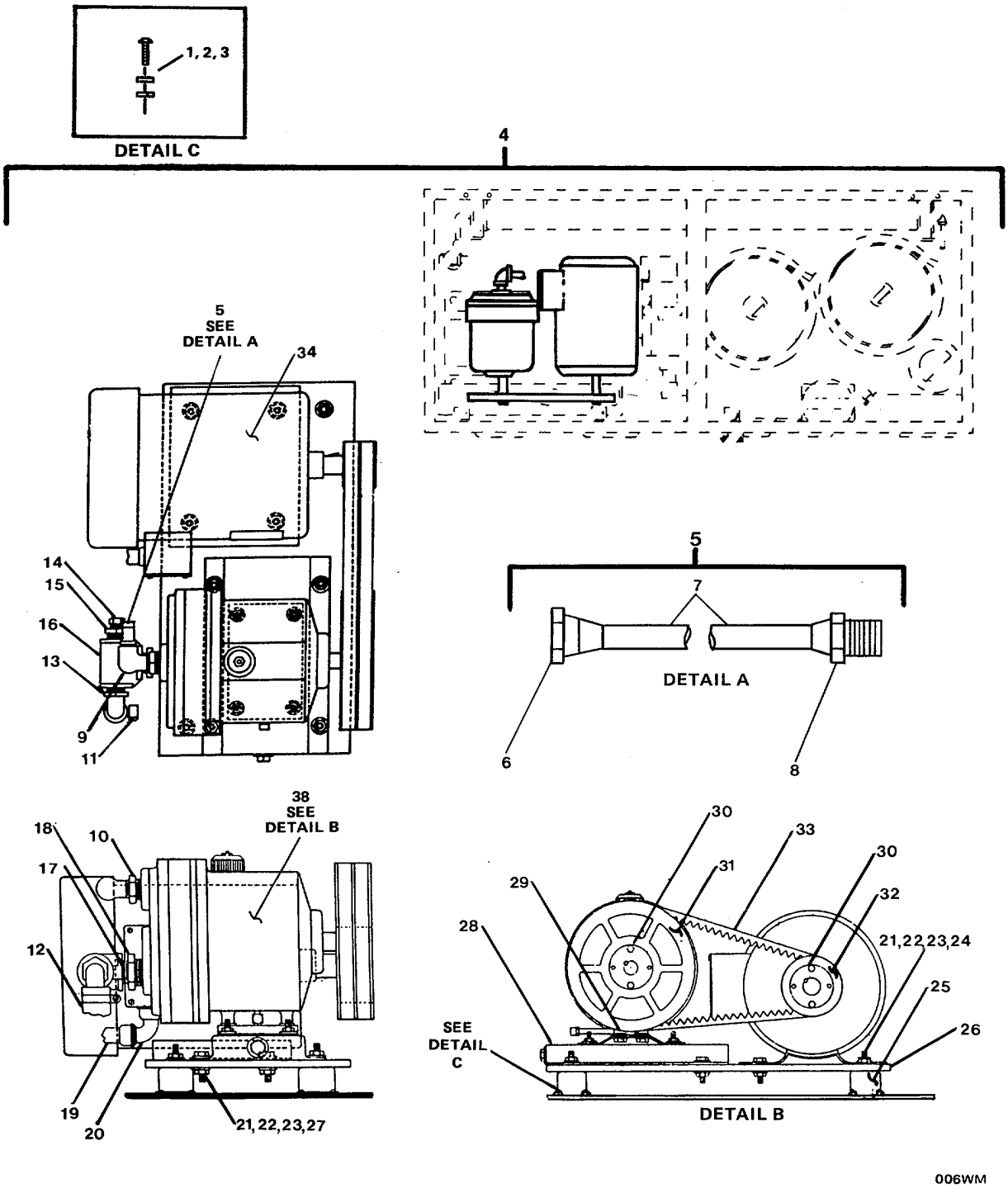

FIGURE 176. Motor and Pump Assembly (Sheet 1 of 2)

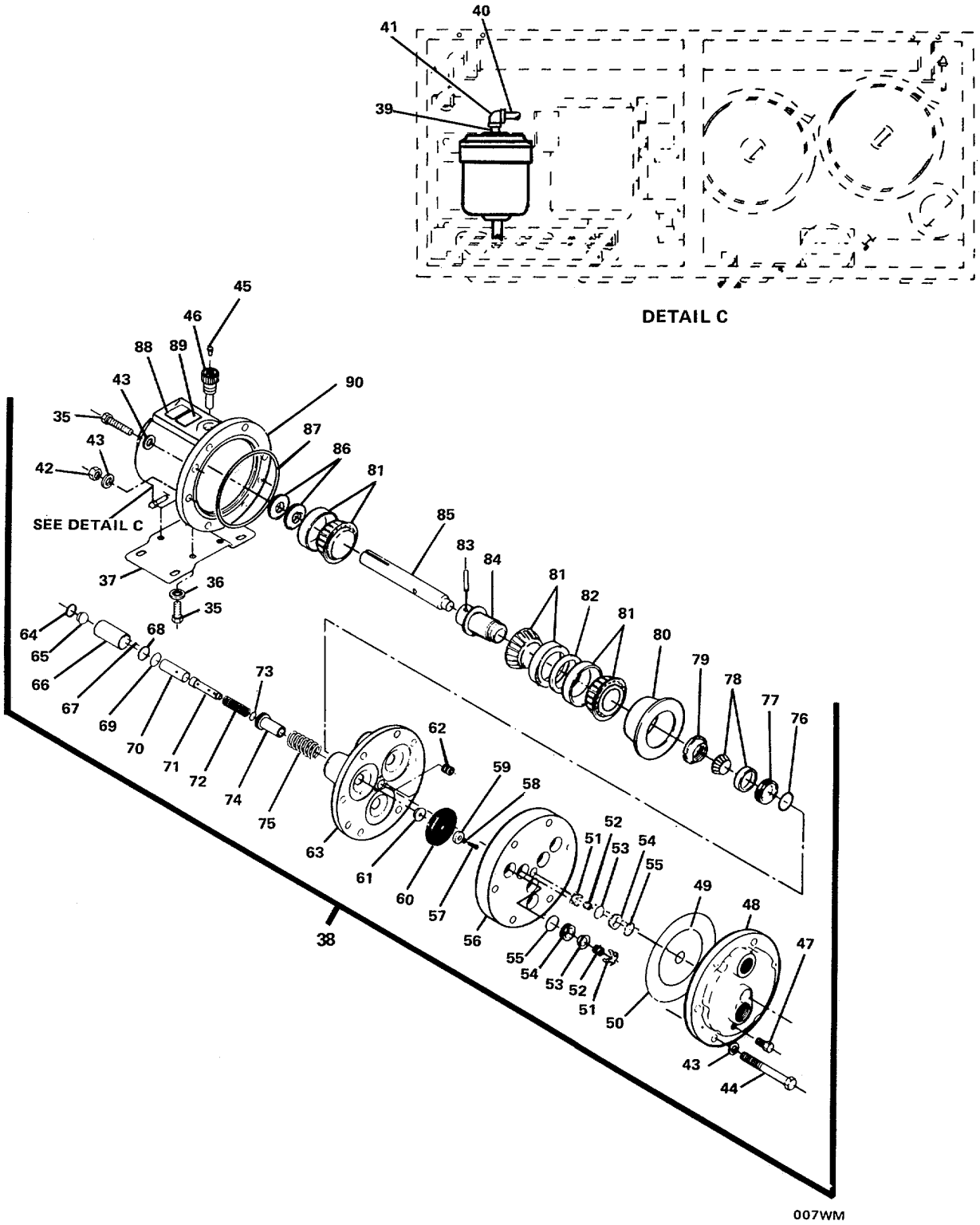

FIGURE 176. Motor and Pump Assembly (Sheet 2 of 2)

(1) ITEM NO	(2) SMR CODE	(3) FSCM	(4) PART NUMBER	(5) DESCRIPTION AND USABLE ON CODES(UOC)	(6) QTY
				GROUP 07 REVERSE OSMOSIS WATER MAKER ASSEMBLY-MODEL PW800	
				FIG. 176 MOTOR AND PUMP ASSEMBLY	
1	XDOZZ	62144	05N-SS0#08-000	.NUT, PLAIN, HEXAGON	16
2	XDOZZ	62144	05L-SS0#08-000	.WASHER, LOCK	16
3	XDOZZ	62144	05B-SS0#08-050	.SCREW, MACHINE	16
4	XDCFF	62144	7384	.MOTOR AND PUMP ASSE	1
5	PAOOO	62144	7392	..HOSE ASSEMBLY, NONME	1
6	XDOZZ	62144	PH-100375	...ADAPTER, HOSE	1
7	XDOZZ	62144	11F-HP3130-072	...HOSE, NONMETALLIC (HIGH PRESSURE)	V
8	XDOZZ	62144	PH-101375	...ADAPTER, HOSE	1
9	XDOZZ	62144	11E-SS3412-003	..ELBOW, HOSE	1
10	XDOZZ	62144	11B-SS3639-099	..BUSHING, REDUCER	1
11	XDOZZ	76599	HF10SS	..CLAMP, HOSE	1
12	PAOZZ	0ABC1	PVTBF075	..HOSE, NONMETALLIC	V
13	XDOZZ	20943	TE-101212	..ADAPTER, HOSE, ELBOW	1
14	XDOZZ	18997	E-2	..PROBE, ZINC	1
15	XDOZZ	62144	11B-SS3639-101	..BUSHING, REDUCER	1
16	XDOZZ	62144	11T-SS3605-007	..TEE, HOSE	1
17	XDOZZ	62144	11N-SS3631-104	..NIPPLE, HOSE	1
18	XDOZZ	62144	11B-SS3639-131	..BUSHING, REDUCER	1
19	XDOZZ	62144	02H-B20000-050	..CONDUIT, OUTLET	V
20	XDOZZ	62144	02H-PNBK90-050	..ELBOW, CONDUIT, OUTLE	1
21	XDOZZ	62144	05N-SS2431-060	..NUT, PLAIN, HEXAGON	10
22	XDOZZ	62144	05L-SS2441-060	..WASHER, LOCK...	10
23	XDOZZ	62144	05W-SS2441-060	..WASHER, FLAT	10
24	XDOZZ	62144	05B-SS2421-069	..BOLT, MACHINE	4
25	XDOZZ	15332	VIP119X90	..MOUNT, RESILIENT	4
26	XDOZZ	62144	SN-C10002	..BASE, PUMP/MOTOR	1
27	XDOZZ	62144	05B-SS2421-063	..BOLT, MACHINE	6
28	XDOZZ	25795	3M279	..BASE, ADJUSTMENT	1
29	XDOZZ	62144	051-VM1318-708	..SLEEVE	4
30	XDOZZ	25795	3X574	..BUSHING, PULLEY	2
31	XDOZZ	25795	3X597	..PULLEY, PUMP	1
32	XDOZZ	25795	3X769	..PULLEY, DRIVE	1
33	PACZZ	2144	10OB-00BX36-000	..BELT, V	2
34	PAOZF	05472	M3611T	..MOTOR, ALTERNATING C	1
35	XDOZZ	59776	D529	..SCREW, CAP, HEXAGON H	6
36	XDOZZ	59776	D1054	..WASHER, LOCK	4
37	XDOZZ	59776	D525	..BASE, PUMP	1
38	PBCFZ	59776	DlOSS6	..PUMP, AXIAL PISTONS	1
39	XDFZZ	59776	D1078	... .CAP, PIPE	1
40	XDFZZ	59776	D1077	...PIPE, METALLIC	1
41	XDFZZ	59776	D1076	...ELBOW, PIPE	1
42	XDFZZ	59776	D528	...NUT, PLAIN, HEXAGON	6
43	XDFZZ	59776	D1048	...WASHER, FLAT	14
44	XDFZZ	59776	D524	...BOLT, MACHINE	6
45	XDFZZ	59776	D1049	...SCREW, MACHINE	1
46	XDFZZ	59776	D1039	...PLUG, OIL FILLER	1
47	XDFZZ	59776	D538	...PLUG, MACHINE THREAD	1

(1) ITEM NO	(2) SMR CODE	(3) FSCM	(4) PART NUMBER	(5) DESCRIPTION AND USABLE ON CODES(UOC)	(6) QTY
48	XDFZZ	59776	D1004SS6-CB	...MANIFOLD	1
49	PAFZZ	59776	D1073	...PACKING, PREFORMED	1
50	PAFZZ	59776	D1074	...PACKING, PREFORMED	1
51	XDFZZ	59776	D1023	...RETAINER, HELICAL CO	6
52	XDFZZ	59776	D1022	...SPRING, HELICAL, COMP	6
53	XDFZZ	59776	D1021	...DISK, VALVE	6
54	XDFZZ	59776	D1020	...SEAT, VALVE	6
55	PAFZZ	59776	D1035	...PACKING, PREFORMED	6
56	XDFZZ	59776	D1003SS6-CB	...PLATE, VALVE	1
57	XDFZZ	59776	D530	...SCREW, MACHINE	3
58	PAFZZ	59776	D1047	...PACKING, PREFORMED	3
59	XDFZZ	59776	D1017	...FOLLOWER	3
60	XDFZZ	59776	D1018	...DIAPHRAGM, VALVE, FLA	3
61	XDFZZ	59776	D1016	...PLUNGER, PUMP	3
62	XDFZZ	59776	D527	...SETSCREW	1
63	XDFZZ	59776	D1002-CB	...HOUSING, CYLINDER	1
64	XDFZZ	59776	D1050	...RETAINER, FOOT	3
65	XDFZZ	59776	D1013	... FOOT	3
66	XDFZZ	59776	D1014	...PISTON, PUMP	3
67	XDFZZ	59776	D1015	...BALL, BEARING	3
68	XDFZZ	59776	D1041	...SPACER, RING	3
69	PAFZZ	59776	D1034	...PACKING, PREFORMED	3
70	XDFZZ	59776	D1043	...CYLINDER, VALVE	3
71	XDFZZ	59776	D1044	...PLUNGER, VALVE	3
72	XDFZZ	59776	D1045	...SPRING, HELICAL, COMP	3
73	PAFZZ	59776	D1046	...PACKING, PREFORMED	3
74	XDFZZ	59776	D1042	...SEAT, HELICAL COMPRE	3
75	XDFZZ	59776	D1019	...SPRING, HELICAL, COMP	3
76	PAFZZ	59776	D1075	...PACKING, PREFORMED	1
77	XDFZZ	59776	D512	...PLATE, BEARING, ADJUS	1
78	XDFZZ	59776	D511	...BEARING, ROLLER, TAPE RED	1
79	XDFZZ	59776	D508	...NUT	1
80	XDFZZ	59776	D1005	...HOUSING	1
81	XDFZZ	59776	D1010	...BEARING, ROLLER, TAPE RED	3
82	XDFZZ	59776	D506	...SPACER, RING	1
83	XDFZZ	59776	D1026	...PIN, STRAIGHT, HEADLE	1
84	XDFZZ	59776	D1007	...CAM, CONTROL	1
85	XDFZZ	59776	D1009	...SHAFT, SHOULDERED	1
86	XDFZZ	59776	D1031	...SEAL, PLAIN	2
87	PAFZZ	62144	HH-A01194	...PACKING, PREFORMED	1
88	XDFZZ	59776	D1040	...PLATE, IDENTIFICATIO	1
89	XDFZZ	59776	D1079	...PLATE, INSTRUCTION	1
90	XDFZZ	59776	D1001	...HOUSING, LIQUID PUMP	1

END OF FIGURE

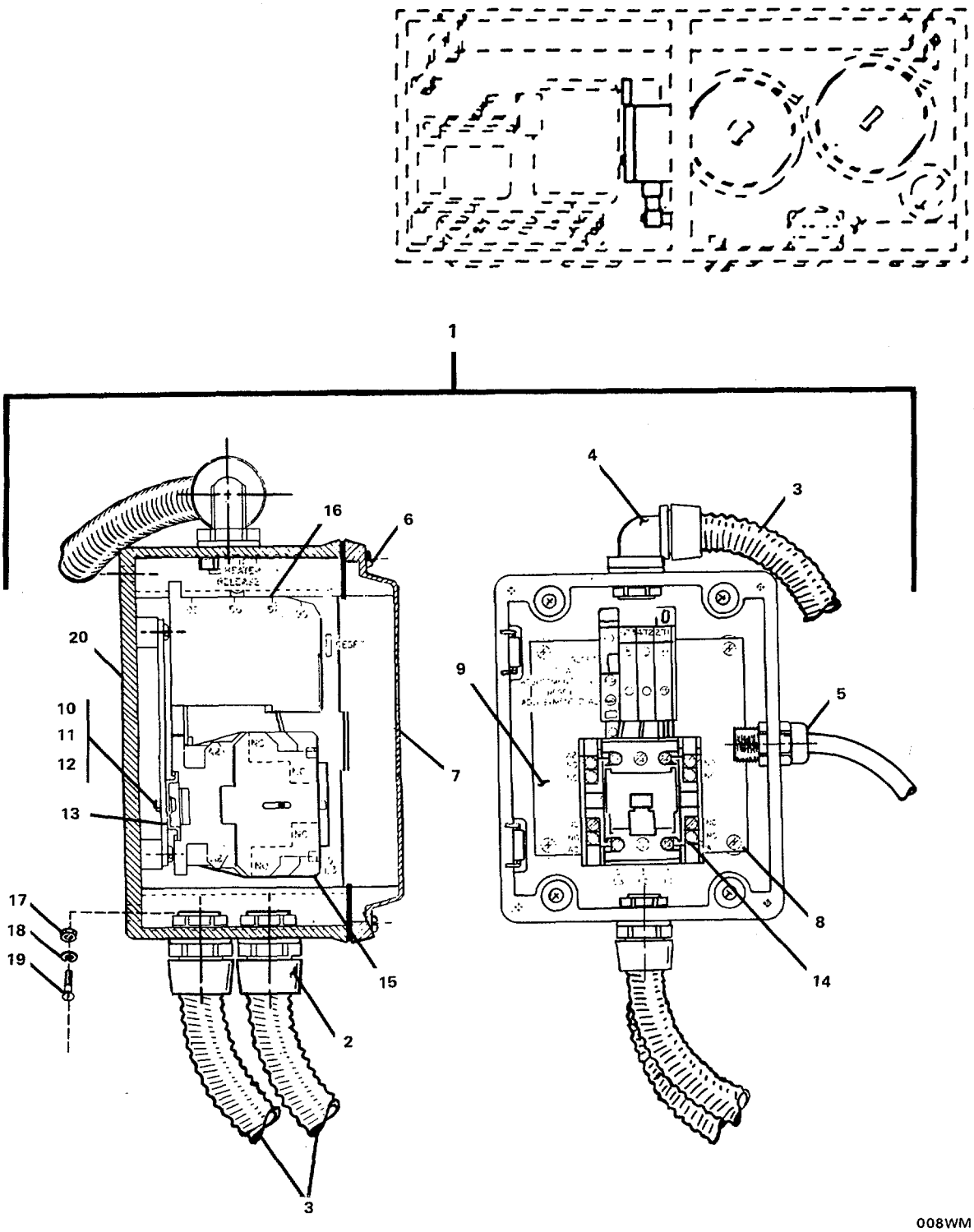

FIGURE 177. Magnetic Starter Assembly.

(1) ITEM NO	(2) SMR CODE	(3) FSCM	(4) PART NUMBER	(5) DESCRIPTION AND USABLE ON CODES(UOC)	(6) QTY
				GROUP 07 REVERSE OSMOSIS WATER MAKER ASSEMBLY-MODEL PW800	
				FIG. 177 MAGNETIC STARTER ASSEMBLY	
1	XDCOO	62144	7387	.MAGNETIC STARTER AS	1
2	XDOZZ	62144	02H-PNBK00-050	..ADAPTER, ELECTRICAL	2
3	XDOZZ	62144	02H-B20000-050	..CONDUIT, OUTLET	V
4	XDOZZ	62144	02H-PNBK90-050	..ELBOW, CONDUIT, OUTLE	1
5	XDOZZ	8L260	PG13, 5 1/2IN MPT.	STRAIN RELIEF, POWE	1
6	XDOZZ	62144	05B-MNO#10-050	..SCREW, MACHINE	4
7	XDOZZ	60041	A-865JFG1	..DOOR, ACCESS	1
8	XDOZZ	62144	05B-SS0O10-050	..SCREW, MACHINE	4
9	XDOZZ	62144	08S-AL1000-005	..PLATE, MOUNTING	1
10	XDOZZ	62144	05N-SS0#08-000	..NUT, PLAIN, HEXAGON	2
11	XDOZZ	62144	05W-SS0#08-000	..WASHER, FLAT	2
12	XDOZZ	62144	05B-SS0#08-050	..SCREW, MACHINE	2
13	XDOZZ	62144	08B-AL1000-005	..BRACKET, MOUNTING	1
14	PBOZZ	27191	C320KGS4	..CONTACTOR, AUXILIARY	1
15	PBOZZ	27191	H2012-3	..HEATER, THERMAL RELE (16.1-23.8 AMP)	1
16	PBOZZ	27191	AE16DNOB	..STARTER, MOTOR	1
17	XDOZZ	62144	05N-SS2431-001	..NUT, PLAIN, HEXAGON	2
18	XDOZZ	62144	05L-SS2441-001	..WASHER, LOCK	2
19	XDOZZ	62144	05F-SS2421-005	..SCREW, MACHINE	2
20	XDOZZ	60041	A-865JFG	..ENCLOSURE, ELECTROMA	1

END OF FIGURE

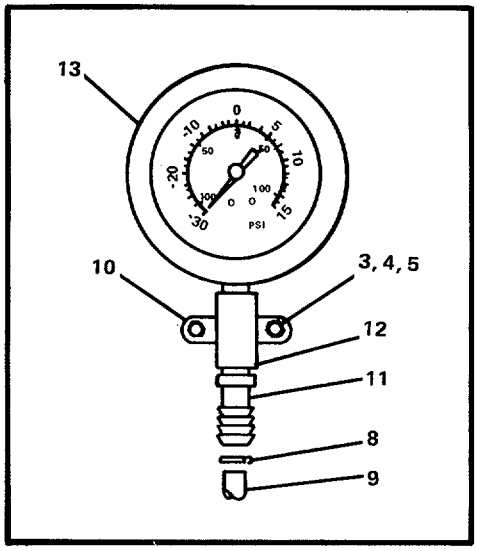

DETAIL A

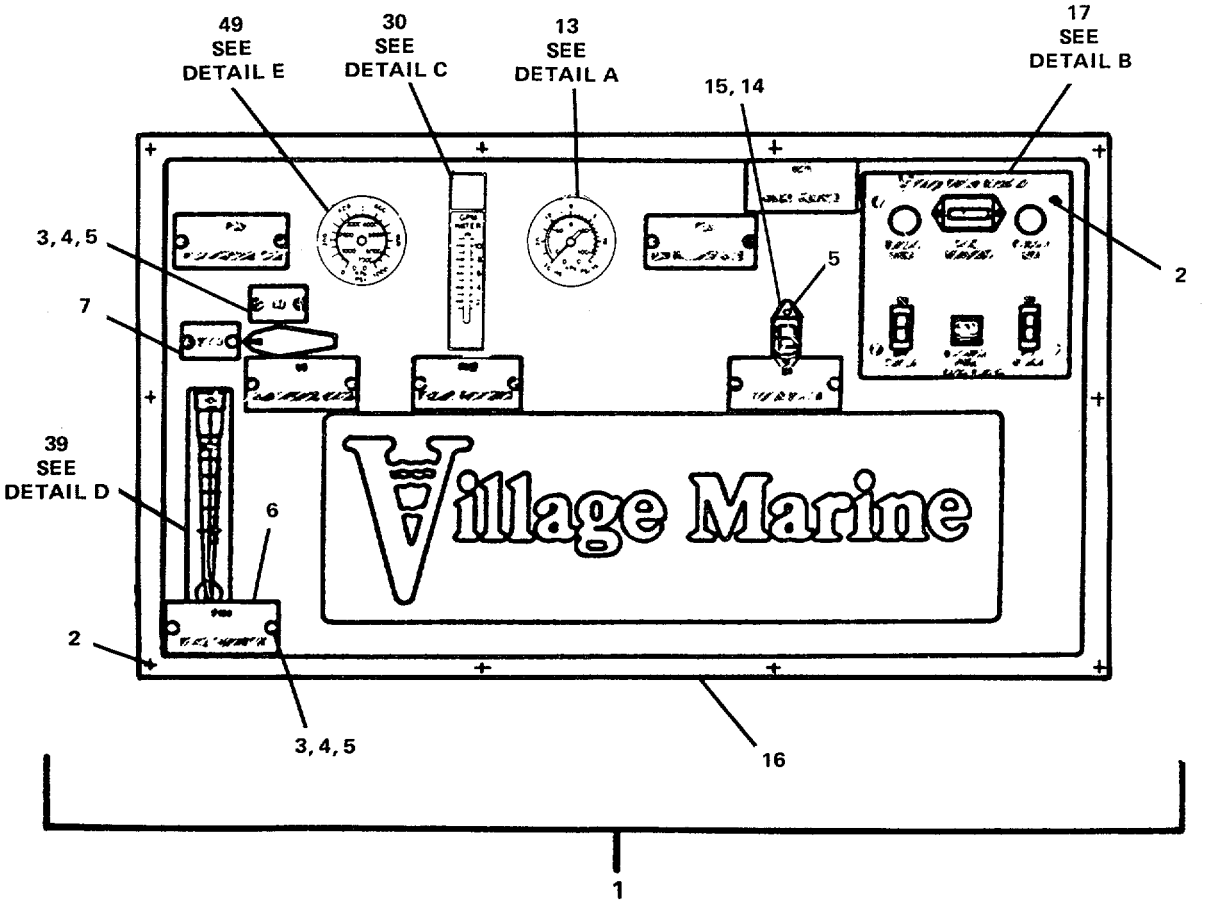

0687A

FIGURE 178. Dash Panel Assembly (Sheet 1 of 5)

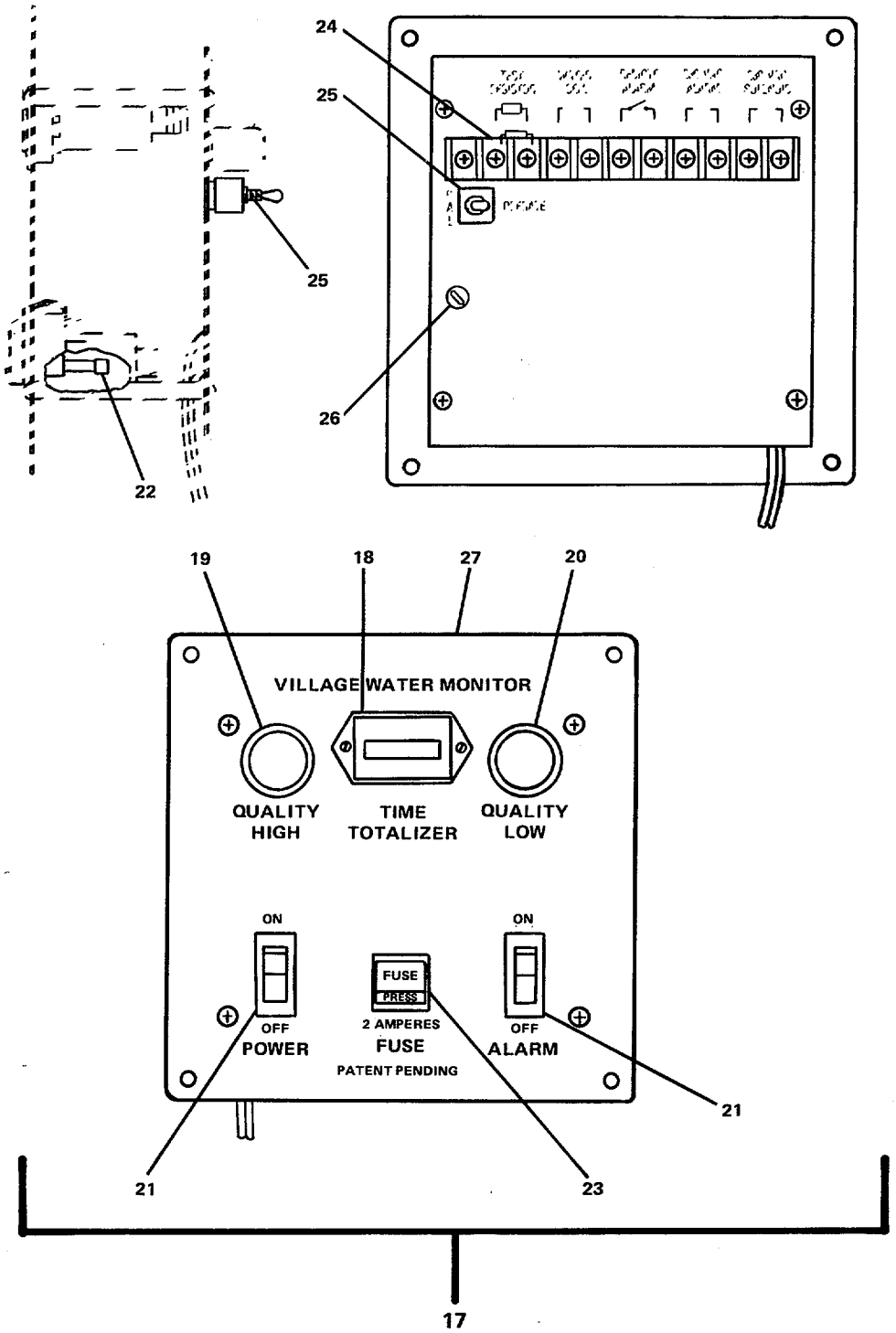

DETAIL B

FIGURE 178. Dash Panel Assembly (Sheet 2 of 5)

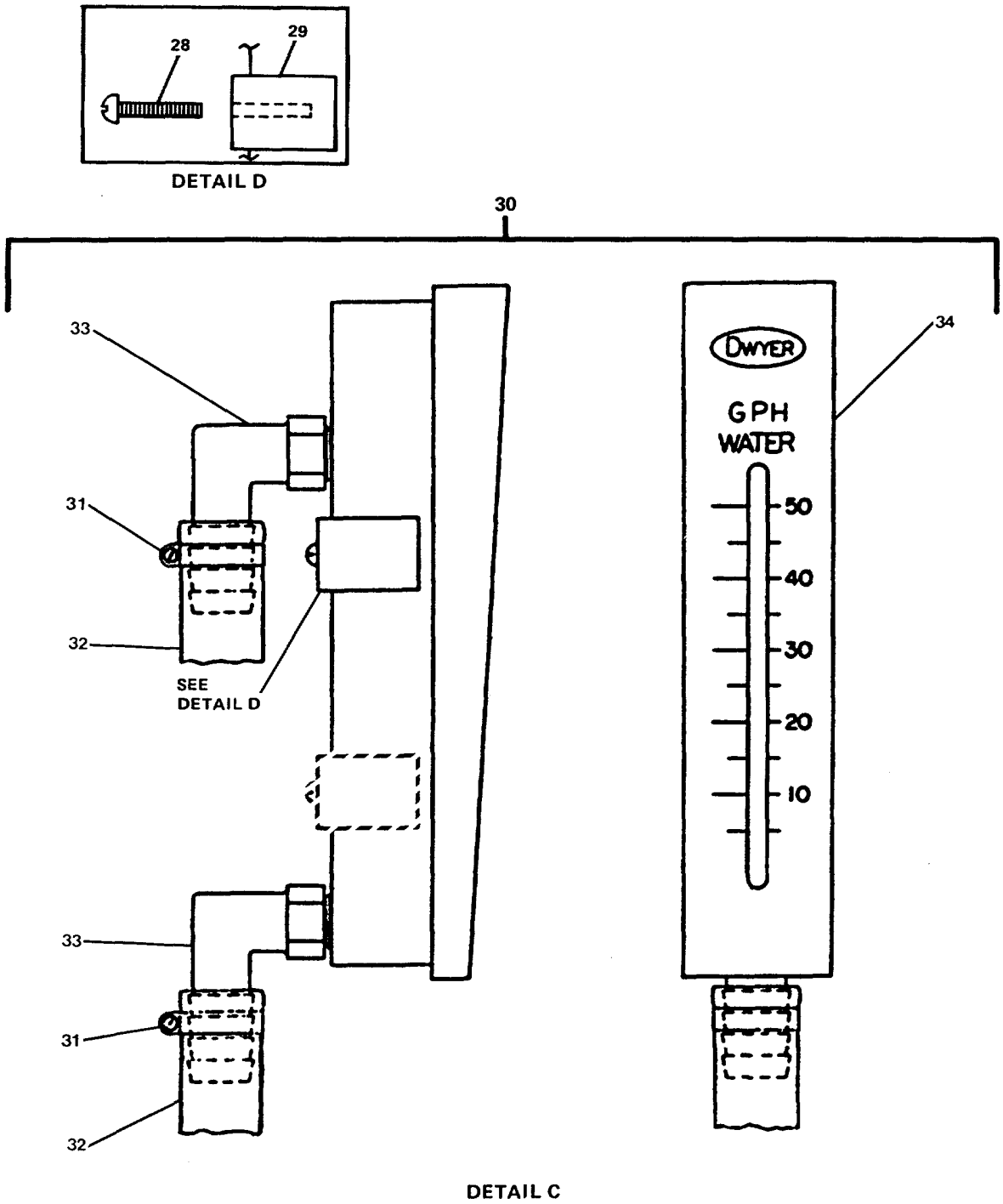

FIGURE 178. Dash Panel Assembly (Sheet 3 of 5)

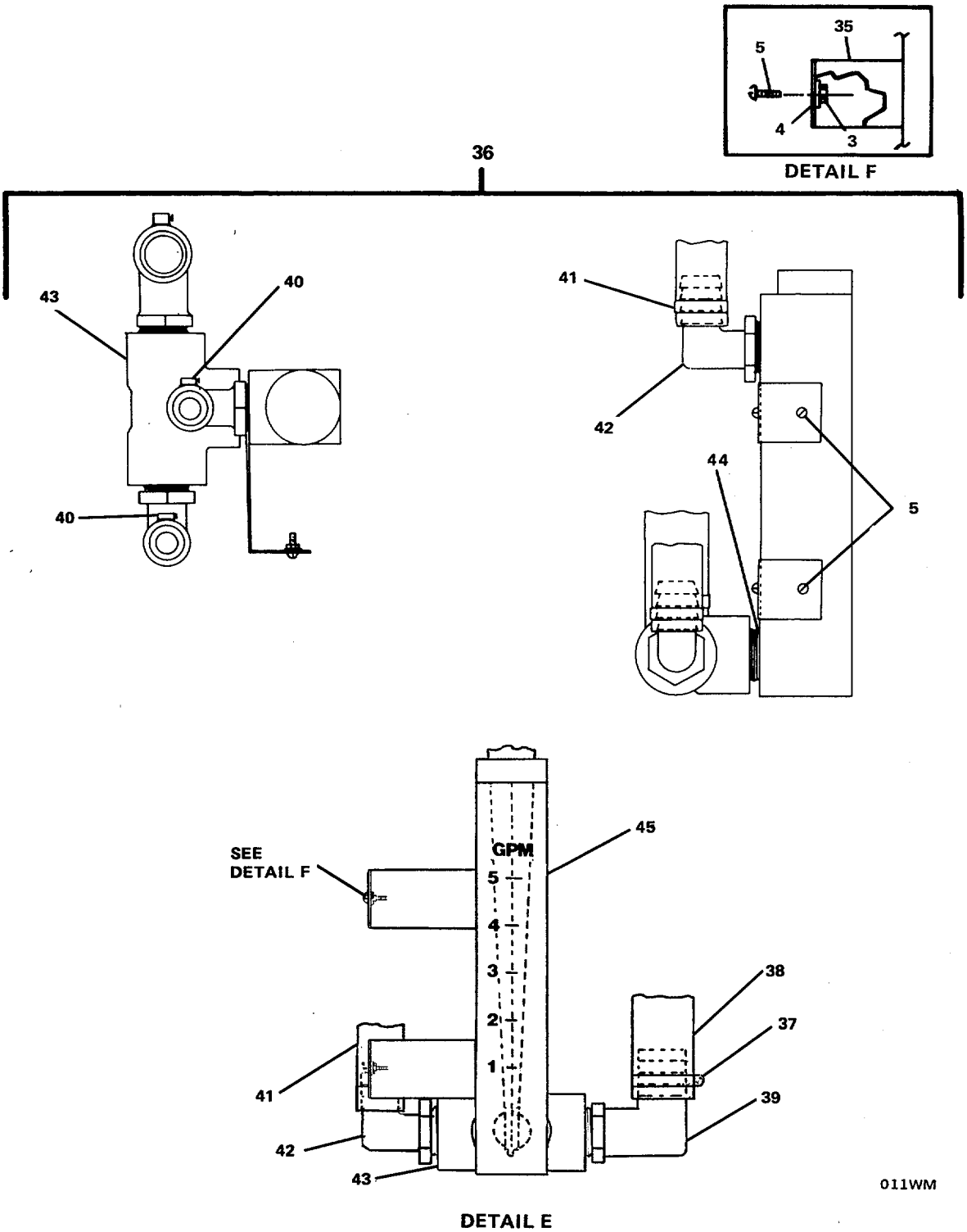

FIGURE 178. Dash Panel Assembly (Sheet 4 of 5)

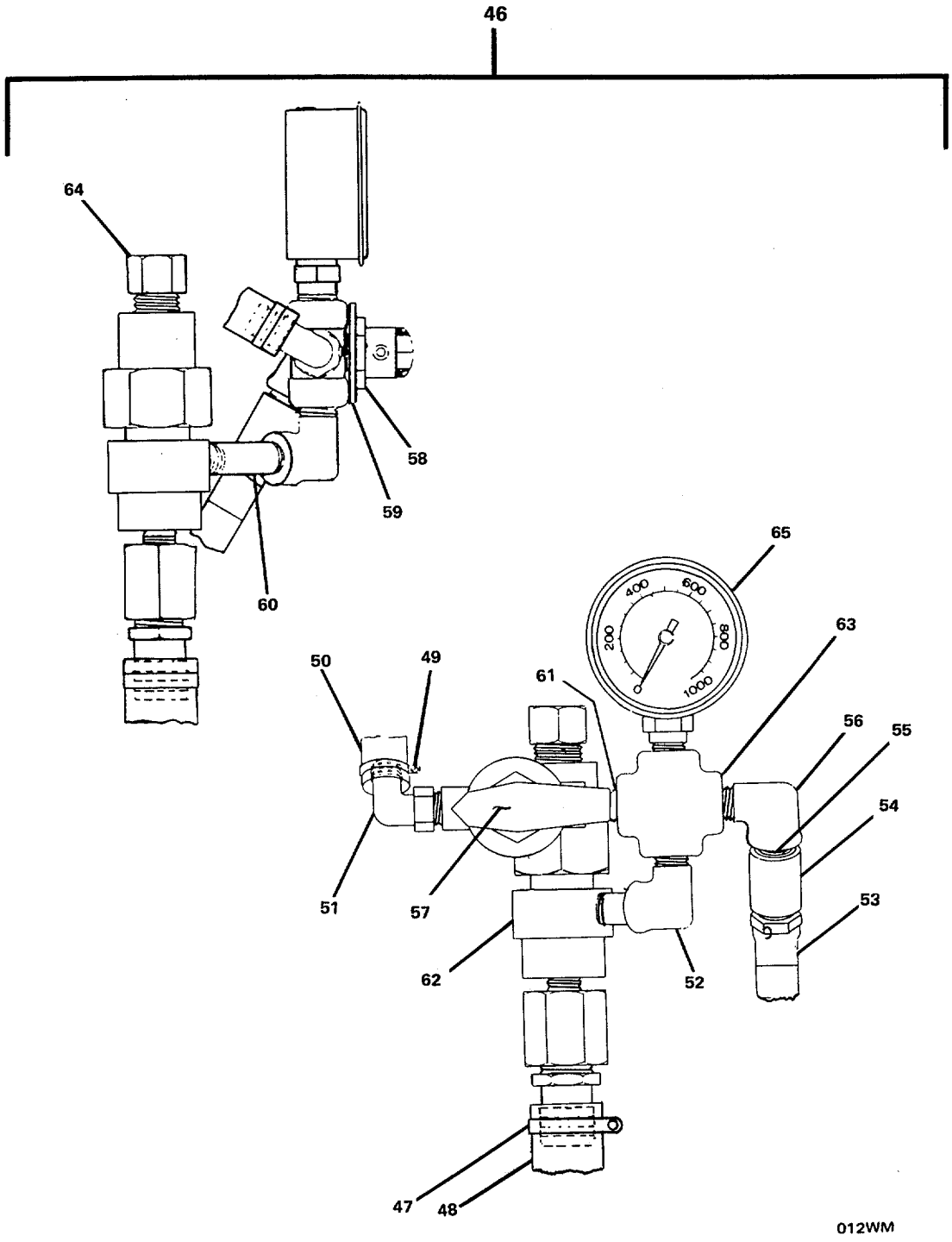

FIGURE 178. Dash Panel Assembly (Sheet 5 of 5)

(1) ITEM NO	(2) SMR CODE	(3) FSCM	(4) PART NUMBER	(5) DESCRIPTION AND USABLE ON CODES(UOC)	(6) QTY
				GROUP 07 REVERSE OSMOSIS WATER MAKER ASSEMBLY-MODEL PW800	
				FIG. 178 DASH PANEL ASSEMBLY	
1	XDCOO	62144	7390	.DASH PANEL ASSEMBLY	1
2	XDOZZ	62144	05B-SSS#08-050	..SCREW, MACHINE	14
3	XDOZZ	62144	05N-SS0#08-000	..NUT, PLAIN, HEXAGON	22
4	XDOZZ	62144	05L-SS0#08-000	..WASHER, LOCK	22
5	XDOZZ	62144	05B-SS0#08-050	..SCREW, MACHINE	26
6	XDOZZ	62144	081-BR1000-003	..PLATE, IDENTIFICATIO	7
7	XDOZZ	62144	081-BR1000-004	..PLATE, IDENTIFICATIO	2
8	XDOZZ	76599	SSHF4	..CLAMP, HOSE	1
9	PAOZZ	0ABC1	PVTBF025	..HOSE, NONMETALLIC	V
10	XDOZZ	62144	05C-PV0000-050	..CLAMP, C.	1
11	XDOZZ	20943	TA-1044	..ADAPTER, HOSE	1
12	XDOZZ	62531	830-002	..COUPLING, HOSE	1
13	PAOZZ	62144	09G-003015-025	..GAGE, PRESSURE, DIAL	1
14	PAOZZ	12532	CR101Y	..SWITCH, PUSH	1
15	PAOZZ	62144	07H-02A812-000	..HEATER, AIR DUCT, ENG	1
16	XDOZZ	62144	08S-PL1000-001	..PANEL, PLASTIC DASH	1
17	PBCOO	62144	7382	..CONTROL-MONITOR SUB	1
18	PBOZZ	57733	LR42455	...METER, TIME TOTALIZI	1
19	PACZZ	62144	20L-LAGO01-000	...LIGHT, INDICATOR GREEN	1
20	PACZZ	62144	20L-LAR001-000	...LIGHT, INDICATOR RED	1
21	PBOZZ	62144	20S-160012-000	...SWITCH, TOGGLE	2
22	PACZZ	81349	F02A250V2-1-2A	...FUSE, CARTRIDGE (250V/2.5A)	1
23	XDOZZ	62144	20F-000001-025	...FUSE HOLDER, RECEPTA	1
24	XDOZZ	62144	20Z-111032-010	...BOARD, TERMINAL	1
25	XDOZZ	62144	20S-MS500G-000	...SWITCH, TOGGLE	1
26	XDOZZ	62144	20Z-111032-011	...CONTROL, SET POINT A	1
27	XDOZZ	62144	20M-111032-220	...MONITOR, WATER QUALI	1
28	XDOZZ	62144	05B-SS0t10-050	..SCREW, MACHINE	2
29	XDOZZ	62144	09R-ORMA45-150	..BRACKET, MOUNTING	2
30	PBCOO	62144	7388	..METER, FLOW RATE, IND	1
31	XDOZZ	76599	SSHF6	...CLAMP, HOSE	2
32	PAOZZ	0ABC1	PVTBF025	...HOSE, NONMETALLIC	V
33	XDOZZ	20943	TE-2046	...ADAPTER, HOSE, ELBOW	2
34	XDOZZ	85274	RMA-45	...METER, FLOW RATE IND	1
35	XDOZZ	62144	08B-AL1000-003	..HOLDER, METER	2
36	PBCOO	62144	7386	..METER, FLOW RATE, IND	1
37	XDOZZ	76599	SSHF6	...CLAMP, HOSE	2
38	PAOZZ	0ABC1	PVTBF050	...HOSE, NONMETALLIC	V
39	XDOZZ	20943	TE-20128	...ADAPTER, HOSE, ELBOW	2
40	XDOZZ	76599	HF110SS	...CLAMP, HOSE.	1
41	PAOZZ	0ABC1	PVTBF075	...HOSE, NONMETALLIC	V
42	XDOZZ	20943	TE-101212	...ADAPTER, HOSE, ELBOW	1
43	XDOZZ	62531	805-007	...TEE, HOSE	1
44	XDOZZ	51671	3681-104	...NIPPLE, HOSE	1
45	XDOZZ	1T589	K75-03-0142	...METER, FLOW RATE IND	1
46	XDCOO	62144	7385	..REGULATOR ASSEMBLY, HIGH PRESSURE	1
47	XDOZZ	76599	HF10SS	...CLAMP, HOSE	1

(1) ITEM NO	(2) SMR CODE	(3) FSCM	(4) PART NUMBER	(5) DESCRIPTION AND USABLE ON CODES(UOC)	(6) QTY
48	PAOZZ	0ABC1	PVTBF075	...HOSE, NONMETALLIC	V
49	XDOZZ	76599	SSHF6	...CLAMP, HOSE	1
50	PAOZZ	0ABC1	PVTBF050	...HOSE, NONMETALLIC	V
51	XDOZZ	20943	TE-2048	...ADAPTER, HOSE, ELBOW	1
52	XDOZZ	20943	TE-20812	...ADAPTER, HOSE, ELBOW	1
53	PAOOO	62144	7392	...HOSE ASSEMBLY, NONME	1
54	XDOZZ	62144	11C-SS3630-052	...COUPLING, REDUCER	1
55	XDOZZ	62144	11N-SS3661-037	...NIPPLE, PIPE	1
56	XDOZZ	62144	11E-SS3412-002	...ELBOW, PIPE	2
57	PBOZZ	12623	SS-43F4	...VALVE, BALL	1
58	XDOZZ	62144	05N-SS2431-190	...NUT	1
59	XDOZZ	62144	05W-SS2441-190	...WASHER, FLAT	1
60	XDOZZ	62144	11N-SS3661-039	...NIPPLE, PIPE	1
61	XDOZZ	62144	11N-SS3661-038	...NIPPLE, PIPE.....	1
62	PAOZO	62144	03R-VM1300-005	...VALVE, REGULATING, FL.....	1
63	XDOZZ	62144	11X-SS3420-002	...CROSS, PIPE	1
64	XDOZZ	62144	03R-VM1301-005	...NUT, ADJUSTMENT	1
65	PAOZZ	62144	09G-001000-025	...GAGE, PRESSURE, DIAL	1

END OF FIGURE

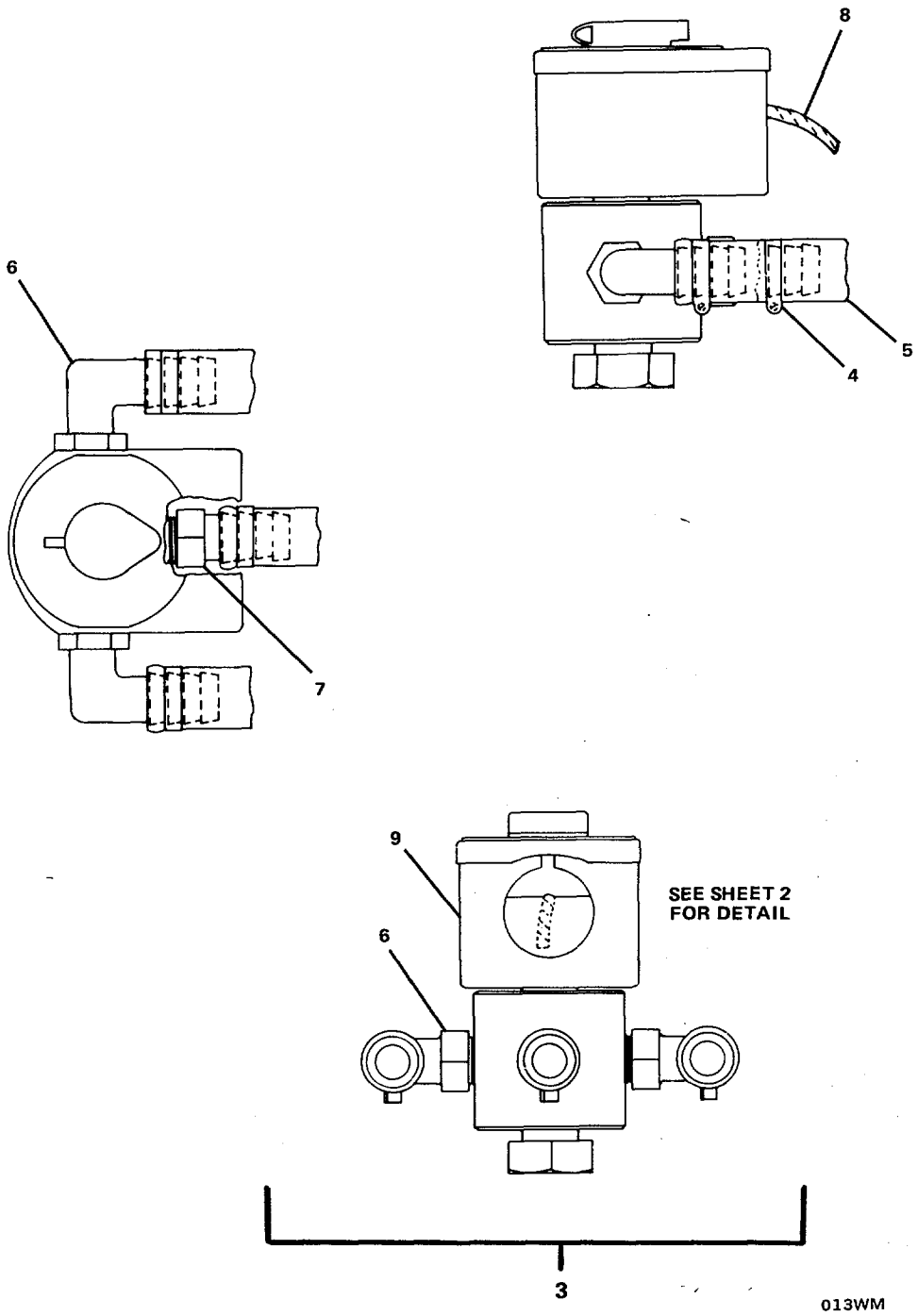

FIGURE 179. Solenoid Valve Assembly (Sheet 1 of 2).

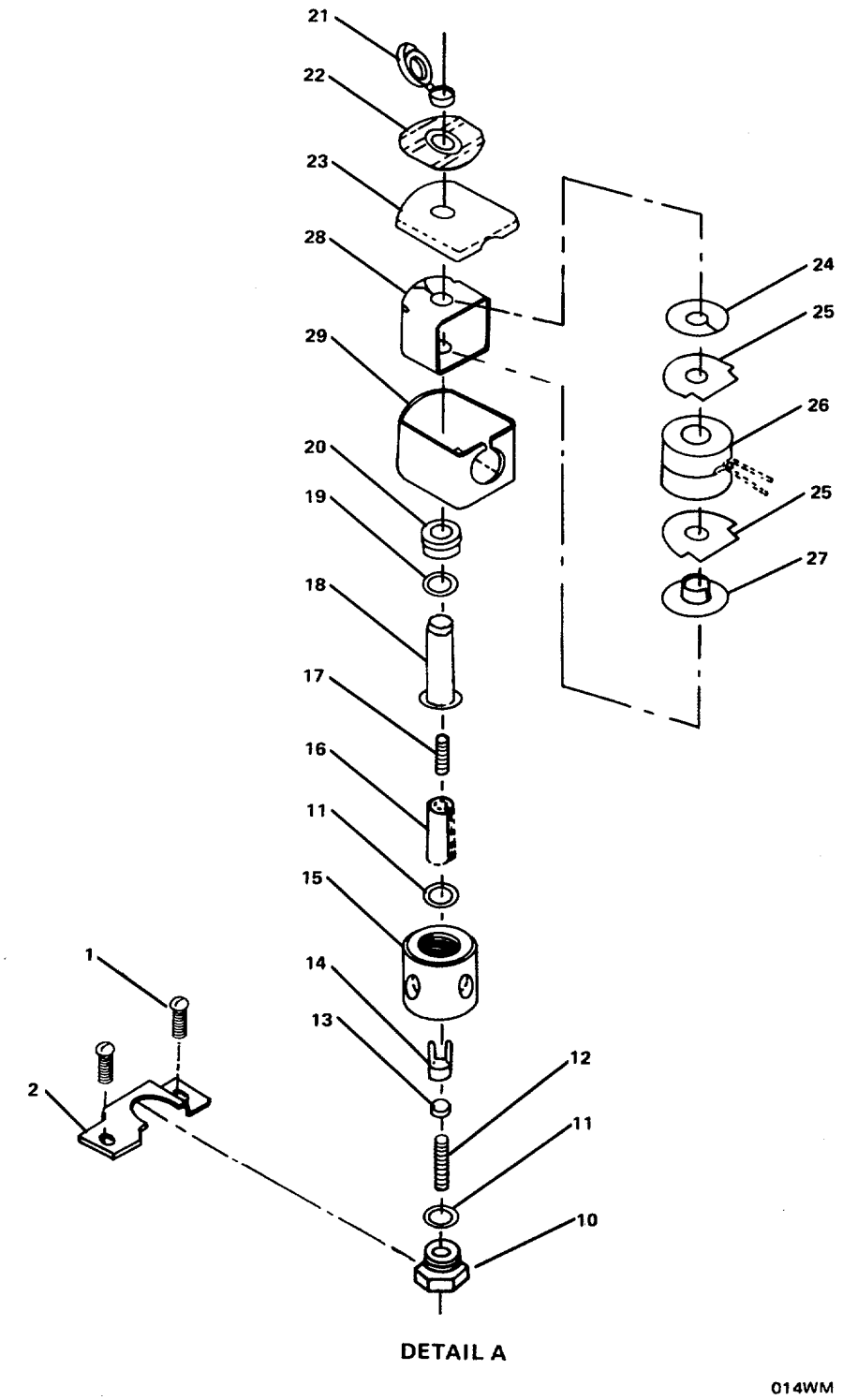

FIGURE 179. Solenoid Valve Assembly (Sheet 2 of 2).

(1) ITEM NO	(2) SMR CODE	(3) FSCM	(4) PART NUMBER	(5) DESCRIPTION AND USABLE ON CODES(UOC)	(6) QTY
				GROUP 07 REVERSE OSMOSIS WATER MAKER ASSEMBLY-MODEL PW800	
				FIG. 179 SOLENOID VALVE ASSEMBLY	
1	XDOZZ	62144	05B-SSS$08-050	.SCREW, MACHINE	2
2	XDOZZ	62144	19S-832061-215-28	.BRACKET, MOUNTING P/N INCLUDES DRAWING CALL NO	1
3	XDCFF	62144	7389	.SOLENOID VALVE ASSE	1
4	XDOZZ	76599	SSHF6	..CLAMP, HOSE	3
5	PAOZZ	0ABC1	PVTBF025	..HOSE, NONMETALLIC	V
6	XDOZZ	20943	TE-2044	..ADAPTER, HOSE , ELBOW	2
7	XDOZZ	20943	TA-1044	..ADAPTER, HOSE	1
8	XDOZZ	92194	SW2-1/4 IN	..WRAP, SPIRAL WIRING	V
9	PBCFZ	14403	832061	..VALVE , SOLENOID	1
10	XDFZZ	62144	19S-832061-219	...CAP	1
11	XDFZZ	62144	19S-832061-214	...GASKET	2
12	XDFZZ	62144	19S-832061-218	...SPRING , HELICAL, COMP	1
13	XDFZZ	62144	19S-832061-217	...DISK, VALVE	1
14	XDFZZ	62144	19S-832061-216	...SEAT, VALVE	1
15	XDFZZ	62144	19S-832061-215	...BODY, VALVE	1
16	XDFZZ	62144	19S-832061-212	...PLUNGER, SOLENOID	1
17	XDFZZ	62144	19S-832061-213	...SPRING, HELICAL, COMP	1
18	XDFZZ	62144	19S-832061-211	...NUT, SLEEVE	1
19	XDFZZ	62144	19S-832061-210	...GASKET	1
20	XDFZZ	62144	19S-832061-209	...BONNET	1
21	XDFZZ	62144	19S-832061-201	...CAP, RETAINING	1
22	XDFZZ	62144	19S-832061-202	....PLATE, IDENTIFICATIO	1
23	XDFZZ	62144	19S-832061-203	...COVER, ACCESS	1
24	XDFZZ	62144	19S-832061-205	...SLEEVE	1
25	XDFZZ	62144	19S-832061-206	...WASHER, FLAT	2
26	XDFZZ	62144	19S-02166D-220	...COIL, ELECTRICAL	1
27	XDFZZ	62144	19S-832061-207	...SLEEVE	1
28	XDFZZ	62144	19S-832061-204	...YOKE	1
29	XDFZZ	62144	19S-832061-208	...HOUSING	1

END OF FIGURE

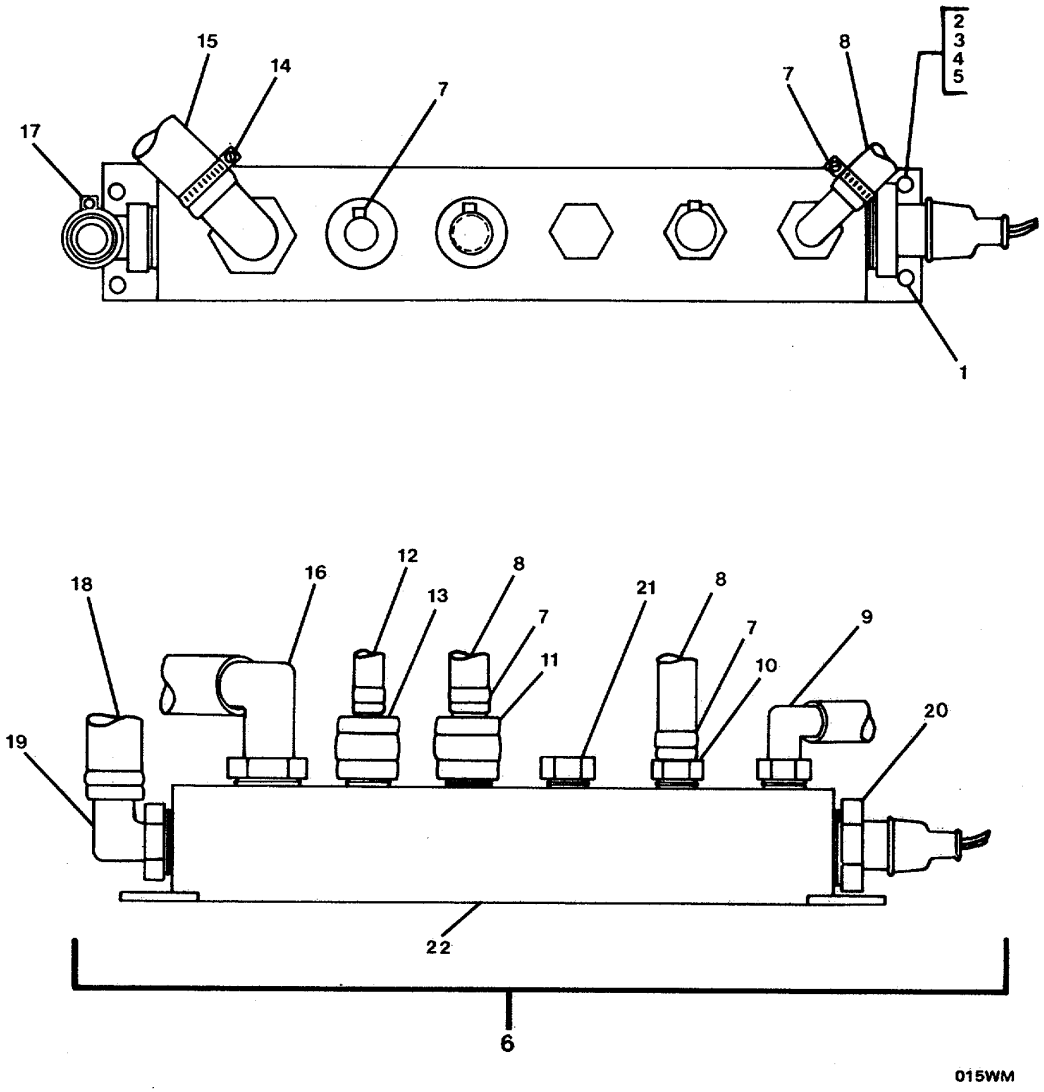

FIGURE 180. Brine Manifold Assembly.

(1) ITEM NO	(2) SMR CODE	(3) FSCM	(4) PART NUMBER	(5) DESCRIPTION AND USABLE ON CODES(UOC)	(6) QTY
				GROUP 07 REVERSE OSMOSIS WATER MAKER ASSEMBLY-MODEL PW800	
				FIG. 180 BRINE MANIFOLD ASSEMBLY	
1	XDFZZ	62144	05B-SSS08-050	.SCREW, MACHINE	2
2	XDFZZ	62144	05N-SS0O08-000	.NUT, PLAIN, HEXAGON	2
3	XDFZZ	62144	05L-SS0*08-000	.WASHER, LOCK	2
4	XDFZZ	62144	05W-SS0O08-000	.WASHER, FLAT	2
5	XDFZZ	62144	05B-SS0*08-050	.SCREW, MACHINE	2
6	XDCFF	62144	7380	.BRINE MANIFOLD ASSE	1
7	XDFZZ	76599	SSHF4	..CLAMP, HOSE .	4
8	PAFZZ	0ABC1	PVTBF038	..HOSE, NONMETALLIC	V
9	XDFZZ	20943	TE-2086	..ADAPTER, HOSE, ELBOW	1
10	XDFZZ	20943	TA-1046	..ADAPTER, HOSE .	1
11	PAFZZ	62144	19C-NY5306-312	..VALVE, CHECK	1
12	PAFZZ	0ABC1	PVTBF025	..HOSE, NONMETALLIC	V
13	PAFZZ	62144	19C-NY5304-312	..VALVE, CHECK	1
14	XDFZZ	76599	HF1lOSS	..CLAMP, HOSE	1
15	PAFZZ	0ABC1	PVTBF075	..HOSE, NONMETALLIC	V
16	XDFZZ	20943	TE-20812	..ADAPTER, HOSE, ELBOW	1
17	XDFZZ	76599	SSHF6	..CLAMP, HOSE	1
18	PAFZZ	0ABC1	PVTBF050	..HOSE, NONMETALLIC	V
19	XDFZZ	20943	TE-2088	..ADAPTER, HOSE, ELBOW	1
20	PBFZZ	62144	20P-102682-000	..ELECTRODE	1
21	XDFZZ	20943	TP-4004	..PLUG, HOSE	1
22	PBFZZ	62144	11M-PV1630-848	..MANIFOLD ASSEMBLY,	1

END OF FIGURE

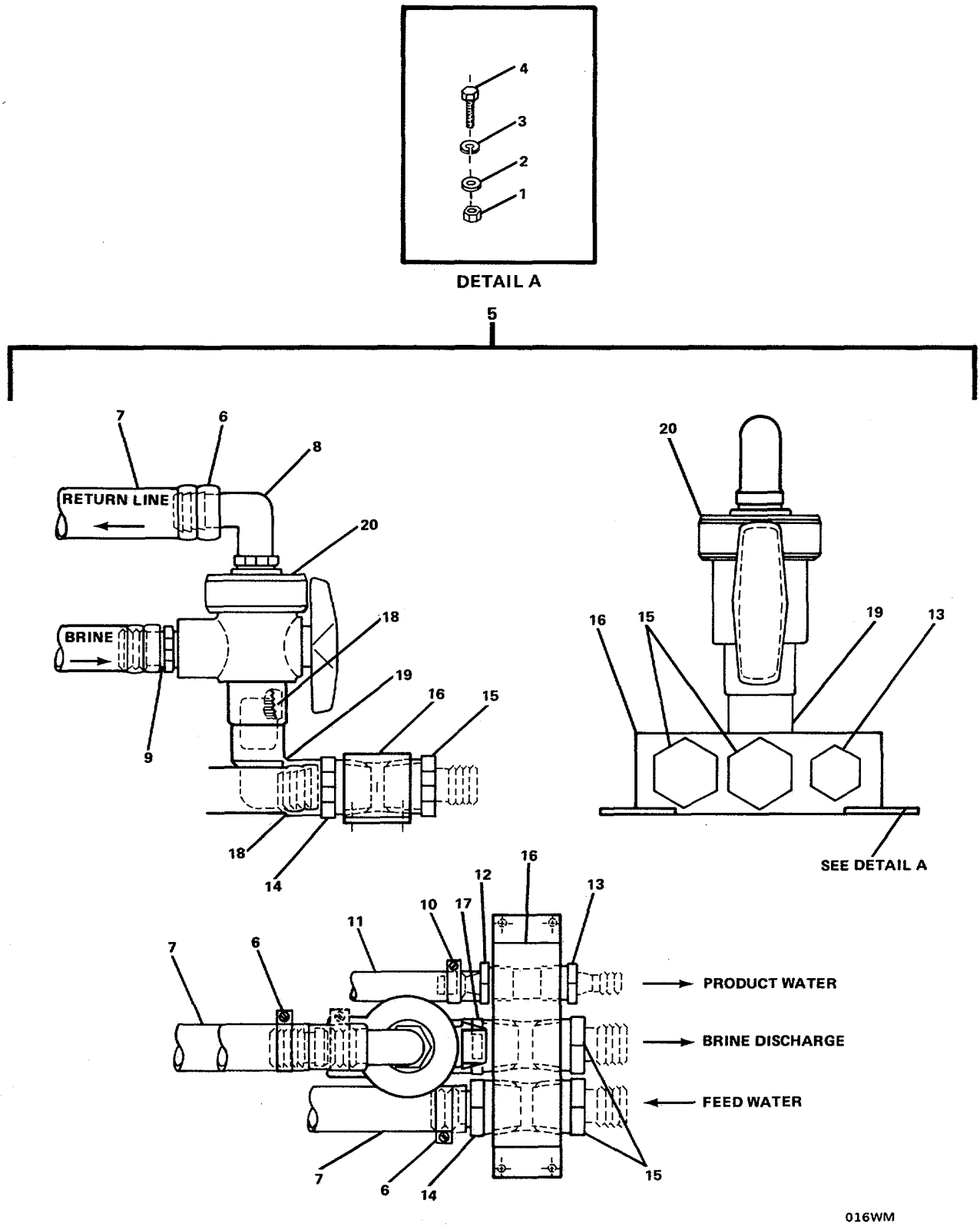

FIGURE 181. Cleaning Valve Assembly.

(1) ITEM NO	(2) SMR CODE	(3) FSCM	(4) PART NUMBER	(5) DESCRIPTION AND USABLE ON CODES(UOC)	(6) QTY
				GROUP 07 REVERSE OSMOSIS WATER MAKER ASSEMBLY-MODEL PW800	
				FIG. 181 CLEANING VALVE ASSEMBLY	
1	XDFZZ	62144	05N-SSO#08-000	.NUT, PLAIN, HEXAGON	4
2	XDFZZ	62144	05L-SSO#08-000	.WASHER, LOCK	4
3	XDFZZ	62144	05W-SSO#08-000	.WASHER, FLAT	4
4	XDFZZ	62144	05B-SSO#08-050	.SCREW, MACHINE	4
5	XDCOO	62144	7379	.CLEANING VALVE ASSE	1
6	XDOZZ	76599	HF10SS	..CLAMP, HOSE	5
7	PAOZZ	0ABC1	PVTBF075	..HOSE, NONMETALLIC	V
8	XDOZZ	20943	TE-20812	..ADAPTER, HOSE, ELBOW	1
9	XDOZZ	20943	TA-10812	..ADAPTER, HOSE	1
10	XDOZZ	76599	SSHF6	..CLAMP, HOSE	1
11	PAOZZ	0ABC1	PVTBF038	..HOSE, NONMETALLIC	V
12	XDOZZ	20943	TA-1086	..ADAPTER, HOSE	1
13	XDOZZ	20943	TP-4008	..PLUG, HOSE	1
14	XDOZZ	20943	TA-101212	..ADAPTER, HOSE	1
15	XDOZZ	02094	3TP-4012	..PLUG, HOSE	2
16	XDOZZ	0ABCI	1IM-PV1630-348	..MANIFOLD, INTAKE	1
17	XDOZZ	62531	839-101	..BUSHING, REDUCER	1
18	XDOZZ	51671	3661-077	..NIPPLE, HOSE	2
19	XDOZZ	62531	808-005	..ELBOW, HOSE	1
20	PBOZZ	73124	TW10050T	..VALVE, BALL	1

END OF FIGURE

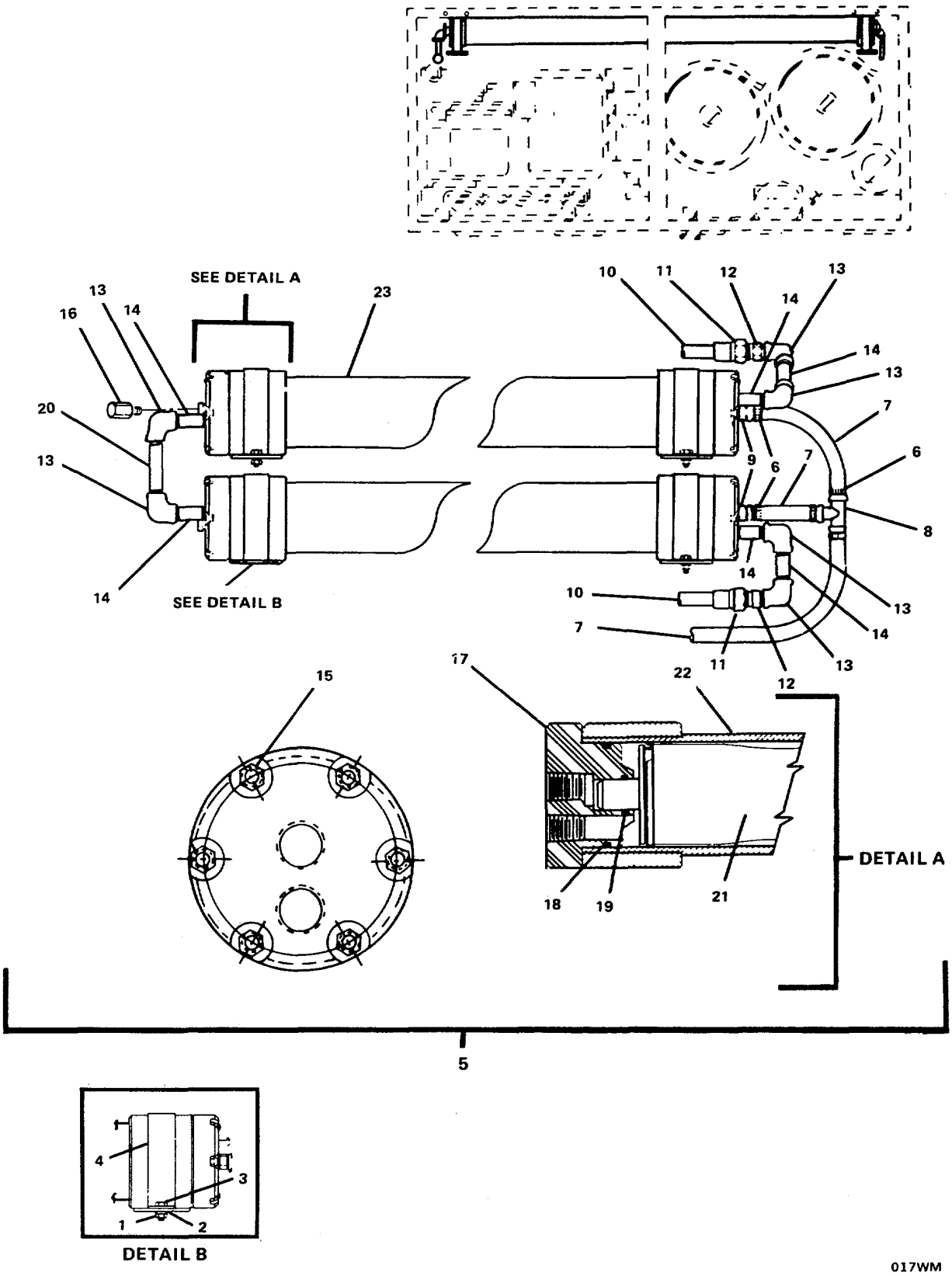

FIGURE 182. Pressure Vessel Assembly.

(1) ITEM NO	(2) SMR CODE	(3) FSCM	(4) PART NUMBER	(5) DESCRIPTION AND USABLE ON CODES(UOC)	(6) QTY
				GROUP 07 REVERSE OSMOSIS WATER MAKER ASSEMBLY-MODEL PW800	
				FIG. 182 PRESSURE VALVE ASSEMBLY	
1	XDOZZ	62144	05N-SS2431-001	.NUT, PLAIN, HEXAGON	8
2	XDOZZ	62144	05L-SS2441-001	.WASHER, LOCK	8
3	XDOZZ	62144	05B-SS2421-002	.BOLT, MACHINE	8
4	XDOZZ	62144	FC-C04250	.STRAP, RETAINING	4
5	XDCOO	62144	7383	.PRESSURE VESSEL ASS	1
6	XDOZZ	76599	SSHF6	..CLAMP, HOSE	5
7	PAOZZ	0ABC1	PVTBF025	..HOSE, NONMETALLIC	V
8	XDOZZ	20943	TT-9444	..TEE, HOSE	1
9	XDOZZ	20943	TA-1044	..ADAPTER, HOSE	2
10	PAOZZ	62144	PG-H00381	..HOSE ASSEMBLY, NONME	V
11	XDOZZ	62144	PH-100375	..ADAPTER, HOSE	2
12	XDOZZ	7K471	B-6-HRN-4	..REDUCER, PIPE	2
13	XDOZZ	62144	11E-SS3608-002	..ELBOW, PIPE	6
14	XDOZZ	62144	11N-SS3661-039	..NIPPLE, PIPE	6
15	XDOZZ	62144	05N-SSOI10-001	..NUT, SELF-LOCKING, HE	12
16	XDOZZ	20943	TP-4004	..PLUG, HOSE	2
17	XDOZZ	62144	13P-VM2540-002	..END PLUG	2
18	PAOZZ	62144	130-VM2542-228	..PACKING, PREFORMED	2
19	PAOZZ	62144	130-VM2542-116	..PACKING, PREFORMED	2
20	XDOZZ	62144	11N-SS3661-041	..NIPPLE, PIPE	1
21	PBOZZ	62144	16S-002540-000	..FILTER ELEMENT, FLUI	1
22	PBOZZ	62144	13A-VM2540-012	..TUBE ASSEMBLY, METAL	1
23	XDOZZ	62144	16M-VM2540-022	..MODULE, REVERSE OSMO	2

END OF FIGURE

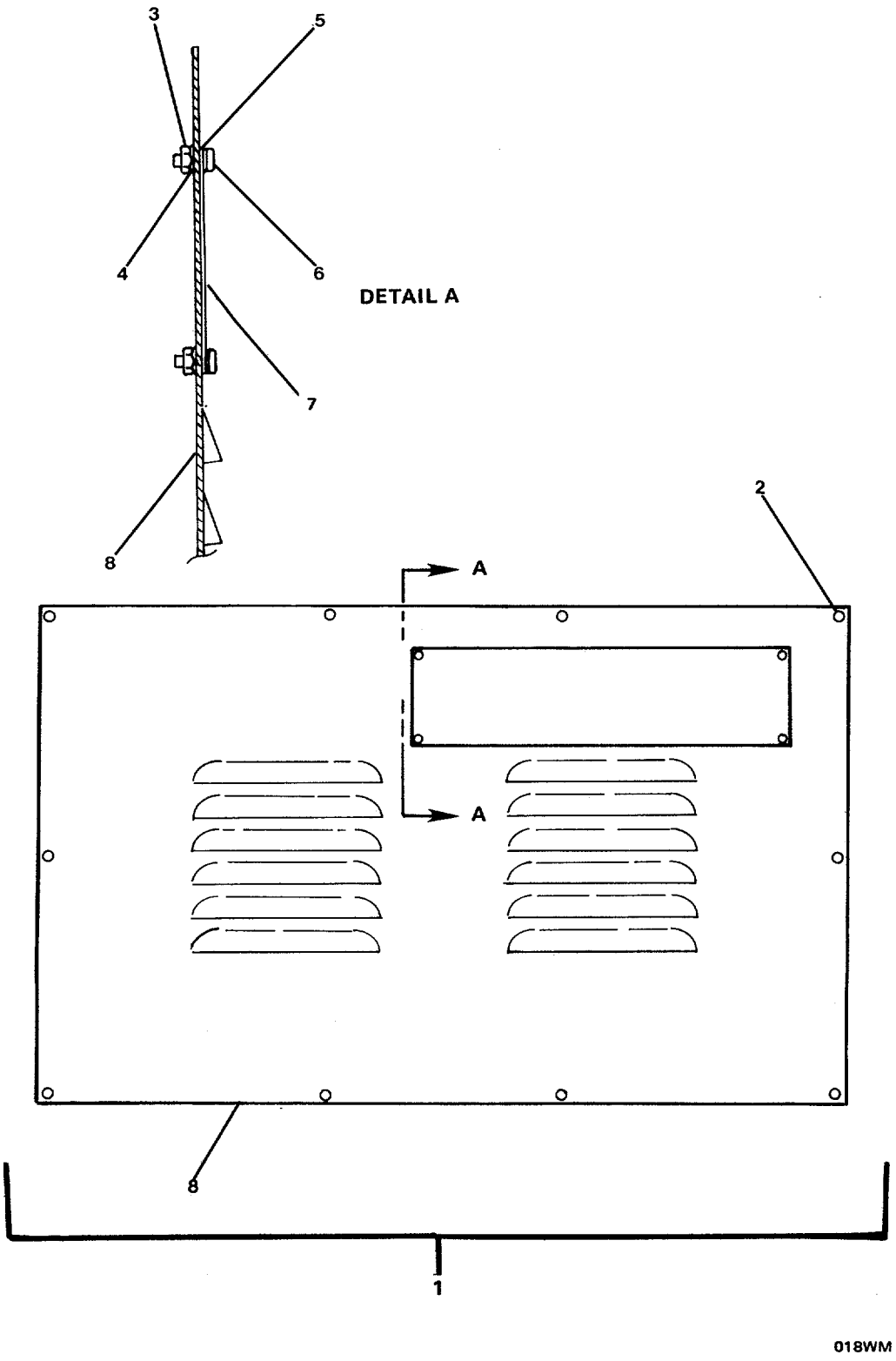

FIGURE 183. Louvered Panel Assembly.

(1) ITEM NO	(2) SMR CODE	(3) FSCM	(4) PART NUMBER	(5) DESCRIPTION AND USABLE ON CODES(UOC)	(6) QTY
				GROUP 07 REVERSE OSMOSIS WATER MAKER ASSEMBLY-MODEL PW800	
				FIG. 183 LOUVERED PANEL ASSEMBLY	
1	XDOOO	62144	7391	.LOUVERED PANEL ASSE	1
2	XDOZZ	62144	05B-SSS#08-050	..SCREW, MACHINE	10
3	XDOZZ	62144	05N-SS0#08-000	..NUT, PLAIN, HEXAGON	4
4	XDOZZ	62144	05L-SS0#08-000	..WASHER, LOCK	4
5	XDOZZ	62144	05W-SS0#08-000	..WASHER, FLAT	4
6	XDOZZ	62144	05B-SS0#08-050	..SCREW, MACHINE	4
7	XDOZZ	62144	081-BR1000-002	..PLATE, INSTRUCTION	1
8	XDOZZ	62144	08S-AL1000-003	..PANEL, LOUVERED	1

END OF FIGURE

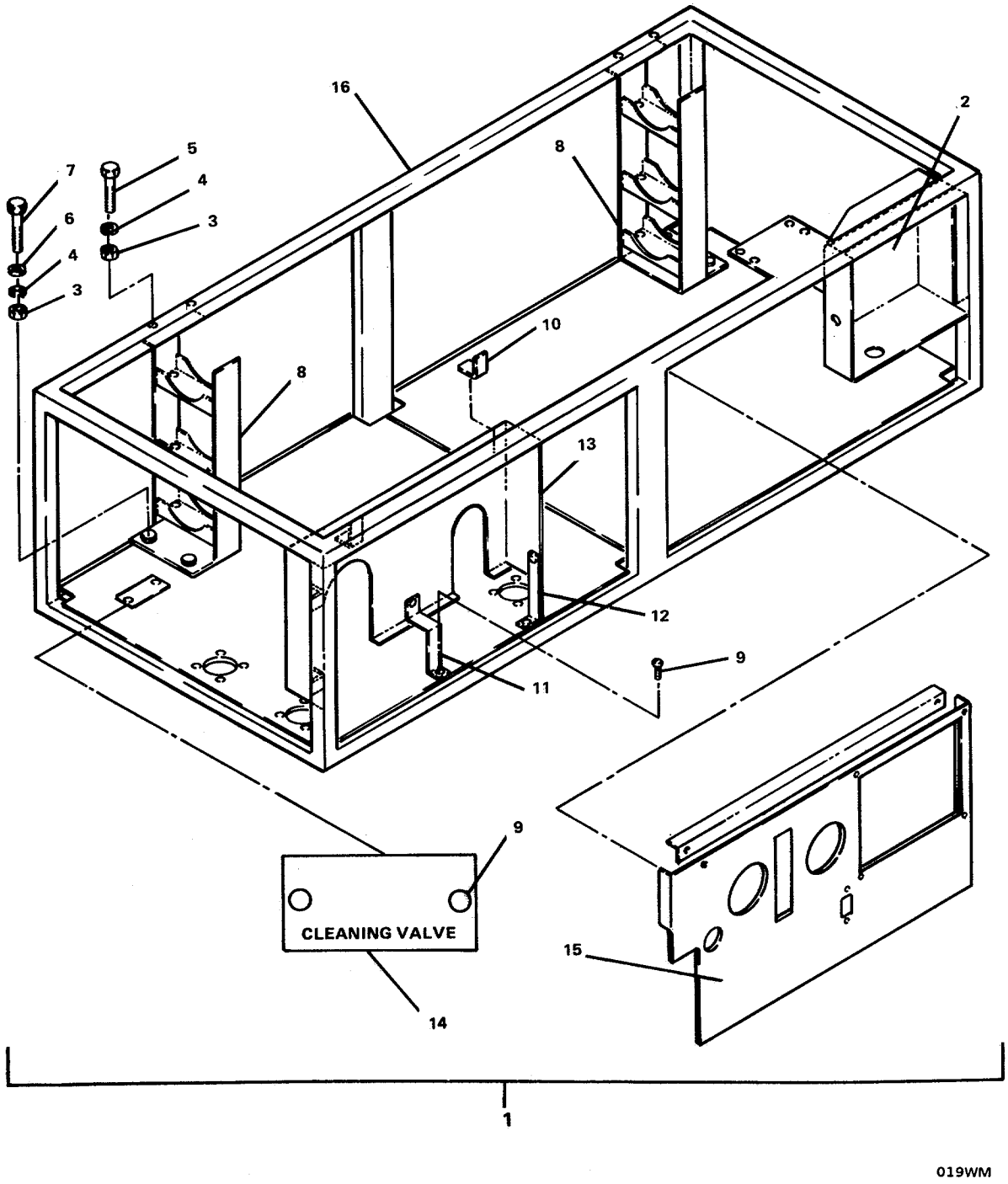

FIGURE 184. Main Frame Assembly.

(1) ITEM NO	(2) SMR CODE	(3) FSCM	(4) PART NUMBER	(5) DESCRIPTION AND USABLE ON CODES(UOC)	(6) QTY
				GROUP 07 REVERSE OSMOSIS WATER MAKER ASSEMBLY-MODEL PW800	
				FIG. 184 MAIN FRAME ASSEMBLY	
1	XDOOO	62144	7393	.MAIN FRAME ASSEMBLY	1
2	XDOZZ	62144	08S-AL1000-001	..ENCLOSURE, WATER MON	1
3	XDOZZ	62144	05N-SS2431-001	..NUT, PLAIN, HEXAGON	8
4	XDOZZ	62144	05L-SS2441-001	..WASHER, LOCK	8
5	XDOZZ	62144	05F-SS2421-006	..SCREW, MACHINE	4
6	XDOZZ	62144	05W-SS2441-001	..WASHER, FLAT	4
7	XDOZZ	62144	05B-SS2421-002	..BOLT, MACHINE	4
8	XDOZZ	62144	08S-AL2540-000	..RACK, PRESSURE VESSE	2
9	XDOZZ	62144	05B-SS0#08-050	..SCREW, MACHINE	16
10	XDOZZ	62144	08B-AL1000-002	..BRACKET, ANGLE	4
11	XDOZZ	62144	08B-AL1000-004	..BRACKET, ANGLE	1
12	XDOZZ	62144	08B-AL1000-001	..BRACKET, ANGLE	1
13	XDOZZ	62144	08S-AL10-002	..GUARD, PULLEY	1
14	XDOZZ	62144	081-BR1000-001	..PLATE, INSTRUCTION	1
15	XDOZZ	62144	08S-AL1000-004	..PANEL, METAL DASH	1
16	XDOZZ	62144	08S-PW1000-000	..FRAME	1
	PACZZ	62144	06C-OVM500-000	.PARTS KIT, WATER CHE (NEEDED FOR COMPLETE CLEANING OF WATERMAKER)	1

END OF FIGURE

SECTION III

(Not Applicable)

CROSS-REFERENCE INDEXES

NATIONAL STOCK NUMBER INDEX

STOCK NUMBER	FIG.	ITEM
5330-00-003-1771	66	9
5330-00-005-0407	58	34
	131	32
5330-00-005-0858	76	17
	153	18
2815-00-005-7431	64	36
	136	33
5360-00-009-9270	68	14
	143	18
2815-00-011-7786	78	38
	155	7
5315-00-014-1195	155	43
5330-00-026-2931	70	10
	145	9
4720-00-056-4608	140	16
5305-00-062-4378	68	31
5330-00-081-9299	14	13
	62	126
5360-00-082-0124	11	30
4820-00-085-7434	68	7
	143	23
3110-00-100-3898	147	39
3110-00-100-4221	148	52
3110-00-107-7564	58	27
	131	29
5330-00-132-0249	67	10
	142	11
2815-00-132-0273	75	5
	152	5
5330-00-132-0274	14	17
	62	124
5330-00-143-8376	72	18
	149	18
5330-00-143-8485	22	28
	68	25
	143	7
3110-00-155-6677	147	6
5330-00-159-1464	53	8
	58	21
	126	9
	131	12
3020-00-160-9092	70	14
	145	19
5330-00-194-8385	55	4
	128	23
5330-00-224-9820	8	20
3110-00-227-2652	148	8
5340-00-238-5435	65	4
	137	4
5330-00-246-0309	72	9
5330-00-246-0309	149	8
5330-00-252-8888	62	92
5315-00-253-3408	11	29
4720-00-278-4890	64	8
	136	9
5330-00-290-9486	23	16
3110-00-293-9302	10	29
2815-00-338-6839	72	25
	149	22
3020-00-353-9273	76	20
	153	5
5330-00-361-2955	76	16
	153	17
4720-00-362-0166	147	13
4720-00-362-0887	148	15
6685-00-365-5572	51	12
5330-00-365-6349	11	33
3020-00-366-0138	147	5
3020-00-384-0958	148	7
2930-00-401-9531	70	8
	145	7
5310-00-426-3990	68	32
5340-00-463-5218	140	28
4820-00-471-0049	63	6
	135	27
2815-00-480-4347	75	9
	152	13
2815-00-483-0780	76	18
	153	3
3010-00-507-8347	15	4
5315-00-532-9388	155	42
5330-00-537-2382	*66*	19
	78	22
	132	10
	155	37
3110-00-554-3197	10	27
3120-00-566-0480	73	8
	150	19
5330-00-582-7484	12	7
5330-00-609-8860	138	5
3120-00-627-6697	73	11
	150	15
	150	31
	150	37
5330-00-627-6825	55	25
5930-00-655-1514	3	22
	51	20
	124	20
5930-00-655-1515	3	19
	51	18

CROSS-REFERENCE INDEXES

NATIONAL STOCK NUMBER INDEX

STOCK NUMBER	FIG.	ITEM
5930-00-655-1515	124	18
5330-00-659-3178	67	9
	142	12
3120-00-659-7808	144	8
5930-00-659-9998	82	54
5360-00-664-5343	59	41
	132	34
2815-00-705-2856	73	28
	150	30
4720-00-716-4938	54	13
	127	13
5310-00-732-0560	16	16
	64	25
	64	31
	64	37
	136	30
	136	35
	136	42
2815-00-739-6098	68	4
	143	24
5315-00-777-3544	144	9
	144	15
2815-00-787-6505	32	16
3120-00-791-1440	144	14
2815-00-791-1453	59	42
	132	35
3120-00-792-9834	70	21
	145	21
4720-00-802-2038	147	15
2815-00-815-0355	58	26
	131	28
2910-00-828-7126	62	93
2815-00-851-7637	64	24
	136	27
5330-00-861-8592	64	42
	136	22
5330-00-864-5422	53	18
	126	15
3120-00-877-2213	71	6
4810-00-887-8358	135	32
5330-00-888-4988	34	
5340-00-933-3009	68	13
	143	17
5305-00-947-3437	16	17
	64	26
	64	32
	64	38
	136	31
	136	36
	136	43
5330-00-951-3538	14	4
	32	23
	135	31
2940-01-019-4513	59	13
	132	13
5330-01-023-7196	166	14
5360-01-038-4659	73	27
	150	29
5330-01-040-2087	53	17
	126	14
2815-01-042-5010	16	18
5330-01-043-5492	27	33
5330-01-043-5600	16	7
5330-01-043-5601	16	29
5330-01-043-5602	10	16
5330-01-043-5604	7	30
5330-01-043-5605	7	27
4820-01-045-6080	125	10
5330-01-046-1991	59	36
	132	30
5330-01-046-3144	59	45
	132	36
2815-01-048-6702	144	12
	144	18
5315-01-058-4551	78	25
2930-01-065-7113	59	30
	132	47
3030-01-065-9404	58	9
	131	14
5310-01-066-2942	65	5
	137	5
5330-01-066-3904	66	32
5330-01-066-3909	150	8
5330-01-066-3910	73	7
	150	16
5330-01-066-5350	58	20
	131	35
5330-01-066-5351	66	14
5330-01-066-5352	66	33
5930-01-067-8418	13	30
	61	19
	134	22
4720-01-070-8149	66	4
5330-01-072-4436	68	19
	143	28
5330-01-072-8998	66	7
5330-01-075-0948	34	
	135	
5330-01-077-5228	19	10
	67	6

CROSS-REFERENCE INDEXES

NATIONAL STOCK NUMBER INDEX

STOCK NUMBER	FIG.	ITEM
5330-01-077-5228	142	9
6685-01-079-1632	77	3
4720-01-079-2592	128	16
4320-01-079-3454	58	33
	131	31
3120-01-079-5451	144	17
5330-01-079-6514	59	12
	132	12
3120-01-079-6823	78	31
	155	44
5306-01-079-7027	152	3
3120-01-079-8194	74	1
	151	4
5330-01-080-5021	68	22
	143	33
5330-01-082-6985	76	13
	153	14
4720-01-085-2571	59	10
2815-01-085-2573	150	5
2815-01-085-2618	68	17
	143	21
4720-01-085-6129	53	11
4720-01-085-6131	13	19
	61	6
	134	16
2910-01-085-8096	78	34
	155	3
2815-01-085-8282	68	3
5330-01-086-3523	66	41
	141	15
2815-01-086-4508	75	1
	152	1
5330-01-086-6197	59	29
	132	46
3120-01-087-3004	75	6
	152	6
2950-01-089-7024	55	1
	128	3
4310-01-092-9816	70	19
	145	17
5920-01-093-8458	178	22
2815-01-096-9198	64	30
	136	39
4720-01-098-6953	148	17
5360-01-102-3448	148	35
3020-01-104-2334	150	17
5330-01-113-2188	11	11
5330-01-113-3702	176	49
2815-01-124-0232	75	3
	152	4

STOCK NUMBER	FIG.	ITEM
5330-01-129-6541	70	3
	145	5
5365-01-132-1984	58	36
	131	30
3120-01-132-9339	75	
	154	
4720-01-135-6694	138	15
5365-01-139-6738	59	28
	132	45
6620-01-141-0907	53	19
	126	16
2930-01-141-9277	66	31
5340-01-143-6048	68	12
	143	16
3120-01-144-7368	70	17
	145	15
5330-01-145-0716	71	13
	146	14
5330-01-145-5377	155	6
5330-01-145-5380	53	13
	126	11
5330-01-145-5381	143	10
5330-01-145-6914	71	8
	146	19
5340-01-145-9362	78	6
	155	38
2910-01-146-0048	68	18
	143	27
2815-01-146-1049	74	4
	151	1
5330-01-146-7172	69	20
	144	21
5330-01-146-7314	58	14
	131	11
2815-01-146-7914	69	7
	144	7
2910-01-146-7955	155	5
5330-01-146-9775	69	20
	144	21
5330-01-146-9928	69	20
	144	21
5330-01-147-0748	72	23
	149	20
5330-01-147-4071	73	22
	150	34
5330-01-147-4072	66	28
3120-01-147-5275	70	24
	145	18
5330-01-149-9715	78	
	143	

CROSS-REFERENCE INDEXES

NATIONAL STOCK NUMBER INDEX

STOCK NUMBER	FIG.	ITEM
2815-01-152-9219	78	
2815-01-159-1789	68	30
	143	11
5330-01-160-7460	15	5
5325-01-160-9660	82	67
4720-01-161-0810	52	2
	125	8
5330-01-164-0904	59	18
	132	19
5330-01-164-0944	59	19
	132	18
2815-01-165-0765		75
5310-01-165-2184	108	6
2815-01-166-3415	69	2
	144	2
4720-01-168-2657	139	11
	140	8
6620-01-169-9307	5	38
5315-01-173-0792	41	22
5315-01-173-0793	41	23
5330-01-173-0890	18	32
5315-01-177-7507	70	18
	145	16
5330-01-178-1760	19	8
5330-01-178-1761	18	14
6105-01-184-7529	176	34
5315-01-188-0760	120	3
2815-01-189-1760	112	12
5305-01-190-1478	116	4
5330-01-190-1904	93	5
5330-01-190-1905	96	11
5330-01-190-1910	117	7
5330-01-190-1912	103	6
5330-01-190-1914	113	11
4720-01-190-2581	111	4
5330-01-190-7443	107	3
5330-01-190-7477	112	13
5330-01-190-7581	96	14
5330-01-190-9555	101	5
5330-01-191-2965	106	2
5330-01-191-4513	112	5
5330-01-191-6065	120	21
5330-01-191-8047	112	7
5330-01-192-2037	117	11
2920-01-192-4469	89	2
4720-01-192-9648	96	2
5330-01-193-0182	96	20
2815-01-193-2638	116	3
5310-01-193-7492	109	4
4710-01-193-7944	96	10
3120-01-193-9475	116	5
2815-01-194-3722	110	11
2815-01-194-3723	110	13
2815-01-194-3775	110	8
2815-01-194-3776	110	10
5325-01-194-4354	100	17
	111	6
5365-01-194-4784	116	1
5330-01-195-1514	110	3
5330-01-195-5268	109	2
5360-01-195-5362	110	9
5305-01-197-1663	108	7
1680-01-197-5288	70	20
	145	20
2815-01-199-0448	110	12
4320-01-199-3080	176	38
2910-01-199-6615	17	5
2815-01-199-6618	72	11
2815-01-199-6703	21	6
5360-01-200-0323	59	27
	132	44
3020-01-200-2449	30	14
3020-01-200-2459	30	5
3040-01-200-3010	17	4
5330-01-200-6017	173	23
5330-01-201-3515	10	22
5330-01-201-3609	18	12
5330-01-201-3615	33	50
5330-01-201-3616	33	49
5330-01-201-3617	11	24
	33	44
5330-01-201-3618	27	49
5330-01-201-3619	5	35
	27	50
5330-01-201-3621	22	35
5330-01-201-3626	10	19
5330-01-201-3627	10	15
5330-01-201-3629	18	42
5330-01-201-3630	5	13
	18	33
5330-01-201-3640	30	4
5330-01-201-3641	23	12
5330-01-201-3642	27	26
5330-01-201-3645	21	24
5330-01-201-3652	11	4
	33	39
5330-01-201-3653	11	5
5330-01-201-3654	19	7
5330-01-201-3655	19	5
5330-01-201-3656	10	35

CROSS-REFERENCE INDEXES

NATIONAL STOCK NUMBER INDEX

STOCK NUMBER	FIG.	ITEM
5330-01-201-3657	10	18
5330-01-201-3658	10	7
5330-01-201-3659	5	7
5330-01-201-3660	5	9
5330-01-201-3661	5	40
5330-01-201-3664	33	36
5365-01-201-3678	10	26
3120-01-201-3700	27	14
5330-01-201-8691	18	23
5330-01-201-8692	18	6
	18	15
5330-01-202-2542	21	25
5330-01-202-2543	21	26
5330-01-202-2544	21	27
5330-01-202-2545	21	28
5365-01-202-2581	10	23
5330-01-202-6712	32	11
4710-01-203-0224	96	8
5330-01-203-0732	176	69
5330-01-203-0733	176	55
5330-01-203-2568	176	73
5330-01-203-2569	176	58
5330-01-204-2184	18	19
5365-01-207-0727	18	20
2815-01-207-3716	33	124
5360-01-207-7341	106	10
3120-01-208-8102	78	29
	155	45
3120-01-208-8103	78	30
	155	46
5315-01-210-0616	144	10
5315-01-210-0617	144	16
2815-01-211-0167	120	4
2815-01-211-2001	116	7
2815-01-211-3886	116	2
3120-01-211-5250	119	1
2815-01-211-5270	106	5
5330-01-212-3361	104	6
4720-01-212-3541	55	17
2815-01-212-3977	120	14
3120-01-212-4472	144	11
2815-01-214-7129	70	15
	145	13
5330-01-215-4972	71	14
	146	15
5330-01-218-1201	96	17
5330-01-220-2389	155	10
5330-01-224-2860	32	13
4730-01-225-1037	172	4
4730-01-225-1038	172	13
4820-01-225-8925	86	30
5330-01-226-8748	7	25
5330-01-230-1595	172	12
2530-01-234-7832	11	26
2990-01-234-7981	10	36
2910-01-234-8235	11	18
4820-01-235-3615	33	31
2815-01-235-9293	16	13
5330-01-236-5735	120	
2815-01-237-3552	114	2
5360-01-237-4946	11	25
	33	45
5330-01-237-4960	27	15
2930-01-237-6299	105	2
5330-01-238-3210	33	48
5340-01-238-7107	31	1
6620-01-239-3701	51	13
6620-01-239-3804	51	9
6645-01-239-4618	51	11
6680-01-239-5702	51	14
5330-01-240-1619	71	15
	146	10
5330-01-240-1660	136	25
6625-01-240-5073	51	10
	16	
6625-01-240-5146	51	32
6625-01-240-5147	51	33
5925-01-240-7815	3	29
	51	22
	124	14
4820-01-241-3295	59	26
	132	43
5365-01-241-3888	77	8
2520-01-241-4247	148	1
5365-01-241-4318	75	8
	152	12
4720-01-241-5489	60	13
2520-01-241-5629	70	11
	145	10
2920-01-241-7251	76	21
	153	7
4720-01-241-7260	60	15
4720-01-241-8794	72	15
	149	15
5330-01-242-0722	141	13
2815-01-242-3003	115	5
3030-01-243-4664	90	3
2815-01-244-5481	118	3
2920-01-244-6058	50	9
	123	9

CROSS-REFERENCE INDEXES

NATIONAL STOCK NUMBER INDEX

STOCK NUMBER	FIG.	ITEM
2910-01-245-9782	56	6
	129	5
4330-01-245-9790	4	1
2815-01-250-8088	16	11
5330-01-252-5248		78
4820-01-252-9555	178	57
4720-01-253-4597	141	11
2995-01-253-6394		2
2995-01-253-6395	49	5
2995-01-253-6396	49	45
5330-01-255-0176	112	14
5330-01-255-9293	112	9
3020-01-258-2776	30	15
4720-01-262-0994	55	21
2930-01-262-2338	19	9
2815-01-262-2346	69	19
	144	20
6110-01-262-2353	82	66
5930-01-262-2356	88	12
6620-01-262-2365	82	29
5360-01-262-2370	29	18
5330-01-262-2372	5	39
2930-01-262-2383	10	21
4810-01-262-2386	179	9
2815-01-262-2389	31	11
6620-01-262-2391	84	11
6685-01-262-2397	88	10
5961-01-262-2398	47	47
3120-01-262-2400		34
2910-01-262-2402	15	7
2930-01-262-2424	18	24
2950-01-262-2430	128	22
2930-01-262-2432	139	19
2815-01-262-2436	29	21
2815-01-262-2437	73	2
2910-01-262-2451	83	5
5905-01-262-2454	47	49
2815-01-262-2455	64	18
	136	23
3020-01-262-3343	118	4
3020-01-262-3344	115	1
2815-01-262-5073	55	24
4810-01-262-5076	3	18
5930-01-262-5088	124	15
5930-01-262-5089	3	24
	124	22
5930-01-262-5090	3	26
	124	23
5930-01-262-5092	34	7
5930-01-262-5093	3	20
6620-01-262-5096	88	11
3030-01-262-5101	176	33
3030-01-262-5102	139	16
5330-01-262-5105	176	87
5330-01-262-5113	182	19
5330-01-262-5114	182	18
5330-01-262-5117	7	6
6620-01-262-5125	178	13
6620-01-262-5126	138	7
6620-01-262-5128	3	28
2815-01-262-5136	152	
4720-01-262-5139	13	15
	61	2
	134	12
2990-01-262-5141	178	15
5330-01-262-5147	33	
5330-01-262-5148	22	
5330-01-262-5149	17	
2930-01-262-5153	58	
	131	
4330-01-262-5169	52	17
	125	17
4330-01-262-5170	11	1
4330-01-262-5172	60	17
	133	11
2950-01-262-5174	55	28
2930-01-262-5175	58	22
	131	15
2910-01-262-5178	17	3
2910-01-262-5181	65	3
2910-01-262-5182	137	3
2940-01-262-5185	6	7
	54	19
	127	14
5930-01-262-7313	85	10
6645-01-262-7318	82	26
2990-01-262-7326	2	1
5330-01-262-9488	174	13
2815-01-262-9492	75	7
4720-01-262-9499	66	20
2815-01-263-0137	69	18
	144	19
6110-01-263-3744	83	6
2805-01-263-3979	111	7
4330-01-263-5353	173	24
4720-01-264-2106	173	6
	174	3
	178	9
	178	32
	179	5

CROSS-REFERENCE INDEXES

NATIONAL STOCK NUMBER INDEX

STOCK NUMBER	FIG.	ITEM
4720-01-264-2106	180	12
	182	7
4720-01-264-2107	180	8
	181	11
4720-01-264-2108	178	38
	178	50
	180	18
4720-01-264-2109	172	6
	173	8
	174	5
	175	7
	176	12
	178	41
	178	48
	180	15
	181	7
5905-01-264-2114	51	21
2910-01-264-2115	62	5
2940-01-265-3262	106	7
5340-01-265-7072	106	11
5330-01-266-3297	111	8
4610-01-266-7531	184	
5330-01-266-7588	162	5
5330-01-266-7589	162	9
6320-01-266-7607	163	9
5961-01-266-7640	47	48
5330-01-266-7643	120	
4330-01-266-7673	99	11
2910-01-266-7679	109	5
2940-01-266-7691	54	18
	127	20
5360-01-267-0098	147	30
5330-01-267-2985	109	3
6115-01-267-5705	47	5
4820-01-268-2314	29	19
5330-01-268-2322	162	3
5330-01-269-1509	112	16
6685-01-269-3879	82	28
2520-01-271-0192	148	24
4720-01-271-6946	96	9
5330-01-271-9375	117	4
5330-01-272-1124	117	9
5977-01-273-7437	180	20
4330-01-273-7614	182	21
6115-01-274-0166	46	3
6115-01-274-0167	46	4
2815-01-275-4753	1	4
2815-01-275-9636	122	3
2815-01-278-0876	116	6
2815-01-278-6192	68	6
2815-01-278-6192	143	22
4810-01-278-7350	62	118
6115-01-280-9955	80	4
5330-01-281-8997	107	2
2520-01-282-0171	148	19
2925-01-282-9149	51	15
2815-01-284-1118	119	4
5330-01-285-4812	167	42
5330-01-285-4817	167	16
5330-01-285-4820	166	24
5330-01-285-4822	167	49
5330-01-285-4823	167	13
5330-01-285-4827	64	13
	136	17
2930-01-286-6259	10	20
4820-01-286-8846	36	62
5945-01-286-8848	14	11
4820-01-286-8853	37	4
6685-01-286-8858	36	70
4720-01-286-8861	7	17
4720-01-286-8862	37	1
4720-01-286-8863	37	6
4710-01-286-8864	45	
4330-01-286-8872	39	3
4420-01-286-8874	38	19
5330-01-287-1309	38	9
4820-01-287-9717	36	26
4820-01-287-9718	40	1
3010-01-287-9719	41	1
3110-01-287-9720	42	12
5365-01-287-9725	58	28
4720-01-287-9729	66	11
2930-01-287-9733	58	
	144	
3040-01-287-9736	131	33
4320-01-287-9738	42	17
4710-01-287-9739	55	18
4330-01-287-9740	8	21
4330-01-287-9741	39	15
4820-01-287-9742	62	127
5930-01-287-9744	50	4
	123	4
2940-01-287-9745	6	19
2990-01-287-9746	49	1
4320-01-288-9887	9	14
2930-01-288-9888	58	32
	131	24
2520-01-290-1669	38	3
4810-01-290-8757	14	5
2010-01-290-9632	35	3

CROSS-REFERENCE INDEXES

NATIONAL STOCK NUMBER INDEX

STOCK NUMBER	FIG.	ITEM	STOCK NUMBER	FIG.	ITEM
2815-01-290-9666	25	13			
2815-01-290-9667	32	14			
4320-01-291-2227	62	101			
2090-01-291-2231	82	1			
2815-01-291-2243	78	1			
	155	18			
5330-01-292-9463	53	5			
	126	20			
5330-01-292-9464	67	5			
5330-01-292-9465	128	15			
5365-01-293-1749	63	19			
2815-01-293-3028	152	11			
4720-01-293-4411	128	11			
4820-01-293-6779	63	15			
	135	18			
5340-01-293-8535	82	25			
2010-01-293-8587	35	4			
2910-01-294-1940	102	1			
4720-01-294-7227	126	7			
2815-01-297-3773	1	3			
2030-01-298-0760	165	3			
5340-01-298-2486	146	16			
2030-01-298-8833	164	1			
2030-01-298-8834	164	44			
4610-01-299-6167	171	4			
4320-01-302-4230	157	2			
4320-01-302-4231	167	1			

CROSS-REFERENCE INDEXES

NATIONAL STOCK NUMBER INDEX

FSCM	PART NUMBER	STOCK NUMBER	FIG.	ITEM
60041	A-865JFG		177	20
60041	A-865JFG1		177	7
15434	AD20052SS		9	1
15434	AD20077SS		9	3
27191	AE16DNOB		177	16
15434	AM06018SS		12	1
15434	AM0603400SS		133	12
15434	AM0603600SS		133	14
15434	AM1002200SS		56	4
			129	6
15434	AM1005400SS		57	15
			130	12
15434	AM12084SS		8	8
15434	AM1601806MC	4720-01-293-4411	128	11
15434	AR-10172	2815-01-085-2573	150	5
15434	AR-10627		24	24
15434	AR-11509	4820-01-235-3615	33	31
15434	AR-1176		71	12
			146	13
15434	AR-2308	2815-00-005-7431	64	36
			136	33
15434	AR-4258		73	6
15434	AR-45728	1680-01-197-5288	70	20
			145	20
15434	AR-8667		150	13
15434	AR-9832		73	30
			150	35
15434	AR-9834	2815-01-262-2437	73	2
15434	AR-9999		59	21
			132	38
15434	AS04010SS		22	2
15434	AS04024SS		28	1
15434	AS04030SS		13	33
15434	AS0403000SS		61	13
			134	19
15434	AS04060SS		13	34
15434	AS06032SL		22	20
15434	AS0603200SS	4720-01-241-5489	60	13
15434	AS06034SL		22	19
15434	AS0603600SS	4720-01-241-7260	60	15
15434	AS10009SS		28	4
15434	AS40120MS		138	11
61208	A1588		147	10
61208	A1663	4720-00-362-0166	147	13
61208	A1663A	4720-00-362-0887	148	15
61208	A1983		148	49
61208	A2702BE	5360-01-102-3448	148	35
61208	A2709N	5360-01-267-0098	147	30
61208	A2836		147	29
61208	A2913		147	21
61208	A2987N		147	33

CROSS-REFERENCE INDEXES

PART NUMBER INDEX

FSCM	PART NUMBER	STOCK NUMBER	FIG.	ITEM
61208	A3271A		147	22
61208	A3308B		148	50
61208	A4241		148	36
61208	A5195		148	51
61208	A6107A		147	31
61208	A6512C		148	37
61208	A6513		148	39
61208	A6514		148	28
7K471	B-6-HRN-4		182	12
21198	BC-4C-MD		175	5
44940	BC234C		87	1
15434	BM-30245		15	10
15434	BM-68356	5330-00-888-4988	34	
15434	BM-73108		15	6
15434	BM-76340		15	12
		2910-00-828-7126	62	93
15434	BM-95161	2815-01-096-9198	64	30
			136	39
15434	BM-95162	2815-00-851-7637	64	24
			136	27
61208	B1284		148	23
61208	B1509T		148	11
61208	B1511L		148	12
61208	B1535A		147	19
61208	B1535C		147	17
			148	25
61208	B1535D		148	20
61208	B1536B		147	20
61208	B1538B		148	26
61208	B1538C		147	18
61208	B1540A		148	21
61208	B2147		147	38
61208	B2341		148	34
64104	B2568	5315-00-532-9388	155	42
61208	B5027A		148	53
61208	B5469A		147	40
12532	CRO01Y		178	14
94066	CVC36-22		173	20
27191	C320KGS4		177	14
77408	D0-1860-8047		156	3
77408	DO-2907-1176		171	2
77408	D0-2907-1691		80	1
77408	D0-3010-8047		80	3
77408	D0-5950-8047		80	2
77408	D0-5980-8036		171	3
77408	D0-6150-1707		122	2
77408	D0-6800-8047		122	1
77408	D0-7050-8036		171	1
68225	DOH-1000	4720-01-286-8862	37	1
68225	DOH2021		37	5
68225	DOH2024		37	7

CROSS-REFERENCE INDEXES

PART NUMBER INDEX

FSCM	PART NUMBER	STOCK NUMBER	FIG.	ITEM
68225	DOH2081		37	2
68225	DOH2247		37	3
68225	DOH234-84	4720-01-286-8863	37	6
68225	DOH435	4820-01-286-8853	37	4
59776	DO1SS6	4320-01-199-3080	176	38
59776	D1001		176	90
59776	D1002-CB		176	63
59776	D1003SS6-CB		176	56
59776	D1004SS6-CB		176	48
59776	D1005		176	80
59776	D1007		176	84
59776	D1009		176	85
59776	D1010		176	81
59776	D1013		176	65
59776	D1014		176	66
59776	D1015		176	67
59776	D1016		176	61
59776	D1017		176	59
59776	D1018		176	60
59776	D1019		176	75
59776	D1020		176	54
59776	D1021		176	53
59776	D1022		176	52
59776	D1023		176	51
59776	D1026		176	83
59776	D1031		176	86
59776	D1034	5330-01-203-0732	176	69
59776	D1035	5330-01-203-0733	176	55
59776	D1039		176	46
59776	D1040		176	88
59776	D1041		176	68
59776	D1042		176	74
59776	D1043		176	70
59776	D1044		176	71
59776	D1045		176	72
59776	D1046	5330-01-203-2568	176	73
59776	01047	5330-01-203-2569	176	58
59776	D1048		176	43
59776	D1049		176	45
59776	D1050		176	64
59776	D1054		176	36
59776	D1073	5330-01-113-3702	176	49
59776	D1074		176	50
59776	D1075		176	76
59776	D1076		176	41
59776	D1077		176	40
59776	D1078		176	39
59776	D1079		176	89
59776	D506		176	82
59776	D508		176	79
59776	D511		176	78

CROSS-REFERENCE INDEXES

PART NUMBER INDEX

FSCM	PART NUMBER	STOCK NUMBER	FIG.	ITEM
59776	D512		176	77
59776	D524		176	44
59776	D525		176	37
59776	D527		176	62
59776	D528		176	42
59776	D529		176	35
59776	D530		176	57
59776	D538		176	47
18997	E-2		176	14
60248	EZR-1022		41	19
60248	EZR1022-1300/1110	3010-01-287-9719	41	1
44940	E000-23020	6115-01-267-5705	47	5
62144	FC-C04250		182	4
D8835	FIGURE 36 24P1		36	1
D8835	FIGURE 42 24P1		42	1
D8835	FIGURE 43 P1		43	
D8835	FIGURE 43 22P1		43	1
D8835	FIGURE 44 24P1		44	1
D8835	FIGURE 45 24P1		45	1
81349	F02A250V2-1-2A	5920-01-093-8458	178	22
05427	F2L-2B		158	12
76599	HF1OSS		172	5
			173	7
			174	4
			175	6
			176	11
			178	40
			178	47
			180	14
			181	6
62144	HH-A01194	5330-01-262-5105	176	87
27191	H2012-3		177	15
32862	H68/1		162	6
1T589	K75-03-0142		178	45
62144	LP1261		173	28
57733	LR42455		178	18
96906	MS122032		7	23
			11	43
			13	3
			15	166
			27	7
			50	2
			57	7
			61	17
			66	17
			123	2
			130	7
			134	4
			135	45
			139	2

CROSS-REFERENCE INDEXES

PART NUMBER INDEX

FSCM	PART NUMBER	STOCK NUMBER	FIG.	ITEM
96906	MS15003-1		147	12
			148	14
96906	MS16624-1050		15	35
96906	MS16627-1093		15	158
96906	MS16632-1050		62	62
			135	88
96906	MS18154-10		7	22
96906	MS21042-08		82	19
96906	MS27183-14		7	16
			8	5
			10	4
			13	11
			16	4
			18	3
			24	3
			28	10
			30	2
			58	6
			60	4
			63	3
			67	3
			72	6
			131	3
			133	3
			135	3
			139	8
			142	6
			149	2
96906	MS27183-42		62	39
			135	145
96906	MS35058-22	5930-00-655-1514	3	22
			51	20
			124	20
96906	MS35058-23	5930-00-655-1515	3	19
			51	18
			124	18
96906	MS35295-62		5	1
			11	7
			18	27
			19	2
			24	1
			61	20
			66	1
96906	MS35295-66		18	30
96906	MS35295-8		66	15
96906	MS35295-87		3	1
			6	21
			10	13
			27	41
96906	MS35308-458		66	21
96906	MS35338-14		7	3

CROSS-REFERENCE INDEXES

PART NUMBER INDEX

FSCM	PART NUMBER	STOCK NUMBER	FIG.	ITEM
96906	MS35338-47		3	2
			6	22
			9	12
			10	14
			12	4
			15	2
			27	17
			28	8
			29	23
			52	14
			62	2
			67	8
			73	19
			125	2
			134	6
			140	27
			142	2
			148	3
			155	48
96906	MS35338-50		32	8
			57	10
			59	16
			66	22
			76	2
			79	6
			130	10
			132	15
			146	2
			153	20
96906	MS35338-7		6	11
			6	18
			11	21
			15	17
			33	41
			54	5
			55	8
			73	5
96906	MS35338-8		4	3
			5	11
			6	14
			7	14
			8	4
			10	2
			11	8
			13	10
			16	3
			18	2
			19	3
			20	2
			22	13
			23	8

CROSS-REFERENCE INDEXES

PART NUMBER INDEX

FSCM	PART NUMBER	STOCK NUMBER.	FIG	ITEM
96906	MS35338-8		24	2
			29	27
			33	33
			53	3
			54	9
			58	5
			59	7
			59	38
			60	3
			61	10
			63	2
			64	3
			66	38
			67	2
			126	3
			127	10
			131	2
			132	6
			132	24
			133	5
			134	9
			135	2
			136	4
			139	6
			140	10
			141	3
			142	5
96906	MS35648-8		78	10
96906	MS35756-34		73	21
			150	32
96906	MS35842-13		13	14
			53	9
			59	9
			61	1
			126	6
			134	11
96906	MS39158-3		134	21
			138	14
96906	MS39162-5		60	14
96906	MS49005-16		155	23
96906	MS51875-6		96	5
96906	MS51968-14	5310-00-732-0560	16	16
			64	25
			64	31
			64	37
			136	30
			136	35
			136	42
96906	MS9021-116	5330-00-582-7484	12	7
96906	MS90725-6		11	42
			61	16

CROSS-REFERENCE INDEXES

PART NUMBER INDEX

FSCM	PART NUMBER	STOCK NUMBER	FIG.	ITEM
96906	MS90725-6		139	1
96906	MS90728-61		11	14
96906	MS90728-91		12	3
			28	21
			33	10
96906	MS90728-95		27	18
68225	MT2391-850	4710-01-286-8864	45	
61208	M1283		147	14
			148	16
61208	M1284		147	16
			148	18
61208	M1292A	4720-00-802-2038	147	15
61208	M1292B	4720-01-098-6953	148	17
61208	M1930F		147	25
			148	30
61208	M2001E		147	35
61208	M2001H		148	47
61208	M2002AG		147	47
			148	56
61208	M2002BB		147	26
			148	31
61208	M2004R		147	45
			148	54
61208	M2004W		148	41
61208	M2022Z		147	48
			148	58
61208	M2023F		147	42
			148	43
61208	M2027AN		147	7
			148	9
61208	M2032Z		147	11
61208	M2033BJ		147	3
61208	M2034AL		148	6
61208	M2035AC		148	13
61208	M2046AF		147	8
			148	10'
61208	M2046L		147	36
			148	48
61208	M2046S		148	57
61208	M2047AA		148	42
61208	M2051B		147	41
61208	M207	3110-00-100-3898	147	39
61208	M2115D		148	22
61208	M215	3110-00-100-4221	148	52
61208	M224	3110-00-155-6677	147	6
61208	M287		147	4
05472	M3611T	6105-01-184-7529	176	34
61208	M503		147	44
			148	46
15434	NTA-855A		48	1
15434	NTA-855E		48	1

CROSS-REFERENCE INDEXES

PART NUMBER INDEX

FSCM	PART NUMBER	STOCK NUMBER	FIG.	ITEM
62144	PG-H00381		182	10
8L260	PG13,5 1/2IN MPT		177	5
62144	PH-100375		176	6
			182	11
62144	PH-101375		176	8
OABC1	PVTBF025	4720-01-264-2106	173	6
			174	3
			178	9
			178	32
			179	5
			180	12
			182	7
OABC1	PVTBF038	4720-01-264-2107	180	8
			181	11
OABC1-	PVTBF050	4720-01-264-2108	178	38
			178	50
			180	18
OABC1	PVTBF075	4720-01-264-2109	172	6
			173	8
			174	5
			175	7
			176	12
			178	41
			178	48
			180	15
			181	7
85274	RMA-45		178	34
21593	RWS	4730-01-225-1037	172	4
21593	RWS-1		172	14
25193	RWS-2		172	11
21593	RWS-5	5330-01-230-1595	172	12
21593	RWS-5B	4730-01-225-1038	172	13
15434	S.0.41727-4BT3.9 -GC	6115-01-280-9955	80	4
15434	S.0.51165-KTA50M	2815-01-297-3773	1	3
15434	S.0.51180-KTA50M	2815-01-275-4753	1	4
15434	S.0.56419-NTA855 -GC	6115-01-274-0166	46	3
15434	S.0.56420-NTA855 -GC	6115-01-274-0167	46	4
15434	S.0.56421-NT855M	2815-01-275-9636	122	3
15434	S-1008-A		22	8
15434	S-102		66	8
15434	S-102-A		11	20
15434	S-103		73	3
15434	S-103-D		138	1
15434	S-1039-A		7	19
15434	S-104		20	1
			63	9
			135	5
15434	S-1047-A		22	3

CROSS-REFERENCE INDEXES

PART NUMBER INDEX

FSCM	PART NUMBER	STOCK NUMBER	FIG.	ITEM
15434	S-1047-A		28	3
15434	S-1049		63	23
			135	23
15434	S-105		5	27
15434	S-105-C		57	6
			61	22
			130	5
			134	2
15434	S-1059		138	9
15434	S-106-C		59	6
132	5			
15434	S-1069		99	4
15434	S-107		11	50
			55	7
			128	5
15434	S-109		5	18
			13	9
			18	35
			23	7
			58	4
			61	9
			67	1
			73	23
			131	6
			134	8
			138	3
			139	9
			142	4
			150	27
15434	S-110		15	16
			33	40
			135	141
15434	S-111		6	17
			28	9
			34	1
			54	4
			73	4
			127	2
15434	S-112		5	2
			7	21
			30	9
			54	8
			58	3
			60	2
			127	9
			131	5
			133	2
15434	S-113		11	38
			29	11
			79	1
			148	4

CROSS-REFERENCE INDEXES

PART NUMBER INDEX

FSCM	PART NUMBER	STOCK NUMBER	FIG.	ITEM
15434	S-116		32	7
15434	S-117		6	13
			8	3
			51	42
			63	1
			135	1
15434	S-119		6	10
			150	9
15434	S-119-C		73	16
15434	S-120		22	12
15434	S-121-B		9	11
15434	S-123		8	1
			9	8
15434	S-125		16	22
15434	S-126		5	24
			24	4
			59	37
			132	23
15434	S-127		27	31
15434	S-127-C		146	1
15434	S-129		51	46
			69	1
			144	1
15434	S-1354		72	24
			149	21
15434	S-136-B		73	18
15434	S-137-A		7	2
15434	S-140		62	1
155	50			
15434	S-140-C		73	17
15434	S-141-A		66	16
15434	S-142-A		150	4
15434	S-145		27	9
			59	1
			132	1
15434	S-147-B		150	10
15434	S-149		79	5
15434	S-149-A		18	16
15434	S-150-A		32	2
15434	S-151-C		63	16
			135	10
15434	S-152-A		26	4
15434	S-153		20	8
15434	S-155		18	4
15434	S-159-B		135	47
15434	S-16052		15	51
			62	7
			135	157
15434	S-16054	3110-00-554-3197	10	27
15434	S-16069	3110-00-293-9302	10	29
15434	S-162-A		10	34

CROSS-REFERENCE INDEXES

PART NUMBER INDEX

FSCM	PART NUMBER	STOCK NUMBER	FIG.	ITEM
15434	S-162-A		27	45
15434	S-16240		15	71
			62	87
			135	110
15434	S-16255	2815-00-815-0355	58	26
			131	19
			131	28
15434	S-165-B		18	45
15434	S-167-A		13	28
15434	S-169		51	38
			60	7
			133	7
15434	S-169-A		16	2
15434	S-169-B		150	2
15434	S-172-B		140	9
15434	S-174-C		62	89
			135	213
15434	S-1747		11	53
15434	S-176		64	14
			136	18
			140	1
15434	S-181		32	9
			57	9
			130	8
15434	S-181-C		138	4
15434	S-186-A		54	2
			127	5
15434	S-186-C		13	1
15434	S-188-C		27	6
			135	170
15434	S-189		26	1
15434	S-189-C		14	1
			62	114
			135	28
15434	S-193		140	5
15434	S-197		4	2
15434	S-199-A		53	2
			126	2
15434	S-199-B		140	17
15434	S-200		57	4
			79	3
			130	1
15434	S-201		58	24
			79	8
			131	17
15434	S-203-A		102	2
15434	S-204		26	3
15434	S-205		63	13
			64	2
		5310-01-165-2184	108	6
			135	8

CROSS-REFERENCE INDEXES

PART NUMBER INDEX

FSCM	PART NUMBER	STOCK NUMBER	FIG.	ITEM
15434	S-205		136	3
15434	S-213-A		15	66
			135	96
15434	S-217		9	13
			15	3
15434	S-221		34	2
			54	6
			55	11
			127	1
			128	4
15434	S-223		5	28
			13	6
			51	6
			54	10
			60	1
			61	21
			124	1
			127	8
			133	1
			139	5
15434	S-224		13	2
			50	1
			61	18
			123	1
			134	1
15434	S-2268		27	13
15434	S-2286		15	103
			62	63
			135	75
15434	S-248		15	78
			135	89
15434	S-251		15	59
			15	146
			135	44
			135	103
15434	S-256		3	32
15434	S-270		62	58
			135	190
15434	S-274		62	4
			155	47
15434	S-302		30	12
15434	S-306		32	20
61208	S-598	2520-01-271-0192	148	24
15434	S-605		127	3
			128	7
			150	11
15434	S-606		62	38
15434	S-606-A		5	3
			10	6
			11	3
15434	S-607		14	7

CROSS-REFERENCE INDEXES

PART NUMBER INDEX

FSCM	PART NUMBER	STOCK NUMBER	FIG.	ITEM
15434	S-607		62	119
			135	144
15434	S-608		11	39
			18	46
			23	2
			51	40
			57	2
			60	8
			79	2
			130	4
			133	8
			140	2
			148	5
15434	S-609		34	3
			63	17
			102	3
			135	11
15434	S-611		5	43
			8	2
			9	9
			26	2
			32	3
15434	S-622		3	3
15434	S-626		55	9
			128	6
15434	S-631		15	56
			50	3
			123	3
15434	S-640		26	5
15434	S-658		57	11
			66	23
			130	9
15434	S-670		51	39
			57	3
			60	9
			130	3
			133	9
			140	3
15434	S-679		66	2
			78	4
			155	19
15434	S-684	5330-00-003-1771	66	9
15434	S-716		155	20
15434	S-719		78	3
			155	21
15434	S-901		78	33
			155	17
15434	S-907-A		10	10
15434	S-910-B		7	7
			18	9
			22	6

CROSS-REFERENCE INDEXES

PART NUMBER INDEX

FSCM	PART NUMBER	STOCK NUMBER	FIG.	ITEM
15434	S-910-B		97	5
			140	36
15434	S-910-C		57	13
			130	14
15434	S-911-B		58	38
			68	21
			70	22
			78	16
			131	26
			143	3
			145	22
			146	8
			155	22
15434	S-912-C		13	25
15434	S-915-A		72	10
15434	S-920		57	17
			72	12
			130	16
15434	S-921-D		52	11
			125	13
15434	S-923-E		67	11
			142	3
15434	S-924-C		13	24
15434	S-937-C		9	5
15434	S-945		138	8
15434	S-955		7	20
			138	10
15434	S-960		130	17
15434	S-960-D		8	17
15434	S-961-E		140	38
15434	S-962-E		10	33
			20	5
15434	S-963-B		9	2
15434	S-964		63	5
			135	25
15434	S-965-E		22	33
			58	29
			131	16
15434	S-966-E		78	2
15434	S-967		13	31
15434	S-969-E		128	12
15434	S-980		57	18
15434	S-981		8	16
15434	S-982		130	18
15434	S-988		8	13
15434	S-995		53	4
			126	18
44940	SC434E/L7561		47	1
17442	SD-01412D		158	5
61208	SL111HP2		147	1
62144	SN-C10002		176	26

CROSS-REFERENCE INDEXES

PART NUMBER INDEX

FSCM	PART NUMBER	STOCK NUMBER	FIG.	ITEM
73124	SP-1022C		173	14
73124	SP1025		173	16
73124	SP1025Z-3		173	18
73124	SP1407-1		173	19
61208	SP214P1	2520-01-241-4247	148	1
73124	SP25Z12		173	17
12623	SS-43F4	4820-01-252-9555	178	57
76599	SSHF4		174	2
			178	8
			180	7
76599	SSHF6		173	5
			178	31
			178	37
			178	49
			179	4
			180	17
			181	10
			182	6
92194	SW2-1/4 IN		179	8
61208	S567		147	23
20943	TA-101212		174	8
			181	14
20943	TA-1044		178	11
			179	7
			182	9
20943	TA-1046		180	10
20943	TA-10812		181	9
20943	TA-1086		181	12
20943	TE-101212		172	7
			173	10
			174	7
			176	13
			178	42
20943	TE-20124		173	9
			174	6
20943	TE-20128		178	39
20943	TE-2044		179	6
20943	TE-2046		178	33
20943	TE-2048		178	51
20943	TE-20812		178	52
			180	16
			181	8
20943	TE-2086		180	9
20943	TE-2088		180	19
20943	TP-4004		180	21
			182	16
20943	TP-4008		181	13
20943	TP-4012		174	14
20943	TT-9444		182	8
73124	TW10050T		181	20
76385	VBM-1473		158	16

CROSS-REFERENCE INDEXES

PART NUMBER INDEX

FSCM	PART NUMBER	STOCK NUMBER	FIG.	ITEM
15332	VIP119X90		176	25
D8835	WAV850-A2		38	1
D8835	WAV850-A2A		38	2
D8835	WAV850-A36		39	22
D8835	WAV850-A38		39	14
D8835	WAV850-A80		39	2
D8835	WAV850-A82		39	4
D8835	WAV850-A83		39	1
D8835	WAV850-E10		43	72
			44	41
D8835	WAV850-E107		43	2
D8835	WAV850-E108		42	13
D8835	WAV850-E11		43	35
D8835	WAV850-E131		42	26
D8835	WAV850-E14		42	6
D8835	WAV850-E143		42	16
D8835	WAV850-E150		42	20
D8835	WAV850-E196		45	35
D8835	WAV850-E2		43	16
D8835	WAV850-E205		43	28
D8835	WAV850-E23		36	78
D8835	WAV850-E29		43	6
D8835	WAV850-E3		42	8
D8835	WAV850-E31		44	47
D8835	WAV850-E32		42	9
D8835	WAV850-E4		43	15
D8835	WAV850-E40		42	7
D8835	WAV850-E41		42	21
D8835	WAV850-E42		42	22
D8835	WAV850-E43		42	25
D8835	WAV850-E44		42	15
D8835	WAV850-E45		42	18
D8835	WAV850-E46		42	4
D8835	WAV850-E49		42	19
D8835	WAV850-E5		43	75
D8835	WAV850-E57		43	14
D8835	WAV850-E6		43	78
			44	44
D8835	WAV850-E63		43	13
D8835	WAV850-E7		43	32
D8835	WAV850-E708		44	2
D8835	WAV850-E8		44	3
D8835	WAV850-E9		43	34
			44	4
D8835	WAV850-E97		42	14
D8835	WAV850-E98		43	33
			44	6
D8835	WAV850-FIGURE 43		43	26
	26P		43	3
D8835	WAV850-G16		43	63

CROSS-REFERENCE INDEXES

PART NUMBER INDEX

FSCM	PART NUMBER	STOCK NUMBER	FIG.	ITEM
D8835	WAV850-G16		44	32
D8835	WAV850-G17		43	62
			44	31
D8835	WAV850-G198A		43	24
D8835	WAV850-G198B		43	25
D8835	WAV850-G2		43	22
D8835	WAV850-G20		45	25
D8835	WAV850-G200		45	8
D8835	WAV850-G24		43	21
			45	7
D8835	WAV850-G25		43	66
			44	35
D8835	WAV850-G27		45	11
D8835	WAV850-G29		45	26
D8835	WAV850-G29A		45	27
D8835	WAV850-G3		36	86
D8835	WAV850-G30		45	10
D8835	WAV850-G31		45	28
D8835	WAV850-G4		43	74
			44	43
D8835	WAV850-G433		6	85
			43	4
D8835	WAV850-G47		43	8
D8835	WAV850-G47A		43	10
D8835	WAV850-G47B		43	12
D8835	WAV850-G48		43	7
D8835	WAV850-G48A		43	9
D8835	WAV850-G48B		43	11
D8835	WAV850-G6		43	17
			45	9
D8835	WAV850-G8A		43	18
			45	6
D8835	WAV850-G8B		43	19
D8835	WAV850-G8D		43	20
D8835	WAV850-H1A		45	34
D8835	WAV850-H1B		45	33
D8835	WAV850-H10A		36	76
D8835	WAV850-H10B		36	77
D8835	WAV850-H100		36	75
D8835	WAV850-H100A		36	32
D8835	WAV850-H100B		36	33
D8835	WAV850-H101A		36	18
D8835	WAV850-H101B		36	19
D8835	WAV850-H11A		36	56
D8835	WAV850-H11B		36	55
D8835	WAV850-H12		36	53
D8835	WAV850-H128		36	14
			36	66
D8835	WAV850-H129		36	64
D8835	WAV850-H13		36	52
D8835	WAV850-H13A		36	51

CROSS-REFERENCE INDEXES

PART NUMBER INDEX

FSCM	PART NUMBER	STOCK NUMBER	FIG.	ITEM
D8835	WAV850-H139		36	30
D8835	WAV850-H14		36	29
D8835	WAV850-H14A		36	35
D8835	WAV850-H14B		36	28
D8835	WAV850-H14C		36	27
D8835	WAV850-H140		36	5
D8835	WAV850-H141		36	41
D8835	WAV850-H142		36	21
D8835	WAV850-H143		36	22
D8835	WAV850-H144		36	36
D8835	WAV850-H15		36	31
D8835	WAV850-H16		36	10
D8835	WAV850-H160		36	61'
D8835	WAV850-H161A		36	60
D8835	WAV850-H161B		36	59
D8835	WAV850-H164		36	65
D8835	WAV850-H17		36	82
D8835	WAV850-H18		36	25
D8835	WAV850-H18A		36	34
D8835	WAV850-H18B		36	24
D8835	WAV850-H18C		36	23
D8835	WAV850-H19		36	20
D8835	WAV850-H2A		36	89
D8835	WAV850-H2B		36	88
D8835	WAV850-H20		36	9
D8835	WAV850-H21		36	79
D8835-	WAV850-H22A		36	15
D8835	WAV850-H22B		36	16
D8835	WAV850-H23		36	11
D8835	WAV850-H24		36	6
D8835	WAV850-H24A		36	7
D8835	WAV850-H25		36	13
D8835	WAV850-H25A		36	54
D8835	WAV850-H26		36	12
D8835	WAV850-H28		36	45
D8835	WAV850-H29		36	46
D8835	WAV850-H3		36	87
D8835	WAV850-H30		36	47
D8835	WAV850-H31A		36	48
D8835	WAV850-H312		36	17
D8835	WAV850-H32		36	44
D8835	WAV850-H33		36	43
D8835	WAV850-H34		36	49
D8835	WAV850-H35		36	50
D8835	WAV850-H38		36	3
D8835	WAV850-H39		36	2
D8835	WAV850-H4		36	83
D8835	WAV850-H40		42	3
D8835	WAV850-H41		36	4
			42	2
D8835	WAV850-H42		36	57

PART NUMBER INDEX

FSCM	PART NUMBER	STOCK NUMBER	FIG.	ITEM
D8835	WAV850-H43		36	58
D8835	WAV850-H44		36	67
D8835	WAV850-H45		36	72
D8835	WAV850-H46A		36	71
D8835	WAV850-H46B		36	69
D8835	WAV850-H5A		36	81
D8835	WAV850-H5B		36	80
D8835	WAV850-H6		36	8
D8835	WAV850-H7		36	84
D8835	WAV850-H73		36	68
D8835	WAV850-H75		36	63
D8835	WAV850-H8		36	74
D8835	WAV850-H9		36	73
D8835	WAV850-K1		43	61
			44	30
D8835	WAV850-K13		43	46
			44	15
D8835	WAV850-K15		43	60
D8835	WAV850-K16		44	29
D8835	WAV850-K17		43	54
			44	23
D8835	WAV850-K18		43	53
			44	22
D8835	WAV850-K2		43	65
			44	34
D8835	WAV850-K22		43	56
			44	25
D8835	WAV850-K23		43	55
			44	24
D8835	WAV850-K24		43	51
			44	20
D8835	WAV850-K3		43	47
			44	16
D8835	WAV850-K30		43	59
			44	28
D8835	WAV850-K31		43	40
			44	9
D8835	WAV850-K32		43	50
			44	19
D8835	WAV850-K4		43	43
			44	11
D8835	WAV850-K47		43	58
			44	27
D8835	WAV850-K5		43	44
			44	12
D8835	WAV850-K6		43	45
			44	13
D8835	WAV850-K7		43	52
			44	21
D8835	WAV850-K8		43	49
			44	18

CROSS-REFERENCE INDEXES

PART NUMBER INDEX

FSCM	PART NUMBER	STOCK NUMBER	FIG.	ITEM
D8835	WAV850-K9		43	48
			44	17
D8835	WAV850-P1		45	32
D8835	WAV850-P2		45	29
D8835	WAV850-P23		45	17
D8835	WAV850-P3		45	22
D8835	WAV850-P4		45	23
D8835	WAV850-P5		45	19
D8835	WAV850-P6		45	20
D8835	WAV850-P7		45	13
D8835	WAV850-P8		45	14
D8835	WAV850-P9		45	31
D8835	WAV850-P91		45	5
D8835	WAV850-P92		45	4
D8835	WAV850-P93		45	3
D8835	WAV850-R1		43	73
			44	42
D8835	WAV850-R100		43	71
			44	40
D8835	WAV850-R11		43	70
			44	39
D8835	WAV850-R16		43	67
			44	36
D8835	WAV850-R17		43	69
			44	38
D8835	WAV850-R18		43	57
			44	26
D8835	WAV850-R2		45	21
D8835	WAV850-V10		43	5
D8835	WAV850-V12		36	37
D8835	WAV850-V13		36	38
D8835	WAV850-V20		36	40
D8835	WAV850-V21		36	39
D8835	WAV850-V34		36	42
D8835	WAV850-W1		43	79
D8835	WAV850-W12		43	36
D8835	WAV850-W13		43	30
D8835	WAV850-W13A		43	29
D8835	WAV850-W17		44	48
D8835	WAV850-W203		42	11
D8835	WAV850-W204		42	10
D8835	WAV85G-W3		43	39
D8835	WAV850-W4		42	23
D8835	WAV850-W42		43	23
D8835	WAV850-W5		42	24
D8835	WAV850-W7		43	31
			44	7
D8835	WAV850-W8		43	27
			44	5
D8835	WAV850-W9		43	41
			44	10

CROSS-REFERENCE INDEXES

PART NUMBER INDEX

FSCM	PART NUMBER	STOCK NUMBER	FIG.	ITEM
D8835	WAV850-ZP23		45	15
D8835	WAV850-ZP9		45	30
D8835	WAV850-ZP93		45	2
08835	WAV850-ZW3		43	38
68225	WAV850PT	2010-01-290-9632	35	3
68225	WAV850SB	2010-01-293-8587	35	4
94066	WC104-78P		173	27
94066	WC9-3	5330-01-200-6017	173	23
21335	W307PP	3110-00-227-2652	148	8
15434	XP05.06-01		14	
61208	X117		147	24
61208	X117B14		148	29
61208	X9586B	2520-01-282-0171	148	19
61208	ZA6519E		148	40
44940	003-14027		47	12
			87	16
32862	0040141463	5330-01-268-2322	162	3
15434	01.01-03		78	
15434	01.01-05		155	
15434	01.02-01		25	
15434	01.02-03		77	
15434	01.02-04		119	
15434	01.02-05		154	
15434	01.04-01		31	
15434	01.04-04		116	
15434	01.04/01.05-03		75	
15434	01.04/01.05-05		152	
15434	01.06-04		112	
15434	01.07-01		30	
15434	01.07-03		74	
15434	01.07-04		115	
15434	01.07-05		151	
15434	01.08-01		23	
15434	01.09-03		71	
15434	01.09-05		146	
44940	015-41613		47	30
44940	016-31115		87	13
44940	016-31249		47	52
44940	016-40614		47	33
			87	2
44940	016-40616		47	16
			87	24
44940	016-40618		87	31
44940	016-40721		87	22
44940	016-40816		47	36
44940	016-40918		87	9
44940	016-40919		47	41
44940	016-40920		47	24
44940	016-40923		47	27
44940	016-41018		87	6
44940	016-41021		47	19

CROSS-REFERENCE INDEXES

PART NUMBER INDEX

FSCM	PART NUMBER	STOCK NUMBER	FIG.	ITEM
15434	02.01-01		21	
15434	02.01-03		68	
15434	02.01-04		110	
15434	02.01-05		143	
62144	02H-B20000-050		176	19
			177	3
62144	02H-PNBK00-050		177	2
62144	02H-PNBK90-050		176	20
			177	4
44940	028-31506		47	17
			87	3
44940	028-31507		47	31
			87	23
44940	028-31508		47	37
44940	028-31509		47	25
			87	10
44940	028-31510		47	20
			87	7
44940	029-61106		87	4
15434	03.01.1-04		107	
15434	03.01-04		108	
15434	03.01/03.01.1-01		16	
15434	03.01/03.01.1-03		64	
15434	03.01/03.01.1-05		136	
62144	03R-VM1300-005		178	62
62144	03R-VM1301-005		178	64
15434	04.01-01		24	
15434	04.01-03		69	
15434	04.01-05		144	
15434	04.01/07.02/07.0 2.01-04		120	
15434	04.03-04		111	
62144	04E-OPF307-020	4330-01-263-5353	173	24
62144	04T-001259-030		173	22
62144	04T-001261-030		173	26
62144	040-VM3005-010		174	17
62144	040-VM3005-020		174	12
62144	040-VM3005-030	5330-01-262-9488	174	13
15434	05.19-04		101	
15434	05-01		15	
62144	05B-MN0#10-050		177	6
62144	05B-SSS#08-050		178	2
			179	1
			180	1
			183	2
62144	05B-SSS#08-075		174	11
62144	05B-SS0#08-050		176	3
			177	12
			178	5
			180	5
			181	4

CROSS-REFERENCE INDEXES

PART NUMBER INDEX

FSCM	PART NUMBER	STOCK NUMBER	FIG.	ITEM
62144	05B-SS0#08-050		183	6
			184	9
62144	05B-SS0#10-050		177	8
			178	28
62144	05B-SS0#8-075		173	3
62144	05B-SS2421-001		175	4
62144	05B-SS2421-002		182	3
			184	7
62144	05B-SS2421-063		176	27
62144	05B-SS2421-069		176	24
62144	05C-PV0000-050		178	10
62144	05F-SS2421-001		172	3
62144	05F-SS2421-005		177	19
62144	05F-SS2421-006		184	5
62144	05L-SS0#08-000		173	2
			176	2
			178	4
			180	3
			181	2
			183	4
62144	05L-SS2441-001		172	2
			175	2
			177	18
			182	2
			184	4
62144	05L-SS2441-060		176	22
62144	05N-SS0#08-000		173	1
			176	1
			177	10
			178	3
			180	2
			181	1
			183	3
62144	05N-SS0#10-001		182	15
62144	05N-SS2431-001		172	1
			175	1
			177	17
			182	1
			184	3
62144	05N-SS2431-060		176	21
62144	05N-SS2431-190		178	58
62144	05W-SS0#08-000		177	11
			180	4
			181	3
			183	5
62144	05W-SS2441-001		175	3
			184	6
62144	05W-SS2441-060		176	23
62144	05W-SS2441-190		178	59
44940	050-11035		87	33
44940	050-11047		47	43

CROSS-REFERENCE INDEXES

PART NUMBER INDEX

FSCM	PART NUMBER	STOCK NUMBER	FIG.	ITEM
62144	051-VM1318-708		176	29
44940	051-01032		87	35
44940	051-01036		47	29
44940	054-20505		47	44
			87	37
15434	06.01-01		17	
15434	06.01-03		65	
15434	06.01-04		109	
15434	06.01-05		137	
15434	06.03-01		22	
15434	06.03-03		63	
15434	06.03-04		100	
15434	06.03/05.06/05.01-05		135	
15434	06.04-01		8	
15434	06.04-03		56	
15434	06.04-04		99	
15434	06.04-05		129	
62144	06C-OVM500-000	4610-01-266-7531	184	
15434	07.01.2-01		9	
15434	07.01-01		28	
15434	07.01-03		72	
15434	07.01-04		113	
15434	07.01-05		149	
15434	07.03-03		60	
15434	07.03-04		106	
15434	07.03-05		133	
15434	07.05.01-01		19	
15434	07.05-01		12	
15434	07.05-03		59	
15434	07.05-05		132	
15434	07.06-01		29	
15434	07.06-04		114	
15434	07.06-05		150	
62144	07H-02A812-000	2990-01-262-5141	178	15
44940	073-08059		87	39
15434	08.01-01		10	
15434	08.01-03		58	
15434	08.01-04		105	
15434	08.01/08.16-05		131	
15434	08.04-04		98	
15434	08.07.1-04		94	
15434	08.07-01		5	
15434	08.07-03		53	
15434	08.07-04		93	
15434	08.07-05		126	
15434	08.08-01		4	
15434	08.08-05		125	
15434	08.10-05		140	
15434	08.11/08.16-05		139	
15434	08.12-01		34	

CROSS-REFERENCE INDEXES

PART NUMBER INDEX

FSCM	PART NUMBER	STOCK NUMBER	FIG.	ITEM
15434	08.12-05		138	
15434	08.13.1/01.09-01		27	
62144	08B-AL1000-001		184	12
62144	08B-AL1000-002		184	10
62144	08B-AL1000-003		178	35
62144	08B-AL1000-004		184	11
62144	08B-AL1000-005		177	13
62144	08S-AL1000-001		184	2
62144	08S-AL1000-002		184	13
62144	08S-AL1000-003		183	8
62144	08S-AL1000-004		184	15
62144	08S-AL1000-005		177	9
62144	08S-AL2540-000		184	8
62144	08S-PL1000-001		178	16
62144	08S-PW1000-000		184	16
62144	081-BR1000-001		184	14
62144	081-BR1000-002		183	7
62144	081-BR1000-003		178	6
62144	081-BR1000-004		178	7
15434	09.01-04		103	
15434	09.03-03		70	
15434	09.03-05		145	
62144	09G-001000-025		178	65
62144	09G-003015-025	6620-01-262-5125	178	13
62144	09R-0RMA45-150		178	29
32862	1/2		158	4
			158	11
			158	15
32862	1/2-13		158	3
			158	14
32862	1/2-13X1 3/4		158	2
05427	1/2-13X3 1/2		158	13
75665	1/2-13X 3/4		158	10
57301	1P20195		2	32
57301	1P20468		2	50
57301	1P22786		49	40
68225	1V5101	4820-01-287-9718	40	1
68225	1V5105		40	7
15434	10.01-01		18	
15434	10.01-03		66	
15434	10.01-05		141	
15434	10.02-01		13	
15434	10.02-03		61	
15434	10.02-05		134	
15434	10.04-01		6	
15434	10.04-03		54	
15434	10.04-05		127	
15434	10.06-03		55	
15434	10.06-04		96	
15434	10.06/10.06.1-05		128	
62144	10B-00BX36-000	3030-01-262-5101	176	33

CROSS-REFERENCE INDEXES

PART NUMBER INDEX

FSCM	PART NUMBER	STOCK NUMBER	FIG.	ITEM
68225	10K2912		43	42
			44	14
32862	10X1.5MM		170	34
32862	1000305		167	37
32862	1000329		164	51
32862	1000336		166	4
32862	1000337		168	2
32862	1000494		160	7
32862	1000673		159	3
32862	1000705		167	17
32862	1000766		160	31
			162	1
32862	1000778		165	4
			166	54
32862	1000811		163	8
32862	1000817		167	47
32862	1000819		164	18
			164	55
32862	1000824		167	6
32862	1000899		*166*	33
32862	1000963		167	2
32862	1000981		160	9
32862	1000984		160	6
32862	1000985		163	5
15434	100099		15	100
			62	94
			135	210
32862	1000995		168	4
32862	1000996		167	33
32862	1000998		159	16
32862	1001006		166	20
			166	46
			167	59
32862	1001056		167	35
32862	1001069		167	60
32862	1001070		167	27
32862	1001082		166	9
32862	1001138		164	28
			164	65
32862	1001147		167	20
32862	1001202		166	32
32862	1001317		166	52
32862	1001324	5330-01-285-4822	167	49
15434	100133		62	110
32862	1001343		167	10
32862	1001357		166	13
32862	1001361	5330-01-285-4817	167	16
32862	1001367	5330-01-285-4823	167	13
32862	1001377		164	24
			164	61
			167	9

CROSS-REFERENCE INDEXES

PART NUMBER INDEX

FSCM	PART NUMBER	STOCK NUMBER	FIG.	ITEM
32862	1001383		164	2
			164	45
32862	1001392	5330-01-285-4820	166	24
32862	1001408		166	16
32862	1001422		164	10
			164	54
32862	1001428		167	19
32862	1001438		166	35
32862	1001444	5330-01-285-4812	167	42
32862	1001449		167	29
32862	1001483		164	26
			164	63
32862	1001484		166	11
32862	1001559		161	26
			168	3
32862	1001578		163	6
32862	1001735	5330-01-023-7196	166	14
32862	1001874		159	5
32862	1001923		166	2
15434	100193		15	138
			62	45
			135	54
32862	1001986		166	51
32862	1002057		164	13
15434	100215		62	109
			135	117
15434	100217		15	88
32862	1002210		159	7
32862	1002245		164	4
			164	50
32862	1002253		160	29
32862	1002324		167	7
32862	1002325		166	5
			167	34
32862	1002326		167	61
32862	1002327		167	3
32862	1002331		159	4
32862	1002332		159	10
			164	7
			164	52
			166	28
32862	1002334		166	21
			166	47
32862	1002335		166	8
32862	1002336		166	31
32862	1002345		164	21
			164	58
32862	1002515		*166*	42
32862	1002533		166	41
15434	100269		60	10
32862	1002917		166	44

CROSS-REFERENCE INDEXES

PART NUMBER INDEX

FSCM	PART NUMBER	STOCK NUMBER	FIG.	ITEM
32862	1002940		166	55
32862	1003211		166	29
32862	1003587		167	22
32862	1003588		167	23
32862	1003690		166	18
32862	1003866		168	5
32862	1003867		168	9
32862	1003928		166	12
32862	1004121		166	53
32862	1004128		166	58
32862	1004141		166	40
32862	1004146		164	29
			164	66
32862	1004177		159	11
32862	1004178		164	8
32862	1004245		168	11
32862	1004380		166	15
32862	1004385		*166*	23
32862	1004391		166	56
32862	1004396		166	59
32862	1004587		166	6
15434	100478		15	111
			62	51
			135	71
15434	100501		28	6
			57	14
			130	13
32862	1005315		166	43
32862	1005337		166	38
32862	1005958		163	2
			164	11
			167	50
32862	1005969		167	40
32862	1005980		164	15
32862	1005983		161	18
			170	29
32862	1005988		166	19
32862	1006000		164	5
			164	49
32862	1006504		166	49
32862	1006519		166	36
32862	1006524		166	34
32862	1006994		164	3
32862	1006999		170	11
32862	1007005		170	4
32862	1007016		161	9
32862	1007070		166	25
32862	100710A		170	33
32862	1007102		161	8
			170	2
32862	1007103		170	44

CROSS-REFERENCE INDEXES

PART NUMBER INDEX

FSCM	PART NUMBER	STOCK NUMBER	FIG.	ITEM
32862	1007104		170	6
32862	1007106		170	40
32862	1007116		170	42
32862	1007330		163	7
32862	1007334		159	17
32862	1007336		165	2
			166	3
32862	1007390		166	10
32862	1007433		160	4
32862	1007508		170	19
32862	1007510		170	18
32862	1007511		170	17
32862	1007512		160	21
32862	1007513		160	19
32862	1007514		160	20
32862	1007519		160	16
32862	1007520		161	11
32862	1007521		161	14
32862	1007524		170	16
15434	100764		62	35
32862	1007790		164	48
32862	1007791		167	58
			170	46
32862	1007796		161	17
			170	28
32862	1007800		160	18
			168	10
			170	1
			170	31
32862	1007832		160	3
			161	10
32862	1008051		160	13
32862	1008053		160	27
32862	1008062		161	15
			170	25
32862	1008065		161	13
			170	26
32862	1008073		161	27
32862	1008082		170	15
32862	1008084		170	7
32862	1008099		160	17
			170	39
32862	1008129		161	23
32862	1008133		161	16
			170	27
32862	1008135		161	5
32862	1008654		161	6
32862	1008660		160	2
			170	37
32862	1008962		166	45
32862	1009004E1		168	1

CROSS-REFERENCE INDEXES

PART NUMBER INDEX

FSCM	PART NUMBER	STOCK NUMBER	FIG.	ITEM
32862	100904		158	1
32862	1009196		167	5
32862	1009199		159	2
32862	1009200		170	47
32862	1009526		168	6
32862	1009813		159	8
32862	1010028		166	50
32862	1010938		166	30
32862	1010940		159	9
			164	6
32862	1011524		166	57
32862	1011528		166	17
32862	1011586		160	11
32862	1011616		161	12
32862	1011618		166	26
32862	1011624		160	30
32862	1011651		161	4
32862	1012099		159	14
32862	1012394		170	13
32862	1012395		170	3
32862	1012398		160	28
32862	1012538		161	24
32862	1012569		159	19
32862	1012570		170	5
32862	1012580		159	18
15434	101264		72	8
32862	1012653		159	21
32862	1012748		166	7
15434	101322		120	18
32862	1013353		160	5
			170	35
32862	1013476		164	23
			164	60
32862	1013477		164	38
			164	72
32862	1013482		164	32
			164	69
32862	1013488		164	27
			164	64
32862	1013489		164	25
			164	62
32862	1013490		164	20
			164	57
32862	1013565		164	30
			164	67
32862	1013722		170	14
32862	1013725		170	10
32862	1013730		170	41
32862	1013731		164	47
32862	1013855		164	22

CROSS-REFERENCE INDEXES

PART NUMBER INDEX

FSCM	PART NUMBER	STOCK NUMBER	FIG.	ITEM
32862	1013855		164	59
32862	1014630		168	7
32862	1014647		161	25
15434	101476		63	10
			135	6
32862	1015594		170	8
32862	1015927		160	23
			161	7
32862	1016503		161	28
32862	1017834		160	10
32862	1017862		159	6
15434	101814		72	2
			149	6
32862	1018148		160	33
			164	46
15434	101841		15	129
			135	77
15434	101842		15	130
			135	78
15434	101843		15	131
			135	79
44940	102-1147	5330-01-212-3361	104	6
15434	102020		27	29
32862	1021602		167	25
32862	1021874		164	35
			167	55
32862	1023016		167	15
32862	1023103		168	8
32862	1024145		166	27
15434	102522	4720-01-085-6129	53	11
32862	1025656		160	26
32862	1026911		161	3
32862	1027406		167	56
32862	1027408		167	53
32862	1027409		167	51
32862	1027410		167	48
32862	1027422		167	52
15434	102827	5330-00-951-3538	32	23
32862	1028927		167	21
32862	1029745		159	15
15434	103009		148	2
15434	103023		3	4
			27	47
			28	7
			29	1
32862	1030488		161	20
32862	1031833		161	2
32862	1032497		164	17
32862	1033337		161	22
32862	1033823		160	12
32862	1034768		167	54

CROSS-REFERENCE INDEXES

PART NUMBER INDEX

FSCM	PART NUMBER	STOCK NUMBER	FIG.	ITEM
32862	1035460		164	33
			164	70
32862	1035473		164	39
			164	73
32862	1036124		164	40
			164	74
32862	1036509		164	42
			164	76
32862	1037190		161	19
32862	1038480		160	8
63208	10387		173	25
63208	10387A		173	21
32862	1039613		160	24
32862	1039753		165	1
15434	104296	4720-00-056-4608	140	16
32862	1043365		167	14
32862	1044688		166	22
			166	48
32862	1045443		170	20
32862	1046197		160	15
			170	23
32862	1046346		159	20
32862	1046348		159	12
32862	1046476		159	13
32862	1046548		170	45
32862	1048050		159	1
32862	1048381		167	24
32862	1048902		167	31
32862	1049041		167	26
32862	1049087		170	43
32862	1051039		164	19
			164	56
32862	1053070	6320-01-266-7607	163	9
32862	1053312		164	31
			164	68
15434	105375		15	140
			62	59
			135	82
32862	1057593		167	8
32862	1059330		170	12
32862	1059812		164	34
			164	71
32862	1060090		164	43
			164	77
32862	1060092		164	41
			164	75
32862	1060407		167	36
32862	1060416		164	53
32862	1060418		165	8
32862	1061004		167	11
32862	1061005		167	45

CROSS-REFERENCE INDEXES

PART NUMBER INDEX

FSCM	PART NUMBER	STOCK NUMBER	FIG.	ITEM
15434	106221		60	12
			133	10
15434	106289		23	1
			57	1
			130	2
15434	106322	5330-00-627-6825	55	25
32862	1063686		167	44
32862	1064129		165	6
32862	1065849		160	14
32862	1065951		170	21
32862	1065952		170	22
32862	1066656		164	36
32862	1066657		164	12
32862	1066804		163	4
32862	1066805		163	1
32862	1066806		164	9
32862	1066809		164	14
32862	1066810		164	16
32862	1066910		163	3
32862	1068446		167	12
32862	1068583		167	43
32862	1068585		167	18
32862	1068806		167	57
32862	1069156		165	5
32862	1069278		160	25
32862	1069557		166	60
32862	1072844		167	46
32862	1073799		167	41
32862	1073947		167	4
32862	1073949		165	7
32862	1074151	2030-01-298-8833	164	1
32862	1074152		164	37
15434	107460		13	12
			63	7
			135	4
32862	1075175	2030-01-298-8834	164	44
32862	1076169		167	38
15434	107695		29	15
15434	107948		29	39
15434	107981		72	3
			136	12
32862	1079852		166	37
32862	1079853		166	1
32862	1079856		166	39
32862	1079858		167	62
32862	1079865		167	32
32862	1079870	4320-01-302-4230	157	2
32862	1079871	4320-01-302-4231	167	1
32862	1079954		167	30
32862	1079955		167	39
32862	1079956		167	28

CROSS-REFERENCE INDEXES

PART NUMBER INDEX

FSCM	PART NUMBER	STOCK NUMBER	FIG.	ITEM
32862	1079993		160	1
32862	1079995	2030-01-298-0760	165	3
32862	1080734		161	21
32862	1080735		161	1
32862	1080849		160	32
32862	1080850		160	22
15434	108172	5330-00-290-9486	23	16
15434	108307		59	33
			132	27
15434	108330		13	7
			51	43
			138	2
-15434	108384		15	122
			135	58
15434	108602		16	23
15434	108707		13	5
			58	2
			60	5
			131	4
			133	4
			139	7
15434	108709		134	5
15434	108722		7	15
			13	27
			51	37
			55	13
			128	9
15434	108767		27	21
			28	25
15434	109319		73	24
			150	26
15434	109333	2815-00-705-2856	73	28
			150	30
61208	1094C		148	59
15434	109686		15	157
			135	202
15434	109753		8	12
15434	109915		15	120
15434	109917		135	188
15434	11.01.01-04		97	
15434	11.01-01		20	
15434	11.01-03		67	
15434	11.01-05		142	
62144	11B-SS3639-099		176	10
62144	11B-SS3639-101		176	15
62144	11B-SS3639-131		176	18
62144	11C-SS3630-052		178	54
62144	11E-SS3412-002		178	56
62144	11E-SS3412-003		176	9
62144	11E-SS3608-002		182	13
62144	11F-HP3130-072		176	7

CROSS-REFERENCE INDEXES

PART NUMBER INDEX

FSCM	PART NUMBER	STOCK NUMBER	FIG.	ITEM
57301	11F-031218-24		2	2
OABC1	11M-PV1630-348		181	16
62144	11M-PV1630-848		180	22
62144	11N-SS3631-104		176	17
62144	11N-SS3661-037		178	55
62144	11N-SS3661-038		178	61
62144	11N-SS3661-039		178	60
			182	14
62144	11N-SS3661-041		182	20
62144	11T-SS3605-007		176	16
62144	11X-SS3420-002		178	63
15434	110058		15	144
			62	57
			135	92
15434	110266		27	32
			55	5
15434	110481		135	48
15434	110855		15	85
			62	107
			135	124
15434	111365		28	5
15434	111445		27	10
15434	111670		64	4
			136	7
15434	112076		62	60
15434	112105		13	32
			61	12
			134	20
15434	112196		54	11
			127	7
15434	112408		15	145
			135	189
15434	112501		7	4
15434	112836		6	2
15434	113244		15	31
			135	167
15434	113710		63	18
			135	12
61208	1144AL		147	49
61208	1146		147	9
15434	114850		13	29
15434	115519	3110-00-107-7564	58	27
			131	21
			131	29
15434	115590		72	7
15434	116391	3120-00-792-9834	70	21
			145	21
15434	116935		63	20
15434	116982		55	6
61208	117		147	27
61208	117B14		148	32

CROSS-REFERENCE INDEXES

PART NUMBER INDEX

FSCM	PART NUMBER	STOCK NUMBER	FIG.	ITEM
15434	117102		124	28
15434	117897		150	3
15434	118226		62	36
			135	143
15434	118227		15	134
			62	46
			135	56
15434	118346		7	18
15434	118377		69	13
		3120-00-791-1440	144	14
15434	118378		69	8
		3120-00-659-7808	144	8
15434	118939		69	9
			69	14
		5315-00-777-3544	144	9
			144	15
61208	119B14		148	27
15434	119363		62	108
			135	125
15434	119364		15	86
15434	119665		34	4
			138	6
15434	12.01.2-03		57	
15434	12.01.2-05		130	
15434	12.01-01		7	
61208	120		147	28
44940	120-1200		104	4
15434	120516		54	1
			127	4
68225	121156	6685-01-286-8858	36	70
15434	121229		22	18
			133	13
61208	1216		147	37
15434	123558		68	11
			143	26
15434	123822		57	19
			130	19
15434	123824		72	13
15434	124019		15	142
15434	124507	2815-00-787-6505	32	16
61208	125B		147	50
68225	125364	4820-01-287-9717	36	26
15434	125741		6	1
			54	12
			127	12
15434	126304		73	25
			150	25
15434	127018		22	31
			57	8
			130	6
15434	127316		29	17

CROSS-REFERENCE INDEXES

PART NUMBER INDEX

FSCM	PART NUMBER	STOCK NUMBER	FIG.	ITEM
15434	127316		54	3
			76	5
			77	2
			79	7
			127	6
			153	9
			154	2
15434	127362		33	34
15434	127554	5340-01-143-6048	68	12
			143	16
15434	127558	2815-00-791-1453	59	42
			132	35
15434	127571		27	24
15434	127814		3	35
			124	25
15434	128006		51	35
15434	128807		15	113
			135	87
61208	1293		148	33
15434	129510		70	12
			145	11
15434	129768		14	14
			62	120
			135	37
15434	129826		135	43
15434	129838		14	8
			62	123
			135	41
15434	129839		14	12
			62	121
			135	35
15434	129859		56	5
			129	4
15434	129886		62	122
15434	129888	5330-00-081-9299	14	13
			62	126
			135	36
15434	13.02.02-04		92	
15434	13.02.03		91	
15434	13.02.03.01-04		90	
15434	13.05-04		89	
15434	13.05/15.05-03		50	
15434	13.05/15.05-05		123	
62144	13A-VM2540-012		182	22
62144	13P-VM2540-002		182	17
62144	130-VM2542-116	5330-01-262-5113	182	19
62144	130-VM2542-228	5330-01-262-5114	182	18
21198	130-024-10		175	14
21198	130-028-10		175	13
44940	130-3064		86	31
44940	130-3080		86	23

CROSS-REFERENCE INDEXES

PART NUMBER INDEX

FSCM	PART NUMBER	STOCK NUMBER	FIG.	ITEM
44940	130-3082		86	24
44940	130-3083		86	7
44940	130-3084		86	10
44940	130-3085		86	13
44940	130-3086		86	12
44940	130-3087-01		86	29
44940	130-3087-02		86	28
44940	130-3088		86	18
44940	130-3089		86	19
44940	130-3090		86	20
44940	130-3091		86	27
44940	130-3092		86	25
44940	130-3102		86	17
44940	130-3140		86	16
44940	130-3141		86	15
15434	130083		10	46
			30	7
15434	130489		13	13
15434	131026	5330-00-143-8485	22	28
			68	25
			143	7
15434	131584		25	18
			32	6
15434	132019		78	21
			155	36
15434	132770		27	34
		3120-00-877-2213	71	6
			146	18
15434	134076		135	34
15434	134596		73	26
			150	28
21198	135-016-20		175	10
21198	135-023-10		175	12
15434	135169		135	163
15434	135308		68	24
			143	5
15434	135783		20	7
			27	2
			28	14
15434	135957	2815-00-739-6098	68	4
			143	24
15434	137797		58	1
			131	1
15434	137890		60	11
			67	7
			142	1
15434	138045		59	14
			132	14
15434	138802		135	95
15434	138912		27	42
15434	139473		12	8

CROSS-REFERENCE INDEXES

PART NUMBER INDEX

FSCM	PART NUMBER	STOCK NUMBER	FIG.	ITEM
15434	139969		63	24
			135	20
15434	139988		15	102
			62	95
			135	208
15434	139990		33	17
57301	14F-012540-08		2	19
57301	14F-019024-08		2	11
57301	14F-025020-12		49	2
57301	14F-025020-16		2	16
57301	14F-031218-08		2	48
57301	14F-031218-16		2	49
44940	140-0078		95	19
44940	140-1260		95	13
44940	140-1548		95	14
44940	140-2157		95	17
44940	140-2158		95	20
44940	140-2159		95	18
44940	140-2163		95	6
44940	140-2164		95	9
44940	140-2166		95	12
44940	140-2169		95	1
15434	140313		6	4
			54	14
			127	15
15434	140314		612	5
15434	140315		18	25
15434	140330		64	27
			64	33
			136	29
			136	41
15434	140418		135	171
73651	1407-131		175	8
15434	141629		62	85
15434	141632		15	167
15434	141761		141	14
15434	142429		55	*22*
			128	17
15434	142486		64	7
			136	10
15434	142689	3020-00-160-9092	70	14
			145	19
15434	143251		62	78
15434	143847		62	31
15434	143848		5	45
			15	132
15434	143854		135	150
15434	144178		15	43
			62	29
			135	152
15434	144179		15	44

CROSS-REFERENCE INDEXES

PART NUMBER INDEX

FSCM	PART NUMBER	STOCK NUMBER	FIG.	ITEM
15434	144179		62	30
			135	151
15434	144195	5360-00-082-0124	11	30
			15	168
			62	83
15434	144378		60	16
			133	15
21198	145-010-10		175	20
21198	145-027-01		175	17
21198	145-033-02		175	15
21198	145-035-10		175	21
15434	145504		15	75
			135	86
15434	145505		15	72
			62	70
			135	111
15434	145528		4	4
15434	145529	5330-01-113-2188	11	11
15434	145578		11	46
15434	145600	5330-01-201-3618	27	49
15434	145782		63	11
			135	7
15434	146159		13	4
			134	3
			139	3
15434	146160		15	18
			135	140
15434	146437		15	47
			62	28
			135	149
15434	146483		15	117
			62	65
			135	83
15434	147100		68	26
			143	6
15434	147389	5305-00-062-4378	68	31
			143	12
15434	148582		33	9
15434	148976	5315-00-253-3408	11	29
15434	149134		29	12
15434	15.08-01		3	
15434	15.08-05		124	
32862	15X2MM		170	32
21198	150-021-10		175	9
21198	150-031-10		175	16
21198	150-032-10		175	11
44940	150-0716	5930-01-262-7313	85	10
44940	150-0723		85	7
44940	150-10710		47	38
44940	150-2187		83	23
44940	150-2198		85	3

CROSS-REFERENCE INDEXES

PART NUMBER INDEX

FSCM	PART NUMBER	STOCK NUMBER	FIG.	ITEM
44940	150-2199		85	12
44940	150-2200		83	11
44940	150-2201	6110-01-263-3744	83	6
44940	150-2202		83	15
44940	150-2203		83	14
44940	151-0611	2910-01-262-2451	83	5
44940	151-0632		83	19
15434	151355		29	2
15434	151441		9	6
15434	151900		15	96
			135	206
15434	152364		33	55
15434	152546		61	5
15434	152547		134	18
15434	152767		52	4
			125	5
15434	153336		15	97
			62	96
			135	212
15434	153338		15	98
			62	97
			135	207
15434	153346		15	94
15434	153408		13	18
			61	7
			134	15
			140	20
15434	153581		76	1
			153	19
15434	154087	5330-00-951-3538	14	4
			62	116
			135	31
15434	154088		62	67
15434	154706	4810-01-262-5076	3	18
15434	155789	4720-01-085-6131	13	19
			61	6
			134	16
15434	157088		62	66
15434	157551	5330-00-143-8376	72	18
			149	18
68225	158186	4820-01-286-8846	36	62
15434	16.01-01		32	
15434	16.01-03		76	
15434	16.01-04		117	
15434	16.01/16.02-05		153	
15434	16.02-04		118	
15434	16.03-01		26	
57301	16F-025020-20		2	37
57301	16F-025028-12		2	33
			49	8
62144	16M-VM2540-022		182	23

CROSS-REFERENCE INDEXES

PART NUMBER INDEX

FSCM	PART NUMBER	STOCK NUMBER	FIG.	ITEM
62144	16S-002540-000	4330-01-273-7614	182	21
15434	160514		15	99
			62	98
			135	211
15434	163086		76	9
			153	10
15434	163733		15	119
			135	55
15434	163826		15	36
			135	168
15434	163944		15	42
			62	16
			135	146
15434	163945		15	112
15434	165006		17	1
15434	166112		9	7
15434	168306	5305-00-947-3437	16	17
			64	26
			64	32
			64	38
			136	31
			136	36
			136	43
15434	168319		64	19
			136	45
15434	169704		64	35
			136	40
15434	169705		64	29
			136	28
15434	169834		32	18
15434	170049		138	18
15434	170226		64	15
			136	19
15434	170296	5340-00-933-3009	68	13
			143	17
15434	170664		11	9
			70	13
			145	12
15434	172640		18	40
15434	175755	5365-01-241-4318	75	8
			152	12
15434	175830		33	29
15434	175831		69	5
			144	5
15434	175864		135	126
15434	175865		15	87
15434	176307		33	15
15434	177417		73	13
15434	177419		73	10
			150	20
15434	178079	4820-00-471-0049	63	6

CROSS-REFERENCE INDEXES

PART NUMBER INDEX

FSCM	PART NUMBER	STOCK NUMBER	FIG.	ITEM
15434	178079	4820-00-471-0049	135	27
15434	178691	3030-01-262-5102	139	16
15434	178937	5330-00-132-0249	67	10
			142	11
15434	178957	2940-01-262-5185	6	7
			54	19
			127	14
44940	179-1284		86	4
44940	179-2264		84	1
15434	179816		135	76
15434	179822		15	67
15434	179901		52	8
		4820-01-045-6080	125	10
15434	179903		52	6
			125	14
15434	179904		52	1
			125	7
15434	179918		52	3
			125	9
15434	179930	4720-01-161-0810	52	2
			125	8
15434	180261		33	27
15434	180372		51	44
15434	180626	5310-01-066-2942	65	5
			137	5
15434	181213		63	25
			135	22
15434	181466		14	2
			15	83
			62	90
			62	105
			62	117
			135	29
			135	119
15434	182706		58	23
			131	13
15434	185347		63	4
			135	24
15434	185804		27	16
15434	186780	5330-00-864-5422	53	18
			126	15
15434	186917		55	27
			128	20
15434	186918		55	23
15434	187317		52	7
			125	15
15434	187368		61	15
15434	187420	2815-00-132-0273	75	5
			152	5
15434	187556		135	33
57301	18779		2	23

CROSS-REFERENCE INDEXES

PART NUMBER INDEX

FSCM	PART NUMBER	STOCK NUMBER	FIG.	ITEM
57301	18780		2	28
57301	18801		2	27
57301	18810		2	17
57301	18817		2	13
57301	18822		2	4
57301	18828		2	8
57301	18830		2	31
15434	189800		15	176
			62	77
			135	179
62144	19C-NY5304-312		180	13
62144	19C-NY5306-312		180	11
62144	19S-02166D-220		179	26
62144	19S-832061-201		179	21
62144	19S-832061-202		179	22
62144	19S-832061-203		179	23
62144	19S-832061-204		179	28
62144	19S-832061-205		179	24
62144	19S-832061-206		179	25
62144	19S-832061-207		179	27
62144	19S-832061-208		179	29
62144	19S-832061-209		179	20
62144	19S-832061-210		179	19
62144	19S-832061-211		179	18
62144	19S-832061-212		179	16
62144	19S-832061-213		179	17
62144	19S-832061-214		179	11
62144	19S-832061-215		179	15
62144	19S-832061-215-28		179	2
62144	19S-832061-216		179	14
62144	19S-832061-217		179	13
62144	19S-832061-218		179	12
62144	19S-832061-219		179	10
15434	190397	2930-00-401-9531	70	8
			145	7
15434	190799		52	13
			125	1
15434	190849	5330-00-194-8385	55	4
			128	23
15434	190876	5330-00-132-0274	14	17
			62	124
			135	39
15434	191772		10	3
			11	2
			22	16
			33	37
15434	191916	5340-00-238-5435	65	4
			137	4
15434	191970	2815-00-480-4347	75	9
			152	13

CROSS-REFERENCE INDEXES

PART NUMBER INDEX

FSCM	PART NUMBER	STOCK NUMBER	FIG.	ITEM
44940	193-0244	6620-01-262-5096	88	11
44940	193-0250		82	27
44940	193-0351	6685-01-269-3879	82	28
44940	193-0352	6620-01-262-2365	82	29
44940	193-0375	6685-01-262-2397	88	10
15434	193136		70	2
			145	3
15434	193498		8	18
15434	193631		72	22
			149	19
15434	194037		16	15
			64	40
			136	37
15434	195265		14	9
15434	195952	5330-01-066-3904	66	32
15434	196057		14	15
		4820-01-287-9742	62	127
15434	196074	5930-01-067-8418	13	30
			61	19
			134	22
15434	196844	5365-01-132-1984	58	36
			131	30
15434	197032		29	22
15434	197221		6	15
15434	199592		150	14
15434	199616		8	15
15434	199919		10	1
			18	7
			29	28
			33	32
70127	2-224		173	15
28835	2CA647	4720-00-278-4890	64	8
			136	9
57301	2P20156-01		2	26
57301	2P20182		2	22
57301	2P20252		2	35
57301	2P20862-02		2	20
57301	2P22235-06		2	45
57301	2P22239-01		2	53
57301	2P22673-02		49	46
62144	20F-000001-025		178	23
62144	20L-LAG001-000		178	19
62144	20L-LAR001-000		178	20
62144	20M-111032-220		178	27
62144	20P-102682-000	5977-01-273-7437	180	20
62144	20S-MS500G-000		178	25
62144	205-160012-000		178	21
32862	20X2.5MM		170	24
			170	38
62144	20Z-111032-010		178	24
62144	20Z-111032-011		178	26

CROSS-REFERENCE INDEXES

PART NUMBER INDEX

FSCM	PART NUMBER	STOCK NUMBER	FIG.	ITEM
15434	200354		68	5
			143	25
15434	200517	4720-01-135-6694	138	15
15434	200809	5330-00-026-2931	70	10
			145	9
15434	200845		28	18
15434	200861		59	15
			76	7
			132	16
			153	2
15434	200998		15	30
			135	161
15434	201007		15	115
			135	85
15434	201008		15	33
			135	165
15434	201010		15	32
			135	166
15434	201048	5330-01-043-5605	7	27
15434	201737	6620-01-141-0907	53	19
			126	16
15434	201745		15	34
			135	164
15434	202128	5360-01-200-0323	59	27
			132	44
15434	202682		15	121
			135	57
15434	202839		13	22
15434	202897		15	101
			62	99
			135	209
15434	202903	5315-01-058-4551	78	25
			155	30
15434	202994	4720-01-070-8149	66	4
15434	203131		21	3
		5310-00-426-3990	68	32
			143	13
15434	203145	5330-01-066-3910	73	7
			150	16
15434	203310		59	2
			132	2
15434	203346		15	177
			135	180
15434	203432		55	26
			128	21
15434	203555	2815-01-262-5073	55	24
15434 -	203619		15	165
15434	203933		16	20
15434	204048		150	7
15434	204163		52	18
			125	18

CROSS-REFERENCE INDEXES

PART NUMBER INDEX

FSCM	PART NUMBER	STOCK NUMBER	FIG.	ITEM
15434	204165		76	6
			77	1
			153	1
15434	204263		57	12
			66	24
			130	11
15434	204493		50	6
			123	6
15434	204832		150	33
15434	205059		21	2
			32	5
			33	53
15434	205068		24	20
15434	205069		24	17
15434	205071		24	14
15434	205091		21	7
15434	205093		21	22
15434	205094		21	8
15434	205115	5330-01-238-3210	33	48
15434	205126		31	3
15434	205128		16	9
15434	205129		16	21
15434	205133		27	27
15434	205138	2815-01-042-5010	16	18
15434	205149		33	22
15434	205156		10	45
15434	205166		10	37
15434	205168		10	38
15434	205169		21	13
15434	205199		33	11
15434	205200		31	13
15434	205208		21	9
15434	205227		24	25
15434	205230		33	23
15434	205269		31	12
15434	205314		18	1
15434	205323		5	36
15434	205348	2530-01-234-7832	11	26
			33	46
15434	205349	5360-01-237-4946	11	25
			33	45
15434	205350		11	23
			33	43
15434	205354		5	10
			23	10
15434	205377		5	37
			29	26
15434	205393		16	8
15434	205394		16	10
15434	205401		21	19
15434	205413		23	9

CROSS-REFERENCE INDEXES

PART NUMBER INDEX

FSCM	PART NUMBER	STOCK NUMBER	FIG.	ITEM
15434	205438		24	13
			24	19
15434	205439		24	9
15434	205462	3040-01-200-3010	17	4
15434	205492		24	10
15434	205565		32	1
15434	205573		33	18
15434	205584		33	16
15434	205659		11	12
15434	205669		5	42
15434	205683	3120-01-201-3700	27	14
15434	205684		33	54
15434	205741		33	59
15434	205742		33	60
15434	205743		33	61
15434	205744		33	62
15434	205745		33	63
15434	205746		33	64
15434	205852	5330-01-202-2543	21	26
15434	205855	5330-01-202-2544	21	27
15434	205858	5330-01-202-2545	21	28
15434	205976		5	14
15434	206021	5330-01-178-1760	19	8
15434	206028		33	52
15434	206029		28	13
15434	206090		32	22
15434	206091		32	21
15434	206092		32	19
15434	206093		32	25
15434	206158		27	48
15434	206193	5330-01-043-5602	10	16
15434	206195		10	24
15434	206196	5365-01-202-2581	10	23
15434	206198	5330-01-201-3515	10	22
15434	20622	2815-00-338-6839	72	25
			149	22
15434	206224		21	18
			33	4
15434	206231		24	23
15434	206277	5330-01-204-2184	18	19
15434	206326		15	1
			20	6
			27	4
15434	206406		27	25
15434	206407	5330-01-201-3642	27	26
15434	206416	5330-01-201-3656	10	35
15434	206434		18	13
15434	206435	5330-01-178-1761	18	14
15434	206436		18	11
15434	206438		18	8
15434	206443	5330-01-201-3661	5	40

CROSS-REFERENCE INDEXES

PART NUMBER INDEX

FSCM	PART NUMBER	STOCK NUMBER	FIG.	ITEM
15434	206451		27	1
15434	206455	5330-01-201-3657	10	18
15434	206457	5330-01-201-3627	10	15
15434	206460	5330-01-201-3659	5	7
15434	206526		27	39
15434	206527		5	22
			27	38
15434	206555		5	25
15434	206556		5	26
15434	206557		20	12
15434	206559		5	23
15434	206576	5330-01-043-5604	7	30
15434	206580		25	8
15434	206587		33	21
15434	206588		33	20
15434	206590		25	9
15434	206600		25	10
15434	206610		25	11
15434	206709		5	17
15434	206742		10	42
			33	3
15434	206904		25	16
15434	207226		16	14
15434	207241		21	12
15434	207244	2910-01-199-6615	17	5
15434	207251		10	40
15434	207344		16	12
15434	207373		30	3
15434	207448	5330-01-202-2542	21	25
15434	207515	5330-01-201-3660	5	9
15434	207539		10	8
15434	207540	5330-01-201-3658	10	7
15434	207551	5330-01-224-2860	32	13
15434	208084		64	28
			64	34
			136	32
			136	44
15434	208128	5330-01-040-2087	53	17
			126	14
15434	208326		66	3
			141	10
15434	208346		78	23
			155	1
57301	20903		2	42
15434	209956	4720-01-079-2592	128	16
15434	209959	4720-01-262-0994	55	21
15434	21.01.2-03		79	
44940	210-10057		87	36
44940	210-10142/3		87	43
44940	210-10143/3		87	41
44940	210-10264		87	15

CROSS-REFERENCE INDEXES

PART NUMBER INDEX

FSCM	PART NUMBER	STOCK NUMBER	FIG.	ITEM
44940	210-1032		87	34
44940	210-1036		87	38
44940	210-10403		87	12
44940	210-10406		87	32
44940	210-10418		87	29
44940	210-10419		87	28
44940	210-10421		87	30
44940	210-10422		87	5
44940	210-10423		87	11
44940	210-10442		87	27
44940	210-10443		87	25
44940	210-10450		87	8
44940	210-1067		87	42
44940	210-1068		87	40
15434	210179		77	5
			154	8
15434	210753		128	10
15434	210884		78	12
			155	25
15434	210915		59	31
			132	48
15434	210966		59	4
			132	11
15434	210967		59	44
			132	37
15434	211633		15	40
			62	27
			135	155
15434	211635		15	38
			62	26
			135	153
15434	211636		15	41
			62	25
			135	147
15434	211657		66	5
15434	211918		77	4
15434	211929		150	36
15434	211939	5360-01-038-4659	73	27
			150	29
15434	211999	5360-00-009-9270	68	14
			143	18
15434	212013		56	7
			129	7
15434	212024		13	35
			61	24
			134	23
15434	212112		154	4
15434	212113		154	1
15434	212161	5330-01-077-5228	19	10
			67	6
			142	9

CROSS-REFERENCE INDEXES

PART NUMBER INDEX

FSCM	PART NUMBER	STOCK NUMBER	FIG.	ITEM
15434	212301		71	18
15434	212350		135	65
15434	212601		15	52
			62	15
			135	156
15434	212602		15	20
			62	11
			135	138
15434	212603		15	24
			62	18
			135	131
15434	212604		15	50
			62	14
			135	158
15434	212605		15	49
			62	10
			135	159
15434	212607		15	23
			62	23
			135	130
15434	212609		15	26
			62	21
			135	133
15434	212610		15	27
			62	22
			135	134
15434	212613		15	19
			62	8
			135	139
15434	212639		15	48
			62	9
			135	160
15434	212668		15	53
			62	12
			135	162
15434	212754		71	16
15434	213082		58	25
			131	18
15434	213394		59	43
			132	31
			143	31
15434	213395		143	29
15434	213485		53	10
			126	8
15434	213559		24	16
			24	22
			69	17
		2815-01-048-6702	144	12
			144	18
15434	213768		15	107
			62	52

CROSS-REFERENCE INDEXES

PART NUMBER INDEX

FSCM	PART NUMBER	STOCK NUMBER	FIG.	ITEM
15434	213768		135	72
15434	213769		15	105
			62	55
			135	73
15434	214139		15	139
			62	41
			135	51
15434	214144		15	77
			135	90
15434	214150		15	62
			135	100
15434	214617		53	7
			126	5
15434	214730		75	13
			152	9
15434	214950	3120-01-087-3004	75	6
			152	6
15434	215041		66	12
15434	215044	5330-01-066-5351	66	14
15434	215090		78	40
			155	9
15434	215233	3120-01-079-8194	74	1
			151	4
15434	215397		58	31
			131	23
15434	215705	5330-01-145-0716	71	13
			146	14
15434	216187	5330-01-226-8748	7	25
15434	216484		72	1
			149	7
15434	216486	5330-01-066-5352	66	33
15434	216487	5330-01-072-8998	66	7
15434	216524		143	30
15434	217315		59	35
			132	29
15434	217323	6685-01-079-1632	77	3
			154	5
15434	217632		5	30
15434	217638	3030-01-065-9404	58	9
			131	14
15434	218025		152	7
15434	218152		64	41
			136	34
15434	218153		64	39
			136	38
15434	218245	5330-01-046-1991	59	36
			132	30
15434	218548		135	53
15434	218732		75	14
			152	10
57301	21880		2	51

CROSS-REFERENCE INDEXES

PART NUMBER INDEX

FSCM	PART NUMBER	STOCK NUMBER	FIG.	ITEM
15434	218808		75	4
			152	2
57301	21899		49	41
15434	219153		75	2
		5306-01-079-7027	152	3
57301	21927		49	19
57301	21929		49	21
57301	21985		49	38
57301	21988		49	37
57301	22051		49	35
57301	22144		49	31
57301	22146		49	28
57301	22148		49	4
57301	22165		2	46
57301	22172		49	3
57301	22183		49	15
57301	22318		2	38
57301	22376		2	36
			49	13
44940	224CR01S21R11A		87	4
44940	224C111F1501A		87	45
44940	226-0090		84	13
44940	226-3290		83	2
44940	226-3705-01		83	3
57301	22634		49	47
57301	22685		2	5
57301	22849		49	16
32862	2307032151	5330-01-266-7589	162	9
32862	230732101	5330-01-266-7588	162	5
44940	234-0845		81	5
32862	2504251171		162	7
15434	2521598		8	22
15434	252193		8	19
15434	252598	5330-00-224-9820	8	20
15434	255180		64	9
			136	11
15434	256835	4330-01-287-9740	8	21
68225	28E1736		42	5
68225	28G2360		45	12
61208	2815		148	44
61208	2815AC		147	43
61208	2816		148	45
32862	287.00.0.05		169	1
32862	287.00.06.01.0		169	4
32862	287.00.2079.00		169	2
32862	287.00.67.00.0		169	3
15434	2965		76	19
			153	4
75665	3/8-16		158	6
68225	3A4040	4330-01-286-8872	39	3
68225	3A40401		39	21
68225	3A404010		39	16

CROSS-REFERENCE INDEXES

PART NUMBER INDEX

FSCM	PART NUMBER	STOCK NUMBER	FIG.	ITEM
68225	3A404011		39	19
68225	3A404012		39	9
68225	3A404015		39	12
68225	3A404016		39	11
68225	3A404017		39	18
68225	3A404018		39	20
68225	3A404019		39	5
68225	3A40402		39	13
68225	3A404020		39	6
68225	3A40404		39	
68225	3A40407		39	10
68225	3A40408		39	8
68225	3A40409		39	7
25795	3M279		176	28
57301	3P22341		49	10
57301	3P22800-04		49	7
02094	3TP-4012		181	15
25795	3X574		176	30
25795	3X597		176	31
25795	3X769		176	32
44940	300-3197		81	1
15434	3000082		28	26
15434	3000138		33	12
15434	3000139		25	12
15434	3000171	4310-01-092-9816	70	19
			145	17
15434	3000175	2815-01-214-7129	70	15
			145	13
15434	3000248		79	4
15434	3000263		61	8
15434	3000264		61	3
			134	14
15434	3000266		62	125
			135	40
15434	3000268		61	23
15434	3000269		61	4
15434	3000270	4720-01-262-5139	61	2
			134	12
15434	3000302		54	15
			127	16
15434	3000446		15	104
			62	56
			135	74
15434	3000573		31	7
15434	3000594		15	123
			135	59
15434	3000632		29	41
15434	3000888	4320-01-079-3454	58	33
			131	31
15434	3000907		59	11
15434	3000909		11	16

CROSS-REFERENCE INDEXES

PART NUMBER INDEX

FSCM	PART NUMBER	STOCK NUMBER	FIG.	ITEM
15434	3000911		11	10
15434	3001160		15	172
15434	3001169		66	25
15434	3001340	5330-01-201-3621	22	35
15434	3001375		5	21
15434	3001646		76	11
			153	12
15434	3001663		21	10
15434	3001707		15	68
			135	94
15434	3001719		29	16
15434	3001726		64	16
			136	20
15434	3001737		135	52
15434	3001811		22	30
15434	3001939		66	18
15434	3001954		27	8
15434	3002108		10	12
15434	3002110		15	22
			62	13
			135	129
15434	3002126		19	1
15434	3002138	2950-01-089-7024	55	1
			128	3
15434	3002158		21	16
			27	36
			28	27
15434	3002170		70	23
15434	3002385	5330-01-066-5350	58	20
			131	35
15434	3002604		51	41
15434	3002718		13	23
15434	3002886		24	7
15434	3002956		5	15
15434	3002993		24	8
			33	7
15434	3003156		15	143
			62	37
			135	185
15434	3003379		5	34
15434	3003448		13	20
15434	3003536		55	16
15434	3003697		7	1
15434	3003814		59	20
			132	22
15434	3004242	5330-01-066-3909	150	8
15434	3004262		25	14
15434	3004272		12	11
15434	3004681	3020-01-200-2459	30	5
15434	3004682		10	48
15434	3004683	3020-01-200-2449	30	14

CROSS-REFERENCE INDEXES

PART NUMBER INDEX

FSCM	PART NUMBER	STOCK NUMBER	FIG.	ITEM
15434	3004686		10	47
			30	6
15434	3004724		15	25
			62	19
			135	132
15434	3005131	2520-01-241-5629	70	11
			145	10
15434	3005508		66	29
15434	3005557		76	22
			153	22
15434	3006175		15	106
			62	53
			135	70
15434	3006182		51	49
15434	3006183		64	12
			136	15
15434	3006298		30	16
15434	3006299		30	13
15434	3006343		15	109
			135	68
15434	3006344		15	110
			135	69
15434	3006349		136	14
15434	3006358		64	11
			136	16
15434	3006430		62	54
15434	3006456	2815-01-085-2618	68	17
			143	21
15434	3006550		15	37
			62	24
			135	154
15434	3006696		17	2
15434	3006722		13	26
15434	3006723		13	17
15434	3006724		13	16
15434	3006737	5330-00-005-0858	76	17
			153	18
15434	3006745	5365-01-139-6738	59	28
			132	45
15434	3007401		27	19
15434	3007402		27	20
15434	3007403		27	22
15434	3007404		27	23
15434	3007441		33	58
15434	3007442		78	37
		5330-01-145-5377	155	6
15434	3007512	5330-01-201-3626	10	19
15434	3007525	2815-01-207-3716	33	
15434	3007634		68	9
15434	3007635		68	10
			120	13

CROSS-REFERENCE INDEXES

PART NUMBER INDEX

FSCM	PART NUMBER	STOCK NUMBER	FIG.	ITEM
15434	3007636		68	8
15434	3007667		27	11
15434	3007668		27	5
15434	3007713	5330-01-086-6197	59	29
			132	46
15434	3007759	5330-01-072-4436	68	19
			143	28
15434	3007971		30	11
15434	3008017	5330-01-079-6514	59	12
			132	12
15434	3008047		78	26
			155	39
15434	3008048		78	27
			155	40
15434	3008049		78	28
			155	41
15434	3008069		72	20
			149	4
15434	3008370		33	14
15434	3008465		11	15
			22	4
			33	56
			110	6
15434	3008466		5	45
			11	49
			27	35
			33	5
			59	22
			78	5
			132	40
			141	6
			155	31
15434	3008468		10	9
			27	30
			28	22
			33	6
			58	16
			72	4
			78	14
			94	4
			110	7
			120	8
			149	10
			155	32
15434	3008469		5	20
			11	48
			16	28
			59	34
			73	29
			78	11
			132	28

CROSS-REFERENCE INDEXES

PART NUMBER INDEX

FSCM	PART NUMBER	STOCK NUMBER	FIG.	ITEM
15434	3008469		150	24
			155	33
15434	3008470		10	11
			28	23
			58	15
			72	28
			140	19
			141	7
			149	13
15434	3008494		10	17
15434	3008530		71	11
			146	12
15434	3008590		67	12
			142	10
15434	3008591	5330-01-086-3523	66	41
			141	15
15434	3008596		64	6
			136	8
15434	3008690		18	36
			96	1
15434	3008710	5330-01-201-3630	5	13
			18	33
15434	3008832		140	12
15434	3008837	6620-01-262-5126	138	7
15434	3008844		140	25
15434	3008947	5330-01-129-6541	70	3
			145	5
15434-	3008970	3020-01-258-2776	30	15
15434	3008971		30	8
15434	3009089		21	23
15434	3009109		21	20
15434	3009213		154	3
15434	3009321		19	6
15434	3009322		19	4
15434	3009323	5330-01-201-3654	19	7
15434	3009324	5330-01-201-3655	19	5
15434	3009380		15	128
			62	48
15434	3009457	5330-01-292-9463	53	5
			126	20
15434	3009459		67	4
			142	7
15434	3009461		68	28
			143	9
15434	3009464		53	20
			126	19
15434	3009631		24	5
15434	3010030	5330-01-046-3144	59	45
			132	36
15434	3010242	5330-01-075-0948	34	
			135	

CROSS-REFERENCE INDEXES

PART NUMBER INDEX

FSCM	PART NUMBER	STOCK NUMBER	FIG.	ITEM
15434	3010320		154	6
15434	3010323		138	19
15434	3010324		140	6
15434	3010325		140	4
15434	3010327		140	18
15434	3010328	2930-01-262-2432	139	19
15434	3010329		139	18
15434	3010342		139	17
15434	3010348		146	20
15434	3010360		52	15
			125	4
15434	3010361		134	17
15434	3010363		134	7
15434	3010365		134	13
15434	3010372		146	21
15434	3010374		140	21
15434	3010376		140	11
15434	3010388		16	5
15434	3010589		64	17
			136	21
15434	3010590		70	9
			145	1
15434	3010594		76	15
			153	15
15434	3010595		7	8
			53	1
			58	10
			59	5
			72	5
			126	1
			132	7
			141	8
			149	1
			150	6
15434	3010596		52	12
			56	2
			59	3
			125	3
			128	13
			129	2
			132	3
			132	25
			147	2
15434	3010597		53	14
			59	8
			126	13
			132	4
15434	3010647	5930-01-262-5090	3	26
			124	23
15434	3010649	5930-01-262-5089	3	24
			124	22

CROSS-REFERENCE INDEXES

PART NUMBER INDEX

FSCM	PART NUMBER	STOCK NUMBER	FIG.	ITEM
15434	3010653		3	25
15434	3010755		63	26
			135	21
15434	3010941		15	151
			135	193
15434	3010942		135	195
15434	3010943		15	149
15434	3010945		15	148
			135	196
15434	3011076	5330-01-201-3615	33	50
15434	3011233		132	9
15434	3011323		140	37
15434	3011324		140	33
15434	3011325		140	31
15434	3011327		140	35
15434	3011329		140	29
15434	3011332		140	34
15434	3011337		140	30
15434	3011342		132	8
15434	3011380		56	3
			129	3
15434	3011580	5330-01-201-8691	18	23
15434	3011650	5330-01-201-3653	11	5
15434	3011651	5330-01-201-3664	33	36
15434	3011711		146	5
15434	3011712		71	9
15434	3011713		71	2
			146	4
15434	3011714		71	1
			146	3
15434	3011715		71	10
			141	4
			146	11
15434	3011716		66	34
			141	5
15434	3011884		33	51
15434	3011934	2910-01-146-0048	68	18
			143	27
15434	3011951	3120-01-079-6823	78	31
			155	44
15434	3011952	5340-01-145-9362	78	6
			155	38
15434	3012331		75	11
15434	3012332		75	12
			152	8
15434	3012468		58	17
			131	10
15434	3012469		58	18
			131	9
15434	3012470		58	11
			68	27

CROSS-REFERENCE INDEXES

PART NUMBER INDEX

FSCM	PART NUMBER	STOCK NUMBER	FIG.	ITEM
15434	3012470		143	8
15434	3012471		51	7
			66	26
			124	2
15434	3012472		136	1
15434	3012474		16	1
15434	3012475		7	13
			18	21
			59	32
			132	26
15434	3012478		72	16
			149	16
15434	3012479		73	15
			150	1
15434	3012526		70	1
			145	2
15434	3012558		135	108
15434	3013036		14	18
15434	3013114		18	5
15434	3013238		127	18
15434	3013257		21	15
15434	3013266		31	2
15434	3013295		66	13
15434	3013300	2815-01-235-9293	16	13
15434	3013305		140	14
15434	3013320		138	17
15434	3013330		69	15
	5315-01-210-0617		144	16
15434	3013331		69	10
	5315-01-210-0616		144	10
15434	3013335		70	7
15434	3013591		78	36
	2910-01-146-7955		155	5
15434	3013623		68	1
			143	1
15434	3013649		32	15
15434	3013786		5	44
			53	15
			58	19
			59	23
			70	4
			72	19
			78	9
			126	12
			131	25
			132	41
			145	8
			146	9
			149	9
			155	34
15434	3013810		135	98

CROSS-REFERENCE INDEXES

PART NUMBER INDEX

FSCM	PART NUMBER	STOCK NUMBER	FIG.	ITEM
15434	3013811		15	63
			135	99
15434	3013904		55	10
			78	20
			155	35
15434	3013930	2815-01-086-4508	75	1
			152	1
15434	3013980		72	17
			149	17
15434	3014010		14	19
15434	3014103		70	16
			145	14
15434	3014157		5	33
15434	3014159		5	29
15434	3014283-		9	4
15434	3014304	5365-01-207-0727	18	20
15434	3014354		55	19
15434	3014404	2910-01-085-8096	78	34
			155	3
15434	3014449	5330-01-173-0890	18	32
15434	3014500		20	3
15434	3014614		77	6
			154	7
15434	3014668	5330-01-201-3616	33	49
15434	3014766		30	1
15434	3014783		150	21
15434	3014784		150	18
15434	3014965	3020-01-104-2334	150	17
15434	3014996		11	45
15434	3015001		11	51
15434	3015002		11	54
15434	3015003		11	58
15434	3015004		11	55
15434	3015005		11	56
15434	3015006		11	57
15434	3015007		11	28
15434	3015008		11	34
15434	3015009		11	31
15434	3015010		11	27
15434	3015029		11	52
15434	3015086		11	36
15434	3015105	5905-01-264-2114	51	21
15434	3015202		11	32
15434	3015224		15	162
15434	3015232	6620-01-239-3804	51	9
15434	3015233	6620-01-239-3701	51	13
15434	3015234	6685-00-365-5572	51	12
15434	3015235	6625-01-240-5073	51	10
			124	16
15434	3015237	6625-01-240-5146	51	32
15434	3015238	6625-01-240-5147	51	33

CROSS-REFERENCE INDEXES

PART NUMBER INDEX

FSCM	PART NUMBER	STOCK NUMBER	FIG.	ITEM
15434	3015261		18	47
15434	3015262		18	48
15434	3015283		140	13
15434	3015520		15	58
			135	104
15434	3015522		15	57
			135	105
15434	3015542		20	10
15434	3015543		20	13
15434	3015544		20	14
15434	3015545		20	4
15434	3015592		15	137
15434	3015750		15	14
15434	3015793		11	40
15434	3015794		11	41
15434	3016021		135	187
15434	3016122		18	28
15434	3016142		18	26
15434	3016306		7	11
15434	3016478		72	14
			149	14
15434	3016631		18	39
15434	3016632		18	41
15434	3016633		18	38
15434	3016786	2815-01-262-5136	152	
15434	3016788	5330-01-043-5492	27	33
15434	3016790	5330-01-202-6712	32	11
15434	3016792	5330-01-237-4960	27	15
15434	3016825		24	21
15434	3016826		24	15
15434	3016887		69	3
			144	3
15434	3016998		13	21
15434	3017002		6	20
15434	3017003		6	16
15434	3017004		6	23
15434	3017031		69	6
			144	6
15434	3017050		72	21
			149	3
15434	3017051		15	28
			15	95
			62	33
			62	100
			135	142
15434	3017052		62	32
			135	184
15434	3017140		15	108
15434	3017655	2815-01-290-9667	32	14
15434	3017748		53	16
15434	3017750	5330-00-861-8592	64	42

CROSS-REFERENCE INDEXES

PART NUMBER INDEX

FSCM	PART NUMBER	STOCK NUMBER	FIG.	ITEM
15434	3017750	5330-00-861-8592	136	22
15434	3017759	4820-00-085-7434	68	7
			143	23
15434	3017961		24	11
15434	3017963	4720-01-241-8794	72	15
			149	15
15434	3018042	2940-01-287-9745	6	19
15434	13018047		14	6
			62	129
15434	3018060		18	37
15434	3018210	3120-01-262-2400	34	
15434	3018453	4810-01-278-7350	62	118
15434	3018640		15	136
15434	3018655		15	76
			135	93
15434	3018673	4820-01-241-3295	59	26
			132	43
15434	3018682		62	34
15434	3018764		53	12
			126	10
15434	3018767		135	175
15434	3018796	2925-01-282-9149	51	15
15434	3018799		51	16
15434	3018800		51	17
15434	3018889		135	14
154-34	3018924		50	8
			123	8
15434	3019035	4720-01-286-8861	7	17
15434	3019158	5330-01-145-5380	53	13
			126	11
15434	3019174		77	9
			154	11
15434	3019180		77	10
			154	12
15434,	3019186		77	11
			154	13
15434	3019192		77	12
			154	14
15434 -	3019198		77	13
			154	15
15434	3019204		77	14
			154	16
15434	3019218		77	15
			154	10
15434	3019227	5330-01-242-0722	141	13
15434	3019573		18	43
15434	3019583		22	32
15434	3019584		22	34
15434	3019620		18	31
15434	3019955		78	42
			155	11

CROSS-REFERENCE INDEXES

PART NUMBER INDEX

FSCM	PART NUMBER	STOCK NUMBER	FIG.	ITEM
15434	3019956		78	43
			155	12
15434	3019957		78	44
			155	13
15434	3019959		78	46
			155	15
15434	3019960		78	47
			155	16
44940	302-1836	6645-01-262-7318	82	26
44940	302-1837		82	56
15434	3020000	5330-01-146-7172	69	20
			144	21
15434	3020002	5330-01-146-9775	69	20
			144	21
15434	3020003	5330-01-146-9928	69	20
			144	21
15434	3020183	5330-01-240-1619	71	15
			146	10
15434	3020185	5330-01-215-4972	71	14
			146	15
15434	3020943	5330-00-659-3178	67	9
			142	12
15434	3020996	4720-01-253-4597	141	11
15434	3021036	2920-01-244-6058	50	9
			123	9
15434	3021361		150	22
15434	3021362		18	22
15434	3021438		23	13
15434	3021440		126	17
15434	3021581	2930-01-065-7113	59	30
			132	47
15434	3021600		74	3
15434	3021601		151	6
15434	3021618	2910-01-234-8235	11	18
15434	3021644		54	17
15434	3021645		127	19
15434	3021692	2815-01-199-6703	21	6
15434	3021704	5330-01-145-6914	71	8
			146	19
15434	3021735	5330-01-082-6985	76	13
			153	14
15434	3022157		33	47
15434	3022183		58	7
			131	8
15434	3022194		139	4
15434	3022209	2940-01-266-7691	54	18
			127	20
15434	3022279		3	27
			124	13
15434	3022299	6620-01-169-9307	5	38
15434	3022340	5330-01-201-3645	21	24

CROSS-REFERENCE INDEXES

PART NUMBER INDEX

FSCM	PART NUMBER	STOCK NUMBER	FIG.	ITEM
15434	3022589		53	6
			126	4
15434	3022590		73	1
			150	12
15434	3022865		55	20
15434	3022867	4710-01-287-9739	55	18
15434	3022961		59	39
			132	32
15434	3023067	2815-01-199-6618	72	11
15434	3023088		15	65
			135	97
15-434	3023130	5330-01-201-3609	18	12
15434	3023171		15	60
			135	102
15434	3023447		15	54
15434	3023473		70	6
			145	6
15434	3023510	2815-00-483-0780	76	18
			153	3
15434	3023534		51	31
15434	3023536		32	4
15434	3023870		15	61
15434	3023994		59	25
			132	42
15434	3024194	2990-01-234-7981	10	36
15434	3024195		10	44
15434	3024709		68	29
		5330-01-145-5381	143	10
15434	3024960	5330-01-146-7314	58	14
			131	11
15434	3024989		15	39
			135	169
15434	3024991		15	46
			135	148
15434	3025253		15	163
15434	3025281		73	12
15434	3025451		31	10
15434	3025458		59	24
			62	130
			132	39
			135	42
15434	3025459		15	164
			62	88
			135	186
15434	3025460		4	7
			15	118
			28	28
			62	61
			135	80
15434	3025485		33	19
15434	3025861		58	35

CROSS-REFERENCE INDEXES

PART NUMBER INDEX

FSCM	PART NUMBER	STOCK NUMBER	FIG.	ITEM
15434	3025861		131	27
15434	3025874	4720-01-287-9729	66	11
15434	3026163		15	93
			135	114
15434	3026246	5945-01-286-8848	14	11
15434	3026274		27	28
15434	3026296		21	21
15434	3026312		29	13
15434	3026313		29	14
15434	3026316		33	35
15434	3026393		11	35
15434	3026421		18	10
15434	3026490		13	8
15434	3026529		141	12
15434	3026556		10	39
		3120-01-147-5275	70	24
			145	18
15434	3026557	3120-01-144-7368	70	17
			145	15
15434	3026595		31	9
15434	3026610	4810-01-290-8757	14	5
15434	3026693		5	8
15434	3026694		5	6
15434	3026925		29	20
15434	3026926	5360-01-262-2370	29	18
15434	3026927	4820-01-268-2314	29	19
15434	3027574		18	17
15434	3027575		18	18
15434	3027629		7	12
15434	3027630		7	9
15434	3027631		7	10
15434	3027633		15	126
			62	50
			135	64
15434	3027706	4720-01-262-5139	13	15
15434	3028075	3120-01-208-8102	78	29
			155	45
15434	3028123	5330-01-201-8692	18	6
			18	15
15434	3028269	3120-01-208-8103	78	50
			155	46
15434	3028279		65	1
			137	1
15434	3028280		58	13
15434	3028282		66	27
15434	3028291		5	16
15434	3028293		68	33
			143	14
15434	3028302		62	17
15434	3028325	4820-01-293-6779	63	15
			135	18
15434	3028992		29	8

CROSS-REFERENCE INDEXES

PART NUMBER INDEX

FSCM	PART NUMBER	STOCK NUMBER	FIG.	ITEM
15434	3028552		11	19
15434	3028616		55	14
15434	3028696		28	19
15434	3028863		5	46
15434	3028888		11	13
15434	3028890		11	17
15434	3028967		66	36
15434	3028997	2930-01-141-9277	66	31
15434	3029032	5330-01-292-9464	67	5
			142	8
15434	3029672		29	32
15434	3029678		29	24
15434	3029683		29	38
15434	3029687		29	33
15434	3029691		29	34
15434	3029692		29	25
15434	3029696		29	35
15434	3029700		29	36
15434	3029701		29	30
15434	3029702		29	31
15434	3029708		29	37
15434	3029857		62	111
			135	128
15434	3030038	2815-01-159-1789	68	30
			143	11
15434	3030207		23	15
15434	3030267		62	6
15434	3030286		66	35
15434	3030487		10	28
15434	3030490		10	32
15434	3030514		6	8
15434	3030518		29	29
15434	3030772		54	16
			127	17
15434	3030774		6	9
15434	3030790		6	3
		4720-00-716-4938	54	13
			127	13
15434	3030970		135	38
15434	3031137		65	2
			137	2
15434	3031158		78	32
15434	3031404		22	24
15434	3031434	5330-01-147-4071	73	22
			150	34
15434	3031544		29	10
15434	3031560	4720-01-085-2571	59	10
15434	3031698		51	24
15434	3031702		124	24
15434	3031707		3	36
			124	27

CROSS-REFERENCE INDEXES

PART NUMBER INDEX

FSCM	PART NUMBER	STOCK NUMBER	FIG.	ITEM
15434	3031734	6680-01-239-5702	51	14
15434	3031736		25	7
15434	3031971		29	3
15434	3031989		29	6
15434	3031998		29	5
15434	3032014		15	171
			62	81
			135	172
15434	3032030	2930-01-262-2424	18	24
15434	3032348	5330-01-147-4072	66	28
15434	3032397		29	9
15434	3032468		6	6
15434	3032627		8	7
			15	11
15434	3032628		8	9
15434	3032633		21	1
15434	3032697		21	4
15434	3032731		25	6
15434	3032795		130	20
15434	3032861	5330-01-147-0748	72	23
			149	20
15434	3032869	4320-01-288-9887	9	14
15434	3032870		9	10
15434	3032872		63	12
			135	16
15434	3032874		78	41
		5330-01-220-2389	155	10
15434	3033005		63	22
			135	17
15434	3033007		63	21
15434	3033013		135	15
15434	3033405		12	9
15434	3033596		8	6
15434	3033597		8	14
15434	3033598		8	11
15434	3033614		8	10
15434	3033626		25	4
15434	3033629		25	5
15434	3033677	5330-00-005-0407	58	34
			131	32
15434	3033714		15	84
15434	3033719		15	92
			62	106
			135	115
15434	3033723		15	90
15434	3033730		62	102
15434	3033732		135	116
15434	3033740		15	79
			135	122
15434	3033742		15	81
			62	113

CROSS-REFERENCE INDEXES

PART NUMBER INDEX

FSCM	PART NUMBER	STOCK NUMBER	FIG.	ITEM
15434	3033742		135	118
15434	3033783		7	5
15434	3033784	5330-01-262-5117	7	6
15434	3033800		3	6
			51	2
			124	5
15434	3033822		78	35
			155	4
15434	3033853		33	26
15434	3033922		33	38
15434	3033929		29	4
15434	3034162		3	10
			124	7
15434	3034209	4320-01-291-2227	62	101
15434	3034221		15	13
15434	3034412		15	80
			135	121
15434	3034438	5315-01-177-7507	70	18
			145	16
15434	3034451		14	10
			62	131
15434	3034452		14	16
			62	132
15434	3034526		56	1
			129	1
15434	3034571		3	11
15434	3034572	2920-01-241-7251	76	21
			153	7
15434	3034574		25	3
15434	3034953	5925-01-240-7815	3	29
			51	22
			124	14
15434	3034985	5930-01-262-5088	124	15
15434	3034999		29	7
15434	3035053	5330-01-160-7460	15	5
15434	3035083		3	9
			51	3
			124	6
15434	3035084		3	7
			51	5
			124	8
15434	3035110		21	11
15434	3035120		51	50
15434	3035126		51	23
15434	3035132		51	45
15434	3035150		51	19
			124	17
15434	3035174	4720-01-212-3541	55	17
15434	3035195		74	2
			151	5
15434	3035230		15	135

CROSS-REFERENCE INDEXES

PART NUMBER INDEX

FSCM	PART NUMBER	STOCK NUMBER	FIG.	ITEM
15434	3035230		135	66
15434	3035248		10	31
15434	3035346	4810-00-887-8358	135	32
15434	3035718		3	16
			124	11
15434	3035719		3	13
			124	10
15434	3035720		124	9
15434	3035727		3	17
15434	3035728		28	29
15434	3035763		3	34
15434	3035766	6645-01-239-4618	51	11
15434	3035796		51	4
			124	3
15434	3035844		5	41
15434	3036018		11	22
			33	42
15434	3036074		31	14
15434	3036125	5340-01-298-2486	146	16
15434	3036306		3	33
			124	30
15434	3036453		51	29
15434	3036455		28	24
15434	3036472		15	170
			62	80
15434	3036474		135	174
15434	3036517		3	8
15434	3036575		3	12
			124	12
			128	19
15434	3036576		124	19
15434	3036577		3	21
15434	3036811		66	40
15434	3036845		25	1
15434	3036901		135	109
15434	3036903		135	112
15434	3036933		69	11
		3120-01-212-4472	144	11
15434	3036934		69	16
		3120-01-079-5451	144	17
15434	3036935	2815-01-146-7914	69	7
			144	7
15434	3036937		69	12
			144	13
15434	3036939	2815-01-166-3415	69	2
			144	2
15434	3036970		62	42
15434	3037045	5365-01-241-3888	77	8
			154	9
15434	3037219		12	10
15434	3037239		25	2

CROSS-REFERENCE INDEXES

PART NUMBER INDEX

FSCM	PART NUMBER	STOCK NUMBER	FIG.	ITEM
15434	3037535		128	18
15434	3037741		51	8
15434	3037821		20	15
15434	3038076		64	10
			136	13
15434	3038215		62	79
15434	3038248		3	14
15434	3038249		3	15
15434	3038725	2815-01-262-2436	29	21
15434	3038903		64	20
			136	24
15434	3038904		64	22
			136	26
15434	3038938		16	6
15434	3039163		24	18
15434	3039164		24	12
15434	3039434		23	14
44940	304-0787		82	55
44940	304-0788		82	44
44940	304-0789-01		82	50
44940	304-0789-02		82	7
44940	304-0790		82	4
15434	3040184		33	30
15434	3040190		33	1
15434	3040705	2815-01-290-9666	25	13
15434	3040720	5330-01-043-5600	16	7
15434	3040721		24	6
15434	3040722	5330-01-201-3640	30	4
15434	3040750		135	61
15434	3040830	2815-01-278-6192	68	6
			143	22
15434	3041968	4720-01-262-9499	66	20
15434	3041991		68	20
			143	32
15434	3041993	2815-01-085-8282	68	3
			143	15
15434	3042568		74	5
			151	2
15434	3042759	5330-01-262-2372	5	39
15434	3043211		28	20
15434	3043213		28	30
15434	3043487		132	20
15434	3043909		31	6
15434	3043910	5340-01-238-7107	31	1
15434	3044189		62	69
15434	3044195		51	30
15434	3044464		33	57
15434	3044632		54	7
			127	11
15434	3044633		60	6
			133	6

CROSS-REFERENCE INDEXES

PART NUMBER INDEX

FSCM	PART NUMBER	STOCK NUMBER	FIG.	ITEM
15434	3044787		64	23
			136	46
15434	3044788	2815-01-262-2455	64	18
			136	23
15434	3044929		128	14
15434	3044942		15	114
			135	101
15434	3044995		15	89
15434	3045163		58	39
			131	34
15434	3045173		15	21
			62	20
			135	137
15434	3045207		62	43
15434	3045212		15	133
15434	3045617		73	20
15434	3045622		73	9
15434	3046110		58	8
			131	7
15434	3046170		66	30
15434	3046200	3010-00-507-8347	15	4
15434	3046227		31	8
15434	3046246		78	24
			155	2
15434	3046364		64	21
		5330-01-240-1660	136	25
15434	3046407		15	147
			62	64
			135	81
15434	3046420	2815-01-263-0137	69	18
			144	19
15434	3046430	2815-01-262-2346	69	19
			144	20
15434	3046680		135	67
15434	3047276		15	64
15434	3047390		31	5
15434	3047402	5330-01-080-5021	68	22
			143	33
15434	3047599	2815-01-250-8088	16	11
15434	3048033		71	7
15434	3048182		62	71
15434	3048228		62	44
15434	3048241		62	40
15434	3048341		15	15
15434	3048351		76	4
			153	8
15434	3048557		15	127
			62	49
			135	63
15434	3048558		15	70
15434	3048559		15	73

CROSS-REFERENCE INDEXES

PART NUMBER INDEX

FSCM	PART NUMBER	STOCK NUMBER	FIG.	ITEM
15434	3048620		21	5
15434	3048725		48	2
15434	3048908		52	9
			125	11
15434	3049018		76	14
			153	16
15434	3049024	2815-01-146-1049	74	4
			151	1
15434	3049555		3	23
			124	21
44940	305-0770	6110-01-262-2353	82	66
15434	3050369		68	16
			143	20
15434	3050394		58	37
		3040-01-287-9736	131	33
15434	3050395	5365-01-287-9725	58	28
			131	20
15434	3050396		58	30
			131	22
15434	3050398	2930-01-262-5175	58	22
			131	15
15434	3050442		10	30
15434	3050447	2930-01-286-6259	10	20
15434	3050454	2930-01-262-2383	10	21
15434	3050624		62	112
			135	127
15434	3050692	5930-01-287-9744	50	4
			123	4
15434	3050694		50	7
			123	7
15434	3050862		140	32
15434	3050863		140	26
15434	3051554		75	10
15434	3051555		152	14
15434	3051560		132	21
15434	3052510		51	28
15434	3052534		71	5
15434	3052770-9867	2910-01-264-2115	62	5
15434	3053010		51	36
15434	3053065		51	25
15434	3053124	2910-01-262-5178	17	3
15434	3055805		135	136
15434	3054218	2910-01-262-5182	137	3
15434	3054219	2910-01-262-5181	65	3
15434	3054292		135	135
15434	3054609		62	128
15434	3054841	5330-01-285-4827	64	13
			136	17
15434	3054889		71	17
15434	3054948		78	45

CROSS-REFERENCE INDEXES

PART NUMBER INDEX

FSCM	PART NUMBER	STOCK NUMBER	FIG.	ITEM
15434	3054948		155	14
15434	3055069		72	26
			149	11
15434	3055099		78	39
			155	8
15434	3055769		140	23
15434	3056139	4720-01-294-7227	126	7
15434	3056155		55	3
			128	2
15434	3056158		55	2
			128	1
15434	3056509		79	10
15434	3056517		79	9
15434	3057436		26	6
15434	3057437		26	7
15434	3057438		3	30
15434	3057439		28	12
15434	3057440	6620-01-262-5128	3	28
15434	3057442		34	8
15434	3057444	5930-01-262-5092	34	7
15434	3057445		34	6
15434	3057448	5930-01-262-5093	3	20
15434	3057817-9348		135	49
15434	3058505		135	50
15434	3059769		28	11
15434	3060820		139	15
15434	3060823		139	14
15434	3060824		139	13
15434	3060827		139	12
15434	3060829		140	22
15434	3060831		140	24
15434	3061846		57	5
44940	307-2611		82	60
44940	307-2612		82	53
44940	307-2613		82	52
44940	307-2614		82	59
44940	307-2615		82	58
44940	308-0069	5930-00-659-9998	82	54
44940	308-0546		82	34
44940	308-0561		82	33
44940	308-0563		82	36
44940	308-0566		82	31
44940	308-0569		82	42
44940	308-0578		82	32
44940	308-0579		82	35
44940	308-0580		82	37
44940	308-0813-01		82	38
44940	309-0258	6620-01-262-2391	84	11
44940	309-0556		88	6
44940	309-0557	5930-01-262-2356	88	12
05427	309M		158	17

CROSS-REFERENCE INDEXES

PART NUMBER INDEX

FSCM	PART NUMBER	STOCK NUMBER	FIG.	ITEM
60248	311032005N		41	6
60248	3110320062		41	11
60248	3110320082		41	24
60248	3110320181		41	9
60248	3110320222		41	20
60248	3110320241		41	18
60248	3110321163		41	26
60248	3110330112		41	27
15434	3175027		27	46
			28	15
15434	3175074		22	21
15434	3175222		10	41
15434	3175239		3	5
			6	12
			51	1
			124	4
15434	3175255		25	15
15434	3175281		33	13
15434	3175452		4	5
15434	3175453		4	6
15434	3175528		18	34
15434	3175543		5	12
15434	3175545	5330-01-201-3629	18	42
15434	3175573	5365-01-201-3678	10	26
15434	3175687		22	7
15434	3175716		22	5
15434	3175792		22	10
15434	3175797		22	14
15434	3175855		23	11
15434	3.175856	5330-01-201-3641	23	12
15434	3175857		10	5
15434	3175908		20	11
15434	3176104		11	6
15434	3176122		18	44
15434	3176127		12	5
15434	3176133		20	9
15434	3176430		25	17
15434	3176590		23	18
15434	3176598		23	17
15434	3176608		23	5
15434	3176637		32	26
15434	3176708		22	26
15434	3176709		22	27
15434	3176710		22	25
15434	3176772		16	19
15434	3176834		18	29
15434	3176835		33	28
15434	3176916		33	25
15434	3176918		27	43
15434	3177039		23	6
15434	3177040		4	8

CROSS-REFERENCE INDEXES

PART NUMBER INDEX

FSCM	PART NUMBER	STOCK NUMBER	FIG.	ITEM
15434	3177108	5330-01-201-3652	11	4
			33	39
15434	3177160		27	40
15434	3177178		27	12
15434	3177195		7	24
15434	3177198		12	6
15434	3177235	2930-01-262-2338	19	9
15434	3177338		7	26
15434	3177366		22	23
15434	3177368		22	29
15434	3177530		23	4
15434	3177543		27	37
15434	3177554		22	15
15434	3177629		22	17
15434	3177708		22	9
15434	3177918		22	22
15434	3177945		33	24
15434	3178076		27	44
44940	319-0039-01		81	11
44940	319-0039-02		81	10
44940	319-0040		81	7
44940	319-0041		81	8
44940	319-0042		81	6
44940	319-0043		81	13
44940	319-0044		81	4
44940	319-0046		82	68
44940	319-0047		82	43
44940	319-0048		82	24
44940	319-0049	5340-01-293-8535	82	25
44940	319-0050		82	22
44940	319-0069		82	57
44940	319-0070		82	8
44940	319-0125		81	12
44940	320-1442		82	39
44940	320-1586		82	30
44940	320-1587		82	40
44940	320-1588		82	41
15434	3200308		11	47
15434	3200802		57	16
			130	15
15434	3201125	5330-01-201-3617	11	24
			33	44
15434	3201311		21	14
15434	3201517	5330-01-043-5601	16	29
15434	3201739		32	24
15434	3201740		32	17
15434	3202117	5330-01-292-9465	128	15
15434	3202144		68	15
			143	19
15434	3202192		16	25
15434	3202193		16	24

CROSS-REFERENCE INDEXES

PART NUMBER INDEX

FSCM	PART NUMBER	STOCK NUMBER	FIG.	ITEM
15434	3202197		16	26
15434	3202202		16	27
15434	3252444		22	11
15434	3275479		7	28
15434	3279503		15	8
15434	3279570-B644	2910-01-262-2402	15	7
15434	3279601		15	9
15434	3279602		15	141
15434	3300908		59	17
			132	17
15434	3302630	5330-01-164-0904	59	18
			132	19
15434	3304173		60	18
			133	17
15434	3308958	5330-01-164-0944	59	19
			132	18
15434	3313279	2940-01-019-4513	59	13
			132	13
15434	3313282	4330-01-262-5170	11	1
15434	3313283		12	2
15434	3313289	4330-01-262-5172	60	17
			133	11
15434	3315847	2910-01-245-9782	56	6
			129	5
15434	3318318	4330-01-245-9790	4	1
15434	3318319	4330-01-262-5169	52	17
			125	17
44940	332-0795		82	64
44940	332-0796		82	63
44940	332-1043		82	61
44940	332-1473		121	5
44940	332-1506		84	12
44940	332-1794		84	2
44940	332-2634		84	5
44940	333-0192		84	16
44940	333-0293		120	22
44940	335-0143		84	8
15434	3351627		146	17
44940	337-0049		82	14
44940	337-0090		121	10
44940	338-2182		82	71
44940	338-2202		82	69
44940	338-2203		82	70
32862	35X2MM		170	30
44940	350-11340		47	6
44940	350-11510		47	55
44940	350-11560		47	53
44940	350-11580		47	54
44940	350-11700		87	20
44940	350-14090		47	4
44940	350-14950		47	23

CROSS-REFERENCE INDEXES

PART NUMBER INDEX

FSCM	PART NUMBER	STOCK NUMBER	FIG.	ITEM
15434	3524648		7	29
44940	354-13010		87	14
44940	354-13460		87	18
44940	354-13480		87	19
44940	358-13380		47	15
44940	358-13470		47	14
44940	359-0082		82	47
15434	3608833		77	7
			154	17
44940	362-12800		47	46
44940	364-10840	5961-01-262-2398	47	47
44940	364-10850	5961-01-266-7640	47	48
51671	3661-077		181	18
51671	3681-104		172	9
			173	12
			174	10
			178	44
51671	3681-106		174	16
68225	37A126	4330-01-287-9741	39	15
68225	37A12601		39	17
15434	3801056	2815-01-165-0765	75	
15434	3801260	3120-01-132-9339	75	
			154	
15434	3801328	2815-01-152-9219	78	
15434	3801330	5330-01-149-9715	78	
			143	
15434	3801436	2815-01-262-2389	31	11
15434	3801468	5330-01-252-5248	78	
15434	3801522		128	
15434	3801523		128	
15434	3801592	2815-01-291-2243	78	1
			155	18
15434	3801614	2950-01-262-2430	128	22
15434	3801643	5330-01-262-5149	17	
15434	3801708	2930-01-288-9888	58	32
			131	24
15434	3801710	2930-01-287-9733	58	
			144	
15434	3801712	2930-01-262-5153	58	
			131	
15434	3801717	5330-01-262-5147	33	
15434	3801718	5330-01-262-5148	22	
15434	3801770	2815-01-293-3028	152	11
15434	3801779		155	
15434	3801826	2815-00-011-7786	78	38
			155	7
15434	3801876	2815-01-262-9492	75	7
15434	3801941	2950-01-262-5174	55	28
15434	3802004	2930-01-237-6299	105	2
15434	3802005	2815-01-194-3722	110	11
15434	3802006	2815-01-194-3723	110	13

CROSS-REFERENCE INDEXES

PART NUMBER INDEX

FSCM	PART NUMBER	STOCK NUMBER	FIG.	ITEM
15434	3802007		110	
15434	3802010	3120-01-211-5250	119	1
15434	3802016	5330-01-266-7643	120	
15434	3802019	5330-01-236-5735	120	
15434	3802050	2815-01-211-2001	116	7
15434	3802061		109	1
15434	3802100	2815-01-278-0876	116	6
15434	3802113		96	21
15434	3827107		52	16
			125	16
15434	3900068	5315-01-188-0760	120	3
15434	3900215		113	5
15434	3900216		113	6
15434	3900227		98	1
			105	1
15434	3900242		108	3
15434	3900245		108	4
15434	3900250	2815-01-199-0448	110	12
15434	3900257		120	10
15434	3900267	5325-01-194-4354	100	17
			111	6
15434	3900269		118	2
15434	3900276	5360-01-195-5362	110	9
15434	3900299	2815-01-194-3775	110	8
15434	3900589		103	4
15434	3900620		91	5
			115	3
15434	3900621		91	3
15434	3900627		117	5
15434	3900629		100	16
			111	5
			112	1
			113	9
15434	3900630		96	6
			103	1
15434	3900631		101	4
15434	3900632		93	2
			106	1
15434	3900633		112	2
15434	3900677		114	1
15434	3900678		98	4
15434	3900687		120	11
15434	3900706	5305-01-197-1663	108	7
15434	3900808	5310-01-193-7492	109	4
15434	3900919	5305-01-190-1478	116	4
15434	3900955		120	9
15434	3900956		120	5
15434	3900958		120	12
15434	3900965		120	6
15434	3900967		120	2
15434	3901019	5330-01-190-1910	117	7

CROSS-REFERENCE INDEXES

PART NUMBER INDEX

FSCM	PART NUMBER	STOCK NUMBER	FIG.	ITEM
15434	3901020	2815-01-212-3977	120	14
15434	3901097	2815-01-194-3776	110	10
15434	3901170	3120-01-193-9475	116	5
15434	3901221		108	2
15434	3901249		120	19
15434	3901258		119	6
15434	3901306	2815-01-211-0167	120	4
15434	3901356	5330-01-190-7581	96	14
15434	3901395		118	1
15434	3901446		112	3
15434	3901569	2815-01-193-2638	116	3
15434	3901706	5365-01-194-4784	116	1
15434	3901757		94	1
15434	3901761		115	4
15434	3901774	3020-01-262-3343	118	4
15434	3901793	2815-01-211-3886	116	2
15434	3901804	4720-01-192-9648	96	2
15434	3901805	5330-01-190-1905	96	11
15434	3901919		96	16
15434	3901961		96	12
15434	3901999	5330-01-193-0182	96	20
15434	3902295		106	12
15434	3902332		102	4
			115	2
15434	3902338	2815-01-211-5270	106	5
15434	3902343		120	15
15434	3902425		106	9
			113	8
15434	3902460		97	2
15434	3902501		103	3
15434	3902604		107	4
15434	3902606		110	5
15434	3902666	5330-01-190-7443	107	3
15434	3902709		98	3
15434	3903035		101	1
15434	3903037		99	3
			101	2
15434	3903089		91	6
15434	3903090	3030-01-243-4664	90	3
15434	3903095		90	4
15434	3903096		93	1
15434	3903103		94	2
15434	3903202	4330-01-266-7673	99	11
15434	3903261	5360-01-207-7341	106	10
15434	3903282		117	10
15434	3903301	5330-01-190-1904	93	5
15434	3903380		100	13
		5330-01-195-5268	109	2
15434	3903381		99	5
15434	3903463		112	6
15434	3903475	5330-01-191-8047	112	7

CROSS-REFERENCE INDEXES

PART NUMBER INDEX

FSCM	PART NUMBER	STOCK NUMBER	FIG.	ITEM
15434	3903609		100	1
15434	3903652		97	1
15434	3903723		100	2
15434	3903740	4710-01-203-0224	96	8
15434	3903744	4710-01-193-7944	96	10
15434	3903745	4720-01-271-6946	96	9
15434	3903756		93	3
15434	3903757		93	6
15434	3903794		112	8
15434	3903834		89	1
15434	3903845		99	12
77408	3903857		90	6
77408	3903858		90	7
15434	3903924	2815-01-189-1760	112	12
15434	3903927	5330-01-190-7477	112	13
15434	3903938		110	2
15434	3903939		110	1
15434	3903940		108	1
15434	3904044	5330-01-190-9555	101	5
15434	3904056	5330-01-266-3297	111	8
15434	3904057	2920-01-192-4469	89	2
15434	3904217		120	1
15434	3904230		111	3
15434	3904294		120	16
15434	3904320		106	3
15434	3904341		96	18
			100	5
15434	3904344		100	6
15434	3904345		100	7
15434	3904353	5330-01-191-4513	112	5
15434	3904374		101	6
15434	3904386		106	8
			113	7
15434	3904427	5330-01-191-2965	106	2
15434	3904446		96	15
15434	3904483		119	5
15434	3904549		90	5
15434	3904630		102	28
15434	3904631		102	18
15434	3904632		102	9
15434	3904633		102	10
15434	3904634		102	7
15434	3904635		102	30
15434	3904636		102	8
15434	3904637		102	15
15434	3904638		102	16
15434	3904639		102	17
15434	3904640		102	14
15434	3904641		102	19
15434	3904642		102	20
15434	3904643		102	5

CROSS-REFERENCE INDEXES

PART NUMBER INDEX

FSCM	PART NUMBER	STOCK NUMBER	FIG.	ITEM
15434	3904644		102	6
15434	3904645		102	27
15434	3904646		102	26
15434	3904647		102	32
15434	3904648		102	33
15434	3904649		102	31
15434	3904650		102	24
15434	3904651		102	22
15434	3904652		102	21
15434	3904653		102	23
15434	3904654		102	25
15434	3904679		108	9
15434	3904690		98	2
15434	3904711		100	3
15434	3904712		100	4
15434	3904777		102	29
15434	3904778		102	35
15434	3904779		102	36
15434	3904780		102	37
15434	3904781		102	11
15434	3904849		112	10
15434	3904981		92	1
15434	3904986		97	4
15434	3904991		120	
15434	3905023		111	9
15434	3905223		113	10
15434	3905307		100	12
15434	3905351		99	6
15434	3905353		99	10
15434	3905363		99	9
15434	3905364		99	8
15434	3905375		99	7
15434	3905387		103	2
15434	3905388		100	20
15434	3905391		100	15
15434	3905403		99	1
15434	3905405		99	2
15434	3905417		96	13
15434	3905425		120	17
15434	3905426		90	1
15434	3905440		120	20
15434	3905443	5330-01-218-1201	96	17
15434	3905468	5330-01-190-1914	113	11
15434	3905649		101	3
15434	3905685	5330-01-190-1912	103	6
15434	3905692		100	18
15434	3905703		100	19
15434	3905831	2815-01-244-5481	118	3
15434	3905933		112	15
15434	3906029		100	8
15434	3906030		100	9

CROSS-REFERENCE INDEXES

PART NUMBER INDEX

FSCM	PART NUMBER	STOCK NUMBER	FIG.	ITEM
15434	3906031		100	10
15434	3906032		100	11
15434	3906080		119	2
15434	3906081		119	3
15434	3906413	2815-01-237-3552	114	2
15434	3906526		117	6
15434	3906593	4720-01-190-2581	111	4
15434	3906610		112	18
15434	3906619		106	6
			120	7
15434	3906623		96	3
15434	3906693	5330-01-255-0176	112	14
15434	3906697		94	3
15434	3906698		105	3
15434	3906704	5330-01-191-6065	120	21
15434	3907049		107	1
15434	3907054	5330-01-195-1514	110	3
15434	3907156		116	8
15434	3907172		97	3
15434	3907431	3020-01-262-3344	115	1
15434	3907446	2815-01-242-3003	115	5
15434	3907485		102	13
15434	3907486		102	38
15434	3907487		102	12
15434	3907493		102	34
15434	3907537		113	2
15434	3907555		108	11
15434	3907570		113	3
15434	3907586	2805-01-263-3979	111	7
15434	3907836	5330-01-269-1509	112	16
15434	3907860		113	1
15434	3907998		112	11
15434	3908031	2815-01-284-1118	119	4
15434	3908082		96	19
15434	3908095		117	3
15434	3908560		91	8
15434	3908563		91	7
15434	3908612		112	17
15434	3908616	2940-01-265-3262	106	7
15434	3909356	5330-01-267-2985	109	3
15434	3909376	5340-01-265-7072	106	11
15434	3909410	5330-01-192-2037	117	11
15434	3909546		96	4
15434	3909670		111	2
15434	3909695		100	14
15434	3909888		98	5
15434	3910248		117	8
15434	3910260	5330-01-272-1124	117	9
15434	3910275		110	4
15434	3910411		112	19
15434	3910500	5330-01-255-9293	112	9

CROSS-REFERENCE INDEXES

PART NUMBER INDEX

FSCM	PART NUMBER	STOCK NUMBER	FIG.	ITEM
15434	3910527		91	1
15434	3910540		117	1
15434	3910713		91	4
15434	3910715		91	2
15434	3910810		108	8
15434	3910811		108	5
15434	3910814		108	10
15434	3910824	5330-01-281-8997	107	2
15434	3910992		97	6
15434	3911185	2910-01-266-7679	109	5
15434	3911315		90	2
15434	3911331		103	5
15434	3911462		92	2
15434	3911535		113	4
15434	3912072		111	1
			117	2
15434	3912473	5330-01-271-9375	117	4
15434	3912587		93	4
15434	3912638		106	4
15434	3912772		112	4
15434	3912852-1890	2910-01-294-1940	102	1
15434	4BT3.9		88	3
57301	4P22204		49	25
57301	4P22601		49	32
77408	40-2719-8068		35	1
77408	40-2898-1371		157	1
77408	40-2905-1484		46	2
77408	40-2905-1821		1	1
77408	40-2951-2149		35	2
77408	40-3017-8043		46	1
77408	40-3017-8049		1	2
44940	402-0030		121	18
44940	402-0568		121	24
44940	402-0603		82	16
44940	402-0604		82	21
44940	403-2631-01		121	16
44940	403-2631-02		121	17
44940	403-2632		121	1
44940	406-0633		82	23
15434	40662-A	5330-00-361-2955	76	16
			153	17
77408	41-4899-1699		156	2
77408	41-5035-8047		156	1
21198	410-039-10		175	19
44940	410-10034		47	18
15434	41044-1		149	5
44940	414ER03S27R12A		47	50
44940	414E115F1503A		47	56
57301	42KG312-08-601	2990-01-287-9746	49	1
15434	43282-C		23	3
15434	43463-A	5330-00-159-1464	53	8

CROSS-REFERENCE INDEXES

PART NUMBER INDEX

FSCM	PART NUMBER	STOCK NUMBER	FIG.	ITEM
15434	43463-A	5330-00-159-1464	58	21
			126	9
			131	12
15434	43765		63	8
			135	26
15434	43828-A		55	15
			66	10
			96	7
			138	16
15434	43828-D		139	10
			140	7
15434	43828-E		5	4
15434	43828-F		5	31
			140	15
77408	44-9500-0100		156	4
15434	44678		15	180
			62	72
			135	183
68225	45C101	2520-01-290-1669	38	3
68225	45C103		38	20
68225	45C105	4420-01-286-8874	38	19
68225	45C106		38	6
68225	45C107		38	17
68225	45C109	5330-01-287-1309	38	9
68225	45C112		38	8
68225	45C115		38	16
68225	45C116		38	18
68225	45C117		38	13
68225	45C118		38	12
68225	45C119		38	10
68225	45C121		38	7
68225	45C123		38	4
68225	45C125		38	5
68225	45C128		38	15
68225	45C305		38	14
68225	45C306		38	11
44940	450-11760	5905-01-262-2454	47	49
44940	450-11910		47	34
44940	450-11990		47	35
44940	450-12860		47	13
			87	17
44940	450-13000		47	3
44940	450-14950		87	21
44940	450-17200		87	26
44940	450-17400		47	39
44940	450-21300		47	40
44940	458-11160		47	26
44940	458-11840		47	7
44940	458-11850		47	8
44940	458-11860		47	11
44940	458-11870		47	10

CROSS-REFERENCE INDEXES

PART NUMBER INDEX

FSCM	PART NUMBER	STOCK NUMBER	FIG.	ITEM
44940	458-11880		47	9
44940	458-12960		47	28
44940	458-12970		47	42
44940	458-14150		47	51
44940	458-14460		47	21
44940	458-20200		47	22
44940	458-22800		47	45
44940	462-12400		47	32
15434	4851	3020-00-353-9273	76	20
			153	5
44940	501-0532		104	2
44940	502-1035		104	3
44940	502-1036		104	5
44940	503-0354		86	8
44940	503-0365		86	5
44940	503-0868		95	2
44940	503-0998		95	10
44940	503-0999		95	15
44940	503-1379-01		86	9
44940	503-1391-01		86	6
44940	503-1542		95	16
44940	503-1543		95	11
44940	504-0028	4820-01-225-8925	86	30
44940	506-0104		88	14
44940	508-0001		81	9
44940	508-0059		88	13
44940	508-0071		85	8
44940	508-0114		84	10
44940	508-0117	5325-01-160-9660	82	67
61208	5091		148	60
68225	510-710-1		40	3
68225	510-710-11		40	15
68225	510-710-12		40	16
68225	510-710-15		40	4
68225	510-710-16		40	12
68225	510-710-17		40	13
68225	510-710-18		40	10
68225	510-710-19		40	9
68225	510-710-2		40	11
68225	510-710-20		40	2
68225	510-710-21		40	8
68225	510-710-3		40	14
68225	510-710-4		40	17
68225	510-710-5		40	5
68225	510-710-6		40	6
57301	52-017		2	
57301	52-021		34	
57301	52-029	2995-01-253-6394	2	
57301	52-034		2	
57301	52-043		2	
57301	52-056		2	

CROSS-REFERENCE INDEXES

PART NUMBER INDEX

FSCM	PART NUMBER	STOCK NUMBER	FIG.	ITEM
57301	52-405		2	
44940	520-0923-01		83	12
75665	520X00266		158	7
75665	520X00290		158	9
75665	520X00718		158	8
57301	52447-12	2990-01-262-7326	2	1
44940	526-0008		83	8
44940	526-0018		82	17
			83	17
44940	526-0022		82	12
44940	526-0115		83	22
44940	526-0158		84	14
44940	526-0219		121	8
			121	22
44940	526-0238		121	15
44940	526-0280		86	2
44940	526-0327		83	9
44940	539-0922		85	1
44940	539-0923		83	1
44940	539-0953		104	1
61208	5499E		148	38
61208	5713	3020-00-384-0958	148	7
15434	600-2887		156	5
15434	60408		71	3
			76	8
			78	17
			146	6
			153	6
			155	24
44940	612-6459	2090-01-291-2231	82	1
15434	62182		32	10
15434	62279		5	19
15434	62392		11	44
15434	63223		5	32
15434	63385		136	2
15434	63842		58	12
			66	39
			141	2
15434	65274	5330-00-246-0309	72	9
			149	8
15434	65434	5365-01-293-1749	63	19
			135	13
61208	6614F		147	32
15434	66292		78	13
			155	26
15434	67185	4720-01-168-2657	139	11
			140	8
15434	67211		78	8
15434	67279		34	5
32862	6730112129		162	8
32862	6730162286		162	2

CROSS-REFERENCE INDEXES

PART NUMBER INDEX

FSCM	PART NUMBER	STOCK NUMBER	FIG.	ITEM
32862	6730217179		162	4
15434	67369		5	5
15434	67684		14	3
			62	115
			135	30
15434	67946		28	17
			59	40
			72	27
			132	33
			149	12
15434	68061-A		15	69
			135	91
15434	68138		22	1
15434	68139		28	2
			61	14
			138	12
15434	68152		61	11
			134	10
15434	68193		74	6
			151	3
15434	68241	5340-00-463-5218	140	28
15434	68274	5360-00-664-5343	59	41
			132	34
15434	68365	3120-00-566-0480	73	8
			150	19
15434	68425		51	47
			52	5
			64	5
			125	6
			136	6
15434	68445		21	17
			33	2
			78	18
			155	27
15434	68585		78	7
		5315-00-014-1195	155	43
15434	68606		63	27
			135	19
15434	68645		133	16
15434	68908		30	10
15434	68910	5330-00-365-6349	11	33
15434	69047-A		66	37
			141	1
16954	691-10014	5330-00-252-8888	62	92
61208	6931	3020-00-366-0138	147	5
15434	69318		138	13
15434	69324		27	3
			62	3
			155	49
15434	69465		55	12
			128	8

CROSS-REFERENCE INDEXES

PART NUMBER INDEX

FSCM	PART NUMBER	STOCK NUMBER	FIG.	ITEM
15434	69519		29	40
			73	14
			150	23
15434	69521	3120-00-627-6697	73	11
			150	15
			150	31
			150	37
15434	69558		31	4
15434	69699		68	2
			143	2
15434	69736		69	4
			144	4
15434	69793		63	14
			64	1
			135	9
			136	5
15434	69901		78	19
			155	28
15434	69911-A		51	48
15434	69962		28	16
60248	7000014050		41	25
60248	7000014060		41	21
60248	7000212085		41	7
60248	7000216150		41	17
60248	7001010045		41	12
60248	7001014040		41	2
15434	70089-1	5330-00-537-2382	66	19
			78	22
			132	10
			155	37
15434	70183		10	25
44940	7019-10000		47	2
60248	7022016000		41	16
15434	70262		51	27
			124	26
15434	70295		10	43
			66	6
			141	9
15434	70310		3	31
			51	26
			124	29
60248	7032010000		41	13
60248	7032012000		41	8
60248	7032014000		41	3
60248	7040008045		41	15
60248	7040010032		41	10
60248	7040014045		41	14
60248	7040110040		41	5
60248	7040111055	5315-01-173-0793	41	23
60248	7040117040		41	4
60248	7040120055	5315-01-173-0792	41	22

CROSS-REFERENCE INDEXES

PART NUMBER INDEX

FSCM	PART NUMBER	STOCK NUMBER	FIG.	ITEM
15434	70415		4	10
			15	150
			135	191
15434	70470		52	10
			125	12
15434	70550		70	5
		2815-01-124-0232	75	3
			145	4
			152	4
15434	70646		51	34
15434	70653		71	4
			78	15
			146	7
			155	29
15434	70657		76	12
			153	13
15434	70662		32	12
			33	8
15434	70690		15	125
			62	47
			135	62
15434	70700		15	116
			62	68
			135	84
15434	70704		15	29
			62	91
			62	104
			135	46
			135	107
15434	70705		15	179
			62	73
			135	182
15434	70709		50	5
			123	5
15434	70713		62	86
15434	70715		15	169
			62	84
			135	173
15434	70716		15	178
			62	82
			135	181
15434	70717		15	173
			62	74
			135	176
15434	70717-A		15	174
			62	75
			135	177
15434	70717-B		15	175
			62	76
			135	178
15434	70760		15	91

CROSS-REFERENCE INDEXES

PART NUMBER INDEX

FSCM	PART NUMBER	STOCK NUMBER	FIG.	ITEM
15434	70772		68	23
			143	4
15434	70772-B		15	55
			135	106
15434	70775		15	74
			135	113
15434	70778		15	155
			135	204
15434	70790		15	82
			62	103
			135	120
15434	70791		135	123
15434	70798		15	156
			135	203
15434	70811		15	159
			135	198
15434	70811-A		15	160
			135	199
15434	70811-B		15	161
			135	200
15434	70813		15	152
			135	192
15434	70815		15	124
			135	60
15434	70820		15	154
			135	205
15434	70823		135	201
15434	70834		15	153
			135	194
15434	70836		135	197
15434	70861	5330-01-201-3619	5	35
			27	50
62144	7156		173	4
15434	7274	5330-00-609-8860	138	5
62144	7375	4610-01-299-6167	171	4
62144	7379		181	5
62144	7380		180	6
62144	7382		178	17
62144	7383		182	5
62144	7384		176	4
62144	7385		178	46
62144	7386		178	36
62144	7387		177	1
62144	7388		178	30
62144	7389		179	3
62144	7390		178	1
62144	7391		183	1
62144	7392		176	5
			178	53
62144	7393		184	1
62144	7394		174	1

CROSS-REFERENCE INDEXES

PART NUMBER INDEX

FSCM	PART NUMBER	STOCK NUMBER	FIG.	ITEM
61208	7441A		147	46
			148	55
44940	750-1010		95	5
68225	7524		43	37
			44	8
68225	7534		45	18
68225	7621		45	24
68225	7704		43	77
			44	45
68225	7706		43	68
			44	37
68225	7736		43	64
			44	33
68225	7830		45	16
32862	8X1.5MM		170	36
44940	800-0006		84	15
44940	800-0008		82	18
44940	800-0012		83	18
44940	800-0024		82	9
44940	800-0026		121	4
44940	800-0028		82	13
44940	800-0048		85	2
44940	800-0071		121	19
44940	800-0090		121	6
44940	800-0153		121	12
44940	800-0520		121	23
44940	800-2008		85	11
44940	800-2056		81	2
44940	800-2060		83	20
44940	800-2068		86	21
44940	800-2110		95	3
44940	800-2111		88	1
			121	9
68225	8013		43	76
			44	46
62531	805-007		172	8
			173	11
			174	9
			178	43
62531	805-007-8		174	15
15434	8078		11	37
62531	808-005		181	19
44940	812-0029		82	6
			82	49
44940	812-0061		82	46
44940	812-0075		88	4
44940	812-0079		82	20
68225	8127	3110-01-287-9720	42	12
44940	813-0096		82	2
44940	813-0103		83	4
44940	813-0105		82	65

CROSS-REFERENCE INDEXES

PART NUMBER INDEX

FSCM	PART NUMBER	STOCK NUMBER	FIG.	ITEM
44940	815-0180		83	10
44940	815-0544		82	62
44940	815-0549		82	51
57301	82F-050013-16		2	55
44940	821-0013		84	4
44940	821-0018		81	3
			86	11
44940	821-0028		86	26
44940	821-0029		86	14
			95	8
44940	821-0030		86	3
61208	8247		147	51
44940	825-0008		88	9
15434	8265		76	10
			153	11
62531	830-002		178	12
15434	8306		4	9
14403	832061	4810-01-262-2386	179	9
62531	839-101		181	17
62531	839-167		173	13
62531	839-210		172	10
44940	850-0025		88	5
44940	850-0030		88	8
44940	850-0038		84	7
44940	850-0055		121	20
44940	850-0060		88	2
			121	11
44940	850-0079		121	14
44940	850-2008		83	21
			86	22
44940	850-2012		95	4
44940	853-0008		82	3
44940	853-0013		85	5
44940	856-0008		121	3
44940	856-0010		85	9
44940	856-0013		121	7
44940	858-0008		82	10
21198	858-001-10		175	18
44940	862-0001		84	6
			85	4
44940	862-0004		121	21
44940	862-0008		121	13
44940	862-0015		82	11
44940	870-0053		83	13
44940	870-0131		83	7
44940	870-0183		82	45
44940	870-0212		82	15
			83	16
			84	3
44940	870-0250		85	6
44940	870-0257		121	2

CROSS-REFERENCE INDEXES

PART NUMBER INDEX

FSCM	PART NUMBER	STOCK NUMBER	FIG.	ITEM
44940	870-0281		86	1
			95	7
44940	870-1220		82	5
			82	48
44940	871-0010		88	7
61208	8718		148	61
44940	898-0863		84	9
57301	90001-016		49	18
57301	90001-030		2	41
57301	90001-034		2	39
57301	90001-046		49	11
57301	90001-161		2	47
57301	90002-010		49	22
57301	90209-19		2	9
57301	90211-09		2	30
			49	12
57301	90401		2	43
57301	90402-25		2	18
57301	90408-07		49	33
57301	90408-08		49	20
57301	90408-09		49	30
57301	90424		49	43
68225	91E240-03	4320-01-287-9738	42	17
57301	91003		2	14
57301	91004-01		2	25
57301	91005		2	6
57301	91281		2	29
		2995-01-253-6396	49	45
57301	91380	2995-01-253-6395	49	5
57301	91389		49	36
57301	91394		49	26
57301	91502-0612		2	52
57301	91516		49	34
57301	92001-01		2	21
57301	92001-15		49	44
57301	92105-06		49	24
57301	92107-15		2	3
57301	92127-07		2	10
15434	9245		76	3
			153	21
57301	92527		2	7
57301	92528		49	6
57301	92531		49	29
57301	93004		2	24
57301	93005-01		2	44
57301	93005-05		49	42
57301	93007		2	15
57301	93047		2	34
			49	9
57301	93050		2	40
57301	93050-02		49	14

CROSS-REFERENCE INDEXES

PART NUMBER INDEX

FSCM	PART NUMBER	STOCK NUMBER	FIG.	ITEM
57301	93061-07		2	12
57301	93065		49	39
57301	93066		49	23
57301	93069-04		49	27
57301	93501-04		2	54
57301	93502-13		49	17
57301	93556-4		2	56
61208	9561		147	34

CROSS-REFERENCE INDEXES

FIGURE AND ITEM NUMBER INDEX

FIG.	ITEM	STOCK NUMBER	FSCM	PART NUMBER
1	1		77408	40-2905-1821
1	2		77408	40-3017-8049
1	3	2815-01-297-3773	15434	S.0.51165-KTA50M
1	4	2815-01-275-4753	15434	S.0.51180-KTA50M
2			57301	52-017
2			57301	52-034
2			57301	52-043
2			57301	52-056
2			57301	52-405
2		2995-01-253-6394	57301	52-029
2	1	2990-01-262-7326	57301	52447-12
2	2		57301	11F-031218-24
2	3		57301	92107-15
2	4		57301	18822
2	5		57301	22685
2	6		57301	91005
2	7		57301	92527
2	8		57301	18828
2	9		57301	90209-19
2	10		57301	92127-07
2	11		57301	14F-019024-08
2	12		57301	93061-07
2	13		57301	18817
2	14		57301	91003
2	15		57301	93007
2	16		57301	14F-025020-16
2	17		57301	18810
2	18		57301	90402-25
2	19		57301	14F-012540-08
2	20		57301	2P20862-02
2	21		57301	92001-01
2	22		57301	2P20182
2	23		57301	18779
2	24		57301	93004
2	25		57301	91004-01
2	26		57301	2P20156-01
2	27		57301	18801
2	28		57301	18780
2	29		57301	91281
2	30		57301	90211-09
2	31		57301	18830
2	32		57301	1P20195
2	33		57301	16F-025028-12
2	34		57301	93047
2	35		57301	2P20252
2	36		57301	22376
2	37		57301	16F-025020-20
2	38		57301	22318
2	39		57301	90001-034
2	40		57301	93050
2	41		57301	90001-030

CROSS-REFERENCE INDEXES

FIGURE AND ITEM NUMBER INDEX

FIG.	ITEM	STOCK NUMBER	FSCM	PART NUMBER
2	42		57301	20903
2	43		57301	90401
2	44		57301	93005-01
2	45		57301	2P22235-06
2	46		57301	22165
2	47		57301	90001-161
2	48		57301	14F-031218-08
2	49		57301	14F-031218-16
2	50		57301	1P20468
2	51		57301	21880
2	52		57301	91502-0612
2	53		57301	2P22239-01
2	54		57301	93501-04.
2	55		57301	82F-050013-16
2	56		57301	93556-4
3			15434	15.08-01
3	1		96906	MS35295-87
3	2		96906	MS35338-47
3	3		15434	S-622
3	4		15434	103023
3	5		15434	3175239
3	6		15434	3033800
3	7		15434	3035084
3	8		15434	3036517
3	9		15434	3035083
3	10		15434	3034162
3	11		15434	3034571
3	12		15434	3036575
3	13		15434	3035719
3	14		15434	3038248
3	15		15434	3038249
3	16		15434	3035718
3	17		15434	3035727
3	18	4810-01-262-5076	15434	154706
3	19	5930-00-655-1515	96906	MS35058-23
3	20	5930-01-262-5093	15434	3057448
3	21		15434	3036577
3	22	5930-00-655-1514	96906	MS35058-22
3	23		15434	3049555
3	24	5930-01-262-5089	15434	3010649
3	25		15434	3010653
3	26	5930-01-262-5090	15434	3010647
3	27		15434	3022279
3	28	6620-01-262-5128	15434	3057440
3	29	5925-01-240-7815	15434	3034953
3	30		15434	3057438
3	31		15434	70310
3	32		15434	S-256
3	33		15434	3036306
3	34		15434	3035763
3	35		15434	127814

CROSS-REFERENCE INDEXES

FIGURE AND ITEM NUMBER INDEX

FIG.	ITEM	STOCK NUMBER	FSCM	PART NUMBER
3	36		15434	3031707
4			15434	08.08-01
4	1	4330-01-245-9790	15434	3318318
4	2		15434	S-197
4	3		96906	MS35338-8
4	4		15434	145528
4	5		15434	3175452
4	6		15434	3175453
4	7		15434	3025460
4	8		15434	3177040
4	9		15434	8306
4	10		15434	70415
5			15434	08.07-01
5	1		96906	MS35295-62
5	2		15434	S-112
5	3		15434	S-606-A
5	4		15434	43828-E
5	5		15434	67369
5	6		15434	3026694
5	7	5330-01-201-3659	15434	206460
5	8		15434	3026693
5	9	5330-01-201-3660	15434	207515
5	10		15434	205354
5	11		96906	MS35338-8
5	12		15434	3175543
5	13	5330-01-201-3630	15434	3008710
5	14		15434	205976
5	15		15434	3002956
5	16		15434	3028291
5	17		15434	206709
5	18		15434	S-109
5	19		15434	62279
5	20		15434	3008469
5	21		15434	3001375
5	22		15434	206527
5	23		15434	206559
5	24		15434	S-126
5	25		15434	206555
5	26		15434	206556
5	27		15434	S-105
5	28		15434	S-223
5	29		15434	3014159
5	30		15434	217632
5	31		15434	43828-F
5	32		15434	63223
5	33		15434	3014157
5	34		15434	3003379
5	35	5330-01-201-3619	15434	70861
5	36		15434	205323
5	37		15434	205377
5	38	6620-01-169-9307	15434	3022299

CROSS-REFERENCE INDEXES

FIGURE AND ITEM NUMBER INDEX

FIG.	ITEM	STOCK NUMBER	FSCM	PART NUMBER
5	39	5330-01-262-2372	15434	3042759
5	40	5330-01-201-3661	15434	206443
5	41		15434	3035844
5	42		15434	205669
5	43		15434	S-611
5	44		15434	3013786
5	45		15434	3008466
5	46		15434	3028863
6			15434	10.04-01
6	1		15434	125741
6	2		15434	112836
6	3		15434	3030790
6	4		15434	140313
6	5		15434	140314
6	6		15434	3032468
6	7	2940-01-262-5185	15434	178957
6	8		15434	3030514
6	9		15434	3030774
6	10		15434	S-119
6	11		96906	MS35338-7
6	12		15434	3175239
6	13		15434	S-117
6	14		96906	MS35338-8
6	15		15434	197221
6	16		15434	3017003
6	17		15434	S-111
6	18		96906	MS35338-7
6	19	2940-01-287-9745	15434	3018042
6	20		15434	3017002
6	21		96906	MS35295-87
6	22		96906	MS35338-47
6	23		15434	3017004
7			15434	12.01-01
7	1		15434	3003697
7	2		15434	S-137-A
7	3		96906	MS35338-14
7	4		15434	112501
7	5		15434	3033783
7	6	5330-01-262-5117	15434	3033784
7	7		15434	S-910-B
7	8		15434	3010595
7	9		15434	3027630
7	10		15434	3027631
7	11		15434	3016306
7	12		15434	3027629
7	13		15434	3012475
7	14		96906	MS35338-8
7	15		15434	108722
7	16		96906	MS27183-14
7	17	4720-01-286-8861	15434	3019035
7	18		15434	118346

CROSS REFERENCE INDEXES

FIGURE AND ITEM NUMBER INDEX

FIG.	ITEM	STOCK NUMBER	FSCM	PART NUMBER
7	19		15434	S-1039-A
7	20		15434	S-955
7	21		15434	S-112
7	22		96906	MS18154-10
7	23		96906	MS122032
7	24		15434	3177195
7	25	5330-01-226-8748	15434	216187
7	26		15434	3177338
7	27	5330-01-043-5605	15434	201048
7	28		15434	3275479
7	29		15434	3524648
7	30	5330-01-043-5604	15434	206576
8			15434	06.04-01
8	1		15434	S-123
8	2		15434	S-611
8	3		15434	S-117
8	4		96906	MS35338-8
8	5		96906	MS27183-14
8	6		15434	3033596
8	7		15434	3032627
8	8		15434	AM12084SS
8	9		15434	3032628
8	10		15434	3033614
8	11		15434	3033598
8	12		15434	109753
8	13		15434	S-988
8	14		15434	303597
8	15		15434	199616
8	16		15434	S-981
8	17		15434	S-960-D
8	18		15434	193498
8	19		15434	252193
8	20	5330-00-224-9820	15434	252598
8	21	4330-01-287-9740	15434	256835
8	22		15434	2521598
9			15434	07.01.2-01
9	1		15434	AD20052SS
9	2		15434	S-963-B
9	3		15434	AD20077SS
9	4		15434	3014283
9	5		15434	S-937-C
9	6		15434	151441
9	7		15434	166112
9	8		15434	S-123
9	9		15434	S-611
9	10		15434	3032870
9	11		15434	S-121-B
9	12		96906	MS35338-47
9	13		15434	S-217
9	14	4320-01-288-9887	15434	3032869
10			15434	08.01-01
10	1		15434	199919

CROSS-REFERENCE INDEXES

FIGURE AND ITEM NUMBER INDEX

FIG.	ITEM	STOCK NUMBER	FSCM	PART NUMBER
10	2		96906	MS35338-8
10	3		15434	191772
10	4		96906	MS27183-14
10	5		15434	3175857
10	6		15434	S-606-A
10	7	5330-01-201-3658	15434	207540
10	8		15434	207539
10	9		15434	3008468
10	10		15434	S-907-A
10	11		15434	3008470
10	12		15434	3002108
10	13		96906	MS35295-87
10	14		96906	MS35338-47
10	15	5330-01-201-3627	15434	206457
10	16	5330-01-043-5602	15434	206193
10	17		15434	3008494
10	18	5330-01-201-3657	15434	206455
10	19	5330-01-201-3626	15434	3007512
10	20	2930-01-286-6259	15434	3050447
10	21	2930-01-262-2383	15434	3050454
10	22	5330-01-201-3515	15434	206198
10	23	5365-01-202-2581	15434	206196
10	24		15434	206195
10	25		15434	70183
10	26	5365-01-201-3678	15434	3175573
10	27	3110-00-554-3197	15434	S-16054
10	28		15434	3030487
10	29	3110-00-293-9302	15434	S-16069
10	30		15434	3050442
10	31		15434	3035248
10	32		15434	3030490
10	33		15434	S-962-E
10	34		15434	S-162-A
10	35	5330-01-201-3656	15434	206416
10	36	2990-01-234-7981	15434	3024194
10	37		15434	205166
10	38		15434	205168
10	39		15434	3026556
10	40		15434	207251
10	41		15434	3175222
10	42		15434	206742
10	43		15434	70295
10	44		15434	3024195
10	45		15434	205156
10	46		15434	130083
10	47		15434	3004686
10	48		15434	3004682
11	1	4330-01-262-5170	15434	3313282
11	2		15434	191772
11	3		15434	S-606-A
11	4	5330-01-201-3652	15434	3177108

CROSS-REFERENCE INDEXES

FIGURE AND ITEM NUMBER INDEX

FIG.	ITEM	STOCK NUMBER	FSCM	PART NUMBER
11	5	5330-01-201-3653	15434	3011650
11	6		15434	3176104
11	7		96906	MS35295-62
11	8		96906	MS35338-8
11	9		15434	170664
11	10		15434	3000911
11	11	5330-01-113-2188	15434	145529
11	12		15434	205659
11	13		15434	3028888
11	14		96906	MS90728-61
11	15		15434	3008465
11	16		15434	3000909
11	17		15434	3028890
11	18	2910-01-234-8235	15434	3021618
11	19		15434	3028552
11	20		15434	S-102-A
11	21		96906	MS35338-7
11	22		15434	3036018
11	23		15434	205350
11	24	5330-01-201-3617	15434	3201125
11	25	5360-01-237-4946	15434	205349
11	26	2530-01-234-7832	15434	205348
11	27		15434	3015010
11	28		15434	3015007
11	29	5315-00-253-3408	15434	148976
11	30	5360-00-082-0124	15434	144195
11	31		15434	3015009
11	32		15434	3015202
11	33	5330-00-365-6349	15434	68910
11	34		15434	3015008
11	35		15434	3026393
11	36		15434	3015086
11	37		15434	8078
11	38		15434	S-113
11	39		15434	S-608
11	40		15434	3015793
11	41		15434	3015794
11	42		96906	MS90725-6
11	43		96906	MS122032
11	44		15434	62392
11	45		15434	3014996
11	46		15434	145578
11	47		15434	3200308
11	48		15434	3008469
11	49		15434	3008466
11	50		15434	S-107
11	51		15434	3015001
11	52		15434	3015029
11	53		15434	S-1747
11	54		15434	3015002
11	55		15434	3015004

CROSS-REFERENCE INDEXES

FIGURE AND ITEM NUMBER INDEX

FIG.	ITEM	STOCK NUMBER	FSCM	PART NUMBER
11	56		15434	3015005
11	57		15434	3015006
11	58		15434	3015003
12			15434	07.05-01
12	1		15434	AM06018SS
12	2		15434	3313283
12	3		96906	MS90728-91
12	4		96906	MS35338-47
12	5		15434	3176127
12	6		15434	3177198
12	7	5330-00-582-7484	96906	MS9021-116
12	8		15434	139473
12	9		15434	3033405
12	10		15434	3037219
12	11		15434	3004272
13			15434	10.02-01
13	1		15434	S-186-C
13	2		15434	S-224
13	3		96906	MS122032
13	4		15434	146159
13	5		15434	108707
13	6		15434	S-223
13	7		15434	108330
13	8		15434	3026490
13	9		15434	S-109
13	10		96906	MS35338-8
13	11		96906	MS27183-14
13	12		15434	107460
13	13		15434	130489
13	14		96906	MS35842-13
13	15	4720-01-262-5139	15434	3027706
13	16		15434	3006724
13	17		15434	3006723
13	18		15434	153408
13	19	4720-01-085-6131	15434	155789
13	20		15434	3003448
13	21		15434	3016998
13	22		15434	202839
13	23		15434	3002718
13	24		15434	S-924-C
13	25		15434	S-912-C
13	26		15434	3006722
13	27		15434	108722
13	28		15434	S-167-A
13	29		15434	114850
13	30	5930-01-067-8418	15434	196074
13	31		15434	S-967
13	32		15434	112105
13	33		15434	AS04030SS
13	34		15434	AS04060SS
13	35		15434	212024

CROSS REFERENCE INDEXES

FIGURE AND ITEM NUMBER INDEX

FIG.	ITEM	STOCK NUMBER	FSCM	PART NUMBER
14			15434	XP05.06-01
14	1		15434	S-189-C
14	2		15434	181466
14	3		15434	67684
14	4	5330-00-951-3538	15434	154087
14	5	4810-01-290-8757	15434	3026610
14	6		15434	3018047
14	7		15434	S-607
14	8		15434	129838
14	9		15434	195265
14	10		15434	3034451
14	11	5945-01-286-8848	15434	3026246
14	12		15434	129839
14	13	5330-00-081-9299	15434	129888
14	14		15434	129768
14	15		15434	196057
14	16		15434	3034452
14	17	5330-00-132-0274	15434	190876
14	18		15434	3013036
14	19		15434	3014010
15			15434	05-01
15	1		15434	206326
15	2		96906	MS35338-47
15	3		15434	S-217
15	4	3010-00-507-8347	15434	3046200
15	5	5330-01-160-7460	15434	3035053
15	6		15434	BM-73108
15	7	2910-01-262-2402	15434	3279570-B644
15	8		15434	3279503
15	9		15434	3279601
15	10		15434	BM-30245
15	11		15434	3032627
15	12		15434	BM-76340
15	13		15434	3034221
15	14		15434	3015750
15	15		15434	3048341
15	16		15434	S-110
15	17		96906	MS35338-7
15	18		15434	146160
15	19		15434	212613
15	20		15434	212602
15	21		15434	3045173
15	22		15434	3002110
15	23		15434	212607
15	24		15434	212603
15	25		15434	3004724
15	26		15434	212609
15	27		15434	212610
15	28		15434	3017051
15	29		15434	70704
15	30		15434	200998

CROSS-REFERENCE INDEXES

FIGURE AND ITEM NUMBER INDEX

FIG.	ITEM	STOCK NUMBER	FSCM	PART NUMBER
15	31		15434	113244
15	32		15434	201010
15	33		15434	201008
15	34		15434	201745
15	35		96906	MS16624-1050
15	36		15434	163826
15	37		15434	3006550
15	38		15434	211635
15	39		15434	3024989
15	40		15434	211633
15	41		15434	211636
15	42		15434	163944
15	43		15434	144178
15	44		15434	144179
15	45		15434	143848
15	46		15434	3024991
15	47		15434	146437
15	48		15434	212639
15	49		15434	212605
15	50		15434	212604
15	51		15434	S-16052
15	52		15434	212601
15	53		15434	212668
15	54		15434	3023447
15	55		15434	70772-B
15	56		15434	S-631
15	57		15434	3015522
15	58		15434	3015520
15	59		15434	S-251
15	60		15434	3023171
15	61		15434	3023870
15	62		15434	214150
15	63		15434	3013811
15	64		15434	3047276
15	65		15434	3023088
15	66		15434	S-213-A
15	67		15434	179822
15	68		15434	3001707
15	69		15434	68061-A
15	70		15434	3048558
15	71		15434	S-16240
15	72		15434	145505
15	73		15434	3048559
15	74		15434	70775
15	75		15434	145504
15	76		15434	3018655
15	77		15434	214144
15	78		15434	S-248
15	79		15434	3033740
15	80		15434	3034412
15	81		15434	3033742

CROSS-REFERENCE INDEXES

FIGURE AND ITEM NUMBER INDEX

FIG.	ITEM	STOCK NUMBER	FSCM	PART NUMBER
15	82		15434	70790
15	83		15434	181466
15	84		15434	3033714
15	85		15434	110855
15	86		15434	119364
15	87		15434	175865
15	88		15434	100217
15	89		15434	3044995
15	90		15434	3033723
15	91		15434	70760
15	92		15434	3033719
15	93		15434	3026163
15	94		15434	153346
15	95		15434	3017051
15	96		15434	151900
15	97		15434	153336
15	98		15434	153338
15	99		15434	160514
15	100		15434	100099
15	101		15434	202897
15	102		15434	139988
15	103		15434	S-2286
15	104		15434	3000446
15	105		15434	213769
15	106		15434	3006175
15	107		15434	213768
15	108		15434	3017140
15	109		15434	3006343
15	110		15434	3006344
15	111		15434	100478
15	112		15434	163945
15	113		15434	128807
15	114		15434	3044942
15	115		15434	201007
15	116		15434	70700
15	117		15434	146483
15	118		15434	3025460
15	119		15434	163733
15	120		15434	109915
15	121		15434	202682
15	122		15434	108384
15	123		15434	3000594
15	124		15434	70815
15	125		15434	70690
15	126		15434	3027633
15	127		15434	3048557
15	128		15434	3009380
15	129		15434	101841
15	130		15434	101842
15	131		15434	101843
15	132		15434	143848

CROSS-REFERENCE INDEXES

FIGURE AND ITEM NUMBER INDEX

FIG.	ITEM	STOCK NUMBER	FSCM	PART NUMBER
15	133		15434	3045212
15	134		15434	118227
15	135		15434	3035230
15	136		15434	3018640
15	137		15434	3015592
15	138		15434	100193
15	139		15434	214139
15	140		15434	105375
15	141		15434	3279602
15	142		15434	124019
15	143		15434	3003156
15	144		15434	110058
15	145		15434	112408
15	146		15434	S-251
15	147		15434	3046407
15	148		15434	3010945
15	149		15434	3010943
15	150		15434	70415
15	151		15434	3010941
15	152		15434	70813
15	153		15434	70834
15	154		15434	70820
15	155		15434	70778
15	156		15434	70798
15	157		15434	109686
15	158		96906	MS16627-1093
15	159		15434	70811
15	160		15434	70811-A
15	161		15434	70811-B
15	162		15434	3015224
15	163		15434	3025253
15	164		15434	3025459
15	165		15434	203619
15	166		96906	MS122032
15	167		15434	141632
15	168		15434	144195
15	169		15434	70715
15	170		15434	3036472
15	171		15434	3032014
15	172		15434	3001160
15	173		15434	70717
15	174		15434	70717-A
15	175		15434	70717-B
15	176		15434	189800
15	177		15434	203346
15	178		15434	70716
15	179		15434	70705
15	180		15434	44678
16			15434	03.01/03.01.1-01
16	1		15434	3012474
16	2		15434	S-169-A

CROSS-REFERENCE INDEXES

FIGURE AND ITEM NUMBER INDEX

FIG.	ITEM	STOCK NUMBER	FSCM	PART NUMBER
16	3		96906	MS35338-8
16	4		96906	MS27183-14
16	5		15434	3010388
16	6		15434	3038938
16	7	5330-01-043-5600	15434	3040720
16	8		15434	205393
16	9		15434	205128
16	10		15434	205394
16	11	2815-01-250-8088	15434	3047599
16	12		15434	207344
16	13	2815-01-235-9293	15434	3013300
16	14		15434	207226
16	15		15434	194037
16	16	5310-00-732-0560	96906	MS51968-14
16	17	5305-00-947-3437	15434	168306
16	18	2815-01-042-5010	15434	205138
16	19		15434	3176772
16	20		15434	203933
16	21		15434	205129
16	22		15434	S-125
16	23		15434	108602
16	24		15434	3202193
16	25		15434	3202192
16	26		15434	3202197
16	27		15434	3202202
16	28		15434	3008469
16	29	5330-01-043-5601	15434	3201517
17			15434	06.01-01
17		5330-01-262-5149	15434	3801643
17	1		15434	165006
17	2		15434	3006696
17	3	2910-01-262-5178	15434	3053124
17	4	3040-01-200-3010	15434	205462
17	5	2910-01-199-6615	15434	207244
18			15434	10.01-01
18	1		15434	205314
18	2		96906	MS35338-8
18	3		96906	MS27183-14
18	4		15434	S-155
18	5		15434	3013114
18	6	5330-01-201-8692	15434	3028123
18	7		15434	199919
18	8		15434	206438
18	9		15434	S-910-B
18	10		15434	3026421
18	11		15434	206436
18	12	5330-01-201-3609	15434	3023130
18	13		15434	206434
18	14	5330-01-178-1761	15434	206435
18	15	5330-01-201-8692	15434	3028123
18	16		15434	S-149-A

CROSS-REFERENCE INDEXES

FIGURE AND ITEM NUMBER INDEX

FIG.	ITEM	STOCK NUMBER	FSCM	PART NUMBER
18	17		15434	3027574
18	18		15434	3027575
18	19	5330-01-204-2184	15434	206277
18	20	5365-01-207-0727	15434	3014304
18	21		15434	3012475
18	22		15434	3021362
18	23	5330-01-201-8691	15434	3011580
18	24	2930-01-262-2424	15434	3032030
18	25		15434	140315
18	26		15434	3016142
18	27		96906	MS35295-62
18	28		15434	3016122
18	29		15434	3176834
18	30		96906	MS35295-66
18	31		15434	3019620
18	32	5330-01-173-0890	15434	3014449
18	33	5330-01-201-3630	15434	3008710
18	34		15434	3175528
18	35		15434	S-109
18	36		15434	3008690
18	37		15434	3018060
18	38		15434	3016633
18	39		15434	3016631
18	40		15434	172640
18	41		15434	3016632
18	42	5330-01-201-3629	15434	3175545
18	43		15434	3019573
18	44		15434	3176122
18	45		15434	S-165-B
18	46		15434	S-608
18	47		15434	3015261
18	48		15434	3015262
19			15434	07.05.01-01
19	1		15434	3002126
19	2		96906	MS35295-62
19	3		96906	MS35338-8
19	4		15434	3009322
19	5	5330-01-201-3655	15434	3009324
19	6		15434	3009321
19	7	5330-01-201-3654	15434	3009323
19	8	5330-01-178-1760	15434	206021
19	9	2930-01-262-2338	15434	3177235
19	10	5330-01-077-5228	15434	212161
20			15434	11.01-01
20	1		15434	S-104
20	2		96906	MS35338-8
20	3		15434	3014500
20	4		15434	3015545
20	5		15434	S-962-E
20	6		15434	206326
20	7		15434	135783

CROSS-REFERENCE INDEXES

FIGURE AND ITEM NUMBER INDEX

FIG.	ITEM	STOCK NUMBER	FSCM	PART NUMBER
20	8		15434	S-153
20	9		15434	3176133
20	10		15434	3015542
20	11		15434	3175908
20	12		15434	206557
20	13		15434	3015543
20	14		15434	3015544
20	15		15434	3037821
21			15434	02.01-01
21	1		15434	3032633
21	2		15434	205059
21	3		15434	203131
21	4		15434	3032697
21	5		15434	3048620
21	6	2815-01-199-6703	15434	3021692
21	7		15434	205091
21	8		15434	205094
21	9		15434	205208
21	10		15434	3001663
21	11		15434	3035110
21	12		15434	207241
21	13		15434	205169
21	14		15434	3201311
21	15		15434	3013257
21	16		15434	3002158
21	17		15434	68445
21	18		15434	206224
21	19		15434	205401
21	20		15434	3009109
21	21		15434	3026296
21	22		15434	205093
21	23		15434	3009089
21	24	5330-01-201-3645	15434	3022340
21	25	5330-01-202-2542	15434	207448
21	26	5330-01-202-2543	15434	205852
21	27	5330-01-202-2544	15434	205855
21	28	5330-01-202-2545	15434	205858
22			15434	06.03-01
22		5330-01-262-5148	15434	3801718
22	1		15434	68138
22	2		15434	AS04010SS
22	3		15434	S-1047-A
22	4		15434	3008465
22	5		15434	3175716
22	6		15434	S-910-B
22	7		15434	3175687
22	8		15434	S-1008-A
22	9		15434	3177708
22	10		15434	3175792
22	11		15434	3252444
22	12		15434	S-120

CROSS-REFERENCE INDEXES

FIGURE AND ITEM NUMBER INDEX

FIG.	ITEM	STOCK NUMBER	FSCM	PART NUMBER
22	13		96906	MS35338-8
22	14		15434	3175797
22	15		15434	3177554
22	16		15434	191772
22	17		15434	3177629
22	18		15434	121229
22	19		15434	AS06034SL
22	20		15434	AS06032SL
22	21		15434	3175074
22	22		15434	3177918
22	23		15434	3177366
22	24		15434	3031404
22	25		15434	3176710
22	26		15434	3176708
22	27		15434	3176709
22	28	5330-00-143-8485	15434	131026
22	29		15434	3177368
22	30		15434	3001811
22	31		15434	127018
22	32		15434	3019583
22	33		15434	S-965-E
22	34		15434	3019584
22	35	5330-01-201-3621	15434	3001340
23			15434	01.08-01
23	1		15434	106289
23	2		15434	S-608
23	3		15434	43282-C
23	4		15434	3177530
23	5		15434	3176608
23	6		15434	3177039
23	7		15434	S-109
23	8		96906	MS35338-8
23	9		15434	205413
23	10		15434	205354
23	11		15434	3175855
23	12	5330-01-201-3641	15434	3175856
23	13		15434	3021438
23	14		15434	3039434
23	15		15434	3030207
23	16	5330-00-290-9486	15434	108172
23	17		15434	3176598
23	18		15434	3176590
24			15434	04.01-01
24	1		96906	MS35295-62
24	2		96906	MS35338-8
24	3		96906	MS27183-14
24	4		15434	S-126
24	5		15434	3009631
24	6		15434	3040721
24	7		15434	3002886
24	8		15434	3002993

CROSS-REFERENCE INDEXES

FIGURE AND ITEM NUMBER INDEX

FIG.	ITEM	STOCK NUMBER	FSCM	PART NUMBER
24	9		15434	205439
24	10		15434	205492
24	11		1543.4	3017961
24	12		15434	3039164
24	13		15434	205438
24	14		15434	205071
24	15		15434	3016826
24	16		15434	213559
24	17		15434	205069
24	18		15434	3039163
24	19		15434	205438
24	20		15434	205068
24	21		15434	3016825
24	22		15434	213559
24	23		15434	206231
24	24		15434	AR-10627
24	25		15434	205227
25			15434	01.02-01
25	1		15434	3036845
25	2		15434	3037239
25	3		15434	3034574
25	4		15434	3033626
25	5		15434	3033629
25	6		15434	3032731
25	7		15434	3031736
25	8		15434	206580
25	9		15434	206590
25	10		15434	206600
25	11		15434	206610
25	12		15434	3000139
25	13	2815-01-290-9666	15434	3040705
25	14		15434	3004262
25	15		15434	3175255
25	16		15434	206904
25	17		15434	3176430
25	18		15434	131584
26			15434	16.03-01
26	1		15434	S-189
26	2		15434	S-611
26	3		15434	S-204
26	4		15434	S-152-A
26	5		15434	S-640
26	6		15434	3057436
26	7		15434	3057437
27			15434	08.13.1/01.09-01
27	1		15434	206451
27	2		15434	135783
27	3		15434	69324
27	4		15434	206326
27	5		15434	3007668
27	6		15434	S-188-C

CROSS-REFERENCE INDEXES

FIGURE AND ITEM NUMBER INDEX

FIG.	ITEM	STOCK NUMBER	FSCM	PART NUMBER
27	7		96906	MS122032
27	8		15434	3001954
27	9		15434	S-145
27	10		15434	111445
27	11		15434	3007667
27	12		15434	3177178
27	13		15434	S-2268
27	14	3120-01-201-3700	15434	205683
27	15	5330-01-237-4960	15434	3016792
27	16		15434	185804
27	17		96906	MS35338-47
27	18		96906	MS90728-95
27	19		15434	3007401
27	20		15434	3007402
27	21		15434	108767
27	22		15434	3007403
27	23		15434	3007404
27	24		15434	127571
27	25		15434	206406
27	26	5330-01-201-3642	15434	206407
27	27		15434	205133
27	28		15434	3026274
27	29		15434	102020
27	30		15434	3008468
27	31		15434	S-127
27	32		15434	110266
27	33	5330-01-043-5492	15434	3016788
27	34		15434	132770
27	35		15434	3008466
27	36		15434	3002158
27	37		15434	3177543
27	38		15434	206527
27	39		15434	206526
27	40		15434	3177160
27	41		96906	MS35295-87
27	42		15434	138912
27	43		15434	3176918
27	44		15434	3178076
27	45		15434	S-162-A
27	46		15434	3175027
27	47		15434	103023
27	48		15434	206158
27	49	5330-01-201-3618	15434	145600
27	50	5330-01-201-3619	15434	70861
28			15434	07.01-01
28	1		15434	AS04024SS
28	2		15434	68139
28	3		15434	S-1047-A
28	4		15434	AS10009SS
28	5		15434	111365
28	6		15434	100501

CROSS-REFERENCE INDEXES

FIGURE AND ITEM NUMBER INDEX

FIG.	ITEM	STOCK NUMBER	FSCM	PART NUMBER
28	7		15434	103023
28	8		96906	MS35338-47
28	9		15434	S-111
28	10		96906	MS27183-14
28	11		15434	3059769
28	12		15434	3057439
28	13		15434	206029
28	14		15434	135783
28	15		15434	3175027
28	16		15434	69962
28	17		15434	67946
28	18		15434	200845
28	19		15434	3028696
28	20		15434	3043211
28	21		96906	MS90728-91
28	22		15434	3008468
28	23		15434	3008470
28	24		15434	3036455
28	25		15434	108767
28	26		15434	3000082
28	27		15434	3002158
28	28		15434	3025460
28	29		15434	3035728
28	30		15434	3043213
29			15434	07.06-01
29	1		15434	103023
29	2		15434	151355
29	3		15434	3031971
29	4		15434	3033929
29	5		15434	3031998
29	6		15434	3031989
29	7		15434	3034999
29	8		15434	3028392
29	9		15434	3032397
29	10		15434	3031544
29	11		15434	S-113
29	12		15434	149134
29	13		15434	3026312
29	14		15434	3026313
29	15		15434	107695
29	16		15434	3001719
29	17		15434	127316
29	18	5360-01-262-2370	15434	3026926
29	19	4820-01-268-2314	15434	3026927
29	20		15434	3026925
29	21	2815-01-262-2436	15434	3038725
29	22		15434	197032
29	23		96906	MS35338-47
29	24		15434	3029678
29	25		15434	3029692
29	26		15434	205377

CROSS-REFERENCE INDEXES

FIGURE AND ITEM NUMBER INDEX

FIG.	ITEM	STOCK NUMBER	FSCM	PART NUMBER
29	27		96906	MS35338-8
29	28		15434	199919
29	29		15434	3030518
29	30		15434	3029701
29	31		15434	3029702
29	32		15434	3029672
29	33		15434	3029687
29	34		15434	3029691
29	35		15434	3029696
29	36		15434	3029700
29	37		15434	3029708
29	38		15434	3029683
29	39		15434	107948
29	40		15434	69519
29	41		15434	3000632
30			15434	01.07-01
30	1		15434	3014766
30	2		96906	MS27183-14
30	3		15434	207373
30	4	5330-01-201-3640	15434	3040722
30	5	3020-01-200-2459	15434	3004681
30	6		15434	3004686
30	7		15434	130083
30	8		15434	3008971
30	9		15434	S-112
30	10		15434	68908
30	11		15434	3007971
30	12		15434	S-302
30	13		15434	3006299
30	14	3020-01-200-2449	15434	3004683
30	15	3020-01-258-2776	15434	3008970
30	16		15434	3006298
31			15434	01.04-01
31	1	5340-01-238-7107	15434	3043910
31	2		15434	3013266
31	3		15434	205126
31	4		15434	69558
31	5		15434	3047390
31	6		15434	3043909
31	7		15434	3000573
31	8		15434	3046227
31	9		15434	3026595
31	10		15434	3025451
31	11	2815-01-262-2389	15434	3801436
31	12		15434	205269
31	13		15434	205200
31	14		15434	3036074
32			15434	16.01-01
32	1		15434	205565
32	2		15434	S-150-A
32	3		15434	S-611

CROSS-REFERENCE INDEXES

FIGURE AND ITEM NUMBER INDEX

FIG.	ITEM	STOCK NUMBER	FSCM	PART NUMBER
32	4		15434	3023536
32	5		15434	205059
32	6		15434	131584
32	7		15434	S-116
32	8		96906	MS35338-50
32	9		15434	S-181
32	10		15434	62182
32	11	5330-01-202-6712	15434	3016790
32	12		15434	70662
32	13	5330-01-224-2860	15434	207551
32	14	2815-01-290-9667	15434	3017655
32	15		15434	3013649
32	16	2815-00-787-6505	15434	124507
32	17		15434	3201740
32	18		15434	169834
32	19		15434	206092
32	20		15434	S-306
32	21		15434	206091
32	22		15434	206090
32	23	5330-00-951-3538	15434	102827
32	24		15434	3201739
32	25		15434	206093
32	26		15434	3176637
33		2815-01-207-3716	15434	3007525
33		5330-01-262-5147	15434	3801717
33	1		15434	3040190
33	2		15434	68445
33	3		15434	206742
33	4		15434	206224
33	5		15434	3008466
33	6		15434	3008468
33	7		15434	3002993
33	8		15434	70662
33	9		15434	148582
33	10		96906	MS90728-91
33	11		15434	205199
33	12		15434	3000138
33	13		15434	3175281
33	14		15434	3008370
33	15		15434	176307
33	16		15434	205584
33	17		15434	139990
33	18		15434	205573
33	19		15434	3025485
33	20		15434	206588
33	21		15434	206587
33	22		15434	205149
33	23		15434	205230
33	24		15434	3177945
33	25		15434	3176916
33	26		15434	3033853

CROSS-REFERENCE INDEXES

FIGURE AND ITEM NUMBER INDEX

FIG.	ITEM	STOCK NUMBER	FSCM	PART NUMBER
33	27		15434	180261
33	28		15434	3176835
33	29		15434	175830
33	30		15434	3040184
33	31	4820-01-235-3615	15434	AR-11509
33	32		15434	199919
33	33		96906	MS35338-8
33	34		15434	127362
33	35		15434	3026316
33	36	5330-01-201-3664	15434	3011651
33	37		15434	191772
33	38		15434	3033922
33	39	5330-01-201-3652	15434	3177108
33	40		15434	S-110
33	41		96906	MS35338-7
33	42		15434	3036018
33	43		15434	205350
33	44	5330-01-201-3617	15434	3201125
33	45	5360-01-237-4946	15434	205349
33	46		15434	205348
33	47		15434	3022157
33	48	5330-01-238-3210	15434	205115
33	49	5330-01-201-3616	15434	3014668
33	50	5330-01-201-3615	15434	3011076
33	51		15434	3011884
33	52		15434	206028
33	53		15434	205059
33	54		15434	205684
33	55		15434	152364
33	56		15434	3008465
33	57		15434	3044464
33	58		15434	3007441
33	59		15434	205741
33	60		15434	205742
33	61		15434	205743
33	62		15434	205744
33	63		15434	205745
33	64		15434	205746
34			15434	08.12-01
34			57301	52-021
34		3120-01-262-2400	15434	3018210
34		5330-00-888-4988	15434	BM-68356
34		5330-01-075-0948	15434	3010242
34	1		15434	S-111
34	2		15434	S-221
34	3		15434	S-609
34	4		15434	119665
34	5		15434	67279
34	6		15434	3057445
34	7	5930-01-262-5092	15434	3057444
34	8		15434	3057442

CROSS-REFERENCE INDEXES

FIGURE AND ITEM NUMBER INDEX

FIG.	ITEM	STOCK NUMBER	FSCM	PART NUMBER
35	1		77408	40-2719-8068
35	2		77408	40-2951-2149
35	3	2010-01-290-9632	68225	WAV850PT
35	4	2010-01-293-8587	68225	WAV850SB
36	1		D8835	FIGURE 36 24P1
36	2		D8835	WAV850-H39
36	3		D8835	WAV850-H38
36	4		D8835	WAV850-H41
36	5		D8835	WAV850-H140
36	6		D8835	WAV850-H24
36	7		D8835	WAV850-H24A
36	8		D8835	WAV850-H6
36	9		D8835	WAV850-H20
36	10		D8835	WAV850-H16
36	11		D8835	WAV850-H23
36	12		D8835	WAV850-H26
36	13		D8835	WAV850-H25
36	14		D8835	WAV850-H128
36	15		D8835	WAV850-H22A
36	16		D8835	WAV850-H22B
36	17		D8835	WAV850-H312
36	18		D8835	WAV850-H101A
36	19		D8835	WAV850-H101B
36	20		D8835	WAV850-H19
36	21		D8835	WAV850-H142
36	22		D8835	WAV850-H143
36	23		D8835	WAV850-H18C
36	24		D8835	WAV850-H18B
36	25		D8835	WAV850-H18
36	26	4820-01-287-9717	68225	125364
36	27		D8835	WAV850-H14C
36	28		D8835	WAV850-H14B
36	29		D8835	WAV850-H14
36	30		D8835	WAV850-H139
36	31		D8835	WAV850-H15
36	32		D8835	WAV850-H100A
36	33		D8835	WAV850-H100B
36	34		D8835	WAV850-H18A
36	35		D8835	WAV850-H14A
36	36		D8835	WAV850-H144
36	37		D8835	WAV850-V12
36	38		D8835	WAV850-V13
36	39		D8835	WAV850-V21
36	40		D8835	WAV850-V20
36	41		D8835	WAV850-H141
36	42		D8835	WAV850-V34
36	43		D8835	WAV850-H33
36	44		D8835	WAV850-H32
36	45		D8835	WAV850-H28
36	46		D8835	WAU850-H29
36	47		D8835	WAV850-H30

CROSS-REFERENCE INDEXES

FIGURE AND ITEM NUMBER INDEX

FIG.	ITEM	STOCK NUMBER	FSCM	PART NUMBER
36	48		D8835	WAV850-H31A
36	49		D8835	WAV850-H34
36	50		D8835	WAV850-H35
36	51		D8835	WAV850-H13A
36	52		D8835	WAV850-H13
36	53		D8835	WAV850-H12
36	54		D8835	WAV850-H25A
36	55		D8835	WAV850-H11B
36	56		D8835	WAV850-H11A
36	57		D8835	WAV850-H42
36	58		D8835	WAV850-H43
36	59		D8835	WAV850-H161B
36	60		D8835	WAV850-H161A
36	61		D8835	WAV850-H160
36	62	4820-01-286-8846	68225	158186
36	63		D8835	WAV850-H75
36	64		D8835	WAV850-H129
36	65		D8835	WAV850-H164
36	66		D8835	WAV850-H128
36	67		D8835	WAV850-H44
36	68		D8835	WAV850-H73
36	69		D8835	WAV850-H46B
36	70	6685-01-286-8858	68225	121156
36	71		D8835	WAV850-H46A
36	72		D8835	WAV850-H45
36	73		D8835	WAV850-H9
36	74		D8835	WAV850-H8
36	75		D8835	WAV850-H100
36	76		D8835	WAV850-H10A
36	77		D8835	WAV850-H10B
36	78		D8835	WAV850-E23
36	79		D8835	WAV850-H21
36	80		D8835	WAV850-H5B
36	81		D8835	WAV850-H5A
36	82		D8835	WAV850-H17
36	83		D8835	WAV850-H4
36	84		D8835	WAV850-H7
36	85		D8835	WAV850-G43
36	86		D8835	WAV850-G3
36	87		D8835	WAV850-H3
36	88		D8835	WAV850-H2B
36	89		D8835	WAV850-H2A
37	1	4720-01-286-8862	68225	DOH-1000
37	2		68225	DOH2081
37	3		68225	DOH2247
37	4	4820-01-286-8853	68225	DOH435
37	5		68225	DOH2021
37	6	4720-01-286-8863	68225	DOH234-84
37	7		68225	DOH2024
38	1		D8835	WAV850-A2
38	2		D8835	WAV850-A2A

CROSS-REFERENCE INDEXES

FIGURE AND ITEM NUMBER INDEX

FIG.	ITEM	STOCK NUMBER	FSCM	PART NUMBER
38	3	2520-01-290-1669	68225	45C101
38	4		68225	45C123
38	5		68225	45C125
38	6		68225	45C106
38	7		68225	45C121
38	8		68225	45C112
38	9	5330-01-287-1309	68225	45C109
38	10		68225	45C119
38	11		68225	45C306
38	12		68225	45C118
38	13		68225	45C117
38	14		68225	45C305
38	15		68225	45C128
38	16		68225	45C115
38	17		68225	45C107
38	18		68225	45C116
38	19	4420-01-286-8874	68225	45C105
38	20		68225	45C103
39			68225	3A40404
39	1		D8835	WAV850-A83
39	2		D8835	WAV850-A80
39	3	4330-01-286-8872	68225	3A4040
39	4		D8835	WAV850-A82
39	5		68225	3A404019
39	6		68225	3A404020
39	7		68225	3A40409
39	8		68225	3A40408
39	9		68225	3A404012
39	10		68225	3A40407
39	11		68225	3A404016
39	12		68225	3A404015
39	13		68225	3A40402
39	14		D8835	WAV850-A38
39	15	4330-01-287-9741	68225	37A126
39	16		68225	3A404010
39	17		68225	37A12601
39	18		68225	3A404017
39	19		68225	3A404011
39	20		68225	3A404018
39	21		68225	3A40401
39	22		D8835	WAV850-A36
40	1	4820-01-287-9718	68225	1V5101
40	2		68225	510-710-20
40	3		68225	510-710-1
40	4		68225	510-710-15
40	5		68225	510-710-5
40	6		68225	510-710-6
40	7		68225	1V5105
40	8		68225	510-710-21
40	9		68225	510-710-19
40	10		68225	510-710-18

CROSS-REFERENCE INDEXES

FIGURE AND ITEM NUMBER INDEX

FIG.	ITEM	STOCK NUMBER	FSCM	PART NUMBER
40	11		68225	510-710-2
40	12		68225	510-710-16
40	13		68225	510-710-17
40	14		68225	510-710-3
40	15		68225	510-710-11
40	16		68225	510-710-12
40	17		68225	510-710-4
41	1	3010-01-287-9719	60248	EZR1022-1300/1110
41	2		60248	7001014040
41	3		60248	7032014000
41	4		60248	7040117040
41	5		60248	7040110040
41	6		60248	311032005N
41	7		60248	7000212085
41	8		60248	7032012000
41	9		60248	3110320181
41	10		60248	7040010032
41	11		60248	3110320062
41	12		60248	7001010045
41	13		60248	7032010000
41	14		60248	7040014045
41	15		60248	7040008045
41	16		60248	7022016000
41	17		60248	7000216150
41	18		60248	3110320241
41	19		60248	EZR-1022
41	20		60248	3110320222
41	21		60248	7000014060
41	22	5315-01-173-0792	60248	7040120055
41	23	5315-01-173-0793	60248	7040111055
41	24		60248	3110320082
41	25		60248	7000014050
41	26		60248	3110321163
41	27		60248	3110330112
42	1		D8835	FIGURE 42 24P1
42	2		D8835	WAV850-H41
42	3		D8835	WAV850-H40
42	4		D8835	WAV850-E46
42	5		68225	28E1736
42	6		D8835	WAV850-E14
42	7		D8835	WAV850-E40
42	8		D8835	WAV850-E3
42	9		D8835	WAV850-E32
42	10		D8835	WAV850-W204
42	11		D8835	WAV850-W203
42	12	3110-01-287-9720	68225	8127
42	13		D8835	WAV850-E108
42	14		D8835	WAV850-E97
42	15		D8835	WAV850-E44
42	16		D8835	WAV850-E143

CROSS-REFERENCE INDEXES

FIGURE AND ITEM NUMBER INDEX

FIG.	ITEM	STOCK NUMBER	FSCM	PART NUMBER
43	40		D8835	WAV850-K31
43	41		D8835	WAV850-W9
43	42		68225	10K2912
43	43		D8835	WAV850-K4
43	44		D8835	WAV850-K5
43	45		D8835	WAV850-K6
43	46		D8835	WAV850-K13
43	47		D8835	WAV850-K3
43	48		D8835	WAV850-K9
43	49		D8835	WAV850-K8
43	50		D8835	WAV850-K32
43	51		D8835	WAV850-K24
43	52		D8835	WAV850-K7
43	53		D8835	WAV850-K18
43	54		D8835	WAV850-K17
43	55		D8835	WAV850-K23
43	56		D8835	WAV850-K22
43	57		D8835	WAV850-R18
43	58		D8835	WAV850-K47
43	59		D8835	WAV850-K30
43	60		D8835	WAV850-K15
43	61		D8835	WAV850-K1
43	62		D8835	WAV850-G17
43	63		D8835	WAV850-G16
43	64		68225	7736
43	65		D8835	WAV850-K2
43	66		D8835	WAV850-G25
43	67		D8835	WAV850-R16
43	68		68225	7706
43	69		D8835	WAV850-R17
43	70		D8835	WAV850-R11
43	71		D8835	WAV850-R10
43	72		D8835	WAV850-E10
43	73		D8835	WAV850-R1
43	74		D8835	WAV850-G4
43	75		D8835	WAV850-E5
43	76		68225	8013
43	77		68225	7704
43	78		D8835	WAV850-E6
43	79		D8835	WAV850-W1
44	1		D8835	FIGURE 44 24P1
44	2		D8835	WAV850-E708
44	3		D8835	WAV850-E8
44	4		D8835	WAV850-E9
44	5		D8835	WAV850-W8
44	6		D8835	WAV850-E98
44	7		D8835	WAV850-W7
44	8		68225	7524
44	9		D8835	WAV850-K31
44	10		D8835	WAV850-W9
44	11		D8835	WAV850-K4

CROSS-REFERENCE INDEXES

FIGURE AND ITEM NUMBER INDEX

FIG.	ITEM	STOCK NUMBER	FSCM	PART NUMBER
44	12		D8835	WAV850-K5
44	13		D8835	WAV850-K6
44	14		68225	10K2912
44	15		D8835	WAV850-K13
44	16		D8835	WAV850-K3
44	17		D8835	WAV850-K9
44	18		D8835	WAV850-K8
44	19		D8835	WAV850-K32
44	20		D8835	WAV850-K24
44	21		D8835	WAV850-K7
44	22		D8835	WAV850-K18
44	23		D8835	WAV850-K17
44	24		D8835	WAV850-K23
44	25		D8835	WAV850-K22
44	26		D8835	WAV850-R18
44	27		D8835	WAV850-K47
44	28		D8835	WAV850-K30
44	29		D8835	WAV850-K16
44	30		D8835	WAV850-K1
44	31		D8835	WAV850-G17
44	32		D8835	WAV850-G16
44	33		68225	7736
44	34		D8835	WAV850-K2
44	35		D8835	WAV850-G25
44	36		D8835	WAV850-R16
44	37		68225	7706
44	38		D8835	WAV850-R17
44	39		D8835	WAV850-R11
44	40		D8835	WAV850-R10
44	41		D8835	WAV850-E10
44	42		D8835	WAV850-R1
44	43		D8835	WAV850-G4
44	44		D8835	WAV850-E6
44	45		68225	7704
44	46		68225	8013
44	47		D8835	WAV850-E31
44	48		D8835	WAV850-W17
45		4710-01-286-8864	68225	MT2391-850
45	1		D8835	FIGURE 45 24P1
45	2		D8835	WAV850-ZP93
45	3		D8835	WAV850-P93
45	4		D8835	WAV850-P92
45	5		D8835	WAV850-P91
45	6		D8835	WAV850-G8A
45	7		D8835	WAV850-G24
45	8		D8835	WAV850-G200
45	9		D8835	WAV850-G6
45	10		D8835	WAV850-G30
45	11		D8835	WAV850-G27
45	12		68225	28G2360
45	13		D8835	WAV850-P7

CROSS-REFERENCE INDEXES

FIGURE AND ITEM NUMBER INDEX

FIG.	ITEM	STOCK NUMBER	FSCM	PART NUMBER
45	14		D8835	WAV850-P8
45	15		D8835	WAV850-ZP23
45	16		68225	7830
45	17		D8835	WAV850-P23
45	18		68225	7534
45	19		D8835	WAV850-P5
45	20		D8835	WAV850-P6
45	21		D8835	WAV850-R2
45	22		D8835	WAV850-P3
45	23		D8835	WAV850-P4
45	24		68225	7621
45	25		D8835	WAV850-G20
45	26		D8835	WAV850-G29
45	27		D8835	WAV850-G29A
45	28		D8835	WAV850-G31
45	29		D8835	WAV850-P2
45	30		D8835	WAV850-ZP9
45	31		D8835	WAV850-P9
45	32		D8835	WAV850-P1
45	33		D8835	WAV850-H1B
45	34		D8835	WAV850-H1A
45	35		D8835	WAV850-E196
46	1		77408	40-3017-8043
46	2		77408	40-2905-1484
46	3	6115-01-274-0166	15434	S.O.56419-NTA855 -GC
46	4	6115-01-274-0167	15434	S.0.56420-NTA855 -GC
47	1		44940	SC434E/L7561
47	2		44940	7019-10000
47	3		44940	450-13000
47	4		44940	350-14090
47	5	6115-01-267-5705	44940	E000-23020
47	6		44940	350-11340
47	7		44940	458-11840
47	8		44940	458-11850
47	9		44940	458-11880
47	10		44940	458-11870
47	11		44940	458-11860
47	12		44940	003-14027
47	13		44940	450-12860
47	14		44940	358-13470
47	15		44940	358-13380
47	16		44940	016-40616
47	17		44940	028-31506
47	18		44940	410-10034
47	19		44940	016-41021
47	20		44940	028-31510
47	21		44940	458-14460
47	22		44940	458-20200
47	23		44940	350-14950

CROSS-REFERENCE INDEXES

FIGURE AND ITEM NUMBER INDEX

FIG.	ITEM	STOCK NUMBER	FSCM	PART NUMBER
47	24		44940	016-40920
47	25		44940	028-31509
47	26		44940	458-11160
47	27		44940	016-40923
47	28		44940	458-12960
47	29		44940	051-01036
47	30		44940	015-41613
47	31		44940	028-31507
47	32		44940	462-12400
47	33		44940	016-40614
47	34		44940	450-11910
47	35		44940	450-11990
47	36		44940	016-40816
47	37		44940	028-31508
47	38		44940	150-10710
47	39		44940	450-17400
47	40		44940	450-21300
47	41		44940	016-40919
47	42		44940	458-12970
47	43		44940	050-11047
47	44		44940	054-20505
47	45		44940	458-22800
47	46		44940	362-12800
47	47	5961-01-262-2398	44940	364-10840
47	48	5961-01-266-7640	44940	364-10850
47	49	5905-01-262-2454	44940	450-11760
47	50		44940	414ER03S27R12A
47	51		44940	458-14150
47	52		44940	016-31249
47	53		44940	350-11560
47	54		44940	350-11580
47	55		44940	350-11510
47	56		44940	414E115F1503A
48	1		15434	NTA-855A
48	1		15434	NTA-855E
48	2		15434	3048725
49	1	2990-01-287-9746	57301	42KG312-08-601
49	2		57301	14F-025020-12
49	3		57301	22172
49	4		57301	22148
49	5	2995-01-253-6395	57301	91380
49	6		57301	92528
49	7		57301	3P22800-04
49	8		57301	16F-025028-12
49	9		57301	93047
49	10		57301	3P22341
49	11		57301	90001-046
49	12		57301	90211-09
49	13		57301	22376
49	14		57301	93050-02
49	15		57301	22183

CROSS-REFERENCE INDEXES

FIGURE AND ITEM NUMBER INDEX

FIG.	ITEM	STOCK NUMBER	FSCM	PART NUMBER
49	16		57301	22849
49	17		57301	93502-13
49	18		57301	90001-016
49	19		57301	21927
49	20		57301	90408-08
49	21		57301	21929
49	22		57301	90002-010
49	23		57301	93066
49	24		57301	92105-06
49	25		57301	4P22204
49	26		57301	91394
49	27		57301	93069-04
49	28		57301	22146
49	29		57301	92531
49	30		57301	90408-09
49	31		57301	22144
49	32		57301	4P22601
49	33		57301	90408-07
49	34		57301	91516
49	35		57301	22051
49	36		57301	91389
49.	37		57301	21988
49	38		57301	21985
49	39		57301	93065
49	40		57301	1P22786
49	41		57301	21899
49	42		57301	93005-05
49	43		57301	90424
49	44		57301	92001-15
49	45	2995-01-253-6396	57301	91281
49	46		57301	2P22673-02
49	47		57301	22634
50			15434	13.05/15.05-03
50	1		15434	S-224
50	2		96906	MS122032
50	3		15434	S-631
50	4	5930-01-287-9744	15434	3050692
50	5		15434	70709
50	6		15434	204493
50	7		15434	3050694
50	8		15434	3018924
50	9	2920-01-244-6058	15434	3021036
51	1		15434	3175239
51	2		15434	3033800
51	3		15434	3035083
51	4		15434	3035796
51	5		15434	3035084
51	6		15434	S-223
51	7		15434	3012471
51	8		15434	3037741
51	9	6620-01-239-3804	15434	3015232

CROSS-REFERENCE INDEXES

FIGURE AND ITEM NUMBER INDEX

FIG.	ITEM	STOCK NUMBER	FSCM	PART NUMBER
51	10	6625-01-240-5073	15434	3015235
51	11	6645-01-239-4618	15434	3035766
51	12	6685-00-365-5572	15434	3015234
51	13	6620-01-239-3701	15434	3015233
51	14	6680-01-239-5702	15434	3031734
51	15	2925-01-282-9149	15434	3018796
51	16		15434	3018799
51	17		15434	3018800
51	18	5930-00-655-1515	96906	MS35058-23
51	19		15434	3035150
51	20	5930-00-655-1514	96906	MS35058-22
51	21	5905-01-264-2114	15434	3015105
51	22	5925-01-240-7815	15434	3034953
51	23		15434	3035126
51	24		15434	3031698
51	25		15434	3053065
51	26		15434	70310
51	27		15434	70262
51	28		15434	3052510
51	29		15434	3036453
51	30		15434	3044195
51	31		15434	3023534
51	32	6625-01-240-5146	15434	3015237
51	33	6625-01-240-5147	15434	3015238
51	34		15434	70646
51	35		15434	128006
51	36		15434	3053010
51	37		15434	108722
51	38		15434	S-169
51	39		15434	S-670
51	40		15434	S-608
51	41		15434	3002604
51	42		15434	S-117
51	43		15434	108330
51	44		15434	180372
51	45		15434	3035132
51	46		15434	S-129
51	47		15434	68425
51	48		15434	69911-A
51	49		15434	3006182
51	50		15434	3035120
52	1		15434	179904
52	2	4720-01-161-0810	15434	179930
52	3		15434	179918
52	4		15434	152767
52	5		15434	68425
52	6		15434	179903
52	7		15434	187317
52	8		15434	179901
52	9		15434	3048908
52	10		15434	70470

CROSS-REFERENCE INDEXES

FIGURE AND ITEM NUMBER INDEX

FIG.	ITEM	STOCK NUMBER	FSCM	PART NUMBER
52	11		15434	S-921-D
52	12		15434	3010596
52	13		15434	190799
52	14		96906	MS35338-47
52	15		15434	3010360
52	16		15434	3827107
52	17	4330-01-262-5169	15434	3318319
52	18		15434	204163
53			15434	08.07-03
53	1		15434	3010595
53	2		15434	S-199-A
53	3		96906	MS35338-8
53	4		15434	S-995
53	5	5330-01-292-9463	15434	3009457
53	6		15434	3022589
53	7		15434	214617
53	8	5330-00-159-1464	15434	43463-A
53	9		96906	MS35842-13
53	10		15434	213485
53	11	4720-01-085-6129	15434	102522
53	12		15434	3018764
53	13	5330-01-145-5380	15434	3019158
53	14		15434	3010597
53	15		15434	3013786
53	16		15434	3017748
53	17	5330-01-040-2087	15434	208128
53	18	5330-00-864-5422	15434	186780
53	19	6620-01-141-0907	15434	201737
53	20		15434	3009464
54			15434	10.04-03
54	1		15434	120516
54	2		15434	S-186-A
54	3		15434	127316
54	4		15434	S-111
54	5		96906	MS35338-7
54	6		15434	S-221
54	7		15434	3044632
54	8		15434	S-112
54	9		96906	MS35338-8
54	10		15434	S-223
54	11		15434	112196
54	12		15434	125741
54	13	4720-00-716-4938	15434	3030790
54	14		15434	140313
54	15		15434	3000302
54	16		15434	3030772
54	17		15434	3021644
54	18	2940-01-266-7691	15434	3022209
54	19	2940-01-262-5185	15434	178957
55			15434	10.06-03
55	1	2950-01-089-7024	15434	3002138

CROSS-REFERENCE INDEXES

FIGURE AND ITEM NUMBER INDEX

FIG.	ITEM	STOCK NUMBER	FSCM	PART NUMBER
55	2		15434	3056158
55	3		15434	3056155
55	4	5330-00-194-8385	15434	190849
55	5		15434	110266
55	6		15434	116982
55	7		15434	S-107
55	8		96906	MS35338-7
55	9		15434	S-626
55	10		15434	3013904
55	11		15434	S-221
55	12		15434	69465
55	13		15434	108722
55	14		15434	3028616
55	15		15434	43828-A
55	16		15434	3003536
55	17	4720-01-212-3541	15434	3035174
55	18	4710-01-287-9739	15434	3022867
55	19		15434	3014354
55	20		15434	3022865
55	21	4720-01-262-0994	15434	209959
55	22		15434	142429
55	23		15434	186918
55	24	2815-01-262-5073	15434	203555
55	25	5330-00-627-6825	15434	106322
55	26		15434	203432
55	27		15434	186917
55	28	2950-01-262-5174	15434	3801941
56			15434	06.04-03
56	1		15434	3034526
56	2		15434	3010596
56	3		15434	3011380
56	4		15434	AM1002200SS
56	5		15434	129859
56	6	2910-01-245-9782	15434	3315847
56	7		15434	212013
57			15434	12.01.2-03
57	1		15434	106289
57	2		15434	S-608
57	3		15434	S-670
57	4		15434	S-200
57	5		15434	3061846
57	6		15434	S-105-C
57	7		96906	MS122032
57	8		15434	127018
57	9		15434	S-181
57	10		96906	MS35338-50
57	11		15434	S-658
57	12		15434	204263
57	13		15434	S-910-C
57	14		15434	100501
57	15		15434	AM1005400SS

CROSS-REFERENCE INDEXES

FIGURE AND ITEM NUMBER INDEX

FIG.	ITEM	STOCK NUMBER	FSCM	PART NUMBER
57	16		15434	3200802
57	17		15434	S-920
57	18		15434	S-980
57	19		15434	123822
58			15434	08.01-03
58		2930-01-262-5153	15434	3801712
58		2930-01-287-9733	15434	3801710
58	1		15434	137797
58	2		15434	108707
58	3		15434	S-112
58	4		15434	S-109
58	5		96906	MS35338-8
58	6		96906	MS27183-14
58	7		15434	3022183
58	8		15434	3046110
58	9	3030-01-065-9404	15434	217638
58	10		15434	3010595
58	11		15434	3012470
58	12		15434	63842
58	13		15434	3028280
58	14	5330-01-146-7314	15434	3024960
58	15		15434	3008470
58	16		15434	3008468
58	17		15434	3012468
58	18		15434	3012469
58	19		15434	3013786
58	20	5330-01-066-5350	15434	3002385
58	21	5330-00-159-1464	15434	43463-A
58	22	2930-01-262-5175	15434	3050398
58	23		15434	182706
58	24		15434	S-201
58	25		15434	213082
58	26	2815-00-815-0355	15434	S-16255
58	27	3110-00-107-7564	15434	115519
58	28	5365-01-287-9725	15434	3050395
58	29		15434	S-965-E
58	30		15434	3050396
58	31		15434	215397
58	32	2930-01-288-9888	15434	3801708
58	33	4320-01-079-3454	15434	3000888
58	34	5330-00-005-0407	15434	3033677
58	35		15434	3025861
58	36	5365-01-132-1984	15434	196844
58	37		15434	3050394
58	38		15434	S-911-B
58	39		15434	3045163
59			15434	07.05-03
59	1		15434	S-145
59	2		15434	203310
59	3		15434	3010596
59	4		15434	210966

CROSS-REFERENCE INDEXES

FIGURE AND ITEM NUMBER INDEX

FIG.	ITEM	STOCK NUMBER	FSCM	PART NUMBER
59	5		15434	3010595
59	6		15434	S-106-C
59	7		96906	MS35338-8
59	8		15434	3010597
59	9		96906	MS35842-13
59	10	4720-01-085-2571	15434	3031560
59	11		15434	3000907
59	12	5330-01-079-6514	15434	3008017
59	13	2940-01-019-4513	15434	3313279
59	14		15434	138045
59	15		15434	200861
59	16		96906	MS35338-50
59	17		15434	3300908
59	18	5330-01-164-0904	15434	3302630
59	19	5330-01-164-0944	15434	3308958
59	20		15434	3003814
59	21		15434	AR-9999
59	22		15434	3008466
59	23		15434	3013786
59	24		15434	3025458
59	25		15434	3023994
59	26	4820-01-241-3295	15434	3018673
59	27	5360-01-200-0323	15434	202128
59	28	5365-01-139-6738	15434	3006745
59	29	5330-01-086-6197	15434	3007713
59	30	2930-01-065-7113	15434	3021581
59	31		15434	210915
59	32		15434	3012475
59	33		15434	108307
59	34		15434	3008469
59	35		15434	217315
59	36	5330-01-046-1991	15434	218245
59	37		15434	S-126
59	38		96906	MS35338-8
59	39		15434	3022961
59	40		15434	67946
59	41	5360-00-664-5343	15434	68274
59	42	2815-00-791-1453	15434	127558
59	43		15434	213394
59	44		15434	210967
59	45	5330-01-046-3144	15434	3010030
60			15434	07.03-03
60	1		15434	S-223
60	2		15434	S-112
60	3		96906	MS35338-8
60	4		96906	MS27183-14
60	5		15434	108707
60	6		15434	3044633
60	7		15434	S-169
60	8		15434	S-608
60	9		15434	S-670

CROSS-REFERENCE INDEXES

FIGURE AND ITEM NUMBER INDEX

FIG.	ITEM	STOCK NUMBER	FSCM	PART NUMBER
60	10		15434	100269
60	11		15434	137890
60	12		15434	106221
60	13	4720-01-241-5489	15434	AS0603200SS
60	14		96906	MS39162-5
60	15	4720-01-241-7260	15434	AS0603600SS
60	16		15434	144378
60	17	4330-01-262-5172	15434	3313289
60	18		15434	3304173
61			15434	10.02-03
61	1		96906	MS35842-13
61	2	4720-01-262-5139	15434	3000270
61	3		15434	3000264
61	4		15434	3000269
61	5		15434	152546
61	6	4720-01-085-6131	15434	155789
61	7		15434	153408
61	8		15434	3000263
61	9		15434	S-109
61	10		96906	MS35338-8
61	11		15434	68152
61	12		15434	112105
61	13		15434	AS0403000SS
61	14		15434	68139
61	15		15434	187368
61	16		96906	MS90725-6
61	17		96906	MS122032
61	18		15434	S-224
61	19	5930-01-067-8418	15434	196074
61	20		96906	MS35295-62
61	21		15434	S-223
61	22		15434	S-105-C
61	23		15434	3000268
61	24		15434	212024
62	1		15434	S-140
62	2		96906	MS35338-47
62	3		15434	69324
62	4		15434	S-274
62	5	2910-01-264-2115	15434	3052770-9867
62	6		15434	3030267
62	7		15434	S-16052
62	8		15434	212613
62	9		15434	212639
62	10		15434	212605
62	11		15434	212602
62	12		15434	212668
62	13		15434	3002110
62	14		15434	212604
62	15		15434	212601
62	16		15434	163944
62	17		15434	3028302

CROSS-REFERENCE INDEXES

FIGURE AND ITEM NUMBER INDEX

FIG.	ITEM	STOCK NUMBER	FSCM	PART NUMBER
62	18		15434	212603
62	19		15434	3004724
62	20		15434	3045173
62	21		15434	212609
62	22		15434	212610
62	23		15434	212607
62	24		15434	3006550
62	25		15434	211636
62	26		15434	211635
62	27		15434	211633
62	28		15434	146437
62	29		15434	144178
62	30		15434	144179
62	31		15434	143847
62	32		15434	3017052
62	33		15434	3017051
62	34		15434	3018682
62	35		15434	100764
62	36		15434	118226
62	37		15434	3003156
62	38		15434	S-606
62	39		96906	MS27183-42
62	40		15434	3048241
62	41		15434	214139
62	42		15434	3036970
62	43		15434	3045207
62	44		15434	3048228
62	45		15434	100193
62	46		15434	118227
62	47		15434	70690
62	48		15434	3009380
62	49		15434	3048557
62	50		15434	3027633
62	51		15434	100478
62	52		15434	213768
62	53		15434	3006175
62	54		15434	3006430
62	55		15434	213769
62	56		15434	3000446
62	57		15434	110058
62	58		15434	S-270
62	59		15434	105375
62	60		15434	112076
62	61		15434	3025460
62	62		96906	MS16632-1050
62	63		15434	S-2286
62	64		15434	3046407
62	65		15434	146483
62	66		15434	157088
62	67		15434	154088
62	68		15434	70700

CROSS-REFERENCE INDEXES

FIGURE AND ITEM NUMBER INDEX

FIG.	ITEM	STOCK NUMBER	FSCM	PART NUMBER
62	69		15434	3044189
62	70		15434	145505
62	71		15434	3048182
62	72		15434	44678
62	73		15434	70705
62	74		15434	70717
62	75		15434	70717-A
62	76		15434	70717-B
62	77		15434	189800
62	78		15434	143251
62	79		15434	3038215
62	80		15434	3036472
62	81		15434	3032014
62	82		15434	70716
62	83		15434	144195
62	84		15434	70715
62	85		15434	141629
62	86		15434	70713
62	87		15434	S-16240
62	88		15434	3025459
62	89		15434	S-174-C
62	90		15434	181466
62	91		15434	70704
62	92	5330-00-252-8888	16954	691-10014
62	93	2910-00-828-7126	15434	BM-76340
62	94		15434	100099
62	95		15434	139988
62	96		15434	153336
62	97		15434	153338
62	98		15434	160514
62	99		15434	202897
62	100		15434	3017051
62	101	4320-01-291-2227	15434	3034209
62	102		15434	3033730
62	103		15434	70790
62	104		15434	70704
62	105		15434	181466
62	106		15434	3033719
62	107		15434	110855
62	108		15434	119363
62	109		15434	100215
62	110		15434	100133
62	111		15434	3029857
62	112		15434	3050624
62	113		15434	3033742
62	114		15434	S-189-C
62	115		15434	67684
62	116		15434	154087
62	117		15434	181466
62	118	4810-01-278-7350	15434	3018453
62	119		15434	S-607

CROSS-REFERENCE INDEXES

FIGURE AND ITEM NUMBER INDEX

FIG.	ITEM	STOCK NUMBER	FSCM	PART NUMBER
62	120		15434	129768
62	121		15434	129839
62	122		15434	129886
62	123		15434	129838
62	124	5330-00-132-0274	15434	190876
62	125		15434	3000266
62	126	5330-00-081-9299	15434	129888
62	127	4820-01-287-9742	15434	196057
62	128		15434	3054609
62	129		15434	3018047
62	130		15434	3025458
62	131		15434	3034451
62	132		15434	3034452
63			15434	06.03-03
63	1		15434	S-117
63	2		96906	MS35338-8
63	3		96906	MS27183-14
63	4		15434	185347
63	5		15434	S-964
63	6	4820-00-471-0049	15434	178079
63	7		15434	107460
63	8		15434	43765
63	9		15434	S-104
63	10		15434	101476
63	11		15434	145782
63	12		15434	3032872
63	13		15434	S-205
63	14		15434	69793
63	15	4820-01-293-6779	15434	3028325
63	16		15434	S-151-C
63	17		15434	S-609
63	18		15434	113710
63	19	5365-01-293-1749	15434	65434
63	20		15434	116935
63	21		15434	3033007
63	22		15434	3033005
63	23		15434	S-1049
63	24		15434	139969
63	25		15434	181213
63	26		15434	3010755
63	27		15434	68606
64			15434	03.01/03.01.1-03
64	1		15434	69793
64	2		15434	S-205
64	3		96906	MS35338-8
64	4		15434	111670
64	5		15434	68425
64	6		15434	3008596
64	7		15434	142486
64	8	4720-00-278-4890	28835	2CA647
64	9		15434	255180

CROSS-REFERENCE INDEXES

FIGURE AND ITEM NUMBER INDEX

FIG.	ITEM	STOCK NUMBER	FSCM	PART NUMBER
64	10		15434	3038076
64	11		15434	3006358
64	12		15434	3006183
64	13	5330-01-285-4827	15434	3054841
64	14		15434	S-176
64	15		15434	170226
64	16		15434	3001726
64	17		15434	3010589
64	18	2815-01-262-2455	15434	3044788
64	19		15434	168319
64	20		15434	3038903
64	21		15434	3046364
64	22		15434	3038904
64	23		15434	3044787
64	24	2815-00-851-7637	15434	BM-95162
64	25	5310-00-732-0560	96906	MS51968-14
64	26	5305-00-947-3437	15434	168306
64	27		15434	140330
64	28		15434	208084
64	29		15434	169705
64	30	2815-01-096-9198	15434	BM-95161
64	31	5310-00-732-0560	96906	MS51968-14
64	32	5305-00-947-3437	15434	168306
64	33		15434	140330
64	34		15434	208084
64	35		15434	169704
64	36	2815-00-005-7431	15434	AR-2308
64	37	5310-00-732-0560	96906	MS51968-14
64	38	5305-00-947-3437	15434	168306
64	39		15434	218153
64	40		15434	194037
64	41		15434	218152
64	42	5330-00-861-8592	15434	3017750
65			15434	06.01-03
65	1		15434	3028279
65	2		15434	3031137
65	3	2910-01-262-5181	15434	3054219
65	4	5340-00-238-5435	15434	191916
65	5	5310-01-066-2942	15434	180626
66			15434	10.01-03
66	1		96906	MS35295-62
66	2		15434	S-679
66	3		15434	208326
66	4	4720-01-070-8149	15434	202994
66	5		15434	211657
66	6		15434	70295
66	7	5330-01-072-8998	15434	216487
66	8		15434	S-102
66	9	5330-00-003-1771	15434	S-684
66	10		15434	43828-A
66	11	4720-01-287-9729	15434	3025874

CROSS-REFERENCE INDEXES

FIGURE AND ITEM NUMBER INDEX

FIG.	ITEM	STOCK NUMBER	FSCM	PART NUMBER
66	12		15434	215041
66	13		15434	3013295
66	14	5330-01-066-5351	15434	215044
66	15		96906	MS35295-8
66	16		15434	S-141-A
66	17		96906	MS122032
66	18		15434	3001939
66	19	5330-00-537-2382	15434	70089-1
66	20	4720-01-262-9499	15434	3041968
66	21		96906	MS35308-458
66	22		96906	MS35338-50
66	23		15434	S-658
66	24		15434	204263
66	25		15434	3001169
66	26		15434	3012471
66	27		15434	3028282
66	28	5330-01-147-4072	15434	3032348
66	29		15434	3005508
66	30		15434	3046170
66	31	2930-01-141-9277	15434	3028997
66	32	5330-01-066-3904	15434	195952
66	33	5330-01-066-5352	15434	216486
66	34		15434	3011716
66	35		15434	3030286
66	36		15434	3028967
66	37		15434	69047-A
66	38		96906	MS35338-8
66	39		15434	63842
66	40		15434	3036811
66	41	5330-01-086-3523	15434	3008591
67			15434	11.01-03
67	1		15434	S-109
67	2		96906	MS35338-8
67	3		96906	MS27183-14
67	4		15434	3009459
67	5	5330-01-292-9464	15434	3029032
67	6	5330-01-077-5228	15434	212161
67	7		15434	137890
67	8		96906	MS35338-47
67	9	5330-00-659-3178	15434	3020943
67	10	5330-00-132-0249	15434	178937
67	11		15434	S-923-E
67	12		15434	3008590
68			15434	02.01-03
68	1		15434	3013623
68	2		15434	69699
68	3	2815-01-085-8282	15434	3041993
68	4	2815-00-739-6098	15434	135957
68	5		15434	200354
68	6	2815-01-278-6192	15434	3040830
68	7	4820-00-085-7434	15434	3017759

CROSS-REFERENCE INDEXES

FIGURE AND ITEM NUMBER INDEX

FIG.	ITEM	STOCK NUMBER	FSCM	PART NUMBER
68	8		15434	3007636
68	9		15434	3007634
68	10		15434	3007635
68	11		15434	123558
68	12	5340-01-143-6048	15434	127554
68	13	5340-00-933-3009	15434	170296
68	14	5360-00-009-9270	15434	211999
68	15		15434	3202144
68	16		15434	3050369
68	17	2815-01-085-2618	15434	3006456
68	18	2910-01-146-0048	15434	3011934
68	19	5330-01-072-4436	15434	3007759
68	20		15434	3041991
68	21		15434	S-911-B
68	22	5330-01-080-5021	15434	3047402
68	23		15434	70772
68	24		15434	135308
68	25	5330-00-143-8485	15434	131026
68	26		15434	147100
68	27		15434	3012470
68	28		15434	3009461
68	29		15434	3024709
68	30	2815-01-159-1789	15434	3030038
68	31	5305-00-062-4378	15434	147389
68	32	5310-00-426-3990	15434	203131
68	33		15434	3028293
69			15434	04.01-03
69	1		15434	S-129
69	2	2815-01-166-3415	15434	3036939
69	3		15434	3016887
69	4		15434	69736
69	5		15434	175831
69	6		15434	3017031
69	7	2815-01-146-7914	15434	3036935
69	8		15434	118378
69	9		15434	118939
69	10		15434	3013331
69	11		15434	3036933
69	12		15434	3036937
69	13		15434	118377
69	14		15434	118939
69	15		15434	3013330
69	16		15434	3036934
69	17		15434	213559
69	18	2815-01-263-0137	15434	3046420
69	19	2815-01-262-2346	15434	3046430
69	20	5330-01-146-7172	15434	3020000
69	20	5330-01-146-9775	15434	3020002
69	20	5330-01-146-9928	15434	3020003
70			15434	09.03-03
70	1		15434	3012526

CROSS-REFERENCE INDEXES

FIGURE AND ITEM NUMBER INDEX

FIG.	ITEM	STOCK NUMBER	FSCM	PART NUMBER
70	2		15434	193136
70	3	5330-01-129-6541	15434	3008947
70	4		15434	3013786
70	5		15434	70550
70	6		15434	3023473
70	7		15434	3013335
70	8	2930-00-401-9531	15434	190397
70	9		15434	3010590
70	10	5330-00-026-2931	15434	200809
70	11	2520-01-241-5629	15434	3005131
70	12		15434	129510
70	13		15434	170664
70	14	3020-00-160-9092	15434	142689
70	15	2815-01-214-7129	15434	3000175
70	16		15434	3014103
70	17	3120-01-144-7368	15434	3026557
70	18	5315-01-177-7507	15434	3034438
70	19	4310-01-092-9816	15434	3000171
70	20	1680-01-197-5288	15434	AR-45728
70	21	3120-00-792-9834	15434	116391
70	22		15434	S-911-B
70	23		15434	3002170
70	24	3120-01-147-5275	15434	3026556
71			15434	01.09-03
71	1		15434	3011714
71	2		15434	3011713
71	3		15434	60408
71	4		15434	70653
71	5		15434	3052534
71	6	3120-00-877-2213	15434	132770
71	7		15434	3048033
71	8	5330-01-145-6914	15434	3021704
71	9		15434	3011712
71	10		15434	3011715
71	11		15434	3008530
71	12		15434	AR-1176
71	13	5330-01-145-0716	15434	215705
71	14	5330-01-215-4972	15434	3020185
71	15	5330-01-240-1619	15434	3020183
71	16		15434	212754
71	17		15434	3054889
71	18		15434	212301
72			15434	07.01-03
72	1		15434	216484
72	2		15434	101814
72	3		15434	107981
72	4		15434	3008468
72	5		15434	3010595
72	6		96906	MS27183-14
72	7		15434	115590
72	8		15434	101264

CROSS-REFERENCE INDEXES

FIGURE AND ITEM NUMBER INDEX

FIG.	ITEM	STOCK NUMBER	FSCM	PART NUMBER
72	9	5330-00-246-0309	15434	65274
72	10		15434	S-915-A
72	11	2815-01-199-6618	15434	3023067
72	12		15434	S-920
72	13		15434	123824
72	14		15434	3016478
72	15	4720-01-241-8794	15434	3017963
72	16		15434	3012478
72	17		15434	3013980
72	18	5330-00-143-8376	15434	157551
72	19		15434	3013786
72	20		15434	3008069
72	21		15434	3017050
72	22		15434	193631
72	23	5330-01-147-0748	15434	3032861
72	24		15434	S-1354
72	25	2815-00-338-6839	15434	20622
72	26		15434	3055069
72	27		15434	67946
72	28		15434	3008470
73	1		15434	3022590
73	2	2815-01-262-2437	15434	AR-9834
73	3		15434	S-103
73	4		15434	S-111
73	5		96906	MS35338-7
73	6		15434	AR-4258
73	7	5330-01-066-3910	15434	203145
73	8	3120-00-566-0480	15434	68365
73	9		15434	3045622
73	10		15434	177419
73	11	3120-00-627-6697	15434	69521
73	12		15434	3025281
73	13		15434	177417
73	14		15434	69519
73	15		15434	3012479
73	16		15434	S-119-C
73	17		15434	S-140-C
73	18		15434	S-136-B
73	19		96906	MS35338-47
73	20		15434	3045617
73	21		96906	MS35756-34
73	22	5330-01-147-4071	15434	3031434
73	23		15434	S-109
73	24		15434	109319
73	25		15434	126304
73	26		15434	134596
73	27	5360-01-038-4659	15434	211939
73	28	2815-00-705-2856	15434	109333
73	29		15434	3008469
73	30		15434	AR-9832
74			15434	01.07-03

CROSS-REFERENCE INDEXES

FIGURE AND ITEM NUMBER INDEX

FIG.	ITEM	STOCK NUMBER	FSCM	PART NUMBER
74	1	3120-01-079-8194	15434	215233
74	2		15434	3035195
74	3		15434	3021600
74	4	2815-01-146-1049	15434	3049024
74	5		15434	3042568
74	6		15434	68193
75			15434	01.04/01.05-03
75		2815-01-165-0765	15434	3801056
75		3120-01-132-9339	15434	3801260
75	1	2815-01-086-4508	15434	3013930
75	2		15434	219153
75	3	2815-01-124-0232	15434	70550
75	4		15434	218808
75	5	2815-00-132-0273	15434	187420
75	6	3120-01-087-3004	15434	214950
75	7	2815-01-262-9492	15434	3801876
75	8	5365-01-241-4318	15434	175755
75	9	2815-00-480-4347	15434	191970
75	10		15434	3051554
75	11		15434	3012331
75	12		15434	3012332
75	13		15434	214730
75	14		15434	218732
76			15434	16.01-03
76	1		15434	153581
76	2		96906	MS35338-50
76	3		15434	9245
76	4		15434	3048351
76	5		15434	127316
76	6		15434	204165
76	7		15434	200861
76	8		15434	60408
76	9		15434	163086
76	10		15434	8265
76	11		15434	3001646
76	12		15434	70657
76	13	5330-01-082-6985	15434	3021735
76	14		15434	3049018
76	15		15434	3010594
76	16	5330-00-361-2955	15434	40662-A
76	17	5330-00-005-0858	15434	3006737
76	18	2815-00-483-0780	15434	3023510
76	19		15434	2965
76	20	3020-00-353-9273	15434	4851
76	21	2920-01-241-7251	15434	3034572
76	22		15434	3005557
77			15434	01.02-03
77	1		15434	204165
77	2		15434	127316
77	3	6685-01-079-1632	15434	217323
77	4		15434	211918

CROSS-REFERENCE INDEXES

FIGURE AND ITEM NUMBER INDEX

FIG.	ITEM	STOCK NUMBER	FSCM	PART NUMBER
77	5		15434	210179
77	6		15434	3014614
77	7		15434	3608833
77	8	5365-01-241-3888	15434	3037045
77	9		15434	3019174
77	10		15434	3019180
77	11		15434	3019186
77	12		15434	3019192
77	13		15434	3019198
77	14		15434	3019204
77	15		15434	3019218
78			15434	01.01-03
78		2815-01-152-9219	15434	3801328
78		5330-01-149-9715	15434	3801330
78		5330-01-252-5248	15434	3801468
78	1	2815-01-291-2243	15434	3801592
78	2		15434	S-966-E
78	3		15434	S-719
78	4		15434	S-679
78	5		15434	3008466
78	6	5340-01-145-9362	15434	3011952
78	7		15434	68585
78	8		15434	67211
78	9		15434	3013786
78	10		96906	MS35648-8
78	11		15434	3008469
78	12		15434	210884
78	13		15434	66292
78	14		15434	3008468
78	15		15434	70653
78	16		15434	S-911-B
78	17		15434	60408
78	18		15434	68445
78	19		15434	69901
78	20		15434	3013904
78	21		15434	132019
78	22	5330-00-537-2382	15434	70089-1
78	23		15434	208346
78	24		15434	3046246
78	25	5315-01-058-4551	15434	202903
78	26		15434	3008047
78	27		15434	3008048
78	28		15434	3008049
78	29	3120-01-208-8102	15434	3028075
78	30	3120-01-208-8103	15434	3028269
78	31	3120-01-079-6823	15434	3011951
78	32		15434	3031158
78	33		15434	S-901
78	34	2910-01-085-8096	15434	3014404
78	35		15434	3033822
78	36		15434	3013591

CROSS-REFERENCE INDEXES

FIGURE AND ITEM NUMBER INDEX

FIG.	ITEM	STOCK NUMBER	FSCM	PART NUMBER
78	37		15434	3007442
78	38	2815-00-011-7786	15434	3801826
78	39		15434	3055099
78	40		15434	215090
78	41		15434	3032874
78	42		15434	3019955
78	43		15434	3019956
78	44		15434	3019957
78	45		15434	3054948
78	46		15434	3019959
78	47		15434	3019960
79			15434	21.01.2-03
79	1		15434	S-113
79	2		15434	S-608
79	3		15434	S-200
79	4		15434	3000248
79	5		15434	S-149
79	6		96906	MS35338-50
79	7		15434	127316
79	8		15434	S-201
79	9		15434	3056517
79	10		15434	3056509
80	1		77408	D0-2907-1691
80	2		77408	D0-5950-8047
80	3		77408	D0-3010-8047
80	4	6115-01-280-9955	15434	S.0.41727-4BT3.9 -GC
81	1		44940	300-3197
81	2		44940	800-2056
81	3		44940	821-0018
81	4		44940	319-0044
81	5		44940	234-0845
81	6		44940	319-0042
81	7		44940	319-0040
81	8		44940	319-0041
81	9		44940	508-0001
81	10		44940	319-0039-02
81	11		44940	319-0039-01
81	12		44940	319-0125
81	13		44940	319-0043
82	1	2090-01-291-2231	44940	612-6459
82	2		44940	813-0096
82	3		44940	853-0008
82	4		44940	304-0790
82	5		44940	870-1220
82	6		44940	812-0029
82	7		44940	304-0789-02
82	8		44940	319-0070
82	9		44940	800-0024
82	10		44940	858-0008
82	11		44940	862-0015

CROSS-REFERENCE INDEXES

FIGURE AND ITEM NUMBER INDEX

FIG.	ITEM	STOCK NUMBER	FSCM	PART NUMBER
82	12		44940	526-0022
82	13		44940	800-0028
82	14		44940	337-0049
82	15		44940	870-0212
82	16		44940	402-0603
82	17		44940	526-0018
82	18		44940	800-0008
82	19		96906	MS21042-08
82	20		44940	812-0079
82	21		44940	402-0604
82	22		44940	319-0050
82	23		44940	406-0633
82	24		44940	319-0048
82	25	5340-01-293-8535	44940	319-0049
82	26	6645-01-262-7318	44940	302-1836
82	27		44940	193-0250
82	28	6685-01-269-3879	44940	193-0351
82	29	6620-01-262-2365	44940	193-0352
82	30		44940	320-1586
82	31		44940	308-0566
82	32		44940	308-0578
82	33		44940	308-0561
82	34		44940	308-0546
82	35		44940	308-0579
82	36		44940	308-0563
82	37		44940	308-0580
82	38		44940	308-0813-01
82	39		44940	320-1442
82	40		44940	320-1587
82	41		44940	320-1588
82	42		44940	308-0569
82	43		44940	319-0047
82	44		44940	304-0788
82	45		44940	870-0183
82	46		44940	812-0061
82	47		44940	359-0082
82	48		44940	870-1220
82	49		44940	812-0029
82	50		44940	304-0789-01
82	51		44940	815-0549
82	52		44940	307-2613
82	53		44940	307-2612
82	54	5930-00-659-9998	44940	308-0069
82	55		44940	304-0787
82	56		44940	302-1837
82	57		44940	319-0069
82	58		44940	307-2615
82	59		44940	307-2614
82	60		44940	307-2611
82	61		44940	332-1043
82	62		44940	815-0544

CROSS-REFERENCE INDEXES

FIGURE AND ITEM NUMBER INDEX

FIG.	ITEM	STOCK NUMBER	FSCM	PART NUMBER
82	63		44940	332-0796
82	64		44940	332-0795
82	65		44940	813-0105
82	66	6110-01-262-2353	44940	305-0770
82	67	5325-01-160-9660	44940	508-0117
82	68		44940	319-0046
82	69		44940	338-2202
82	70		44940	338-2203
82	71		44940	338-2182
83	1		44940	539-0923
83	2		44940	226-3290
83	3		44940	226-3705-01
83	4		44940	813-0103
83	5	2910-01-262-2451	44940	151-0611
83	6	6110-01-263-3744	44940	150-2201
83	7		44940	870-0131
83	8		44940	526-0008
83	9		44940	526-0327
83	10		44940	815-0180
83	11		44940	150-2200
83	12		44940	520-0923-01
83	13		44940	870-0053
83	14		44940	150-2203
83	15		44940	150-2202
83	16		44940	870-0212
83	17		44940	526-0018
83	18		44940	800-0012
83	19		44940	151-0632
83	20		44940	800-2060
83	21		44940	850-2008
83	22		44940	526-0115
83	23		44940	150-2187
84	1		44940	179-2264
84	2		44940	332-1794
84	3		44940	870-0212
84	4		44940	821-0013
84	5		44940	332-2634
84	6		44940	862-0001
84	7		44940	850-0038
84	8		44940	335-0143
84	9		44940	898-0863
84	10		44940	508-0114
84	11	6620-01-262-2391	44940	309-0258
84	12		44940	332-1506
84	13		44940	226-0090
84	14		44940	526-0158
84	15		44940	800-0006
84	16		44940	333-0192
85	1		44940	539-0922
85	2		44940	800-0048
85	3		44940	150-2198

CROSS-REFERENCE INDEXES

FIGURE AND ITEM NUMBER INDEX

FIG.	ITEM	STOCK NUMBER	FSCM	PART NUMBER
85	4		44940	862-0001
85	5		44940	853-0013
85	6		44940	870-0250
85	7		44940	150-0723
85	8		44940	508-0071
85	9		44940	856-0010
85	10	5930-01-262-7313	44940	150-0716
85	11		44940	800-2008
85	12		44940	150-2199
86	1		44940	870-0281
86	2		44940	526-0280
86	3		44940	821-0030
86	4		44940	179-1284
86	5		44940	503-0365
86	6		44940	503-1391-01
86	7		44940	130-3083
86	8		44940	503-0354
86	9		44940	503-1379-01
86	10		44940	130-3084
86	11		44940	821-0018
86	12		44940	130-3086
86	13		44940	130-3085
86	14		44940	821-0029
86	15		44940	130-3141
86	16		44940	130-3140
86	17		44940	130-3102
86	18		44940	130-3088
86	19		44940	130-3089
86	20		44940	130-3090
86	21		44940	800-2068
86	22		44940	850-2008
86	23		44940	130-3080
86	24		44940	130-3082
86	25		44940	130-3092
86	26		44940	821-0028
86	27		44940	130-3091
86	28		44940	130-3087-02
86	29		44940	130-3087-01
86	30	4820-01-225-8925	44940	504-0028
86	31		44940	130-3064
87	1		44940	BC234C
87	2		44940	016-40614
87	3		44940	028-31506
87	4		44940	029-61106
87	5		44940	210-10422
87	6		44940	016-41018
87	7		44940	028-31510
87	8		44940	210-10450
87	9		44940	016-40918
87	10		44940	028-31509
87	11		44940	210-10423

CROSS-REFERENCE INDEXES

FIGURE AND ITEM NUMBER INDEX

FIG.	ITEM	STOCK NUMBER	FSCM	PART NUMBER
87	12		44940	210-10403
87	13		44940	016-31115
87	14		44940	354-13010
87	15		44940	210-10264
87	16		44940	003-14027
87	17		44940	450-12860
87	18		44940	354-13460
87	19		44940	354-13480
87	20		44940	350-11700
87	21		44940	450-14950
87	22		44940	016-40721
87	23		44940	028-31507
87	24		44940	016-40616
87	25		44940	210-10443
87	26		44940	450-17200
87	27		44940	210-10442
87	28		44940	210-10419
87	29		44940	210-10418
87	30		44940	210-10421
87	31		44940	016-40618
87	32		44940	210-10406
87	33		44940	050-11035
87	34		44940	210-1032
87	35		44940	051-01032
87	36		44940	210-10057
87	37		44940	054-20505
87	38		44940	210-1036
87	39		44940	073-08059
87	40		44940	210-1068
87	41		44940	210-10143/3
87	42		44940	210-1067
87	43		44940	210-10142/3
87	44		44940	224CRO1S21R11A
87	45		44940	224C111F1501A
88	1		44940	800-2111
88	2		44940	850-0060
88	3		15434	4BT3.9
88	4		44940	812-0075
88	5		44940	850-0025
88	6		44940	309-0556
88	7		44940	871-0010
88	8		44940	850-0030
88	9		44940	825-0008
88	10	6685-01-262-2397	44940	193-0375
88	11	6620-01-262-5096	44940	193-0244
88	12	5930-01-262-2356	44940	309-0557
88	13		44940	508-0059
88	14		44940	506-0104
89			15434	13.05-04
89	1		15434	3903834
89	2	2920-01-192-4469	15434	3904057

CROSS-REFERENCE INDEXES

FIGURE AND ITEM NUMBER INDEX

FIG.	ITEM	STOCK NUMBER	FSCM	PART NUMBER
90			15434	13.02.03.01-04
90	1		15434	3905426
90	2		15434	3911315
90	3	3030-01-243-4664	15434	3903090
90	4		15434	3903095
90	5		15434	3904549
90	6		77408	3903857
90	7		77408	3903858
91			15434	13.02.03
91	1		15434	3910527
91	2		15434	3910715
91	3		15434	3900621
91	4		15434	3910713
91	5		15434	3900620
91	6		15434	3903089
91	7		15434	3908563
91	8		15434	3908560
92			15434	13.02.02-04
92	1		15434	3904981
92	2		15434	3911462
93			15434	08.07-04
93	1		15434	3903096
93	2		15434	3900632
93	3		15434	3903756
93	4		15434	3912587
93	5	5330-01-190-1904	15434	3903301
93	6		15434	3903757
94			15434	08.07.1-04
94	1		15434	3901757
94	2		15434	3903103
94	3		15434	3906697
94	4		15434	3008468
95	1		44940	140-2169
95	2		44940	503-0868
95	3		44940	800-2110
95	4		44940	850-2012
95	5		44940	750-1010
95	6		44940	140-2163
95	7		44940	870-0281
95	8		44940	821-0029
95	9		44940	140-2164
95	10		44940	503-0998
95	11		44940	503-1543
95	12		44940	140-2166
95	13		44940	140-1260
95	14		44940	140-1548
95	15		44940	503-0999
95	16		44940	503-1542
95	17		44940	140-2157
95	18		44940	140-2159
95	19		44940	140-0078

CROSS-REFERENCE INDEXES

FIGURE AND ITEM NUMBER INDEX

FIG.	ITEM	STOCK NUMBER	FSCM	PART NUMBER
95	20		44940	140-2158
96			15434	10.06-04
96	1		15434	3008690
96	2	4720-01-192-9648	15434	3901804
96	3		15434	3906623
96	4		15434	3909546
96	5		96906	MS51875-6
96	6		15434	3900630
96	7		15434	43828-A
96	8	4710-01-203-0224	15434	3903740
96	9	4720-01-271-6946	15434	3903745
96	10	4710-01-193-7944	15434	3903744
96	11	5330-01-190-1905	15434	3901805
96	12		15434	3901961
96	13		15434	3905417
96	14	5330-01-190-7581	15434	3901356
96	15		15434	3904446
96	16		15434	3901919
96	17	5330-01-218-1201	15434	3905443
96	18		15434	3904341
96	19		15434	3908082
96	20	5330-01-193-0182	15434	3901999
96	21		15434	3802113
97			15434	11.01.01-04
97	1		15434	3903652
97	2		15434	3902460
97	3		15434	3907172
97	4		15434	3904986
97	5		15434	S-910-B
97	6		15434	3910992
98			15434	08.04-04
98	1		15434	3900227
98	2		15434	3904690
98	3		15434	3902709
98	4		15434	3900678
98	5		15434	3909888
99			15434	06.04-04
99	1		15434	3905403
99	2		15434	3905405
99	3		15434	3903037
99	4		15434	S-1069
99	5		15434	3903381
99	6		15434	3905351
99	7		15434	3905375
99	8		15434	3905364
99	9		15434	3905363
99	10		15434	3905353
99	11	4330-01-266-7673	15434	3903202
99	12		15434	3903845
100			15434	06.03-04
100	1		15434	3903609

CROSS-REFERENCE INDEXES

FIGURE AND ITEM NUMBER INDEX

FIG.	ITEM	STOCK NUMBER	FSCM	PART NUMBER
100	2		15434	3903723
100	3		15434	3904711
100	4		15434	3904712
100	5		15434	3904341
100	6		15434	3904344
100	7		15434	3904345
100	8		15434	3906029
100	9		15434	3906030
100	10		15434	3906031
100	11		15434	3906032
100	12		15434	3905307
100	13		15434	3903380
100	14		15434	3909695
100	15		15434	3905391
100	16		15434	3900629
100	17	5325-01-194-4354	15434	3900267
100	18		15434	3905692
100	19		15434	3905703
100	20		15434	3905388
101			15434	05.19-04
101	1		15434	3903035
101	2		15434	3903037
101	3		15434	3905649
101	4		15434	3900631
101	5	5330-01-190-9555	15434	3904044
101	6		15434	3904374
102	1	2910-01-294-1940	15434	3912852-1890
102	2		15434	S-203-A
102	3		15434	S-609
102	4		15434	3902332
102	5		15434	3904643
102	6		15434	3904644
102	7		15434	3904634
102	8		15434	3904636
102	9		15434	3904632
102	10		15434	3904633
102	11		15434	3904781
102	12		15434	3907487
102	13		15434	3907485
102	14		15434	3904640
102	15		15434	3904637
102	16		15434	3904638
102	17		15434	3904639
102	18		15434	3904631
102	19		15434	3904641
102	20		15434	3904642
102	21		15434	3904652
102	22		15434	3904651
102	23		15434	3904653
102	24		15434	3904650
102	25		15434	3904654

CROSS-REFERENCE INDEXES

FIGURE AND ITEM NUMBER INDEX

FIG.	ITEM	STOCK NUMBER	FSCM	PART NUMBER
102	26		15434	3904646
102	27		15434	3904645
102	28		15434	3904630
102	29		15434	3904777
102	30		15434	3904635
102	31		15434	3904649
102	32		15434	3904647
102	33		15434	3904648
102	34		15434	3907493
102	35		15434	3904778
102	36		15434	3904779
102	37		15434	3904780
102	38		15434	3907486
103			15434	09.01-04
103	1		15434	3900630
103	2		15434	3905387
103	3		15434	3902501
103	4		15434	3900589
103	5		15434	3911331
103	6	5330-01-190-1912	15434	3905685
104	1		44940	539-0953
104	2		44940	501-0532
104	3		44940	502-1035
104	4		44940	120-1200
104	5		44940	502-1036
104	6	5330-01-212-3361	44940	102-1147
105			15434	08.01-04
105	1		15434	3900227
105	2	2930-01-237-6299	15434	3802004
105	3		15434	3906698
106			15434	07.03-04
106	1		15434	3900632
106	2	5330-01-191-2965	15434	3904427
106	3		15434	3904320
106	4		15434	3912638
106	5	2815-01-211-5270	15434	3902338
106	6		15434	3906619
106	7	2940-01-265-3262	15434	3908616
106	8		15434	3904386
106	9		15434	3902425
106	10	5360-01-207-7341	15434	3903261
106	11	5340-01-265-7072	15434	3909376
106	12		15434	3902295
107			15434	03.01.1-04
107	1		15434	3907049
107	2	5330-01-281-8997	15434	3910824
107	3	5330-01-190-7443	15434	3902666
107	4		15434	3902604
108			15434	03.01-04
108	1		15434	3903940
108	2		15434	3901221

CROSS-REFERENCE INDEXES

FIGURE AND ITEM NUMBER INDEX

FIG.	ITEM	STOCK NUMBER	FSCM	PART NUMBER
108	3		15434	3900242
108	4		15434	3900245
108	5		15434	3910811
108	6	5310-01-165-2184	15434	S-205
108	7	5305-01-197-1663	15434	3900706
108	8		15434	3910810
108	9		15434	3904679
108	10		15434	3910814
108	11		15434	3907555
109			15434	06.01-04
109	1		15434	3802061
109	2	5330-01-195-5268	15434	3903380
109	3	5330-01-267-2985	15434	3909356
109	4	5310-01-193-7492	15434	3900808
109	5	2910-01-266-7679	15434	3911185
110			15434	02.01-04
110			15434	3802007
110	1		15434	3903939
110	2		15434	3903938
110	3	5330-01-195-1514	15434	3907054
110	4		15434	3910275
110	5		15434	3902606
110	6		15434	3008465
110	7		15434	3008468
110	8	2815-01-194-3775	15434	3900299
110	9	5360-01-195-5362	15434	3900276
110	10	2815-01-194-3776	15434	3901097
110	11	2815-01-194-3722	15434	3802005
110	12	2815-01-199-0448	15434	3900250
110	13	2815-01-194-3723	15434	3802006
111			15434	04.03-04
111	1		15434	3912072
111	2		15434	3909670
111	3		15434	3904230
111	4	4720-01-190-2581	15434	3906593
111	5		15434	3900629
111	6	5325-01-194-4354	15434	3900267
111	7	2805-01-263-3979	15434	3907586
111	8	5330-01-266-3297	15434	3904056
111	9		15434	3905023
112			15434	01.06-04
112	1		15434	3900629
112	2		15434	3900633
112	3		15434	3901446
112	4		15434	3912772
112	5	5330-01-191-4513	15434	3904353
112	6		15434	3903463
112	7	5330-01-191-8047	15434	3903475
112	8		15434	3903794
112	9	5330-01-255-9293	15434	3910500
112	10		15434	3904849

CROSS-REFERENCE INDEXES

FIGURE AND ITEM NUMBER INDEX

FIG.	ITEM	STOCK NUMBER	FSCM	PART NUMBER
112	11		15434	3907998
112	12	2815-01-189-1760	15434	3903924
112	13	5330-01-190-7477	15434	3903927
112	14	5330-01-255-0176	15434	3906693
112	15		15434	3905933
112	16	5330-01-269-1509	15434	3907836
112	17		15434	3908612
112	18		15434	3906610
112	19		15434	3910411
113			15434	07.01-04
113	1		15434	3907860
113	2		15434	3907537
113	3		15434	3907570
113	4		15434	3911535
113	5		15434	3900215
113	6		15434	3900216
113	7		15434	3904386
113	8		15434	3902425
113	9		15434	3900629
113	10		15434	3905223
113	11	5330-01-190-1914	15434	3905468
114			15434	07.06-04
114	1		15434	3900677
114	2	2815-01-237-3552	15434	3906413
115			15434	01.07-04
115	1	3020-01-262-3344	15434	3907431
115	2		15434	3902332
115	3		15434	3900620
115	4		15434	3901761
115	5	2815-01-242-3003	15434	3907446
116			15434	01.04-04
116	1	5365-01-194-4784	15434	3901706
116	2	2815-01-211-3886	15434	3901793
116	3	2815-01-193-2638	15434	3901569
116	4	5305-01-190-1478	15434	3900919
116	5	3120-01-193-9475	15434	3901170
116	6	2815-01-278-0876	15434	3802100
116	7	2815-01-211-2001	15434	3802050
116	8		15434	3907156
117			15434	16.01-04
117	1		15434	3910540
117	2		15434	3912072
117	3		15434	3908095
117	4	5330-01-271-9375	15434	3912473
117	5		15434	3900627
117	6		15434	3906526
117	7	5330-01-190-1910	15434	3901019
117	8		15434	3910248
117	9	5330-01-272-1124	15434	3910260
117	10		15434	3903282
117	11	5330-01-192-2037	15434	3909410

CROSS-REFERENCE INDEXES

FIGURE AND ITEM NUMBER INDEX

FIG.	ITEM	STOCK NUMBER	FSCM	PART NUMBER
118			15434	16.02-04
118	1		15434	3901395
118	2		15434	3900269
118	3	2815-01-244-5481	15434	3905831
118	4	3020-01-262-3343	15434	3901774
119			15434	01.02-04
119	1	3120-01-211-5250	15434	3802010
119	2		15434	3906080
119	3		15434	3906081
119	4	2815-01-284-1118	15434	3908031
119	5		15434	3904483
119	6		15434	3901258
120			15434	04.01/07.02/07.02.01-04
120			15434	3904991
120		5330-01-236-5735	15434	3802019
120		5330-01-266-7643	15434	3802016
120	1		15434	3904217
120	2		15434	3900967
120	3	5315-01-188-0760	15434	3900068
120	4	2815-01-211-0167	15434	3901306
120	5		15434	3900956
120	6		15434	3900965
120	7		15434	3906619
120	8		15434	3008468
120	9		15434	3900955
120	10		15434	3900257
120	11		15434	3900687
120	12		15434	3900958
120	13		15434	3007635
120	14	2815-01-212-3977	15434	3901020
120	15		15434	3902343
120	16		15434	3904294
120	17		15434	3905425
120	18		15434	101322
120	19		15434	3901249
120	20		15434	3905440
120	21	5330-01-191-6065	15434	3906704
120	22		44940	333-0293
121	1		44940	403-2632
121	2		44940	870-0257
121	3		44940	856-0008
121	4		44940	800-0026
121	5		44940	332-1473
121	6		44940	800-0090
121	7		44940	856-0013
121	8		44940	526-0219
121	9		44940	800-2111
121	10		44940	337-0090
121	11		44940	850-0060
121	12		44940	800-0153

CROSS-REFERENCE INDEXES

FIGURE AND ITEM NUMBER INDEX

FIG.	ITEM	STOCK NUMBER	FSCM	PART NUMBER
121	13		44940	862-0008
121	14		44940	850-0079
121	15		44940	526-0238
121	16		44940	403-2631-01
121	17		44940	403-2631-02
121	18		44940	402-0030
121	19		44940	800-0071
121	20		44940	850-0055
121	21		44940	862-0004
121	22		44940	526-0219
121	23		44940	800-0520
121	24		44940	402-0568
122	1		77408	D0-6800-8047
122	2		77408	D0-6150-1707
122	3	2815-01-275-9636	15434	S.0.56421-NT855M
123			15434	13.05/15.05-05
123	1		15434	S-224
123	2		96906	MS122032
123	3		15434	S-631
123	4	5930-01-287-9744	15434	3050692
123	5		15434	70709
123	6		15434	204493
123	7		15434	3050694
123	8		15434	3018924
123	9	2920-01-244-6058	15434	3021036
124			15434	15.08-05
124	1		15434	S-223
124	2		15434	3012471
124	3		15434	3035796
124	4		15434	3175239
124	5		15434	3033800
124	6		15434	3035083
124	7		15434	3034162
124	8		15434	3035084
124	9		15434	3035720
124	10		15434	3035719
124	11		15434	3035718
124	12		15434	3036575
124	13		15434	3022279
124	14	5925-01-240-7815	15434	3034953
124	15	5930-01-262-5088	15434	3034985
124	16	6625-01-240-5073	15434	3015235
124	17		15434	3035150
124	18	5930-00-655-1515	96906	MS35058-23
124	19		15434	3036576
124	20	5930-00-655-1514	96906	MS35058-22
124	21		15434	3049555
124	22	5930-01-262-5089	15434	3010649
124	23	5930-01-262-5090	15434	3010647
124	24		15434	3031702
124	25		15434	127814

CROSS-REFERENCE INDEXES

FIGURE AND ITEM NUMBER INDEX

FIG.	ITEM	STOCK NUMBER	FSCM	PART NUMBER
124	26		15434	70262
124	27		15434	3031707
124	28		15434	117102
124	29		15434	70310
124	30		15434	3036306
125			15434	08.08-05
125	1		15434	190799
125	2		96906	MS35338-47
125	3		15434	3010596
125	4		15434	3010360
125	5		15434	152767
125	6		15434	68425
125	7		15434	179904
125	8	4720-01-161-0810	15434	179930
125	9		15434	179918
125	10	4820-01-045-6080	15434	179901
125	11		15434	3048908
125	12		15434	70470
125	13		15434	S-921-D
125	14		15434	179903
125	15		15434	187317
125	16		15434	3827107
125	17	4330-01-262-5169	15434	3318319
125	18		15434	204163
126			15434	08.07-05
126	1		15434	3010595
126	2		15434	S-199-A
126	3		96906	MS35338-8
126	4		15434	3022589
126	5		15434	214617
126	6		96906	MS35842-13
126	7	4720-01-294-7227	15434	3056139
126	8		15434	213485
126	9	5330-00-159-1464	15434	43463-A
126	10		15434	3018764
126	11	5330-01-145-5380	15434	3019158
126	12		15434	3013786
126	13		15434	3010597
126	14	5330-01-040-2087	15434	208128
126	15	5330-00-864-5422	15434	186780
126	16	6620-01-141-0907	15434	201737
126	17		15434	3021440
126	18		15434	S-995
126	19		15434	3009464
126	20	5330-01-292-9463	15434	3009457
127			15434	10.04-05
127	1		15434	S-221
127	2		15434	S-111
127	3		15434	S-605
127	4		15434	120516
127	5		15434	S-186-A

CROSS-REFERENCE INDEXES

FIGURE AND ITEM NUMBER INDEX

FIG.	ITEM	STOCK NUMBER	FSCM	PART NUMBER
127	6		15434	127316
127	7		15434	112196
127	8		15434	S-223
127	9		15434	S-112
127	10		96906	MS35338-8
127	11		15434	3044632
127	12		15434	125741
127	13	4720-00-716-4938	15434	3030790
127	14	2940-01-262-5185	15434	178957
127	15		15434	140313
127	16		15434	3000302
127	17		15434	3030772
127	18		15434	3013238
127	19		15434	3021645
127	20	2940-01-266-7691	15434	3022209
128			15434	10.06/10.06.1-05
128			15434	3801522
128			15434	3801523
128	1		15434	3056158
128	2		15434	3056155
128	3	2950-01-089-7024	15434	3002138
128	4		15434	S-221
128	5		15434	S-107
128	6		15434	S-626
128	7		15434	S-605
128	8		15434	69465
128	9		15434	108722
128	10		15434	210753
128	11	4720-01-293-4411	15434	AM1601806MC
128	12		15434	S-969-E
128	13		15434	3010596
128	14		15434	3044929
128	15	5330-01-292-9465	15434	3202117
128	16	4720-01-079-2592	15434	209956
128	17		15434	142429
128	18		15434	3037535
128	19		15434	3036575
128	20		15434	186917
128	21		15434	203432
128	22	2950-01-262-2430	15434	3801614
128	23	5330-00-194-8385	15434	190849
129			15434	06.04-05
129	1		15434	3034526
129	2		15434	3010596
129	3		15434	3011380
129	4		15434	129859
129	5	2910-01-245-9782	15434	3315847
129	6		15434	AM1002200SS
129	7		15434	212013
130			15434	12.01.2-05
130	1		15434	S-200

CROSS-REFERENCE INDEXES

FIGURE AND ITEM NUMBER INDEX

FIG.	ITEM	STOCK NUMBER	FSCM	PART NUMBER
130	2		15434	106289
130	3		15434	S-670
130	4		15434	S-608
130	5		15434	S-105-C
130	6		15434	127018
130	7		96906	MS122032
130	8		15434	S-181
130	9		15434	S-658
130	10		96906	MS35338-50
130	11		15434	204263
130	12		15434	AM1005400SS
130	13		15434	100501
130	14		15434	S-910-C
130	15		15434	3200802
130	16		15434	S-920
130	17		15434	S-960
130	18		15434	S-982
130	19		15434	123822
130	20		15434	3032795
131			15434	08.01/08.16-05
131		2930-01-262-5153	15434	3801712
131	1		15434	137797
131	2		96906	MS35338-8
131	3		96906	MS27183-14
131	4		15434	108707
131	5		15434	S-112
131	6		15434	S-109
131	7		15434	3046110
131	8		15434	3022183
131	9		15434	3012469
131	10		15434	3012468
131	11	5330-01-146-7314	15434	3024960
131	12	5330-00-159-1464	15434	43463-A
131	13		15434	182706
131	14	3030-01-065-9404	15434	217638
131	15	2930-01-262-5175	15434	3050398
131	16		15434	S-965-E
131	17		15434	S-201
131	18		15434	213082
131	19		15434	S-16255
131	20		15434	3050395
131	21		15434	115519
131	22		15434	3050396
131	23		15434	215397
131	24	2930-01-288-9888	15434	3801708
131	25		15434	3013786
131	26		15434	S-911-B
131	27		15434	3025861
131	28	2815-00-815-0355	15434	S-16255
131	29	3110-00-107-7564	15434	115519
131	30	5365-01-132-1984	15434	196844

CROSS-REFERENCE INDEXES

FIGURE AND ITEM NUMBER INDEX

FIG.	ITEM	STOCK NUMBER	FSCM	PART NUMBER
131	31	4320-01-079-3454	15434	3000888
131	32	5330-00-005-0407	15434	3033677
131	33	3040-01-287-9736	15434	3050394
131	34		15434	3045163
131	35	5330-01-066-5350	15434	3002385
132			15434	07.05-05
132	1		15434	S-145
132	2		15434	203310
132	3		15434	3010596
132	4		15434	3010597
132	5		15434	S-106-C
132	6		96906	MS35338-8
132	7		15434	3010595
132	8		15434	3011342
132	9		15434	3011233
132	10	5330-00-537-2382	15434	70089-1
132	11		15434	210966
132	12	5330-01-079-6514	15434	3008017
132	13	2940-01-019-4513	15434	3313279
132	14		15434	138045
132	15		96906	MS35338-50
132	16		15436	200861
132	17		15434	3300908
132	18	5330-01-164-0944	15434	3308958
132	19	5330-01-164-0904	15434	3302630
132	20		15434	3043487
132	21		15434	3051560
132	22		15434	3003814
132	23		15434	S-126
132	24		96906	MS35338-8
132	25		15434	3010596
132	26		15434	3012475
132	27		15434	108307
132	28		15434	3008469
132	29		15434	217315
132	30	5330-01-046-1991	15434	218245
132	31		15434	213394
132	32		15434	3022961
132	33		15434	67946
132	34	5360-00-664-5343	15434	68274
132	35	2815-00-791-1453	15434	127558
132	36	5330-01-046-3144	15434	3010030
132	37		15434	210967
132	38		15434	AR-9999
132	39		15434	3025458
132	40		15434	3008466
132	41		15434	3013786
132	42		15434	3023994
132	43	4820-01-241-3295	15434	3018673
132	44	5360-01-200-0323	15434	202128
132	45	5365-01-139-6738	15434	3006745

CROSS-REFERENCE INDEXES

FIGURE AND ITEM NUMBER INDEX

FIG.	ITEM	STOCK NUMBER	FSCM	PART NUMBER
132	46	5330-01-086-6197	15434	3007713
132	47	2930-01-065-7113	15434	3021581
132	48		15434	210915
133			15434	07.03-05
133	1		15434	S-223
133	2		15434	S-112
133	3		96906	MS27183-14
133	4		15434	108707
133	5		96906	MS35338-8
133	6		15434	3044633
133	7		15434	S-169
133	8		15434	S-608
133	9		15434	S-670
133	10		15434	106221
133	11	4330-01-262-5172	15434	3313289
133	12		15434	AM0603400SS
133	13		15434	121229
133	14		15434	AM0603600SS
133	15		15434	144378
133	16		15434	68645
133	17		15434	3304173
134			15434	10.02-05
134	1		15434	S-224
134	2		15434	S-105-C
134	3		15434	146159
134	4		96906	MS122032
134	5		15434	108709
134	6		96906	MS35338-47
134	7		15434	3010363
134	8		15434	S-109
134	9		96906	MS35338-8
134	10		15434	68152
134	11		96906	MS35842-13
134	12	4720-01-262-5139	15434	3000270
134	13		15434	3010365
134	14		15434	3000264
134	15		15434	153408
134	16	4720-01-085-6131	15434	155789
134	17		15434	3010361
134	18		15434	152547
134	19		15434	AS0403000SS
134	20		15434	112105
134	21		96906	MS39158-3
134	22	5930-01-067-8418	15434	196074
134	23		15434	212024
135			15434	06.03/05.06/05.01-05
135		5330-01-075-0948	15434	3010242
135	1		15434	S-117
135	2		96906	MS35338-8
135	3		96906	MS27183-14

CROSS-REFERENCE INDEXES

FIGURE AND ITEM NUMBER INDEX

FIG.	ITEM	STOCK NUMBER	FSCM	PART NUMBER
135	4		15434	107460
135	5		15434	S-104
135	6		15434	101476
135	7		15434	145782
135	8		15434	S-205
135	9		15434	69793
135	10		15434	S-151-C
135	11		15434	S-609
135	12		15434	113710
135	13		15434	65434
135	14		15434	3018889
135	15		15434	3033013
135	16		15434	3032872
135	17		15434	3033005
135	18	4820-01-293-6779	15434	3028325
135	19		15434	68606
135	20		15434	139969
135	21		15434	3010755
135	22		15434	181213
135	23		15434	S-1049
135	24		15434	185347
135	25		15434	S-964
135	26		15434	43765
135	27	4820-00-471-0049	15434	178079
135	28		15434	S-189-C
135	29		15434	181466
135	30		15434	67684
135	31	5330-00-951-3538	15434	154087
135	32	4810-00-887-8358	15434	3035346
135	33		15434	187556
135	34		15434	134076
135	35		15434	129839
135	36		15434	129888
135	37		15434	129768
135	38		15434	3030970
135	39		15434	190876
135	40		15434	3000266
135	41		15434	129838
135	42		15434	3025458
135	43		15434	129826
135	44		15434	S-251
135	45		96906	MS122032
135	46		15434	70704
135	47		15434	S-159-B
135	48		15434	110481
135	49		15434	3057817-9348
135	50		15434	3058505
135	51		15434	214139
135	52		15434	3001737
135	53		15434	218548
135	54		15434	100193

CROSS-REFERENCE INDEXES

FIGURE AND ITEM NUMBER INDEX

FIG.	ITEM	STOCK NUMBER	FSCM	PART NUMBER
135	55		15434	163733
135	56		15434	118227
135	57		15434	202682
135	58		15434	108384
135	59		15434	3000594
135	60		15434	70815
135	61		15434	3040750
135	62		15434	70690
135	63		15434	3048557
135	64		15434	3027633
135	65		15434	212350
135	66		15434	3035230
135	67		15434	3046680
135	68		15434	3006343
135	69		15434	3006344
135	70		15434	3006175
135	71		15434	100478
135	72		15434	213768
135	73		15434	213769
135	74		15434	3000446
135	75		15434	S-2286
135	76		15434	179816
135	77		15434	101841
135	78		15434	101842
135	79		15434	101843
135	80		15434	3025460
135	81		15434	3046407
135	82		15434	105375
135	83		15434	146483
135	84		15434	70700
135	85		15434	201007
135	86		15434	145504
135	87		15434	128807
135	88		96906	MS16632-1050
135	89		15434	S-248
135	90		15434	214144
135	91		15434	68061-A
135	92		15434	110058
135	93		15434	3018655
135	94		15434	3001707
135	95		15434	138802
135	96		15434	S-213-A
135	97		15434	3023088
135	98		15434	3013810
135	99		15434	3013811
135	100		15434	214150
135	101		15434	3044942
135	102		15434	3023171
135	103		15434	S-251
135	104		15434	3015520
135	105		15434	3015522

CROSS-REFERENCE INDEXES

FIGURE AND ITEM NUMBER INDEX

FIG.	ITEM	STOCK NUMBER	FSCM	PART NUMBER
135	106		15434	70772-B
135	107		15434	70704
135	108		15434	3012558
135	109		15434	3036901
135	110		15434	S-16240
135	111		15434	145505
135	112		15434	3036903
135	113		15434	70775
135	114		15434	3026163
135	115		15434	3033719
135	116		15434	3033732
135	117		15434	100215
135	118		15434	3033742
135	119		15434	181466
135	120		15434	70790
135	121		15434	3034412
135	122		15434	3033740
135	123		15434	70791
135	124		15434	110855
135	125		15434	119363
135	126		15434	175864
135	127		15434	3050624
135	128		15434	3029857
135	129		15434	3002110
135	130		15434	212607
135	131		15434	212603
135	132		15434	3004724
135	133		15434	212609
135	134		15434	212610
135	135		15434	3054292
135	136		15434	3053805
135	137		15434	3045173
135	138		15434	212602
135	139		15434	212613
135	140		15434	146160
135	141		15434	S-110
135	142		15434	3017051
135	143		15434	118226
135	144		15434	S-607
135	145		96906	MS27183-42
135	146		15434	163944
135	147		15434	211636
135	148		15434	3024991
135	149		15434	146437
135	150		15434	143854
135	151		15434	144179
135	152		15434	144178
135	153		15434	211635
135	154		15434	3006550
135	155		15434	211633
135	156		15434	212601

CROSS-REFERENCE INDEXES

FIGURE AND ITEM NUMBER INDEX

FIG.	ITEM	STOCK NUMBER	FSCM	PART NUMBER
135	157		15434	S-16052
135	158		15434	212604
135	159		15434	212605
135	160		15434	212639
135	161		15434	200998
135	162		15434	212668
135	163		15434	135169
135	164		15434	201745
135	165		15434	201008
135	166		15434	201010
135	167		15434	113244
135	168		15434	163826
135	169		15434	3024989
135	170		15434	S-188-C
135	171		15434	140418
135	172		15434	3032014
135	173		15434	70715
135	174		15434	3036474
135	175		15434	3018767
135	176		15434	70717
135	177		15434	70717-A
135	178		15434	70717-B
135	179		15434	189800
135	180		15434	203346
135	181		15434	70716
135	182		15434	70705
135	183		15434	44678
135	184		15434	3017052
135	185		15434	3003156
135	186		15434	3025459
135	187		15434	3016021
135	188		15434	109917
135	189		15434	112408
135	190		15434	S-270
135	191		15434	70415
135	192		15434	70813
135	193		15434	3010941
135	194		15434	70834
135	195		15434	3010942
135	196		15434	3010945
135	197		15434	70836
135	198		15434	70811
135	199		15434	70811-A
135	200		15434	70811-B
135	201		15434	70823
135	202		15434	109686
135	203		15434	70798
135	204		15434	70778
135	205		15434	70820
135	206		15434	151900
135	207		15434	153338

CROSS-REFERENCE INDEXES

FIGURE AND ITEM NUMBER INDEX

FIG.	ITEM	STOCK NUMBER	FSCM	PART NUMBER
135	208		15434	139988
135	209		15434	202897
135	210		15434	100099
135	211		15434	160514
135	212		15434	153336
135	213		15434	S-174-C
136			15434	03.01/03.01.1-05
136	1		15434	3012472
136	2		15434	63385
136	3		15434	S-205
136	4		96906	MS35338-8
136	5		15434	69793
136	6		15434	68425
136	7		15434	111670
136	8		15434	3008596
136	9	4720-00-278-4890	28835	2CA647
136	10		15434	142486
136	11		15434	255180
136	12		15434	107981
136	13		15434	3038076
136	14		15434	3006349
136	15		15434	3006183
136	16		15434	3006358
136	17	5330-01-285-4827	15434	3054841
136	18		15434	S-176
136	19		15434	170226
136	20		15434	3001726
136	21		15434	3010589
136	22	5330-00-861-8592	15434	3017750
136	23	2815-01-262-2455	15434	3044788
136	24		15434	3038903
136	25	5330-01-240-1660	15434	3046364
136	26		15434	3038904
136	27	2815-00-851-7637	15434	BM-95162
136	28		15434	169705
136	29		15434	140330
136	30	5310-00-732-0560	96906	MS51968-14
136	31	5305-00-947-3437	15434	168306
136	32		15434	208084
136	33	2815-00-005-7431	15434	AR-2308
136	34		15434	218152
136	35	5310-00-732-0560	96906	MS51968-14
136	36	5305-00-947-3437	15434	168306
136	37		15434	194037
136	38		15434	218153
136	39	2815-01-096-9198	15434	BM-95161
136	40		15434	169704
136	41		15434	140330
136	42	5310-00-732-0560	96906	MS51968-14
136	43	5305-00-947-3437	15434	168306
136	44		15434	208084

CROSS-REFERENCE INDEXES

FIGURE AND ITEM NUMBER INDEX

FIG.	ITEM	STOCK NUMBER	FSCM	PART NUMBER
136	45		15434	168319
136	46		15434	3044787
137			15434	06.01-05
137	1		15434	3028279
137	2		15434	3031137
137	3	2910-01-262-5182	15434	3054218
137	4	5340-00-238-5435	15434	191916
137	5	5310-01-066-2942	15434	180626
138			15434	08.12-05
138	1		15434	S-103-D
138	2		15434	108330
138	3		15434	S-109
138	4		15434	S-181-C
138	5	5330-00-609-8860	15434	7274
138	6		15434	119665
138	7	6620-01-262-5126	15434	3008837
138	8		15434	S-945
138	9		15434	S-1059
138	10		15434	S-955
138	11		15434	AS40120MS
138	12		15434	68139
138	13		15434	69318
138	14		96906	MS39158-3
138	15	4720-01-135-6694	15434	200517
138	16		15434	43828-A
138	17		15434	3013320
138	18		15434	170049
138	19		15434	3010323
139			15434	08.11/08.16-05
139	1		96906	MS90725-6
139	2		96906	MS122032
139	3		15434	146159
139	4		15434	3022194
139	5		15434	S-223
139	6		96906	MS35338-8
139	7		15434	108707
139	8		96906	MS27183-14
139	9		15434	S-109
139	10		15434	43828-D
139	11	4720-01-168-2657	15434	67185
139	12		15434	3060827
139	13		15434	3060824
139	14		15434	3060823
139	15		15434	3060820
139	16	3030-01-262-5102	15434	178691
139	17		15434	3010342
139	18		15434	3010329
139	19	2930-01-262-2432	15434	3010328
140			15434	08.10-05
140	1		15434	S-176
140	2		15434	S-608

CROSS-REFERENCE INDEXES

FIGURE AND ITEM NUMBER INDEX

FIG.	ITEM	STOCK NUMBER	FSCM	PART NUMBER
140	3		15434	S-670
140	4		15434	3010325
140	5		15434	S-193
140	6		15434	3010324
140	7		15434	43828-D
140	8	4720-01-168-2657	15434	67185
140	9		15434	S-172-B
140	10		96906	MS35338-8
140	11		15434	3010376
140	12		15434	3008832
140	13		15434	3015283
140	14		15434	3013305
140	15		15434	43828-F
140	16	4720-00-056-4608	15434	104296-
140	17		15434	S-199-B
140	18		15434	3010327
140	19		15434	3008470
140	20		15434	153408
140	21		15434	3010374
140	22		15434	3060829
140	23		15434	3055769
140	24		15434	3060831
140	25		15434	3008844
140	26		15434	3050863
140	27		96906	MS35338-47
140	28	5340-00-463-5218	15434	68241
140	29		15434	3011329
140	30		15434	3011337
140	31		15434	3011325
140	32		15434	3050862
140	33		15434	3011324
140	34		15434	3011332
140	35		15434	3011327
140	36		15434	S-910-B
140	37		15434	3011323
140	38		15434	S-961-E
141			15434	10.01-05
141	1		15434	69047-A
141	2		15434	63842
141	3		96906	MS35338-8
141	4		15434	3011715
141	5		15434	3011716
141	6		15434	3008466
141	7		15434	3008470
141	8		15434	3010595
141	9		15434	70295
141	10		15434	208326
141	11	4720-01-253-4597	15434	3020996
141	12		15434	3026529
141	13	5330-01-242-0722	15434	3019227
141	14		15434	141761

CROSS-REFERENCE INDEXES

FIGURE AND ITEM NUMBER INDEX

FIG.	ITEM	STOCK NUMBER	FSCM	PART NUMBER
141	15	5330-01-086-3523	15434	3008591
142			15434	11.01-05
142	1		15434	137890
142	2		96906	MS35338-47
142	3		15434	S-923-E
142	4		15434	S-109
142	5		96906	MS35338-8
142	6		96906	MS27183-14
142	7		15434	3009459
142	8		15434	3029032
142	9	5330-01-077-5228	15434	212161
142	10		15434	3008590
142	11	5330-00-132-0249	15434	178937
142	12	5330-00-659-3178	15434	3020943
143			15434	02.01-05
143		5330-01-149-9715	15434	3801330
143	1		15434	3013623
143	2		15434	69699
143	3		15434	S-911-B
143	4		15434	70772
143	5		15434	135308
143	6		15434	147100
143	7	5330-00-143-8485	15434	131026
143	8		15434	3012470
143	9		15434	3009461
143	10	5330-01-145-5381	15434	3024709
143	11	2815-01-159-1789	15434	3030038
143	12		15434	147389
143	13		15434	203131
143	14		15434	3028293
143	15		15434	3041993
143	16	5340-01-143-6048	15434	127554
143	17	5340-00-933-3009	15434	170296
143	18	5360-00-009-9270	15434	211999
143	19		15434	3202144
143	20		15434	3050369
143	21	2815-01-085-2618	15434	3006456
143	22	2815-01-278-6192	15434	3040830
143	23	4820-00-085-7434	15434	3017759
143	24	2815-00-739-6098	15434	135957
143	25		15434	200354
143	26		15434	123558
143	27	2910-01-146-0048	15434	3011934
143	28	5330-01-072-4436	15434	3007759
143	29		15434	213395
143	30		15434	216524
143	31		15434	213394
143	32		15434	3041991
143	33	5330-01-080-5021	15434	3047402
144			15434	04.01-05
144		2930-01-287-9733	15434	3801710

CROSS-REFERENCE INDEXES

FIGURE AND ITEM NUMBER INDEX

FIG.	ITEM	STOCK NUMBER	FSCM	PART NUMBER.
144	1		15434	S-129
144	2	2815-01-166-3415	15434	3036939
144	3		15434	3016887
144	4		15434	69736
144	5		15434	175831
144	6		15434	3017031
144	7	2815-01-146-7914	15434	3036935
144	8	3120-00-659-7808	15434	118378
144	9	5315-00-777-3544	15434	118939
144	10	5315-01-210-0616	15434	3013331
144	11	3120-01-212-4472	15434	3036933
144	12	2815-01-048-6702	15434	213559
144	13		15434	3036937
144	14	3120-00-791-1440	15434	118377
144	15	5315-00-777-3544	15434	118939
144	16	5315-01-210-0617	15434	3013330
144	17	3120-01-079-5451	15434	3036934
144	18	2815-01-048-6702	15434	213559
144	19	2815-01-263-0137	15434	3046420
144	20	2815-01-262-2346	15434	3046430
144	21	5330-01-146-7172	15434	3020000
144	21	5330-01-146-9775	15434	3020002
144	21	5330-01-146-9928	15434	3020003
145			15434	09.03-05
145	1		15434	3010590
145	2		15434	3012526
145	3		15434	193136
145	4		15434	70550
145	5	5330-01-129-6541	15434	3008947
145	6		15434	3023473
145	7	2930-00-401-9531	15434	190397
145	8		15434	3013786
145	9	5330-00-026-2931	15434	200809
145	10	2520-01-241-5629	15434	3005131
145	11		15434	129510
145	12		15434	170664
145	13	2815-01-214-7129	15434	3000175
145	14		15434	3014103
145	15	3120-01-144-7368	15434	3026557
145	16	5315-01-177-7507	15434	3034438
145	17	4310-01-092-9816	15434	3000171
145	18	3120-01-147-5275	15434	3026556
145	19	3020-00-160-9092	15434	142689
145	20	1680-01-197-5288	15434	AR-45728
145	21	3120-00-792-9834	15434	116391
145	22		15434	S-911-B
146			15434	01.09-05
146	1		15434	S-127-C
146	2		96906	MS35338-50
146	3		15434	3011714
146	4		15434	3011713

CROSS-REFERENCE INDEXES

FIGURE AND ITEM NUMBER INDEX

FIG.	ITEM	STOCK NUMBER	FSCM	PART NUMBER
146	5		15434	3011711
146	6		15434	60408
146	7		15434	70653
146	8		15434	S-911-B
146	9		15434	3013786
146	10	5330-01-240-1619	15434	3020183
146	11		15434	3011715
146	12		15434	3008530
146	13		15434	AR-1176
146	14	5330-01-145-0716	15434	215705
146	15	5330-01-215-4972	15434	3020185
146	16	5340-01-298-2486	15434	3036125
146	17		15434	3351627
146	18		15434	132770
146	19	5330-01-145-6914	15434	3021704
146	20		15434	3010348
146	21		15434	3010372
147	1		61208	SL111HP2
147	2		15434	3010596
147	3		61208	M2033BJ
147	4		61208	M287
147	5	3020-00-366-0138	61208	6931
147	6	3110-00-155-6677	61208	M224
147	7		61208	M2027AN
147	8		61208	M2046AF
147	9		61208	1146
147	10		61208	A1588
147	11		61208	M2032Z
147	12		96906	MS15003-1
147	13	4720-00-362-0166	61208	A1663
147	14		61208	M1283
147	15	4720-00-802-2038	61208	M1292A
147	16		61208	M1284
147	17		61208	B1535C
147	18		61208	B1538C
147	19		61208	B1535A
147	20		61208	B1536B
147	21		61208	A2913
147	22		61208	A3271A
147	23		61208	S567
147	24		61208	X117
147	25		61208	M1930F
147	26		61208	M2002BB
147	27		61208	117
147	28		61208	120
147	29		61208	A2836
147	30	5360-01-267-0098	61208	A2709N
147	31		61208	A6107A
147	32		61208	6614F
147	33		61208	A2987N
147	34		61208	9561

CROSS-REFERENCE INDEXES

FIGURE AND ITEM NUMBER INDEX

FIG.	ITEM	STOCK NUMBER	FSCM	PART NUMBER
147	35		61208	M2001E
147	36		61208	M2046L
147	37		61208	1216
147	38		61208	B2147
147	39	3110-00-100-3898	61208	M207
147	40		61208	B5469A
147	41		61208	M2051B
147	42		61208	M2023F
147	43		61208	2815AC
147	44		61208	M503
147	45		61208	M2004R
147	46		61208	7441A
147	47		61208	M2002AG
147	48		61208	M2022Z
147	49		61208	1144AL
147	50		61208	125B
147	51		61208	8247
148	1	2520-01-241-4247	61208	SP214P1
148	2		15434	103009
148	3		96906	MS35338-47
148	4		15434	S-113
148	5		15434	S-608
148	6		61208	M2034AL
148	7	3020-00-384-0958	61208	5713
148	8	3110-00-227-2652	21335	W307PP
148	9		61208	M2027AN
148	10		61208	M2046AF
148	11		61208	B1509T
148	12		61208	B1511L
148	13		61208	M2035AC
148	14		96906	MS15003-1
148	15	4720-00-362-0887	61208	A1663A
148	16		61208	M1283
148	17	4720-01-098-6953	61208	M1292B
148	18		61208	M1284
148	19	2520-01-282-0171	61208	X9586B
148	20		61208	B1535D
148	21		61208	B1540A
148	22		61208	M2115D
148	23		61208	B1284
148	24	2520-01-271-0192	61208	S-598
148	25		61208	B1535C
148	26		61208	B1538B
148	27		61208	119B14
148	28		61208	A6514
148	29		61208	X117B14
148	30		61208	M1930F
148	31		61208	M2002BB
148	32		61208	117B14
148	33		61208	1293
148	34		61208	B2341

CROSS-REFERENCE INDEXES

FIGURE AND ITEM NUMBER INDEX

FIG.	ITEM	STOCK NUMBER	FSCM	PART NUMBER
148	35	5360-01-102-3448	61208	A2702BE
148	36		61208	A4241
148	37		61208	A6512C
148	38		61208	5499E
148	39		61208	A6513
148	40		61208	ZA6519E
148	41		61208	M2004W
148	42		61208	M2047AA
148	43		61208	M2023F
148	44		61208	2815
148	45		61208	2816
148	46		61208	M503
148	47		61208	M2001H
148	48		61208	M2046L
148	49		61208	A1983
148	50		61208	A3308B
148	51		61208	A5195
148	52	3110-00-100-4221	61208	M215
148	53		61208	B5027A
148	54		61208	M2004R
148	55		61208	7441A
148	56		61208	M2002AG
148	57		61208	M2046S
148	58		61208	M2022Z
148	59		61208	1094C
148	60		61208	5091
148	61		61208	8718
149			15434	07.01-05
149	1		15434	3010595
149	2		96906	MS27183-14
149	3		15434	3017050
149	4		15434	3008069
149	5		15434	41044-1
149	6		15434	101814
149	7		15434	216484
149	8	5330-00-246-0309	15434	65274
149	9		15434	3013786
149	10		15434	3008468
149	11		15434	3055069
149	12		15434	67946
149	13		15434	3008470
149	14		15434	3016478
149	15	4720-01-241-8794	15434	3017963
149	16		15434	3012478
149	17		15434	3013980
149	18	5330-00-143-8376	15434	157551
149	19		15434	193631
149	20	5330-01-147-0748	15434	3032861
149	21		15434	S-1354
149	22	2815-00-338-6839	15434	20622
150			15434	07.06-05

CROSS-REFERENCE INDEXES

FIGURE AND ITEM NUMBER INDEX

FIG.	ITEM	STOCK NUMBER	FSCM	PART NUMBER
150	1		15434	3012479
150	2		15434	S-169-B
150	3		15434	117897
150	4		15434	S-142-A
150	5	2815-01-085-2573	15434	AR-10172
150	6		15434	3010595
150	7		15434	204048
150	8	5330-01-066-3909	15434	3004242
150	9		15434	S-119
150	10		15434	S-147-B
150	11		15434	S-605
150	12		15434	3022590
150	13		15434	AR-8667
150	14		15434	199592
150	15	3120-00-627-6697	15434	69521
150	16	5330-01-066-3910	15434	203145
150	17	3020-01-104-2334	15434	3014965
150	18		15434	3014784
150	19	3120-00-566-0480	15434	68365
150	20		15434	177419
150	21		15434	3014783
150	22		15434	3021361
150	23		15434	69519
150	24		15434	3008469
150	25		15434	126304
150	26		15434	109319
150	27		15434	S-109
150	28		15434	134596
150	29	5360-01-038-4659	15434	211939
150	30	2815-00-705-2856	15434	109333
150	31	3120-00-627-6697	15434	69521
150	32		96906	MS35756-34
150	33		15434	204832
150	34	5330-01-147-4071	15434	3031434
150	35		15434	AR-9832
150	36		15434	211929
150	37	3120-00-627-6697	15434	69521
151			15434	01.07-05
151	1	2815-01-146-1049	15434	3049024
151	2		15434	3042568
151	3		15434	68193
151	4	3120-01-079-8194	15434	215233
151	5		15434	3035195
151	6		15434	3021601
152			15434	01.04/01.05-05
152		2815-01-262-5136	15434	3016786
152	1	2815-01-086-4508	15434	3013930
152	2		15434	218808
152	3	5306-01-079-7027	15434	219153
152	4	2815-01-124-0232	15434	70550
152	5	2815-00-132-0273	15434	187420

CROSS-REFERENCE INDEXES

FIGURE AND ITEM NUMBER INDEX

FIG.	ITEM	STOCK NUMBER	FSCM	PART NUMBER
152	6	3120-01-087-3004	15434	214950
152	7		15434	218025
152	8		15434	3012332
152	9		15434	214730
152	10		15434	218732
152	11	2815-01-293-3028	15434	3801770
152	12	5365-01-241-4318	15434	175755
152	13	2815-00-480-4347	15434	191970
152	14		15434	3051555
153			15434	16.01/16.02-05
153	1		15434	204165
153	2		15434	200861
153	3	2815-00-483-0780	15434	3023510
153	4		15434	2965
153	5	3020-00-353-9273	15434	4851
153	6		15434	60408
153	7	2920-01-241-7251	15434	3034572
153	8		15434	3048351
153	9		15434	127316
153	10		15434	163086
153	11		15434	8265
153	12		15434	3001646
153	13		15434	70657
153	14	5330-01-082-6985	15434	3021735
153	15		15434	3010594
153	16		15434	3049018
153	17	5330-00-361-2955	15434	40662-A
153	18	5330-00-005-0858	15434	3006737
153	19		15434	153581
153	20		96906	MS35338-50
153	21		15434	9245
153	22		15434	3005557
154			15434	01.02-05
154		3120-01-132-9339	15434	3801260
154	1		15434	212113
154	2		15434	127316
154	3		15434	3009213
154	4		15434	212112
154	5		15434	217323
154	6		15434	3010320
154	7		15434	3014614
154	8		15434	210179
154	9		15434	3037045
154	10		15434	3019218
154	11		15434	3019174
154	12		15434	3019180
154	13		15434	3019186
154	14		15434	3019192
154	15		15434	3019198
154	16		15434	3019204
154	17		15434	3608833

CROSS-REFERENCE INDEXES

FIGURE AND ITEM NUMBER INDEX

FIG.	ITEM	STOCK NUMBER	FSCM	PART NUMBER
155			15434	01.01-05
155			15434	3801779
155	1		15434	208346
155	2		15434	3046246
155	3	2910-01-085-8096	15434	3014404
155	4		15434	3033822
155	5	2910-01-146-7955	15434	3013591
155	6	5330-01-145-5377	15434	3007442
155	7	2815-00-011-7786	15434	3801826
155	8		15434	3055099
155	9		15434	215090
155	10	5330-01-220-2389	15434	3032874
155	11		15434	3019955
155	12		15434	3019956
155	13		15434	3019957
155	14		15434	3054948
155	15		15434	3019959
155	16		15434	3019960
155	17		15434	S-901
155	18	2815-01-291-2243	15434	3801592
155	19		15434	S-679
155	20		15434	S-716
155	21		15434	S-719
155	22		15434	S-911-B
155	23		96906	MS49005-16
155	24		15434	60408
155	25		15434	210884
155	26		15434	66292
155	27		15434	68445
155	28		15434	69901
155	29		15434	70653
155	30		15434	202903
155	31		15434	3008466
155	32		15434	3008468
155	33		15434	3008469
155	34		15434	3013786
155	35		15434	3013904
155	36		15434	132019
155	37	5330-00-537-2382	15434	70089-1
155	38	5340-01-145-9362	15434	3011952
155	39			15434 3008047
155	40			15434 3008048
155	41			15434 3008049
155	42	5315-00-532-9388	64104	B2568
155	43	5315-00-014-1195	15434	68585
155	44	3120-01-079-6823	15434	3011951
155	45	3120-01-208-8102	15434	3028075
155	46	3120-01-208-8103	15434	3028269
155	47			15434 S-274
155	48			96906 MS35338-47
155	49			15434 69324

CROSS-REFERENCE INDEXES

FIGURE AND ITEM NUMBER INDEX

FIG.	ITEM	STOCK NUMBER	FSCM	PART NUMBER
155	50		15434	S-140
156	1		77408	41-5035-8047
156	2		77408	41-4899-1699
156	3		77408	D0-1860-8047
156	4		77408	44-9500-0100
156	5		15434	600-2887
157	1		77408	40-2898-1371
157	2	4320-01-302-4230	32862	1079870
158	1		32862	100904
158	2		32862	1/2-13X1 3/4
158	3		32862	1/2-13
158	4		32862	1/2
158	5		17442	SD-01412D
158	6		75665	3/8-16
158	7		75665	520X00266
158	8		75665	520X00718
158	9		75665	520X00290
158	10		75665	1/2-13X3/4
158	11		75665	1/2
158	12		05427	F2L-2B
158	13		05427	1/2-13X3 1/2
158	14		05427	1/2-13
158	15		05427	1/2
158	16		76385	VBM-1473
158	17		05427	309M
159	1		32862	1048050
159	2		32862	1009199
159	3		32862	1000673
159	4		32862	1002331
159	5		32862	1001874
159	6		32862	1017862
159	7		32862	1002210
159	8		32862	1009813
159	9		32862	1010940
159	10		32862	1002332
159	11		32862	1004177
159	12		32862	1046348
159	13		32862	1046476
159	14		32862	1012099
159	15		32862	1029745
159	16		32862	1000998
159	17		32862	1007334
159	18		32862	1012580
159	19		32862	1012569
159	20		32862	1046346
159	21		32862	1012653
160	1		32862	1079993
160	2		32862	1008660
160	3		32862	1007832
160	4		32862	1007433
160	5		32862	1013353

CROSS-REFERENCE INDEXES

FIGURE AND ITEM NUMBER INDEX

FIG.	ITEM	STOCK NUMBER	FSCM	PART NUMBER
160	6		32862	1000984
160	7		32862	1000494
160	8		32862	1038480
160	9		32862	1000981
160	10		32862	1017834
160	11		32862	1011586
160	12		32862	1033823
160	13		32862	1008051
160	14		32862	1065849
160	15		32862	1046197
160	16		32862	1007519
160	17		32862	1008099
160	18		32862	1007800
160	19		32862	1007513
160	20		32862	1007514
160	21		32862	1007512
160	22		32862	1080850
160	23		32862	1015927
160	24		32862	1039613
160	25		32862	1069278
160	26		32862	1025656
160	27		32862	1008053
160	28		32862	1012398
160	29		32862	1002253
160	30		32862	1011624
160	31		32862	1000766
160	32		32862	1080849
160	33		32862	1018148
161	1		32862	1080735
161	2		32862	1031833
161	3		32862	1026911
161	4		32862	1011651
161	5		32862	1008135
161	6		32862	1008654
161	7		32862	1015927
161	8		32862	1007102
161	9		32862	1007016
161	10		32862	1007832
161	11		32862	1007520
161	12		32862	1011616
161	13		32862	1008065
161	14		32862	1007521
161	15		32862	1008062
161	16		32862	1008133
161	17		32862	1007796
161	18		32862	1005983
161	19		32862	1037190
161	20		32862	1030488
161	21		32862	1080734
161	22		32862	1033337
161	23		32862	1008129

CROSS-REFERENCE INDEXES

FIGURE AND ITEM NUMBER INDEX

FIG.	ITEM	STOCK NUMBER	FSCM	PART NUMBER
161	24		32862	1012538
161	25		32862	1014647
161	26		32862	1001559
161	27		32862	1008073
161	28		32862	1016503
162	1		32862	1000766
162	2		32862	6730162286
162	3	5330-01-268-2322	32862	0040141463
162	4		32862	6730217179
162	5	5330-01-266-7588	32862	2307632101
162	6		32862	H68/1
162	7		32862	2504251171
162	8		32862	6730112129
162	9	5330-01-266-7589	32862	2307032151
163	1		32862	1066805
163	2		32862	1005958
163	3		32862	1066910
163	4		32862	1066804
163	5		32862	1000985
163	6		32862	1001578
163	7		32862	1007330
163	8		32862	1000811
163	9	6320-01-266-7607	32862	1053070
164	1	2030-01-298-8833	32862	1074151
164	2		32862	1001383
164	3		32862	1006994
164	4		32862	1002245
164	5		32862	1006000
164	6		32862	1010940
164	7		32862	1002332
164	8		32862	1004178
164	9		32862	1066806
164	10		32862	1001422
164	11		32862	1005958
164	12		32862	1066657
164	13		32862	1002057
164	14		32862	1066809
164	15		32862	1005980
164	16		32862	1066810
164	17		32862	1032497
164	18		32862	1000819
164	19		32862	1051039
164	20		32862	1013490
164	21		32862	1002345
164	22		32862	1013855
164	23		32862	1013476
164	24		32862	1001377
164	25		32862	1013489
164	26		32862	1001483
164	27		32862	1013488
164	28		32862	1001138

CROSS-REFERENCE INDEXES

FIGURE AND ITEM NUMBER INDEX

FIG.	ITEM	STOCK NUMBER	FSCM	PART NUMBER
164	29		32862	1004146
164	30		32862	1013565
164	31		32862	1053312
164	32		32862	1013482
164	33		32862	1035460
164	34		32862	1059812
164	35		32862	1021874
164	36		32862	1066656
164	37		32862	1074152
164	38		32862	1013477
164	39		32862	1035473
164	40		32862	1036124
164	41		32862	1060092
164	42		32862	1036509
164	43		32862	1060090
164	44	2030-01-298-8834	32862	1075175
164	45		32862	1001383
164	46		32862	1018148
164	47		32862	1013731
164	48		32862	1007790
164	49		32862	1006000
164	50		32862	1002245
164	51		32862	1000329
164	52		32862	1002332
164	53		32862	1060416
164	54		32862	1001422
164	55		32862	1000819
164	56		32862	1051039
164	57		32862	1013490
164	58		32862	1002345
164	59		32862	1013855
164	60		32862	1013476
164	61		32862	1001377
164	62		32862	1013489
164	63		32862	1001483
164	64		32862	1013488
164	65		32862	1001138
164	66		32862	1004146
164	67		32862	1013565
164	68		32862	1053312
164	69		32862	1013482
164	70		32862	1035460
164	71		32862	1059812
164	72		32862	1013477
164	73		32862	1035473
164	74		32862	1036124
164	75		32862	1060092
164	76		32862	1036509
164	77		32862	1060090
165	1		32862	1039753
165	2		32862	1007336

CROSS-REFERENCE INDEXES

FIGURE AND ITEM NUMBER INDEX

FIG.	ITEM	STOCK NUMBER	FSCM	PART NUMBER
165	3	2030-01-298-0760	32862	1079995
165	4		32862	1000778
165	5		32862	1069156
165	6		32862	1064129
165	7		32862	1073949
165	8		32862	1060418
166	1		32862	1079853
166	2		32862	1001923
166	3		32862	1007336
166	4		32862	1000336
166	5		32862	1002325
166	6		32862	1004587
166	7		32862	1012748
166	8		32862	1002335
166	9		32862	1001082
166	10		32862	1007390
166	11		32862	1001484
166	12		32862	1003928
166	13		32862	1001357
166	14	5330-01-023-7196	32862	1001735
166	15		32862	1004380
166	16		32862	1001408
166	17		32862	1011528
166	18		32862	1003690
166	19		32862	1005988
166	20		32862	1001006
166	21		32862	1002334
166	22		32862	1044688
166	23		32862	1004385
166	24	5330-01-285-4820	32862	1001392
166	25		32862	1007070
166	26		32862	1011618
166	27		32862	1024145
166	28		32862	1002332
166	29		32862	1003211
166	30		32862	1010938
166	31		32862	1002336
166	32		32862	1001202
166	33		32862	1000899
166	34		32862	1006524
166	35		32862	1001438
166	36		32862	1006519
166	37		32862	1079852
166	38		32862	1005337
166	39		32862	1079856
166	40		32862	1004141
166	41		32862	1002533
166	42		32862	1002515
166	43		32862	1005315
166	44		32862	1002917
166	45		32862	1008962

CROSS-REFERENCE INDEXES

FIGURE AND ITEM NUMBER INDEX

FIG.	ITEM	STOCK NUMBER	FSCM	PART NUMBER
166	46		32862	1001006
166	47		32862	1002334
166	48		32862	1044688
166	49		32862	1006504
166	50		32862	1010028
166	51		32862	1001986
166	52		32862	1001317
166	53		32862	1004121
166	54		32862	1000778
166	55		32862	1002940
166	56		32862	1004391
166	57		32862	1011524
166	58		32862	1004128
166	59		32862	1004396
166	60		32862	1069557
167	1	4320-01-302-4231	32862	1079871
167	2		32862	1000963
167	3		32862	1002327
167	4		32862	1073947
167	5		32862	1009196
167	6		32862	1000824
167	7		32862	1002324
167	8		32862	1057593
167	9		32862	1001377
167	10		32862	1001343
167	11		32862	1061004
167	12		32862	1068446
167	13	5330-01-285-4823	32862	1001367
167	14		32862	1043365
167	15		32862	1023016
167	16	5330-01-285-4817	32862	1001361
167	17		32862	1000705
167	18		32862	1068585
167	19		32862	1001428
167	20		32862	1001147
167	21		32862	1028927
167	22		32862	1003587
167	23		32862	1003588
167	24		32862	1048381
167	25		32862	1021602
167	26		32862	1049041
167	27		32862	1001070
167	28		32862	1079956
167	29		32862	1001449
167	30		32862	1079954
167	31		32862	1048902
167	32		32862	1079865
167	33		32862	1000996
167	34		32862	1002325
167	35		32862	1001056
167	36		32862	1060407

CROSS-REFERENCE INDEXES

FIGURE AND ITEM NUMBER INDEX

FIG.	ITEM	STOCK NUMBER	FSCM	PART NUMBER
167	37		32862	1000305
167	38		32862	1076169
167	39		32862	1079955
167	40		32862	1005969
167	41		32862	1073799
167	42	5330-01-285-4812	32862	1001444
167	43		32862	1068583
167	44		32862	1063686
167	45		32862	1061005
167	46		32862	1072844
167	47		32862	1000817
167	48		32862	1027410
167	49	5330-01-285-4822	32862	1001324
167	50		32862	1005958
167	51		32862	1027409
167	52		32862	1027422
167	53		32862	1027408
167	54		32862	1034768
167	55		32862	1021874
167	56		32862	1027406
167	57		32862	1068806
167	58		32862	1007791
167	59		32862	1001006
167	60		32862	1001069
167	61		32862	1002326
167	62		32862	1079858
168	1		32862	1009004E1
168	2		32862	1000337
168	3		32862	1001559
168	4		32862	1000995
168	5		32862	1003866
168	6		32862	1009526
168	7		32862	1014630
168	8		32862	1023103
168	9		32862	1003867
168	10		32862	1007800
168	11		32862	1004245
169	1		32862	287.00.0.05
169	2		32862	287.00.2079.060
169	3		32862	287.00.67.00.000
169	4		32862	287.00.06.01.010
170	1		32862	1007800
170	2		32862	1007102
170	3		32862	1012396
170	4		32862	1007005
170	5		32862	1012570
170	6		32862	1007104
170	7		32862	1008084
170	8		32862	1015594
170	9		32862	1012395
170	10		32862	1013725

CROSS-REFERENCE INDEXES

FIGURE AND ITEM NUMBER INDEX

FIG.	ITEM	STOCK NUMBER	FSCM	PART NUMBER
170	11		32862	1006999
170	12		32862	1059330
170	13		32862	1012394
170	14		32862	1013722
170	15		32862	1008082
170	16		32862	1007524
170	17		32862	1007511
170	18		32862	1007510
170	19		32862	1007508
170	20		32862	1045443
170	21		32862	1065951
170	22		32862	1065952
170	23		32862	1046197
170	24		32862	20X2.5MM
170	25		32862	1008062
170	26		32862	1008065
170	27		32862	1008133
170	28		32862	1007796
170	29		32862	1005983
170	30		32862	35X2MM
170	31		32862	1007800
170	32		32862	15X2MM
170	33		32862	100710A
170	34		32862	10X1.5MM
170	35		32862	1013353
170	36		32862	8X1.5MM
170	37		32862	1008660
170	38		32862	20X2.5MM
170	39		32862	1008099
170	40		32862	1007106
170	41		32862	1013730
170	42		32862	1007116
170	43		32862	1049087
170	44		32862	1007103
170	45		32862	1046548
170	46		32862	1007791
170	47		32862	1009200
171	1		77408	DO-7050-8036
171	2		77408	DO-2907-1176
171	3		77408	DO-5980-8036
171	4	4610-01-299-6167	62144	7375
172	1		62144	05N-SS2431-001
172	2		62144	05L-SS2441-001
172	3		62144	05F-SS2421-001
172	4	4730-01-225-1037	21593	RWS
172	5		76599	HF1OSS
172	6	4720-01-264-2109	OABC1	PVTBF075
172	7		20943	TE-101212
172	8		62531	805-007
172	9		51671	3681-104
172	10		62531	839-210

CROSS-REFERENCE INDEXES

FIGURE AND ITEM NUMBER INDEX

FIG.	ITEM	STOCK NUMBER	FSCM	PART NUMBER
172	11		25193	RWS-2
172	12	5330-01-230-1595	21593	RWS-5
172	13	4730-01-225-1038	21593	RWS-5B
172	14		21593	RWS-1
173	1		62144	05N-SSOI08-000
173	2		62144	05L-SS0108-000
173	3		62144	05B-SS0O8-075
173	4		62144	7156
173	5		76599	SSHF6
173	6	4720-01-264-2106	OABC1	PVTBF025
173	7		76599	HF1OSS
173	8	4720-01-264-2109	OABC1	PVTBF075
173	9		20943	TE-20124
173	10		20943	TE-101212
173	11		62531	805-007
173	12		51671	3681-104
173	13		62531	839-167
173	14		73124	SP-1022C
173	15		70127	2-224
173	16		73124	SP1025
173	17		73124	SP25Z12
173	18		73124	SP1025Z-3
173	19		73124	SP1407-1
173	20		94066	CVC36-22
173	21		63208	10387A
173	22		62144	04T-001259-030
173	23	5330-01-200-6017	94066	WC9-3
173	24	4330-01-263-5353	62144	04E-OPF307-020
173	25		63208	10387
173	26		62144	04T-001261-030
173	27		94066	WC104-78P
173	28		62144	LP1261
174	1		62144	7394
174	2		76599	SSHF4
174	3	4720-01-264-2106	OABC1	PVTBF025
174	4		76599	HF1OSS
174	5	4720-01-264-2109	OABC1	PVTBF075
174	6		20943	TE-20124
174	7		20943	TE-101212
174	8		20943	TA-101212
174	9		62531	805-007
174	10		51671	3681-104
174	11		62144	05B-SSSt08-075
174	12		62144	040-VM3005-020
174	13	5330-01-262-9488	62144	040-VM3005-030
174	14		20943	TP-4012
174	15		62531	805-007-8
174	16		51671	3681-106
174	17		62144	040-VM3005-010
175	1		62144	05N-SS2431-001
175	2		62144	05L-SS2441-001

CROSS-REFERENCE INDEXES

FIGURE AND ITEM NUMBER INDEX

FIG.	ITEM	STOCK NUMBER	FSCM	PART NUMBER
175	3		62144	05W-SS2441-001
175	4		62144	05B-SS2421-001
175	5		21198	BC-4C-MD
175	6		76599	HF1OSS
175	7	4720-01-264-2109	OABC1	PVTBF075
175	8		73651	1407-131
175	9		21198	150-021-10
175	10		21198	135-016-20
175	11		21198	150-032-10
175	12		21198	135-023-10
175	13		21198	130-028-10
175	14		21198	130-024-10
175	15		21198	145-033-02
175	16		21198	150-031-10
175	17		21198	145-027-01
175	18		21198	858-001-10
175	19		21198	410-039-10
175	20		21198	145-010-10
175	21		21198	145-035-10
176	1		62144	05N-SS008-000
176	2		62144	05L-SS0O08-000
176	3		62144	05B-SS0*08-050
176	4		62144	7384
176	5		62144	7392
176	6		62144	PH-100375
176	7		62144	11F-HP3130-072
176	8		62144	PH-101375
176	9		62144	lIE-SS3412-003
176	10		62144	11B-SS3639-099
176	11		76599	HF1OSS
176	12	4720-01-264-2109	OABC1	PVTBF075
176	13		20943	TE-101212
176	14		8997	E-2
176	15		62144	11B-SS3639-101
176	16		62144	11T-SS3605-007
176	17		62144	11N-SS3631-104
176	18		62144	11B-SS3639-131
176	19		62144	02H-B20000-050
176	20		62144	02H-PNBK90-050
176	21		62144	05N-SS2431-060
176	22		62144	05L-SS2441-060
176	23		62144	05W-SS2441-060
176	24		62144	05B-SS2421-069
176	25		15332	VIP119X90
176	26		62144	SN-C10002
176	27		62144	05B-SS2421-063
176	28		25795	3M279
176	29		62144	051-VM1318-708
176	30		25795	3X574
176	31		25795	3X597
176	32		25795	3X769

CROSS-REFERENCE INDEXES

FIGURE AND ITEM NUMBER INDEX

FIG.	ITEM	STOCK NUMBER	FSCM	PART NUMBER
176	33	3030-01-262-5101	62144	10OB-OOBX36-000
176	34	6105-01-184-7529	05472	M3611T
176	35		59776	D529
176	36		59776	D1054
176	37		59776	D525
176	38	4320-01-199-3080	59776	DlOSS6
176	39		59776	D1078
176	40		59776	D1077
176	41		59776	D1076
176	42		59776	D528
176	43		59776	D1048
176	44		59776	D524
176	45		59776	D1049
176	46		59776	D1039
176	47		59776	D538
176	48		59776	D1004SS6-CB
176	49	5330-01-113-3702	59776	D1073
176	50		59776	D1074
176	51		59776	D1023
176	52		59776	D1022
176	53		59776	D1021
176	54		59776	D1020
176	55	5330-01-203-0733	59776	D1035
176	56		59776	D1003SS6-CB
176	57		59776	D530
176	58	5330-01-203-2569	59776	D1047
176	59		59776	D1017
176	60		59776	D1018
176	61		59776	D1016
176	62		59776	D527
176	63		59776	D1002-CB
176	64		59776	D1050
176	65		59776	D1013
176	66		59776	D1014
176	67		59776	D1015
176	68		59776	D1041
176	69	5330-01-203-0732	59776	D1034
176	70		59776	D1043
176	71		59776	D1044
176	72		59776	D1045
176	73	5330-01-203-2568	59776	D1046
176	74		59776	D1042
176	75		59776	D1019
176	76		59776	D1075
176	77		59776	D512
176	78		59776	D511
176	79		59776	D508
176	80		59776	D1005
176	81		59776	D1010
176	82		59776	D506
176	83		59776	D1026

CROSS-REFERENCE INDEXES

FIGURE AND ITEM NUMBER INDEX

FIG.	ITEM	STOCK NUMBER	FSCM	PART NUMBER
176	84		59776	D1007
176	85		59776	D1009
176	86		59776	D1031
176	87	5330-01-262-5105	62144	HH-A01194
176	88		59776	D1040
176	89		59776	D1079
176	90		59776	D1001
177	1		62144	7387
177	2		62144	02H-PNBK00-050
177	3		62144	02H-B20000-050
177	4		62144	02H-PNBK90-050
177	5		8L260	PG13,5 1/2IN MPT
177	6		62144	05B-MNOI10-050
177	7		60041	A-865JFG1
177	8		62144	05B-SS0*10-050
177	9		62144	08S-AL1000-005
177	10		62144	05N-SS5008-000
177	11		62144	05W-SS008-000
177	12		62144	05B-SS0O08-050
177	13		62144	08B-AL1000-005
177	14		27191	C320KGS4
177	15		27191	H2012-3
177	16		27191	AE16DNOB
177	17		62144	05N-SS2431-001
177	18		62144	05L-SS2441-001
177	19		62144	05F-SS2421-005
177	20		60041	A-865JFG
178	1		62144	7390
178	2		62144	05B-SSSt08-050
178	3		62144	05N-SS0108-000
178	4		62144	05L-SS0O08-000
178	5		62144	05B-SS0108-050
178	6		62144	081-BR1000-003
178	7		62144	081-BR1000-004
178	8		76599	SSHF4
178	9	4720-01-264-2106	OABC1	PVTBF025
178	10		62144	05C-PV0000-050
178	11		20943	TA-1044
178	12		62531	830-002
178	13	6620-01-262-5125	62144	09G-003015-025
178	14		12532	CRlOlY
178	15	2990-01-262-5141	62144	07H-02A812-000
178	16		62144	08S-PL1OO000-001
178	17		62144	7382
178	18		57733	LR42455
178	19		62144	20L-LAGOOl-000
178	20		62144	20L-LAROO1-000
178	21		62144	20S-160012-000
178	22	5920-01-093-8458	81349	F02A250V2-1-2A
178	23		62144	20F-000001-025
178	24		62144	20Z-111032-010

CROSS-REFERENCE INDEXES

FIGURE AND ITEM NUMBER INDEX

FIG.	ITEM	STOCK NUMBER	FSCM	PART NUMBER
178	25		62144	20S-MS500G-000
178	26		62144	20Z-111032-011
178	27		62144	20M-111032-220
178	28		62144	05B-SSO#10-050
178	29		62144	09R-ORMA45-150
178	30		62144	7388
178	31		76599	SSHF6
178	32	4720-01-264-2106	OABC1	PVTBF025
178	33		20943	TE-2046
178	34		85274	RMA-45
178	35		62144	08B-AL1000-003
178	36		62144	7386
178	37		76599	SSHF6
178	38	4720-01-264-2108	OABC1	PVTBF050
178	39		20943	TE-20128
178	40		76599	HF1OSS
178	41	4720-01-264-2109	OABC1	PVTBF075
178	42		20943	TE-101212
178	43		62531	805-007
178	44		51671	3681-104
178	45		1T589	K75-03-0142
178	46		62144	7385
178	47		76599	HF10OSS
178	48	4720-01-264-2109	OABC1	PVTBF075
178	49		76599	SSHF6
178	50	4720-01-264-2108	OABC1	PVTBF050
178	51		20943	TE-2048
178	52		20943	TE-20812
178	53		62144	7392
178	54		62144	11C-SS3630-052
178	55		62144	1N-SS3661-037
178	56		62144	11E-SS3412-002
178	57	4820-01-252-9555	12623	SS-43F4
178	58		62144	05N-SS2431-190
178	59		62144	05W-SS2441-190
178	60		62144	11N-SS3661-039
178	61		62144	11N-SS3661-038
178	62		62144	03R-VM1300-005
178	63		62144	11X-SS3420-002
178	64		62144	03R-VM1301-005
178	65		62144	09G-001000-025
179	1		62144	05B-SSS#08-050
179	2		62144	19S-832061-215-2 8
179	3		62144	7389
179	4		76599	SSHF6
179	5	4720-01-264-2106	OABC1	PVTBF025
179	6		20943	TE-2044
179	7		20943	TA-1044
179	8		92194	SW2-1/4 IN
179	9	4810-01-262-2386	14403	832061

CROSS-REFERENCE INDEXES

FIGURE AND ITEM NUMBER INDEX

FIG.	ITEM	STOCK NUMBER	FSCM	PART NUMBER
179	10		62144	19S-832061-219
179	11		62144	19S-832061-214
179	12		62144	19S-832061-218
179	13		62144	19S-832061-217
179	14		62144	19S-832061-216
179	15		62144	19S-832061-215
179	16		62144	19S-832061-212
179	17		62144	19S-832061-213
179	18		62144	19S-832061-211
179	19		62144	19S-832061-210
179	20		62144	19S-832061-209
179	21		62144	19S-832061-201
179	22		62144	19S-832061-202
179	23		62144	19S-832061-203
179	24		62144	19S-832061-205
179	25		62144	19S-832061-206
179	26		62144	19S-02166D-220
179	27		62144	19S-832061-207
179	28		62144	19S-832061-204
179	29		62144	19S-832061-208
180	1		62144	05B-SSS#08-050
180	2		62144	05N-SSO#08-000
180	3		62144	05L-SSO#08-000
180	4		62144	05W-SS0O08-000
180	5		62144	05B-SSO#08-050
180	6		62144	7380
180	7		76599	SSHF4
180	8	4720-01-264-2107	OABC1	PVTBF038
180	9		20943	TE-2086
180	10		20943	TA-1046
180	11		62144	19C-NY5306-312
180	12	4720-01-264-2106	OABC1	PVTBF025
180	13		62144	19C-NY5304-312
180	14		76599	HF1OSS
180	15	4720-01-264-2109	OABC1	PVTBF075
180	16		20943	TE-20812
180	17		76599	SSHF6
180	18	4720-01-264-2108	OABC1	PVTBF050
180	19		20943	TE-2088
180	20	5977-01-273-7437	62144	20P-102682-000
180	21		20943	TP-4004
180	22		62144	11M-PV1630-848
181	1		62144	05N-SS0#08-000
181	2		62144	05L-SS0#08-000
181	3		62144	05W-SS0#08-000
181	4		62144	05B-SS0#08-050
181	5		62144	7379
181	6		76599	HF1OSS'
181	7	4720-01-264-2109	OABC1	PVTBF075
181	8		20943	TE-20812
181	9		20943	TA-10812

CROSS-REFERENCE INDEXES

FIGURE AND ITEM NUMBER INDEX

FIG.	ITEM	STOCK NUMBER	FSCM	PART NUMBER
181	10		76599	SSHF6
181	11	4720-01-264-2107	OABC1	PVTBF038
181	12		20943	TA-1086
181	13		20943	TP-4008
181	14		20943	TA-101212
181	15		02094	3TP-4012
181	16		OABC1	11M-PV1630-348
181	17		62531	839-101
181	18		51671	3661-077
181	19		62531	808-005
181	20		73124	TW10050T
182	1		62144	05N-SS2431-001
182	2		62144	05L-SS2441-001
182	3		62144	05B-SS2421-002
182	4		62144	FC-C04250
182	5		62144	7383
182	6		76599	SSHF6
182	7	4720-01-264-2106	OABC1	PVTBF025
182	8		20943	TT-9444
182	9		20943	TA-1044
182	10		62144	PG-H00381
182	11		62144	PH-100375
182	12		7K471	B-6-HRN-4
182	13		62144	11E-SS3608-002
182	14		62144	11N-SS3661-039
182	15		62144	05N-SSOI10-001
182	16		20943	TP-4004
182	17		62144	13P-VM2540-002
182	18	5330-01-262-5114	62144	130-VM2542-228
182	19	5330-01-262-5113	62144	130-VM2542-116
182	20		62144	11N-SS3661-041
182	21	4330-01-273-7614	62144	16S-002540-000
182	22		62144	13A-VM2540-012
182	23		62144	16M-VM2540-022
183	1		62144	7391
183	2		62144	05B-SSS#08-050
183	3		62144	05N-SSO008-000
183	4		62144	05L-SSOt08-000
183	5		62144	05W-SSO008-000
183	6		62144	05B-SS0108-050
183	7		62144	081-BR1000-002
183	8		62144	08S-AL1OO0-003
184		4610-01-266-7531	62144	06C-OVM500-000
184	1		62144	7393
184	2		62144	08S-AL1000-001
184	3		62144	05N-SS2431-001
184	4		62144	05L-SS2441-001
184	5		62144	05F-SS2421-006
184	6		62144	05W-SS2441-001
184	7		62144	05B-SS2421-002
184	8		62144	08S-AL2540-000

CROSS-REFERENCE INDEXES

FIGURE AND ITEM NUMBER INDEX

FIG.	ITEM	STOCK NUMBER	FSCM	PART NUMBER
184	9		62144	05B-SS0008-050
184	10		62144	08B-AL1000-002
184	11		62144	08B-AL1000-004
184	12		62144	08B-AL1000-001
184	13		62144	08S-AL1000-002
184	14		62144	081-BR1000-001
184	15		62144	08S-AL1000-004
184	16		62144	08S-PW1000-000

By Order of the Secretary of the Army:

CARL E. VUONO
General United States Army
Chief of Staff

Official:

WILLIAM J. MEEHAN, II
Brigadier General United States Army
The Adjutant General

DISTRIBUTION:
To be distributed in accordance with DA Form 12-25A, Unit and Intermediate Direct Support and General Support Maintenance requirements for Landing Craft, Utility, LUC-1466, Type III

***U.S. GOVERNMENT PRINTING OFFICE: 1994 - *300-4*21/02050**

The Metric System and Equivalents

Linear Measure

1 centimeter = 10 millimeters = .39 inch
1 decimeter = 10 centimeters = 3.94 inches
1 meter = 10 decimeters = 39.37 inches
1 dekameter = 10 meters = 32.8 feet
1 hectometer = 10 dekameters = 328.08 feet
1 kilometer = 10 hectometers = 3,280.8 feet

Weights

1 centigram = 10 milligrams = .15 grain
1 decigram = 10 centigrams = 1.54 grains
1 gram = 10 decigram = .035 ounce
1 dekagram = 10 grams = .35 ounce
1 hectogram = 10 dekagrams = 3.52 ounces
1 kilogram = 10 hectograms = 2.2 pounds
1 quintal = 100 kilograms = 220.46 pounds
1 metric ton = 10 quintals = 1.1 short tons

Liquid Measure

1 centiliter = 10 milliters = .34 fl. ounce
1 deciliter = 10 centiliters = 3.38 fl. ounces
1 liter = 10 deciliters = 33.81 fl. ounces
1 dekaliter = 10 liters = 2.64 gallons
1 hectoliter = 10 dekaliters = 26.42 gallons
1 kiloliter = 10 hectoliters = 264.18 gallons

Square Measure

1 sq. centimeter = 100 sq. millimeters = .155 sq. inch
1 sq. decimeter = 100 sq. centimeters = 15.5 sq. inches
1 sq. meter (centare) = 100 sq. decimeters = 10.76 sq. feet
1 sq. dekameter (are) = 100 sq. meters = 1,076.4 sq. feet
1 sq. hectometer (hectare) = 100 sq. dekameters = 2.47 acres
1 sq. kilometer = 100 sq. hectometers = .386 sq. mile

Cubic Measure

1 cu. centimeter = 1000 cu. millimeters = .06 cu. inch
1 cu. decimeter = 1000 cu. centimeters = 61.02 cu. inches
1 cu. meter = 1000 cu. decimeters = 35.31 cu. feet

Approximate Conversion Factors

To change	*To*	*Multiply by*	*To change*	*To*	*Multiply by*
inches	centimeters	2.540	ounce-inches	newton-meters	.007062
feet	meters	.305	centimeters	inches	.394
yards	meters	.914	meters	feet	3.280
miles	kilometers	1.609	meters	yards	1.094
square inches	square centimeters	6.451	kilometers	miles	.621
square feet	square meters	.093	square centimeters	square inches	.155
square yards	square meters	.836	square meters	square feet	10.764
square miles	square kilometers	2.590	square meters	square yards	1.196
acres	square hectometers	.405	square kilometers	square miles	.386
cubic feet	cubic meters	.028	square hectometers	acres	2.471
cubic yards	cubic meters	.765	cubic meters	cubic feet	35.315
fluid ounces	milliliters	29,573	cubic meters	cubic yards	1.308
pints	liters	.473	milliliters	fluid ounces	.034
quarts	liters	.946	liters	pints	2.113
gallons	liters	3.785	liters	quarts	1.057
ounces	grams	28.349	liters	gallons	.264
pounds	kilograms	.454	grams	ounces	.035
short tons	metric tons	.907	kilograms	pounds	2.205
pound-feet	newton-meters	1.356	metric tons	short tons	1.102
pound-inches	newton-meters	.11296			

Temperature (Exact)

°F	Fahrenheit temperature	5/9 (after subtracting 32)	Celsius temperature	°C

RECOMMENDED CHANGES TO EQUIPMENT TECHNICAL PUBLICATIONS

THEN...JOT DOWN THE DOPE ABOUT IT ON THIS FORM. CAREFULLY TEAR IT OUT, FOLD IT AND DROP IT IN THE MAIL.

SOMETHING WRONG WITH PUBLICATION

FROM: (PRINT YOUR UNIT'S COMPLETE ADDRESS)

DATE SENT

PUBLICATION NUMBER	PUBLICATION DATE	PUBLICATION TITLE

BE EXACT PIN-POINT WHERE IT IS

PAGE NO.	PARA-GRAPH	FIGURE NO.	TABLE NO.

IN THIS SPACE, TELL WHAT IS WRONG AND WHAT SHOULD BE DONE ABOUT IT.

PRINTED NAME, GRADE OR TITLE AND TELEPHONE NUMBER	SIGN HERE

DA FORM 1 JUL 79 2028-2

PREVIOUS EDITIONS ARE OBSOLETE.

P.S.--IF YOUR OUTFIT WANTS TO KNOW ABOUT YOUR RECOMMENDATION MAKE A CARBON COPY OF THIS AND GIVE IT TO YOUR HEADQUARTERS.

PIN :066801-000