UNIT, DIRECT SUPPORT AND GENERAL SUPPORT MAINTENANCE REPAIR PARTS AND SPECIAL TOOLS LIST

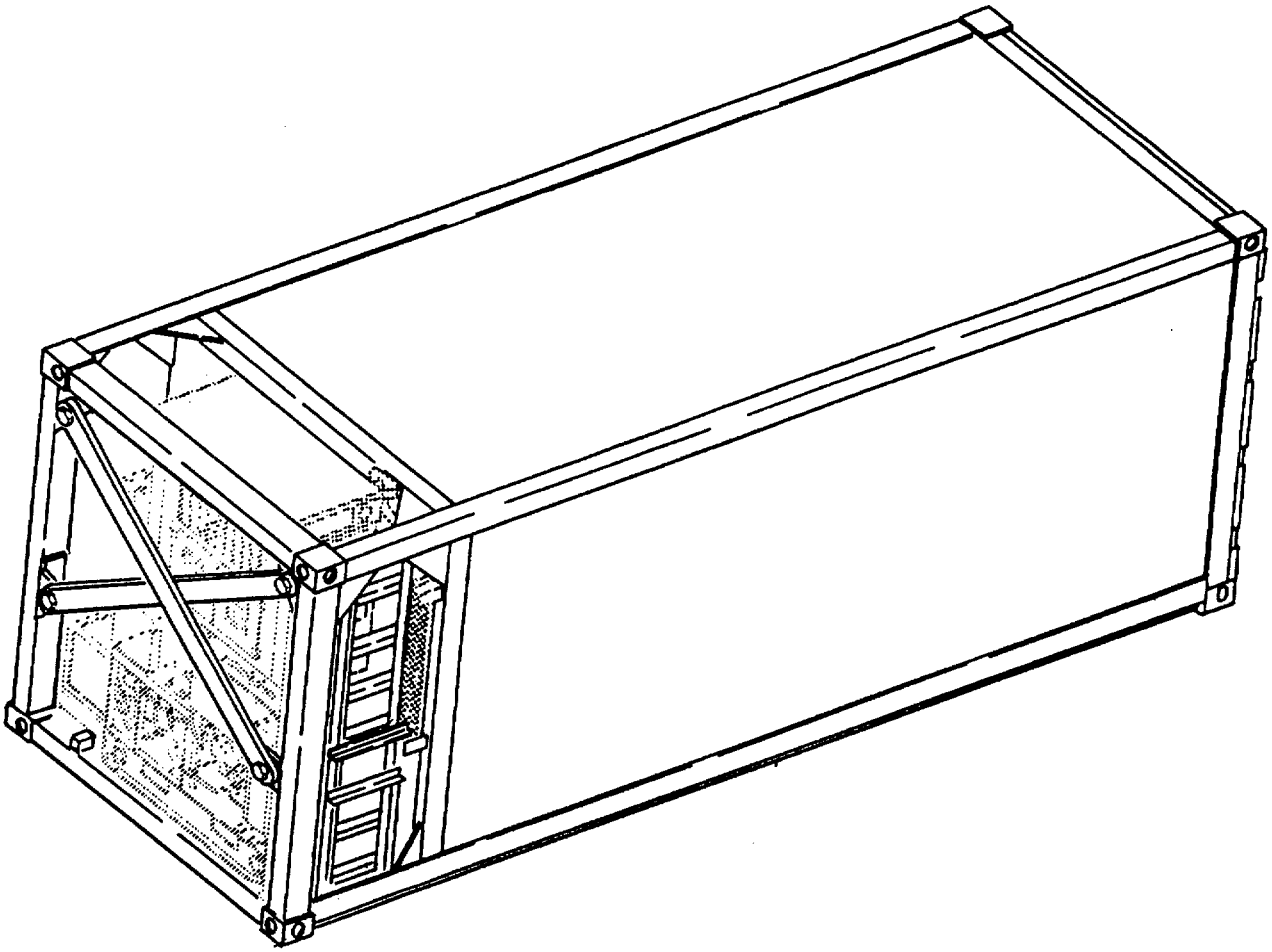

CONTAINER, REFRIGERATED
MODEL SC219
NSN 8145-01-337-9997

DISTRIBUTION STATEMENT A: Approved for public release; distribution is unlimited

HEADQUARTERS, DEPARTMENT OF THE ARMY
14 MARCH 1994

TECHNICAL MANUAL
NO. 55-8145-201-24P

HEADQUARTERS
DEPARTMENT OF THE ARMY
WASHINGTON D.C., 14 March 1994

UNIT, DIRECT SUPPORT AND GENERAL SUPPORT MAINTENANCE REPAIR PARTS AND SPECIAL TOOLS LIST FOR Container, Refrigerated MODEL SC219 NSN 8145-01-337-9997

REPORTING ERRORS AND RECOMMENDING IMPROVEMENTS

You can help improve this manual. If you find any mistakes or if you know of a way to improve the procedures, please let us know. Mail your letter, DA Form 2028 (Recommended Changes to Publications and Blank Forms), or DA Form 2028-2 located in the back of this manual directly to: Commander, US Army Aviation and Troop Command, ATTN: AMSAT-I-MP, 4300 Goodfellow Blvd., St. Louis, MO 63120-1798. A reply will be furnished directly to you.

DISTRIBUTION STATEMENT A: Approved for public release; distribution is unlimited

TABLE OF CONTENTS

		Page	Illus/ Figure
Section I.	INTRODUCTION	1	
Section II.	REPAIR PART	1-1	
Group 01	Identification Plate and Manual Holders		1
Group 02	Thermometer Assembly		2
Group 03	Fuel Tank Assembly		3
	Fuel Line Storage Box Storage		4
Group 04	Exhaust Extension Assembly		5
Group 05	Ladder and Block Assembly		6
Group 06	Power Cable Assembly		7
	Power Cord and Connectors		8
	Light Assembly and Connectors		9
Group 07	Box Assembly		10
	Right Hand Door Assembly		11
	Left Hand Door Assembly		12
	Spacers, Angles, and Zees		13
	Roof Assembly		14

TABLE OF CONTENTS

		Page	Illus/ Figure
Group 07	(CONT.)		
	Side Panels		15
	Front End Panel		16
	Floor Panel		17
	Braces and Container Frame		18
Group 08	Refrigeration Unit Mounting Hardware		19
Group 09	Diesel Generator Set Mounting Hardware		20
Group 10	Bulk Items		Bulk-1
Section III.	SPECIAL TOOLS		21
Section IV.	CROSS REFERENCE INDEXES		
	NATIONAL STOCK NUMBER INDEX	I-1	
	PART NUMBER INDEX	I-2	
	FIGURE AND ITEM NUMBER INDEX	I-8	

UNIT, DIRECT SUPPORT AND GENERAL SUPPORT MAINTENANCE REPAIR PARTS AND SPECIAL TOOLS LIST

Section I. INTRODUCTION

1. SCOPE. This RPSTL lists and authorizes spares and repair parts; special tools; special test, measurement, and diagnostic equipment (TMDE); and other special support equipment required for performance of unit, direct support and general support maintenance of the Container, Refrigerated Model SC219. It authorizes the requisitioning, issue, and disposition of spares, repair parts and special tools as indicated by the source, maintenance and recoverability (SMR) codes.

2. GENERAL. In addition to this section, Introduction, this Repair Parts and Special Tools List is divided into the following sections:

a. Section II. Repair Parts List. A list of spares and repair parts authorized by this RPSTL for use in the performance of maintenance. This list also includes parts which must be removed for replacement of the authorized parts. Parts lists are composed of functional groups in ascending alphanumeric sequence, with the parts in each group listed in ascending figure and item number sequence. Bulk materials are listed in item name sequence. Repair parts kits are listed separately in their own functional group within Section II. Repair parts for repairable special tools are also listed in this section. Items listed are shown on the associated illustration(s)/figure(s).

b. Section III. Special Tools List. A list of special tools, special TMDE, and other special support equipment authorized by this RPSTL (as indicated by Basis of Issue (BOI) information in DESCRIPTION AND USABLE ON CODE column) for the performance of maintenance.

c. Section IV. Cross-references Indexes. A list, in National Item Identification Number (NIIN) sequence, of all National stock numbered items appearing in the listing, followed by a list in alphanumeric sequence of all part numbers appearing in the listings. National stock numbers and part numbers are cross referenced to each illustration figure and item number appearance. The figure and item number index lists figure and item number in alphanumeric sequence and cross references NSN, CAGEC and part number.

3. EXPLANATION OF COLUMNS (SECTIONS II AND III).

a. ITEM NO. (Column (1)). Indicates the number used to identify items called out in the illustration.

b. SMR Code (Column (2)). The Source, Maintenance, and Recoverability (SMR) code is a 5-position code containing supply/requisitioning information, maintenance category authorization criteria, and disposition instruction, as shown in the following breakout:

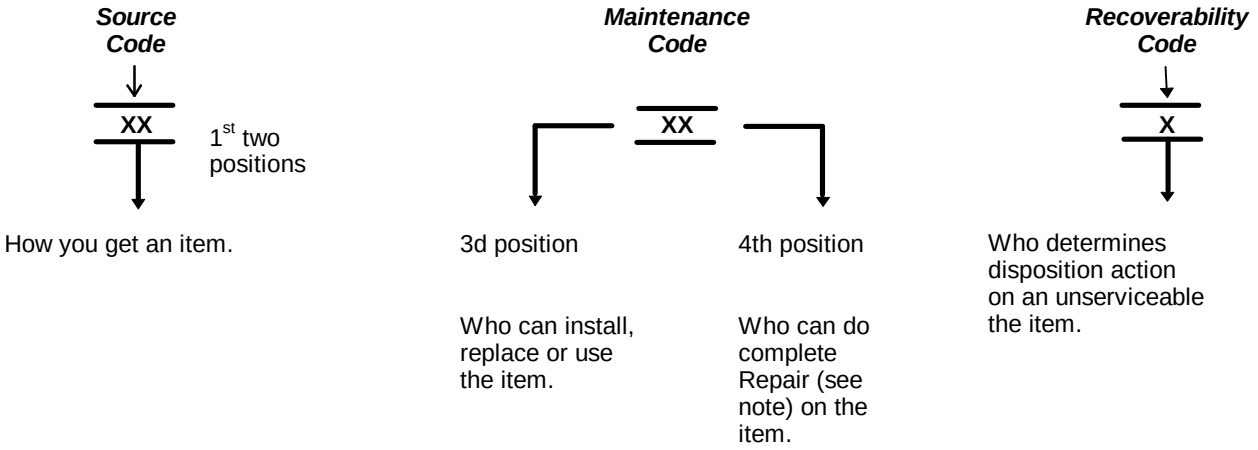

* Complete Repair: Maintenance capacity, capability, and authority to perform all corrective maintenance tasks of the "Repair" function in a use/user environment in order to restore serviceability to a failed item.

(1) Source Code. The source code tells you how to get an item needed for maintenance, repair, or overhaul of an end item/equipment. Explanations of source codes follows:

Code	Explanation
PA PB PC** PD PE PF PG	Stocked items; use the applicable NSN to request(requisition items with these source codes. They are authorized to the category indicated by the code entered in the 3rd position of the SMR code. **NOTE: Items coded PC are subject to deterioration.
KD KF KB	Items with these codes are not to be requested/requisitioned individually. They re part of a kit which is authorized to the maintenance category indicated in the 3rd position of the SMR code. The complete kit must be requisitioned and applied.
MO- (Made at Unit/AVUM Level) MF- (Made at DS/AVUM Level) MH- (Made at GS Level) ML- (Made at Specialized Repair Activity (SRA)) MD- (Made at Depot)	Items with these codes are not to be requested/requisitioned individually. They must be made from bulk material which is identified by the part number in the DESCRIPTION and USABLE ON CODE (UOC) column and listed in the Bulk Material group of the repair parts list in this RPSTL. H the item is authorized to you by the 3rd position code of the SMR code, but the source code indicates it is made at a higher level, order the item from the higher level of maintenance.
AO- (Assembled by Unit/AVUM Level) AF- (Assembled by DS/AVIM Level) AH- (Assembled by GS Category) AL- (Assembled by SRA) AD- (Assembled by Depot)	Items with these codes are not to be requested/ requisitioned individually. The puts that make up the assembled item must be requisitioned or fabricated and assembled at the level of maintenance indicated by the source code. H the 3rd position code of the SMR code authorizes you to replace the item, but the source code indicates the items are assembled at a higher level, order the item from the higher level of maintenance.

XA- Do not requisition "XA"-coded item. Order its next higher assembly. (Refer to the NOTE below.)
XB- If an UXB" item is not available from salvage, order it using the CAGEC and part number given.
XC- Installation drawing, diagram, instruction sheet, field service drawing, that is identified manufacturer's part number.
XD- Item is not stocked. Order an XD"-coded item through normal supply channels using the CAGEC and part number given, if no NSN is available.

NOTE

Cannibalization or controlled exchange, when authorized, may be used as a source of supply for items with the above source codes, except for those source coded "XA" or those aircraft support items restricted by requirements of AR 750-1.

(2) Maintenance Code. Maintenance codes tell you the level(s) of maintenance authorized to USE and REPAIR support items. The maintenance codes are entered in the third and fourth positions of the SMR code as follows:

(a) The maintenance code entered in the third position tells you the lowest maintenance level authorized to remove, replace, and use an item. The maintenance code entered in the third position will indicate authorization to one of the following levels of maintenance.

Code	Application/Explanation
C -	Crew or operator maintenance done within organizational or aviation unit maintenance.
0 -	Organizational or aviation unit category can remove, replace, and use the item.
F -	Direct support or aviation intermediate level can remove, replace, and use the item.
H -	General support level can remove, replace, and use the item.
L -	Specialized repair activity can remove, replace, and use the item.
D -	Depot level can remove, replace, and use the item.

(b) The maintenance code entered in the fourth position tells whether or not the item is to be repaired and identifies the lowest maintenance level with the capability to do complete repair (i.e., perform all authorized repair functions.) NOTE: Some limited repair may be done on the item at a lower level of maintenance, if authorized by the Maintenance Allocation Chart (MAC) and SMR codes. This position will contain one of the following maintenance codes.

Code	Application/Explanation
O -	Organization or (aviation unit) is the lowest level that can do complete repair of the item.
F --	Direct support or aviation intermediate is the lowest level that can do complete repair of the item.
H -	General Support is the lowest level that can do complete repair of the item.
L -	Specialized repair activity is the lowest level that can do complete repair of the item.
D -	Depot is the lowest level that can do complete repair of the item.
Z -	Nonreparable. No repair is authorized.
B -	No repair is authorized. (No parts or special tools are authorized for the maintenance of a "B" coded item). However, the item may be reconditioned by adjusting, lubricating, etc., at the user level.

(3) Recoverability Code. Recoverability codes are assigned to items to indicate the disposition action on unserviceable items. The recoverability code is entered in the fifth position of the SMR Code as follows:

Recoverability Codes	**Application/Explanation**
Z -	Nonreparable item. When unserviceable, condemn and dispose of the item at the level of maintenance shown in third position of SMR Code.
0 -	Reparable item. When not economically reparable, condemn and dispose of the item at organization or aviation unit level.
F -	Reparable item. When uneconomically reparable, condemn and dispose of the item at the direct support or aviation intermediate level.
H -	Reparable item. When uneconomically reparable, condemn and dispose of the item at the general support level.
D -	Reparable item. When beyond lower level repair capability, return to depot. Condemnation and disposal of item not authorized below depot level.
L -	Reparable item. Condemnation and disposal not authorized below specialized repair activity (SRA).
A--	Item requires special handling or condemnation procedures because of specific reasons (e.g., precious metal content, high dollar value, critical material, or hazardous material). Refer to appropriate manuals/directives for specific instructions.

c. CAGEC (Column (3)). The Commercial and Government Entity Code (CAGEC) is a 5-digit numeric code which is used to identify the manufacturer, distributor, or Government agency, etc., that supplies the item.

d. PART NUMBER (Column (4)). Indicates the primary number used by the manufacturer, (individual, company, firm, corporation, or Government activity), which controls the design and characteristics of the item by means of its engineering drawings, specifications standards, and inspection requirements to identify an item or range of items.

NOTE

When you use an NSN to requisition an item, the item you receive may have a different part number from the part ordered.

e. DESCRIPTION AND USABLE ON CODE (UOC) (Column (5). This column includes the following information:

(1) The Federal item name and, when required, a minimum description to identify the item.

(2) The physical security classification of the item is indicated by the parenthetical entry, e.g., Phy Sec C1 - Confidential, Phy Sec C1 (S) - Secret, Phy Sec C1 (T) - Top Secret.

(3) Items that are included in kits and sets are listed below the name of the kit or set.

(4) Spare/repair parts that make up an assembled item are listed immediately following the assembled item line entry.

(5) Part numbers for bulk materials are referenced in this column in the line item entry for the item to be manufactured/fabricated.

(6) When the item is not used with all serial numbers of the same model, the effective serial numbers are shown on the last line(s) of the description (before UOC).

(7) The usable on code, when applicable (see paragraph 5, Special Information).

(8) In the Special Tools List section, the basis of issue (BOI) appears as the last line(s) in the entry for each special tool, special TMDE, and other special support equipment. When density of equipments supported exceeds density spread indicated in the basis of issue, the total authorization is increased proportionately.

(9) The statement "END OF FIGURE" appears just below the last item description in Column 5 for a given figure in both Section II and Section III.

(10) The indenture, shown as dots appearing before the repair part, indicates that the item is a repair part of the next higher assembly.

f. QTY (Column (6)). The QTY (quantity per figure column) indicates the quantity of the item used in the breakout shown on the illustration figure, which is prepared for a functional group, subfunctional group, or an assembly. A "V" appearing in this column in lieu of a quantity indicates that the quantity is variable and may vary from application to application.

4. EXPLANATION OF COLUMNS (SECTION IV).

a. NATIONAL STOCK NUMBER (NSN) INDEX.

(1) STOCK NUMBER Column. This column lists the NSN by National item identification number (NIIN) sequence. The NIIN consists of the last nine digits of the NSN, i.e.

NSN
5305-01-574-1467
NIIN

When using this column to locate an item, ignore the first 4 digits of the NSN. However, the complete NSN should be used when ordering items by stock number.

(2) FIG. Column. This column lists the number of the figure where the item is identified/located. The figures are in numerical order in Section H and Section III.

(3) ITEM Column. The item number identifies the item associated with the figure listed in the adjacent FIG. column. This item is also identified by the NSN listed on the same line.

b. PART NUMBER INDEX. Part numbers in this index are listed by part number in ascending alphanumeric sequence (i.e., vertical arrangement of letter and number combination which places the first letter or digit of each group in order A through Z, followed by the numbers 0 through 9 and each following letter or digit in like order).

(1) CAGEC Column. The Commercial and Government Entity Code (CAGEC) is a 5-digit numeric code used to identify the manufacturer, distributor, or Government agency, etc., that supplies the item.

(2) PART NUMBER Column. Indicates the primary number used by the manufacturer (individual, firm, corporation, or Government activity), which controls the design and characteristics of the item by means of its engineering drawings, specifications standards, and inspection requirements to identify an item or range of items.

(3) STOCK NUMBER Column. This column lists the NSN for the associated part number and manufacturer identified in the PART NUMBER and CAGEC columns to the left.

(4) FIG. Column. This column lists the number of the figure where the item is identified/located in Section II and Section III.

(5) ITEM Column. The item number is that number assigned to the item as it appears in the figure referenced in adjacent figure number column.

c. FIGURE AND ITEM NUMBER INDEX.

(1) FIG. Column. This column lists the number of the figure where the item is identified/located in Section II and Section III.

(2) ITEM Column. The item number is that number assigned to the item as it appears in the figure referenced in the adjacent figure number column.

(3) STOCK NUMBER Column. This column lists the NSN for the item.

(4) CAGEC Column. The Commercial and Government Entity Code (CAGEC) is a 5-digit numeric code used to identify the manufacturer, distributor, or Government agency, etc., that supplies the item.

(5) PART NUMBER Column. Indicates the primary number used by the manufacturer (individual, firm, corporation, or Government activity), which controls the design and characteristics of the item by means of its engineering drawings, specifications standards, and inspection requirements to identify an item or range of items.

5. SPECIAL INFORMATION.

a. USABLE ON CODE. The usable on code appears in the lower comer of the Description column heading. Usable on codes are shown as "UOC: ..... in the Description Column (justified left) on the last line applicable item description/nomenclature. Uncoded items are applicable to all models.

b. ASSOCIATED PUBLICATIONS. The publications listed below pertains to the Container, Refrigerated and its components.

Publication	Short Title
TM 5-6115-585-12	Generated Set, Diesel Engine Driver
TM 55-8145-201-14	Container, Refrigerated
TM 9-4110-252-14	Refrigeration Unit
TM 9-4110-252-24P	Refrigeration Unit

6. HOW TO LOCATE REPAIR PARTS.

a. When National Stock Number or Part Number is NOT Known.

(1) First. Using the table of contents, determine the assembly group or subassembly group to which the item belongs. This is necessary since figures are prepared for assembly groups and subassembly groups, and listings are divided into the same groups.

(2) Second. Find the figure covering the assembly group or subassembly group to which the item belongs.

(3) Third. Identify the item on the figure and note the item number.

(**4) Fourth.** Refer to the Repair Parts List for the figure to find the part number for the item number noted on the figure.

(5) Fifth. Refer to the Part Number Index to find the NSN, if assigned.

b. When National Stock Number or Part Number is Known.

(1) First. Using the Index of National Stock Numbers and Part Numbers, find the pertinent National Stock Number or Part Number. The NSN index is in National Item Identification Number (NIN) sequence (see c-4a.(1)). The part numbers in the Part Number index are listed in ascending alphanumeric sequence (see paragraph c-4.b). Both indexes cross-reference you to the illustration figure and item number of the item you are looking for.

(2) Second. After finding the figure and item number, verify that the item is the one you are looking for, then locate the item number in the repair parts list for the figure.

7. ABBREVIATIONS. Abbreviations used in this manual are listed in MIL-STD-12.

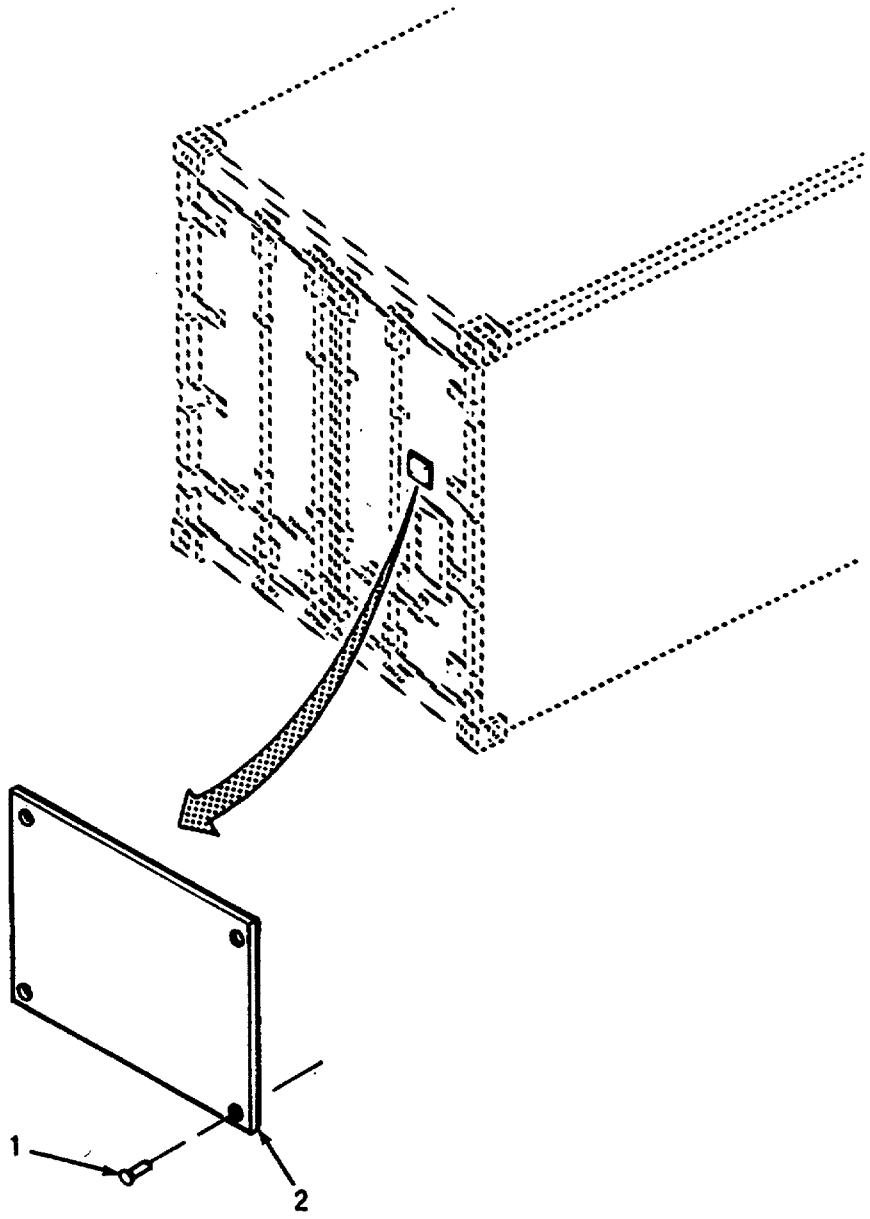

Figure 1. Identification Plate and Manual Holders (Sheet 1 of 3)

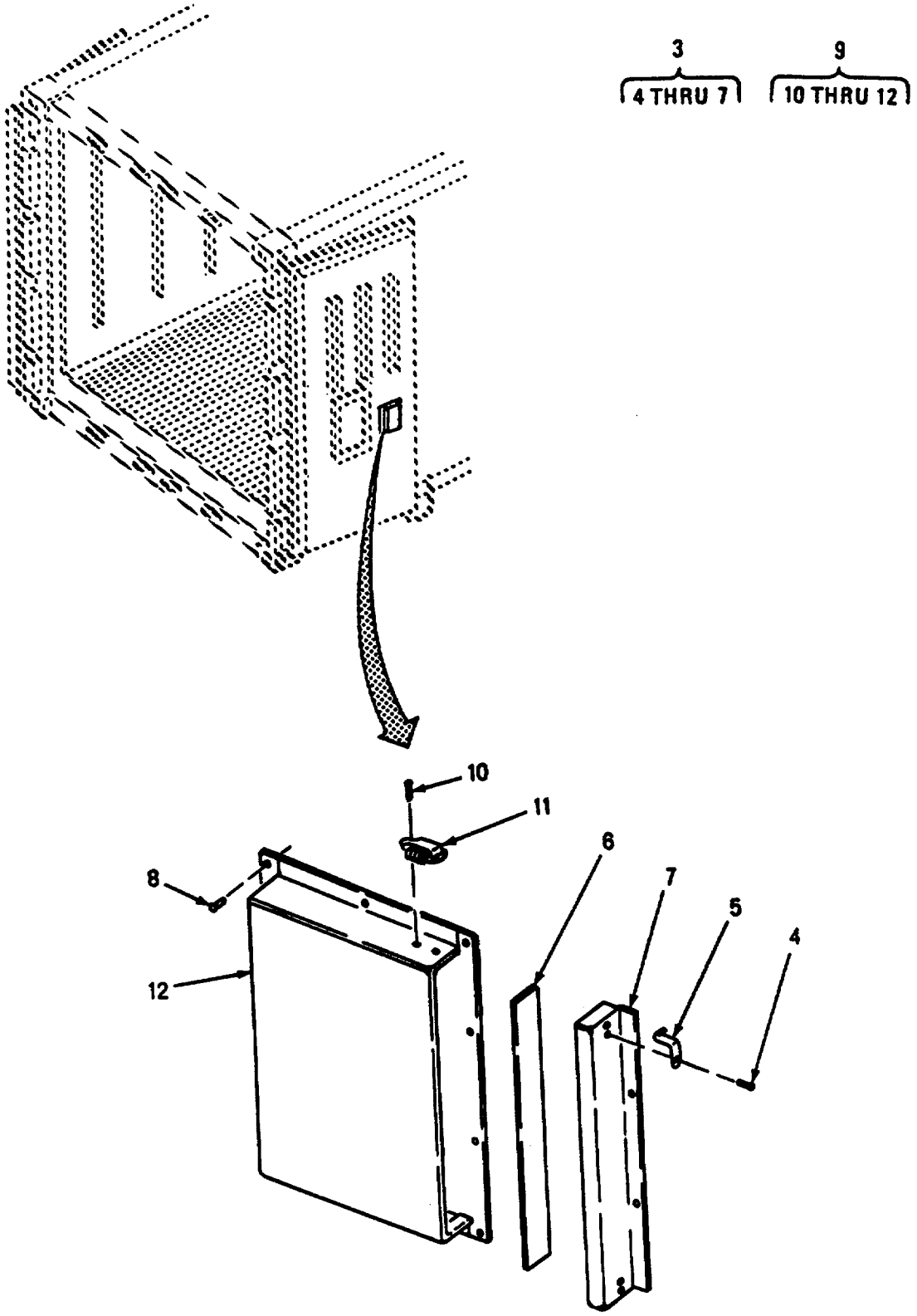

Figure 1. Identification Plate and Manual Holders(Sheet 2 of 3)

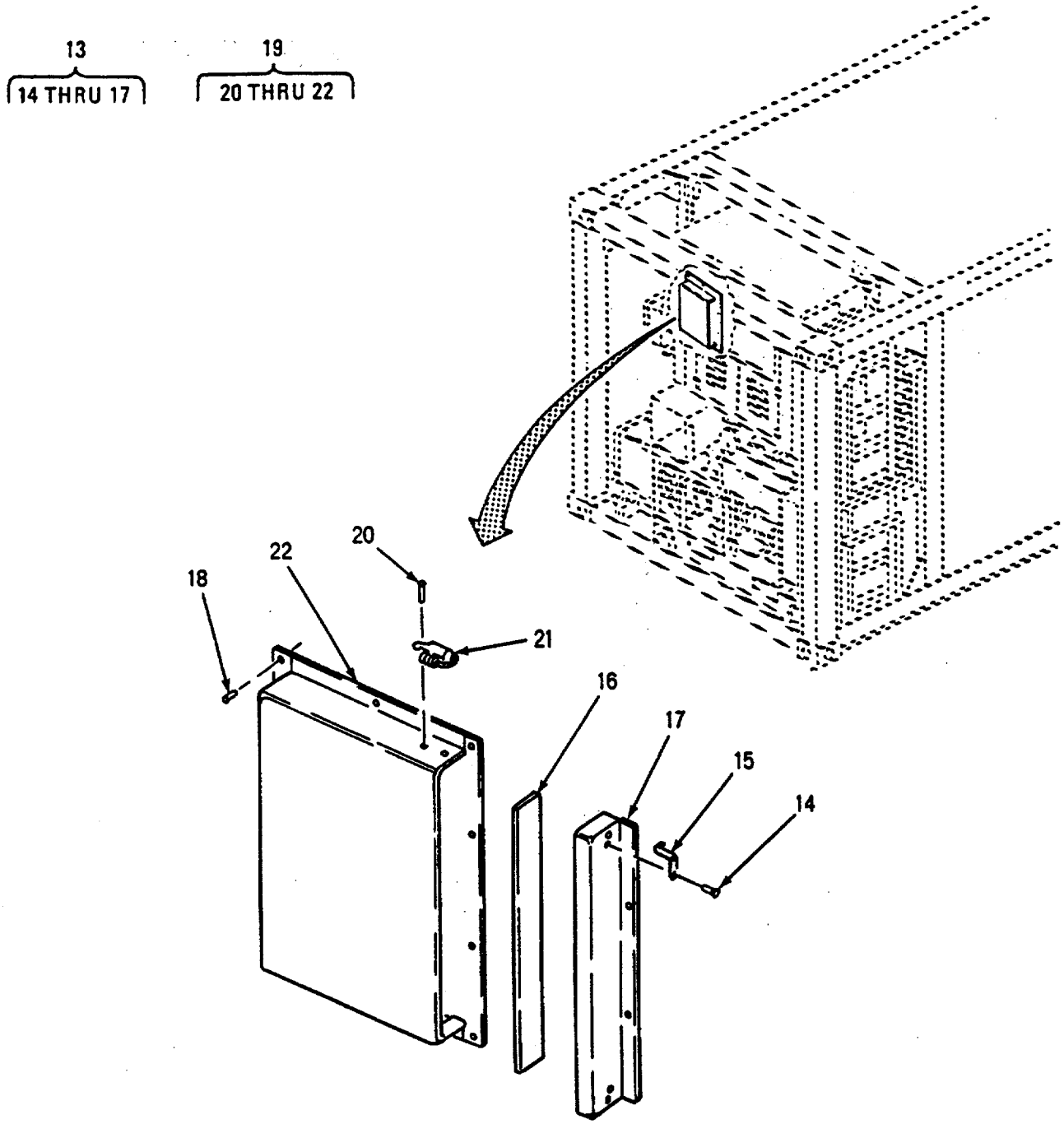

Figure 1. Identification Plate and Manual Holders(Sheet 3 of 3)

(1) ITEM NO	(2) SMR CODE	(3) CAGEC	(4) PART NUMBER	(5) DESCRIPTION AND USABLE ON CODES(UOC)	(6) QTY
				GROUP 01 DOCUMENT HOLDER AND PLATES	
				FIG. 1 IDENTIFICATION PLATE AND MANUAL HOLDERS	
1	XDOZZ	94222	38-104-05-93	RIVET, DRIVE	4
2	XDOZZ	90598	30494-1	PLATIE,INDENT	1
3	XBOZZ	90598	30405-100	COVER ASSY	1
4	PAOZZ	81349	M24243/6-A402H	RIVET,BLIND	4
5	XDOZZ	98003	SC-D20650-14-ZE	STRIKE,CATCH	2
6	MOOZZ	90598	30405-2	GASKET	2
7	PAOZZ	90598	30405-1	COVER	1
8	PAOZZ	81349	M24243/1-A404	RIVET,BLIND	10
9	XBOOO	90598	30404-100	BOX ASSY	1
10	PAOZZ	81349	M24243/6-A402H	RIVET,BLIND	4
11	PAOZZ	98003	SC-D20648	CATCH,CLAHPING	2
12	XBOZZ	90598	30402-1	.BOX,FORMED	1
13	XBOOO	90598	30408-100	COVER ASSY	1
14	PAOZZ	81349	M24243/6-A402H	.RIVET,BLIND	4
15	XDOZZ	98003	SC-D20650-14	.STRIKE,CATCH	2
16	MOOZZ	90598	30408-2	.GASKET MAKE FROM BULK P/N 4111D-1/ 8X2X12 1/2	1
17	PAOZZ	90598	30408-1	.COVER	1
18	XDOZZ	94222	38-104-12-93	RIVET,BLIND	10
19	XBOOO	90598	30407-_00	BOX ASSY	1
20	PAOZZ	81349	M24243/6-A402H	.RIVET,BLIND	4
21	PAOZZ	98003	SC-D20648	.CATCH,CLAMPING	2
22	XBOZZ	90598	30406-1	.BOX,FORMED	1

END OF FIGURE

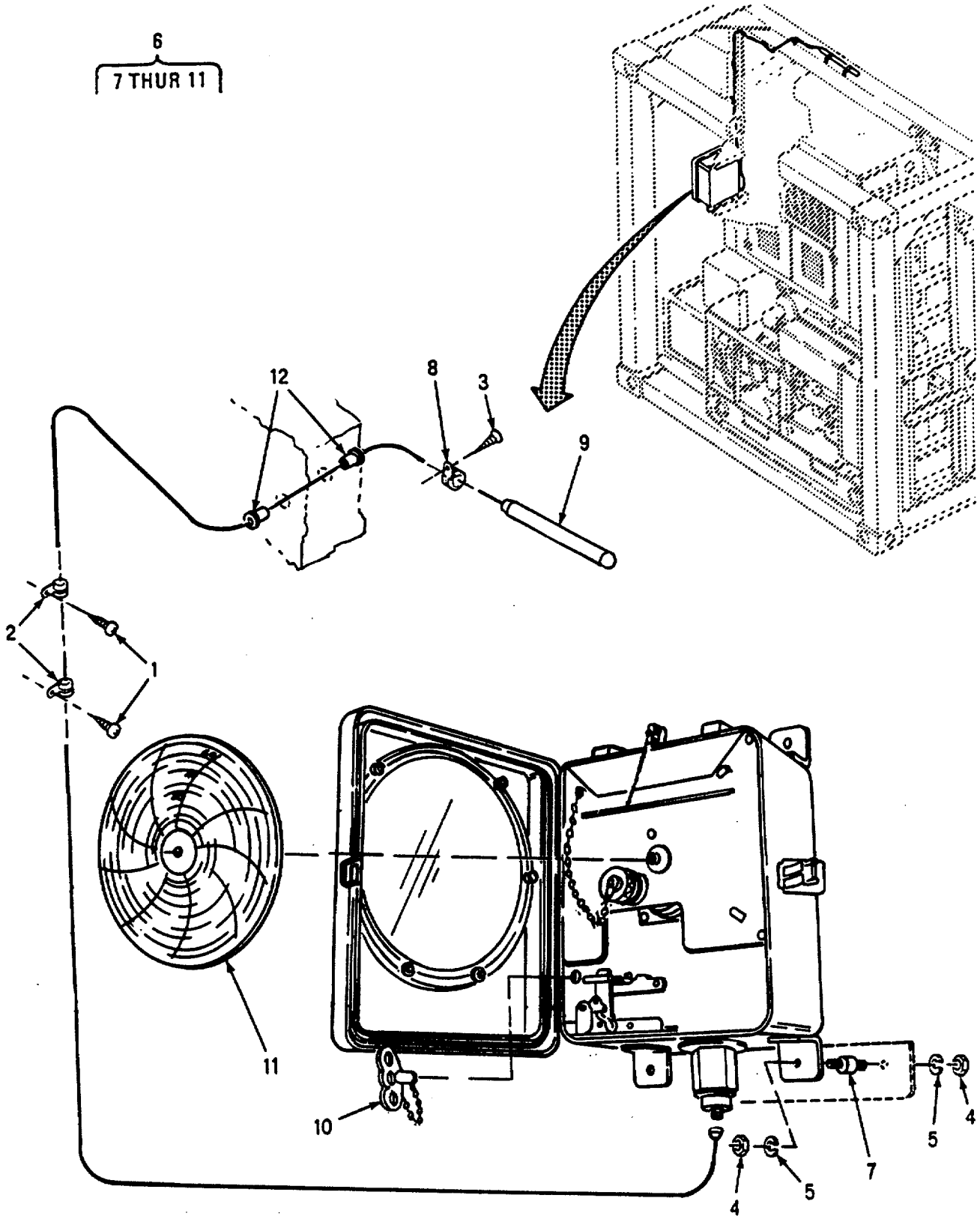

Figure 2. Thermomter Assembly

(1) ITEM NO	(2) SMR CODE	(3) CAGEC	(4) PART NUMBER	(5) DESCRIPTION AND USABLE ON CODES(UOC)	(6) QTY
				GROUP 02 THERMOMETER ASSEMBLY	
				FIG. 2 THERMOMETER ASSEMBLY	
1	XDOZZ	94222	38-106-12-91	RIVET,BLIND	5
2	XDOZZ	39428	8876T34	CLAMP,LOOP	5
3	PAOZZ	96906	MS35493-75	SCREW,WOOD	2
4	PAOZZ	96906	MS51967-2	NUT, PLAIN,HEXAGON	8
5	PAOZZ	96906	MS35333-40	WASHER,LOCK.....	8
6	PAOOZ	90598	30416	THERMOMETER	1
7	XDOZZ	45809	171	.SHOCK MOUNT.....	4
8	XDOZZ	45809	133	.SUPPORT ELEMENT	2
9	XDOZZ	45809	217KLSP220-8	ELEMENT	1
10	XDOZZ	45809	60101102	.KEY WINDING	1
11	XDOZZ	45809	PS217F31D2DEG.DIV	CHART.....	1
12	PAOZZ	77969	3885	GROMMET,NONMETALLIC.....	2

END OF FIGURE

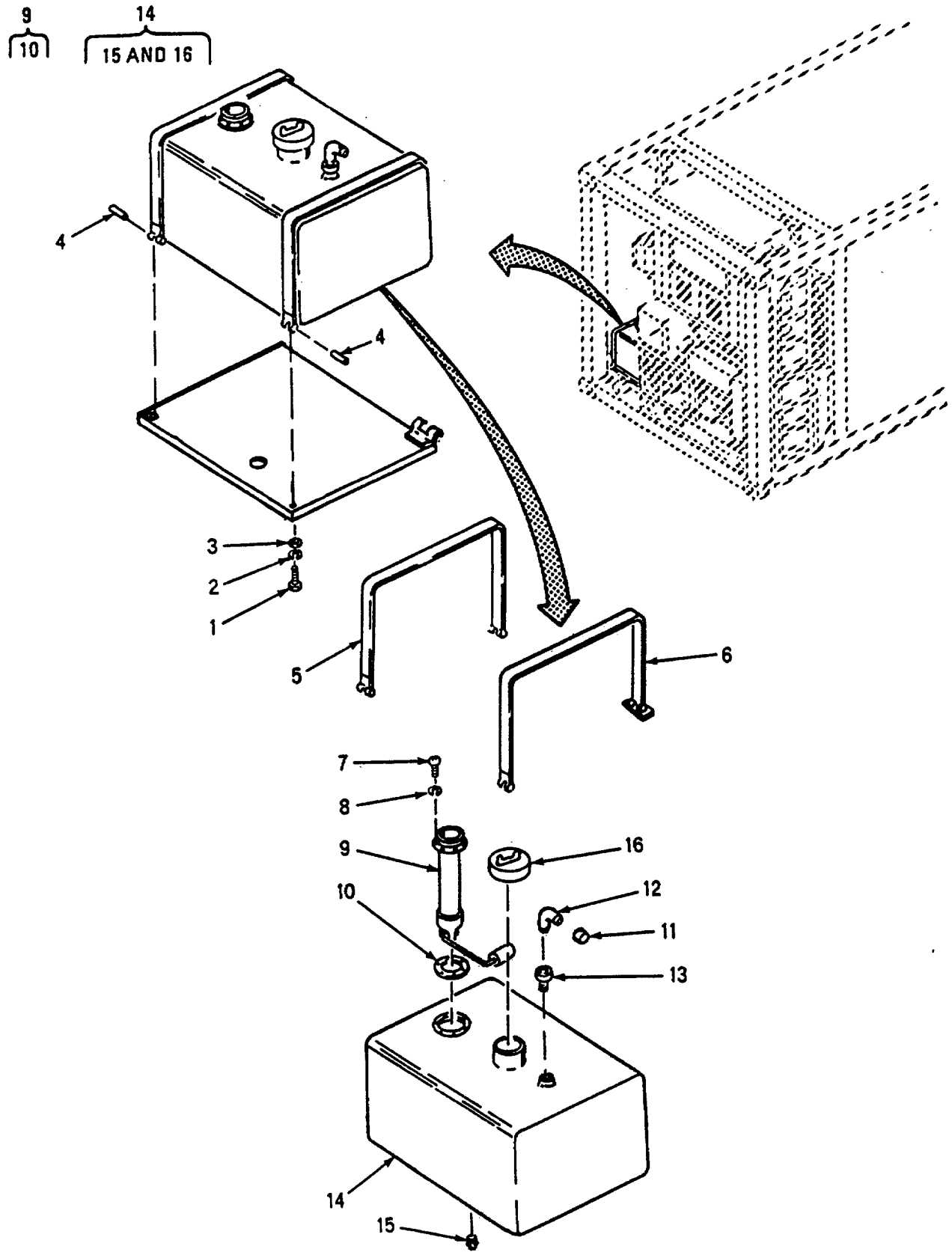

Figure 3. Fuel Tank Assembly

(1) ITEM NO	(2) SMR CODE	(3) CAGEC	(4) PART NUMBER	(5) DESCRIPTION AND USABLE ON CODES(UOC)	(6) QTY
				GROUP 03 FUEL SYSTEM	
				FIG. 3 FUEL TANK ASSEMBLY	
1	PAOZO	96906	MS90725-68	SCREW,CAP,HEXAGON H.....	3
2	PAOZZ	96906	MS35338-046	WASHER,LOCK.....	3
3	PAOZZ	96906	MS27183-14	WASHER,FLAT.....	3
4	PAOZZ	90598	TT403	NUT,PLAIN,BARREL.....	3
5	XDOZZ	90598	30306-1	STRAP	1
6	XDOZZ	90598	30307-100	STRAP	1
7	PAOZO	96906	MS35207-264	SCREW,MACHINE.....	5
8	PAOZZ	96906	NS35338-43	WASHER,LOCK.....	5
9	PAOZZ	09393	6781-00236	GAGE,LIQUID QUANTIT.....	1
10	PAOZZ	09393	15-423	.GASKET.....	1
11	XDOZZ	30327	830FS-05	CAP.....	1
12	PAOZZ	96906	MS51504A5-4S	ELBOW,PIPE TO TUBE.....	1
13	PAOZZ	30327	24SB-08X04	BUSHING,PIPE.....	1
14	PAOOZ	90598	30305-100	TANK,FUEL,ENGINE	1
15	XDOZZ	90598	23535017	.PLUG	1
16	XDOZZ	90598	2302J013	.CAP.....	1

END OF FIGURE

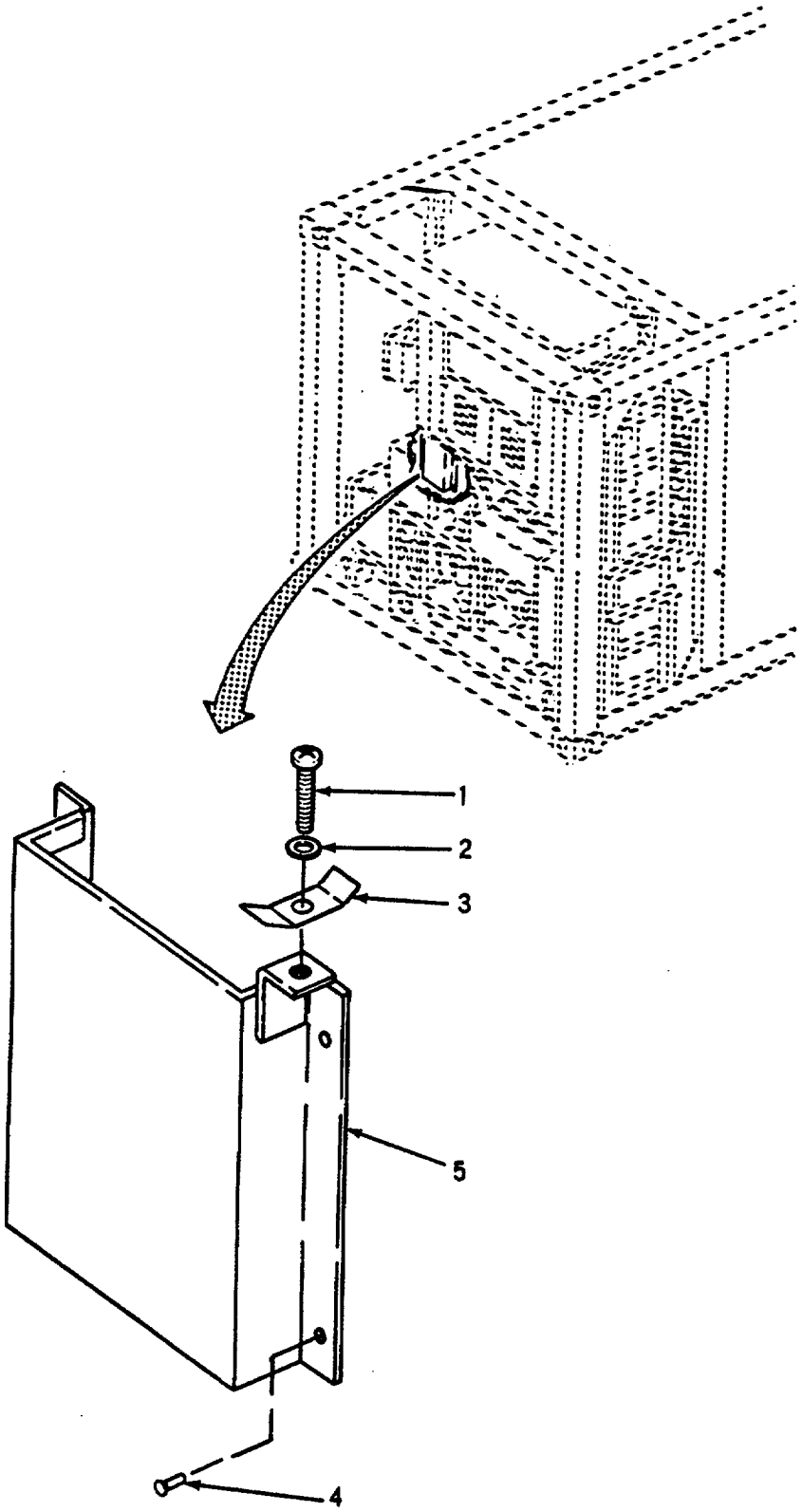

Figure 4. Fuel Line Storage Box Assembly

(1) ITEM NO	(2) SMR CODE	(3) CAGEC	(4) PART NUMBER	(5) DESCRIPTION AND USABLE ON CODES(UOC)	(6) QTY
				GROUP 03 THERMOMETER ASSEMBLY	
				FIG. 4 FUEL LINE STORAGE BOX ASSEMBLY	
1	PAOZZ	96906	MS90728-12	SCREW,CAP,HEXAGON H	1
2	PAOZZ	96906	MS27183-10	WASHER,FLAT	1
3	XDOZZ	90598	30492-1	CLAMP	1
4	XDOZZ	94222	38-104-12-93	RIVET,B LIND	4
5	XDOZZ	90598	30491-100	BOX,STORAGE	1

END OF FIGURE

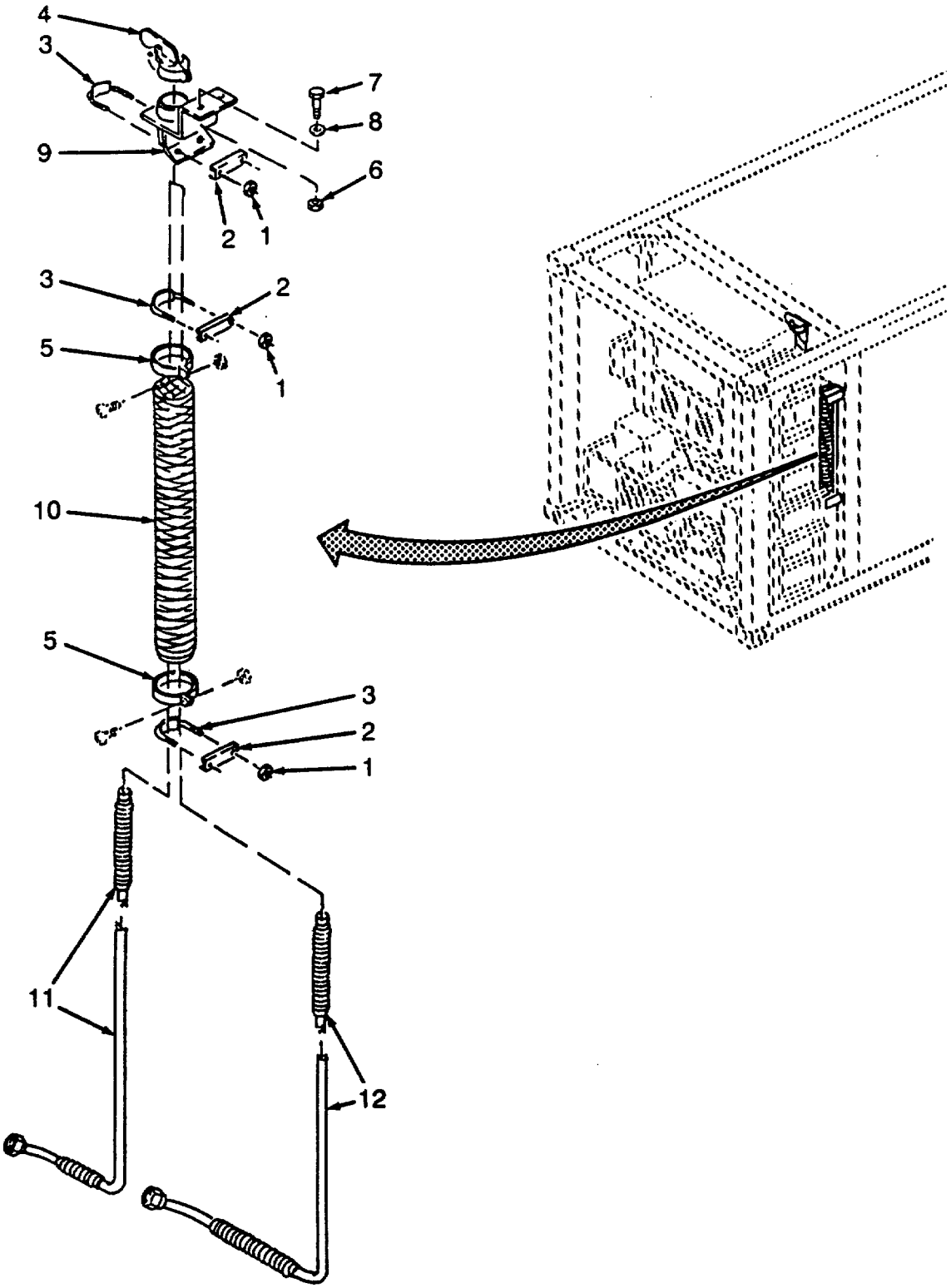

Figure 5. Exhaust Extension Assembly

(1) ITEM NO	(2) SMR CODE	(3) CAGEC	(4) PART NUMBER	(5) DESCRIPTION AND USABLE ON CODES(UOC)	(6) QTY
				GROUP 04 EXHAUST LINE EXTENSION	
				FIG. 5 EXHAUST EXTENSION ASSEMBLY	
1	XDOZZ	90598	CLF-3816-S	NUT,SELF LOCKING	6
2	XDOZZ	90598	30422-1	SPACER	3
3	XDOZZ	90598	30421-100	U BOLT	3
4	PAOZZ	81859	5	CAP,PROTECTIVE,DUST	1
5	PAOZZ	90598	30302-68	RING,PIPE	2
6	PAOZZ	96906	MS51922-17	NUT,SELF-LOCKING,HE	2
7	PAOZZ	24446	N20P25018C11	SCREW,CAP,HEXAGON H	2
8	PAOZZ	96906	MS27183-14	WASHER,FLAT	2
9	XDOZZ	90598	30456-100	BRACKET,EXHAUST,ENG	1
10	XDOZZ	90598	30426-1	TUBE	1
11	PAOZZ	90598	30433-100	TUBE ASSEMBLY,METAL	1
12	PAOZZ	90598	30432-100	TUBE ASSEMBLY,EXHAU	1

END OF FIGURE

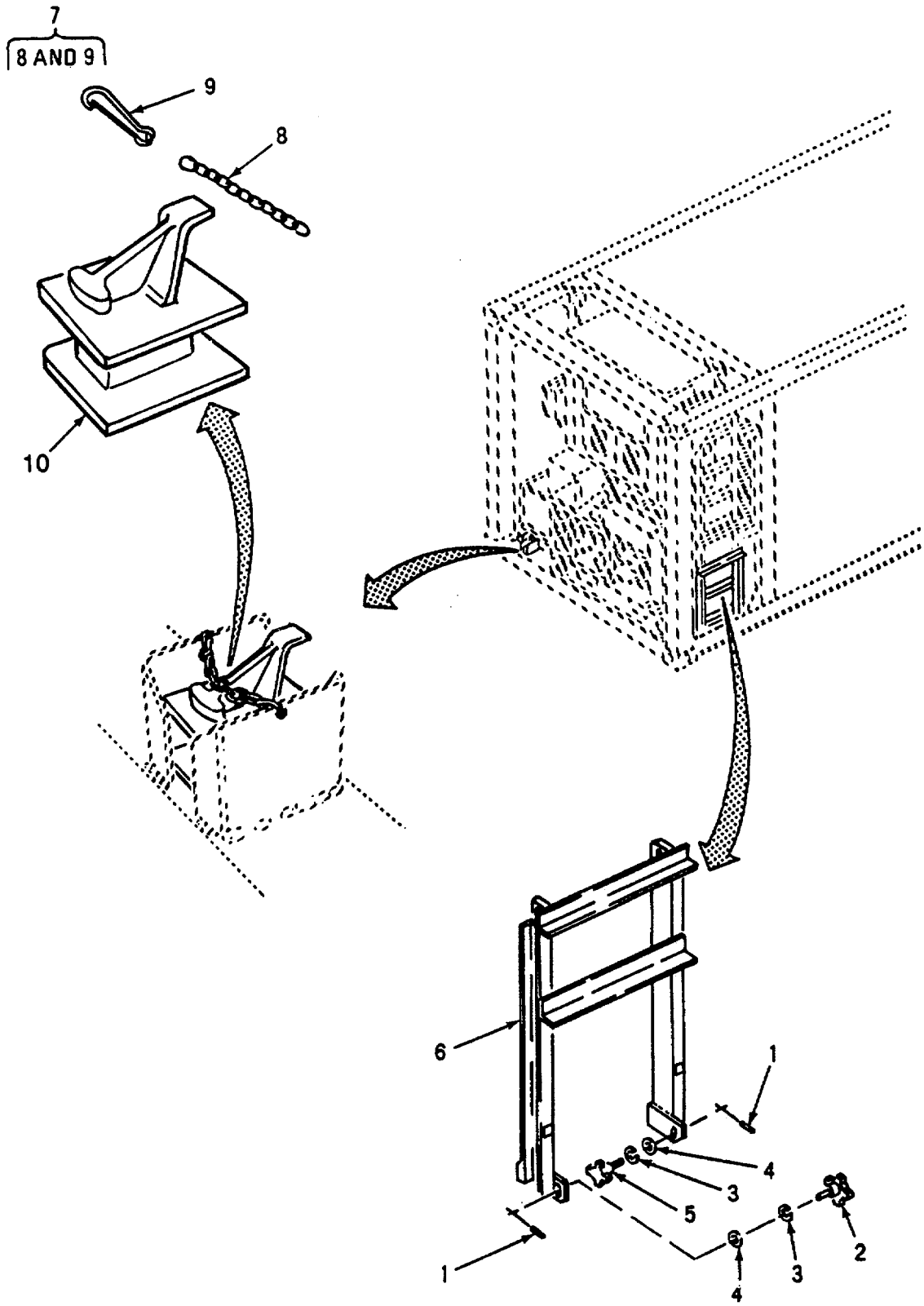

Figure 6. Ladder and Block Assembly

(1) ITEM NO	(2) SMR CODE	(3) CAGEC	(4) PART NUMBER	(5) DESCRIPTION AND USABLE ON CODES(UOC)	(6) QTY
				GROUP 05 LADDER SECTION	
				FIG. 6 LADDER AND BLOCK ASSEMBLY	
1	PAFZZ	96906	MS16562-36	PIN,SPRING.....	2
2	XDFZZ	90598	30399-1	KNOB ASSY.....	1
3	PAFZZ	96906	MS35338-48	WASHER,LOCK.....	2
4	PAFZZ	96906	MS27183-18	WASHER,FLAT.....	2
5	XDFZZ	90598	30399-2	KNOB ASSY.....	1
6	XDFZZ	90598	30400-100	LADDER ASSY	1
7	XDFFF	90598	30413-100	CHAIN ASSY.....	1
8	XAOZZ	39428	3603T19	.CHAIN	1
9	XAOZZ	39428	3929T14	.SWIVEL EYE	1
10	XDFZZ	90598	30414	SPACER BLOCK.....	1

END OF FIGURE

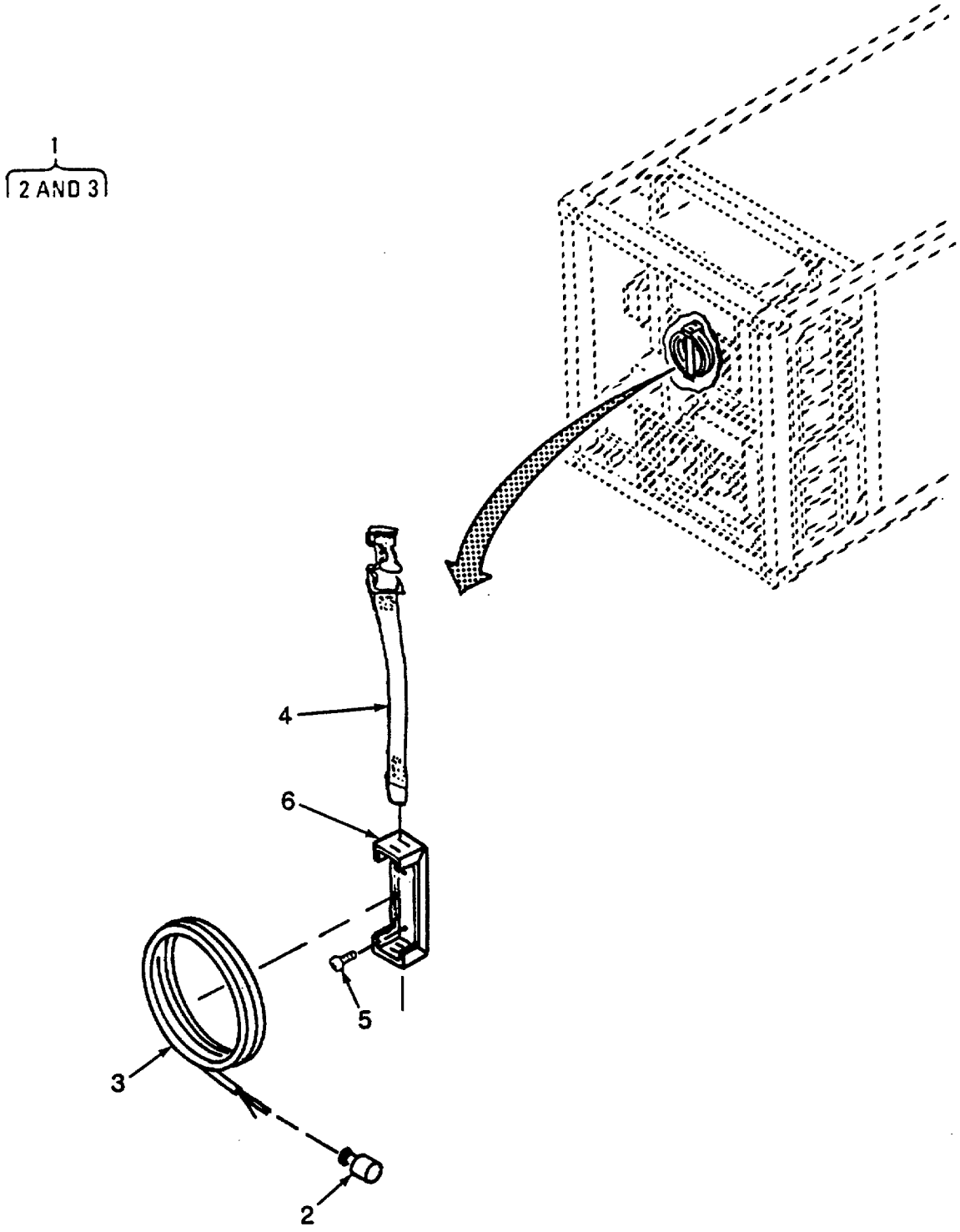

Figure 7. Power Cable Assembly

(1) ITEM NO	(2) SMR CODE	(3) CAGEC	(4) PART NUMBER	(5) DESCRIPTION AND USABLE ON CODES(UOC)	(6) QTY
				GROUP 06 ELECTRICAL EQUIPMENT	
				FIG. 7 POWER CABLE ASSEMBLY	
1	AOOOO	90598	30442-100	CABLE ASSY	1
2	PAOZZ	90598	534FC	.CONNECTOR,PLUG,ELEC	1
3	MOOZZ	90598	30442-1	.CABLE,POWER MAKE FROM BULK P/N CO- ..... 04HLF(4/10)5J0850 ,60 IN.....	1
4	PAOZZ	39428	3706T16	STRAP,WEBBING	1
5	PAOZZ	96906	MS35493-74	SCREW,WOOD	4
6	XDOZZ	90598	30441-1	BRACKET	1

END OF FIGURE

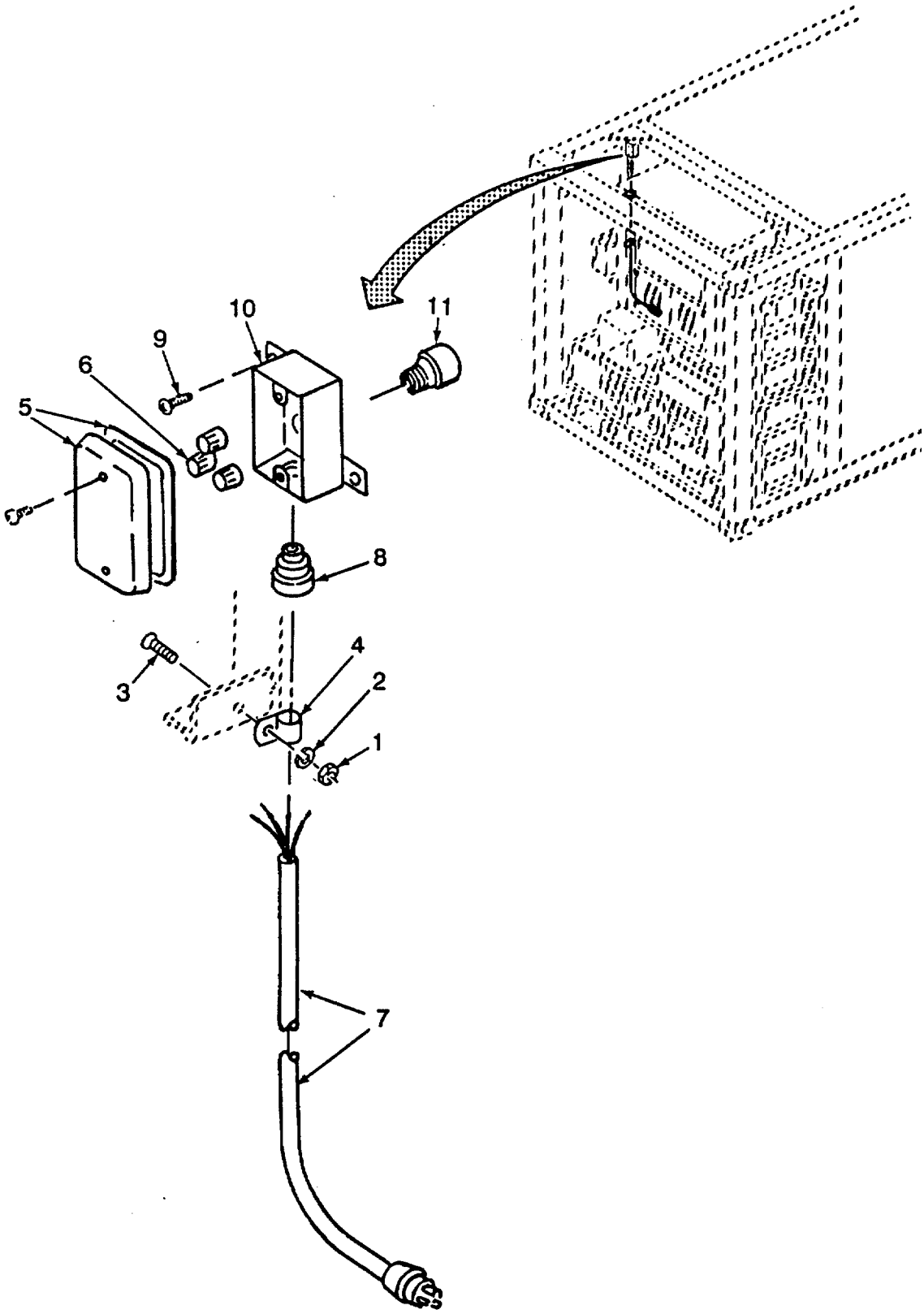

Figure 8. Power Cord and Connectors

(1) ITEM NO	(2) SMR CODE	(3) CAGEC	(4) PART NUMBER	(5) DESCRIPTION AND USABLE ON CODES(UOC)	(6) QTY
				GROUP 06 ELECTRICAL EQUIPMENT	
				FIG. 8 POWER CORD AND CONNECTORS	
1	PAOZZ	96906	MS35650-302	NUT,PLAIN,HEXAGON	1
2	PAOZZ	96906	MS35338-43	WASHER,LOCK	1
3	PAOZZ	96906	MS35207-263	SCREW,MACHINE	1
4	XDOZZ	39428	8876T37	CLAMP.....	1
5	PAOZZ	28488	5232	PLATE,WALL,ELECTRIC.....	1
6	XDOZZ	83209	30-076	WIRE NUT	4
7	PAOZZ	18876	10275424	CABLE ASSEMBLY.POWE.....	1
8	PAOZZ	59730	2521	BOX CONNECTOR,ELECT	1
9	PAOZZ	96906	MS35493-78	SCREW,WOOD	2
10	PAOZZ	08556	250-L	CONDUIT OUTLET	2
11	PAOZZ	93908	E943D	ADAPTER,ELECTRICAL	1

END OF FIGURE

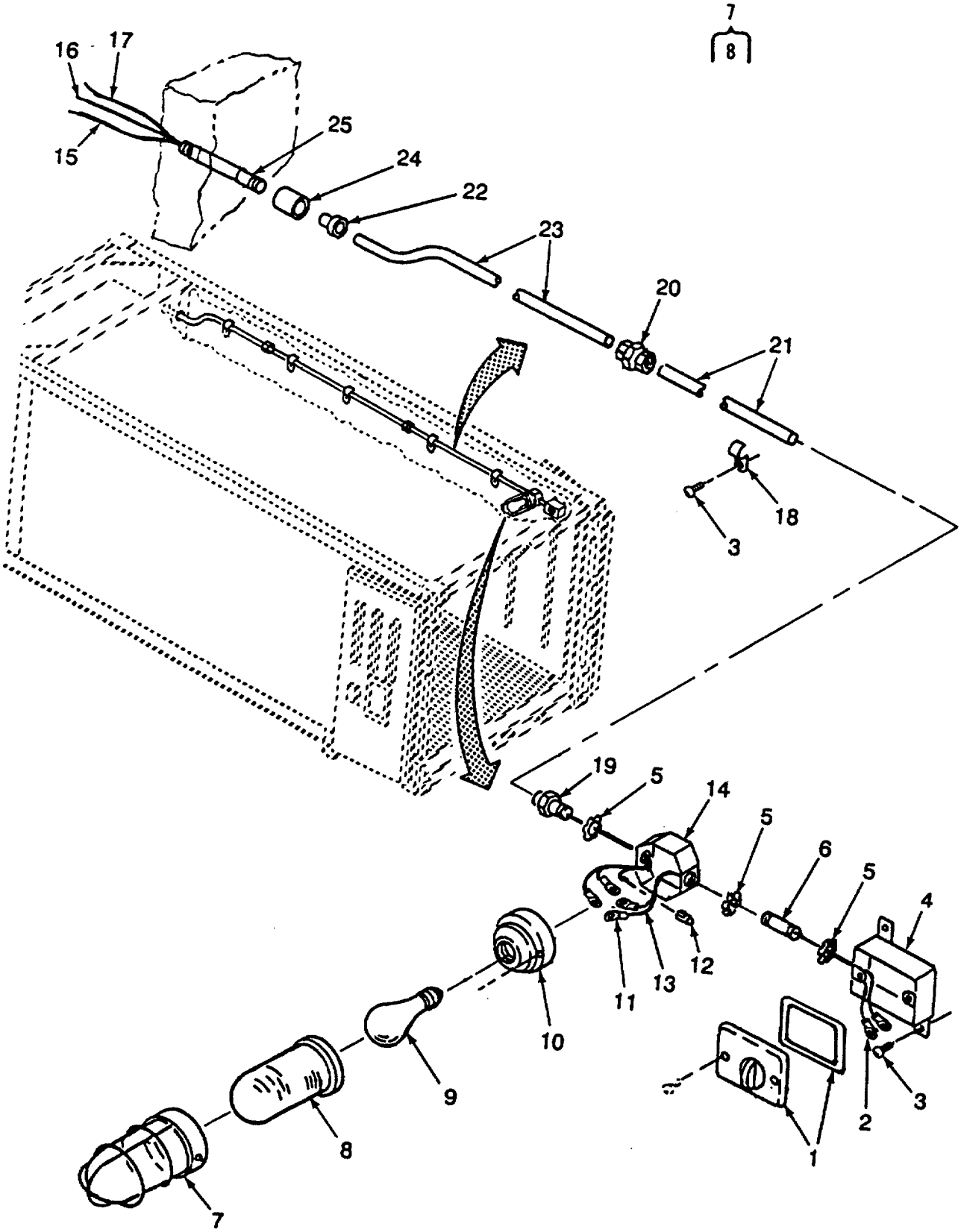

Figure 9. Light Assembly and Connectors

(1) ITEM NO	(2) SMR CODE	(3) CAGEC	(4) PART NUMBER	(5) DESCRIPTION AND USABLE ON CODES(UOC)	(6) QTY
				GROUP 06 ELECTRICAL EQUIPMENT	
				FIG. 9 LIGHT ASSEMBLY AND CONNECTORS	
1	XDOZZ	08556	216	COVER	1
2	PAOZZ	96906	MS25036-153	TERMINAL,LUG	2
3	PAOZZ	96906	MS35493-78	SCREW,WOOD	2
4	PAOZZ	08556	250-L	CONDUIT OUTLET	1
5	XDOZZ	59730	151	BLANK SNAPIN 3-4 IN	3
6	XDOZZ	80996	FIG343	NIPPLE	1
7	XDOZZ	75282	VCG-15	GUARD	1
8	XDOZZ	75282	VG-15	GLOBE	1
9	PAOZZ	08805	100A	LAMP,INCANDESCENT	1
10	XDOZZ	75282	VP151	FIXTURE	1
11	PAOZZ	59730	RB-2237	TERMINAL,LUG	3
12	XDOZZ	83209	30-076	WIRE NUT	1
13	XDOZZ	90598	30302-39	WIRE BLACK 39 IN LG, 14 GA	2
14	XDOZZ	90598	30411-1	HOLDER,LAMP	1
15	XDOZZ	90598	30302-41	WIRE WHITE 189 IN LG, 14 GA	1
16	XDOZZ	90598	30302-40	WIRE GREEN 189 IN LG, 14 GA	1
17	XDOZZ	90598	30302-38	WIRE BLACK 189 IN LG, 14 GA	1
18	XDOZZ	39428	9435T13	CLAMP	7
19	PAOZA	59730	1192	BOX CONNECTOR,ELECT	1
20	XDOZZ	03743	95T050	COUPLING	1
21	XDOZZ	90598	30302-25	CONDUIT	1
22	PAOZZ	03743	96T050	BOX CONNECTOR,ELECT	1
23	XDOZZ	90598	30410-1	CONDUIT,FORMED	1
24	XDOZZ	83209	E942D	ADAPTER,FEMALE	1
25	XDOZZ	90598	30202-21	CONDUIT	1

END OF FIGURE

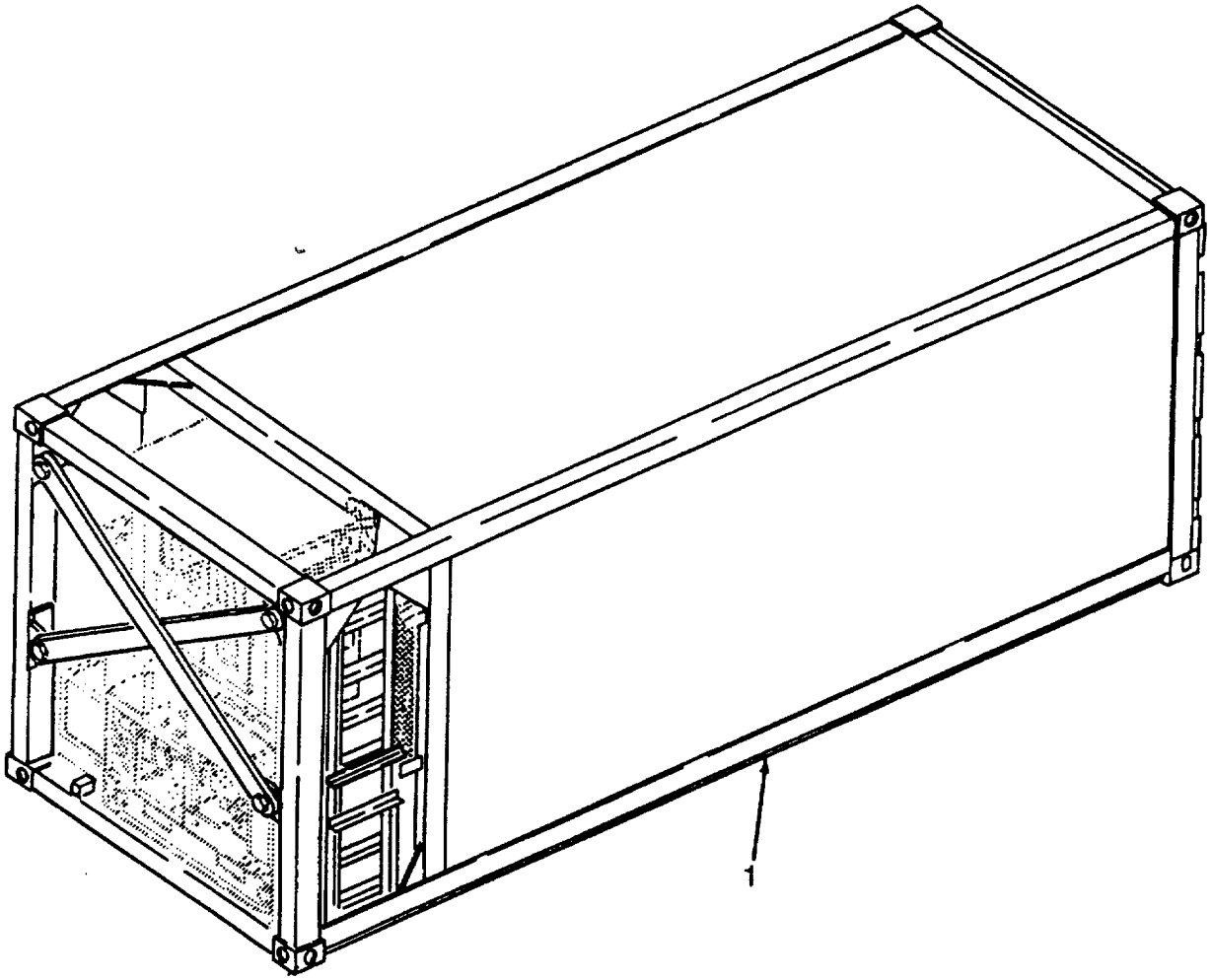

Figure 10. Box Assembly

(1) ITEM NO	(2) SMR CODE	(3) CAGEC	(4) PART NUMBER	(5) DESCRIPTION AND USABLE ON CODES(UOC)	(6) QTY
				GROUP 07 BOX ASSEMBLY	
				FIG. 10 BOX ASSEMBLY	
1	XAFOF	90598	30301-101	BOX ASSY	1

END OF FIGURE

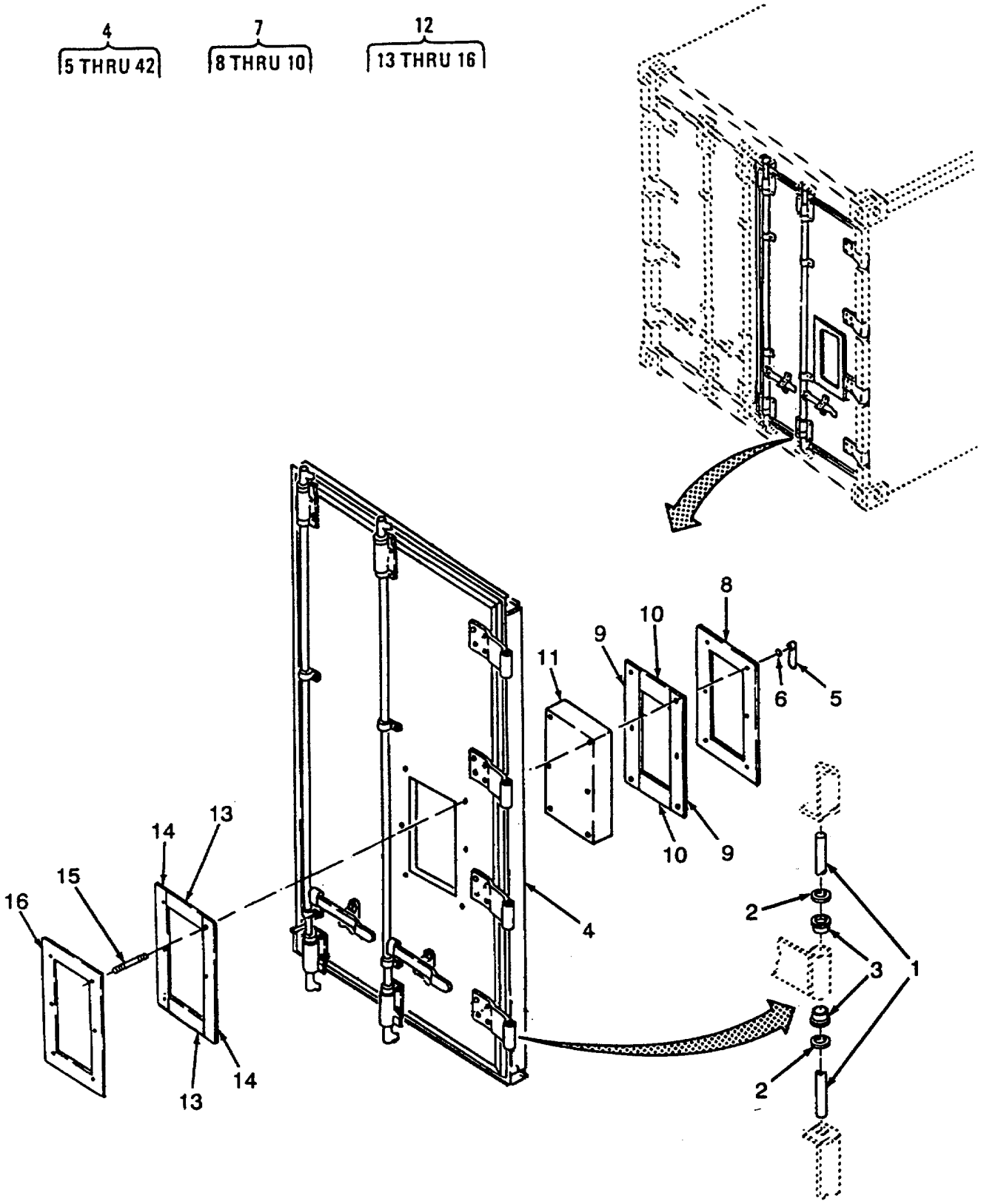

Figure 11. Right Hand Door Assembly(Sheet 1 of 2)

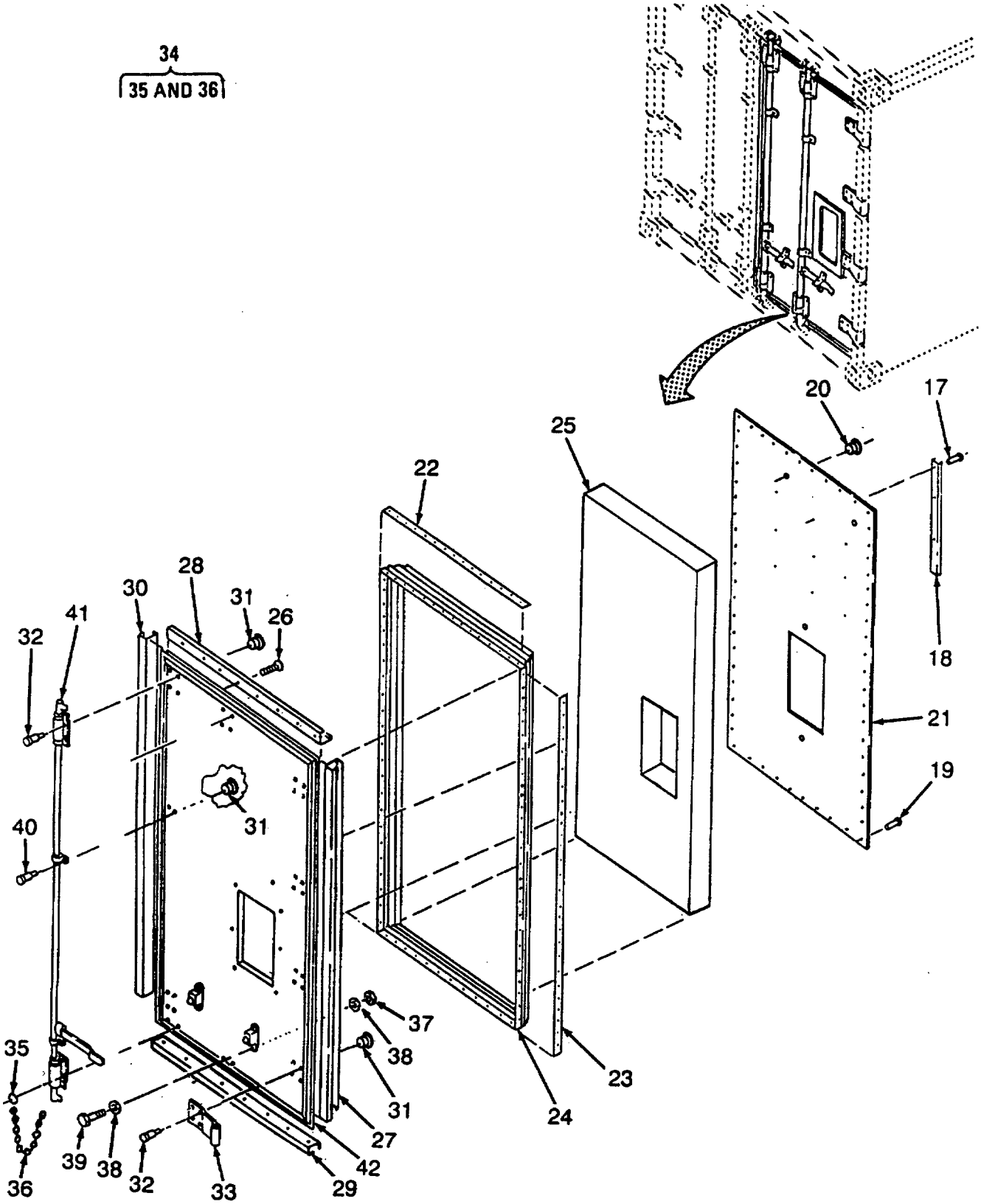

Figure 11. Right Hand Door Assembly (Sheet 2 of 2)

(1) ITEM NO	(2) SMR CODE	(3) CAGEC	(4) PART NUMBER	(5) DESCRIPTION AND USABLE ON CODES(UOC)	(6) QTY
				GROUP 07 BOX ASSEMBLY	
				FIG. 11 RIGHT HAND DOOR ASSEMBLY	
1	PAOZZ	57877	HP-1054-3	.PIN,STRAIGHT,HEADED	4
2	PAOZZ	57877	HW-1054-8	.WASHER	8
3	XDOZZ	57877	BU1062-2	.BUSHING,SLEEVE	8
4	XDFOF	90598	30375-100	.DOOR ASSY,RH	1
5	XDOZZ	90598	30357-100	..HANDLE,DOOR	6
6	PAOZZ	96906	MS9321-11	..WASHER,FLAT	6
7	XDOZZ	90598	30356-100	..FRAME ASSY	1
8	XDOZZ	90598	30356-100-1	...FRAME	2
9	MOOZZ	90598	30356-100-2	...GASKET MAKE FROM BULK P/N 411D1/ 8X3X25	2
10	XDOZZ	90598	30356-100-3	...GASKET MAKE FROM BULK P/N 411D1/ 8X3X9	2
11	XDOZZ	90598	30355-100	..DOOR ASSY,ESCAPE	1
12	PBOZZ	90598	30356-101	..FRAME,DOOR	1
13	MOOZZ	90598	30356-3-101	...GASKET MAKE FROM BULK P/N 411D1/ 8X3X9	2
14	MOOZZ	90598	30356-2-101	...GASKET MAKE FROM BULK P/N 411D1/ 8X3X25	2
15	XDOZZ	90598	30356-4	...ROD,THREADED	6
16	XDOZZ	90598	30356-1	FRAME	1
17	PAOZZ	81349	M24243/1-A608	..RIVET,BLIND.	9
18	XDOZZ	90598	30438-3	..SPACER,SPECIAL	3
19	PAOZZ	81349	M24243/1-A404	..RIVET,BLIND	60
20	PAOZZ	83058	SS48143K1611	..BUTTON,PLUG	6
21	XDOZZ	90598	30373-1	..SHEET BACK RIGHT DOOR	1
22	PAOZZ	90598	30387-1	..STRIP,RETAINING,DOO DOOR SEAL	2
23	XDOZZ	90598	30388-1	..STRIP,RETAINING,DOO DOOR SEAL	2
24	PAOZZ	90598	30385-1	..SEAL,DOOR,RIGHT RIGHT	1
25	XDOZZ	90598	30375-10	..INSULATION	1
26	XDOZZ	70519	A34N-1902	..SCREW,SHEETMETAL	51
27	XDOZZ	90598	30368-1	..FRAME,RETAINER	1
28	XDOZZ	90598	30369-1	..FRAME,RETAINER	1
29	XDOZZ	90598	30369-2	..FRAME,RETAINER	1
30	XDOZZ	90598	30486-1	..FRAME,RETAINER	1
31	XDOZZ	93907	890-60008-100	..NUT,CAMTAINER	34
32	XDOZZ	93907	880-84165-100	..BOLT,CAMTAINER	34
33	XDOZZ	57877	H-10604	..HINGE	4
34	PAOOZ	90598	30436-100	..CHAIN ASSEMBLY,SING	1
35	XDOZZ	39428	3929T14	...SWIVEL EYE	1
36	XAOZZ	39428	3603T19	.. CHAIN	1
37	PAOZZ	96906	MS51922-17	..NUT,SELF-LOCKING,HE	2
38	PAOZZ	96906	MS27183-14	..WASHER,FLAT	4
39	PAOZZ	80204	B1821BH038C200N	..SCREW,CAP,HEXAGON H	2
40	XDOZZ	93907	880-82920-100	..BOLT,CAMTAINER..	8
41	XDOZZ	57877	DL-1104-RH	..POWER BRACE ASSY	2
42	XDOZZ	90598	30487-1	..DOOR	1

END OF FIGURE

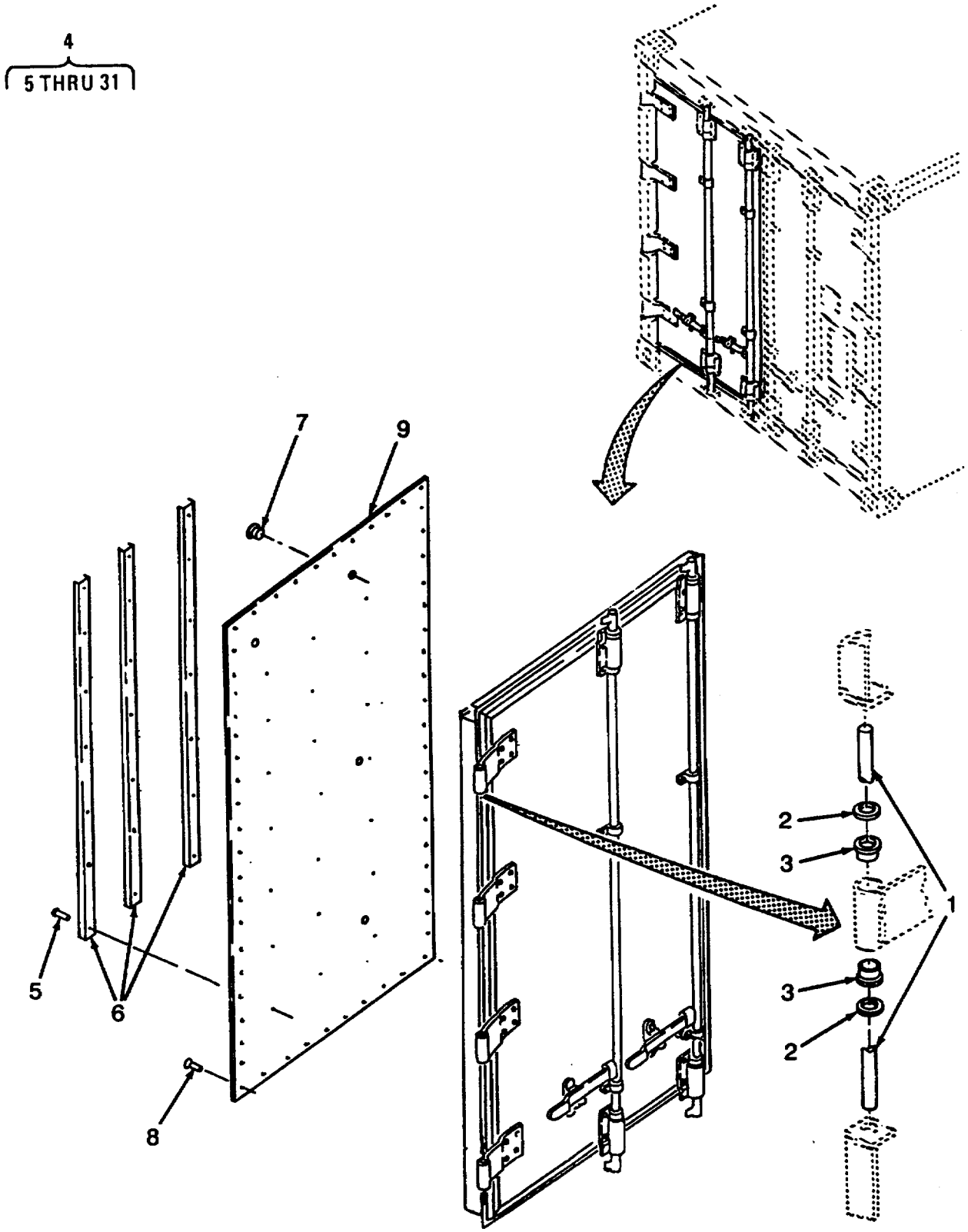

Figure 12. Left Hand Door Assembly (Sheet 1 of 2)

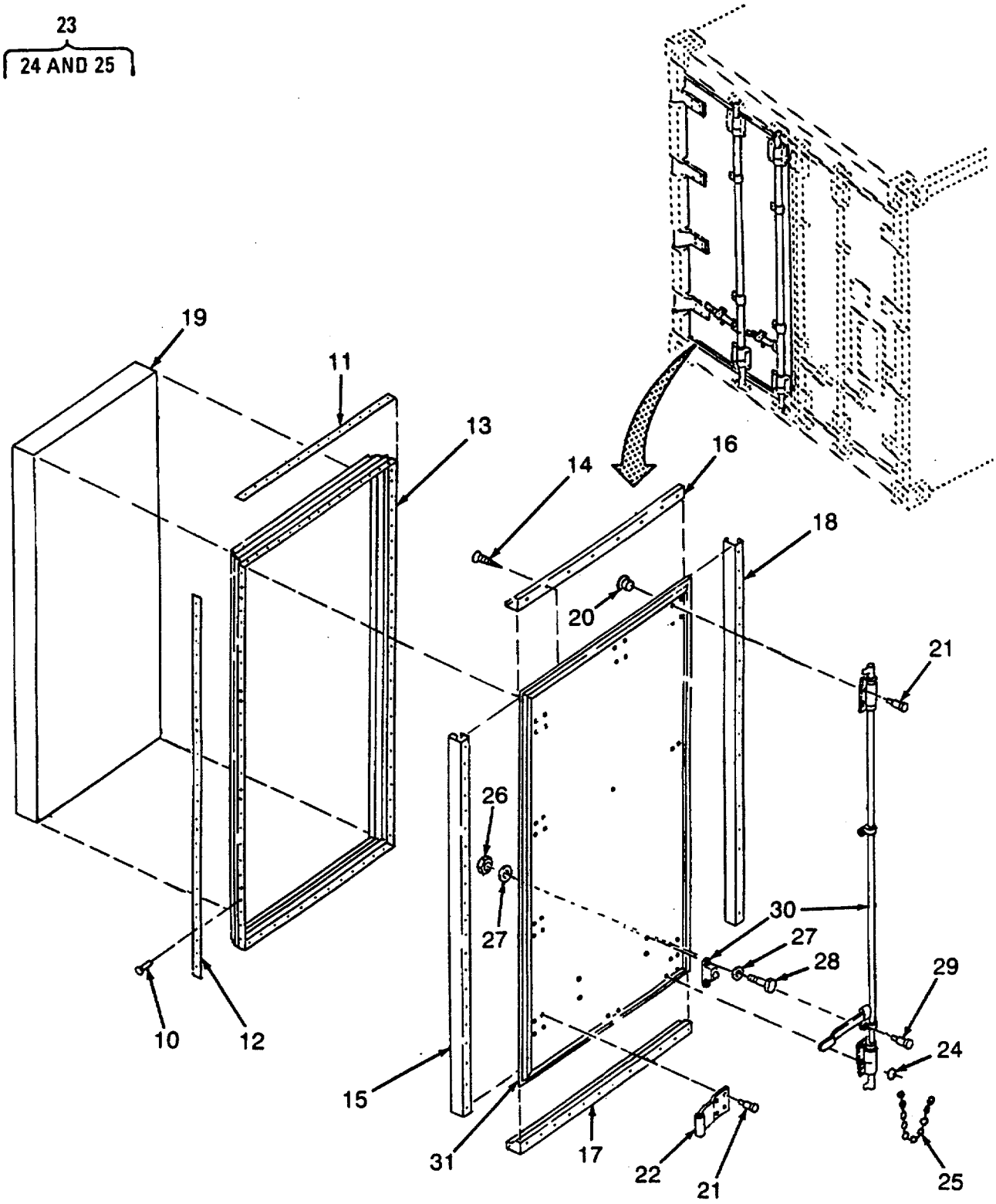

Figure 12. Left Hand Door Assembly(Sheet 2 of 2)

(1) ITEM NO	(2) SMR CODE	(3) CAGEC	(4) PART NUMBER	(5) DESCRIPTION AND USABLE ON CODES(UOC)	(6) QTY
				GROUP 07 BOX ASSEMBLY	
				FIG. 12 LEFT HAND DOOR ASSEMBLY	
1	PAOZZ	57877	HP-1054-3	.PIN,STRAIGHT,HEADED	4
2	PAOZZ	57877	HW-1054-8	.WASHER	8
3	XDOZZ	57877	BU1062-2	.BUSHING,SLEEVE	8
4	XDFOF	90598	30376-100	.DOOR ASSY,LH	1
5	PAOZZ	81349	M24243/1-A608	..RIVET,BLIND	18
6	PAOZZ	90598	30438-1	..SPACER,SPECIAL	3
7	PAOZZ	83058	SS-48143K1611	..BUTTON,PLUG	5
8	PAOZZ	81349	N24243/1-A404	..RIVET,BLIND..	82
9	PAOZZ	90598	30374-1	..INSERT,PACKAGING	1
10	PAOZZ	54402	AD45BS	..RIVET,BLIND	23
11	PAOZZ	90598	30391-1	..STRIP,RETAINING,DO0	2
12	XDOZZ	90598	30388-1	..STRIP,RETAINING,DOO	1
13	PAOZZ	90598	30386-1	..SEAL	1
14	XDOZZ	70519	A34N-1902	..SCREW,SHEETHETAL..	50
15	XDOZZ	90598	30368-2	..FRAME,RETAINER	1
16	XDOZZ	90598	30370-1	..FRAME,RETAINER	1
17	XDOZZ	90598	30370-2	..FRAME,RETAINER.	1
18	XDOZZ	90598	30367-1	..FRAME,CENTER	1
19	XDOZZ	90598	30376-10	..INSULATION	1
20	XDOZZ	93907	890-6008-100	..NUT,CAMTAINER	42
21	XDOZZ	93907	880-84165-100	..BOLT,CAMTAINER	34
22	PAOZZ	57877	H-1060-4	..HINGE,STRAP	4
23	PAOOZ	90598	30436-100	..CHAIN ASSEMBLY,SING	1
24	XDOZZ	39428	3929T14	...SWIVEL EYE	1
25	XDOZZ	39428	3603T19	... CHAIN	1
26	PAOZZ	96906	MS51922-17	..NUT,SELF-LO CKING,HE	2
27	PAOZZ	96906	MS27183-14	..WASHER,FLAT	4
28	PAOZZ	80204	B1821BH038C200N	..SCREW,CAP,HEXAGON H	2
29	XDOZZ	93907	880-82920-100	..BOLT,CAMTAINER	8
30	XDOZZ	57877	DL-1104-LH	..POWER BRACE ASSY	2
31	XDOZZ	90598	30488-1	..DOOR	1

END OF FIGURE

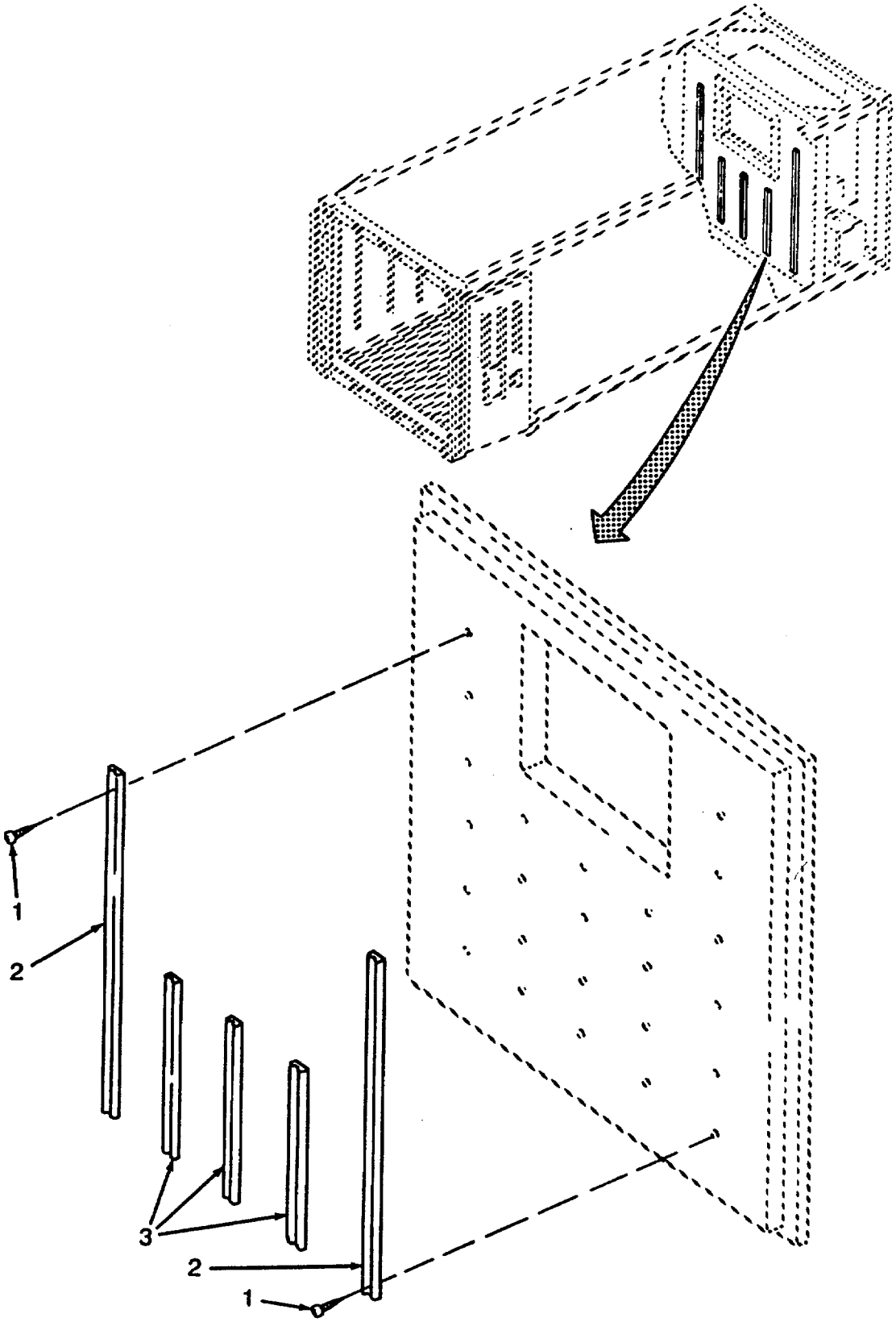

Figure 13. Spacers, Angles, and Zees (Sheet 1 of 2)

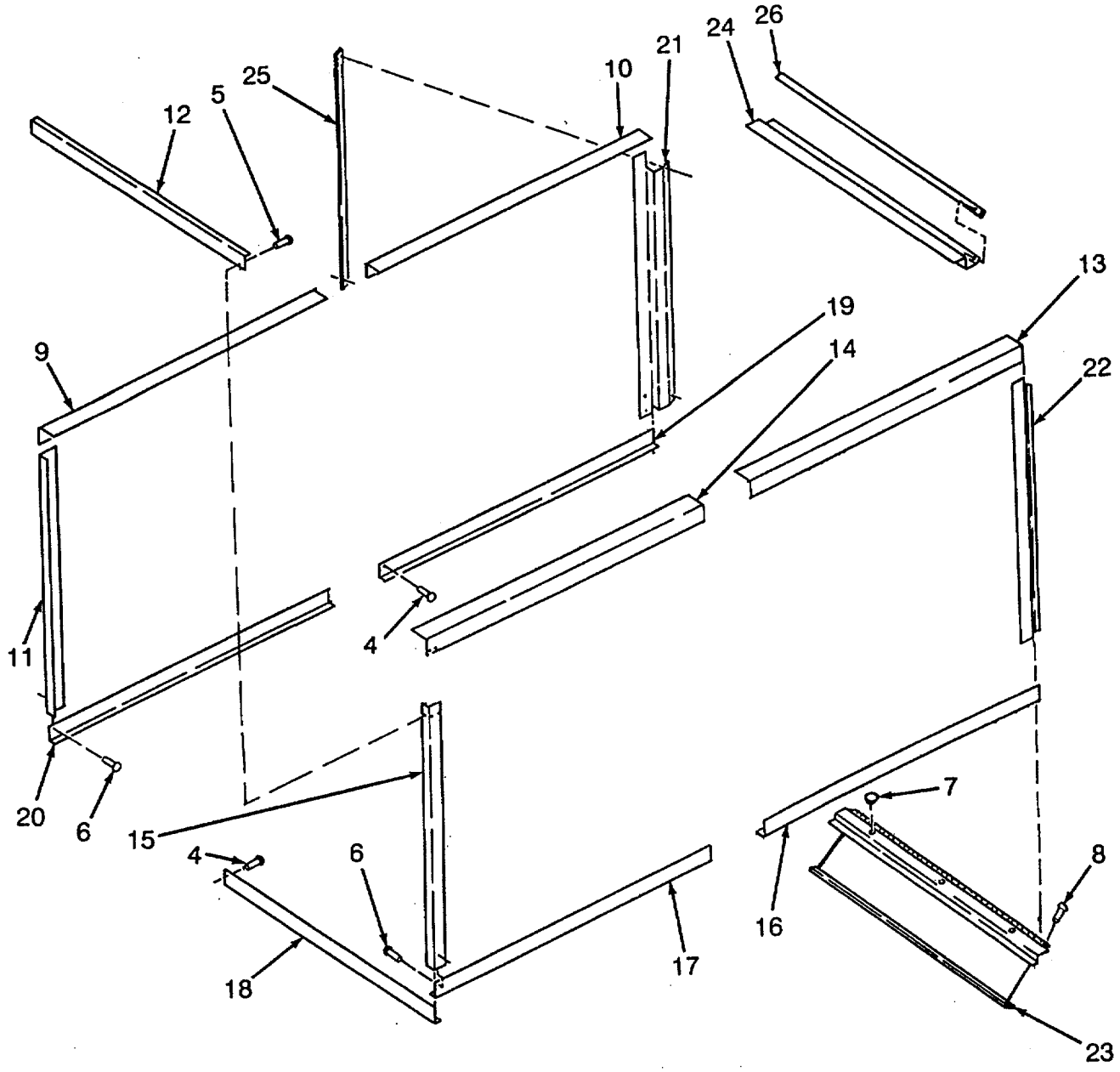

Figure 13. Spacers, Angles, and Zees (Sheet 2 of 2)

(1) ITEM NO	(2) SMR CODE	(3) CAGEC	(4) PART NUMBER	(5) DESCRIPTION AND USABLE ON CODES(UOC)	(6) QTY
				GROUP 07 BOX ASSEMBLY	
				FIG. 13 SPACERS, ANGLES, AND ZEES	
1	PAOZZ	96906	MS90725-113	.SCREW,CAP,HEXAGON H.....	4
2	PAOZZ	90598	30438-1	.SPACER,SPECIAL.....	24
3	PAOZZ	90598	30438-2	.SPACER,SPECIAL.....	3
4	XDOZZ	70519	AIN-1904	.SCREW,SHEETMETAL	224
5	XDOZZ	94222	10-15-706-13	.RIVET,3G LINER.....	221
6	PAOZZ	07707	AD64H	.RIVET,BLIND	6
7	PAOZZ	83058	SS48143K1611	.BUTTON,PLUG	44
8	XDOZZ	90598	30301-48	.SCREW,THD CUTTING 10-24X3/4 T-410 ..... CRES	56
9	XDOZZ	90598	30471-1	.ANGLE	1
10	XDOZZ	90958	30470-1	.ANGLE	1
11	XDOZZ	90598	30467-2	.ANGLE	1
12	XDOZZ	90598	30468-1	.ANGLE	1
13	XDOZZ	90598	30470-2	.ANGLE.	1
14	XDOZZ	90598	30471-2	.ANGLE	1
15	XDOZZ	90598	30467-1	.ANGLE	1
16	XDOZZ	90598	30472-2	.ANGLE	1
17	XDOZZ	90598	30473-2	.ANGLE	1
18	XDOZZ	90598	30469-1	.ANGLE	1
19	XDOZZ	90598	30472-1	.ANGLE	1
20	XDOZZ	90598	30473-1	.ANGLE	1
21	XDOZZ	90598	30476-1	.ZEE	1
22	XDOZZ	90598	30476-2	.ZEE	1
23	XDOZZ	90598	30474-1	.ZEE	1
24	XDOZZ	90598	30475-1	.ZEE	1
25	XDOZZ	90598	30478-1	.INSULATOR.....	2
26	XDOZZ	90598	30477-1	.INSULATOR.....	2

END OF FIGURE

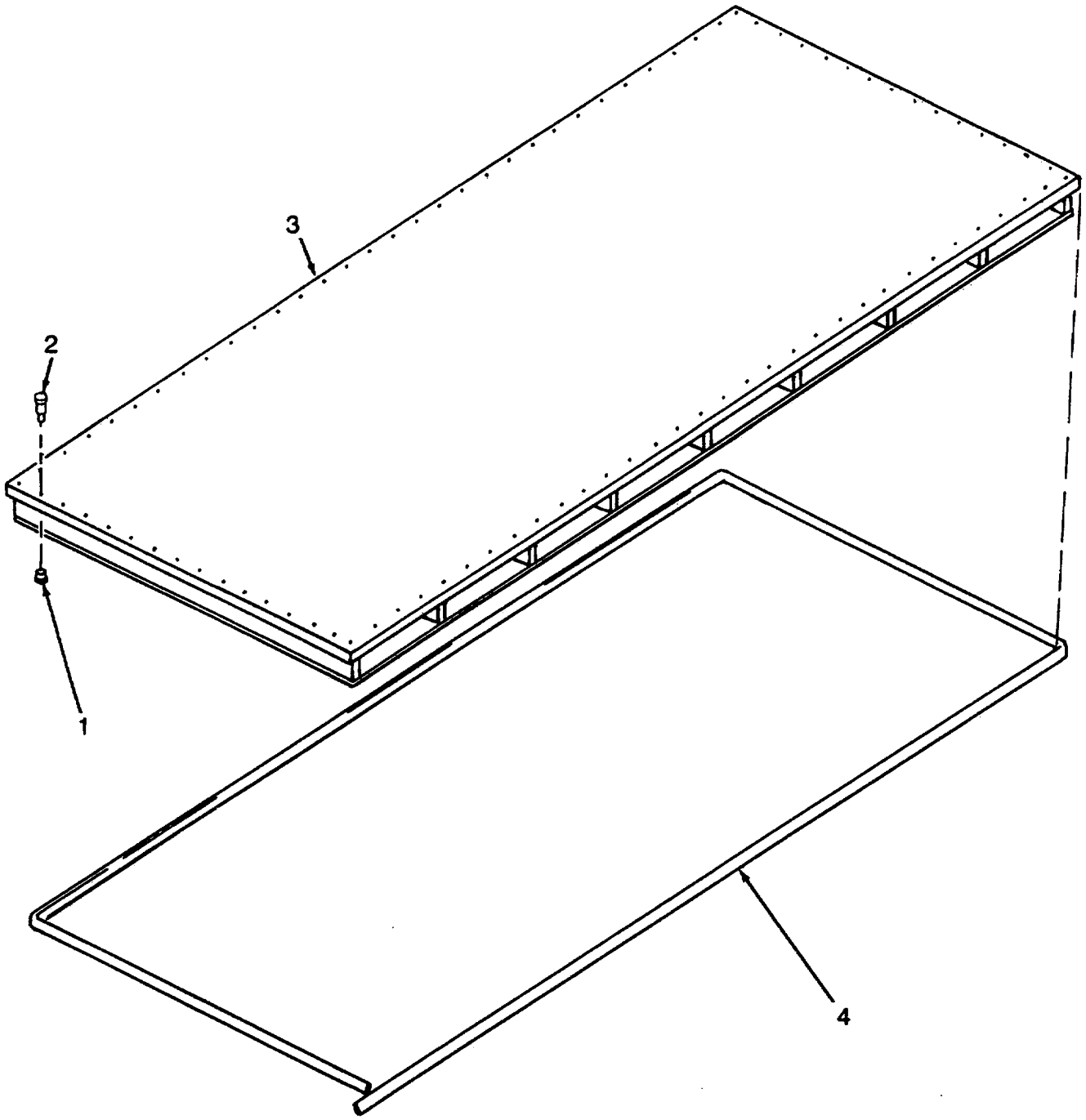

Figure 14. Roof Assembly

(1) ITEM NO	(2) SMR CODE	(3) CAGEC	(4) PART NUMBER	(5) DESCRIPTION AND USABLE ON CODES(UOC)	(6) QTY
				GROUP 07 BOX ASSEMBLY	
				FIG. 14 ROOF ASSEMBLY	
1	XDFZZ	93907	890-60008-100	.NUT,CAMTAINER	138
2	XDFZZ	93907	880-82120-100	.BOLT,CAMTAINER	138
3	XDFZZ	90598	30340-1	.ROOF.....	1
4	XDFZZ	90598	30301-28	.ROPE,FILLER 47 FT	1

END OF FIGURE

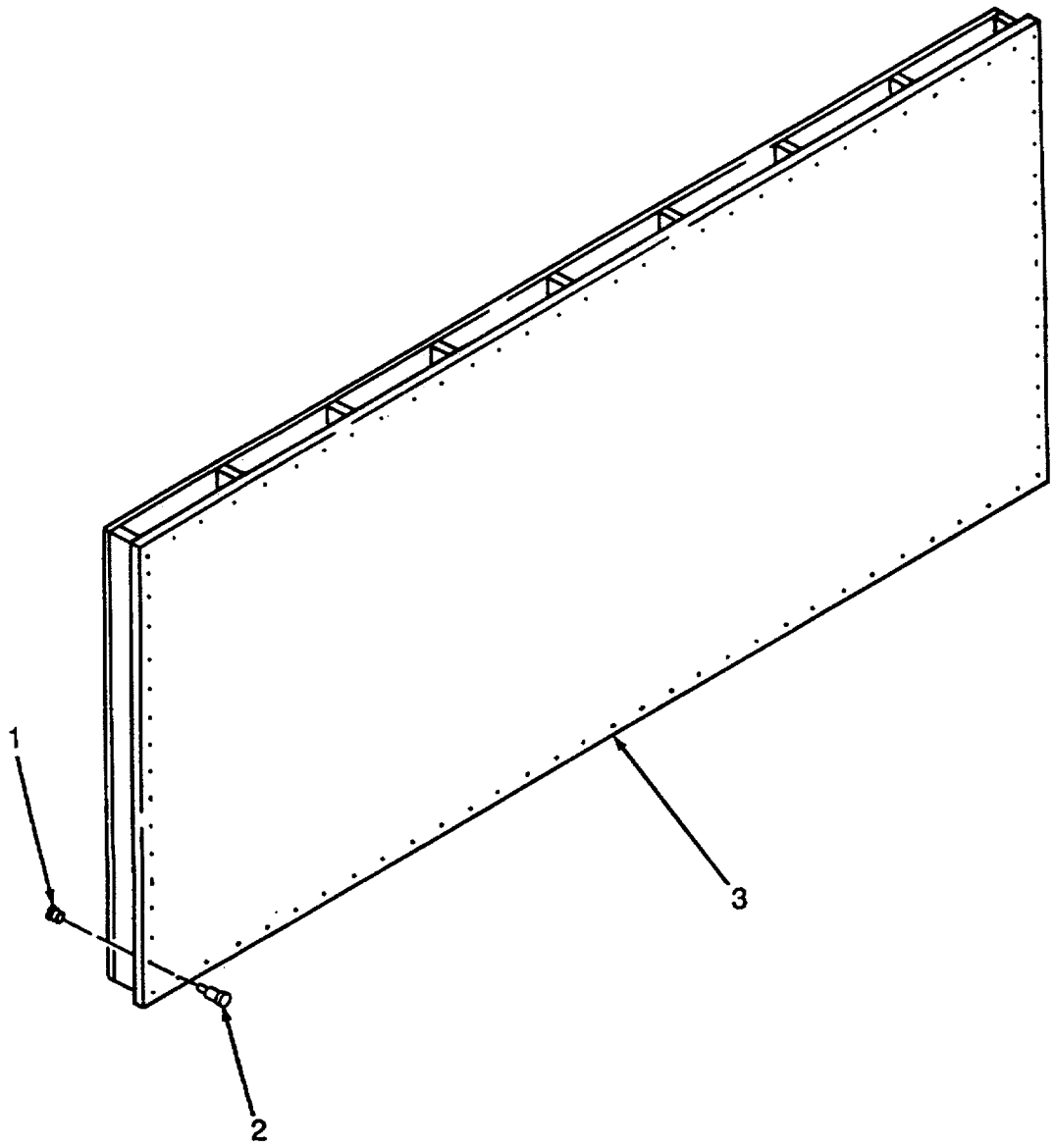

Figure 15. Side Panels

(1) ITEM NO	(2) SMR CODE	(3) CAGEC	(4) PART NUMBER	(5) DESCRIPTION AND USABLE ON CODES(UOC)	(6) QTY
				GROUP 07 BOX ASSEMBLY	
				FIG. 15 SIDE PANELS	
1	XDOZZ	93907	890-58000-100	.NUT,CAMTAINER	448
2	XDOZZ	93907	880-84165-100	.BOLT,CANTAINER	448
3	XDFZZ	90598	30341-1	.SIDE	2

END OF FIGURE

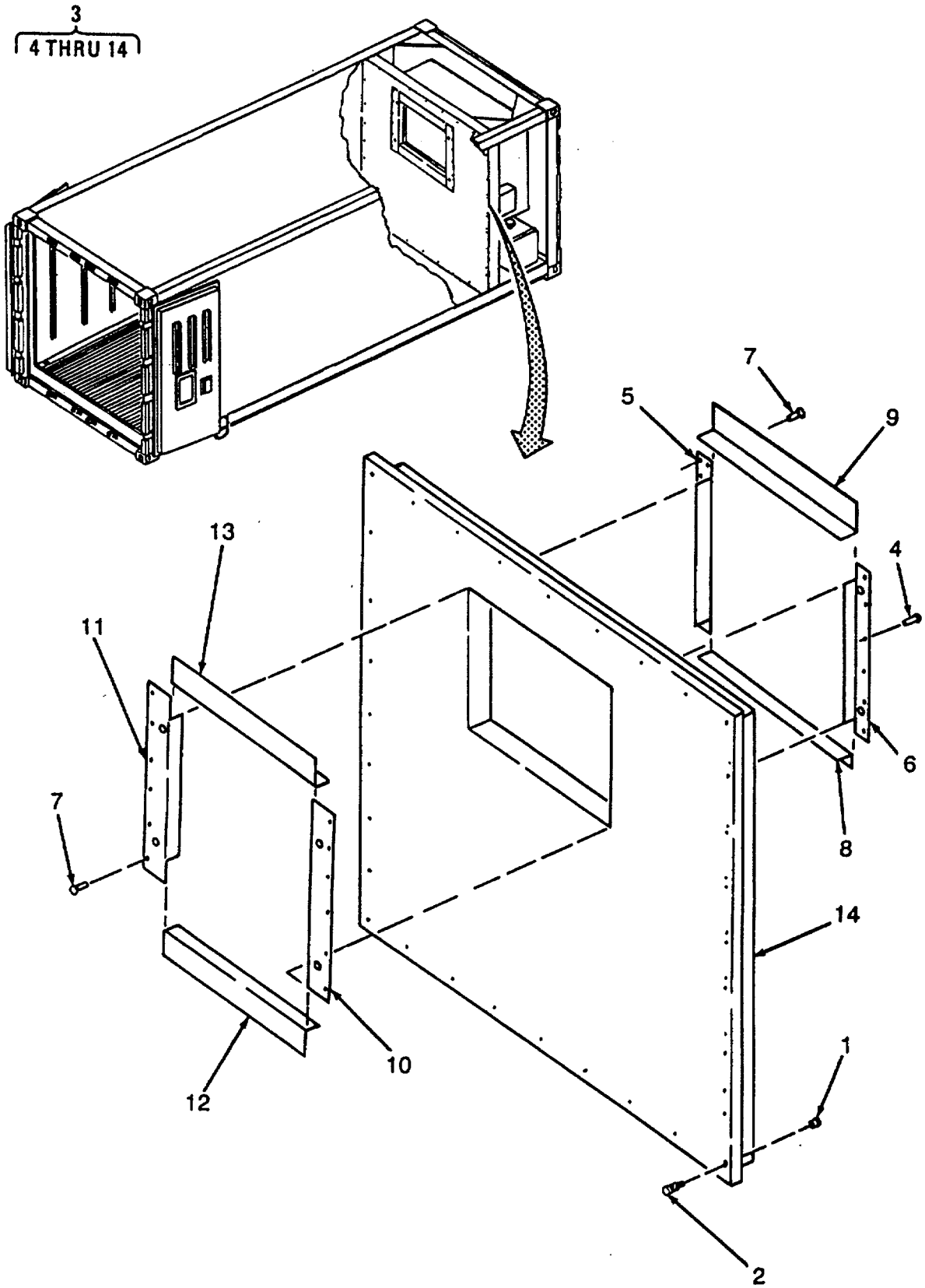

Figure 16. Front End Panel

(1) ITEM NO	(2) SMR CODE	(3) CAGEC	(4) PART NUMBER	(5) DESCRIPTION AND USABLE ON CODES(UOC)	(6) QTY
				GROUP 07 BOX ASSEMBLY	
				FIG. 16 FRONT END PANEL	
1	XDFZZ	93907	890-60008-100	.NUT,CAMTAINER	45
2	XDFZZ	93907	880-82120-100	.BOLT CAMTAINER	45
3	XDFOO	90598	30466-100	.PANEL ASSY	1
4	PAOZZ	94222	38-106-12-91	..RIVET,BLIND	12
5	XDFZZ	90598	30463-1	..ANGLE	1
6	XDFZZ	90598	30463-2	..ANGLE	1
7	XDFZZ	94222	10-15-706-13	..RIVET,3G LINER.....	12
8	XDFZZ	90598	30464-1	..ANGLE	1
9	XDFZZ	90598	30465-1	..ANGLE	I
10	XDFZZ	90598	30460-1	..ANGLE	1
11	XDFZZ	90598	30460-2	..ANGLE	1
12	XDFZZ	90598	30461-1	..ANGLE	1
13	XDFZZ	90598	30462-1	..ANGLE	1
14	XDFZZ	90598	30343-1	..PANEL,FRONT	1

END OF FIGURE

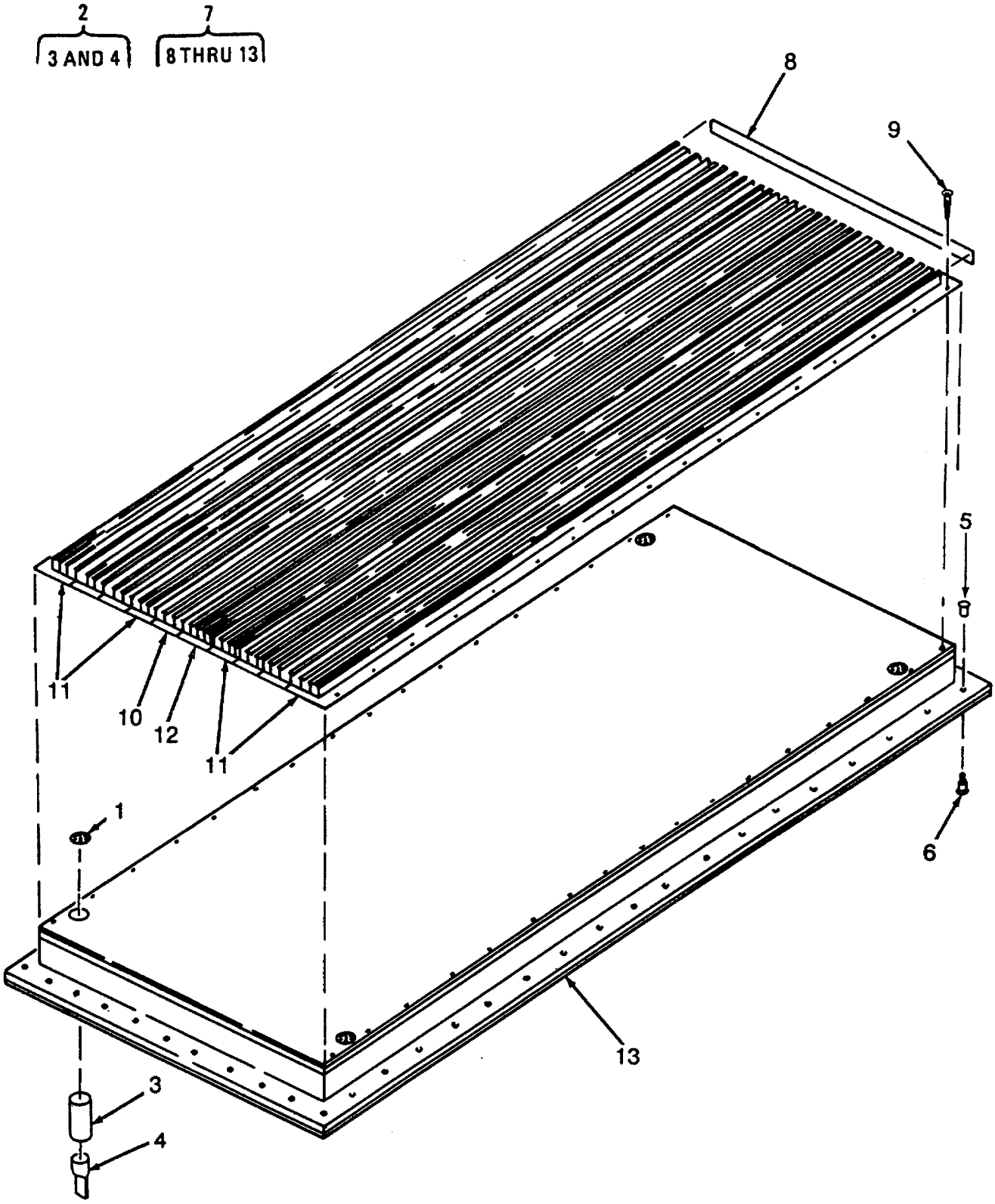

Figure 17. Floor Panel

(1) ITEM NO	(2) SMR CODE	(3) CAGEC	(4) PART NUMBER	(5) DESCRIPTION AND USABLE ON CODES(UOC)	(6) QTY
				GROUP 07 BOX ASSEMBLY	
				FIG. 17 FLOOR PANEL	
1	XDOZZ	90598	30309-1	.SCREEN,DRAIN	4
2	XDOZZ	90598	30308-100	.DRAIN,FLOOR ASS	4
3	XAOZZ	90598	30308-1	..TUBE ¾ PVC PIPE 1.05 OD X .824 ID	4
4	XAOZZ	90598	30308-2	..HOSE ¾ NEOPRENE FLAT COLLAPSIBLE 3/64 WALL	4
5	XDFZZ	93907	890-58000-100	.NUT,CAMTAINER	128
6	XDFZZ	93907	880-84165-100	.BOLT, CAMTAINER	128
7	XDFFF	90598	30327-100	.FLOOR ASSY	1
8	XDFZZ	90598	30327-5	..BAR	1
9	XDFZZ	70519	A2N-1908	..SCREW,SHEETHETAL	64
10	XDFZZ	90598	30326-1	..FLOOR,9 IN BOARD	8
11	XDFZZ	90598	30325-1	..FLOOR,8 IN BOARD	1
12	XDFZZ	90598	30324-1	..FLOOR,CTR STARTER	1
13	XDFZZ	90598	30347-1	..FLOOR,PANEL	1

END OF FIGURE

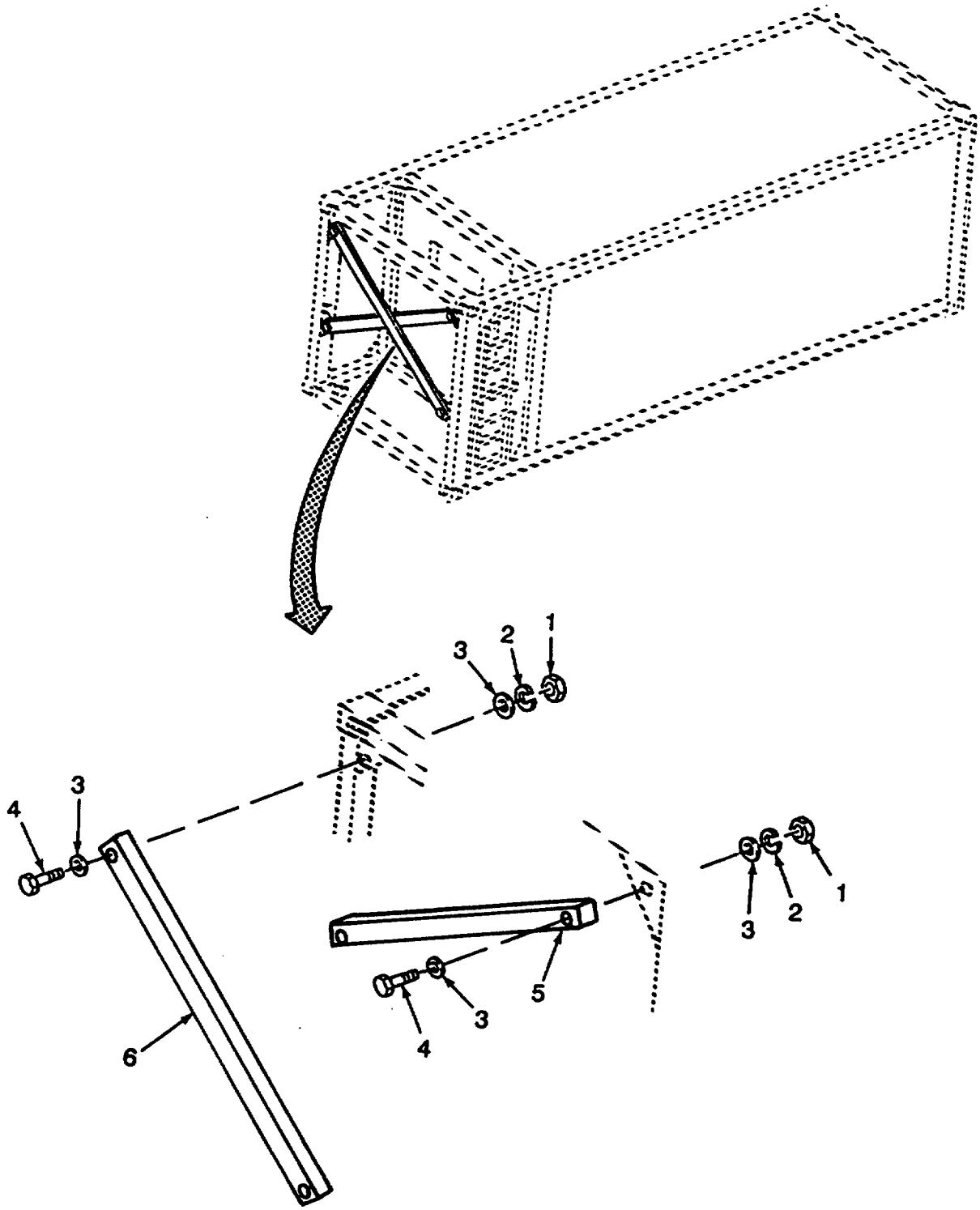

Figure 18. Braces and Container Frame (Sheet 1 of 2)

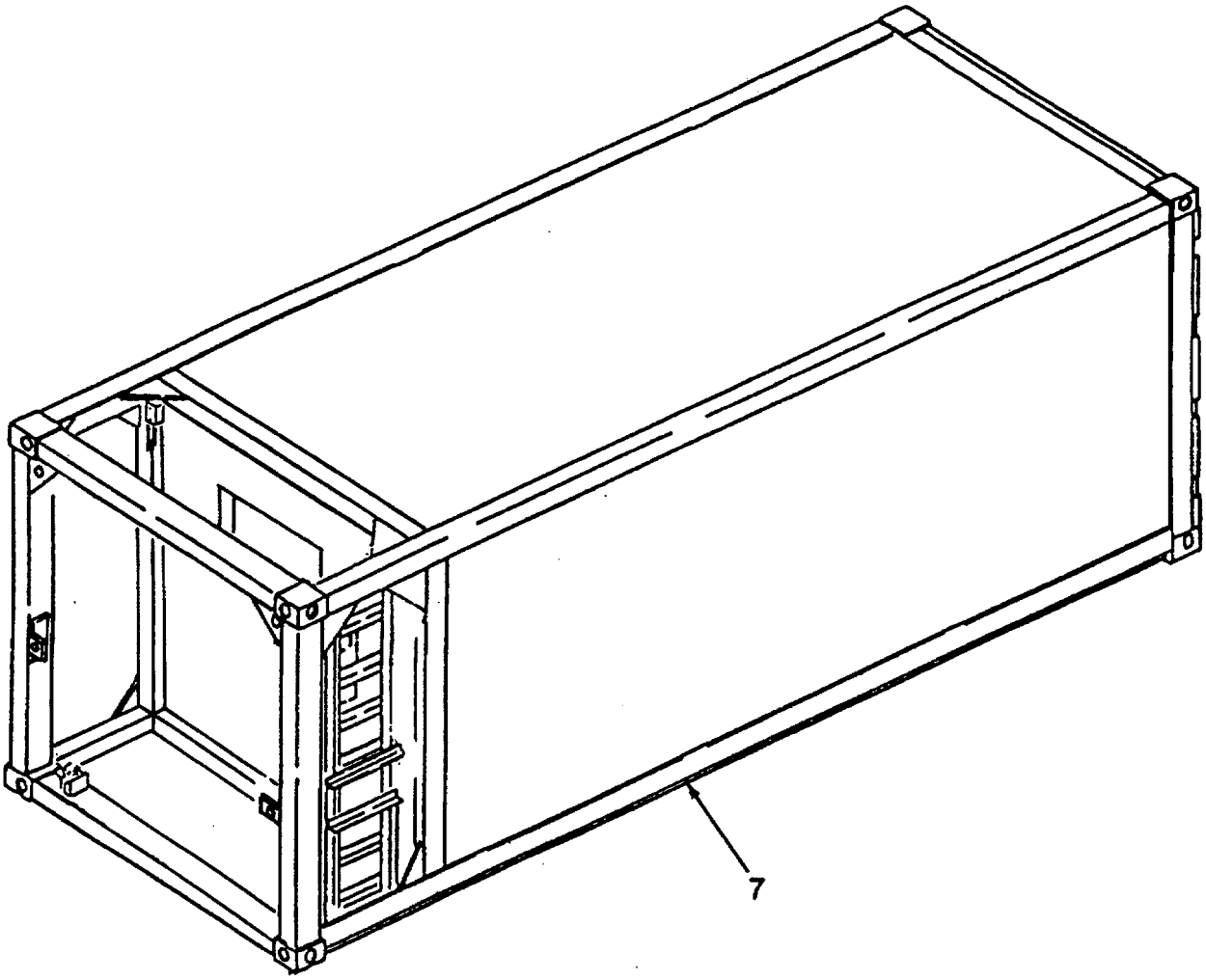

Figure 18. Braces and Container Frame(Sheet 2 of 2)

(1) ITEM NO	(2) SMR CODE	(3) CAGEC	(4) PART NUMBER	(5) DESCRIPTION AND USABLE ON CODES(UOC)	(6) QTY
				GROUP 07 BOX ASSEMBLY	
				FIG. 18 BRACES AND CONTAINER FRAME	
1	XDOZZ	90598	30301-57	.NUT,HEX	4
2	XDOZZ	90598	30301-56	.WASHER,LOCK	4
3	XDOZZ	90598	30301-55	.WASHER,FLAT	8
4	XDOZZ	90598	30301-54	.BOLT,HEX	4
5	XDOFF	90598	30593-100	.TUBE,BRACE	1
6	XDOFF	90598	30593-101	.TUBE, BRACE	1
7	XBFZZ	90598	30304-100	.CONTAINER WELDMENT	1

END OF FIGURE

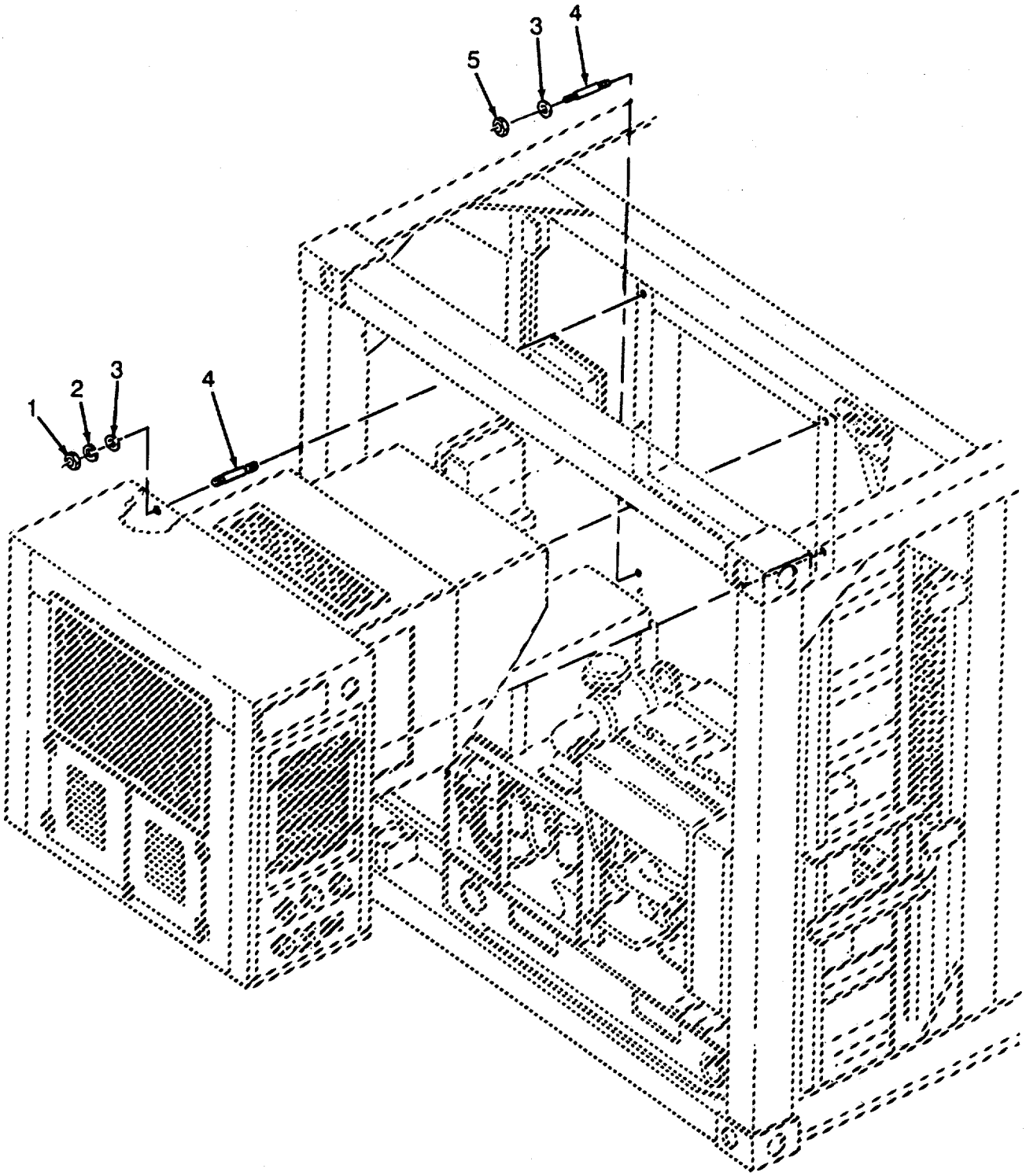

Figure 19. Refrigeration Unit Mounting Hardware

(1) ITEM NO	(2) SMR CODE	(3) CAGEC	(4) PART NUMBER	(5) DESCRIPTION AND USABLE ON CODES(UOC)	(6) QTY
				GROUP 08 REFRIGERATION UNIT	
				FIG. 19 REFRIGERATION UNIT MOUNTING HARDWARE	
1	PAOZZ	96906	MS51967-23	NUT,PLAIN,HEXAGON	4
2	PAOZZ	96906	MS35338-51	WASHER,LOCK.....	4
3	PAOZZ	96906	HS27183-23	WASHER,FLAT.....	8
4	XDOZZ	39428	91563A849	STUD	8
5	PAOZZ	77122	RF3410	NUT,STAMPED.....	4

END OF FIGURE

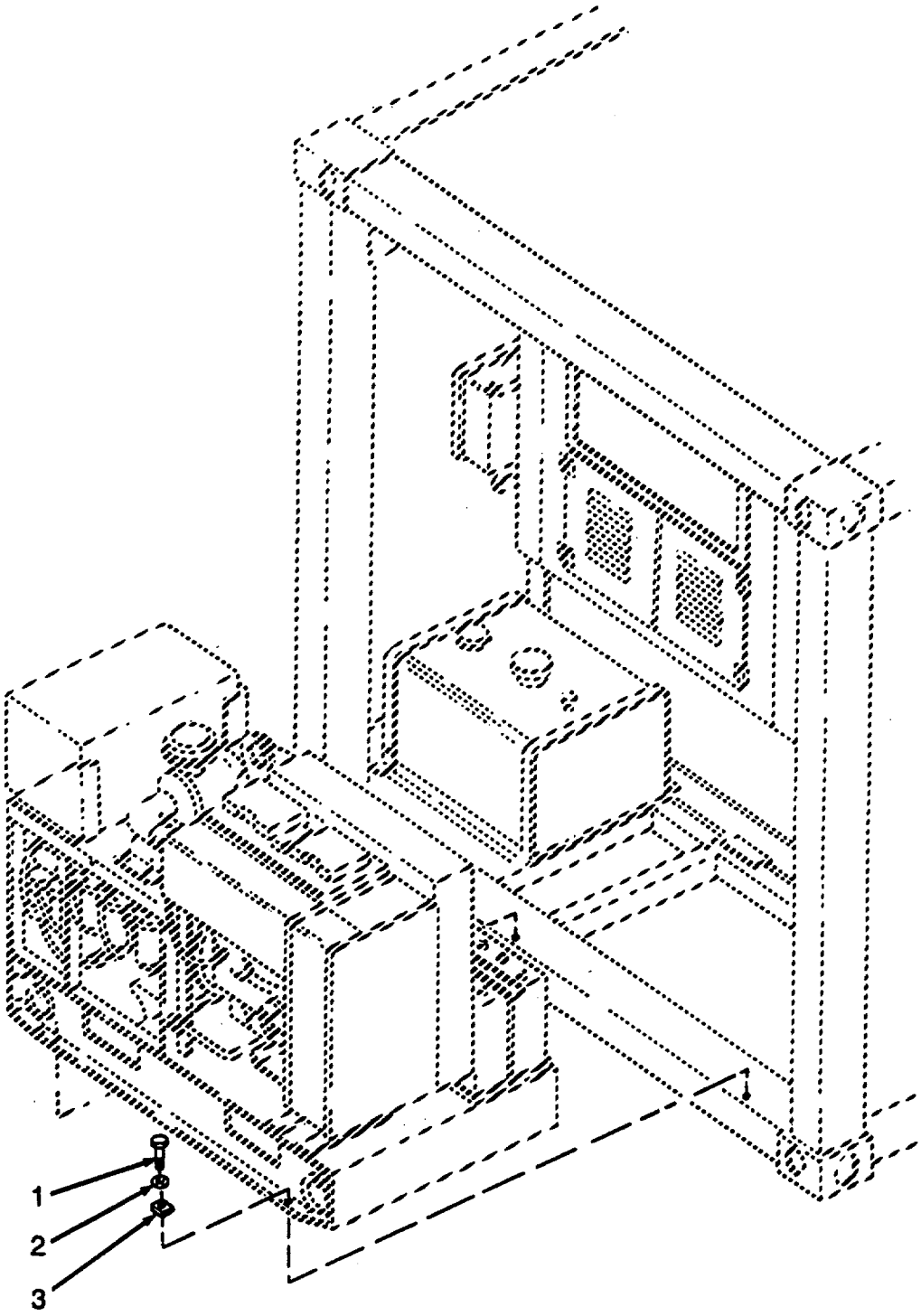

Figure 20. Diesel Generator Set Mounting Hardware

(1) ITEM NO	(2) SMR CODE	(3) CAGEC	(4) PART NUMBER	(5) DESCRIPTION AND USABLE ON CODES(UOC)	(6) QTY
				GROUP 09 GENERATOR SET, DIESEL	
				FIG. 20 DIESEL GENERATOR SET MOUNTING HARDWARE	
1	PAOZZ	96906	MS90725-113	SCREW,CAP,HEXAGON H	4
2	PAOZZ	96906	MS35338-48	WASHER,LOCK	6
3	XDOZZ	90598	30302-83	WASHER,BEVELED	4

END OF FIGURE

(1) ITEM NO	(2) SMR CODE	(3) CAGEC	(4) PART NUMBER	(5) DESCRIPTION AND USABLE ON CODES(UOC)	(6) QTY
				GROUP 10 BULK	
				FIG. BULK	
1	PAOZZ	86730	4111D1-8X2	GASKET.....	V
2	PAOZZ	86730	4111D1/8X3	GASKET.....	V
3	PAOZZ	81349	CO-04HLF(4/10)SJ 0850	CABLE,POWER,ELECTRI	V

END OF FIGURE

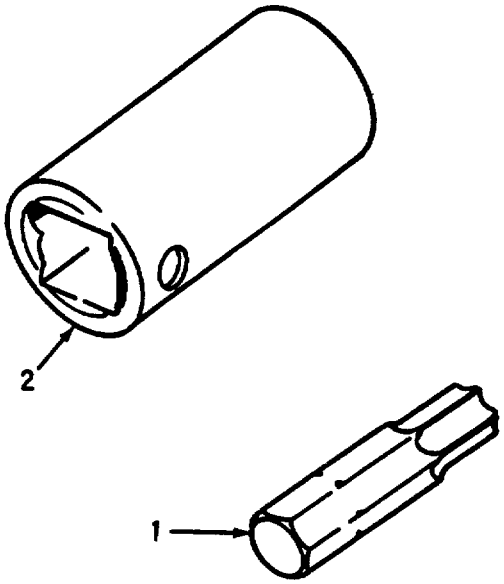

Figure 21. Special Tools

(1) ITEM NO	(2) SMR CODE	(3) CAGEC	(4) PART NUMBER	(5) DESCRIPTION AND USABLE ON CODES(UOC)	(6) QTY
				GROUP 11 SPECIAL TOOLS	
				FIG. 21 SPECIAL TOOLS	
1	PFOZZ	93907	480-TX55	BIT, TORX.....	
2	PFOZZ	93907	TX-5416	TOOL,DRIVE,SOCKET	

END OF FIGURE

CROSS-REFERENCE INDEXES

NATIONAL STOCK NUMBER INDEX

STOCK NUMBER	FIG.	ITEM
5305-00-014-9921	2	3
5310-00-045-3296	3	8
	8	2
5305-00-056-7879	7	5
5305-00-071-2509	4	1
5310-00-080-6004	3	3
	5	8
	11	38
	12	27
5310-00-087-4652	5	6
	11	37
	12	26
6240-00-143-3127	9	9
5940-00-143-4774	9	2
5975-00-179-0098	9	22
5305-00-180-1991	8	9
	9	3
5305-00-269-3218	3	1
5320-00-275-8344	12	10
5975-00-296-1669	8	8
5305-00-543-2419	5	7
5310-00-550-1130	2	5
5340-00-563-8037	5	4
4730-00-580-7417	3	13
5310-00-584-5272	6	3
	20	2
5310-00-584-7888	19	2
6145-00-617-1368	BULK	3
5340-00-663-2428	11	20
	12	7
	13	7
4730-00-740-8781	3	12
5310-00-761-6882	2	4
5310-00-763-8921	19	1
5305-00-782-9489	11	39
	12	28
5310-00-809-4058	4	2
5310-00-809-5998	6	4
5310-00-809-8533	19	3
5315-00-810-3701	6	1
5320-00-850-3264	11	17
	12	5
5340-00-860-3862	1	11
	1	21
5320-00-932-1972	1	4
	1	10
	1	14
	1	20
5310-00-934-9751	8	1
5310-00-945-0528	11	6
5320-00-956-7355	13	6
5305-00-989-7434	8	3
5305-00-989-7435	3	7
5975-01-006-6037	8	.5
5995-01-014-5202	8	7
5320-01-023-2529	1	8
	11	19
	12	8
5975-01-055-5630	8	11
8115-01-066-6054	11	12
6685-01-072-0480	2	6
6680-01-072-2493	3	9
2910-01-073-6023	3	14
5330-01-074-1355	BULK	2
5320-01-074-1543	16	4
5365-01-074-1887	12	6
	13	2
5365-01-074-1888	13	3
5330-01-074-1890	12	13
5330-01-074-1998	BULK	1
4010-01-074-2004	11	34
	12	23
5340-01-074-3526	1	7
5340-01-074-3527	1	17
5330-01-074-3530	11	24
5330-01-074-3866	3	10
5325-01-074-3927	2	12
5935-01-076-5719	7	2
5310-01-077-1930	19	5
5940-01-078-2936	9	11
9515-01-078-6042	12	11
4710-01-079-3163	5	11
5310-01-079-6537	3	4
4710-01-079-8839	5	12
5975-01-080-2598	9	19
9515-01-081-1397	11	*22*
5315-01-081-4487	11	1
	12	1
8135-01-081-9770	12	9
5340-01-087-6967	12	22
5120-01-088-8833	21	2
5130-01-091-3750	21	1
5365-01-198-3178	5	5
5310-01-257-0621	11	2
	12	2
5305-01-325-8388	13	1
	20	1
5340-01-339-8681	7	4

CROSS-REFERENCE INDEXES

PART NUMBER INDEX

CAGEC	PART NUMBER	STOCK NUMBER	FIG.	ITEM
54402	AD45BS	5320-00-275-8344	12	10
07707	AD64H	5320-00-956-7355	13	6
70519	A1N-1904		13	4
70519	A2N-1908		17	9
70519	A34N-1902		11	26
			12	14
57877	BU1062-2		11	3
			12	3
80204	B1821BH038C200N	5305-00-782-9489	11	39
			12	28
90598	CLF-3816-S		5	1
81349	CO-04HLF(4/10)SJ 0850	6145-00-617-1368	BULK	3
57877	DL-1104-LH		12	30
57877	DL-1104-RH		11	41
83209	E942D		9	24
93908	E943D	5975-01-055-5630	8	11
80996	FIG343		9	6
57877	H-1060-4	5340-01-087-6967	*12*	*22*
57877	H-10604		11	33
57877	HP-1054-3	5315-01-081-4487	11	1
			12	1
57877	HW-1054-8	5310-01-257-0621	11	2
			12	2
96906	MS16562-36	5315-00-810-3701	6	1
96906	MS25036-153	5940-00-143-4774	9	2
96906	MS27183-10	5310-00-809-4058	4	2
96906	MS27183-14	5310-00-080-6004	3	3
			5	8
			11	38
			12	27
96906	MS27183-18	5310-00-809-5998	6	4
96906	MS27183-23	5310-00-809-8533	19	3
96906	MS35207-263	5305-00-989-7434	8	3
96906	MS35207-264	5305-00-989-7435	3	7
96906	MS35333-40	5310-00-550-1130	2	5
96906	MS35338-046		3	2
96906	MS35338-43	5310-00-045-3296	3	8
			8	2
96906	MS35338-48	5310-00-584-5272	6	3
			20	2
96906	MS35338-51	5310-00-584-7888	19	2
96906	MS35493-74	5305-00-056-7879	7	5
96906	MS35493-75	5305-00-014-9921	2	3
96906	MS35493-78	5305-00-180-1991	8	9
			9	3
96906	MS35650-302	5310-00-934-9751	8	1
96906	MS51504A5-4S	4730-00-740-8781	3	12
96906	MS51922-17	5310-00-087-4652	5	6
			11	37
			12	26

CROSS-REFERENCE INDEXES

PART NUMBER INDEX

CAGEC	PART NUMBER	STOCK NUMBER	FIG.	ITEM
96906	MS51967-2	5310-00-761-6882	2	4
96906	MS51967-23	5310-00-763-8921	19	1
96906	MS90725-113	5305-01-325-8388	13	1
			20	1
96906	MS90725-68	5305-00-269-3218	3	1
96906	MS90728-12	5305-00-071-2509	4	1
96906	MS9321-11	5310-00-945-0528	11	6
81349	M24243/1-A404	5320-01-023-2529	1	8
			11	19
			12	8
81349	M24243/1-A608	5320-00-850-3264	11	17
			12	5
81349	M24243/6-A402H	5320-00-932-1972	1	4
			1	10
			1	14
			1	20
24446	N20P25018C11	5305-00-543-2419	5	7
45809	PS217F31D2DEG.DIV		2	11
59730	RB-2237	5940-01-078-2936	9	11
77122	RF3410	5310-01-077-1930	19	5
98003	SC-D20648	5340-00-860-3862	1	11
			1	21
98003	SC-D20650-14		1	15
98003	SC-D20650-14-ZE		1	5
83058	SS-48143K1611	5340-00-663-2428	12	7
83058	SS48143K1611	5340-00-663-2428	11	20
			13	7
90598	TT403	5310-01-079-6537	3	4
93907	TX-5416	5120-01-088-8833	21	2
75282	VCG-15		9	7
75282	VG-15		9	8
75282	VP151		9	10
94222	10-15-706-13		13	5
			16	7
08805	100A	6240-00-143-3127	9	9
18876	10275424	5995-01-014-5202	8	7
59730	1192	5975-01-080-2598	9	19
45809	133		2	8
09393	15-423	5330-01-074-3866	3	10
59730	151		9	5
45809	171		2	7
08556	216		9	1
45809	217KLSP220-8		2	9
90598	2302J013		3	16
90598	23535017		3	15
30327	24SB-08X04	4730-00-580-7417	3	13
08556	250-L		8	10
			9	4
59730	2521	5975-00-296-1669	8	8
83209	30-076		8	6

CROSS-REFERENCE INDEXES

PART NUMBER INDEX

CAGEC	PART NUMBER	STOCK NUMBER	FIG.	ITEM
83209	30-076		9	12
90598	30202-21		9	25
90598	30301-101		10	1
90598	30301-28		14	4
90598	30301-48		13	8
90598	30301-54		18	4
90598	30301-55		18	3
90598	30301-56		18	2
90598	30301-57		18	1
90598	30302-25		9	21
90598	30302-38		9	17
90598	30302-39		9	13
90598	30302-40		9	16
90598	30302-41		9	15
90598	30302-68	5365-01-198-3178	5	5
90598	30302-83		20	3
90598	30304-100		18	7
90598	30305-100	2910-01-073-6023	3	14
90598	30306-1		3	5
90598	30307-100		3	6
90598	30308-1		17	3
90598	30308-100		17	2
90598	30308-2		17	4
90598	30309-1		17	1
90598	30324-1		17	12
90598	30325-1		17	11
90598	30326-1		17	10
90598	30327-100		17	7
90598	30327-5		17	8
90598	30340-1		14	3
90598	30341-1		15	3
90598	30343-1		16	14
90598	30347-1		17	13
90598	30355-100		11	11
90598	30356-1		11	16
90598	30356-100		11	7
90598	30356-100-1		11	8
90598	30356-100-2		11	9
90598	30356-100-3		11	10
90598	30356-101	8115-01-066-6054	11	12
90598	30356-2-101		11	14
90598	30356-3-101		11	13
90598	30356-4		11	15
90598	30357-100		11	5
90598	30367-1		12	18
90598	30368-1		11	27
90598	30368-2		12	15
90598	30369-1		11	28
90598	30369-2		11	29
90598	30370-1		12	16
90598	30370-2		12	17

CROSS-REFERENCE INDEXES

PART NUMBER INDEX

CAGEC	PART NUMBER	STOCK NUMBER	FIG.	ITEM
90598	30373-1		11	21
90598	30374-1	8135-01-081-9770	12	9
90598	30375-10		11	25
90598	30375-100		11	4
90598	30376-10		12	19
90598	30376-100		12	4
90598	30385-1	5330-01-074-3530	11	24
90598	30386-1	5330-01-074-1890	12	13
90598	30387-1	9515-01-081-1397	11	22
90598	30388-1		11	23
			12	12
90598	30391-1	9515-01-078-6042	12	11
90598	30399-1		6	2
90598	30399-2		6	5
90598	30400-100		6	6
90598	30402-1		1	12
90598	30404-100		1	9
90598	30405-1	5340-01-074-3526	1	7
90598	30405-100		1	3
90598	30405-2		1	6
90598	30406-1		1	22
90598	30407-100		1	19
90598	30408-1	5340-01-074-3527	1	17
90598	30408-100		1	13
90598	30408-2		1	16
90598	30410-1		9	23
90598	30411-1		9	14
90598	30413-100		6	7
90598	30414		6	10
90598	30416	6685-01-072-0480	2	6
90598	30421-100		5	3
90598	30422-1		5	2
90598	30426-1		5	10
90598	30432-100	4710-01-079-8839	5	12
90598	30433-100	4710-01-079-3163	5	11
90598	30436-100	4010-01-074-2004	11	34
			12	23
90598	30438-1	5365-01-074-1887	12	6
			13	2
90598	30438-2	5365-01-074-1888	13	3
90598	30438-3		11	18
90598	30441-1		7	6
90598	30442-1		7	3
90598	30442-100		7	1
90598	30456-100		5	9
90598	30460-1		16	10
90598	30460-2		16	11
90598	30461-1		16	12
90598	30462-1		16	13
90598	30463-1		16	5
90598	30463-2		16	6

CROSS-REFERENCE INDEXES

PART NUMBER INDEX

CAGEC	PART NUMBER	STOCK NUMBER	FIG.	ITEM
90598	30464-1		16	8
90598	30465-1		16	9
90598	30466-100		16	3
90598	30467-1		13	15
90598	30467-2		13	11
90598	30468-1		13	12
90598	30469-1		13	18
90958	30470-1		13	10
90598	30470-2		13	13
90598	30471-1		13	9
90598	30471-2		13	14
90598	30472-1		13	19
90598	30472-2		13	16
90598	30473-1		13	20
90598	30473-2		13	17
90598	30474-1		13	23
90598	30475-1		13	24
90598	30476-1		13	21
90598	30476-2		13	22
90598	30477-1		13	26
90598	30478-1		13	25
90598	30486-1		11	30
90598	30487-1		11	42
90598	30488-1		12	31
90598	30491-100		4	5
90598	30492-1		4	3
90598	30494-1		1	2
90598	30593-100		18	5
90598	30593-101		18	6
39428	3603T19		6	8
			11	36
			12	25
39428	3706T16	5340-01-339-8681	7	4
94222	38-104-05-93		1	1
94222	38-104-12-93		1	18
			4	4
94222	38-106-12-91		2	1
		5320-01-074-1543	16	4
77969	3885	5325-01-074-3927	2	12
39428	3929T14		6	9
			11	35
			12	24
86730	4111D1-8X2	5330-01-074-1998	BULK	1
86730	4111D1/8X3	5330-01-074-1355	BULK	2
93907	480-TX55	5130-01-091-3750	21	1
81859	5	5340-00-563-8037	5	4'
28488	5232	5975-01-006-6037	8	5
90598	534FC	5935-01-076-5719	7	2
45809	60101102		2	10
09393	6781-00236	6680-01-072-2493	3	9
30327	830FS-05		3	11

CROSS-REFERENCE INDEXES

PART NUMBER INDEX

CAGEC	PART NUMBER	STOCK NUMBER	FIG.	ITEM
93907	880-82120-100		14	2
			16	2
93907	880-82920-100		11	40
			12	29
93907	880-84165-100		11	32
			12	21
			15	2
			17	6
39428	8876T34		2	2
39428	8876T37		8	4
93907	890-58000-100		15	1
			17	5
93907	890-60008-100		11	31
			14	1
			16	1
93907	890-6008-100		12	20
39428	91563A849		19	4
39428	9435T13		9	18
03743	95T050		9	20
03743	96T050	5975-00-179-0098	9	22

CROSS-REFERENCE INDEXES

FIGURE AND ITEM NUMBER INDEX

FIG.	ITEM	STOCK NUMBER	CAGEC	PART NUMBER
BULK	1	5330-01-074-1998	86730	4111D1-8X2
BULK	2	5330-01-074-1355	86730	4111D1/8X3
BULK	3	6145-00-617-1368	81349	CO-04HLF(4/10)SU 0850
1	1		94222	38-104-05-93
1	2		90598	30494-1
1	3		90598	30405-100
1	4	5320-00-932-1972	81349	M24243/6-A402H
1	5		98003	SC-D20650-14-ZE
1	6		90598	30405-2
1	7	5340-01-074-3526	90598	30405-1
1	8	5320-01-023-2529	81349	M24243/1-A404
1	9		90598	30404-100
1	10	5320-00-932-1972	81349	M24243/6-A402H
1	11	5340-00-860-3862	98003	SC-D20648
1	12		90598	30402-1
1	13		90598	30408-100
1	14	5320-00-932-1972	81349	M24243/6-A402H
1	15		98003	SC-D20650-14
1	16		90598	30408-2
1	17	5340-01-074-3527	90598	30408-1
1	18		942Z2	38-104-12-93
1	I,		90598	30407-100
1	20	5320-00-932-1972	81349	M24243/6-A402H
1	21	5340-00-860-3862	98003	SC-D20648
1	22		90598	30406-1
2	1		94222	38-106-12-91
2	2		39428	8876T34
2	3	5305-00-014-9921	96906	MS35493-75
2	4	5310-00-761-6882	96906	MS51967-2
2	5	5310-00-550-1130	96906	MS35333-40
2	6	6685-01-072-0480	90598	30416
2	7		45809	171
2	8		45809	133
2	9		45809	217KLSP220-8
2	10		45809	60101102
2	11		45809	PS217F31D2DEG.DI V
2	12	5325-01-074-3927	77969	3885
3	1	5305-00-269-3218	96906	MS90725-68
3	2		96906	MS35338-046
3	3	5310-00-080-6004	96906	MS27183-14
3	4	5310-01-079-6537	90598	TT403
3	5		90598	30306-1
3	6		90598	30307-100
3	7	5305-00-989-7435	96906	MS35207-264
3	8	5310-00-045-3296	96906	MS35338-43
3	9	6680-01-072-2493	09393	6281-00236
3	10	5330-01-074-3866	09393	15-423
3	11		30327	830FS-05
3	12	4730-00-740-8781	96906	MS51504A5-4S

CROSS-REFERENCE INDEXES

FIGURE AND ITEM NUMBER INDEX

FIG.	ITEM	STOCK NUMBER	CAGEC	PART NUMBER
3	13	4730-00-580-74i7	30327	24SB-08X04
3	14	2910-01-073-6023	90598	30305-100
3	15		90598	23535017
3	16		90598	2302J013
4	1	5305-00-071-2509	96906	MS90728-12
4	2	5310-00-809-4058	96906	MS27183-10
4	3		90598	30492-1
4	4		94222	38-104-12-93
4	5		90598	30491-100
5	1		90598	CLF-3816-S
5	2		90598	30422-1
5	3		90598	30421-100
5	4	5340-00-563-8037	81859	5
5	5	5365-01-198-3178	90598	30302-68
5	6	5310-00-087-4652	96906	MS51922-17
5	7	5305-00-543-2419	24446	N20P25018C11
5	8	5310-00-080-6004	96906	MS27183-14
5	g		90598	30456-100
5	10		90598	30426-1
5	11	4710-01-079-3163	90598	30433-100
5	12	4710-01-079-8839	90598	30432-100
6	1	5315-00-810-3701	96906	MS16562-36
6	2		90598	30399-1
6	3	5310-00-584-5272	96906	MS35338-48
6	4	5310-00-809-5998	96906	MS27183-18
6	5		90598	30399-2
6	6		90598	30~~00-100
6	7		00598	30413-100
6	8		39428	3603T19
6	9		39428	3929T14
6	10		90598	30414
7	1		90598	30442-100
7	2	5935-01-076-5719	90598	534FC
7	3		90598	30442-1
7	4	5340-01-339-8681	39428	3706T16
7	5	5305-00-056-7879	96906	MS35493-74
7	6		90598	30441-1
8	1	5310-00-934-9751	96906	MS35650-302
8	2	5310-00-045-3296	96906	MS35338-43
8	3	5305-00-989-7434	96906	MS35207-263
8	4		39428	8876T37
8	5	5975-01-006-6037	28488	5232
8	6		83209	30-076
8	7	5995-01-014-5202	18876	10275424
8	8	5975-00-296-1669	59730	2521
8	9	5305-00-180-1991	96906	MS35493-78
8	10		08556	250-L
8	11	5975-01-055-5630	93908	E943D
9	1		08556	216
9	2	5940-00-143-4774	96906	MS25036-153
9	3	5305-00-180-1991	96906	MS35493-78

CROSS-REFERENCE INDEXES

FIGURE AND ITEM NUMBER INDEX

FIG.	ITEM	STOCK NUMBER	CAGEC	PART NUMBER
9	4		08556	250-L
9	5		59730	151
9	6		80996	FIG343
9	7		75282	YCG-15
9	8		75282	VG-15
9	9	6240-00-143-3127	08805	100A
9	10		75282	VP151
9	11	5940-01-07802936	59730	RB-2237
9	12		83209	30-076
9	13		90598	30302-39
9	14		90598	30411-1
9	15		90598	30302-41
9	16		90598	30302-40
9	17		90598	30302-38
9	18		39428	9435T13
9	19	5975-01-080-2598	59730	1192
9	20		03743	95T050
9	21		90598	30302-25
9	22	5975-00-179-0098	03743	96T050
9	23		90598	30410-1
9	24		83209	E942D
9	25		90598	30202-21
10	1		90598	30301-101
11	1	5315-01-081-4487	57877	HP-1054-3
11	2	5310-01-257-0621	57B77	HW-1054-8
11	3		57877	BU1062-2
11	4		90598	30375-100
11	5		90598	30357-100
11	6	5310-00-945-0528	96906	MS9321-11
11	7		90598	30356-100
11	8		90598	30356-100-1
11	9		90598	30356-100-2
11	10		90598	30356-100-3
11	11		90598	30355-100
11	12	8115-01-066-6054	90598	30356-101
11	13		90598	30356-3-101
11	14		90598	30356-2-101
11	15		90598	30356-4
11	16		90598	30356-1
11	17	5320-00-850-3264	81349	M24243-1-A608
11	18		90598	30438-3
11	19	5320-01-023-2529	81349	M24243/1-A404
11	20	5340-00-663-2428	83058	SS48143K1611
11	21	.	90598	30373-1
11	22	9515-01-081-1397	90598	30387-1
11	23		90598	30388-1
11	24	5330-01-074-3530	90598	30385-1
11	25		90598	30375-10
11	26		70519	A34N-1902
11	27		90598	30368-1
11	28		90598	30369-1

CROSS-REFERENCE INDEXES

FIGURE AND ITEM NUMBER INDEX

FIG.	ITEM	STOCK NUMBER	CAGEC	PART NUMBER
11	29		90598	30369-2
11	30		90598	30486-1
11	31		93907	890-60008-100
11	32		93907	880-84165-100
11	33		57877	H-10604
11	34	4010-01-074-2004	90598	30436-100
11	35		39428	3929T14
11	36		39428	3603T19
11	37	5310-00-087-4652	96906	MS51922-17
11	38	5310-00-080-6004	96906	MS27183-14
11	39	5305-00-782-9489	80204	B1821BH038C200N
11	40		93907	880-82920-100
11	41		57877	DL-1104-RH
11	42		90598	30487-1
12	1	5315-01-081-4487	57877	HP-1054-3
12	2	5310-01-257-0621	57877	HW-1054-8
12	3		57877	BU106Z-2
12	4		90598	30376-100
12	5	5320-00-850-3264	81349	M24243-1-A608
12	6	5365-01-074-1887	90598	30438-1
12	7	5340-00-663-2428	83058	SS-48143K1611
12	8	5320-01-023-2529	81349	H24243-1-A404
12	9	8135-01-081-9770	90598	30374-1
12	10	5320-00-275-8344	54402	AD45BS
12	11	9515-01-078-6042	90598	30391-1
12	12		90598	30388-1
12	13	5330-01-074-1890	90598	30386-1
12	14		70519	A34N-1902
12	15		90598	30368-2
12	16		90598	30370-1
12	17		90598	30370-2
12	18		90598	30367-1
12	19		90598	30376-10
12	20		93907	890-6008-100
12	21		93907	880-84165-100
12	22	5340-01-087-6967	57877	H-1060-4
12	23	4010-01-074-2004	90598	30436-100
12	24		39428	3929T14
12	25		39428	3603T19
12	26	5310-00-087-4652	96906	MS51922-17
12	27	5310-00-080-6004	96906	MS27183-14
12	28	5305-00-782-9489	80204	B1821BH038C200N
12	29		93907	880-82920-100
12	30		57877	DL-1104-LH
12	31		90598	30488-1
13	1	5305-01-325-8388	96906	MS90725-113
13	2	5365-01-074-1887	90598	30438-1
13	3	5365-01-074-1888	90598	30438-2
13	4		70519	A1N-1904
13	5		94222	10-15-706-13
13	6	5320-00-956-7355	07707	AD64H

CROSS-REFERENCE INDEXES

FIGURE AND ITEM NUMBER INDEX

FIG.	ITEM	STOCK NUMBER	CAGEC	PART NUMBER
13	7	5340-00-663-2428	83058	SS48143K1611
13	8		90598	30301-48
13	9		90598	30471-1
13	10		90958	30470-1
13	11		90598	30467-2
13	12		90598	30468-1
13	13		90598	30470-2
13	14		90598	30471-2
13	15		90598	30467-1
13	16		90598	30472-2
13	17		90598	30473-2
13	18		90598	30469-1
13	19		90598	30472-1
13	20		90598	30473-1
13	21		90598	30476-1
13	22		90598	30476-2
13	23		90598	30474-1
13	24		90598	30475-1
13	25		90598	30478-1
13	26		90598	30477-1
14	1		93907	890-60008-100
14	2		93907	880-82120-100
14	3		90598	30340-1
14	4		90598	30301-28
15	1		93907	890-58000-100
15	2		93907	880-84165-100
15	3		90598	30341-1
16	1		93907	890-60008-100
16	2		93907	880-82120-100
16	3		90598	30466-100
16	4	5320-01-074-1543	94222	38-106-12-91
16	5		90598	30463-1
16	6		90598	30463-2
16	7		94222	10-15-706-13
16	8		90598	30464-1
16	9		90598	30465-1
16	10		90598	30460-1
16	11		90598	30460-2
16	12		90598	30461-1
16	13		90598	30462-1
16	14		90598	30343-1
17	1		90598	30309-1
17	2		90598	30308-100
17	3		90598	30308-1
17	4		90598	30308-2
17	5		93907	890-58000-100
17	6		93907	880-84165-100
17	7		90598	30327-100
17	8		90598	30327-5
17	9		70519	A2N-1908
17	10		90598	30326-1

CROSS-REFERENCE INDEXES

FIGURE AND ITEM NUMBER INDEX

FIG.	ITEM	STOCK NUMBER	CAGEC	PART NUMBER
17	11		90598	30325-1
17	12		90598	30324-1
17	13		90598	30347-1
18	1		90598	30301-57
18	2		90598	30301-56
18	3		90598	30301-55
18	4		90598	30301-54
18	5		90598	30593-100
18	6		90598	30593-101
18	7		90598	30304-100
19	1	5310-00-763-8921	96906	MS51967-23
19	2	5310-00-584-7888	96906	MS35338-51
19	3	5310-00-809-8533	96906	MS27183-23
19	4		39428	91563A849
19	5	5310-01-077-1930	77122	RF3410
20	1	5305-01-325-8388	96906	MS90725-113
20	2	5310-00-584-5272	96906	MS35338-48
20	3		90598	30302-83
21	1	5130-01-091-3750	93907	480-TX55
21	2	5120-01-088-8833	93907	TX-5416

By Order of the Secretary of the Army:

GORDON R. SULLIVAN
General, *United* States Army
Chief of Staff

Official:

MILTOM H. HAMILTON
Administrative Assistant to the
Secretary of the Army
06531

DISTRIBUTION:

To be distributed in accordance with DA Form 12-25-E, block no. 6207, requirements for TM 55-8145-201-24P.

***U.S. GOVERNMENT PRINTING OFFICE: 1994 - 555-028 00222**

The Metric System and Equivalents

Linear Measure

1 centimeter = 10 millimeters = .39 inch
1 decimeter = 10 centimeters = 3.94 inches
1 meter = 10 decimeters = 39.37 inches
1 dekameter = 10 meters = 32.8 feet
1 hectometer = 10 dekameters = 328.08 feet
1 kilometer = 10 hectometers = 3,280.8 feet

Weights

1 centigram = 10 milligrams = .15 grain
1 decigram = 10 centigrams = 1.54 grains
1 gram = 10 decigram = .035 ounce
1 dekagram = 10 grams = .35 ounce
1 hectogram = 10 dekagrams = 3.52 ounces
1 kilogram = 10 hectograms = 2.2 pounds
1 quintal = 100 kilograms = 220.46 pounds
1 metric ton = 10 quintals = 1.1 short tons

Liquid Measure

1 centiliter = 10 milliters = .34 fl. ounce
1 deciliter = 10 centiliters = 3.38 fl. ounces
1 liter = 10 deciliters = 33.81 fl. ounces
1 dekaliter = 10 liters = 2.64 gallons
1 hectoliter = 10 dekaliters = 26.42 gallons
1 kiloliter = 10 hectoliters = 264.18 gallons

Square Measure

1 sq. centimeter = 100 sq. millimeters = .155 sq. inch
1 sq. decimeter = 100 sq. centimeters = 15.5 sq. inches
1 sq. meter (centare) = 100 sq. decimeters = 10.76 sq. feet
1 sq. dekameter (are) = 100 sq. meters = 1,076.4 sq. feet
1 sq. hectometer (hectare) = 100 sq. dekameters = 2.47 acres
1 sq. kilometer = 100 sq. hectometers = .386 sq. mile

Cubic Measure

1 cu. centimeter = 1000 cu. millimeters = .06 cu. inch
1 cu. decimeter = 1000 cu. centimeters = 61.02 cu. inches
1 cu. meter = 1000 cu. decimeters = 35.31 cu. feet

Approximate Conversion Factors

To change	*To*	*Multiply by*	*To change*	*To*	*Multiply by*
inches	centimeters	2.540	ounce-inches	newton-meters	.007062
feet	meters	.305	centimeters	inches	.394
yards	meters	.914	meters	feet	3.280
miles	kilometers	1.609	meters	yards	1.094
square inches	square centimeters	6.451	kilometers	miles	.621
square feet	square meters	.093	square centimeters	square inches	.155
square yards	square meters	.836	square meters	square feet	10.764
square miles	square kilometers	2.590	square meters	square yards	1.196
acres	square hectometers	.405	square kilometers	square miles	.386
cubic feet	cubic meters	.028	square hectometers	acres	2.471
cubic yards	cubic meters	.765	cubic meters	cubic feet	35.315
fluid ounces	milliliters	29,573	cubic meters	cubic yards	1.308
pints	liters	.473	milliliters	fluid ounces	.034
quarts	liters	.946	liters	pints	2.113
gallons	liters	3.785	liters	quarts	1.057
ounces	grams	28.349	liters	gallons	.264
pounds	kilograms	.454	grams	ounces	.035
short tons	metric tons	.907	kilograms	pounds	2.205
pound-feet	newton-meters	1.356	metric tons	short tons	1.102
pound-inches	newton-meters	.11296			

Temperature (Exact)

°F	Fahrenheit temperature	5/9 (after subtracting 32)	Celsius temperature	°C

TEAR ALONG PERFORATED LINE

RECOMMENDED CHANGES TO EQUIPMENT TECHNICAL PUBLICATIONS

THEN...JOT DOWN THE DOPE ABOUT IT ON THIS FORM. CAREFULLY TEAR IT OUT, FOLD IT AND DROP IT IN THE MAIL.

SOMETHING WRONG WITH PUBLICATION

FROM: (PRINT YOUR UNIT'S COMPLETE ADDRESS)

DATE SENT

PUBLICATION NUMBER	PUBLICATION DATE	PUBLICATION TITLE

BE EXACT PIN-POINT WHERE IT IS

PAGE NO.	PARA-GRAPH	FIGURE NO.	TABLE NO.

IN THIS SPACE, TELL WHAT IS WRONG AND WHAT SHOULD BE DONE ABOUT IT.

PRINTED NAME, GRADE OR TITLE AND TELEPHONE NUMBER	SIGN HERE

DA FORM 1 JUL 79 2028-2

PREVIOUS EDITIONS ARE OBSOLETE.

P.S.--IF YOUR OUTFIT WANTS TO KNOW ABOUT YOUR RECOMMENDATION MAKE A CARBON COPY OF THIS AND GIVE IT TO YOUR HEADQUARTERS.

THE METRIC SYSTEM AND EQUIVALENTS

'NEAR MEASURE

. Centimeter = 10 Millimeters = 0.01 Meters = 0.3937 Inches
1 Meter = 100 Centimeters = 1000 Millimeters = 39.37 Inches
1 Kilometer = 1000 Meters = 0.621 Miles

'VEIGHTS

Gram = 0.001 Kilograms = 1000 Milligrams = 0.035 Ounces
1 Kilogram = 1000 Grams = 2.2 lb.
1 Metric Ton = 1000 Kilograms = 1 Megagram = 1.1 Short Tons

LIQUID MEASURE

1 Milliliter = 0.001 Liters = 0.0338 Fluid Ounces
1 Liter = 1000 Milliliters = 33.82 Fluid Ounces

SQUARE MEASURE

1 Sq. Centimeter = 100 Sq. Millimeters = 0.155 Sq. Inches
1 Sq. Meter = 10,000 Sq. Centimeters = 10.76 Sq. Feet
1 Sq. Kilometer = 1,000,000 Sq. Meters = 0.386 Sq. Miles

CUBIC MEASURE

1 Cu. Centimeter = 1000 Cu. Millimeters = 0.06 Cu. Inches
1 Cu. Meter = 1,000,000 Cu. Centimeters = 35.31 Cu. Feet

TEMPERATURE

5/9(°F - 32) = °C
212° Fahrenheit is evuivalent to 100° Celsius
90° Fahrenheit is equivalent to 32.2° Celsius
32° Fahrenheit is equivalent to 0° Celsius
9/5C° + 32 =°F

APPROXIMATE CONVERSION FACTORS

TO CHANGE	TO	MULTIPLY BY
Inches	Centimeters	2.540
Feet	Meters	0.305
Yards	Meters	0.914
Miles	Kilometers	1.609
Square Inches	Square Centimeters	6.451
Square Feet	Square Meters	0.093
Square Yards	Square Meters	0.836
Square Miles	Square Kilometers	2.590
Acres	Square Hectometers	0.405
Cubic Feet	Cubic Meters	0.028
Cubic Yards	Cubic Meters	0.765
Fluid Ounces	Milliliters	29.573
ıts	Liters	0.473
arts	Liters	0.946
allons	Liters	3.785
Ounces	Grams	28.349
Pounds	Kilograms	0.454
Short Tons	Metric Tons	0.907
Pound-Feet	Newton-Meters	1.356
Pounds per Square Inch	Kilopascals	6.895
Miles per Gallon	Kilometers per Liter	0.425
Miles per Hour	Kilometers per Hour	1.609

TO CHANGE	TO	MULTIPLY BY
Centimeters	Inches	0.394
Meters	Feet	3.280
Meters	Yards	1.094
Kilometers	Miles	0.621
Square Centimeters	Square Inches	0.155
Square Meters	Square Feet	10.764
Square Meters	Square Yards	1.196
Square Kilometers	Square Miles	0.386
Square Hectometers	Acres	2.471
Cubic Meters	Cubic Feet	35.315
Cubic Meters	Cubic Yards	1.308
Milliliters	Fluid Ounces	0.034
Liters	Pints	2.113
Liters	Quarts	1.057
'ers	Gallons	0.264
.ms	Ounces	0.035
.ograms	Pounds	2.205
Metric Tons	Short Tons	1.102
Newton-Meters	Pounds-Feet	0.738
Kilopascals	Pounds per Square Inch	0.145
'lometers per Liter	Miles per Gallon	2.354
›meters per Hour	Miles per Hour	0.621

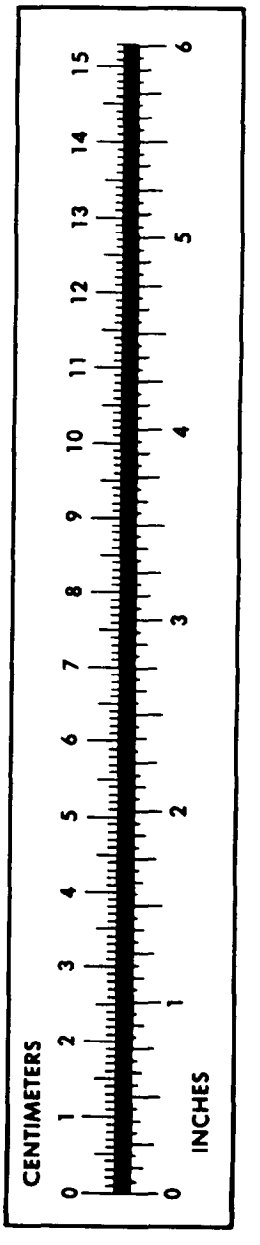

PIN: 072580-000