TECHNICAL MANUAL

TM 55-1905-223-24P-3

UNIT AND INTERMEDIATE DIRECT AND
GENERAL SUPPORT MAINTENANCE
REPAIR PARTS AND SPECIAL TOOLS LIST

FOR

LANDING CRAFT UTILITY (LCU 2000)

(NSN 1905-01-154-1191)

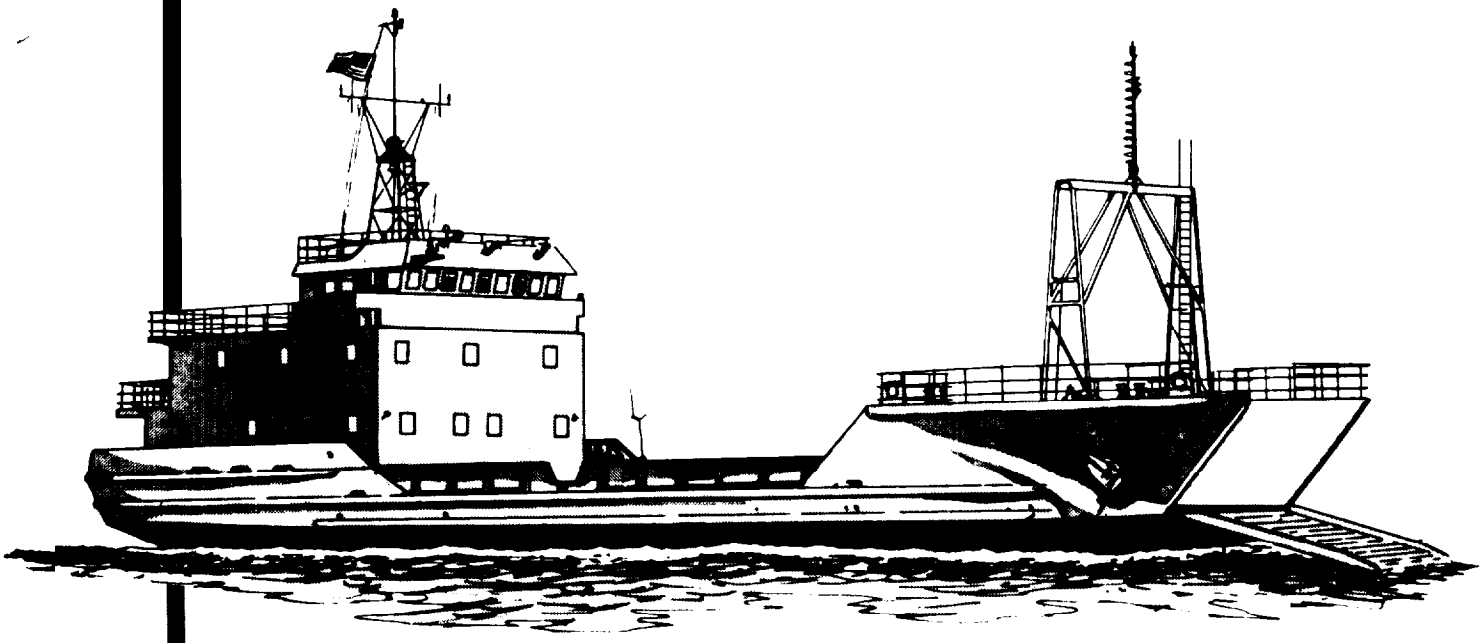

Approved for public release; distribution is unlimited.

HEADQUARTERS, DEPARTMENT OF THE ARMY

10 OCTOBER 1989

CHANGE

No.2

HEADQUARTERS
DEPARTMENT OF THE ARMY
WASHINGTON, D.C., 28 February 1995

UNIT AND INTERMEDIATE DIRECT AND
GENERAL SUPPORT MAINTENANCE REPAIR
PARTS AND SPECIAL TOOLS LIST
FOR

LANDING CRAFT UTILITY
(LCU 2000)
NSN 1905-01-154-1191

Current as of 26 February 1995

DISTRIBUTION STATEMENT A: Approved for public release; distribution is unlimited

TM 55-1905-223-24P-3,21 10 October 1989, is changed as follows:

1. Remove and insert Rages as indicated below. New or changed text material is indicated by a vertical bar in the margin. An illustration change is indicated by a miniature pointing hand.

Remove pages	Insert pages
Fig. 354 (Sheet 1 of 2) through 355-1	Fig. 354 (Sheet 1 of 2) through 355-1
436-1 through Fig. 438	436-1 through Fig. 4-38
450-1 and Fig. 451 (Sheet 1 of 3)	450-1 and Fig. 451 (Sheet 1 of 3)
492-1 through Fig. 495	492-1 through Fig. 495
I-3 and I-4	I-3 and I-4
I-33 and I-34	I-33 and I-34
I-61 and I-62	I-61 and I-62
I-75 and I-76	I-75 and I-76
I-97 through I-100	I-97 through I-100
I-145 and I-146	I-145 and I-146
I-161 and I-162	I-161 and I-162

2. Retain this sheet in front of manual for reference purposes.

By Order of the Secretary of the Army:

GORDON R. SULLIVAN
General, United States Army
Chief of Staff

Official:

MILTON H. HAMILTON
Administrative Assistant to the
Secretary of the Army
08113

DISTRIBUTION:

To be distributed in accordance with DA Form 12-25-E, block no. 4424, requirements for TM 55-1905-223-24P-3.

CHANGE

NO. 1

HEADQUARTERS
DEPARTMENT OF THE ARMY
WASHINGTON, D.C., 9 SEPTEMBER 1992

Unit and Intermediate Direct and General Support Maintenance
Repair Parts and Special Tools List
for

LANDING CRAFT UTILITY
(LCU 2000)
NSN 1905-01-154-1191

Approved for public release; Distribution is unlimited

TM 55-1905-223-24P-3,10 October 1989 is changed as follows:

1. Remove and insert pages as indicated below. New or changed text material is indicated by a vertical bar in the margin. An illustration change is indicated by a miniature pointing hand.

Remove pages	Insert pages
Fig 337, Sheets 1 and 2	Fig 337, Sheets 1 and 2
337-1 and Fig 338	337-1 and Fig 338
I-1 and I-2	I-1 and I-2
I-17 and I-18	I-17 and I-18
I-91 and I-92	I-91 and I-92

2. Retain this sheet in front of manual for reference purposes.

By Order of the Secretary of the Army:

GORDON R. SULLIVAN
General, United States Army
Chief of Staff

Official:

MILTON H. HAMILTON
Administrative Assistant to the
Secretary of the Army
02427

DISTRIBUTION:

To be distributed in accordance with DA Form 12-25-E, block 4424, Unit, Direct and General Support Maintenance requirements for TM 55-1905-223-24P-3.

Technical Manual
No. TM 55-1905-223-24P-3

TM 55-1905-223-24P-3
HEADQUARTERS
DEPARTMENT OF THE ARMY
WASHINGTON, D.C. 10 October 1989

UNIT AND INTERMEDIATE DIRECT AND GENERAL SUPPORT MAINTENANCE REPAIR PARTS AND SPECIAL TOOLS LIST FOR LANDING CRAFT UTILITY (LCU 2000) (NSN 1905-01-154-1191)

(CURRENT AS OF 20 MARCH 1989)

NOTE: This manual is printed in four volumes as follows:
TM 55-1905-223-24P-1, consisting of Table of Contents, Section I Section II (Functional Groups 01 thru 07), and Section IV.
TM 55-1905-223-24P-2, consisting of Table of Contents, Section II (Functional Groups 08 thru 17), and Section IV.
TM 55-1905-223-24P-3, consisting of Table of Contents, Section II (Functional Group 1801 thru 1811), and Section IV.
TM 55-1905-223-24P-4, consisting of Table of Contents, Section II (Functional Groups 1812 thru 1820), Section III and Section IV.
The Table of Contents and Section I are applicable to the -1 thru -4.

REPORTING ERRORS AND RECOMMENDING IMPROVEMENTS

You can help improve this manual. If you find any mistake or if you know of a way to improve the procedures, please let us know. Mail your letter. **DA** Form 2028 (Recommended Changes to Publications and Blank Forms), or DA Form 2028-2 located in the back of this manual direct to: Commander, U.S. Army Troop Support Command, ATTN: AMSTR-MCTS. 4300 Goodfellow Boulevard, St. Louis, MO 63120-1798. A reply will be furnished directly to you.

Approved for public release; distribution is unlimited.

TABLE OF CONTENTS

		PAGE	ILLUSTRATIONS FIGURE
Section I	INTRODUCTION	**1**	
Section II	REPAIR PARTS LIST		
Group 00	Landing Craft Utility		
Group 01	Main Propulsion Engine	1-1	1
0101	Engine Air Starter Assembly	2-1	2
0102	Instrument Panel Group	3-1	3
0103	Water Filter Group	4-1	4
010301	Water Filter Head	4-1	4
0104	Thermostat Housing/Water Transfer Tube Group	5-1	5
0105	Air Cleaner Group	6-1	6
0106	Turbocharger Group	7-1	7
0107	Fuel Filter Group	8-1	8
010701	Fuel Filter Assembly	8-1	8

TABLE OF CONTENTS - Continued

0108	Sump Pump Croup	9-1	9
0109	Water Pump Group	10-1	10
010901	Engine Cooling System Pump	10-1	10
010902	Engine Accessory Bracket	10-2	10
0110	Lubricating Oil Filter Group	11-1	11
0110	Lubricating Oil Bypass Filter Group	12-1	12
011101	Lube Oil Bypass Filter Assembly	12-1	12
01110101	Fluid Filter Head	12-1	12
0112	Cold Starting Aid Group	13-1	13
0113	Shut Down Valve Group	14-1	14
011301	Shut Down Valve Assembly	14-1	14
0114	Fuel Pump Group	15-1	15
011401	Cam Actuated Fuel Pump	15-1	15
0115	Rocker Housing Cover/Rocker Lever Housing Group	16-1	16
0116	Injector Group	17-1	17
0117	Air Intake Manifold Group	18-1	18
0118	Lubricating Oil Cooler Group	19-1	19
0119	Exhaust Manifold Group	20-1	20
0120	Cylinder Head Group	21-1	21
012001	Diesel Engine Cylinder Head	21-1	21
0121	Fuel Manifold Group	22-1	22
0122	Handhole Cover Group	23-1	23
0123	Cam Follower and Housing Group	24-1	24
012301	Needle Bearing Cam Follower	24-1	24
012302	Remote Control Lever	24-1	24
012303	Straight Shaft	24-1	24
0124	Vibration Damper/Bearings/Crankshaft Group	25-1	25
012401	Crankshaft Assembly	25-1	25
0125	Engine Support Group	26-1	26
0126	Pulley Shields and Front Gear Housing Group	27-1	27
0127	Oil Pan and Adapter Group	28-1	28
0128	Lubricating Oil Pump Group	29-1	29
012801	Engine Oil Pump Assembly	29-2	29
0129	Camshaft and Gear Group	30-1	30
0130	Connecting Rod and Piston Group	31-1	31
013001	Connecting Rod Assembly	31-1	31
013002	Internal Combustion Engine Piston	31-1	31
0131	Flywheel Housing Group	32-1	32
013101	Flywheel and Ring Gear Assembly	32-1	32
013102	Barring Mechanism Assembly	32-1	32
0132	Cylinder Block Assembly	33-1	33
013201	Fluid Pressure Regulating Valve	33-2	33
0133	Fresh Water Expansion Tank Group	34-1	34
Group 02	Main Reduction Gear	35-1	35
0201	External Hardware Parts	36-1	36
020101	Non-Metallic Hose Assembly	37-1	37

TABLE OF CONTENTS - Continued

0202	Fluid Transmission Cooler	38-1	38
0203	Double Changeover Filter	39-1	39
0204	Control Valve	40-1	40
0205	Torsional Coupling	41-1	41
0206	External Input/Intermediate Shaft Parts	42-1	42
0207	Housing/Input Shaft Group	43-1	43
020701	Housing Assembly	43-1	43
020702	Input Shaft Assembly	43-2	43
0208	Intermediate Shaft Parts.	44-1	44
0209	Output Shaft Parts	45-1	45
Group 03	Ship Service Generator Set	46-1	46
0301	Generator Assembly	47-1	47
0302	Diesel Engine Assembly	48-1	48
030201	Engine Starter - Air	49-1	49
030202	Electric Starting Motor/Magnetic Switch Group	50-1	50
030203	Instrument Panel Assembly	51-1	51
03020301	Terminal Board	51-2	51
030204	Water Filter Assembly	52-1	52
030205	Thermostat Housing Group	53-1	53
030206	Air Cleaner Group	54-1	54
030207	Turbocharger and Exhaust Group	55-1	55
030208	Fuel Filter Group	56-1	56
030209	Sump Pump Group	57-1	57
030210	Water Pump and Idler Group	58-1	58
03021001	Belt-Chain Tension Adjusting Device	58-1	58
03021002	Engine Cooling System Pump	58-2	58
030211	Lubricating Oil Cooler/Filter Group	59-1	59
03021101	Lubricating Oil Cooler Assembly	59-1	59
0302110101	Transmission Fluid Cooler	59-2	59
030212	Lubricating Oil Bypass Filter Group	60-1	60
030213	Coolant Heater Group	61-1	61
030214	Metering and Distributing Fuel Pump Assembly	62-1	62
03021401	Fluid Pressure Dampener	62-5	62
03021402	Fuel Pump Gear Assembly	62-5	62
03021403	Shutoff Valve Assembly	62-6	62
030215	Fuel Tubing Group	63-1	63
030216	Rocker Lever Housing Group	64-1	64
03021601	Rocker Lever Housing	64-2	64
0302160101	Engine Poppet Valve Rocker Arm	64-2	64
0302160102	Engine Poppet Valve Rocker Arm	64-2	64
0302160103	Injector Rocker Lever	64-2	64
030217	Injector Group	65-1	65
030218	Aftercooler Group	66-1	66
030219	Exhaust Manifold Group	67-1	67
030220	Cylinder Head Group	68-1	68
03022001	Diesel Engine Cylinder Head	68-1	68
03022002	Crosshead Valve Assembly	68-2	68

TABLE OF CONTENTS - Continued

030221	Cam Follower Housing Group	69-1	69
03022101	Cam Follower Housing	69-1	69
0302210101	Engine Poppet Valve Rocker Arm	69-1	69
0302210102	Engine Poppet Valve Rocker Arm	69-1	69
030222	Accessory Drive and Pulley Group	70-1	70
03022201	Flat Pulley Assembly	70-1	70
03022202	Transmission Power Take Off	70-1	70
0302220201	Constant Speed Mechanical Drive	70-1	70
030223	Gear Cover and Support Group	71-1	71
03022301	Gear Cover	71-1	71
030224	Oil Pan Group	72-1	72
030225	Engine Oil Pump Assembly	73-1	73
030226	Camshaft and Gear Group'	74-1	74
03022601	Camshaft	74-1	74
030227	Connecting Rod and Piston Group	75-1	75
03022701	Piston Connecting Rod	75-1	75
03022732	Internal Combustion Engine Piston	75-1	75
030228	Flywheel and Housing Group	76-1	76
03022801	Engine Flywheel Assembly	76-1	76
030229	Crankshaft Group	77-1	77
030230	Cylinder Block Group	78-1	78
03023001	Diesel Engine Block	78-1	78
0302300101	Piston Cooling Nozzle Assembly	78-2	78
0303	Sub-Base Group	79-1	79
Group 04	Emergency Generator Set	80-1	80
0401	Control Housing Assembly	81-1	81
0402	Instrument Panel Assembly	82-1	82
040201	Resistor Assembly	82-1	82
040202	Door Assembly	82-2	82
040203	Door Assembly	82-2	82
040204	Resistor Assembly	82-3	82
0403	Electric Governor Assembly	83-1	83
0404	Generator Heater Assembly	84-1	84
040401	Cable Assembly	84-1	84
0405	Overspeed Assembly	85-1	85
0406	Radiator Assembly	86-1	86
0407	Generator Assembly	87-1	87
0408	Diesel Engine	88-1	88
040801	Starting Motor Group	89-1	89
040802	Alternating Mounting Group	90-1	90
040803	Alternator Support Group	91-1	91
040804	Alternator Group	92-1	92
040805	Thermostat and Housing Group	93-1	93
040805	Water Inlet Connection Group	94-1	94
040806	Water Inlet Connection Group	94-1	94
040807	Air Cleaner Assembly	95-1	95
040808	Turbocharger Group	96-1	96
040809	Exhaust Connection Group	97-1	97
040810	Fan Drive Group	98-1	98
040811	Fuel Filter Group	99-1	99

TABLE OF CONTENTS - Continued

040812	Fuel Plumbing Group	100-1	100
040813	Fuel System Accessory Group	101-1	101
040814	Metering and Distributing Fuel Pump Assembly	102-1	102
040815	Fuel Pump Coupling Group	103-1	103
040816	Sump Pump Assembly	104-1	104
040817	Water Pump Group	105-1	105
040818	Lubricating Oil Cooler Group	106-1	106
040819	Valve Cover Group	107-1	107
040820	Rocker Lever Group	108-1	108
040821	Fuel Injector Group	109-1	109
040822	Cylinder Head Group	110-1	110
04082201	Diesel Cylinder Head	110-1	110
040823	Cam Follower Cover Group	111-1	111
040824	Front Gear Cover Group	112-1	112
040825	Oil Pan Group	113-1	113
040826	Lubricating Oil Pump Group	114-1	114
040827	Camshaft and Gear Group	115-1	115
040828	Connecting Rod and Piston Group	116-1	116
040829	Flywheel Housing Group.	117-1	117
040830	Flywheel Group	118-1	118
04083001	Engine Flywheel	118-2	118
040831	Crankshaft and Main Bearing Group	119-1	119
04083101	Crankshaft	119-1	119
040832	Cylinder Block Group	120-1	120
0409	Chassis Assembly	120-1	121
Group 05	Bow Thruster Engine	122-1	122
0501	Starting Motor/Magnetic Switch Group	123-1	123
0502	Instrument Panel Group	124-1	124
0503	Water Filter Group	125-1	125
050301	Water Filter Assembly	125-1	125
0504	Thermostat Housing Group	126-1	126
0505	Air Cleaner Group	127-1	127
050501	Air Cleaner	127-1	127
0506	Turbocharger Group	128-1	128
0507	•Fuel Filter Group	129-1	129
0508	Sump Pump Group	130-1	130
0509	Water Pump and Idler/Belt Guard Group	131-1	131
050901	Belt-Chain Tension Adjusting Device	131-1	131
050902	Engine Cooling System Pump	131-2	131
0510	Lubricating Oil Cooler/Filter Group	132-1	132
051001	Oil Cooler Assembly	132-2	132
05100101	Industrial Fluid Cooler	132-3	132
0511	Lubricating Oil Bypass Filter Group	133-1	133
0512	Coolant Heater Group	134-1	134
0513	Fuel Tubing, Shutdown Valve and Fuel Pump Group	135-1	135
051301	Solenoid Valve	135-2	135
051302	Metering and Distributing Fuel Pump	135-3	135

TABLE OF CONTENTS - Continued

0514	Rocker Lever Housing/Cover Group	136-1	136
051401	Rocker Lever Housing	136-1	136
05140101	Engine Poppet Valve Rocker Arm	136-2	136
05140102	Injector Rocker Lever	136-2	136
05140103	Engine Poppet Valve Rocker Ann	136-2	136
0515	Injector Group	137-1	137
0516	Expansion Tank Group	138-1	138
0517	Seawater Pump/Belt Guard Group	139-1	139
051701	Engine Cooling System Pump	139-2	139
0518	Heat Exchanger Group	140-1	140
051801	Heat Exchanger	140-2	140
0519	Air Intake Manifold Group	141-1	141
0520	Exhaust Manifold Group	142-1	142
0521	Cylinder Head Group	143-1	143
052101	Crossover Valve	143-1	143
052102	Diesel Engine Cylinder Head	143-1	143
0522	Cam Follower Housing Group	144-1	144
052201	Cam Follower Housing	144-1	144
052202	Engine Poppet Valve Rocker Arm	144-1	144
052203	Engine Poppet Valve Rocker Arm	144-1	144
0523	Accessory Drive and Pulley Group	145-1	145
052301	Transmission Power Takeoff	145-1	145
0524	Gear Cover Group	146-1	146
052401	Gear Cover	146-1	146
0525	Power Take-Off Assembly	147-1	147
052501	Nonmetallic Hose Assembly	147-1	147
052502	Collar Assembly	147-2	147
0526	Clutch Assembly - Friction	148-1	148
052601	Nonmetallic Hose Assembly	148-1	148
052602	Clutch Assembly	148-1	148
05260201	Sleeve Assembly	148-2	148
0526020101	Shaft Collar Assembly	148-2	148
0527	Oil Pan Group	149-1	149
0528	Lubricating Oil Pump Group	150-1	150
052801	Oil Lubricating Pump	150-1	150
05280101	Hydraulic Drive Housing	150-1	150
05280102	Spur Gear	150-1	150
05280103	Lube Oil Pump Body	150-1	150
0529	Camshaft Group	151-1	151
052901	Camshaft	151-1	151
0530	Connecting Rod and Piston Group	152-1	152
053001	Piston Connecting Rod Assembly	152-1	152
053002	Engine Piston Set	152-2	152
0531	Flywheel and Flywheel Housing Group	153-1	153
053101	Engine Flywheel	153-1	153
0532	Crankshaft Group	154-1	154
0533	Cylinder Block Group	155-1	155
053301	Piston Cooling Nozzle	155-1	155
053302	Diesel Engine Cylinder Block	155-1	155
0534	Bow Thruster Subbase Group	156-1	156

TABLE OF CONTENTS - Continued

Group 06	SPJ 55 Bow Thruster Waterjet	157-1	157
0601	Pump Assembly Complete	158-1	158
060101	Vane Pump	158-1	158
060102	Alternating Current Motor	158-1	158
0602	Oil Tank Assembly	159-1	159
0603	Hydraulic Aggregate	160-1	160
060301	Hydraulic Aggregate Base Assembly	161-1	161
060302	Return Oil Filter Assembly	162-1	162
0604	Feedback Unit	163-1	163
060401	Rudder Angle Transmitter	163-1	163
0605	Steering Gear Assembly (Right)	164- 1	164
0606	Steering Gear Assembly (Left)	164-1	164
0607	Steering Assembly	165-1	165
060701	Hy-Motor	165-1	165
060702	Brake	165-1	165
0608	Upper Gear Assembly	166-1	166
060801	Flange Assembly	166-1	166
060802	Cover Assembly	166-1	166
0609	Water Jet Assembly	167-1	167
060901	Adjusting Device	167-1	167
0610	Oil Evacuation Pump	168-1	168
0611	Drive Shaft	169-1	169
0612	Waterjet Plumbing	170-1	170
Group 07	Reverse Osmosis Water Maker Assembly - Model PW800	171-1	171
0701	Sediment Strainer Assembly	172-1	172
0702	Micron Filter Assembly	173-1	173
0703	Air/Oil Separator Assembly	174-1	174
0704	Low Pressure Pump Assembly	175-1	175
0705	Motor and Pump Assembly	176-1	176
070501	High Pressure Hose Assembly	176-1	176
070502	Alternating Current Motor	176-2	176
070503	Axial Pistons Pump	176-2	176
0706	Magnetic Starter Assembly	177-1	177
0707	Dash Panel Assembly	178-1	178
070701	Water Quality Monitor Assembly	178-2	178
070702	Product Flowmeter Assembly	178-2	178
070703	Brine Flowmeter Assembly	178-2	178
070704	High Pressure Regulator Assembly	178-3	178
0708	Solenoid Valve Assembly	179-1	173
070801	Solenoid Valve	179-1	179
0709	Brine Manifold Assembly	180-1	180
0710	Cleaning Valve Assembly	181-1	181
0711	Pressure Vessel Assembly	182-1	182
0712	Louvered Panel Assembly	183-1	183
0713	Main Frame Assembly	184-1	184
Group 08	Air Compressor Assembly	185-1	185
0801	Alternating Current Motor	186-1	186
0802	Hydraulic Underloader Assembly	187-1	187

TABLE OF CONTENTS - Continued

0803	Cylinder Block and Head Assembly	188-1	188
080301	Cylinder Head Assembly	188-2	188
08030102	Valve Assembly	188-3	188
08030103	Valve Assembly Compressor	188-3	188
08030104	Valve Assembly Compressor	188-4	188
08030105	Unloader Assembly	188-4	188
08030106	Valve Assembly	188-5	188
0804	Connecting Rod and Low Pressure Piston Assembly	189-1	189
080401	Connecting Rod Assembly	189-1	189
0805	Connecting Rod and High Pressure Piston Assembly	190-1	190
080501	Connecting Rod Assembly	190-1	190
0806	Bearing Carrier Group	191-1	191
080601	Bearing Carrier Assembly	191-1	191
080602	Bearing Carrier	191-2	191
0807	Crankshaft Group	192-1	192
080701	Pulley Assembly	192-1	192
080702	Crankshaft Assembly	192-1	192
0808	Crankcase Assembly	193-1	193
080801	Gauge Rod-Cap Liquid Level	193-1	193
Group 09	Steering Gear System	194-1	194
0901	Follow Up Unit	195-1	195
0902	Hydraulic Cylinder Assembly	196-1	196
0903	Jockey Bar Assembly	197-1	197
0904	Tiller Arm Assembly	198-1	198
0905	Rudder Assembly	199-1	199
0906	Helm Pump	200-1	200
0907	Header Tank	201-1	201
0908	Twin Pump Assembly	202-1	202
090801	Electric Motor	202-3	202
090802	Hydraulic Pump Assembly	203-1	203
090803	Uniblock 2A Assembly	204-1	204
09080301	Coil Assembly	204-1	204
090804	Inlet Filter Assembly	205-1	205
0909	Relief Bypass and Shut-Off Valve	206-1	206
090901	Cartridge Relief	206-1	206
Group 10	Bow Ramp Assembly	207-1	207
1001	Hydraulic Power Pack Assembly	208-1	208
100101	Electric Motor	209-1	209
100102	Piston Pump Assembly	210-1	210
100103	Directional Control Valve	211-1	211
100104	Modular Relief/Crossport Relief Valve	212-1	212
1002	Hydraulic System Accessories Manifold	213-1	213
1003	Hydrulic Winch Assembly	214-1	214
100301	Hydraulic Hand Pump	215-1	215
100302	Emergency Hand Crank	216-1	216
100303	Hydraulic Motor	217-1	217
100304	Failsafe Hydraulic Brake	218-1	218
100305	Gear Reducer Assembly	219-1	219
10030501	Planet Carrier	219-1	219

TABLE OF CONTENTS - Continued

100306	Bow Ramp Winch	220-1	220
1004	Bow Ramp Lifting Assembly	221-1	221
100401	Pulley Sheave Assembly	222-1	222
100402	Wildcat Foundation Assembly	223-1	223
10040201	Chain Stopper Assembly	223-1	223
10040202	Wildcat Sheave Assembly	223-1	223
10040203	Locking Assembly	223-2	223
100403	Bow Ramp Hinge Assembly	224-1	224
100404	Bow Ramp Sealing	225-1	225
100405	Turnbuckle Assembly	226-1	226
100406	Gland Assembly	226-1	226
Group 11	Marine Sanitation System	227-1	227
1101	Sewage Treatment Unit Assembly	228-1	228
110101	End-Sediment Tank Cover Assembly	229-1	229
110102	Mid-Sediment Tank **Cover** Assembly	230-1	230
110103	Screen Assembly	231-1	231
110104	Impact Sprinkler	232-1	232
110105	Sewage Treatment Unit Sub-Assembly	233-1	233
110106	Control Module Assembly	234-1	234
110107	Cable Equipment Routing Assembly	235-1	235
110108	Level Sensor Assembly	236-1	236
110109	Discharge Pump System	237-1	237
110110	Flow Pump System	238-1	238
110111	Sludge Pump System	239-1	239
110112	Macerator Assembly	240-1	240
11011201	Motor Assembly	240-2	240
110113	Marine Sanitation System Piping	241-1	241
110114	Bleach Tank Assembly	242-1	242
110115	Commode Warning Light Assembly	243-1	243
Group 12	Fire Pump Subsystem		
1201	Auxiliary Fire Pump Assembly	244-1	244
120101	Flexible Coupling Assembly	244-2	244
1202	Centrifugal Pump Unit	245-l	245
120201	Alternating Current Motor	246-l	246
120202	Centrifugal Pump	247-l	247
Group 13	Bilge/Ballast Pump Assembly	248-1	248
1301	Alternating Current Motor	249-1	249
1302	Centrifugal Pump	250-1	250
Group 14	Gyro and Magnetic Compass System	251-1	251
1401	Mk 27 Mod 1 Gyrocompass	252-1	252
140101	Gyro Compass	252-1	252
140102	Gyro Control and Power Assembly	252-1	252
140103	Switching Unit	252-1	252
1402	Relay Transmitter Mk 37 **Mod** E	252-1	252
1403	Open Scale Repeater	252-1	252
1404	Bearing Repeater	252-1	252
1405	Bulkhead Mounting Bracket	252-1	252
1406	Pelorus Stand	252-2	252
1407	Power Converter	252-2	252

TABLE OF CONTENTS - Continued

1408	Power Transfer Unit	252-2	252
1409	Binnacle and Compass Assembly	253-1	253
Group 15	Bow Anchor Windlass Subsystem	254-1	254
1501	Bow Anchor Windlass Assembly	255-1	255
150101	Hydraulic Valve Assembly	256-1	256
150102	Failsafe Brake Assembly	257-1	257
150103	Hydraulic Motor Assembly	258-1	258
150104	Gear Reducer Assembly	259-1	259
1502	Hydraulic Power Pack Assembly	260-1	260
150201	Alternating Current Motor	261-1	261
150202	Hydraulic Pump	262-1	262
15020201	Pump Shaft	262-1	262
150203	Directional Control Valve	263-1	263
Group 16	Stern Anchor Winch Subsystem	264-1	264
1601	Stern Anchor Winch Assembly	265-1	265
160101	Hydraulic Valve Assembly	266-1	266
160102	Hydraulic Motor Assembly	267-1	267
160103	Failsafe Brake Assembly	268-1	268
160104	Gear Reducer Assembly	269-1	269
1602	Hydraulic Power Pack Assembly	270-1	270
160201	Alternating Current Motor	271-1	271
160202	Hydraulic Pump Assembly	272-1	272
16020201	Pump Shaft	272-1	272
160203	Directional Control Valve	273-1	273
Group 17	Environmental Control Subsystems	274-1	274
1701	Duct Heater # DH 1	275-1	275
1702	Duct Heater # DH 2	276-1	276
1703	Duct Heater # DH 3	277-1	277
1704	Duct Heater # DH 4	278-1	278
1705	Duct Heater # DH 5	279-1	279
1706	Duct Heater # DH 6	280-1	280
1707	Duct Heater # DH 7	281-1	281
1708	Duct Heater # DH 8	282-1	282
1709	Duct Heater # DH 9	283-1	283
1710	Duct Heater # DH 10	284-1	284
1711	Duct Heater # DH 11	285-1	285
1712	Duct Heater # DH 12	286-1	286
1713	Duct Heater # DH 12A	287-1	287
1714	Duct Heater # DH 13	288-1	288
1715	Duct Heater # DH 14	289-1	289
1716	Duct Heater # DH 15	290-1	290
1727	Duct Heater # DH 16	291-1	291
1718	Duct Heater # DH 17	292-1	292
1719	Unit Heater # UH 1 & 2	293-1	293
1720	Unit Heater # UH 4 & 10	294-1	294
1721	Unit Heater # UH 9 & 11	295-1	295
1722	Unit Heater # UH 3 & 5	296-1	296
1723	Unit Heater # UH 6	297-1	297
1724	Unit Heater # UH 7	298-1	298
1725	Unit Heater # UH 8 & 8A	299-1	299

TABLE OF CONTENTS - Continued

1726	Convection Heater # CH 1	300-1	300
1727	Convection Heater # 2, 3, 4	301-1	301
1728	Ventilating Fan # EF 1 & 2	302-1	302
172801	Ventilating Fan Motor # EF 1 & 2	302-1	302
1729	Ventilating Fan # SF 1 & 2	303-2	303
172901	Ventilating Fan Motor # SF 1 & 2	303-2	303
1730	Ventilating Fan # SF 3	304-1	304
173001	Ventilating Fan Motor # SF 4	304-1	304
1731	Ventilating Fan # SF 4	305-1	305
173101	Ventilating Fan Motor # SF 4	305-2	305
1732	Ventilating Fan # SF 5	306-1	306
173201	Ventilating Fan Motor # SF 5	306-1	306
1733	Ventilating Fan # SF 6	307-1	307
173301	Ventilating Fan Motor # SF 6	307-2	307
1734	Ventilating Fan # EF 3	308-1	308
173401	Ventilating Fan Motor # EF 3	308-1	308
1735	Ventilating Fan # EF 4	309-1	309
173501	Ventilating Fan Motor # EF 4	309-1	309
1736	Ventilating Fan # EF 6	310-1	310
173601	Ventilating Fan Motor # EF 6	310-1	310
1737	Ventilating Fan # EF 7	311-1	311
173701	Ventilating Fan Motor # EF 7	311-1	311
1738	Air Conditioner Unit #AC 1	312-1	312
1739	Air Conditioner Assembly #AC 2	313-1	313
173901	Air Conditioner Motor #AC 2	313-1	313
173902	Air Conditioner Blower #AC 2	313-1	313
173903	Liquid Refrigerant Receiver #AC 2	313-1	313
173904	Refrigerating Water Cooled Condenser	314-1	314
173905	Refrigeration Compressor	315-1	315
1740	Air Conditioner Unit #AC 3	316-1	316
Group 18	Basic Craft	317-1	317
Group 1801	Halon System	318-1	318
180101	Halon Subsystem-Paint Locker	319-1	319
180102	Halon Subsystem-Machinery Room	320-1	320
Group 1802	Furniture/Fixtures Group	321-1	321
Group 1803	Entertainment System	322-1	322
1801	Antenna, OMNI Directional Television	323-1	323
Group 1804	Purifiers and Separators	324-1	324
180401	Lube Oil Purifier	325-1	325
18040101	Alternating Current Motor	326-1	326
18040102	Pump Connection Assembly	327-1	327
18040103	Double Gear Pump	328-1	328
18040104	Hood Assembly	329-1	329
18040105	Bowl Assembly	330-1	330
18040106	Vertical Gear Assembly	331-1	331
18040107	Horizontal Gear Assembly	332-1	332
18040108	Frame Assembly	333-1	333
18040109	Circulation Heater	334-1	334
18040110	Sediment Strainer	335-1	335

TABLE OF CONTENTS - Continued

18040111	Pressure Switch Assembly	336-1	336
180402	Diesel Fuel Oil Filter/Separator	337-1	337
180403	Oil/Water Separator	338-1	338
18040301	Motor Control Box Assembly	339-1	339
18040302	Gage Panel Assembly	340-1	340
18040303	Control Module Assembly	341-1	341
18040304	Vessel Subassembly (1st Stage)	342-1	342
18040305	Plate Assembly	343-1	343
18040306	Vessel Subassembly (3rd Stage)	344-1	344
18040307	Vessel Subassembly (2nd Stage)	345-1	345
18040308	Oil Pump/Motor Assembly	346-1	346
18040309	Water Pump/Motor Assembly	347-1	347
18040310	Sensing Module Assembly	348-1	348
Group 1805	Sound Powered Telephone System	349-1	349
180501	Sound Powered Telephone SER (MOD)-19	350-1	350
180502	Sound Powered Telephone SELR (MOD)-19	351-1	351
180503	Sound Powered Telephone SER (MOD)	352-1	352
180504	Sound Powered Telephone SELR MOD)-8	353-1352-1	353
180505	Sound Powered Telephone MWT-R-19	354-1	354
180506	Sound Powered Telephone MWT-R-8	355-1	355
180507	Sound Powered Telephone SFLR (MOD)-19	356-1	356
Group 1806	Tank Level Indicator System		
180601	Level Sight Indicator	357-1	357
180602	Level Sight Indicator	358-1	358
180603	Level Sight Indicator	359-1	359
180604	Level Sight Indicator	360-1	360
180605	Float Switch Assembly	361-1	361
180606	Float Switch Assembly	362-1	362
180607	Float Switch Assembly	363-1	363
180608	Float Switch Assembly	364-1	364
180609	Float Switch Assembly	365-1	365
180610	Float Switch Assembly	366-1	366
180611	Float Switch Assembly	367-1	367
180612	Receiver Module	368-1	368
180613	Receiver Module	369-1	369
180614	Receiver Module	370-1	370
Group 1807	Navigation Signal and Searchlights		
180701	Marine Navigation Light (Forward)	371-1	371
180702	Marine Navigation Light (Forward)	372-1	372
180703	Marine Navigation Light (Aft)	373-1	373
180704	Marine Navigation Light	374-1	374
180705	Marine Navigation Light	375-1	375
180706	Marine Navigation Light (Green)	376-1	376
180707	Marine Navigation Light (Red)	377-1	377
180708	Marine Navigation Light (Aft)	378-1	378
180709	Marine Navigation Light	379-1	379
180710	Blinker Light	380-1	380
180711	Indicator Panel	381-1	381
180712	Searchlight	382-1	382
18071201	Drum Assembly	383-1	383

TABLE OF CONTENTS - Continued

18071202	Starter Assembly	384-1	384
18071203	Power Supply	385-1	385
18071204	Manual Lever Control	386-1	386
18071205	Level Gear Assembly	387-1	387
18071206	Control Station	388-1	388
180713	Electrical Horn and Controls	389-1	389
18071301	Electrical Horn	390-1	390
18071302	Power Supply	391-1	391
18071303	Sequential Timer	392-1	392
18071304	Rotary Switch	393-1	393
18071305	Oscillator Unit	394-1	394
180714	Ships Bell	395-1	395
180715	Fog Gong	395-1	395
Group 1808	Machinery Ship Equipment		
180801	Machine, Electric Welding	396-1	396
18080101	S.C.R. Assembly	396-1	396
18080102	High Frequency Assembly	396-2	396
18080103	Electronic Module Assembly	396-2	396
1808010301	Interface Board Assembly	396-3	396
Group 1809	Commissary and Laundry Vent Hood	397-1	397
	Electric Fry Kettle	398-1	398
	Bakers Scale	399-1	399
	Microwave Oven	400-1	400
	Can Opener, Electric	401-1	401
	Toaster, Electronic	402-1	402
	Coffee Maker, Percolator	403-1	403
	Coffee Maker	404-1	404
	Beverage Dispenser	405-1	405
	Milk Dispenser	406-1	406
	Electric Food Mixer Accessories	407-1	407
180901	Electric Range Assembly	408-1	408
180902	Griddle, Self-Heating	409-1	409
180903	Electric Food Mixing Machine	410-1	410
18090301	Transmission, Mechanical	410-2	410
1809030101	Intermediate Shaft Assembly	410-4	410
1809030102	Sun Shaft Group	410-5	410
1809030103	Shifter Yoke Assembly	410-6	410
1809030104	Pinion Shaft Group	410-7	410
18090302	Column and Base Assembly	410-8	410
180904	Meat Slicing Machine	411-1	411
18090401	Carriage Unit Assembly	411-1	411
18090402	Knife Unit Assembly	411-1	411
18090403	Gage Plate and Indexing Mechanism	411-2	411
18090404	Base Unit Assembly	411-2	411
18090405	Motor Parts	411-3	411
18090406	Electrical Unit Assembly	411-3	411
18090407	Knife Sharpener Unit Assembly	411-4	411
180905	Refrigerator, Mechanical, Food	412-1	412
18090501	Condenser, Refrigeration	412-2	412
18090502	Evaporator Coil, Refrigeration	412-3	412
180906	Freezer, Mechanical, Food	423-1	413
18090601	Condenser, Refrigeration	413-1	413

TABLE OF CONTENTS - Continued

18090602	Evaporator Coil, Refrigeration	413-2	413
180907	Garbage, Disposal (Modified)	414-1	414
180908	Solid Waste Compactor	415-1	415
180909	Refrigerator, Mechanical Food	416-2	416
18090901	Condenser, Refrigeration	416-1	416
18090902	Evaporator Coil, Refrigeration	416-1	416
180910	Freezer, Mechanical, Food	417-1	417
18091001	Condenser, Refrigeration	417-1	417
18091002	Evaporator Coil, Refrigeration	417-2	417
180911	Dishwasher	418-1	418
18091101	Pump and Motor Assembly	418-3	418
180912	Washer Machine, Laundry Commercial	419-1	419
18091201	Valve, Water Mixing	420-1	420
18091202	Agitator Post Assembly	421-1	421
18091203	Outer Tub, Cover and Pressure Hose	422-1	422
18091204	Lint Filter, Washtub and Hub Group	423-1	423
18091205	Bearing Housing, Brake, Pulley and Pivot Dome Group	424-1	424
18091206	Transmission Group	425-1	425
1809120601	Transmission, Mechanical	425-1	425
18091207	Pump and Hoses Group	426-1	426
1809120701	Pump, Centrifugal	426-1	426
18091208	Motor and Idler Group	427-1	427
180913	Dryer Tumbler, Laundry, Commercial	428-1	428
18091301	Front Bulkhead and Cylinder Roller Group	429-1	429
18091302	Rear Bulkhead and Cylinder Roller Group	430-1	430
18091303	Heater Box Group	431-1	431
18091304	Motor and Exhaust Fan Group	432-1	432
18091305	Cabinet, Exhaust Duct and Base Group	433-1	433
	Clothes Wringer	434-1	434
Group 1810	Miscellaneous Pumps/Motors		
181001	Pump Unit, Centrifugal (Fresh Water)	435-1	435
181002	Pump Unit, Centrifugal (Fresh Water Booster)	436-1	436
181003	Pump Unit, Centrifugal (Auxiliary Sea Water Cooling)	437-1	437
181004	Pump Unit, Rotary (Fuel Oil Transfer)	438-1	438
181005	Pump Unit, Rotary (Prelube Oil Transfer)	439-1	439
18100501	Pump, Rotary	440-1	440
18100502	Motor, Alternating Current	441-1	441
181006	Pump Unit, Rotary (Dirty Lube Oil)	442-1	442
181007	Pump Unit, Centrifugal	443-1	443
18100701	Pump, Rotary	443-1	443
18100702	Motor, Alternating Current	443-2	443
181008	Pump Assembly (Cooling Water, Reduction Gear)	443-1	443
18100801	Motor, Alternating Current	443-1	443
Group 1811	Controls System		
181101	Steering Control' and Autopilot System	444-1	444

TABLE OF CONTENTS - Continued

	Gyro Interface Assembly	445-1	445
	Helm Unit, Wheel Control	446-1	446
18110101	Panel Assembly Steering Control	447-1	447
18110102	Autopilot Control Assembly	448-1	448
18110103	Indicator, Rudder	449-1	449
18110104	Junction Box Assembly	450-1	450
18110105	Isolator Control Unit	451-1	451
181102	Two Station Twin Engine with Bow Thruster and Fire Control System	452-1	452
	Venturi Meter	453-1	453
18110201	Valve, Linear Directional	454-1	454
	Venturi Meter	455-1	455
	Valve, Directional, Four-Way	456-1	456
18110202	Control Station, Pilot House	457-1	457
	Control Station, Engine Room	458-1	458
18110203	Gearmate Control System	459-1	459
181102301	Panel, Gearmate Control	459-1	459
1811020302	Throttle Interlock	459-1	459
18110204	Gearmate Control System	460-1	460
1811020401	Panel Gearmate Control	460-1	460
1811020402	Throttle Interlock	460-1	460
18110205	Air Preparation System	461-1	461
18110206	Valve Regulating System Pressure	462-1	462
18110207	Governor Acuator Assembly	463-1	463
1811020701	Manual Override, Governor Actuator	463-1	463
18110208	Valve, Linear Directional Control	464-1	464
18110209	Bow Thruster/Fire Pump Velve Pump	465-1	465
1811020901	Cylinder Assembly	466-1	466
181103	Machinery Plant Monitoring and and Alarm System	467-1	467
	Monitor, Video	468-1	468
18110301	Panel Assembly, Engine Room	469-1	469
18110302	Multi-Remote Module, Engine Room	470-1	470
18110304	Panel, Annunciator, Engineers Quarters	472-1	472
18110305	Panel, Annunciator, Galley	473-1	473
18110306	Interface Unit Assembly	474-1	474
18110307	Remote Module, Starboard Engine	475-1	475
18110308	Interface Unit Assembly	476-1	476
18110309	Panel Assembly, Bridge	477-1	477
18110309	Panel Assembly, Bridge	477-1	477
18110310	Central Processing Unit	478-1	478
18110311	Analog Remote Module Assembly	479-1	479
18110312	Remote Module, Generators	480-1	480
18110313	Interface Unit Assembly	481-1	481
18110314	Interface Unit Assembly	482-1	482
18110315	Interface Unit Assembly	483-1	483
18110316	Multi-Remote Module Motor Controllers	484-1	484
181104	Engine Order Telegraph System	485-1	485
18110401	Panel Assembly, Bridge	486-1	486
18110402	Multi-Remote'Module, Bridge	487-1	487

TABLE OF CONTENTS - Continued

18110403	Central Processing Unit	488-1	488
18110404	Multi-Remote Module, Engine Room	489-1	489
18110405	Panel Assembly, Engine Room	490-1	490
181105	Bow Ramp Control System	491-1	491
18110501	Panel, Control Winch Room	492-1	492
18110502	Panel, Control Pilot House	493-1	493
18110503	Panel, Control Forecastle	494-1	494
18110504	Motor Controller, Bow Ramp	495-1	495
181106	Fire Detection System	496-1	496
18110601	Control Panel with Thermostats	497-1	497
18110602	Panel, Alarm, Switchboards	498-1	498
181107	Bowthruster Control	499-1	499
18110701	Panel Assembly, Steering Control	500-1	500
18110702	Control Unit Assembly	501-1	501
Group 1812	Electrical System		
181201	Power Distribution 240 Volts	502-1	502
18120101	Shore Power Supply Assembly	503-1	503
18120102	Power Panel P201 Distribution	504-1	504
18120103	Power Panel P202 Distribution	505-1	505
18120104	Power Panel P203 Distribution	506-1	506
18120105	Power Panel P204 Distribution	507-1	507
18120106	Auxiliary Machinery Motor Control Center Power Distribution	508-1	508
18120107	Forward Deck Machinery Motor Control Center Power Distribution	509-1	509
18120108	Fire Pump Number Two Power Distribution	510-1	510
18120109	Engine Room Vent Motor Control Center Power Distribution	511-1	511
18120110	Power Panel P211 Distribution	522-1	512
18120111	Pilot House Air Conditioner Power Distribution	513-1	513
18120112	Accommodation Air Condition Power Distribution	514-1	514
18120113	Engine Room Air Condition Power Distribution	515-1	515
18120114	Water Heater Power Distribution	516-1	516
18120115	Fresh Water Pump No. One Power Distribution	517-1	517
18120116	Fresh Water Pump No. Two Power Distribution	518-1	518
18120117	Stern Anchor Winch Power Distribution	519-1	519
18120118	Boat Davit Power Distribution	520-1	520
18120119	Bilge/Ballast Pump Power Distribution	521-1	521
18120120	Welder Power Distribution	522-1	522
18120121	Steering Gear Port Power Distribution	523-1	523
18120122	Fire Pump No. One Power Distribution	524-1	524
18120123	Winch Bow Ramp Power Distribution	525-1	525
181202	Power Distribution 120 Volts	526-1	526

TABLE OF CONTENTS - Continued

18120201	Power Panel P1Ol Distribution	527-1	527
18120202	Power Panel L102 Distribution	528-1	528
18120203	Power Panel L104 Distribution	529-1	529
18120204	Power Panel L105 Distribution	530-1	530
18120205	Power Panel P106 Distribution	531-1	531
181203	Emergency Power Distribution 240 Volts	532-1	532
181204	Emergency Power Distribution 120 Volts	533-1	533
18120401	Power Panel EL102 Distribution	534-1	534
18120402	Power Panel EPI03 Distribution	535-1	535
181205	Emergency Power Lighting	536-1	536
181206	Emergency Power 24 Volt Distribution	537-1	537
18120601	Power Panel EP024-1 Distribution	538-1	538
18120602	Power Panel EP024 Section B Distribution	539-1	539
181207	Storage Battery Group	540-1	540
18120701	Emergency Switchboard Battery Assembly	541-1	541
18120702	Pilot House Battery Assembly	542-1	542
18120703	Emergency Generator Battery Assembly	543-1	543
18120704	Generator No. One Battery Assembly	544-1	544
18120705	Bowthruster Battery Assembly	545-1	545
Group 1813	Doors, Hatches and Manholes/Windows Group		
	Bolted Plate Manhole	546-1	546
	Flush Bolted Plate Manhole	547-1	547
	Flush Bolted Plate Manhole	548-1	548
	Raised **Bolted** Plate **Manhole**	549-1	549
	Flush Bolted Plate Manhole	550-1	550
	Single Bolt Flush Manhole With Inside T-Handle	551-1	551
181301	Watertight Door	552-1	552
181302	Watertight Door	553-1	553
181303	Watertight Door	554-1	554
181304	Watertight Door/Quick Action, Left-Hand)	555-1	555
181305	Watertight Door	556-1	556
181306	Watertight Door	557-1	557
181307	Watertight Door	558-1	558
181308	Watertight Hatch (Quick Action)	559-1	559
181309	Watertight Scuttle (Quick Action, Flush)	560-1	560
181310	Watertight Scuttle (Quick Action, Raised)	561-1	561
181311	Fixed Window (Heat Treated)	562-1	562
181312	Fixed Window with Rotary Window	563-1	563
181313	Fixed Window, Right Hand	564-1	564
181314	Fixed Window, Left Hand	565-1	565
181315	Fixed Window	566-1	566
Group 1814	Lashing Gear Group		
181401	Lashing Gear Equipment	567-1	567
Group 1815	Work Boat/Davit Group		
181501	Workboat	568-1	568
181502	Outboard Motor	569-1	569

TABLE OF CONTENTS - Continued

181503	Liferaft/Container Group	570-1	570
181504	Boat Davit	571-1	571
181505	Pcrtable Davit Assembly	572-1	572
Group 1816	Control Centers/Switchboards		
181601	Motor Control Center Auxiliary Machinery Room Vent No. 1	573-1	573
18160101	Motor Controller (Emergency Lube Oil Prelube Pump)	574-1	574
18160102	Controller SSDG Water Jacket Heater No. 1 and No. 2	575-1	575
18160103	Motor Controller (Air Compressor No. 1 and 2)	576-1	576
18160104	Motor Controller (Dirty Lube Oil pump)	577-1	577
18160105	Controller (Main Engine No. 1 and 2 Jacket Water Heater)	578-1	578
181602	Motor Control Center Auxiliary Machinery Room Vent No. 2	579-1	579
18160201	Motor Controller (Auxiliary Seawater Colling Pump)	580-1	580
18160202	Motor Controller (Fuel Oil Transfer Pump No. 1)	581-1	581
18160203	Motor Controller (Lube Oil Purifier Heater)	582-1	582
18160204	Motor Controller (Lube Oil Purifier)	583-1	583
18160205	Motor Controller (Reducing Gear Cooling Water Pump No. 1 and 2)	584-1	584
18160206	Motor Controller (Clear Lube Oil Pump)	585-1	585
181603	Motor Control Center (Engine Room Vent)	586-1	586
18160301	Motor Controller (Engine Room Exhaust Fan)	587-1	587
18160302	Motor Controller (Engine Room Supply Fan)	588-1	588
181604	Motor Control Center Forward Deck Machinery	589-1	589
18160401	Motor Controller (Bow Windlass 1 and 2)	590-1	590
18160402	Motor Controller (Bowthruster Steering Motor)	591-1	591
18160403	Controller (Bowthruster Jacket Water Heater)	592-1	592
181605	Motor Controller (Stern Windlass)	593-1	593
181606	Motor Controller (Fire Pump)	594-1	594
181607	Motor Controller (Steering Gear Hydraulic Pump)	595-1	595
181608	Motor Controller (Fresh Water Pump No. 1 and 2)	596-1	596
181609	Motor Controller (Bilge and Ballast Pump)	597-1	597

TABLE OF CONTENTS - Continued

181610	Motor Controller (Fuel Oil Transfer Pump No. 2)	598-1	598
181611	Motor Controller (Gallery Exhaust Fan)	599-1	599
181612	Motor Controller (Lavatory Exhaust Fan)	600-1	600
181613	Motor Controller (Steering Gear Exhaust Fan)	601-1	601
181614	Motor Controller (Tunnel Supply Fan)	602-1	602
181615	Motor Controller (Bowthruster Supply Fan)	603-1	603
181616	Motor Controller (Emergency Generator Room Supply Fan)	604-1	604
181617	Motor Controller (Gallery Makeup Supply Fan)	605-1	605
181618	Motor Controller (Gallery Vent Hood Fan)	606-1	606
181619	Motor Controller (Gallery Duct Heater)	607-1	607
181620	Ship Service Switchboard	608-1	608
181621	Emergency Switchboard	609-1	609
Group 1817	Propeller Shaft Assembly		
181701	Propeller Shafting Assembly	610-1	610
181702	Shaft Brake Assembly	611-1	611
181703	Shaft Tachometer	612-1	612
Group 1818	Valves and Strainers		
181801	Angle Stop Check Valve 2-l/2"	613-1	613
181802	Three Way Ball Valve 4"	614-1	614
181803	Three Way Ball Valve 4-l/2"	615-1	615
181804	Three Way Ball Valve 5"	616-1	616
181805	Swing Check Valve	617-1	617
181806	Strainer Simplex 5"	618-1	618
181807	Duplex Strainer 3"	619-1	619
181808	Simplex Strainer 8"	620-1	620
181809	Basket Strainer 4"	621-1	621
181810	Basket Strainer 5"	622-1	622
181811	Basket Strainer 2-l/2	623-1	623
Group 1819	Piping System		
181901	Piping System-Potable Water	624-1	624
18190101	Hot Water Heater	625-1	625
181902	Piping System-Bilge, Ballast and Firemain	626-1	626
181903	Piping System-Seawater Cooling	627-1	627
181904	Piping System-Fresh Water Cooling	628-1	628
181905	Piping System-Compressed Air	629-1	629
181906	Piping System-Fire Monitor and Washdown	630-1	630
181907	Piping System-Lube Oil Transfer/Dirty Oil Discharge	631-1	631
181908	Piping System-Hydraulic Oil	632-1	632
181909	Piping System-Oily Water Separator	633-1	633
181910	Piping System Bilge Manifold Unit Assembly	634-1	634

TABLE **OF** CONTENTS - Continued

181911	Piping System Fuel Transfer Pump Unit Assembly	635-1	635
181912	Piping System-Sewage and Plumbing-	636-1	636
181913	Piping System-Bow Thruster	637-1	637
181914	Piping System-Steering Gear	638-1	638
181915	Piping System-Emergency Generator	639-1	639
181916	Piping System-Foam Proportioners	640-1	640
181917	Piping System-Fire Pump Unit Assembly	641-1	641
Group 1820	Hull/Miscellaneous		
182001	Ladders and Handrails	642-1	642
18200101	Pilot Housetop Ladders and Handrails	643-1	643
18200102	Ladders and Handrails (02 Level)	644-1	644
18200103	Forecastle Deck Ladders and Handrails	645-1	645
18200104	Main Deck Ladders and Handrails	646-1	646
182002	Tank Arrangement	647-1	647
182003	Miscellaneous. Independent Tanks	648-1	648
18200301	Tank, Day, Emergency Diesel Generator	649-1	649
1.8200302	Tank, Day, Bowthruster Engine	650-1	650
18200303	Tank, Storage, Hydraulic Oil	651-1	651
Sectlon III	Special Tools and Test Measurements/ Diagnostic Equipment		
Group 19	Special Tools	652-1	652
Section IV	CROSS-REFERENCE INDEXES (Each volume contains indexes specific to that volume.,		
	National Stock Number Index	I-1	
	Part Number Index	I-6	
	Figure and Item Number Index	I-93	

UNIT AND INTERMEDIATE DIRECT AND GENERAL SUPPORT MAINTENANCE REPAIR PARTS AND SPECIAL TOOLS LIST FOR LANDING CRAFT UTILITY (LCU 2000) (NSN 1905-01-154-1191)

SECTION I. INTRODUCTION

1. SCOPE. This RPSTL lists and authorizes spares and repair parts; special tools; special test, measurement, and diagnostic equipment (TMDE); and other special support equipment required for performance of organizational, direct support, general support maintenance of the Landing Craft Utility (LCU 2000). It authorizes the requisitioning, issue, and disposition of spares, repair parts and special tools as indicated by the source, maintenance and recoverability (SMR) codes.

2. GENERAL. In addition to this section, Introduction, this Repair Parts and Special Tools List is divided into the following sections:

a. Section II. Repair Parts List. A list of spares and repair parts authorized by this RPSTL for use in the performance of maintenance. The list also includes parts which must be removed for replacement of the authorized parts. Parts lists are composed of functional groups in ascending alphanumeric sequence, with the parts in each group listed in ascending figure and item number sequence. Bulk materials are listed in item name sequence. Repair parts kits are listed separately in their own functional group within Section II. Repair parts for repairable special tools are also listed in this section. Items listed are shown on the associated illustration(s)/figure(s).

b. Section III. Special Tools List. A list of special tools, special TMDE, and other special support equipment authorized by this RPSTL (as indicated by Basis of Issue (BOI) information in DESCRIPTION AND USABLE ON CODE column) for the performance of maintenance.

C. Section IV. Cross-references Indexes. A list, in National Item Identification Number (NIIN) sequence, of all National stock numbered items appearing in the listing, followed by a list in alphanumeric sequence of all part numbers appearing in the listings. National stock numbers and part numbers are cross-referenced to each illustration figure and item number appearance. The figure and item number index lists figure and item number in alphanumeric sequence and cross-references NSN, FSCM and part number.

3. EXPLANATION 0F COLUMNS (SECTIONS II AND III).

a. ITEM NO. (Column (1)). Indicates the number used to identify items called out in the illustration.

b. SMR Code (Column (2)). The Source, Maintenance, and Recoverability (SMR) code is a 5-position code containing supply/requisitioning information, maintenance category authorization criteria, and disposition instruction, as shown in the following breakout:

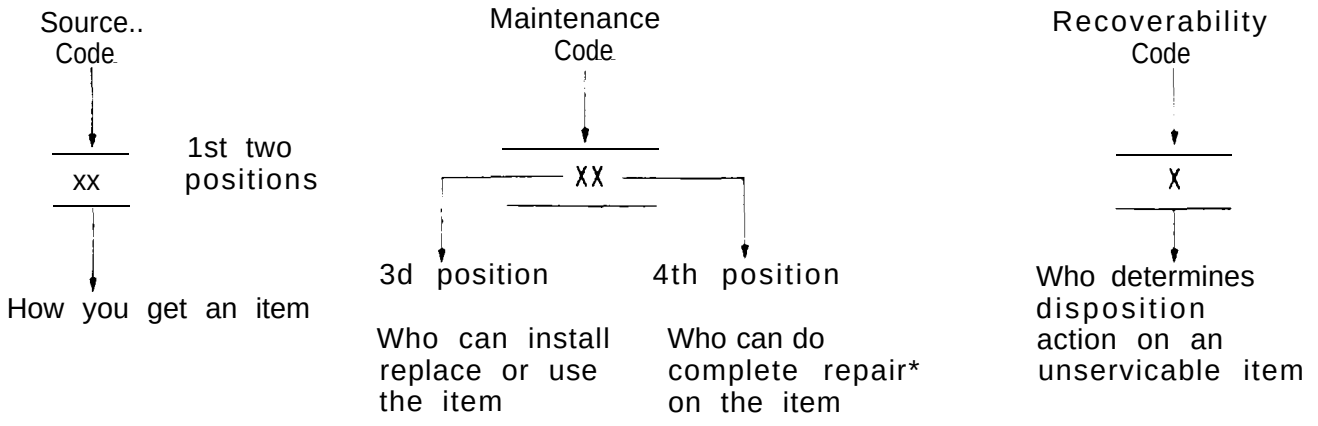

*Complete Repair: Maintenance capacity, capability, and authority to perform all corrective maintenance tasks of the "Repair" function in a use/user environment in order to restore serviceability to a failed item.

(1) Source Code. The source code tells you how to get an item needed for maintenance, repair, or overhaul of an end item/equipment. Explanations of source codes follows:

Code	Explanation
PA PB PC** PD PE PF PG	Stocked items; use the applicable NSN to request/requisition items with these source codes. They are authorized to the category indicated by the code entered in the 3d position of the SMR code. **NOTE: Items coded PC are subject to deterioration.
KD KF KB	Items with these codes are not to be requested/requisitioned individually. They are part of a kit which is authorized to the maintenance category indicated in the 3d position of the SMR code. The complete kit must be requisitioned and applied.

	Explanation
MO--(Made at org. AVUM Level MF--(Made at DS/ AVUM Level MH--(Made at GS Level) ML--Made at Specialized Repair Activity (SRA)) MD--(Made at Depot)	Items with these codes are not to be requested/requisitioned individually. They must be made from bulk material which is identified by the part number in the DESCRIPTION and USABLE ON CODE (UOC) column and listed in the Bulk Material group of the repair parts list in this RPSTL. If the item is authorized to you by the 3d position code of the SMR code, but the source code indicates it is made at a higher level, order the item from the higher level of maintenance.

	Explanation
AO--(Assembled by org/AVUM Level) AF--(Assembled by DS/AVIM Level) AH--(Assembled by GS Category) AL--(Assembled by SRA) AD--(Assembled by Depot)	Items with these codes are not to be requested/requisitioned individually. The parts that make up the assembled item must be requisitioned or fabricated and assembled at the level of maintenance indicated by the source code. If the 3d position code of the SMR code authorizes you to replace the item, but the source code indicates the items are assembled at a higher level, order the item from the higher level of maintenance.

Code	Explanation
XA--Do not requisition an "XA"-coded item. Order its next higher assembly. (Also, refer to the NOTE below.)	
XB--If an "XB" item is not available from salvage, order it using the FSCM and part number given.	
XC--Installation drawing, diagram, instruction sheet, field service drawing, that is identified by manufacturer's part number.	
XD--Item is not stocked. Order an "XD"-coded item through normal supply channels using the FSCM and part number given, if no NSN is available.	

NOTE

Cannibalization or controlled exchange, when authorized, may be used as a source of supply for items with the above source codes, except for those source coded "XA" or those aircraft support items restricted by requirements of AR 750-l.

(2) Maintenance Code. Maintenance codes tells you the level(s) of maintenance authorized to USE and REPAIR support items. The maintenance codes are entered in the third and fourth positions of the SMR code as follows:

(a) The maintenance code entered in the third position tells you the lowest maintenance level authorized to remove, replace, and use an item. The maintenance code entered in the third position will indicate authorization to one of the following levels of maintenance.

Code	Application/Explanation
C	--Crew or operator maintenance done within organizational or aviation unit maintenance.
O	--Organizational or aviation unit category can remove, replace, and use the item.
F	--Direct support or aviation intermediate level can remove, replace, and use the item.

H --General support level can remove, replace, and use the item.

L --Specialized repair activity can remove, replace, and use the item.

D --Depot level can remove, replace, and use the item.

(b) The maintenance code entered in the fourth position tells whether or not the item is to be repaired and identifies the lowest maintenance level with the capability to do complete repair (i.e., perform all authorized repair functions.) NOTE: Some limited repair may be done on the item at a lower level of maintenance, if authorized by the Maintenance Allocation Chart (MAC) and SMR codes. This position will contain one of the following maintenance codes.

Code	Application/Explanation
O	--Organizational or (aviation unit) is the lowest level that can do complete repair of the item.
F	--Direct support or aviation intermediate is the lowest level that can do complete repair of the item.
H	--General Support is the lowest level that can do complete repair of the item.
L	--Specialized repair activity is the lowest level that can do complete repair of the item.
D	--Depot is the lowest level that can do complete repair of the item.
Z	--Nonreparable. No repair is authorized.
B	--No repair is authorized. (No parts or special tools are authorized for the maintenance of a "B" coded item). However, the item may be reconditioned by adjusting, lubricating, etc., at the user level.

(3) Recoverability Code. Recoverability codes are assigned to items to indicate the disposition action on unserviceable items. The recoverability code is entered in the fifth position of the SMR Code as follows:

Recoverability Codes	Application/Explanation
Z	--Nonreparable item. When unserviceable, condemn and dispose of the item at the level of maintenance shown in 3d position of SMR Code.

Recoverability Codes	Application/Explanation
0	--Reparable item. When uneconomically reparable, condemn and dispose of the item at organizational or aviation unit level.
F	--Reparable item. When uneconomically reparable, condemn and dispose of the item at the direct support or aviation intermediate level.
H	--Reparable item. When uneconomically reparable, condemn and dispose of the item at the general support level.
D	--Reparable item. When beyond lower level repair capability, return to depot. Condemnation and disposal of item not authorized below depot level.
L	--Reparable item. Condemnation and disposal not authorized below specialized repair activity (SRA).
A	--Item requires special handling or condemnation procedures because of specific reasons (e.g., precious metal content, high dollar value, critical material, or hazardous material). Refer to appropriate manuals/directives for specific instructions.

C. **FSCM (Column (3)).** The Federal Supply Code for Manufacturer (FSCM) is a 5-digit numeric code which is used to identify the manufacturer, distributor, or Government agency, etc., that supplies the item.

d. PART NUMBER (Column (4)). Indicates the primary number used by the manufacturer, (individual, company, firm, corporation, or Government activity), which controls the design and characteristics of the item by means of its engineering drawings, specifications standards, and inspection requirements to identify an item or range of items.

NOTE

When you use an NSN to requisition an item, the item you receive may have a different part number from the part **ordered.**

e. DESCRIPTION AND USABLE ON CODE (UOC) (Column (5)). This column includes the following information:

(1) The Federal item name and, when required, a minimum description to identify the item.

(2) The physical security classification of the item is indicated by the parenthetical entry, e. g., Phy Sec Cl - Confidential, Phy Sec Cl (S) - Secret, Phy Sec Cl (T) - Top Secret.

(3) Items that are included in kits and sets are listed below the name of the kit or set.

(4) Spare/repair parts that make up an assembled item are listed immediately following the assembled item line entry.

(5) Part numbers for bulk materials are referenced in this column in the line item entry for the item to be manufactured/fabricated.

(6) When the item is not used with all serial numbers of the same model, the effective serial numbers are shown on the last line(s) of the description (before UOC).

(7) The usable on code, when applicable (see paragraph 5, Special Information).

(8) In the Special Tools List section, the basis of issue (BOI) appears as the last line(s) in the entry for each special tool special TMDE, and other special support equipment. When density of equipments supported exceeds density spread indicated in the basis of issue, the total authorization is increased proportionately.

(9) The statement "END OF FIGURE" appears just below the last item description in Column 5 for a given figure in both Section II and Section III.

(10) The indenture, shown as dots appearing before the repair part, indicates that the item is a repair part of the next higher assembly.

f. QTY (Column (6)). The QTY (quantity per figure column) indicates the quantity of the item used in the breakout shown on the illustration figure, which is prepared for a functional group, subfunctional group, or an assembly. A "V" appearing in this column in lieu of a quantity indicates that the quantity is variable and may vary from application to application.

4. EXPLANATION OF COLUMNS (SECTION IV).

a. NATIONAL STOCK NUMBER (NSN) INDEX.

(1) STOCK NUMBER column. This column lists the NSN by National item identification number

(NIIN) sequence. The NIIN consists of the last nine digits of the NSN, i.e. (5305-01-574-1467).

NSN

NIIN

When using this column to locate an item, ignore the first 4 digits of the NSN. However, the complete NSN should be used when ordering items by stock number.

(2) FIG. column. This column lists the number of the figure where the item is identified/located. The figures are in numerical order in Section II and Section III.

(3) ITEM column. The item number identifies the item associated with the figure listed in the adjacent FIG. column. This item is also identified by the NSN listed on the same line.

b. PART NUMBER INDEX. Part numbers in this index are listed by part number in ascending alphanumeric sequence (i.e., vertical arrangement of letter and number combination which places the first letter or digit of each group in order A through Z, followed by the numbers 0 through 9 and each following letter or digit in like order).

(1) FSCM column. The Federal Supply Code for Manufacturer (FSCM) is a 5-digit numeric code used to identify the manufacturer, distributor, or Government agency, etc., that supplies the item.

(2) PART NUMBER column. Indicates the primary number used by the manufacturer (individual, firm, corporation, or Government activity), which controls the design and characteristics of the item by means of its engineering drawings, specifications standards, and inspection requirements to identify an item or range of items.

(3) STOCK NUMBER column. This column lists the NSN for the associated part number and manufacturer identified in the PART NUMBER and FSCM columns to the left.

(4) FIG. column. This column lists the number of the figure where the item is identified/located in Sections II and III.

(5) ITEM column. The item number is that number assigned to the item as it appears in the figure referenced in adjacent figure number column.

C. FIGURE AND ITEM NUMBER INDEX.

(1) FIG. column. This column lists the number of the figure where the item is identified/located in Section II and III.

(2) ITEM column. The item number is that number assigned to the item as it appears in the figure referenced in the adjacent figure number column.

(3) STOCK NUMBER column. This column lists the NSN for the item.

(4) FSCM column. The Federal Supply Code for Manufacturer (FSCM) is a 5-digit numeric code used to identify the manufacturer, distributor, or Government agency, etc., that supplies the item.

(5) PART NUMBER column. Indicates the primary number used by the manufacturer (individual, firm, corporation, or Government activity), which controls the design and characteristics of the item by means of its engineering drawings, specifications standards, and inspection requirements to identify an item or range of items.

5. SPECIAL INFORMATION.

a. USABLE ON CODE. The usable on code appears in the lower left corner of the Description column heading. Usable on codes are shown as "UOC:....." in the Description Column (justified left) on the last line applicable item description/ nomenclature. Uncoded items are applicable to all models.

b. ASSOCIATED PUBLICATIONS. The publications listed below pertains to the LCU 2000 and its components and its components

Publication	Short Title
TM 55-1905-223-24P-1	Basic Craft Maintenance Manual (LCU 2000)
LO 55-1905-223-24-12	Lubrication Order (LCU-2000)
TM 55-1905-223-24-1	Main Engine (LCU-2000)
TM 55-1905-223-24-2	Reduction Gear
TM 55-1905-223-24-3	Ships Service Generator
TM 55-1905-223-24-4	Emergency Generator Set
TM 55-1905-223-24-5	Bowthruster Engine
TM 55-1905-223-24-6	Bowthruster Waterjet
TM 55-1905-223-24-7	Reverse Osmosis Watermaker
TM 55-1905-223-24-8	Air Compressor
TM 55-1905-223-24-9	Steering Gear System
TM 55-1905-223-24-10	Bow Ramp Assembly
TM 55-1905-223-24-11	Marine Sanitation
TM 55-1905-223-24-12	Fire Pump Subsystem
TM 55-1905-223-24-13	Bilge/Ballast Pumps
TM 55-1905-223-24-14	Gyro and Magnetic Compass Systems
TM 55-1905-223-24-15	Bow Anchor Windlass System
TM 55-1905-223-24-16	Stern Anchor Winch
TM 55-1905-223-24-17	Environmental Control Subsystem
TM 55-1905-223-24-18A	Basic Craft
TM 55-1905-223-24-18B	Basic Craft

6. HOW TO LOCATE REPAIR PARTS.

a. When National Stock Number or Part Number is NOT Known.

(1) First. Using the table of contents, determine the assembly group for subassembly group to which the item belongs. This is necessary since figures are prepared for assembly groups and subassembly groups, and listings are divided into the same groups.

(2) Second. Find the figure covering the assembly group or subassembly group to which the item belongs.

(3) Third. Identify the item on the figure and note the item number.

(4) Fourth. Refer to the Repair Parts List for the figure to find the part number for the item number noted on the figure.

(5) Fifth. Refer to the Part Number Index to find the NSN, if assigned.

b. When National Stock Number or Part Number is Known:

(1) First. Using the Index of National Stock Numbers and Part Numbers, find the pertinent National Stock Number or Part Number. The NSN index is in National Item Identification Number (NIIN) sequence (see 4a(1)). The part numbers in the Part Number index are listed in ascending alphanumeric sequence (see paragraph 4b). Both indexes cross-reference you to the illustration figure and item number of the item you are looking for.

(2) Second. After finding the figure and item number, verify that the item is the one you are looking for, then locate the item number in the repair parts list for the figure.

7. ABBREVIATIONS. Abbreviations used in this manual are listed in MIL-STD-12.

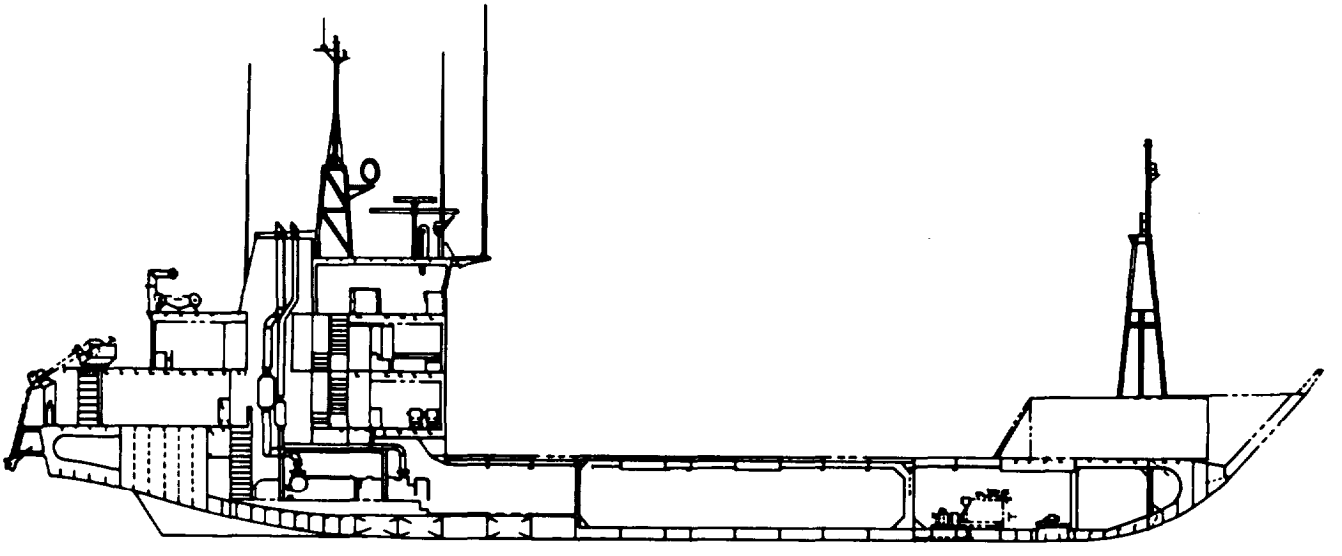

00lHFS

FIGURE 317. Basic Craft.

(1) ITEM NO	(2) SMR CODE	(3) FSCM	(4) PART NUMBER	(5) DESCRIPTION AND USABLE ON CODES(UDC)	(6) QTY
				GROUP 18 BASIC CRAFT	
				FIG. 317 BASIC CRAFT	
1	XCFFF	77408	8821043	BASIC CRAFT	1

END OF FIGURE

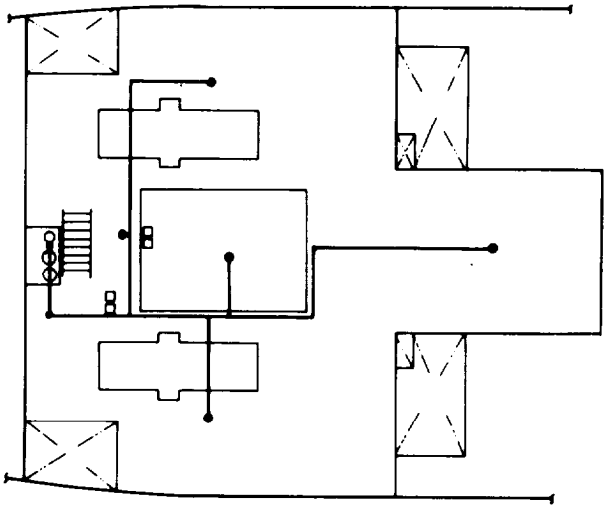

PLAN VIEW
MAIN MACHINERY ROOM
BELOW MAIN DECK

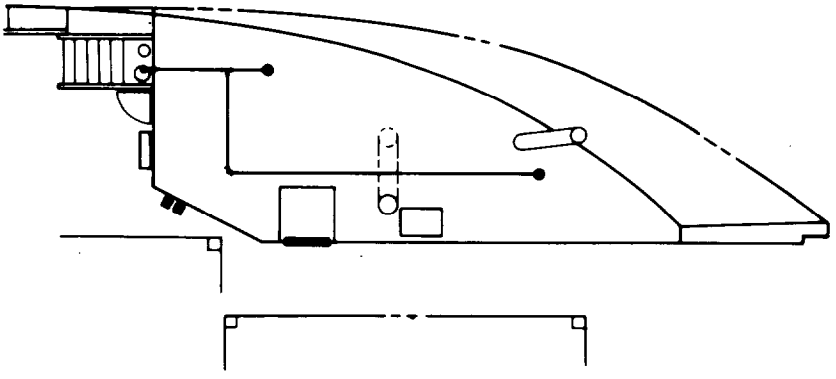

PLAN VIEW
PAINT LOCKER
MAIN DECK

002HFS

FIGURE 318. Halon System.

(1) ITEM NO	(2) SMR CODE	(3) FSCM	(4) PART NUMBER	(5) DESCRIPTION AND USABLE ON CODES(UOC)	(6) QTY
				GROUP 18 BASIC CRAFT	
				FIG. 318 HALON SYSTEM	
	XCFFF	77408	8555033	.HALON FIREFIGHTING SYSTEM	1
				END OF FIGURE	

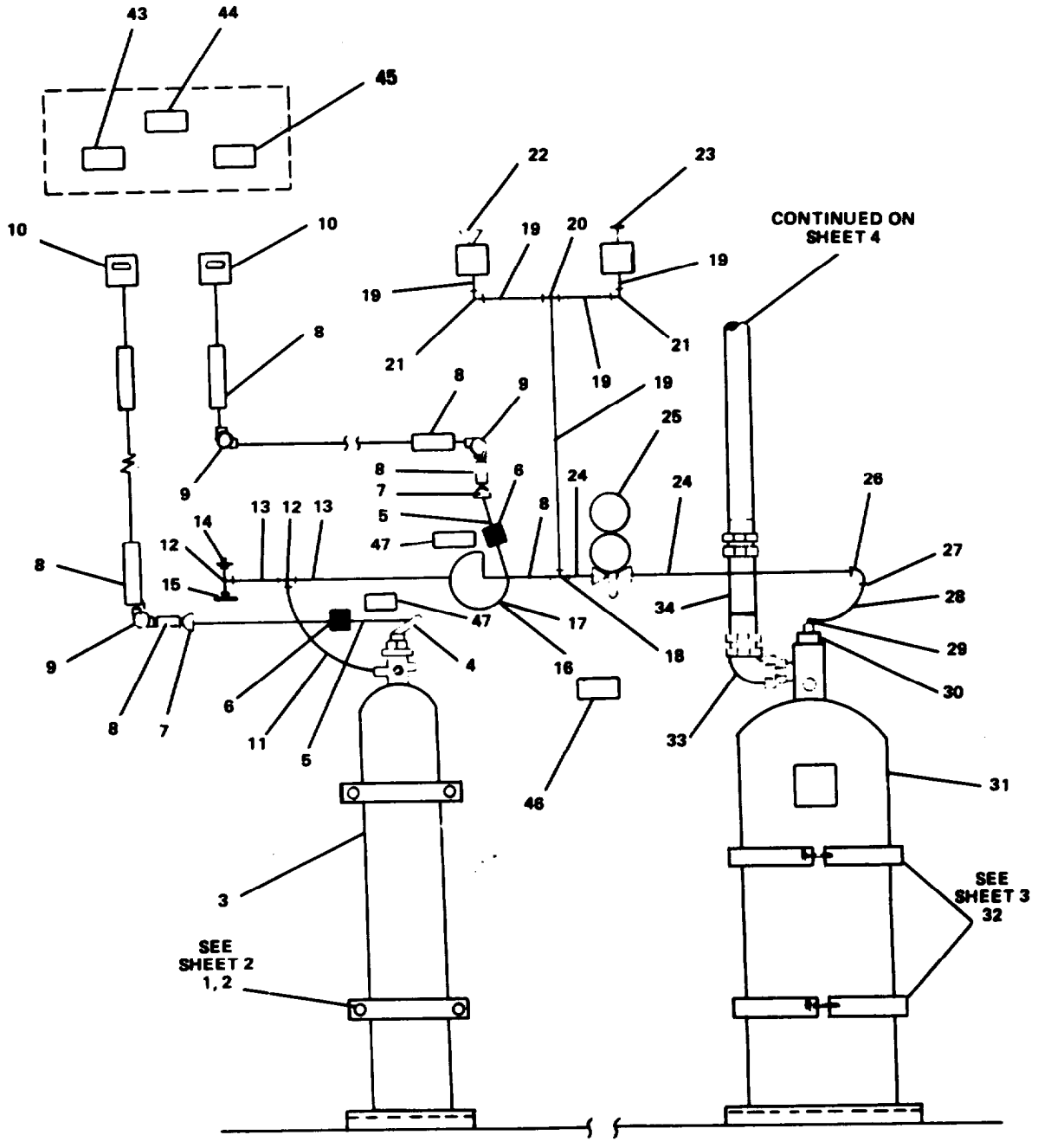

003HFS

FIGURE 319. Halon Subsystem-Paint Locker (Sheet 1 of 4).

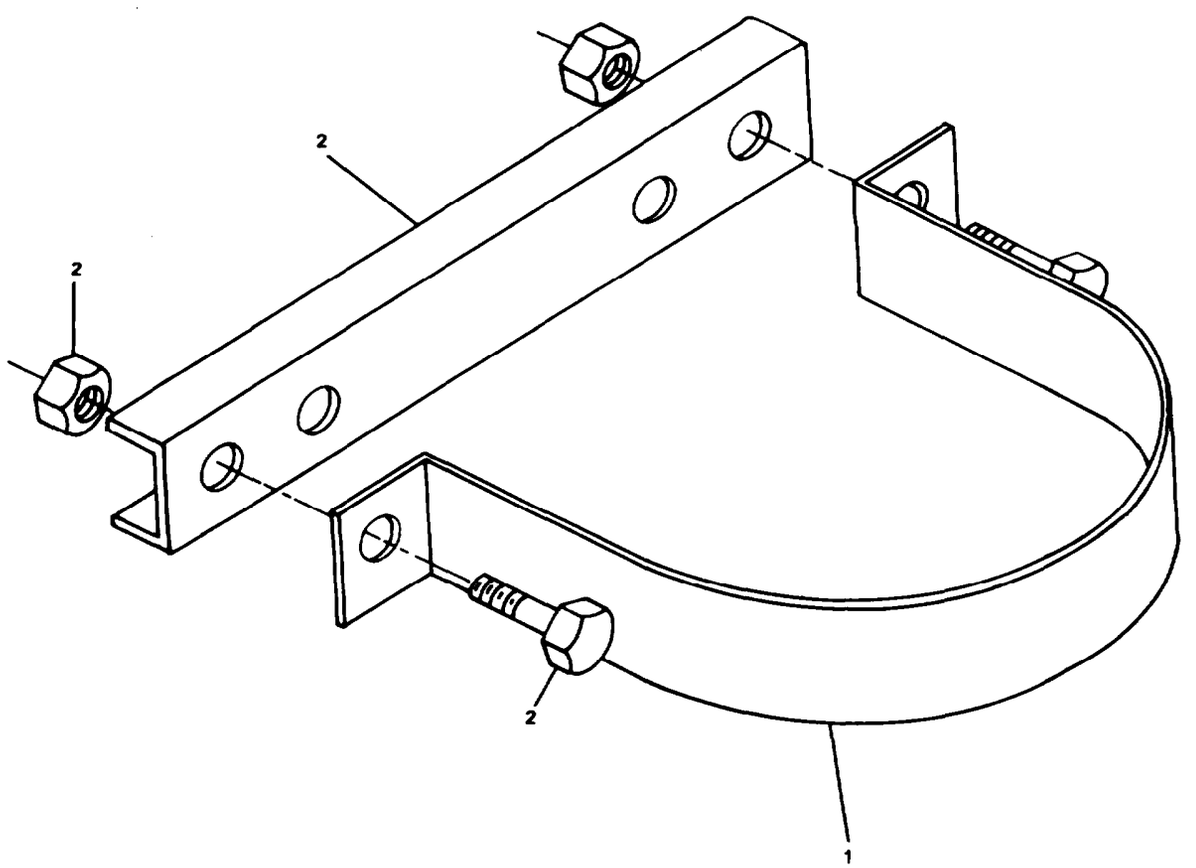

004 HFS

FIGURE 319. Halon Subsystem-Paint Locker (Sheet 2 of 4).

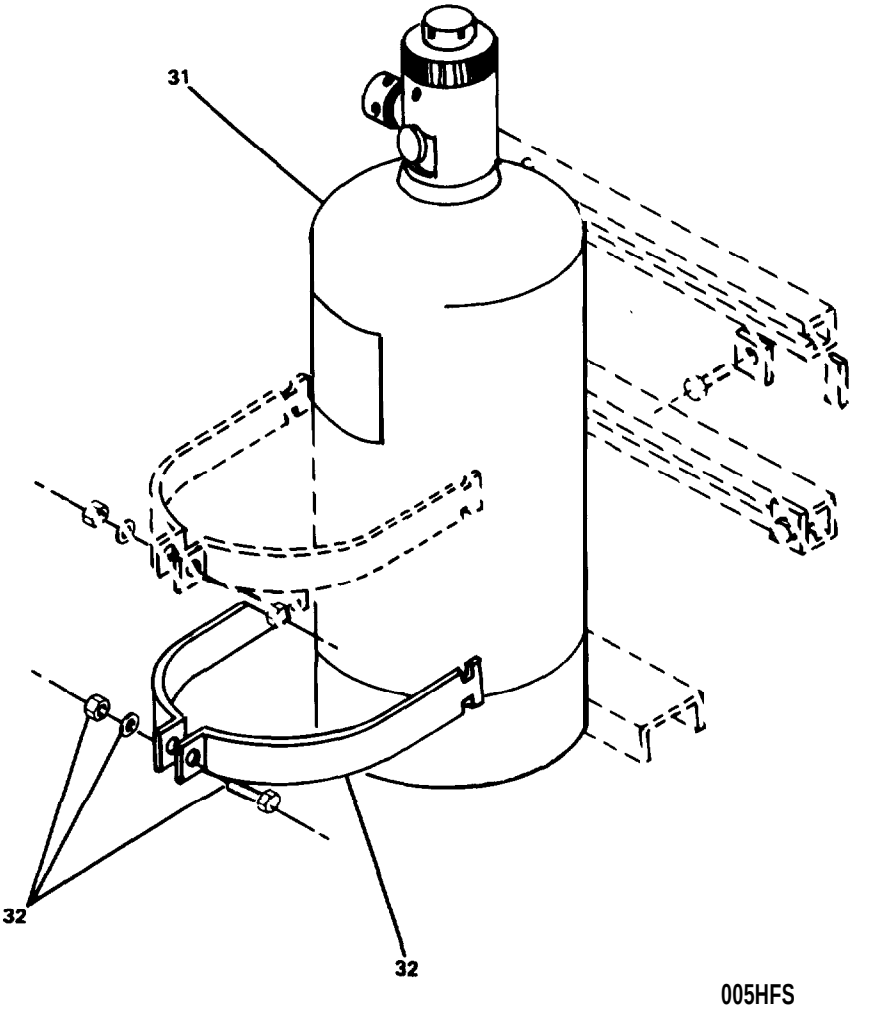

FIGURE 319. Halon Subsystem-Paint Locker (Sheet 3 of 4).

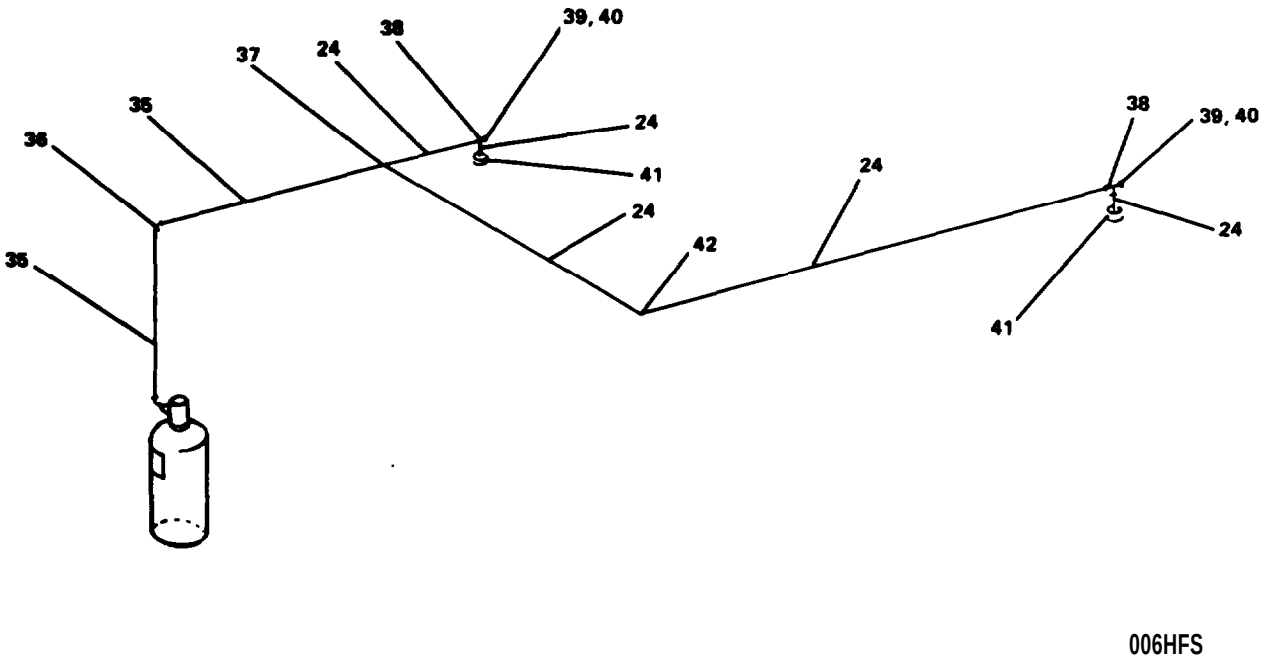

FIGURE 319. Halon Subsystem-Paint Locker **(Sheet 4 of 4)**.

(1) ITEM NO	(2) SMR CODE	(3) FSCM	(4) PART NUMBER	(5) DESCRIPTION AND USABLE ON CODES(UOC)	(6) QTY
				GROUP 18 BASIC CRAFT	
				FIG. 319 HALON SUBSYSTEM-PAINT LOCKER	
	XCFFF	03670	8766414-2	..HALON SUBSYSTEM,PAI	1
1	XDFZZ	03670	45120	...STRAP,CYLINDER	2
2	XDFZZ	03670	45244	...CHANNEL,CYLINDER	2
3	XDFZZ	03670	76924	...CYLINDER (C02,AP-8)	1
4	PAFZZ	03670	42486	... LEVER,REMOTE CONTRO	1
5	XDFZZ	03670	42128	... CABLE (I/I6 IN)	200
6	XDFZZ	03670	45333	....CLAMP.CABLE	3
7	XDFZZ	03670	40060	... FITTING,FLARED END	3
8	XDFZZ	77408	ASTM A-53	... PIPE,METALLIC (318 IN)	V
9	XDFZZ	03670	42678	...PULLEY.CORNER.SHEAV	5
10	XDFZZ	03670	41527	... BOX,PULL (CYLINDER RELEASE)	3
11	PAFZZ	03670	42424	...HOSE ASSEMBLY,NONME (CO2)	1
12	XDFZZ	77408	ASTM A-197	... FITTING,PIPE (TEE,PIPE) (1/2 IN).	3
13	XDFZZ	77408	ASTM A-53	... PIPE,METALLIC (I/2 IN)	V
14	XDFZZ	03670	40094	...SAFETY,HEADER (I/2 IN)	1
15	XDFZZ	03670	40309	...PLUG,VENT (I/2 IN)	1
16	PAFZZ	03670	41451	...VALVE,GLOBE (I/2 IN)	1
17	XDFZZ	77408	40276	...HANDLE,SECTOR	1
18	XDFZZ	77408	ASTM A-197	...FITTING,PIPE (TEE,PIPE)(1/2 IN X 3/4 IN X I/4 IN)	1
19	XDFZZ	77408	ASTM A-53	...PIPE,METALLIC (I/4 IN)	V
20	XDFZZ	77408	ASTM A-197	...FITTING,PIPE (TEE,PIPE)(1/4 IN).	1
21	XDFZZ	77408	ASTM A-197	...FITTING,PIPE (ELBOW,PIPE)(1/4 IN,90 DEG)	3
22	XDFZZ	03670	43118	...SIREN,PRESSURE OPER	1
23	PAFZZ	03670	46250	...SWITCH,PRESSURE	1
24	XDFZZ	77408	ASTM A-53	...PIPE,METALLIC (3/4 IN)	V
25	PAFZZ	77408	41732	...TIMER,INTERVAL (60 SEC,RIGHT HAND)	1
26	XDFZZ	77408	ASTM A-197	...FITTING,PIPE (ELBOW,PIPE)(3/4 IN X 1/4 IN,90 DEG)	1
27	XDFZZ	03670	32338	...ADAPTER,MALE STRAIG (1/4 IN)	1
28	PAFZZ	03670	32336	...HOSE ASSEMBLY,NONME (1/4 IN)	V
29	XDFZZ	03670	31810	...ELBOW,MALE ADAPTER (1/4 IN)	1
30	PAFZZ	03670	32096	...ACTUATOR.ELECTRO-PN	1
31	XDFZZ	03670	76610	...CYLINDER,HALON (72 LB)	1
32	XDFZZ	03670	57699	...BRACKET,HALON	2
33	XDFZZ	03670	23574	...ELBOW,UNION (1 IN)	1
34	XDFZZ	03670	71862	...HOSE,DISCHARGE (1 IN)	1
35	XDFZZ	77408	ASTM A-53	...PIPE,METALLIC (1 IN)	V
36	XDFZZ	77408	ASTM A-197	...FITTING,PIPE (ELBOW,PIPE)(1 IN, 90 DEG)	1
37	XDFZZ	77408	ASTM A-197	...FITTING,PIPE (TEE,PIPE)(1 IN X 3/4 IN X 3/4 IN)	1
38	XDFZZ	77408	ASTM A-197	...FITTING,PIPE (TEE,PIPE)(3/4 IN X 1/2 IN X 3/4 IN)	3
39	XDFZZ	77408	ASTM A-197	...FITTING,PIPE (NIPPLE,PIPE)(1/2	2

(1) ITEM NO	(2) SMR CODE	(3) FSCM	(4) PART NUMBER	(5) DESCRIPTION AND USABLE ON CODES(UOC)	(6) QTY
				IN)	
40	XDFZZ	77408	ASTM A-197	...FITTING,PIPE (CAP,PIPE)(1/2 IN).	3
41	PAFZZ	03670	32659	...NOZZLE,FIRE HOSE	3
42	XDFZZ	77408	ASTM A-197	...FITTING,PIPE (ELBOW,PIPE)(3/4 IN,90 DEG)	1
43	XDFZZ	03670	33262	...SIGN (ENTRANCE WARNING)	1
44	XDFZZ	03670	52201	...SIGN (BREATHING APPARATUS)	1
45	XDFZZ	03670	33263	...SIGN (EXIT WARNING)	1
46	XDFZZ	03670	41917	...SIGN (CD2 MAINTENANCE)	1
47	XDFZZ	03670	41908	...PLATE,IDENTIFICATI0 (VALVE RELEASE 1, (CYLINDER RELEASE)	2

END OF FIGURE

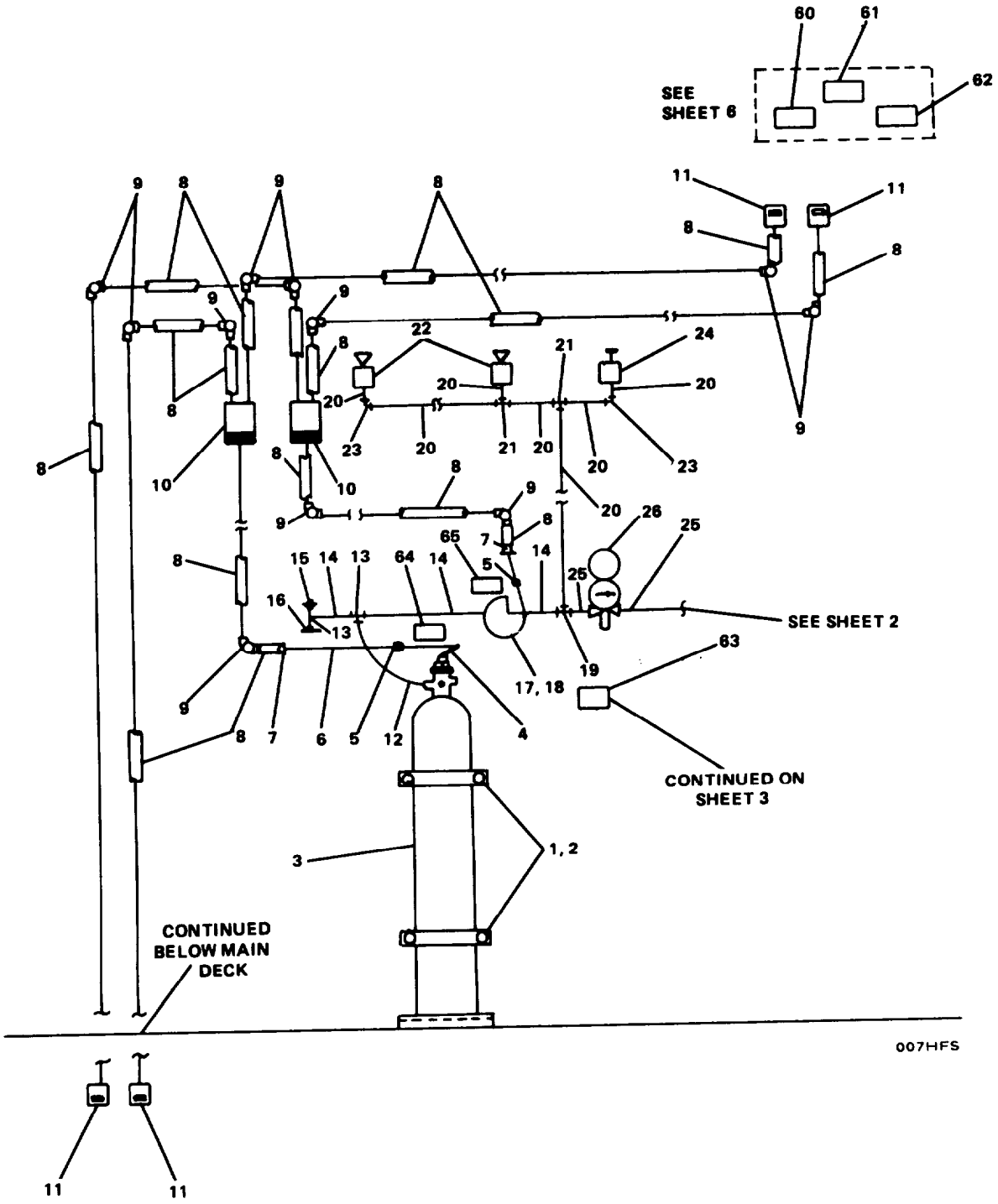

FIGURE 320. Halon Subsystem-Machinery Room (Sheet 1 of 6).

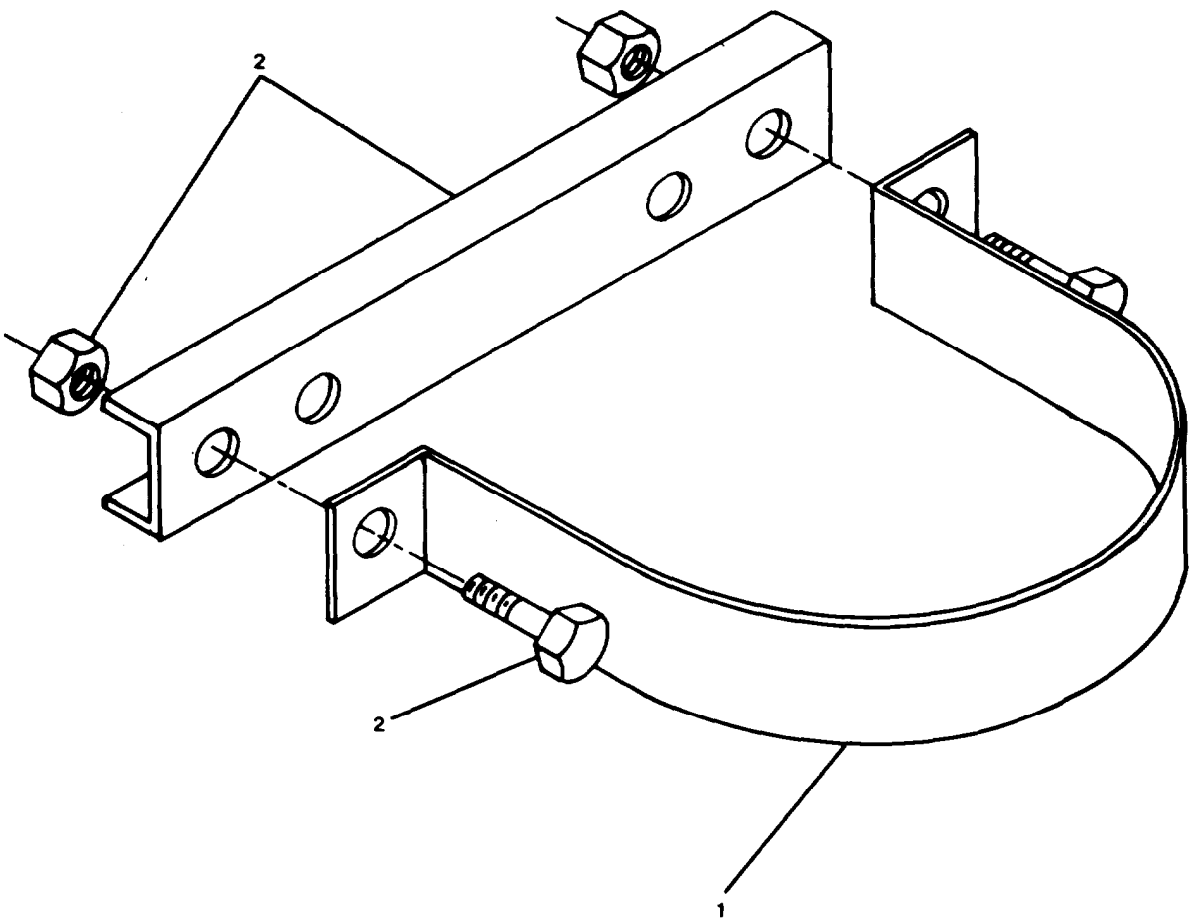

008HFS

FIGURE 320. Halon Subsystem-Machinery Room (Sheet 2 of 6).

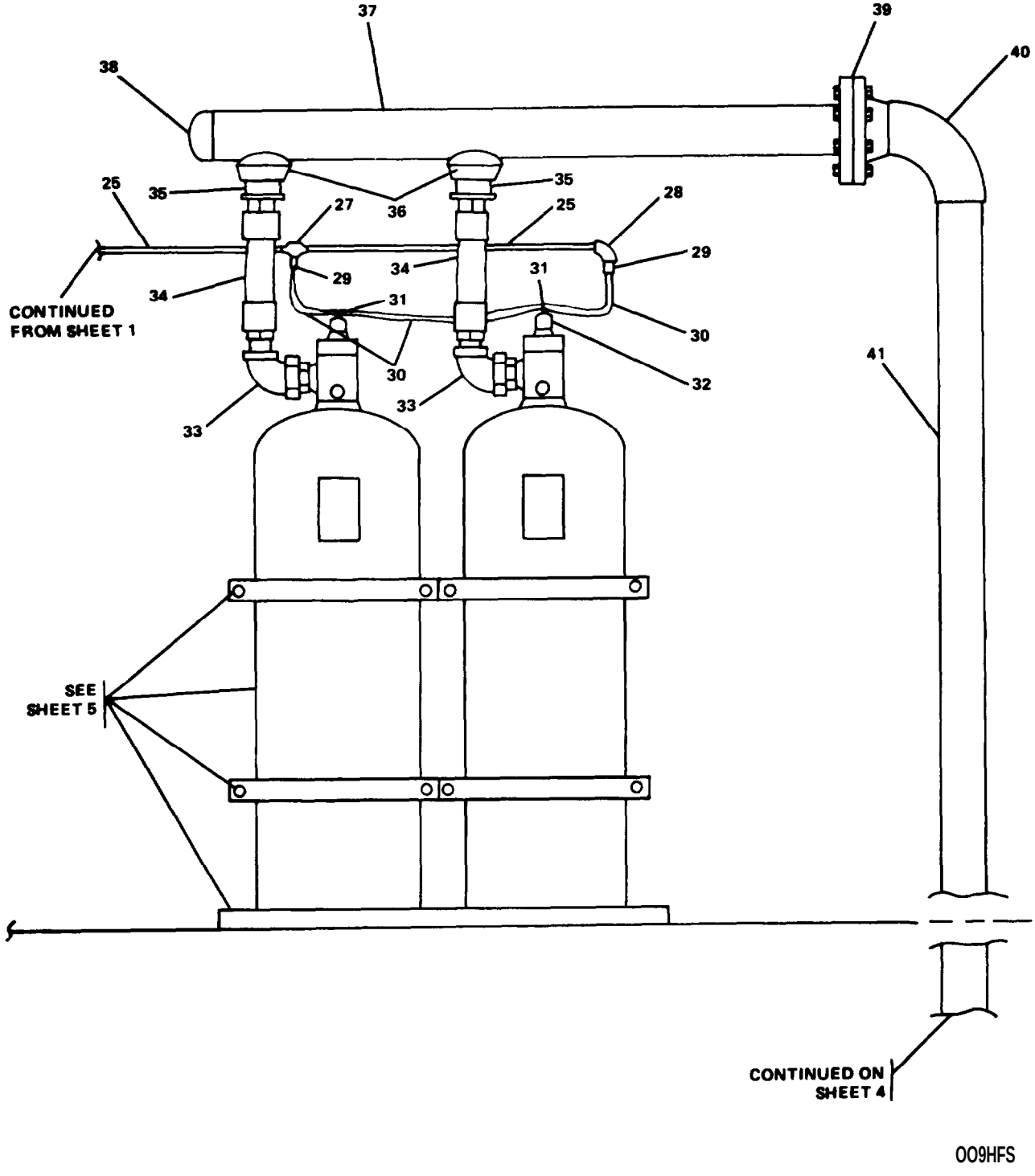

FIGURE 320. Halon Subsystem-Machinery Room (Sheet 3 of 6).

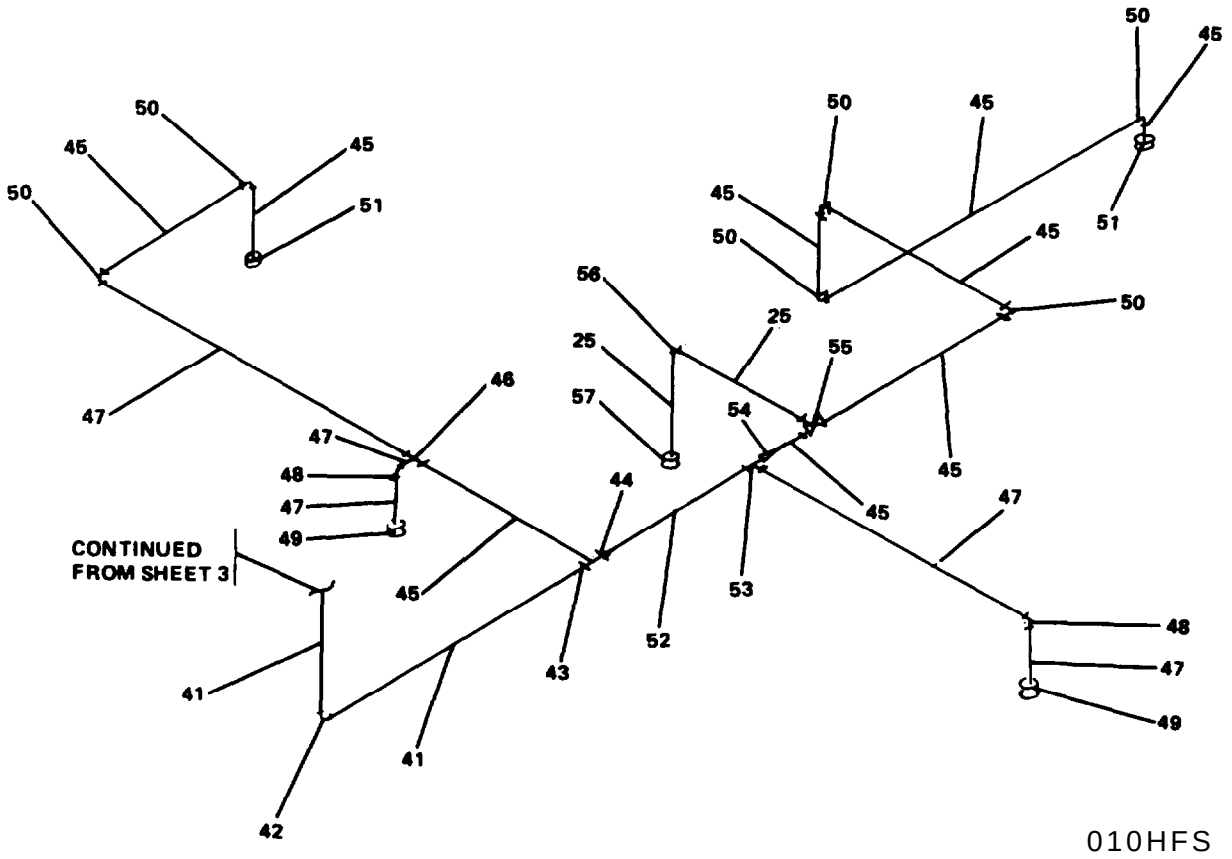

FIGURE 320. Halon Subsystem-Machinery Room (Sheet 4 of 6).

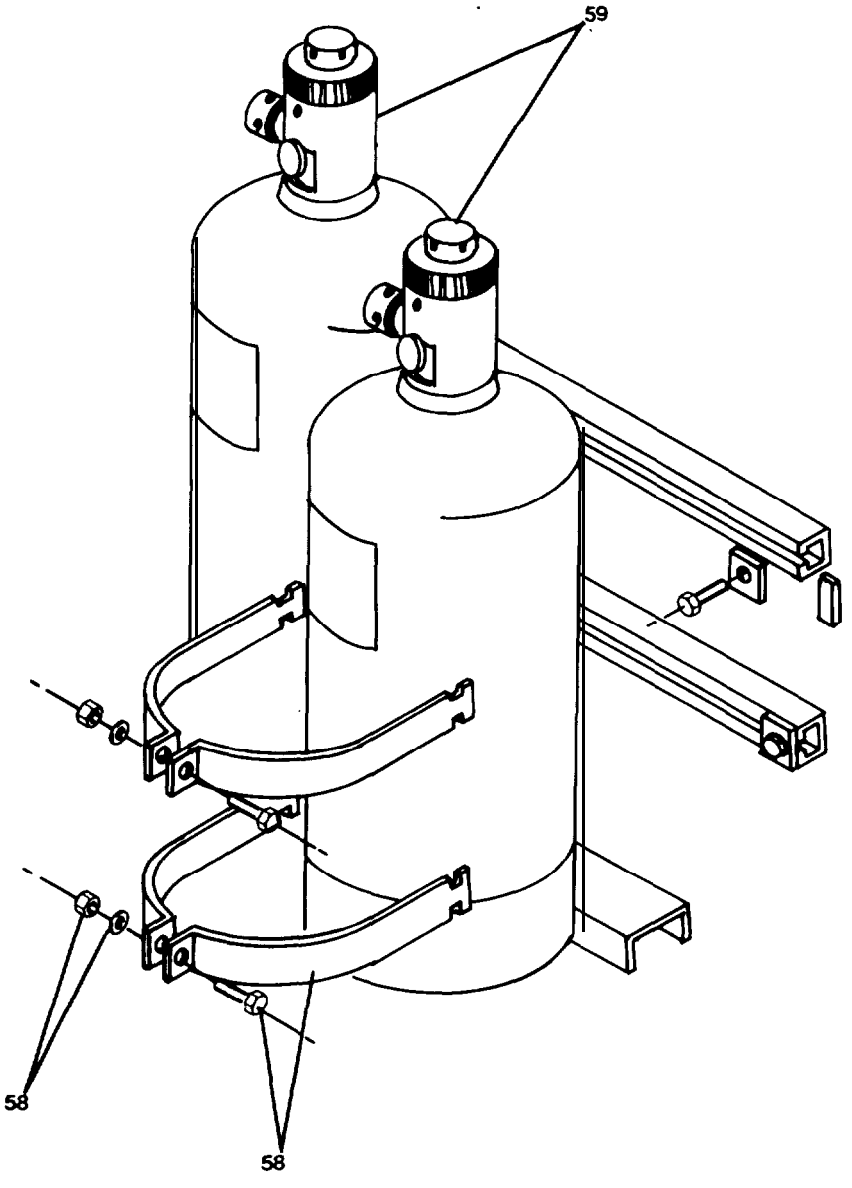

O11HFS

FIGURE 320. Halon Subsystem-Machinery Room (Sheet 5 of 6).

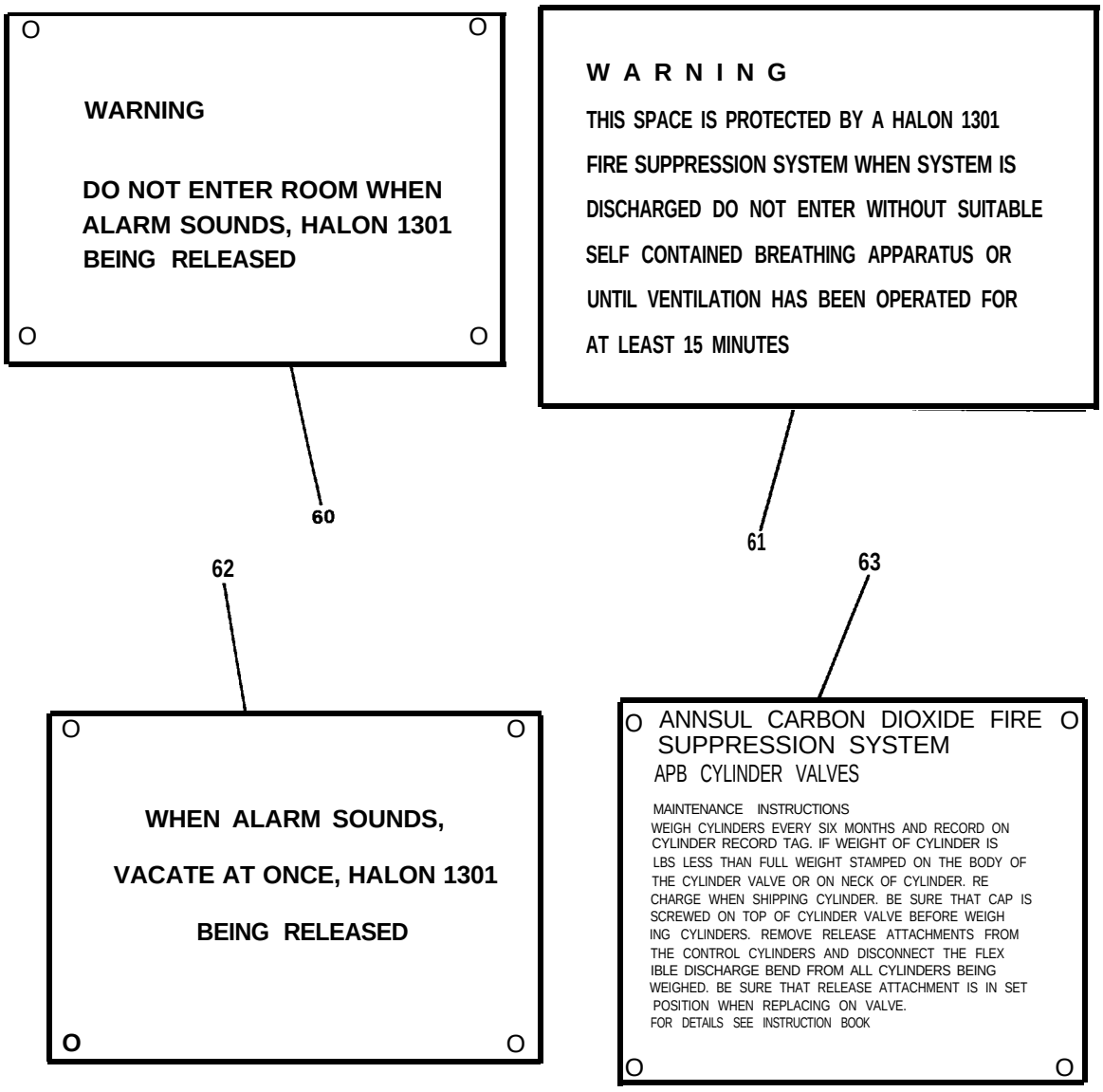

FIGURE 320. Halon Subsystem-Machinerv Room (Sheet 6 of 6).

(1) ITEM NO	(2) SMR CODE	(3) FSCM	(4) PART NUMBER	(5) DESCRIPTION AND USABLE ON CODES(UOC)	(6) QTY
				GROUP 18 BASIC CRAFT	
				FIG. 320 HALON SUBSYSTEM-MACHINERY ROOM	
	XCFFF	03670	8766414-1	..HALON SUBSYSTEM,MAI	1
1	XDFZZ	03670	45120	...STRAP,CYLINDER(CO2)	2
2	XDFZZ	03670	45244	...CHANNEL,CYLINDER(CO2)	2
3	XDFZZ	03670	76924	...CYLINDER (C02,AP-8)	1
4	PAFZZ	03670	42486	...LEVER,REMOTE CONTRO(CO2)	1
5	XDFZZ	03670	45333	...CLAMP,CABLE	3
6	XDFZZ	03670	42128	...CABLE (1/16 IN)	200
7	XDFZZ	03670	40060	...FITTING,FLARED END	3
8	XDFZZ	77408	ASTM A-53	...PIPE,METALLIC (3/8 IN)	V
9	XDFZZ	03670	42678	...PULLEY,CORNER,SHEAV	21
10	XDFZZ	03670	43166	...BOX,DUAL CONTROL	3
11	XDFZZ	03670	41527	...BOX,PULL (CYLINDER RELEASE)	7
12	PAFZZ	03670	42424	...HOSE ASSEMBLY,NONME	1
13	XDFZZ	77408	ASTM A-197	...FITTING,PIPE (TEE,PIPE)(1/2 IN)	1
14	XDFZZ	77408	ASTM A-53	...PIPE,METALLIC (1/2 IN)	V
15	XDFZZ	03670	40094	...SAFETY,HEADER (1/2 IN)	1
16	XDFZZ	03670	40309	...PLUG,VENT (1/2 IN)	1
17	PAFZZ	03670	41451	...VALVE,GLOBE (1/2 IN)	1
18	XDFZZ	03670	40276	...HANDLE,SECTOR (1/2 IN)	1
19	XDFZZ	77408	ASTM A-197	...FITTING,PIPE (TEE,PIPE)(1/2 IN X 3/4 IN X 1/4 IN)	1
20	XDFZZ	77408	ASTM A-53	...PIPE,METALLIC(1/4 IN)	V
21	XDFZZ	77408	ASTM A-197	...FITTING,PIPE (TEE,PIPE)(1/4 IN)	3
22	XDFZZ	03670	43118	...SIREN,PRESSURE OPER	3
23	XDFZZ	77408	ASTM A-197	...FITTING,PIPE(ELBOW,PIPE)(1/4 IN,90 DEG)	3
24	PAFZZ	03670	46250	...SWITCH,PRESSURE	1
25	XDFZZ	77408	ASTM A-53	...PIPE,METALLIC (3/4 IN)	V
26	PAFZZ	03670	41732	...TIMEDELAY,SPRINKLE (60 SEC/ RIGHT HAND)	1
27	XDFZZ	77408	ASTM A-197	...FITTING,PIPE (TEE,PIPE)(3/4 IN)	1
28	XDFZZ	77408	ASTM A-197	...FITTING,PIPE (ELBOW,PIPE)(3/4 IN,90 DEG)	1
29	XDFZZ	03670	32338	...ADAPTER,MALE STRAIG (1/4 IN)	3
30	PAFZZ	03670	32336	...HOSE ASSEMBLY,NONME (1/4 IN)	V
31	XDFZZ	03670	31811	...TEE,MALE ADAPTER (1/4 IN)	3
32	PAFZZ	03670	32096	...ACTUATOR,ELECTRO-PN	2
33	XDFZZ	03670	36075	...ELBOW,UNION (2 IN)	2
34	XDFZZ	03670	71863	...HOSE ASSEMBLY,METAL (2 IN)	2
35	XDFZZ	03670	32100	...VALVE,CHECK (2 IN)	2
36	XDFZZ	77408	ASTM A-197	...FITTING, PIPE (WELDOLET)(2 IN)	2
37	XDFZZ	77408	ASTM A-53	...PIPE, METALLIC (MANIFOLD,PIPE)(3 IN)	V
38	XDFZZ	77408	ASTM A-197	...FITTING,PIPE (CAP,PIPE)(3 IN)	1
39	XDFZZ	77408	ASTM A-397	...FLANGE,PIPE (3 IN)	2
40	XDFZZ	77408	ASTM A-197	...FITTING,PIPE (ELBOW,PIPE)(3 IN)	1
41	XDFZZ	77408	ASTM A-53	...PIPE,METALLIC (3 IN)	V

(1) ITEM NO	(2) SMR CODE	(3) FSCM	(4) PART NUMBER	(5) DESCRIPTION AND USABLE ON CODES(UOC)	(6) QTY
42	XDFZZ	77408	ASTM A-197	. . . ELBOW,PIPE (3 IN,90 DEG)	1
43	XDFZZ	77408	ASTM A-197	. . . TEE, PIPE (3 IN X 3 IN X 2 IN)	1
44	XDFZZ	77408	ASTM A-197	. . . REDUCER, TEE (3 IN X 2-1/2 IN)	1
45	XDFZZ	77408	ASTM A-53	. . . PIPE, METALLIC (2 IN)	V
46	XDFZZ	77408	ASTM A-197	. . . FITTING, PIPE (TEE,PIPE)(2 IN X 2 IN X 1-1/2 IN)	1
47	XDFZZ	77408	ASTM A-53	. . . PIPE, METALLIC (1-1/2 IN)	V
48	XDFZZ	77408	ASTM A-197	. . . FITTING, PIPE (ELBOW,PIPE)(1-1/2 IN,90 DEG)	3
49	PAFZZ	77408	32662	. . . NOZZLE, FIRE HOSE (1-1/2 IN)	3
50	XDFZZ	77408	ASTM A-197	. . . FITTING, PIPE (ELBOW PIPE)(2 IN, 90 DEG)	11
51	PAFZZ	03670	32663	. . . HEAD,SPRINKLER,FIRE (2 IN)	3
52	XDFZZ	77408	ASTM A-53	. . .PIPE,METALLIC (2-1/2 IN)	V
53	XDFZZ	77408	ASTM A-197	. . . TEE,PIPE (2 1/2 IN X 2 IN X 1 1/2 IN)	1
54	XDFZZ	77408	ASTM A-234	. . . REDUCER,TEE (2-1/2 IN X 2-1/2 IN)	1
55	XDFZZ	77408	ASTM A-197	. . . FITTING, PIPE (TEE,PIPE)(2 IN X 2 IN X 3/4 IN)	1
56	XDFZZ	77408	ASTM A-197	. . .FITTING,PIPE (ELBOW,PIPE)(3/4 IN,90 DEG)	1
57	XDFZZ	03670	32659	. . . NOZZLE, HALON	1
58	XDFZZ	03670	57702	. . . BRACKET, HALON	4
59	XDFZZ	03670	76645	. . . CYLINDER, HALON	2
60	XDFZZ	03670	33262	. . . SIGN (ENTRANCE WARNING)	2
61	XDFZZ	03670	52201	. . . SIGN (BREATHING APPARATUS)	2
62	XDFZZ	03670	33263	. . . SIGN (EXIT WARNING)	2
63	XDFZZ	03670	41917	. . . SIGN (CO2 MAINTENANCE)	1
64	XDFZZ	03670	41908	. . . PLATE, IDENTIFICATIO (VALVE RELEASE) (CYLINDER RELEASE)	2

END OF FIGURE

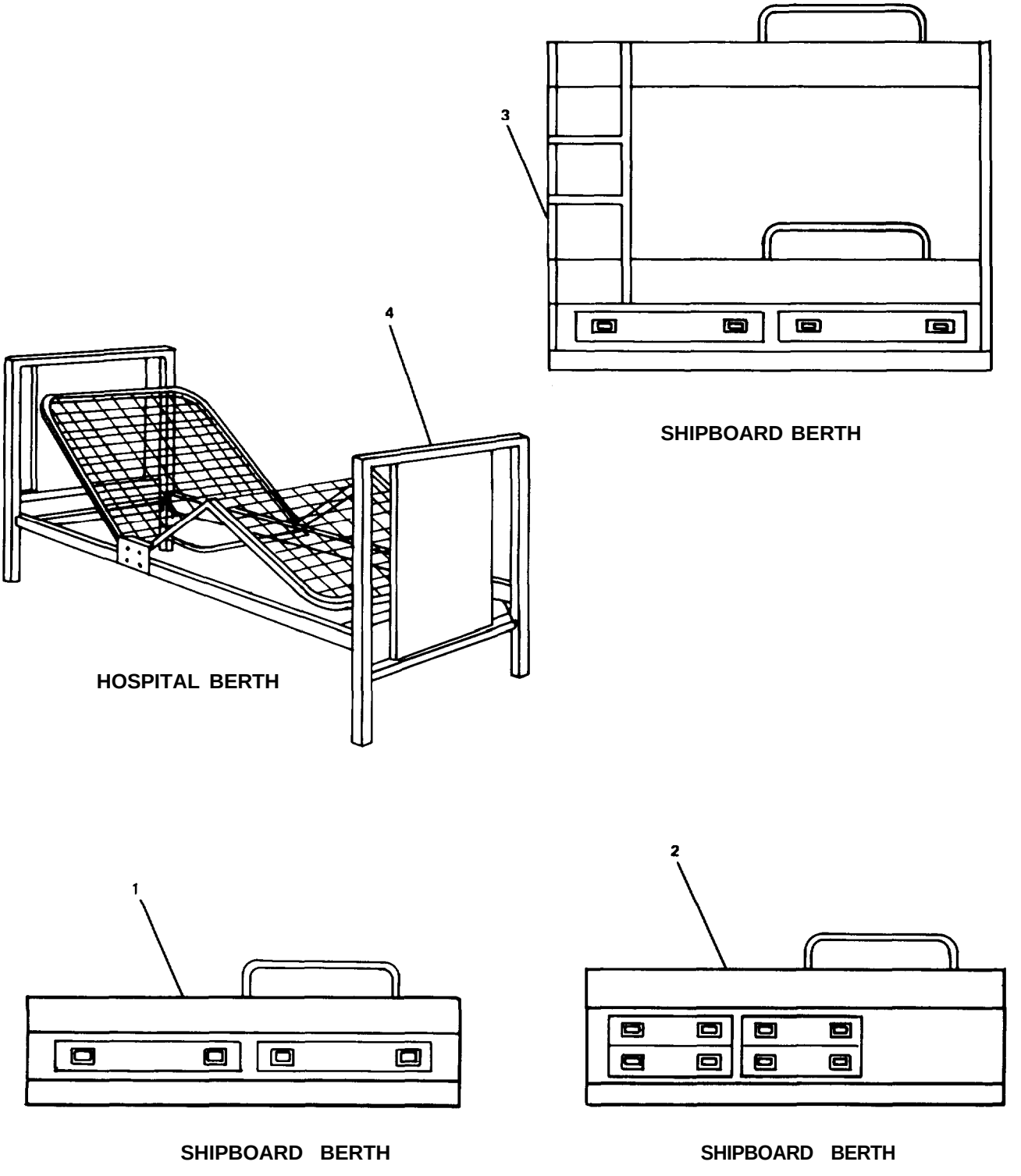

FIGURE 321. Furniture/Fixtures Group (Sheet 1 of 14).

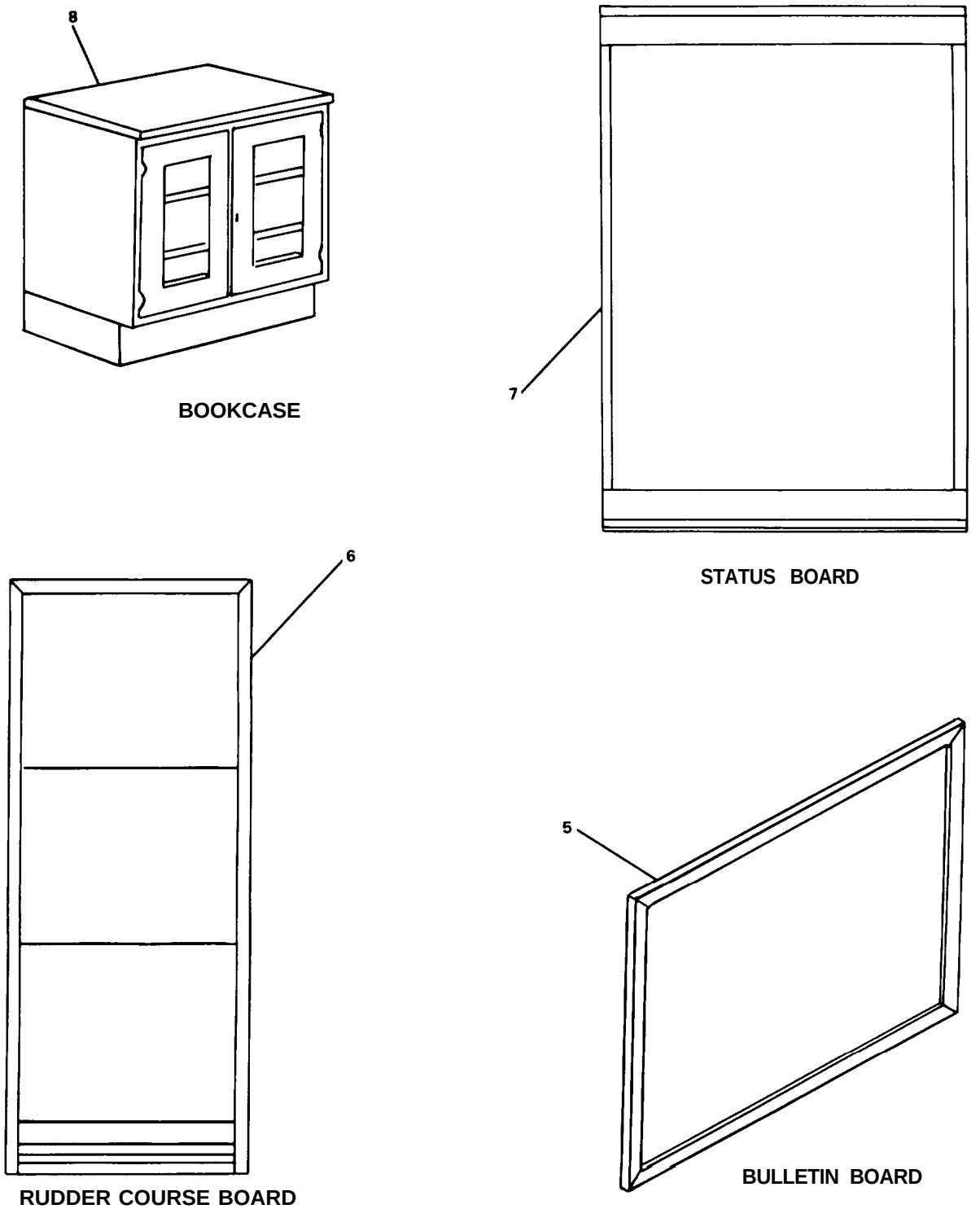

FIGURE 321. Furniture/Fixtures Group (Sheet 2 of 14).

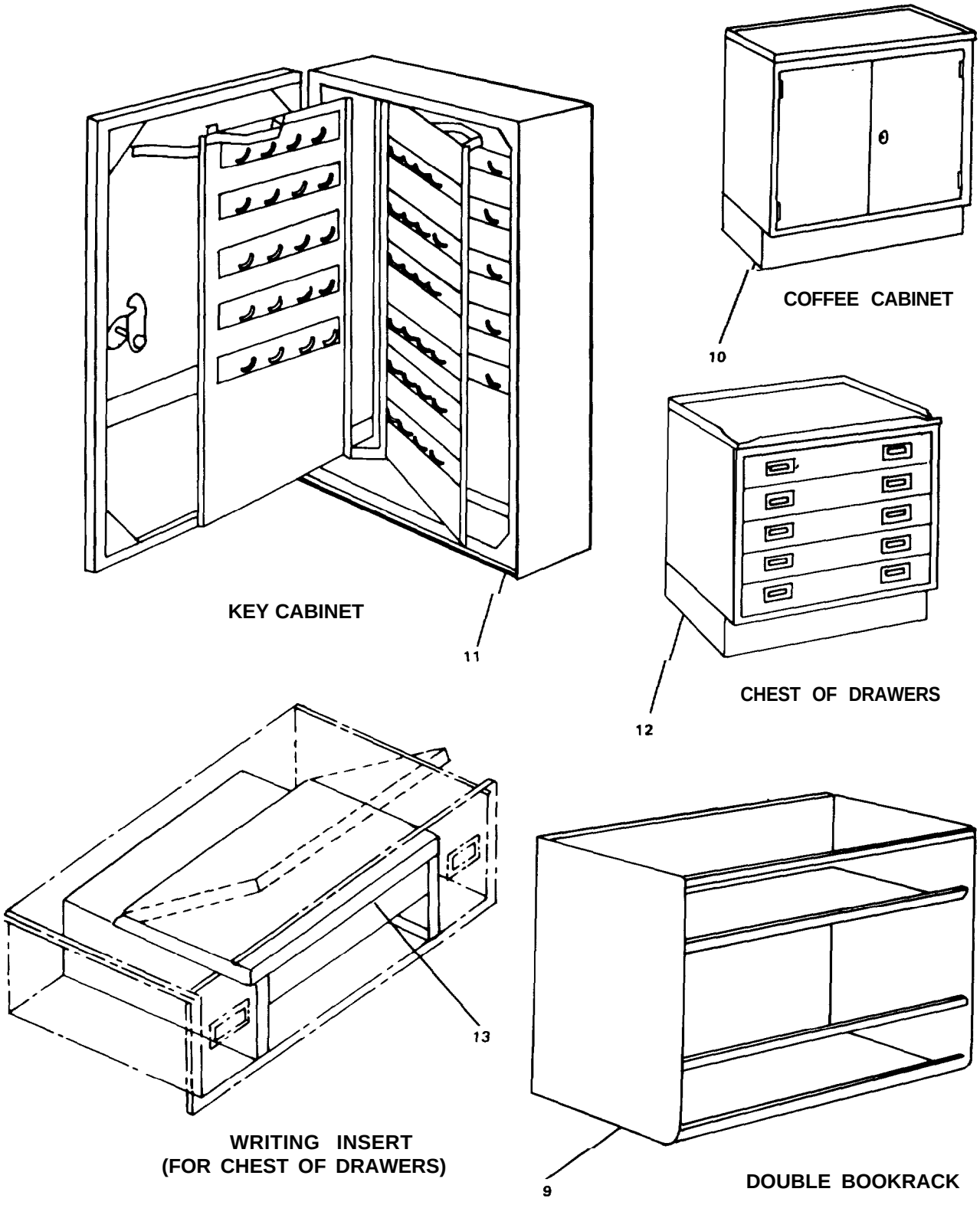

003FF

FIGURE 321. Furniture/Fixtures Group (Sheet 3 of 14).

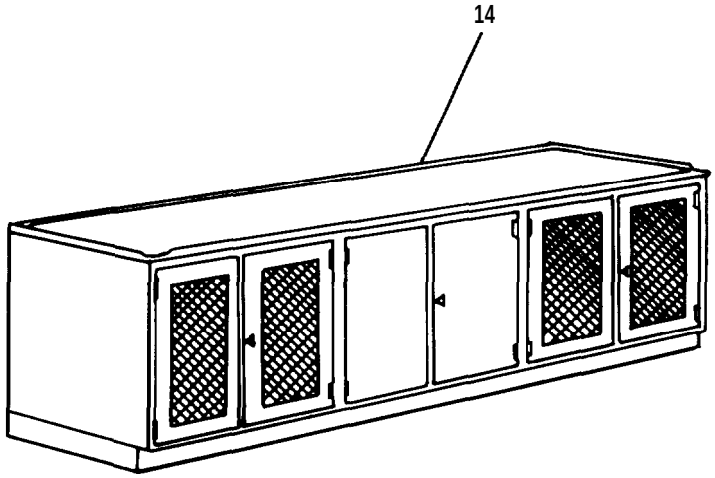

ENTERTAINMENT CONSOLE

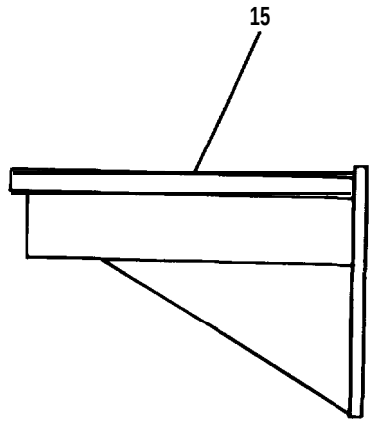

LOG DESK

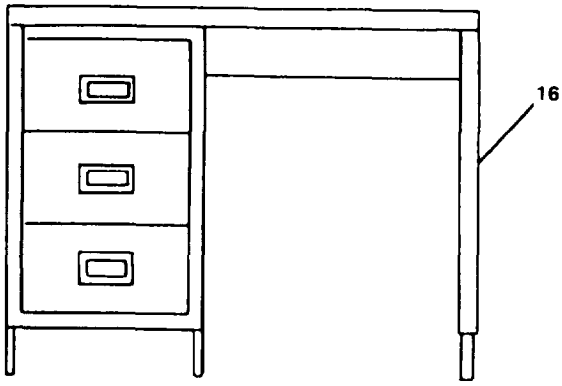

FLAT-TOP DESK

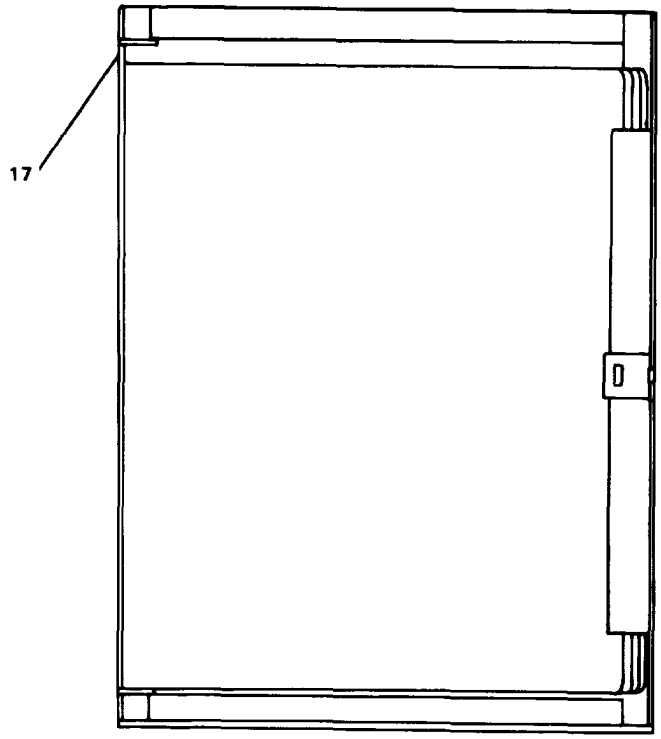

HINGED DAMAGE CONTROL LEAF UNIT

004FF

FIGURE 321. Furniture/Fixtures Group (Sheet 4 of 14).

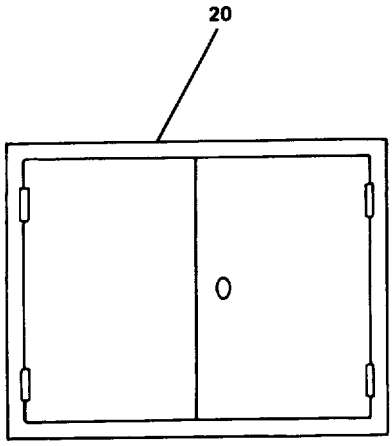

BULKHEAD MOUNTED LOCKER

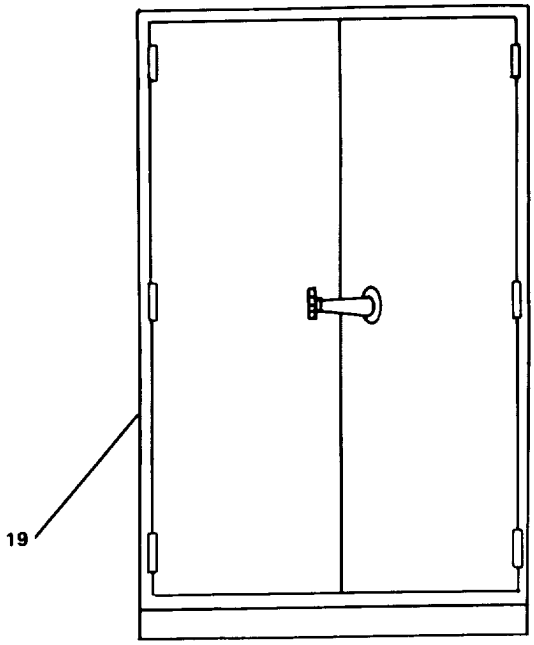

LOCKER

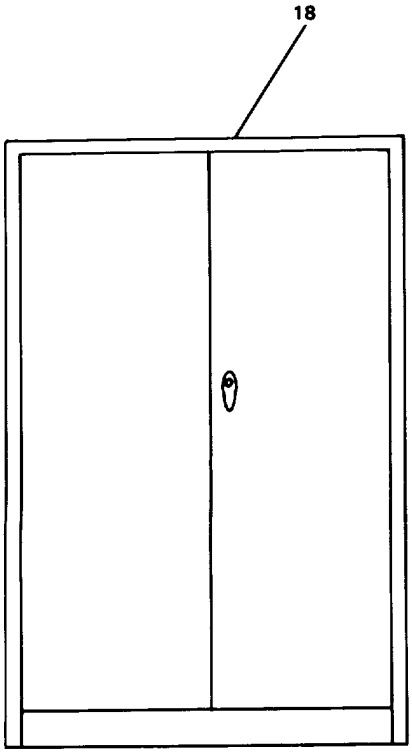

LOCKER

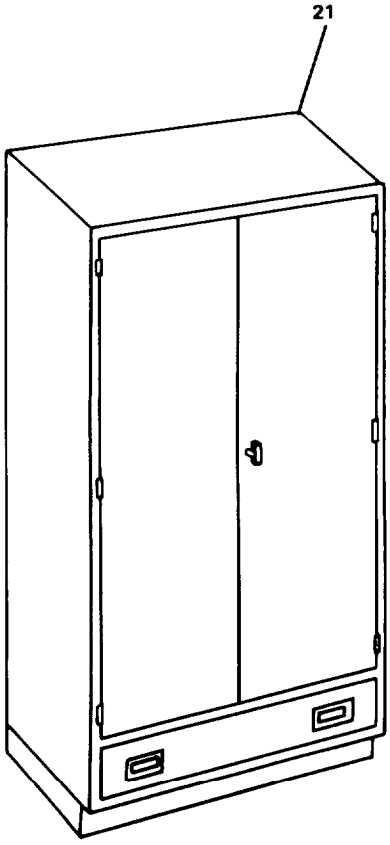

005FF

WARDROBE LOCKER

FIGURE 321. Furniture/Fixtures Group (Sheet 5 of 14).

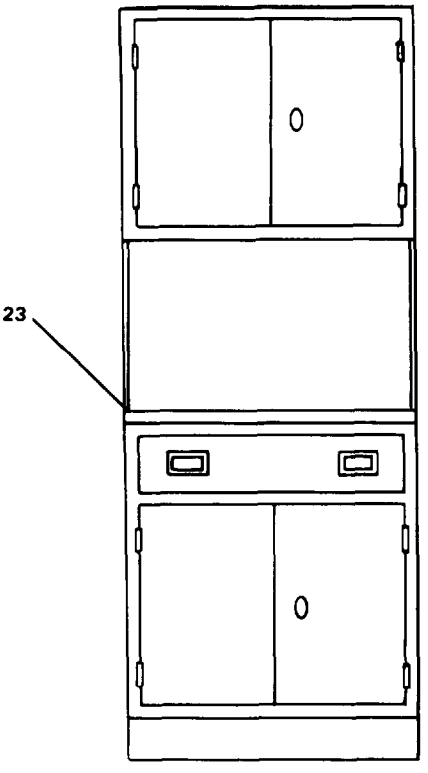

MEDICINE LOCKER

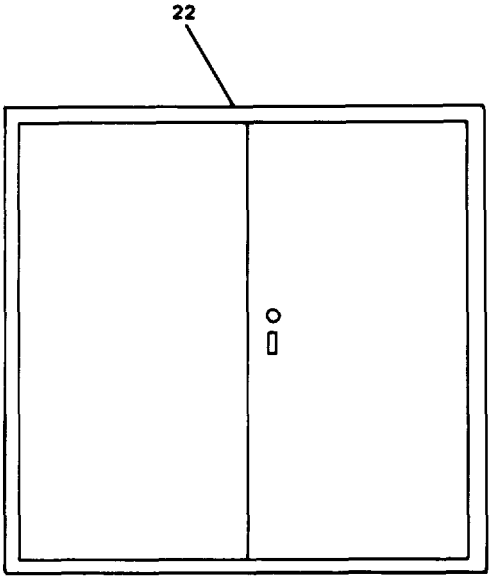

PORTABLE FLAG BAG LOCKER

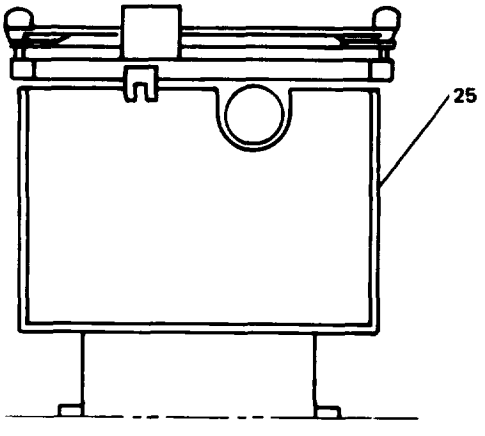

READY SERVICE AMMUNITION LOCKER

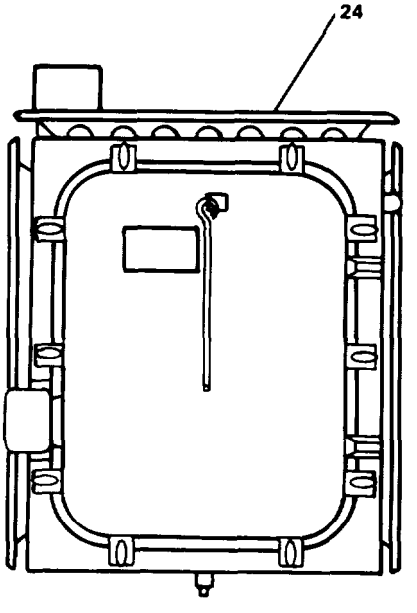

PYROTECHNICS LOCKER

006FF

FIGURE 321. Furniture/Fixtures Group (Sheet 6 of 14).

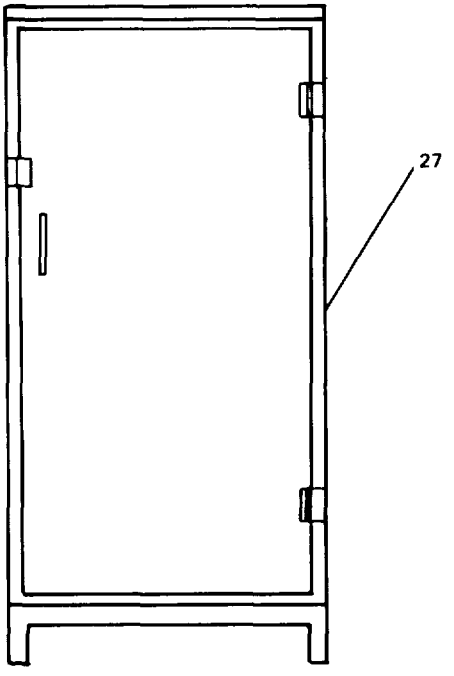

SMALL ARMS LOCKER

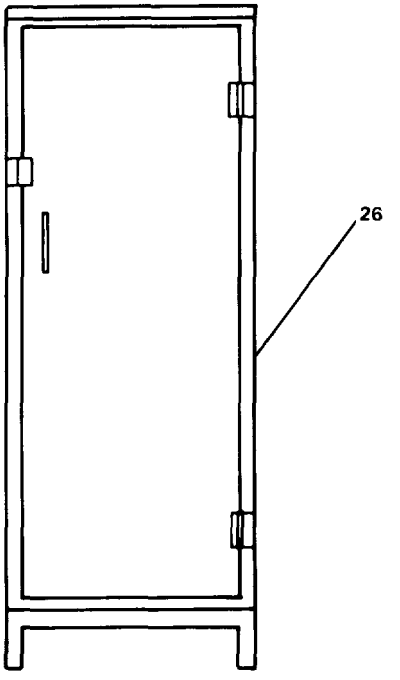

AMMUNITION LOCKER

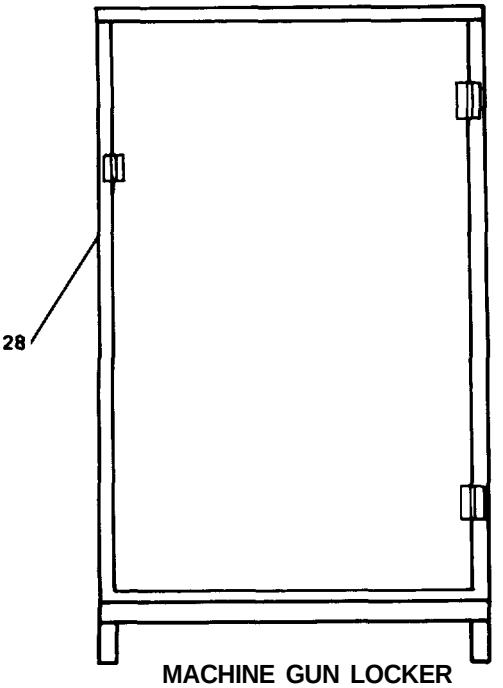

MACHINE GUN LOCKER

007FF

FIGURE 321. Furniture/Fixtures Group (Sheet 7 of 14).

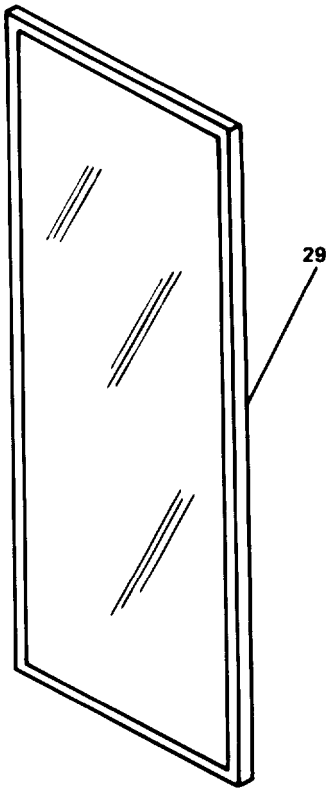

FULL LENGTH MIRROR

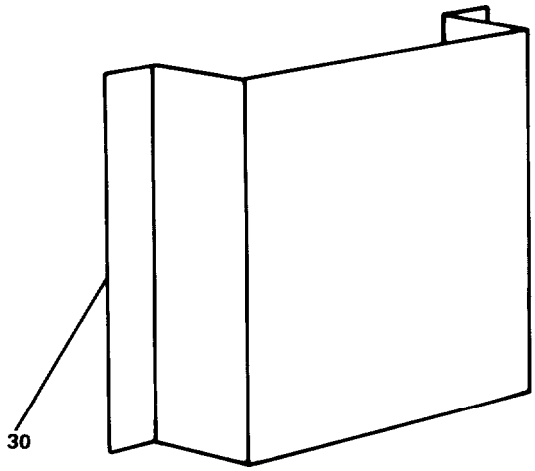

LIFE PRESERVER RACK

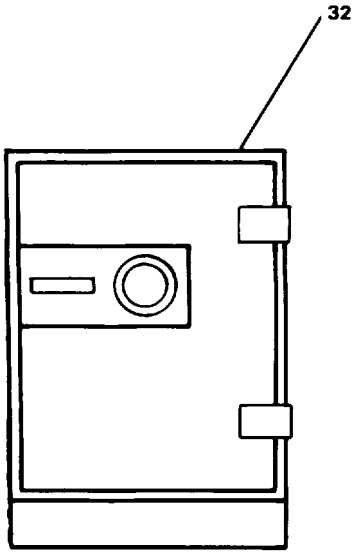

SAFE (TYPE 1433C)

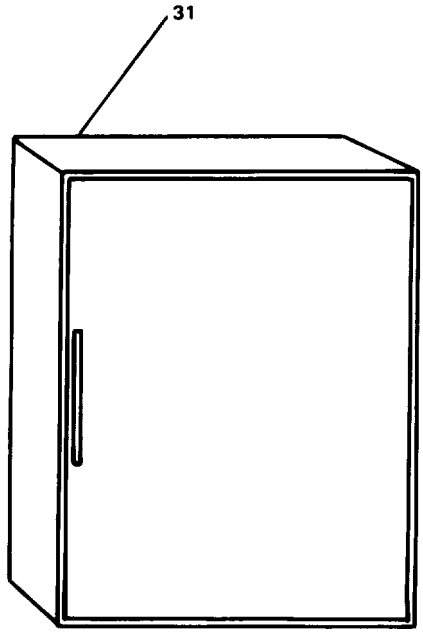

REFRIGERATOR

OO8FF

FIGURE 321. Furniture/Fixtures Group (Sheet 8 of 14).

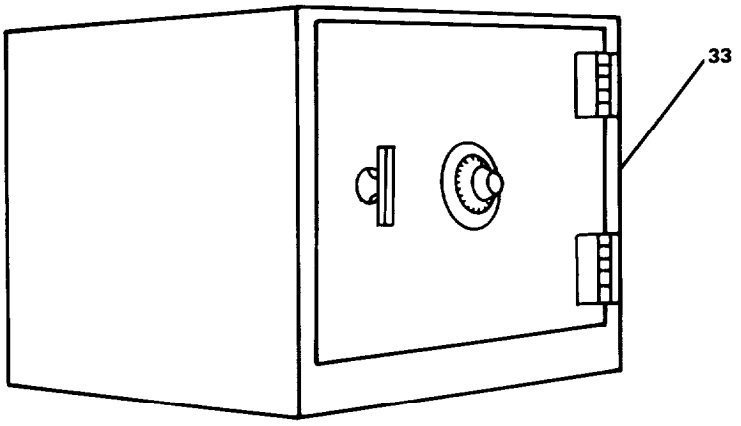

SAFE (TYPE7)

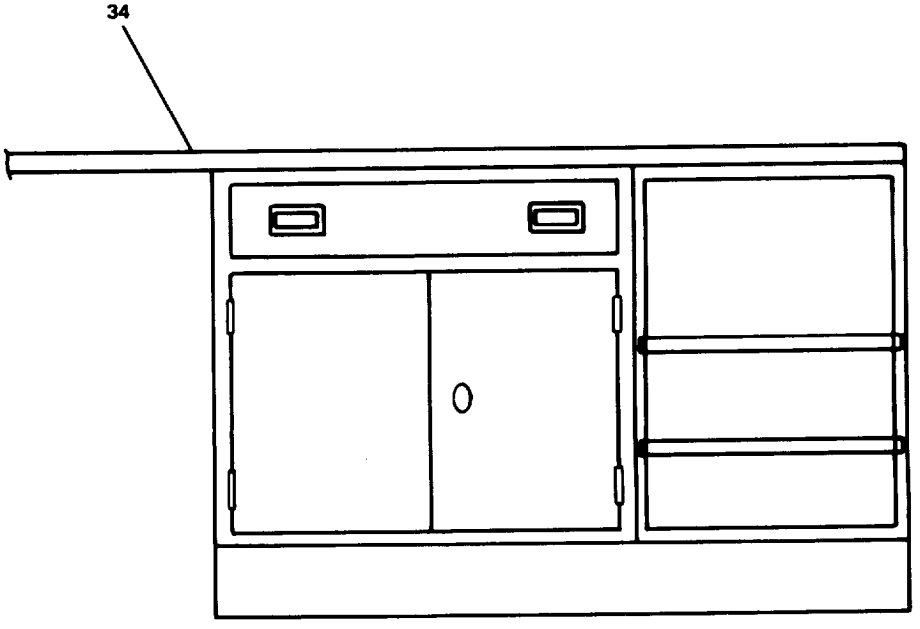

SERVER

FIGURE 321. Furniture/Fixtures Group (Sheet 9 of 14).

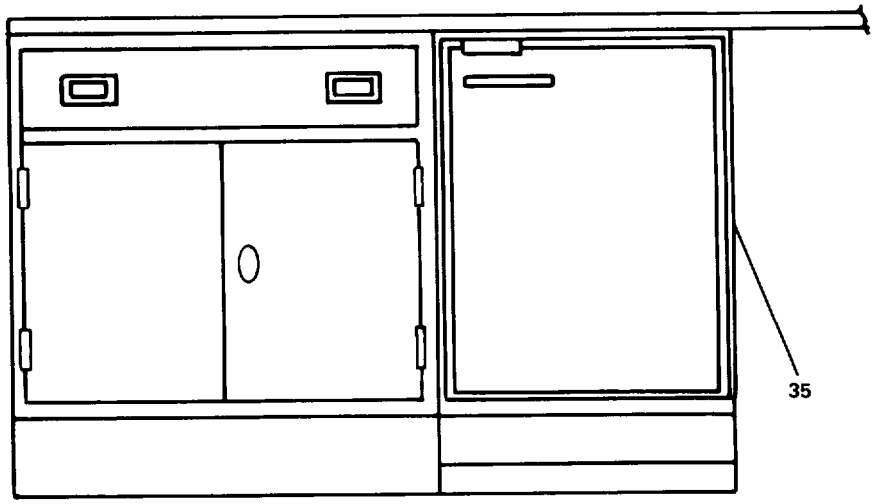

SIDEBOARD WITH REFRIGERATOR

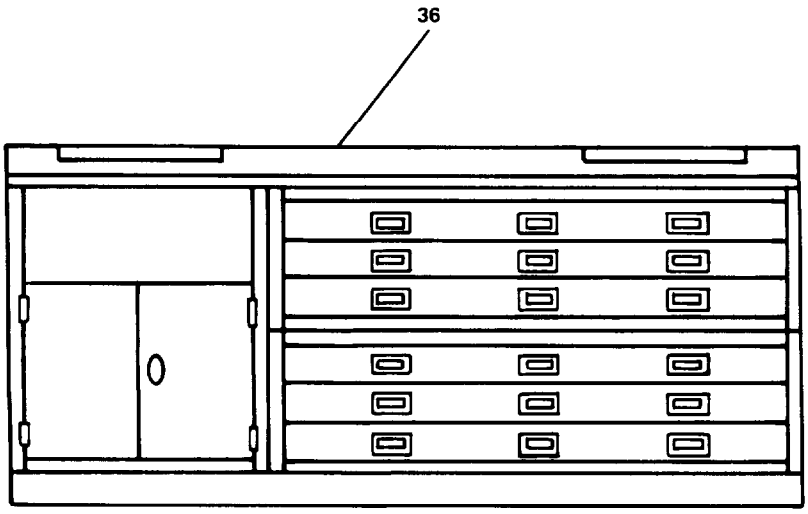

CHART TABLE WITH CHRONOMETER CASE

010FF

FIGURE 321. Furniture/Fixtures Group (Sheet 10 of 14).

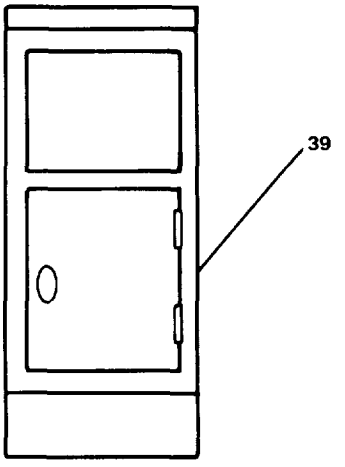

NIGHT TABLE

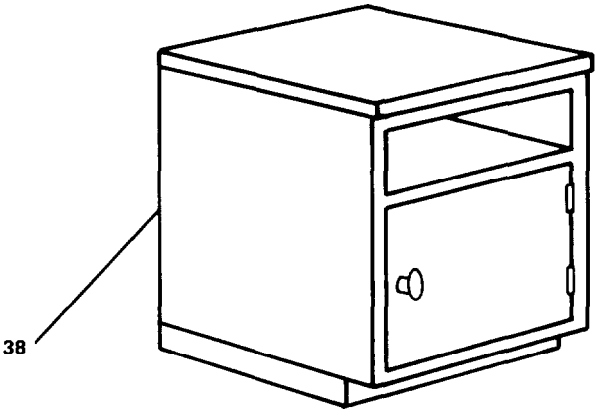

NIGHT TABLE

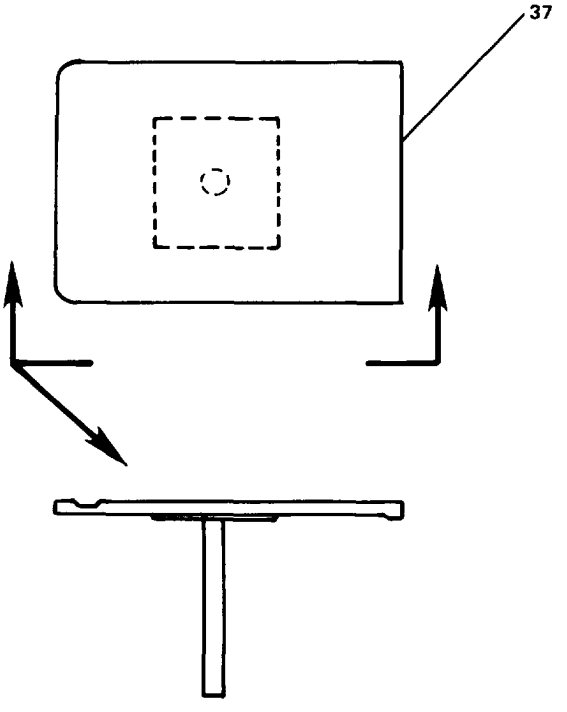

MESS TABLE

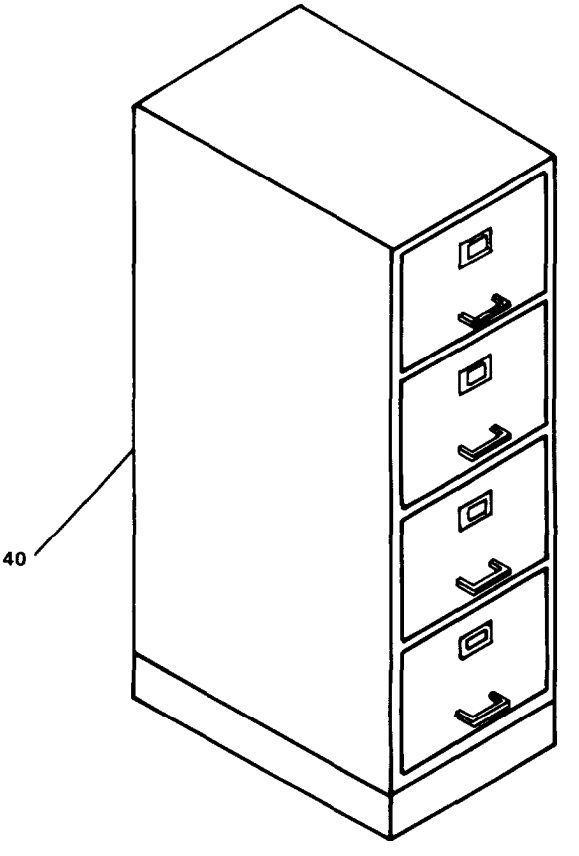

FILE CABINET O11FF

FIGURE 321. Furniture/Fixtures Group (Sheet 11 of 14).

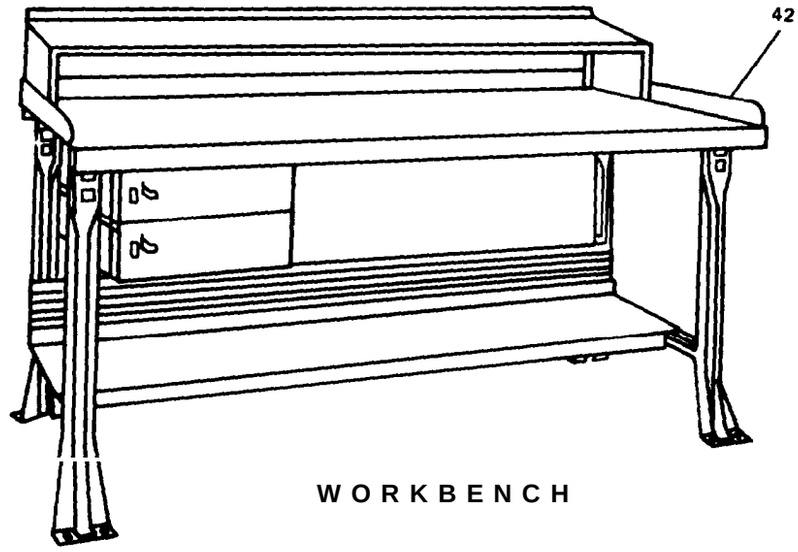

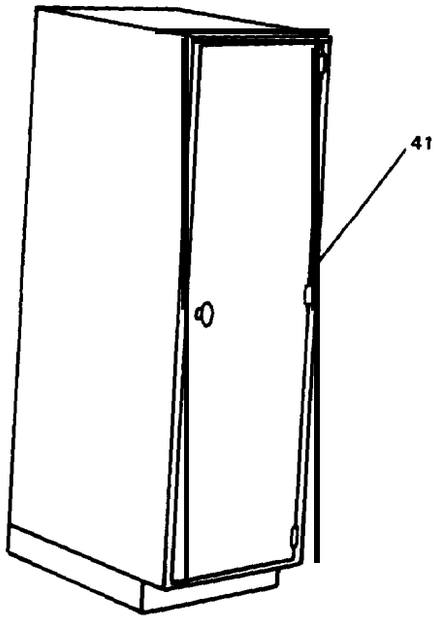

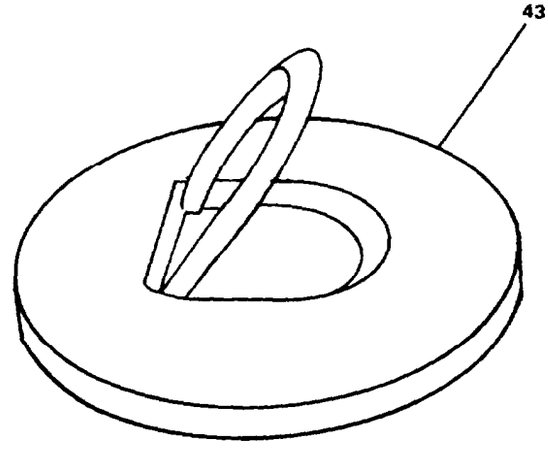

012FF

FIGURE 321. Furniture/Fixtures Group (Sheet 12 of 14).

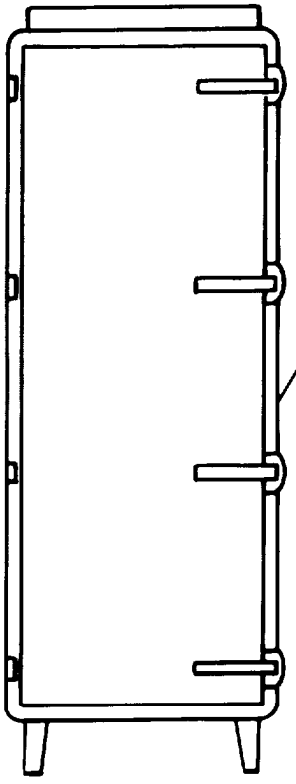

DAMAGE CONTROL LOCKER

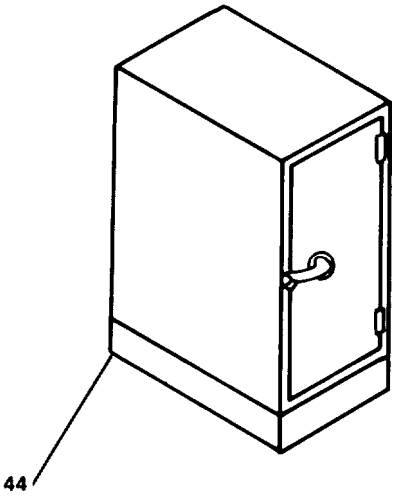

LOCKER

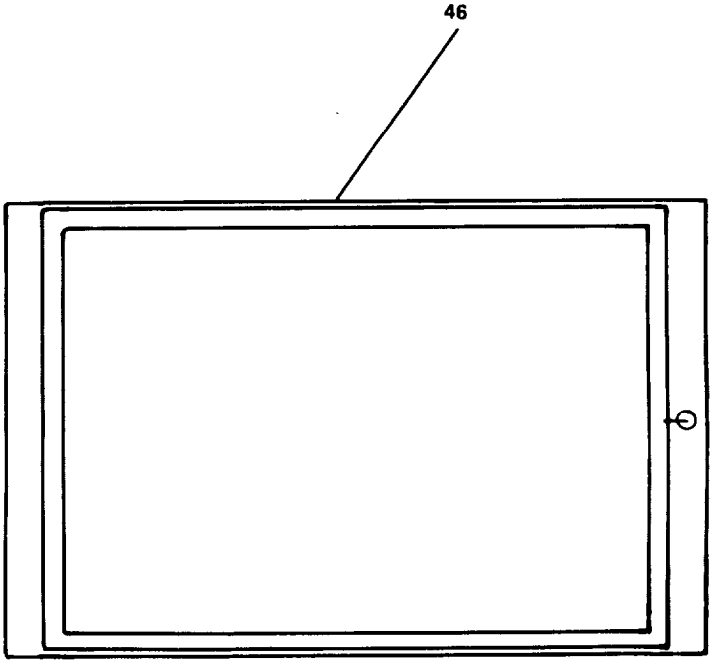

BULLETIN BOARD

013FF

FIGURE 321. Furniture/Fixtures Group (Sheet 13 of 14).

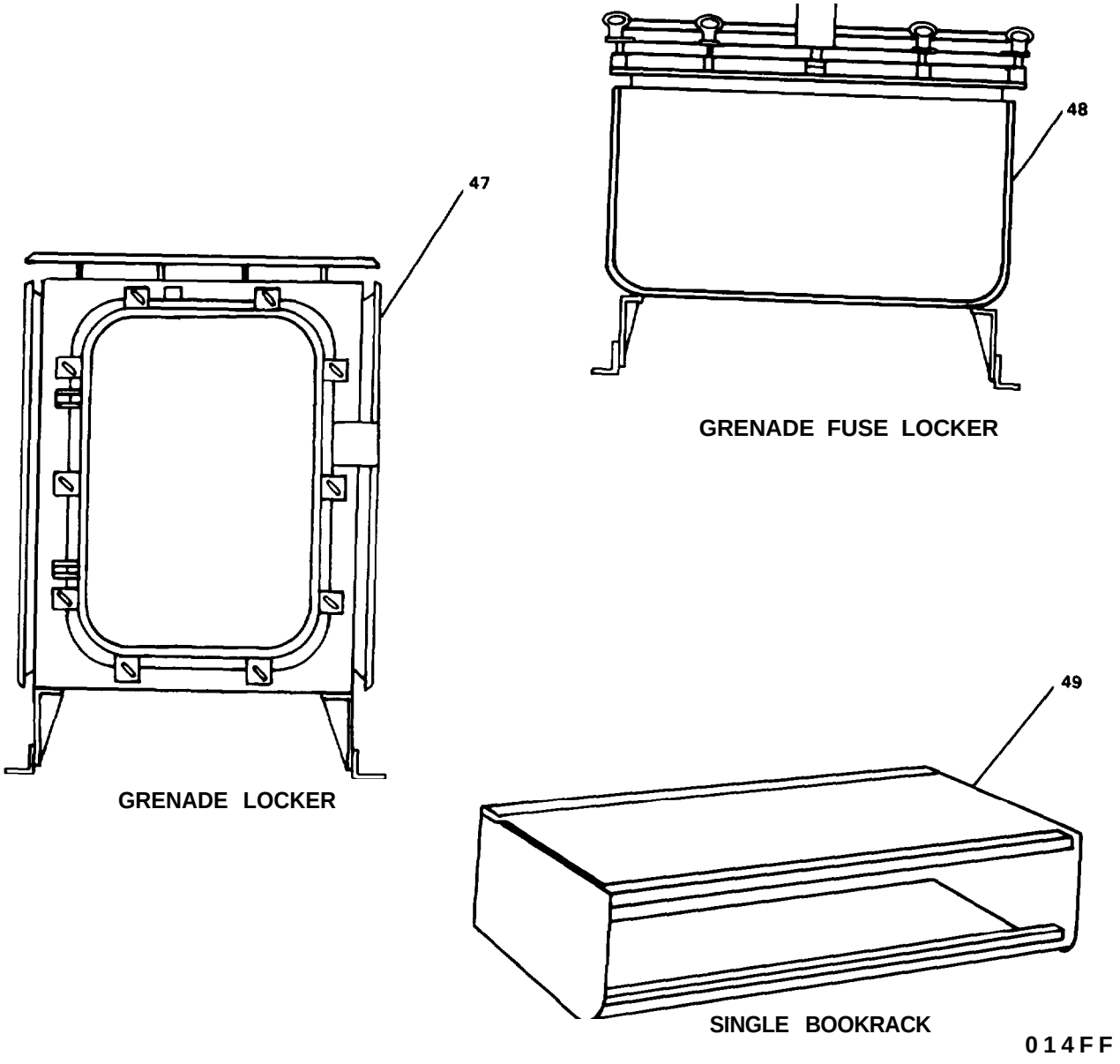

FIGURE 321. Furniture/Fixtures Group (Sheet 14 of 14).

(1) ITEM NO	(2) SMR CODE	(3) FSCM	(4) PART NUMBER	(5) DESCRIPTION AND USABLE ON CODES(UOC)	(6) QTY
				GROUP 18 BASIC CRAFT	
				FIG. 321 FURNITURE/FIXTURES GROUP	
	XC000	77408	8640030	.FURNITURE/FIXTURES	1
1	XDOZZ	00096	471-3 C	. . BERTH,SHIPBOARD	2
2	XDOZZ	OOO96	471-6A C	. . B E R T H , S H I P B O A R D	1
3	XDOZZ	00096	471-6 C	. . B E R T H , S H I P B O A R D	5
4	XDOZZ	00096	552-2 C	. . B E R T H , H O S P I T A L	1
5	XDOZZ	00096	246-10 C	. . BULLETIN BOARD	7
6	XDOZZ	00096	148-11 C	. . BOARD,RUDDER COURSE	1
7	XDOZZ	00096	148-12 C	. . BOARD,STATUS	1
8	XDOZZ	00096	84-1 C	. . BOOKCASE	1
9	XDOZZ	00096	30-5A C	. . BOOKRACK,DOUBLE	8
10	XDOZZ	00096	14-1-1 C	. . CABINET, COFFEE	1
11	XDOZZ	00096	14-5-12 C	. . C A B I N E T , K E Y	2
12	XDOZZ	00096	14-C C	. . CHEST OF DRAWERS	6
13	XDOZZ	00096	14-2 C	. . INSERT,WRITING	6
14	XDOZZ	00096	612-8 CG	. . C O N S O L E , E N T E R T A I N M E	1
15	XDOZZ	00096	SK239-2 C	. . DESK,LOG	1
16	XDOZZ	00096	164-4 C	. . DESK, FLAT TOP	2
17	XDOZZ	00096	527-14-3-1 N	. . LEAF UNIT,HINGED DA	1
18	XDOZZ	00096	E1792	. . LOCKER	1
19	XDOZZ	00096	207-3-2 C	. . LOCKER	1
20	XDOZZ	00096	207-1-2 C	. . LOCKER,BULKHEAD MOU	1
21	XDOZZ	00096	SK 9-N	. . LOCKER,WARDROBE	2
22	XDOZZ	00096	454-9 C	. . LOCKER,FLAG BAG,POR	1
23	XDOZZ	00096	444-12 C	. . LOCKER,MEDICINE	1
24	XDOZZ	00096	463 C	. . LOCKER,PYROTECHNICS	1
25	XDOZZ	00096	4210	. . LOCKER,AMMUNITI0N,R	2
26	XDOZZ	00096	7616	. . LOCKER,AMMUNITION	1
27	XDOZZ	00096	7618	. . LOCKER, SMALL ARMS	1
28	XDOZZ	00096	7621	. . LOCKER, MACHINE GUN	1
29	XDOZZ	00096	6-10P C	. . MIRROR, FULL LENGTH	2
30	XDOZZ	00096	351-11 C	. . RACK, LIFE PRESERVER	6
31	XDOZZ	00096	870-20 C	. . REFRIGERATOR	3
32	XDOZZ	00096	153-19 C	. . SAFE (TYPE 1433C)	1
33	XDOZZ	00096	331 N	. . SAFE (TYPE 7)	3
34	XDOZZ	00096	612-1 C	. . SERVER	1
35	XDOZZ	00096	612-16 C	. . SIDEBOARD	1
36	XDOZZ	00096	178-55-1 C	. . TABLE,CHART (WITH CHRONOMETER CASE)	1
37	XDOZZ	00096	66-5 C	. . TABLE,MESS	2
38	XDOZZ	00096	14-5 C	. . TABLE,NIGHT	2
39	XDOZZ	00096	14-5 C MOD	. . TABLE,NIGHT	1
40	XDOZZ	00096	126 C	. . CABINET,FILE	1
41	XDOZZ	00096	25-4 C	. . WARDROBE	11
42	XDOZZ	00096	210-24 C	. . WORKBENCH	1
43	XDOZZ	00096	802-5	. . PAD,DECK	32
44	XDOZZ	00096	207-3-3 C	. . LOCKER	1
45	XDOZZ	00096	351-14 N	. . LOCKER,DAMAGE CONTR	1
46	XDOZZ	00096	148-5 N	. . BULLETIN BOARD	2

(1) ITEM NO	(2) SMR CODE	(3) FSCM	(4) PART NUMBER	(5) DESCRIPTION AND USABLE ON CODES(UOC)	(6) QTY
47	XDOZZ	00096	3770	..LOCKER,GRENADE	1
48	XDOZZ	00096	3771	..LOCKER,GRENADE FUSE	1
49	XDOZZ	00096	30-5 C	..BOOKRACK,SINGLE	2

END OF FIGURE

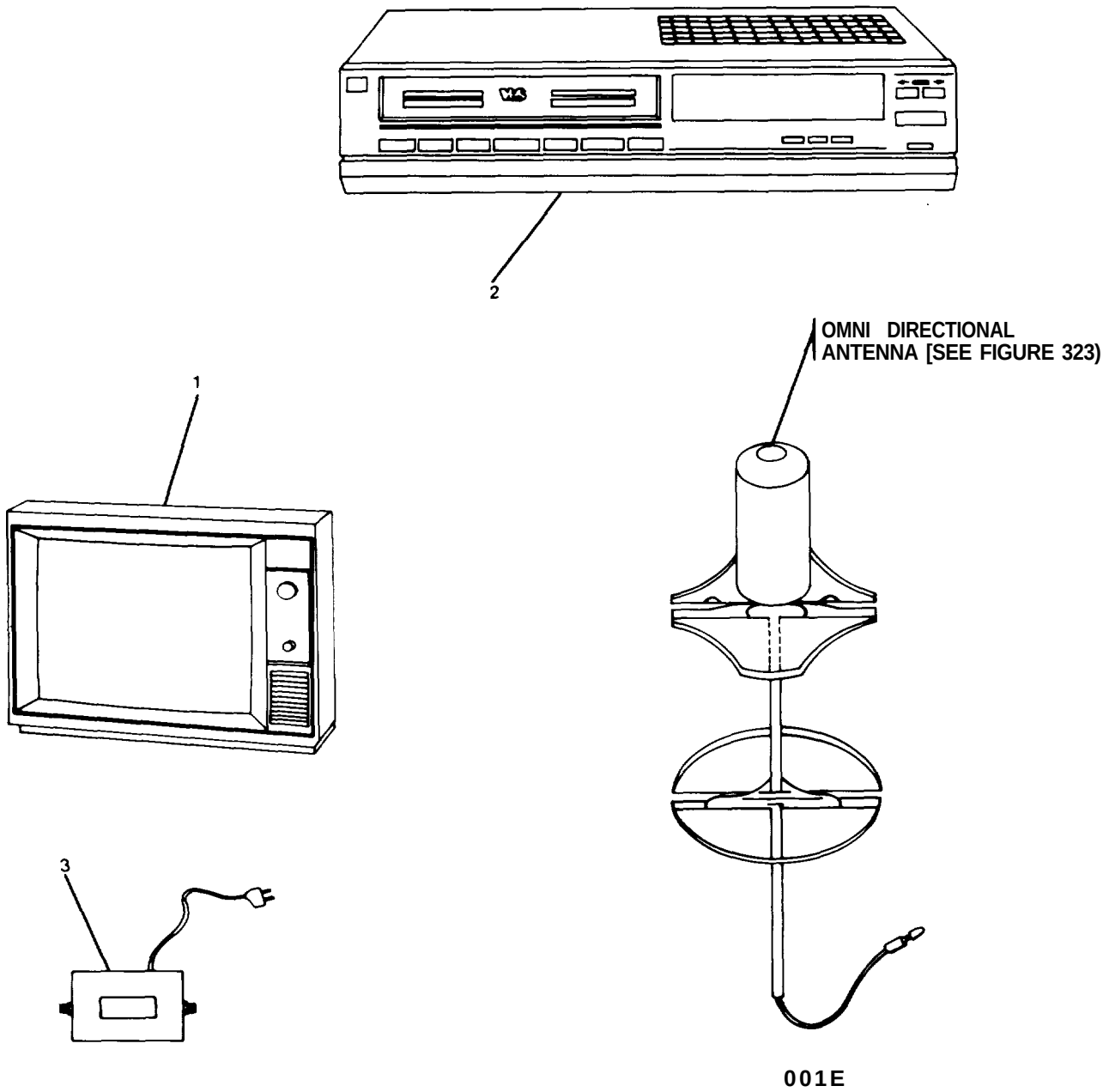

FIGURE 322. Entertainment System.

(1) ITEM NO	(2) SMR CODE	(3) FSCM	(4) PART NUMBER	(5) DESCRIPTION AND USABLE ON CODES(UOC)	(6) QTY
				GROUP 18 BASIC CRAFT	
				FIG. 322 ENTERTAINMENT SYSTEM	
	XC000	77408	8435005	.ENTERTAINMENT SYSTE	1
1	PDOZZ	54590	FMR490D	. . TELEVISION SET	1
2	PDOZZ	53800	53293	. . R E C O R D E R , V I D E O	1
3	PDOZZ	01113	MODEL 4320	. . AMPLIFIER,VIDEO	1

END OF FIGURE

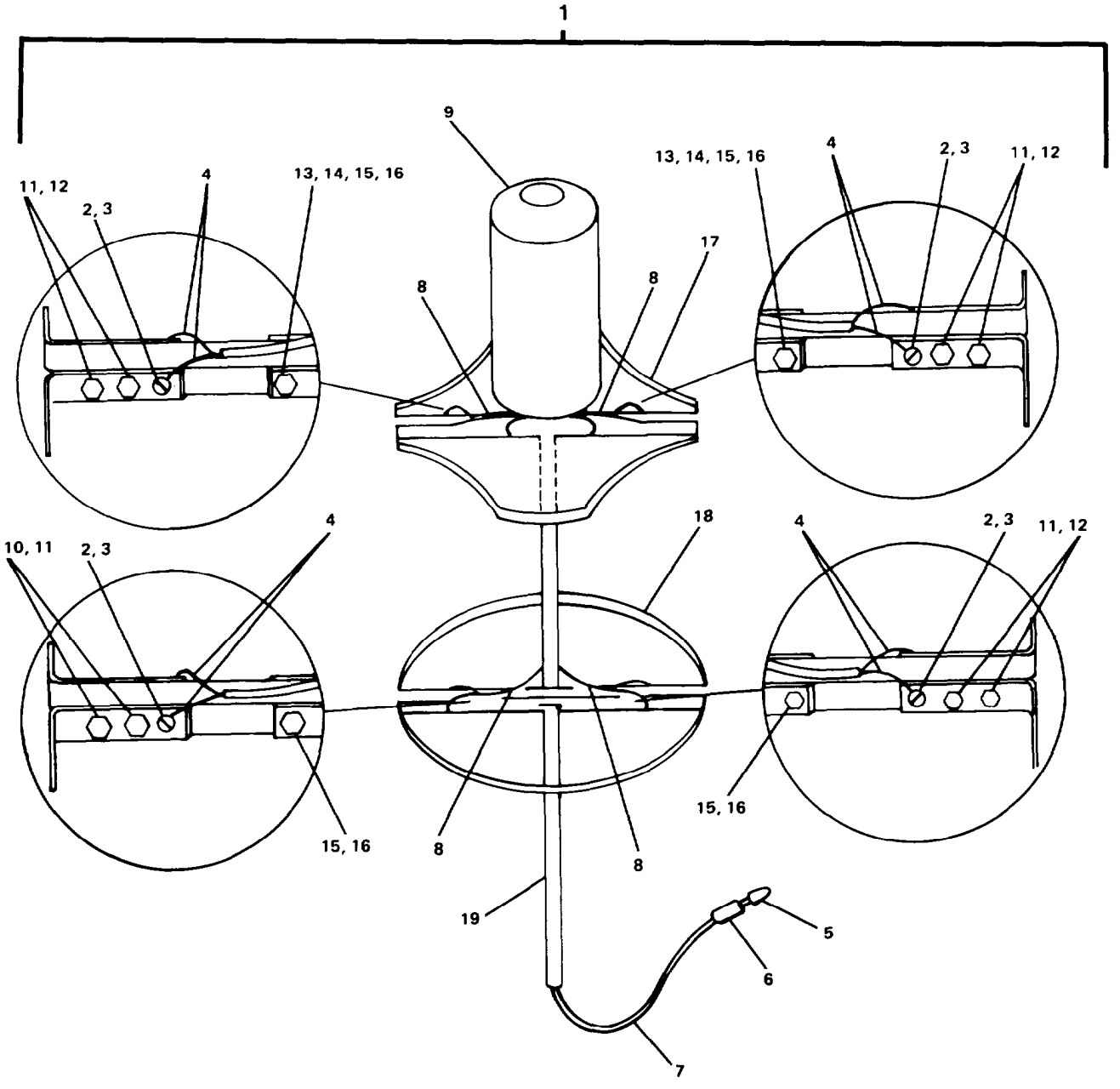

OO2E

FIGURE 323. Omni Directional Television Antenna.

(1) ITEM NO	(2) SMR CODE	(3) FSCM	(4) PART NUMBER	(5) DESCRIPTION AND USABLE ON CODES(UOC)	(6) QTY
				GROUP 18 BASIC CRAFT	
				FIG. 323 OMNI DIRECTIONAL TELEVISION ANTENNA	
1	PBOOO	82692	MR-106-36D	. . ANTENNA	1
2	XDOZZ	82692	50916	. . . NUT, PLAIN, HEXAGON (PURCHASED AS QUANTITY OF SIXTEEN)	8
3	XDOZZ	82692	50917	. . . WASHER, LOCK (PURCHASED AS QUANTITY OF SIXTEEN)	8
4	XDOZZ	82692	50908	. . . LUG,TERMINAL (PURCHASED AS QUANTITY OF EIGHT)	8
5	PAOZZ	82692	50903	. . . CONNECTOR ASSEMBLY	1
6	PAOZZ	82692	600009-39E-8	. . . B O O T , D U S T A N D M O I S T	1
7	PAOZZ	82692	RG-11A/U	. . . C A B L E , R A D I O F R E Q U E N	V
8	XDOZZ	82692	50914	. . . STUD, WHITE NYLON (PURCHASED AS QUANTITY OF SIXTEEN)	8
9	PAOZZ	82692	600009-39E-1	. . . COVER,ANTENNA	1
10	XDOZZ	82692	50912	. . . NUT, PLAIN, HEXAGON (RED NYLON) (PURCHASED AS QUANTITY OF FOUR)	6
11	XDOZZ	82692	600009-39E-11	. . . B O L T , M A C H I N E (RED NYLON)	14
12	XDOZZ	82692	50911	. . . NUT,PLAIN,HEXAGON (BLACK NYLON)(PURCHASED AS QUANTITY OF F O U R)	6
13	XDOZZ	82692	50909	. . . NUT, PLAIN, HEXAGON (PURCHASED AS QUANTITY OF SIXTEEN)	12
14	XDOZZ	82692	50910	. . . WASHER, LOCK (PURCHASED AS QUANTITY OF SIXTEEN)	12
15	XDOZZ	82692	50915	. . . SCREW, MACHINE (PURCHASED AS QUANTITY OF EIGHT)	12
16	PAOZZ	82692	50924	. . . INSULATOR, SPACER (PURCHASED AS QUANTITY OF EIGHT)	6
17	PAOZZ	82692	50921	. . . ANTENNA ELEMENT (PURCHASED AS QUANTITY OF FOUR)	1
18	PAOZZ	82692	50922	. . . ANTENNA ELEMENT (PURCHASED AS K I T O F F O U R)	1
19	XDOZZ	82692	600009-39E-4	. . . PIPE, METALLIC	V

END OF FIGURE

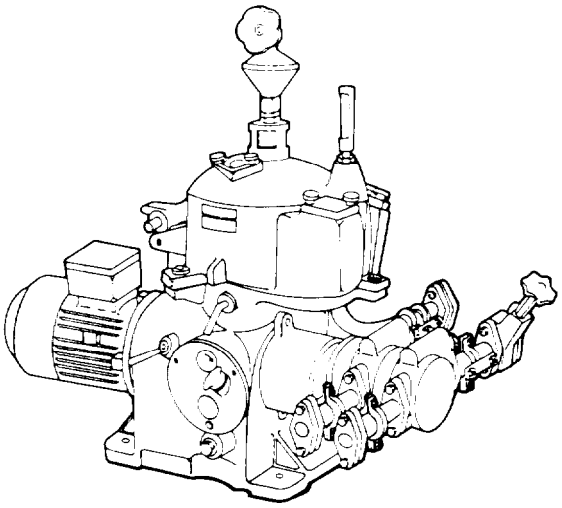

LUBE OIL PURIFIER

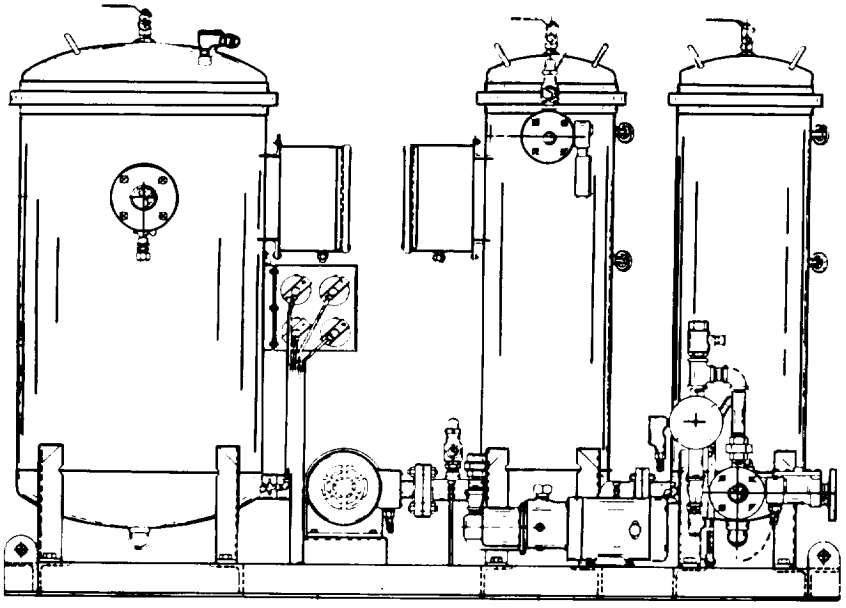

OIL/WATER SEPARATOR

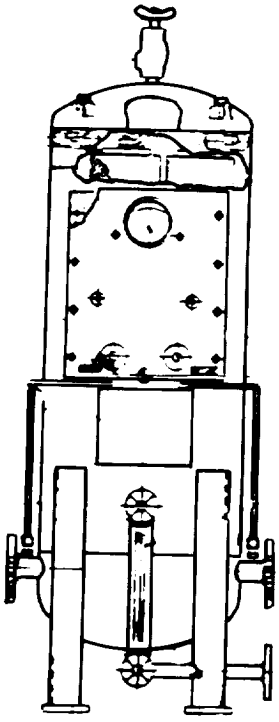

DIESEL FUEL OIL
FILTER/SEPARATOR

001SP

FIGURE 324. Purifiers and Separators.

(1) ITEM NO	(2) SMR CODE	(3) FSCM	(4) PART NUMBER	(5) DESCRIPTION AND USABLE ON CODES(UOC)	(6) QTY
				GROUP 18 BASIC CRAFT	
				FIG. 324 PURIFIERS AND SEPARATORS	
1	XCFHH	77408	8262011/8529025	.PURIFIER/SEPARATORS	1

END OF FIGURE

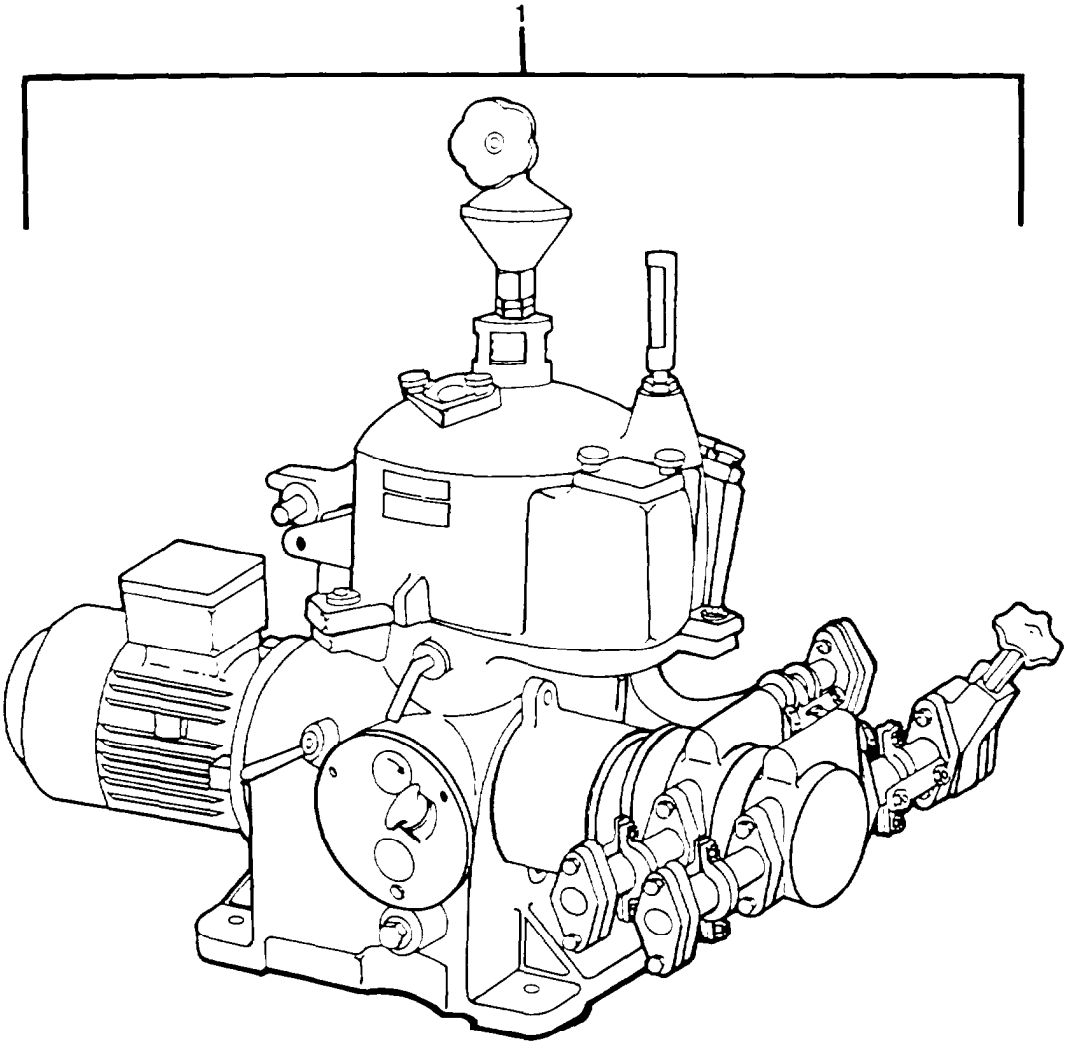

002SP

FIGURE 325. Lube Oil Purifier.

(1) ITEM NO	(2) SMR CODE	(3) FSCM	(4) PART NUMBER	(5) DESCRIPTION AND USABLE ON CODES(UOC)	(6) QTY
				GROUP 18 BASIC CRAFT	
				FIG. 325 LUBE OIL PURIFIER	
1	XDFHH	80871	OTB2-00-066	..PURIFIER,LUBE OIL	1

END OF FIGURE

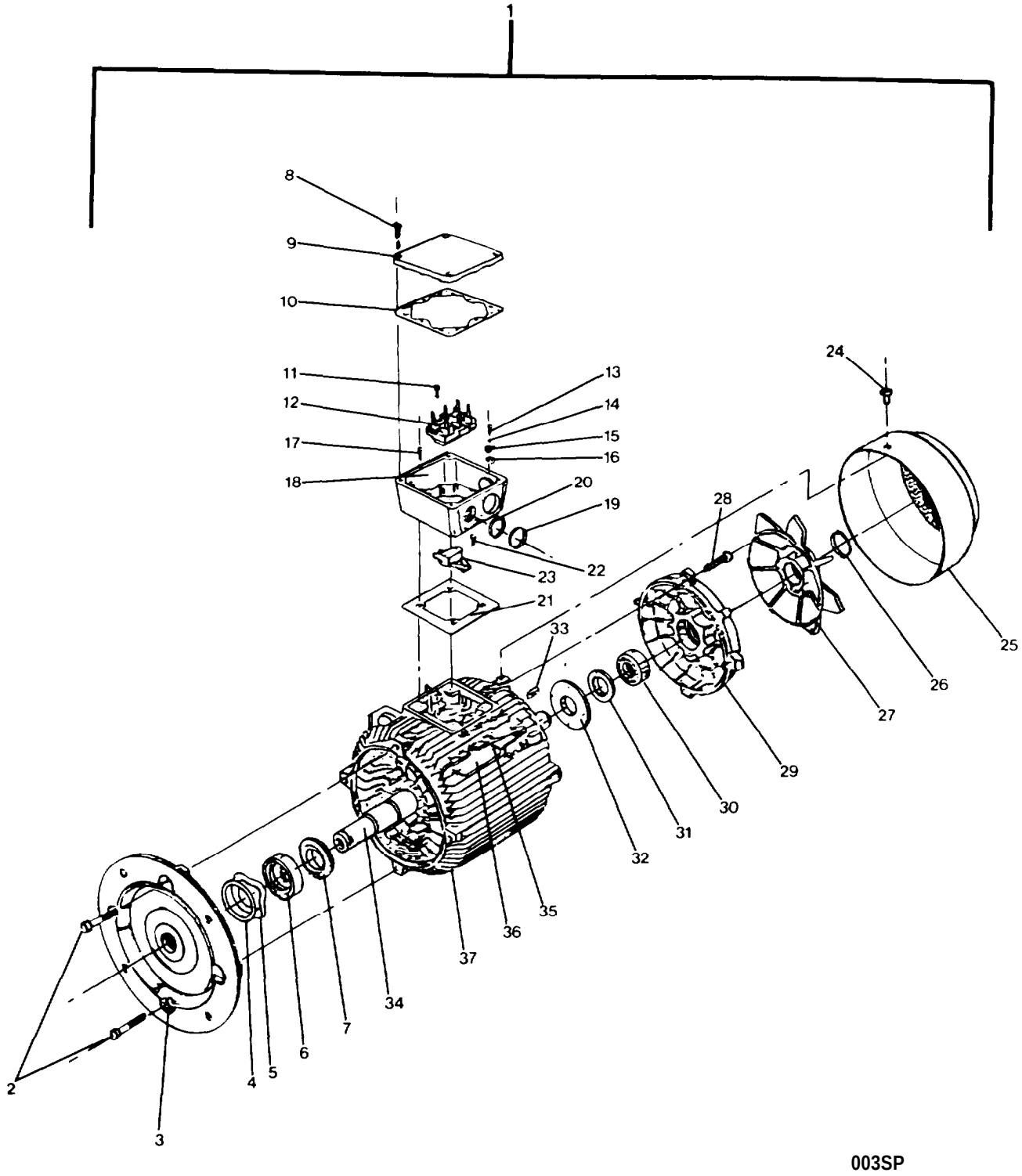

FIGURE 326. Alternating Current Motor.

(1) ITEM NO	(2) SMR CODE	(3) FSCM	(4) PART NUMBER	(5) DESCRIPTION AND USABLE ON CODES(UOC)	(6) QTY
				GROUP 18 BASIC CRAFT	
				FIG. 326 ALTERNATING CURRENT MOTOR	
1	PBOHH	80871	5989-4340-579	...MOTOR,ALTERNATING C	1
2	XDHZZ	80871	1.48	....SCREW,MACHINE	4
3	XDHZZ	80871	1.40	....SHIELD,END	1
4	XDHZZ	80871	1.56	....RING,EQUALIZING	1
5	PAHZZ	80871	1.58	....WASHER,SPRING	1
6	PAHZZ	80871	1.60	....BEARING,BALL,ANNULA	1
7	XDHZZ	80871	1.74	....RING,COX	1
8	XDHZZ	80871	5.89	....SCREW,MACHINE	4
9	XDHZZ	80871	5.84	....COVER, TERMINAL BOX	1
10	PAHZZ	80871	5.83	....GASKET	1
11	XDHZZ	80871	5.19	....SCREW,MACHINE	2
12	XDHZZ	80871	5.10	....BOARD,TERMINAL	1
13	XDHZZ	80871	5.79	....SCREW,MACHINE	2
14	XDHZZ	80871	5.78	....WASHER,LOCK	1
15	XDHZZ	80871	5.71	....CLIP,TERMINAL	1
16	XDHZZ	80871	5.70	....CLIP,TERMINAL	1
17	XDHZZ	80871	5.49	....SCREW,MACHINE	4
18	XDHZZ	80871	5.44	.... BOX,TERMINAL	1
19	XDHZZ	80871	5.66	.... PLUG	1
20	XDHZZ	80871	5.67	....GASKET	1
21	PAHZZ	80871	5.03	....GASKET	1
22	XDHZZ	80871	5.09	.... SCREW,MACHINE	1
23	XDHZZ	80871	5.02	.... LINK	1
24	XDHZZ	80871	7.49	.... SCREW,MACHINE	1
25	XDHZZ	80871	7.40	.... COWL,FAN	1
26	PAHZZ	80871	7.12	....RING,RETAINING	1
27	XDHZZ	80871	7.04	....FAN,EXTERNAL	1
28	XDHZZ	80871	6.29	.... SCREW,MACHINE	4
29	XDHZZ	80871	6.20	.... SHIELD,END	1
30	PAHZZ	80871	6.10	....BEARING,BALL,ANNULA	1
31	XDHZZ	80871	6.74	....RING,COX	1
32	XDHZZ	80871	6.02	....CAP,INNER BEARING	1
33	PAHZZ	80871	3.88	....KEY,MACHINE	1
34	PAHZZ	80871	3.00	.... ROTOR,MOTOR	1
35	XDHZZ	80871	4.19	....SCREW,MACHINE	2
36	XDHZZ	80871	4.18	.... PLATE,RATING	1
37	PAHZZ	80871	4.00	....STATOR,MOTOR	1

END OF FIGURE

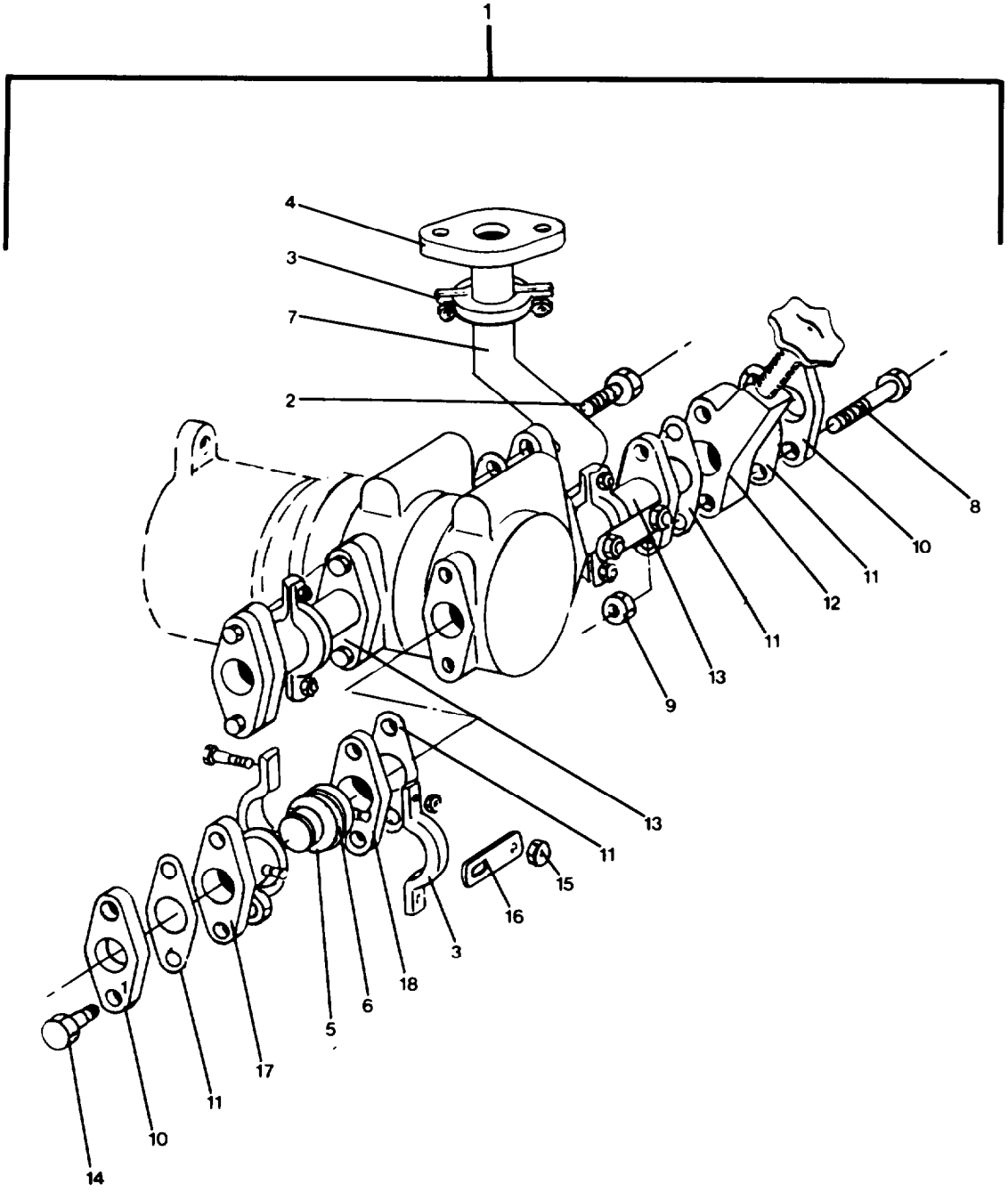

004SP

FIGURE 327. Pump Connection Assembly.

(1) ITEM NO	(2) SMR CODE	(3) FSCM	(4) PART NUMBER	(5) DESCRIPTION AND USABLE ON CODES(UOC)	(6) QTY
				GROUP 18 BASIC CRAFT	
				FIG. 327 PUMP CONNECTION ASSEMBLY	
1	XDOOO	80871	2125-1159-060	...PUMP CONNECTION ASS	1
2	XDOZZ	80871	0019-6790-150	....SCREW,MACHINE	8
3	XDOZZ	80871	0018-4841-020	....CLAMP	8
4	XDOZZ	80871	2125-2831-010	....JOINT,EXPANSION	1
5	PAOZZ	80871	0018-4841-750	....GASKET	8
6	XDOZZ	80871	0018-4841-010	....RETAINER,GASKET	8
7	XDOZZ	80871	2125-1444-030	....PIPE,METALLIC	1
8	XDOZZ	80871	0019-6540-150	....SCREW,MACHINE	2
9	XDOZZ	80871	0013-0280-150	....NUT,PLAIN,HEXAGON	6
10	XDOZZ	80871	0001-0139-000	....FLANGE	3
11	PAOZZ	80871	0004-5445-740	....GASKET	8
12	XDOZZ	80871	0018-1683-000	....VALVE,PRESET	1
13	XDOZZ	80871	2125-2832-000	....JOINT,EXPANSION	3
14	XDOZZ	80871	0019-6972-150	....SCREW,MACHINE	4
15	XDOZZ	80871	0013-0291-150	....NUT,PLAIN,HEXAGON	6
16	XDOZZ	80871	2178-1108-000	....PLATE	3
17	XDOZZ	80871	2125-2831-000	....JOINT,EXPANSION	3
18	XDOZZ	80871	2125-2831-020	....JOINT,EXPANSION	3

END OF FIGURE

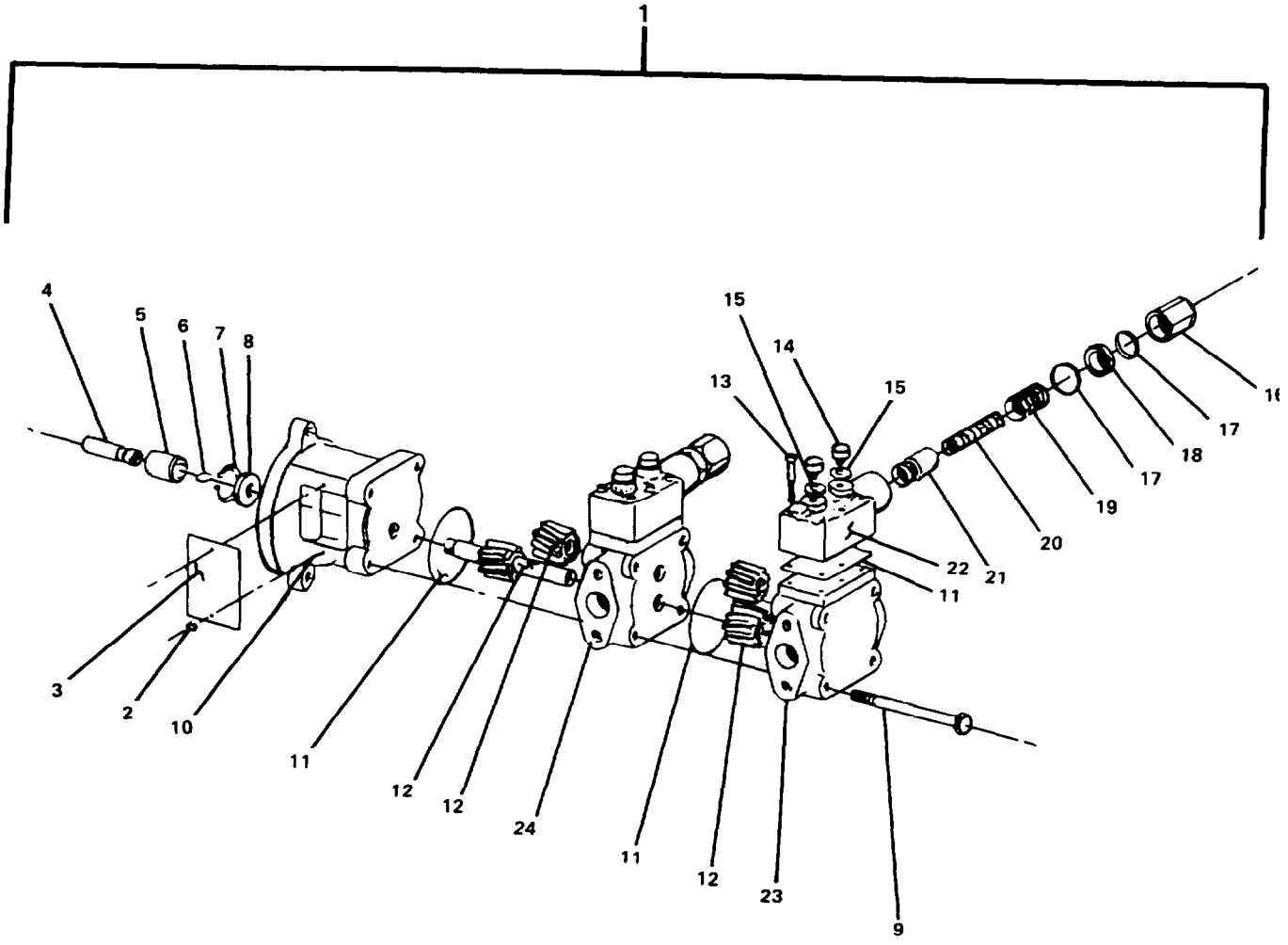

005SP

FIGURE 328. Double Gear Pump.

(1) ITEM NO	(2) SMR CODE	(3) FSCM	(4) PART NUMBER	(5) DESCRIPTION AND USABLE ON CODES(UOC)	(6) QTY
				GROUP 18 BASIC CRAFT	
				FIG. 328 DOUBLE GEAR PUMP	
1	PBOFF	80871	8054-9200-060	. . . PUMP,ROTARY	1
2	XDFZZ	80871	357	. . . . SCREW,MACHINE	2
3	XDFZZ	80871	356	. . . . C O V E R	1
4	PAFZZ	80871	0019-3973-060	. . . . SETSCREW	1
5	PAFZZ	80871	2125-1074-000	. . . . COUPLING,SHAFT,RIGI	1
6	PAFZZ	80871	2125-3438-000	. . . . KEY,MACHINE	1
7	PAFZZ	80871	354	. . . . RING,RETAINING	1
8	XDFZZ	80871	0004-5949-830	. . . . R I N G , S E A L I N G	1
9	XDFZZ	80871	0019-6526-150	. . . . SCREW,MACHINE	4
10	XDFZZ	80871	358	. . . . COVER,DRIVE	1
11	PAFZZ	80871	8054-9125-010	. . . . G A S K E T	1
12	PAFZZ	80871	8054-9415-070	. . . . GEAR SET, HELICAL, MA	1
13	XDFZZ	80871	0019-6113-150	. . . . SCREW,MACHINE	12
14	XDFZZ	80871	371	. . . . P L U G , S C R E W	2
15	PAFZZ	80871	0007-1792-550	. . . . GASKET	2
16	XDFZZ	80871	378	. . . . NUT,CAP	2
17	PAFZZ	80871	376	. . . . GASKET	4
18	XDFZZ	80871	377	. . . . N U T , L O C K	2
19	PAFZZ	80871	375	. . . . S P I N D L E , S A F E T Y V A L V	2
20	PAFZZ	80871	374	. . . . S P R I N G , C Y L I N D R I C A L	2
21	PAFZZ	80871	373	. . . . P I S T O N , V A L V E	2
22	XDFZZ	80871	372	. . . . HOUSING,RELIEF VALV	2
23	XDFZZ	80871	367	. . . . H O U S I N G , G E A R	1
24	XDFZZ	80871	366	. . . . HOUSING,GEAR	1

END OF FIGURE

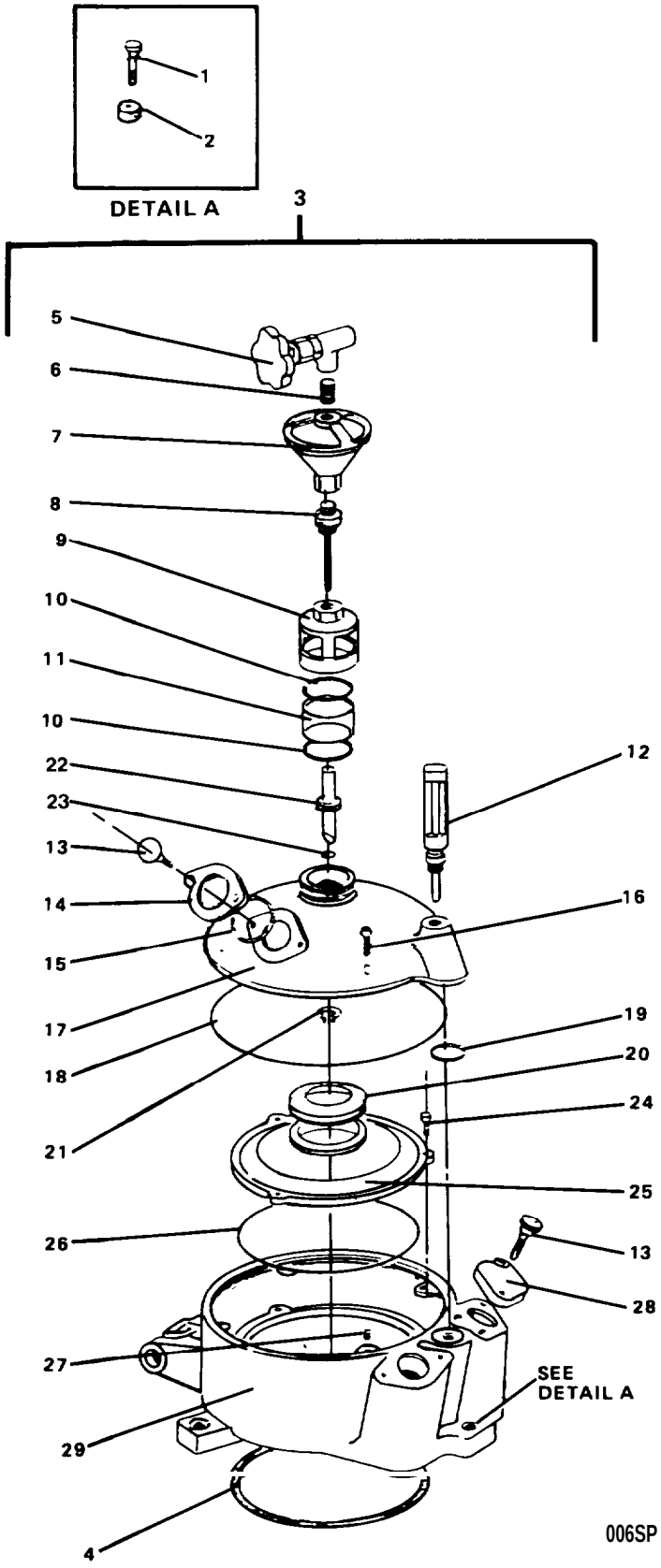

FIGURE 329. Hood Assembly.

(1) ITEM NO	(2) SMR CODE	(3) FSCM	(4) PART NUMBER	(5) DESCRIPTION AND USABLE ON CODES(UOC)	(6) QTY
				GROUP 18 BASIC CRAFT	
				FIG. 329 HOOD ASSEMBLY	
1	XDOZZ	80871	0019-0235-150	...SCREW,HEXAGON HEAD	3
2	XDOZZ	80871	0019-0805-000	...SLEEVE,THREADED	3
3	PBOOO	80871	2125-8800-000	...COVER,ACCESS	1
4	PAOZZ	80871	0004-2361-758	....PACKING,PREFORMED	1
5	PAOZZ	80871	0018-1676-600	....VALVE,ANGLE	1
6	XDOZZ	80871	0018-0971-050	....NIPPLE,PIPE	1
7	XDOZZ	80871	0018-1701-280	....FUNNEL	1
8	XDOZZ	80871	2160-8768-000	....PIPE,INLET	1
9	XDOZZ	80871	2160-8817-000	....HOUSING	1
10	PAOZZ	80871	0004-1917-740	....PACKING,PREFORMED	2
11	PAOZZ	80871	0001-0104-820	....INDICATOR,SIGHT,LIQ	1
12	PAOZZ	80871	0001-0326-280	....THERMOMETER,SELF-IN	1
13	XDOZZ	80871	0019-4547-090	....SCREW,KNURLED	6
14	XDOZZ	80871	2160-8850-000	....COVER,INSPECTION	1
15	PAOZZ	80871	0007-2124-750	....PACKING,PREFORMED	1
16	XDOZZ	80871	0019-6125-150	....SCREW,SOCKET HEAD	4
17	XDOZZ	80871	2125-8809-000	....COVER,HOOD	1
18	PAOZZ	80871	0007-2572-750	....GASKET	1
19	PAOZZ	80871	0007-2387-750	....GASKET	1
20	PAOZZ	80871	0004-5811-750	....SEAL,PLAIN	1
21	PAOZZ	80871	0026-5859-170	....RING,RETAINING	1
22	XDOZZ	80871	2125-7712-000	....TUBE,INLET	1
23	PAOZZ	80871	0007-2926-750	....GASKET	1
24	XDOZZ	80871	0019-6903-150	....SCREW,MACHINE	3
25	XDOZZ	80871	2125-8811-000	....BOTTOM,OIL CHANGER	1
26	PAOZZ	80871	0007-2560-750	....PACKING,PREFORMED	1
27	XDOZZ	80871	0019-1131-000	....BUSHING	11
28	XDOZZ	80871	2125-8851-000	....COVER,INSPECTION	2
29	XDOZZ	80871	2125-8801-000	....HOOD,LOWER SECTION	1

END OF FIGURE

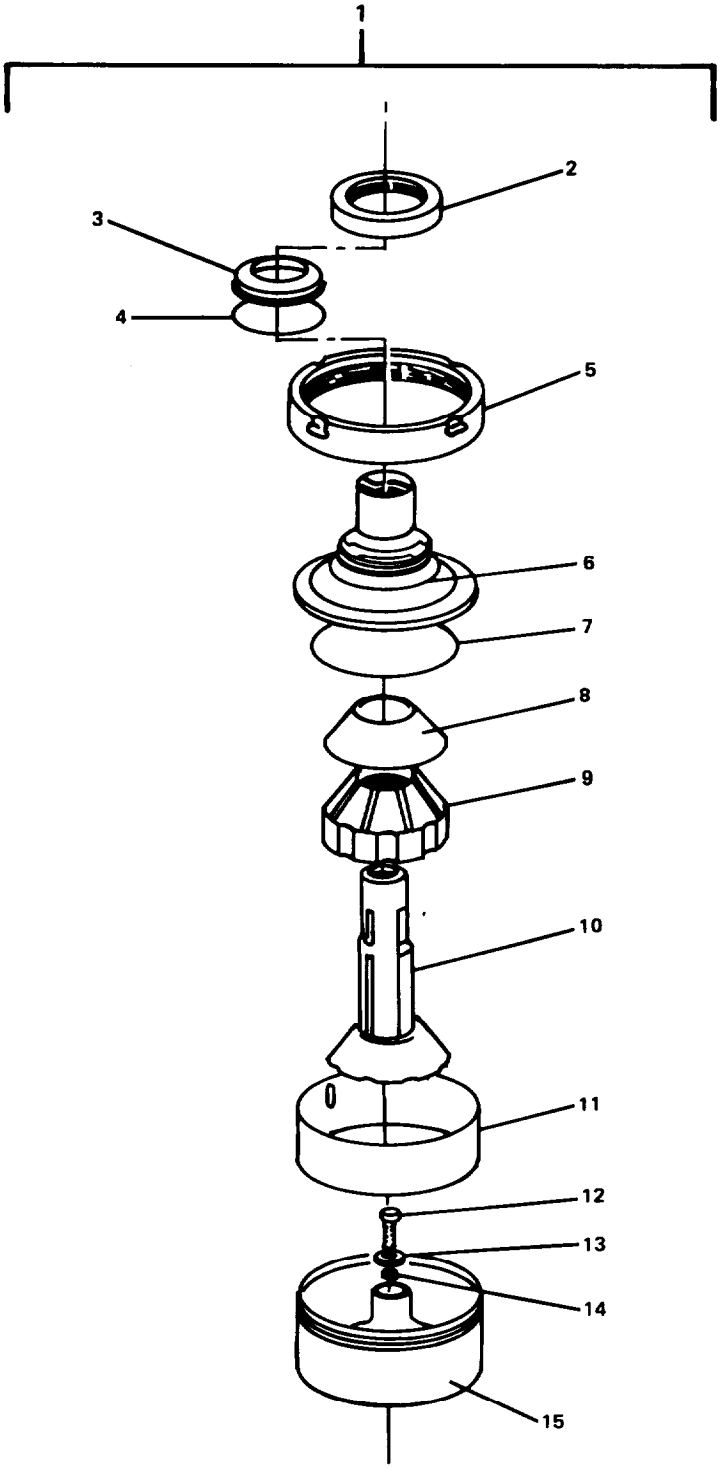

007SP

FIGURE 330. Bowl Assembly.

(1) ITEM NO	(2) SMR CODE	(3) FSCM	(4) PART NUMBER	(5) DESCRIPTION AND USABLE ON CODES(UOC)	(6) QTY
				GROUP 18 BASIC CRAFT	
				FIG. 330 BOWL ASSEMBLY	
1	PBFHH	80871	2125-6600-L	. . . PURIFIER,CENTRIFUGA	1
2	XDHZZ	80871	2125-6631-010	....RING,LOCK	1
3	PAHZZ	80871	2125-6691-000	....RING,CONTROL,FLUID	1
4	PAHZZ	80871	0007-1989-750	....GASKET	1
5	XDHZZ	80871	2125-6631-000	....RING,LOCK	1
6	XDHZZ	80871	2125-6610-000	....TOP,BOWL	1
7	PAHZZ	80871	0007-2942-750	....PACKING,PREFORMED	1
8	XDHZZ	80871	0028-0136-308	....DISC,COMPENSATING	1
9	XDHZZ	80871	2125-6663-000	....DISC	43
10	XDHZZ	80871	2125-6620-L	....DISTRIBUTOR	1
11	XDHZZ	80871	2125-6695-000	....LINER,SLUDGE	1
12	XDHZZ	80871	0019-6907-150	....SCREW,MACHINE	1
13	XDHZZ	80871	0026-1824-300	....DISC,CENTERING	1
14	XDHZZ	80871	0013-0278-150	....NUT,PLAIN,HEXAGON	1
15	XDHZZ	80871	2125-6601-000	....BOTTOM,BOWL	1

END OF FIGURE

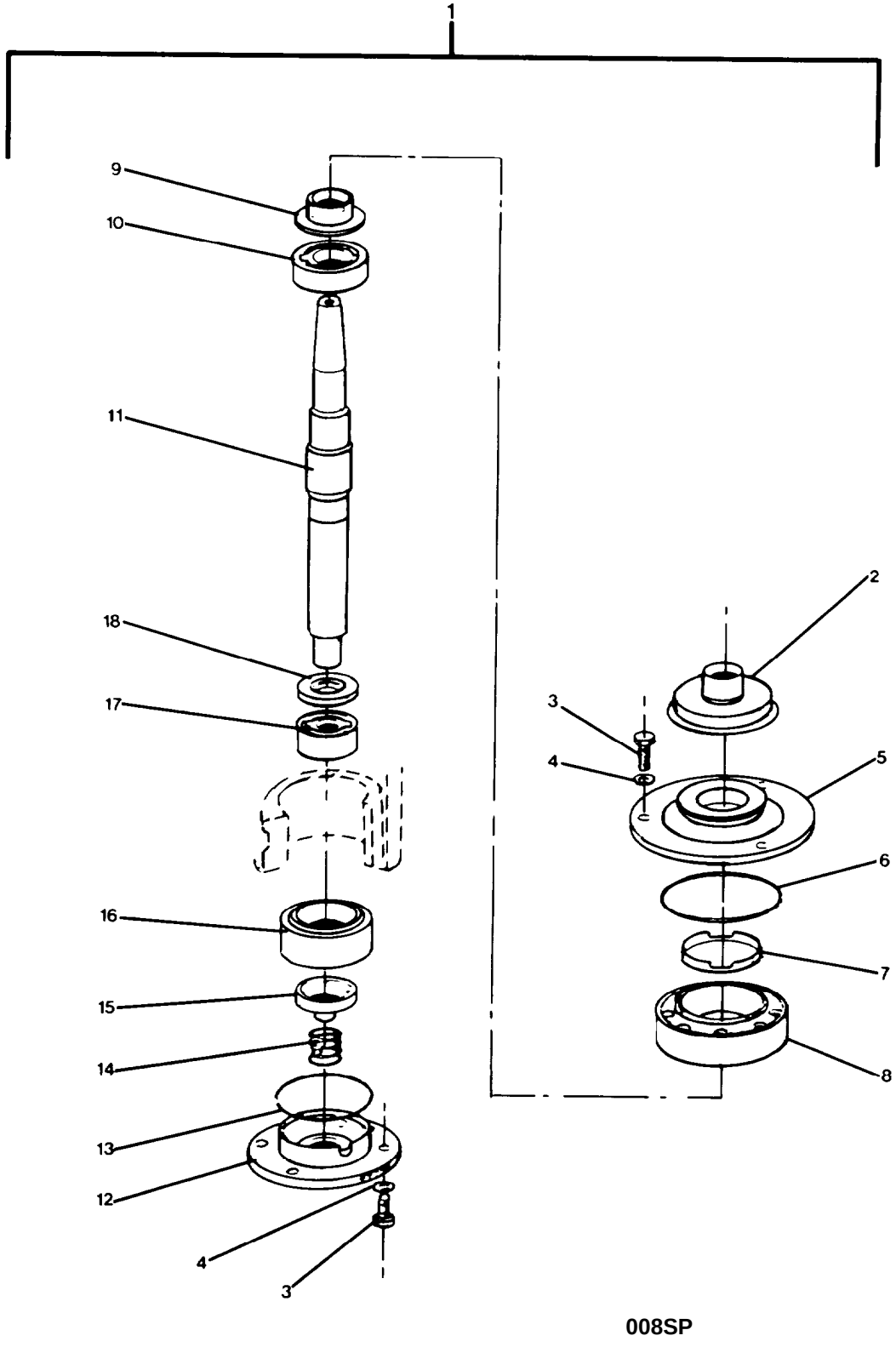

FIGURE 331. Vertical Gear Assembly.

(1) ITEM NO	(2) SMR CODE	(3) FSCM	(4) PART NUMBER	(5) DESCRIPTION AND USABLE ON CODES(UOC)	(6) QTY
				GROUP 18 BASIC CRAFT	
				FIG. 331 VERTICAL GEAR ASSEMBLY	
1	PAFHH	80871	2125-4003-000	...WORM SHAFT	1
2	XDHZZ	80871	0008-2501-800	....CAP,SPINDLE	1
3	XDHZZ	80871	0019-6903-150	....SCREW,MACHINE	6
4	XDHZZ	80871	0026-1325-190	....WASHER,LOCK	12
5	XDHZZ	80871	0008-2502-200	....CAP,NECK BEARING	1
6	PAHZZ	80871	0007-1988-750	....PACKING,PREFORMED	1
7	XDHZZ	80871	0008-2509-030	....RING,DISTANCE	1
8	PAHZZ	80871	0008-2533-000	....SEAL,PLAIN,ENCASED	1
9	XDHZZ	80871	0008-2504-300	....SLEEVE	1
10	PAHZZ	80871	0011-6205-110	....BEARING,BALL,ANNUAL	1
11	PBHZZ	80871	2125-3420-010	....WORM SHAFT	1
12	XDHZZ	80871	2125-3376-000	....COVER,BEARING	1
13	PAHZZ	80871	0007-2485-750	....GASKET	1
14	PAHZZ	80871	0006-4271-160	....SPRING,HELICAL,COMP	1
15	XDHZZ	80871	0010-4006-000	....BOLT,GUIDE	1
16	PAHZZ	80871	0011-8065-000	....BEARING,PLAIN,SPHER	1
17	PAHZZ	80871	0011-3203-470	....BEARING,BALL,ANNULA	1
18	XDHZZ	80871	0008-1708-010	....RING,BALL BEARING P	1

END OF FIGURE

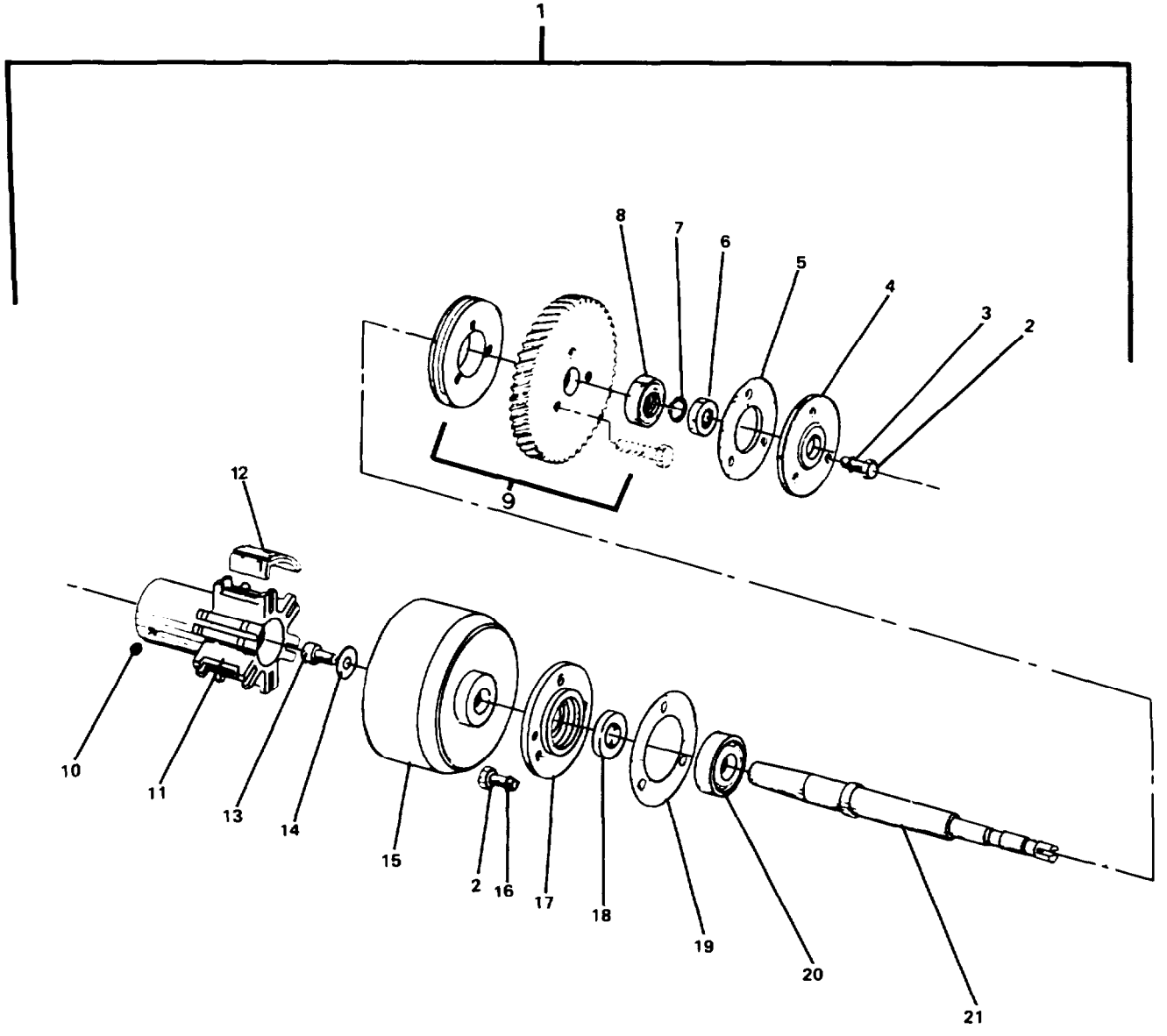

009SP

FIGURE 332. Horizontal Gear Assembly.

(1) ITEM NO	(2) SMR CODE	(3) FSCM	(4) PART NUMBER	(5) DESCRIPTION AND USABLE ON CODES(UOC)	(6) QTY
				GROUP 18 BASIC CRAFT	
				FIG. 332 HORIZONTAL GEAR ASSEMBLY	
1	PBFHH	80871	2125-4003-010	...DRIVE UNIT, ANGLE	1
2	XDHZZ	80871	0019-6903-150	....SCREW,MACHINE	6
3	XDHZZ	80871	0026-1325-160	.... WASHER,LOCK	3
4	XDHZZ	80871	2125-3375-010	....COVER,BEARING	1
5	PAHZZ	80871	0004-5197-770	....GASKET	1
6	XDHZZ	80871	0004-5768-910	.... RING,SEALING	1
7	PAHZZ	80871	0026-5854-170	....RING,RETAINING	1
8	PAHZZ	80871	0011-6202-000	....BEARING,BALL,ANNULA	1
9	PAHZZ	80871	2125-3449-010	....GEAR,WORM WHEEL	1
10	XDHZZ	80871	0019-9063-150	....PIN,THREADED	1
11	XDHZZ	80871	2125-3468-000	....DRIVER,CLUTCH	1
12	XDHZZ	80871	0820-3397-000	....SHOE,CLUTCH	1
13	XDHZZ	80871	0019-6120-150	....SCREW,SOCKET HEAD	1
14	XDHZZ	80871	0026-1344-030	....WASHER,FLAT	1
15	XDHZZ	80871	2125-3365-000	....DRUM,CLUTCH	1
16	XDHZZ	80871	0026-1325-190	....WASHER,LOCK	3
17	XDHZZ	80871	2125-3375-000	....COVER,BEARING	1
18	XDHZZ	80871	0004-5769-910	....RING,SEALING	1
19	PAHZZ	80871	0004-2463-770	....GASKET	1
20	PAHZZ	80871	0011-6204-000	....BEARING,GROOVED BAL	1
21	XDHZZ	80871	2125-3400-000	....SHAFT,WORM WHEEL	1

END OF FIGURE

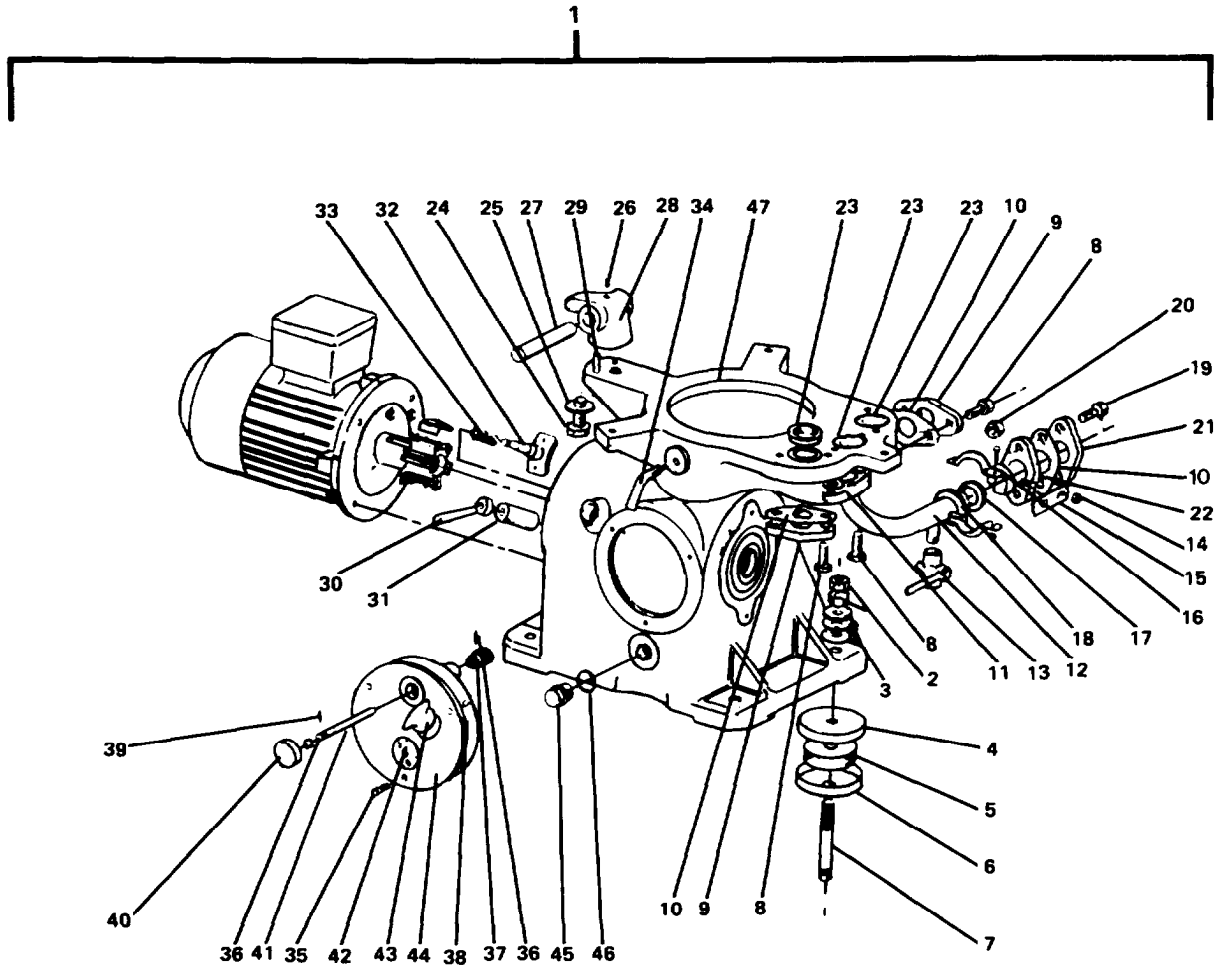

010SP

FIGURE 333. Frame Assembly.

GROUP 18 BASIC CRAFT

FIG. 333 FRAME ASSEMBLY

(1) ITEM NO	(2) SMR CODE	(3) FSCM	(4) PART NUMBER	(5) DESCRIPTION AND USABLE ON CODES(UOC)	(6) QTY
1	XDHHH	80871	2125-4001-000	...FRAME ASSEMBLY	1
2	XDHZZ	80871	0019-0282-150	.... NUT,PLAIN,HEXAGON	8
3	XDHZZ	80871	0006-4331-010	....SPRING,CUP	12
4	XDHZZ	80871	0026-2130-030	.... CAP	4
5	PAHZZ	80871	0021-3017-750	....MOUNT,RESILIENT	4
6	XDHZZ	80871	0026-2129-030	....CAP	4
7	XDHZZ	80871	0019-7736-150	....STUD	4
8	XDHZZ	80871	0019-6970-150	....SCREW,MACHINE	12
9	XDHZZ	80871	0001-0140-000	....FLANGE	3
10	PAHZZ	80871	0004-5447-740	....GASKET	6
11	PAHZZ	80871	0004-5445-740	....GASKET	1
12	XDHZZ	80871	2125-1444-000	....MANIFOLD	1
13	XDHZZ	80871	0018-1331-600	....COCK,OIL DRAIN	1
14	XDHZZ	80871	0013-0291-150	....NUT,PLAIN,HEXAGON	2
15	XDHZZ	80871	2178-1108-000	....PLATE	1
16	XDHZZ	80871	0018-4841-020	....CLAMP	1
17	PAHZZ	80871	0018-4841-750	....GASKET	1
18	XDHZZ	80871	0018-4841-010	....RETAINER,GASKET	1
19	XDHZZ	80871	0019-6972-150	.... SCREW,MACHINE	2
20	XDHZZ	80871	0013-0280-150	....NUT,PLAIN,HEXAGON	2
21	XDHZZ	80871	0001-0139-000	....FLANGE	2
22	XDHZZ	80871	2125-2831-000	.... JOINT,EXPANSION	2
23	PAHZZ	80871	0007-2387-750	....GASKET	3
24	XDHZZ	80871	0019-7037-150	.... SCREW,MACHINE	1
25	XDHZZ	80871	0026-1353-030	....WASHER,FLAT	1
26	XDHZZ	80871	0019-9063-150	.... PIN,THREADED	1
27	XDHZZ	80871	0026-5716-300	.... PIN,CYLINDRICAL	1
28	XDHZZ	80871	2161-1126-000	.... SUPPORT	1
29	XDHZZ	80871	0026-5699-400	.... PIN,CYLINDRICAL	2
30	XDHZZ	80871	0021-3525-000	.... HANDLE	1
31	XDHZZ	80871	0021-3552-030	....HOUSING,BRAKE	1
32	XDHZZ	80871	2125-1031-000	....BOLT,BRAKE	1
33	XDHZZ	80871	0006-4415-160	.... SPRING,CYLINDRICAL	1
34	XDHZZ	80871	0019-1390-150	.... SCREW,SELF-LOCKING	2
35	XDHZZ	80871	0019-6903-150	.... SCREW,MACHINE	3
36	XDHZZ	80871	0026-1562-120	.... PIN,CYLINDRICAL NOT	2
37	XDHZZ	80871	2160-3487-000	....WHEEL,WORM	1
38	PAHZZ	80871	0004-2076-700	....GASKET	1
39	XDHZZ	80871	2160-3497-010	.... DISK,REVOLUTION IND	1
40	PAHZZ	80871	0007-2508-750	....PACKING,PREFORMED	1
41	XDHZZ	80871	2125-3488-000	.... SHAFT	1
42	PAHZZ	80871	0001-0040-820	.... INDICATOR,SIGHT,LIQ	1
43	XDHZZ	80871	0019-1741-800	....SCREW,OIL FILL	1
44	XDHZZ	80871	2125-3493-000	....HOUSING,REVOLUTION	1
45	XDHZZ	80871	0019-8910-030	....SCREW,OIL DRAIN	1
46	XDHZZ	80871	0007-1796-550	....GASKET (COPPER)	1
47	XDHZZ	80871	2125-1001-000	.... FRAME	1

END OF FIGURE

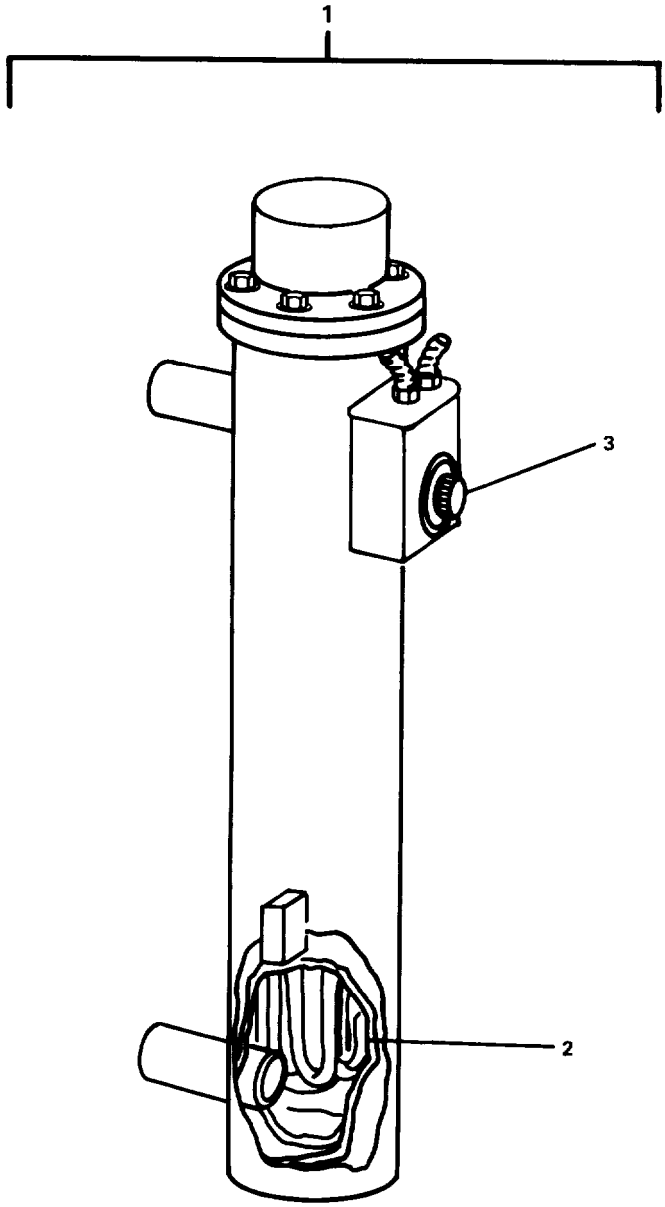

011P

FIGURE 334. Circulation Heater.

(1) ITEM NO	(2) SMR CODE	(3) FSCM	(4) PART NUMBER	(5) DESCRIPTION AND USABLE ON CODES(UOC)	(6) QTY
				GROUP 18 BASIC CRAFT	
				FIG. 334 CIRCULATION HEATER	
1	XDFHH	80871	9131-1235-009	...HEATER,CIRCULATION	1
2	PAHZZ	80871	TMO-3061SE-2XX	....HEATING ELEMENT,ELE	1
3	PAHZZ	80871	AR-2524LT	....SWITCH,THERMOSTATIC	1

END OF FIGURE

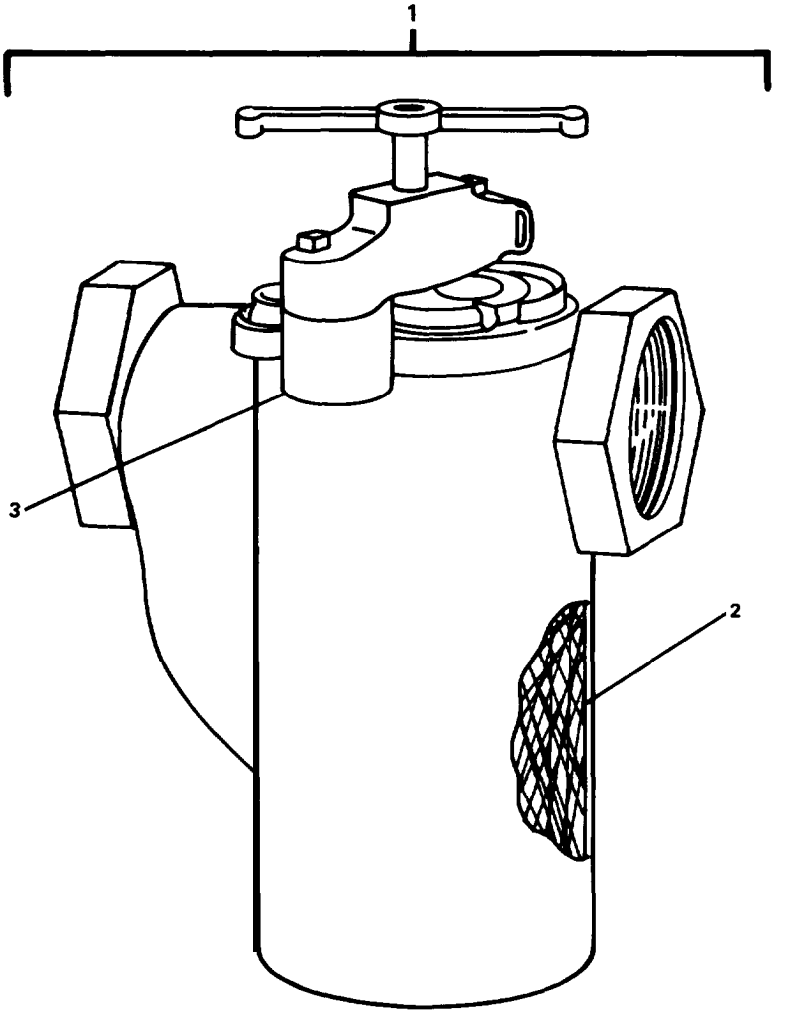

012SP

FIGURE 335. Sediment Strainer.

(1) ITEM NO	(2) SMR CODE	(3) FSCM	(4) PART NUMBER	(5) DESCRIPTION AND USABLE ON CODES(UOC)	(6) QTY
				GROUP 18 BASIC CRAFT	
				FIG. 335 SEDIMENT STRAINER	
1	XDOOO	73124	9131-1541-003	...STRAINER,SEDIMENT	1
2	PAOZZ	73124	SF052100P141AM	....STRAINER ELEMENT, SE	1
3	PAOZZ	73124	ST650042	....PACKING,PREFORMED	1

END OF FIGURE

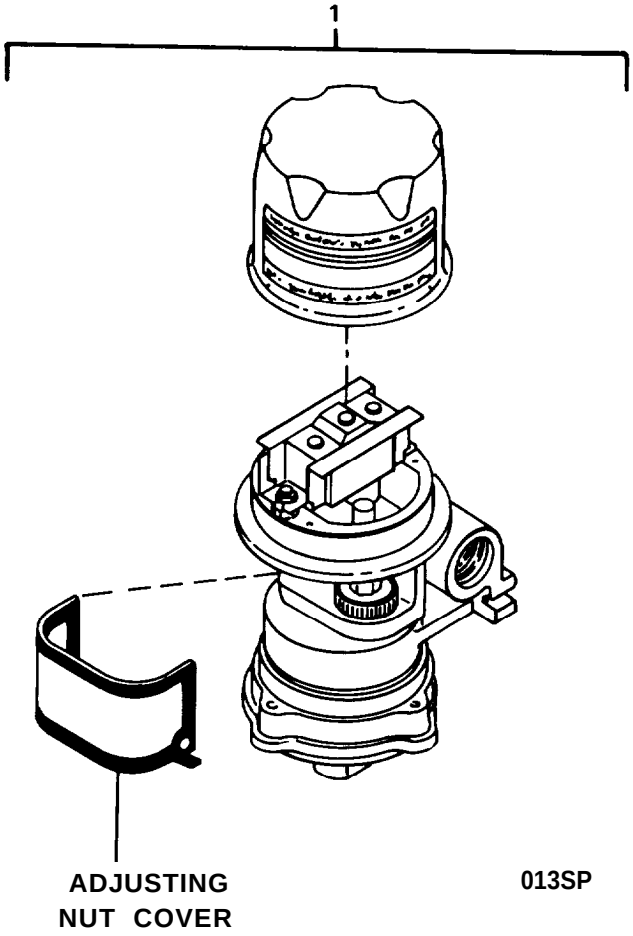

FIGURE 336. Pressure Switch Assembly.

(1) ITEM NO	(2) SMR CODE	(3) FSCM	(4) PART NUMBER	(5) DESCRIPTION AND USABLE ON CODES(UOC)	(6) QTY
				GROUP 18 BASIC CRAFT	
				FIG. 336 PRESSURE SWITCH ASSEMBLY	
1	PAOZZ	04845	HYA-188-042	. . . SWITCH,PRESSURE	1

END OF FIGURE

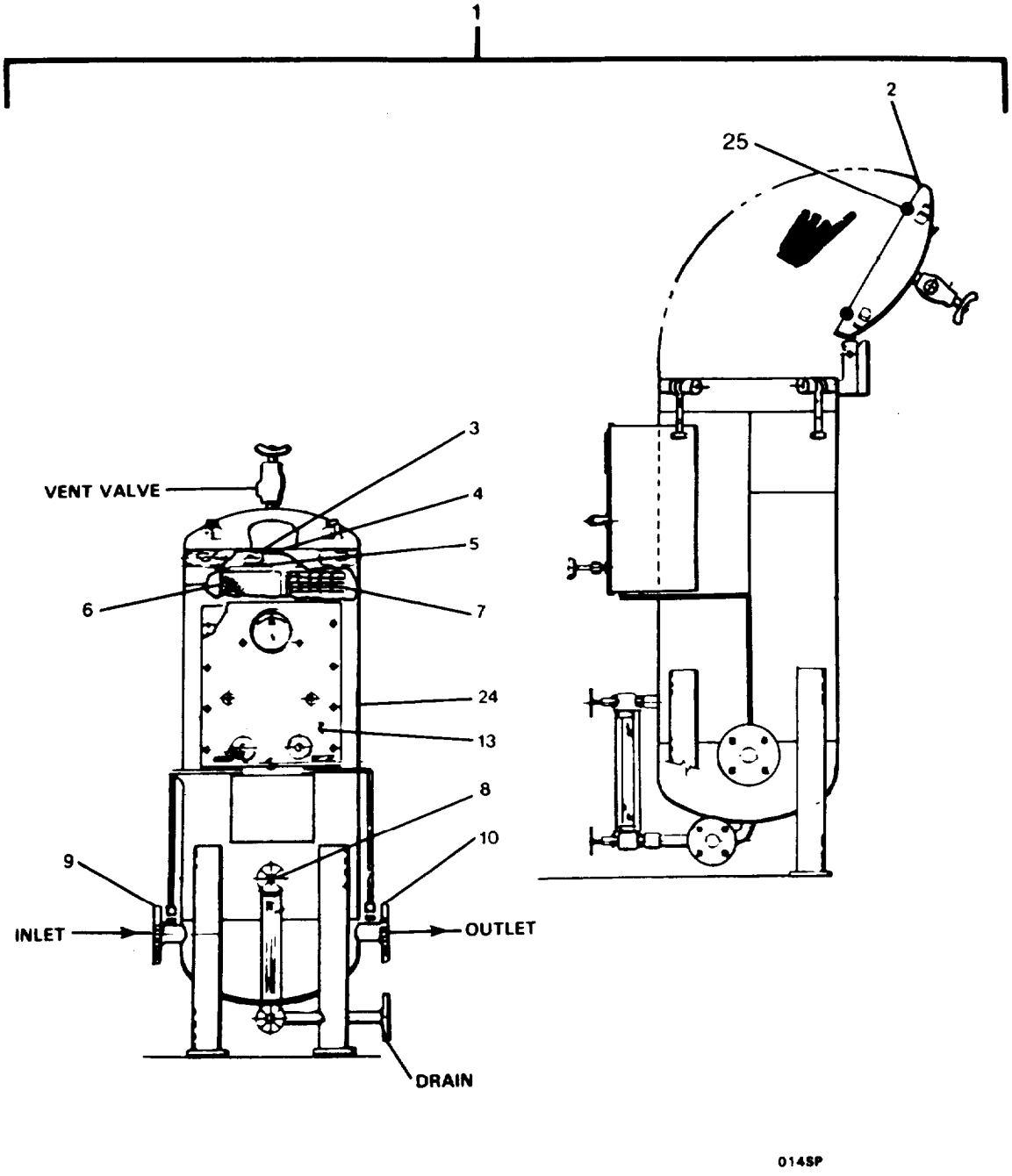

FIGURE 337. Diesel Fuel Oil Filter/Separator (Sheet 1 of 2).

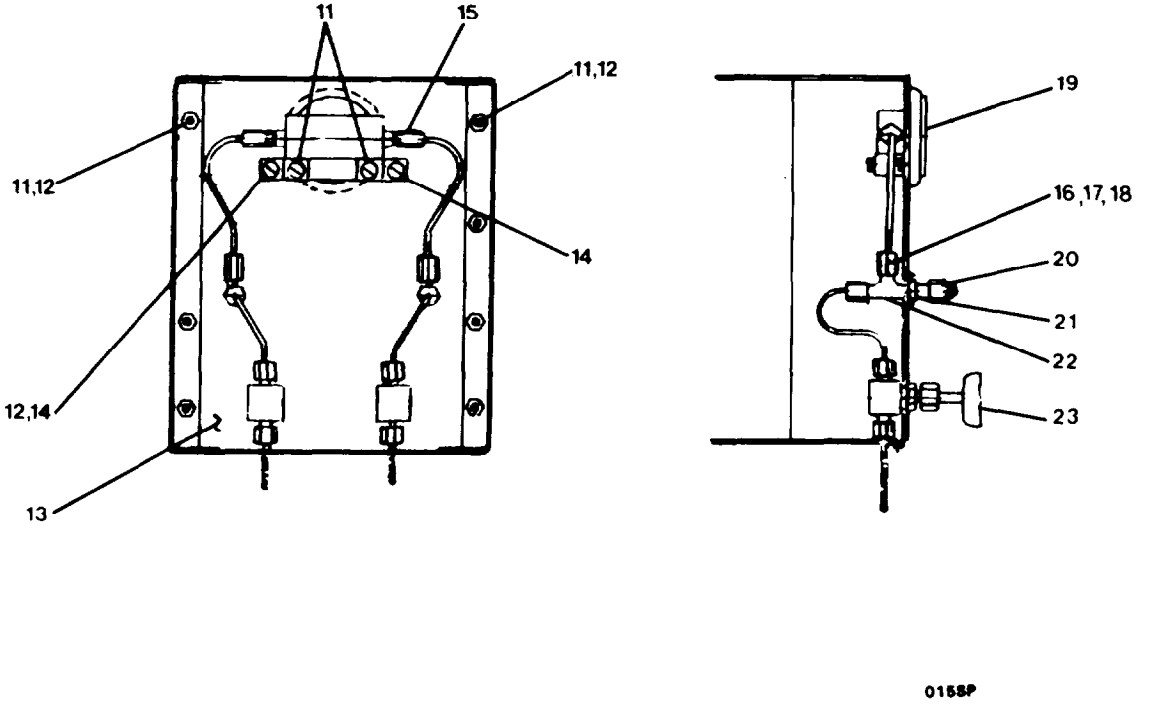

FIGURE 337. Diesel Fuel Oil Filter/Separator (Sheet 2 of 2).

(1) ITEM NO	(2) SMR CODE	(3) FSCM	(4) PART NUMBER	(5) DESCRIPTION AND USABLE ON CODES (UOC)	(6) QTY
				GROUP 18 BASIC CRAFT	
				FIG. 337 DIESEL FUEL OIL FILTER/SEPARATOR	
1	XDFHH	25204	690224	.DIESEL FUEL OIL FIL	1
2	XDOZZ	25204	202391	...END CAP, MACHINING	3
3	XDOZZ	96906	MS51922-19	...NUT, SELF-LOCKING, HE	4
4	XDOZZ	88044	AN960-C616	...WASHER, FLAT	4
5	PAOZZ	25204	201333	...SEAL	4
6	PAOZZ	87405	CC-15	...FILTER ELEMENT, FLUI	2
7	PAOZZ	25204	600617	...FILTER ELEMENT, FLUI	1
8	PAHZZ	25204	203927	...VALVE, ANGLE	1
9	XDHZZ	25204	200358	...PLATE, INLET	1
10	XDHZZ	25204	200359	...PLATE, OUTLET	1
11	XDHZZ	96906	MS35307-305	...SCREW, CAP, HEXAGON H	12
12	XDHZZ	96906	MS51922-2	...NUT, SELF-LOCKING, HE	12
13	XDHZZ	25204	601353	...PANEL, INSTRUMENT	1
14	XDHZZ	96906	MS35307-301	...SCREW, CAP, HEXAGON H	2
15	XDHZZ	25204	202550	...BRACKET, GAGE SUPPOR	2
16	XDHZZ	96906	MS21921-4J	...NUT, TUBE COUPLING	4
17	XDHZZ	96906	MS21922-4C	...SLEEVE, COUPLING	4
18	XDHZZ	96906	M551819-5SS	...ADAPTER, STRAIGHT PI	2
19	PAOZZ	25204	202327	...GAGE, DIFFERENTIAL, P	1
20	XDHZZ	96906	MS21914-4J	...CAP,TUBE	2
21	XDHZZ	96906	MS51860-53SS	...LOCKNUT, TUBE FITTIN	2
22	XDHZZ	96906	MS21912-4K	...TEE, FLARELESS TUBE	2
23	PAHZZ	25204	201720	...VALVE ASSEMBLY	2
24	XDHZZ	25204	601285	...FILTER/SEPARATOR, WE	1
25		96906	MS2951 3-452	...PACKING PREFORMED	1

END OF FIGURE

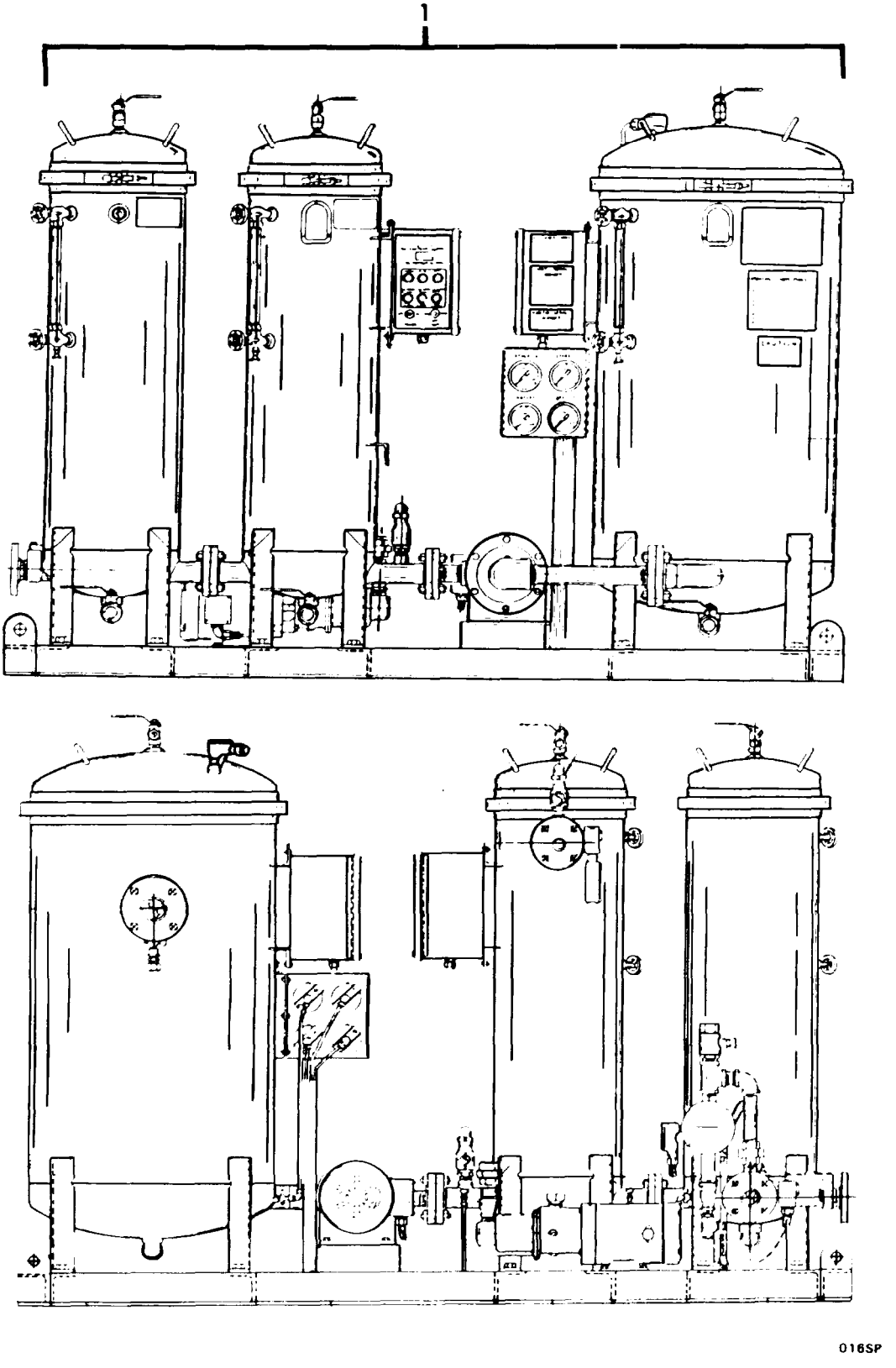

FIGURE 338. Oil/Water Separator.

(1) ITEM NO	(2) SMR CODE	(3) FSCM	(4) PART NUMBER	(5) DESCRIPTION AND USABLE ON CODES(UOC)	(6) QTY
				GROUP 18 BASIC CRAFT	
				FIG. 338 OIL/WATER SEPARATOR	
1	XDFHH	53918	VGS10	... SEPARATOR,OIL/WATER	1

END OF FIGURE

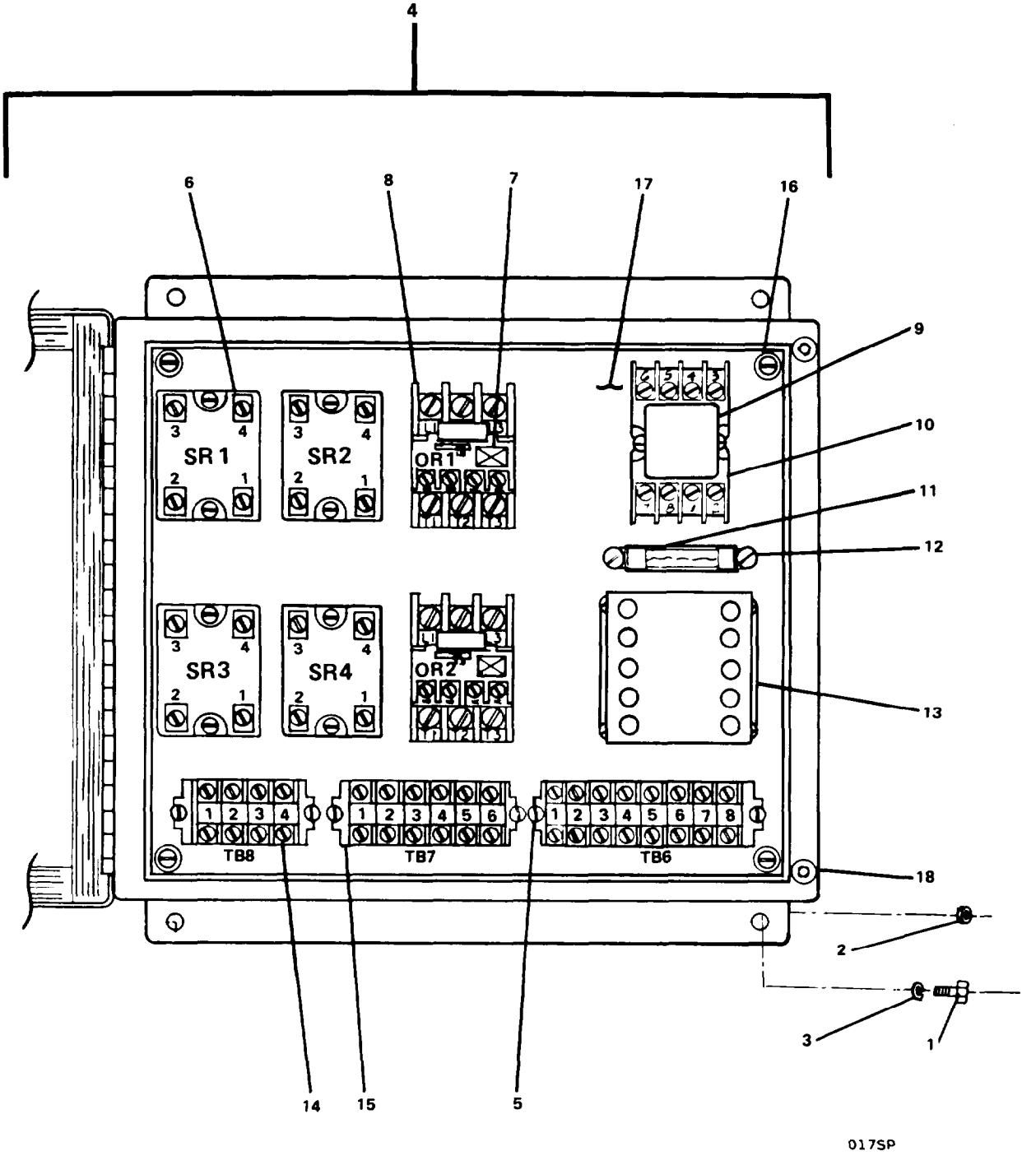

FIGURE 339. Motor Control Box Assembly.

(1) ITEM NO	(2) SMR CODE	(3) FSCM	(4) PART NUMBER	(5) DESCRIPTION AND USABLE ON CODES(UOC)	(6) QTY
				GROUP 18 BASIC CRAFT	
				FIG. 339 MOTOR CONTROL BOX ASSEMBLY	
1	XDFZZ	53918	B006	. . . BOLT,MACHINE	4
2	XDFZZ	53918	NU05	. . . NUT,PLAIN,HEXAGON	4
3	XDFZZ	53918	WA02	. . . WASHER,LOCK	4
4	XDOFF	53918	1282-L	. . . MOTOR CONTROL BOX A	1
5	XDFZZ	53918	1282-L-10	. . . SCREW,MACHINE	28
6	PAFZZ	55442	480D10-12	. . . RELAY,SOLID STATE	4
7	PAFZZ	52090	LRI-D09307	. . . RELAY,ELECTROMAGNE T (1.6-2.5 AMP)	2
8	XDFZZ	3N065	LA7-D0954	. . . MOUNTING,PAD	2
9	PAFZZ	77342	KRP11DG24VDC	. . . RELAY,ELECTROMAGNE T (24 VDC)	1
10	XDFZZ	2B488	SMH-C	. . . SOCKET	1
11	PAOZZ	81349	F02B250V1-2A	. . . FUSE,CARTRIDGE (250V, 5 AMP)	1
12	XDFZZ	71400	4407	. . . FUSEHOLDER,BLOCK	1
13	PAFZZ	3N065	LC1-EC03M	. . . CONTACTOR,MAGNETIC	1
14	XDFZZ	89020	525	. . . TERMINAL BOARD	18
15	XDFZZ	89020	530	. . . END,TERMINAL BOARD	3
16	XDFZZ	53918	1282-L-11	. . . SCREW,MACHINE	4
17	XDFZZ	34221	12P10	. . . PANEL	1
18	XDFZZ	08458	EN27	. . . HOUSING	1

END OF FIGURE

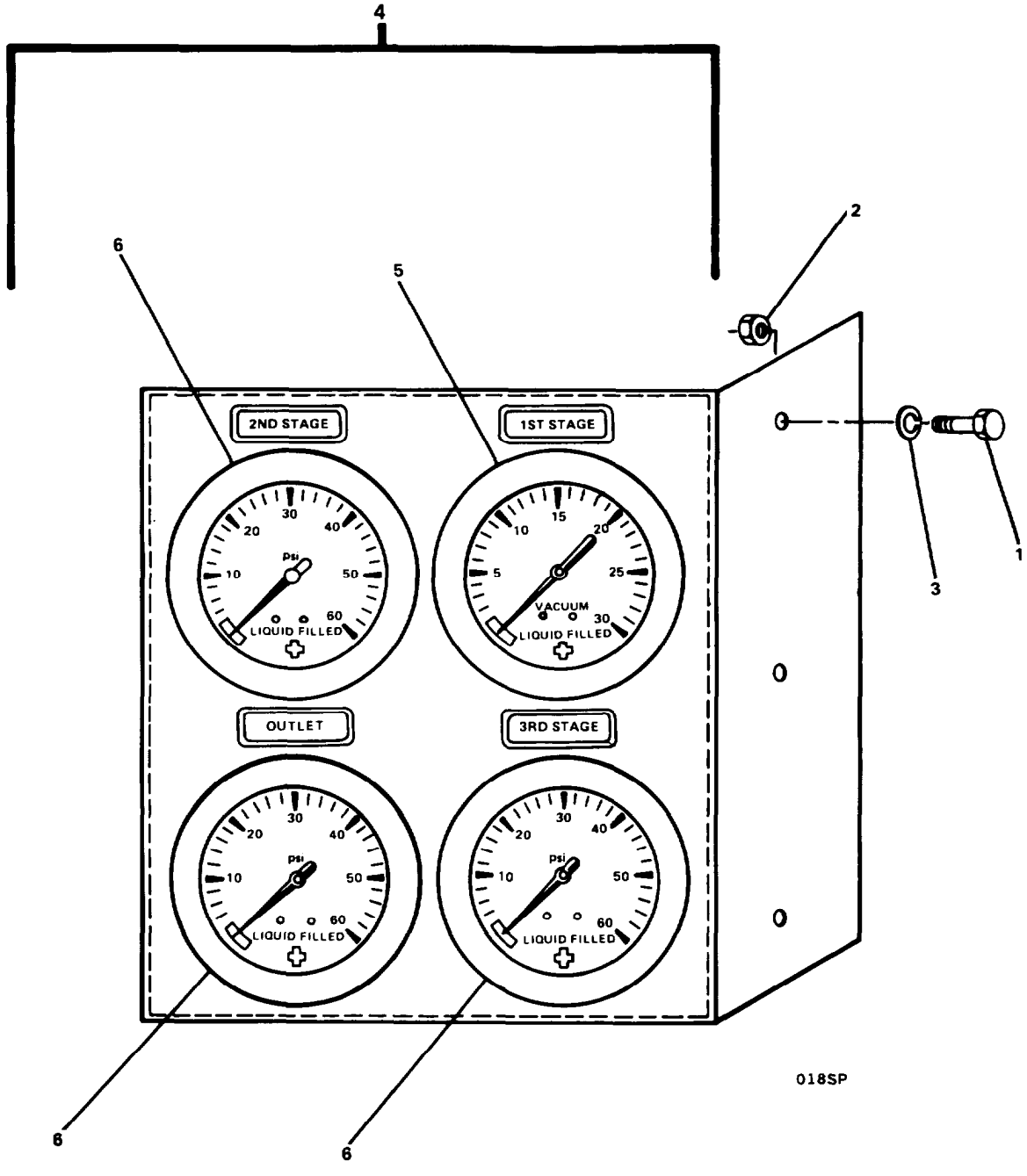

FIGURE 340. Gage Panel Assembly.

(1) ITEM NO	(2) SMR CODE	(3) FSCM	(4) PART NUMBER	(5) DESCRIPTION AND USABLE ON CODES(UOC)	(6) QTY
				GROUP 18 BASIC CRAFT	
				FIG. 340 GAGE PANEL ASSEMBLY	
1	XDOZZ	53918	BOO6	...BOLT,MACHINE	3
2	XDOZZ	53918	NU05	...NUT,PLAIN.HEXAGON	3
3	XDOZZ	53918	WA02	...WASHER,LOCK	3
4	XDOOO	53918	1284-2	...GAGE PANEL ASSEMBLY	1
5	PAOZZ	53918	GG28	...GAGE,VACUUM,DIAL IN	1
6	PAOZZ	53918	GG31	...GAGE,PRESSURE,DIAL	3

END OF FIGURE

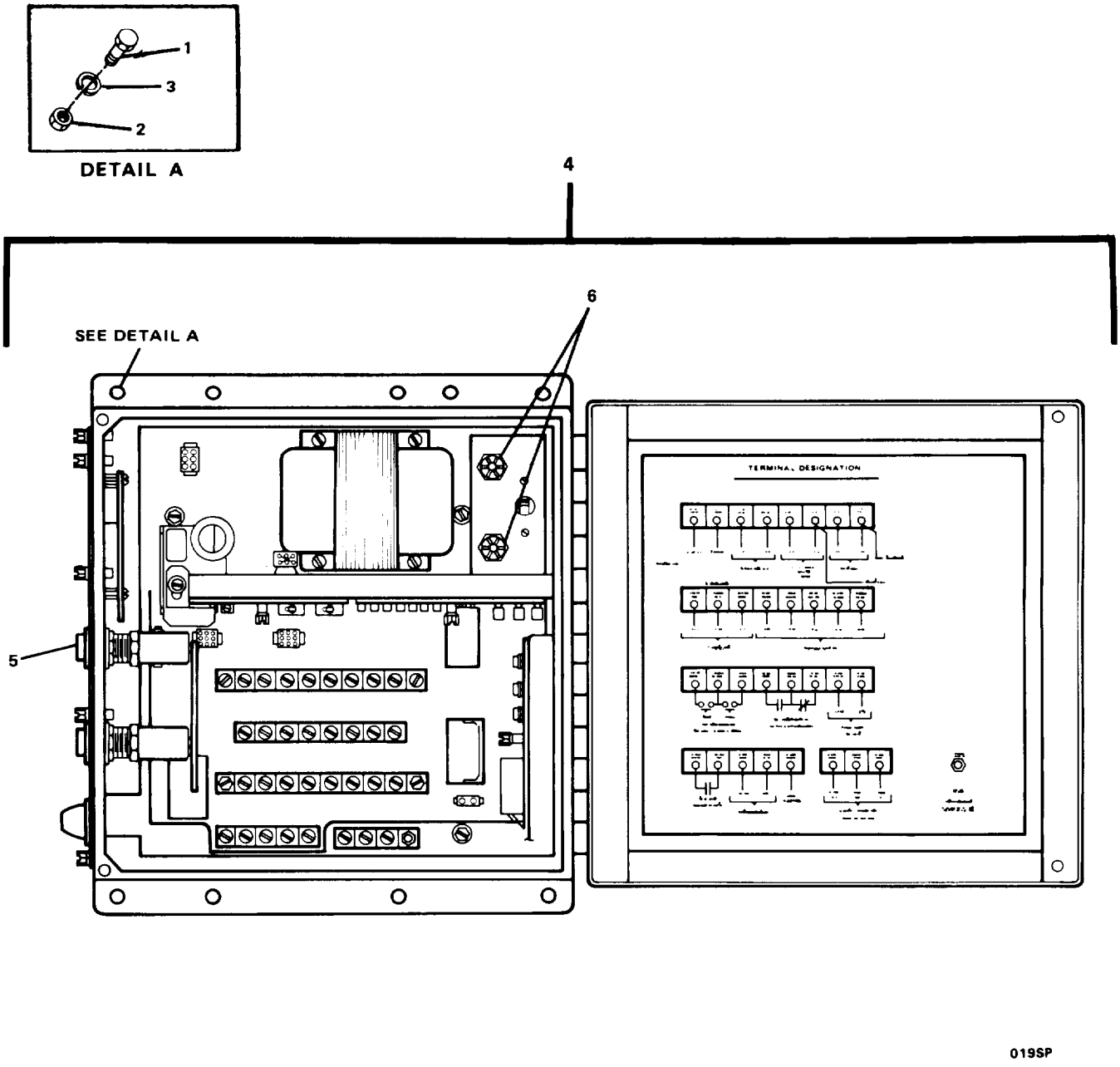

FIGURE 341. Control Module Assembly.

(1) ITEM NO	(2) SMR CODE	(3) FSCM	(4) PART NUMBER	(5) DESCRIPTION AND USABLE ON CODES(UOC)	(6) QTY
				GROUP 18 BASIC CRAFT	
				FIG. 341 CONTROL MODULE ASSEMBLY	
1	XDOZZ	53918	BOO6	. . . BOLT,MACHINE	6
2	XDOZZ	53918	NU05	. . . NUT,PLAIN,HEXAGON	6
3	XDOZZ	53918	WA02	. . . WASHER,LOCK	6
4	PA000	53918	OCA-1A	. . . CONTROL,INDICATOR	1
5	PAOZZ	53918	81007	. . . LAMP,INCANDESCENT	6
6	PAOZZ	53918	50016	. . . FUSE,CARTRIDGE (.25 AMP 15V)	2

END OF FIGURE

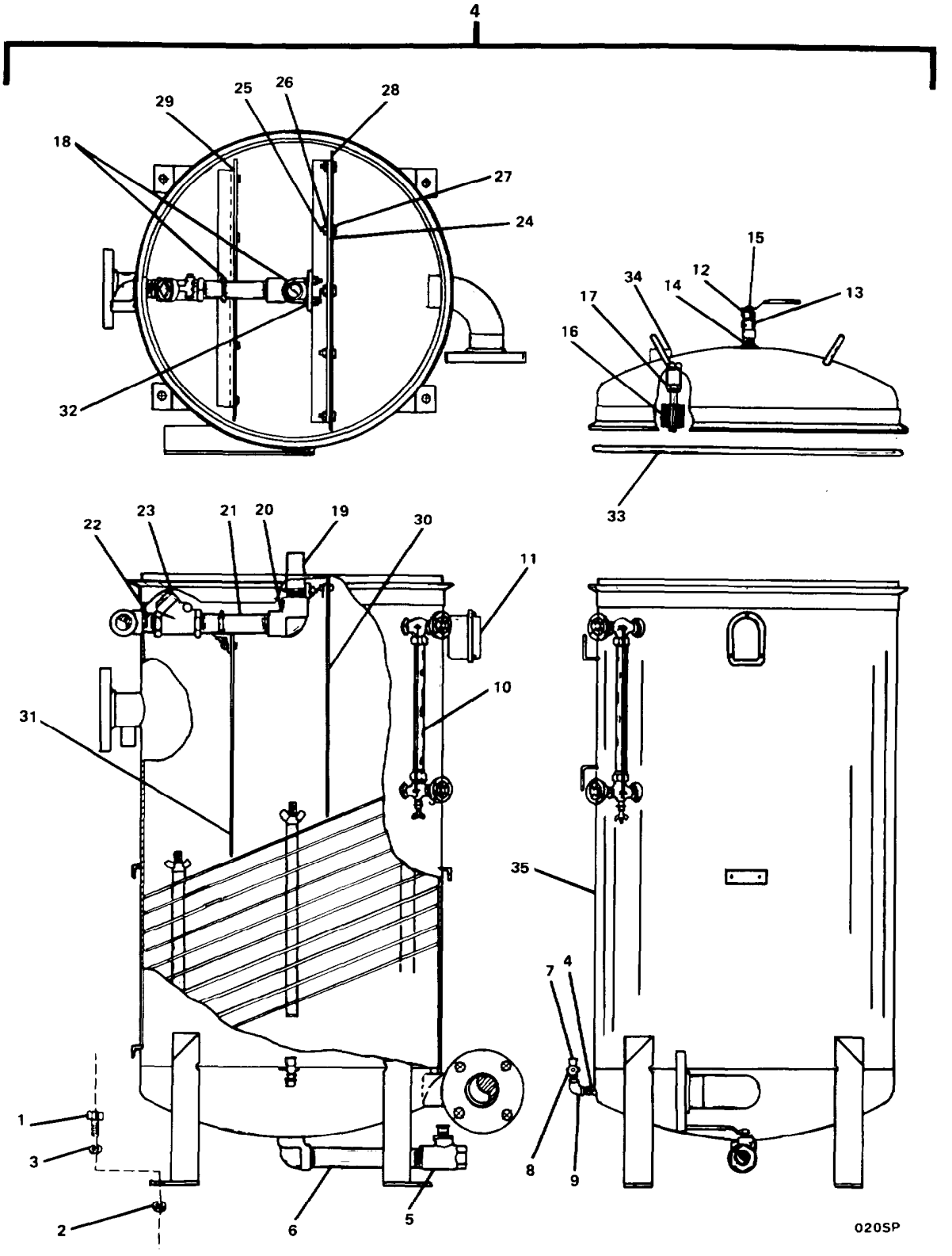

FIGURE. 342. Vessel Subassembly (1st Stage).

(1) ITEM NO	(2) SMR CODE	(3) FSCM	(4) PART NUMBER	(5) DESCRIPTION AND USABLE ON CODES(UOC)	(6) QTY
				GROUP 18 BASIC CRAFT	
				FIG. 342 VESSEL SUBASSEMBLY (1ST STAGE)	
1	XDFZZ	53918	B028	...BOLT,MACHINE	4
2	XDFZZ	53918	NU25	...NUT,PLAIN,HEXAGON	4
3	XDFZZ	53918	WA16	...WASHER,LOCK	4
4	XDFFF	53918	1279-4	.....VESSELL SUBASSEMBLY	1
5	PAFZZ	53918	VB62	..VALVE,BALL	1
6	XDFZZ	53918	PI16	..NIPPLE,PIPE	1
7	XDFZZ	53918	VC65	....VALVE,STOP CHECK	1
8	XDFZZ	53918	NJ39	..NIPPLE,PIPE	1
9	XDFZZ	53918	EB58	..ELBOW,PIPE	1
10	XDFZZ	53918	423-4	....SIGHT GLASS	1
11	PAFZZ	53918	392	..TRANSMITTER,LIQUID	1
12	PAFZZ	72219	70-103-01	..VALVE,BALL	1
13	XDFZZ	53918	EB60	..ELBOW,PIPE	1
14	XDFZZ	53918	NJ40	..NIPPLE,PIPE	2
15	XDFZZ	53918	1279-30	..SCREW,MACHINE	10
16	PAFZZ	53918	SX77	...SWITCH,LIQUID LEVEL	1
17	XDFZZ	53918	BU29	..BUSHING	1
18	XDFZZ	53918	B093	..B0LT,U	2
19	XDFZZ	53918	P174	..NIPPLE,PIPE	1
20	XDFZZ	53918	EB73	..ELBOW,PIPE	1
21	XDFZZ	53918	NJ86	..NIPPLE,PIPE	1
22	XDFZZ	53918	NJ78	..NIPPLE,PIPE	1
23	XDFZZ	53918	VE16	....VALVE,STOP CHECK	1
24	XDFZZ	53918	1279-25	..BOLT,MACHINE	10
25	XDFZZ	53918	NU05	..NUT,PLAIN,HEXAGON	10
26	XDFZZ	53918	WA02	..WASHER,LOCK	10
27	XDFZZ	53918	1279-26	..WASHER,LOCK	10
28	XDFZZ	53918	1279-20	..BRACKET	1
29	XDFZZ	53918	1279-21	..BRACKET	1
30	XDFZZ	53918	1279-23	..BAFFLE	1
31	XDFZZ	53918	1279-24	..BAFFLE	1
32	XDFZZ	53918	BA50	..BRACKET	1
33	PAFZZ	53918	GA22	..PACKING,PREFORMED	1
34	PAFZZ	53918	1638	...SWITCH,LIQUID LEVEL	1
35	XDFZZ	53918	1279-1	.VESSEL	1

END OF FIGURE

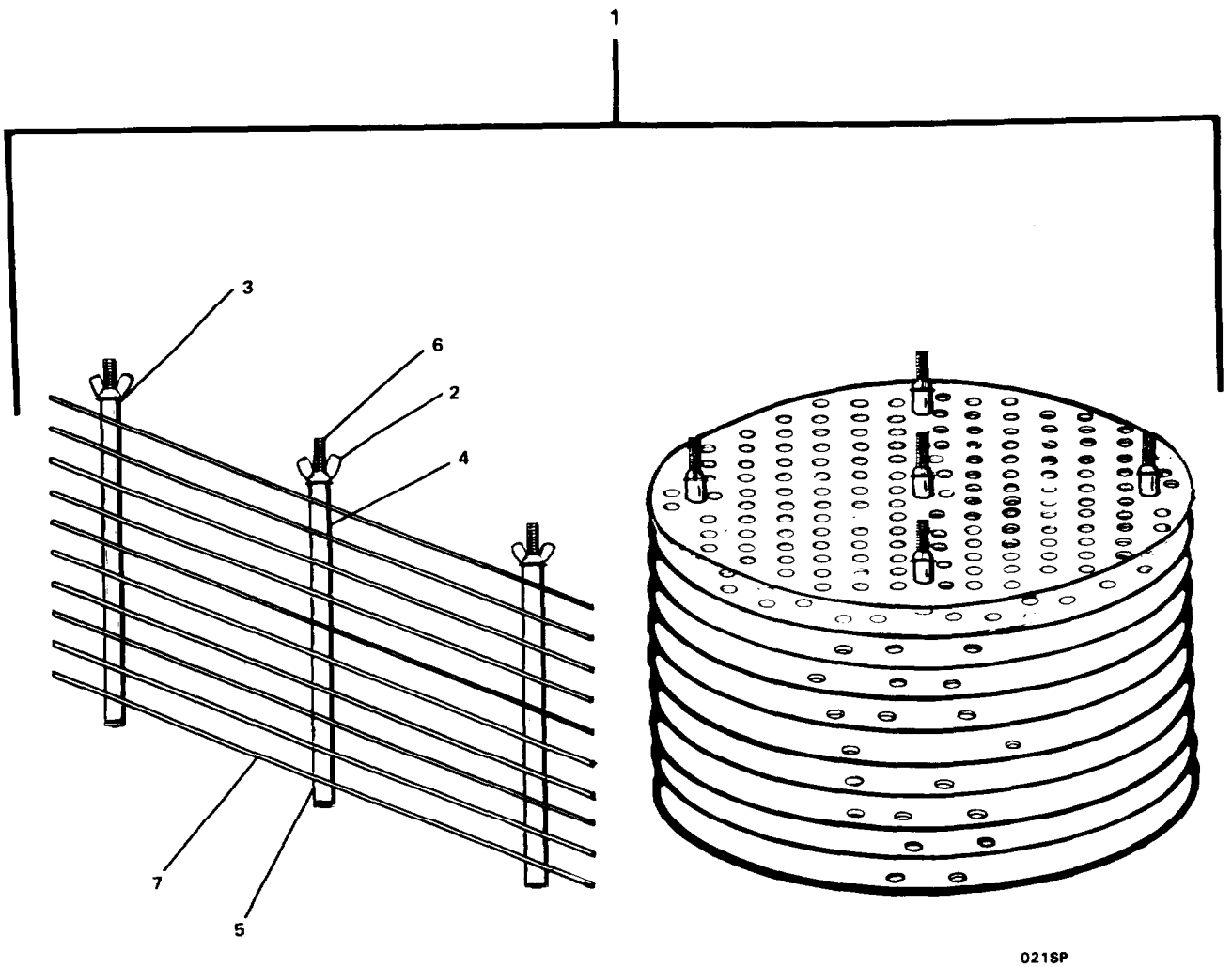

FIGURE 343. Plate Assembly.

(1) ITEM NO	(2) SMR CODE	(3) FSCM	(4) PART NUMBER	(5) DESCRIPTION AND USABLE ON CODES(UOC)	(6) QTY
				GROUP 18 BASIC CRAFT	
				FIG. 343 PLATE ASSEMBLY	
1	PBFFF	53918	1291	...STRAINER ELEMENT,SE	1
2	XDFZZ	53918	NU75	...NUT,SELF-LOCKING,WI	5
3	XDFZZ	53918	WA14	...WASHER,FLAT	5
4	XDFZZ	53918	1292-D	...SPACER,SLEEVE	45
5	XDFZZ	53918	1292-C	...SPACER,SLEEVE	10
6	XDFZZ	53918	1292-B	...ROD END,THREADED	5
7	XDFZZ	53918	1291-1	...PLATE,ELLIPTICAL	10

END OF FIGURE

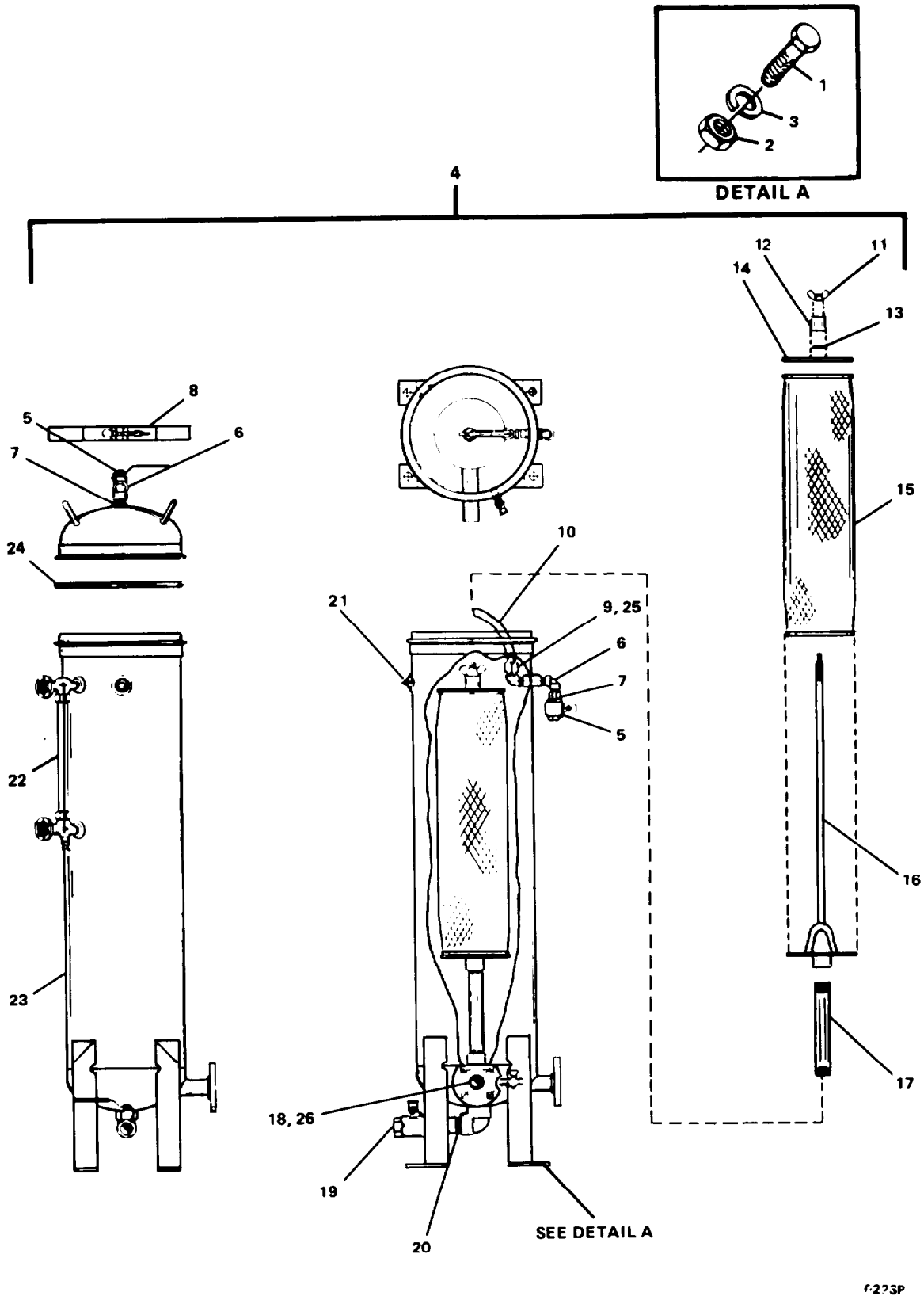

FIGURE 344. Vessel Subassembly (3rd Stage).

(1) ITEM NO	(2) SMR CODE	(3) FSCM	(4) PART NUMBER	(5) DESCRIPTION AND USABLE ON CODES(UOC)	(6) QTY
				GROUP 18 BASIC CRAFT	
				FIG. 344 VESSEL SUBASSEMBLY (3RD STAGE)	
1	XDFZZ	53918	B028	...BOLT,MACHINE	4
2	XDFZZ	53918	NU25	...NUT,PLAIN,HEXAGON	4
3	XDFZZ	53918	WA16	...WASHER,LOCK	4
4	XDFFF	53918	1333-4	....VESSEL SUBASSEMBLY	1
5	PAFZZ	72219	70-103-01	..VALVE,BALL	2
6	XDFZZ	53918	EB60	..ELBOW,PIPE	2
7	XDFZZ	53918	NJ40	..NIPPLE,PIPE	2
8	XDFZZ	53198	CU92	..RETAINER,PACKING	1
9	XDFZZ	53918	EB58	..ELBOW,PIPE	1
10	XDFZZ	53918	TU62	..TUBE,METAL	1
11	PAOZZ	53918	NU75	..NUT,SELF-LOCKING,WI	1
12	PAOZZ	53918	OR80	..RETAINER,PACKING	1
13	PAOZZ	02697	2-206 N674-70	..PACKING,PREFORMED	1
14	XDOZZ	53918	PK80	..COVER	1
15	PAOZZ	53918	622-100	....FILTER ELEMENT,FLUI	1
16	XDOZZ	53918	ST17	..SUPPORT	1
17	XDFZZ	53918	PI16	..NIPPLE,PIPE	1
18	XDFZZ	53918	VC65	....VALVE,STOP CHECK	1
19	PAFZZ	72219	70105-01	..VALVE,BALL	1
20	XDFZZ	53918	NJ80	..NIPPLE,PIPE	1
21	XDFZZ	53918	PL27	..PLUG,PIPE	1
22	XDOZZ	53918	423-4	....SIGHT GLASS	1
23	XDFZZ	53918	1333-1	..VESSEL	1
24	PAFZZ	53918	GA19	...PACKING,PREFORMED	1
25	XDFZZ	53918	EC44	...ELBOW,PIPE	1
26	XDFZZ	53918	NJ39	...NIPPLE,PIPE	1

END OF FIGURE

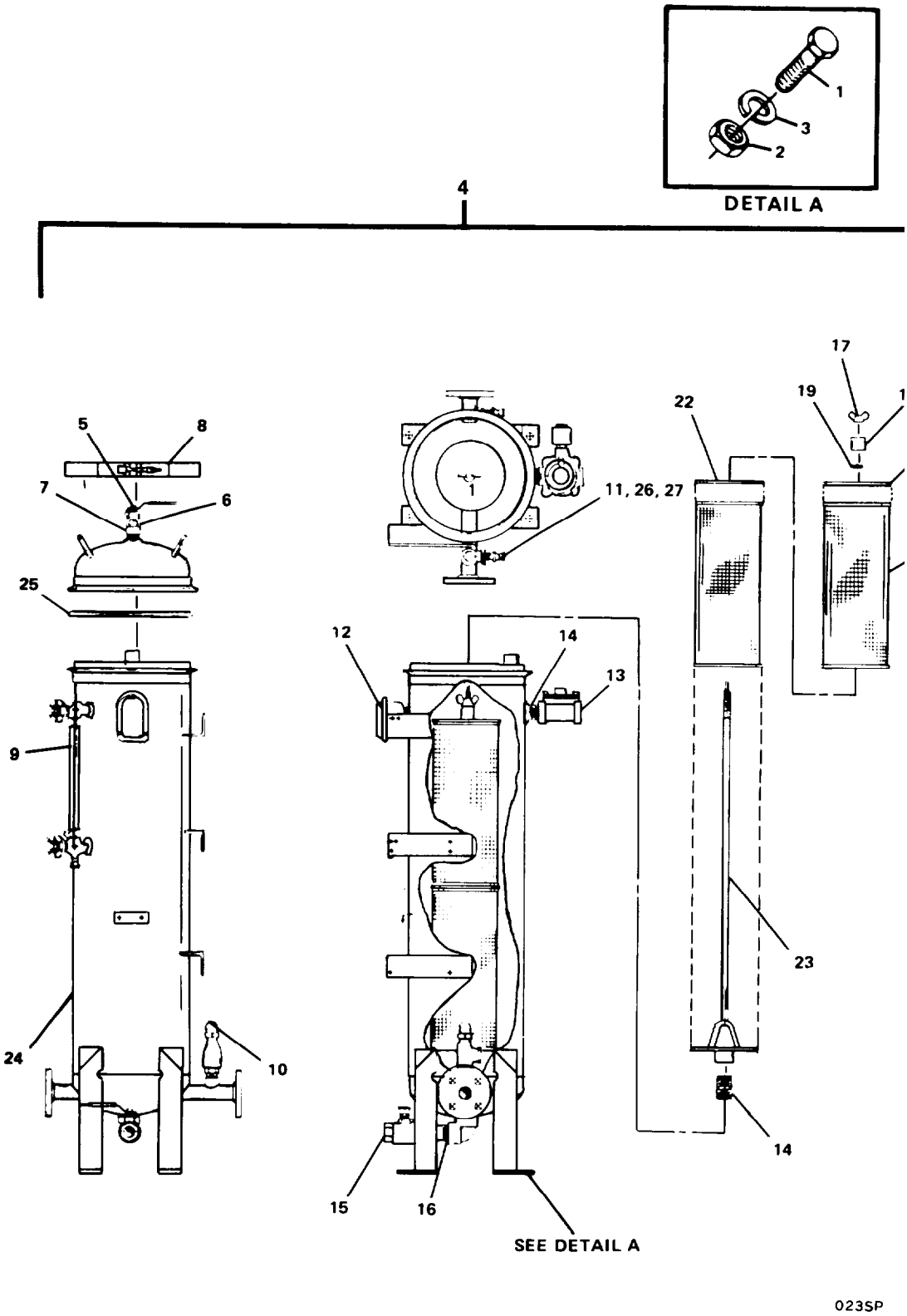

FIGURE 345. Vessel Subassembly (2nd Stage).

(1) ITEM NO	(2) SMR CODE	(3) FSCM	(4) PART NUMBER	(5) DESCRIPTION AND USABLE ON CODES(UOC)	(6) QTY
				GROUP 18 BASIC CRAFT	
				FIG. 345 VESSEL SUBASSEMBLY (2ND STAGE)	
1	XDFZZ	53918	B028	...BOLT,MACHINE	4
2	XDFZZ	53918	NU25	...NUT,PLAIN,HEXAGON	4
3	XDFZZ	53918	WA16	...WASHER,LOCK	4
4	XDFFF	53918	1332	.....VESSEL SUBASSEMBLY	1
5	PAFZZ	53198	VB57	..VALVE,BALL	1
6	XDFZZ	53918	EB60	..ELBOW,PIPE	1
7	XDFZZ	53918	NJ40	..NIPPLE,PIPE	2
8	XDFZZ	53198	CU92	...RETAINER,PACKING	1
9	XDOZZ	53918	423-4	.....SIGHT GLASS	1
10	PAFZZ	53198	VD33	.....VALVE,SAFETY RELIEF	1
11	XDFZZ	53198	VC65	.....VALVE,STOP CHECK	2
12	PAOZZ	53918	392	...TRANSMITTER,LIQUID	1
13	XDFZZ	53198	VD80	...VALVE,SOLENOID	1
14	XDFZZ	53918	NJ78	...NIPPLE,PIPE	2
15	PAFZZ	72219	70105-01	...VALVE,BALL	2
16	XDFZZ	53918	NJ80	...NIPPLE,PIPE	1
17	XDOZZ	53918	NU75	....NUT,SELF-LOCKING,WI	1
18	PAOZZ	53918	OR80	....RETAINER,PACKING	1
19	PAOZZ	02697	2-206 N674-70	....PACKING,PREFORMED	1
20	XDOZZ	53918	PK80	...COVER	1
21	PAOZZ	53918	614-505	.....FILTER ELEMENT,FLUI	2
22	XDOZZ	53918	PK86	...SPACER,RING	1
23	XDOZZ	53918	ST21	...SUPPORT	1
24	XDFZZ	53918	1332-1	...VESSEL	1
25	PAOZZ	53918	GA19	....PACKING,PREFORMED	1
26	XDFZZ	53918	NJ39	...NIPPLE,PIPE	1
27	XDFZZ	53918	EB58	...ELBOW,PIPE	1

END OF FIGURE

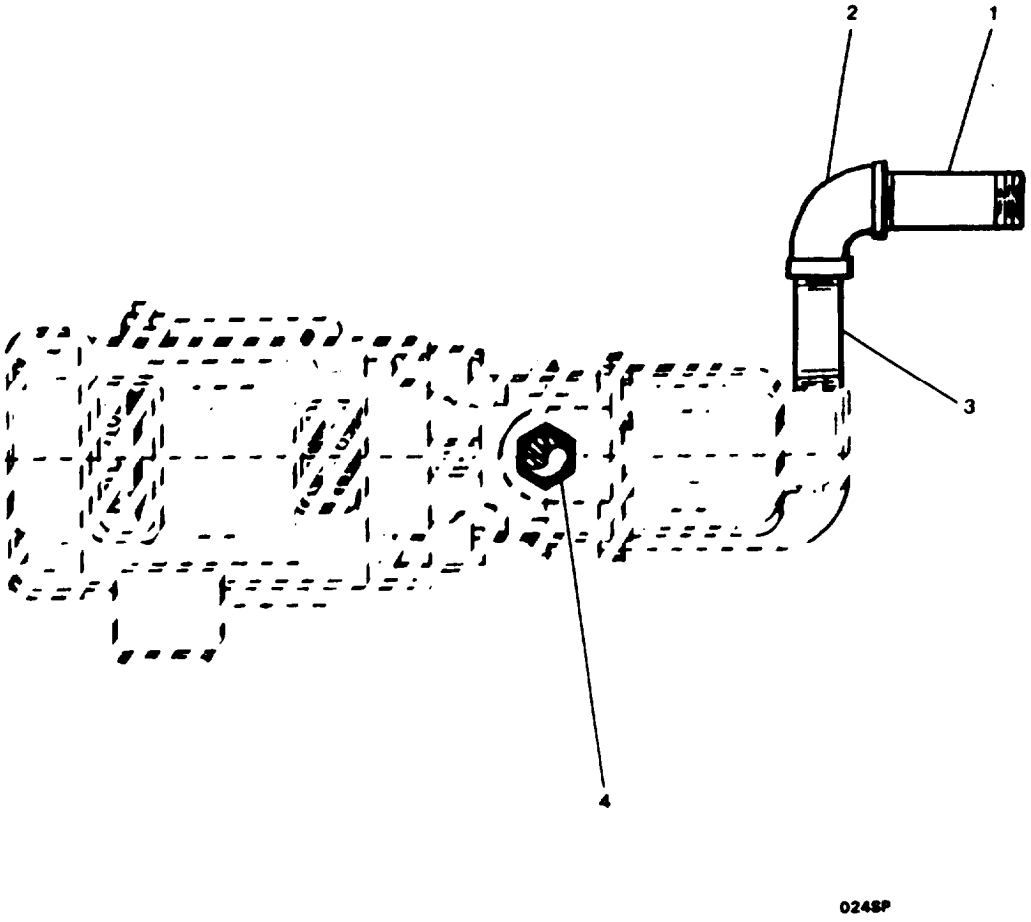

FIGURE 346. Oil Pump/Motor Assembly (Sheet 1 of 2).

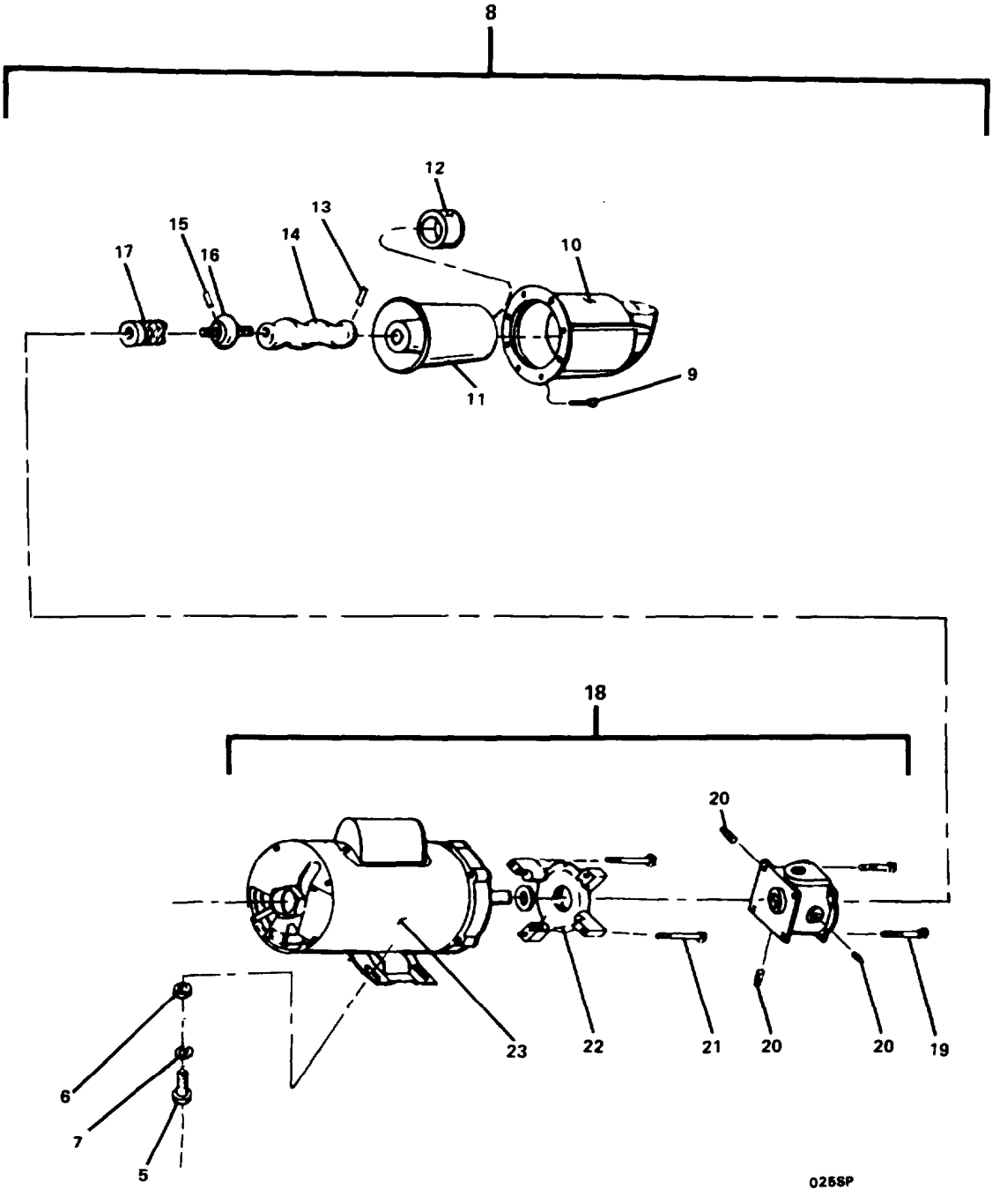

FIGURE 346. Oil Pump/Motor Assembly (Sheet 2 of 2).

(1) ITEM NO	(2) SMR CODE	(3) FSCM	(4) PART NUMBER	(5) DESCRIPTION AND USABLE ON CODES(UOC)	(6) QTY
				GROUP 18 BASIC CRAFT	
				FIG. 346 OIL PUMP/MOTOR ASSEMBLY	
1	XDFZZ	53918	NJ81	...NIPPLE,PIPE	1
2	XDFZZ	53918	1334-2-5	....ELBOW,REDUCING	1
3	XDFZZ	53918	NJ67	...NIPPLE,PIPE	1
4	XDFZZ	53918	SW05	....NIPPLE,SWAGE	1
5	XDFZZ	53918	B037	....BOLT,MACHINE	4
6	XDFZZ	53918	NU07	....NUT,PLAIN,HEXAGON	4
7	XDFZZ	53918	WA04	....WASHER,LOCK	4
8	XDFHH	51064	1334-2	....PUMP/MOTOR,ASSEMBLY (FAILURE OF MOTOR REQUIRES PURCHASE OF COMPLETE ASSEMBLY)	1
9	XDHZZ	51064	619-0860-101	...SCREW,MACHINE	8
10	XDHZZ	51064	330-1064-002	..HOUSING	1
11	PAHZZ	51064	330-1545-002	...STATOR,MOTOR	1
12	PAHZZ	51064	320-2361-000	...RING,STATOR	1
13	XDHZZ	51064	320-4069-002	..PIN	1
14	PAHZZ	51064	320-4559-002	...ROTOR	1
15	XDHZZ	51064	320-4069-003	...PIN	1
16	PAHZZ	51064	320-1612-000	.....UNIVERSAL JOINT	1
17	PAHZZ	51064	320-2424-000	.....SEAL,MECHANICAL	1
18	PBHZZ	51064	33260	.....PUMP UNIT,CENTRIFUG	1
19	XDHZZ	51064	602-0020-161	.....SCREW,MACHINE	4
20	XDHZZ	51064	610-0120-021	....PLUG,PIPE	3
21	XDHZZ	51064	602-0030-241	.....SCREW,MACHINE	4
22	XDHZZ	51064	320-6382-000	.....RING,CONTROL,FLUID	1
23	PBHZZ	51064	330-04528-000	.....MOTOR,ALTERNATING C	1

END OF FIGURE

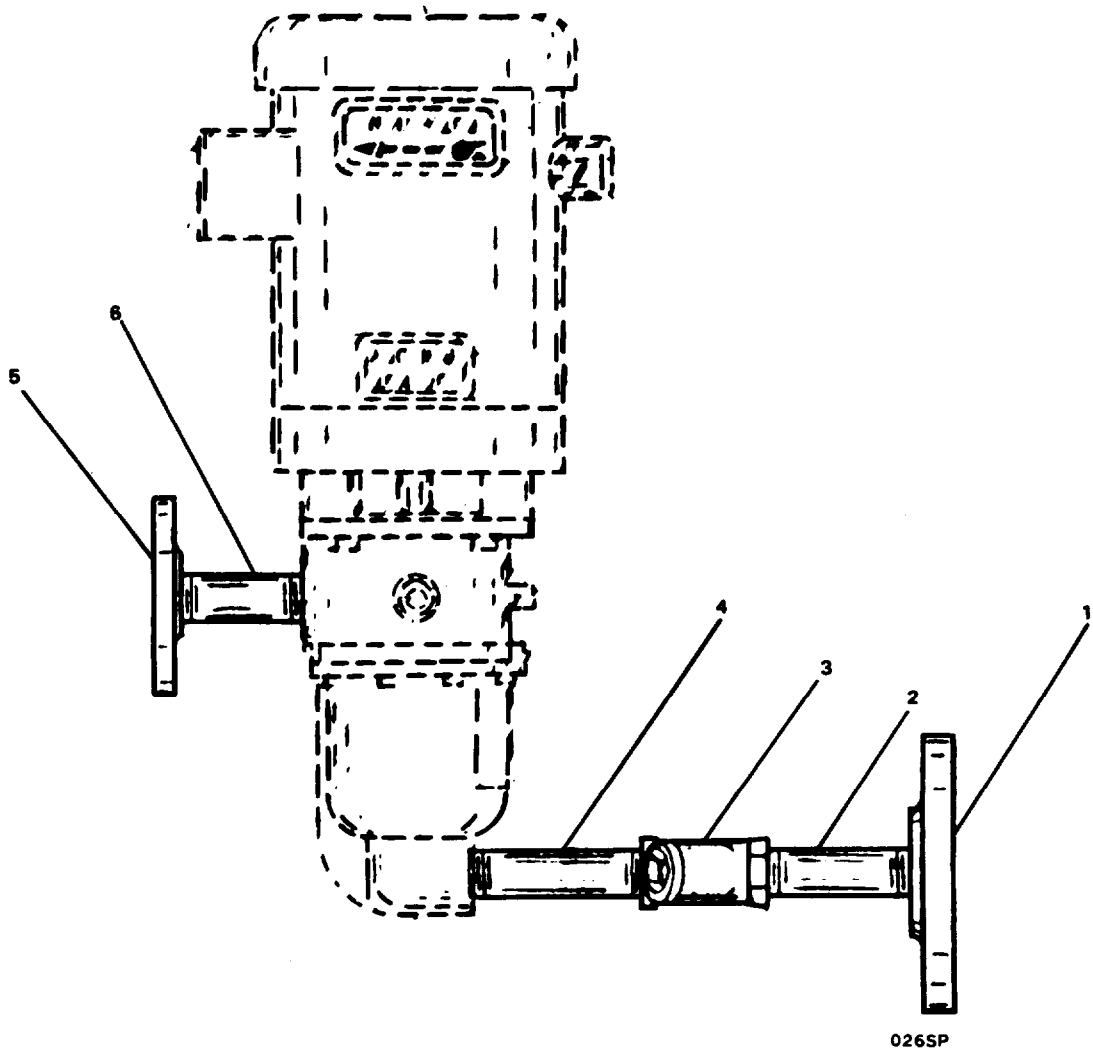

FIGURE 347. Water Pump/Motor Assembly (Sheet 1 of 2).

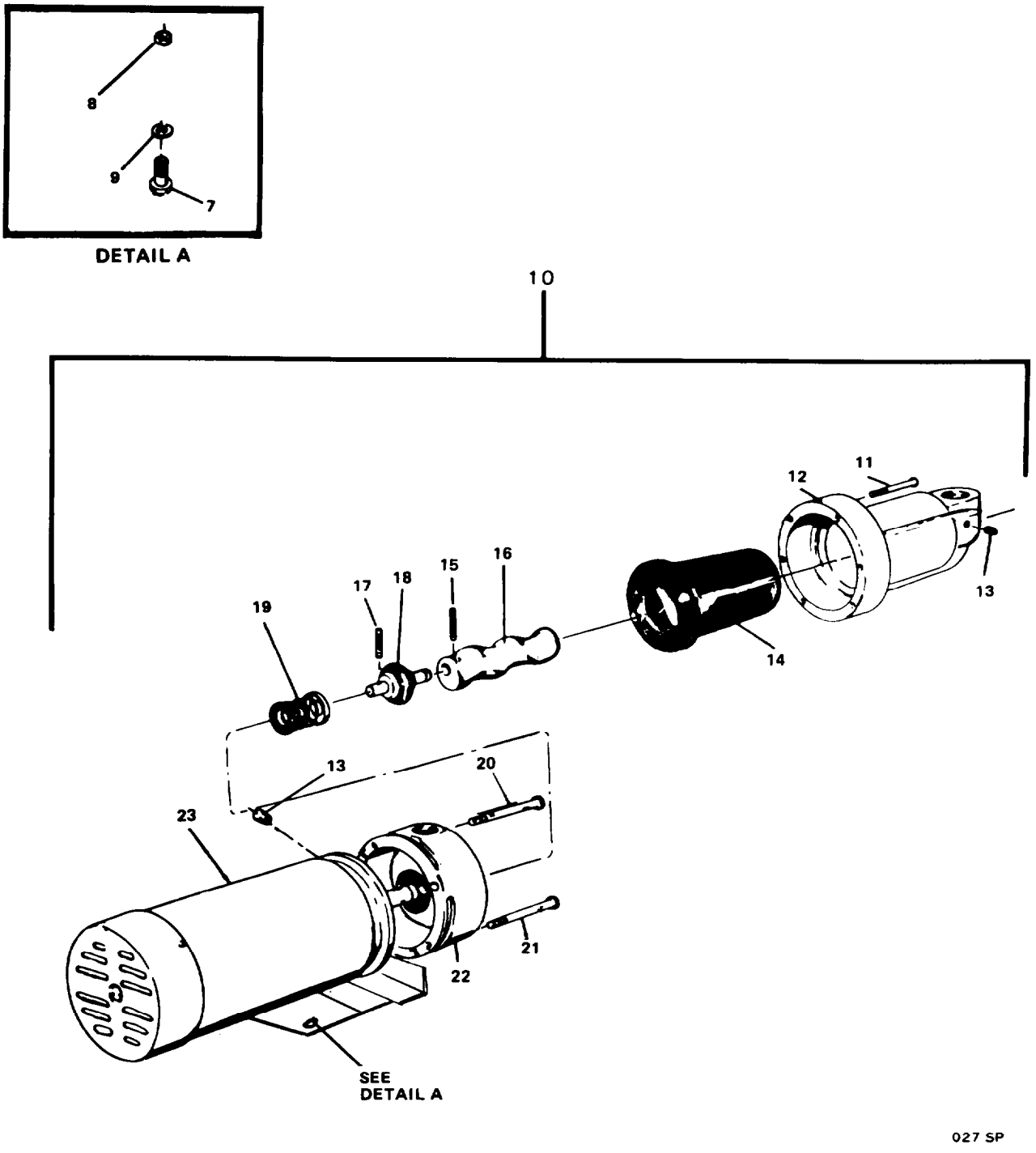

FIGURE 347. Water Pump/Motor Assembly (Sheet 2 of 2).

(1) ITEM NO	(2) SMR CODE	(3) FSCM	(4) PART NUMBER	(5) DESCRIPTION AND USABLE ON CODES(UOC)	(6) QTY
				GROUP 18 BASIC CRAFT	
				FIG. 347 WATER PUMP/MOTOR ASSEMBLY	
1	XDFZZ	53918	1334-1-2	...FLANGE,PIPE	1
2	XDFZZ	53918	NJ68	...NIPPLE,PIPE	1
3	XDFZZ	53918	VE14	...VALVE,CHECK	1
4	XDFZZ	53918	NJ69	...NIPPLE,PIPE	1
5	XDFZZ	53918	1334-1-3	...FLANGE,PIPE	1
6	XDFZZ	53918	NJ67	...NIPPLE,PIPE	1
7	XDFZZ	53918	B018	...BOLT,MACHINE	4
8	XDFZZ	53918	NU12	...NUT,PLAIN,HEXAGON	4
9	XDFZZ	53918	WA12	...WASHER,LOCK	4
10	XDFHH	51064	1334-1	...PUMP/MOTOR,ASSEMBLY	1
11	XDHZZ	51064	619-0860-101	...SCREW,MACHINE	6
12	XDHZZ	51064	330-1064-002	..HOUSING	1
13	XDHZZ	51064	610-0120-021	..PLUG,PIPE	2
14	PAHZZ	51064	330-1006-001	...STATOR,MOTOR	1
15	XDHZZ	51064	320-4069-002	..PIN	1
16	PAHZZ	51064	320-1569-002	...ROTOR,MOTOR	1
17	XDHZZ	51064	320-4069-003	...PIN	1
18	PAHZZ	51064	320-1612-000	.... UNIVERSAL JOINT	1
19	PAHZZ	51064	320-2424-000	... SEAL,MECHANICAL0	1
20	XDHZZ	51064	602-0030-241	... SCREW,MACHINE	4
21	XDHZZ	51064	602-0020-161	... SCREW,MACHINE	4
22	XDHZZ	51064	320-6382-000	... RING,CONTROL,FLUID	1
23	XDHZZ	51064	34461	... PUMP,MOTORIZED	1

END OF FIGURE

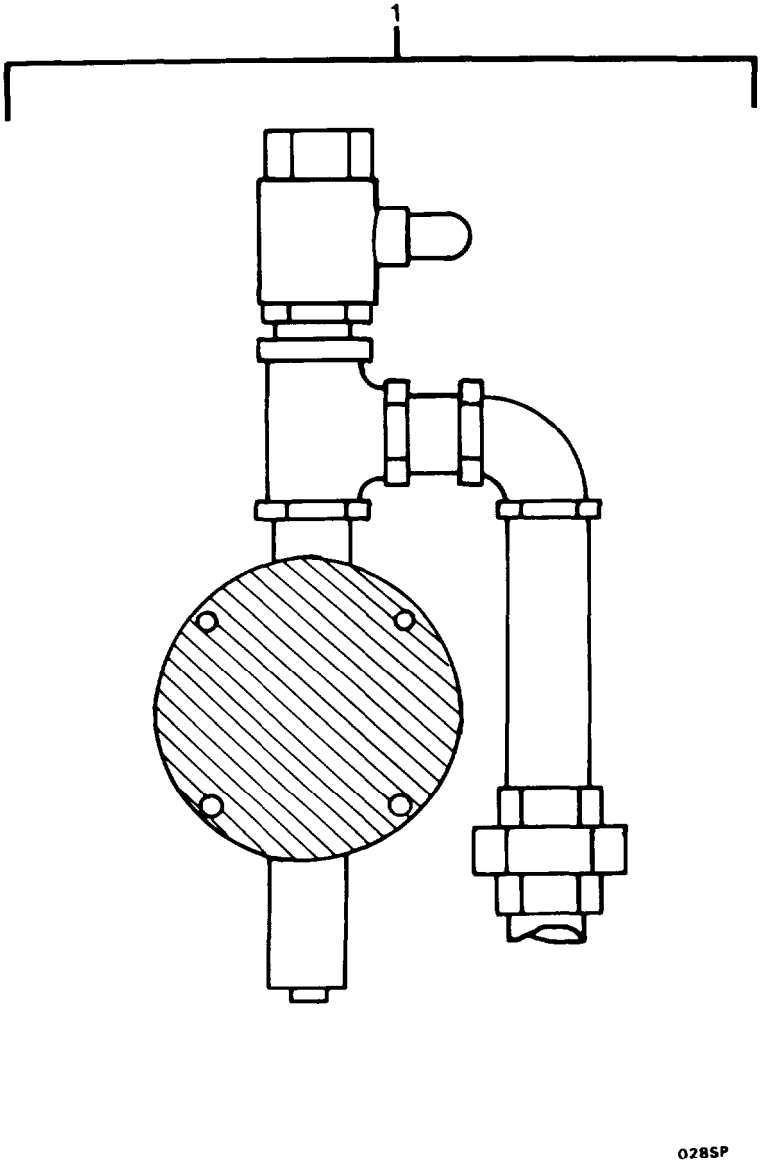

FIGURE 348. Sensing Module Assembly (Sheet 1 of 2).

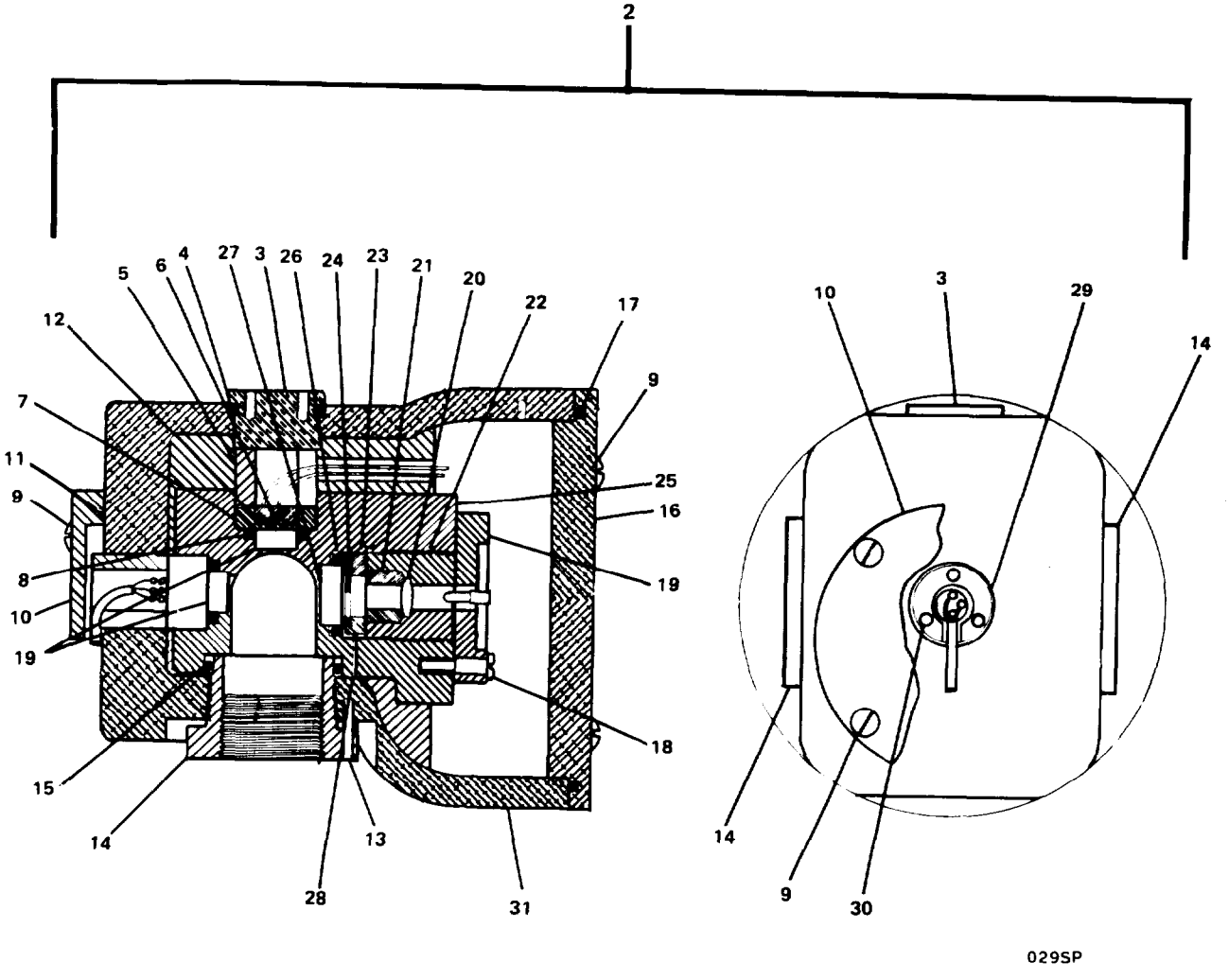

FIGURE 348. Sensing Module Assembly (Sheet 2 of 2).

(1) ITEM NO	(2) SMR CODE	(3) FSCM	(4) PART NUMBER	(5) DESCRIPTION AND USABLE ON CODES(UOC)	(6) QTY
				GROUP 18 BASIC CRAFT	
				FIG. 348 SENSING MODULE ASSEMBLY	
1	XDFZZ	53918	1335-E	...MANIFOLD,SENSOR	1
2	PBFHH	53918	7 7 0	....PHOT0 ELECTRIC CELL	1
3	XDHZZ	53918	80197	...PLUG,RETAINER	1
4	XDHZZ	53918	80200	...PACKING,PREFORMED	1
5	XDHZZ	53918	80196	...RETAINER,DIODE	1
6	XDHZZ	53918	21022	...PHOTO,DIODE	1
7	XDHZZ	53918	80195	...SUPPORT,DIODE	1
8	XDHZZ	53918	80199	...PACKING,PREFORMED	2
9	XDHZZ	53918	26033	...SCREW,MACHINE	8
10	XDHZZ	53918	80224	... CAP,LIGHT DETECTOR	1
11	XDHZZ	53918	80992	...PACKING,PREFORMED	1
12	XDHZZ	53918	80174	...WINDOW,SIDE	2
13	XDHZZ	53918	80221	...PIN,ROLL	2
14	XDHZZ	53918	80237	...BUSHING	2
15	XDHZZ	53918	80212	...PACKING,PREFORMED	2
16	XDHZZ	53918	80186	... CAP,SENSOR END	1
17	XDHZZ	53918	80206	...PACKING,PREFORMED	1
18	XDHZZ	53918	770-22	...SCREW,MACHINE	2
19	XDHZZ	53918	80996	...SUPPORT	1
20	XDHZZ	53918	21020	...LENS,BARREL	1
21	XDHZZ	53918	80192	...RETAINER,LENS	1
22	XDHZZ	53918	80191	...BARREL	1
23	XDHZZ	53918	80175	... SUPPORT,WINDOW	1
24	XDHZZ	53918	80215	... PACKING,PREFORMED	1
25	XDHZZ	53918	80236	... BLOCK,INNER OPTICAL	1
26	XDHZZ	53918	80198	... PACKING,PREFORMED	1
27	XDHZZ	53918	80173	...WINDOW,DIRECT	1
28	XDHZZ	53918	80222	...SPACER,ALIGNMENT	1
29	XDHZZ	53918	80993	...SPACER,LIGHT (DETECTOR)	1
30	XDHZZ	53918	80994	...PAD,LIGHT (DETECTOR)	1
31	XDHZZ	53918	80185	...HOUSING	1

END OF FIGURE

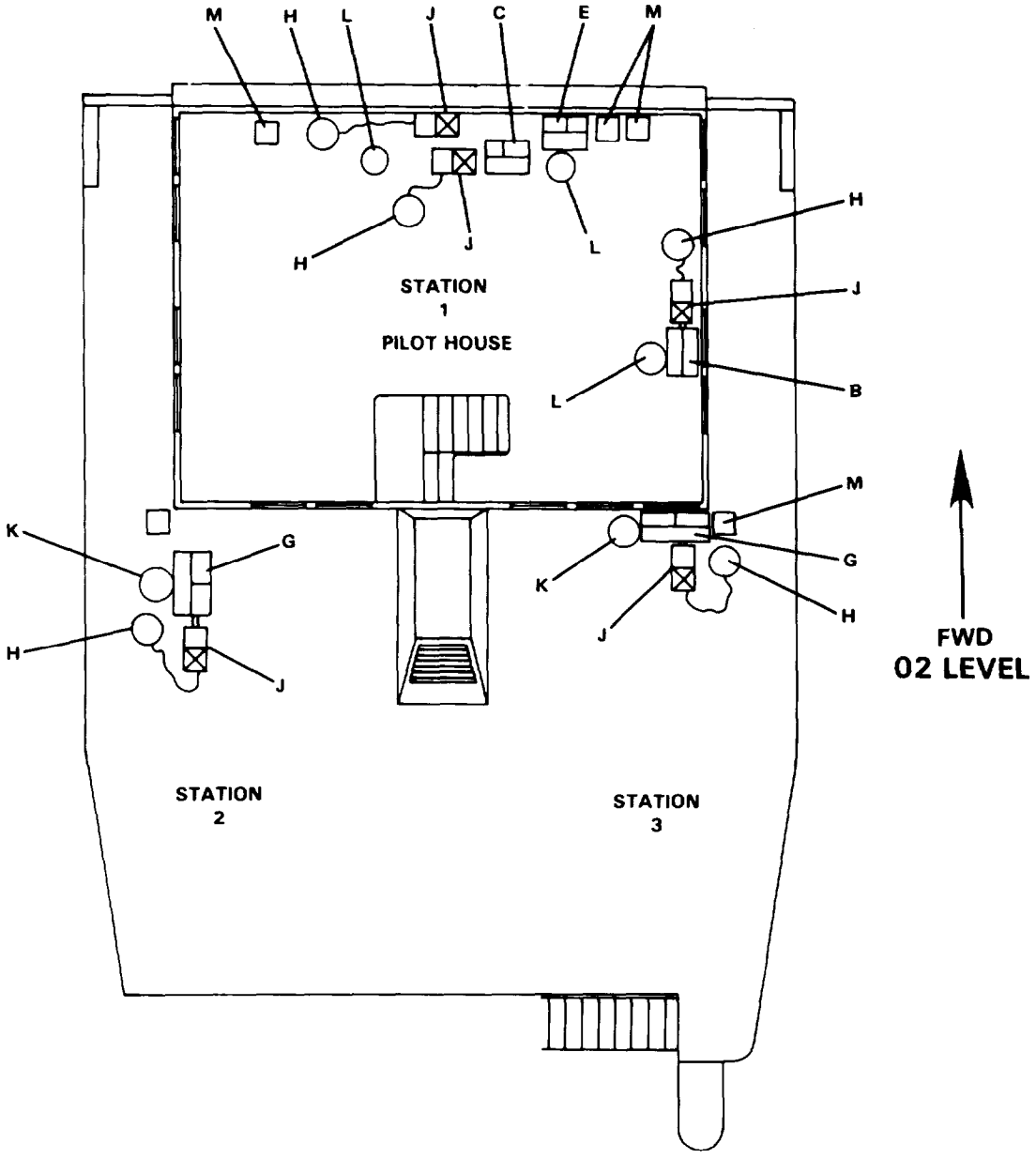

LEGEND

A	SOUNDPOWERED	TELEPHONE,	SER(MOD)-19-(1JVR/19)	H	HEADSETCHEST
B	SOUND-POWERED	TELEPHONE.	SELR(MOD)-19-(1JVR/19)	J	JACKBOX
C	SOUNDPOWERED	TELEPHONE;	SFLR(MOD)-19-(1JVCM19)	K	BELL
D	SOUNDPOWERED	TELEPHONE,	SER(MOD)-8-(2JVR8)	L	BUZZER
E	SOUND-POWERED	TELEPHONE,	SELR(MOD)-8-(2JAR/L8)	M	HEADSET LOCKER
F	SOUND-POWERED	TELEPHONE,	MWT-R-19(1JVWT19)	N	HORN
G	SOUND-POWERED	TELEPHONE,	MWT-R-8(JAWT8)	P	ACOUSTIC SOUND BOOTH

001SPPS

FIGURE 349. Sound Powered Telephone System (Sheet 1 of 7).

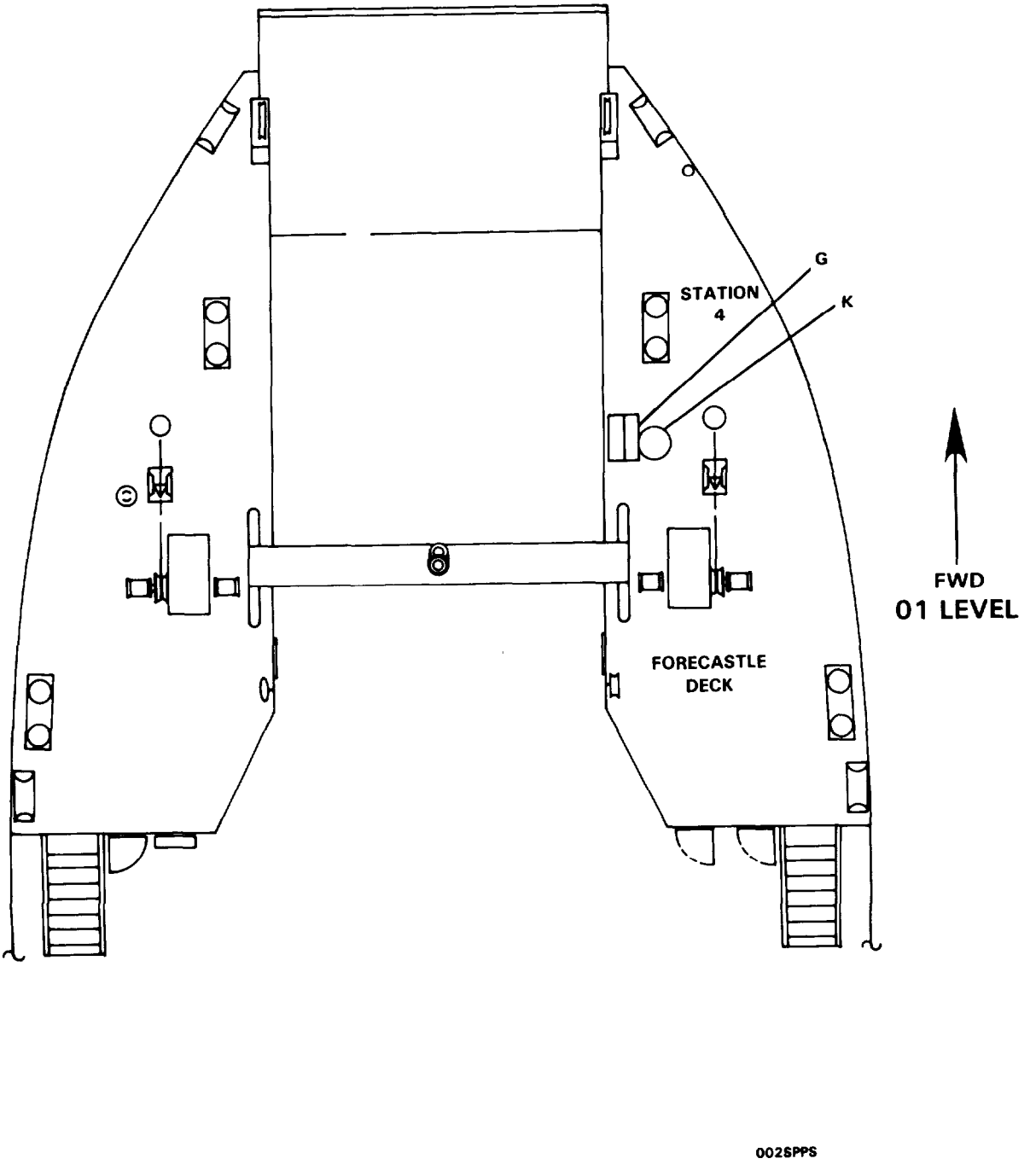

FIGURE 349. Sound Powered Telephone System (Sheet 2 of 7).

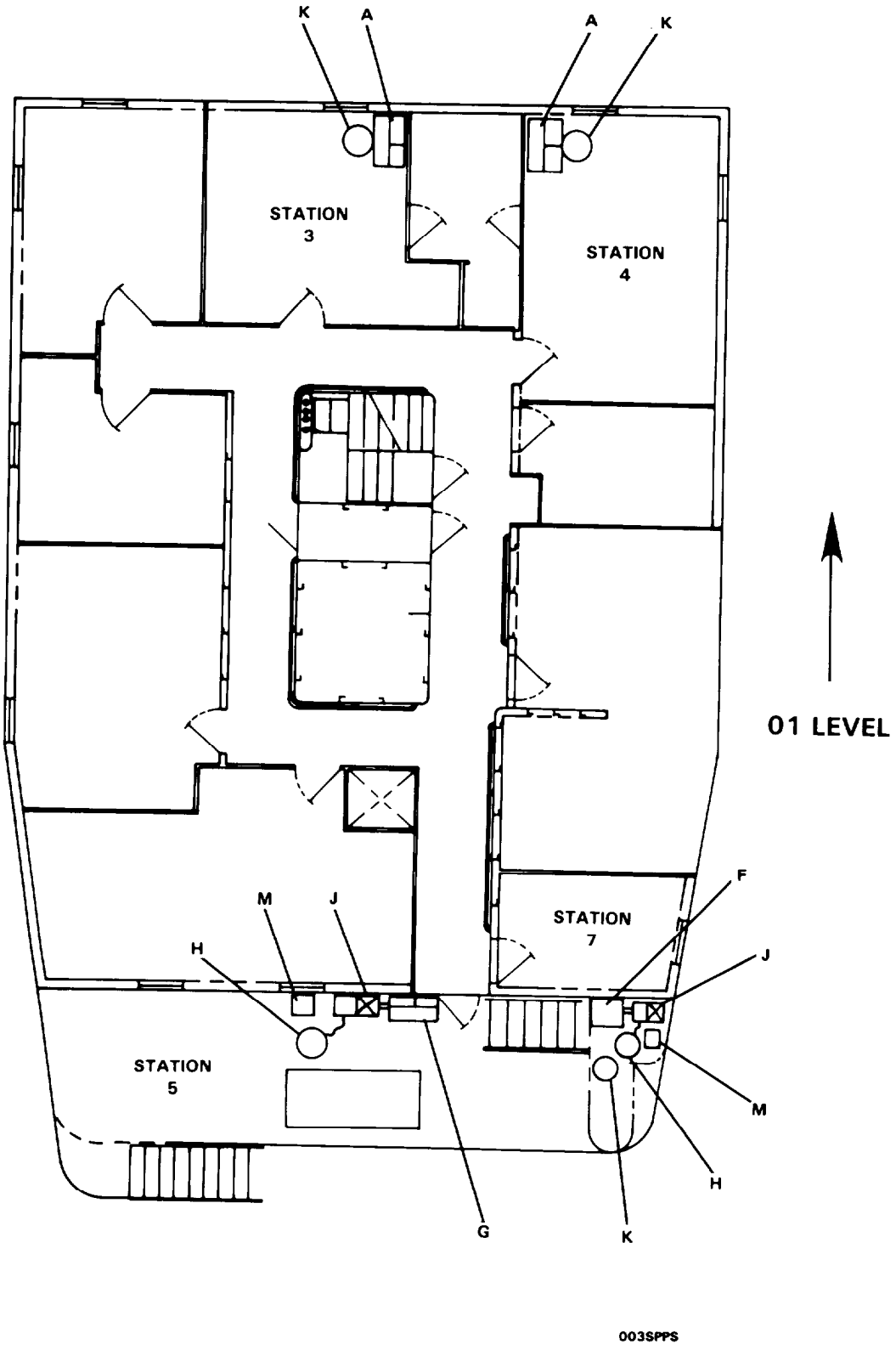

FIGURE 349. Sound Powered Telephone System (Sheet 3 of 7).

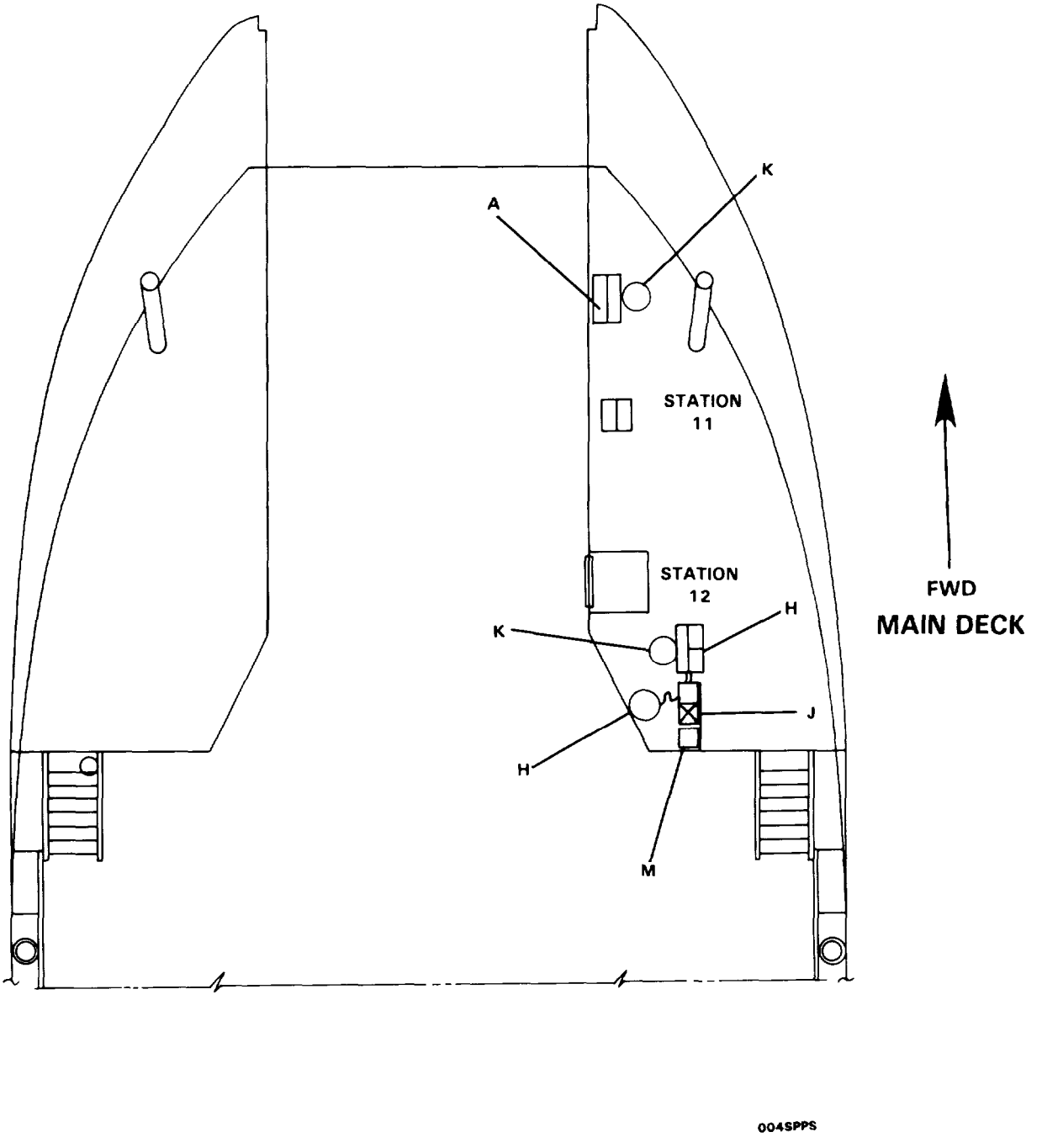

FIGURE 349. Sound Powered Telephone System (Sheet 4 of 7).

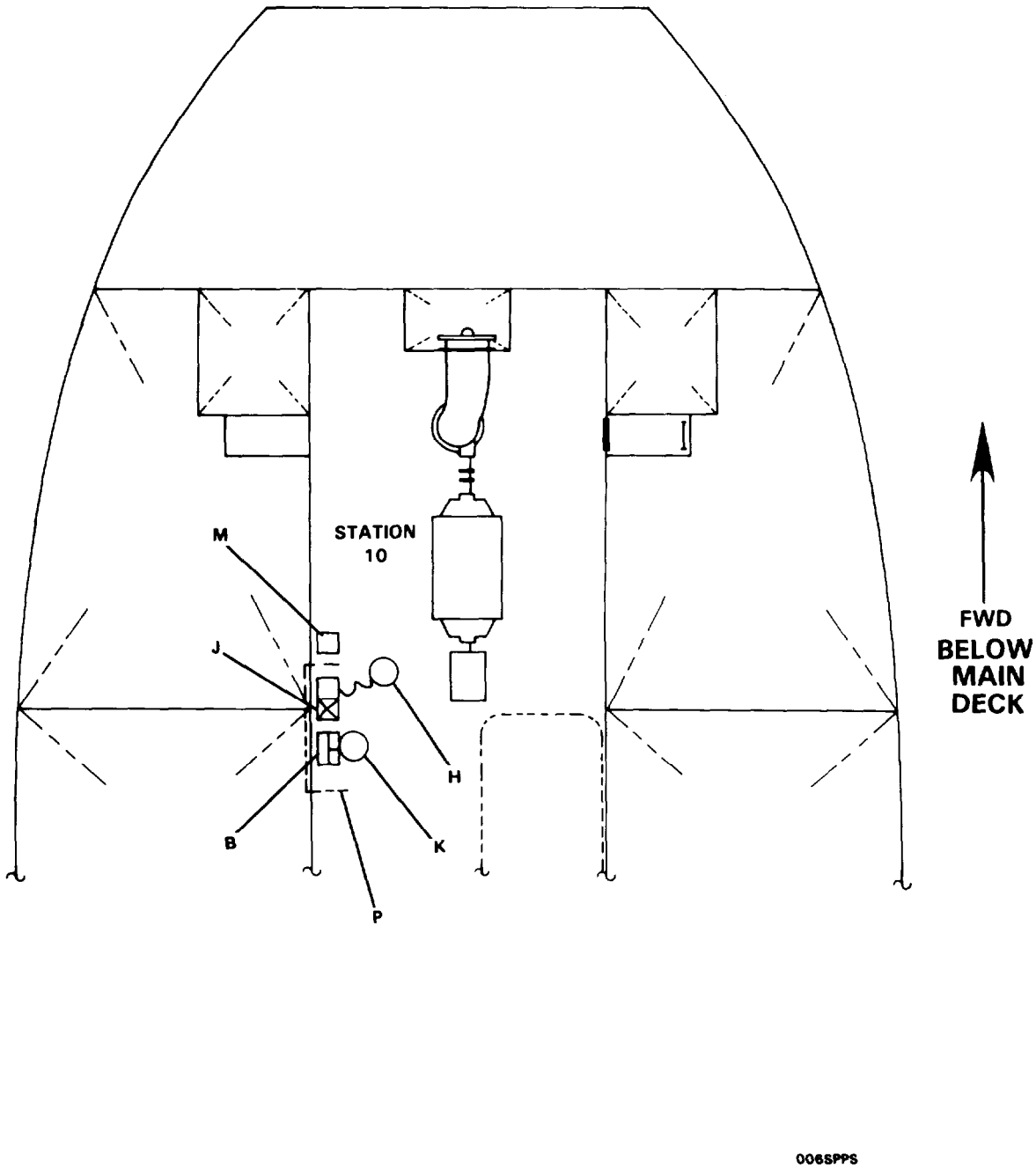

FIGURE 349. Sound Powered Telephone System (Sheet 5 of 7).

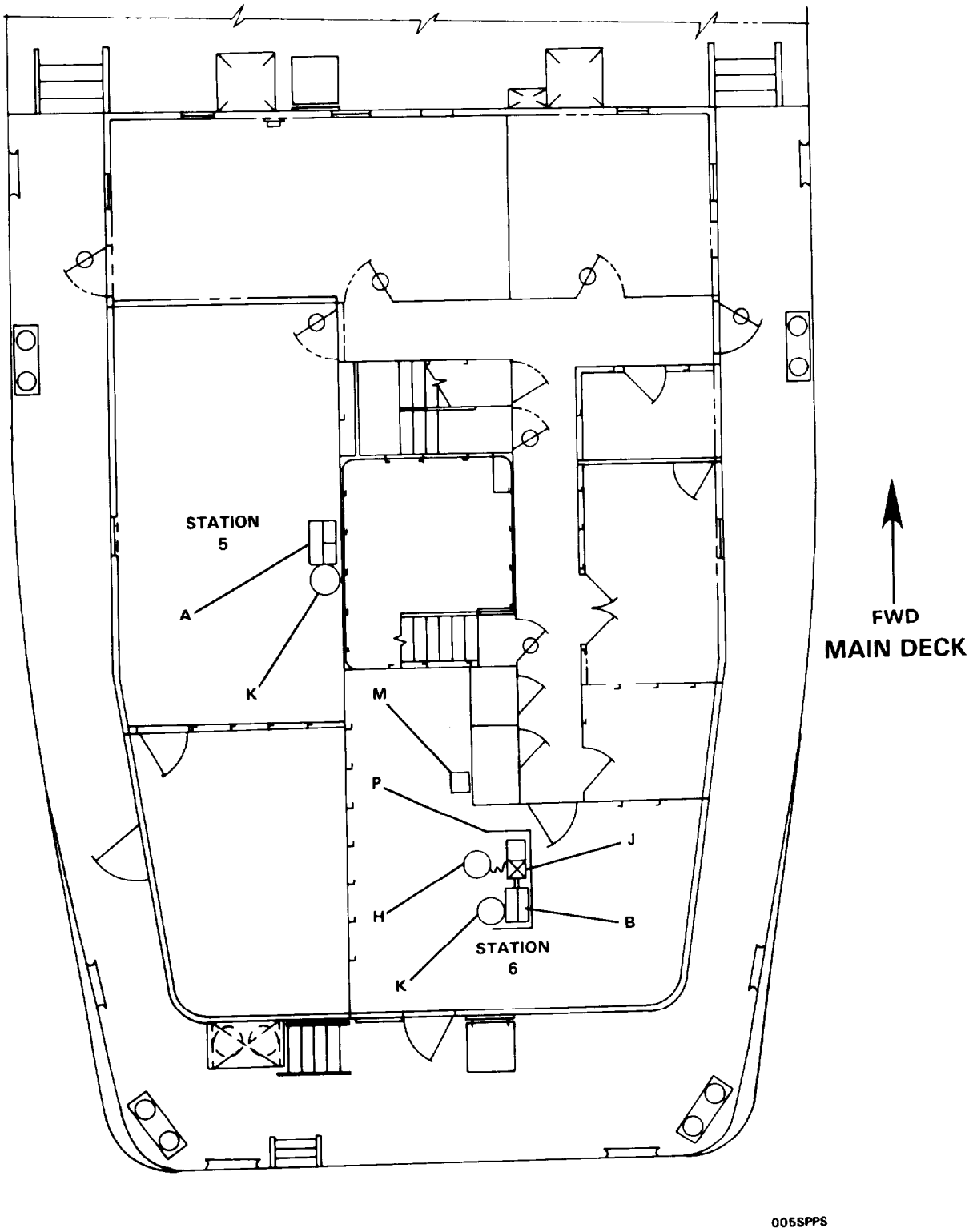

FIGURE 349. Sound Powered Telephone System (Sheet 6 of 7).

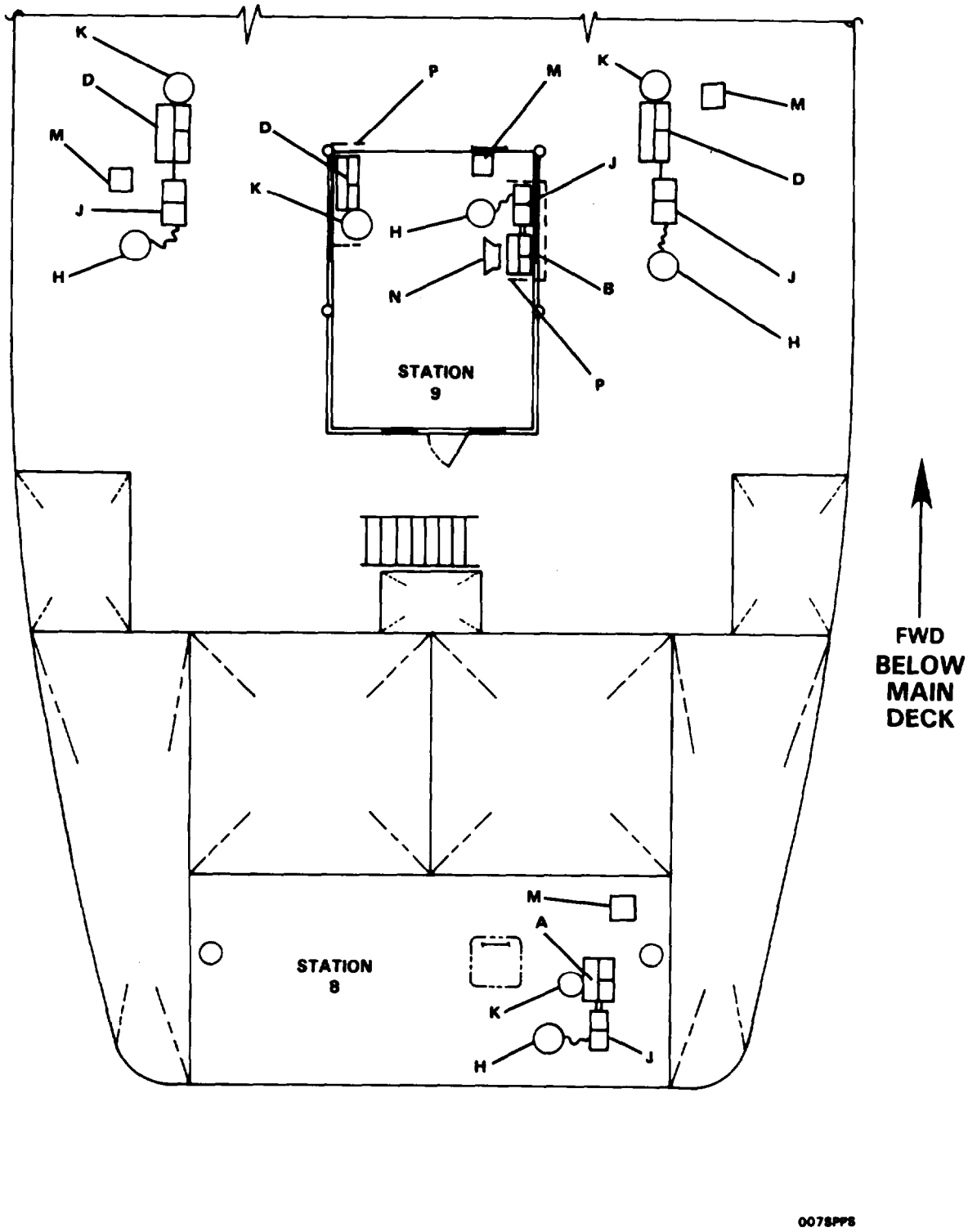

FIGURE 349. Sound Powered Telephone System (Sheet 7 of 7).

(1) ITEM NO	(2) SMR CODE	(3) FSCM	(4) PART NUMBER	(5) DESCRIPTION AND USABLE ON CODES(UOC)	(6) QTY
				GROUP 18 BASIC CRAFT	
				FIG. 349 SOUND POWERED TELEPHONE SYSTEM	
	XCCFF	77408	8432016	.SOUND POWERED TELEP	1
				END OF FIGURE	

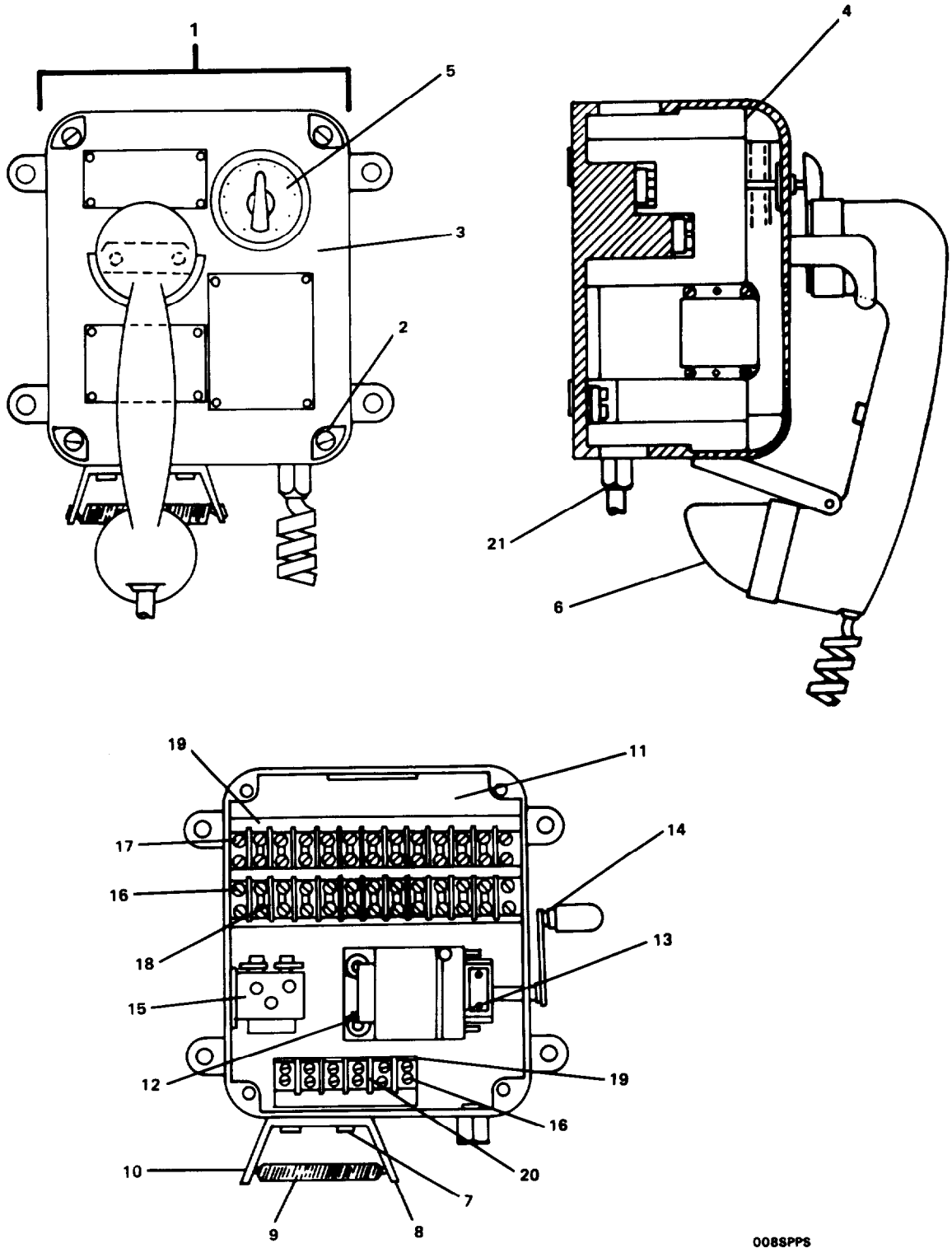

FIGURE 350. Sound Powered Telephone. SER (MOD)-19 (Sheet 1 of 2).

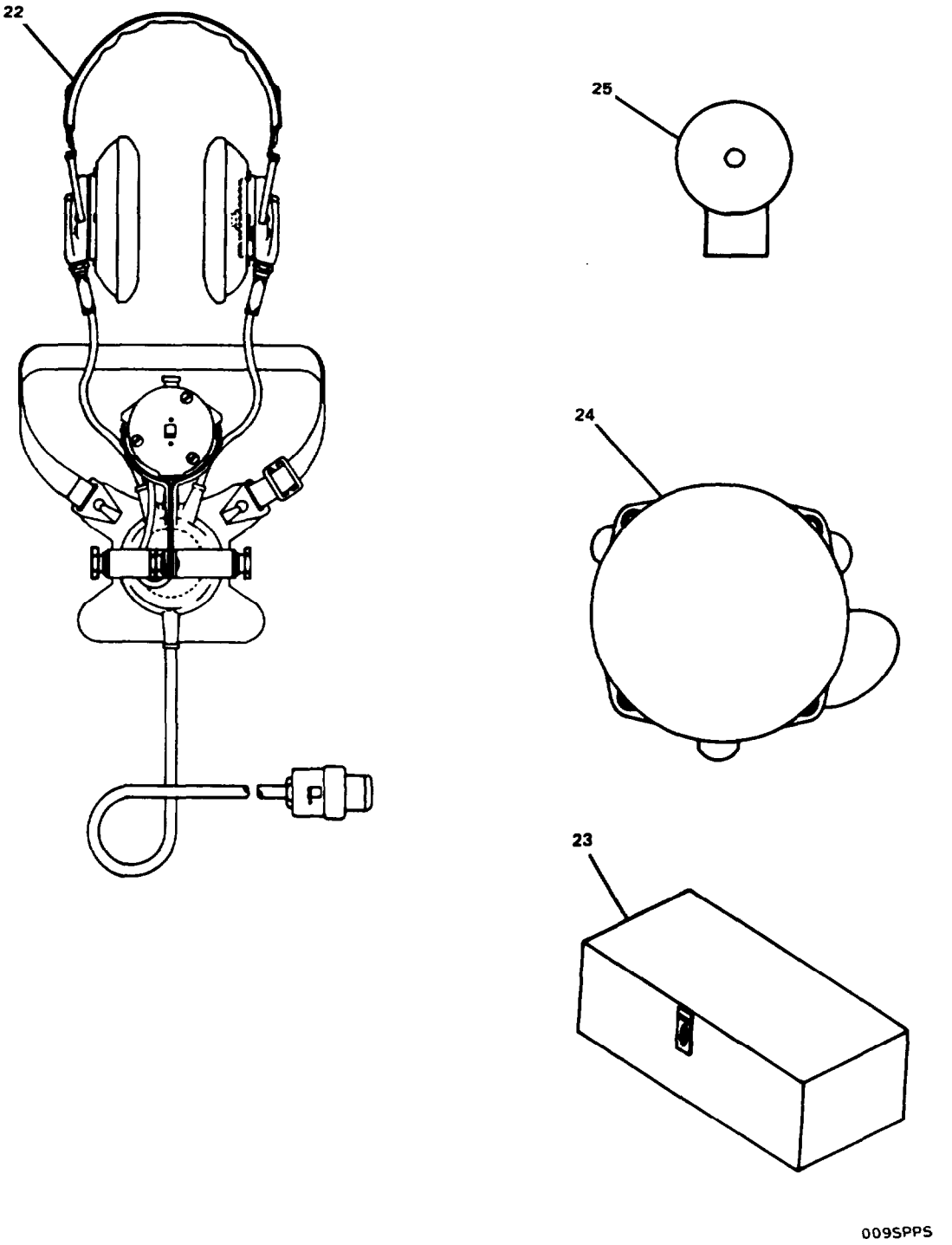

FIGURE 350. Sound Powered Telephone. SER (MOD)-19 (Sheet 2 of 2).

(1) ITEM NO	(2) SMR CODE	(3) FSCM	(4) PART NUMBER	(5) DESCRIPTION AND USABLE ON CODES(UOC)	(6) QTY
				GROUP 18 BASIC CRAFT	
				FIG. 350 SOUND POWERED TELEPHONE, SER (MOD)-19	
1	PBCFF	73274	SER (MOD)-19	....TELEPHONE, SET	6
2	XDFZZ	73274	52-02-26	...SCREW,SELF-LOCKING	4
3	XDFZZ	73274	52-02-20	...COVER,TELEPHONE	1
4	PBFZZ	73274	50-19A	...GASKET	1
5	XDFZZ	73274	1D	...SWITCH,TELEPHONE,SE	1
6	PBCZZ	81349	H-203/U	...HANDSET	1
7	XDFZZ	73274	52-02-28	...SCREW,SELF-LOCKING	2
8	XDFZZ	73274	52-02-10	...BRACKET,HANDSET	1
9	XDFZZ	73274	52-02-11	...SPRING,BRACKET	1
10	XDFZZ	73274	52-02-12	...PIN,COTTER	2
11	XDFZZ	73274	52-02-19	...BOX,TELEPHONE	1
12	XDFZZ	73274	52-02-31	...SCREW,DRIVE	4
13	PBFZZ	73274	22	...SCREW,MACHINE	1
14	PAFZZ	73274	24	...HANDLE	1
15	PAFZZ	73274	31	...RELAY,ELECTROMAGNET	1
16	XDFZZ	73274	52-02-29	...SCREW,DRIVE	12
17	XDFZZ	73274	52-02-30	...SCREW,DRIVE	4
18	XDFZZ	81349	38TB11	....TERMINAL BOARD	2
19	XDFZZ	73274	52-02-6	...PLATE,IDENTIFICATIO	4
20	XDFZZ	81349	38TB4	....TERMINAL BOARD	1
21	XDFZZ	73274	13	....GUARD,CORD TELEPHON	1
22	PBCZZ	81349	H-ZOO/U	....HEADSET-CHEST SET,E	2
23	XDCZZ	53711	815F1853040SYM29 24.1	....BOX,HEADSET STORAGE	2
24	XDCZZ	81349	SYM2841TYG-15A	....JACKBOX ASSEMBLY	2
25	PAFZO	28199	ICB2S4EXP	...BELL,ELECTRICAL	6

END OF FIGURE

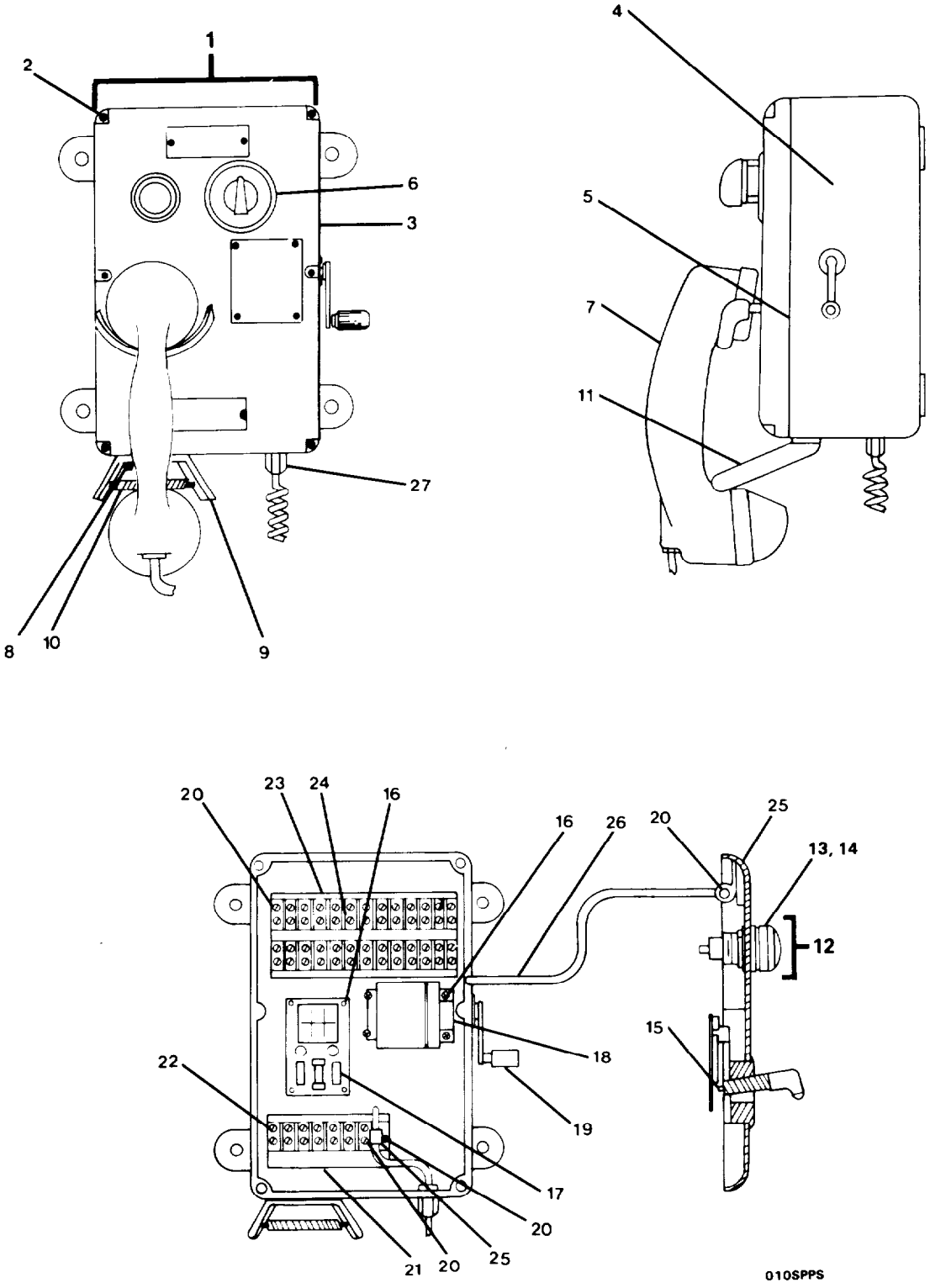

FIGURE 351. Sound Powered Telephone, SELR (MOD)-19 (Sheet 1 of 2).

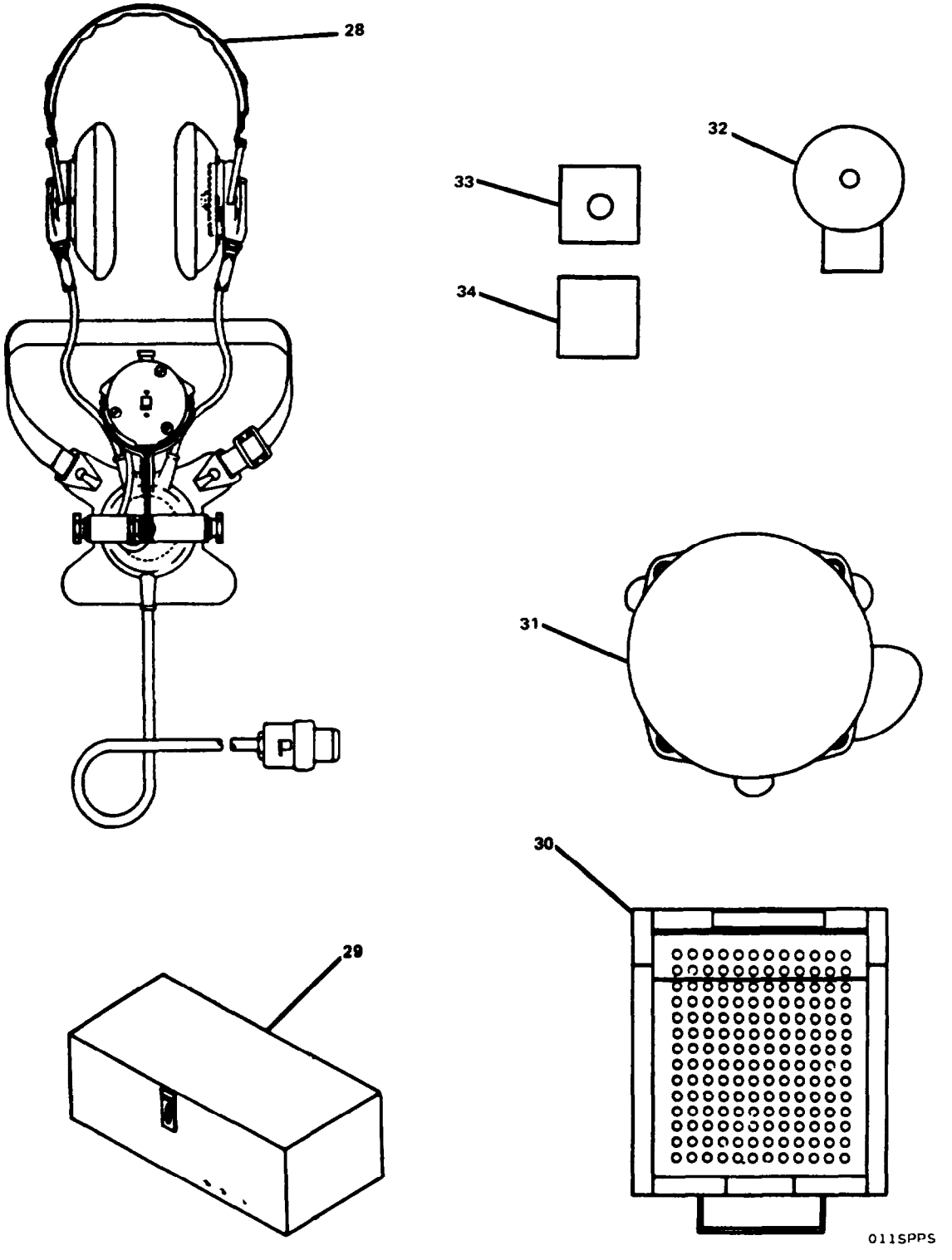

FIGURE 351. Sound Powered Telephone. SELR (MOD)-19 (Sheet 2 of 2).

(1) ITEM NO	(2) SMR CODE	(3) FSCM	(4) PART NUMBER	(5) DESCRIPTION AND USABLE ON CODES(UOC)	(6) QTY
				GROUP 18 BASIC CRAFT	
				FIG. 351 SOUND POWERED TELEPHONE, SELR (MOD)-19	
1	PBCFF	73274	SELR (MOD)-19	....TELEPHONE SET	4
2	XDFZZ	73274	85-09-26	...SCREW,DRIVE	6
3	XDFZZ	73274	85-09-2	...COVER,ACCESS	1
4	XDFZZ	73274	85-09-1	...HOUSING,TELEPHONE	1
5	PAFZZ	73274	50-19B	...GASKET	1
6	XDFZZ	73274	1D	...SWITCH,TELEPHONE,SE	1
7	PBCZZ	81349	H-203/U	...HANDSET	1
8	XDFZZ	73274	85-09-28	...SCREW,DRIVE	2
9	XDFZZ	73274	28	...BRACKET,HANDSET	1
10	XDFZZ	73274	85-09-16	...SPRING,RETAINING,HA	1
11	XDFZZ	73274	85-09-8	...PIN,COTTER	2
12	PAFZZ	73274	41	...LIGHT,INDICATOR	1
13	XAFZZ	73274	43	..LENS (RED)	1
14	XAFZZ	73274	42	...LAMP,INCANDESCENT (12OV)	1
15	PBFZZ	73274	44	...SWITCH,HOOK	1
16	XDFZZ	73274	85-09-27	...SCREW,SELF-LOCKING	8
17	PAFZZ	73274	32A	...RELAY,ELECTROMAGNET	1
18	PBFZZ	73274	22	...SCREW,MACHINE	1
19	PAFZZ	73274	24	...HANDLE	1
20	XDFZZ	73274	85-09-25	...SCREW,DRIVE	14
21	XDFZZ	73274	85-09-20	...PLATE,IDENTIFICATIO	1
22	XDFZZ	81349	38TB4	....TERMINAL BOARD	1
23	XDFZZ	73274	85-09-33	...PLATE,IDENTIFICATIO	2
24	XDFZZ	81349	38TB11	....TERMINAL BOARD	2
25	XDFZZ	73274	85-09-22	...STRAP,CABLE	2
26	XDFZZ	73274	85-09-21	...CABLE,ELECTRICAL	1
27	XDFZZ	73274	85-09-9	....GUARD,CORD TELEPHON	1
28	PBCZZ	81349	H-200/U	.....HEADSET-CHEST SET,E	3
29	XDCZZ	53711	815F1853040SYM29 24.1	.....BOX,HEADSET STORAGE	3
30	XDFZZ	73274	B-D 602	...ACOUSTIC-BOOTH	3
31	XDCZZ	81349	SYM2841TYG-15A	....JACKBOX ASSEMBLY	4
32	PAFZO	28199	ICB2S4EXP	...BELL,ELECTRICAL	2
33	PACZO	81349	IC/Z1S4	...BUZZER	1
34	PAFZO	81349	IC/H1S4	...HORN,ELECTRICAL	1

END OF FIGURE

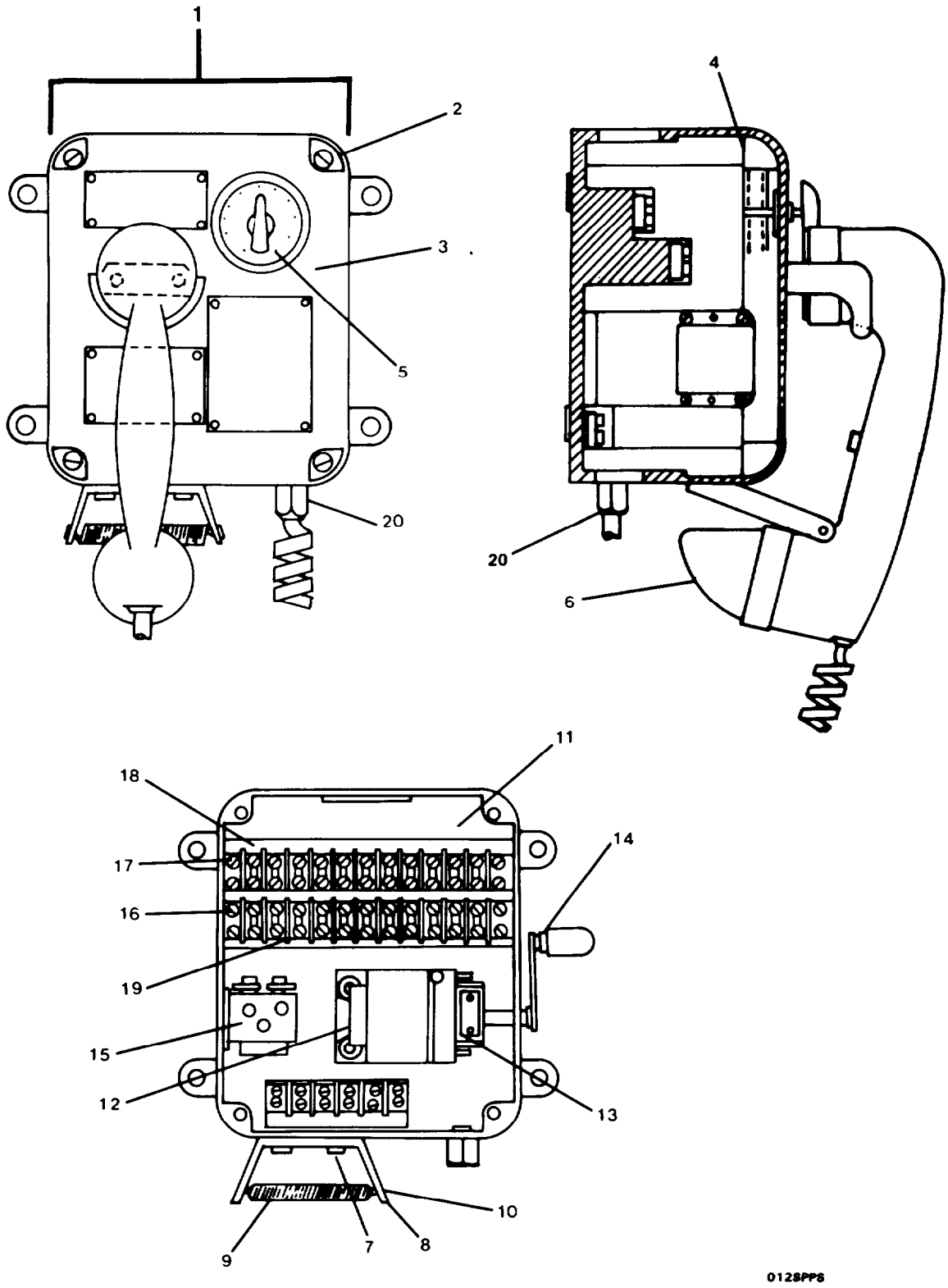

FIGURE 352. Sound Powered Telephone. SER (MOD)-8 (Sheet 1 of 2).

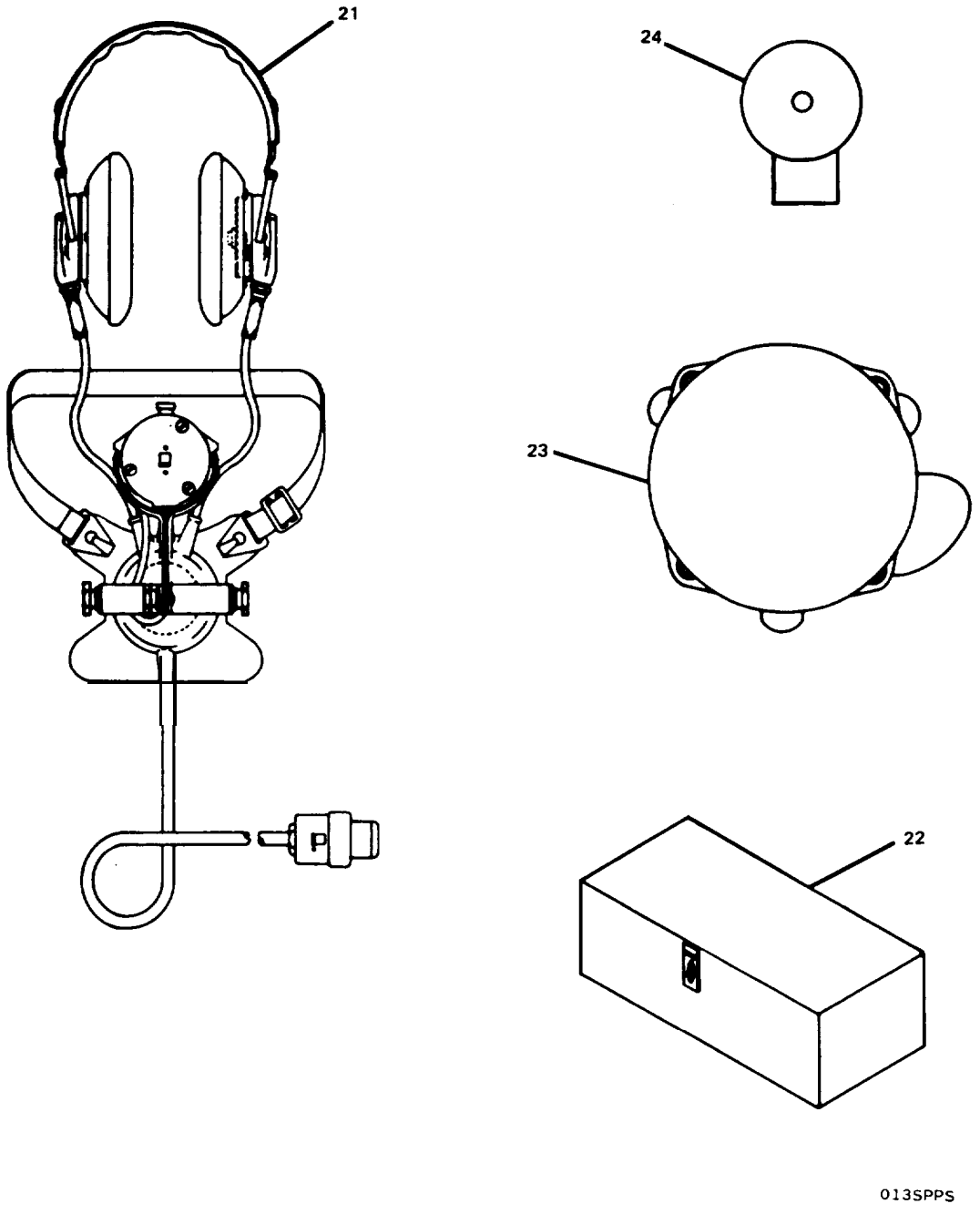

FIGURE 352. Sound Powered Telephone, SER (MOD)-8 (Sheet 2 of 2).

(1) ITEM NO	(2) SMR CODE	(3) FSCM	(4) PART NUMBER	(5) DESCRIPTION AND USABLE ON CODES (UOC)	(6) QTY
				GROUP 18 BASIC CRAFT	
				FIG. 352 SOUND POWERED TELEPHONE, SER (MOD)-8	
1	PBCFF	73274	SER (MOD)-8	. . TELEPHONE,SET	3
2	XDFZZ	73274	52-02-26	. . . SCREW,SELF-LOCKING	4
3	XDFZZ	73274	52-02-20	. . . COVER,TELEPHONE	1
4	PAFZZ	73274	50-19A	. . . GASKET	1
5	XDFZZ	73274	1A	. . . SWITCH,TELEPHONE,SE	1
6	PBCZZ	81349	H-203/U	. . . HANDSET	1
7	XDFZZ	73274	52-02-28	. . . SCREW,SELF-LOCKING	2
8	XDFZZ	73274	52-02-10	. . . BRACKET,HANDSET	1
9	XDFZZ	73274	52-02-11	. . . SPRING,BRACKET	1
10	XDFZZ	73274	52-02-12	. . PIN,COTTER	2
11	XDFZZ	73274	52-02-19	. . . BOX.TELEPHONE	1
12	XDFZZ	73274	52-02-31	. . . SCREW,DRIVE	4
13	PBFZZ	73274	22	. . . SCREW,MACHINE	1
14	PAFZZ	73274	24	. . HANDLE	1
15	PAFZZ	73274	31	. . . RELAY,ELECTROMAGNET	1
16	XDFZZ	73274	52-02-29	. . SCREW,DRIVE	4
17	XDFZZ	73274	52-02-30	. . . SCREW,DRIVE	4
18	XDFZZ	73274	52-02-6	. . . PLATE,IDENTIFICATIO	2
19	XDFZZ	81349	38TB11	. . . TERMINAL BOARD	2
20	XDFZZ	73274	13	. . GUARD,CORD TELEPHON	1
21	PBCZZ	81349	H-200/U	. . . HEADSET-CHEST SET,E	2
22	XDCZZ	53711	815F1853040SYM29 24.1	. . BOX,HEADSET STORAGE	2
23	XDCZZ	81349	SYM2841TYG-15A	. . . J A C K B O X A S S E M B L Y	3
24	PAFZO	28199	ICB2S4EXP	. . . B E L L , E L E C T R I C A L	3

END OF FIGURE

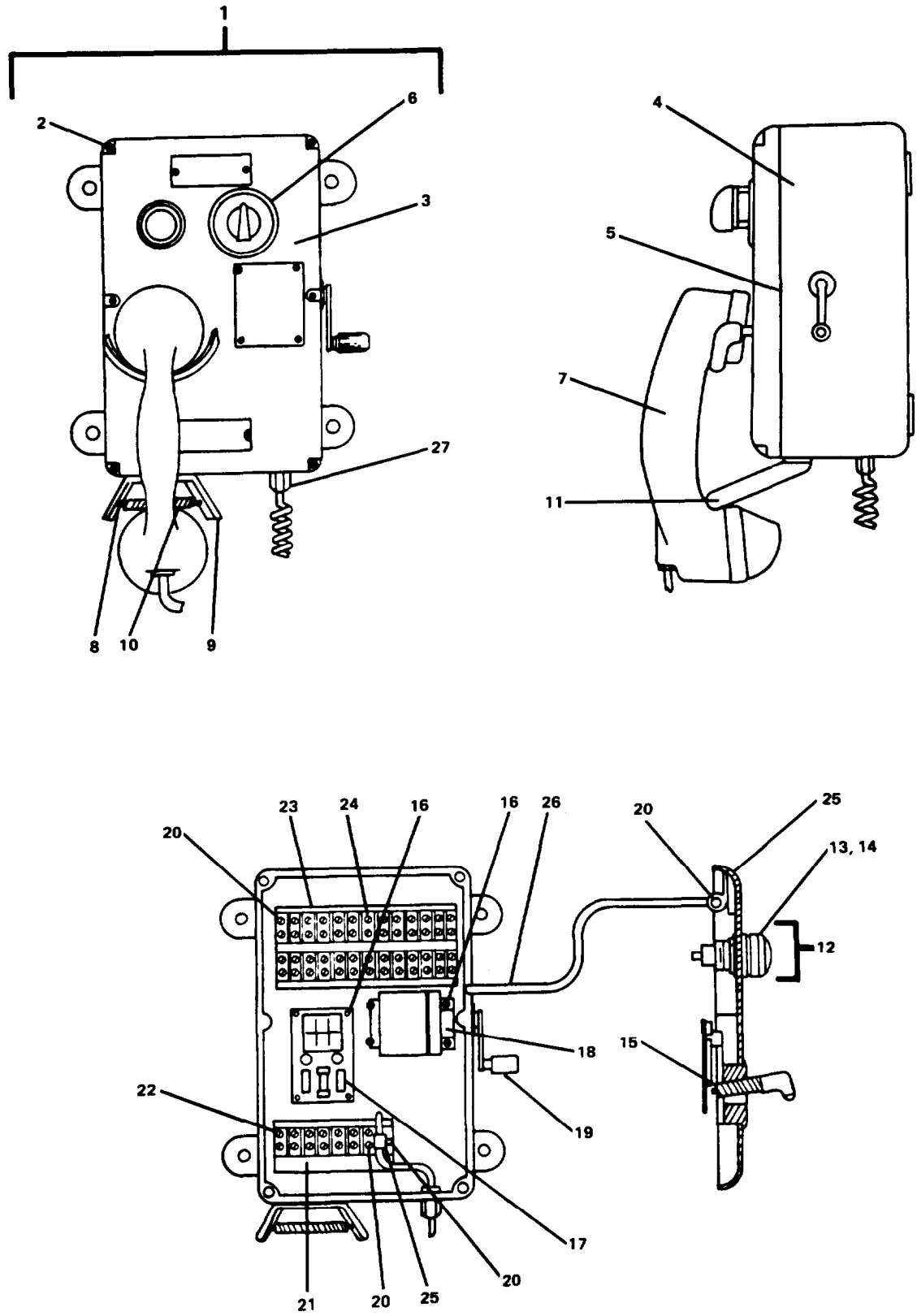

FIGURE 353. Sound Powered Telephone, SELR (MOD)-8 (Sheet 1 of 2).

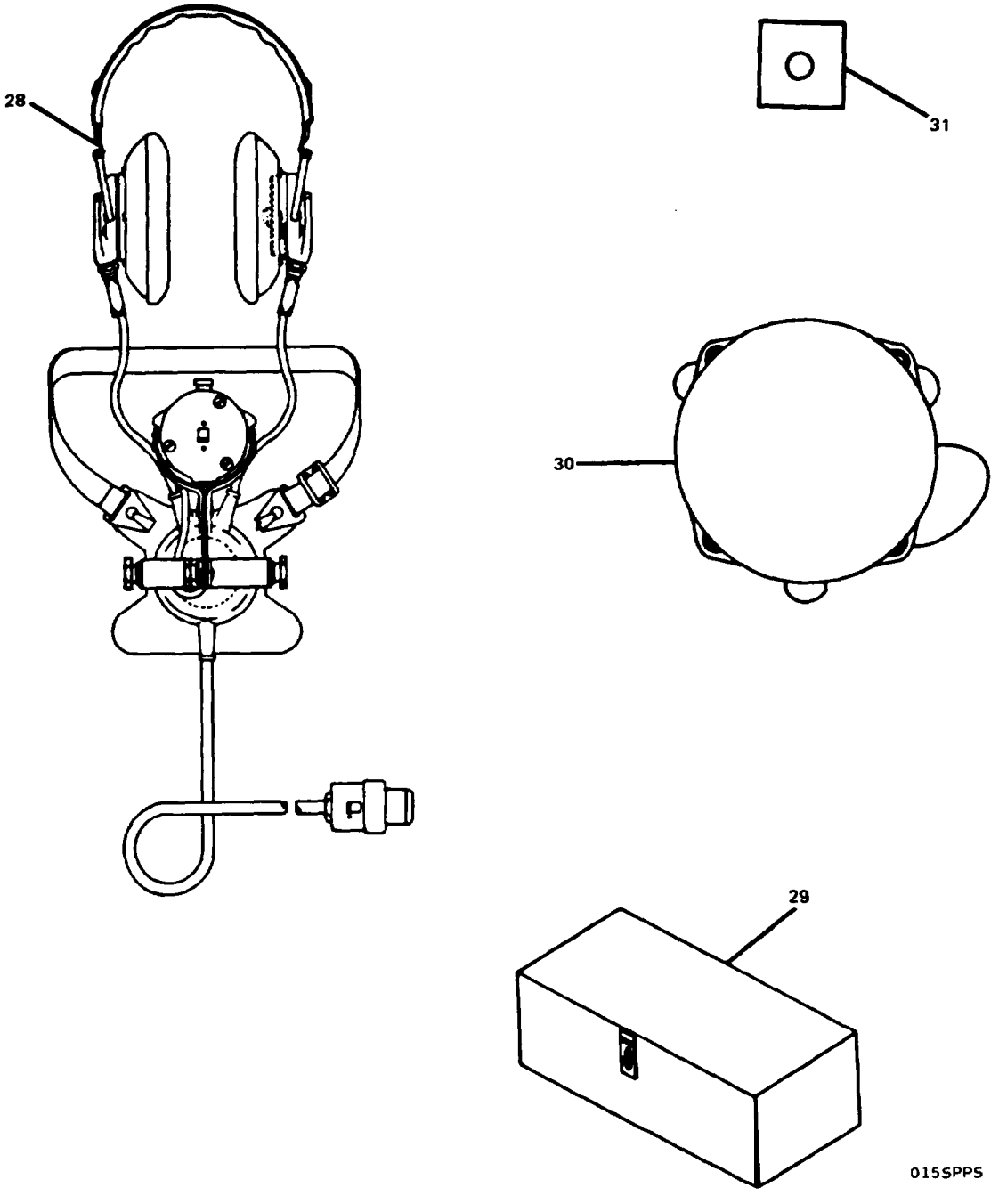

FIGURE 353. Sound Powered Telephone, SELR (MOD)-8 (Sheet 2 of 2).

(1) ITEM NO	(2) SMR CODE	(3) FSCM	(4) PART NUMBER	(5) DESCRIPTION AND USABLE ON CODES(UOC)	(6) QTY
				GROUP 18 BASIC CRAFT	
				FIG. 353 SOUND POWERED TELEPHONE, SELR (MOD)-8	
1	PBCFF	73274	SELR (MOD)-8	. . TELEPHONE,SET	1
2	XDFZZ	73274	85-09-26	. . . SCREW,DRIVE	6
3	XDFZZ	73274	85-09-2	. . . COVER,ACCESS	1
4	XDFZZ	73274	85-09-1	. ..HOUSING,TELEPHONE	1
5	PAFZZ	73274	50-19B	. ..GASKET	1
6	XDFZZ	73274	1A	. . . SWITCH,TELEPHONE SE	1
7	PBCZZ	81349	H-203/U	. . . HANDSET	1
8	XDFZZ	73274	85-09-28	. . . SCREW,DRIVE	2
9	XDFZZ	73274	28	. . . BRACKET,HANDSET	1
10	XDFZZ	73274	85-09-16	. . . SPRING,RETAINING,HA	1
11	XDFZZ	73274	85-09-B	. . . PIN,COTTER	2
12	PAFZZ	73274	41	. . . LIGHT,INDICATOR	1
13	XAFZZ	73274	43	. . . . LENS (RED)	1
14	XAFZZ	73274	42	. . . . LAMP,INCANDESCENT	1
15	PBFZZ	73274	44	. . . SWITCH,HOOK	1
16	XDFZZ	73274	85-09-27	. . . SCREW,SELF-LOCKING	8
17	PAFZZ	73274	32A	. . . RELAY,ELECTROMAGNET	1
18	PBFZZ	73274	22	. ..SCREW,MACHINE	1
19	PAFZZ	73274	24	. . . HANDLE	1
20	XDFZZ	73274	85-09-25	. . . SCREW,DRIVE	14
21	XDFZZ	73274	85-09-20	. . . PLATE,IDENTIFICATIO	1
22	XDFZZ	81349	38TB4	. . . TERMINAL BOARD	1
23	XDFZZ	73274	85-09-33	. . . PLATE,IDENTIFICATIO	2
24	XDFZZ	81349	38TB11	. . . TERMINAL BOARD	2
25	XDFZZ	73274	85-09-22	. . . STRAP,CABLE	2
26	XDFZZ	73274	85-09-21	. . . CABLE,ELECTRICAL	1
27	XDFZZ	73274	85-09-9	. . . GUARD,CORD TELEPHON	1
28	PBCZZ	81349	H-200/U	. HEADSET-CHEST SET,E	1
29	XDCZZ	53711	815F1853040SYM29 24.1	. . . BOX,HEADSET STORAGE	1
30	XDCZZ	81349	SYM2841TYG-15A	. . . JACKBOX ASSEMBLY	1
31	PACZO	81349	IC/Z1S4	. . . BUZZER	1

END OF FIGURE

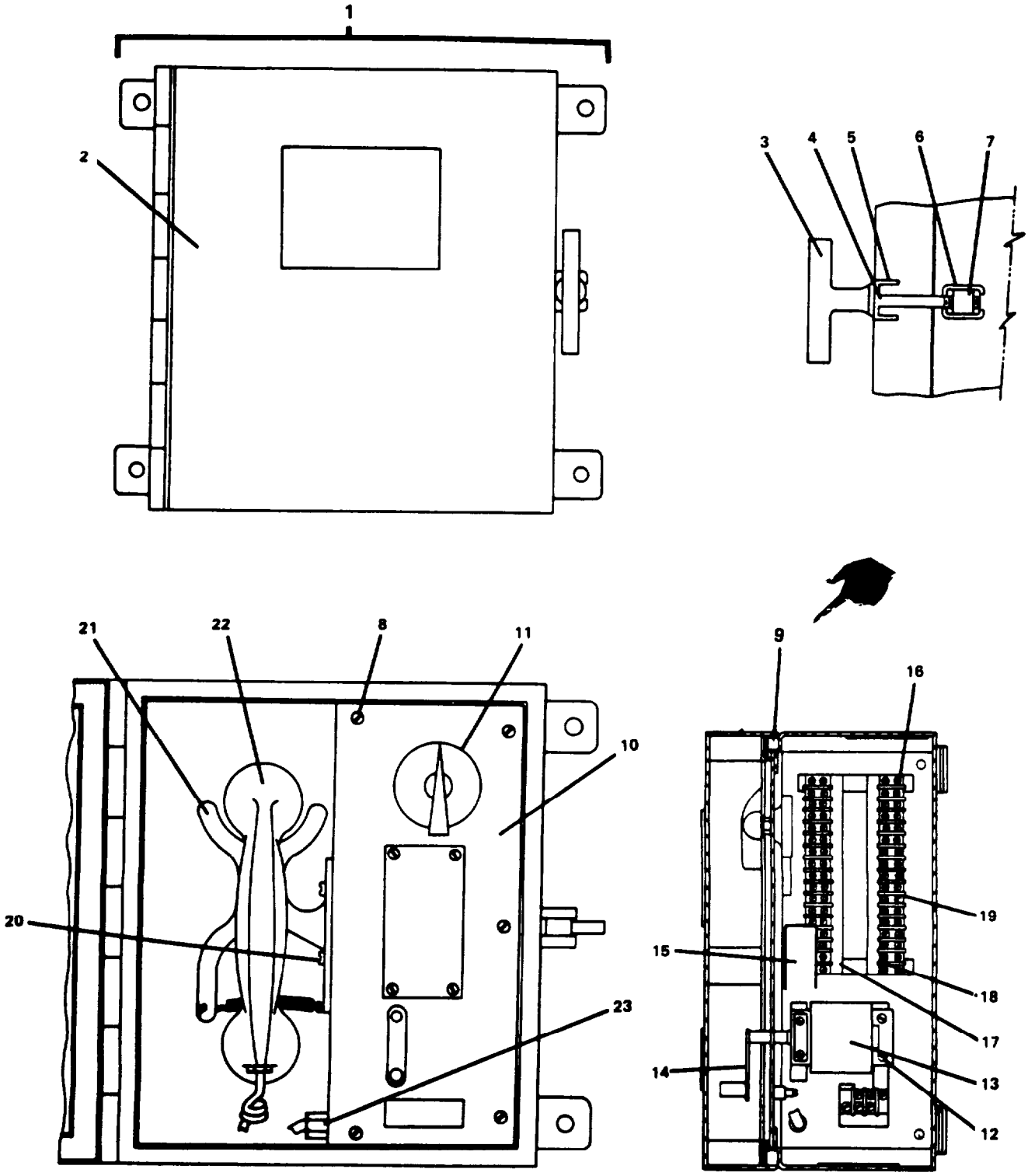

FIGURE 354. Sound Powered Telephone MWT-R-19 (Sheet 1 of 2).

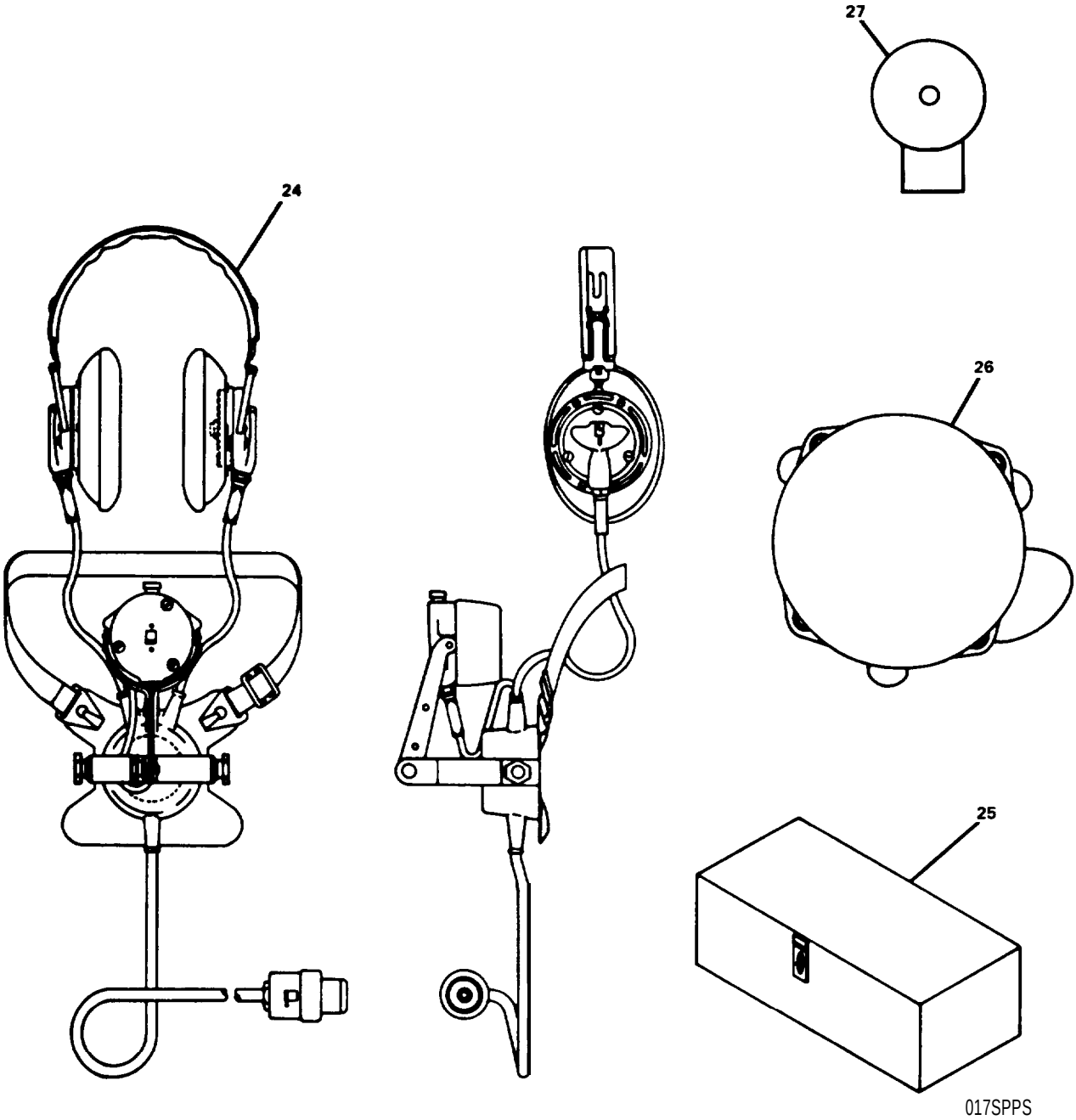

FIGURE 354. Sound Powered Telephone, MWT-R-19 (Sheet 2 of 2).

(1) ITEM NO	(2) SMR CODE	(3) CAGEC	(4) PART NUMBER	(5) DESCRIPTION AND USABLE ON CODES (UOC)	(6) QTY
				GROUP 18 BASIC CRAFT	
				FIG. 354 SOUND POWERED TELEPHONE, MWT-R-19	
1	PBCFF	73274	MWT-R-19	••TELEPHONE,SET	1
2	XDFZZ	73274	803-02-1	•••HANDSET BOX	1
3	XDFZZ	73274	51-204	•••T-HANDLE	1
4	XDFZZ	73274	803-02-6	•••SCREW, SELF-LOCKING	1
5	XDFZZ	73274	50-97	•••GUIDE, HANDLE	1
6	XDFZZ	73274	50-98	•••RETAINER, ROD, PIVOT	2
7	XDFZZ	73274	50-96	•••ROD,PIVOT	1
8	XDFZZ	73274	803-02-21	•••SCREW, SELF-LOCKING	5
9	PAFZZ	73274	50-19D	•••GASKET GUM RUBBER	1
10	XDFZZ	73274	803-02-2	•••PLATE, MOUNTING	1
11	XDFZZ	73274	1D	•••SWITCH, TELEPHONE, SE	1
12	XDFZZ	73274	803-02-23	•••SCREW, SELF-LOCKING	4
13	PBFZZ	73274	22	•••SCREW, MACHINE	1
14	PAFZZ	73274	25	•••GENERATOR, RINGING, H	1
15	PAFZZ	73274	31	•••RELAY, ELECTROMAGNET	1
16	XDFZZ	73274	803-02-22	•••SCREW,DRIVE	8
17	XDFZZ	75382	615-112	•••PLATE, IDENTIFICATIO	1
18	XDFZZ	75382	615-1327	•••PlATE, IDENTIFICATIO	1
19	XDFZZ	75382	600-15	•••TERMINAL BOARD	2
20	XDFZZ	73274	803-02-24	•••SCREW, SELF-LOCKING	2
21	XDFZZ	73274	51-22	•••BRACKET, HANDSET	1
22	PBCZZ	81349	H-203/U	•••HANDSET	1
23	XDFZZ	73274	803-02-20	•••GUARD, CORD TELEPHON	1
24	PBCZZ	81349	H-200/U	•••HEADSET-CHEST SET, E	1
25	XDCZZ	53711	815F1853040 SYM2924.1	•••BOX, HEADSET STORAGE	1
26	XDCZZ	81349	SYM284ITYG-15A	•••JACKBOX ASSEMBLY	1
27	PAFZO	28199	ICB2S4EXP	•••BELL, ELECTRICAL	1

END OF FIGURE

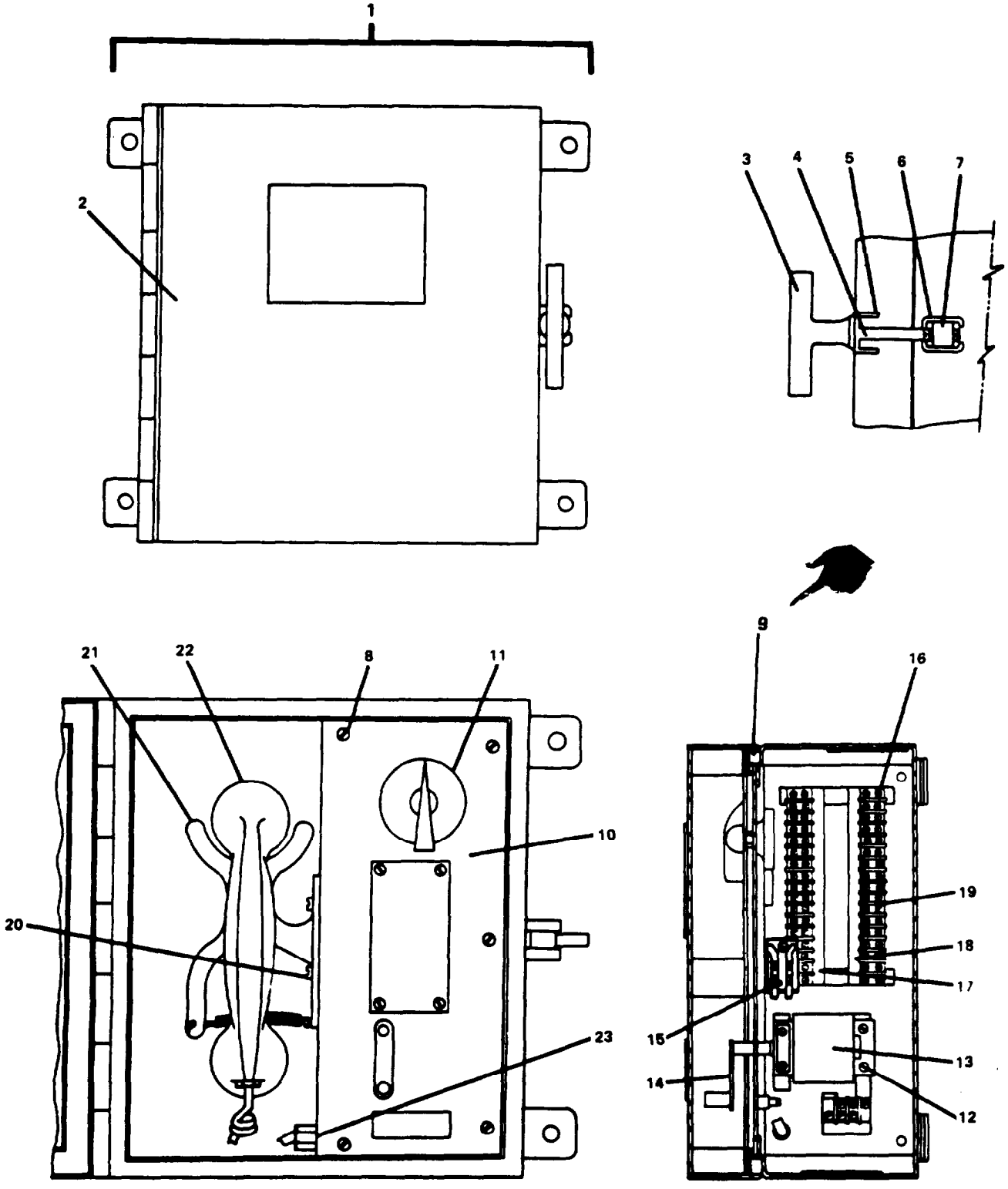

FIGURE 355. Sound Powered Telephone MWT-R-8 (Sheet 1 of 2).

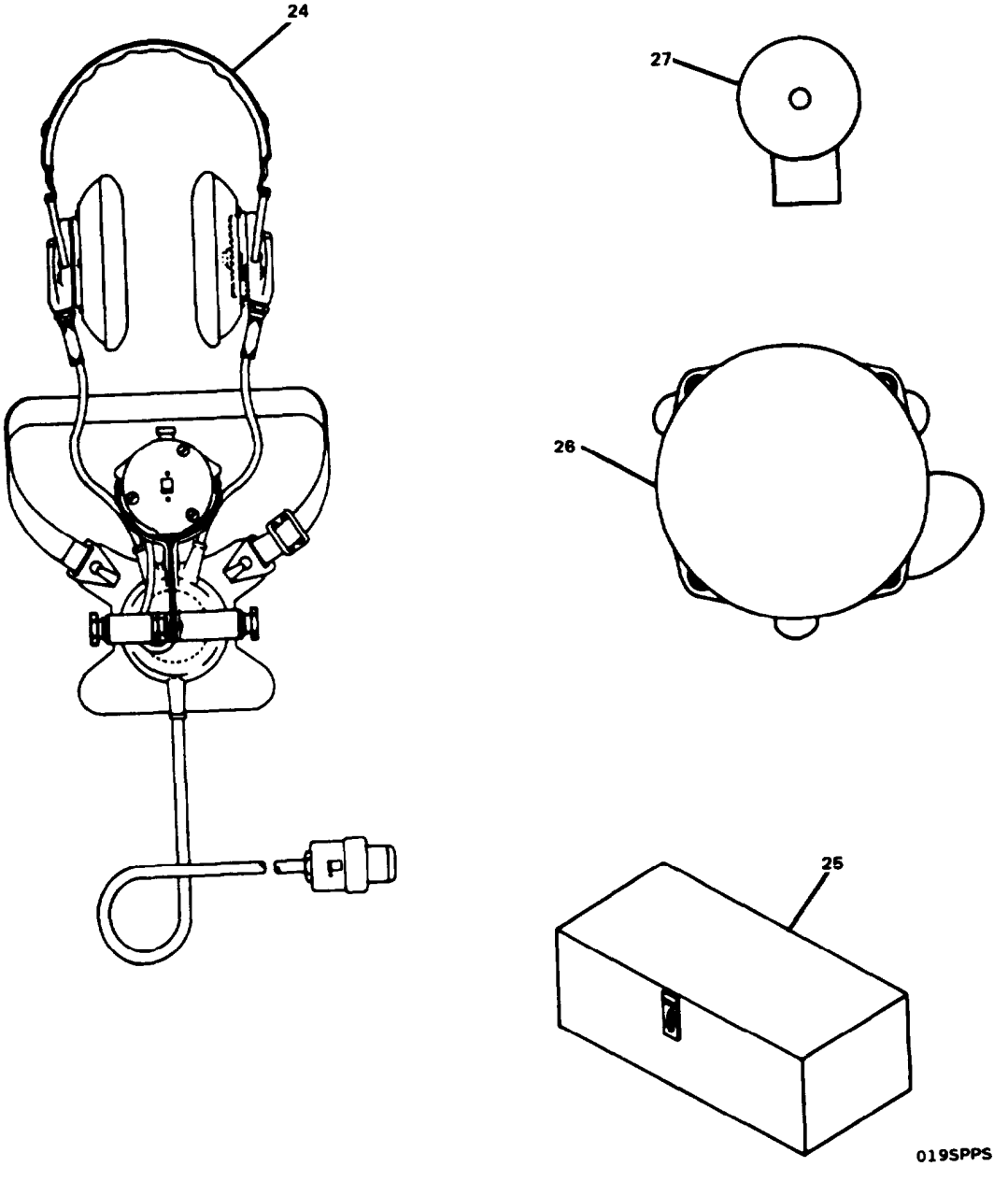

FIGURE 355. Sound Powered Telephone. MWT-R-8 (Sheet 2 of 2)

(1) ITEM NO	(2) SMR CODE	(3) CAGEC	(4) PART NUMBER	(5) DESCRIPTION AND USABLE ON CODES (UOC)	(6) QTY
				GROUP 18 BASIC CRAFT	
				FIG. 355 SOUND POWERED TELEPHONE, MWT-R-8	
1	PBCFF	73274	MWT-R-18	••TELEPHONE, SET	4
2	XDFZZ	73274	803-M-1	•••HANDSET BOX	1
3	XDFZZ	73274	51-204	•••T-HANDLE	1
4	XDFZZ	73274	803-02-6	•••SCREW, SELF-LOCKING	1
5	XDFZZ	73274	50-97	•••GUIDE,HANDLE	1
6	XDFZZ	73274	50-98	•••RETAINER, ROD, PIVOT	2
7	XDFZZ	73274	50-96	•••ROD,PIVOT	1
8	XDFZZ	73274	803-02-21	•••SCREW, SELF-LOCKING	5
9	PAFZZ	73274	50-19D	•••GASKET GUM RUBBER	1
10	XDFZZ	73274	803-02-2	•••PLATE, MOUNTING	1
11	XDFZZ	73274	1A	•••SWITCH, TELEPHONE, SE	1
12	XDFZZ	73274	803-02-23	•••SCREW, SELF-LOCKING	4
13	PBFZZ	73274	22	•••SCREW, MACHINE	1
14	XDFZZ	73274	25	•••HANDLE, MANUAL CONTR	1
15	PAFZZ	73274	31	•••RELAY, ELECTROMAGNET	1
16	XDFZZ	73274	803-02-22	•••SCREW, DRIVE	8
17	XDFZZ	75382	615-112	•••PLATE, IDENTIFICATIO	1
18	XDFZZ	75382	615-1327	•••PLATE, IDENTIFICATIO	1
19	XDFZZ	75382	600-15	•••TERMINAL BOARD	2
20	XDFZZ	73274	803-02-24	•••SCREW, SELF-LOCKING	2
21	XDFZZ	73274	51-22	•••BRACKET, HANDSET	1
22	PBCZZ	81349	H-203/U	•••HANDSET	1
23	XDFZZ	73274	803-02-20	•••GUARD, CORD TELEPHON	1
24	PBCZZ	81349	H-200/U	•••HEADSET-CHEST SET, E	4
25	XDCZZ	53711	815F1853040 SYM2924.1	•••BOX, HEADSET STORAGE	4
26	XDCZZ	81349	SYM2841TYG-15A	•••JACKBOX ASSEMBLY	3
27	PAFZO	28199	ICB2S4EXP	•••BELL, ELECTRICAL	4

END OF FIGURE

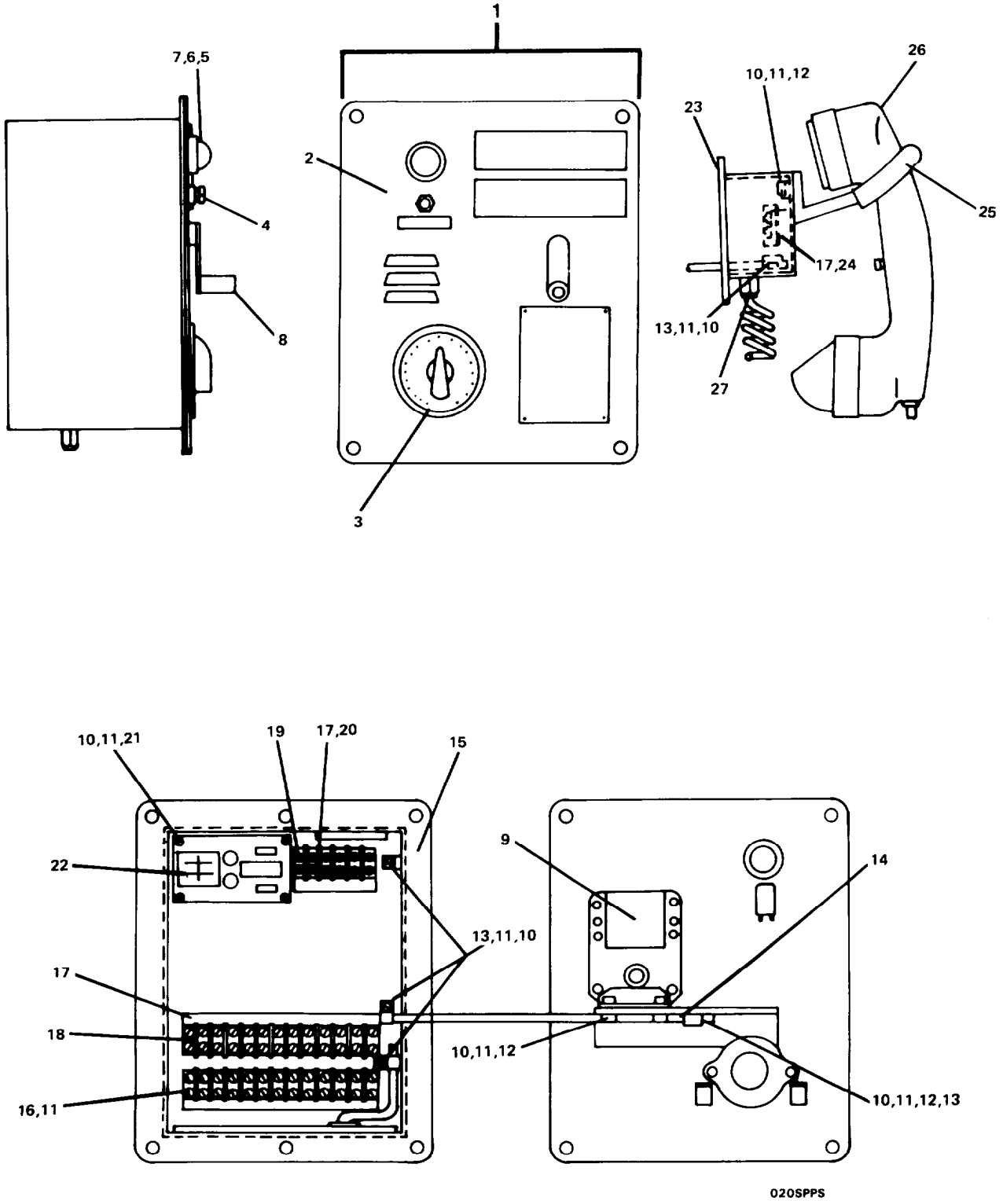

FIGURE 356. Sound Powered Telephone. SFTLR (MOD)-19 (Sheet 1 of 2).

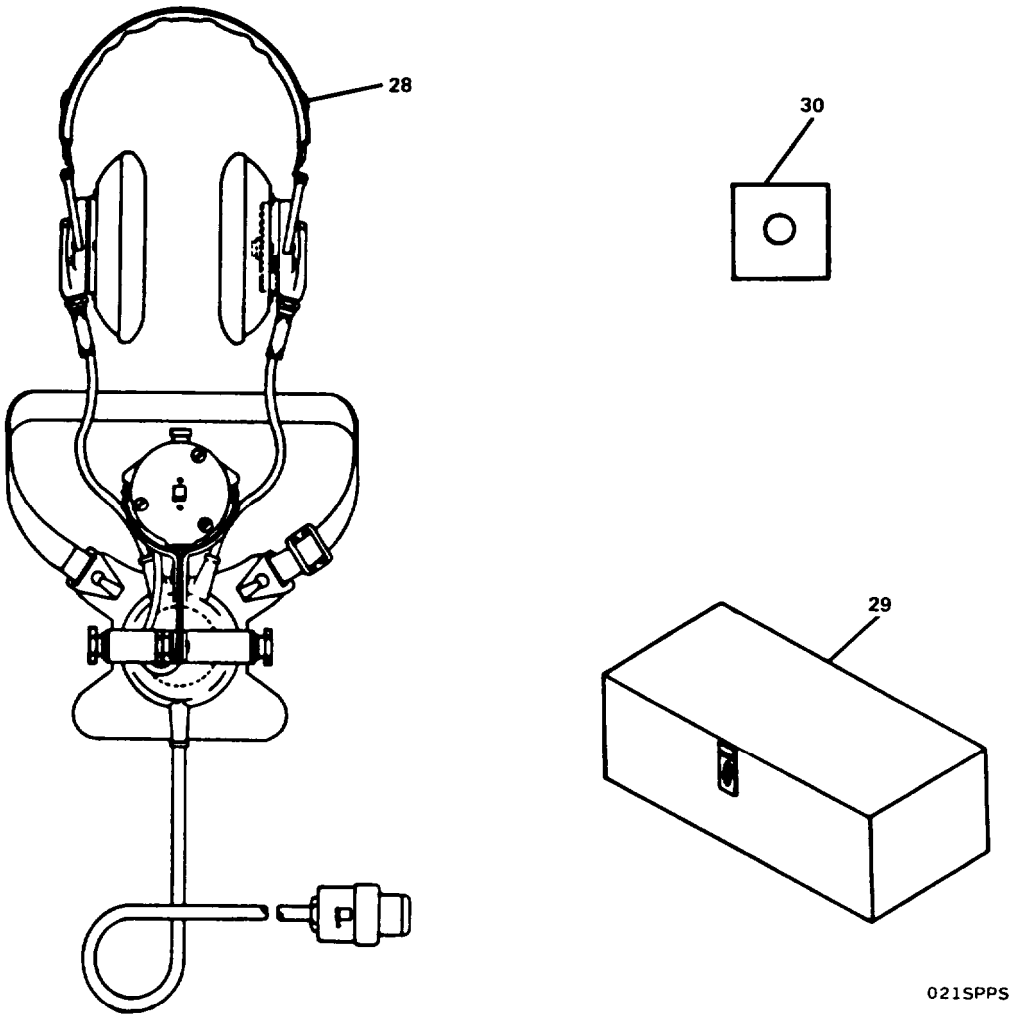

FIGURE 356. Sound Powered Telephone. SFLR (MOD)-19 (Sheet 2 of 2).

(1) ITEM NO	(2) SMR CODE	(3) FSCM	(4) PART NUMBER	(5) DESCRIPTION AND USABLE ON CODES(UOC)	(6) QTY
				GROUP 18 BASIC CRAFT	
				FIG. 356 SOUND POWERED TELEPHONE, SLFR (MOD)-19	
1	PBCFF	73274	SFLR (MOD)-19	. . TELEPHONE,SET	1
2	XDFZZ	73274	128-18-2	. ..COVER.TELEPHONE	1
3	XDFZZ	73274	1D	. ..SWITCH,TELEPHONE,SE	1
4	PAFZZ	73274	53-03	. ..SWITCH,PUSH	1
5	PAFZZ	73274	41	. . . LIGHT, INDICATOR	1
6	XAFZZ	73274	43	. . . . LENS (RED)	1
7	XAFZZ	73274	42	. . ..LAMP,INCANDESCENT (120V)	1
8	PAFZZ	73274	24	. ..HANDLE	1
9	PBFZZ	73274	22	. ..SCREW,MACHINE	1
10	XDFZZ	73274	128-18-29	. ..SCREW,SELF-LOCKING	18
11	XDFZZ	73274	128-18-31	. . . WASHER,LOCK	102
12	XDFZZ	73274	128-18-30	. . . NUT,PLAIN,HEXAGON	6
13	XDFZZ	73274	50-73	. . . CLAMP,CABLE	5
14	XDFZZ	73274	128-18-15	. ..CABLE	1
15	XDFZZ	73274	128-18-1	. . . BOX,TELEPHONE	1
16	XDFZZ	73274	128-18-27	. . . SCREW,SELF-LOCKING	42
17	XDFZZ	73274	128-18-23	. . . PLATE,IDENTIFICATIO	4
18	XDFZZ	81349	38TB11	. . . TERMINAL BOARD	2
19	XDFZZ	73274	128-18-28	. . . SCREW, FLAT HEAD	12
20	XDFZZ	81349	38TB4	. . . TERMINAL BOARD	1
21	XDFZZ	73274	128-18-19	. . . STANDOFF	4
22	PAFZZ	73274	32A	. . . RELAY,ELECTROMAGNET	1
23	XDFZZ	73274	128-18-3	. ..BOX,MOUNTING,HANDSE	1
24	XDFZZ	75382	601-02	. . . TERMINAL BOARD	1
25	XDFZZ	73274	128-18-4	. . . BRACKET,HANDSET	1
26	PBCZZ	81349	H-203/U	. ..HANDSET	1
27	XDFZZ	73274	128-18-20	. ..GUARD,CORD TELEPHON	2
28	PBCZZ	81349	H-200/U	. . . HEADSET-CHEST SET,E	1
29	XDCZZ	53711	815F1853040SYM29 24.1	. . . B O X , H E A D S E T S T O R A G E	1
30	PACZO	81349	IC/Z1S4	. . . B U Z Z E R	1

END OF FIGURE

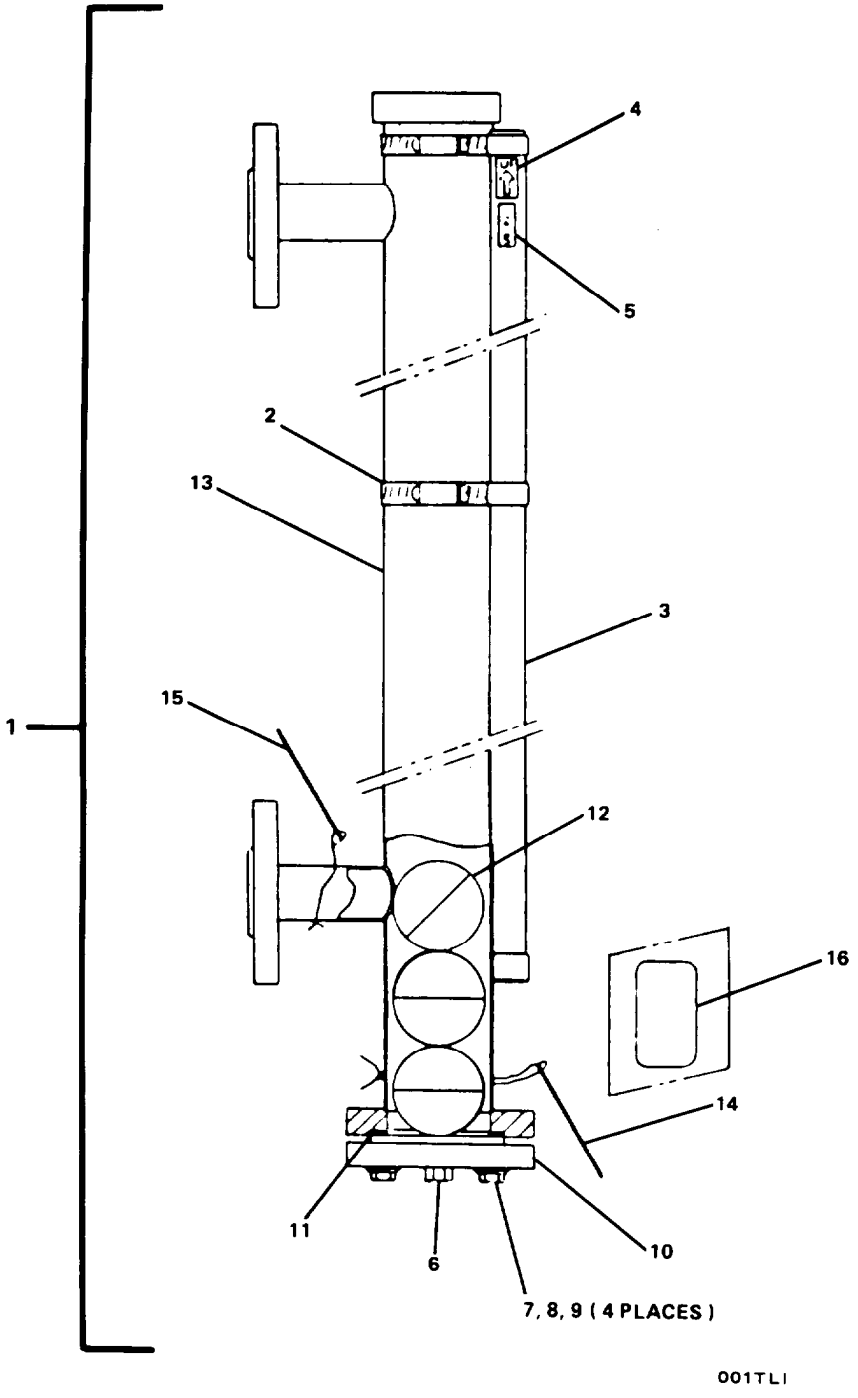

FIGURE 357. Level Sight Indicator.

(1) ITEM NO	(2) SMR CODE	(3) FSCM	(4) PART NUMBER	(5) DESCRIPTION AND USABLE ON CODES(UOC)	(6) QTY
				GROUP 18 BASIC CRAFT	
				FIG. 357 LEVEL SIGHT INDICATOR	
1	XDFFF	04034	VLI-86501-44	. . INDICATOR,LEVEL.SIG	1
2	XDFZZ	04034	85579	. ..STRAP,RETAINING	V
3	XDFZZ	04034	86556	. . . FLAG ASSEMBLY (44 IN)	1
4	XDFZZ	04034	29948	. . . MARKER,IDENTIFICATI	1
5	XDFZZ	04034	86666	. . . MARKER,IDENTIFICATI	1
6	XDFZZ	04034	86436	. . . PLUG,PIPE	1
7	XDFZZ	04034	79741	. . . SCREW,CAP	4
8	XDFZZ	04034	36383	. . . WASHER,FLAT	4
9	XDFZZ	04034	22139	. . . WASHER,LOCK	4
10	XDFZZ	04034	86434	. . . CAP,BOTTOM	1
11	PAFZZ	04034	86104	. . . GASKET	1
12	PAFZZ	04034	86523	. . . FLOAT, METER, FLOW RA	1
13	XDFZZ	04034	86509	. ..CASING ASSEMBLY	1
14	XDFZZ	04034	86375	. . . TAG,FLOAT	1
15	XDFZZ	04034	87246	. ..TAG,WARNING	1
16	XDFZZ	04034	85143	. . . PLATE,IDENTIFICATIO	1

END OF FIGURE

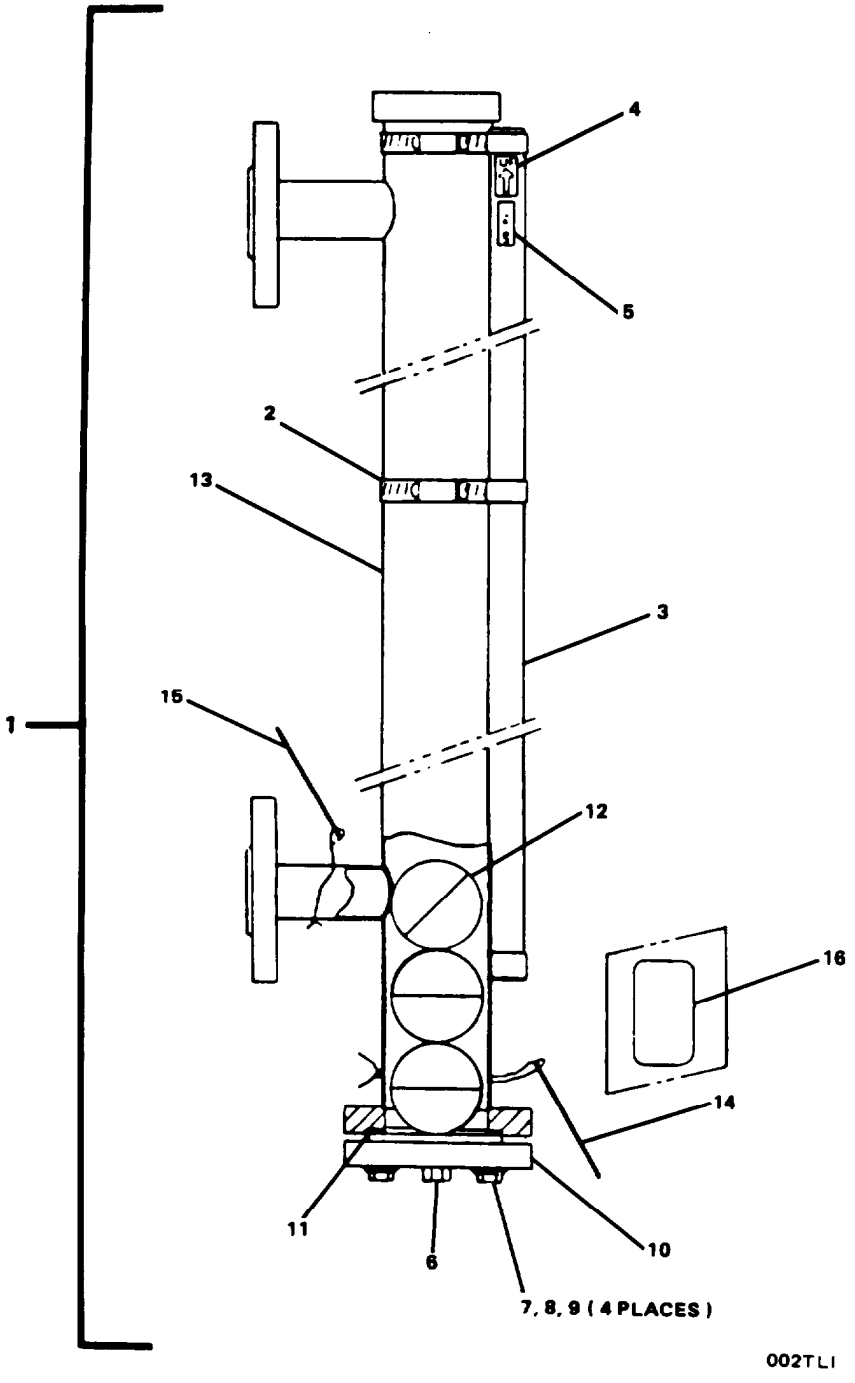

FIGURE 358. Level Sight Indicator.

(1) ITEM NO	(2) SMR CODE	(3) FSCM	(4) PART NUMBER	(5) DESCRIPTION AND USABLE ON CODES(UOC)	(6) QTY
				GROUP 18 BASIC CRAFT	
				FIG. 358 LEVEL SIGHT INDICATOR	
1	XDFFF	04034	VLI-86501-97	. . INDICATOR,LEVEL SIG	2
2	XDFZZ	04034	85579	. ..STRAP,RETAINING	V
3	XDFZZ	04034	86556	. ..FLAG ASSEMBLY (97 IN)	1
4	XDFZZ	04034	29948	. ..MARKER,IDENTIFICATI	1
5	XDFZZ	04034	86666	. ..MARKER,IDENTIFICATI	1
6	XDFZZ	04034	86436	. ..PLUG,PIPE	1
7	XDFZZ	04034	79741	. . . SCREW,CAP	4
8	XDFZZ	04034	36383	. ..WASHER,FLAT	4
9	XDFZZ	04034	22139	. ..WASHER,LOCK	4
10	XDFZZ	04034	86434	. ..CAP.BOTTOM	1
11	PAFZZ	04034	86104	. . . GASKET	1
12	PAFZZ	04034	86523	. ..FLOAT,METER,FLOW RA	1
13	XDFZZ	04034	86509	. ..CASING ASSEMBLY	1
14	PBFZZ	04034	86375	. ..TAG,FLOAT	1
15	XDFZZ	04034	87246	. ..TAG,WARNING	1
16	XDFZZ	04034	85143	. ..PLATE,IDENTIFICATIO	1

END OF FIGURE

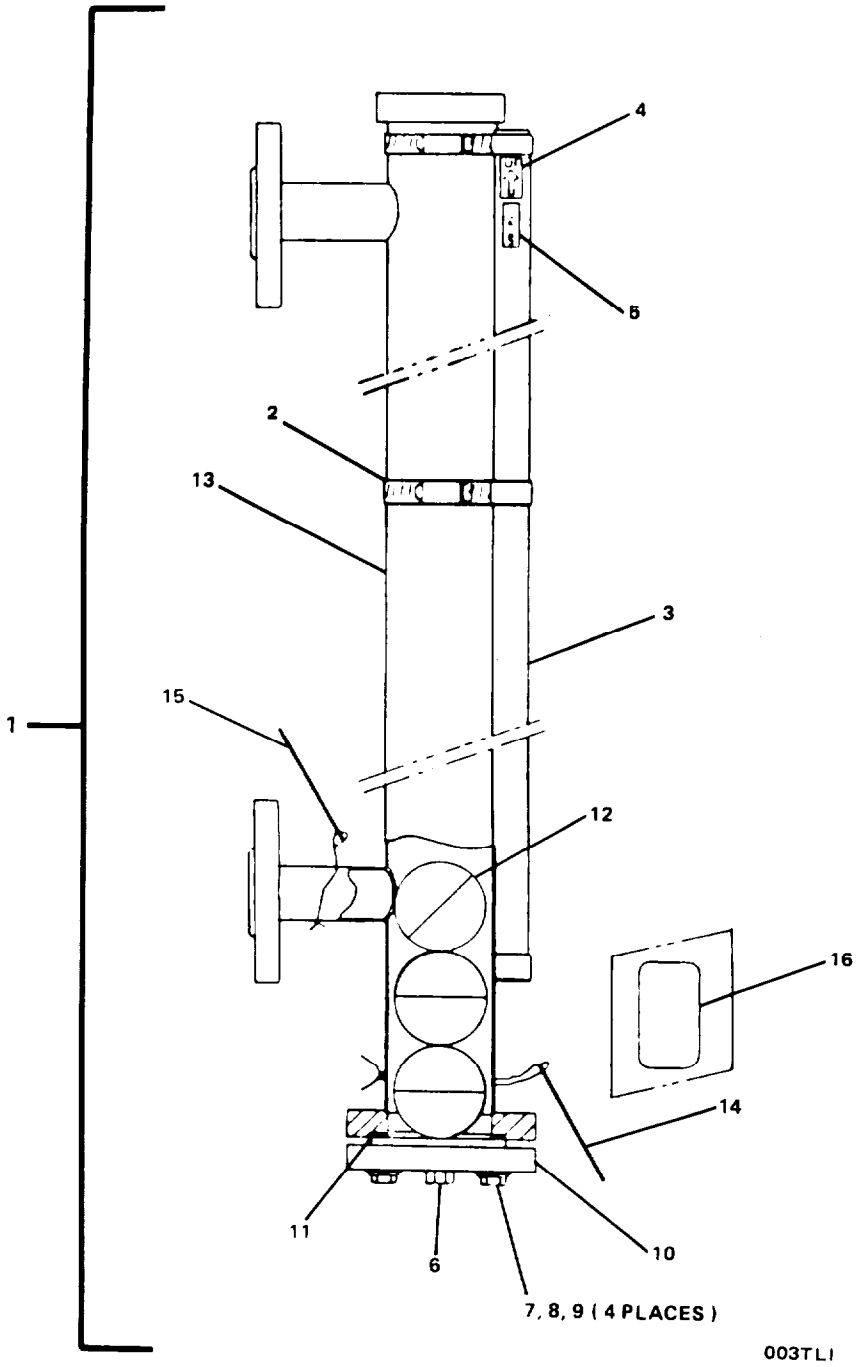

FIGURE 359. Level Sight Indicator.

(1) ITEM NO	(2) SMR CODE	(3) FSCM	(4) PART NUMBER	(5) DESCRIPTION AND USABLE ON CODES(UOC)	(6) QTY
				GROUP 18 BASIC CRAFT	
				FIG. 359 LEVEL SIGHT INDICATOR	
1	XDFFF	04034	VLI-86501-20	. . INDICATOR,LEVEL,SIG	1
2	XDFZZ	04034	85579	. ..STRAP,RETAINING	V
3	XDFZZ	04034	86556	. . . FLAG ASSEMBLY (20 IN)	1
4	XDFZZ	04034	29948	. . . MARKER,IDENTIFICATI	1
5	XDFZZ	04034	86666	. . . MARKER,IDENTIFICATI	1
6	XDFZZ	04034	86436	. ..PLUG,PIPE	1
7	XDFZZ	04034	79741	. . . SCREW,CAP	4
8	XDFZZ	04034	36383	. ..WASHER,FLAT	4
9	XDFZZ	04034	22139	. ..WASHER,LOCK	4
10	XDFZZ	04034	86434	. ..CAP,BOTTOM	1
11	PAFZZ	04034	86104	. . . GASKET	1
12	PAFZZ	04034	86523	. . . FLOAT, METER, FLOW RA	1
13	XDFZZ	04034	86509	. . . CASING ASSEMBLY	1
14	PBFZZ	04034	86375	. ..TAG,FLOAT	1
15	XDFZZ	04034	87246	. ..TAG,WARNING	1
16	XDFZZ	04034	85143	. ..PLATE,IDENTIFICATIO	1

END OF FIGURE

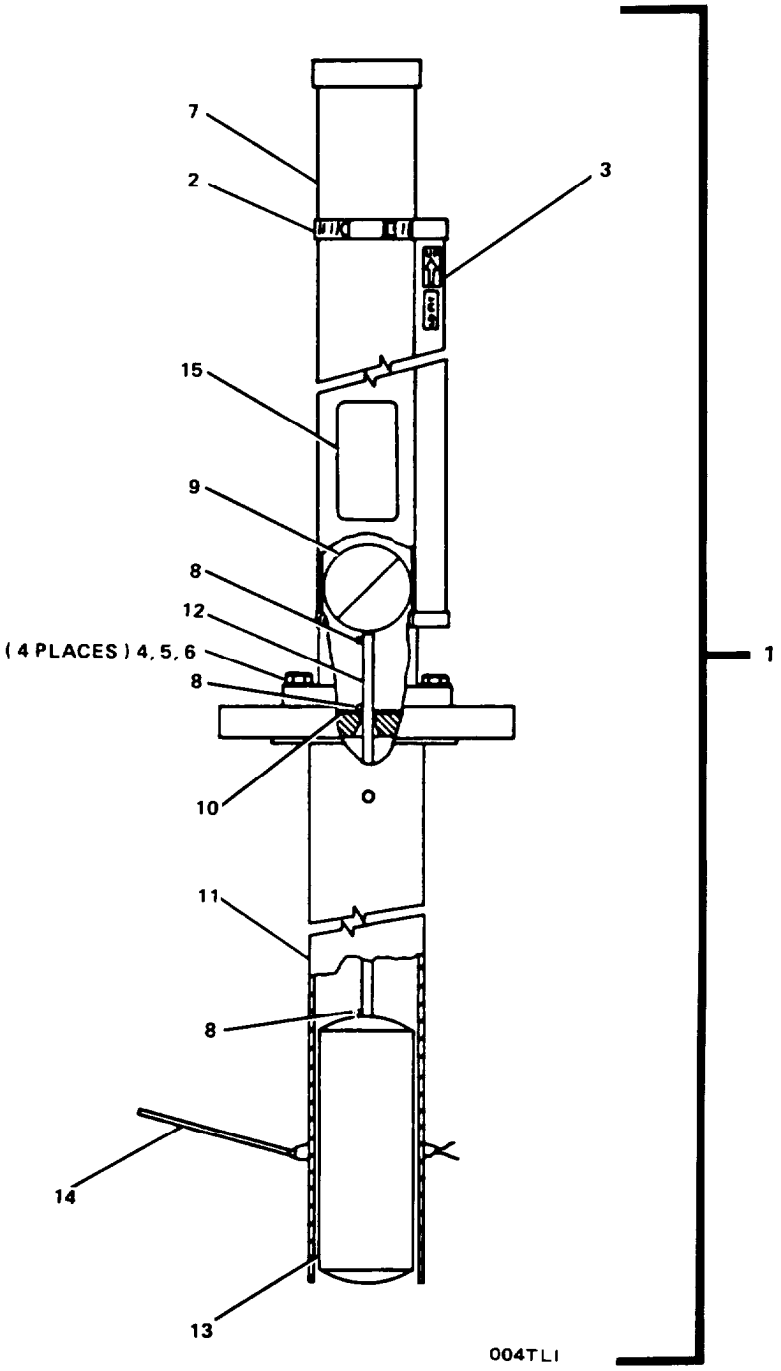

FIGURE 360. Level Sight Indicator.

(1) ITEM NO	(2) SMR CODE	(3) FSCM	(4) PART NUMBER	(5) DESCRIPTION AND USABLE ON CODES(UOC)	(6) QTY
				GROUP 18 BASIC CRAFT	
				FIG. 360 LEVEL SIGHT INDICATOR	
1	XDFFF	04034	VLI-86200-36	. . INDICATOR,LEVEL,SIG	1
2	XDFZZ	04034	85579	. . . STRAP,RETAINING	V
3	XDFZZ	04034	86198	. . . FLAG ASSEMBLY (36 IN)	1
4	XDFZZ	04034	119836	. . . SCREW,CAP,HEXAGON H	4
5	XDFZZ	04034	36383	. ..WASHER,FLAT	4
6	XDFZZ	04034	22139	. . . WASHER,LOCK	4
7	XDFZZ	04034	87426	. . . MAGNETIC CHAMBER AS	1
8	XDFZZ	04034	52823	. . . PIN,COTTER	5
9	XDFZZ	04034	87305	. . . MAGNET ASSEMBLY	1
10	PAFZZ	04034	86104	. . . GASKET	1
11	XDFZZ	04034	86047	. . . FLOAT CHAMBER ASSEM	1
12	XDFZZ	04034	86258	. . . ROD,FLOAT	1
13	XDFZZ	04034	85465	. . . FLOAT	1
14	XDFZZ	04034	86474	. . . TAG,FLOAT	1
15	XDFZZ	04034	a5143	. . . PLATE,IDENTIFICATIO	1

END OF FIGURE

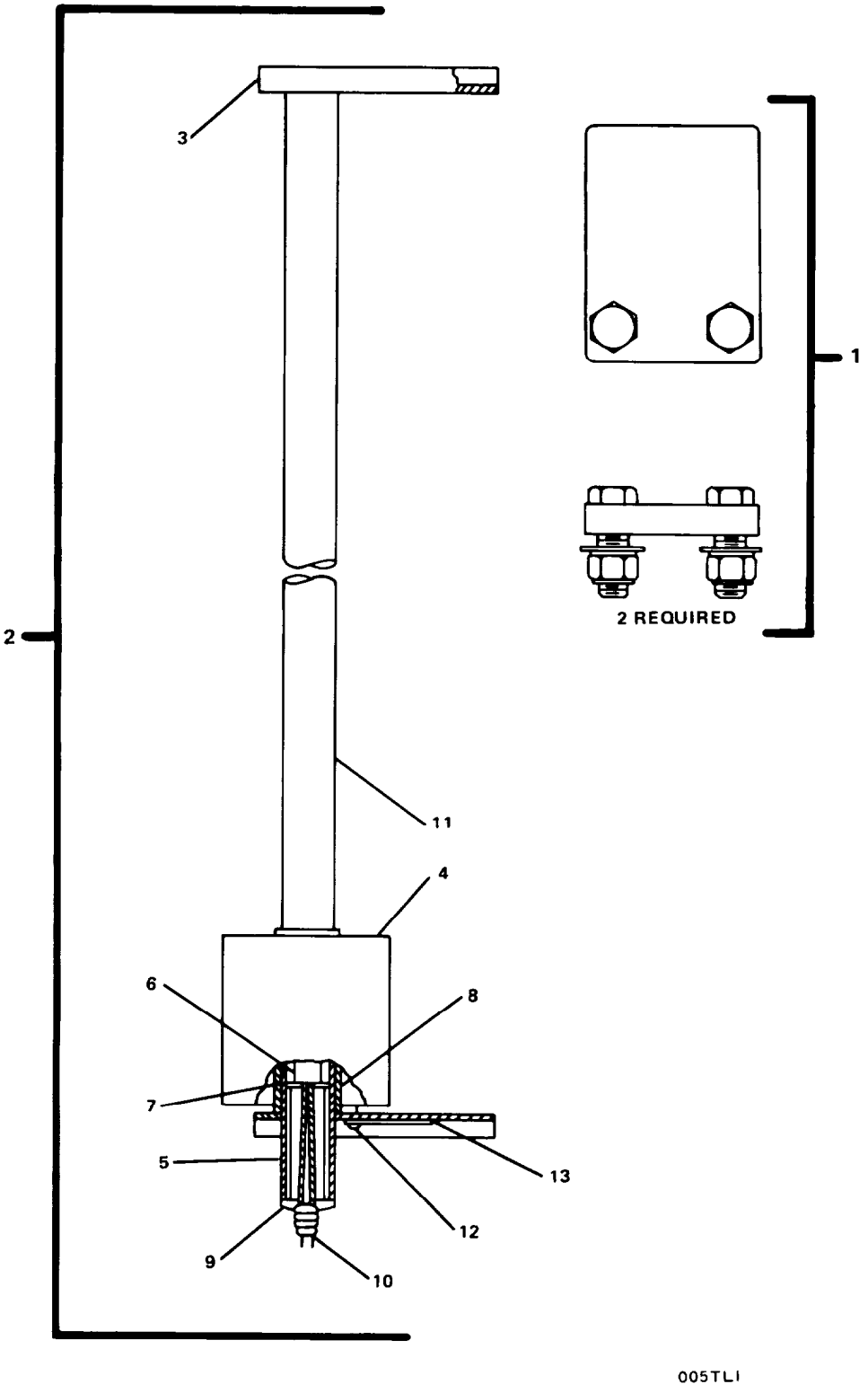

FIGURE 361. Float Switch Assembly (Sheet 1 of 3).

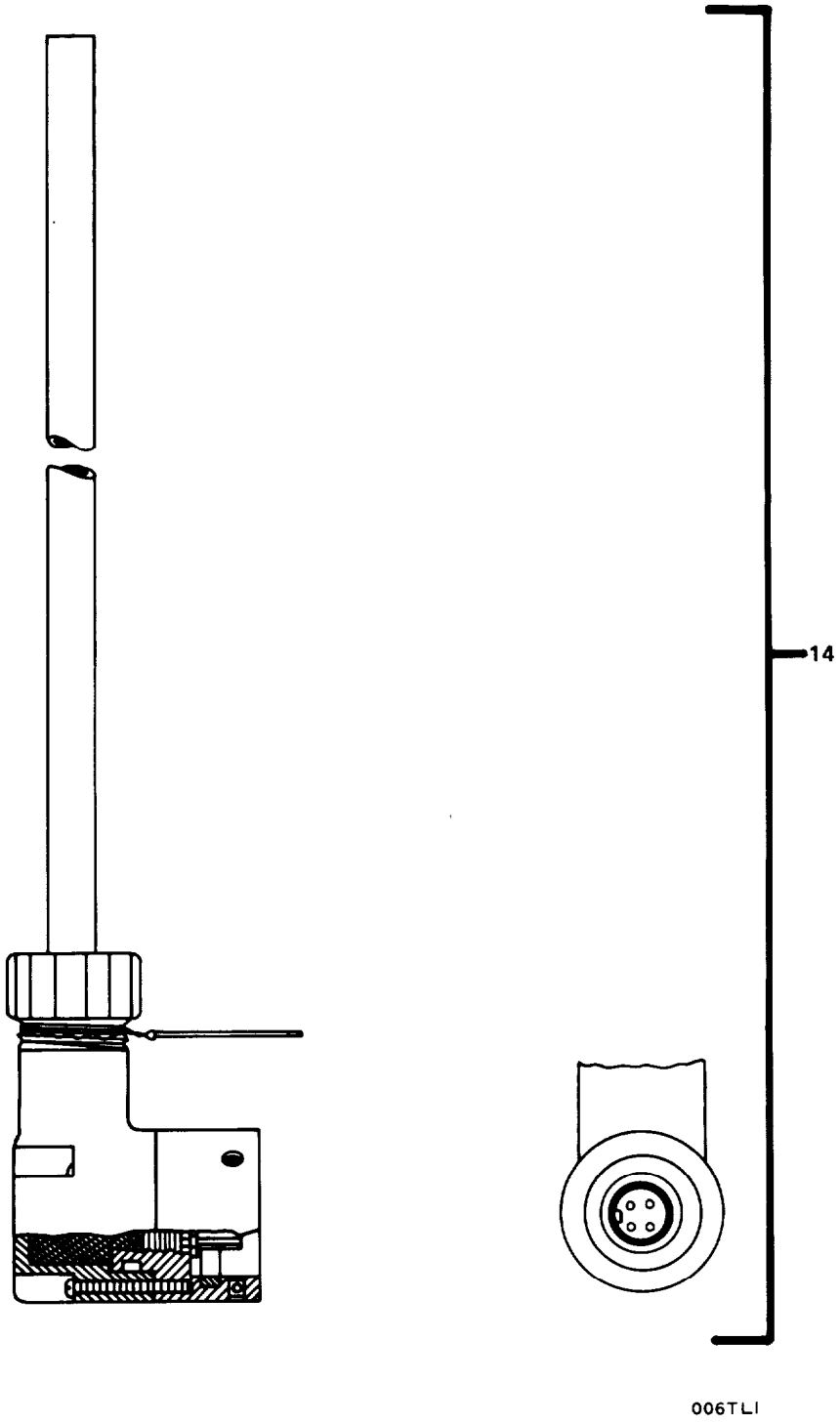

FIGURE 361. Float Switch Assembly (Sheet 2 of 3).

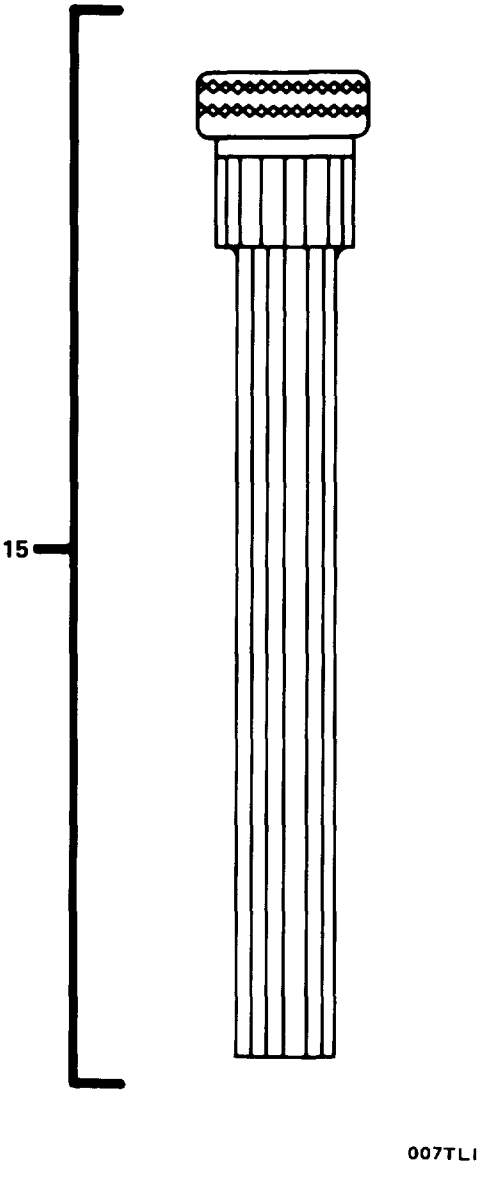

FIGURE 361. Float Switch Assembly (Sheet 3 of 3).

(1) ITEM NO	(2) SMR CODE	(3) FSCM	(4) PART NUMBER	(5) DESCRIPTION AND USABLE ON CODES(UOC)	(6) QTY
				GROUP 18 BASIC CRAFT	
				FIG. 361 FLOAT SWITCH ASSEMBLY	
1	XDFZZ	04034	36413	..MOUNTING BRACKET	8
2	PBFFF	04034	XM-36480-120-100 0-0-L	..SWITCH, LIQUID LEVEL	4
3	XDFZZ	04034	16391	. . . SPACER,SPECIAL	1
4	XDFZZ	04034	32230	. ..FLOAT ASSEMBLY	1
5	XDFZZ	04034	19326	. . .SPACER	1
6	XDFZZ	04034	36481	. ..SWITCH INSERT ASSEM	1
7	XDFZZ	04034	26534	. ..TUBE.SHOCK	V
8	XDFZZ	04034	36462	. ..WASHER,SPLIT	1
9	XDFZZ	79136	36464	. ..RING,RETAINING	1
10	PBFZZ	71468	36468	. . . CONNECTOR,PLUG,ELEC	1
11	XDFZZ	04034	36411	. . . STEM ASSEMBLY (120 IN)	1
12	XDFZZ	04034	50727	. . . RIVET,POP	2
13	XDFZZ	04034	27337	. ..PLATE,IDENTIFICATIO	1
14	PBFZZ	04034	36880-30-LP	. . . CABLE ASSEMBLY,SPEC	4
15	PBFZZ	04034	36424	. . . TANK PENETRATION AS	4

END OF FIGURE

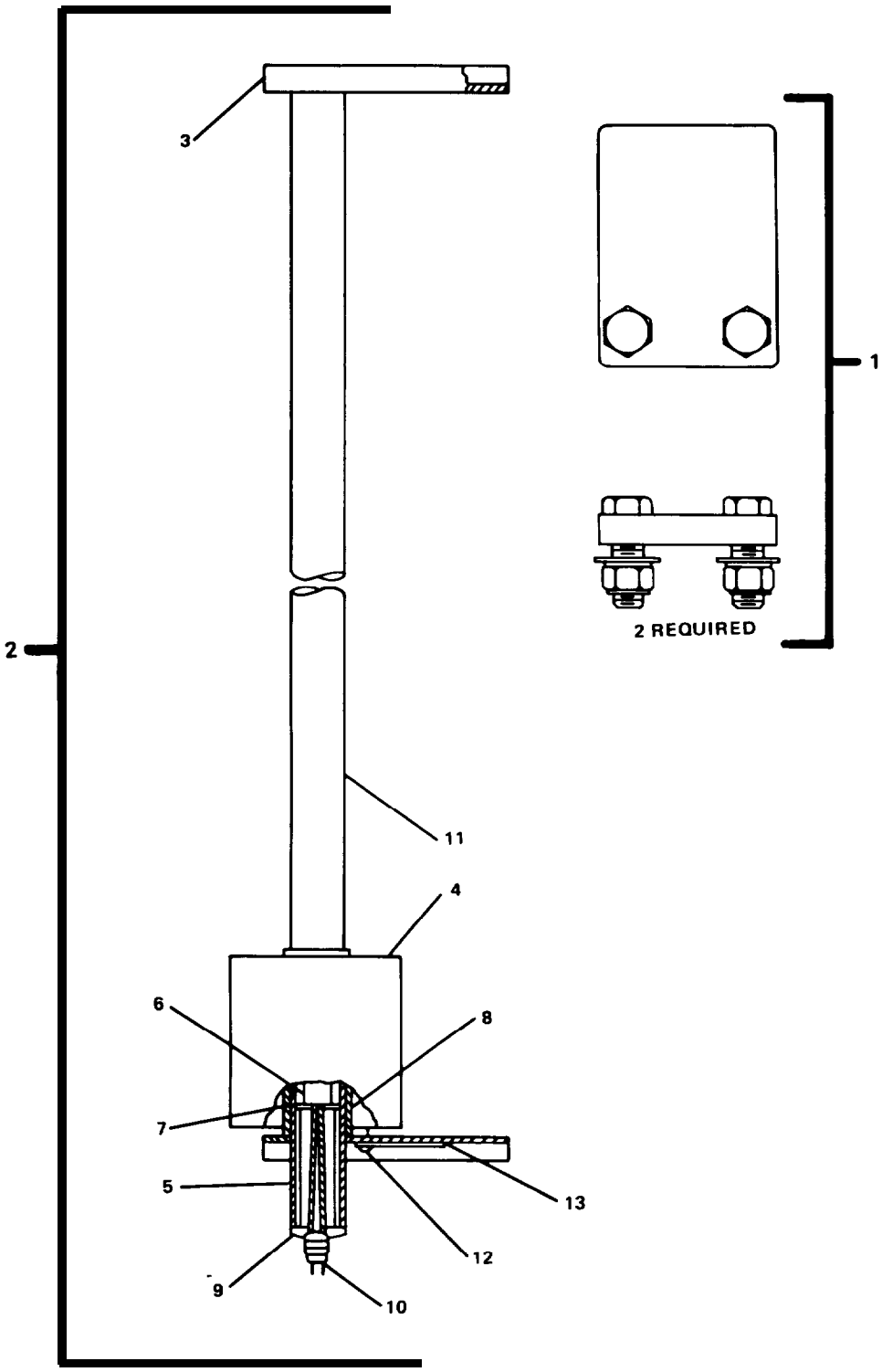

FIGURE 362. Float Switch Assembly (Sheet 1 of 3).

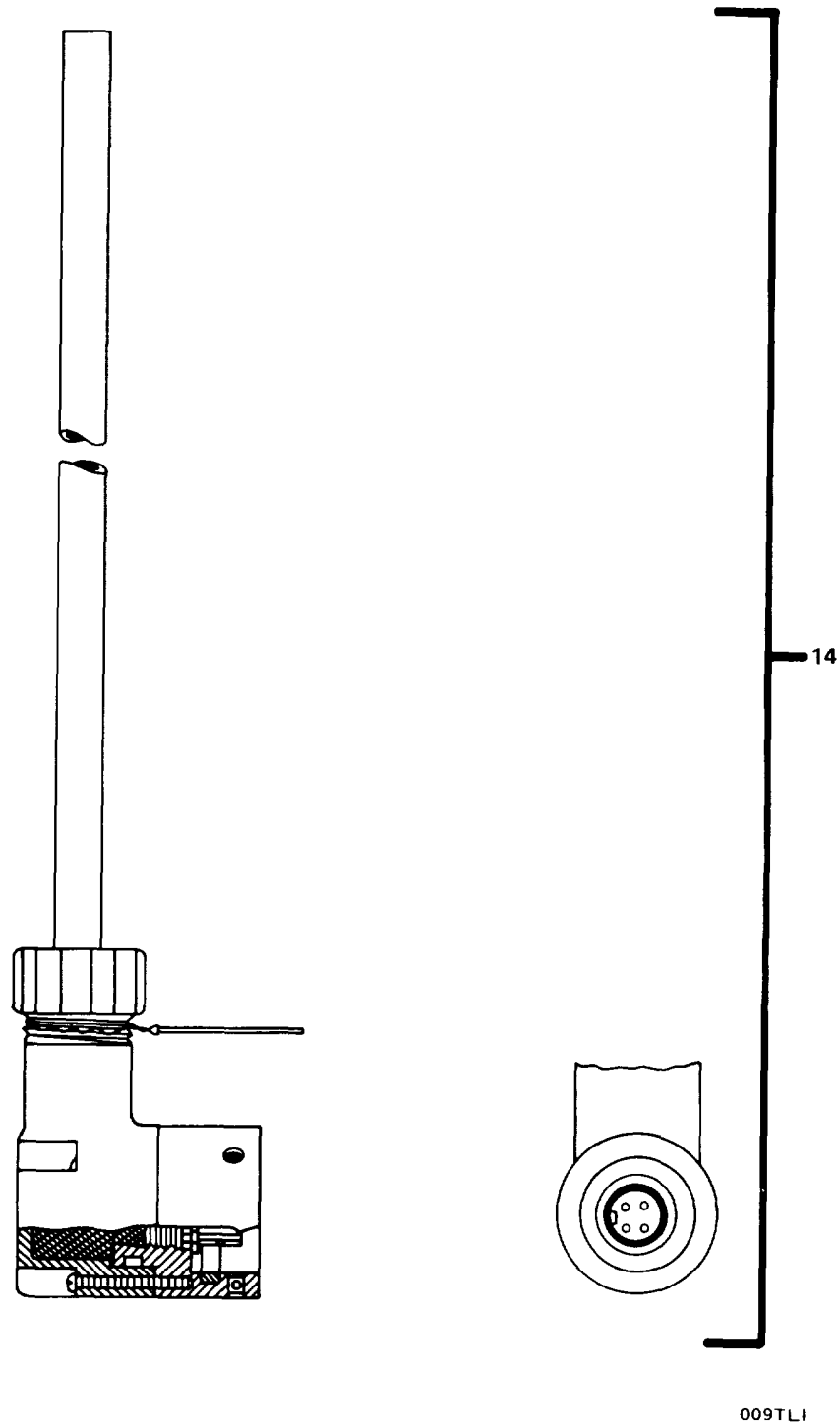

FIGURE 362. Float Switch Assembly (Sheet 2 of 3).

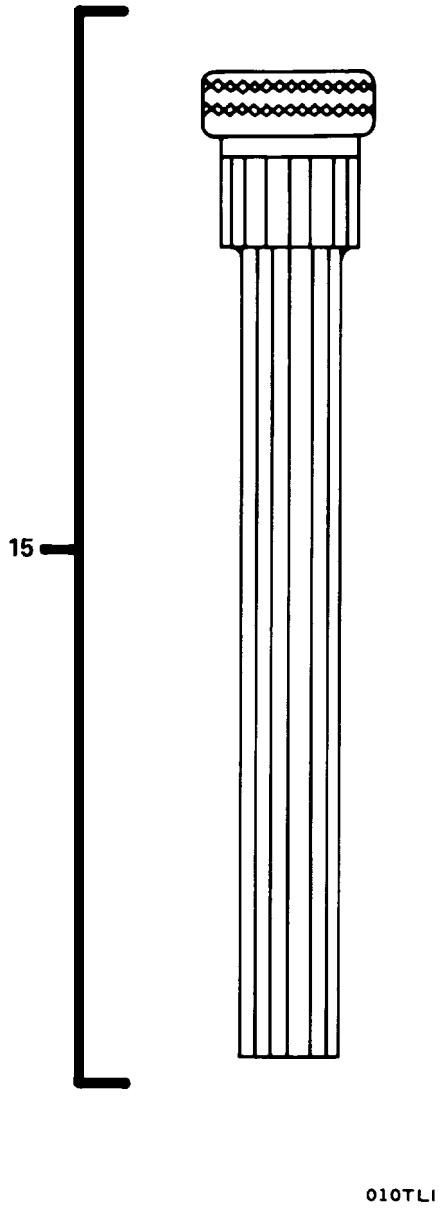

FIGURE 362. Float Switch Assembly (Sheet 3 of 3).

(1) ITEM NO	(2) SMR CODE	(3) FSCM	(4) PART NUMBER	(5) DESCRIPTION AND USABLE ON CODES(UOC)	(6) QTY
				GROUP 18 BASIC CRAFT	
				FIG. 362 FLOAT SWITCH ASSEMBLY	
1	XDFZZ	04034	36413	. . MOUNTING BRACKET	2
2	PBFFF	04034	XM-36480-112-100 O-O-L	. . SWITCH, LIQUID LEVEL	1
3	XDFZZ	04034	16391	...SPACER,SPECIAL	1
4	XDFZZ	04034	32230	...FLOAT ASSEMBLY	1
5	XDFZZ	04034	19326	...SPACER	1
6	XDFZZ	04034	36481	. . . SWITCH INSERT ASSEM	1
7	XDFZZ	04034	26534	...TUBE,SHOCK	V
8	XDFZZ	04034	36462	...WASHER,SPLIT	1
9	XDFZZ	79136	36464	...RING,RETAINING	1
10	PBFZZ	71468	36468	. . . CONNECTOR,PLUG,ELEC	1
11	XDFZZ	04034	36411	. ..STEM ASSEMBLY (112 IN)	1
12	XDFZZ	04034	50727	. ..RIVET,POP	2
13	XDFZZ	04034	27337	. ..PLATE,IDENTIFICATIO	1
14	PBFZZ	04034	36880-30-LP	. ..CABLE ASSEMBLY, SPEC	1
15	PBFZZ	04034	36424	. . . TANK PENETRATION AS	1

END OF FIGURE

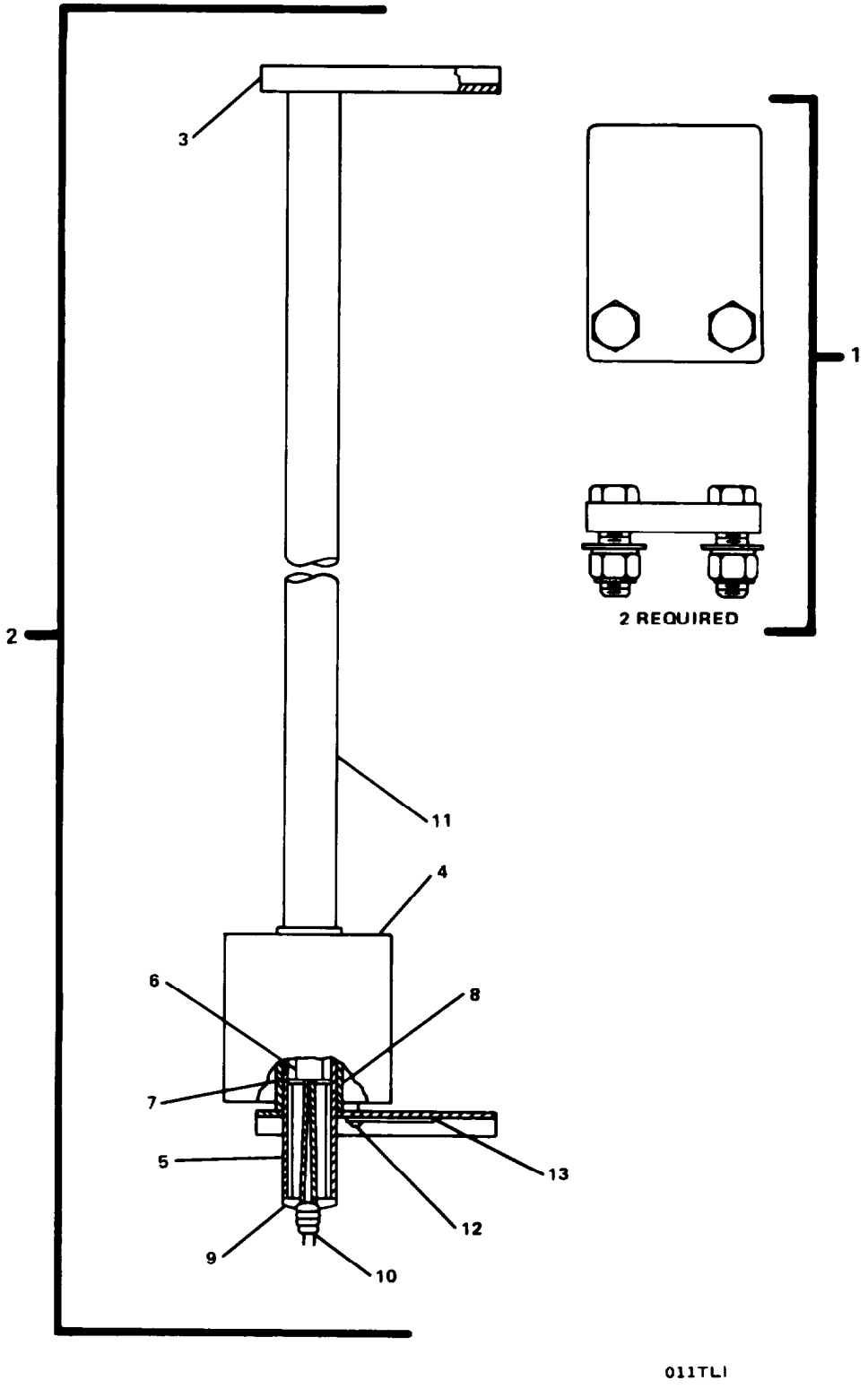

FIGURE 363. Float Switch Assembly (Sheet 1 of 3).

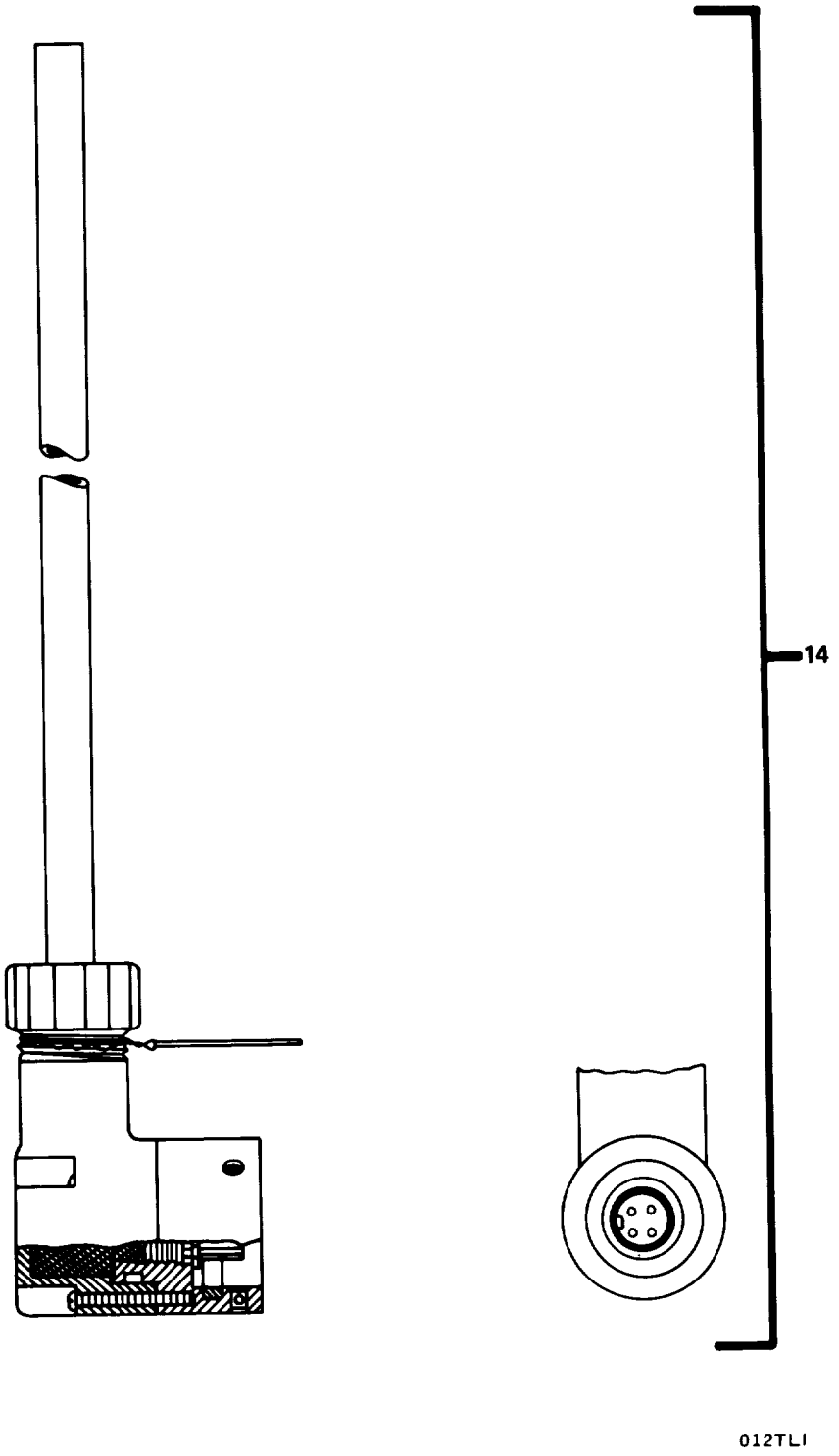

FIGURE 363. Float Switch Assembly (Sheet 2 of 3).

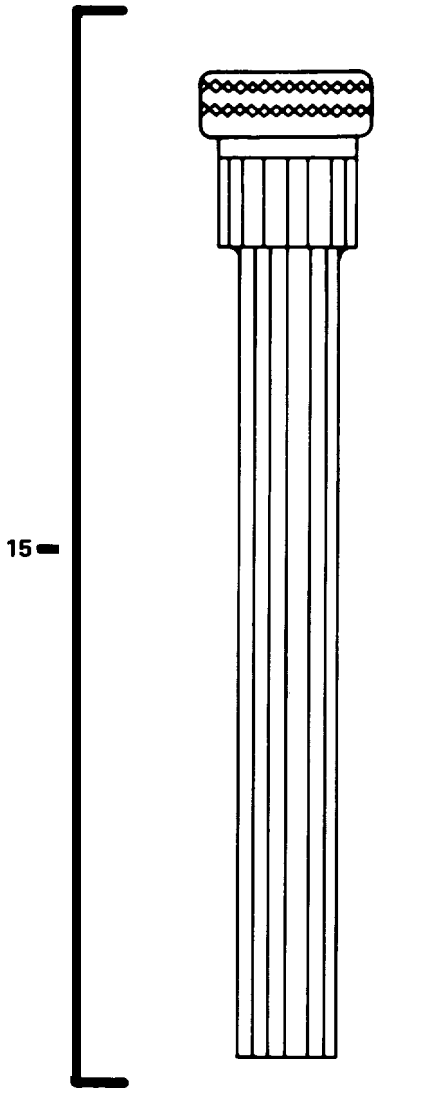

FIGURE 363. Float Switch Assembly (Sheet 3 of 3).

(1) ITEM NO	(2) SMR CODE	(3) FSCM	(4) PART NUMBER	(5) DESCRIPTION AND USABLE ON CODES(UOC)	(6) QTY
				GROUP 18 BASIC CRAFT	
				FIG. 363 FLOAT SWITCH ASSEMBLY	
1	XDFZZ	04034	36413	. . MOUNTING BRACKET	4
2	PBFFF	04034	XM-36480-47-3000 -W-L	. . SWITCH, LIQUID LEVEL	2
3	XDFZZ	04034	16391	. . . SPACER,SPECIAL	1
4	XDFZZ	04034	32230	. . .FLOAT ASSEMBLY	1
5	XDFZZ	04034	19326	. . . SPACER	1
6	XDFZZ	04034	36481	. . . SWITCH INSERT ASSEM	1
7	XDFZZ	04034	26534	. .TUBE,SHOCK	V
8	XDFZZ	04034	36462	. .WASHER,SPLIT	1
9	XDFZZ	79136	36464	. .RING,RETAINING	1
10	PBFZZ	71468	36468	. .CONNECTOR,PLUG,ELEC	1
11	XDFZZ	04034	36411	. . . STEM ASSEMBLY (47 IN)	1
12	XDFZZ	04034	50727	. .RIVET,POP	2
13	XDFZZ	04034	27337	. . . PLATE,IDENTIFICATIO	1
14	PBFZZ	04034	36880-30-LP	. . . CABLE ASSEMBLY, SPEC	2
15	PBFZZ	04034	36424	. . . TANK PENETRATION AS	2

END OF FIGURE

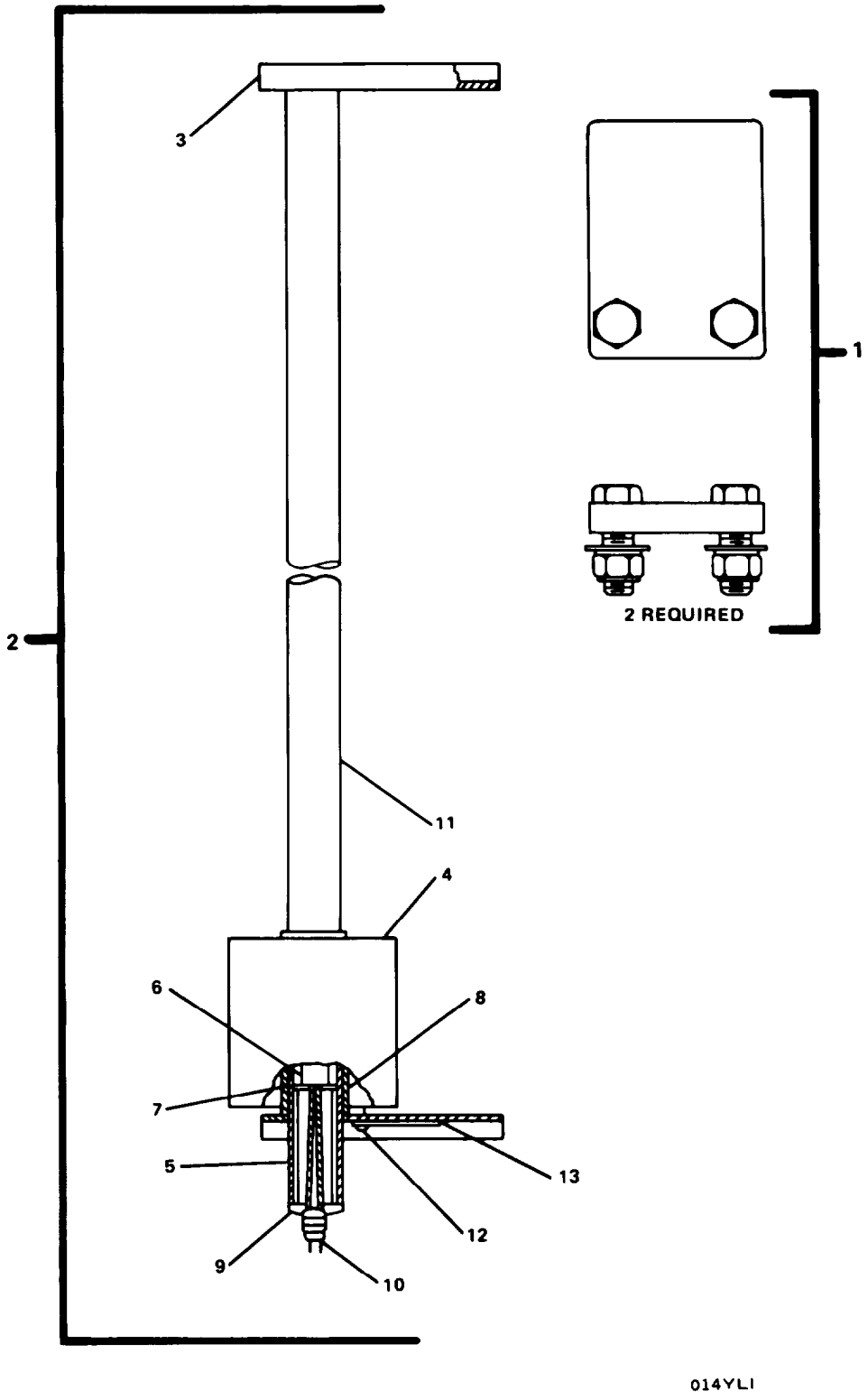

FIGURE 364. Float Switch Assembly (Sheet 1 of 3).

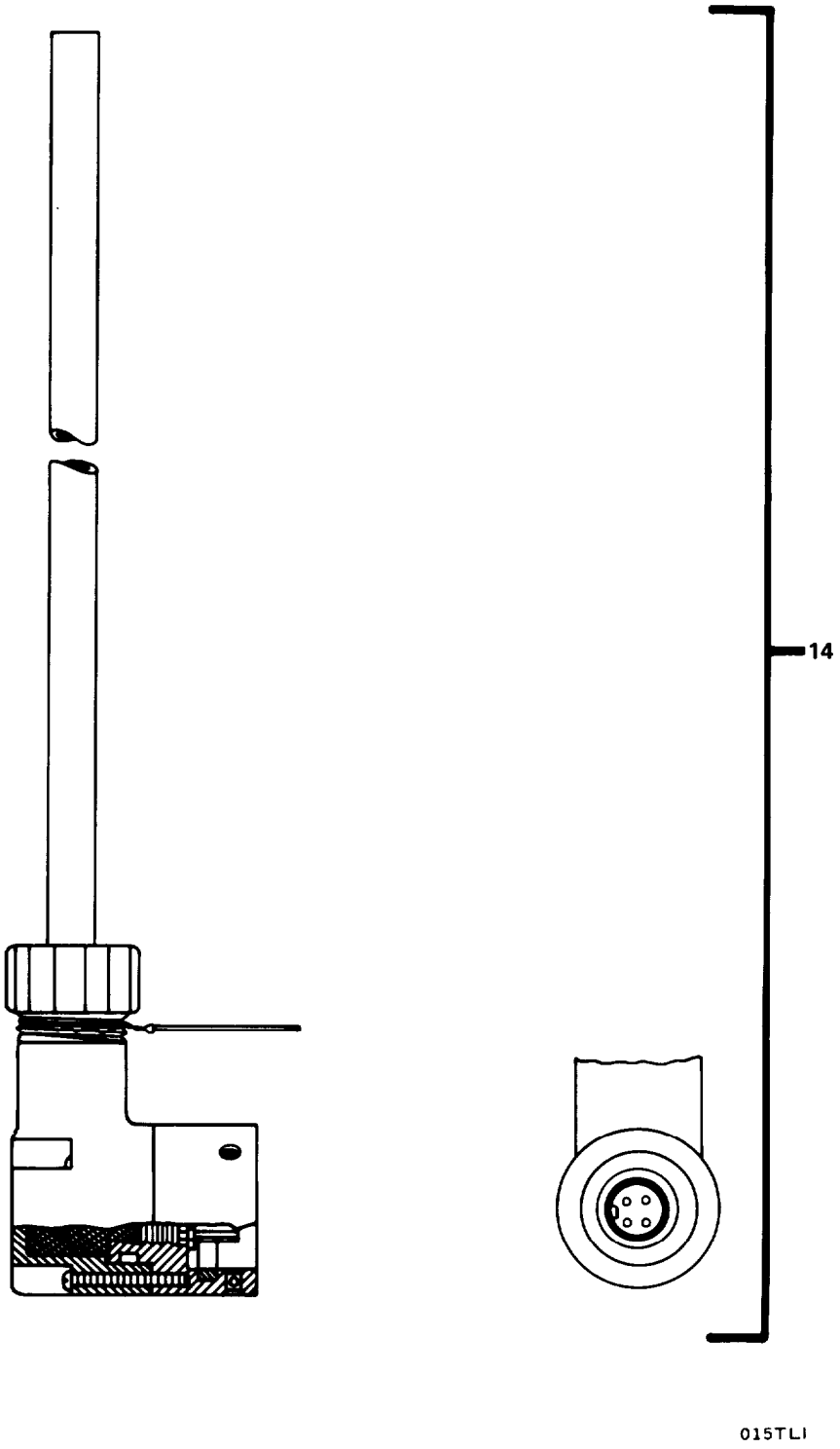

FIGURE 364. Float Switch Assembly (Sheet 2 of 3).

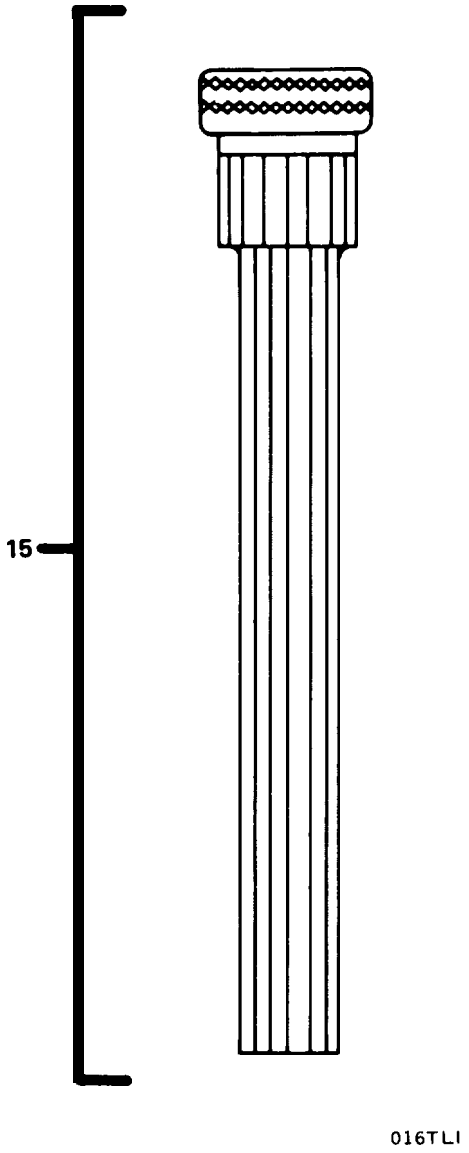

FIGURE 364. Float Switch Assembly (Sheet 3 of 3).

(1) ITEM NO	(2) SMR CODE	(3) FSCM	(4) PART NUMBER	(5) DESCRIPTION AND USABLE ON CODES(UOC)	(6) QTY
				GROUP 18 BASIC CRAFT	
				FIG. 364 FLOAT SWITCH ASSEMBLY	
1	XDFZZ	04034	36413	..MOUNTING BRACKET	6
2	PBFFF	04034	XM-36480-95-1500 -0-L	. .SWITCH, LIQUID LEVEL	3
3	XDFZZ	04034	16391	. ..SPACER,SPECIAL	1
4	XDFZZ	04034	32230	. . . FLOAT ASSEMBLY	1
5	XDFZZ	04034	19326	. . . SPACER	1
6	XDFZZ	04034	36481	. ..SWITCH INSERT ASSEM	1
7	XDFZZ	04034	26534	. ..TUBE,SHOCK	V
8	XDFZZ	04034	36462	. ..WASHER,SPLIT	1
9	XDFZZ	79136	36464	. . . RING,RETAINING	1
10	PBFZZ	71468	36468	. ..CONNECTOR,PLUG,ELEC	1
11	XDFZZ	04034	36411	. . . STEM ASSEMBLY (95 IN)	1
12	XDFZZ	04034	50727	. . . RIVET,POP	2
13	XDFZZ	04034	27337	. ..PLATE,IDENTIFICATIO	1
14	PBFZZ	04034	36880-30-LP	. . . CABLE ASSEMBLY, SPEC	3
15	PBFZZ	04034	36424	. ..TANK PENETRATION AS	3

END OF FIGURE

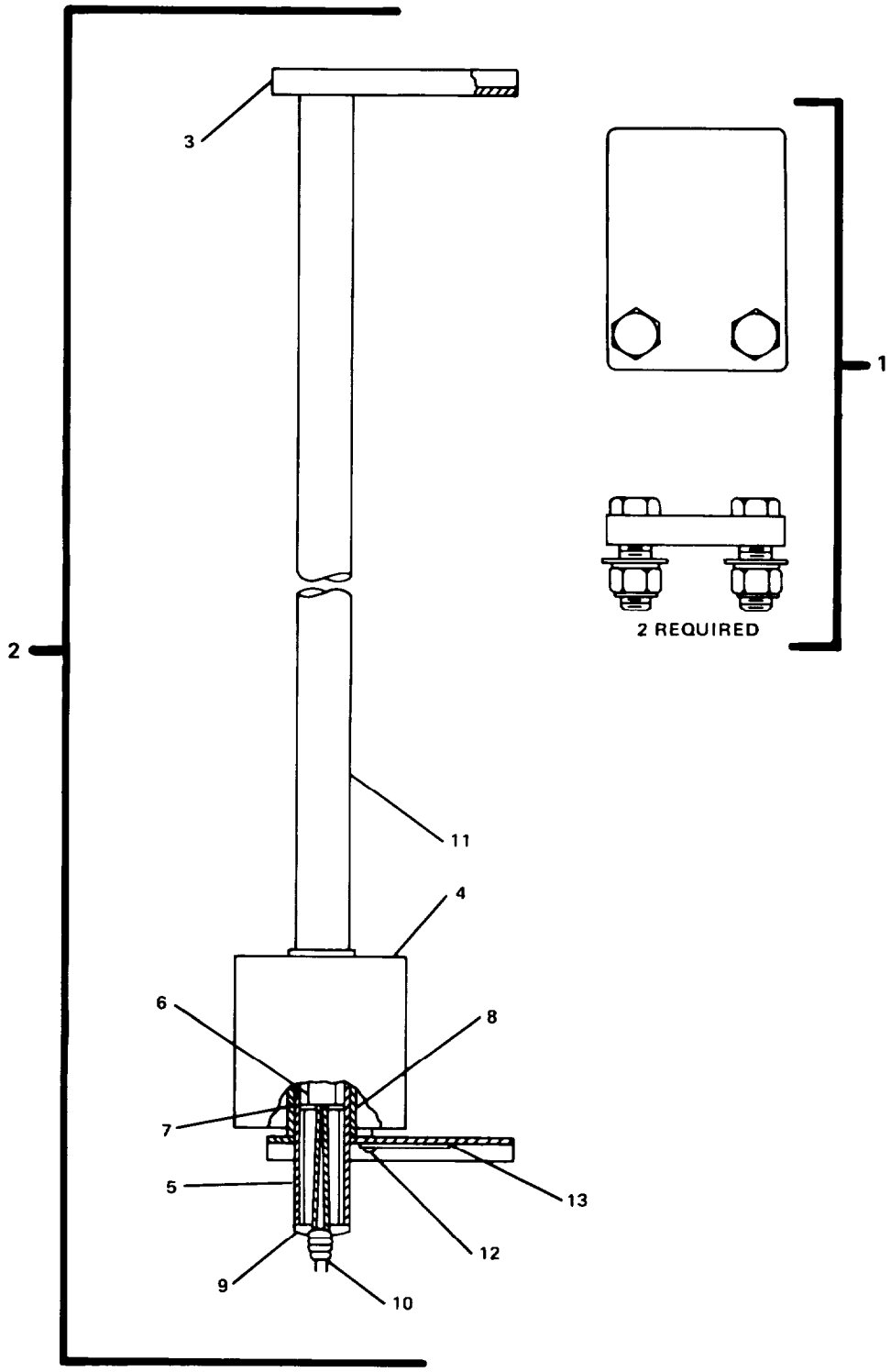

FIGURE 365. Float Switch Assembly (Sheet 1 of 3).

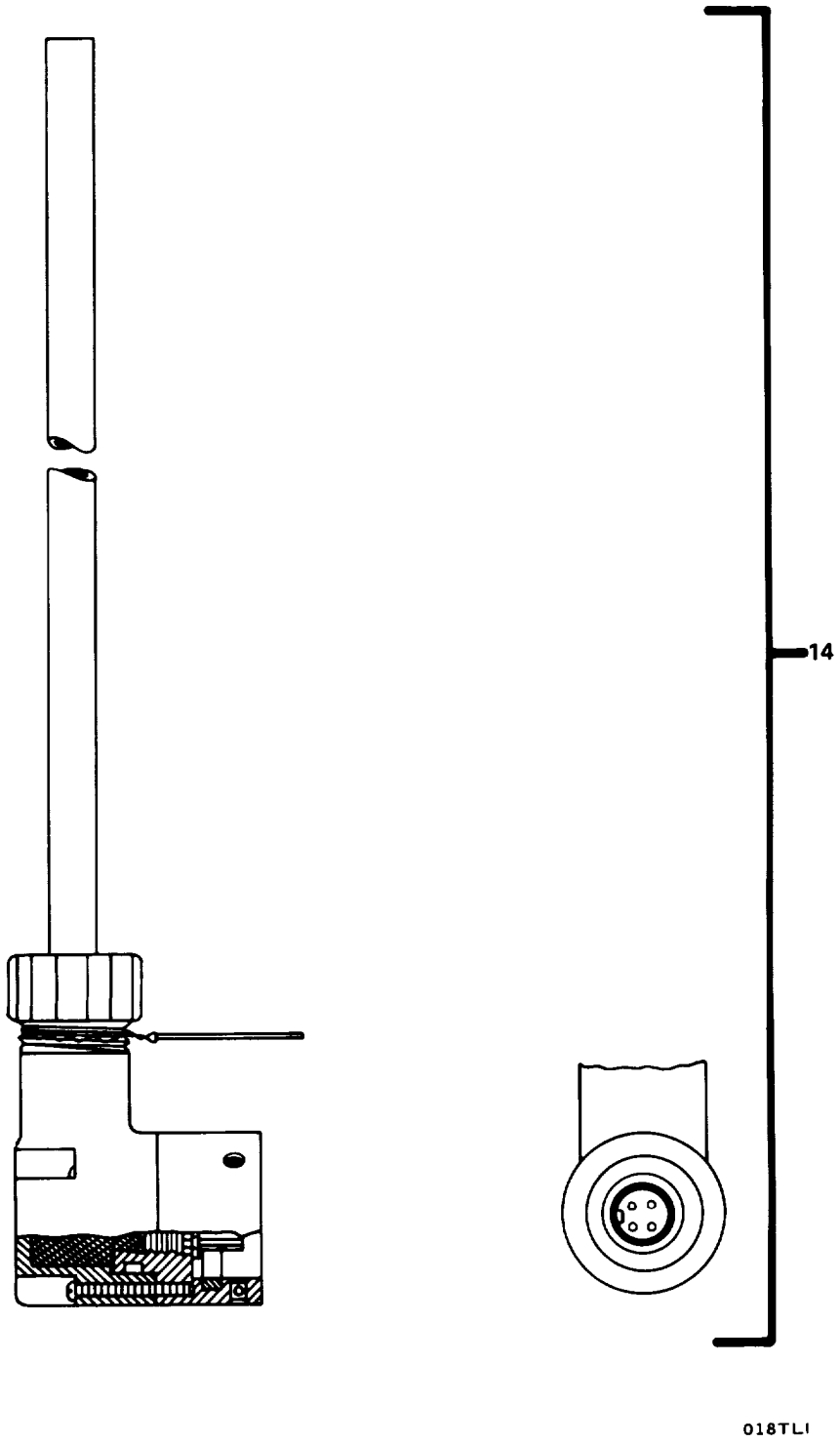

FIGURE 365. Float Switch Assembly (Sheet 2 of 3).

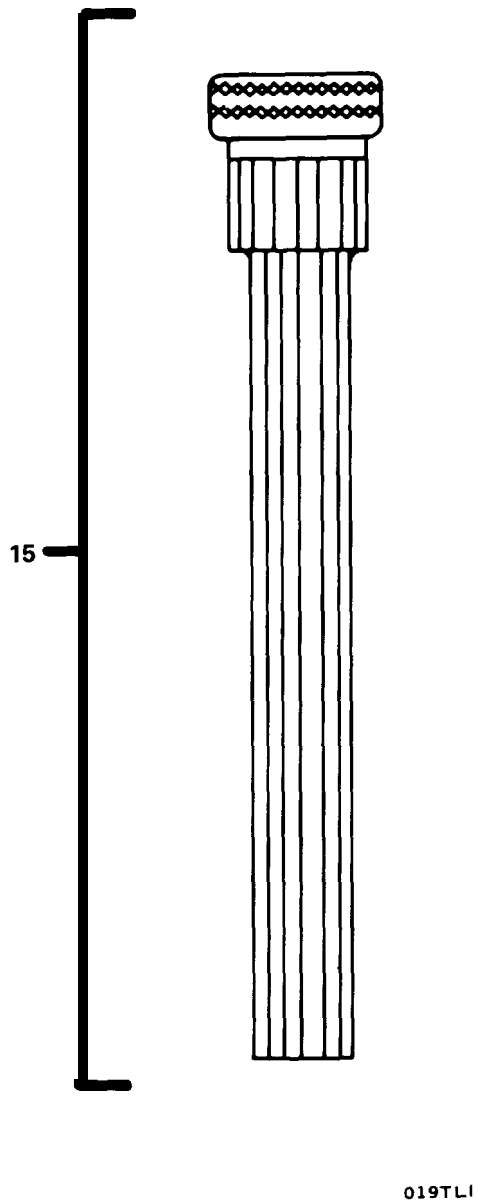

FIGURE 365. Float Switch Assembly (Sheet 3 of 3).

(1) ITEM NO	(2) SMR CODE	(3) FSCM	(4) PART NUMBER	(5) DESCRIPTION AND USABLE ON CODES(UOC)	(6) QTY
				GROUP 18 BASIC CRAFT	
				FIG. 365 FLOAT SWITCH ASSEMBLY	
1	XDFZZ	04034	36413	..MOUNTING BRACKET	8
2	PBFFF	04034	XM-36480-125-100 0-W-L	. . SWITCH, LIQUID LEVEL	4
3	XDFZZ	04034	16391	. . . SPACER,SPECIAL	1
4	XDFZZ	04034	32230	. ..FLOAT ASSEMBLY	1
5	XDFZZ	04034	19326	. . . SPACER	1
6	XDFZZ	04034	36481	. . . SWITCH INSERT ASSEM	1
7	XDFZZ	04034	26534	. ..TUBE,SHOCK	V
8	XDFZZ	04034	36462	. . . WASHER,SPLIT	1
9	XDFZZ	79136	36464	. ..RING,RETAINING	1
10	PBFZZ	71468	36468	. ..CONNECTOR,PLUG,ELEC	1
11	XDFZZ	04034	36411	. ..STEM ASSEMBLY (125 IN)	1
12	XDFZZ	04034	50727	. . . RIVET,POP	2
13	XDFZZ	04034	27337	. ..PLATE,IDENTIFICATIO	1
14	PBFZZ	04034	36880-30-LP	. . . CABLE ASSEMBLY, SPEC	4
15	PBFZZ	04034	36424	. ..TANK PENETRATION AS	4

END OF FIGURE

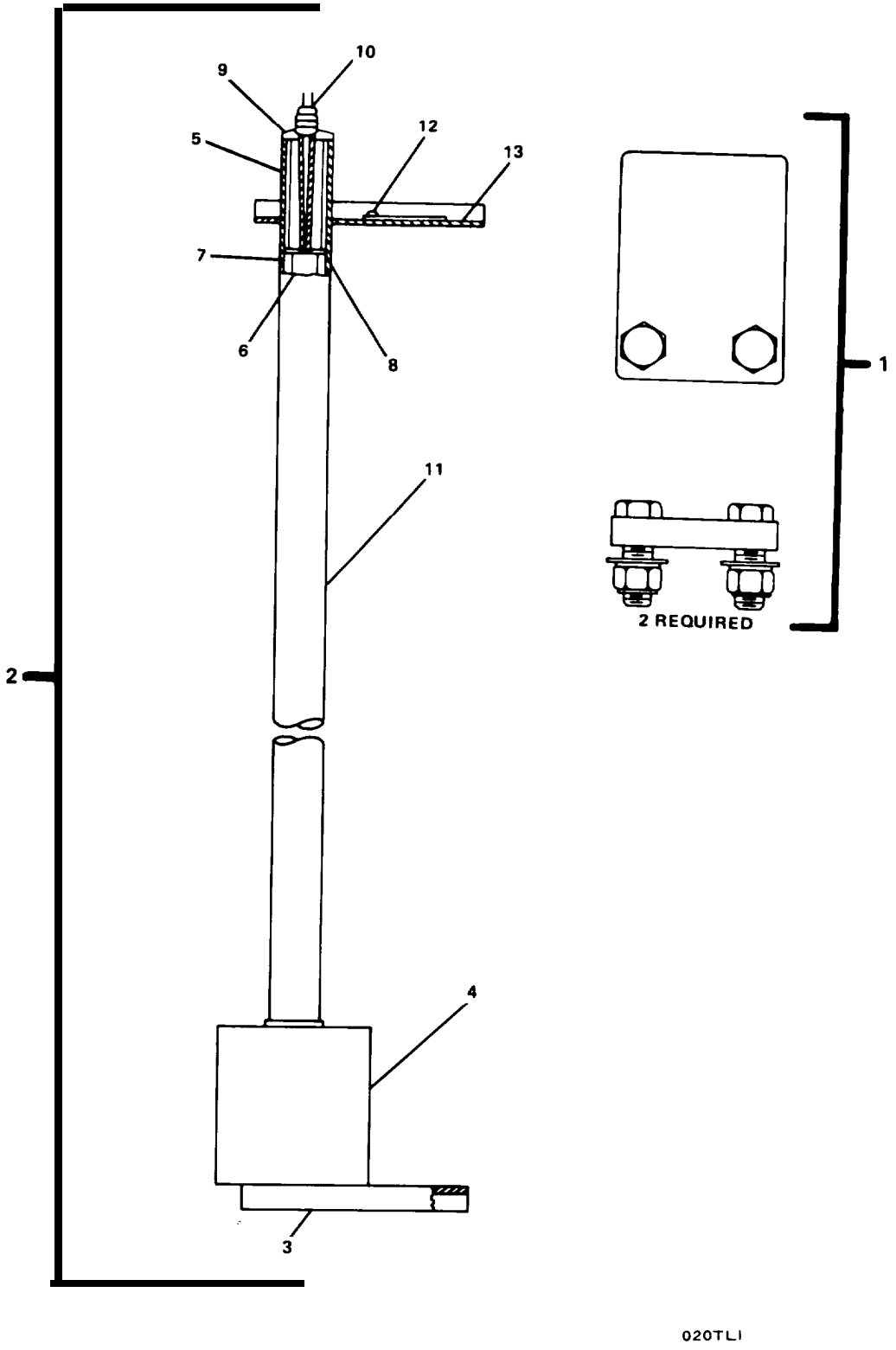

FIGURE 366. Float Switch Assembly (Sheet 1 of 3).

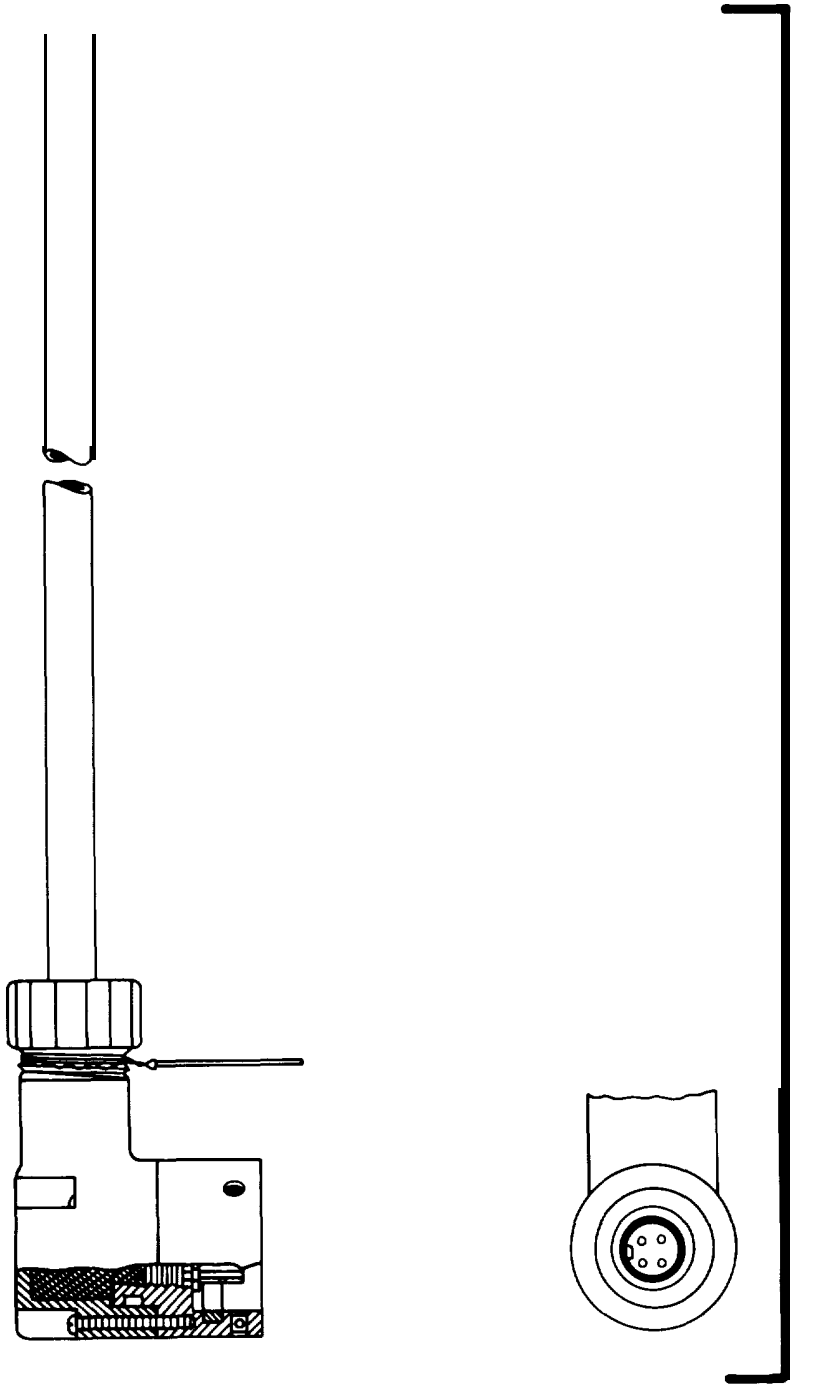

021TL1

FIGURE 366. Float Switch Assembly (Sheet 2 of 3).

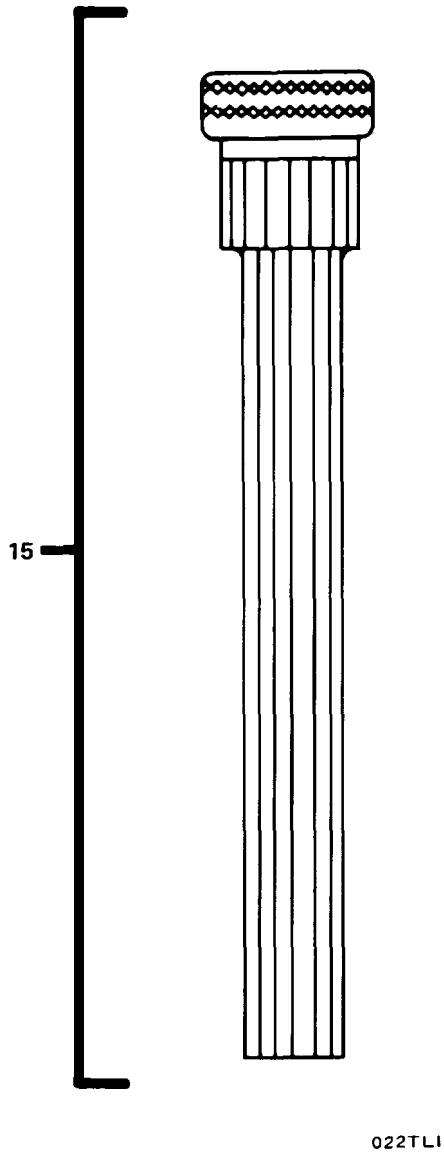

FIGURE 366. Float Switch Assembly (Sheet 3 of 3).

(1) ITEM NO	(2) SMR CODE	(3) FSCM	(4) PART NUMBER	(5) DESCRIPTION AND USABLE ON CODES(UOC)	(6) QTY
				GROUP 18 BASIC CRAFT	
				FIG. 366 FLOAT SWITCH ASSEMBLY	
1	XDFZZ	04034	36413	...MOUNTING BRACKET	2
2	PBFFF	04034	XM-36460-36-4300 -0-L	...SWITCH,LIQUID LEVEL	1
3	XDFZZ	04034	16391	..SPACER,SPECIAL	1
4	XDFZZ	04034	32230	...FLOAT ASSEMBLY	1
5	XDFZZ	04034	19326	..SPACER	1
6	XDFZZ	04034	53585	..SWITCH,PUSH	1
7	XDFZZ	04034	26534	..TUBE,SHOCK	V
8	XDFZZ	04034	36462	..WASHER,SPLIT	1
9	XDFZZ	79136	36464	..RING,RETAINING	1
10	PBFZZ	71468	36468	..CONNECTOR,PLUG,ELEC	1
11	XDFZZ	04034	36411	..STEM ASSEMBLY (36 IN).	1
12	XDFZZ	04034	50727	..RIVET,POP	2
13	XDFZZ	04034	27337	..PLATE,IDENTIFICATIO	1
14	PBFZZ	04034	36880-30-LP	...CABLE ASSEMBLY,SPEC	1
15	PBFZZ	04034	36424	...TANK PENETRATION AS	1

END OF FIGURE

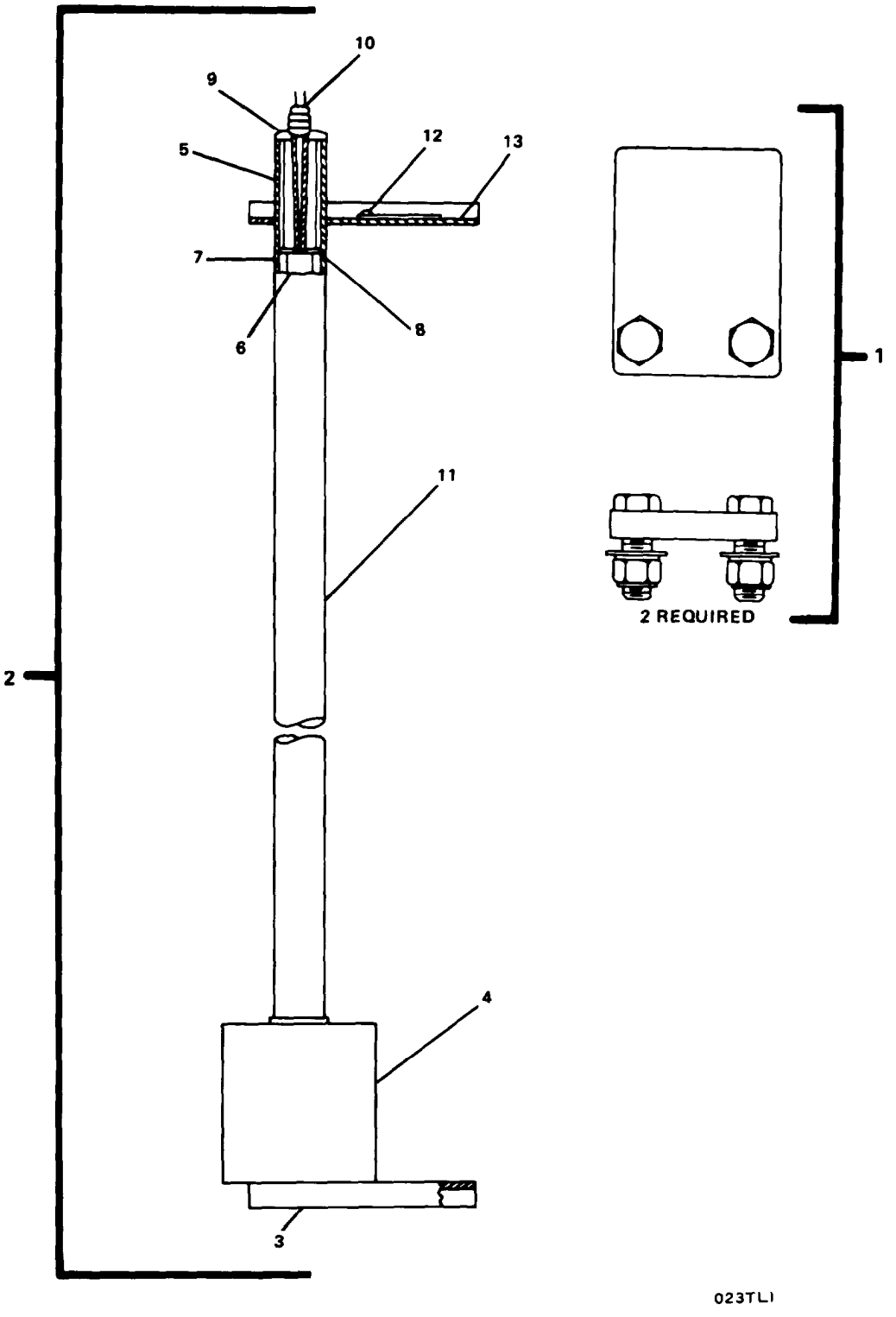

FIGURE 367. Float Switch Assembly (Sheet 1 of 3).

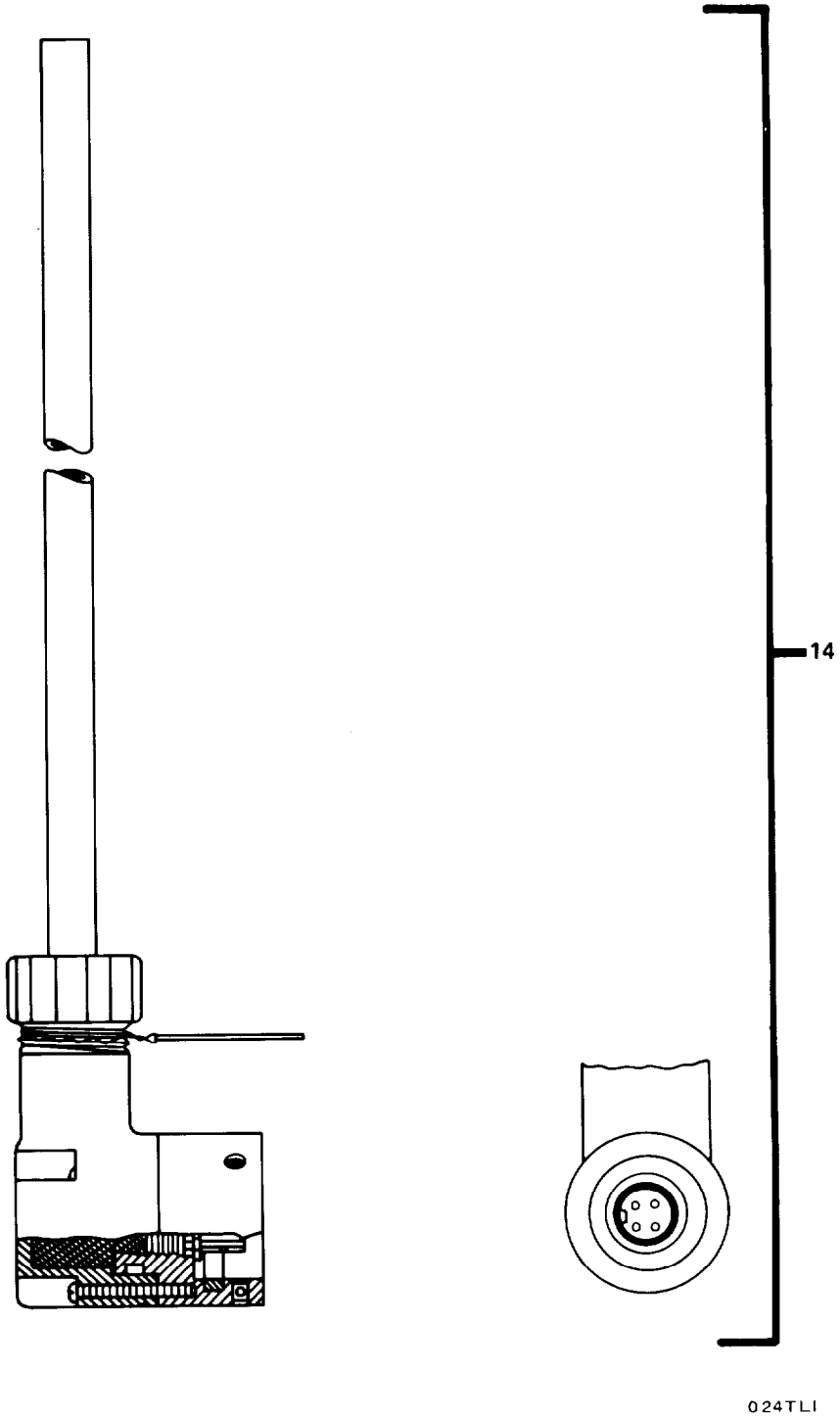

FIGURE 367. Float Switch Assembly (Sheet 2 of 3).

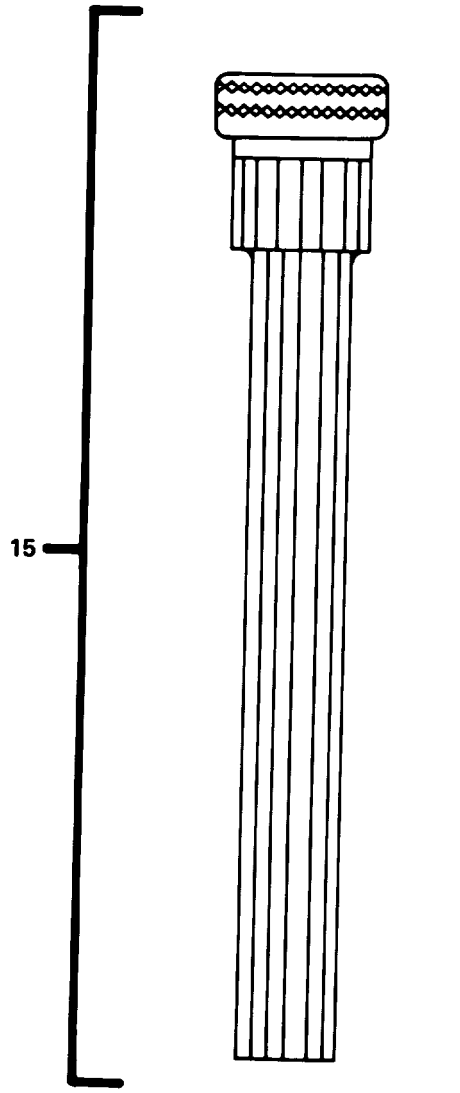

FIGURE 367. Float Switch Assembly (Sheet 3 of 3).

(1) ITEM NO	(2) SMR CODE	(3) FSCM	(4) PART NUMBER	(5) DESCRIPTION AND USABLE ON CODES(UOC)	(6) QTY
				GROUP 18 BASIC CRAFT	
				FIG. 367 FLOAT SWITCH ASSEMBLY	
1	XDFZZ	04034	36413	. . . MOUNTING BRACKET	2
2	PBFFF	04034	XM-36460-52-2700 -0-L	. . . SWITCH,LIQUID LEVEL	1
3	XDFZZ	04034	16391	. . . SPACER,SPECIAL	1
4	XDFZZ	04034	32230	. . . FLOAT ASSEMBLY	1
5	XDFZZ	04034	19326	. . . SPACER	1
6	XDFZZ	04034	53585	. . . SWITCH,PUSH	1
7	XDFZZ	04034	26534	. . . TUBE,SHOCK	V
8	XDFZZ	04034	36462	. . . WASHER,SPLIT	1
9	XDFZZ	79136	36464	. . . RING,RETAINING	1
10	PBFZZ	71468	36468	. . . CONNECTOR,PLUG,ELEC	1
11	XDFZZ	04034	36411	. . . STEM ASSEMBLY (52 IN)	1
12	XDFZZ	04034	50727	. . . RIVET,POP	2
13	XDFZZ	04034	27337	. . . PLATE,IDENTIFICATIO	1
14	PBFZZ	04034	36880-30-LP	. . . CABLE ASSEMBLY,SPEC	1
15	PBFZZ	04034	36424	. . . TANK PENETRATION AS	1

END OF FIGURE

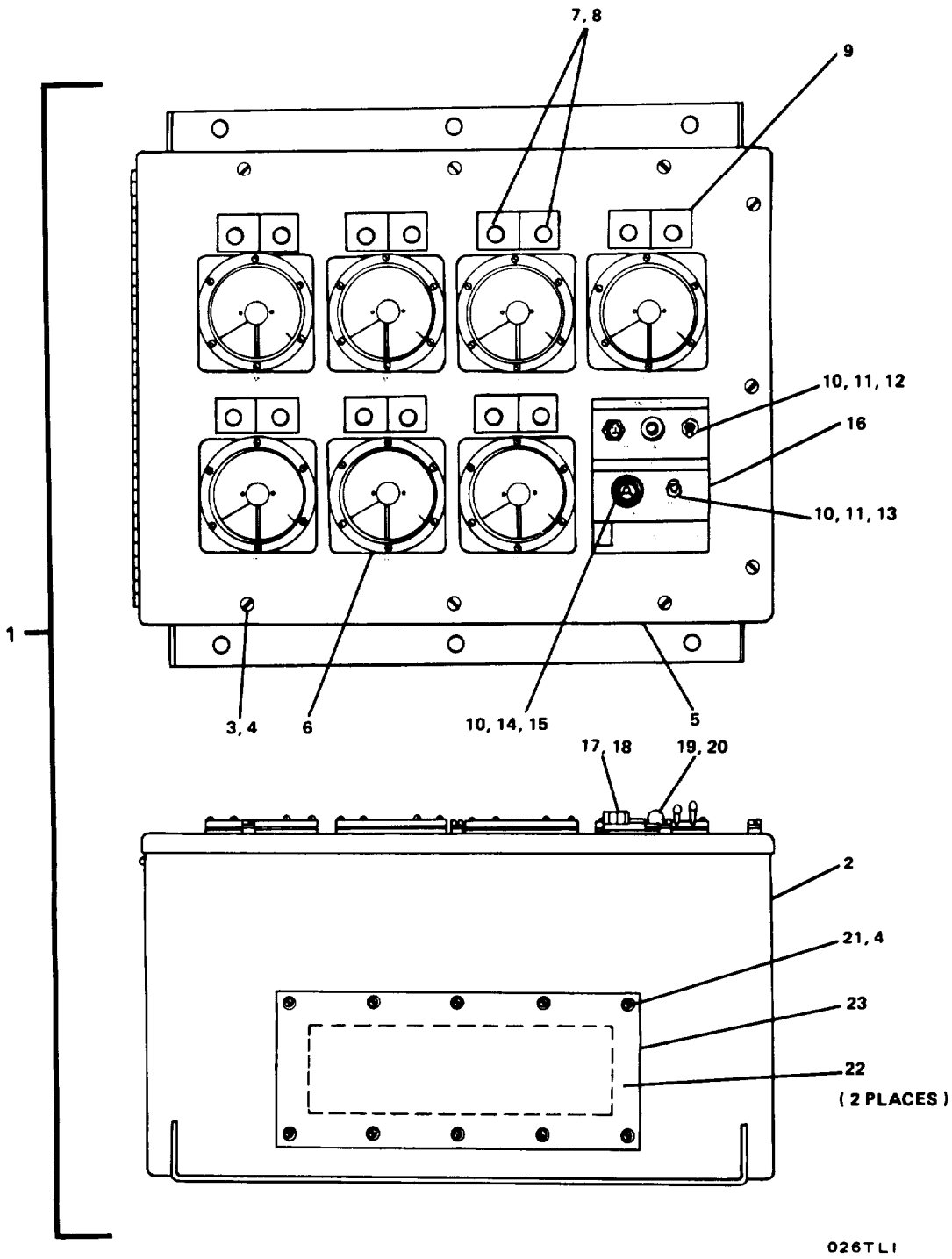

FIGURE 368. Receiver Module (Sheet 1 of 4).

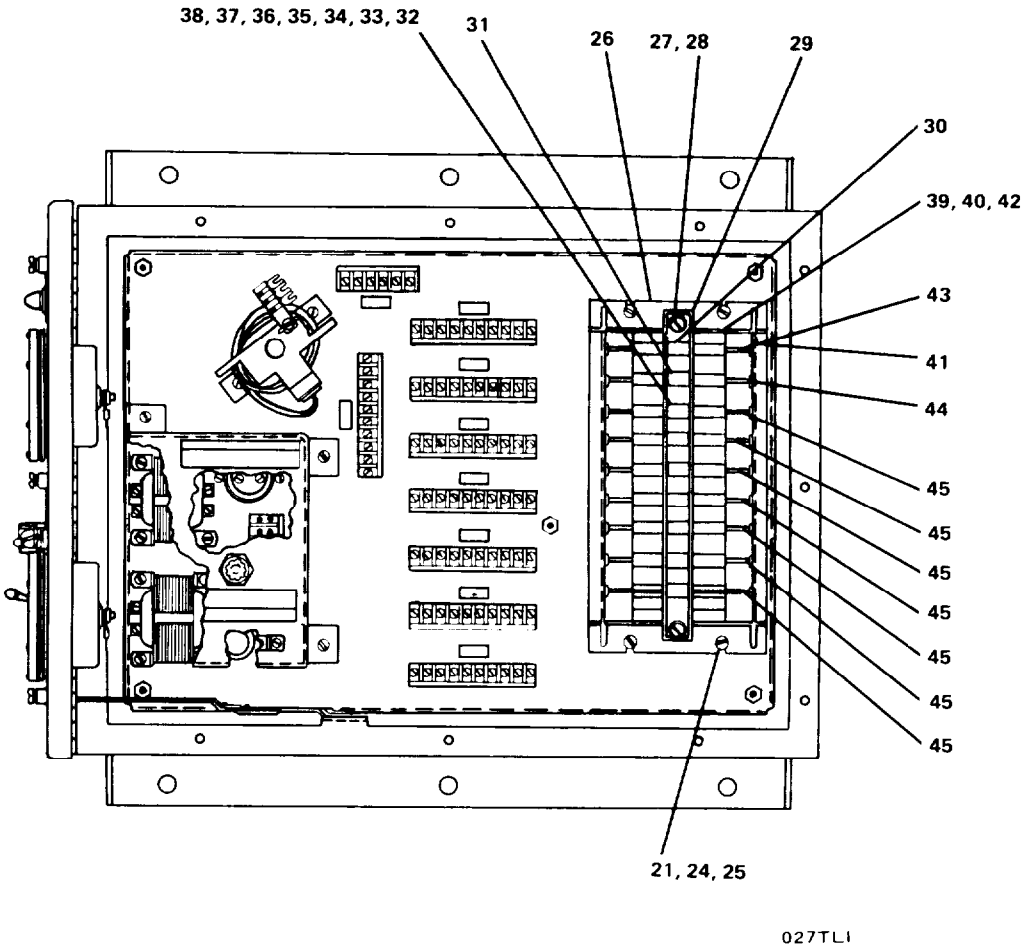

FIGURE 368. Receiver Module (Sheet 2 of 4).

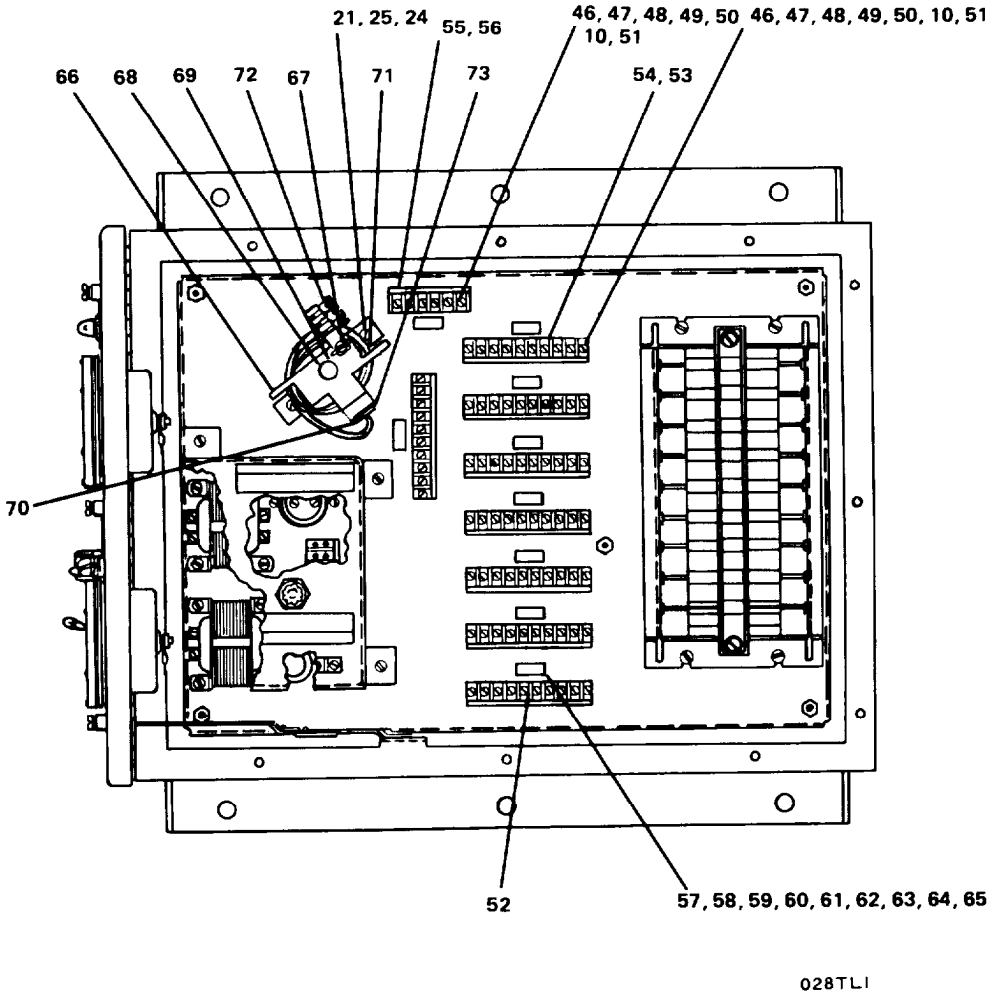

FIGURE 368. Receiver Module (Sheet 3 of 4).

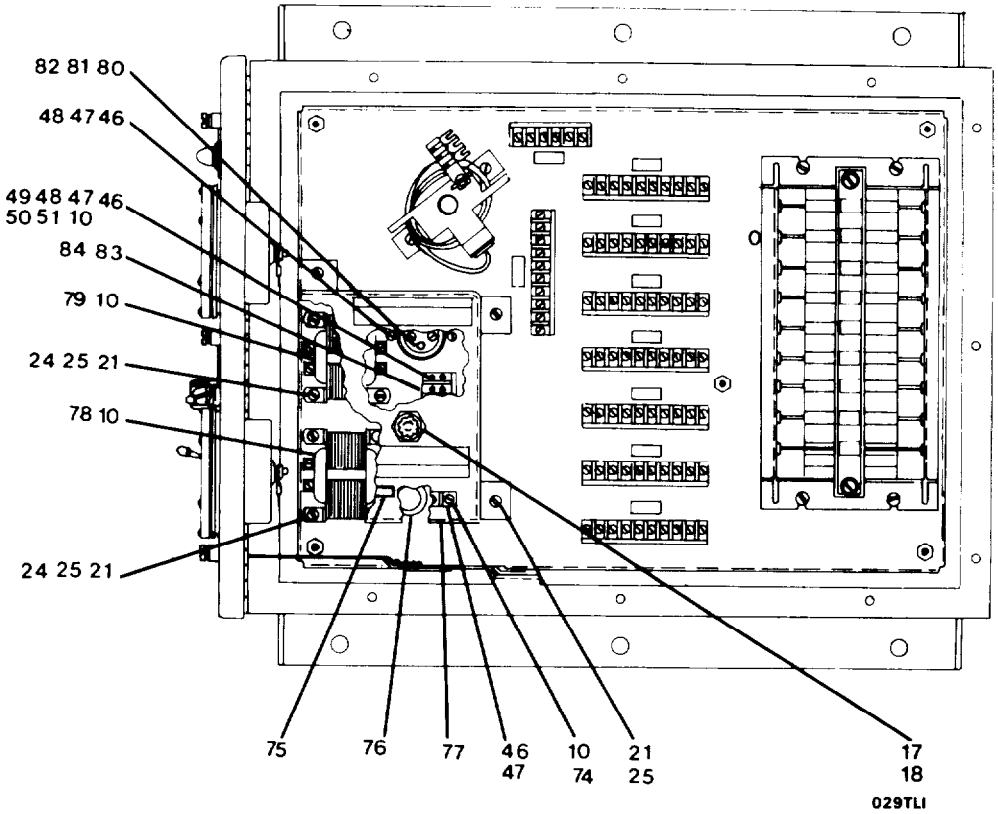

FIGURE 368. Receiver Module (Sheet 4 of 4).

(1) ITEM NO	(2) SMR CODE	(3) FSCM	(4) PART NUMBER	(5) DESCRIPTION AND USABLE ON CODES(UOC)	(6) QTY
				GROUP 18 BASIC CRAFT	
				FIG. 368 RECEIVER MODULE	
1	XDFFF	04034	RE-39240-7/M1-M7 -38100	. . . MODULE,RECEIVER	1
2	XDFZZ	04034	37041	. . . BOX ASSEMBLY	1
3	XDFZZ	04034	32767	. . . SCREW,CAP,HEXAGON H	9
4	XDFZZ	04034	33980	. . . WASHER,LOCK	49
5	PAFZZ	04034	37044	. . . GASKET	1
6	PAFZZ	04034	43075	. . . INDICATOR,LIQUID QU	7
7	PACZZ	81349	LH89/1-LC35RT2	. . . LIGHT,INDICATOR	14
8	XDFZZ	04034	26657	. . . TUBING,INSULATING	V
9	XDFZZ	04034	37082	. . . PLATE,IDENTIFICATIO	V
10	XDFZZ	04034	16146	. . . LUG,TERMINAL	V
11	PAFZZ	04034	17287	. . . PACKING,PREFORMED	3
12	PAFZZ	96906	MS24659-22D	. . . SWITCH,TOGGLE	1
13	PAFZZ	04034	30054	. . . SWITCH,TOGGLE	1
14	PAFZZ	04034	23273	. . . PACKING,PREFORMED	1
15	PAFZZ	04034	39713	. . . HORN,ELECTRICAL	1
16	XDFZZ	04034	37004	. . . PLATE,IDENTIFICATIO	1
17	XDFZZ	04034	36794	. . . FUSEHOLDER	3
18	PACZZ	81349	F03A250V2AS	. . . FUSE,CARTRIDGE (2 AMP)	3
19	PACZZ	04034	37075	. . . LIGHT,INDICATOR	1
20	PACZZ	04034	36843	. . . LAMP,INCANDESCENT	1
21	XDFZZ	04034	32799	. . . SCREW,MACHINE	56
22	XDFZZ	04034	37046	. . . PANEL,ACCESS	2
23	PAFZZ	04034	37047	. . . GASKET	2
24	XDFZZ	04034	29308	. . . NUT,PLAIN,HEXAGON	22
25	XDFZZ	04034	33323	. . . WASHER,LOCK	26
26	XDFZZ	04034	37920	. . . RACK,CARD	1
27	XDFZZ	04034	34365	. . . SCREW,CAP,HEXAGON H	2
28	XDFZZ	04034	33979	. . . WASHER,LOCK	2
29	XDFZZ	04034	37929	. . . BAR,RETAINING	1
30	XDFZZ	04034	37098	. . . MARKER,IDENTIFICATI	1
31	XDFZZ	04034	37987	. . . MARKER,IDENTIFICATI	1
32	XDFZZ	04034	37971	. . . MARKER,IDENTIFICATI	1
33	XDFZZ	04034	37972	. . . MARKER,IDENTIFICATI	1
34	XDFZZ	04034	37973	. . . MARKER,IDENTIFICATI	1
35	XDFZZ	04034	37974	. . . MARKER,IDENTIFICATI	1
36	XDFZZ	04034	37975	. . . MARKER,IDENTIFICATI	1
37	XDFZZ	04034	37976	. . . MARKER,IDENTIFICATI	1
38	XDFZZ	04034	37977	. . . MARKER,IDENTIFICATI	1
39	XDFZZ	04034	35017	. . . SCREW,MACHINE	18
40	XDFZZ	04034	22045	. . . WASHER,LOCK	18
41	PBFZZ	04034	37096	. . . HOLDER,ELECTRICALC	18
42	PBFZZ	04034	32962	. . . CONNECTOR,RECEPTACL	9
43	PBFZF	04034	38005	. . . POWER SUPPLY	1
44	PBFZZ	04034	38105	. . . FLASHER MODULE	1
45	PBFZZ	04034	38100	. . . CIRCUIT CARD ASSEMB	7
46	XDFZZ	04034	32759	. . . SCREW,MACHINE	V
47	XDFZZ	04034	28681	. . . WASHER,LOCK	V

(1) ITEM NO	(2) SMR CODE	(3) FSCM	(4) PART NUMBER	(5) DESCRIPTION AND USABLE ON CODES(UOC)	(6) QTY
48	XDFZZ	04034	32803	NUT,PLAIN,HEXAGON	V
49	XDFZZ	04034	11117	WIRE,HOOK-UP	V
50	XDFZZ	04034	31097	TIE,CABLE	V
51	XDFZZ	04034	31098	TIE,MOUNTING DEVICE	V
52	XDFZZ	04034	36115	JUMPER,TYPE J	V
53	XDFZZ	04034	37090	MARKER STRIP,TERMIN	8
54	XDFZZ	04034	37089	TERMINAL BLOCK	8
55	XDFZZ	04034	37094	MARKER STRIP,TERMIN	1
56	XDFZZ	04034	37093	TERMINAL BLOCK	1
57	XDFZZ	04034	36631	MARKER,IDENTIFICATI	1
58	XDFZZ	04034	36632	MARKER,IDENTIFICATI	1
59	XDFZZ	04034	36328	MARKER,IDENTIFICATI	1
60	XDFZZ	04034	37249	MARKER,IDENTIFICATI	1
61	XDFZZ	04034	37250	MARKER,IDENTIFICATI	1
62	XDFZZ	04034	37251	MARKER,IDENTIFICATI	1
63	XDFZZ	04034	37252	MARKER,IDENTIFICATI	1
64	XDFZZ	04034	37264	MARKER,IDENTIFICATI	1
65	XDFZZ	04034	37262	MARKER,IDENTIFICATI	1
66	PAFZZ	04034	37084	FLOAT,SIMULATOR	1
67	XDFZZ	04034	37088	NUT,WING	1
68	PAFZZ	81349	RV4SAYSB252A	RESISTOR,VARIABLE, N (2.5K)	1
69	PBFZZ	04034	22423	KNOB	1
70	XDFZZ	04034	37074	BUSHING,SNUB	1
71	XDFZZ	04034	37073	CABLE,ELECTRICAL	V
72	XDFZZ	04034	37072	STRIP,CONNECTING	1
73	XDFZZ	04034	37006	PLATE,IDENTIFICATIO	1
74	XDFZZ	04034	30424	TERMINAL BLOCK	1
75	XDFZZ	04034	37261	MARKER,IDENTIFICATI	1
76	PAFZZ	04034	30674	GROMMET,NONMETALLIC	1
77	XDFZZ	04034	36827	PLATE,IDENTIFICATIO	1
78	PBFZZ	04034	37652	TRANSFORMER,POWER	1
79	PBFZZ	04034	37653	TRANSFORMER,POWER	1
80	XDFZZ	04034	14476	TERMINAL,STUD	2
81	PAFZZ	04034	37079	CAPACITOR,FIXED,ELE (50VDC)	1
82	XDFZZ	04034	79943	PAD,SHOCK	1
83	XDFZZ	04034	37092	MARKER STRIP,TERMIN	1
84	XDFZZ	04034	37091	TERMINAL BLOCK	1

END OF FIGURE

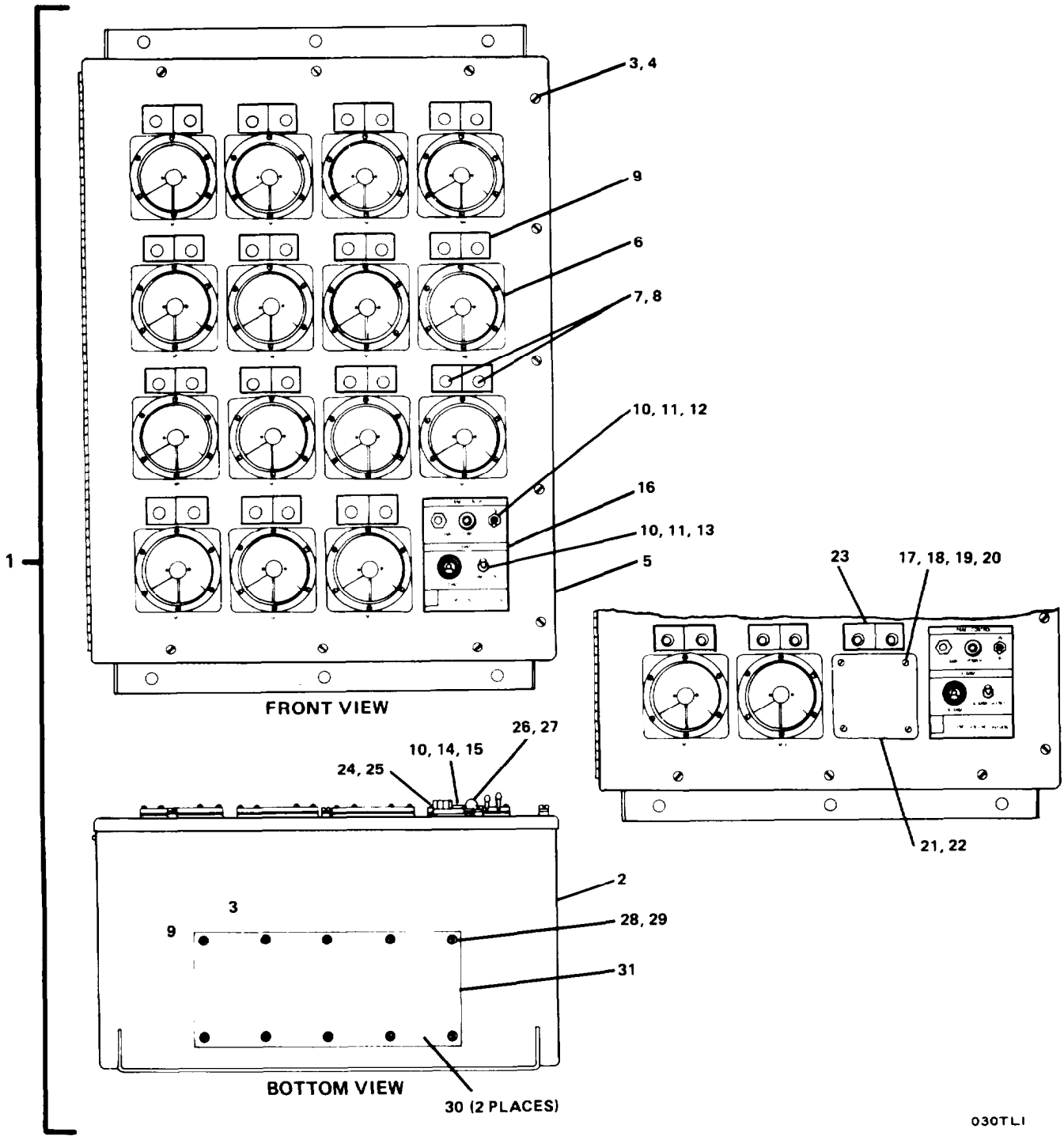

FIGURE 369. Receiver Module (Sheet 1 of 5).

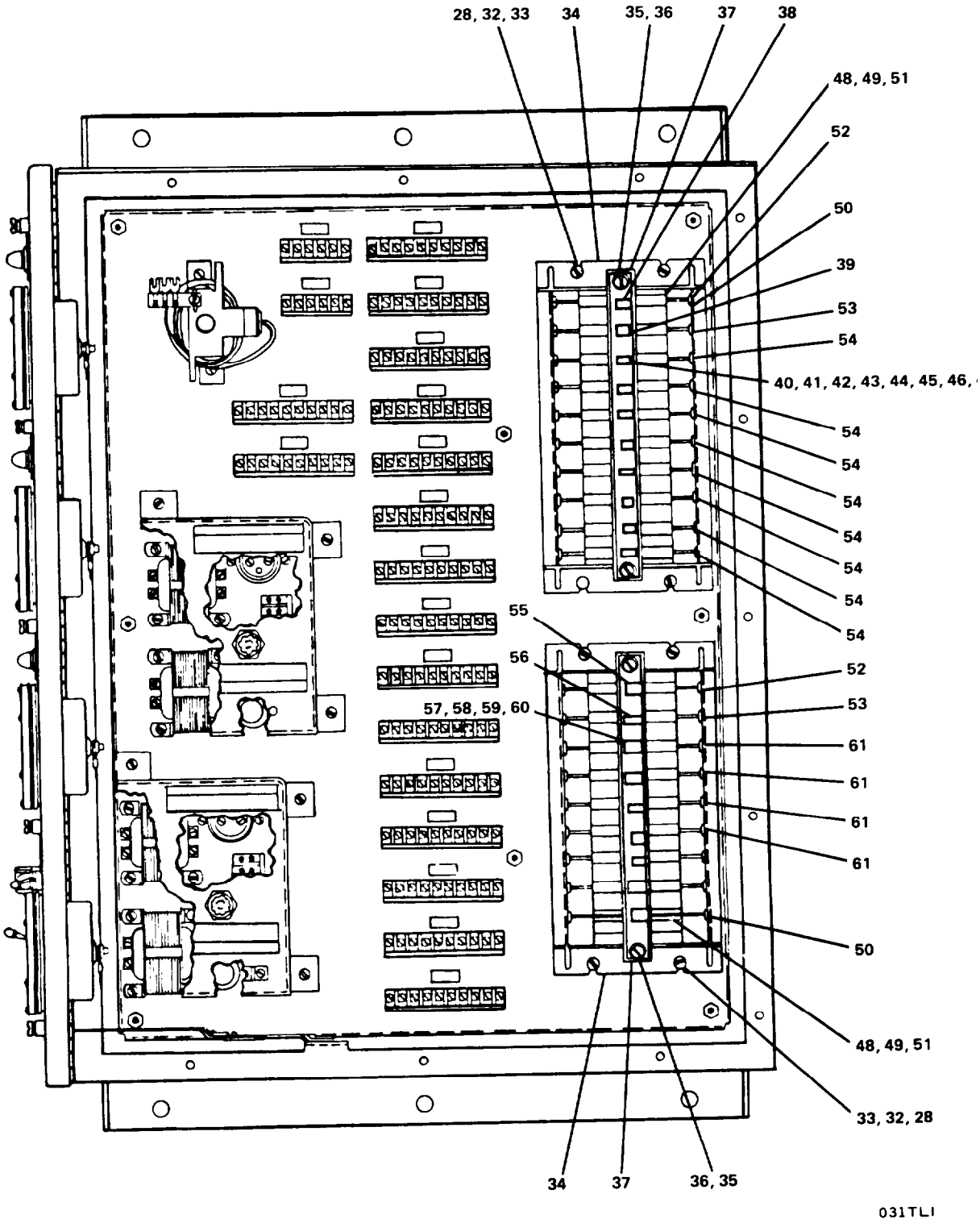

FIGURE 369. Receiver Module (Sheet 2 of 5).

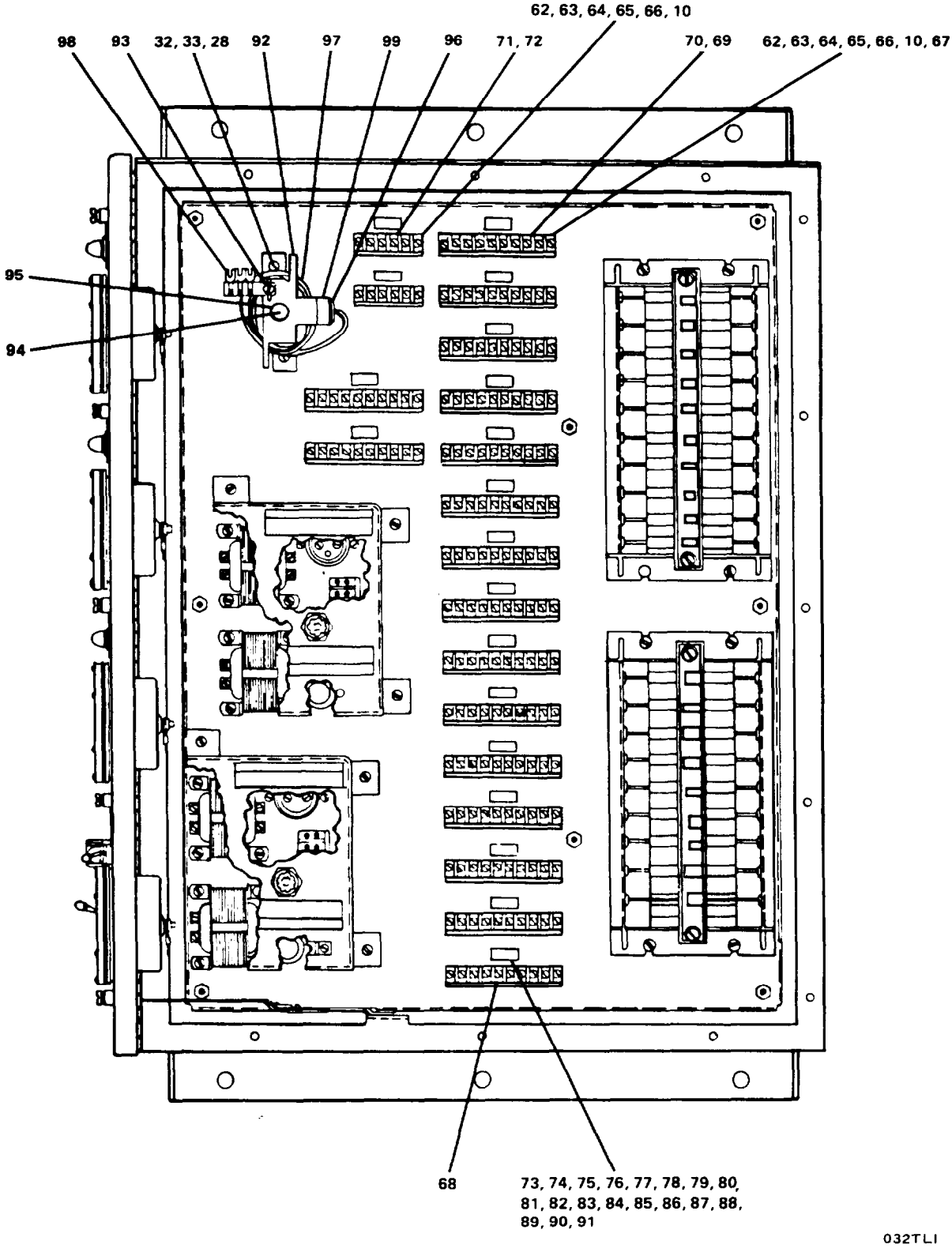

FIGURE 369. Receiver Module (Sheet 3 of 5).

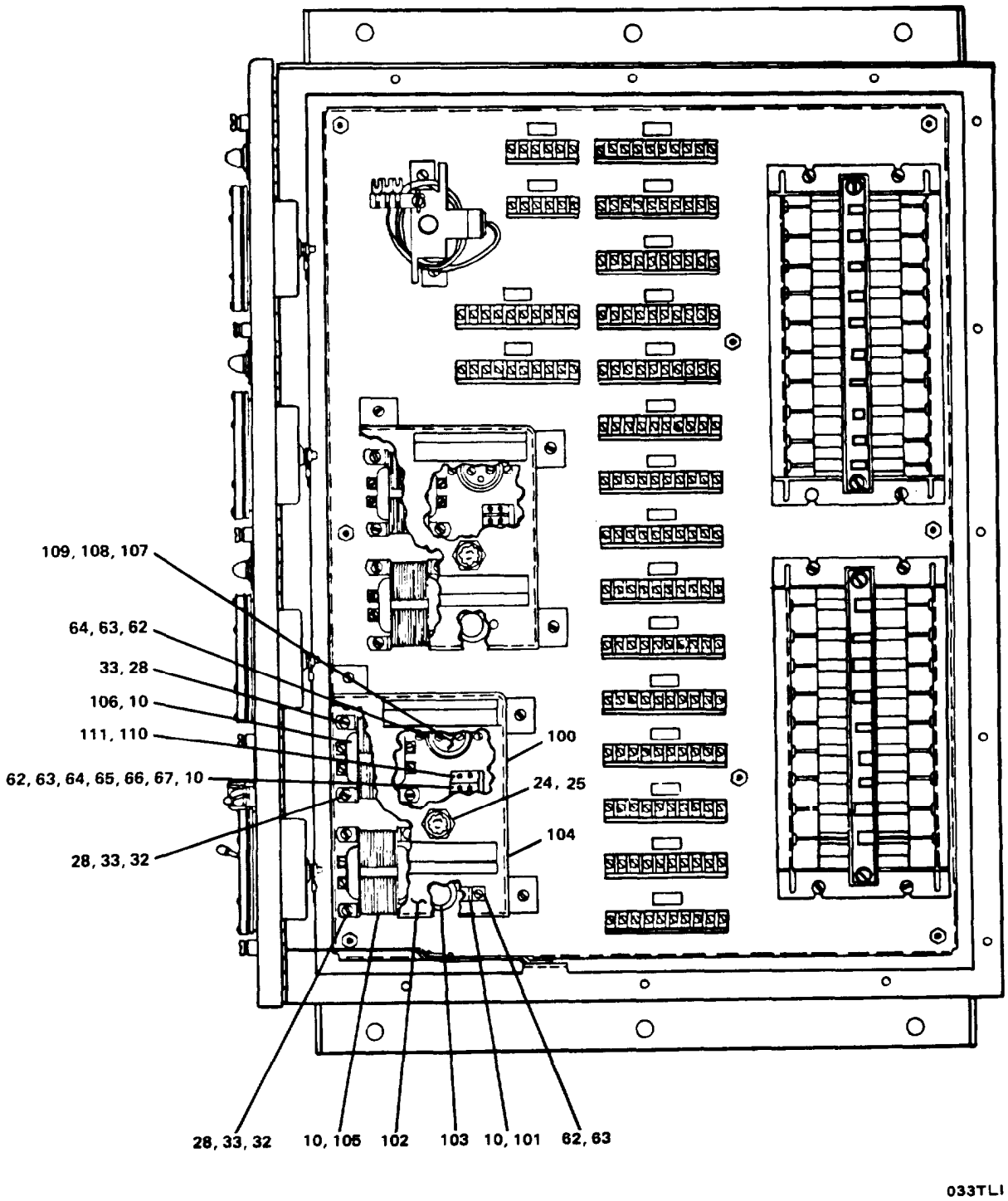

FIGURE 369. Receiver Module (Sheet 4 of 5).

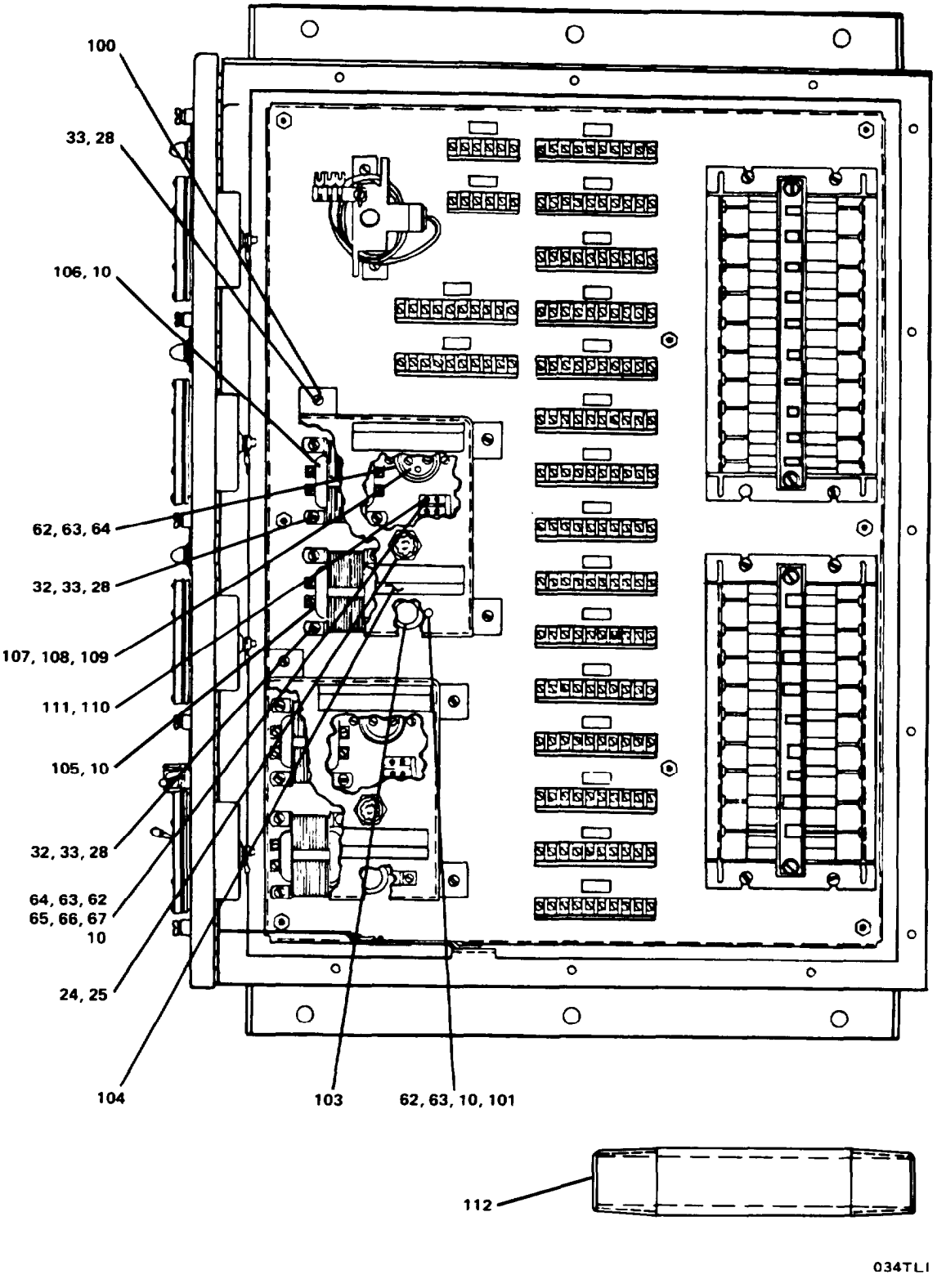

FIGURE 369. Receiver Module (Sheet 5 of 5).

(1) ITEM NO	(2) SMR CODE	(3) FSCM	(4) PART NUMBER	(5) DESCRIPTION AND USABLE ON CODES(UOC)	(6) QTY
				GROUP 18 BASIC CRAFT	
				FIG. 369 RECEIVER MODULE	
1	XDFFF	04034	39260-12M1-M8-38 100/M9-M12-38139	.. MODULE,RECEIVER	1
2	XDFZZ	04034	37061	. . . BOX,ASSEMBLY	1
3	XDFZZ	04034	32767	. . . SCREW,CAP,HEXAGON H	11
4	XDFZZ	04034	33980	. . . WASHER,LOCK	11
5	PAFZZ	04034	37064	. . . GASKET	1
6	PAFZZ	04034	43075	. . . INDICATOR,LIQUID QU	12
7	PACZZ	81349	LH89/1-LC35RT2	. . . LIGHT,INDICATOR	24
8	XDFZZ	04034	26657	. . . TUBING,INSULATING	V
9	XDFZZ	04034	37082	. . . PLATE,IDENTIFICATIO	V
10	XDFZZ	04034	16146	. . . LUG,TERMINAL	V
11	PAFZZ	04034	17287	. . . PACKING,PREFORMED	3
12	PAFZZ	96906	MS24659-22D	. . . SWITCH,TOGGLE	1
13	XDFZZ	04034	37059	. . . SWITCH,TOGGLE	1
14	PAFZZ	04034	23273	. . . PACKING,PREFORMED	1
15	PAFZZ	04034	39713	. . . HORN,ELECTRICAL	1
16	XDFZZ	04034	37004	. . . PLATE,IDENTIFICATIO	1
17	XDFZZ	04034	32801	. . . SCREW,MACHINE	12
18	XDFZZ	04034	34029	. . . WASHER,LOCK	12
19	XDFZZ	04034	22401	. . . WASHER,LOCK	12
20	XDFZZ	04034	17308	. . . NUT,HEXAGON HEAD	12
21	XDFZZ	04034	37080	. . . PLATE,COVER,METER	3
22	PAFZZ	04034	37081	. . . GASKET	3
23	XDFZZ	04034	40720	. . . PLATE, IDENTIFICATIO (SPARE)	V
24	XDFZZ	04034	36794	. . . FUSEHOLDER	6
25	PACZZ	81349	F03A250V2AS	. . . FUSE,CARTRIDGE (2 AMP)	5
26	PACZZ	04034	37075	. . . LIGHT,INDICATOR	1
27	PACZZ	04034	36843	. . . LAMP,INCANDESCENT	1
28	XDFZZ	04034	32799	. . . SCREW,MACHINE	84
29	XDFZZ	04034	33980	. . . WASHER,LOCK	20
30	XDFZZ	04034	37046	. . . PANEL,ACCESS	2
31	PAFZZ	04034	37047	. . . GASKET	2
32	XDFZZ	04034	29308	. . . NUT,PLAIN,HEXAGON	36
33	XDFZZ	04034	33323	. . . WASHER,LOCK	50
34	XDFZZ	04034	37920	. . . RACK,CARD	17
35	XDFZZ	04034	34365	. . . SCREW,CAP,HEXAGON H	6
36	XDFZZ	04034	33979	. . . WASHER,LOCK	6
37	XDFZZ	04034	37929	. . . BAR,RETAINING	3
38	XDFZZ	04034	37098	. . . MARKER,IDENTIFICATI	1
39	XDFZZ	04034	37987	. . . MARKER,IDENTIFICATI	1
40	XDFZZ	04034	37971	. . . MARKER,IDENTIFICATI	1
41	XDFZZ	04034	37972	. . . MARKER,IDENTIFICATI	1
42	XDFZZ	04034	37973	. . . MARKER,IDENTIFICATI	1
43	XDFZZ	04034	37974	. . . MARKER,IDENTIFICATI	1
44	XDFZZ	04034	37975	. . . MARKER,IDENTIFICATI	1
45	XDFZZ	04034	37976	. . . MARKER,IDENTIFICATI	1
46	XDFZZ	04034	37977	. . . MARKER,IDENTIFICATI	1
47	XDFZZ	04034	37978	. . . MARKER,IDENTIFICATI	1

(1) XTEM NO	(2) SMR CODE	(3) FSCM	(4) PART NUMBER	(5) DESCRIPTION AND USABLE ON CODES(UOC)	(6) QTY
48	XDFZZ	04034	35017	. . . SCREW,MACHINE	44
49	XDFZZ	04034	22405	. . .WASHER,LOCK	44
50	PBFZZ	04034	37096	. . . HOLDER,ELECTRICAL C	44
51	PBFZZ	04034	32962	. . . CONNECTOR,RECEPTACL	22
52	PBFZF	04034	38005	. . . POWER SUPPLY	3
53	PBFZZ	04034	38105	. . . FLASHER MODULE	3
54	PBFZZ	04034	38100	. . .CIRCUIT CARD ASSEMB	8
55	XDFZZ	04034	37099	. . . MARKER,IDENTIFICATI	1
56	XDFZZ	04034	37988	. . .MARKER,IDENTIFICATI	1
57	XDFZZ	04034	37979	. . .MARKER,.IDENTIFICATI	1
58	XDFZZ	04034	37980	. . .MARKER,IDENTIFICATI	1
59	XDFZZ	04034	37981	. . . MARKER,IDENTIFICATI	1
60	XDFZZ	04034	37982	. . . MARKER,IDENTIFICATI	1
61	PBFZZ	04034	38139	. . . CIRCUIT CARD ASSEMB	4
62	XDFZZ	04034	32759	. . . SCREW,MACHINE	V
63	XDFZZ	04034	28681	. . .WASHER,LOCK	V
64	XDFZZ	04034	32803	. . . NUT,PLAIN,HEXAGON	V
65	XDFZZ	04034	11117	. . .WIRE,HOOK-UP	V
66	XDFZZ	04034	31097	. . . TIE,CABLE	V
67	XDFZZ	04034	31098	. . . TIE,MOUNTING DEVICE	V
68	XDFZZ	04034	36115	. . . JUMPER,TYPE J	V
69	XDFZZ	04034	37090	. . . MARKER STRIP,TERMIN	17
70	XDFZZ	04034	37089	. . . TERMINAL BLOCK	17
71	XDFZZ	04034	37094	. . . MARKER STRIP,TERMIN	2
72	XDFZZ	04034	37093	. . . TERMINAL BLOCK	2
73	XDFZZ	04034	36631	. . . MARKER,IDENTIFICATI	1
74	XDFZZ	04034	36632	. . .MARKER,IDENTIFICATI	1
75	XDFZZ	04034	36328	. . . MARKER,IDENTIFICATI	1
76	XDFZZ	04034	37249	. . . MARKER,IDENTIFICATI	1
77	XDFZZ	04034	37250	. . MARKER,IDENTIFICATI	1
78	XDFZZ	04034	37251	. . . MARKER,IDENTIFICATI	1
79	XDFZZ	04034	37252	. . . MARKER,IDENTIFICATI	1
80	XDFZZ	04034	37253	. . . MARKER,IDENTIFICATI	1
81	XDFZZ	04034	37254	. . . MARKER,IDENTIFICATI	1
82	XDFZZ	04034	37255	. . . MARKER,IDENTIFICATI	1
83	XDFZZ	04034	37256	. . .MARKER,IDENTIFICATI	1
84	XDFZZ	04034	37257	. . . MARKER,IDENTIFICATI	1
85	XDFZZ	04034	37258	. . . MARKER,IDENTIFICATI	1
86	XDFZZ	04034	37259	. . . MARKER,IDENTIFICATI	1
87	XDFZZ	04034	37260	. . .MARKER,IDENTIFICATI	1
88	XDFZZ	04034	37262	. . . MARKER,IDENTIFICATI	1
89	XDFZZ	04034	37263	. . .MARKER,IDENTIFICATI	1
90	XDFZZ	04034	37264	. . .MARKER,IDENTIFICATI	1
91	XDFZZ	04034	37265	. . .MARKER,IDENTIFICATI	1
92	PAFZZ	04034	37084	. . .FLOAT,SIMULATOR	1
93	XDFZZ	04034	37088	. . .NUT,WING	1
94	PBFZZ	81349	RV4SAYSB252A	. . . RESISTOR,VARIABLE,N (2.5K)	1
95	PBFZZ	04034	22423	. . .KNOB	1
96	XDFZZ	04034	37074	. . . BUSHING,SNUB	1
97	XDFZZ	04034	37073	. . . CABLE,ELECTRICAL	V
98	XDFZZ	04034	37072	. . .STRIP,CONNECTING	1
99	XDFZZ	04034	37006	. . . PLATE,IDENTIFICATIO	1

(1) ITEM NO	(2) SMR CODE	(3) FSCM	(4) PART NUMBER	(5) DESCRIPTION AND USABLE ON CODES(UOC)	(6) QTY
100	XDFZZ	04034	37077	. . . PLATE,COVER	2
101	XDFZZ	04034	30424	. . . TERMINAL BLOCK	3
102	XDFZZ	04034	37261	. . . MARKER,IDENTIFICATI	1
103	PAFZZ	04034	30674	. . . GROMMET,NONMETALLIC	3
104	XDFZZ	04034	42922	. . . PLATE,IDENTIFICATIO	3
105	PBFZZ	04034	37652	. . . TRANSFORMER,POWER	3
106	PBFZZ	04034	37653	. . . TRANSFORMER,POWER	3
107	XDFZZ	04034	14476	. . . TERMINAL,STUD	4
108	PAFZZ	04034	37079	. . . CAPACITOR,FIXED,ELE (2600 OHMS, 50VDC)	4
109	XDFZZ	04034	79943	. . . PAD,SHOCK	2
110	XDFZZ	04034	37092	. . . MARKER STRIP,TERMIN	3
111	XDFZZ	04034	37091	. . . TERMINAL BLOCK	3
112	XDFZZ	04034	TD-86206	. . . PIPE,NIPPLE	1

END OF FIGURE

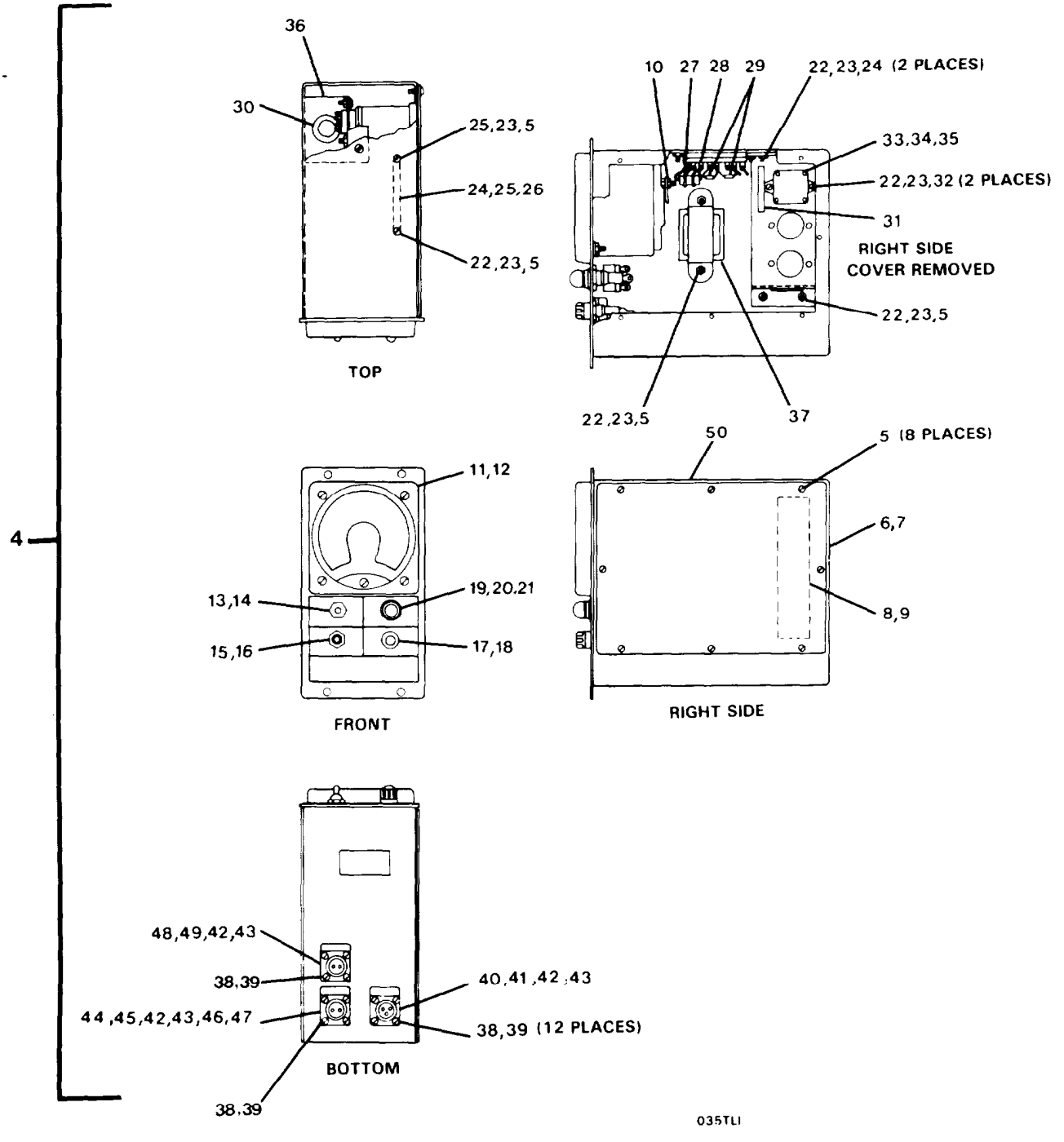

FIGURE 370. Receiver, Module, RF-31326 (Sheet 1 of 2).

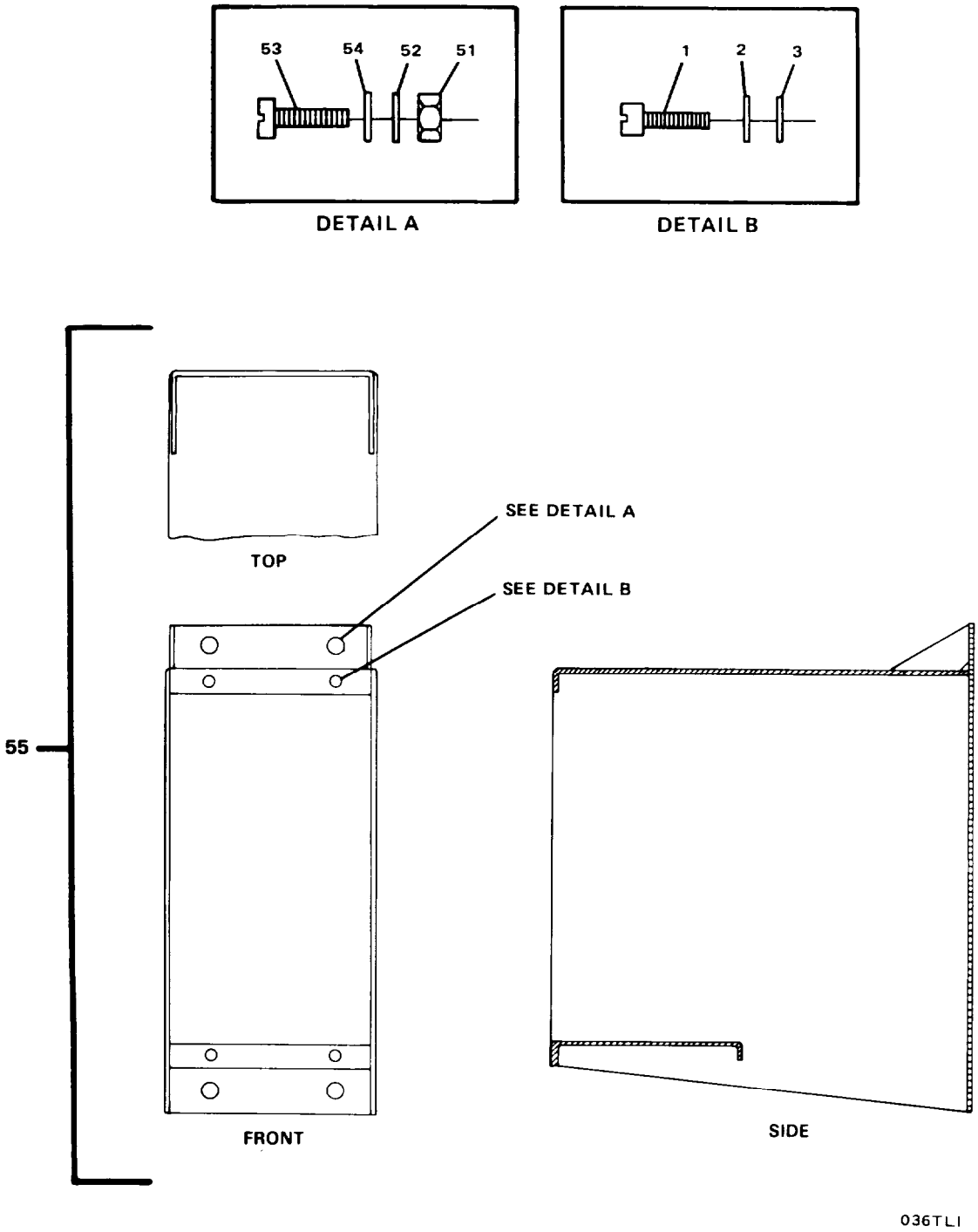

FIGURE 370. Receiver, Module, RE-31326 (Sheet 2 of 2).

(1) ITEM NO	(2) SMR CODE	(3) FSCM	(4) PART NUMBER	(5) DESCRIPTION AN0 USABLE ON CODES(UOC)	(6) QTY
				GROUP 18 BASIC CRAFT	
				FIG. 370 RECEIVER MODULE, RE-31326	
1	XDFZZ	04034	32799	... SCREW,MACHINE	4
2	XDFZZ	04034	15311	... WASHER,LOCK	4
3	XDFZZ	04034	45484	... WASHER,FLAT	4
4	XDFFF	04034	RE-31326	... MODULE RECEIVER	2
5	XDFZZ	04034	32463	... SCREW,MACHINE	22
6	XDFZZ	04034	31672	... COVER	1
7	PAFZZ	04034	31407	... GASKET	1
8	XDFZZ	04034	31427	... CUSHION,SHOCK	1
9	XDFZZ	04034	33729	... ADHESIVE	V
10	XDFZZ	04034	14476	... TERMINAL,STUD	2
11	PAFZZ	90689	15032	... AMMETER	1
12	PAFZZ	04034	28736	... GASKET	1
13	PAFZZ	04034	36805	... BOOT,DUST AND MOIST	1
14	XDFZZ	73559	15709	... SWITCH,TOGGLE	1
15	XDFZZ	04034	33914	... NUT,LOCKING	1
16	PBFZZ	81349	RV4SAYSB252A	... RESISTOR,VARIABLE,N (2.5K)	1
17	XDFZZ	71400	36794	... FUSEHOLDER	1
18	PACZZ	71400	15483	... FUSE,ALARM CONTROL	1
19	PACZZ	71744	37075	... LIGHT,INDICATOR	1
20	XDFZZ	04034	39427	... INSULATION SLEEVING	V
21	PACZZ	71600	41021	... LAMP,GLOW	1
22	XDFZZ	04034	30803	... NUT,PLAIN,HEXAGON	16
23	XDFZZ	04034	28681	... WASHER,LOCK	16
24	XDFZZ	71785	19563	... STRIP,TERMINAL	1
25	XDFZZ	04034	31097	... TIE,CABLE	V
26	XDFZZ	04034	11117	... WIRE,HOOK-UP	V
27	XDFZZ	56289	22791	... CAPACITOR (60 OHMS,50VDC)	1
28	XDFZZ	11502	91331	... RESISTOR (330 OHMS)	1
29	XDFZZ	11502	31843	... RESISTOR	2
30	XDFZZ	04034	80674	... GROMMET	1
31	XDFZZ	04034	36832	... MARKER,IDENTIFICATI	1
32	XDFZZ	04034	30801	... SCREW,MACHINE	2
33	PAFZZ	04034	41415	... POWER SUPPLY	1
34	XDFZZ	02660	31417	... SOCKET,POWER SUPPLY	1
35	XDFZZ	04034	40012	... TUBING,INSULATING	V
36	XDFZZ	04034	31419	... BRACKET	1
37	PBFZZ	04034	37031	... TRANSFORMER,POWER	1
38	XDFZZ	04034	29148	... SCREW,FLAT HEAD	20
39	XDFZZ	04034	22405	... WASHER,LOCK	20
40	XDFZZ	71468	10426	... RECEPTACLE,ELECTRIC	1
41	PAFZZ	08718	10626	... CONNECTOR,RECEPTACL	1
42	PAFZZ	71468	16600	... GASKET	5
43	PAFZZ	04034	26657	... INSULATION SLEEVING	V
44	XDFZZ	71468	28108	... RECEPTACLE,ELECTRIC	1
45	PAFZZ	71468	28109	... CONNECTOR,PLUG,ELEC	1
46	XDFZZ	04034	29566	... WIRE,JUMPER	1
47	XDFZZ	71468	28113	... CAP,PROTECTIVE	1
48	XDFZZ	71468	28106	... RECEPTACLE,ELECTRIC	1

(1) ITEM NO	(2) SMR CODE	(3) FSCM	(4) PART NUMBER	(5) DESCRIPTION AND USABLE ON CODES(UOC)	(6) QTY
49	PAFZZ	71468	28107	. . . CONNECTOR,RECEPTACL	1
50	XDFZZ	04034	70154	. . . BOX,SILK SCREENED	1
51	XDFZZ	04034	32989	. . . NUT,PLAIN,HEXAGON	4
52	XDFZZ	04034	32458	. . . WASHER,LOCK	4
53	XDFZZ	04034	32987	. . . BOLT,MACHINE	4
54	XDFZZ	04034	32988	. . . WASHER,FLAT	8
55	XDFZZ	04034	33011	. . . RACK,MOUNTING	1

END OF FIGURE

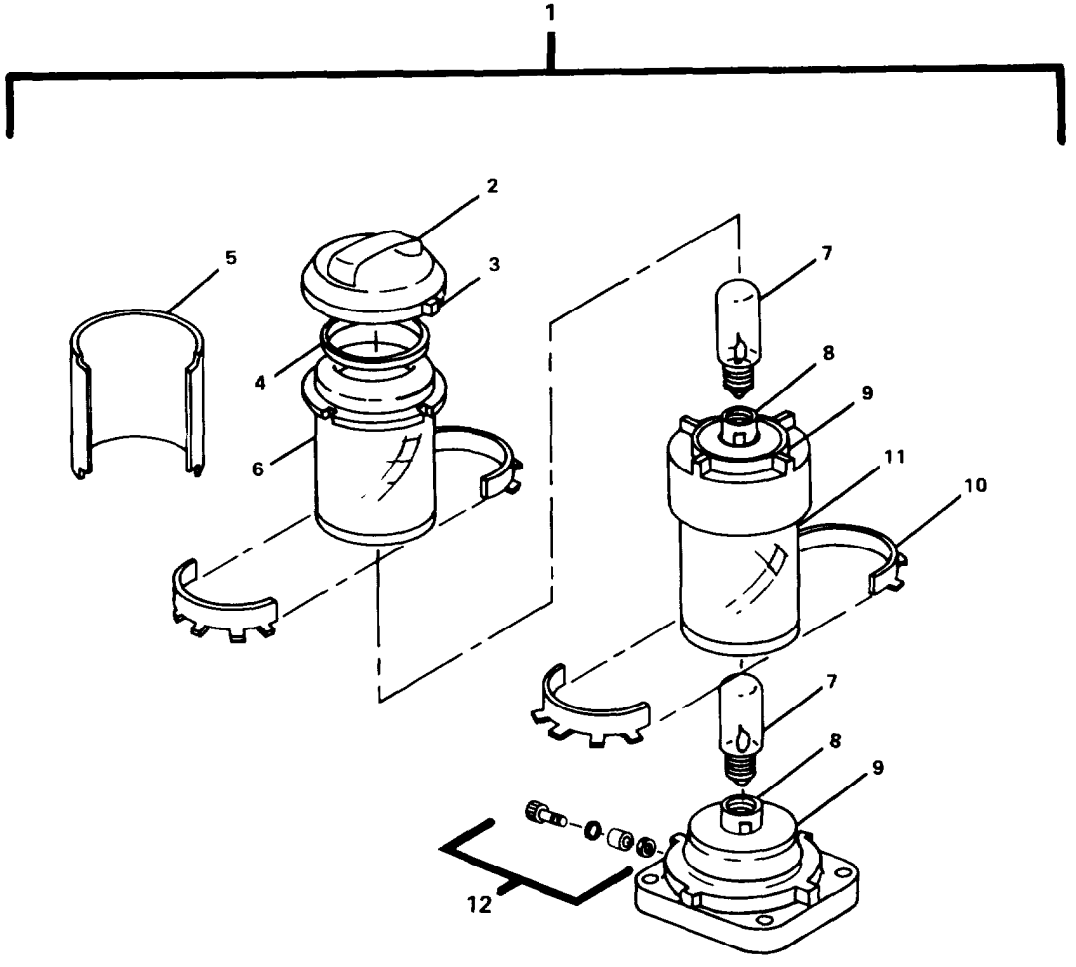

001NE

FIGURE 371. Marine Navigation Light (Forward) (Sheet 1 of 2).

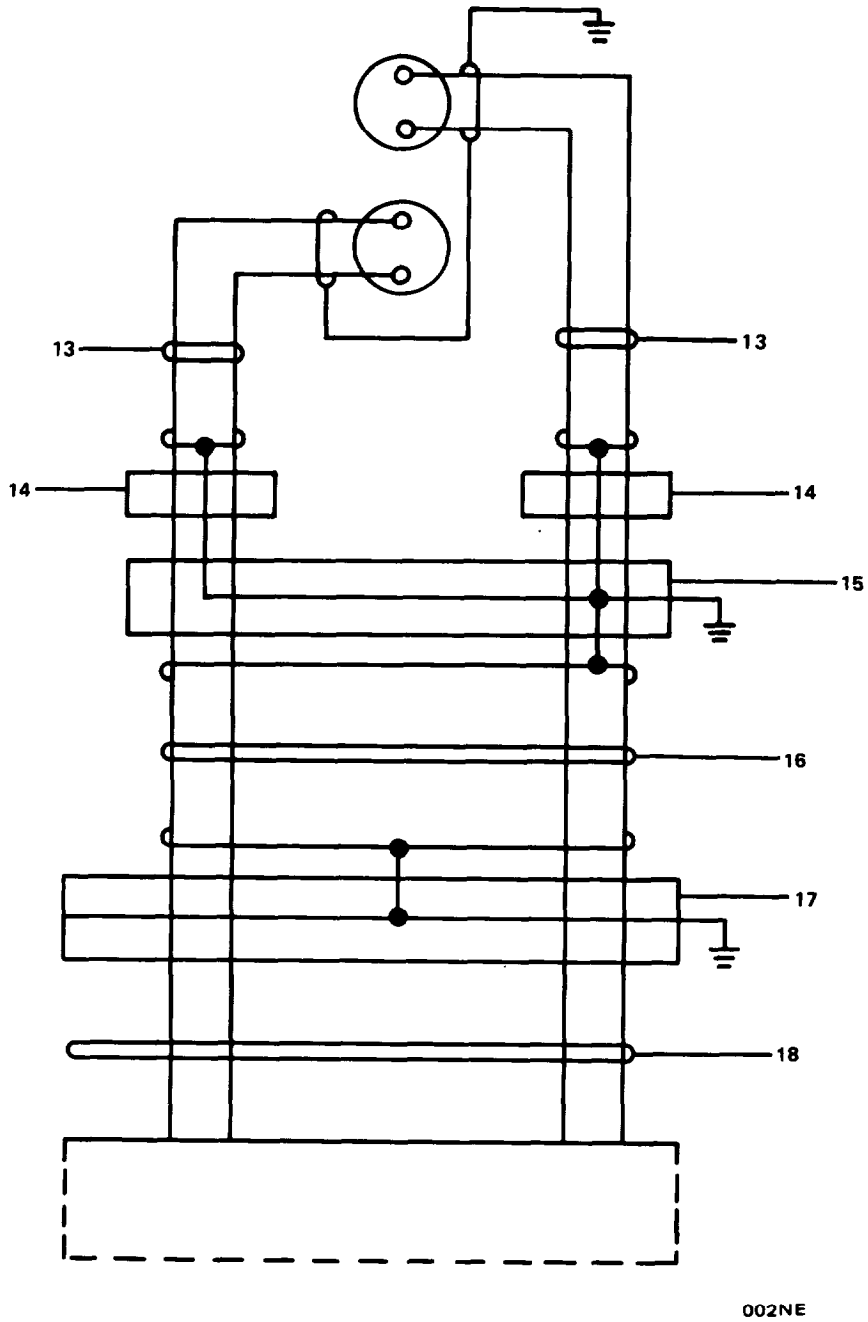

FIGURE 371. Marine Navigation Light (Forward) (Sheet 2 of 2).

(1) ITEM NO	(2) SMR CODE	(3) FSCM	(4) PART NUMBER	(5) DESCRIPTION AND USABLE ON CODES(UOC)	(6) QTY
				GROUP 18 BASIC CRAFT	
				FIG. 371 MARINE NAVIGATION LIGHT (FORWARD)	
1	PBOOO	61204	3076009	. . . LIGHT,NAVIGATION,MA (FORWARD)(60W,120V)	1
2	XDOZZ	61204	83070003	. . . LID	1
3	XDOZZ	61204	95000074	. . . SCREW	1
4	PAOZZ	61204	95800146	. . . GASKET	1
5	XDOZZ	61204	23071001	. . . SCREEN (MASTHEAD)	2
6	PAOZZ	61204	83070017	. . . LENS,LIGHT (WHITE)	1
7	PAOZZ	61204	90400172	. . . LAMP,INCANDESCENT (60W,120V)	3
8	XDOZZ	61204	83070022	. . . SOCKET	3
9	XDOZZ	61204	83075011	. . . CARRIER,BULB	3
10	XDOZZ	61204	63070049	. . . CLAMP	1
11	PAOZZ	61204	83075013	. . . LENS,LIGHT (WHITE)	1
12	XDOZZ	61204	83070009	. . . INSERT,CABLE	2
13	XDOZZ	81349	DSS-4	. . CABLE,POWER,ELECTRI	8
14	XDOZZ	96620	3720PU	. . . CONNECTOR,PLUG,ELEC	2
15	XDOZZ	96620	495-45AU	. . . CONNECTOR,RECEPTACL	1
16	XDOZZ	81349	FSS-4	. . . CABLE,POWER,ELECTRI	5
17	XDOZZ	77408	50-0435-0100	. . . TERMINAL BOX	1
18	XDOZZ	81349	7SGU-4	. . . CABLE,POWER,ELECTRI	V

END OF FIGURE

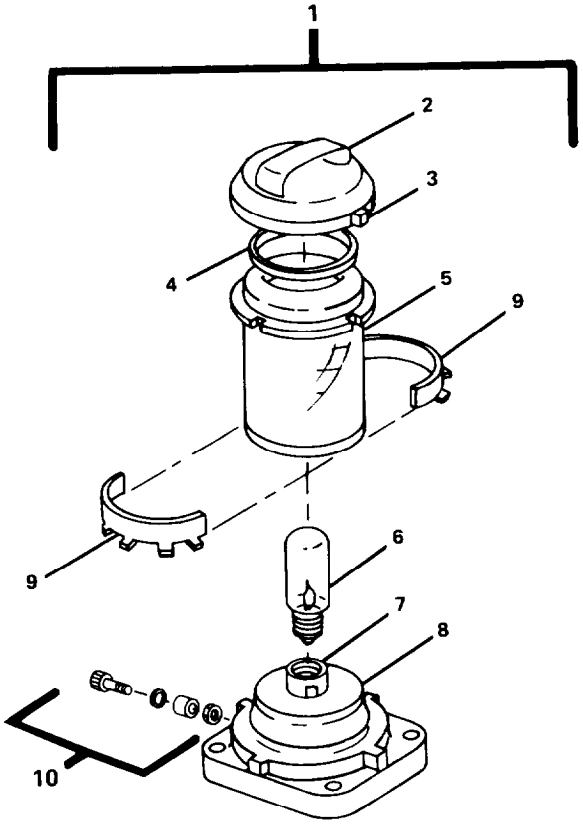

003NE

FIGURE 372. Marine Navigation Light (Forward) (Sheet 1 of 2).

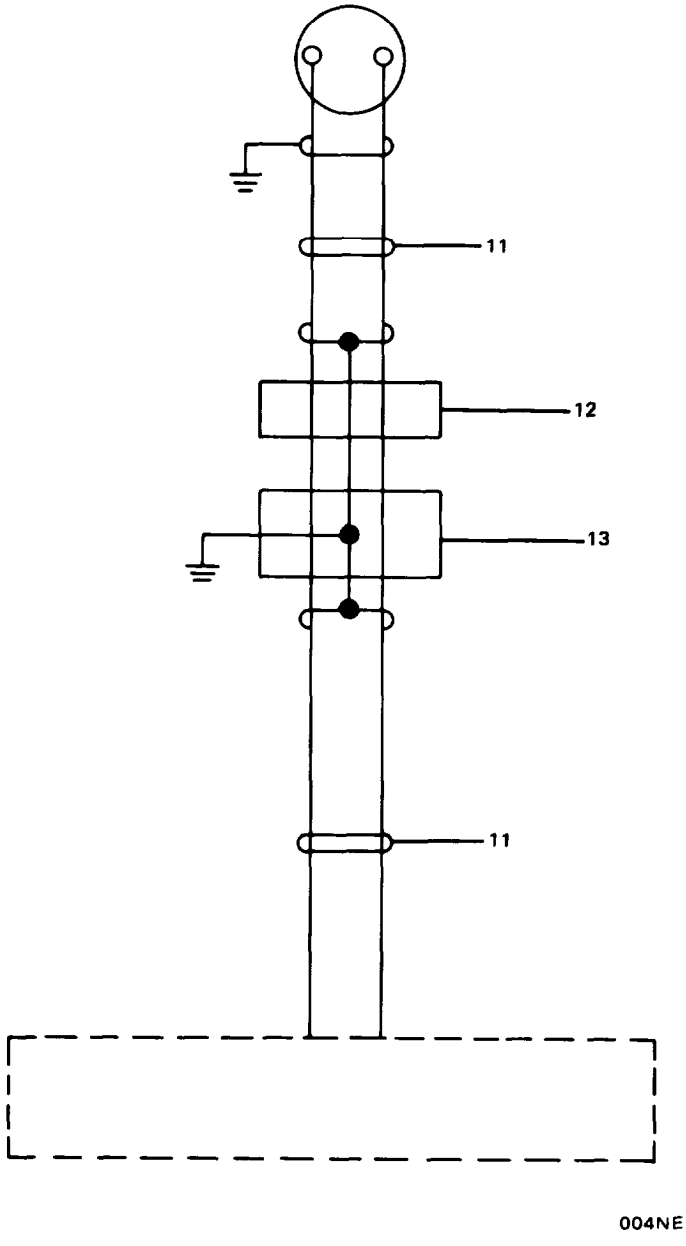

FIGURE 372. Marine Navigation Light (Forward) (Sheet 2 of 2).

(1) ITEM NO	(2) SMR CODE	(3) FSCM	(4) PART NUMBER	(5) DESCRIPTION AND USABLE ON CODES(UOC)	(6) QTY
				GROUP 18 BASIC CRAFT	
				FIG. 372 MARINE NAVIGATION LIGHT (FORWARD)	
1	PBOOO	61204	3070009	. . . LIGHT,NAVIGATION MA (FORWARD)(55W,120V)	2
2	XDOZZ	61204	83070003	. . . LID	1
3	XDOZZ	61204	95000074	. . . SCREW	1
4	PAOZZ	61204	95800146	. . . GASKET	1
5	PAOZZ	61204	83070017	. . . LENS,LIGHT (WHITE)	1
6	PAOZZ	61204	90400290	. . . LAMP,INCANDESCENT (55W,120V)	1
7	XDOZZ	61204	83070022	. . . SOCKET	1
8	XDOZZ	61204	83070021	. . . CARRIER,BULB	1
9	XDOZZ	61204	63070049	. . . CLAMP	1
10	XDOZZ	61204	83070009	. . . INSERT,CABLE	1
11	XDOZZ	81349	DSS-4	. . . CABLE,POWER,ELECTRI	104
12	XDOZZ	81349	M2726/38-001	. . . CONNECTOR,PLUG,ELEC	1
13	XDOZZ	81349	M2726/37-001	. . . CONNECTOR,RECEPTACL	1

END OF FIGURE

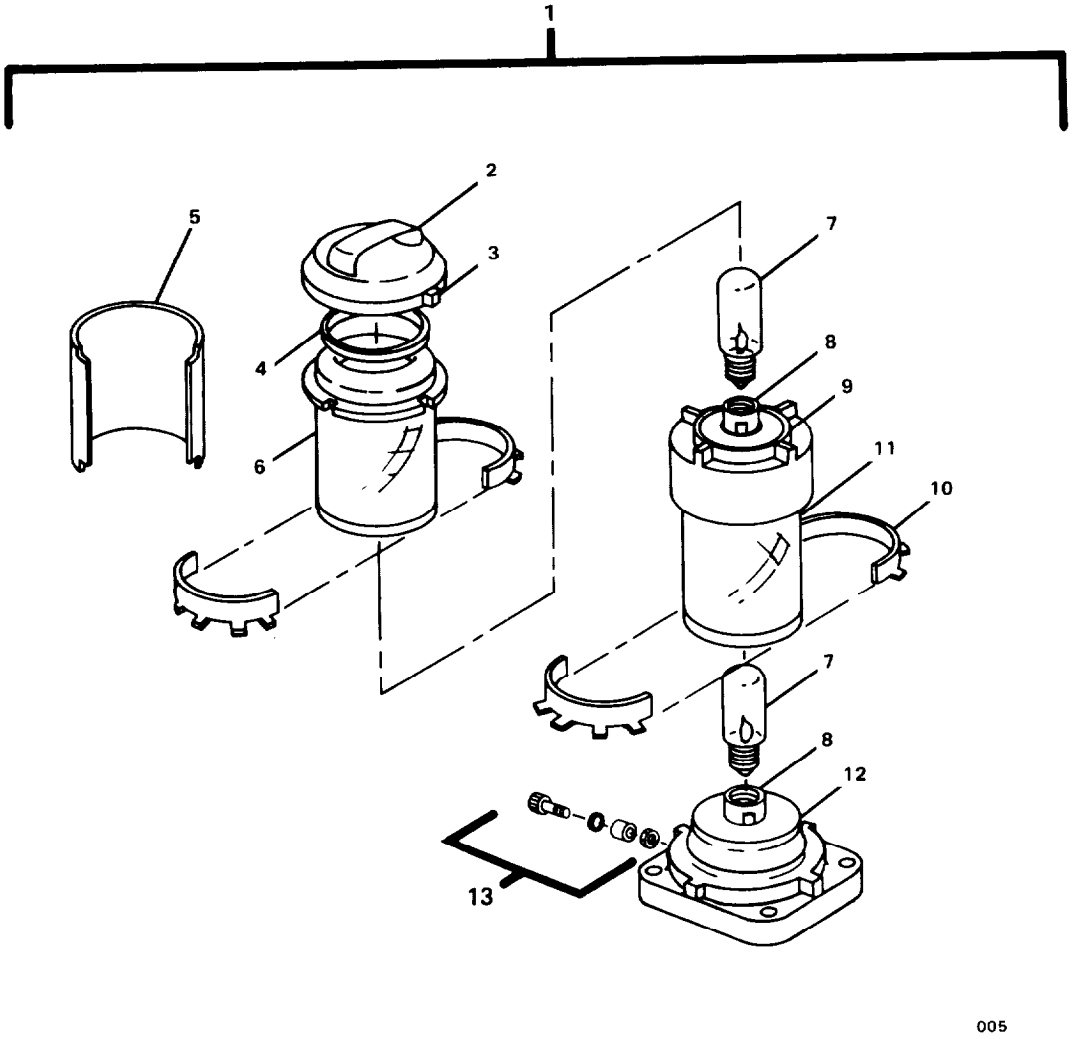

FIGURE 373. Marine Navigation Light (AFT) (Sheet 1 of 2).

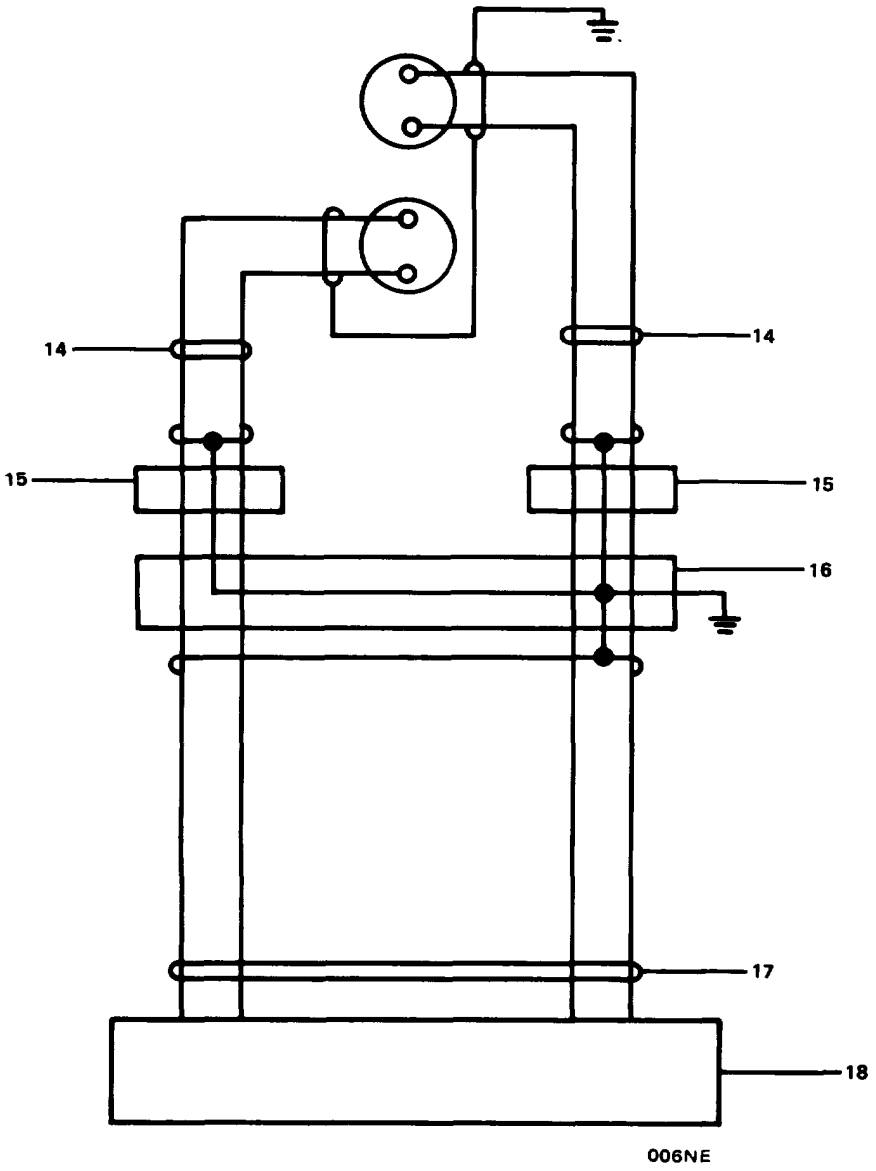

FIGURE 373. Marine Navigation Light (AFT) (Sheet 2 of 2).

(1) ITEM NO	(2) SMR CODE	(3) FSCM	(4) PART NUMBER	(5) DESCRIPTION AND USABLE ON CODES(UOC)	(6) QTY
				GROUP 18 BASIC CRAFT	
				FIG. 373 MARINE NAVIGATION LIGHT (AFT)	
1	PBOOO	61204	3076009	. . .LIGHT,NAVIGATION,MA (AFT) (60W, 120V)	1
2	XDOZZ	61204	83070003	. . . LID	1
3	XDOZZ	61204	95000074	. . . SCREW	1
4	PAOZZ	61204	95800146	. . .GASKET	1
5	XDOZZ	61204	23071001	. . . SCREEN (MASTHEAD)	1
6	PAOZZ	61204	83070017	. . . LENS,LIGHT (WHITE)	1
7	PAOZZ	61204	90400172	. . . LAMP,INCANDESCENT (60W,120V)	4
8	XDOZZ	61204	83070022	. . . SOCKET	3
9	XDOZZ	61204	83075011	. . .CARRIER,BULB	1
10	XDOZZ	61204	63070049	. . . CLAMP	1
11	PAOZZ	61204	83075013	. . . LENS,LIGHT (WHITE)	1
12	XDOZZ	61204	83070021	. . . CARRIER,BULB	1
13	XDOZZ	61204	83070009	. . . INSERT,CABLE	2
14	XDOZZ	81349	DSS-4	. . . CABLE,POWER,ELECTRI	8
15	XDOZZ	96620	3720PU	. . . CONNECTOR,PLUG,ELEC	2
16	XDOZZ	96620	495-45AU	. . . CONNECTOR,RECEPTACL	1
17	XDOZZ	81349	FSS-4	. . . CABLE,POWER,ELECTRI	50
18	XDOZZ	81349	M24558/4-432.1	. . . TERMINAL BOX	1

END OF FIGURE

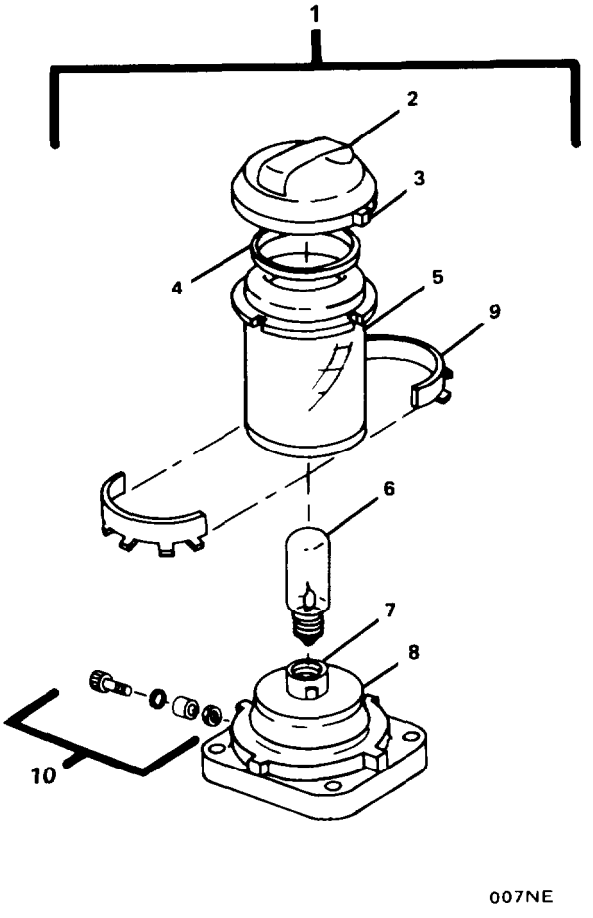

FIGURE 374. Marine Navigation Light (Sheet 1 of 2).

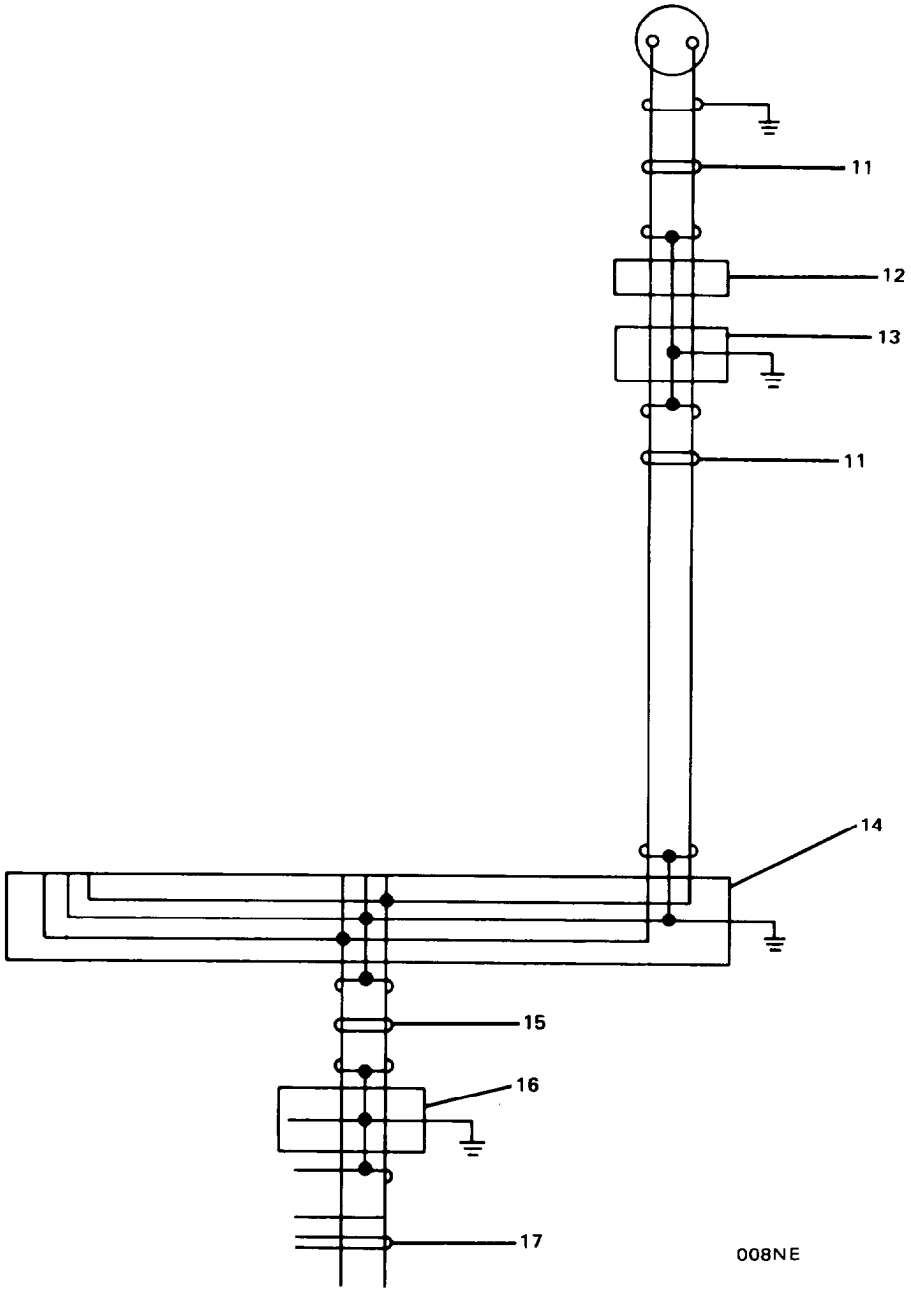

FIGURE 374. Marine Navigation Light (Sheet 2 of 2).

(1) ITEM NO	(2) SMR CODE	(3) FSCM	(4) PART NUMBER	(5) DESCRIPTION AND USABLE ON CODES(UOC)	(6) QTY
				GROUP 18 BASIC CRAFT	
				FIG. 374 MARINE NAVIGATION LIGHT	
1	PBOOO	61204	3070209	. . . LIGHT,NAVIGATION MA (55W,120V)	2
2	XDOZZ	61204	83070003	. . . LID	1
3	XDOZZ	61204	95000074	. . . SCREW	1
4	PAOZZ	61204	95800146	. . . GASKET	1
5	PAOZZ	61204	83070019	. . . LENS,LIGHT (RED)	1
6	PAOZZ	61204	90400290	. . . LAMP,INCANDESCENT (55W,120V)	1
7	XDOZZ	61204	83070022	. . . SOCKET	1
8	XDOZZ	61204	83070021	. . . CARRIER,BULB	1
9	XDOZZ	61204	63070049	. . . CLAMP	1
10	XDOZZ	61204	83070009	. . . INSERT,CABLE	1
11	XDOZZ	81349	DSS-4	. . . CABLE,POWER,ELECTRI	34
12	XDOZZ	81349	M2726/38-001	. . . CONNECTOR,PLUG,ELEC	1
13	XDOZZ	81349	M2726/37-001	. . . CONNECTOR,RECEPTACL	1
14	XDOZZ	96620	495-45AU	. . . CONNECTOR,RECEPTACL	1
15	XDOZZ	81349	FSS-4	. . . CABLE,POWER,ELECTRI	25
16	XDOZZ	81349	M24558/4-432.1	. . . TERMINAL BOX	1
17	XDOZZ	81349	LSDSGU-4	. . . CABLE,. POWER, ELECT	1

END OF FIGURE

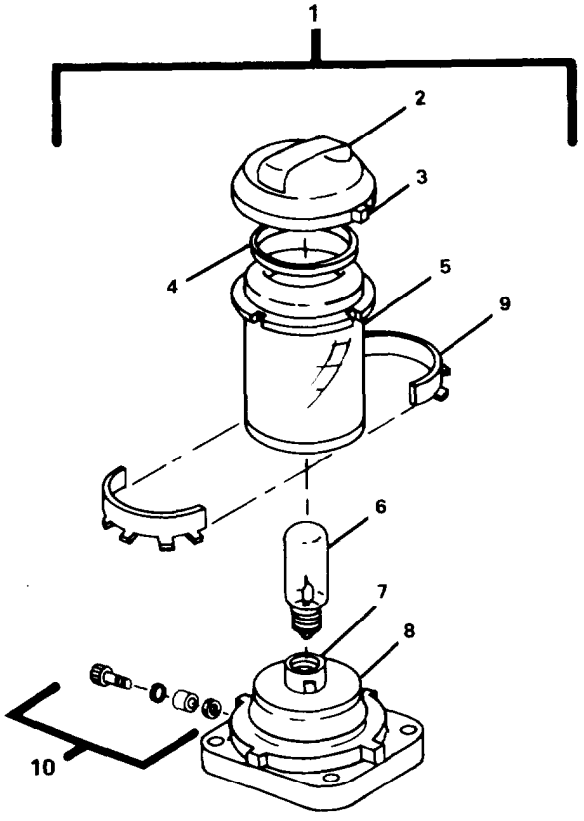

FIGURE 375. Marine Navigation Light (Sheet 1 of 2).

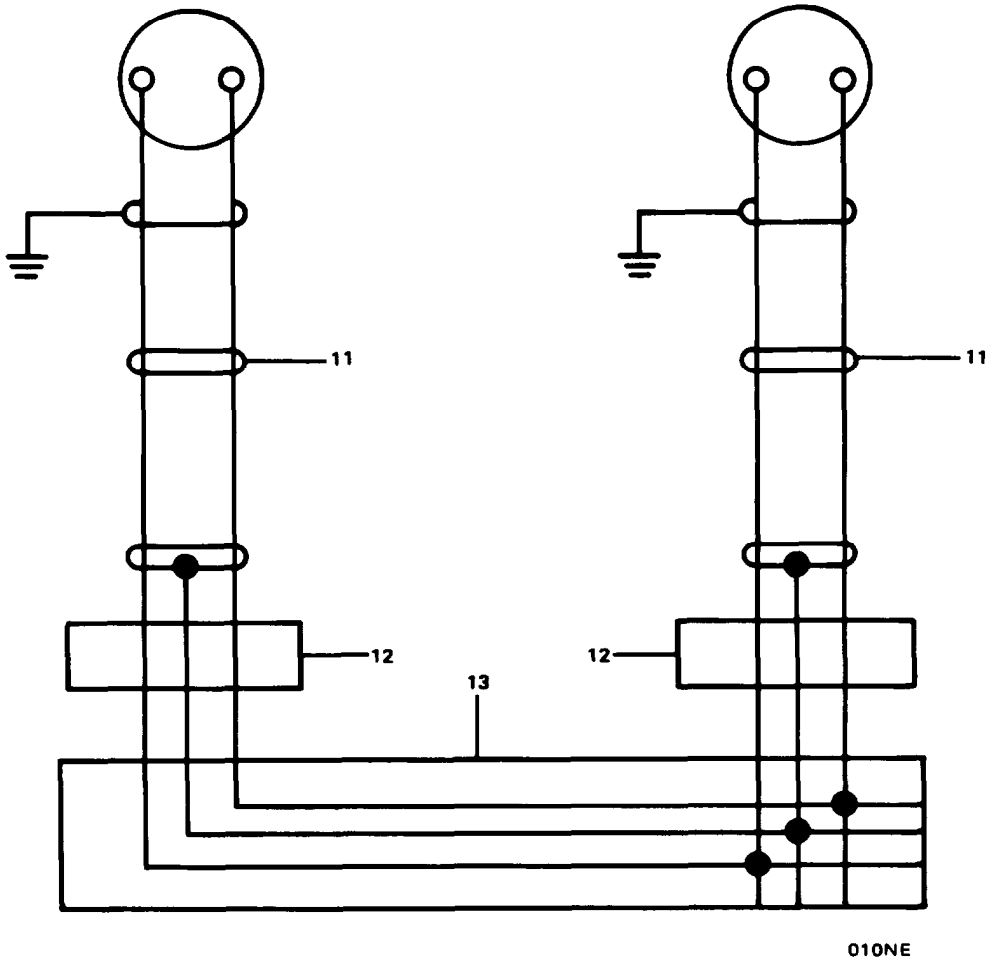

FIGURE 375. Marine Navigation Light (Sheet 2 of 2).

(1) ITEM NO	(2) SMR CODE	(3) FSCM	(4) PART NUMBER	(5) DESCRIPTION AND USABLE ON CODES(UOC)	(6) QTY
				GROUP 18 BASIC CRAFT	
				FIG. 375 MARINE NAVIGATION LIGHT	
1	PBOOO	61204	3070209	...LIGHT,NAVIGATION MA (55W,120V)	2
2	XDOZZ	61204	83070003	. . . LID	1
3	XDOZZ	61204	95000074	. . . SCREW	1
4	PAOZZ	61204	95800146	. . . GASKET	1
5	PAOZZ	61204	83070019	. . . LENS,LIGHT (RED)	1
6	PAOZZ	61204	90400290	. . . LAMP,INCANDESCENT (55W,120V)	1
7	XDOZZ	61204	83070022	SOCKET	1
8	XDOZZ	61204	83070021	. . . CARRIER,BULB	1
9	XDOZZ	61204	63070049	. . . CLAMP	1
10	XDOZZ	61204	83070009	. . . INSERT,CABLE	1
11	XDOZZ	81349	DSS-4	. . .CABLE,POWER,ELECTRI	4
12	XDOZZ	96620	3720PU	. . . CONNECTOR,PLUG,ELEC	2
13	XDOZZ	81349	M2726/37-001	. . . CONNECTOR,RECEPTACL	1

END OF FIGURE

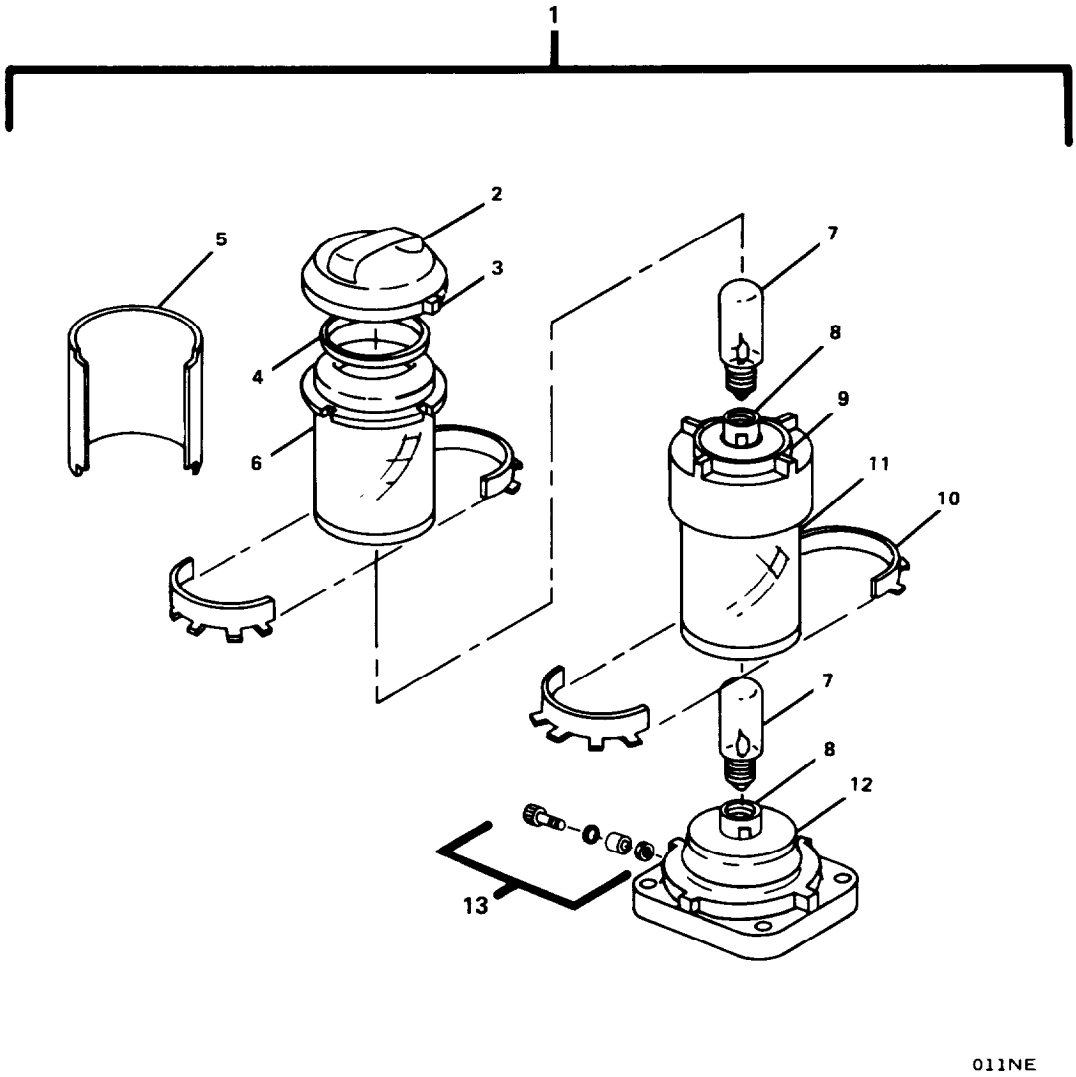

FIGURE 376. Marine Navigation Light (Green) (Sheet 1 of 2).

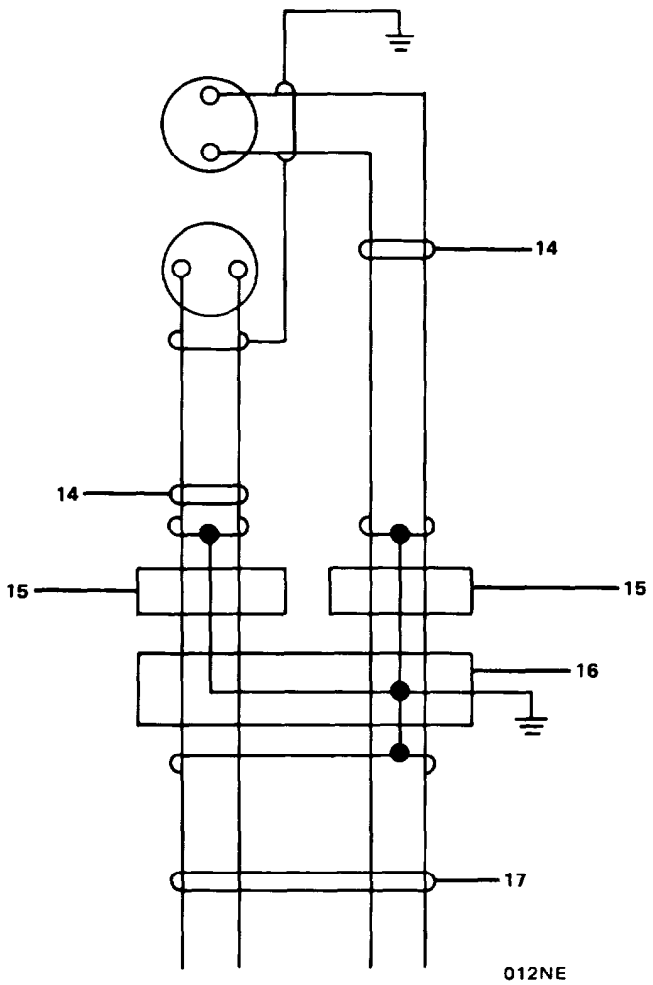

FIGURE 376. Marine Navigation Light (Green) (Sheet 2 of 2).

(1) ITEM NO	(2) SMR CODE	(3) FSCM	(4) PART NUMBER	(5) DESCRIPTION AND USABLE ON CODES(UOC)	(6) QTY
				GROUP 18 BASIC CRAFT	
				FIG. 376 MARINE NAVIGATION LIGHT (GREEN)	
1	PBOOO	61204	3079109	... LIGHT,NAVIGATION,MA (GREEN) (60W, 120V)	1
2	XDOZZ	61204	83070003	. . . LID	1
3	XDOZZ	61204	95000074	. . . SCREW	1
4	PAOZZ	61204	95800146	. . . GASKET	1
5	XDOZZ	61204	23073001	. . . SCREEN (STARBOARD)	2
6	PAOZZ	61204	83070018	. . . LENS,LIGHT (GREEN)	1
7	PAOZZ	61204	90400172	. . . LAMP,INCANDESCENT (60W,120V)	3
8	XDOZZ	61204	83070022	. . . SOCKET	3
9	XDOZZ	61204	83075011	. . . CARRIER,BULB	1
10	XDOZZ	61204	63070049	. . . CLAMP	1
11	PAOZZ	61204	83075014	. . . LENS,LIGHT (GREEN)	1
12	XDOZZ	61204	83070021	. . . CARRIER,BULB	1
13	XDOZZ	61204	83070009	. . . INSERT,CABLE	1
14	XDOZZ	81349	DSS-4	. . . CABLE,POWER,ELECTRI	8
15	XDOZZ	96620	3720PU	. . . CONNECTOR,PLUG,ELEC	2
16	XDOZZ	96620	495-45AU	. . . CONNECTOR,RECEPTACL	1
17	XDOZZ	81349	FSS-4	. . . CABLE,POWER,ELECTRI	45

END OF FIGURE

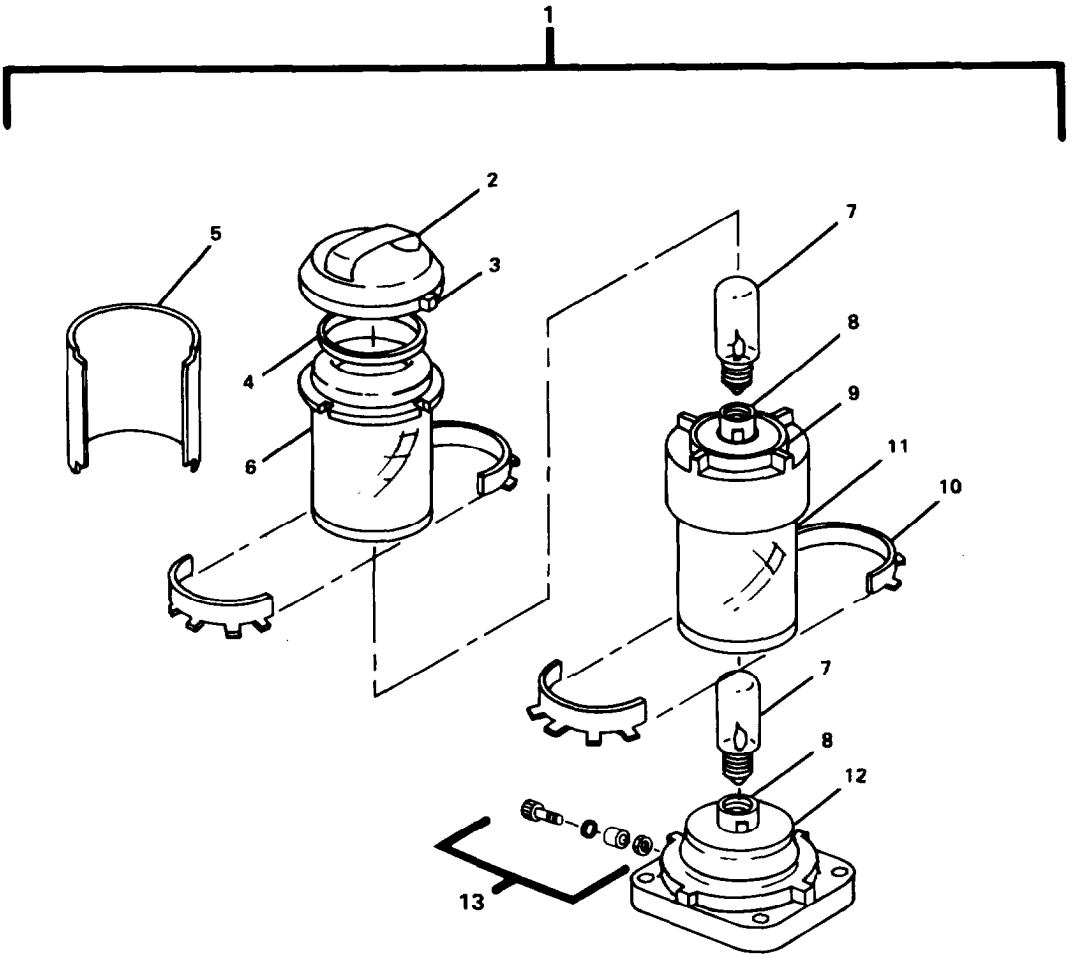

FIGURE 377. Marine Navigation Light (Red) (Sheet 1 of 2).

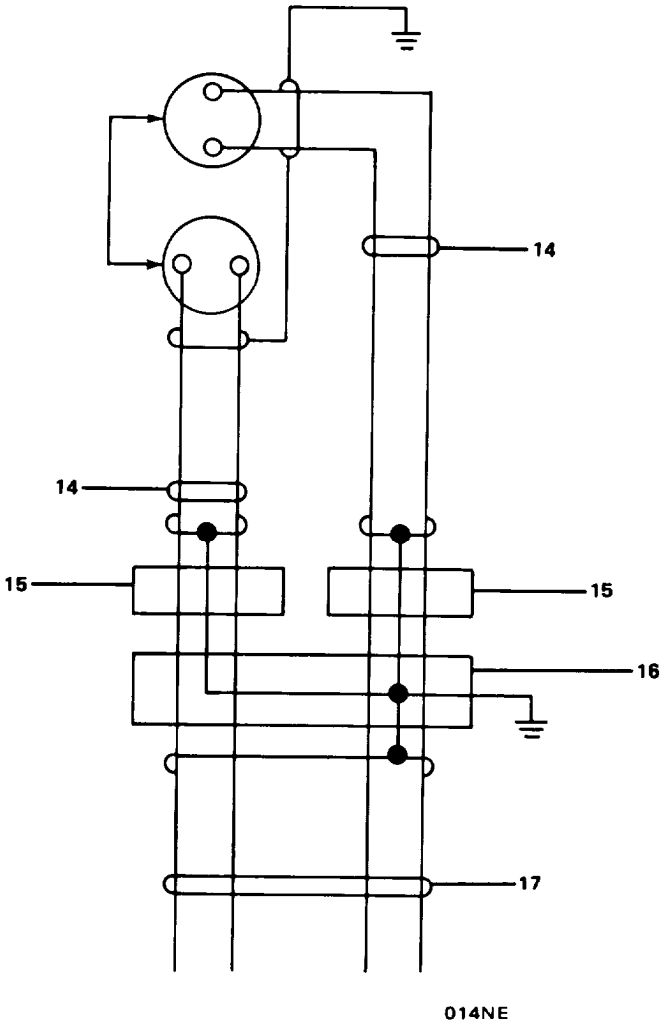

FIGURE 377. Marine Navigation Light (Red) (Sheet 2 of 2).

(1) ITEM NO	(2) SMR CODE	(3) FSCM	(4) PART NUMBER	(5) DESCRIPTION AND USABLE ON CODES(UOC)	(6) QTY
				GROUP 18 BASIC CRAFT	
				FIG. 377 MARINE NAVIGATION LIGHT (RED)	
1	PBOOO	61204	3078209	..LIGHT,NAVIGATION MA (RED) (60W, 120V)	1
2	XDOZZ	61204	83070003	. . . LID	1
3	XDOZZ	61204	95000074	. . . SCREW	1
4	PAOZZ	61204	95800146	. . . GASKET	1
5	XDOZZ	61204	23074001	. . . SCREEN (PORT)	2
6	PAOZZ	61204	83070019	. . . LENS,LIGHT (RED)	1
7	PAOZZ	61204	90400172	. . . LAMP,INCANDESCENT (60W,120V)	3
8	XDOZZ	61204	83070022	. . . SOCKET	3
9	XDOZZ	61204	83075011	. . . CARRIER,BULB	1
10	XDOZZ	61204	63070049	. . . CLAMP	1
11	PADZZ	61204	83075015	. . . LENS,LIGHT (RED)	1
12	XDOZZ	61204	83070021	. . . CARRIER,BULB	1
13	XDOZZ	61204	83070009	. . . INSERT,CABLE	1
14	XDOZZ	81349	DSS-4	. . . CABLE,POWER,ELECTRI	8
15	XDOZZ	96620	3720PU	. . . CONNECTOR,PLUG,ELEC	2
16	XDOZZ	96620	495-45AU	. . . CONNECTOR,RECEPTACL	1
17	XDOZZ	81349	FSS-4	. . . CABLE,POWER,ELECTRI	45

END OF FIGURE

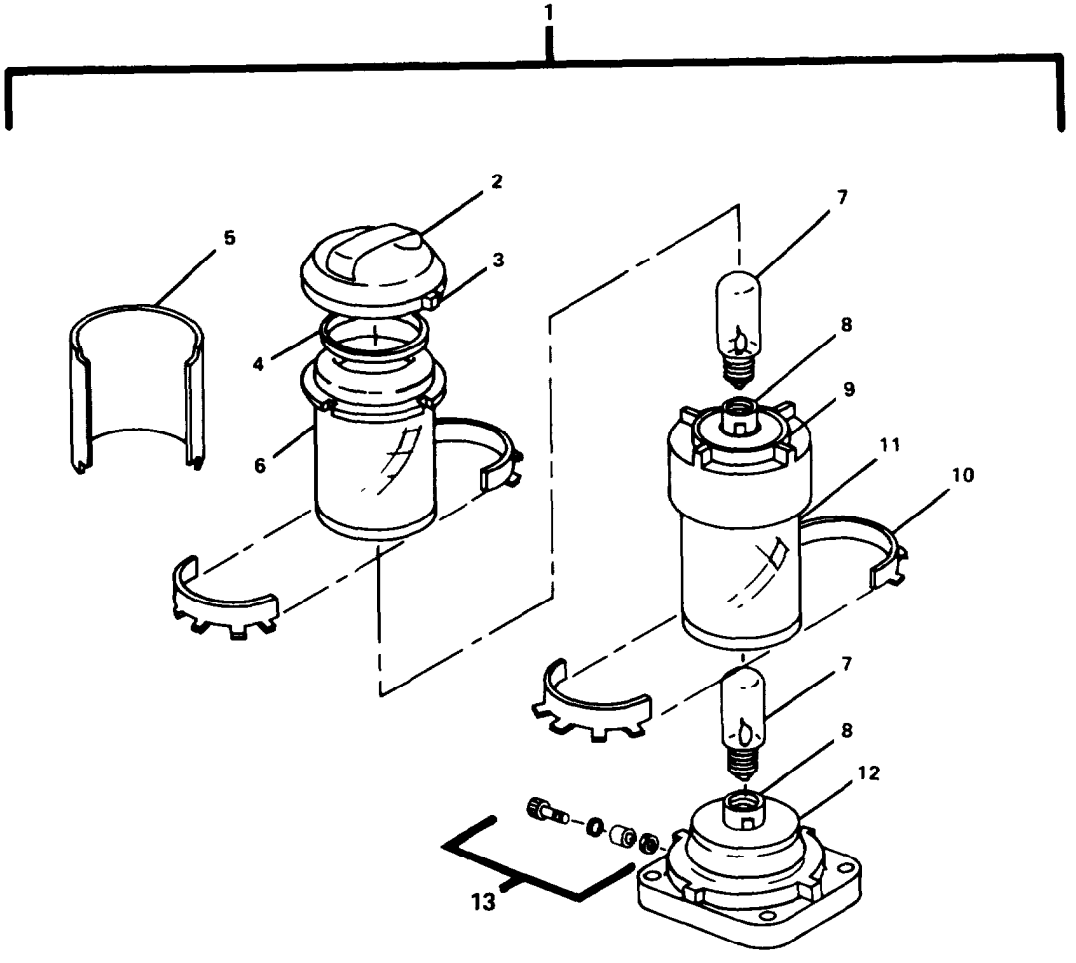

015NE

FIGURE 378. Marine Navigation Light (Aft) (Sheet 1 of 2).

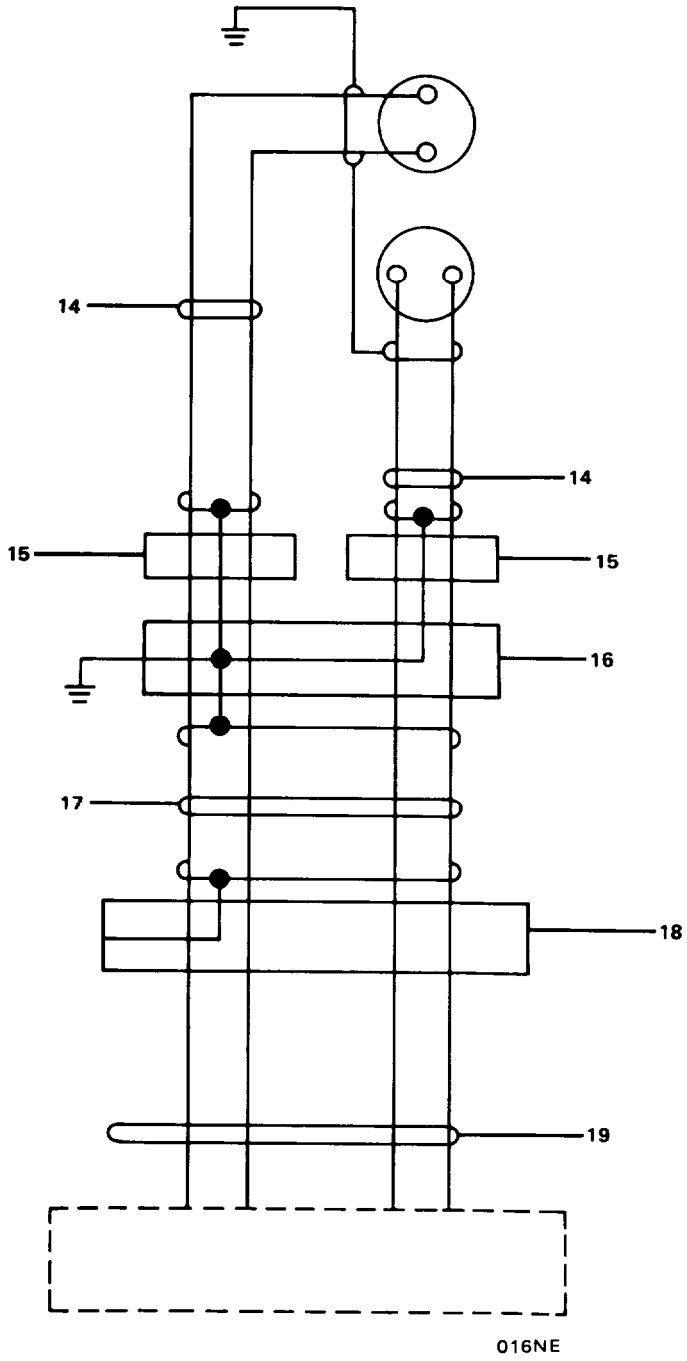

FIGURE 378. Marine Navigation Light (Aft) (Sheet 2 of 2).

(1) ITEM NO	(2) SMR CODE	(3) FSCM	(4) PART NUMBER	(5) DESCRIPTION AND USABLE ON CODES(UOC)	(6) QTY
				GROUP 18 BASIC CRAFT	
				FIG, 378 MARINE NAVIGATION LIGHT (AFT)	
1	PBOOO	61204	3077009	. . LIGHT,NAVIGATION MA	1
2	XDOZZ	61204	83070003	. . . LID	1
3	XDOZZ	61204	95000074	. . . SCREW	1
4	PAOZZ	61204	95800146	. . . GASKET	1
5	XDOZZ	61204	23072001	. . . SCREEN (STERN)	2
6	PAOZZ	61204	83070017	. . . LENS,LIGHT (WHITE)	1
7	PAOZZ	61204	90400172	. . . LAMP,INCANDESCENT	3
8	XDOZZ	61204	83070022	. . . SOCKET	3
9	XDOZZ	61204	83075011	. . . CARRIER,BULB	1
10	XDOZZ	61204	63070049	. . . CLAMP	1
11	PAOZZ	61204	83075013	. . . LENS,LIGHT	1
12	XDOZZ	61204	83070021	. . . CARRIER,BULB	1
13	XDOZZ	61204	83070009	. . . INSERT,CABLE	1
14	XDOZZ	81349	DSS-4	. . . CABLE,POWER,ELECTRI	8
15	XDOZZ	96620	3720PU	. . . CONNECTOR,PLUG,ELEC	2
16	XDOZZ	96620	495-45AU	. . . CONNECTOR,RECEPTACL	1
17	XDOZZ	81349	FSS-4	. . . CABLE,POWER,ELECTRI	V
18	XDOZZ	77408	50-0435-0100	. . . TERMINAL BOX	1
19	XDOZZ	81349	7SGU-4	. . . CABLE,POWER,ELECTRI	V

END OF FIGURE

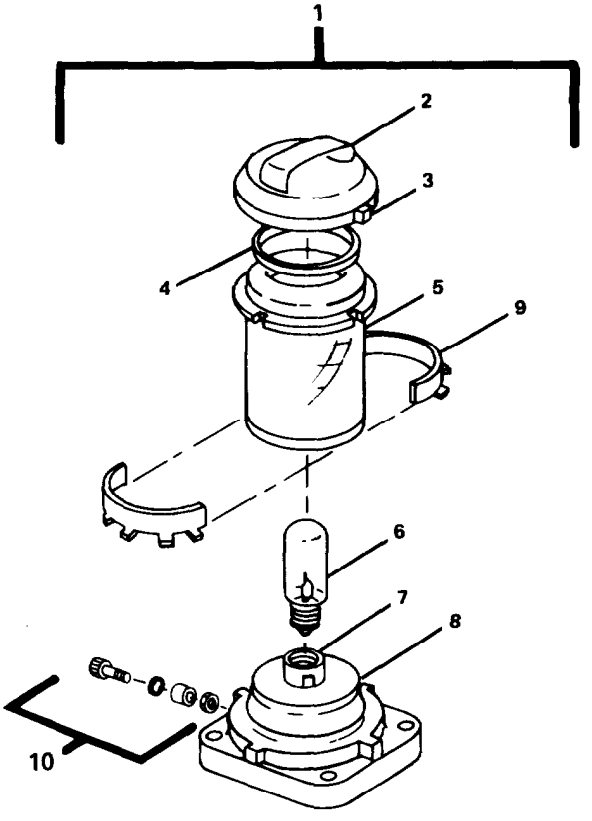

017NE

FIGURE 379. Marine Navigation Light (Aft) (Sheet 1 of 2).

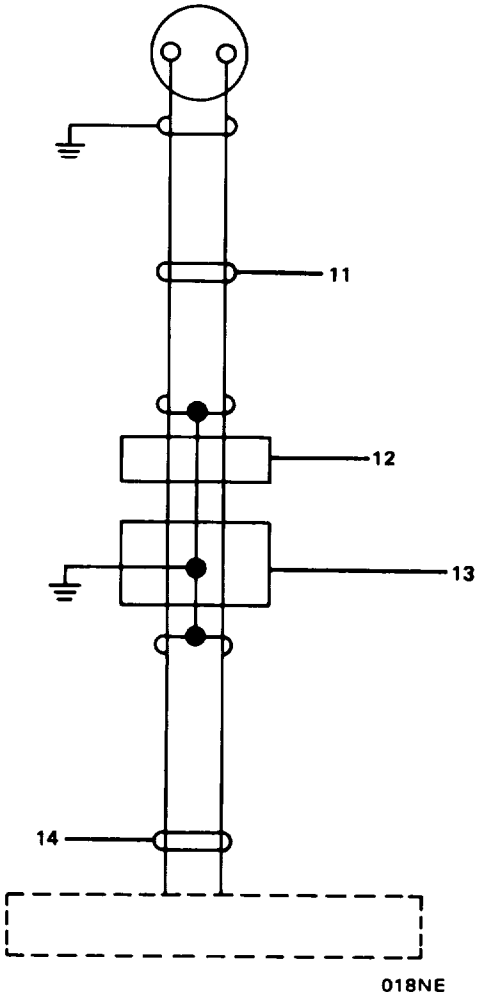

FIGURE 379. Marine Navigation Light (Aft) (Sheet 2 of 2).

(1) ITEM NO	(2) SMR CODE	(3) FSCM	(4) PART NUMBER	(5) DESCRIPTION AND USABLE ON CODES(UOC)	(6) QTY
				GROUP 18 BASIC CRAFT	
				FIG. 379 MARINE NAVIGATION LIGHT	
1	PBOOO	61204	3070009	. . LIGHT,NAVIGATION MA (AFT) (55W, 120V)	2
2	XDOZZ	61204	83070003	. . . LID	1
3	XDOZZ	61204	95000074	. . . SCREW	1
4	PAOZZ	61204	95800146	. . . GASKET	1
5	PAOZZ	61204	83070017	. . . LENS,LIGHT (WHITE)	1
6	PAOZZ	61204	90400290	. . . LAMP,INCANDESCENT	1
7	XDOZZ	61204	83070022	. . . SOCKET	1
8	XDOZZ	61204	83070021	. . . CARRIER,BULB	1
9	XDOZZ	61204	63070049	. . . CLAMP	1
10	XDOZZ	61204	83070009	. . . INSERT,CABLE	1
11	XDOZZ	81349	DSS-4	. . . CABLE,POWER,ELECTRI	4
12	XDOZZ	81349	M2726/38-001	. . . CONNECTOR,PLUG,ELEC	1
13	XDOZZ	81349	M2726/37-001	. . . CONNECTOR,RECEPTACL	1
14	XDOZZ	81349	DSS-4	. . . CABLE,POWER,ELECTRI	V

END OF FIGURE

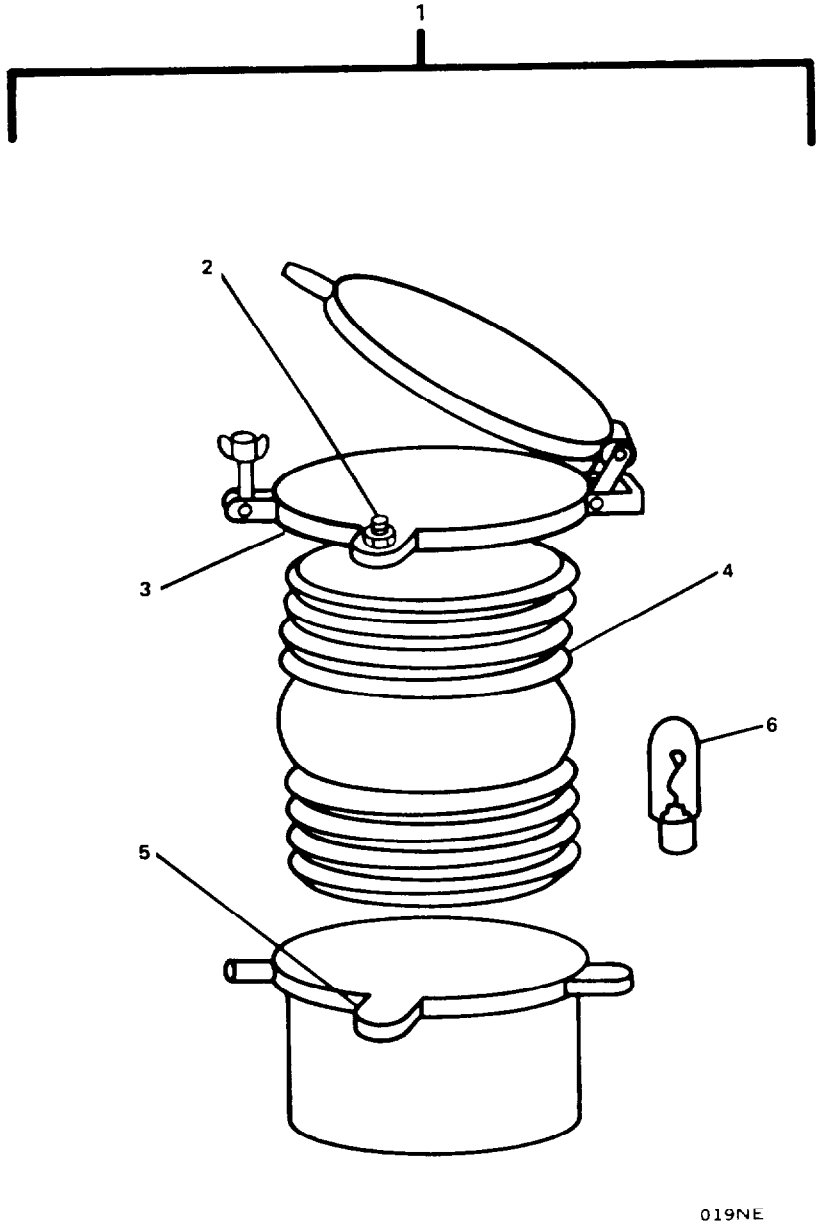

FIGURE 380. Blinker Light (Sheet 1 of 2).

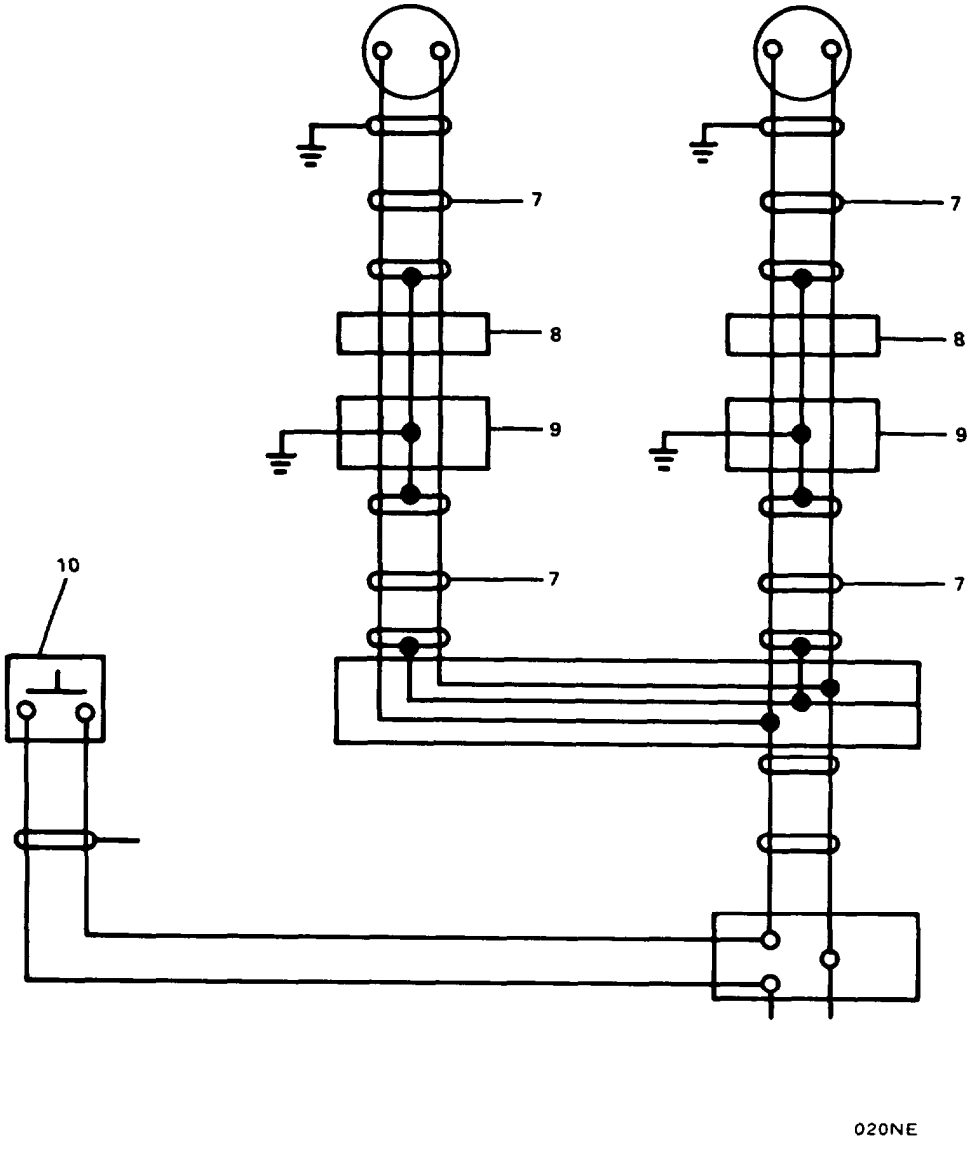

FIGURE 380. Blinker Light (Sheet 2 of 2).

(1) ITEM NO	(2) SMR CODE	(3) FSCM	(4) PART NUMBER	(5) DESCRIPTION AND USABLE ON CODES(UOC)	(6) QTY
				GROUP 18 BASIC CRAFT	
				FIG. 380 BLINKER LIGHT	
1	PBOOO	95405	1453	. . LIGHT,BLINKER (100W,120V)	2
2	PAOZZ	95405	GKT1032	. . . GASKET (TOP)	1
3	PAOZZ	95405	GKT1005	. . . GASKET (LENS,UPPER)	1
4	PAOZZ	95405	INX4034	. . . LENS,LIGHT (CLEAR)	1
5	PAOZZ	95405	GKT1016	. . . GASKET (LENS,LOWER)	1
6	PAOZZ	95405	A-19	. . . LAMP,INCANDESCENT (100W,120V)	1
7	XDOZZ	81349	DSS-4	. . . CABLE,POWER,ELECTRI	V
8	XDOZZ	81349	M2726/38-001	. . . CONNECTOR,PLUG,ELEC	2
9	XDOZZ	81349	M2726/37-001	. . . CONNECTOR,RECEPTACL	2
10	PAOZH	81349	M24174/3-001	. . . CONTROL,NAVIGATIONA	1

END OF FIGURE

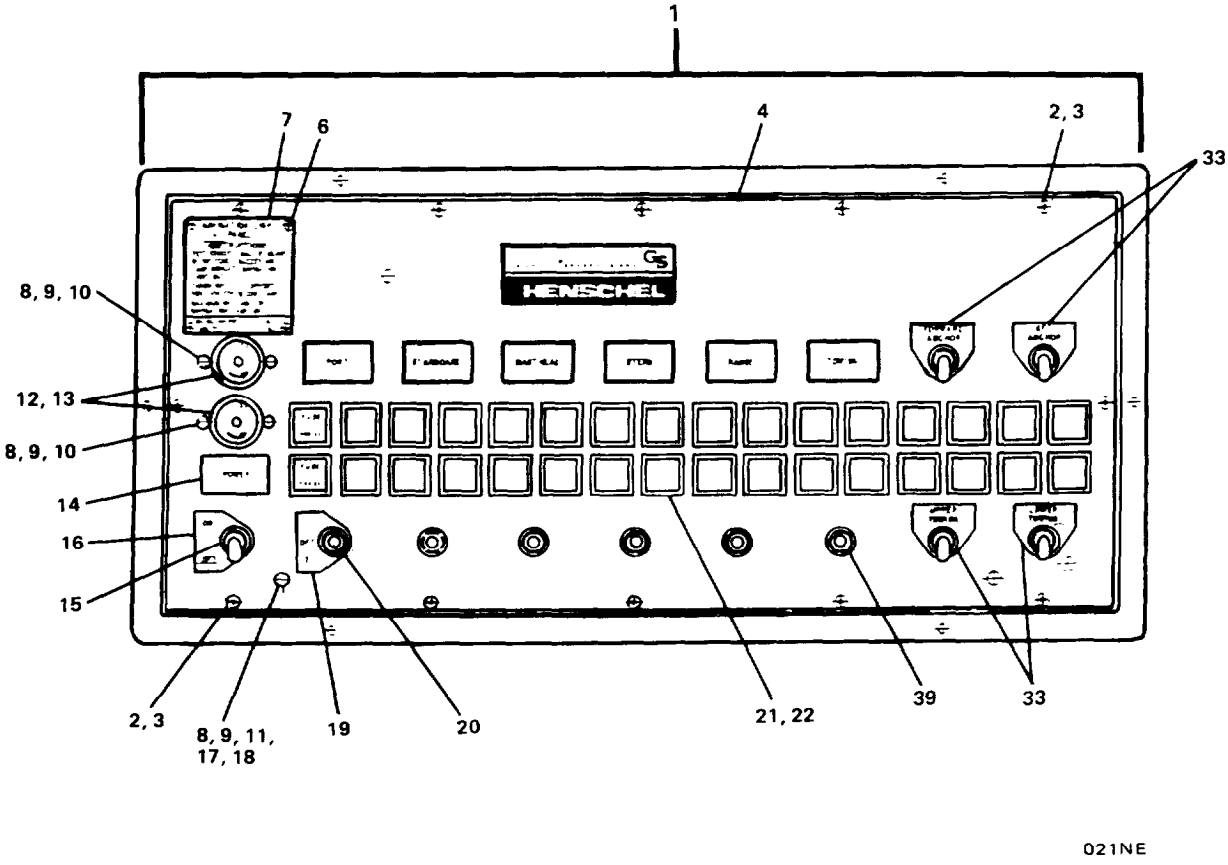

FIGURE 381. Indicator Panel (Sheet 1 of 2).

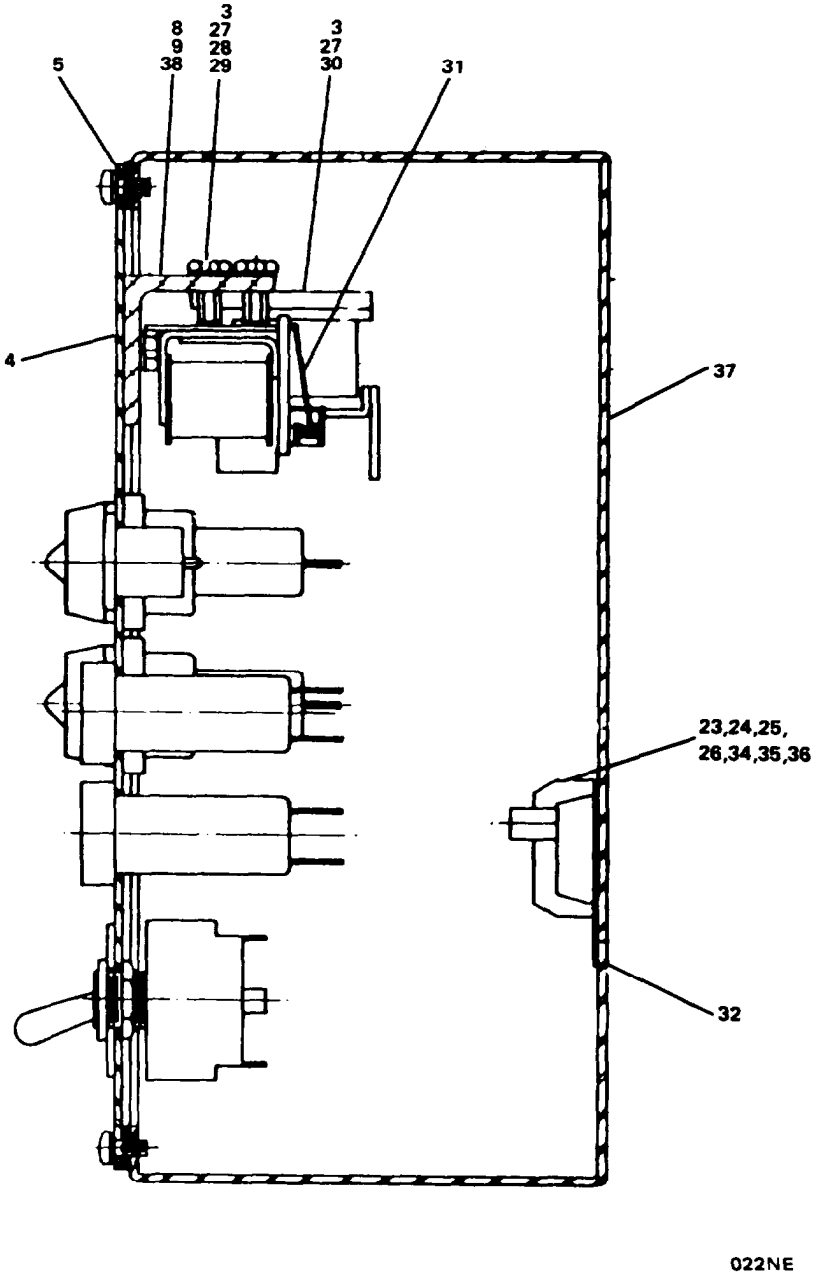

FIGURE 381. Indicator Panel (Sheet 2 of 2).

(1) ITEM NO	(2) SMR CODE	(3) FSCM	(4) PART NUMBER	(5) DESCRIPTION AND USABLE ON CODES(UOC)	(6) QTY
				GROUP 18 BASIC CRAFT	
				FIG. 381 INDICATOR PANEL	
1	XDOOO	28199	42-260 TY464	. . PANEL,INDICATOR	1
2	XDOZZ	28199	42-260-12	. . . SCREW,MACHINE	12
3	XDOZZ	96906	MS35338-79	. . . WASHER,LOCK	40
4	XDOZZ	28199	D-1884	. . . PANEL,STEEL	1
5	XDOZZ	28199	40-260-55	. . . GASKET	1
6	XDOZZ	28199	40-260-52	. . . SCREW,MACHINE	4
7	XDOZZ	28199	A-18646	. . . PLATE,INSTRUCTION	1
8	XDOZZ	28199	42-260-8	. . . NUT,PLAIN,HEXAGON	16
9	XDOZZ	96906	MS35338-80	. . . WASHER,LOCK	16
10	XDOZZ	96906	MS15795-807	. . . WASHER,FLAT	4
11	XDOZZ	28199	FHS832-8	. . . STUD,SELF-LOCKING	8
12	PACZZ	81349	F03A250V10AS	. . . FUSE,CARTRIDGE (10 AMP,250V)	2
13	XDOZZ	66127	G47	. . . FUSE, RECEPTACLE	2
14	PAOZZ	95263	47-3M	. . . LIGHT,INDICATOR (RED)(24V)	7
15	XDOZZ	28199	G-103	. . . SWITCH,TOGGLE	1
16	XDOZZ	28199	A-186481	. . . PLATE,INSTRUCTION	1
17	XDOZZ	28199	40-260-13	. . . CHAIN,WELDED	2
18	XDOZZ	28199	40-260-14	. . . SLEEVING,CHAIN	2
19	XDOZZ	28199	A-18648-11	. . . PLATE,INSTRUCTION	1
20	XDOZZ	28199	G102	. . . SWITCH,PUSH	5
21	PACZA	81349	F03A250V3AS	. . . FUSE,CARTRIDGE (3 AMP,250V)	32
22	XDOZZ	28199	G-153	. . . FUSEHOLDER,RECEPTAC	32
23	XDOZZ	28199	A-18650	. . . NUT,PLAIN,HEXAGON	4
24	XDOZZ	28199	FHS632-10	. . . STUD,SELF-LOCKING	5
25	XDOZZ	28199	G-110-18	. . . TERMINAL BOARD	2
26	XDOZZ	28199	SQ60311	. . . TERMINAL	34
27	XDOZZ	28199	40-260-26	. . . NUT,PLAIN,HEXAGON	26
28	XDOZZ	28199	40-260-24	. . . SCREW,MACHINE	2
29	XDOZZ	28199	20-081	. . . BUZZER	1
30	XDOZZ	28199	G-46	. . . RELAY,ELECTROMAGNET	6
31	XDOZZ	28199	A-11445-18	. . . TAPE,IDENTIFICATION	2
32	PAOZA	96906	MS35059-22	. . . SWITCH,TOGGLE	5
33	XDOZZ	28199	A-18649	. . . PLATE,INSTRUCTION	4
34	XDOZZ	28199	600J	. . . LEAD,ELECTRICAL	6
35	XDOZZ	28199	42-260-1	. . . SCREW,MACHINE	4
36	XDOZZ	28199	D-1893-11	. . . FLANGE,MOUNTING	1
37	XDOZZ	28199	D-1890	. . . CASE	1
38	XDOZZ	28199	C-2404	. . . BRACKET,ANGLE	1

END OF FIGURE

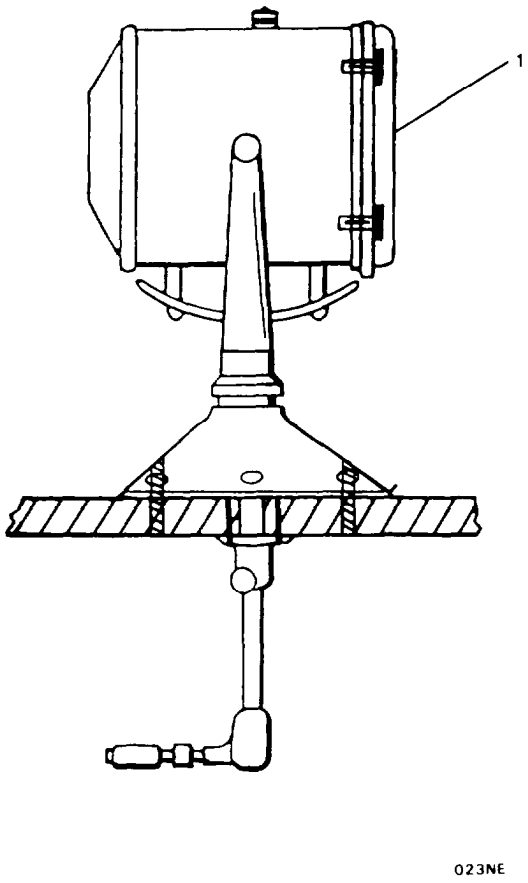

FIGURE 382. Searchlight.

(1) ITEM NO	(2) SMR CODE	(3) FSCM	(4) PART NUMBER	(5) DESCRIPTION AND USABLE ON CODES(UOC)	(6) QTY
				GROUP 18 BASIC CRAFT	
				FIG. 382 SEARCHLIGHT	
1	XDFFF	10741	X9396LG-RF	. . SEARCHLIGHT (500W XENON)	2
				END OF FIGURE	

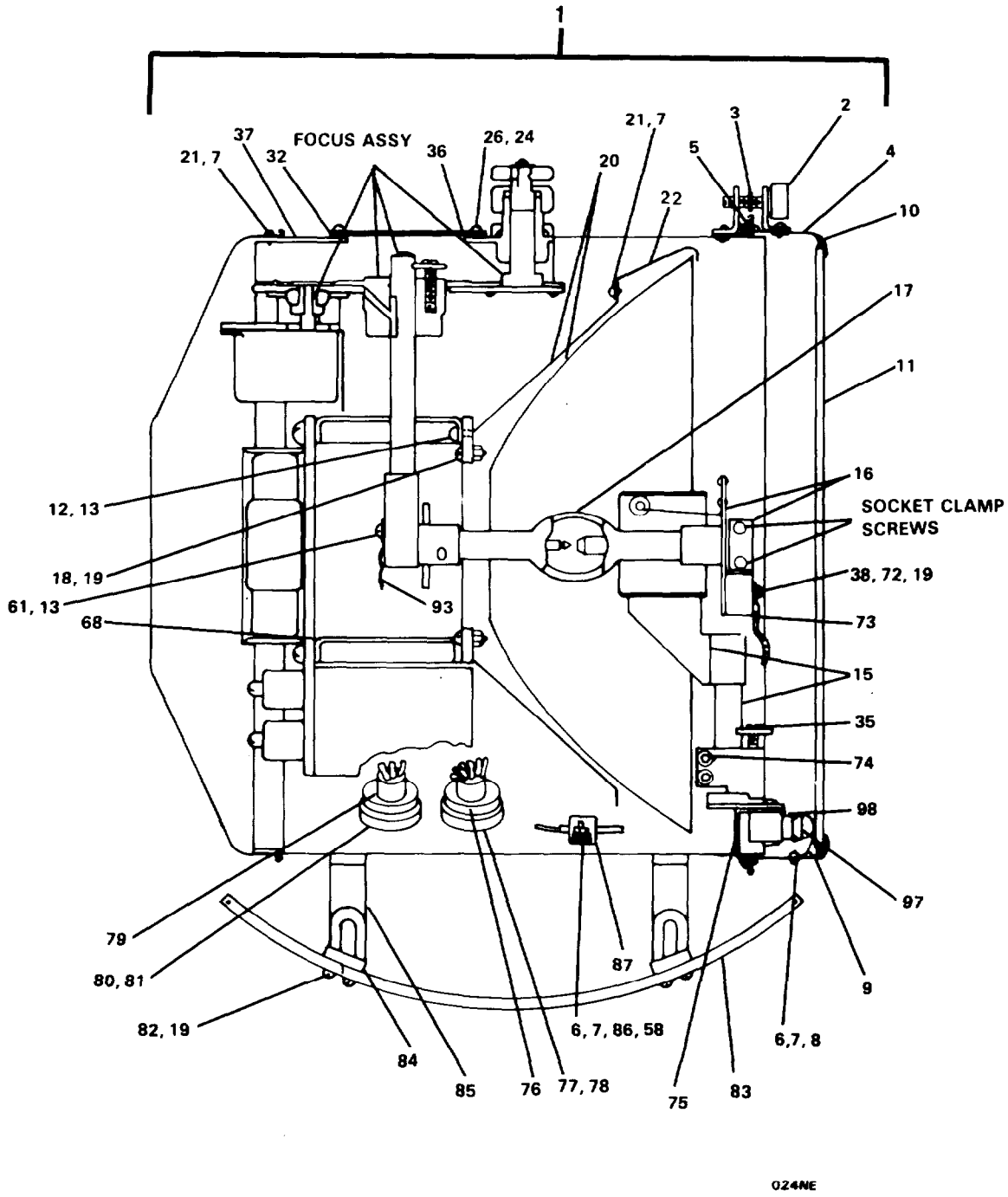

FIGURE 383. Drum Assembly (Sheet 1 of 4).

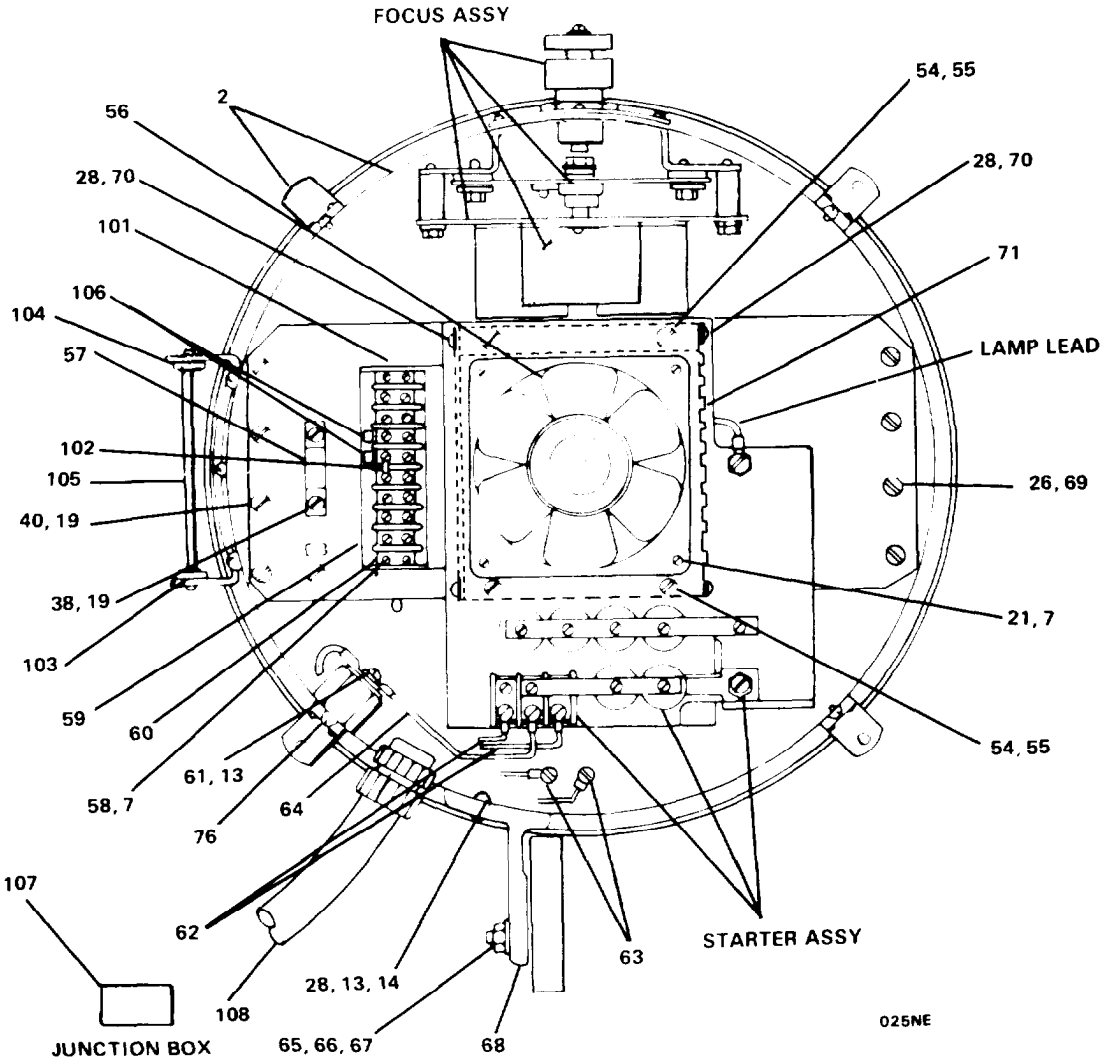

FIGURE 383. Drum Assembly (Sheet 2 of 4).

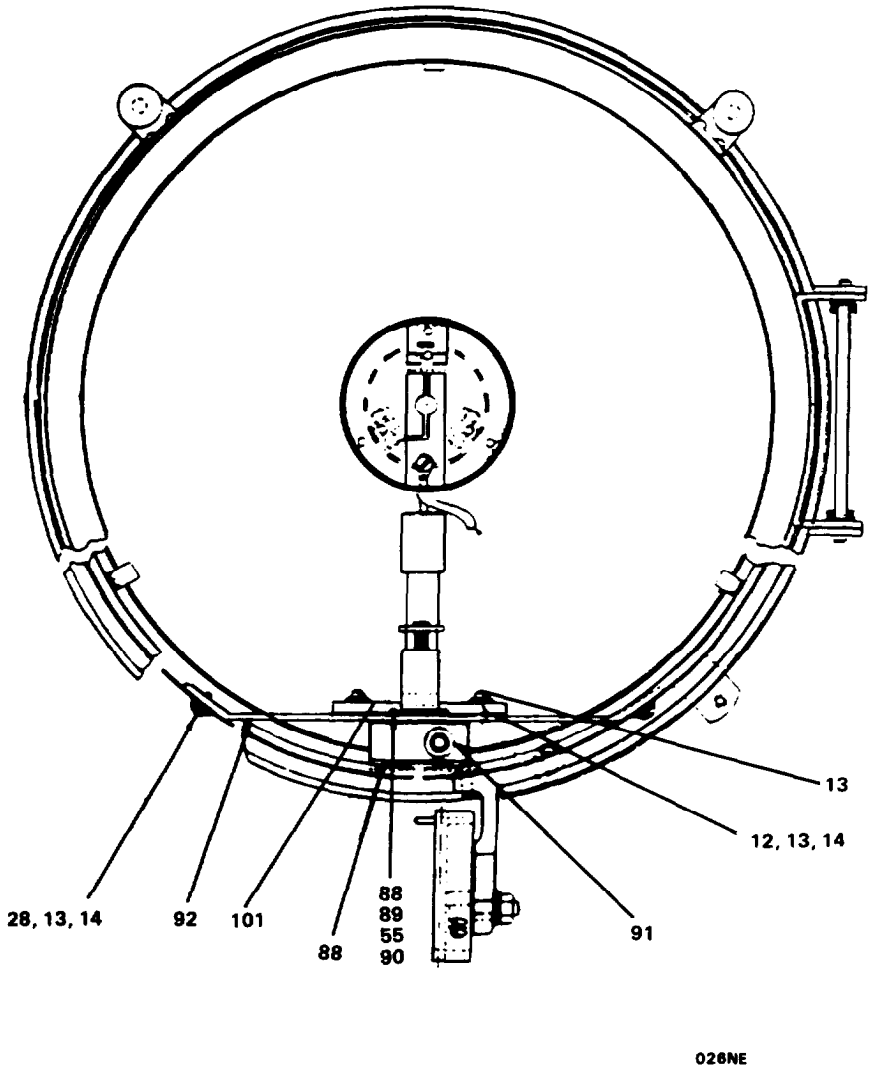

FIGURE 383. Drum Assembly (Sheet 3 of 4).

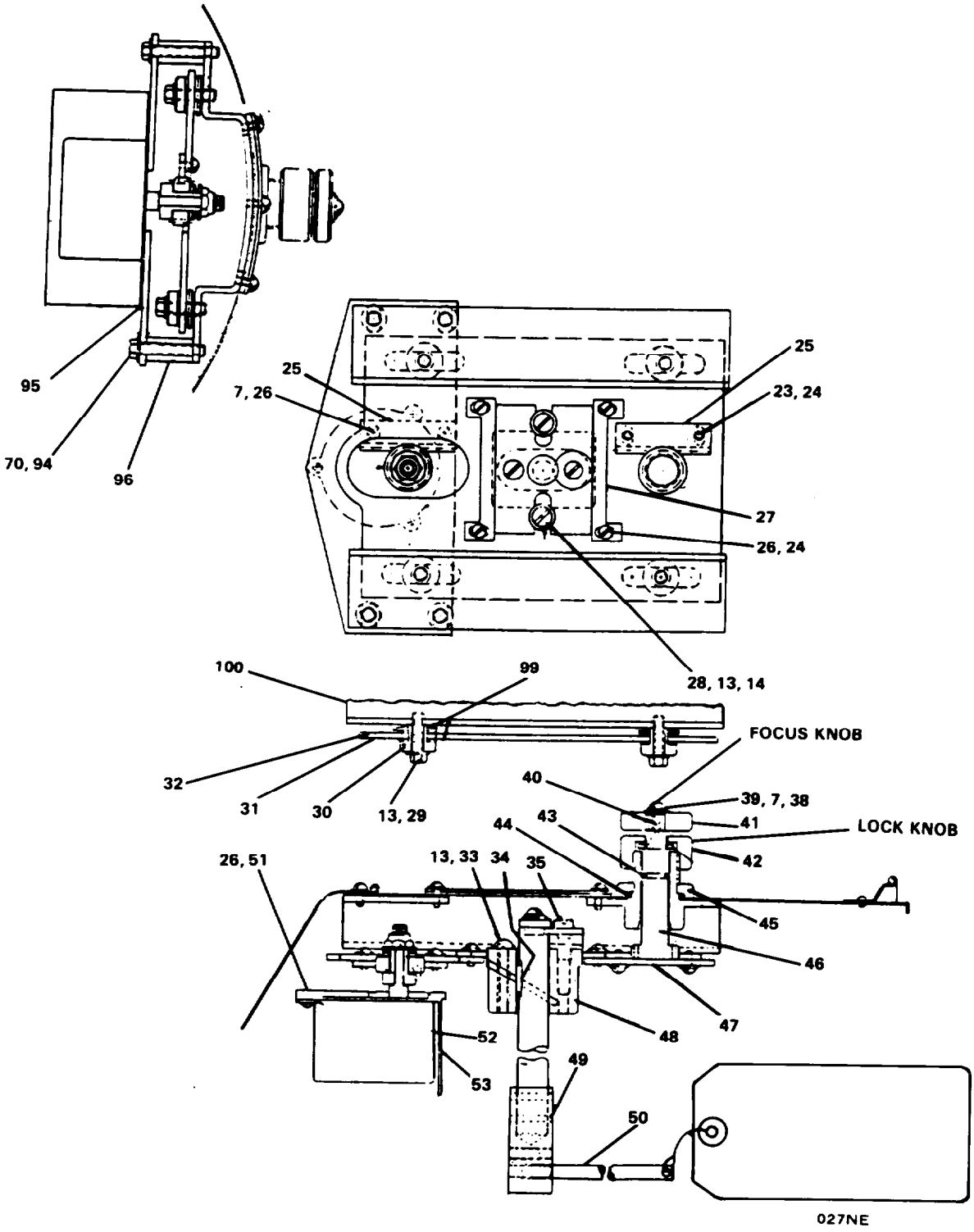

FIGURE 383. Drum Assembly (Sheet 4 of 4).

(1) ITEM NO	(2) SMR CODE	(3) FSCM	(4) PART NUMBER	(5) DESCRIPTION AND USABLE ON CODES(UOC)	(6) QTY
				GROUP 18 BASIC CRAFT	
				FIG. 383 DRUM ASSEMBLY	
1	XDFFF	10741	9312X	. . . DRUM ASSEMBLY	1
2	XDFZZ	10741	SL16X	. . . . SCREW,MACHINE	4
3	XDFZZ	10741	FL1225	. . . .WASHER,FLAT	4
4	XDFZZ	10741	9353X	. . . . DOOR,ACCESS	1
5	PAFZZ	10741	SL3110	. . . . GASKET	1
6	XDFZZ	10741	10CR832	. . . . NUT,PLAIN,HEXAGON	8
7	XDFZZ	10741	4578-35	. . . . WASHER,LOCK	46
8	XDFZZ	10741	60CR832-8	. . . . SCREW,MACHINE	6
9	XDFZZ	10741	SL1652	. . . . CLAMP,RETAINING	12
10	XDFZZ	10741	9669	. . . . SEALING COMPOUND	V
11	XDFZZ	10741	SL1085	. . . . COVER,LAMP	1
12	XDFZZ	10741	60CR420-10	. . . . SCREW,MACHINE	10
13	XDFZZ	10741	4578-38	. . . . WASHER,LOCK	47
14	XDFZZ	10741	4574-16	. . . . WASHER,FLAT	21
15	XDFZZ	10741	4506X	. . . . SUPPORT,LAMP	1
16	XDFZZ	10741	4502X	. . . . SOCKET,LAMP	1
17	PAFZZ	10741	9800	. . . . LAMP,XENON (500W)	1
18	XDFZZ	10741	60CR1024-12	. . . . SCREW,MACHINE	6
19	XDFZZ	10741	4578-36	. . . . WASHER,LOCK	27
20	XDFZZ	10741	9719X	. . . . REFLECTOR,LIGHT	1
21	XDFZZ	10741	60CR832-4	. . . . SCREW,MACHINE	19
22	XDFZZ	10741	9744	. . . . BRACKET,ANGLE	3
23	XDFZZ	10741	60CR832-6	. . . . SCREW,MACHINE	2
24	XDFZZ	10741	CR4579-20	. . . . WASHER,LOCK	30
25	XDFZZ	10741	4340	. . . . RACK	3
26	XDFZZ	10741	60CR832-6	. . . . SCREW,MACHINE	39
27	XDFZZ	10741	4211	. . . . GUIDE	2
28	XDFZZ	10741	60CR420-8	. . . . SCREW,MACHINE	26
29	XDFZZ	10741	30CR420-14	. . . . SCREW,CAP,HEXAGON H	4
30	XDFZZ	10741	9453	. . . . BUSHING,SLEEVE	4
31	XDFZZ	10741	9457	. . . . WASHER,TEFLON	8
32	XDFZZ	10741	4574-24	. . . . WASHER,FLAT	4
33	XDFZZ	10741	60CR420-24	. . . . SCREW,MACHINE	1
34	XDFZZ	10741	2660C	. . . . KEY	1
35	XDFZZ	10741	6879	. . . . SCREW,MACHINE	3
36	XDFZZ	10741	9324	. . . . COVER,ACCESS	1
37	PAFZZ	10741	9291	. . . . GASKET	1
38	XDFZZ	10741	60CR1024-6	. . . . SCREW,MACHINE	11
39	XDFZZ	10741	4574-12	. . . . WASHER,FLAT	1
40	XDFZZ	10741	2660B	. . . . KEY,MACHINE	5
41	XDFZZ	10741	FE1866	. . . . KNOB,FOCUS	1
42	XDFZZ	10741	6158	. . . . DIAL-KNOB LOCK ELEC	1
43	PAFZZ	10741	2285K	. . . . PACKING,PREFORMED	1
44	PAFZZ	10741	2285AA	. . . . PACKING,PREFORMED	1
45	XDFZZ	10741	5047	. . . . NUT,PLAIN,HEXAGON	1
46	XDFZZ	10741	SL2536X	. . . . GEARSHAFT,SPUR	1
47	XDFZZ	10741	4342	. . . . CARRIAGE	1
48	XDFZZ	10741	6878	. . . . CLAMP	1

(1) ITEM NO	(2) SMR CODE	(3) FSCM	(4) PART NUMBER	(5) DESCRIPTION AND USABLE ON CODES(UOC)	(6) QTY
49	XDFZZ	10741	9295X	. . . . SOCKET	1
50	XDFZZ	10741	9779	. . . . ROD,TEST	1
51	XDFZZ	10741	4578-34	. . ..WASHER,LOCK	3
52	XDFZZ	10741	9326X	. . . . MOTOR,CONTROL	1
53	XDFZZ	10741	4528	. . . . SHIELD,MOTOR	1
54	XDFZZ	10741	60CR632-32	. . . . SCREW,MACHINE	4
55	XDFZZ	10741	4578-34	. . . . WASHER,LOCK	8
56	XDFZZ	10741	4434X	. . . . FAN,CIRCULATING	1
57	XDFZZ	10741	3782-3	. . . . STRAP,TIEDOWN ELECT	1
58	XDFZZ	10741	60CR832-10	. . ..SCREW,MACHINE	8
59	XDFZZ	10741	2509WW	. . ..TERMINAL BOARD	1
60	XDFZZ	10741	9367	. . ..INSULATOR	1
61	XDFZZ	10741	60CR420-6	. . . . SCREW,MACHINE	4
62	XDFZZ	10741	4437X	. . . . LEAD,ELECTRICAL	1
63	XDFZZ	10741	4438X	. . ..LEAD,ELECTRICAL	1
64	XDFZZ	10741	4436X	. . ..LEAD,ELECTRICAL	1
65	XDFZZ	10741	11CR518	. . . . NUT,PLAIN,HEXAGON	2
66	XDFZZ	10741	4578-39	. . ..WASHER,LOCK	2
67	XDFZZ	10741	4574-22	. . . . WASHER,FLAT	4
68	XDFZZ	10741	9321	. . . . BRACKET	2
69	XDFZZ	10741	CR4579-25	. . ..WASHER,LOCK	4
70	XDFZZ	10741	CR4579-35	. . ..WASHER,LOCK	10
71	XDFZZ	10741	9298	. . . . COVER,ACCESS	1
72	XDFZZ	10741	4574-12	. . ..WASHER,FLAT	1
73	XDFZZ	10741	4435X	. . . . LEAD,ELECTRICAL	1
74	XDFZZ	10741	31CR420-8	. . . . SCREW,MACHINE	2
75	XDFZZ	10741	9472	. . ..INSULATION	1
76	XDFZZ	10741	4383X	. . . . CABLE ASSEMBLY,POWE	1
77	XDFZZ	10741	2666F	. . ..PACKING,PREFORMED	1
78	XDFZZ	10741	2334A	. . . . STUFFING,TUBE	1
79	XDFZZ	10741	4384X	. . . . CABLE ASSEMBLY	1
80	PAFZZ	10741	2666A	. . . . PACKING,PREFORMED	1
81	XDFZZ	10741	2334A	. . . . STUFFING,TUBE	1
82	XDFZZ	10741	60CR1024-10	. . . . SCREW,MACHINE	4
83	XDFZZ	10741	7120	. . . . RACK	1
84	XDFZZ	10741	SL1591	. . . . BOLT ASSEMBLY,CLAMP	2
85	XDFZZ	10741	SL1590	. . . . BRACKET,RACK	2
86	XDFZZ	10741	4577-6	. . . . WASHER,FLAT	2
87	XDFZZ	10741	3782-2	. . . . STRAP	2
88	XDFZZ	10741	9327	. . . . NUT,DOUBLE	1
89	XDFZZ	10741	60CR632-16	. . . . SCREW,MACHINE	2
90	XDFZZ	10741	4574-8	. . . . WASHER,FLAT	2
91	PAFZZ	10741	9731	. . . . SWITCH	1
92	XDFZZ	10741	9338	. . . . BRACKET	1
93	XDFZZ	10741	4612	. . . . LEAD,ELECTRICAL	1
94	XDFZZ	10741	30CR420-20	. . . . SCREW,MACHINE	4
95	XDFZZ	10741	9337	. . . . BRACKET	1
96	XDFZZ	10741	4341	. . . . SPACER	4
97	XDFZZ	10741	2301	. . . . NUT,PLAIN,HEXAGON	1
98	XDFZZ	10741	5190	. . . . SPACER,SLEEVE	1
99	XDFZZ	10741	9465	. . . . SPRING,HELICAL,COMP	4
100	XDFZZ	10741	4500X	. . . . SUPPORT ASSEMBLY	1

(1) ITEM NO	(2) SMR CODE	(3) FSCM	(4) PART NUMBER	(5) DESCRIPTION AND USABLE ON CODES(UOC)	(6) QTY
101	XDFZZ	10741	4526	. . . . PANEL	1
102	XDFZZ	10741	6446B	. . . . LEAD,ELECTRICAL	1
103	XDFZZ	10741	B4564-26	. . . . PIN,COTTER	2
104	XDFZZ	10741	4574-16	. . ..WASHER,FLAT	2
105	XDFZZ	10741	9333	. . . . PIN,STRAIGHT,HEADED	1
106	XDFZZ	10741	9799	. . . . MARKER STRIP,TERMIN	1
107	XDFZZ	95405	5684-T10	. . ..BOX,JUNCTION	2
108	XDFZZ	81349	7SGU-4	. . . . CABLE,POWER,ELECTRI	V

END OF FIGURE

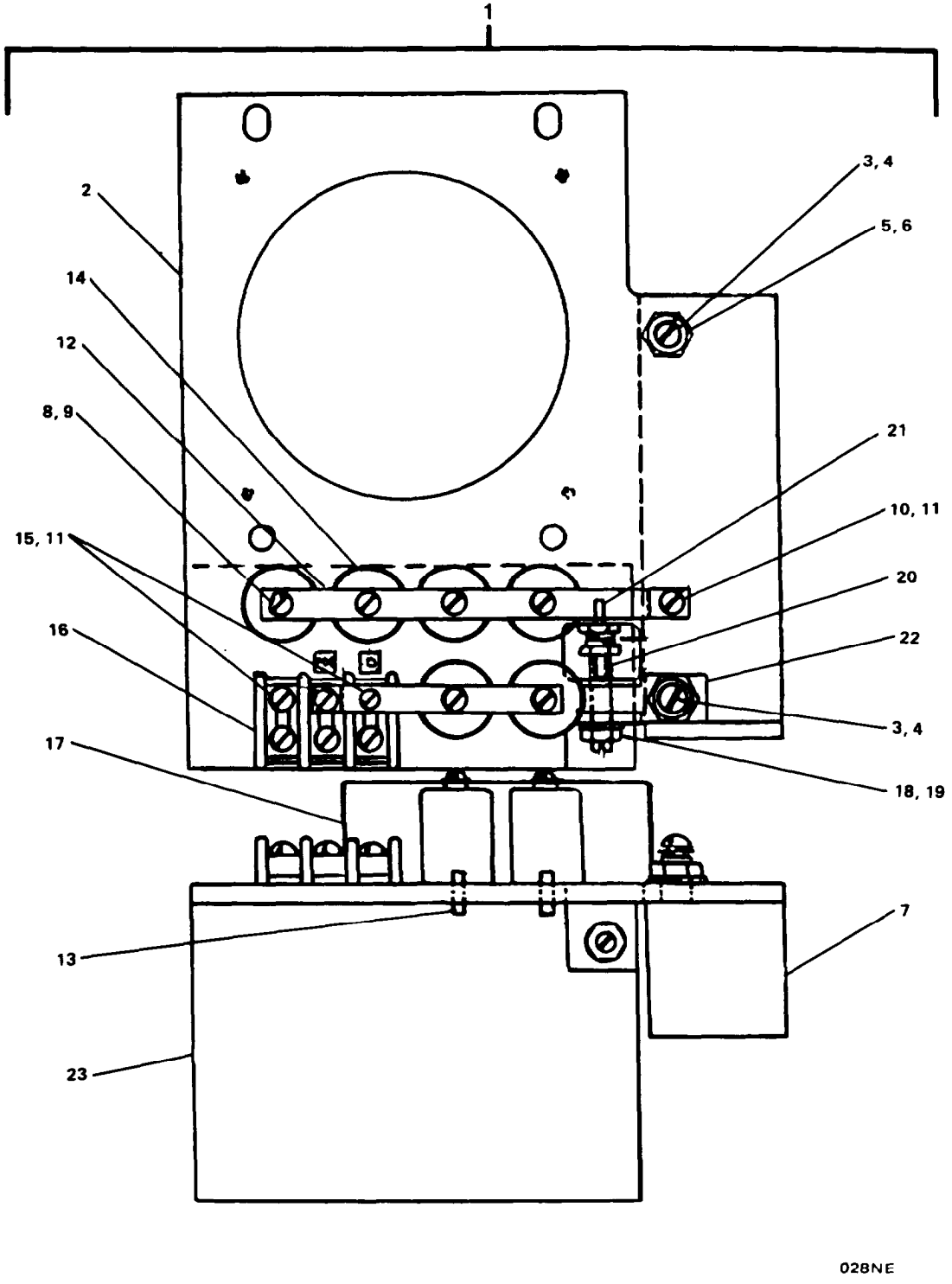

FIGURE 384. Starter Assembly.

(1) ITEM NO	(2) SMR CODE	(3) FSCM	(4) PART NUMBER	(5) DESCRIPTION AND USABLE ON CODES(UOC)	(6) QTY
				GROUP 18 BASIC CRAFT	
				FIG. 384 STARTER ASSEMBLY	
1	XDFFF	10741	4636X	. . . STARTER ASSEMBLY	1
2	XDFZZ	10741	4343X	. . . . PLATE	1
3	XDFZZ	10741	60CR1024-6	. . . . SCREW,MACHINE	2
4	XDFZZ	10741	4578-36	. . . . WASHER,LOCK	2
5	XDFZZ	10741	11CR624	. . . . NUT,PLAIN,HEXAGON	2
6	XDFZZ	10741	4578-40	. . . . WASHER,LOCK	2
7	PAFZZ	10741	9339X	. . . . TRANSFORMER,POWER	1
8	XDFZZ	10741	60CR832-4	. . . . SCREW,MACHINE	6
9	XDFZZ	10741	CR4579-20	. . . . WASHER,LOCK	6
10	XDFZZ	10741	60CR832-8	. . . . SCREW,MACHINE	1
11	XDFZZ	10741	4578-35	. . . . WASHER,LOCK	5
12	XDFZZ	10741	9340	. . . . CONNECTOR,BRASS	1
13	XDFZZ	10741	80CR832-10	. . . . SETSCREW,SOCKETHEAD	6
14	PAFZZ	10741	2896	. . . . CAPACITOR	6
15	XDFZZ	10741	60CR832-14	. . . . SCREW,MACHINE	2
16	XDFZZ	10741	9348	. . . . TERMINAL BLOCK	1
17	XDFZZ	10741	9347	. . . . CONNECTOR,BRASS	1
18	XDFZZ	10741	10B428	. . . . NUT,PLAIN,HEXAGON	1
19	XDFZZ	10741	4578-38	. . . . WASHER,LOCK	1
20	XDFZZ	10741	9349	. . . . SCREW,CONTACT	1
21	XDFZZ	10741	3246	. . . . CONTACT,ELECTRICAL	1
22	XDFZZ	10741	9350	. . . . CONNECTOR	1
23	PAFZZ	10741	4407X	. . . . TRANSFORMER,POWER	1

END OF FIGURE

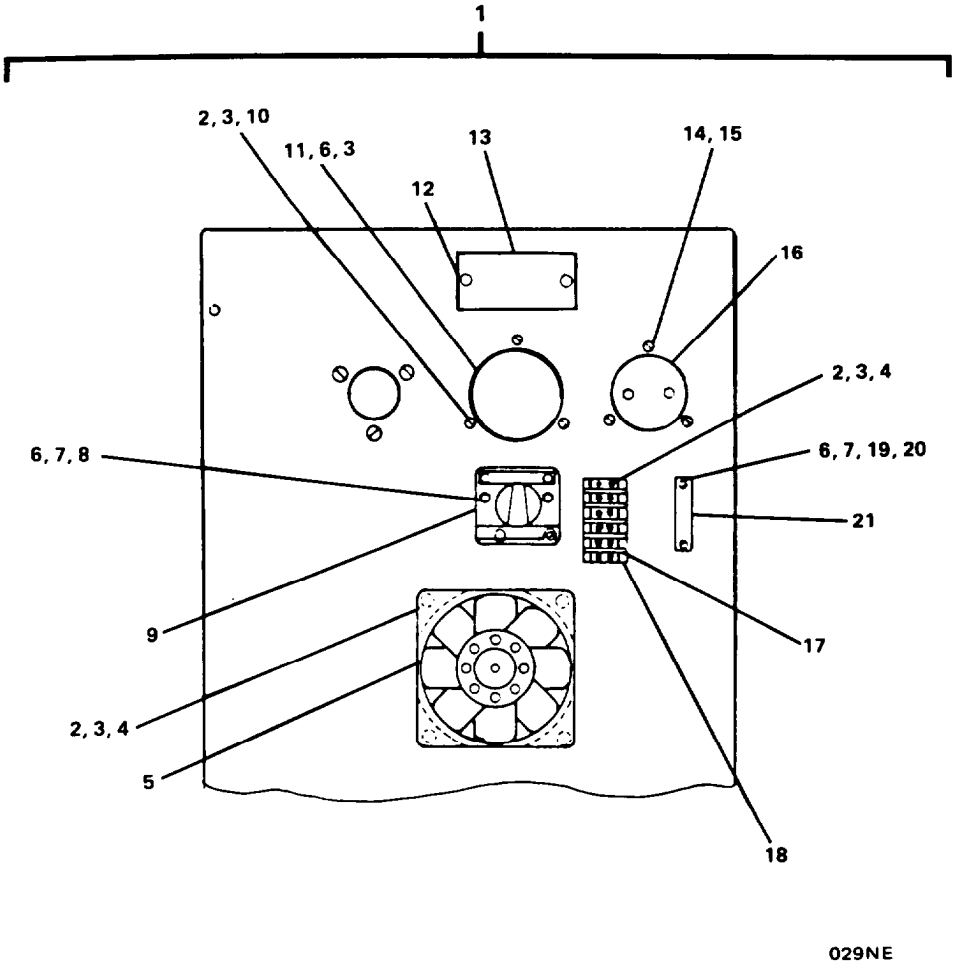

FIGURE 385. Power Supply (Sheet 1 of 3).

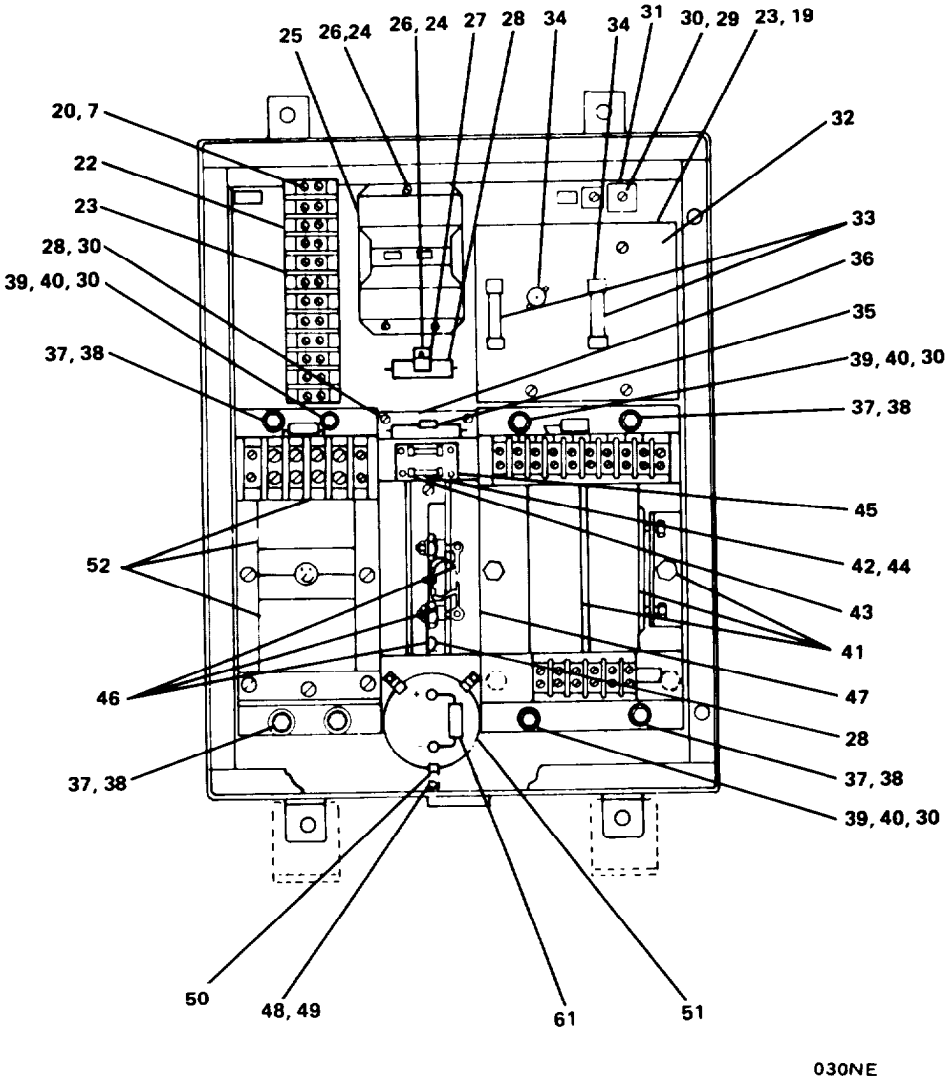

FIGURE 385. Power Supply (Sheet 2 of 3).

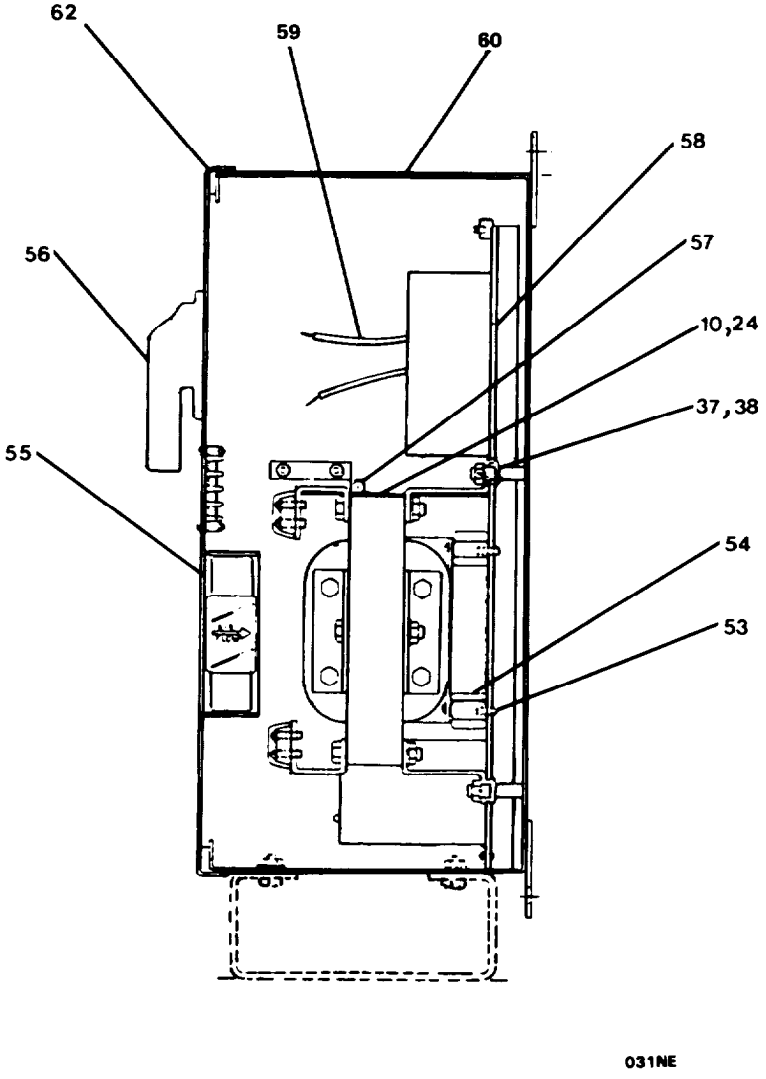

FIGURE 385. Power Supply (Sheet 3 of 3).

(1) ITEM NO	(2) SMR CODE	(3) FSCM	(4) PART NUMBER	(5) DESCRIPTION AND USABLE ON CODES(UOC)	(6) QTY
				GROUP 18 BASIC CRAFT	
				FIG. 385 POWER SUPPLY	
1	XDFFF	10741	4198PS	..POWER SUPPLY	1
2	XDFZZ	10741	10CR632	.... NUT,PLAIN,HEXAGON	18
3	XDFZZ	10741	4578-34	.. ..WASHER,LOCK	18
4	XDFZZ	10741	60CR632-10	.. ..SCREW,MACHINE	12
5	PAFZZ	10741	4434x	.. ..FAN,CIRCULATING	1
6	XDFZZ	10741	10CR832	.. ..NUT,PLAIN,HEXAGON	10
7	XDFZZ	10741	4578-35	.. ..WASHER,LOCK	18
8	XDFZZ	10741	60CR832-12	.... SCREW,MACHINE	2
9	PAFZZ	10741	8433	.. ..RELAY,ELECTROMAGNET	1
10	XDFZZ	10741	60CR632-6	.... SCREW,MACHINE	5
11	PAFZZ	10741	6094	.. ..METER,TIME TOTALIZI	1
12	XDFZZ	10741	SSD42SSBS	.. ..RIVET,BLIND	4
13	XDFZZ	10741	8034	.. ..PLATE,IDENTIFICATIO	1
14	XDFZZ	10741	4574-7	.. ..WASHER,FLAT	3
15	XDFZZ	10741	4578-32	.. ..WASHER,LOCK	3
16	PAFZZ	10741	9591	.... AMMETER	1
17	XDFZZ	10741	2509T	.. ..TERMINAL BLOCK	1
18	XDFZZ	10741	5080	.. ..MARKER STRIP,TERMIN	1
19	XDFZZ	10741	4574-10	.. ..WASHER,FLAT	4
20	XDFZZ	10741	60CR832-10	.. ..SCREW,MACHINE	18
21	XDFZZ	10741	3782-3	.... STRAP,TIEDOWN ELECT	3
22	XDFZZ	10741	2509MM	.. ..TERMINAL BLOCK	1
23	XDFZZ	10741	8501	.... PLATE,IDENTIFICATIO	1
24	XDFZZ	10741	CR4579-20	.. ..WASHER,LOCK	7
25	PAFZZ	10741	4722	.. ..RELAY,ELECTROMAGNET	1
26	XDFZZ	10741	60CR832-6	.... SCREW,MACHINE	1
27	XDFZZ	10741	2001D	.. ..CLAMP,CARTRIDGE	1
28	PAFZZ	10741	4212X	.... CAPACITOR,FIXED,MET	1
29	XDFZZ	10741	60CR420-8	.... SCREW,MACHINE	9
30	XDFZZ	10741	4578-38	.. ..WASHER,LOCK	17
31	XDFZZ	10741	2329UU	.... TERMINAL,GROUND LUG	1
32	XDFZZ	10741	6291	.. ..SWITCH SUBASSEMBLY	1
33	PAFZZ	10741	4113A30	.. ..FUSE,CARTRIDGE (30 AMP,250V)	2
34	XDFZZ	10741	6346	.. ..SHAFT,SHOULDERED	1
35	PAFZZ	10741	4404X	.. ..CAPACITOR,FIXED,ELE	1
36	XDFZZ	10741	4525	.... BRACKET	1
37	XDFZZ	10741	11CR616	.. ..NUT,PLAIN,HEXAGON	4
38	XDFZZ	10741	CR4579-45	.. ..WASHER,LOCK	4
39	XDFZZ	10741	30CR420-8	.. ..SCREW,CAP,HEXAGON H	4
40	XDFZZ	10741	4574-16	.. ..WASHER,FLAT	4
41	PAFZZ	10741	4395X	.... TRANSFORMER,POWER	1
42	PAFZZ	10741	4110A3	.... FUSE	2
43	XDFZZ	10741	61CR632-6	.. ..SCREW,MACHINE	2
44	XDFZZ	10741	3427	.... FUSE BLOCK	1
45	XDFZZ	10741	4053	.. ..INSULATOR	1
46	PAFZZ	10741	4390X	.... RECTIFIER,SEMICONDU	1
47	XDFZZ	10741	4524	.... DEFLECTOR	1
48	XDFZZ	10741	60CR1024-6	.. ..SCREW,MACHINE	3

(1) ITEM NO	(2) SMR CODE	(3) FSCM	(4) PART NUMBER	(5) DESCRIPTION AND USABLE ON CODES(UOC)	(6) QTY
49	XDFZZ	10741	CR4579-25	. . ..WASHER,LOCK	3
50	XDFZZ	10741	4386	. . . . CLAMP	3
51	PAFZZ	10741	4405	. . . . CAPACITOR,FIXED,ELE	1
52	PAFZZ	10741	4394X	. . ..COIL,RADIO FREQUENC	1
53	XDFZZ	10741	80CR420-8	. . . . SETSCREW	2
54	XDFZZ	10741	9367	. . ..INSULATOR	2
55	XDFZZ	10741	9589	. . . . SCREEN	1
56	XDFZZ	10741	6289	. . . . HANDLE	1
57	XDFZZ	10741	2001C	. . . . CLAMP	1
58	XDFZZ	10741	4400	. . ..PANEL,STEEL	1
59	XDFZZ	10741	4512X	. . ..WIRE SET,LEAD	1
60	XDFZZ	10741	4402X	. . ..ENCLOSURE ASSEMBLY	1
61	PAFZZ	10741	9723X	. . . .RESISTOR,FIXED,WIRE	1
62	XDFZZ	10741	2329QQ	. . . . TERMINAL	2

END OF FIGURE

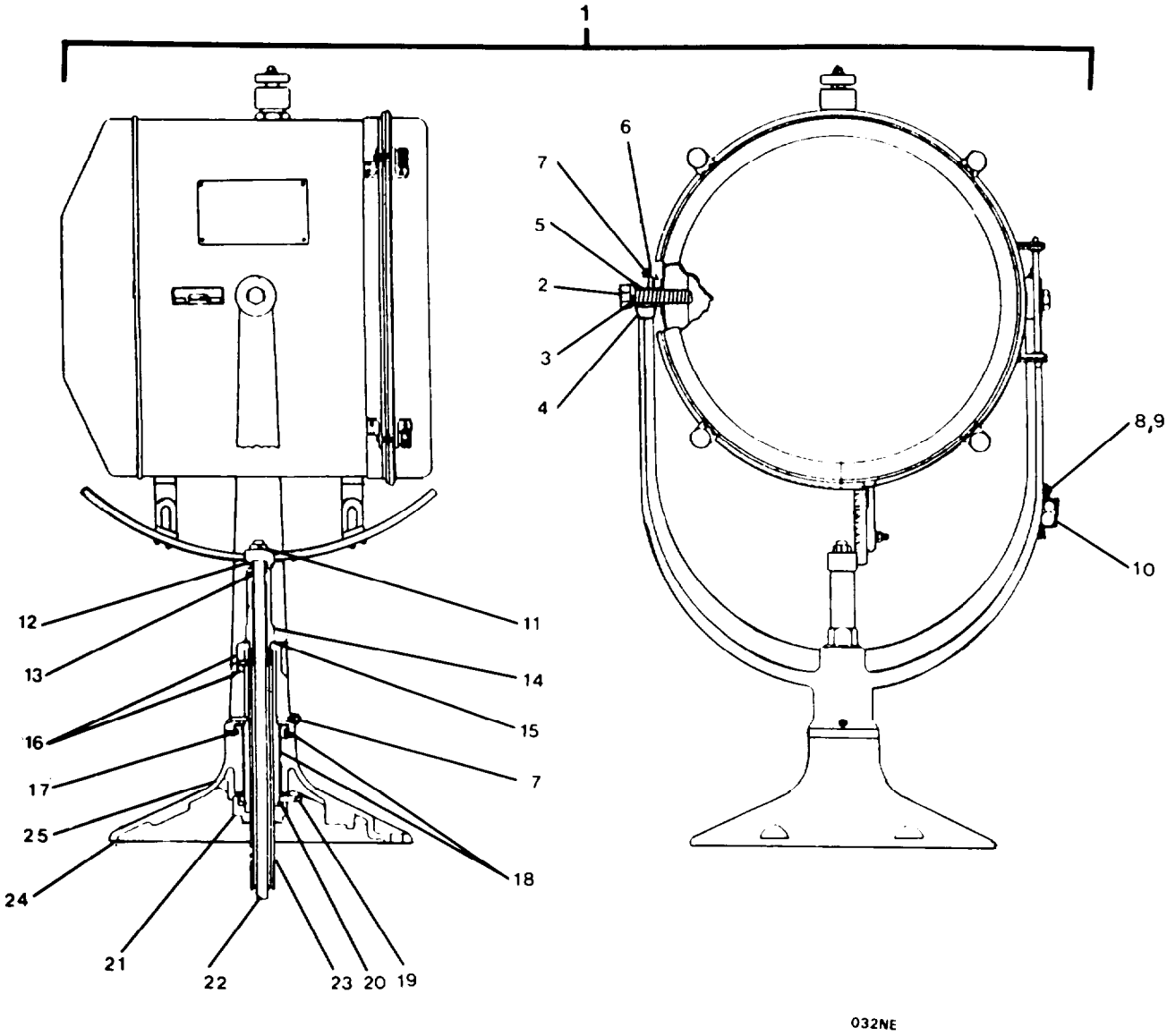

FIGURE 386. Manual Lever Control.

(1) ITEM NO	(2) SMR CODE	(3) FSCM	(4) PART NUMBER	(5) DESCRIPTION AND USABLE ON CODES(UOC)	(6) QTY
				GROUP 18 BASIC CRAFT	
				FIG. 386 MANUAL LEVER CONTROL	
1	XDFFF	10741	X9396LG	. . . CONTROL,MANUAL LEVE	1
2	XDFZZ	10741	30CR1011-40	. . . . SCREW,CAP,HEXAGON H	2
3	XDFZZ	10741	4578-44	. . ..WASHER,LOCK	2
4	XDFZZ	10741	4577-14	. . ..WASHER,FLAT	2
5	XDFZZ	10741	4625	. . . . BEARING	2
6	XDFZZ	10741	4176	. . . . SPACER	2
7	XDFZZ	10741	2448A	. . . . FITTING,LUBRICATION	3
8	XDFZZ	10741	60CR1024-6	. . . . SCREW,MACHINE	2
9	XDFZZ	10741	4578-36	. . ..WASHER,LOCK	2
10	XDFZZ	10741	4619	. . ..CLAMP	1
11	XDFZZ	10741	4565-60	. . ..PIN,STRAIGHT,HEADLE	1
12	XDFZZ	10741	4729	. . . . PINION	1
13	PAFZZ	10741	2285K	. . ..PACKING,PREFORMED	2
14	XDFZZ	10741	4728	. . . . NUT,SPACER	1
15	XDFZZ	10741	600-015-718	. . . . WASHER,SEALING	1
16	XDFZZ	10741	5592AX	. . . . YOKE ASSEMBLY	1
17	PAFZZ	10741	2285TT	. . ..PACKING,PREFORMED	1
18	XDFZZ	10741	3677B	. . ..BEARING,FLANGED	2
19	XDFZZ	10741	SL3329	. . . . STOP,SLIDING	1
20	XDFZZ	10741	RS-150-S	. . . . RING,RETAINING	1
21	XDFZZ	10741	3700X	. . . . CLAMP ASSEMBLY	1
22	XDFZZ	10741	4174	. . ..ROD,CONTROL	1
23	XDFZZ	10741	3721B	. . . . TUBE,CONTROL	1
24	XDFZZ	10741	4675	. . . . PLATE,IDENTIFICATIO	1
25	XDFZZ	10741	5593A	. . . . BASE	1

END OF FIGURE

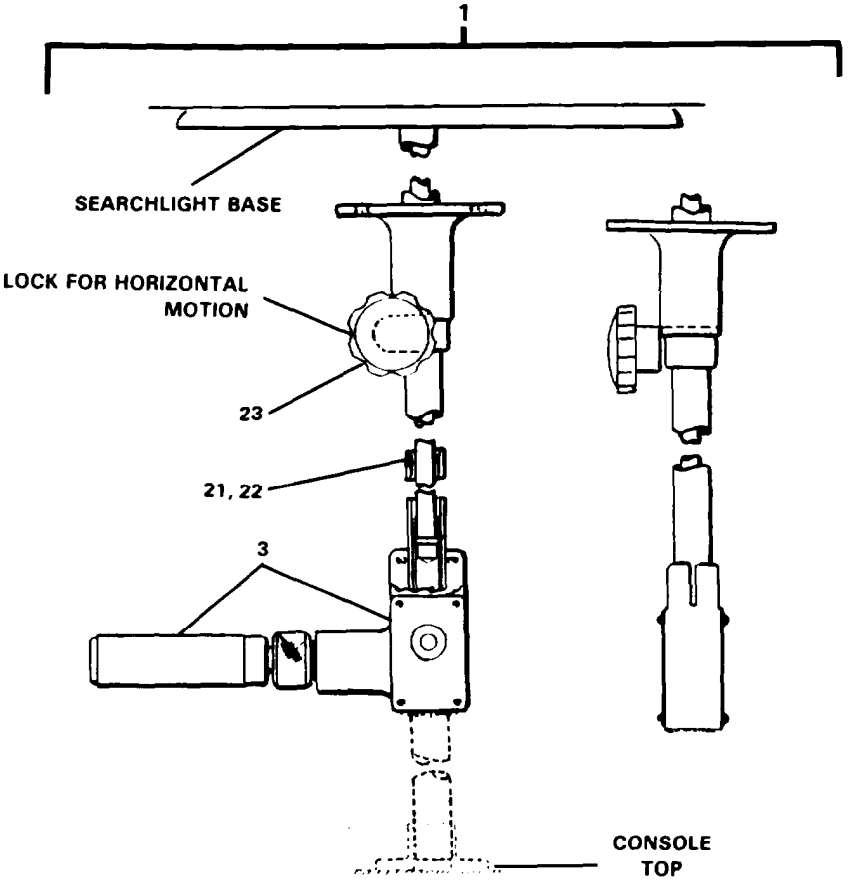

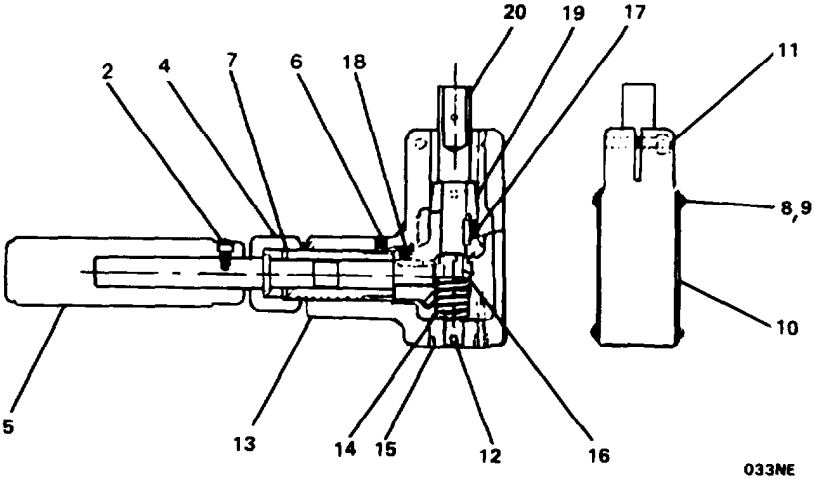

FIGURE 387. Lever Gear Assembly.

(1) ITEM NO	(2) SMR CODE	(3) FSCM	(4) PART NUMBER	(5) DESCRIPTION AND USABLE ON CODES(UOC)	(6) QTY
				GROUP 18 BASIC CRAFT	
				FIG. 387 LEVEL GEAR ASSEMBLY	
1	XDFFF	10741	SL3455XA	..GEAR ASSEMBLY,LEVEL	1
2	XDFZZ	10741	31CR1024-6	.... SCREW,CAP,HEXAGON H	1
3	XDFZZ	10741	SL2982	..HANDLE	1
4	XDFZZ	10741	SL2991	..NUT,LOCK	1
5	XDFZZ	10741	5579	.... SHAFT, LEVER	1
6	XDFZZ	10741	80CR420-4	..SETSCREW	1
7	XDFZZ	10741	5580	..BEARING	1
8	XDFZZ	10741	60CR832-4	..SCREW,MACHINE	8
9	XDFZZ	10741	4578-35	..WASHER,LOCK	8
10	XDFZZ	10741	SL2992	.... COVER	2
11	XDFZZ	10741	31CR420-12	..SCREW,CAP,SOCKET HE	2
12	XDFZZ	10741	80CR832-4	.... SETSCREW	4
13	XDFZZ	10741	5584	.... DRIVE UNIT,ANGLE	1
14	XDFZZ	10741	3685	...SPRING	1
15	XDFZZ	10741	5582	..BEARING	1
16	XDFZZ	10741	3686	.... SPACER	1
17	XDFZZ	10741	26606	.... KEY,SQUARE	2
18	XDFZZ	10741	5412	..GEAR,MITER	2
19	XDFZZ	10741	5581	.... BEARING	1
20	XDFZZ	10741	5583	..SHAFT,STRAIGHT	1
21	XDFZZ	10741	1467D	.... WASHER,FLAT	1
22	XDFZZ	10741	SL2107	..SCREW,MACHINE	1
23	XDFZZ	10741	SL1490	...LOCK,CEILING	1

END OF FIGURE

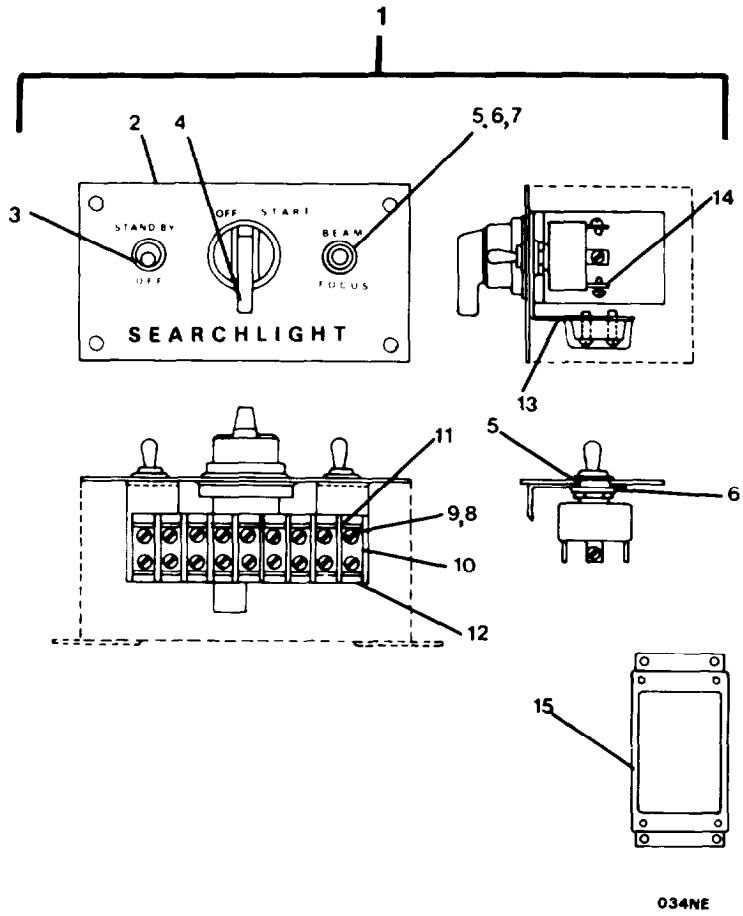

FIGURE 388. Control Station.

(1) ITEM NO	(2) SMR CODE	(3) FSCM	(4) PART NUMBER	(5) DESCRIPTION AND USABLE ON CODES(UOC)	(6) QTY
				GROUP 18 BASIC CRAFT	
				FIG. 388 CONTROL STATION	
1	XDFFF	10741	4441X-RF	. ..CONTROL STATION	2
2	XDFZZ	10741	4389	. . ..PLATE,SWITCH	1
3	PAFZZ	10741	8621	. . ..SWITCH,TOGGLE	1
4	PAFZZ	10741	9855	. . ..SWITCH,ROTARY	1
5	XDFZZ	10741	9798	. . ..RING,LOCKING	2
6	XDFZZ	10741	9813	. . ..WASHER,LOCK	2
7	XDFZZ	10741	9796	. . ..SWITCH,TOGGLE	1
8	XDFZZ	10741	60CR632-8	. . ..SCREW,MACHINE	4
9	XDFZZ	10741	4578-34	. . ..WASHER,LOCK	4
10	XDFZZ	10741	2509AB	. . ..TERMINAL BLOCK	1
11	XDFZZ	10741	6446B	. . . . LEAD,ELECTRICAL	1
12	XDFZZ	10741	4150	. . ..PLATE,IDENTIFICATIO	1
13	XDFZZ	10741	4393	. . ..BRACKET	1
14	XDFZZ	10741	4608	. . ..WIRE LEADS	1
15	XDFZZ	10741	5079A	. . ..ENCLOSURE	1

END OF FIGURE

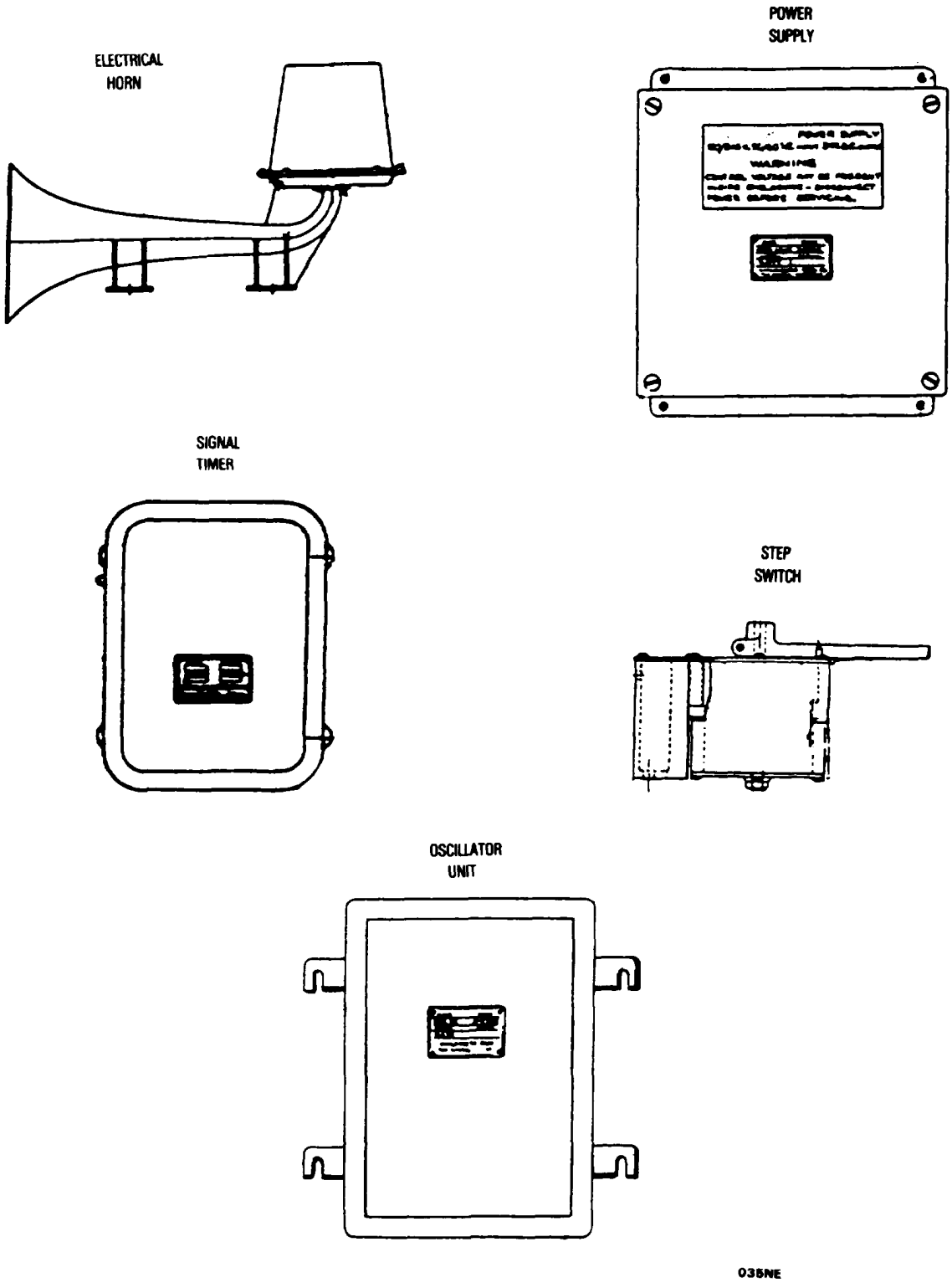

FIGURE 389. Electrical Horn & Controls.

(1) ITEM NO	(2) SMR CODE	(3) FSCM	(4) PART NUMBER	(5) DESCRIPTION AND USABLE ON CODES(UOC)	(6) QTY
				GROUP 18 BASIC CRAFT	
				FIG. 389 ELECTRICAL HORN AND CONTROLS	
	XCOOO	75214	3-5501	..ELECTRIC HORN AND C	1
				END OF FIGURE	

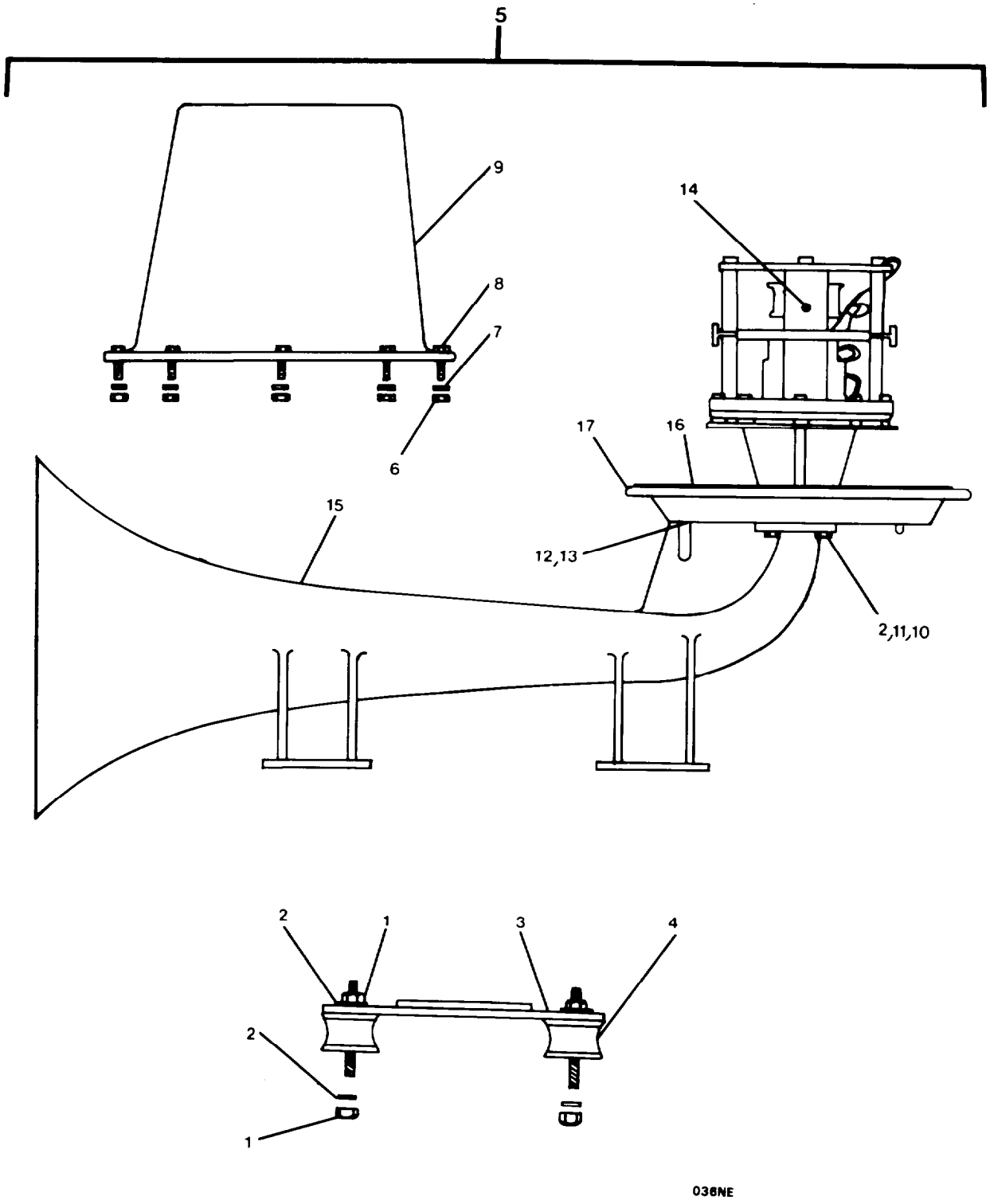

FIGURE 390. Electrical Horn.

(1) ITEM NO	(2) SMR CODE	(3) FSCM	(4) PART NUMBER	(5) DESCRIPTION AND USABLE ON CODES(UOC)	(6) QTY
				GROUP 18 BASIC CRAFT	
				FIG. 390 ELECTRICAL HORN	
1	XDOZZ	75214	W95-5	. ..NUT,SELF-LOCKING HE	8
2	XDOZZ	75214	W78-5	. ..WASHER,FLAT	12
3	XDOZZ	75214	P504-1	. ..SUPPORT BAR	2
4	XDOZZ	75214	PT32-4	. ..MOUNT,RESILIENT	4
5	PBOOO	75214	KB-20	. ..HORN,ELECTRICAL	1
6	XDOZZ	75214	W95-3	. . ..NUT,SELF-LOCKING,HE	8
7	XDOZZ	75214	W78-12	. . . . WASHER,FLAT PART OF KIT P/N P263 -1	8
8	XDOZZ	75214	W43-18	. . ..SCREW,CAP,HEXAGON,H	8
9	XDOZZ	75214	P33-2	. . . . COVER,ACCESS	1
10	XDOZZ	75214	W95-4	. . ..NUT,SELF-LOCKING HE	4
11	XDOZZ	75214	W91-8	. . . . SCREW,CAP,HEXAGON H	4
12	XDOZZ	75214	W90-15	. . . . SCREW,CAP,HEXAGON H	1
13	XDOZZ	75214	W78-18	. . ..WASHER,LOCK	1
14	PAOZZ	75214	PT120-1	. . ..DIAPHRAGM,HEATER AN	1
15	XDOZZ	75214	PT1-5	. . . . CONE,LOUDSPEAKER	1
16	PAOZZ	75214	PT121-1	. . . . PACKING,PREFORMED	1
17	XDOZZ	75214	P34-2	. . ..COVER	1

END OF FIGURE

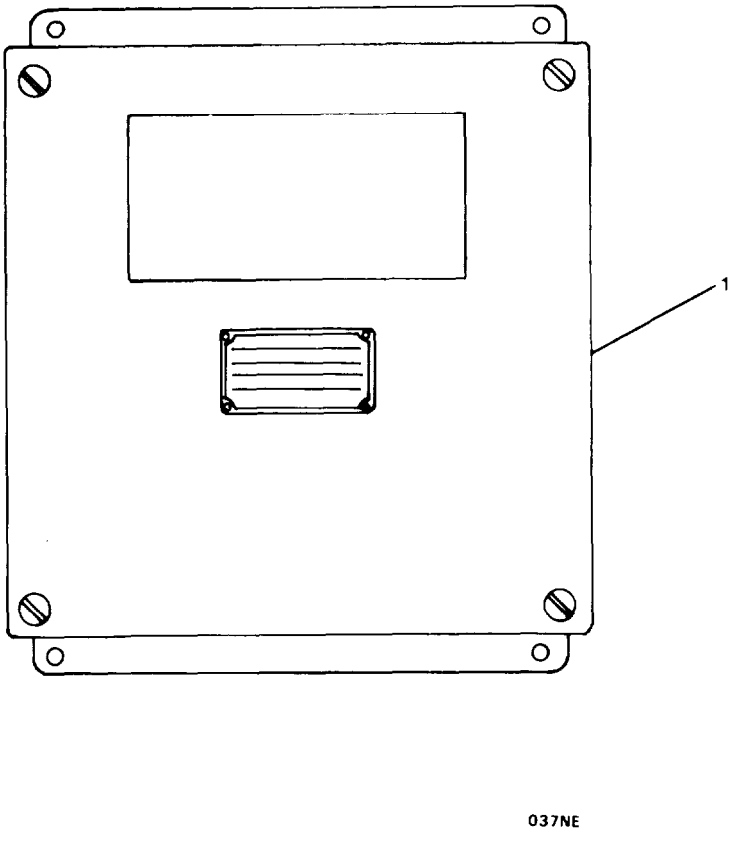

FIGURE 391. Power Supply (Sheet 1 of 2).

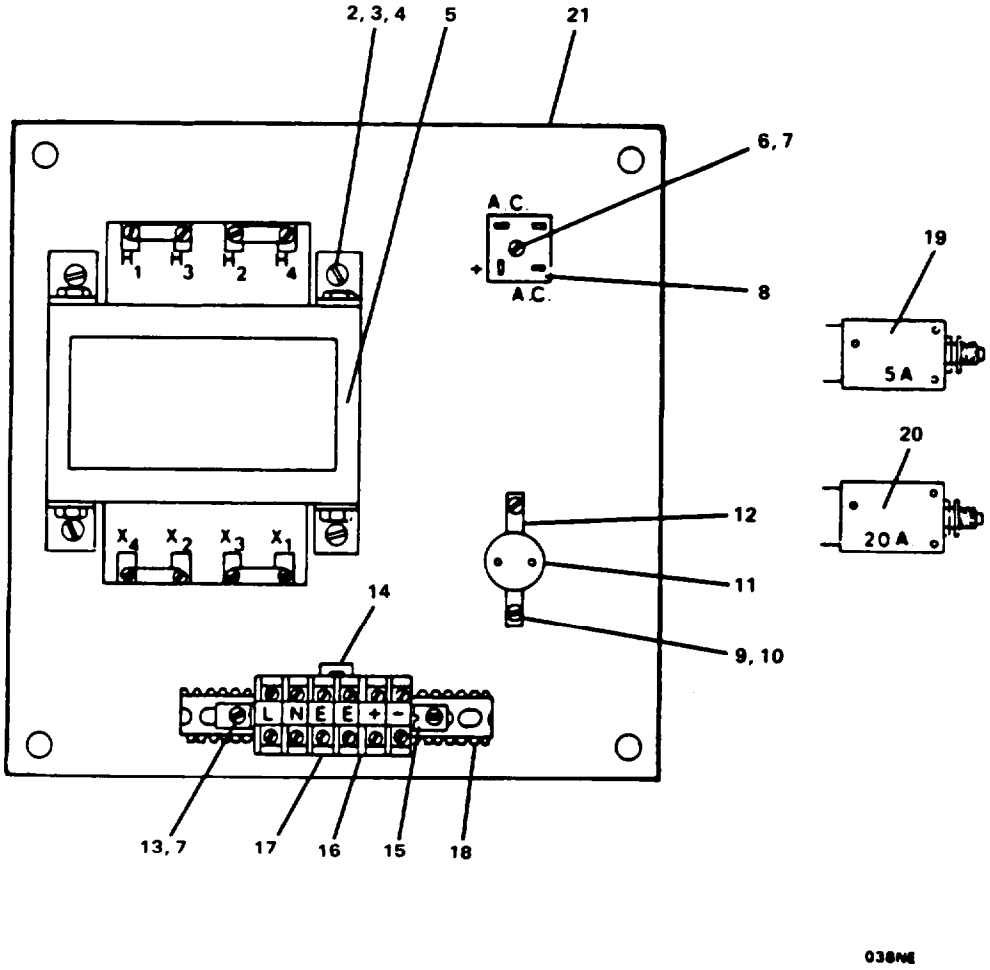

FIGURE 391. Power Supply (Sheet 2 of 2).

(1) ITEM NO	(2) SMR CODE	(3) FSCM	(4) PART NUMBER	(5) DESCRIPTION AND USABLE ON CODES(UOC)	(6) QTY
				GROUP 18 BASIC CRAFT	
				FIG. 391 POWER SUPPLY	
1	XDOOO	75214	M477	...POWER SUPPLY	1
2	XDOZZ	75214	W40-9	....NUT,PLAIN,HEXAGON	4
3	XDOZZ	75214	W27-2	....WASHER.LOCK	4
4	XDOZZ	75214	W43-14	....SCREW,CAP,HEXAGON H	4
5	PAOZZ	75214	P490-1	.... TRANSFORMER,POWER	1
6	XDOZZ	75214	W38-51	.... SCREW,MACHINE	1
7	XDOZZ	75214	W27-10	.... WASHER,LOCK	5
8	PAOZZ	75214	P502-1	....RECTIFIER FULL WAVE BRIDGE	1
9	XDOZZ	75214	W38-2	....SCREW,MACHINE	2
10	XDOZZ	75214	W27-12	....WASHER,LOCK	2
11	PAOZZ	75214	P500-1	....CAPACITOR	1
12	XDOZZ	75214	P501-1	....MOUNT,CAPACITOR	1
13	XDOZZ	75214	W38-48	....SCREW,MACHINE	2
14	XDOZZ	75214	P256-10	....JUMPER	1
15	XDOZZ	75214	P256-8	....CLIP,RETAINING	2
16	XDOZZ	75214	P256-7	....BARRIER,END	1
17	XDOZZ	75214	P256-6	.... TERMINAL BLOCK	6
18	XDOZZ	75214	P256-9	....CHANNEL,MOUNTING	1
19	PAOZZ	75214	P503-1	....CIRCUIT BREAKER (5 AMP)	1
20	PAOZZ	75214	P503-2	....CIRCUIT BREAKER (20 AMP)	1
21	XDOZZ	75214	P248-15	....PANEL	1

END OF FIGURE

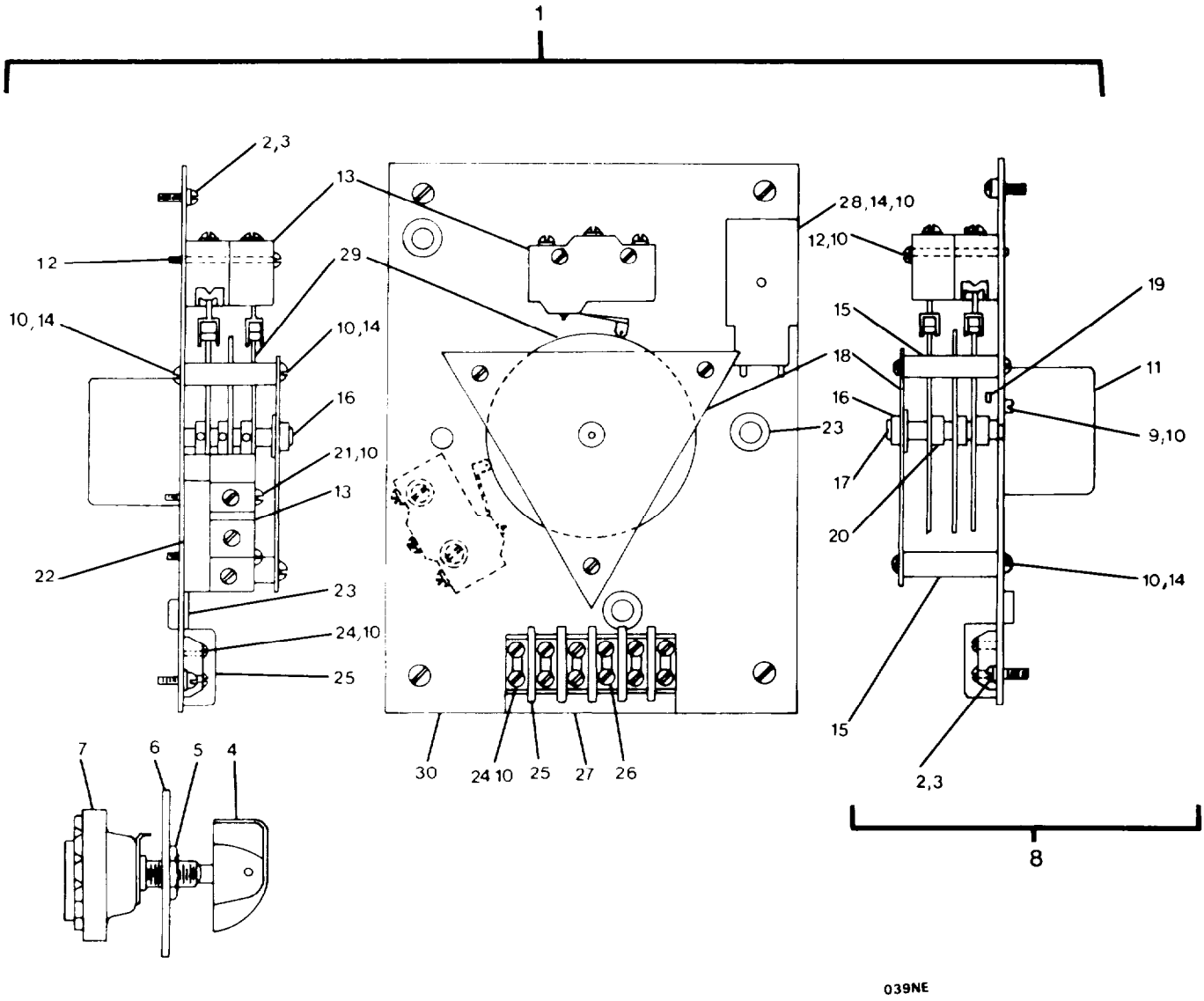

FIGURE 392. Sequential Timer.

(1) ITEM NO	(2) SMR CODE	(3) FSCM	(4) PART NUMBER	(5) DESCRIPTION AND USABLE ON CODES(UOC)	(6) QTY
				GROUP 18 BASIC CRAFT	
				FIG. 392 SEQUENTIAL TIMER	
1	XDOOO	75214	M411	...TIMER,SEQUENTIAL	1
2	XDOZZ	75214	W10-16	....SCREW,MACHINE	4
3	XDOZZ	75214	W27-2	....WASHER,LOCK	4
4	XDOZZ	75214	P435-2	....KNOB,SWITCH	1
5	XDOZZ	75214	P66-7	....NUT,PLAIN,HEXAGON	1
6	XDOZZ	75214	P357-2	....PLATE,SWITCH	1
7	PAOZZ	75214	P268-1	....SWITCH,ROTARY	1
8	XDOOO	75214	P437-4	....PANEL ASSEMBLY	1
9	XDOZZ	75214	W10-28	.....SCREW,MACHINE	2
10	XDOZZ	75214	W27-12	.....WASHER,LOCK	17
11	PAOZZ	75214	P252-12	.....GEARCASE-MOTOR	1
12	XDOZZ	75214	W38-43	.....SCREW,MACHINE	2
13	PAOZZ	75214	P253-5	.....SWITCH,SENSITIVE	3
14	XDOZZ	75214	W38-36	.....SCREW,MACHINE	7
15	XDOZZ	75214	P360-10	.....SPACER	3
16	XDOZZ	75214	P361-4	.....BUSHING	1
17	XDOZZ	75214	P359-4	.....SHAFT,STRAIGHT	1
18	XDOZZ	75214	P249-7	.....BRACKET	1
19	XDOZZ	75214	W77-1	.....SETSCREW	3
20	XDOZZ	75214	P464-1	.....HUB	3
21	XDFZZ	75214	W38-4	.....SCREW,MACHINE	2
22	XDFZZ	75214	P360-14	.....SPACER	1
23	XDOZZ	75214	P363-3	.....BUSHING	3
24	XDOZZ	75214	W38-38	.....SCREW,MACHINE	4
25	XDOZZ	75214	P256-3	.....TERMINAL	1
26	XDOZZ	75214	W38-142	.....SCREW,SELF-LOCKING	8
27	XDOZZ	75214	P438-1	.....MARKER,IDENTIFICATI	1
28	PAOZZ	75214	P254-4	.....RELAY,ELECTROMAGNET	1
29	PAOZZ	75214	P250-2	.....CAM,CONTROL	3
30	XDOZZ	75214	P248-13	.....PANEL,MOUNTING	1

END OF FIGURE

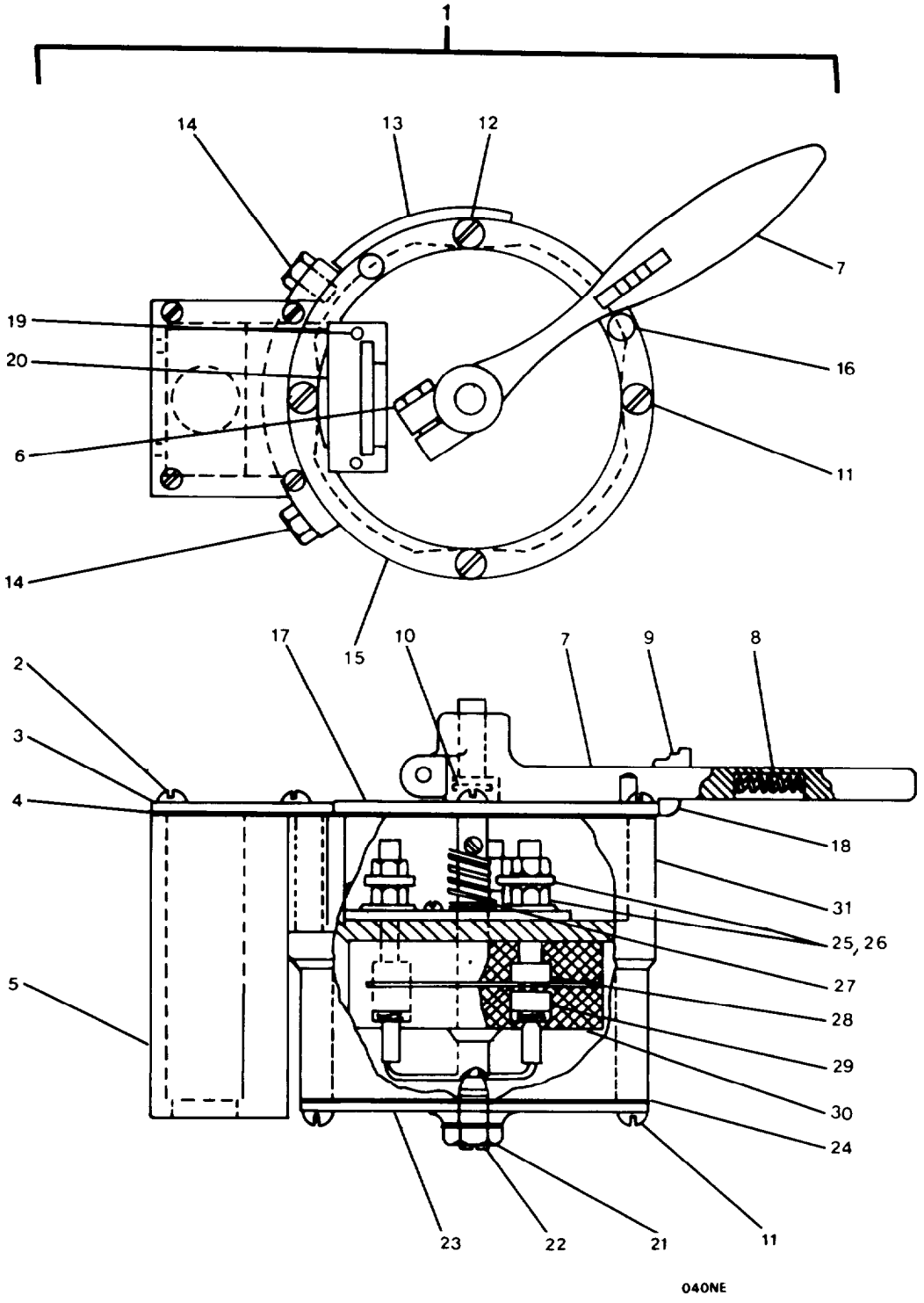

FIGURE 393. Rotary Switch.

(1) ITEM NO	(2) SMR CODE	(3) FSCM	(4) PART NUMBER	(5) DESCRIPTION AND USABLE ON CODES(UOC)	(6) QTY
				GROUP 18 BASIC CRAFT	
				FIG. 393 ROTARY SWITCH	
1	PA000	75214	M461	....SWITCH,ROTARY	1
2	XDOZZ	75214	W39-2	....SCREW,MACHINE	4
3	XDOZZ	75214	P261-1	....COVER	1
4	PAOZZ	75214	P402-1	....GASKET	1
5	XDOZZ	75214	P260-1	....BOX CONNECTOR,ELECT	1
6	XDOZZ	75214	W9-13	....SCREW,CAP,HEXAGON H	1
7	XDOZZ	75214	P262-1	....HANDLE,SWITCH	1
8	XDOZZ	75214	P358-1	....SPRING,SPIRAL TORSI	1
9	XDOZZ	75214	P326-1	....SWITCH,LEVER	1
10	PAOZZ	75214	P383-5	....PACKING,PREFORMED PART OF KIT P/N P263-1	1
11	XDOZZ	75214	W50-1	....SCREW,MACHINE	9
12	XDOZZ	75214	W51-1	....SCREW,MACHINE	9
13	XDOZZ	75214	P325-1	....STOP,ELECTRICAL SWI	1
14	XDOZZ	75214	W9-11	....SCREW,CAP,HEXAGON H	2
15	PAOZZ	75214	P432-1	....GASKET	1
16	XDOZZ	75214	P369-1	....STOP,PIN	2
17	XDOZZ	75214	P259-1	....COVER	1
18	PAOZZ	75214	P401-1	....GASKET	1
19	XDOZZ	75214	W12-1	....SCREW,DRIVE	2
20	XDOZZ	75214	P257-1	....PLATE,IDENTIFICATIO	1
21	XDOZZ	75214	W14-4	....NUT,PLAIN,HEXAGON	1
22	XDOZZ	75214	W52-1	....SCREW,ADJUSTING	1
23	XDOZZ	75214	P264-1	....COVER	1
24	PAOZZ	75214	P418-1	....GASKET	1
25	XDOZZ	75214	W18-2	....NUT,PLAIN,HEXAGON PART OF KIT P/N P263-1	20
26	XDOZZ	75214	W78-12	....WASHER,FLAT	20
27	XDOZZ	75214	P285-2	....SPRING,SPIRAL TORSI PART OF KIT P/N P263-1	1
28	XDOZZ	75214	P378-1	....CONTACT,ELECTRICAL PART OF KIT P/N P263-1	6
29	XDOZZ	75214	P373-1	....CONTACT,ELECTRICAL PART OF KIT P/N P263-1	3
30	PAOZZ	75214	P353-1	....SPRING,SPIRAL TORSI PART OF KIT P/N P263-1	3
31	XDOZZ	75214	P258-1	....HOUSING	1
	PAOZZ	75214	P263-1	....SWITCH,ROTARY (NEEDED FOR COMPLETE REPAIR OF SWITCH,ROTARY)	1
				CONTACT,ELECTRICAL (6) 393-28	
				CONTACT,ELECTRICAL (3) 393-29	
				NUT,PLAIN,HEXAGON (20) 393-25	
				PACKING,PREFORMED (1) 393-10	
				SPRING,SPIRAL TORSI(1) 393-27	
				SPRING,SPIRAL TORSI(3) 393-30	
				WASHER,FLAT (8) 390-7	

END OF FIGURE

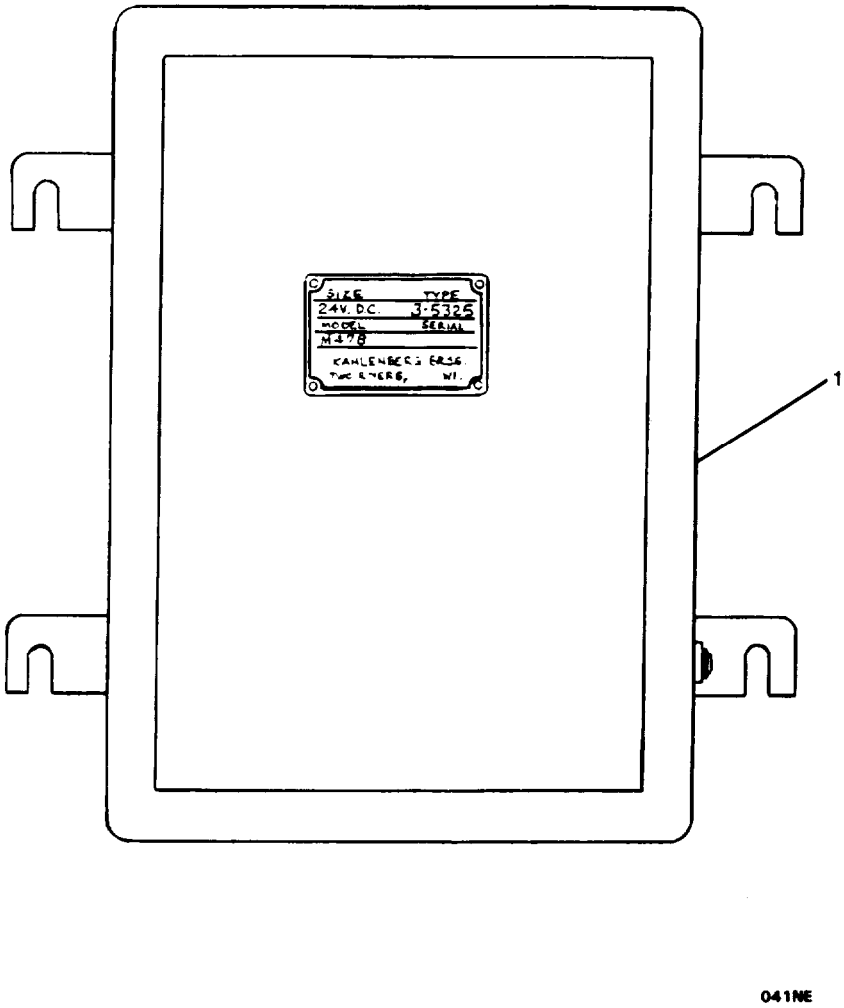

FIGURE 394. Oscillator Unit.

(1) ITEM NO	(2) SMR CODE	(3) FSCM	(4) PART NUMBER	(5) DESCRIPTION AND USABLE ON CODES(UOC)	(6) QTY
				GROUP 18 BASIC CRAFT	
				FIG. 394 OSCILLATOR UNIT	
1	PAOZZ	75214	M-478	...OSCILLATOR,NONCRYST	1

END OF FIGURE

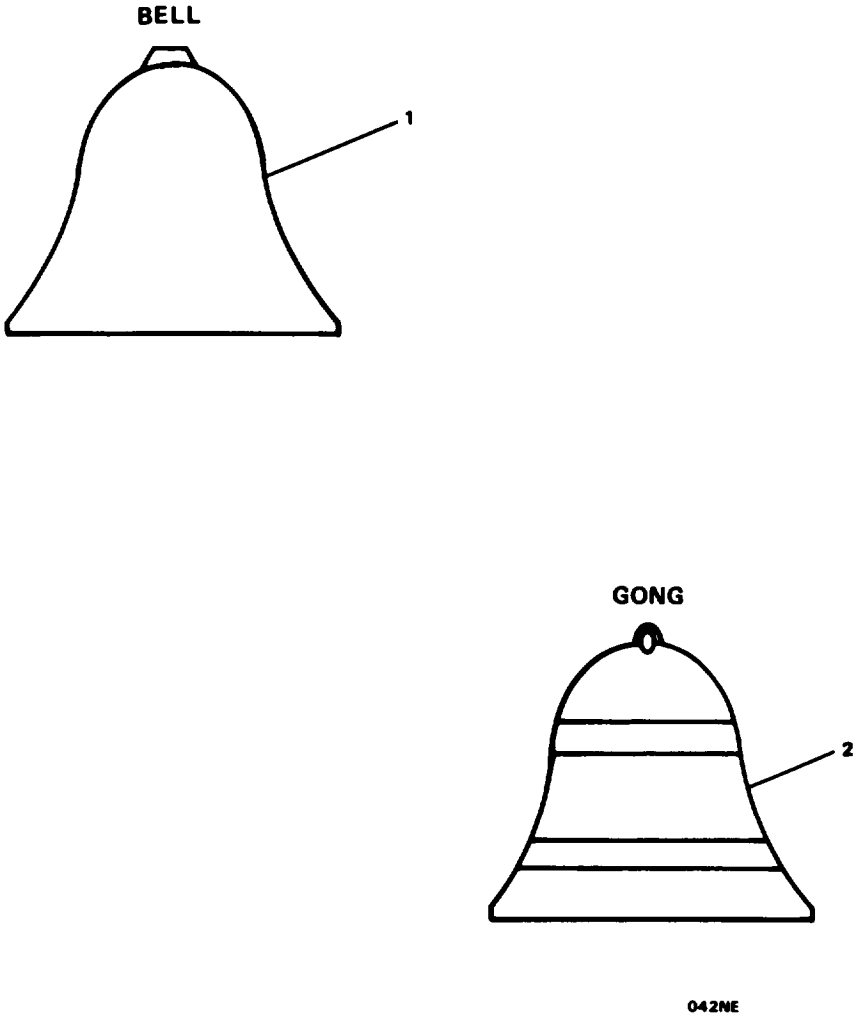

FIGURE 395. Bell and Gong.

(1) ITEM NO	(2) SMR CODE	(3) FSCM	(4) PART NUMBER	(5) DESCRIPTION AND USABLE ON CODES(UOC)	(6) QTY
				GROUP 18 BASIC CRAFT	
				FIG. 395 BELL AND GONG	
1	XDOZZ	81349	MIL-B-674	..BELL,SHIP'S	1
2	XDOZZ	91319	B-GONG-10	..GONG,FOG	1

END OF FIGURE

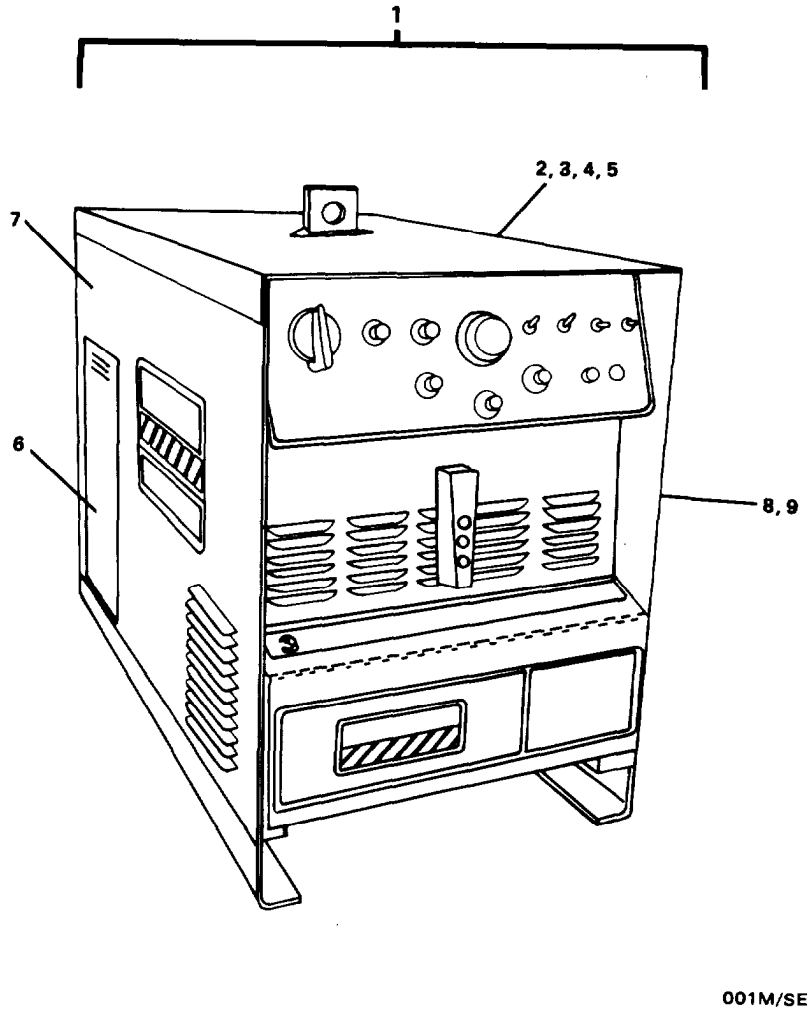

FIGURE 396. Machine. Electric Welding (Sheet 1 of 6).

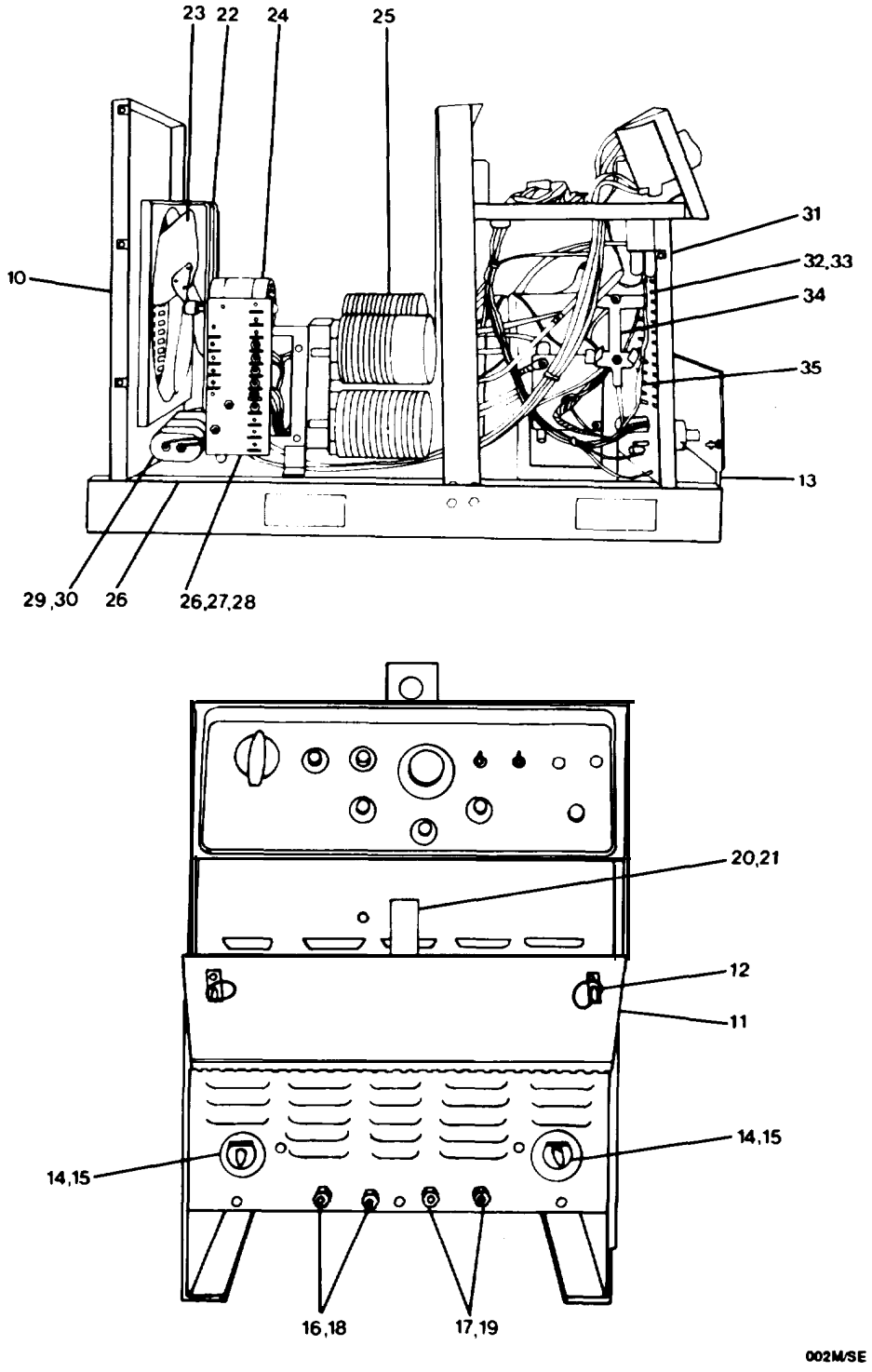

FIGURE 396. Machine, Electric Welding (Sheet 2 of 6).

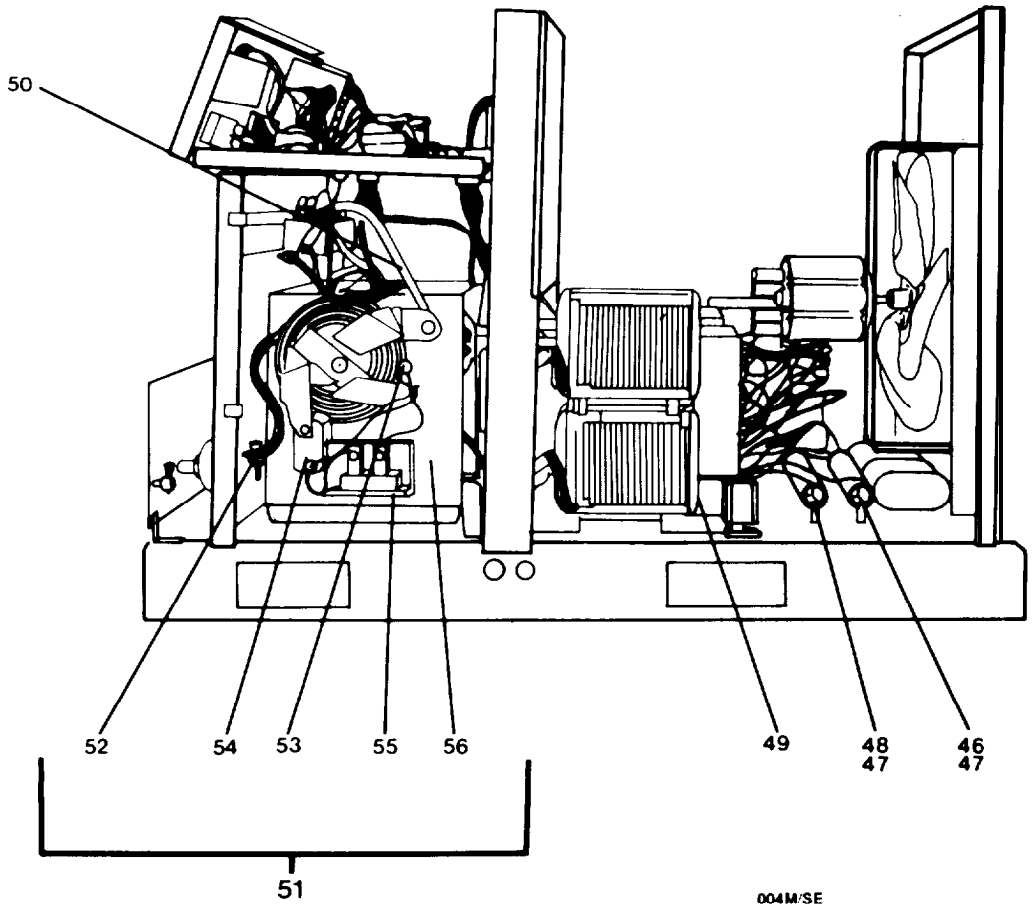

FIGURE 396. Machine, Electric Welding (Sheet 3 of 6).

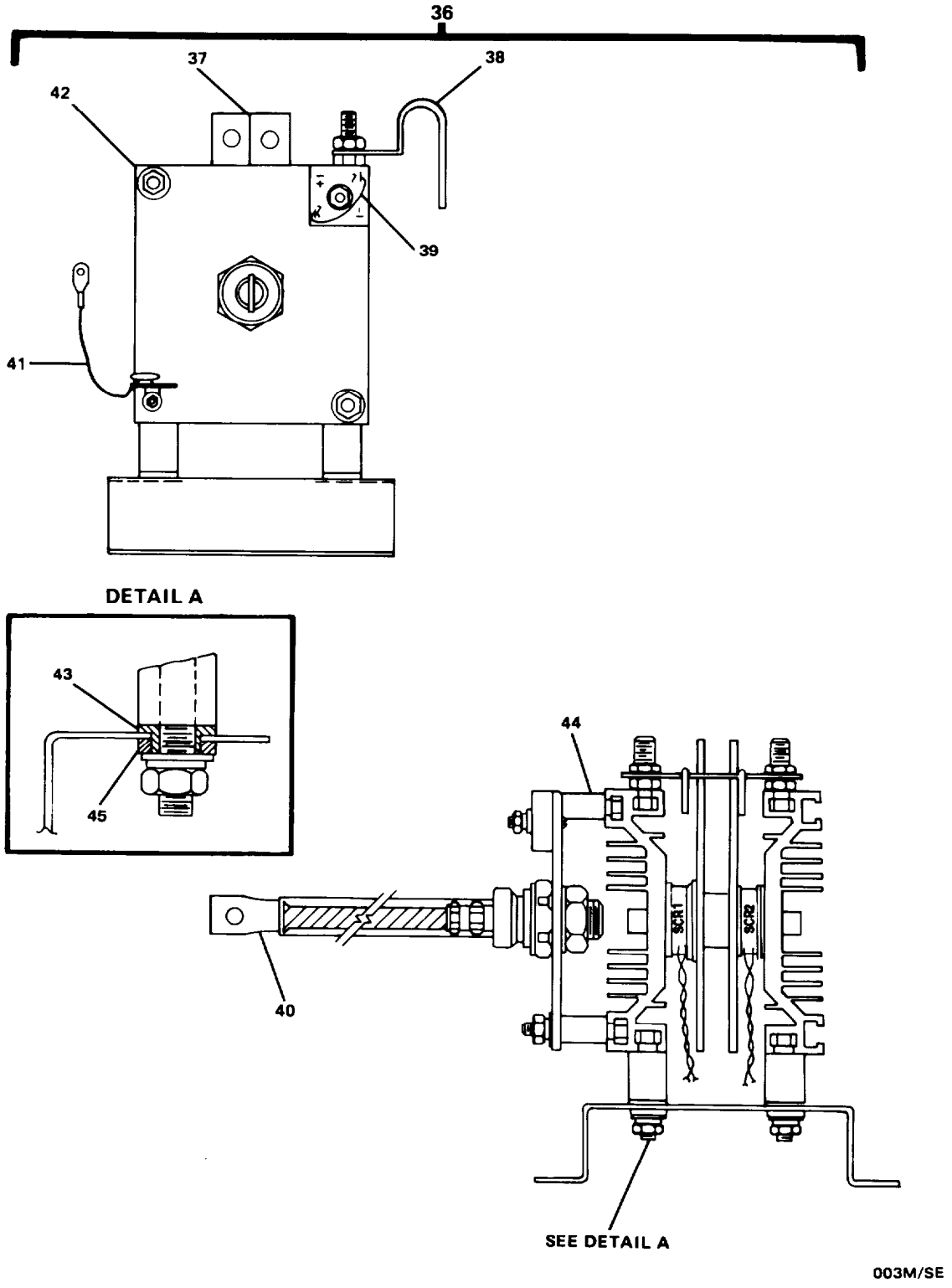

FIGURE 396. Machine, Electric Welding (Sheet 4 of 6).

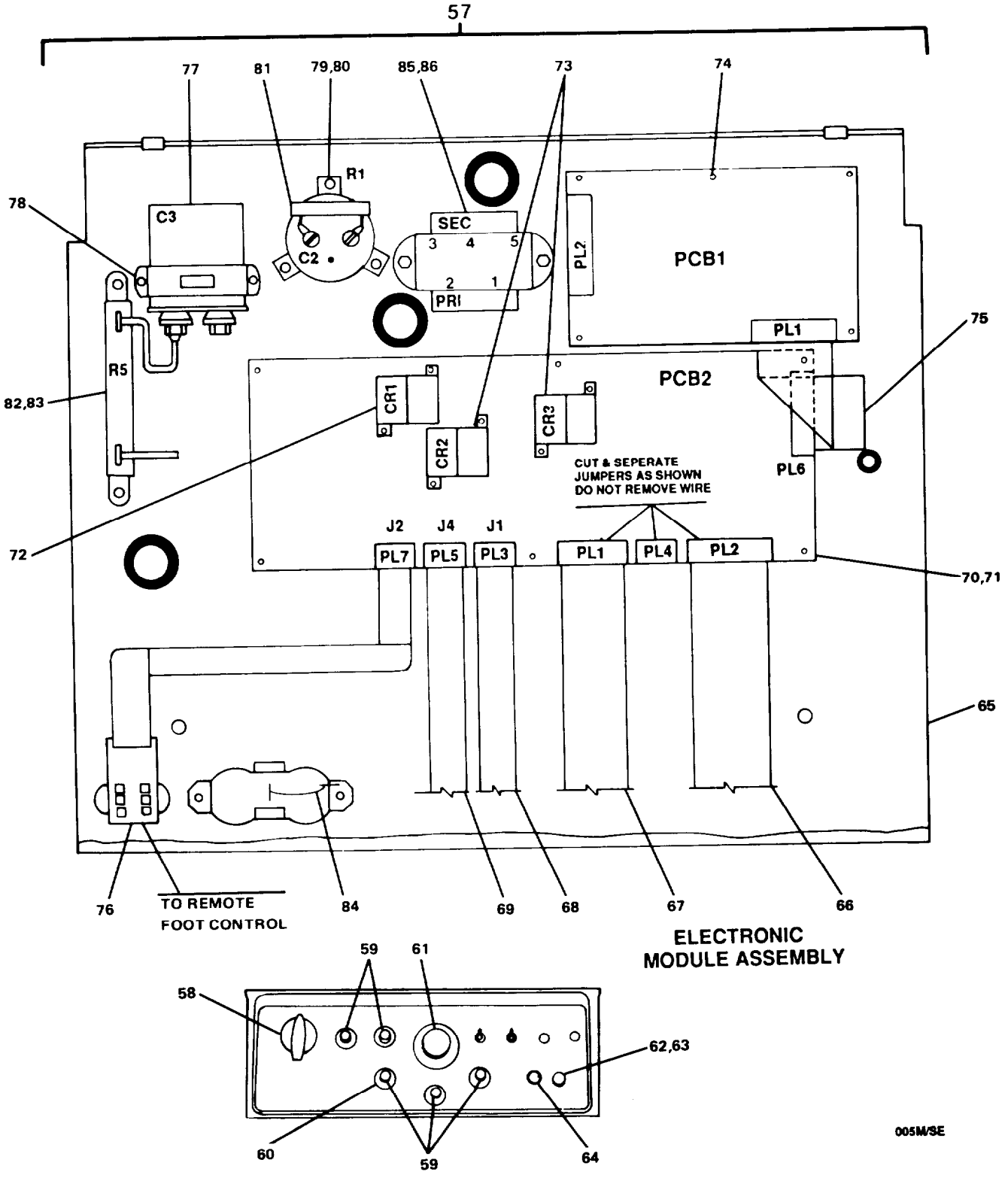

FIGURE 396. Machine, Electric Welding (Sheet 5 of 6).

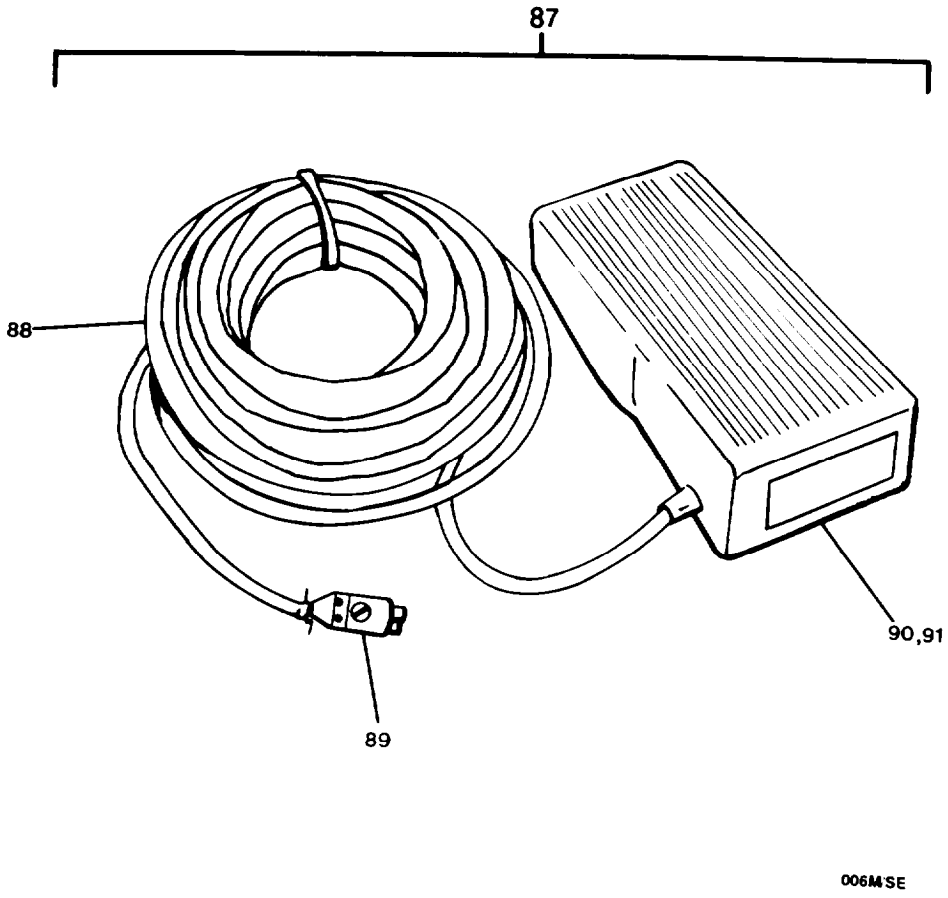

FIGURE 396. Machine. Electric Welding (Sheet 6 of 6).

(1) ITEM NO	(2) SMR CODE	(3) FSCM	(4) PART NUMBER	(5) DESCRIPTION AND USABLE ON CODES(UOC)	(6) QTY
				GROUP 18 BASIC CRAFT	
				FIG. 396 MACHINE, ELECTRICAL WELDING	
1	PDOFF	96073	1341-0354	..WELDING,MACHINE,ARC (WITH 125 FT WELDING CABLE)	1
2	XDFZZ	96073	2361-0197	...CAP,PROTECTIVE	1
3	XDFZZ	96073	2360-8209	...BUSHING	1
4	XDFZZ	96073	1373-4703	...PANEL,TOP	1
5	PAFZZ	96073	1373-0783	...GASKET	1
6	XDFZZ	96073	1373-5152	...DOOR,ACCESS	1
7	XDFZZ	96073	1373-4655	...PANEL (LEFT SIDE)	1
8	XDFZZ	96073	1373-4698	...COVER (RIGHT SIDE PANEL)	1
9	XDFZZ	96073	1373-4697	...PANEL (RIGHT SIDE)	1
10	XDFZZ	96073	1373-4641	...PANEL (REAR)	1
11	XDFZZ	96073	1373-2521	...COVER ASSEMBLY, TERM	1
12	XDFZZ	96073	1373-0958	...LATCH,SPRING	2
13	XDFZZ	96073	1373-1089	...FASTENER,COVER	2
14	XDFZZ	96073	1373-2251	...TERMINAL,INSULATED	2
15	XDFZZ	96073	1373-2253	...TERMINAL, BUS BAR	2
16	PAFZZ	96073	1373-4673	...VALVE,SOLENOID (GAS)	1
17	PAFZZ	96073	1373-4674	...VALVE,SOLENOID (WATER)	1
18	PAFZZ	96073	0803-0281	...CONNECTOR,GAS	2
19	PAFZZ	96073	0803-0280	...CONNECTOR,WATER	2
20	XDFZZ	96073	1373-2146	...HANDLE	1
21	XDFZZ	96073	1373-4112	...SWITCH,MODE	1
22	XDFZZ	96073	1373-1972	...HOUSING,FAN	1
23	XDFZZ	96073	1373-0125	...BLADE,FAN	1
24	XDFZZ	96073	1373-0124	...MOTOR, ALTERNATING C	1
25	PAFZZ	96073	1373-4648	...TRANSFORMER ASSEMBL	1
26	XDFZZ	96073	9951-2212	...STUD,TERMINAL	9
27	XDFZZ	96073	1373-0646	...BOARD,TERMINAL	1
28	XDFZZ	96073	1373-0122	...LINK,VOLTAGE	2
29	PAFZZ	96073	1373-0462	...CAPACITOR	1
30	XDFZZ	96073	1373-0799	...BRACKET,CAPACITOR	1
31	XDFZZ	96073	1373-4640	...PANEL (LOWER FRONT)	1
32	PAFZZ	96073	1373-0476	...CAPACITOR, FIXED (0.047 UF,1600 VOLT)	1
33	PAFZZ	96073	1373-2461	...CAPACITOR,FIXED (0.1 UF,500 VOLT)	2
34	XDFZZ	96073	1373-4675	...SHUNT ASSEMBLY	1
35	XDFZZ	96073	1373-1575	...BUS BAR	1
36	PAFFF	96073	1373-4664	...ELECTRONIC COMPONEN	1
37	PAFZZ	96073	1373-4016	....S.C.R. ASSEMBLY,DUA	1
38	XDFZZ	96073	1373-3979	....BOARD ASSEMBLY,SNUB	1
39	XDFZZ	96073	1373-0469	....RECTIFIER,BRIDGE	1
40	XDFZZ	96073	1373-0638	....DIOD E ASSEMBLY (REVERSE POLARITY)	1
41	PAFZZ	96073	1373-4084	....CAPACITOR ASSEMBLY	1
42	XDFZZ	96073	1373-4657	....HEAT SINK	1
43	XDFZZ	96073	9951-2957	....SPACER (MALE NYLON)	4

(1) ITEM NO	(2) SMR CODE	(3) FSCM	(4) PART NUMBER	(5) DESCRIPTION AND USABLE ON CODES(UOC)	(6) QTY
44	XDFZZ	96073	1373-1742	....TUBE,JUMPER	2
45	XDFZZ	96073	9951-2958	....SPACER (FEMALE NYLON)	4
46	PAFZZ	96073	1373-4113	...RESISTOR,ELECTRICAL (25 OHM,175 WATT)	1
47	XDFZZ	96073	9951-2558	... BRACKET,RESISTOR	4
48	PAFZZ	96073	1373-2087	...RESISTOR,ELECTRICAL (50 OHM,175 WATT)	1
49	XDFZZ	96073	1373-4649	...CHOKE ASSEMBLY (WITH THERMOSTAT)	1
50	XDFZZ	96073	9951-2900	...BUS BAR	1
51	PAFFF	96073	1373-4665	... HIGH FREQUENCY ASSE	1
52	XDFZZ	96073	1373-4695	....COIL,TESLA	1
53	XDFZZ	96073	9951-1779	....RESISTOR,ELECTRICAL (0.5 OHM, 35 WATT)	1
54	XDFZZ	96073	1373-0304	.... CAPACITOR (0.002 UF.6KV)	1
55	XDFZZ	96073	1373-4517	.. SPARK GAP ASSEMBLY	1
56	XDFZZ	96073	1373-0303	....TRANSFORMER (3500 VOLT)	1
57	PAFFF	96073	1373-5145	...ELECTRONIC MODULE A	1
58	PAFZZ	96073	1373-4633	.... SWITCH,ROTARY	1
59	XDFZZ	96073	1373-0611	.... KNOB	5
60	XDFZZ	96073	1373-0632	....POTENTIDMETER (10K OHM,2 WATT).	1
61	XDFZZ	96073	1373-0612	....KNOB	1
62	XDFZZ	96073	1373-1072	....FUSEHOLDER,EXTRACTO	1
63	PACZZ	96073	0828-2395	....FUSE,CARTRIDGE (2 AMP)	1
64	PAFZZ	96073	1373-0756	....CIRCUIT BREAKER (10 AMP)	1
65	XDFZZ	96073	1373-5150	....PANEL (TOP FRONT)	1
66	XDFZZ	96073	1373-4469	....SWITCHBOARD ASSEMBL	1
67	XDFZZ	96073	1373-4762	....MODULE ASSEMBLY,STA	1
68	XDFZZ	96073	1373-4763	....MODULE ASSEMBLY,POS	1
69	PAFZZ	96073	1388-0126	....TIMER ASSEMBLY,PREF	1
70	PAFFF	96073	1373-4767	....PRINTED CIRCUIT BOA (INTERFACE)	1
71	XDFZZ	96073	1373-4455	.....BOARD,CIRCUIT,INTER	1
72	PAFZZ	96073	1373-4627	.....RELAY,ELECTROMAGNET (PILOT)	1
73	PAFZZ	96073	1373-4638	.....RELAY,ELECTROMAGNET (3 POLE DOUBLE THROW)	2
74	PAFFF	96073	1373-4988	....PRINTED CIRCUIT BOA (CONTROL)	1
75	XDFZZ	96073	1373-4696	.....CABLE ASSEMBLY,RIBB (INCLUDES HOUSING AND COVER)	1
76	XDFZZ	96073	1373-4473	.....CONTROL ASSEMBLY,RE	1
77	XDFZZ	96073	1373-2077	.....CAPACITOR (5 MF)	1
78	XDFZZ	96073	1373-0836	.....BRACKET,CAPACITOR	1
79	XDFZZ	96073	1373-2923	.....CAPACITOR (6800 MF)	1
80	XDFZZ	96073	1373-4122	.....BRACKET,CAPACITOR	1
81	XDFZZ	96073	1373-2075	.....RESISTOR (1K OHM,12 WATT)	1
82	XDFZZ	96073	9951-2078	.....RESISTOR (25 OHM,50 WATT)	1
83	XDFZZ	96073	9951-2068	.....BRACKET,RESISTOR	1
84	PAFZZ	96073	1373-2461	.....CAPACITOR,FIXED (0.1 UF,500 VOLT)	2
85	XDFZZ	96073	1373-0128	.....RECEPTACLE,DUPLEX	1
86	XDFZZ	96073	1373-5100	.....TRANSFORMER	1
87	PA000	96073	1388-0043	...FOOT CONTROL,REMOTE	1
88	XDOZZ	96073	1373-1443	....CORD SET	1
89	XDOZZ	96073	1373-0660	....PLUG	1

(1) ITEM NO	(2) SMR CODE	(3) FSCM	(4) PART NUMBER	(5) DESCRIPTION AND USABLE ON CODES(UOC)	(6) QTY
90	XDOZZ	96073	1373-1320	. . . .SWITCH	1
91	XDOZZ	96073	1373-1305	. . . .POTENTIOMETER (10 OHM,2 WATT)	1

END OF FIGURE

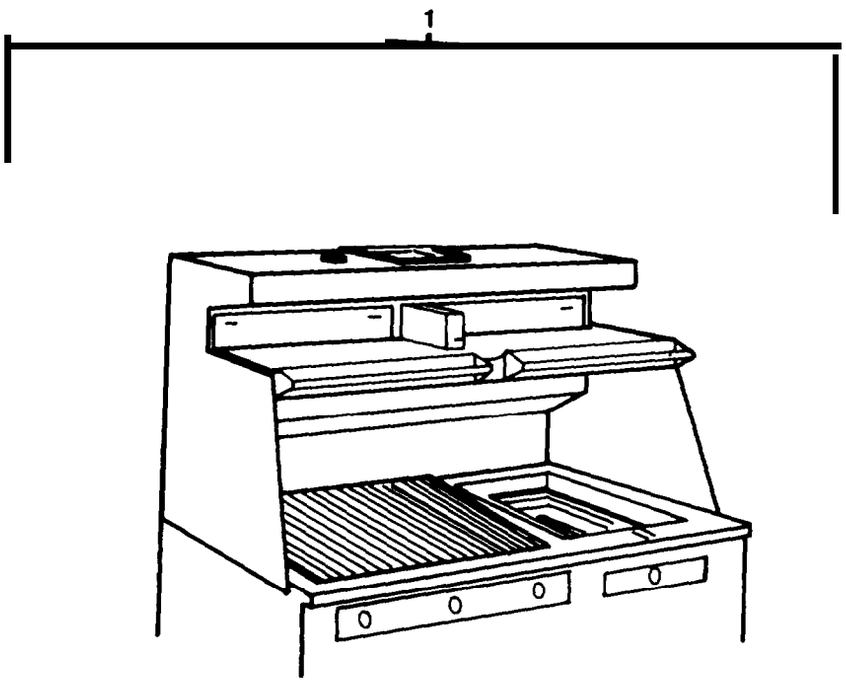

001CE

FIGURE 397. Vent Hood.

(1) ITEM NO	(2) SMR CODE	(3) FSCM	(4) PART NUMBER	(5) DESCRIPTION AND USABLE ON CODES(UOC)	(6) QTY
				GROUP 18 BASIC CRAFT	
				FIG. 397 VENT HOOD	
1	XDOZZ	09051	NAB	. . HOOD,VENT (WITH PLUMBING ENCLOSURE)	
				END OF FIGURE	

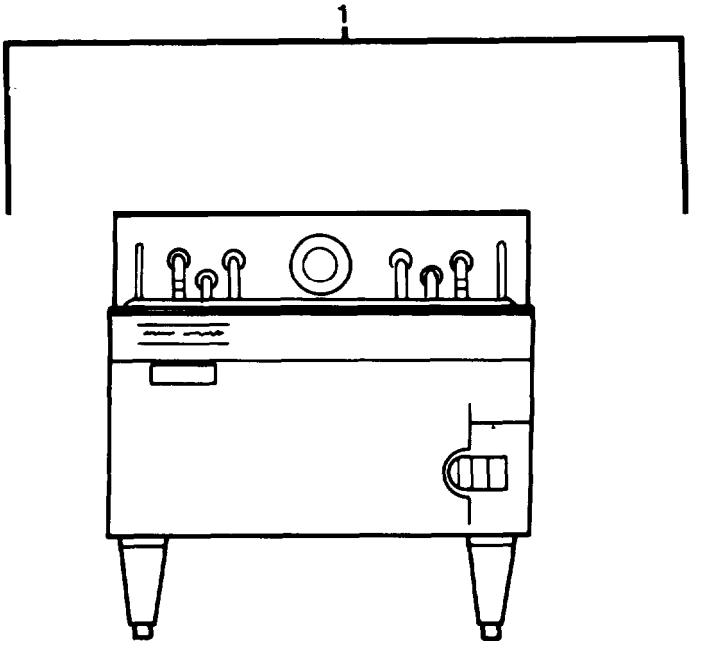

002CE

FIGURE 398. Electric Fry Kettle.

(1) ITEM NO	(2) SMR CODE	(3) FSCM	(4) PART NUMBER	(5) DESCRIPTION AND USABLE ON CODES(UOC)	(6) QTY
				GROUP 18 BASIC CRAFT	
				FIG. 398 ELECTRIC FRY KETTLE	
1	XDOZZ	78770	1435	..FRYER,DEEP FAT	1
				END OF FIGURE	

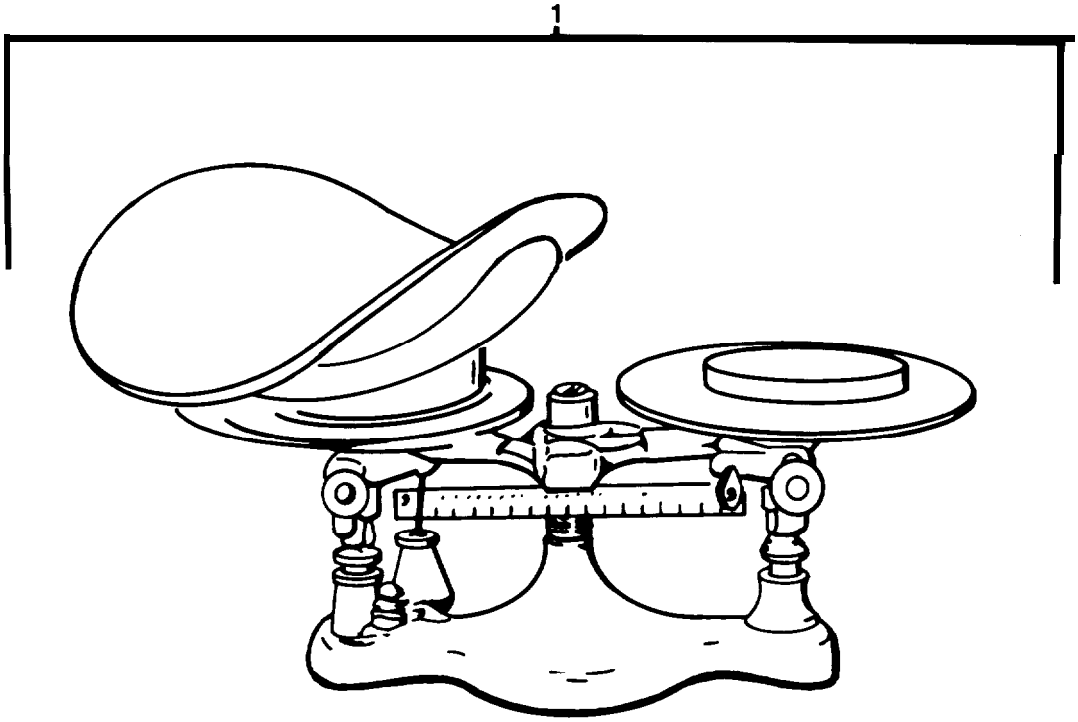

FIGURE 399. Bakers Scale.

(1) ITEM NO	(2) SMR CODE	(3) FSCM	(4) PART NUMBER	(5) DESCRIPTION AND USABLE ON CODES(UOC)	(6) CITY
				GROUP 18 BASIC CRAFT	
				FIG. 399 BAKERS SCALE	
1	XDOZZ	17087	1002TB	..SCALE,BAKERS (8 POUND WITH TIN FOOT SCOOP)	1

END OF FIGURE

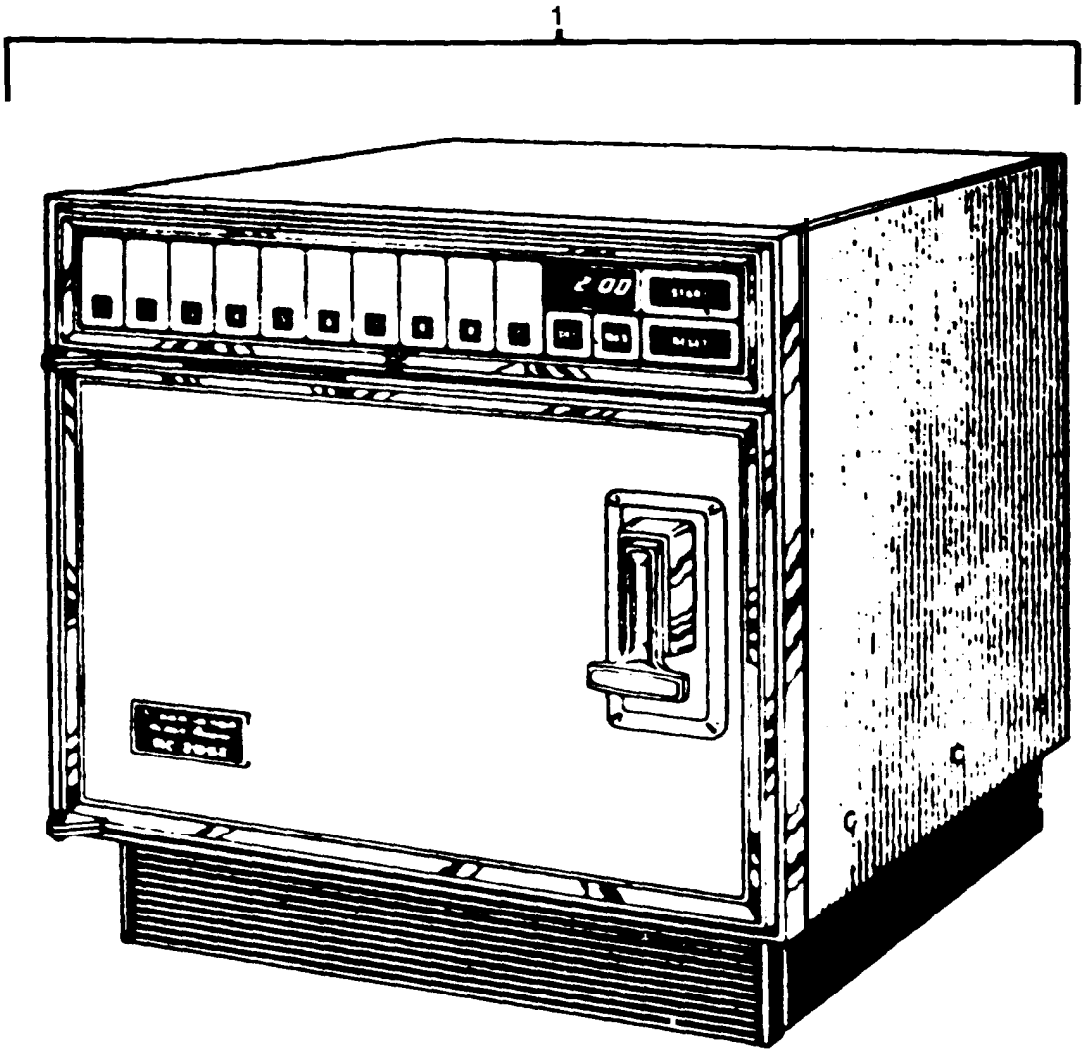

FIGURE 400. Microwave Oven.

(1) ITEM NO	(2) SMR CODE	(3) FSCM	(4) PART NUMBER	(5) DESCRIPTION AND USABLE ON CODES(UOC)	(6) QTY
				GROUP 18 BASIC CRAFT	
				FIG. 400 MICROWAVE OVEN	
1	XDOZZ	14852	RC-20SE	. . OVEN,MICROWAVE (WITH 4 LEGS	1
				END OF FIGURE	

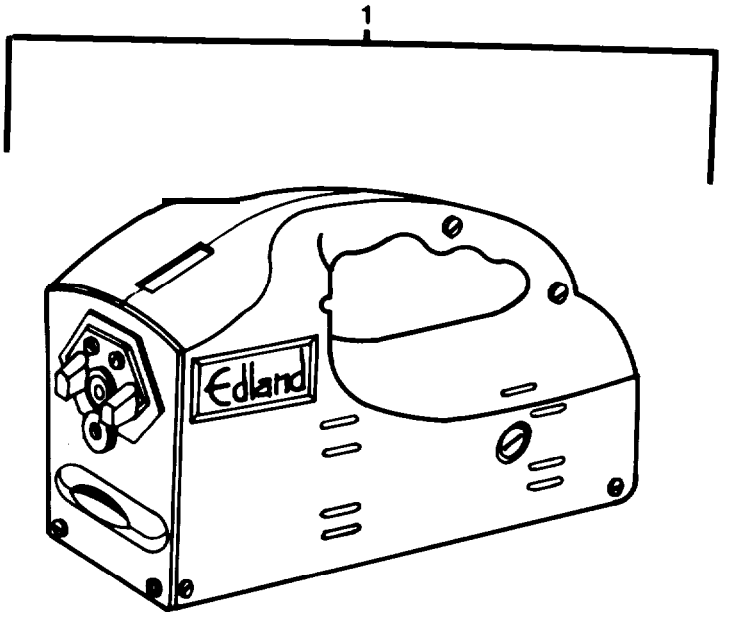

005CE

FIGURE 401. Can Opener. Electric.

(1) ITEM NO	(2) SMR CODE	(3) FSCM	(4) PART NUMBER	(5) DESCRIPTION AND USABLE ON CODES(UOC)	(6) QTY
				GROUP 18 BASIC CRAFT	
				FIG. 401 CAN OPENER, ELECTRIC	
1	XDOZZ	83190	201	..OPENER,CAN,ELECTRIC	1

END OF FIGURE

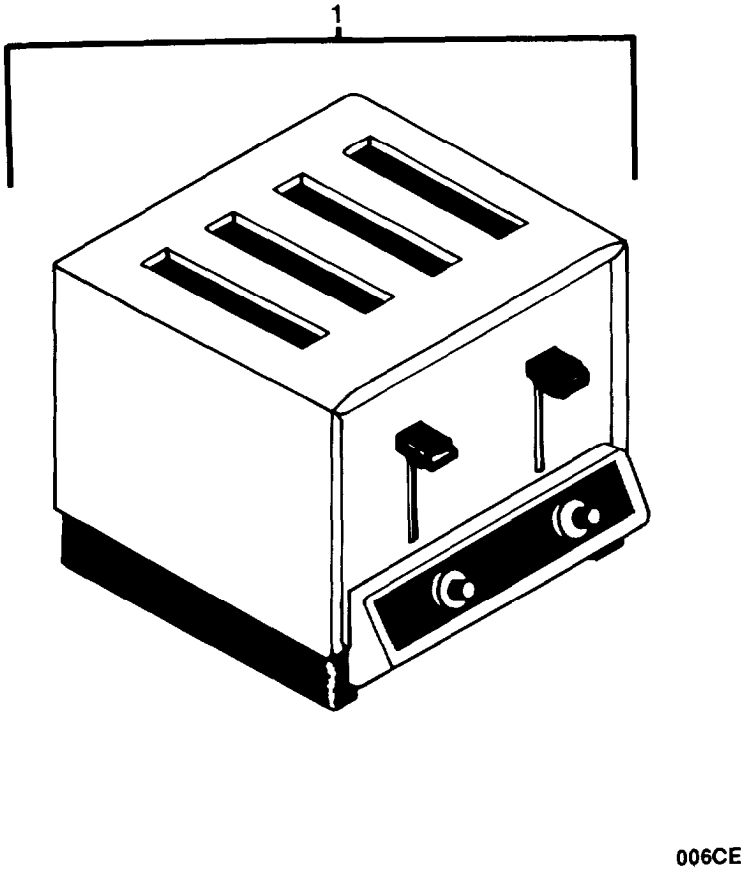

FIGURE 402. Toaster. Electronic.

(1) ITEM NO	(2) SMR CODE	(3) FSCM	(4) PART NUMBER	(5) DESCRIPTION AND USABLE ON CODES(UOC)	(6) QTY
				GROUP 18 BASIC CRAFT	
				FIG. 402 TOASTER, ELECTRIC	
1	XDOZZ	78770	TP120	. . TOASTER,ELECTRICAL	2

END OF FIGURE

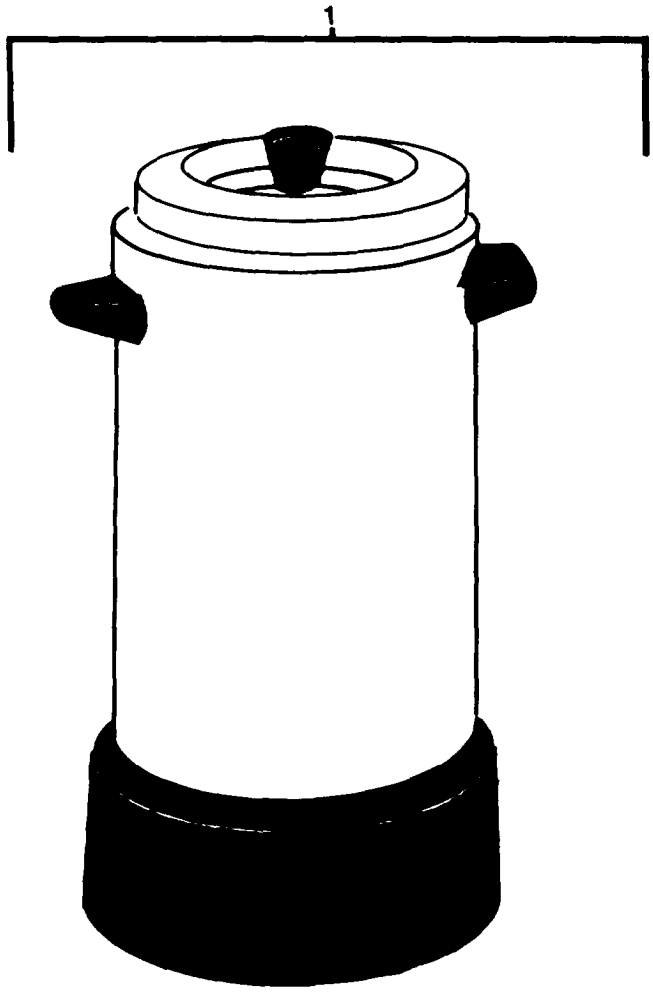

FIGURE 403. Coffee Maker. Percolator.

(1) ITEM NO	(2) SMR CODE	(3) FSCM	(4) PART NUMBER	(5) DESCRIPTION AND USABLE ON CODES(UOC)	(6) QTY
				GROUP 18 BASIC CRAFT	
				FIG. 403 COFFEE MAKER, PERCOLATOR	
1	XDOZZ	93335	43536	..COFFEE MAKER, PERCOL	1
				END OF FIGURE	

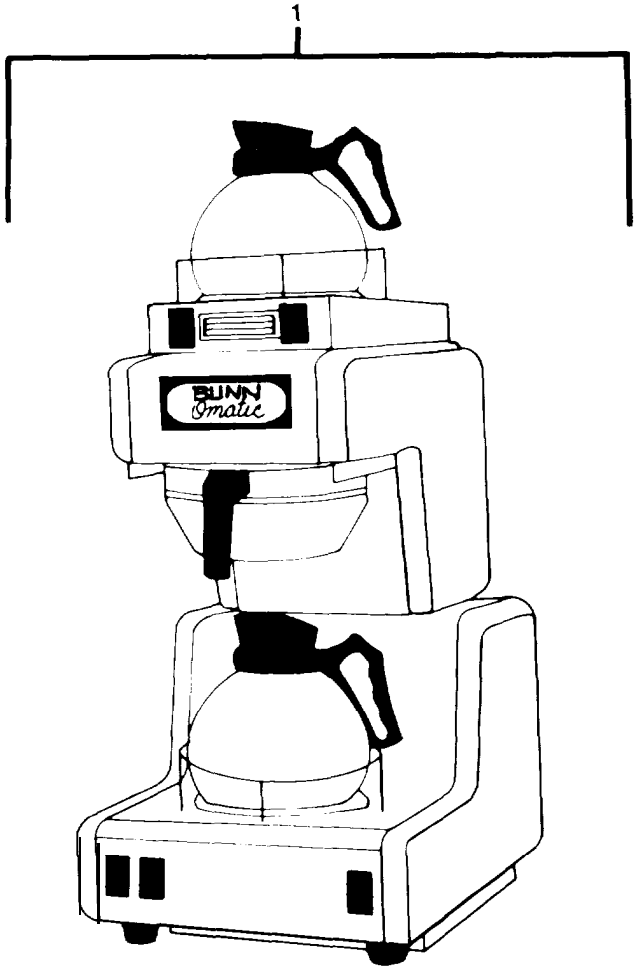

008CE

FIGURE 404. Coffee Maker.

(1) ITEM NO	(2) SMR CODE	(3) FSCM	(4) PART NUMBER	(5) DESCRIPTION AND USABLE ON CODES(UOC)	(6) QTY
				GROUP 18 BASIC CRAFT	
				FIG. 404 COFFEE MAKER	
1	XDOZZ	25628	0T15	. . COFFEE MAKER (WITH CRESCENT DECANTERS AND SEARAILS)	3

END OF FIGURE

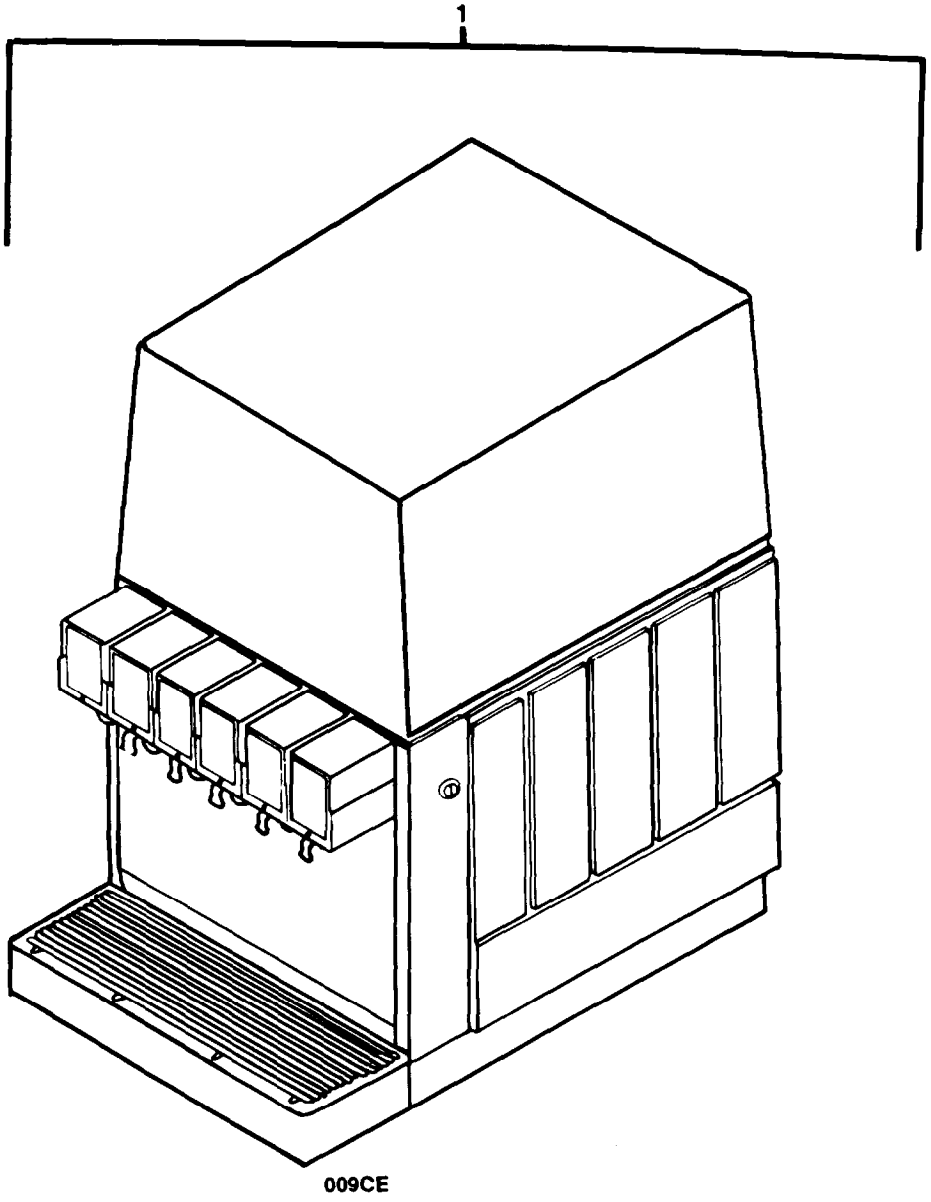

FIGURE 405. Beverage Dispenser.

(1) ITEM NO	(2) SMR CODE	(3) FSCM	(4) PART NUMBER	(5) DESCRIPTION AND USABLE ON CODES(UOC)	(6) QTY
				GROUP 18 BASIC CRAFT	
				FIG. 405 BEVERAGE DISPENSER	
1	XDOZZ	51267	417405000	. . DISPENSER,BEVERAGE, SOFTDRINK	1
				END OF FIGURE	

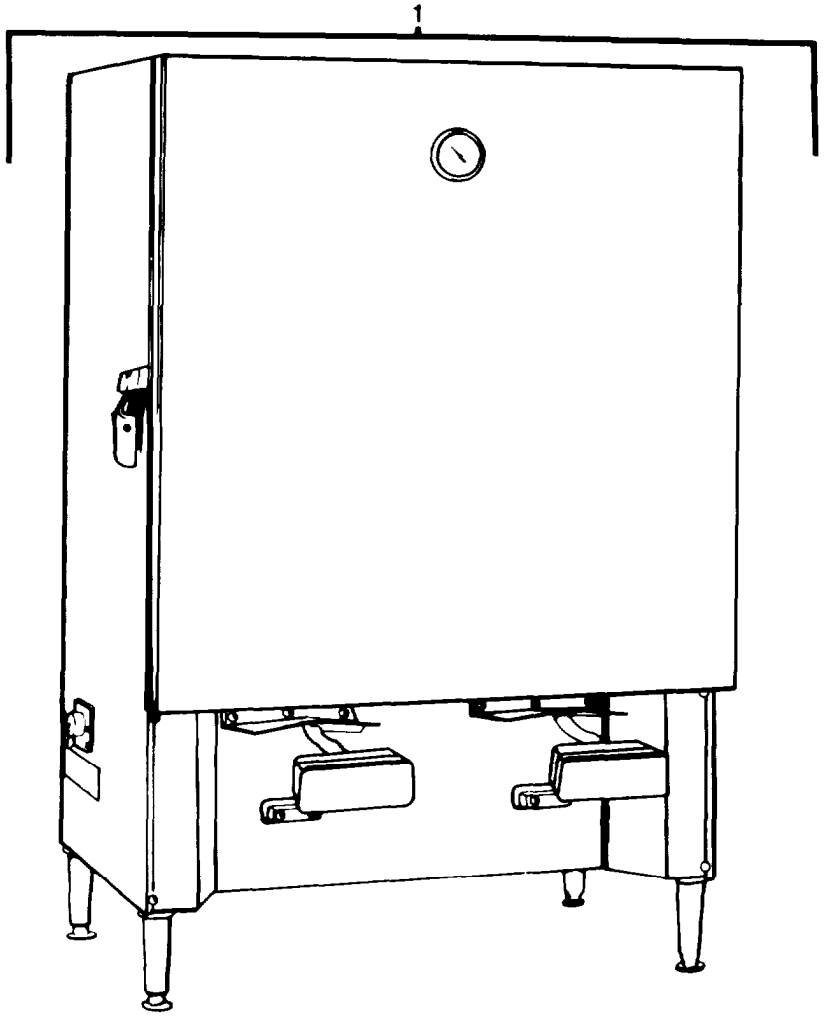

010CE

FIGURE 406. Milk Dispenser.

(1) ITEM ND	(2) SMR CODE	(3) FSCM	(4) PART NUMBER	(5) DESCRIPTION AND USABLE ON CODES(UOC)	(6) QTY
				GROUP 18 BASIC CRAFT	
				FIG. 406 MILK DISPENSER	
1	XDOZZ	28535	MD2-SSC-1	. . DISPENSER,MILK	1

END OF FIGURE

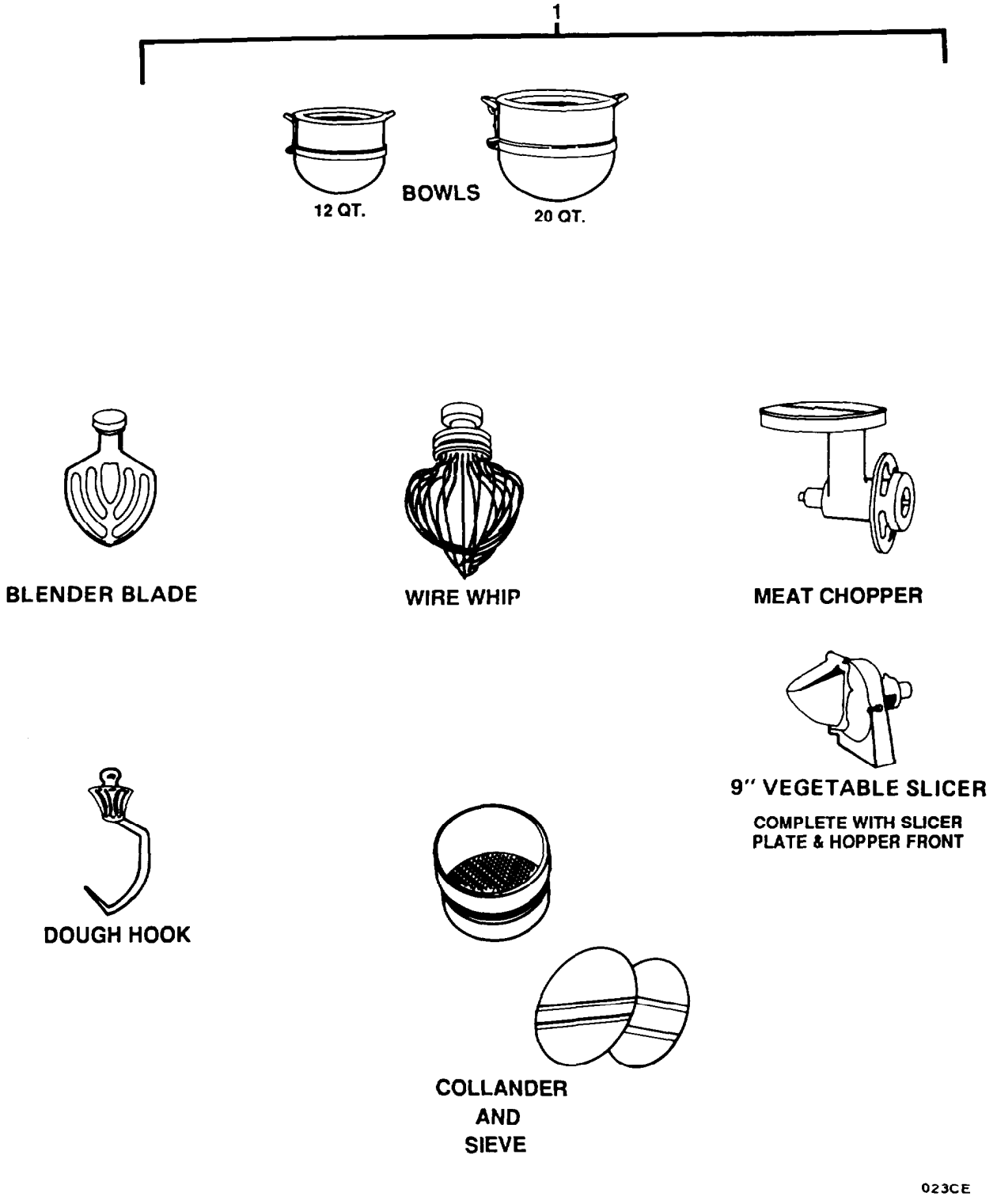

FIGURE 407. Electric Food Mixing Machine - Accessories.

(1) ITEM NO	(2) SMR CODE	(3) FSCM	(4) PART NUMBER	(5) DESCRIPTION AND USABLE ON CODES(UOC)	(6) QTY
				GROUP 18 BASIC CRAFT	
				FIG. 407 ELECTRIC FOOD MIXER - ACCESSORIES	
1	XCOZZ	7L611	FIG 402 RPSTL	..ACCESSORIES	1

END OF FIGURE

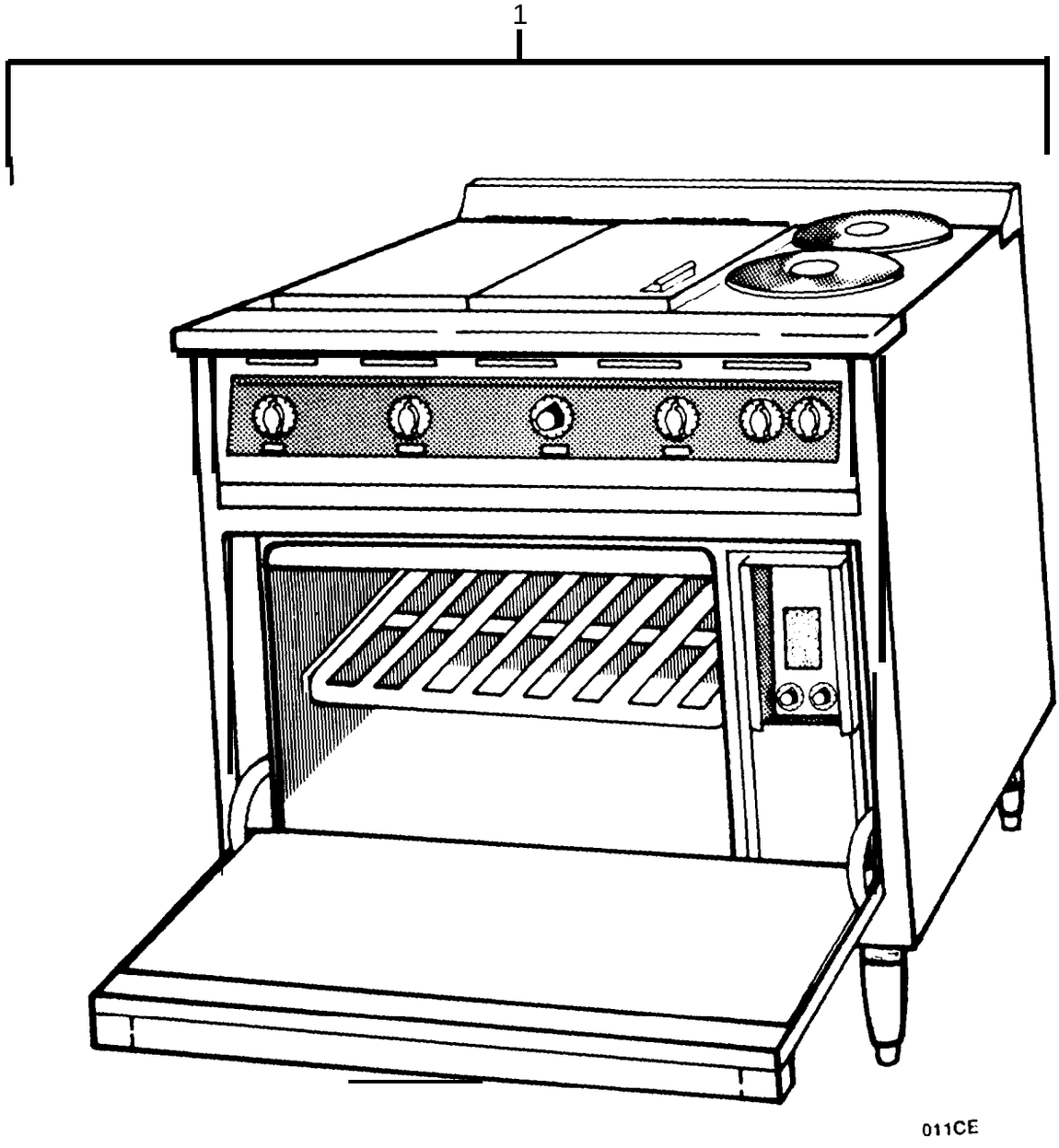

FIGURE 408. Electric Range Assembly (Sheet 1 of 3).

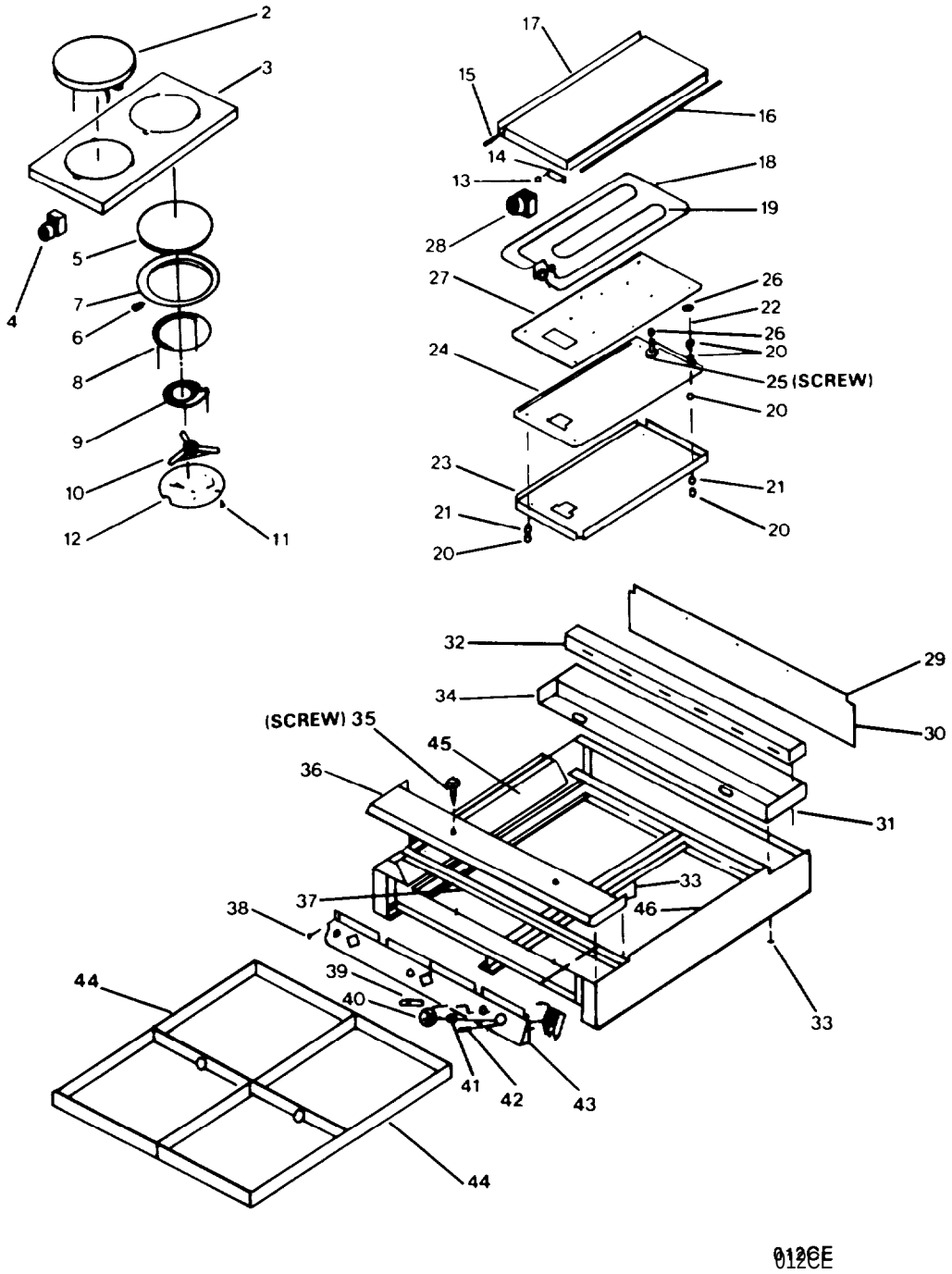

FIGURE 408. Electric Range Assembly (Sheet 2 of 3).

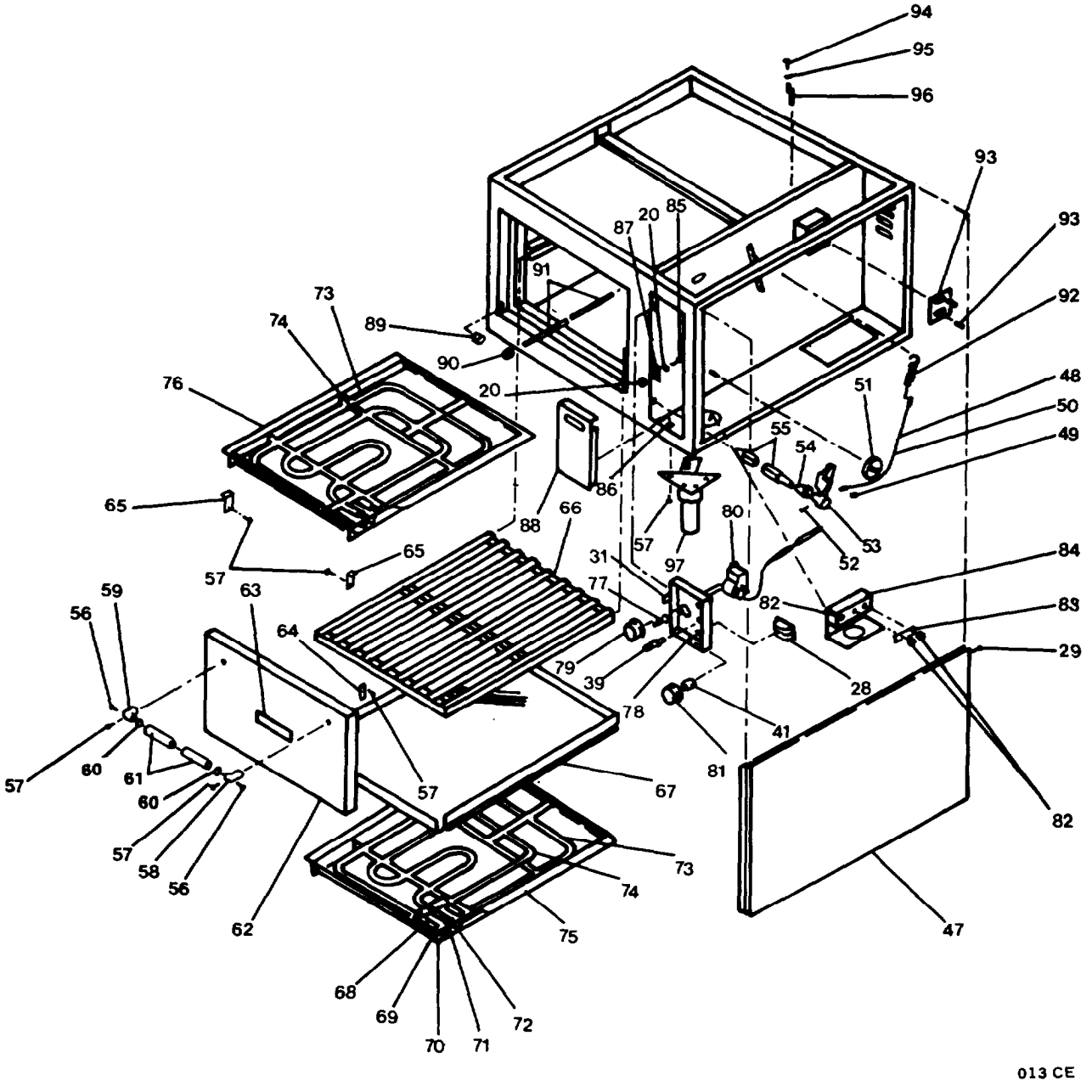

FIGURE 408. Electric Range Assembly (Sheet 3 of 3).

(1) ITEM NO	(2) SMR CODE	(3) FSCM	(4) PART NUMBER	(5) DESCRIPTION AND USABLE ON CODES(UOC)	(6) QTY
				GROUP 18 BASIC CRAFT	
				FIG. 408 ELECTRIC RANGE ASSEMBLY	
1	XDOFF	78770	MR36D1	.... ELECTRIC RANGE ASSE	1
2	XDFZZ	78770	20B2A-74	... UNIT,SURFACE,SOLID	2
3	PAFZZ	78770	20B1A-30	... COVER,ACCESS	1
4	PAFZZ	78770	4111A8733	... SWITCH,ROTARY	2
5	XDFZZ	78770	20B2E-16	... CASTING,SOLID ROUND	2
6	XDFZZ	78770	4118B8802	... SCREW,MACHINE	2
7	XDFZZ	78770	20B2E-10	... RING,SOLID ROUND SU	2
8	PACZZ	78770	20B2E-6	... HEATING ELEMENT,ELE	2
9	PACZZ	78770	20B2E-8	... HEATING ELEMENT, ELE	2
10	XDFZZ	78770	20B2E-15	... CLAMP,SPIDER	2
11	XDFZZ	78770	4111A8824	... SCREW,MACHINE	2
12	XDFZZ	78770	20B2A-150	... PLATE,ELEMENT CLAMP	2
13	XDFZZ	78770	20A2G-7	... SCREW,MACHINE	8
14	XDFZZ	78770	20A1G-9	... LATCH,PLATE	4
15	XDFZZ	78770	20A1G-7	... PIN,PLATE LATCH	4
16	XDFZZ	78770	20A1G-8	... STRIP,KEY	2
17	XDFZZ	78770	20A2G-8	... CASTING,HOT PLATE	2
18	PACZZ	78770	20M1E-2	... HEATING ELEMENT,ELE	2
19	PACZZ	78770	20M1E-6	... HEATING ELEMENT, ELE	2
20	XDFZZ	78770	B301A8817	... NUT,PLAIN,HEXAGON	16
21	XDFZZ	78770	F706A8805	... WASHER,FLAT	8
22	XDFZZ	78770	20M1G-2	... STUD	8
23	XDFZZ	78770	20M1G-1	... SHIELD,ELEMENT	2
24	XDFZZ	78770	20M1G-4	... BAFFLE,ELEMENT	2
25	XDFZZ	78770	F716A8803	... SCREW,MACHINE	8
26	XDFZZ	78770	F706A8809	... WASHER,FLAT	8
27	XDFZZ	78770	20M1G-3	... PLATE,ELEMENT CLAMP	2
28	PAFZZ	78770	4111A8733	... SWITCH,ROTARY	3
29	XDFZZ	78770	F716A8813	... SCREW,MACHINE	8
30	XDFZZ	78770	20A1C-53	... BACK,RANGE TOP	1
31	XDFZZ	78770	4005A8801	... SCREW,MACHINE	6
32	XDFZZ	78770	20A2A-125	... RAIL (BACK TOP)	1
33	XDFZZ	78770	1454J8801	... SCREW,MACHINE	4
34	XDFZZ	78770	20A2A-240	... RAIL (BACK BOTTOM)	1
35	XDFZZ	78770	F716A8803	... SCREW,MACHINE	2
36	XDFZZ	78770	20A1A-64	... RAIL (FRONT)	1
37	XDFZZ	78770	20A1A-51	... SUPPORT,GRIDDLE	1
38	XDFZZ	78770	4118B8801	... SCREW,MACHINE	3
39	PAFZZ	78770	F706A8727	... LIGHT,INDICATOR (RED)	2
40	XDFZZ	78770	20B2A-77	... KNOB,SWITCH	1
41	XDFZZ	78770	4111A0103	... ADAPTER,KNOB	2
42	XDFZZ	78770	3024A8813	... SCREW,MACHINE	4
43	XDFZZ	78770	20B2A-78	... PANEL,LOUVERED	1
44	XDFZZ	78770	20A1A-66	... DRAWER,GREASE	2
45	XDFZZ	78770	20A1C-19	... SHIELD,DRIP	1
46	XDFZZ	78770	20A1C-18	... SHIELD,DRIP	1
47	XDFZZ	78770	18A1A-71	... COVER,SIDE	1
48	XDFZZ	78770	18A1S-17	... SPRING,BALANCE	1

(1) ITEM NO	(2) SMR CODE	(3) FSCM	(4) PART NUMBER	(5) DESCRIPTION AND USABLE ON CODES(UOC)	(6) QTY
49	XDFZZ	78770	18A1S-45	...LINK, CONNECTING	1
50	XDFZZ	78770	18A1A-62	...CABLE, OVEN DOOR	1
51	XDFZZ	78770	18A1S-15	...PULLEY	1
52	XDFZZ	78770	18A1C-13	...PIN, SPRING	1
53	XDFZZ	78770	18A1C-18	...SPRING, ACTUATING AR	1
54	XDFZZ	78770	18A1S-14	...DOOR,TRUNNION,RIGHT	1
55	XDFZZ	78770	18A1C-67	...SHAFT, OVEN DOOR	1
56	XDFZZ	78770	4111A8819	...SCREW,MACHINE	2
57	XDFZZ	78770	B301A8843	...SCREW,CAP,HEXAGON H	22
58	XDFZZ	78770	4111A4037	...SUPPORT.DOO R HANDLE	1
59	XDFZZ	78770	4111A4039	...SUPPORT,DOOR HANDLE	1
60	XDFZZ	78770	4111A4041	...PIVOT, DOOR HANDLE	2
61	XDFZZ	78770	18A1C-97	...HANDLE, OVEN DOOR	1
62	XDFZZ	78770	18A1A-57	...DOOR,OVEN	1
63	XDFZZ	78770	C714B0096	...PLATE,IDENTIFICATIO	1
64	XDFZZ	78770	18A1C-59	...CLIP, HOLD DOWN	2
65	XDFZZ	78770	18A1C-52	...SUPPORT, FRONT UNIT	2
66	XDFZZ	78770	18A1A-63	...SHELF, OVEN	1
67	XDFZZ	78770	18A1A-55	...DECK, OVEN	1
68	XDFZZ	78770	18A1S-10	...NUT,PLAIN,HEXAGON	1
69	XDFZZ	78770	18A1S-9	...WASHER,MICA	1
70	XDFZZ	78770	7A2S-7	...WASHER,MONEL	1
71	XDFZZ	78770	18A1E-17	...JUMPER,MONEL	1
72	XDFZZ	78770	F716A8703	...BUSHING, LAVA	1
73	PACZZ	78770	18A1E-15	...HEATING ELEMENT, ELE	2
74	PACZZ	78770	18A1E-12	...HEATING ELEMENT, ELE	2
75	XDFZZ	78770	18A1A-52	...PANEL,ELEMENT	1
76	XDFZZ	78770	18A1A-47	...PANEL,ELEMENT	1
77	XDFZZ	78770	18A1C-100	...PANEL,SWITCH	1
78	XDFZZ	78770	18A1A-140	...KNOB	1
79	PAFZZ	78770	18A1S-74	...SWITCH,THERMOSTATIC	1
80	XDFZZ	78770	4161A8715	...KNOB,SWITCH	1
81	XDFZZ	78770	F706A8807	...NUT,PLAIN,HEXAGON	3
82	XDFZZ	78770	1429A7015	...JUMPER,COPPER	1
83	XDFZZ	78770	20A1A-181	...BLOCK,TERMINAL	1
84	XDFZZ	78770	18A1S-19	...SCREW,MACHINE	1
85	XDFZZ	78770	1411D8813	...SCREW,MACHINE	1
86	XDFZZ	78770	18AIC-39	...STOP,DOOR	1
87	XDFZZ	78770	18A1A-119	...DOOR, FUSE COMPARTME	1
88	XDFZZ	78770	18A1C-65	...TRUNNION,DOOR	1
89	XDFZZ	78770	4161A8901	...KNOB,DAMPER	1
90	XDFZZ	78770	18A1C-46	...ROD.DAMPER	2
91	XDFZZ	78770	18A1S-2	...PIN,COTTER	1
92	XDFZZ	78770	18A1A-34	...DAMPER	1
93	XDFZZ	78770	18A1S-5	...SPRING, HELICAL, COMP	1
94	XDFZZ	78770	1501D8803	...WASHER,FLAT	1
95	XDFZZ	78770	18A1C-23	...SPINDLE,DAMPER	1
96	XDFZZ	78770	14C4A-39	...SUPPORT, LEG	4

END OF FIGURE

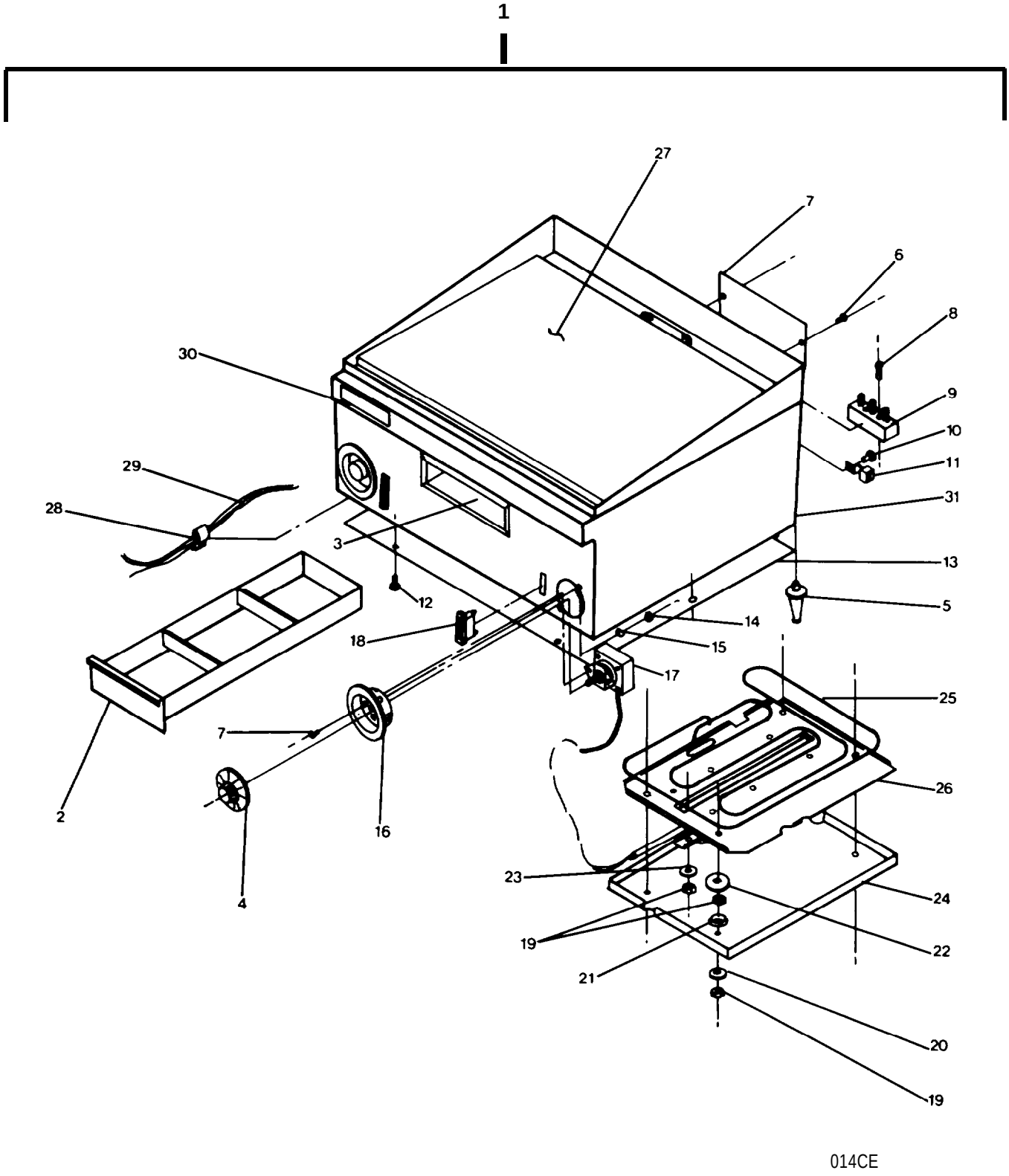

FIGURE 409. Griddle. Self Heating.

(1) ITEM NO	(2) SMR CODE	(3) FSCM	(4) PART NUMBER	(5) DESCRIPTION AND USABLE ON CODES(UOC)	(6) QTY
				GROUP 18 BASIC CRAFT	
				FIG. 409 GRIDDLE, SELF HEATING	
1	XDOFF	78770	7224	..GRIDDLE,SELF-HEATIN	1
2	XDFZZ	78770	7236B0017	...DRAWER,GREASE,GRIDD	1
3	XDFZZ	78770	7236B0013	...ENCLOSURE GRIDDLE	1
4	PAFZZ	78770	A710E8751	...KNOB	2
5	XDFZZ	78770	1523B0003	...LEGS,COUNTER TOP FO	4
6	XDFZZ	78770	B301A8861	...SCREW,MACHINE	2
7	XDFZZ	78770	7236B3033	...COVER,TERMINAL BOX	1
8	XDFZZ	78770	B301G8839	...SCREW,MACHINE	6
9	XDFZZ	78770	3027B0001	...BLOCK,TERMINAL	1
10	XDFZZ	78770	F716A8811	...SCREW,MACHINE	1
11	XDFZZ	78770	1502-8707	...LUG,SOLDERLESS	1
12	XDFZZ	78770	B301A8863	...SCREW,MACHINE	6
13	XDFZZ	78770	7224B0013	...BOTTOM,CASE	1
14	XDFZZ	78770	1411D8809	...NUT,PLAIN,HEXAGON	4
15	XDFZZ	78770	B301A8829	...WASHER,LOCK	4
16	XDFZZ	78770	1523B0001	...MOUNTING CUP, CONTRO	2
17	PAFZZ	78770	2262A8723	...SWITCH, THERMOSTATIC	2
18	PAFZZ	78770	1433B8701	...LIGHT,INDICATOR	2
19	XDFZZ	78770	F706A8807	...NUT,PLAIN,HEXAGON	8
20	XDFZZ	78770	F706A8805	...WASHER,FLAT	4
21	XDFZZ	78770	7236B8901	...EYELET	4
22	XDFZZ	78770	F706A8809	...WASHER,FLAT	4
23	XDFZZ	78770	3B82D8737	...WASHER,CUP	2
24	XDFZZ	78770	7236B1005	...BAFFLE	1
25	PAFZZ	78770	7236B8714	...HEATING ELEMENT, ELE	1
26	XDFZZ	78770	7236B1001	...PLATE, ELEMENT CLAMP	1
27	XDFZZ	78770	7224B0001	...PLATE, GRIDDLE	1
28	XDFZZ	78770	1455A8927	...WIRE CLAMP	1
29	XDFZZ	78770	7224B0901	...CABLE ASSEMBLY, POWE	1
30	XDFZZ	78770	1523B8903	...PLATE, IDENTIFICATIO	1
31	XDFZZ	78770	7224B0011	...CASE ASSEMBLY	1

END OF FIGURE

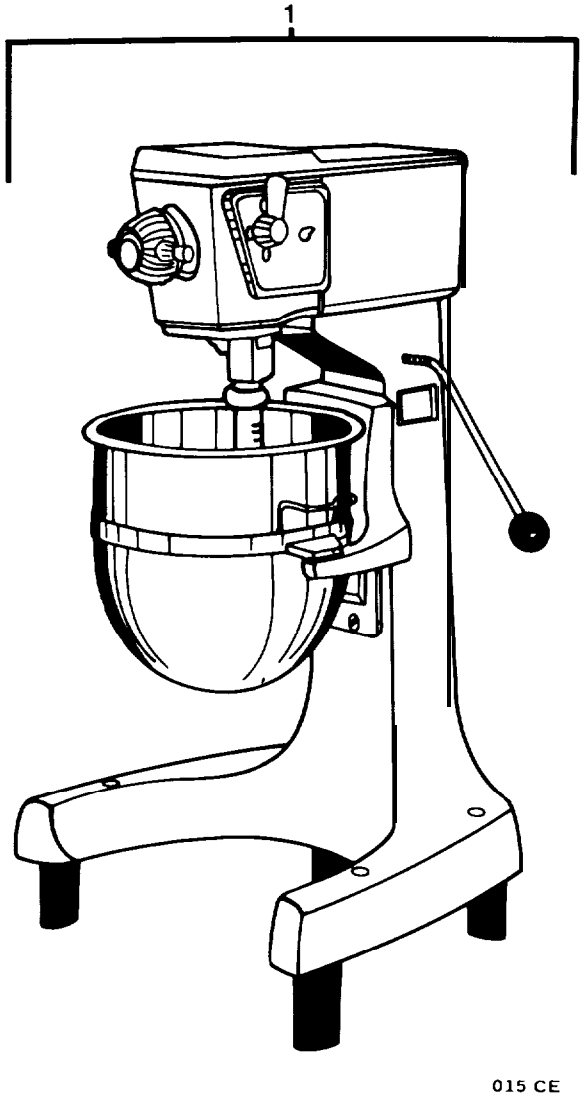

FIGURE 410. Electric Food Mixing Machine (Sheet 1 of 8).

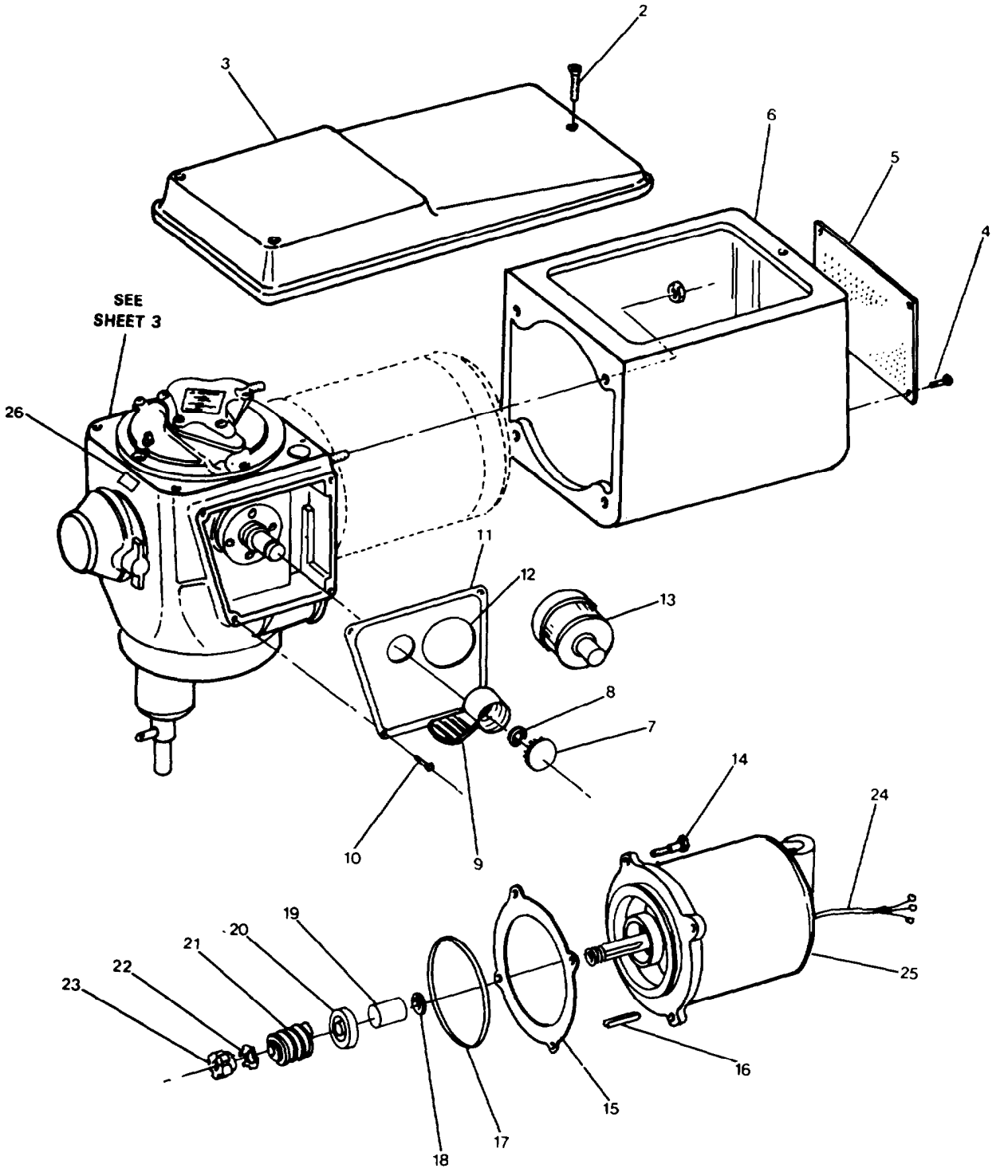

TRANSMISSION, MOTOR, AND HOUSING

016 CE

FIGURE 410. Electric Food Mixing Machine (Sheet 2 of 8).

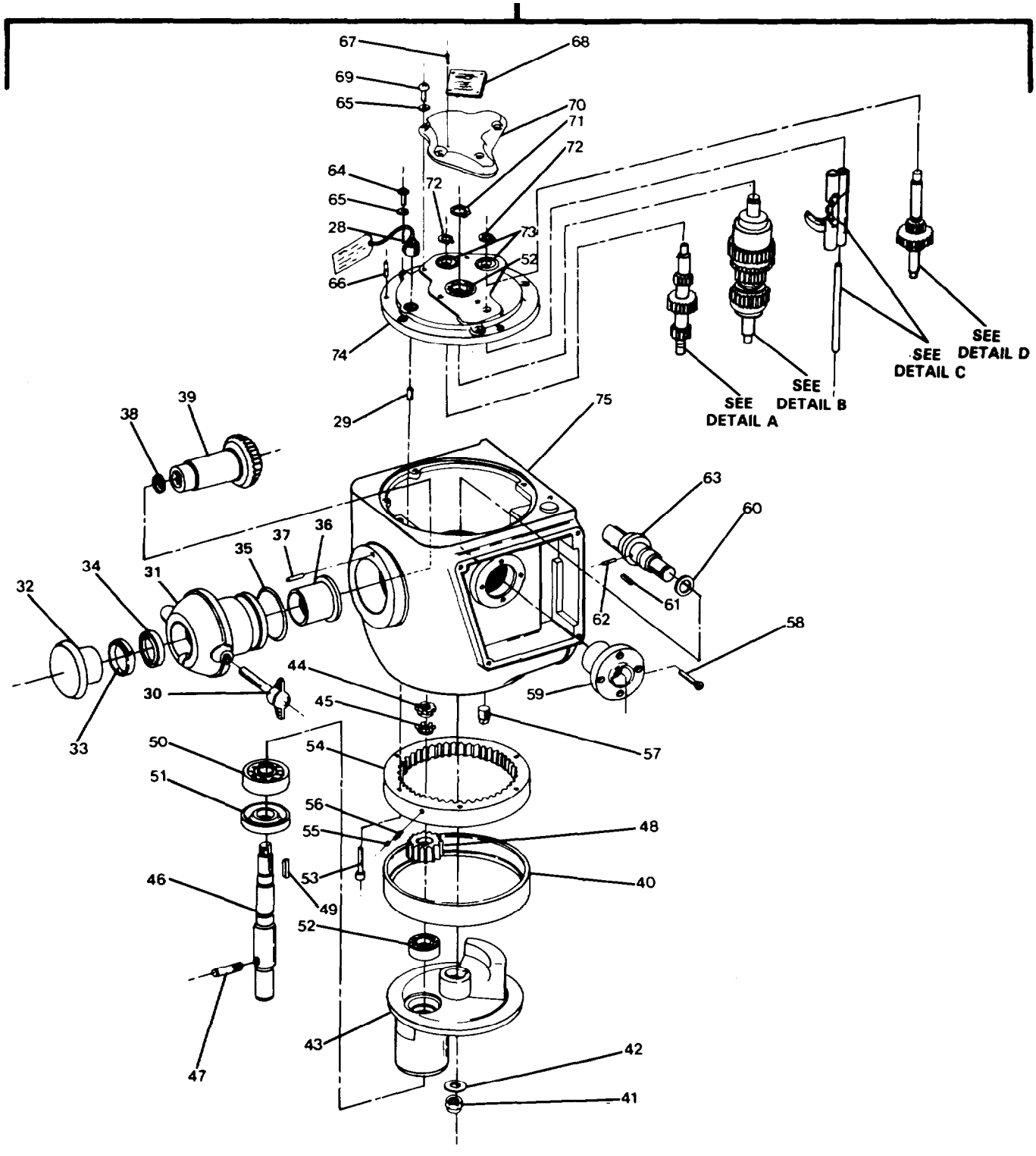

FIGURE 410. Electric Food Mixing Machine (Sheet 3 of 8).

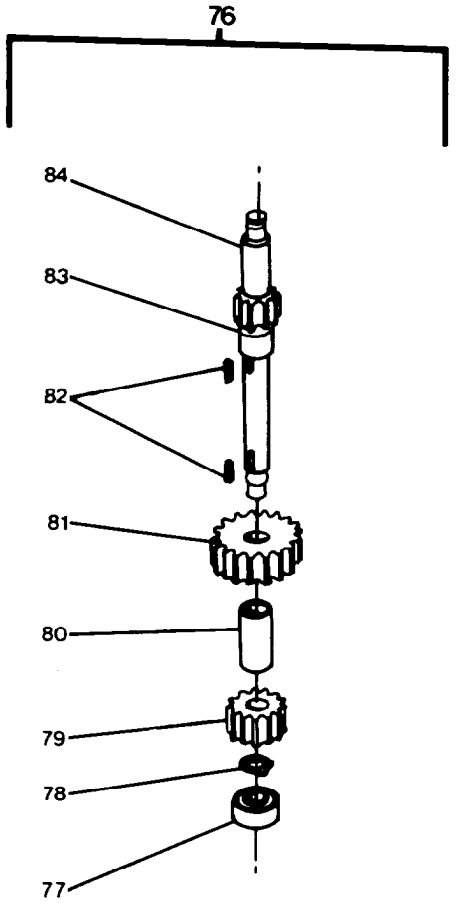

DETAIL A
INTERMEDIATE SHAFT ASSEMBLY
TRANSMISSION

018 CE

FIGURE 410. Electric Food Mixing Machine (Sheet 4 of 8).

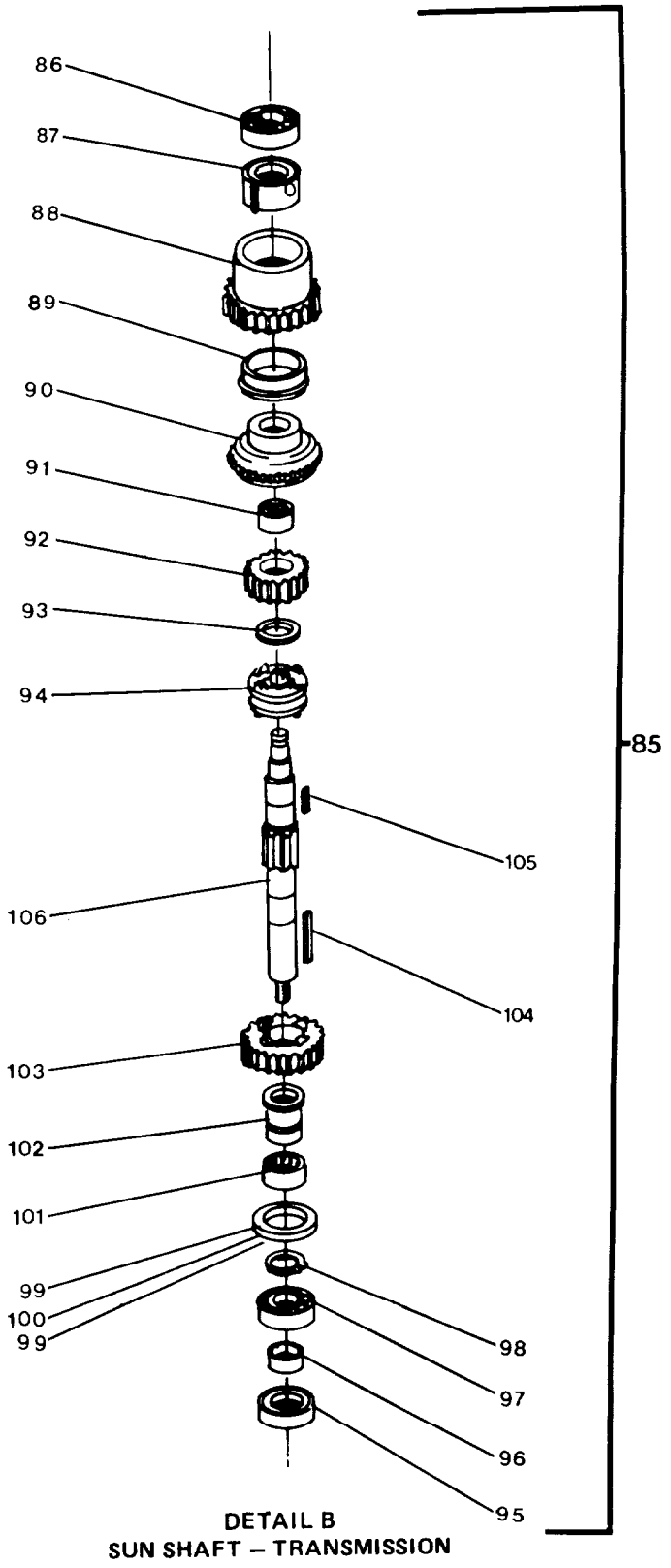

FIGURE 410. Electric Food Mixing Machine (Sheet 5 of 8).

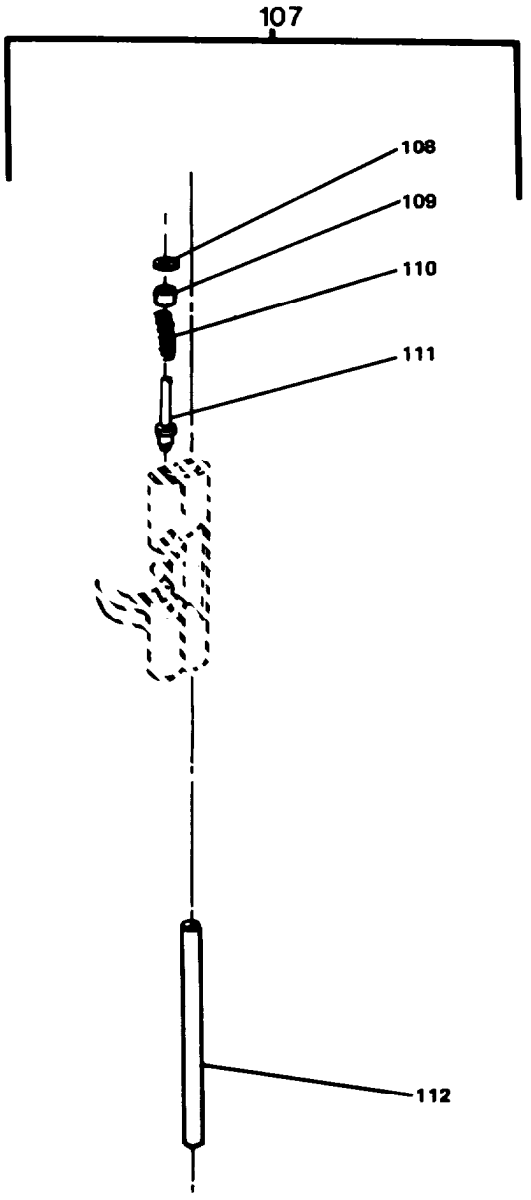

DETAIL C
SHIFTER YOKE ASSEMBLY
TRANSMISSION

020 CE

FIGURE 410. Electric Food Mixing Machine (Sheet 6 of 8).

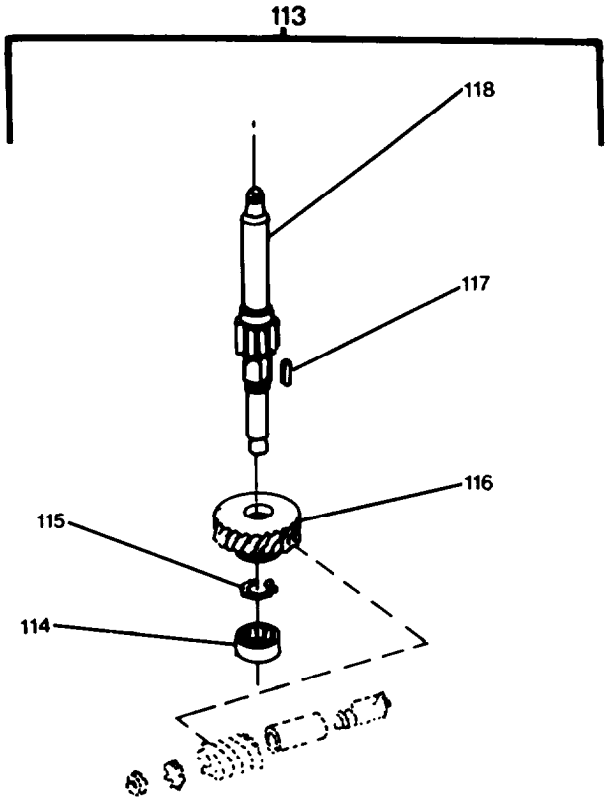

DETAIL D
PINION SHAFT
TRANSMISSION

021 CE

FIGURE 410. Electric Food Mixing Machine (Sheet 7 of 8).

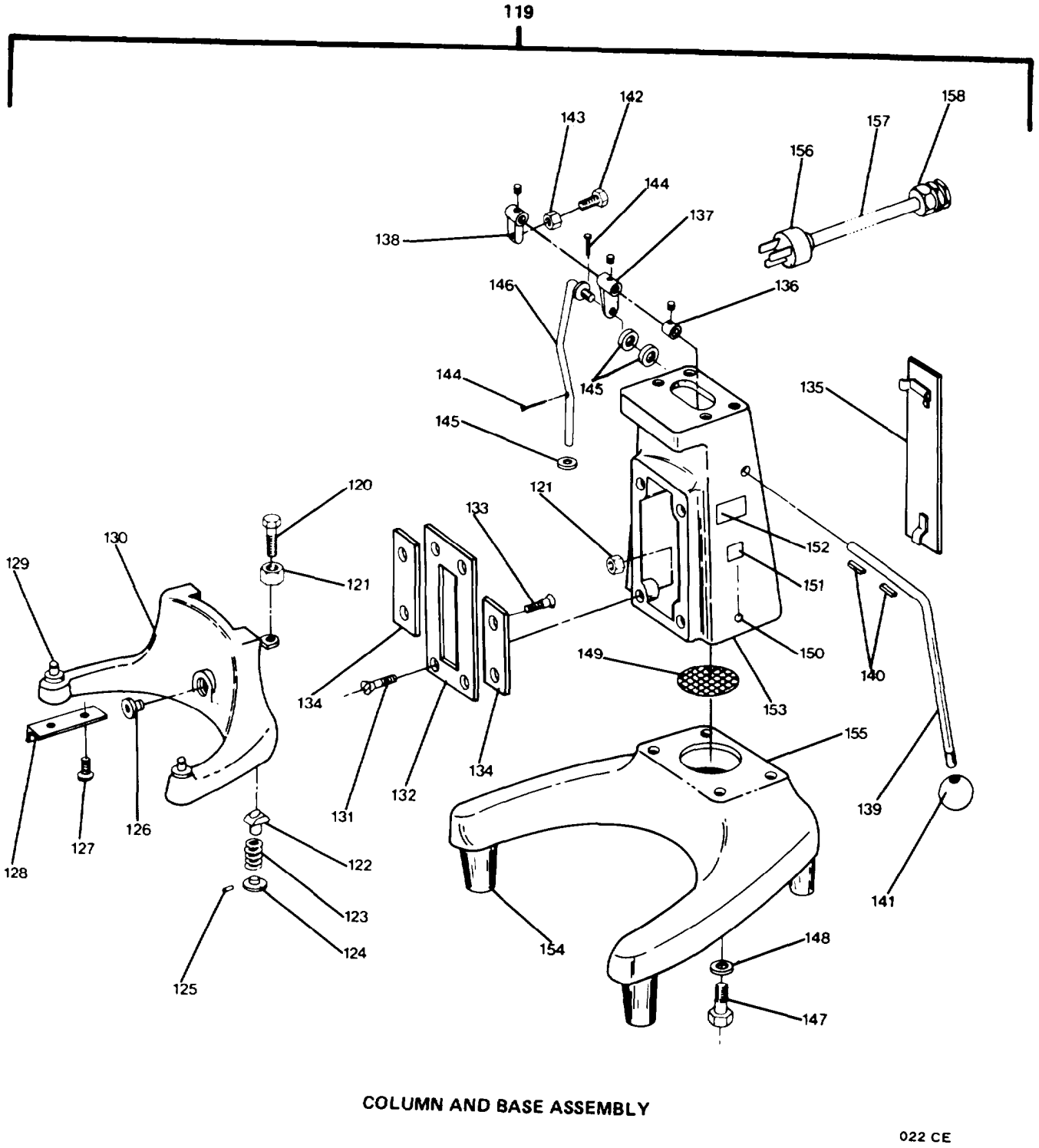

FIGURE 410. Electric Food Mixing Machine (Sheet 8 of 8).

(1) ITEM NO	(2) SMR CODE	(3) FSCM	(4) PART NUMBER	(5) DESCRIPTION AND USABLE ON CODES(UOC)	(6) QTY
				GROUP 18 BASIC CRAFT	
				FIG. 410 ELECTRIC FOOD MIXING MACHINE	
1	PBOFF	7L611	B20T	.. MIXING,MACHINE,FOOD	1
2	XDFZZ	7L611	W1-12549	... SCREW,MACHINE	3
3	XDFZZ	7L611	M3-1961	... COVER,TOP	1
4	XDFZZ	7L611	W0-20279	... SCREW,MACHINE	4
5	XDFZZ	7L611	M1-3451	... PLATE,COVER	1
6	XDFZZ	7L611	M2-3321	... HOUSING,MOTOR	1
7	XDFZZ	7L611	M0-17379	... PLUG	1
8	XDFZZ	7L611	M0-17380	... RING,RETAINING	1
9	XDFZZ	7L611	M2-1458	... LEVER,MANUAL CONTRO	1
10	XDFZZ	7L611	M1-15316	... SCREW,.MACHINE	4
11	XDFZZ	7L611	M2-3327	... PLATE,IDENTIFICATIO	1
12	XDFZZ	7L611	M1-95654	... GUARD,SWITCH	1
13	PBFZZ	7L611	M1-1957	... TIMER,INTERVAL	1
14	XDFZZ	7L611	M1-3573	... SCREW,CAP,SOCKET HE	4
15	PAFZZ	7L611	M2-3427	... GASKET	1
16	XDFZZ	7L611	M1-15358	... KEY	1
17	PAFZZ	7L611	M1-15141	... PACKING,PREFORMED	1
18	XDFZZ	7L611	M1-15144	... WASHER	1
19	XDFZZ	7L611	M1-1491	... SPACER	1
20	PAFZZ	7L611	M1-15143	... SEAL,PLAIN,ENCASED	1
21	PAFZZ	7L611	M-1252	... GEAR,WORM	1
22	XDFZZ	7L611	M1-15142	... WASHER,LOCK	1
23	XDFZZ	7L611	M1-15145	... NUT,SELF-LOCKING,HE	1
24	XDFZZ	7L611	M1-15366	... CABLE ASSEMBLY	1
25	PBFZZ	7L611	M1-15117	... MOTOR,ALTERNATING C	1
26	XDFZZ	7L611	M1-95650	... PLATE,INSTRUCTION	1
27	PBOFF	7L611	M5-3330-D	... TRANSMISSION MECHAN	1
28	XDFZZ	7L611	M1-1681	... PLUG ASSEMBLY	1
29	XDFZZ	7L611	W0-16086	.... SETSCREW	1
30	XDFZZ	7L611	M1-1438-A	.... SCREW,SPECIAL	1
31	XDFZZ	7L611	M3-3333-A	.... HUB	1
32	XDFZZ	7L611	M1-1933	.... CAP	1
33	XDFZZ	7L611	M1-95032	.... SLEEVE	1
34	PAFZZ	7L611	M1-15314	.... SEAL,PLAIN,ENCASED	1
35	PAFZZ	7L611	M0-17384	.... PACKING,PREFORMED	1
36	XDFZZ	7L611	M1-3334	.... BUSHING	1
37	XDFZZ	7L611	M0-17385	.... PIN	1
38	XDFZZ	7L611	M0-17386	.... PLUG,EXPANSION	1
39	PAFZZ	7L611	M2-1262-G	.... SHAFT,SHOULDERED	1
40	XDFZZ	7L611	M2-1284-A	.... RING,DRIP	1
41	XDFZZ	7L611	W0-16085	.... NUT,STOP	1
42	XDFZZ	7L611	W0-16084	.... WASHER,FLAT	1
43	XDFZZ	7L611	M3-1248-E	.... SUPPORT,SHAFT	1
44	XDFZZ	7L611	M0-16081	.... NUT,LOCK	1
45	XDFZZ	7L611	M0-16080	.... WASHER,LOCK	1
46	PAFZZ	7L611	M2-1250-D	.... SHAFT,SHOULDERED (BEATER)	1
47	PAFZZ	7L611	M1-1396-A	.... PIN,STRAIGHT,THREAD	1

(1) ITEM NO	(2) SMR CODE	(3) FSCM	(4) PART NUMBER	(5) DESCRIPTION AND USABLE ON CODES(UOC)	(6) QTY
48	XDFZZ	7L611	M1-1263-A	. . . . PINION,PLANET	1
49	XDFZZ	7L611	M1-1658	. . . . KEY	1
50	XDFZZ	7L611	M0-17383	. . . . BEARING	2
51	PAFZZ	7L611	W1-12561	. . . . SEAL,PLAIN,ENCASED	1
52	XDFZZ	7L611	M0-17368	. . . . BEARING	2
53	XDFZZ	7L611	S0-16083	. . . . SCREW,CAP,SOCKET HE	6
54	XDFZZ	7L611	M2-1264-C	. . . . GEAR,RING	1
55	XDFZZ	7L611	W0-16082	. . . . BALL	3
56	XDFZZ	7L611	M1-1292	. . . . SPRING	3
57	XDFZZ	7L611	W0-16079	. . . . PLUG	1
58	XDFZZ	7L611	W0-16078	. . . . SCREW,MACHINE	4
59	XDFZZ	7L611	M1-1408-A	. . . . COVER,BEARING	1
60	PAFZZ	7L611	M0-17381	. . . . PACKING,PREFORMED	1
61	XDFZZ	7L611	M1-1659	. . . . KEY	1
62	XDFZZ	7L611	M0-17382	. . . . PIN,DRIV-LOK	1
63	PAFZZ	7L611	M2-3332-D	. . . . SHAFT,SHOULDERED (CAM AND GEAR)	1
64	XDFZZ	7L611	W0-16074	. . . . SCREW,MACHINE	4
65	XDFZZ	7L611	M0-17365	. . . . WASHER,FLAT	9
66	XDFZZ	7L611	M0-17364	. . . . PIN,DRIV-LOK	1
67	XDFZZ	7L611	M0-16076	. . . . PIN,ESCUTCHEON	4
68	XDFZZ	7L611	M1-1492-B	. . . . PLATE,IDENTIFICATIO	1
69	XDFZZ	71611	W0-16075	. . . . SCREW,MACHINE	5
70	XDFZZ	7L611	M2-1407-B	. . . . COVER,SHAFT	1
71	XDFZZ	7L611	W1-13059	. . . . RING,RETAINING	1
72	XDFZZ	7L611	M0-17367	. . . . RING,RETAINING	2
73	XDFZZ	7L611	M0-17366	. . . . BEARING	2
74	XDFZZ	7L611	M4-1959-A	. . . . COVER	1
75	XDFZZ	7L611	M5-1960-C	. . . . HOUSING,TRANSMISSIO	1
76	XDOFF	7L611	W0-14862	. . . . INTERMEDIATE SHAFT	1
77	XDFZZ	7L611	M0-17366	. . . . . BEARING	1
78	XDFZZ	7L611	M1-15083	. . . . . RING,RETAINING	1
79	XDFZZ	7L611	M1-15075	. . . . . PINION,SPUR	1
80	XDFZZ	7L611	M1-15077	. . . . SPACER	1
81	XDFZZ	7L611	M1-15076	. . . . GEAR	1
82	XDFZZ	7L611	M1-1559	. . . . KEY	1
83	XDFZZ	7L611	M1-1280-A	. . . . SPACER	2
83	XDFZZ	7L611	M1-15078	. . . . SPACER (FOR HEAVY DUTY SHAFT ONLY)	2
84	XDFZZ	7L611	M1-15074	. . . . GEAR SHAFT,SPUR	1
85	XCOFF	7L611	019CE	. . . . SUN SHAFT GROUP	1
86	XDFZZ	7L611	M0-17369	. . . . BEARING	1
87	PBFZZ	7L611	M1-1934	. . . . CLUTCH,POSITIVE	1
88	PBFZZ	7L611	M2-1258-D	. . . . GEAR,SPUR (WITH SLEEVE).	1
89	XDFZZ	7L611	M0-17370	. . . . BUSHING	1
90	XDFZZ	7L611	M2-1261-E	. . . . GEAR,BEVEL	1
91	XDFZZ	7L611	M0-17371	. . . . BEARING,NEEDLE	1
92	XDFZZ	7L611	M2-1260-F	. . . . GEAR AND CLUTCH	1
93	XDFZZ	7L611	M0-17372	. . . . BUSHING,THRUST	1
94	XDFZZ	7L611	M2-1265-C	. . . . CLUTCH	1
95	PAFZZ	7L611	M1-15315	. . . . SEAL,PLAIN,ENCASED	1
96	XDFZZ	7L611	M1-1279-B	. . . . SPACER	1
97	XDFZZ	7L611	M0-17378	. . . . BEARING	1

(1) ITEM NO	(2) SMR CODE	(3) FSCM	(4) PART NUMBER	(5) DESCRIPTION AND USABLE ON CODES(UOC)	(6) QTY
98	XDFZZ	7L611	M0-17377	. . . . RING,RETAINING	1
99	XDFZZ	7L611	M0-17375	. . . . . RACE,BEARING,THRUST	2
100	XDFZZ	7L611	M0-17376	. . . . . BEARING,THRUST,NEED	1
101	XDFZZ	7L611	M0-17374	. . . . . BEARING,NEEDLE	1
102	XDFZZ	7L611	M1-1884-B	. . . . . SPACER AND BEARING	1
103	PBFZZ	7L611	M2-1259-E	. . . . . GEAR-SLIP CLUTCH,SP	1
104	XDFZZ	7L611	M1-15079	. . . . . KEY	1
105	XDFZZ	7L611	M1-1560	. . . . . KEY	1
106	PAFZZ	7L611	M2-1271-D	. . . . . SHAFT,SHOULDERED	1
107	PBOFF	7L611	M2-3345-B	. . . . SHIFTER FORK	1
108	XDFZZ	7L611	M0-17373	. . . . . RING,RETAINING	2
109	XDFZZ	7L611	M1-1404-B	. . . . . GUIDE	1
110	XDFZZ	7L611	M1-1288	. . . . . SPRING	2
111	XDFZZ	7L611	M1-3331-B	. . . . . ROD	2
112	XDFZZ	7L611	M1-1293	. . . . . ROD,GUIDE	1
113	XCOFF	7L611	021CE	. . . . PINION SHAFT GROUP	1
114	XDFZZ	7L611	M0-17366	. . . . . BEARING	1
115	XDFZZ	7L611	M1-3488	. . . . . RING,RETAINING	1
116	PAFZZ	7L611	M1-1253-C	. . . . . GEAR,BEVEL	1
117	XDFZZ	7L611	M1-1658	. . . . . KEY	1
118	PAFZZ	7L611	M1-1254-C	. . . . . SHAFT,SHOULDERED (PINION)	1
119	XCOFF	7L611	022CE	. . . . COLUMN AND BASE ASS	1
120	XDFZZ	7L611	M1-15095	. . . . . SCREW,CAP,HEXAGON H	1
121	XDFZZ	7L611	M1-15323	. . . . . NUT,LOCK	5
122	XDFZZ	7L611	M1-1322	. . . . . GUIDE,ROCKER	1
123	XDFZZ	7L611	M1-1320	. . . . . SPRING	1
124	XDFZZ	7L611	M1-1346	. . . . . WASHER,SPRING	1
125	XDFZZ	7L611	M1-15345	. . . . . PIN	1
126	XDFZZ	7L611	M1-1603	. . . . . BUSHING	1
127	XDFZZ	7L611	M1-3514	. . . . . SCREW,MACHINE	2
128	XDFZZ	7L611	M1-3476	. . . . . GUARD,SPLASH	1
129	XDFZZ	7L611	M1-1348-B	. . . . . PIN,BOWL	2
130	XDFZZ	7L611	M4-1417	. . . . . SUPPORT,BOWL	1
131	XDFZZ	7L611	M1-15339	. . . . . SCREW,MACHINE	4
132	XDFZZ	7L611	M2-1428-B	. . . . . BAR,BOWL SUPPORT	1
133	XDFZZ	7L611	M1-15056	. . . . . SCREW,MACHINE	4
134	XDFZZ	7L611	M1-1427	. . . . . STRAP,LOCK BOWL SUP	2
135	XDFZZ	7L611	M2-3359	. . . . . PANEL,COLUMN	1
136	XDFZZ	7L611	M1-15346	. . . . . COLLAR	1
137	PAFZZ	7L611	M1-1344	. . . . . LEVER,MANUAL CONTRO (WITH SETSCREW)	1
138	XDFZZ	7L611	M1-1528	. . . . . CRANK STOP (WITH SETSCREW)	1
139	XDFZZ	7L611	M2-1436	. . . . . LEVER,BOWL LIFT	1
140	XDFZZ	7L611	M1-15385	. . . . . KEY	2
141	XDFZZ	7L611	M1-15138	. . . . . KNOB	1
142	XDFZZ	7L611	W1-7657	. . . . . SCREW,CAP,HEXAGON H	1
143	XDFZZ	7L611	W0-7012	. . . . . NUT,PLAIN,HEXAGON	1
144	XDFZZ	7L611	W1-16361	. . . . . PIN,COTTER	2
145	XDFZZ	7L611	M1-3538	. . . . . WASHER,FLAT	3
146	XDFZZ	7L611	M2-1422	. . . . . DRAG LINK	1
147	XDFZZ	7L611	W1-9548	. . . . . SCREW,CAP,HEXAGON H	4
148	XDFZZ	7L611	W1-5994	. . . . . WASHER,LOCK	4

(1) ITEM NO	(2) SMR CODE	(3) FSCM	(4) PART NUMBER	(5) DESCRIPTION AND USABLE ON CODES(UOC)	(6) QTY
149	XDFZZ	7L611	M1-1462	. . .SCREEN	1
150	XDFZZ	7L611	W1-8096	. . .SCREW,MACHINE	4
151	XDFZZ	7L611	W2-20878	. . .PLATE,INSTRUCTION	1
152	XDFZZ	7L611	P1-5052	. . .PLATE,IDENTIFICATIO	1
153	XDFZZ	7L611	M4-1416	. . .COLUMN	1
154	XDFZZ	7L611	M2-1503	. . .LEG CUP,PLASTIC	4
155	XDFZZ	7L611	M4-1401	. . .BASE,BENCH TYPE	1
156	XDFZZ	7L611	P1-17212	. . .PLUG (3 PRONG)	1
157	XDFZZ	7L611	M1-18562	. . .CORD,POWER (3 WIRE,RUBBER COVERED)	1
158	XDFZZ	7L611	P1-17227	. . .CONNECTOR,CABLE	1

END OF FIGURE

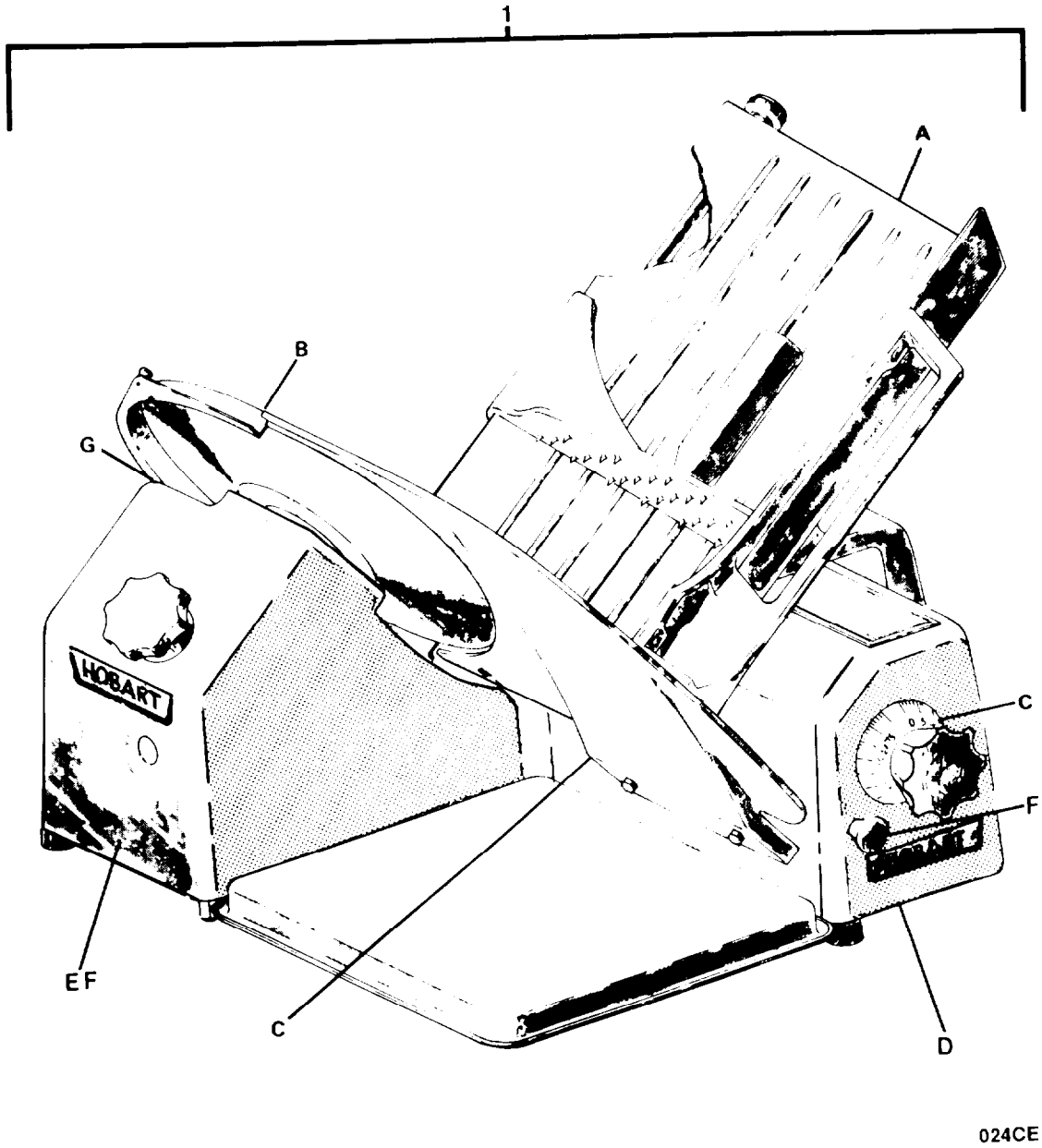

FIGURE 411. Meat Slicing Machine (Sheet 1 of 8).

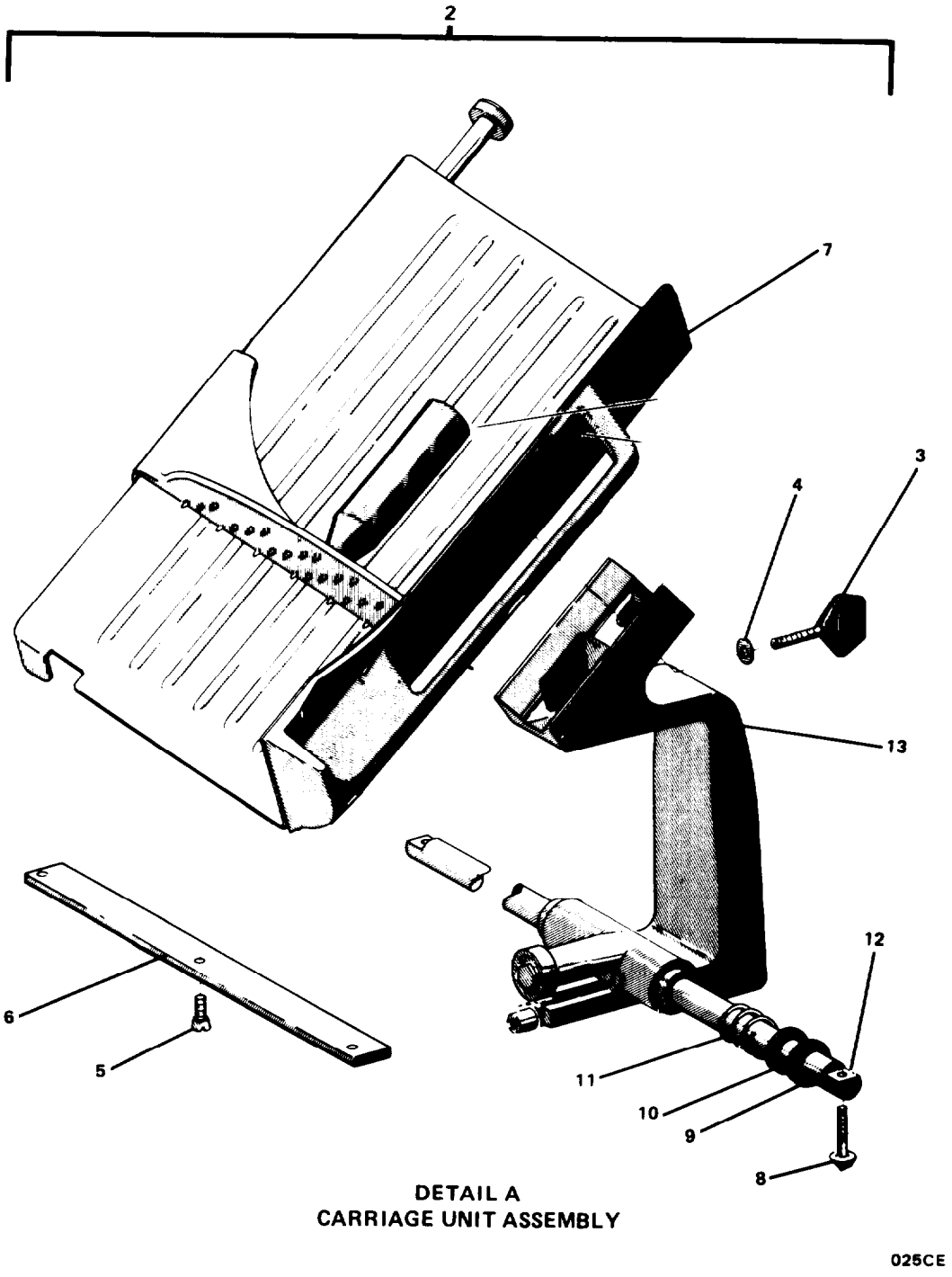

FIGURE 411. Meat Slicing Machine (Sheet 2 of 8).

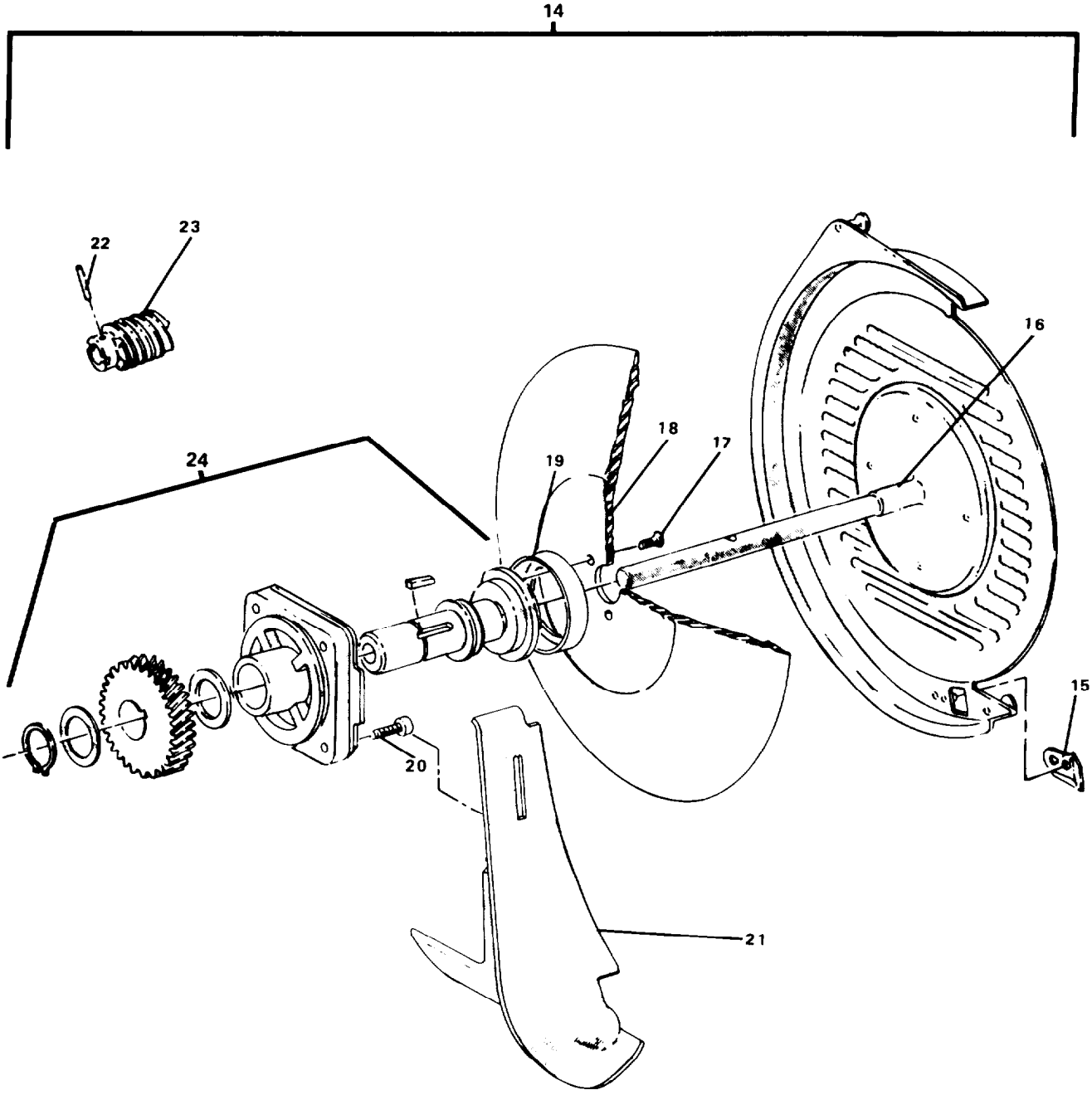

DETAIL B
KNIFE UNIT ASSEMBLY

FIGURE 411. Meat Slicing Machine (Sheet 3 of 8).

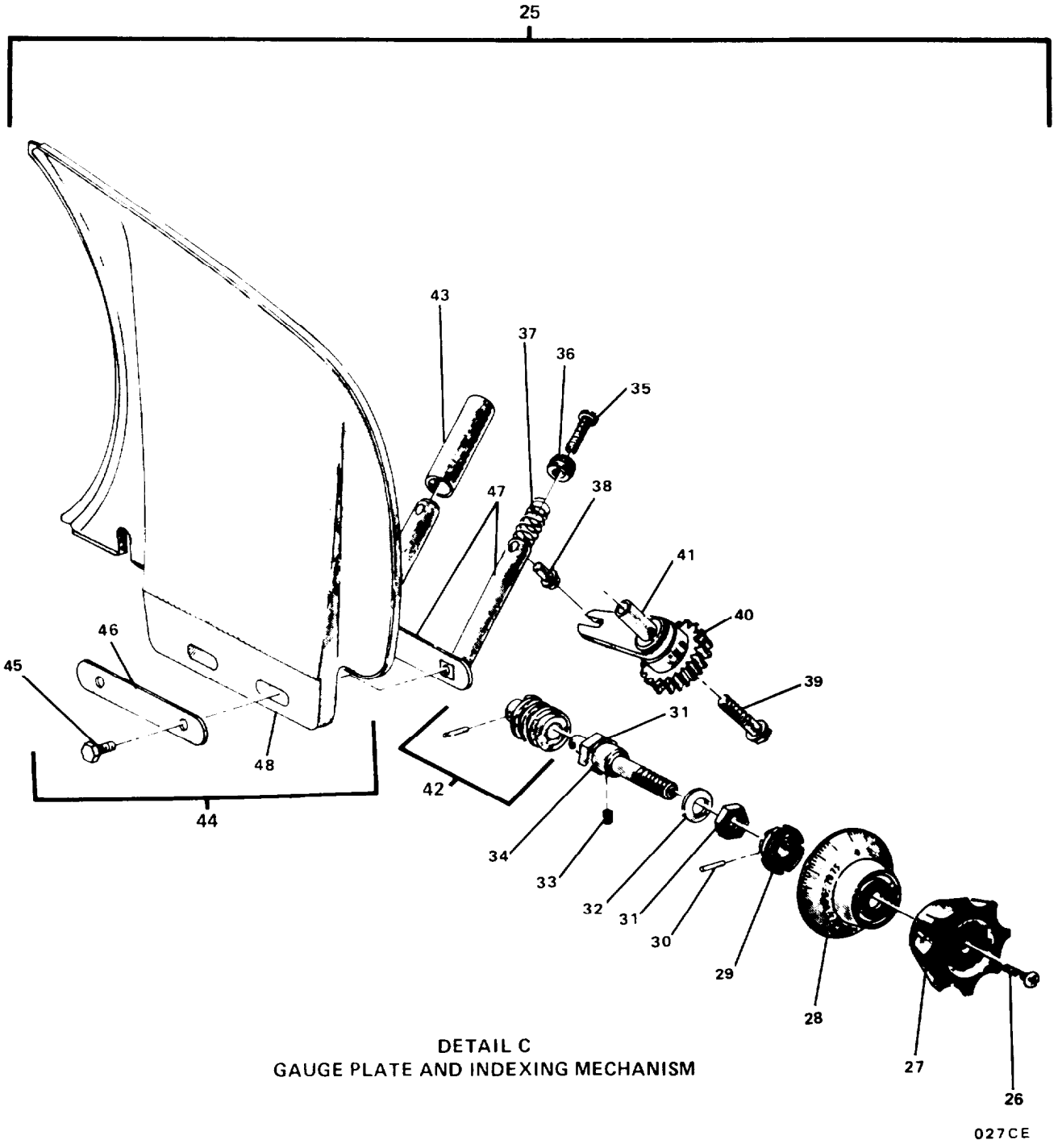

DETAIL C
GAUGE PLATE AND INDEXING MECHANISM

FIGURE 411. Meat Slicing Machine (Sheet 4 of 8).

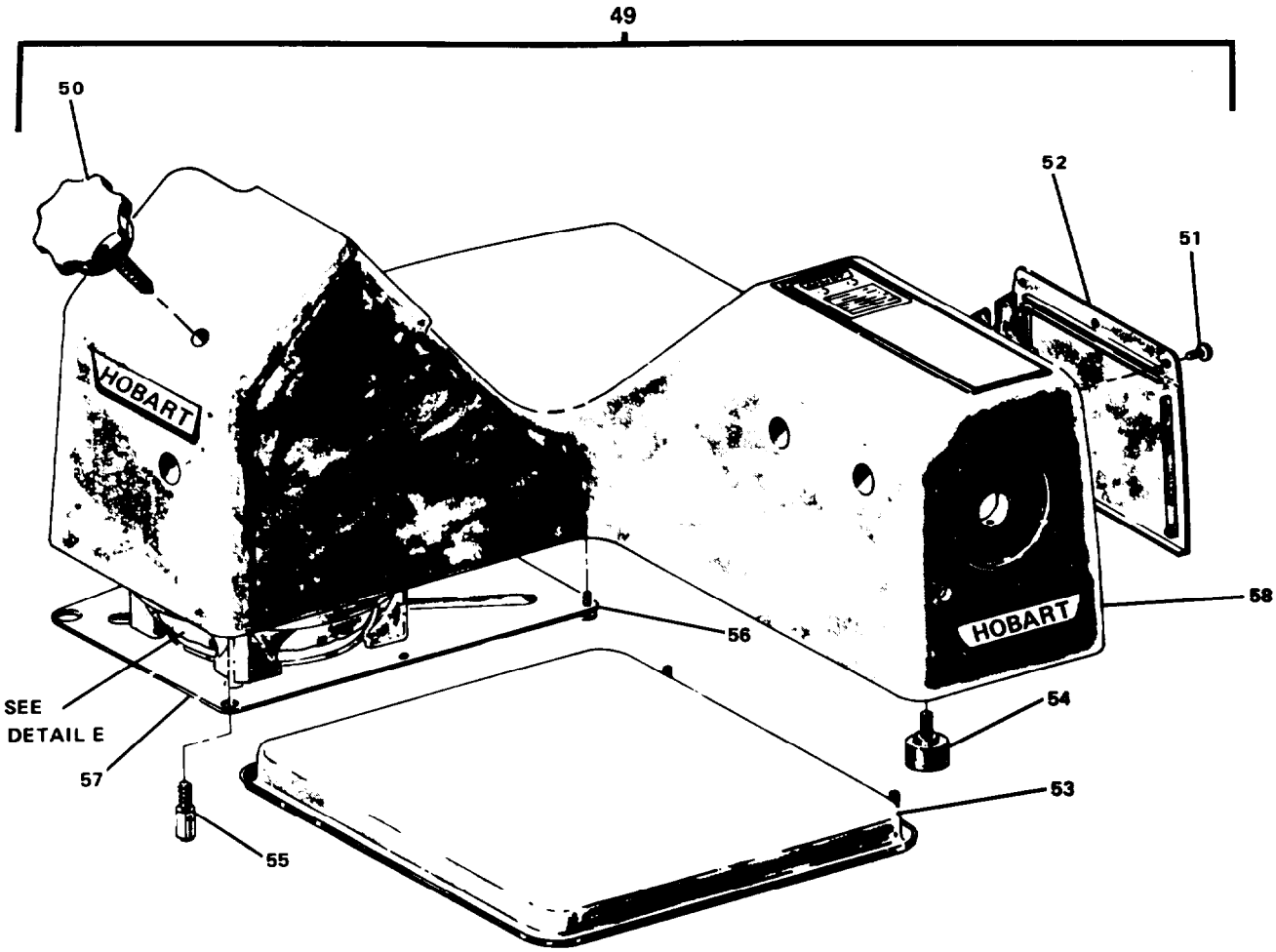

DETAIL D
BASE UNIT ASSEMBLY

028CE

FIGURE 411. Meat Slicing Machine (Sheet 5 of 8).

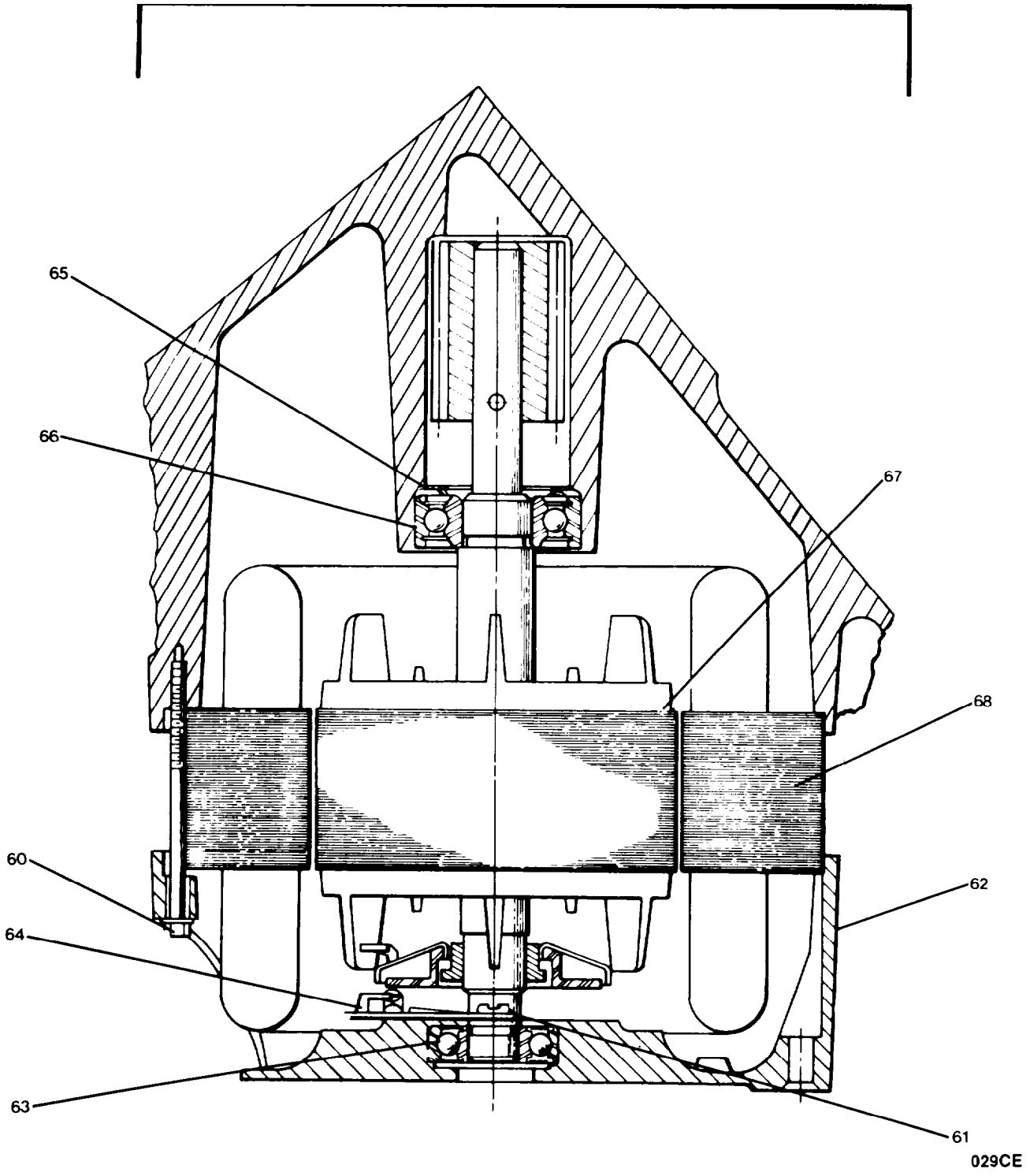

Detail E
Motor Parts

FIGURE 411. Meat Slicing Machine (Sheet 6 of 8).

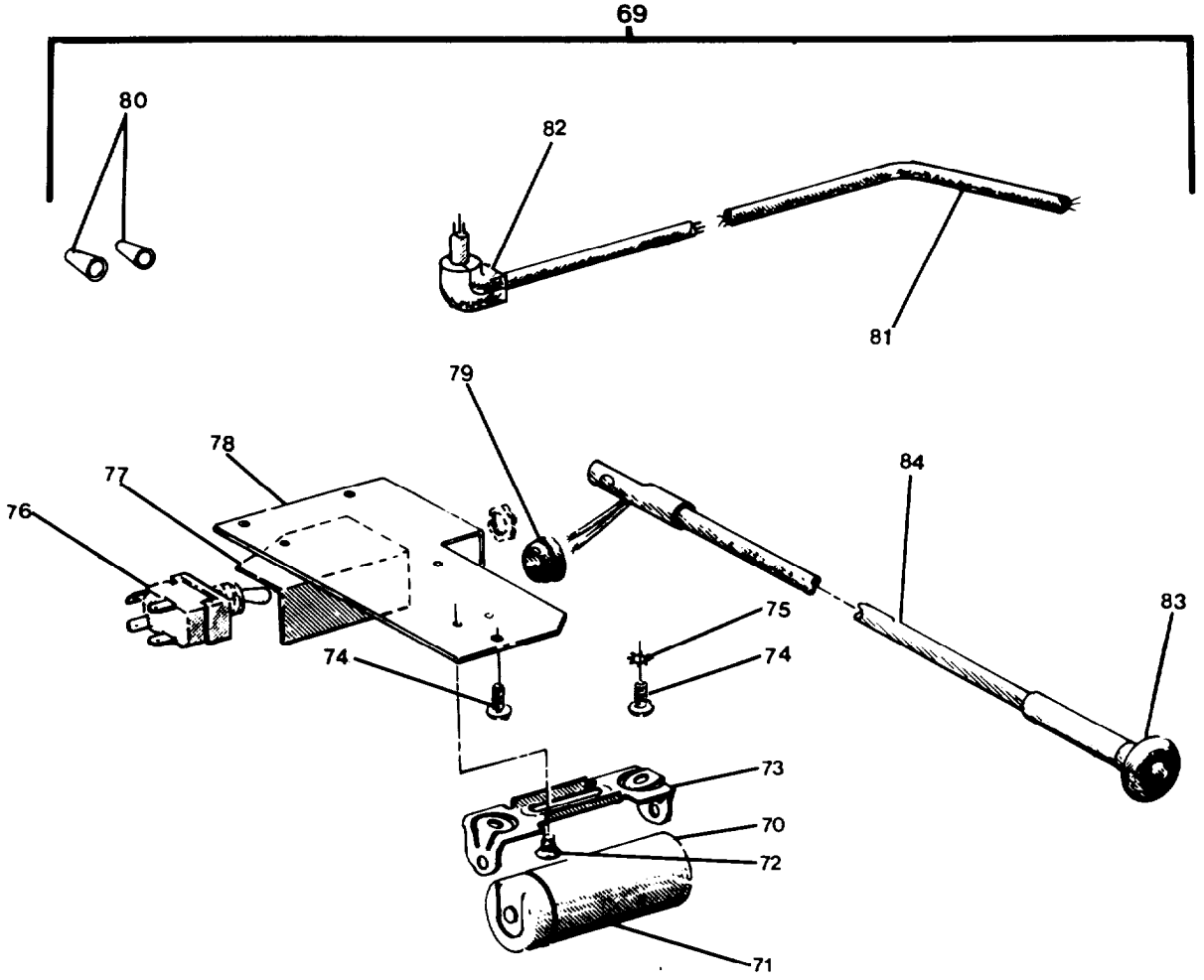

DETAIL F
ELECTRICAL UNIT ASSEMBLY

030 CE

FIGURE 411. Meat Slicing Machine (Sheet 7 of 8).

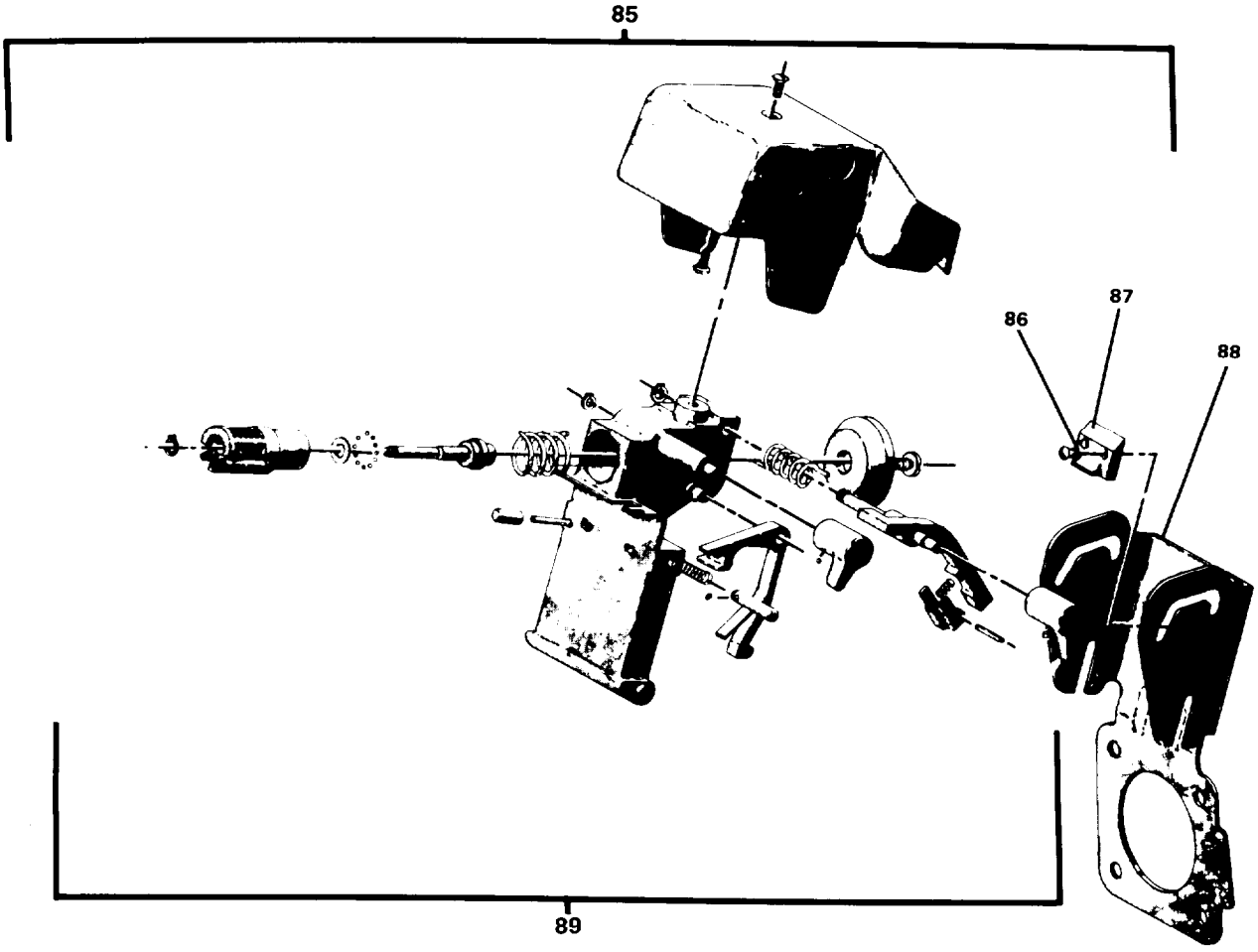

DETAIL G
KNIFE SHARPENER UNIT ASSEMBLY

031CE

FIGURE 411. Meat Slicing Machine (Sheet 8 of 8).

(1) ITEM NO	(2) SMR CODE	(3) FSCM	(4) PART NUMBER	(5) DESCRIPTION AND USABLE ON CODES(UOC)	(6) QTY
				GROUP 18 BASIC CRAFT	
				FIG. 411 MEAT SLICING MACHINE	
1	PBOFF	60438	512	..MEAT SLICING MACHIN	1
2	XCOFF	60438	PL-18497-1	...CARRIAGE UNIT ASSEM	1
3	XDFZZ	60438	C-108197-5	....THUMBSCREW	1
4	XDFZZ	60438	A-107364	....WASHER,BELLEVILLE	1
5	XDFZZ	60438	SD-24-47	....SCREW,SELF-TAPPING	3
6	XDFZZ	60438	C-76970	....BAR,SLIDE	1
7	XDFZZ	60438	E-290969	....CARRIAGE TRAY,MEAT	1
8	XDFZZ	60438	SD-24-48	....SCREW,SELF-TAPPING	2
9	XDFZZ	60438	B-118162	....WASHER,FLAT	2
10	XDFZZ	60438	V-21046-3	....WASHER,RUBBER	2
11	XDFZZ	60438	M-20622	....SPRING	2
12	XDFZZ	60438	C-123686-3	....ROD,SLIDE	1
13	XDFZZ	60438	C-120782	....CARRIAGE AND BUSHIN	1
14	XCOFF	60438	PL-16270	...KNIFE UNIT ASSEMBLY	1
15	XDFZZ	60438	B-109756	....SCRAPER,KNIFE,MEAT	1
16	XDFZZ	60438	E-123721-2	....KNIFE GUARD AND SHA	1
17	XDFZZ	60438	SC-22-18	....SCREW,MACHINE	3
18	XDFZZ	60438	D-275913-2	....KNIFE,ROTARY,MEAT S	1
19	XDFZZ	60438	B-111154	....RING,KNIFE SHAFT	1
20	XDFZZ	60438	SD-24-46	....SCREW,SELF-TAPPING	4
21	XDFZZ	60438	E-120379	....CUP,DRIP	1
22	XDFZZ	60438	RP-2-25	....ROLLPIN	1
23	XDFZZ	60438	C-114190-4	....GEAR,BEVEL	1
24	XDFZZ	60438	C-120145	....KNIFE SHAFT ASSEMBL	1
25	XCOFF	60438	PL-13891	...GAGE PLATE AND INDE	1
26	XDFZZ	60438	SC-23-10	....SCREW,MACHINE	1
27	XDFZZ	60438	C-114214	....CAP	1
28	XDFZZ	60438	B-118175	....DIAL ASSEMBLY	1
29	XDFZZ	60438	B-76948	....INDEX DISC,MEAT SLI	1
30	XDFZZ	60438	RP-2-40	....ROLLPIN	1
31	XDFZZ	60438	V-10928-2	....NUT	2
32	XDFZZ	60438	M-88298	....WASHER,BELLEVILLE	1
33	XDFZZ	60438	SC-47-73	....SETSCREW	1
34	XDFZZ	60438	B-111144	....BUSHING,ECCENTRIC	1
35	XDFZZ	60438	SC-18-72	....SCREW,MACHINE	1
36	XDFZZ	60438	B-114146	....PLUG,CAP	1
37	XDFZZ	60438	B-113906	....SPRING,HELICAL,COMP	1
38	XDFZZ	60438	B-114114	....ROLLER	1
39	XDFZZ	60438	SD-24-49	....SCREW,SELF-TAPPING	1
40	XDFZZ	60438	B-109762	....GEAR ASSEMBLY,INDEX	1
41	XDFZZ	60438	B-76956	....SLEEVE	1
42	XDFZZ	60438	B-114103	....INDEX ASSEMBLY	1
43	XDFZZ	60438	B-113903	....SLEEVE	1
44	PBOFF	60438	E-118328	....GAGE PLATE AND SLID	1
45	XDFZZ	60438	SC-62-47	.....SCREW,CAP,HEXAGON H	2
46	XDFZZ	60438	B-114112	.....SPACER	1
47	XDFZZ	60438	D-118935	.....SLIDE ROD AND SPACE	1
48	XDFZZ	60438	D-76961	.....GAGE PLATE ASSEMBLY	1

(1) ITEM ND	(2) SMR CODE	(3) FSCM	(4) PART NUMBER	(5) DESCRIPTION AND USABLE ON CODES(UOC)	(6) QTY
49	XCOFF	60438	PL-15572	...BASE UNIT ASSEMBLY	1
50	XDFZZ	60438	B-114297	.... KNOB	1
51	XDFZZ	60438	SD-24-13	.... SCREW,SELF-TAPPING	3
52	XDFZZ	60438	D-118939	.... PANEL	1
53	XDFZZ	60438	D-114452	.... TRAY	1
54	XDFZZ	60438	B-18682-1	.... FOOT	3
55	XDFZZ	60438	B-76953	.... FOOT,HELPER	1
56	XDFZZ	60438	SD-24-1	.... SCREW,SELF-TAPPING	4
57	XDFZZ	60438	D-114236	.... COVER,BOTTOM	1
58	XDFZZ	60438	B-122727-1	.... BASE AND LOGO PLAT	1
59	XCOFF	60438	PL-16505-1	...MOTOR PARTS	1
60	XDFZZ	60438	B-114525-1	.... SCREW,CAP,HEXAGON H	4
61	XDFZZ	60438	SD-9-34	.... SCREW,SELF-TAPPING	2
62	XDFZZ	60438	E-111835-3	.... BRACKET	1
63	XDFZZ	60438	BB-5-5	.... BEARING,BALL	1
64	PAFZZ	28873	C-111688-4	.... SWITCH,TOGGLE	1
65	XDFZZ	60438	SL-2-10	.... SPRING	1
66	XDFZZ	60438	BB-5-30	.... BEARING,BALL,ANNULA	1
67	XDFZZ	60438	C-22275-211	.... ROTOR ASSEMBLY	1
68	XDFZZ	60438	D-65477-103-1	.... STATOR ASSEMBLY	1
69	XCOFF	60438	PL-16269	...ELECTRICAL UNIT ASS	1
70	PAFZZ	28873	D-70487-15	.....CAPACITOR	1
71	XDFZZ	60438	C-70486-1	.... END CAP,CAPACITOR	1
72	XDFZZ	60438	SD-24-16	.... SCREW,SELF-TAPPING	1
73	XDFZZ	60438	P-66621-3	.... BRACKET	1
74	XDFZZ	60438	SD-24-1	.... SCREW,SELF-TAPPING	4
75	XDFZZ	60438	WL-7-12	.... WASHER,LOCK	1
76	PAFZZ	28873	B-87711-148-1	.... SWITCH,ELECTRICAL	1
77	XDFZZ	60438	B-123128	.... INSULATOR	1
78	XDFZZ	60438	C-114243	....PLATE	1
79	XDFZZ	60438	FE-21-9	.... BUSHING	1
80	XDFZZ	60438	FE-18-16	....WIRE NUT	2
81	XDFZZ	60438	B-117542-21	....CORD AND PLUG ASSEM	1
82	XDFZZ	60438	FE-15-5	.... STRAIN RELIEF	1
83	XDFZZ	60438	C-122342-3	.... KNOB	1
84	XDFZZ	60438	B-76902	.... DISC,INSERT	1
85	XCOFF	60438	PL-13892	...KNIFE SHARPENER UNI	1
86	XDFZZ	60438	SC-7-39	.... SCREW,MACHINE	2
87	XDFZZ	60438	C-119884	.... CATCH	1
88	XDFZZ	60438	D-119890	.... PLATE,MOUNTING	1
89	XDFZZ	60438	E-119888	.... KNIFE SHARPENER ASS	1

END OF FIGURE

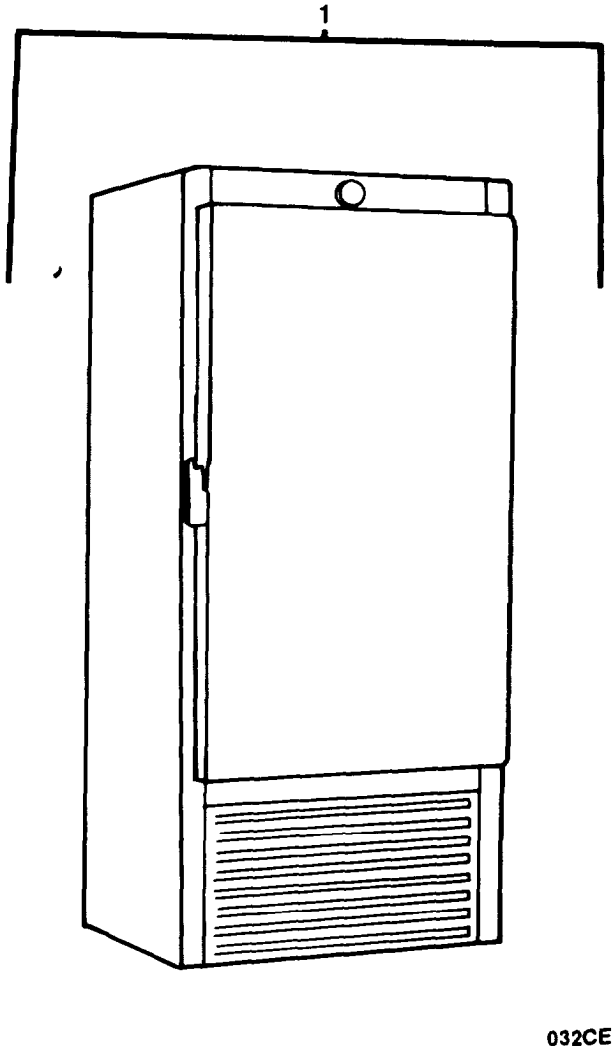

FIGURE 412. Refrigerator, Mechanical, Food (Sheet 1 of 4).

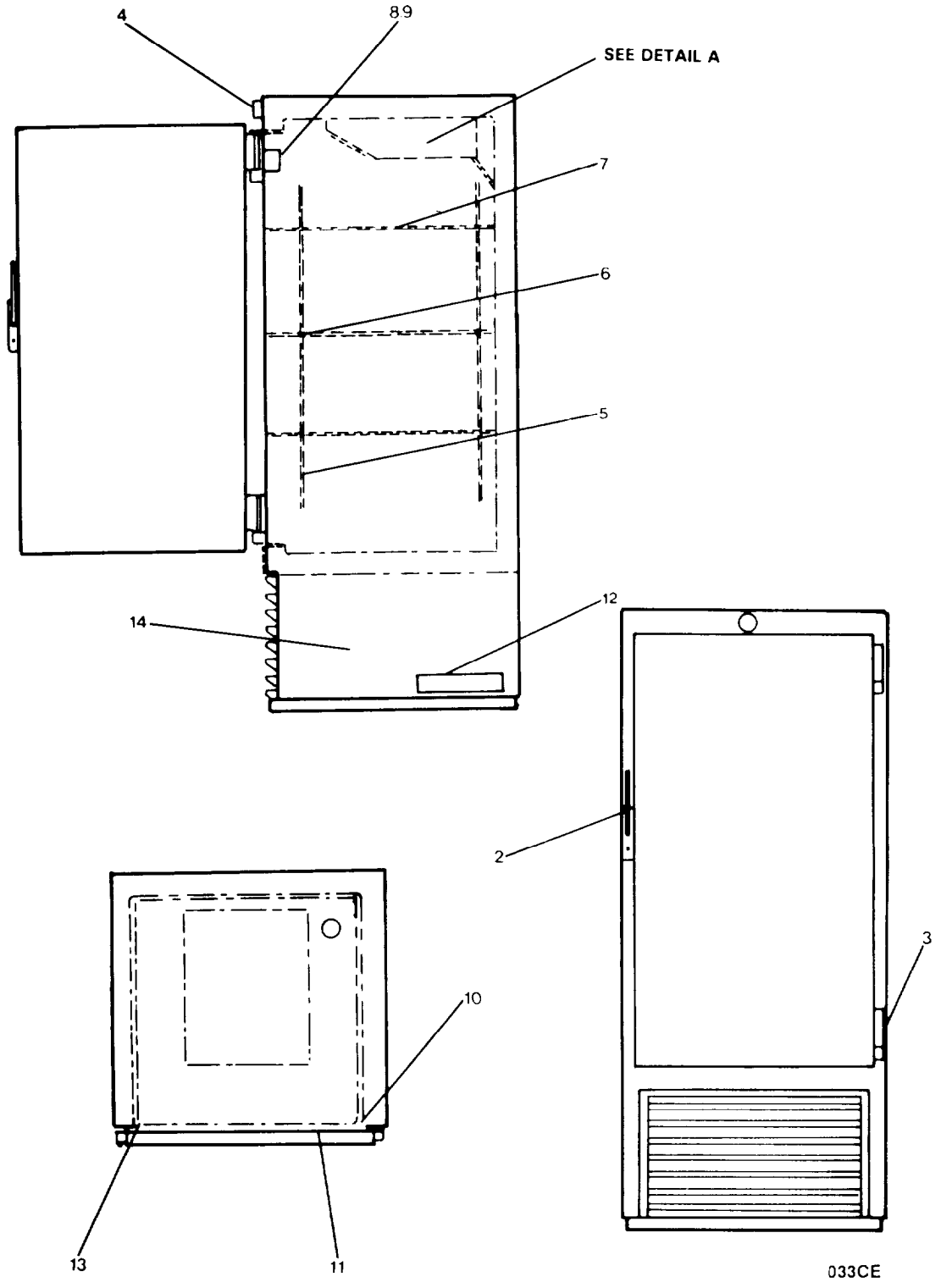

FIGURE 412. Refrigerator, Mechanical, Food (Sheet 2 of 4).

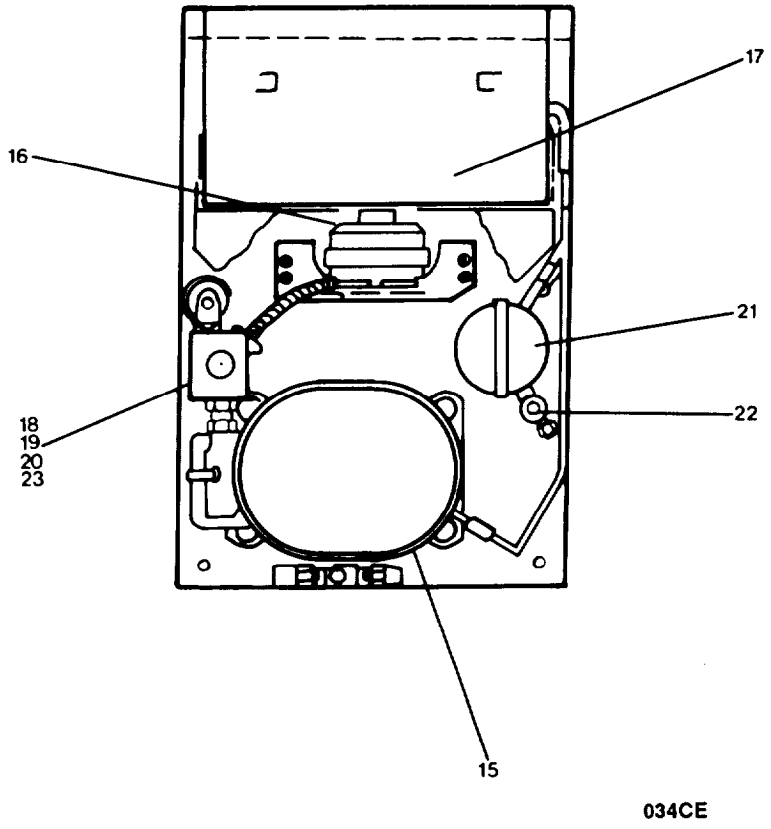

FIGURE 412. Refrigerator, Mechanical, Food (Sheet 3 of 4).

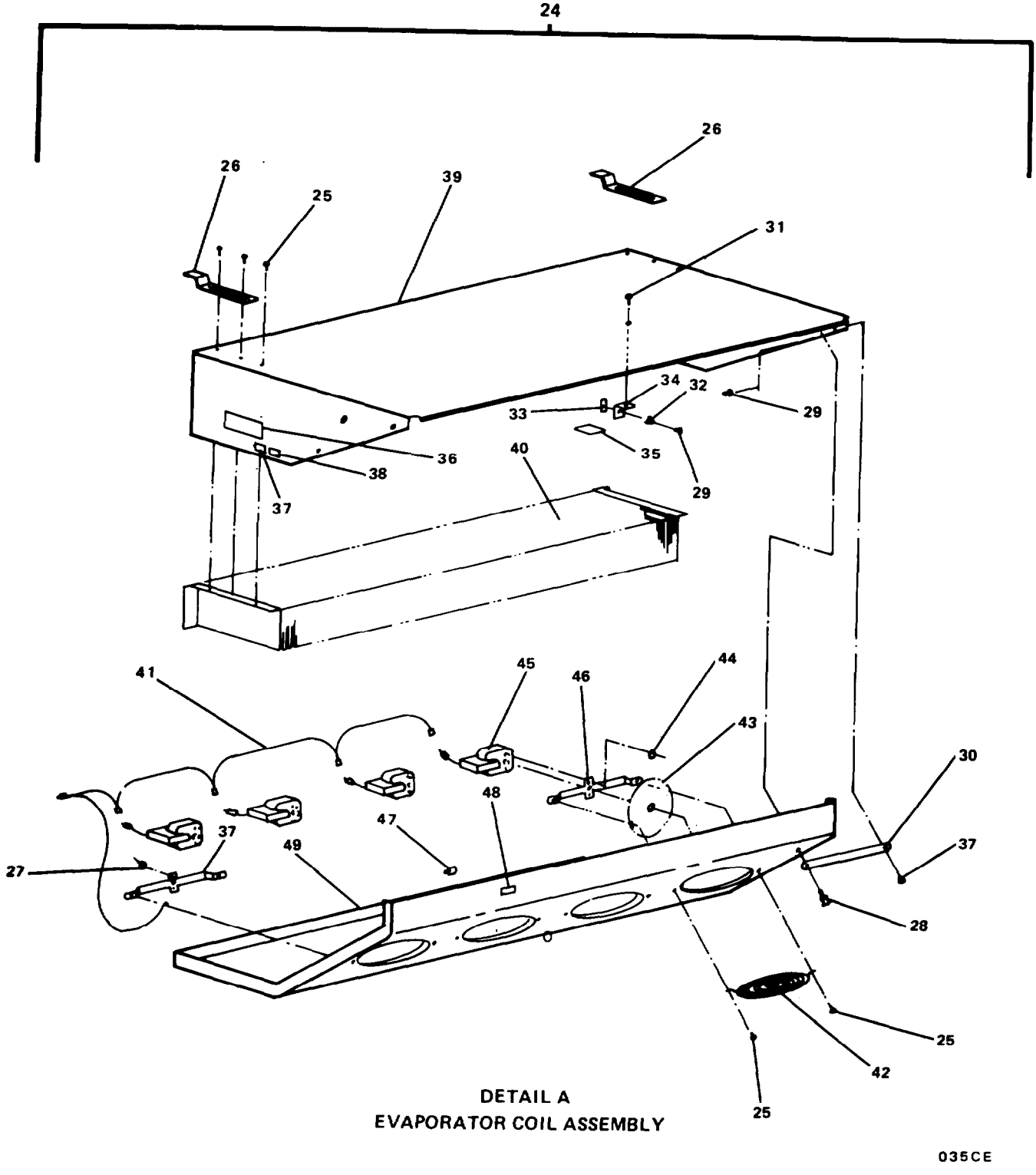

FIGURE 412. Refrigerator, Mechanical, Food (Sheet 4 of 4).

(1) ITEM NO	(2) SMR CODE	(3) FSCM	(4) PART NUMBER	(5) DESCRIPTION AND USABLE ON CODES(UOC)	(6) QTY
				GROUP 18 BASIC CRAFT	
				FIG. 412 REFRIGERATOR, MECHANICAL, FOOD	
1	XDOFF	66682	R20-2M-S	..REFRIGERATOR,MECHAN	1
2	XDFZZ	66682	174	...LATCH ASSEMBLY	1
3	XDFZZ	66682	1267	...HINGE,ACCESS DOOR	2
4	XDFZZ	66682	6812	...THERMOMETER	1
5	XDFZZ	66682	60	...PILASTER	4
6	XDFZZ	66682	66	...CLIP,PILASTER	12
7	XDFZZ	66682	26-22E	...SHELF	3
8	XDFZZ	66682	2778	...SHIELD,LAMP	1
9	XDFZZ	66682	L10-X003	...SOCKET,LAMP	1
10	XDFZZ	66682	R67-1907	...SWITCH,LIGHT	1
11	XDFZZ	66682	29-50 1/2	...GASKET	1
12	XDFZZ	66682	43-065	...EVAPORATOR,CONDENSA	1
13	XDFZZ	66682	FG-152	...HEATER,CONDENSATE	1
14	XDOFF	59431	AE4430AC	...CONDENSER,REFRIGERA	1
15	XDFZH	59431	AE4430A	....COMPRESSOR	1
16	XDFZZ	59418	10G006A13	.....MOTOR,ALTERNATING C	1
17	XDFZZ	59431	51531-2	.....IMPELLER,FAN,AXIAL	1
18	XDFZZ	59431	85635-2	.....CAPACITOR,FIXED,ELE	1
19	XDFZZ	59431	82628	....RELAY,ELECTRONMAGNE	1
20	XDFZZ	59431	83940	.....CIRCUIT BREAKER	1
21	XDFZZ	59431	C052S	.....DRYER,FILTER	1
22	XDFZZ	59431	SG114	.....INDICATOR,SIGHT,LIQ	1
23	XDFZZ	59431	1402	....CONTROL,LOW LEVEL	1
24	XDOFF	14852	TA-130	...EVAPORATOR COIL,REF	1
25	XDFZZ	14852	5488-B	....SCREW,MACHINE	10
26	XDFZZ	14852	65504002	....BAR,HANGER	2
27	XDFZZ	14852	5491-F	.....SCREW,MACHINE	8
28	XDFZZ	14852	4399-B	.....SCREW,WING,CAPTIVE	4
29	XDFZZ	14852	5441-C	.....TINNERMAN	4
30	XDFZZ	14852	4392-X	.....LANYARD	4
31	XDFZZ	14852	5487-B	.....SCREW,MACHINE	2
32	XDFZZ	14852	5540-R	.....CLAMP,TUBE	1
33	XDFZZ	14852	5446-A	.....TINNERMAN,FLAT	2
34	XDFZZ	14852	91815001	....BRACKET	1
35	XDFZZ	14852	4334B002	....PLATE,INSTRUCTION	1
36	XDFZZ	14852	C1288E01	.....PLATE,IDENTIFICATIO	1
37	XDFZZ	14852	5797-J	....LABEL	1
38	XDFZZ	14852	4354-D	.....LABEL,PLATE	1
39	XDFZZ	14852	C25523A1	.....HOUSING,TOP	1
40	XDFZZ	14852	C23706A2	....COIL ASSEMBLY	1
41	XDFZZ	14852	4355E001	.....HARNESS,MOTOR	1
42	XDFZZ	14852	5054-D	.....GUARD,FAN	2
43	XDFZZ	14852	5101-B	.....BLADE,FAN	2
44	XDFZZ	14852	5441-F	.....NUT,WHIZ	4
45	XDFZZ	14852	5021-S	....MOTOR,ALTERNATING C	2
46	XDFZZ	14852	91179001	.....MOUNT,MOTOR	2
47	XDFZZ	14852	4380-A	.....CLAMP,WIRE	2

(1) ITEM NO	(2) SMR CODE	(3) FSCM	(4) PART NUMBER	(5) DESCRIPTION AND USABLE ON CODES(UOC)	(6) QTY
48	XDFZZ	14852	5561-T	. . . . LABEL	1
49	XDFZZ	14852	91186002	. . . . HOUSING,BOTTOM	1

END OF FIGURE

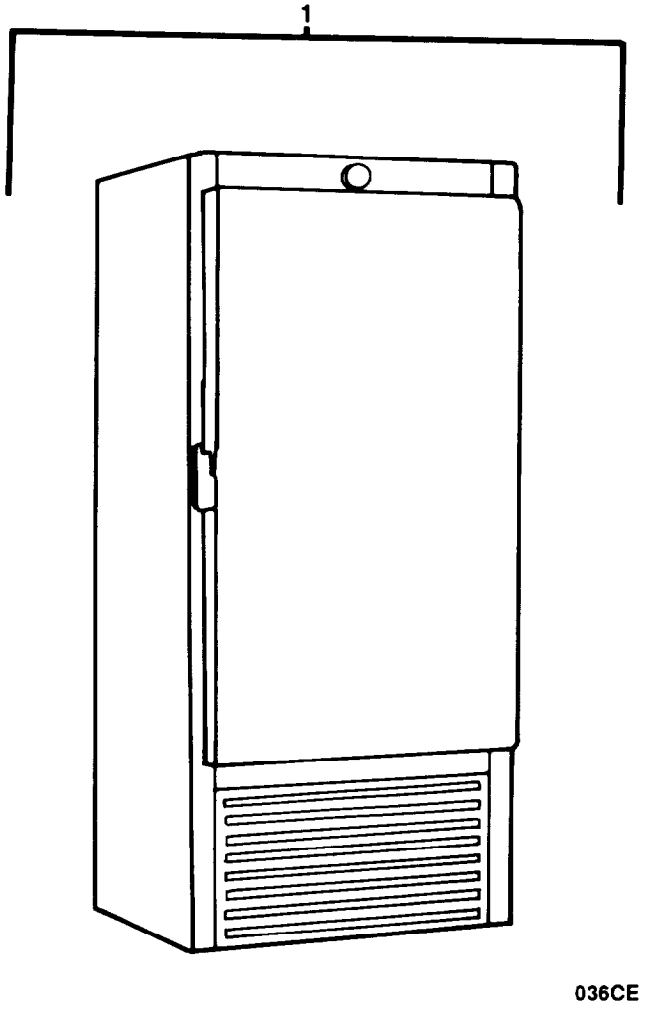

FIGURE 413. Freezer, Mechanical, Food (Sheet 1 of 4).

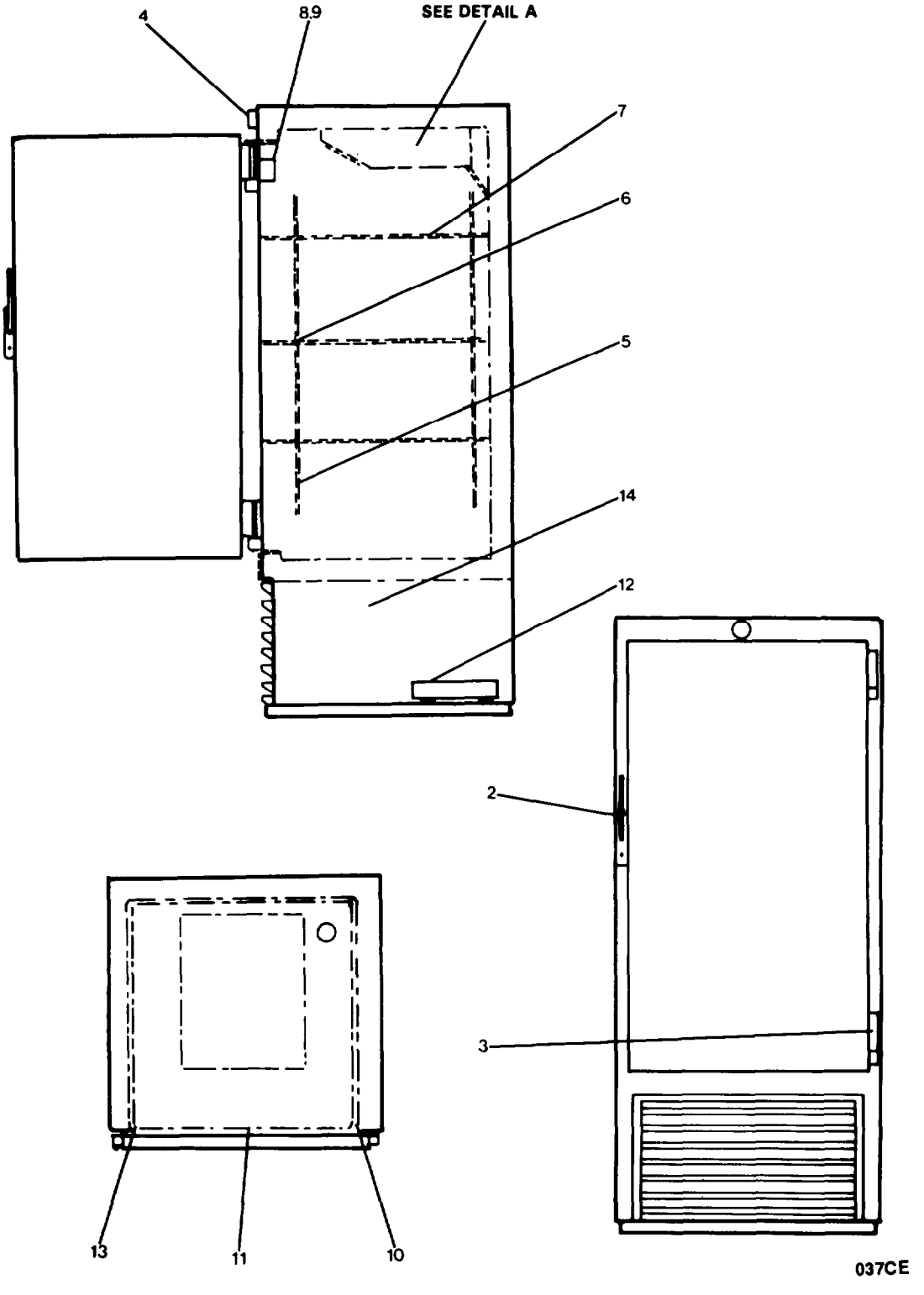

FIGURE 413. Freezer, Mechanical, Food (Sheet 2 of 4).

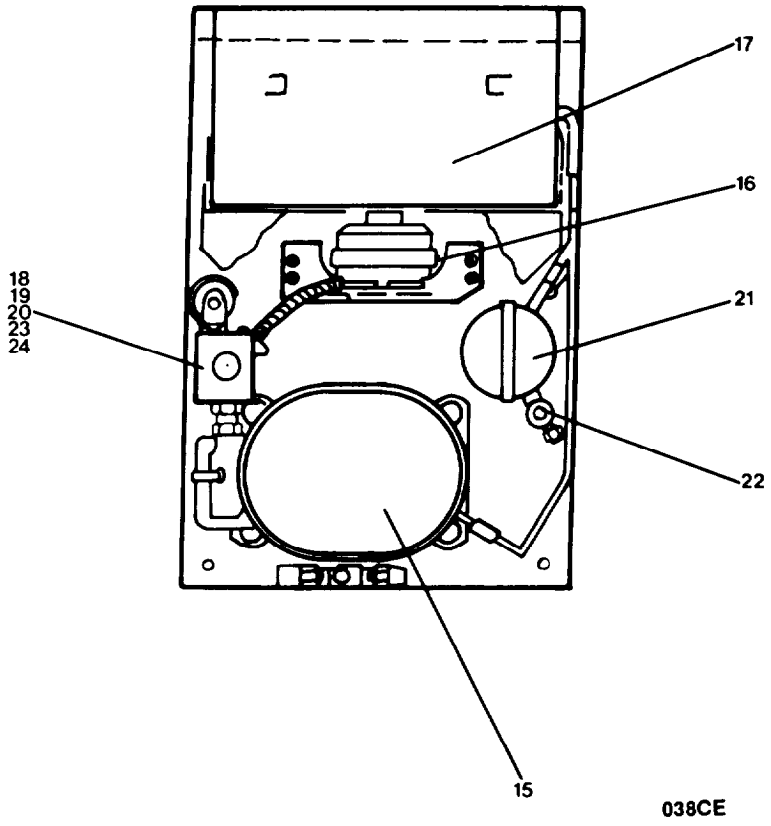

FIGURE 413. Freezer, Mechanical, Food (Sheet 3 of 4).

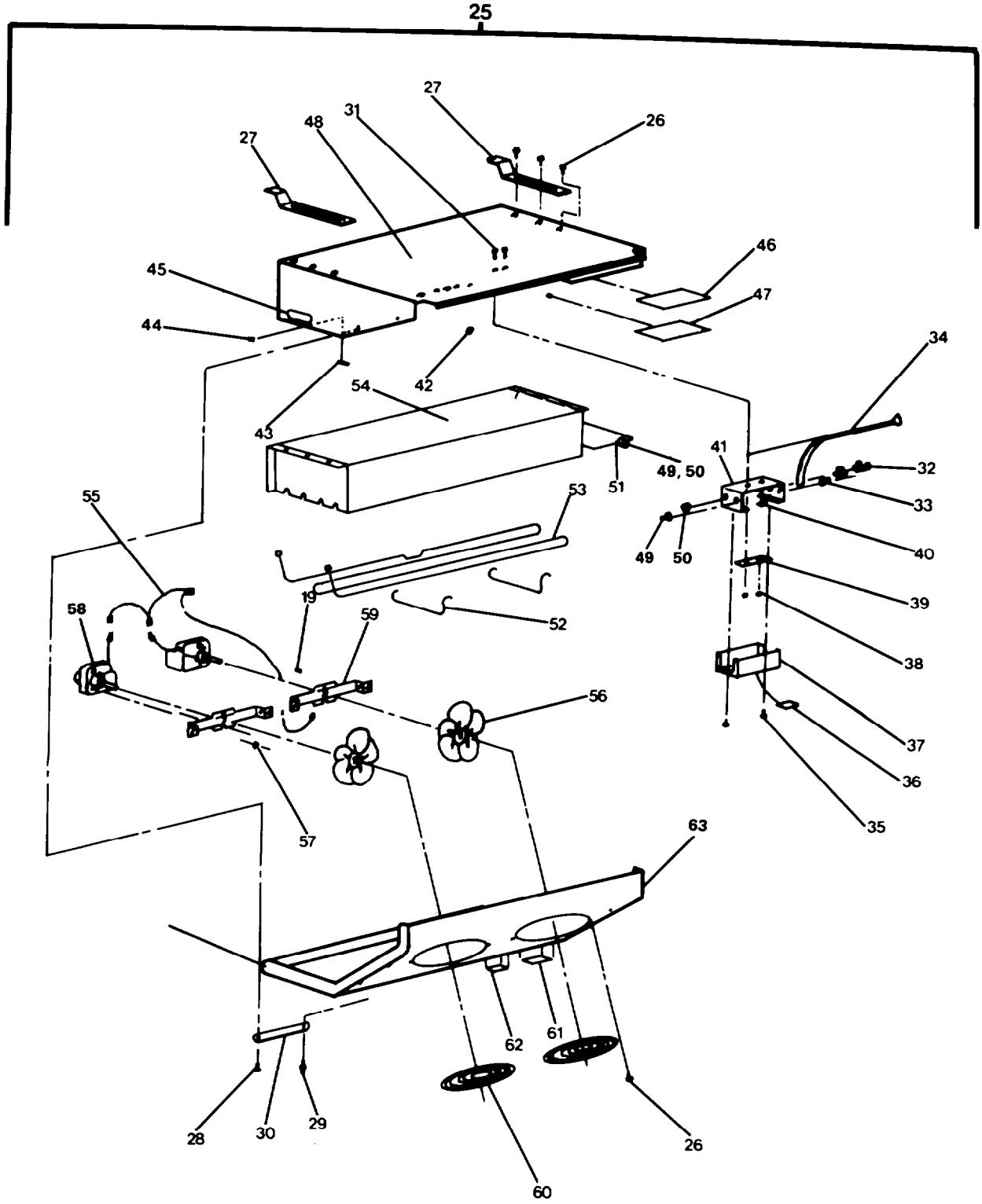

DETAIL A
EVAPORATOR COIL ASSEMBLY

039 CE

FIGURE 413. Freezer, Mechanical, Food (Sheet 4 of 4).

(1) ITEM NO	(2) SMR CODE	(3) FSCM	(4) PART NUMBER	(5) DESCRIPTION AND USABLE ON CODES(UOC)	(6) QTY
				GROUP 18 BASIC CRAFT	
				FIG. 413 FREEZER, MECHANICAL, FOOD	
1	XDOFF	66682	F20-2M-ADS	..FREEZER,MECHANICAL	1
2	XDFZZ	66682	174	...LATCH ASSEMBLY	1
3	XDFZZ	66682	1267	...HINGE,ACCESS DOOR	2
4	XDFZZ	66682	6812	... THERMOMETER	1
5	XDFZZ	66682	60	...PILASTER	4
6	XDFZZ	66682	66	...CLIP,PILASTER	12
7	XDFZZ	66682	26-22E	...SHELF	3
8	XDFZZ	66682	2778	...SHIELD,LAMP	1
9	XDFZZ	66682	L10-X003	...SOCKET,LAMP	1
10	XDFZZ	66682	R67-1907	...SWITCH,LIGHT	1
11	XDFZZ	66682	29-50 1/2	...GASKET	1
12	XDFZZ	66682	43-065	...EVAPORATOR,CONDENSA	1
13	XDFZZ	66682	FG-152	...HEATER,CONDENSATE	1
14	XDOFF	59431	AE2415AC	...CONDENSER,REFRIGERA	1
15	XDFZZ	59431	AE2415A	. . .COMPRESSOR,REFRIGER	1
16	XDFZZ	59431	8106006A13	....MOTOR,ALTERNATING C	1
17	XDFZZ	59431	51531-2	....IMPELLER,FAN,AXIAL	1
18	XDFZZ	59431	85709	. . .CAPACITOR,FIXED,ELE	1
19	XDFZZ	59431	820RR12B79	....RELAY	1
20	XDFZZ	59431	8300MRTD88	....OVERLOAD	1
21	XDFZZ	59431	CO52S	....DRYER,FILTER	1
22	XDFZZ	59431	SG114	....INDICATOR,SIGHT,LIQ	1
23	XDFZZ	59431	T6061	. . .THERMOSTAT	1
24	XDFZZ	59431	8145-00	....TIMER,DEFROST	1
25	XDOFF	14852	TL 90	...EVAPORATOR COIL,REF	1
26	XDFZZ	14852	5488-B	....SCREW,MACHINE	7
27	XDFZZ	14852	65504002	....BAR,HANGAR	2
28	XDFZZ	14852	5491-F	....SCREW,MACHINE	6
29	XDFZZ	14852	4399-B	....SCREW,WING,CAPTIVE	4
30	XDFZZ	14852	4392-X	....LANYARD	4
31	XDFZZ	14852	5408-B	. . .SCREW,MACHINE	2
32	XDFZZ	14852	5528-G	....STRAIN RELIEF	1
33	XDFZZ	14852	5534-G	....BUSHING,SNAP	3
34	XDFZZ	14852	4366E001	....HARNESS LEAD	1
35	XDFZZ	14852	5487-B	....SCREW,MACHINE	2
36	XDFZZ	14852	5575-P	. . .LABEL	1
37	XDFZZ	14852	91190001	....COVER,JUNCTION BOX	1
38	XDFZZ	14852	5436-F	. . .NUT,WHIZ	2
39	XDFZZ	14852	4145-W	....BLOCK,TERMINAL	1
40	XDFZZ	14852	5445-B	. . .TINNERMAN	2
41	XDFZZ	14852	91189001	....BOX,JUNCTION	1
42	XDFZZ	14852	5433-D	....CLIP,WIRE	1
43	XDFZZ	14852	5441-C	....TINNERMAN	4
44	XDFZZ	14852	5797-J	....LABEL	1
45	XDFZZ	14852	C1297A01	....PLATE,IDENTIFICATIO	1
46	XDFZZ	14852	4300-F	....DIAGRAM,WIRING	1
47	XDFZZ	14852	4335B001	....PLATE,INSTRUCTION	1
48	XDFZZ	14852	C2552161	. . .HOUSING, TOP	1

(1) ITEM NO	(2) SMR CODE	(3) FSCM	(4) PART NUMBER	(5) DESCRIPTION AND USABLE ON CODES(UOC)	(6) QTY
49	XDFZZ	14852	5485-B	. . . SCREW,MACHINE	4
50	XDFZZ	14852	5708-L	. . . SWITCH,THERMOSTATIC	1
51	XDFZZ	14852	5709-L	. . . SWITCH,THERMOSTATIC	1
52	XDFZZ	14852	5543-J	. . . CLIP,HEATER	2
53	XDFZZ	14852	72102001	. . . . HEATER,DEFROST	1
54	XDFZZ	14852	C23728A1	. . . COIL ASSEMBLY	1
55	XDFZZ	14852	4354E003	. . . . HARNESS,MOTOR	1
56	XDFZZ	14852	5101-B	. . . BLADE FAN	1
57	XDFZZ	14852	5441-F	. . . NUT,WHIZ	2
58	XDFZZ	14852	5021-S	. . . MOTOR,ALTERNATING C	1
59	XDFZZ	14852	91179001	. . . MOUNT,MOTOR	1
60	XDFZZ	14852	5054-D	. . . GUARD,FAN	1
61	XDFZZ	14852	4363B001	. . . PLATE,INSTRUCTION	1
62	XDFZZ	14852	4363B002	. . . PLATE,INSTRUCTION	1
63	XDFZZ	14852	91184002	. . . HOUSING,BOTTOM	1

END OF FIGURE

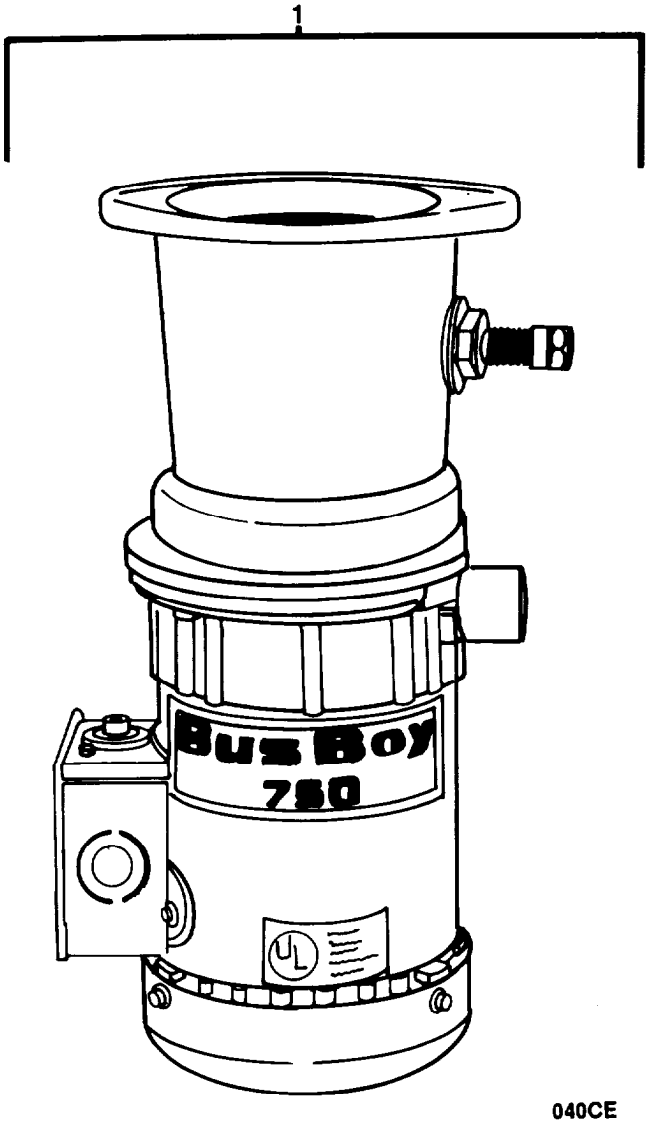

FIGURE 414. Garbage Disposal, (Modified) (Sheet 1 of 2).

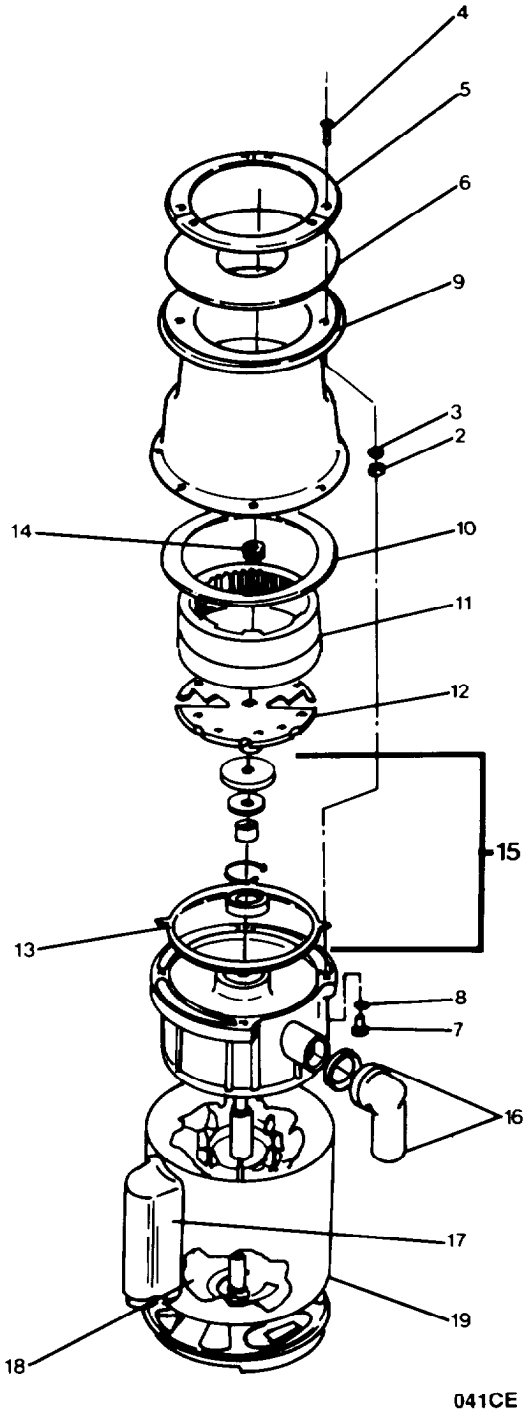

FIGURE 414. Garbage Disposal, (Modified) (Sheet 2 of 2).

(1) ITEM NO	(2) SMR CODE	(3) FSCM	(4) PART NUMBER	(5) DESCRIPTION AND USABLE ON CODES(UOC)	(6) QTY
				GROUP 18 BASIC CRAFT	
				FIG. 414 GARBAGE DISPOSAL, (MODIFIED)	
1	PBOFF	78770	BB-325/750	..GARBAGE DISPOSAL MA (MODIFIED)	1
2	XDFZZ	78770	B10012	...NUT,PLAIN,HEXAGON	6
3	XDFZZ	78770	B10225	...WASHER,LOCK	6
4	XDFZZ	78770	B10330	...BOLT,MACHINE	6
5	XDFZZ	78770	B10228	...ADAPTER SEGMENTS	3
6	PAFZZ	78770	B10229	... GASKET	1
7	XDFZZ	78770	B10215	...BOLT,MACHINE	4
8	XDFZZ	78770	B10212	...WASHER,LOCK	4
9	XDFZZ	78770	B10230	...HOPPER	1
10	PAFZZ	78770	B10204	...GASKET	1
11	XDFZZ	78770	B10205	...SLEEVE,SHREDDING	1
12	XDFZZ	78770	B14173	...ROTOR	1
13	PAFZZ	78770	B10203	...GASKET	1
14	XDFZZ	78770	B10015	...LOCKNUT (RIGHT HAND)	1
15	XDFZZ	78770	B14143	...DRAIN ASSEMBLY	1
16	XDFZZ	78770	B10517	... ELBOW	1
17	XDFZZ	78770	B14258	... CAPACITOR	1
18	PAFZZ	78770	B14276	...SWITCH,PUSH	1
19	PBFZZ	78770	B14223	...MOTOR,ALTERNATING C	1

END OF FIGURE

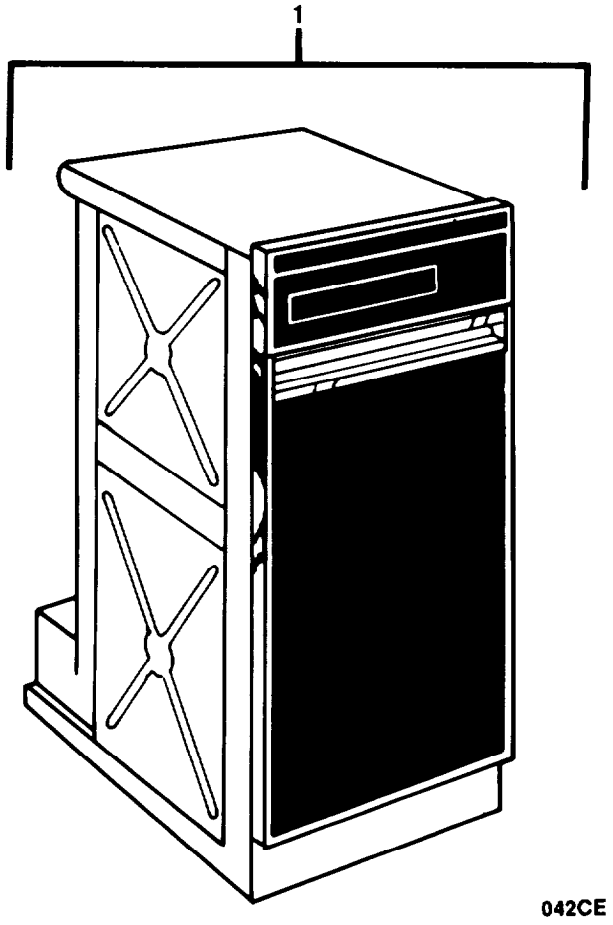

FIGURE 415. Solid Waste Compactor (Sheet 1 of 5).

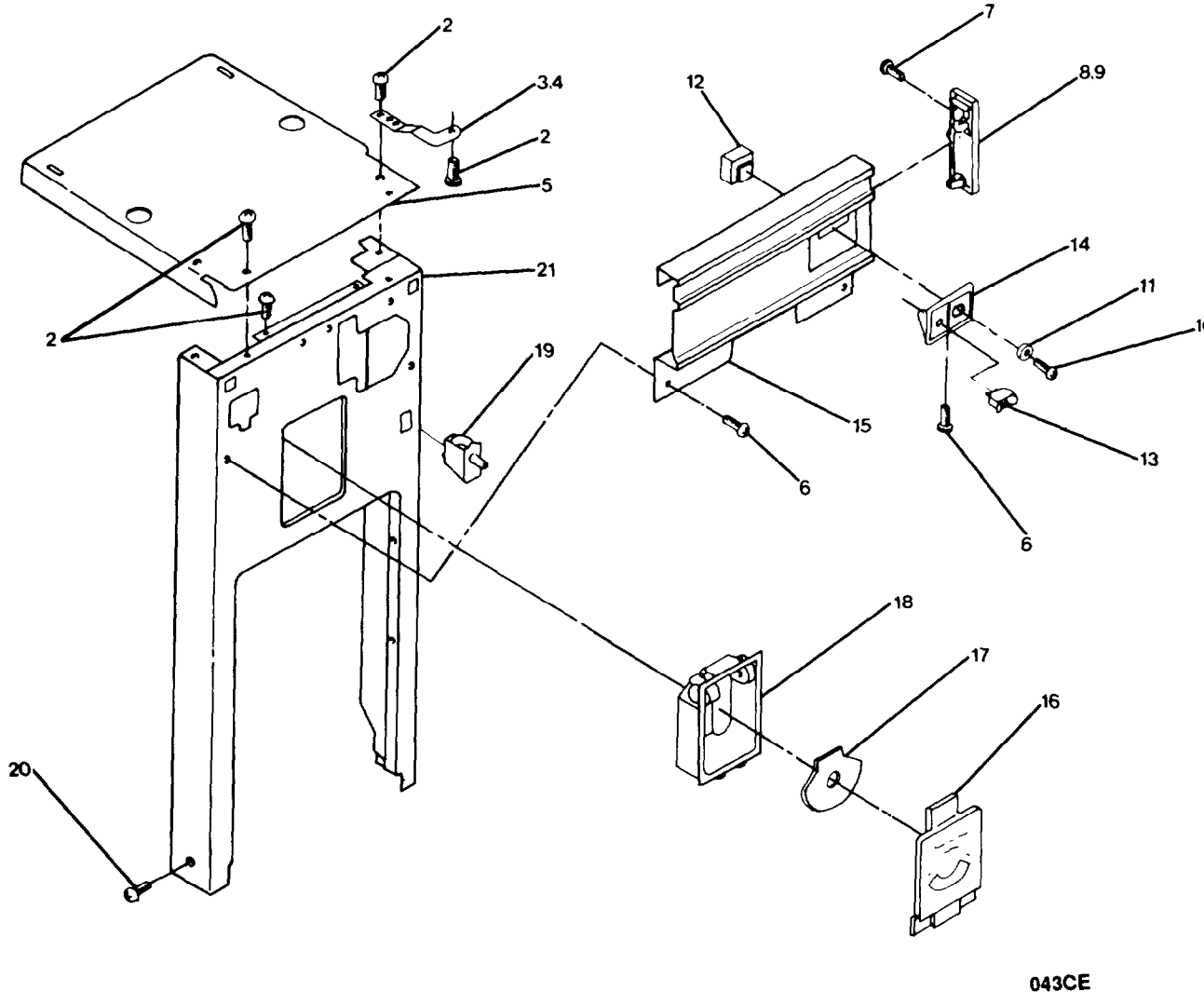

FIGURE 415. Solid Waste Compactor (Sheet 2 of 5).

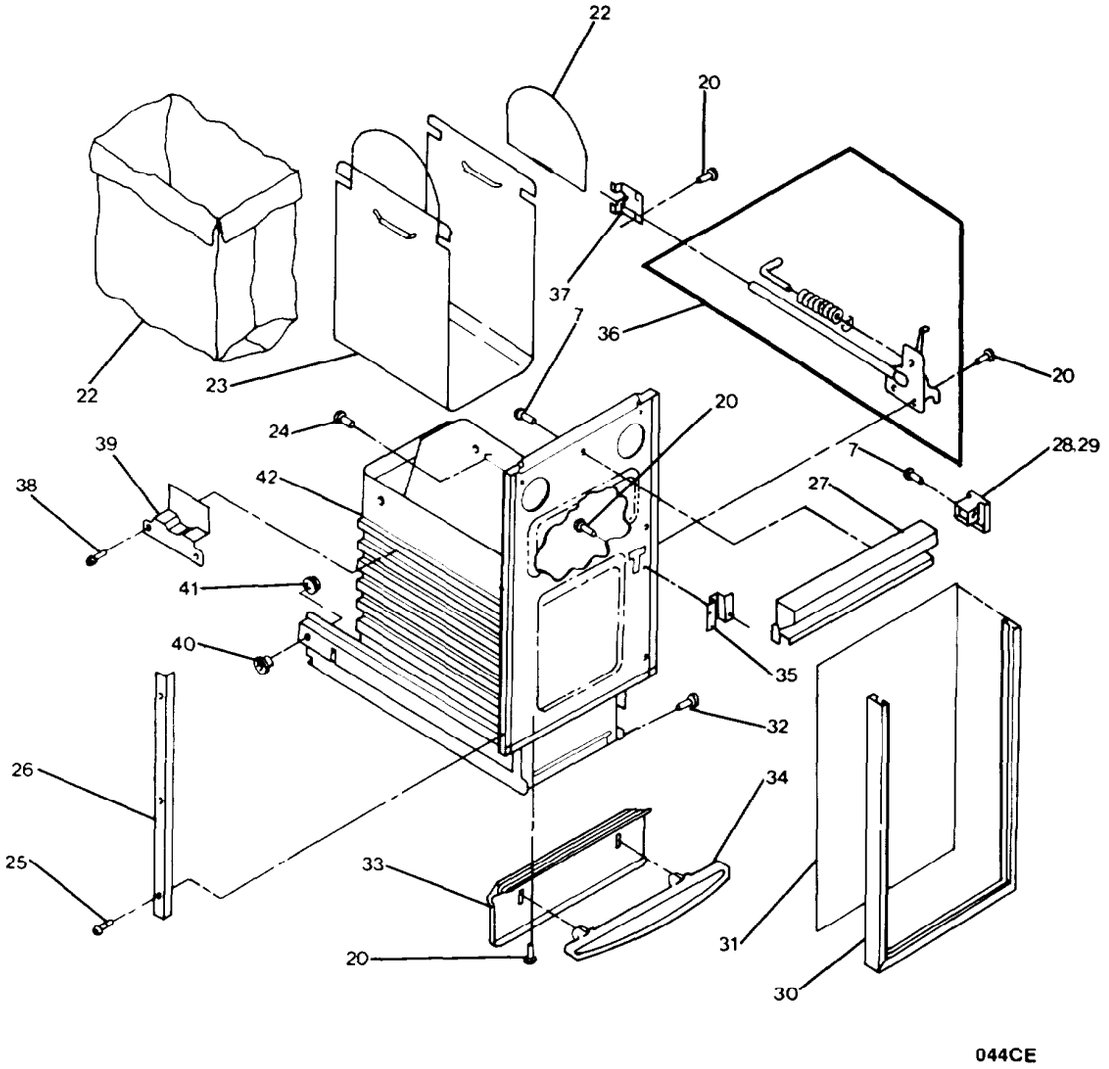

FIGURE 415. Solid Waste Compactor (Sheet 3 of 5).

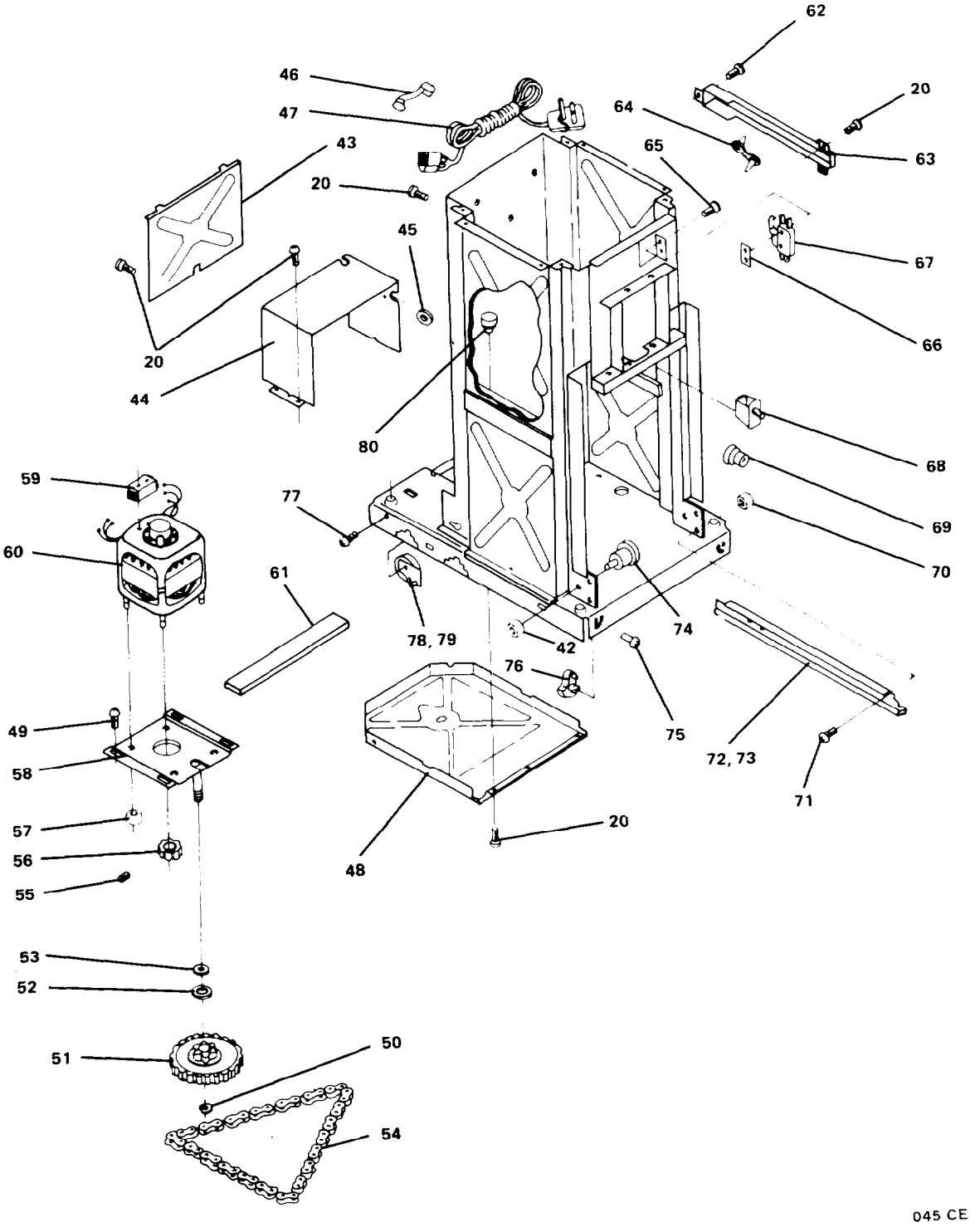

FIGURE 415. Solid Waste Compactor (Sheet 4 of 5).

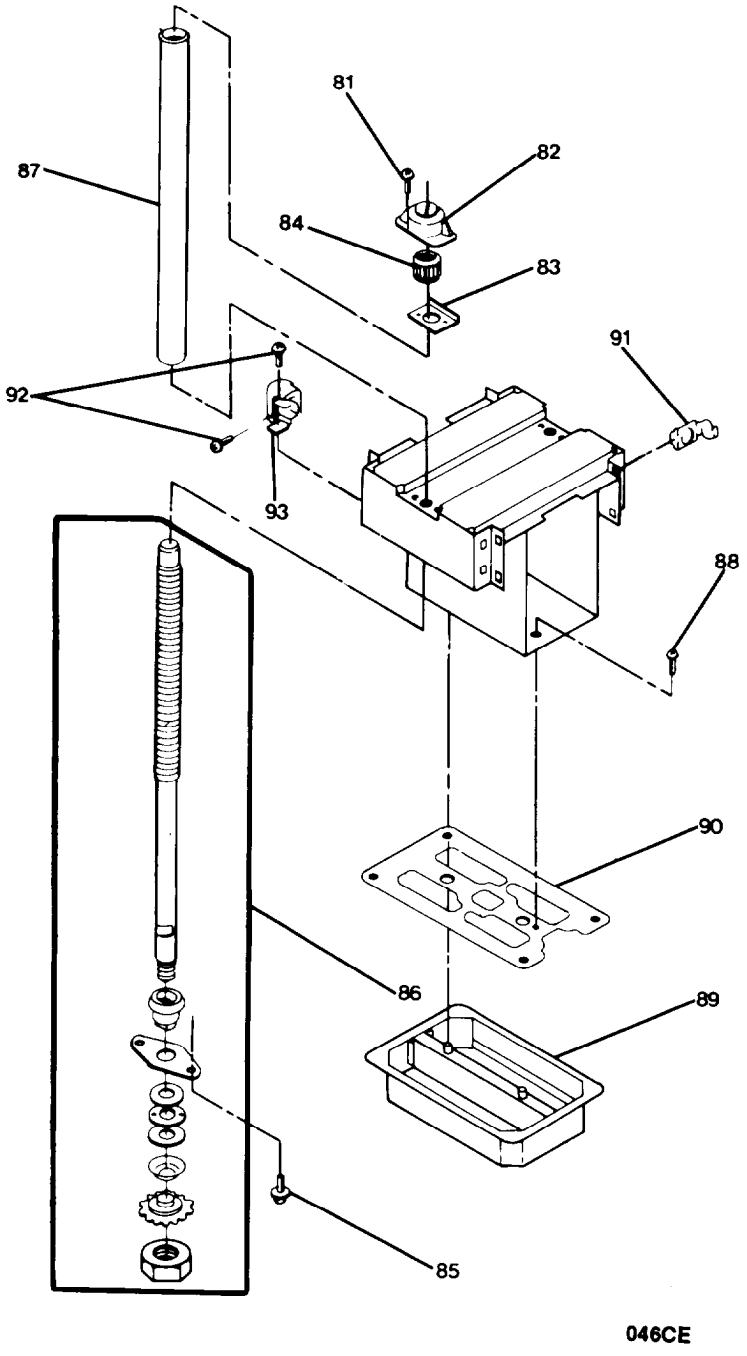

FIGURE 415. Solid Waste Compactor (Sheet 5 of 5).

(1) ITEM NO	(2) SMR CODE	(3) FSCM	(4) PART NUMBER	(5) DESCRIPTION AND USABLE ON CODES(UOC)	(6) QTY
				GROUP 18 BASIC CRAFT	
				FIG. 415 SOLID WASTE COMPACTOR	
1	XDOFF	81306	TUB000XR	. . COMPACTOR,SOLID WAS	1
2	XDFZZ	81306	780138	. . . SCREW,MACHINE	6
3	XDFZZ	81306	608784	. . . BRACKET,RETAINE R (RIGHT HAND)	1
4	XDFZZ	81306	608785	. . . BRACKET,RETAINER (LEFT HAND)	1
5	XDFZZ	81306	608572	. . . COVER,TOP	1
6	XDFZZ	81306	776559	. . . SCREW,MACHINE	4
7	XDFZZ	81306	780230	. . . SCREW,MACHINE	6
8	XDFZZ	81306	780180	. . . END CAP (RIGHT HAND)	1
9	XDFZZ	81306	780179	. . . END CAP (LEFT HAND)	1
10	XDFZZ	81306	780392	. . . KNOB,SWITCH	1
11	XDFZZ	81306	777383	. . . NUT,SWITCH	1
12	PAFZZ	81306	608824	. . . SWITCH,ROTARY (START-RUN)	1
13	PAFZZ	81306	780398	. . . SWITCH,TOGGLE	1
14	XDFZZ	81306	780387	. . . BEZEL,SWITCH	1
15	XDFZZ	81306	780390	. . . ESCUTCHEON,CONTROL	1
16	XDFZZ	81306	608783	. . . COVER,AIR FLOW	1
17	XDFZZ	81306	608782	. . . DIAL,AIR FLOW	1
18	XDFZZ	81306	777642	. . . COMPARTMENT,AIR FLO	1
19	PAFZZ	81306	780421	. . . SWITCH,PUSH (DRAWER TILT)	1
20	XDFZZ	81306	776076	. . . SCREW,MACHINE	25
21	XDFZZ	81306	608846	. . . PANEL,FRONT FRAME	1
22	XDFZZ	81306	777108	. . . HANDLE,CARRIER	2
23	XDFZZ	81306	776989	. . . CARRIER,BAG	1
24	XDFZZ	81306	775785	. . . BUMPER,CONTAINER	2
25	XDFZZ	81306	776191	. . . SCREW,MACHINE	6
26	XDFZZ	81306	608051	. . . PLATE,TRIM	2
27	XDFZZ	81306	780388	. . . HANDLE,CONTAINER	1
28	XDFZZ	81306	780189	. . . CAP,HANDLE (LEFT HAND)	1
29	XDFZZ	81306	780188	. . . CAP,HANDLE (RIGHT HAND)	1
30	XDFZZ	81306	777345	. . . TRIM,CONTAINER	1
31	XDFZZ	81306	777762	. . . PANEL,FRONT	1
32	XDFZZ	81306	780263	. . . SCREW,MACHINE	2
33	XDFZZ	81306	777328	. . . GUARD,TOEPLATE	1
34	XDFZZ	81306	777172	. . . PEDAL,FOOT	1
35	XDFZZ	81306	775665	. . . PLATE,LATCH	1
36	XDFZZ	81306	775740	. . . LATCH ASSEMBLY	1
37	XDFZZ	81306	776395	. . . GUIDE,LATCH	1
38	XDFZZ	81306	777465	. . . SCREW,MACHINE	4
39	XDFZZ	81306	776523	. . . CAM,SPRAY ACTUATOR	2
40	XDFZZ	81306	776261	. . . BEARING,ROLLER	2
41	XDFZZ	81306	776356	. . . LOCKNUT	4
42	XDFZZ	81306	882666	. . . CONTAINER ASSEMBLY	1
43	XDFZZ	81306	608009	. . . PLATE,MOTOR COVER	1
44	XDFZZ	81306	608849	. . . COVER,MOTOR	1
45	XDFZZ	81306	776118	. . . GROMMET,MOTOR COVER	1
46	XDFZZ	81306	776119	. . . BUSHING,CORD	1
47	XDFZZ	81306	778575	. . . CORD,POWER	1
48	XDFZZ	81306	608022	. . . PAN,BOTTOM	1

(1) ITEM NO	(2) SMR CODE	(3) FSCM	(4) PART NUMBER	(5) DESCRIPTION AND USABLE ON CODES(UOC)	(6) QTY
49	XDFZZ	81306	776593	... BOLT,MACHINE	4
50	XDFZZ	81306	776036	...CLIP,RING	1
51	XDFZZ	81306	777124	...GEAR,DRIVEN	1
52	XDFZZ	81306	297462	... WASHER,THRUST	1
53	XDFZZ	81306	776035	...WASHER,WAVE	1
54	XDFZZ	81306	780477	...CHAIN,DRIVE	1
55	XDFZZ	81306	454512	...PIN,SLOTTED SPRING	1
56	XDFZZ	81306	776839	...GEAR,DRIVE	1
57	XDFZZ	81306	776338	... LOCKNUT	4
58	XDFZZ	81306	776327	...PLATE,MOUNT	1
59	PAFZZ	81306	7801064	... SWITCH,SOLID STATE	1
60	PAFZZ	81306	780378	...MOTOR,ALTERNATING C (DRIVE)	1
61	XDFZZ	81306	776780	...BARRIER,GLASS	1
62	XDFZZ	81306	777070	...SCREW,MACHINE	1
63	XDFZZ	81306	608039	... SHIELD,HARNESS	1
64	XDFZZ	81306	777035	...CLAMP,WIRE	1
65	XDFZZ	81306	777849	...SCREW,MACHINE	2
66	XDFZZ	81306	777850	...PLATE,NUT	1
67	PAFZZ	81306	777811	...SWITCH,SENSITIVE (TOP LIMIT AND DIRECTIONAL)	1
68	PAFZZ	81306	780420	...SWITCH,PUSH (DRAWER SAFETY)	1
69	XDFZZ	81306	777180	...SPRING,CONTAINER	1
70	XDFZZ	81306	776188	...NUT,PLAIN,HEXAGON	4
71	XDFZZ	81306	777458	...SCREW,MACHINE	4
72	XDFZZ	81306	608090	...FRAME,SLIDE (RIGHT HAND)	1
73	XDFZZ	81306	608091	...FRAME,SLIDE (LEFT HAND)	1
74	XDFZZ	81306	776262	...BEARING,ROLLER	2
75	XDFZZ	81306	780125	...SCREW AND WASHER	2
76	XDFZZ	81306	780082	... LEVELER	2
77	XDFZZ	81306	780131	...SCREW,MACHINE	2
78	XDFZZ	81306	780137	...WHEEL ASSEMBLY (LEFT HAND)	1
79	XDFZZ	81306	780139	...WHEEL ASSEMBLY (RIGHT HAND)	1
80	XDFZZ	81306	775643	...BUMPER	4
81	XDFZZ	81306	780034	...SCREW,MACHINE	4
82	XDFZZ	81306	780036	...RETAINER,NUT	2
83	XDFZZ	81306	608733	...PLATE,DOUBLER	2
84	XDFZZ	81306	777533	...NUT,POWER	2
85	XDFZZ	81306	775071	...SCREW,MACHINE	4
86	PAFZZ	81306	777876	...ACTUATOR,MECHANICAL	2
87	XDFZZ	81306	780413	...PROTECTOR,POWER SCR	2
88	XDFZZ	81306	777595	...SCREW,MACHINE	1
89	XDFZZ	81306	608723	... COVER,RAM	1
90	XDFZZ	81306	780021	...WIPER,RAM	1
91	XDFZZ	81306	777758	...PAD,RAM	8
92	XDFZZ	81306	777444	...SCREW,MACHINE	2
93	XDFZZ	81306	777691	...BLOCK,CONTAINER STO	1

END OF FIGURE

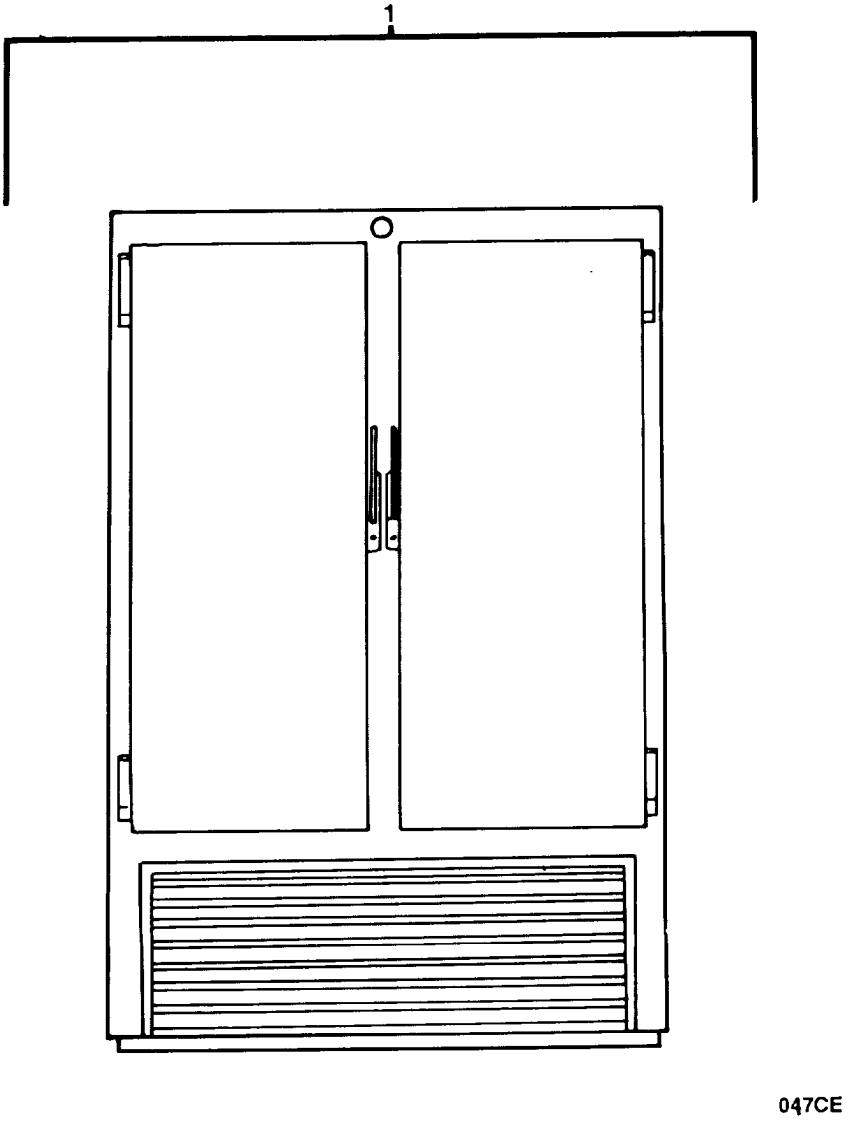

FIGURE 416. Refrigerator Mechanical, Food (Sheet 1 of 4).

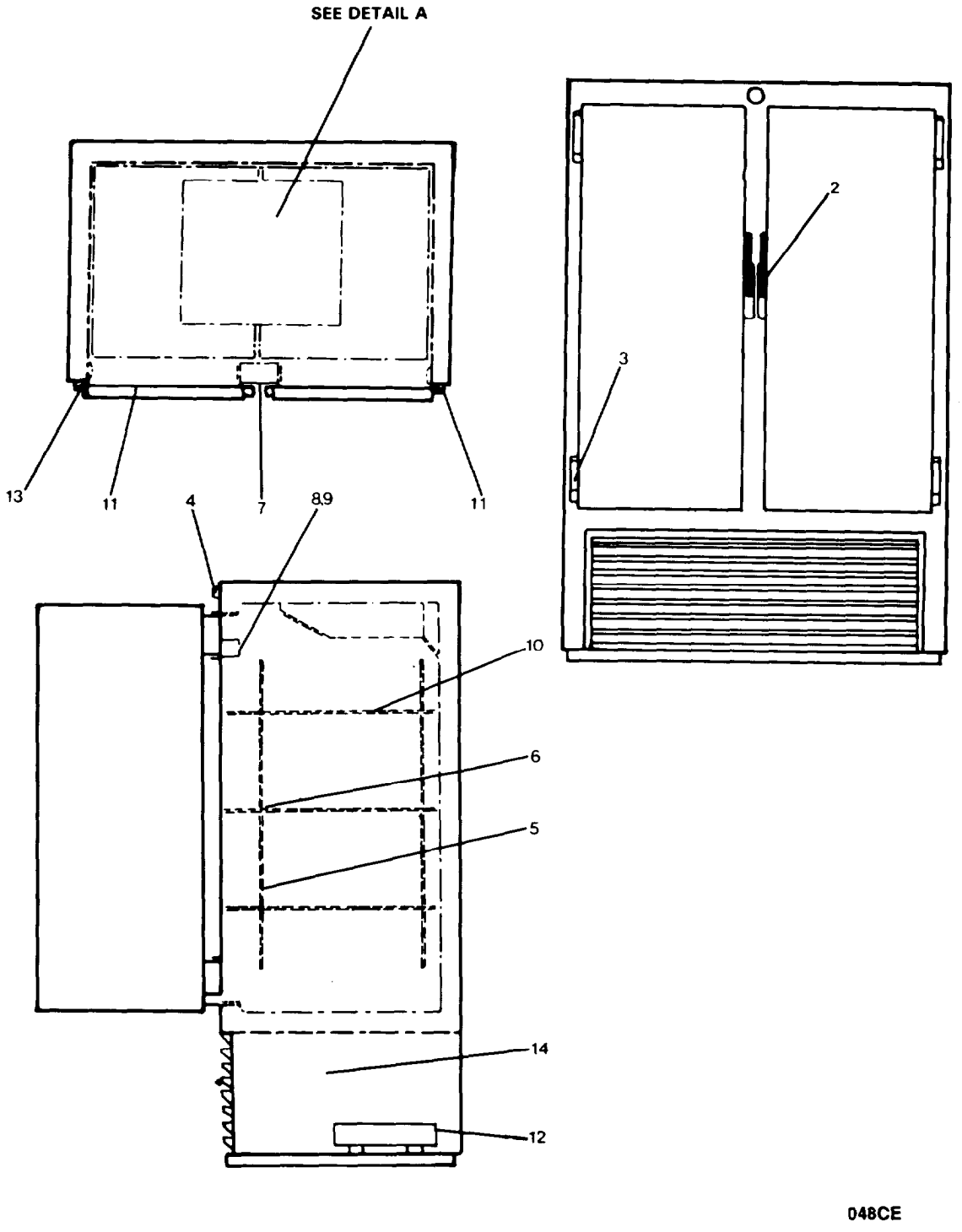

FIGURE 416. Refrigerator Mechanical, Food (Sheet 2 of 4).

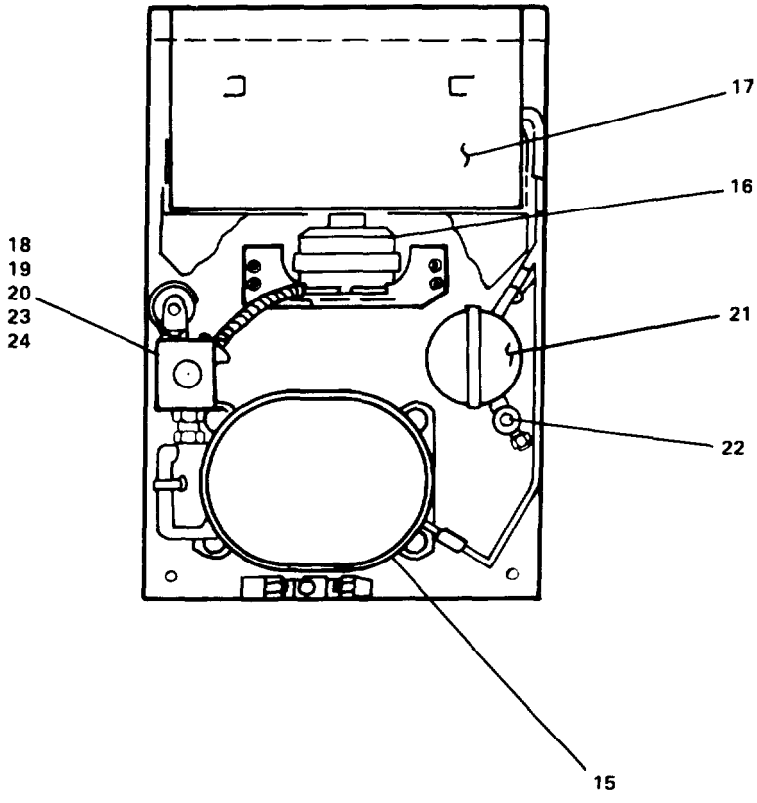

DETAIL A
CONDENSER, REFRIGERATION

049 CE

FIGURE 416. Refrigerator Mechanical, Food (Sheet 3 of 4).

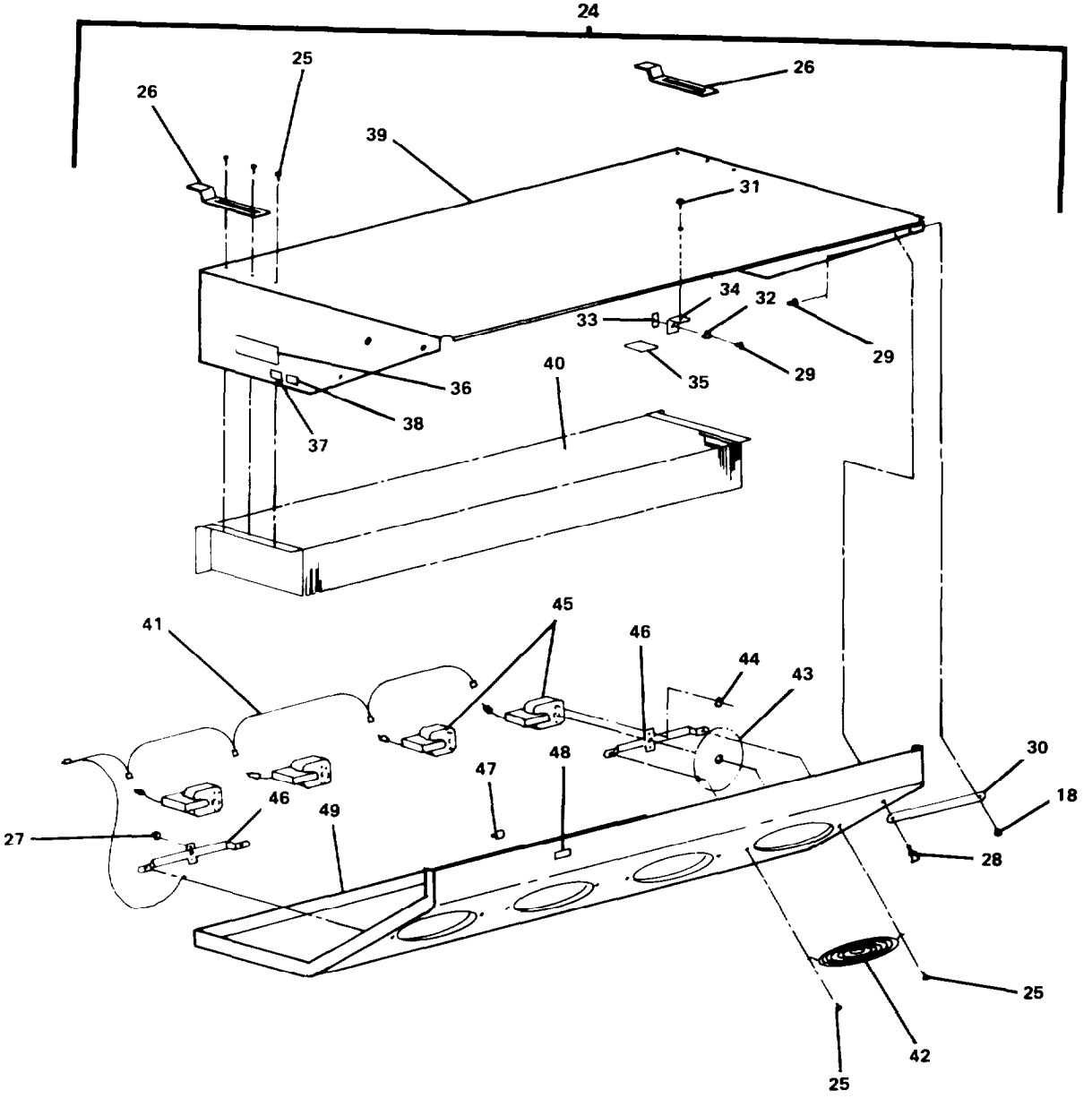

DETAIL A
EVAPORATOR COIL, REFRIGERATION

050 CE

FIGURE 416. Refrigerator Mechanical, Food (Sheet 4 of 4).

(1) ITEM NO	(2) SMR CODE	(3) FSCM	(4) PART NUMBER	(5) DESCRIPTION AND USABLE ON CODES(UOC)	(6) QTY
				GROUP 18 BASIC CRAFT	
				FIG. 416 REFRIGERATOR, MECHANICAL, FOOD	
1	XDOFF	66682	R30-2M-S	. . REFRIGERATOR,MECHAN	1
2	XDFZZ	66682	174	. . . LATCH ASSEMBLY	2
3	XDFZZ	66682	1267	. . . HINGE,ACCESS DOOR	4
4	XDFZZ	66682	6812	. . . THERMOMETER	1
5	XDFZZ	66682	60	. . . PILASTER	4
6	XDFZZ	66682	66	. . . CLIP,PILASTER	24
7	XDFZZ	66682	R67-1907	. . . SWITCH,LIGHT	2
8	XDFZZ	66682	2778	. . . SHIELD,LAMP	2
9	XDFZZ	66682	L10-X003	. . . SOCKET,LAMP	2
10	XDFZZ	66682	20 1/2-23 1/2	. . . SHELF	6
11	XDFZZ	66682	20 1/2-50	. . . GASKET	2
12	XDFZZ	66682	43-065	. . . EVAPORATOR,CONDENSA	1
13	XDFZZ	66682	FG-152	. . . HEATER,CONDENSATE	1
14	XDOFF	59431	AE4440AC	. . . CONDENSER,REFRIGERA	1
15	XDFZZ	59431	AE4440	. . . . COMPRESSOR	1
16	XDFZZ	59431	810G006A13	. . . . MOTOR,ALTERNATING C	1
17	XDFZZ	59431	51531-2	. . . . IMPELLER,FAN,AXIAL	1
18	XDFZZ	59431	85657-1	. . . . CAPACITOR,FIXED,ELE	1
19	XDFZZ	59431	82632	. . . . RELAY,ELECTROMAGNET	1
20	XDFZZ	59431	8300MRPD86	. . . . PROTECTOR,THERMAL-0	1
21	XDFZZ	59431	C052S	. . . . DRYER,FILTER	1
22	XDFZZ	59431	SG114	. . . . INDICATOR,SIGHT,LIQ	1
23	XDFZZ	59431	1402	. . . . CONTROL,LOW LEVEL	1
24	XDOFF	14852	TA-170	. . . EVAPORATOR COIL,REF	1
25	XDFZZ	14852	5488-B	. . . . SCREW,MACHINE	10
26	XDFZZ	14852	65504002	. . . . BAR,HANGER	4
27	XDFZZ	14852	5491-F	. . . . SCREW,MACHINE	4
28	XDFZZ	14852	4399-B	. . . . SCREW,WING,CAPTIVE	4
29	XDFZZ	14852	5441-C	. . . . TINNERMAN	4
30	XDFZZ	14852	4392-X	. . . . LANYARD	4
31	XDFZZ	14852	5487-B	. . . . SCREW,MACHINE	2
32	XDFZZ	14852	5540-R	. . . . CLAMP,TUBE	1
33	XDFZZ	14852	5446-A	. . . . TINNERMAN,FLAT	2
34	XDFZZ	14852	91815001	. . . . BRACKET	1
35	XDFZZ	14852	4334B002	. . . . PLATE,INSTRUCTION	1
36	XDFZZ	14852	C1288E01	. . . . PLATE,IDENTIFICATIO	1
37	XDFZZ	14852	5797-J	. . . . LABEL	1
38	XDFZZ	14852	4354-D	. . . . LABEL,PLATE	1
39	XDFZZ	14852	C25523A1	. . . . HOUSING,TOP	1
40	XDFZZ	14852	C23706A2	. . . . COIL ASSEMBLY	1
41	XDFZZ	14852	4355E001	. . . . HARNESS,MOTOR	1
42	XDFZZ	14852	5054-D	. . . . GUARD,FAN	2
43	XDFZZ	14852	5101-B	. . . . BLADE,FAN	2
44	XDFZZ	14852	5441-F	. . . . NUT,WHIZ	4
45	XDFZZ	14852	5021-S	. . . . MOTOR,ALTERNATING C	2
46	XDFZZ	14852	91179001	. . . . MOUNT,MOTOR	2
47	XDFZZ	14852	4380-A	. . . . CLAMP,WIRE	2

(1) ITEM NO	(2) SMR CODE	(3) FSCM	(4) PART NUMBER	(5) DESCRIPTION AND USABLE ON CODES(UOC)	(6) QTY
48	XDFZZ	14852	5561-T	. . . LABEL	1
49	XDFZZ	14852	91186002	. . . HOUSING,BOTTOM	1

END OF FIGURE

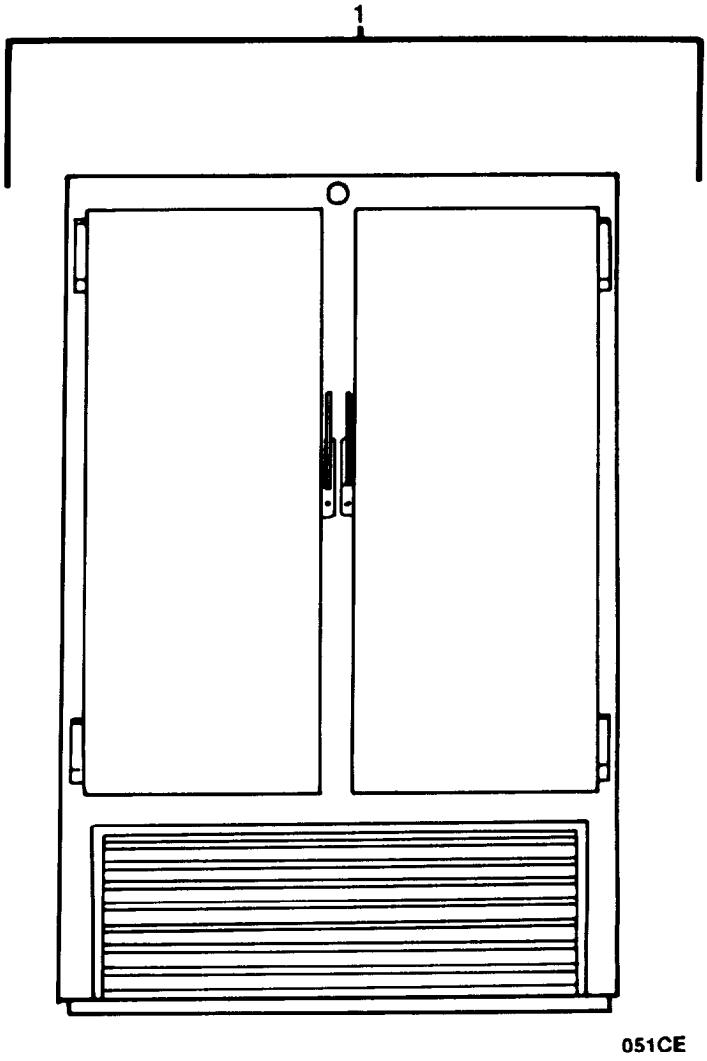

FIGURE 417. Freezer, Mechanical, Food (Sheet 1 of 4).

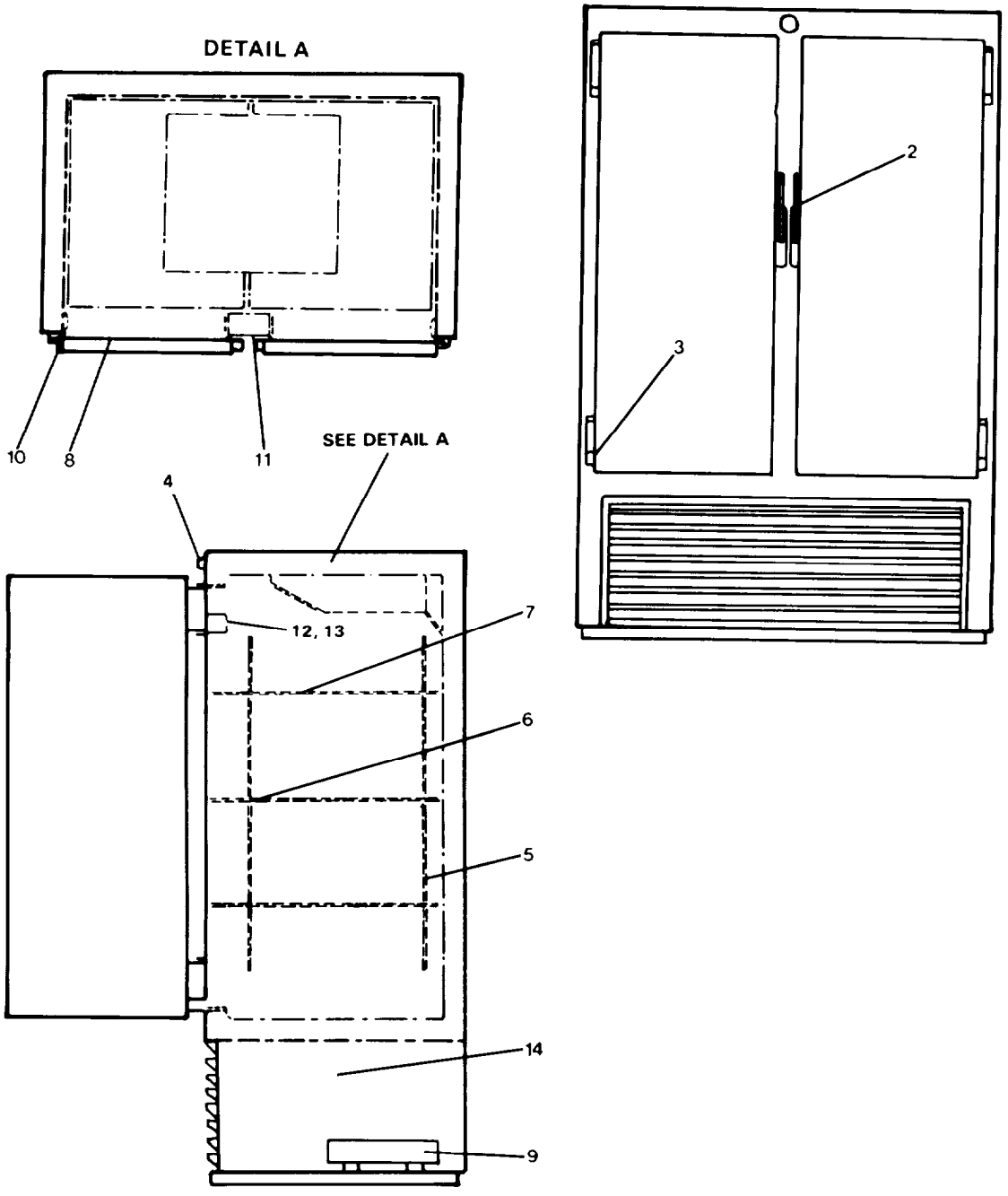

FIGURE 417. Freezer, Mechanical, Food (Sheet 2 of 4).

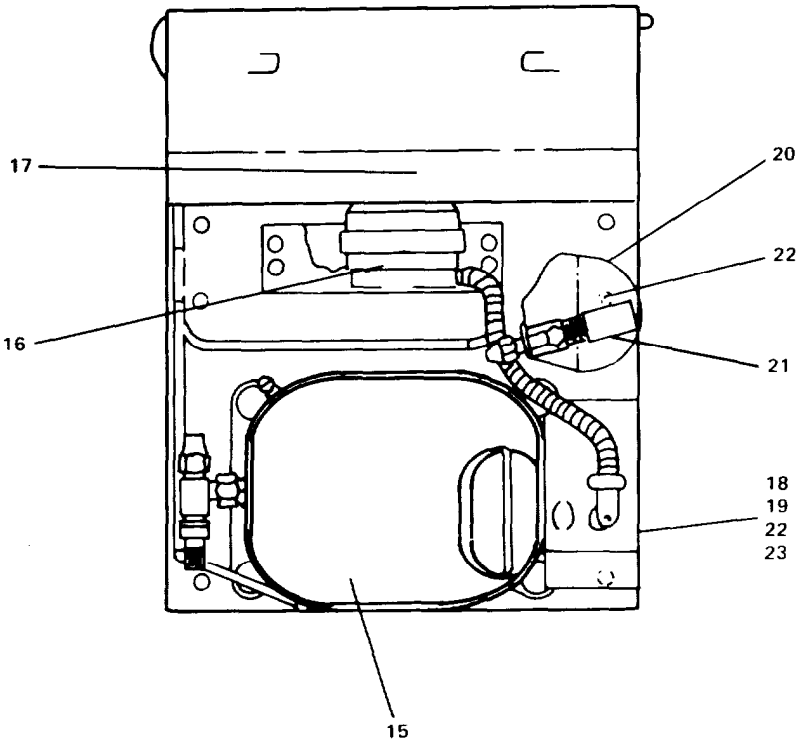

CONDENSER, REFRIGERATION

053 CE

FIGURE 417. Freezer, Mechanical, Food (Sheet 3 of 4).

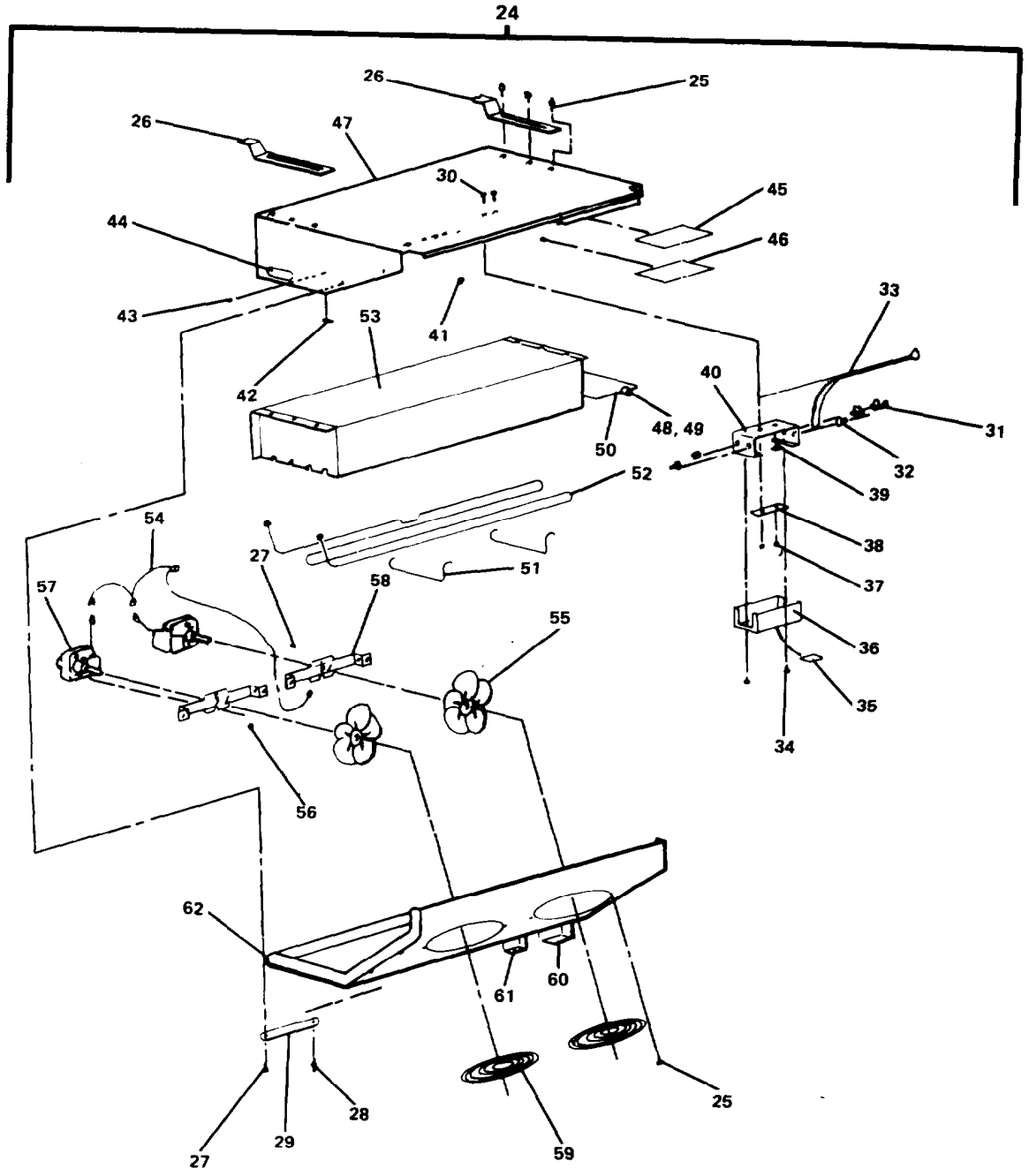

DETAIL A
EVAPORATOR COIL ASSEMBLY

054CE

FIGURE 417. Freezer, Mechanical, Food (Sheet 4 of 4).

(1) ITEM NO	(2) SMR CODE	(3) FSCM	(4) PART NUMBER	(5) DESCRIPTION AND USABLE ON CODES(UOC)	(6) QTY
				GROUP 18 BASIC CRAFT	
				FIG. 417 FREEZER, MECHANICAL, FOOD	
1	XDOFF	66682	F30-2M-ADS	. . FREEZER,MECHANICAL	1
2	XDFZZ	66682	174	. . . LATCH ASSEMBLY	2
3	XDFZZ	66682	1267	. ..HINGE,ACCESS DOOR	4
4	XDFZZ	66682	6812	. ..THERMOMETER	1
5	XDFZZ	66682	60	. . . PILASTER	4
6	XDFZZ	66682	66	. ..CLIP,PILASTER	24
7	XDFZZ	66682	20 1/2-23 1/2	. . . SHELF	6
8	XDFZZ	66682	20 1/2-50	. . . GASKET	2
9	XDFZZ	66682	43-065	. . . EVAPORATOR,CONDENSA	1
10	XDFZZ	66682	FG-152	. . . HEATER,CONDENSATE	1
11	XDFZZ	66682	R67-1907	. . . SWITCH,LIGHT	2
12	XDFZZ	66682	2778	. . . SHIELD,LAMP	2
13	XDFZZ	66682	L10-X003	. . . SOCKET,LAMP	2
14	XDOFF	59431	AJ2425AC	. . . CONDENSER,REFRIGERA	1
15	XDFZZ	50431	AJ2425A	. . ..COMPRESSOR	1
16	XDFZZ	59431	810A18-A	. . ..MOTOR,ALTERNATING C	1
17	XDFZZ	59431	51551	. . . . IMPELLER,FAN,AXIAL	1
18	XDFZZ	59431	85PS165A47	. . ..CAPACITOR,FIXED,PAP	1
19	XDFZZ	59431	83960	. . . . OVERLOAD	1
20	XDFZZ	59431	C052S	. . . . DRYER,FILTER	1
21	XDFZZ	59431	SG114	. . . . INDICATOR,SIGHT,LIQ	1
22	XDFZZ	59431	T6061	. . . . THERMOSTAT	1
23	XDFZZ	59431	8145-00	. . . . TIMER,DEFROST	1
24	XDOFF	14852	TL 160	. ..EVAPORATOR COIL,REF	1
25	XDFZZ	14852	5488-B	. . . . SCREW,MACHINE	10
26	XDFZZ	14852	65504002	. . . . BAR,HANGER	2
27	XDFZZ	14852	5491-F	. . . . SCREW,MACHINE	6
28	XDFZZ	14852	4399-B	. . . . SCREW,WING,CAPTIVE	4
29	XDFZZ	14852	4392-X	. . . . LANYARD	4
30	XDFZZ	14852	5408-B	. . . . SCREW,MACHINE	2
31	XDFZZ	14852	5528-G	. . . . STRAIN RELIEF	1
32	XDFZZ	14852	5534-G	. . ..BUSHING,SNAP	3
33	XDFZZ	14852	4366E001	. . . . HARNESS LEAD	1
34	XDFZZ	14852	5487-B	. . . . SCREW,MACHINE	2
35	XDFZZ	14852	5575-P	. . . . LABEL	1
36	XDFZZ	14852	91190001	. . . . COVER,JUNCTION BOX	1
37	XDFZZ	14852	5436-F	. . ..NUT,WHIZ	2
38	XDFZZ	14852	4145-W	. . ..BLOCK,TERMINAL	1
39	XDFZZ	14852	5445-B	. . ..TINNERMAN	2
40	XDFZZ	14852	91189001	. . . . BOX,JUNCTION	1
41	XDFZZ	14852	5433-D	. . . . CLIP,WIRE	1
42	XDFZZ	14852	5441-C	. . . . TINNERMAN	4
43	XDFZZ	14852	5797-J	. . ..LABEL	1
44	XDFZZ	14852	C1297A03	. . . . PLATE,IDENTIFICATIO	1
45	XDFZZ	14852	4300-F	. . . . DIAGRAM,WIRING	1
46	XDFZZ	14852	4335B001	. . ..PLATE,INSTRUCTION	1
47	XDFZZ	14852	C25523A1	. . . . HOUSING,TOP	1
48	XDFZZ	14852	5485-B	. . . . SCREW,MACHINE	4

(1) ITEM NO	(2) SMR CODE	(3) FSCM	(4) PART NUMBER	(5) DESCRIPTION AND USABLE ON CODES(UOC)	(6) QTY
49	XDFZZ	14852	5709-L	. . ..SWITCH,THERMOSTATIC	1
50	XDFZZ	14852	5708-L	. . . . SWITCH,THERMOSTATIC	1
51	XDFZZ	14852	5543-J	. . . . CLIP,HEATER	2
52	XDFZZ	14852	72102003	. . . . HEATER,DEFROST	1
53	XDFZZ	14852	C23730A1	. . . . COIL ASSEMBLY	1
54	XDFZZ	14852	4355E003	. . . . HARNESS,MOTOR	1
55	XDFZZ	14852	5101-B	. . . . BLADE FAN	2
56	XDFZZ	14852	5441-F	. . . . NUT,WHIZ	2
57	XDFZZ	14852	5021-S	. . . . MOTOR,ALTERNATING C	2
58	XDFZZ	14852	91179001	. . . . MOUNT,MOTOR	2
59	XDFZZ	14852	5054-D	. . . . GUARD,FAN	2
60	XDFZZ	14852	4363B001	. . ..PLATE,INSTRUCTION	1
61	XDFZZ	14852	4363B002	. . . . PLATE,INSTRUCTION	1
62	XDFZZ	14852	91186002	. . . . HOUSING,BOTTOM	1

END OF FIGURE

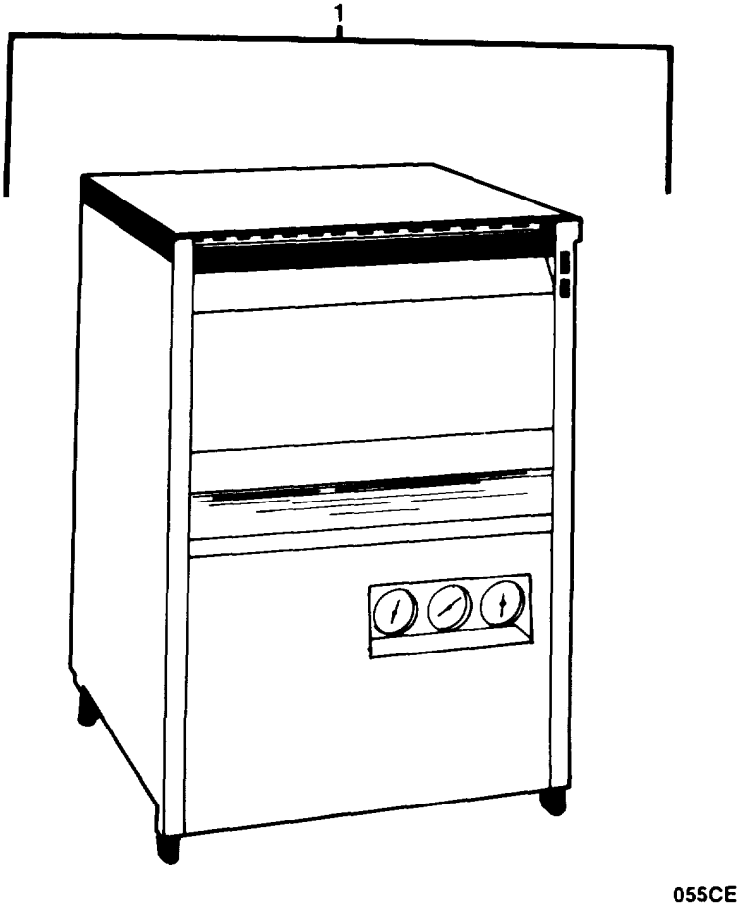

FIGURE 418. Dishwasher (Sheet 1 of 6).

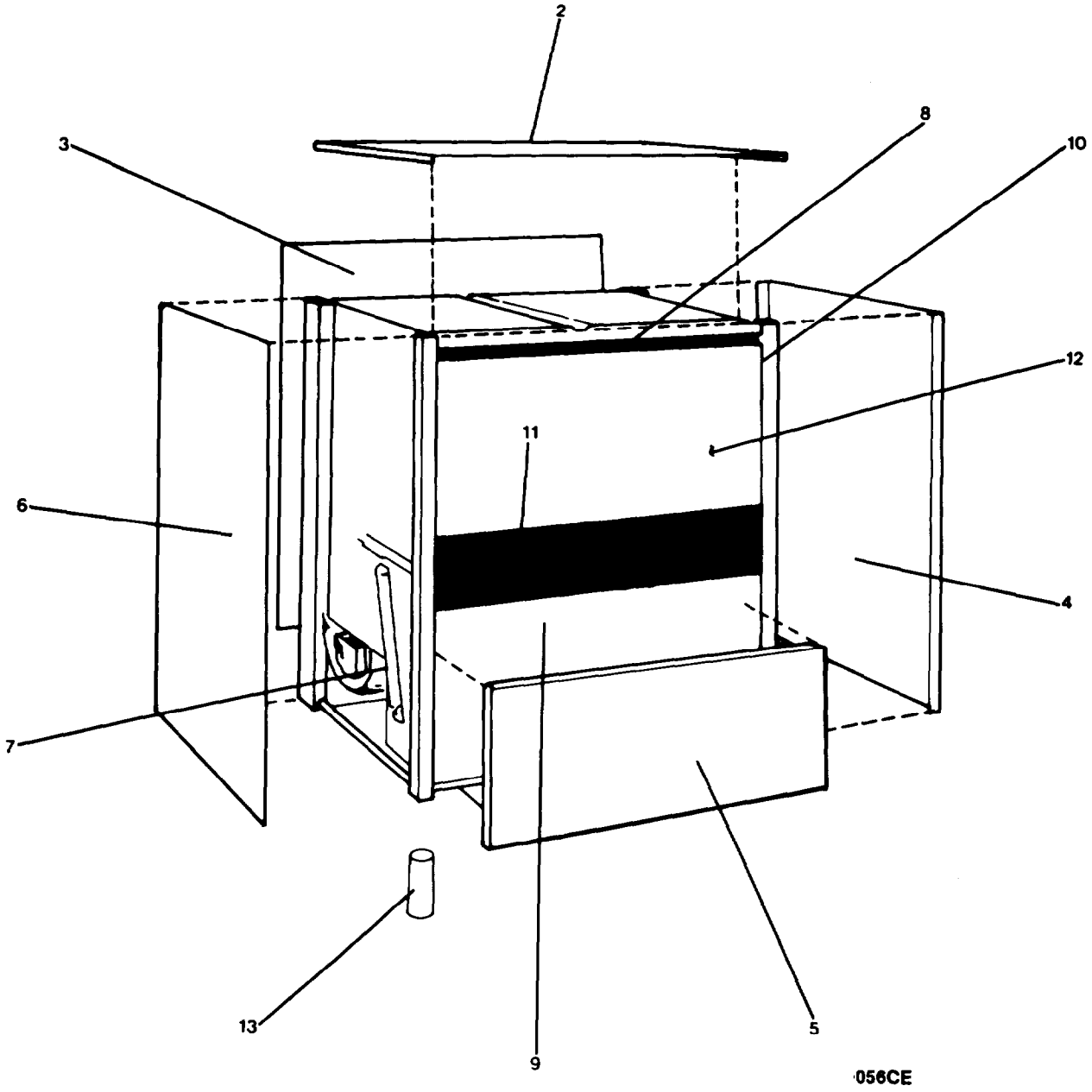

FIGURE 418. Dishwasher (Sheet 2 of 6).

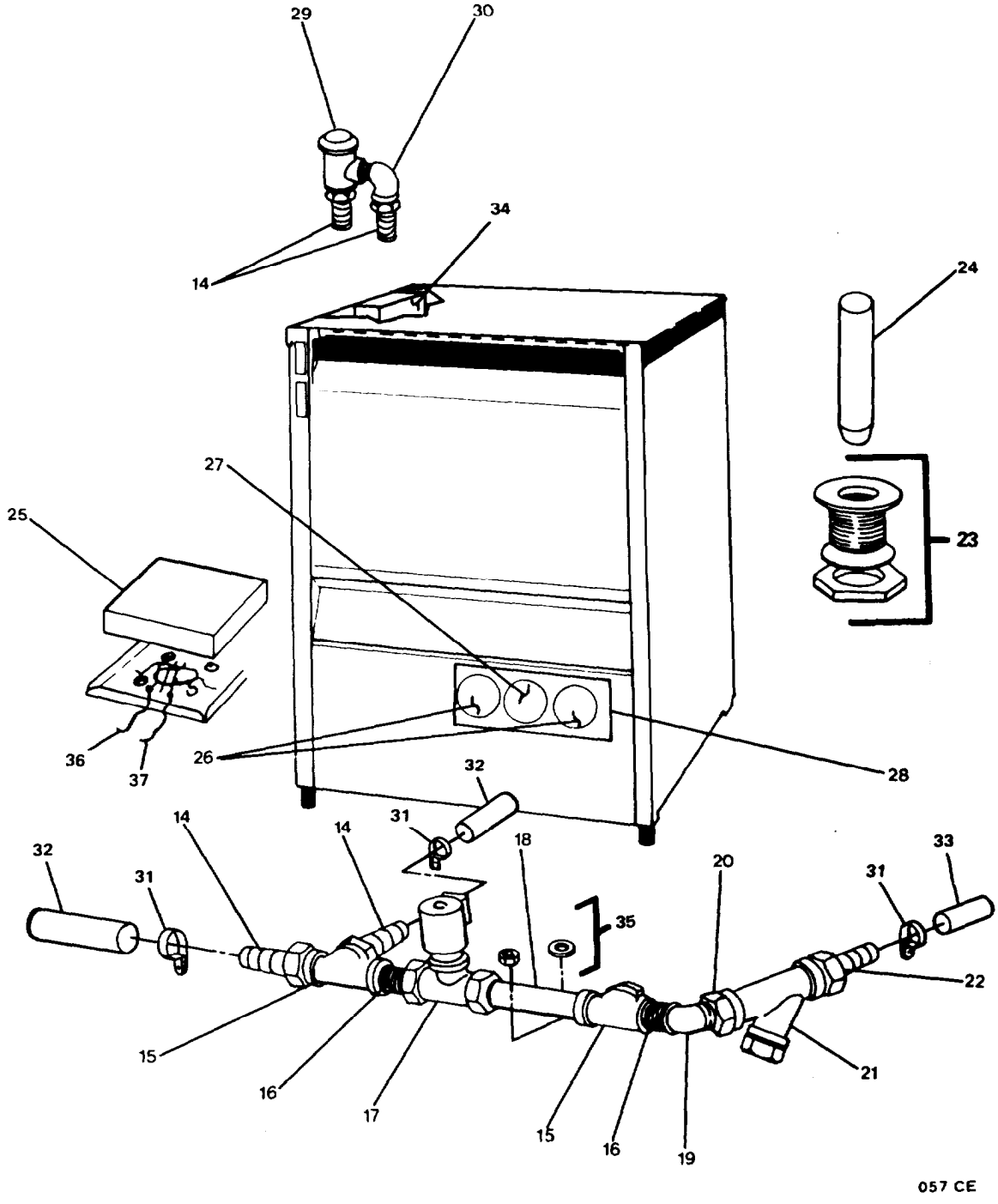

FIGURE 418. Dishwasher (Sheet 3 of 6).

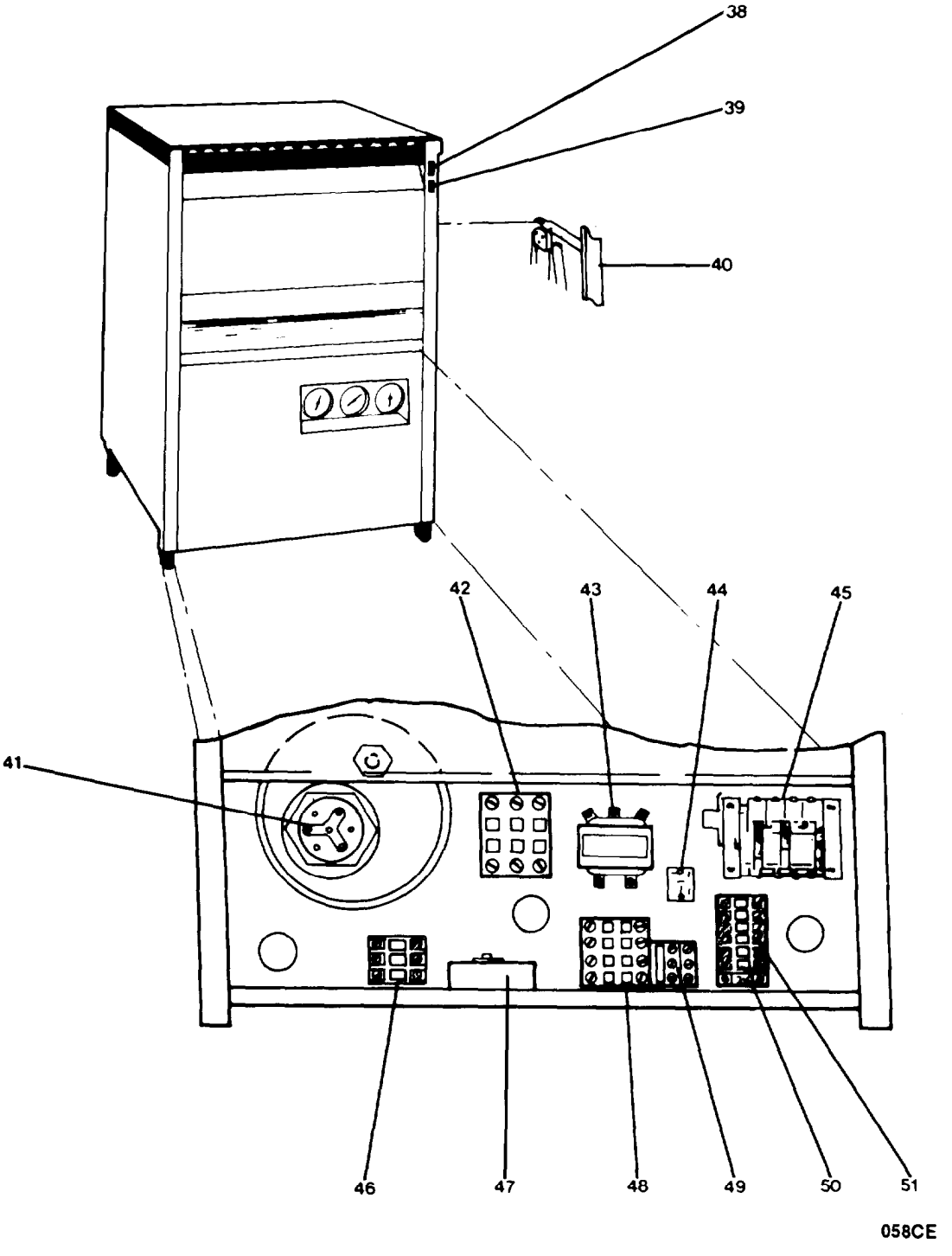

FIGURE 418. Dishwasher (Sheet 4 of 6).

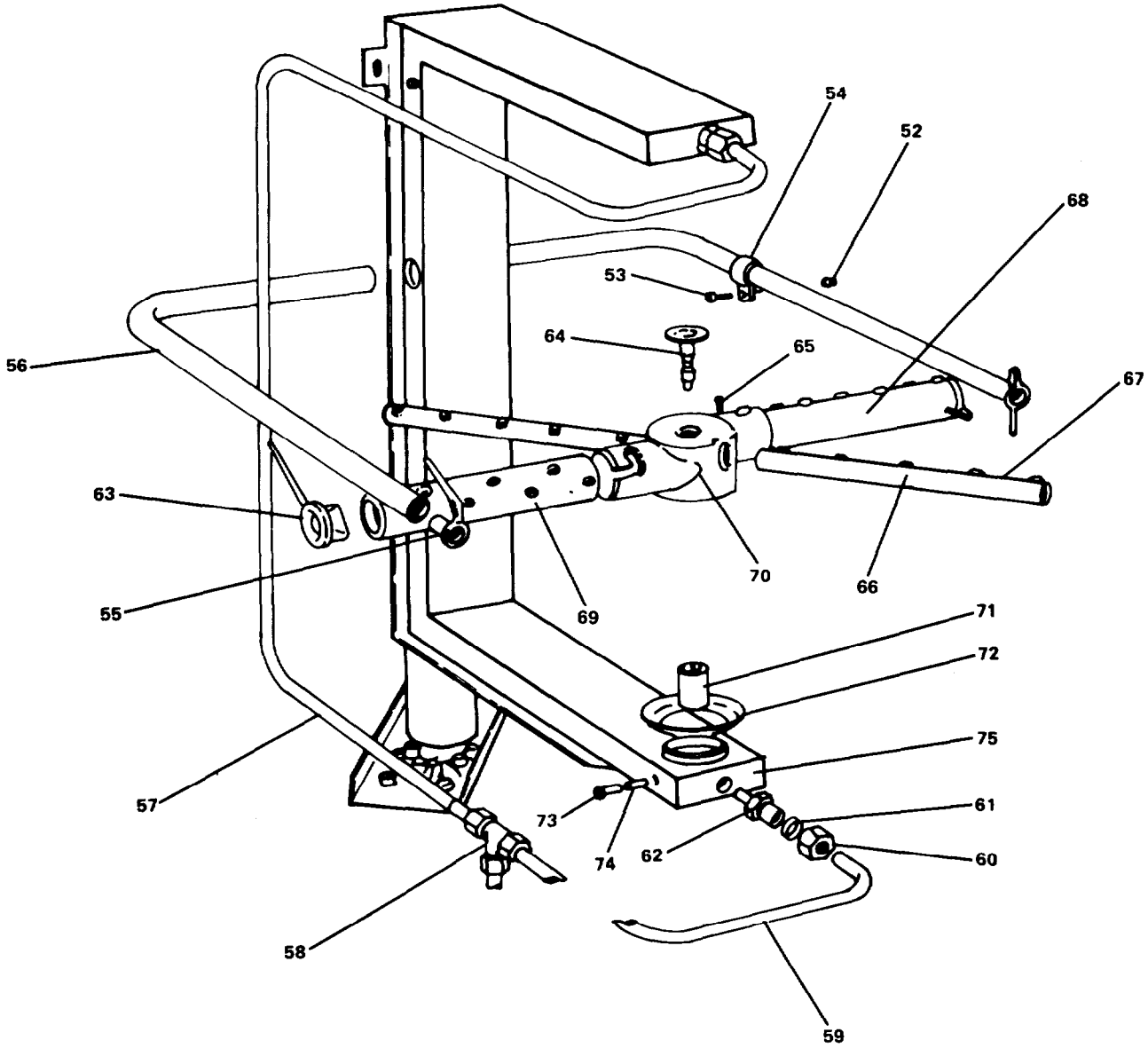

PUMP AND MOTOR ASSEMBLY

059CE

FIGURE 418. Dishwasher (Sheet 5 of 6).

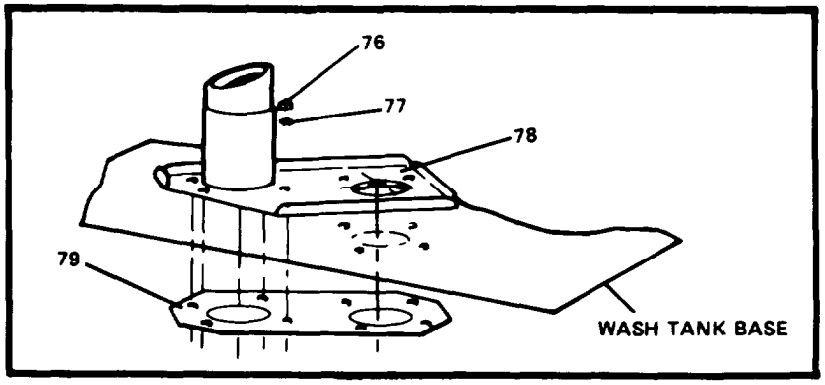

DETAIL A

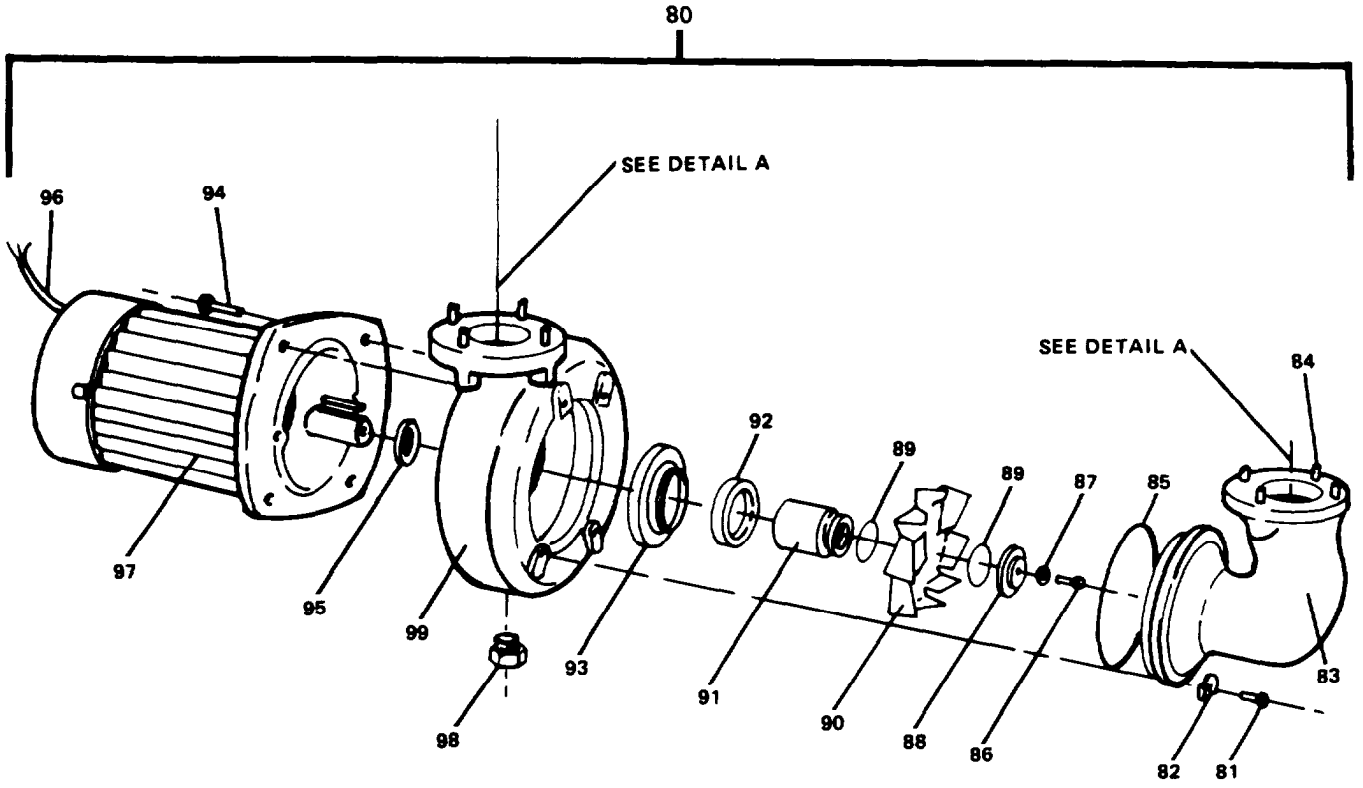

FIGURE 418. Dishwasher (Sheet 6 of 6).

(1) ITEM NO	(2) SMR CODE	(3) FSCM	(4) PART NUMBER	(5) DESCRIPTION AND USABLE ON CODES(UOC)	(6) QTY
				GROUP 18 BASIC CRAFT	
				FIG. 418 DISHWASHER	
1	PBOFF	08347	UC-1	..DISHWASHER (WITH BOOSTER HEATER)	1
2	XDFZZ	08347	W-3-70294	. . . COVER,TOP	1
3	XDFZZ	08347	W-3-70440	. ..PANEL,REAR	1
4	XDFZZ	08347	W-1-70296	. ..PANEL,RIGHT HAND	1
5	XDFZZ	08347	W-3-99726	. . . PANEL,FRONT	1
6	XDFZZ	08347	W-1-70295	. ..PANEL,LEFT HAND	1
7	XDFZZ	08347	W-0-70437	. . . SPRING,DOOR	2
8	XDFZZ	08347	W-0-70134	. . . HANDLE	1
9	XDFZZ	08347	W-2-99710	. ..PANEL,HINGE COVER	1
10	XDFZZ	08347	W-0-70140	. ..BRACKET	1
11	XDFZZ	08347	M-0-97844	. ..LOGO	1
12	XDFZZ	08347	W-4-07001	. ..FRAME WITH DOOR	1
13	XDFZZ	08347	W-1-70765-AJ	. . . LEG,ADJUSTABLE	4
14	XDFZZ	08347	W-0-70286	. ..NIPPLE,HOSE	4
15	XDFZZ	08347	W-0-70204	. ..TEE	1
16	XDFZZ	08347	W-0-70395	. ..NIPPLE,CLOSE	2
17	PAFZZ	08347	W-0-70200	. . . VALVE,SOLENOID	1
18	XDFZZ	08347	W-0-70284	. . .NIPPLE	1
19	XDFZZ	08347	W-0-70205	. . .ELBOW	1
20	XDFZZ	08347	W-0-70348	. ..BUSHING,REDUCING	1
21	XDFZZ	08347	W-0-70392	. ..STRAINER,LINE	1
22	XDFZZ	08347	W-0-70393	. . . NIPPLE,HOSE	1
23	XDFZZ	08347	W-1-70765	. . . DRAIN ASSEMBLY,OUTL	1
24	XDFZZ	08347	W-1-70058	. . . PIPE,STAND	1
25	XDFZZ	08347	W-2-70059	. . . STRAINER,PUMP INLET	1
26	PAFZZ	08347	W-0-70155	. . . GAGE,THERMOMETER	2
27	PAFZZ	08347	W-0-70156	. ..GAGE,PRESSURE	1
28	XDFZZ	08347	W-2-70441	. ..BRACKET	1
29	PAFZZ	08347	W-0-70201	. . . BREAKER,VACUUM	1
30	XDFZZ	08347	W-0-70370	. . .ELBOW	1
31	XDFZZ	08347	W-0-70202	. ..CLAMP,HOSE	6
32	PAFZZ	08347	W-0-70346	. . . HOSE	2
33	PAFZZ	08347	W-0-70347	. ..HOSE	1
34	XDFZZ	08347	W-2-70388	. ..BRACKET	1
35	XDFZZ	08347	W-0-70293	. . . BOLT,U WITH NUTS	2
36	XDFZZ	08347	W-0-70436	. ..WIRE	V
37	XDFZZ	08347	W-0-96551	. ..WIRE	V
38	PAFZZ	08347	W-0-70154	. ..SWITCH,FILL/START	1
39	PAFZZ	08347	W-0-70153	. ..SWITCH,ON/OFF HEAT	1
40	PAFZZ	08347	W-0-70152	. ..SWITCH,LIMIT	1
41	PAFZZ	08347	W-0-70094	. ..HEATING ELEMENT,ELE	1
42	PAFZZ	08347	W-1-07209	. ..CONTACTOR,HEAT	1
43	PAFZZ	08347	W-1-07957	. ..TRANSFORMER	1
44	PAFZZ	08347	W-0-14246	. . .RELAY	1
45	PAFZZ	08347	W-0-70189	. . . TIMER,CYCLE	1
46	XDFZZ	08347	W-1-70191	. ..TERMINAL,POWER	1
47	PAFZZ	08347	W-1-07768	. ..THERMOSTAT	1
48	PAFZZ	08347	W-0-70192	. ..CONTACTOR,MOTOR	1

(1) ITEM NO	(2) SMR CODE	(3) FSCM	(4) PART NUMBER	(5) DESCRIPTION AND USABLE ON CODES(UOC)	(6) QTY
49	PAFZZ	08347	M-0-71603	. ..OVERLOAD,MOTOR	1
50	PAFZZ	08347	W-0-70434	. . . FUSE,FAST ACTING	1
51	XDFZZ	08347	W-1-70190	. ..TERMINAL,CONTROL	1
52	XDFZZ	08347	W-0-70122	. . . NUT	4
53	XDFZZ	08347	W-0-70121	. ..BOLT	4
54	XDFZZ	08347	W-1-70120	. . .CLIP	4
55	XDFZZ	08347	W-1-70066	. ..CAP,END	2
56	XDFZZ	08347	W-2-70056	. . . ARM,FIXED SPRAY	2
57	XDFZZ	08347	W-1-70044	. ..MANIFOLD,RINSE,UPPE	1
58	XDFZZ	08347	W-0-70117	. ..TEE,COMPRESSION	2
59	XDFZZ	08347	W-1-70045	. ..MANIFOLD,RINSE,LOWE	1
60	XDFZZ	08347	W-0-70115	. ..NUT,COMPRESSION	2
61	XDFZZ	08347	W-0-70116	. ..RING,COMPRESSION	2
62	XDFZZ	08347	W-1-70047	. . . CONNECTOR,RINSE BLO	2
63	XDFZZ	08347	W-1-70085	. . . CAP,END	2
64	XDFZZ	08347	W-1-70060	. ..KNOB,SPRAY ARM	1
65	XDFZZ	08347	W-0-70093	. ..SCREW,ADJUSTMENT	2
66	PAFZZ	08347	W-1-70086	. ..ARM,RINSE	2
67	PAFZZ	08347	W-0-70087	. ..NOZZLE,RINSE ARM	10
68	PAFZZ	08347	W-2-70083	. ..ARM,WASH	2
69	PAFZZ	08347	W-1-70084	. . . NOZZLE,WASH ARM	14
70	PAFZZ	08347	W-2-70082	. . . HUB ASSEMBLY	1
71	XDFZZ	08347	W-1-70046	. ..BLOCK,RINSE	2
72	XDFZZ	08347	W-1-70767	. ..WASHER,CUP	1
73	XDFZZ	08347	W-0-70114	. ..BOLT,HEXAGON	4
74	XDFZZ	08347	W-1-70048	. . . SPACER	4
75	XDFZZ	08347	W-1-70043	. . . MANIFOLD,WASH	1
76	XDFZZ	08347	W-0-70112	. . .NUT	8
77	XDFZZ	08347	W-0-70113	. ..WASHER,LOCK	8
78	XDFZZ	08347	W-2-70090	. ..PLATE,PUMP INLET	1
79	PAFZZ	08347	W-1-70067	. . . GASKET	1
80	PBFFF	08347	W-4-70069	. . . PUMP AND MOTOR ASSE	1
81	XDFZZ	08347	W-0-70110	. . . . BOLT,HEXAGON	4
82	XDFZZ	08347	W-1-70072	. . ..CLAMP,HOUSING	4
83	XDFZZ	08347	W-3-70071	. . . . PIPE SUCTION	1
84	XDFZZ	08347	W-1-70078	. . ..STUD	8
85	PAFZZ	08347	W-0-70108	. . . . PACKING,PREFORMED	1
86	XDFZZ	08347	W-0-70107	. . . . BOLT,HEXAGON	1
87	PAFZZ	08347	W-0-70111	. . . . PACKING,PREFORMED	1
88	XDFZZ	08347	W-1-70075	. . . . RETAINER	1
89	PAFZZ	08347	W-0-70102	. . . . PACKING,PREFORMED	1
90	XDFZZ	08347	W-2-70074	. . ..IMPELLER	1
91	XDFZZ	08347	W-1-70073	. . ..BUSHING	1
92	PAFZZ	08347	W-0-70101	. . . . SEAL,PLAIN,ENCASEDO	1
93	XDFZZ	08347	W-0-70100	. . ..SEAL BELLOWS	1
94	XDFZZ	08347	W-0-70109	. . ..BOLT,HEXAGON	4
95	XDFZZ	08347	W-0-70106	. . ..SPACER	1
96	XDFZZ	08347	W-0-70098	. . ..CABLE	1
97	PAFZZ	08347	W-0-70096	. . . . MOTOR	1
98	XDFZZ	08347	W-0-70103	. . . . PLUG,PIPE	1
99	XDFZZ	08347	W-4-70070	. . . . HOUSING,PUMP	1

END OF FIGURE

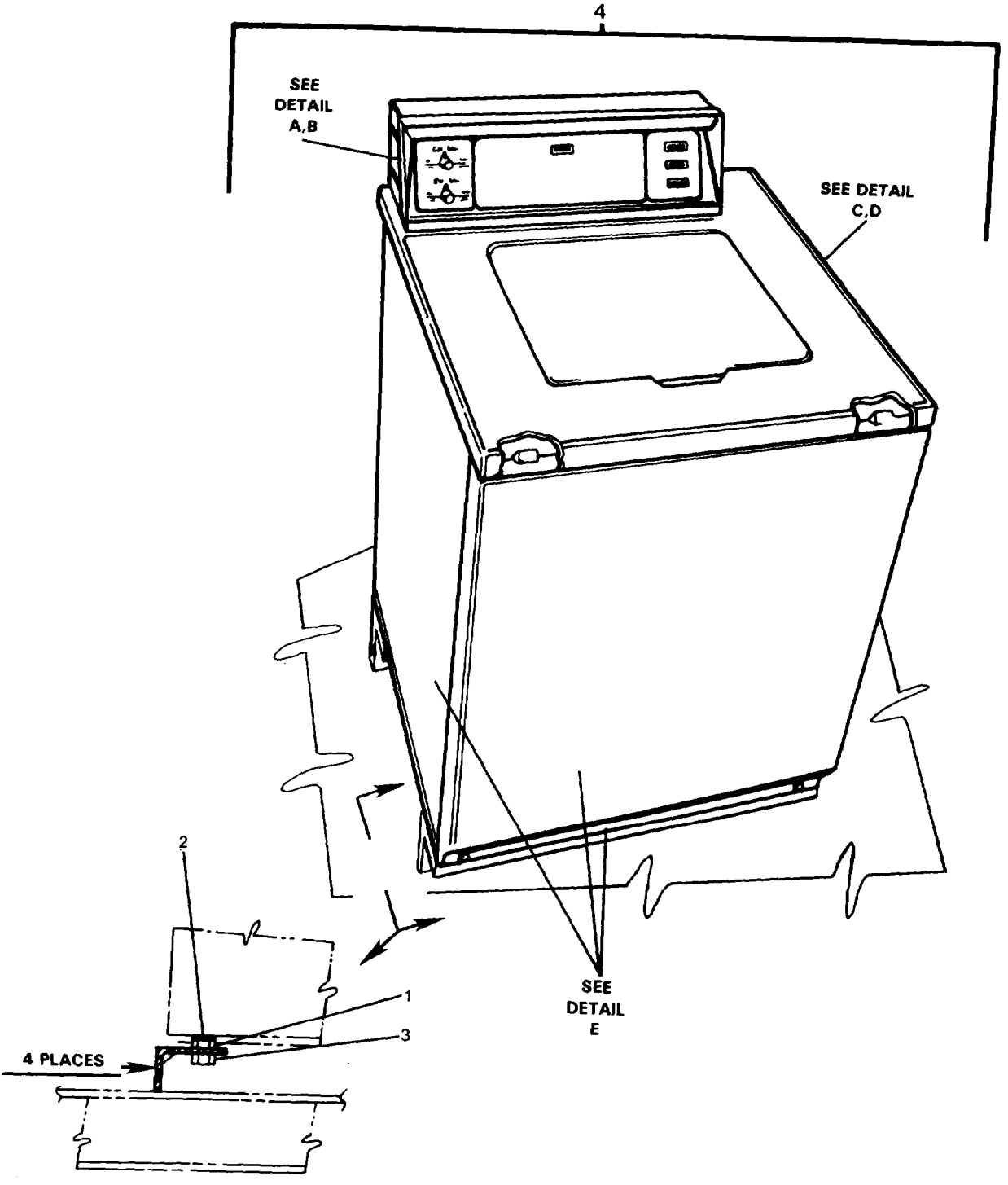

FIGURE 419. Washer Machine, Laundry, Commercial (Sheet 1 of 6).

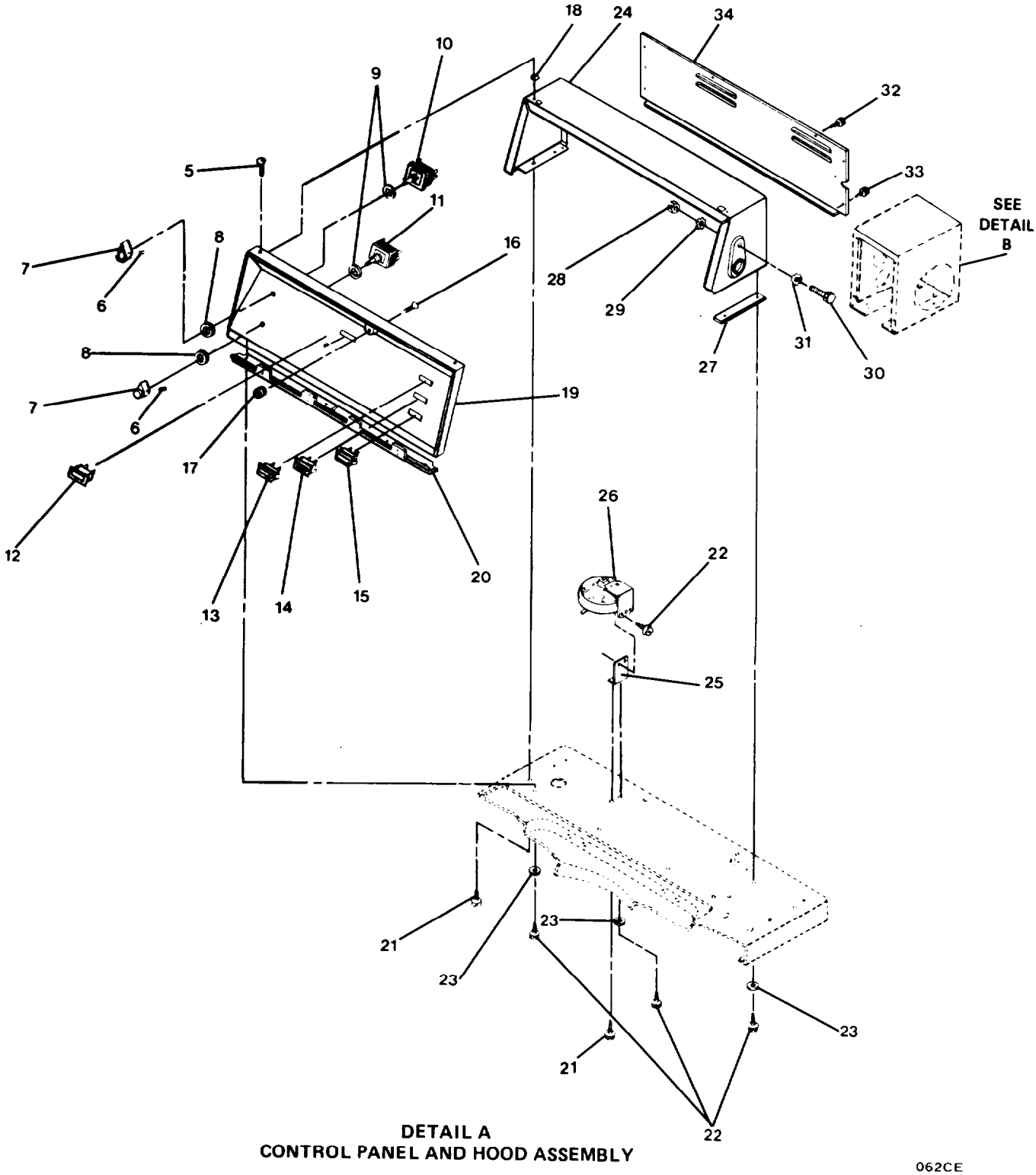

FIGURE 419. Washer Machine, Laundry, Commercial (Sheet 2 of 6).

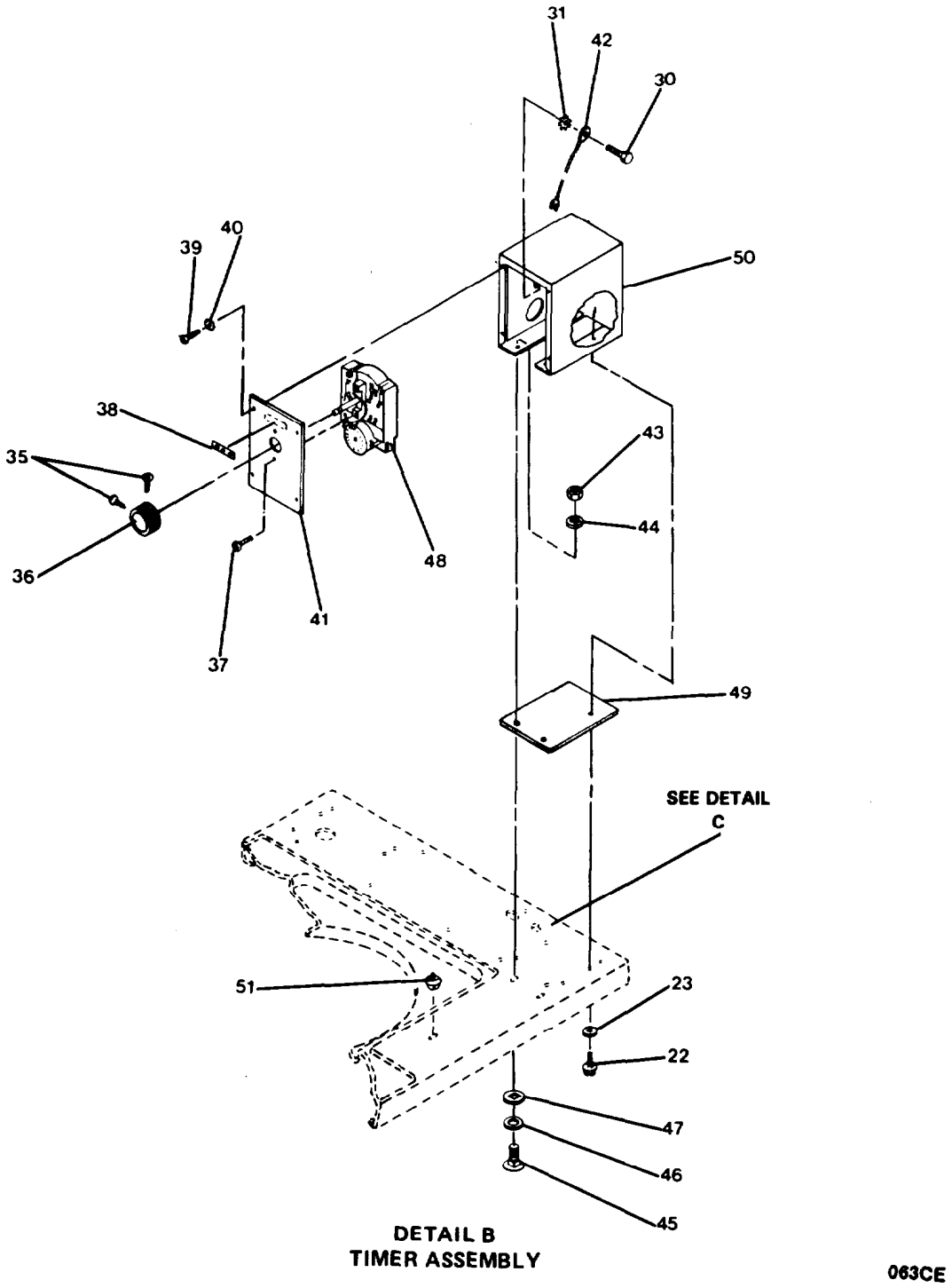

FIGURE 419. Washer Machine, Laundry, Commercial (Sheet 3 of 6).

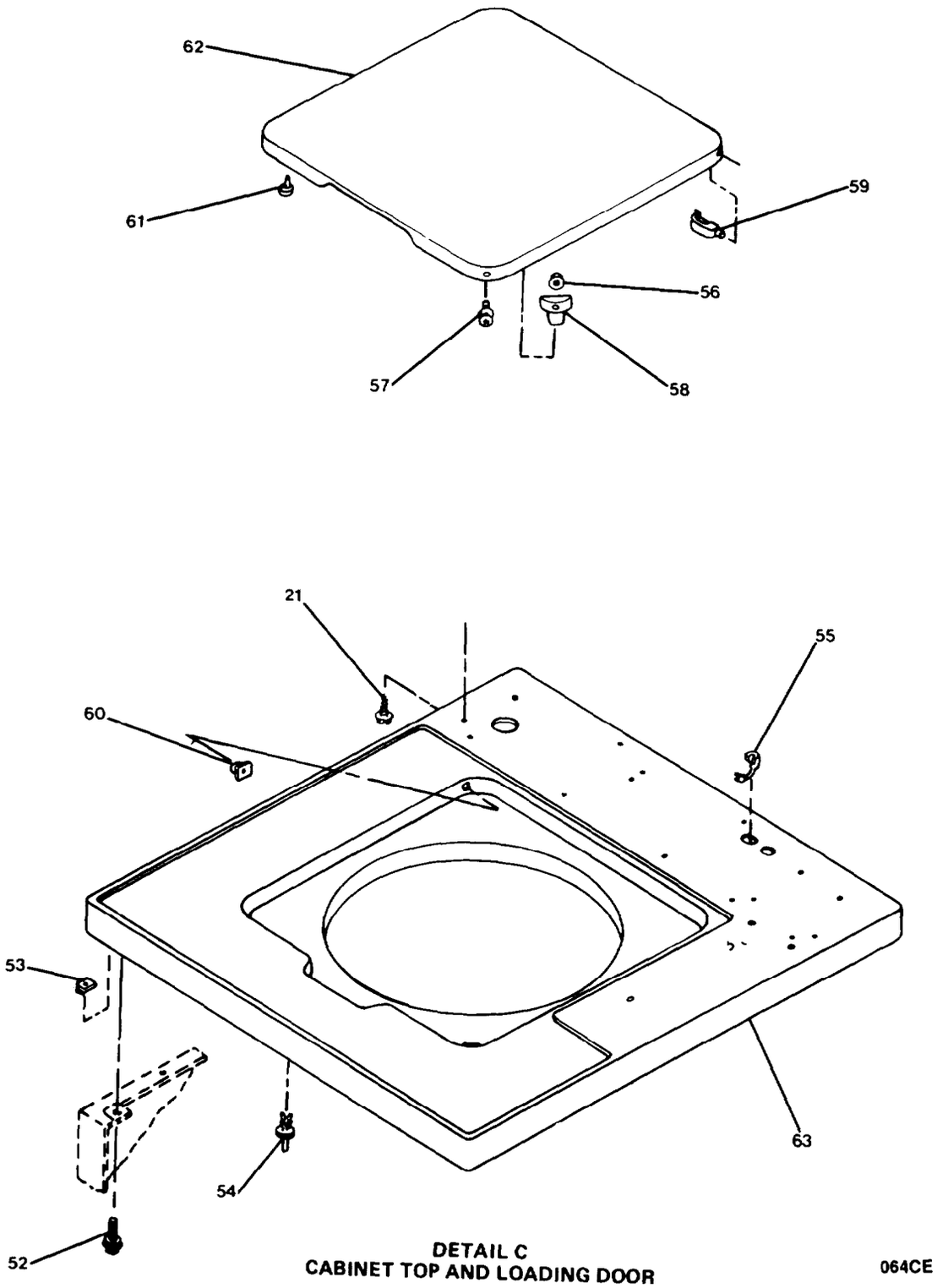

FIGURE 419. Washer Machine, Laundry, Commercial (Sheet 4 of 6).

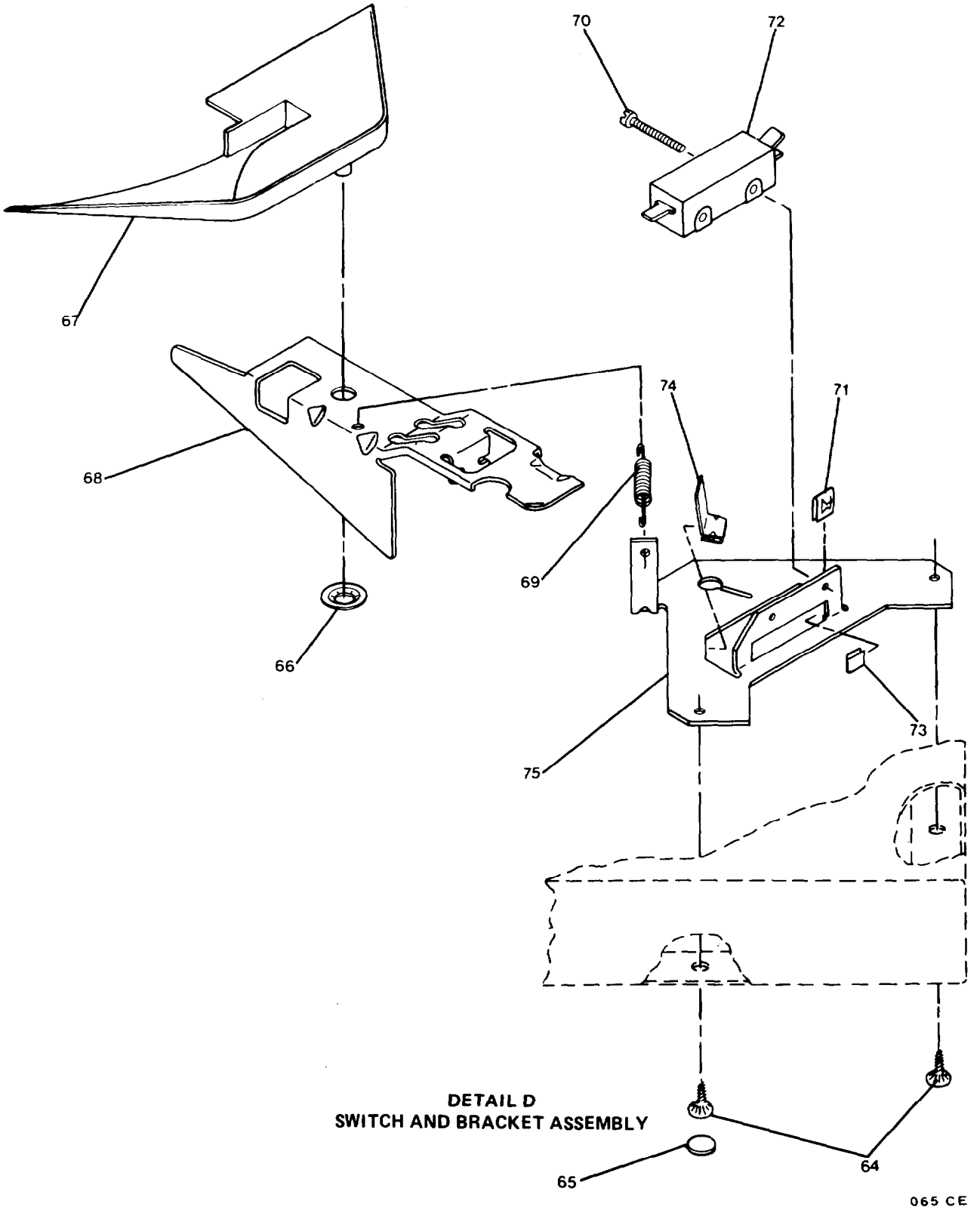

FIGURE 419. Washer Machine, Laundry, Commercial (Sheet 5 of 6).

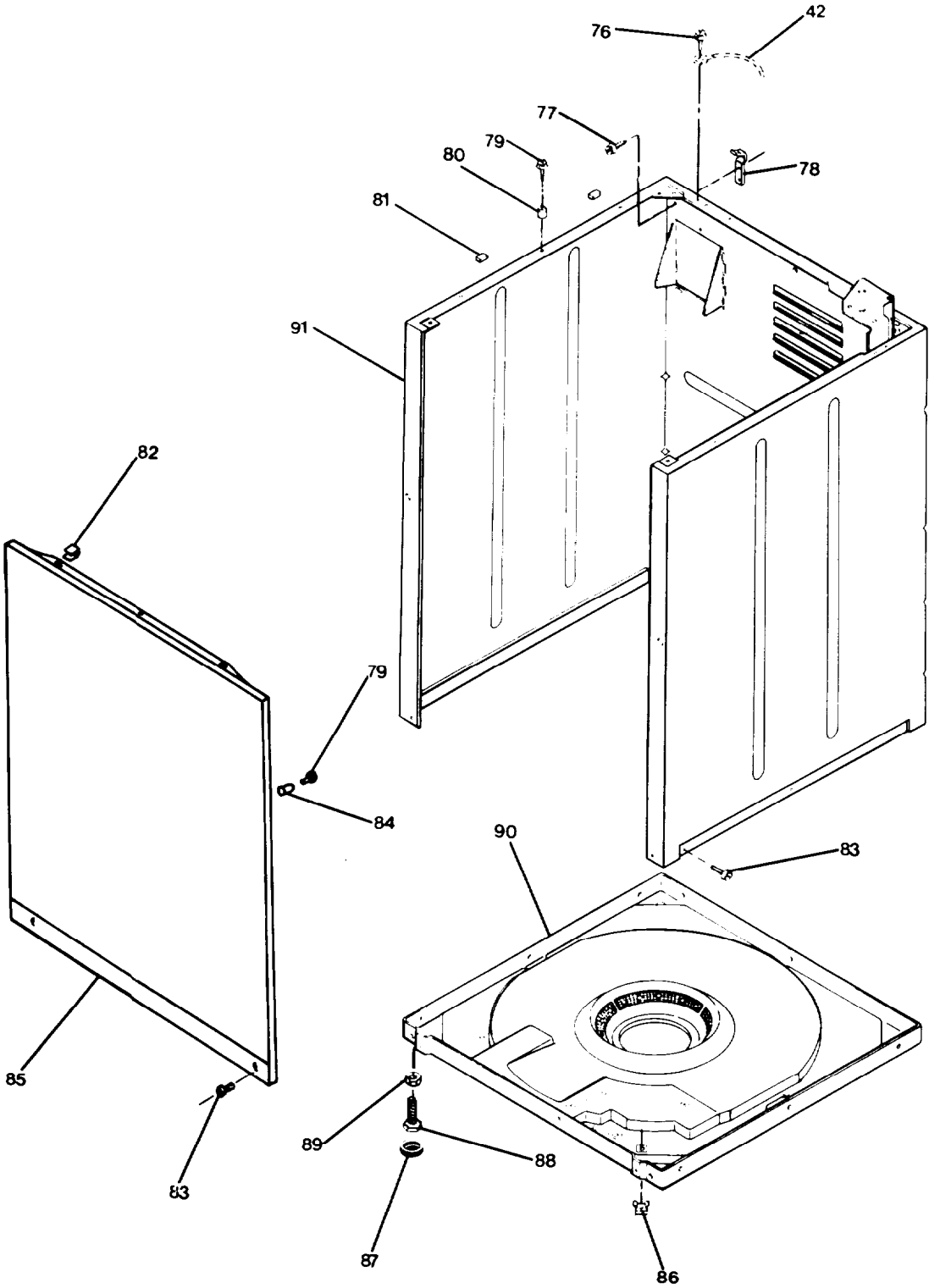

DETAIL E
FRONT PANEL, CABINET, AND BASE

066 CE

FIGURE 419. Washer Machine, Laundry, Commercial (Sheet 6 of 6).

(1) ITEM NO	(2) SMR CODE	(3) FSCM	(4) PART NUMBER	(5) DESCRIPTION AND USABLE ON CODES(UOC)	(6) QTY
				GROUP 18 BASIC CRAFT	
				FIG. 419 WASHER MACHINE, LAUNDRY, COMMERCIAL	
1	XDOZZ	77408	D0-6170-8039	..NUT,PLAIN,HEXAGON	4
2	XDOZZ	77408	D0-5925-8039	..WASHER,LOCK	4
3	XDOZZ	77408	D0-6150-1372	..BOLT,MACHINE	4
4	PBOFF	59618	WA-4721	..WASHING MACHINE,LAU	1
5	XDFZZ	59618	52864	..SCREW,MACHINE	2
6	XDFZZ	59618	20310	..SETSCREW	2
7	XDFZZ	59618	25688	..KNOB	2
8	XDFZZ	59618	24205	..NUT,KNURLED	2
9	XDFZZ	59618	91176	..WASHER,LOCK	2
10	PAFZZ	59618	27761	..SWITCH,ROTARY	1
11	PAFZZ	59618	27762	... SWITCH,ROTARY	1
12	PAFZZ	59618	27769	..LIGHT,INDICATOR (UNBALANCED LOAD)	1
13	PAFZZ	59618	29543	... LIGHT,INDICATOR (IN USE)	1
14	PAFZZ	59618	29544	... LIGHT,INDICATOR (RINSE)	1
15	PAFZZ	59618	29545	... LIGHT,INDICATOR (SPIN)	1
16	XDFZZ	59618	21623	..SCREW,CAP,HEXAGON H	1
17	XDFZZ	59618	23223	... BUMPER	1
18	XDFZZ	59618	24522	...NUT,SPEED	2
19	XDFZZ	59618	29661	..PANEL,CONTROL	1
20	XDFZZ	59618	25845	..CONTROL SUPPORT PAN	1
21	XDFZZ	59618	56392	... SCREW,MACHINE	4
22	XDFZZ	59618	23962	..SCREW,CAP,HEXAGON H	7
23	XDFZZ	59618	20493	...WASHER	5
24	XDFZZ	59618	27193W	..HOOD,CONTROL	1
25	XDFZZ	59618	27223	..BRACKET	1
26	XDFZZ	59618	28615	..SWITCH,PRESSURE	1
27	XDFZZ	59618	23028	... GASKET	2
28	XDFZZ	59618	20275	... NUT,PLAIN,HEXAGON	1
29	XDFZZ	59618	02431	..WASHER,LOCK	1
30	XDFZZ	59618	02916	... SCREW,CAP,HEXAGON H	2
31	XDFZZ	59618	91093	..WASHER,LOCK	2
32	XDFZZ	59618	23222	..SCREW,CAP,HEXAGON H	2
33	XDFZZ	59618	25724	..SCREW,CAP,HEXAGON H	4
34	XDFZZ	59618	29550	... SCREW,CAP,HEXAGON H	1
35	XDFZZ	59618	80399	..SCREW,MACHINE	2
36	XDFZZ	59618	26256	..KNOB,TIMER	1
37	XDFZZ	59618	27328	..SCREW,MACHINE	2
38	XDFZZ	59618	53738	...DECAL	1
39	XDFZZ	59618	51778	..SCREW,MACHINE	4
40	XDFZZ	59618	21734	..WASHER,LOCK	4
41	XDFZZ	59618	27869W	..PLATE,ACCESS	1
42	XDFZZ	59618	28074	..WIRE,GROUND	2
43	XDFZZ	59618	20275	..NUT,PLAIN,HEXAGON	2
44	XDFZZ	59618	21456	..WASHER,LOCK	2
45	XDFZZ	59618	02505	..BOLT,CARRIAGE	2
46	XDFZZ	59618	21541	..WASHER,FLAT	2

(1) ITEM NO	(2) SMR CODE	(3) FSCM	(4) PART NUMBER	(5) DESCRIPTION AND USABLE ON CODES(UOC)	(6) QTY
47	XDFZZ	59618	23225	. . . WASHER	2
48	PAFZZ	59618	28716	. . . TIMER,STOP	1
49	XDFZZ	59618	27864	. . . GASKET	1
50	XDFZZ	59618	27870W	. ..CASE,TIMER	1
51	XDFZZ	59618	26351	. ..RIVET	1
52	XDFZZ	59618	23008	. ..SCREW,ASSEMBLED WAS	2
53	XDFZZ	59618	20249	. . . NUT,SPEED	2
54	XDFZZ	59618	56534	. . . RIVET,SUPPORT	1
55	XDFZZ	59618	21903	. ..STRAIN RELIEF	1
56	XDFZZ	59618	21752	. . . NYLON NUT	1
57	XDFZZ	59618	27203	. . . SCREW,ASSEMBLED WAS	1
58	XDFZZ	59618	27149	. . . CATCH	1
59	XDFZZ	59618	27626	. . . HINGE	2
60	XDFZZ	59618	27625	. . .BUSHING	2
61	XDFZZ	59618	21685	. . . BUMPER	2
62	XDFZZ	59618	28840W	. ..DOOR,LOADING	1
63	XDFZZ	59618	28071W	. . . TOP,CABINET	1
64	XDFZZ	59618	28193	. . . SCREW	2
65	XDFZZ	59618	28291	. . .WASHER	2
66	XDFZZ	59618	29043	. . . PUSHNUT	1
67	XDFZZ	59618	29042	. . . SHIELD	1
68	XDFZZ	59618	27602	. . . LEVER	1
69	XDFZZ	59618	27603	. ..SPRING	1
70	XDFZZ	59618	Q6516	. ..SCREW,MACHINE	2
71	XDFZZ	59618	27248	. ..NUT,SPEED	2
72	XDFZZ	59618	27612	. ..SWITCH,SENSITIVE (DOOR AND OUT OF BALANCE)	1
73	XDFZZ	59618	27610	. ..U-CLIP	1
74	XDFZZ	59618	27837	. . .U-CLIP	1
75	XDFZZ	59618	27250	. ..BRACKET	1
76	XDFZZ	59618	23222	. ..SCREW,CAP,HEXAGON H	1
77	XDFZZ	59618	51780	. ..SCREW,CAP,HEXAGON H	1
78	XDFZZ	59618	27103	. . . HINGE	1
79	XDFZZ	59618	56086	. . . SCREW,MACHINE	8
80	XDFZZ	59618	56079	. . . BUSHING,SLEEVE	6
81	XDFZZ	59618	56128	. . . PAD	4
82	XDFZZ	59618	28835	. ..CLIP,HOLD-DOWN	2
83	XDFZZ	59618	27196	. . . SCREW,CAP,HEXAGON H	8
84	XDFZZ	59618	28102	. . . LUG,GUIDE	2
85	XDFZZ	59618	27072W	. . . PANEL,FRONT	1
86	XDFZZ	59618	28837	. . . NUT	2
87	XDFZZ	59618	21749	. ..PAD	4
88	XDFZZ	59618	20409	. . . LEG,LEVELING	4
89	XDFZZ	59618	21899	. ..NUT,LOCK	4
90	XDFZZ	59618	29757	. ..BASE	1
91	XDFZZ	59618	28325W	. ..CABINET	1

END OF FIGURE

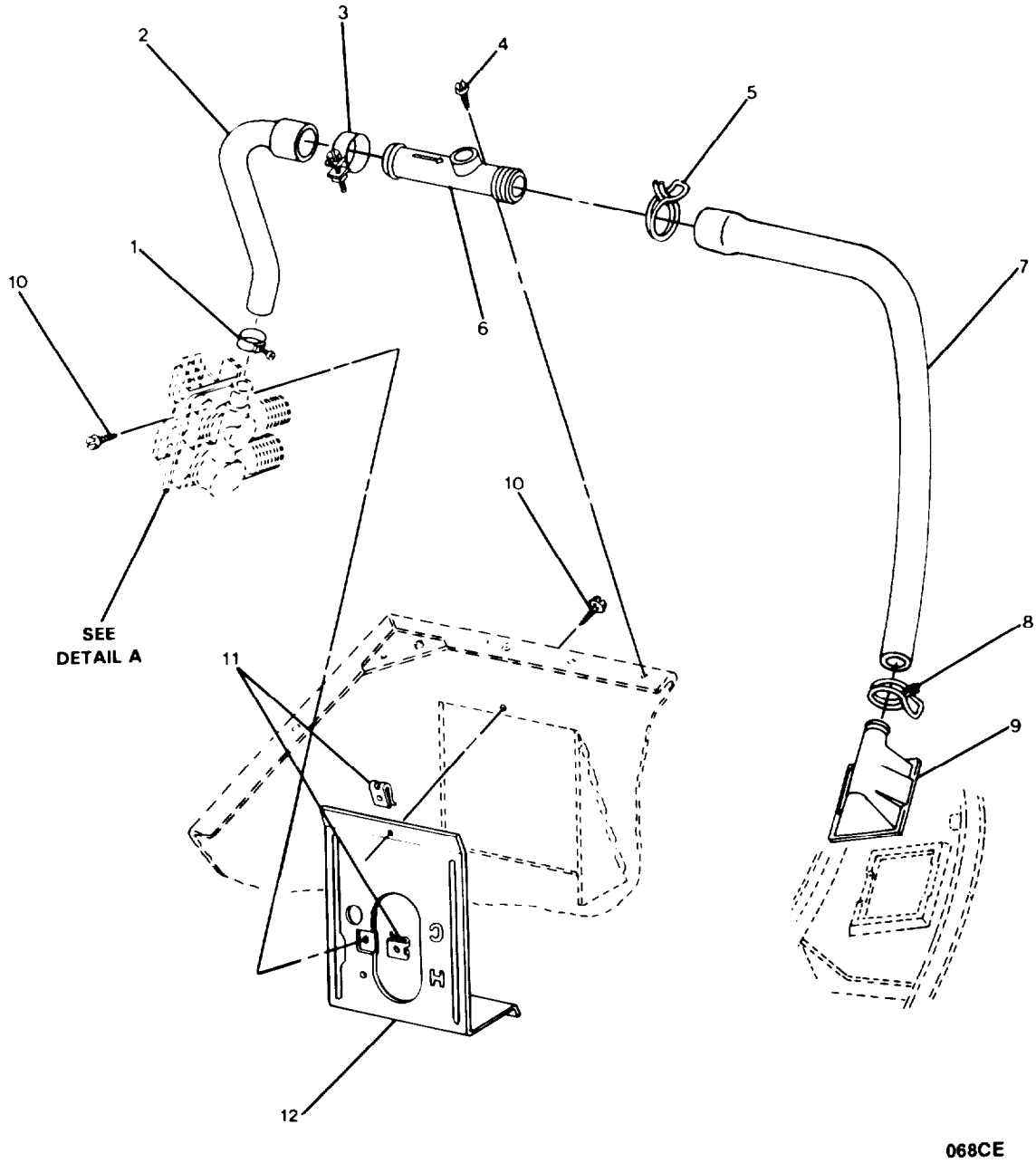

FIGURE 420. Washer: Mixing Valve Assembly (Sheet 1 of 2).

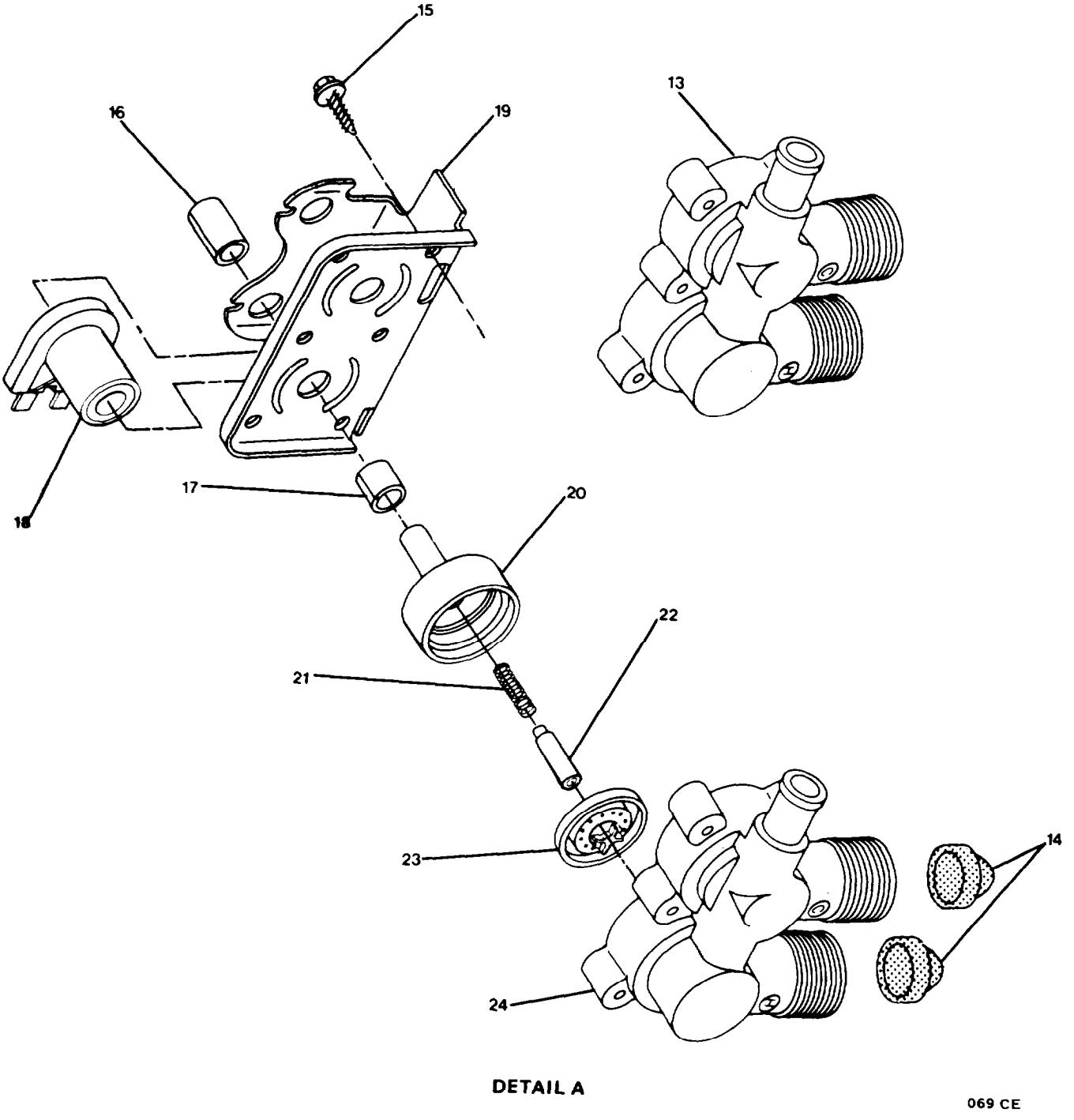

FIGURE 420. Washer: Mixing Valve Assembly (Sheet 2 of 2).

(1) ITEM NO	(2) SMR CODE	(3) FSCM	(4) PART NUMBER	(5) DESCRIPTION AND USABLE ON CODES(UOC)	(6) QTY
				GROUP 18 BASIC CRAFT	
				FIG. 420 WASHER: MIXING VALVE ASSEMBLY	
1	XDOZZ	59618	27643	. . . CLAMP,HOSE	1
2	XDOZZ	59618	27183	. . . HOSE,PREFORMED	1
3	XDOZZ	59618	27152	. . . CLAMP,HOSE	1
4	XDOZZ	59618	23962	. ..SCREW,CAP,HEXAGON H	1
5	XDOZZ	59618	29176	. . . CLAMP,HOSE (GREEN)	1
6	XDOZZ	59618	27118	. . . VALVE,CHECK	1
7	XDOZZ	59618	29182	. . . HOSE,NONMETALLIC	1
8	XDOZZ	59618	29210	. . . CLAMP,HOSE (RED)	1
9	XDOZZ	59618	29154	. . . HEAD,WATER INLET	1
10	XDOZZ	59618	56392	. . . SCREW,MACHINE	2
11	XDOZZ	59618	54038	. ..NUT,SPEED	2
12	XDOZZ	59618	27126	. . . BRACKET	1
13	PAOFF	59618	27156	. . . VALVE,WATER MIXING	1
14	XDFZZ	59618	24122	. . ..FILTER,FLUID	2
15	XDFZZ	59618	25817C	. . ..SCREW,MACHINE	6
16	XDFZZ	59618	24128	. . . . BUSHING,SLEEVE (LONG)	2
17	XDFZZ	59618	24129	. . ..BUSHING,SLEEVE (SHORT)	2
18	XDFZZ	59618	24126	. . . . RELAY,ELECTROMAGNET	2
19	XDFZZ	59618	24158	. . . . BRACKET,MOUNTING	1
20	XDFZZ	59618	24130	. . . . GUIDE,ARMATURE,VALV	2
21	XDFZZ	59618	24131	. . . . SPRING,HELICAL,COMP	2
22	XDFZZ	59618	24132	. . ..ARMATURE,VALVE	2
23	XDFZZ	59618	24134	. . . . DIAPHRAGM,VALVE,SPE	2
24	XDFZZ	59618	24159	. . . . BODY,VALVE	1

END OF FIGURE

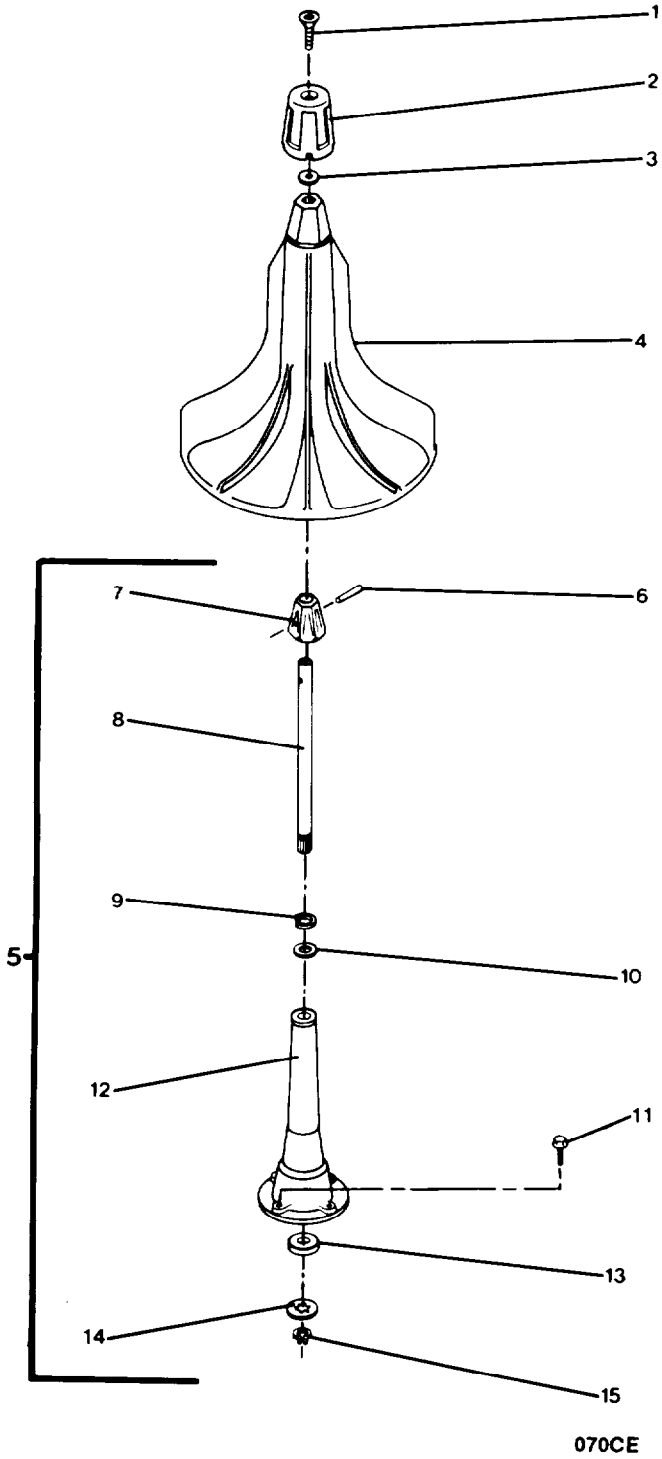

FIGURE 421. Agitator Post Assembly.

(1) ITEM NO	(2) SMR CODE	(3) FSCM	(4) PART NUMBER	(5) DESCRIPTION AND USABLE ON CODES(UOC)	(6) QTY
				GROUP 18 BASIC CRAFT	
				FIG. 421 WASHER: AGITATOR POST ASSEMBLY	
1	XDFZZ	59618	27188	. ..SCREW,CAP,SOCKET HE	1
2	XDFZZ	59618	28345	. ..CAP,HOLD-DOWN	1
3	XDFZZ	59618	27189	. ..WASHER,FLAT	1
4	XDFZZ	59618	27120	. . . AGITATOR	1
5	XDOFF	59618	28934	. ..AGITATOR POST ASSEM	1
6	XDFZZ	59618	20243	. . ..PIN,TAPERED	1
7	XDFZZ	59618	27174	. . ..BLOCK,DRIVE	1
8	XDFZZ	59618	28091	. . ..SHAFT,DRIVE	1
9	XDFZZ	59618	20057	. . ..WASHER,FLAT	1
10	XDFZZ	59618	04704	. . ..WASHER,FLAT	1
11	XDFZZ	59618	27202	. . ..SCREW,CAP,HEXAGON H	4
12	XDFZZ	59618	28933	. . ..POST,AGITATOR	1
13	XDFZZ	59618	10429	. . ..WASHER,THRUST	1
14	XDFZZ	59618	27164	. . ..WASHER	1
15	XDFZZ	59618	27197	. . . . RING,RETAINING	1

END OF FIGURE

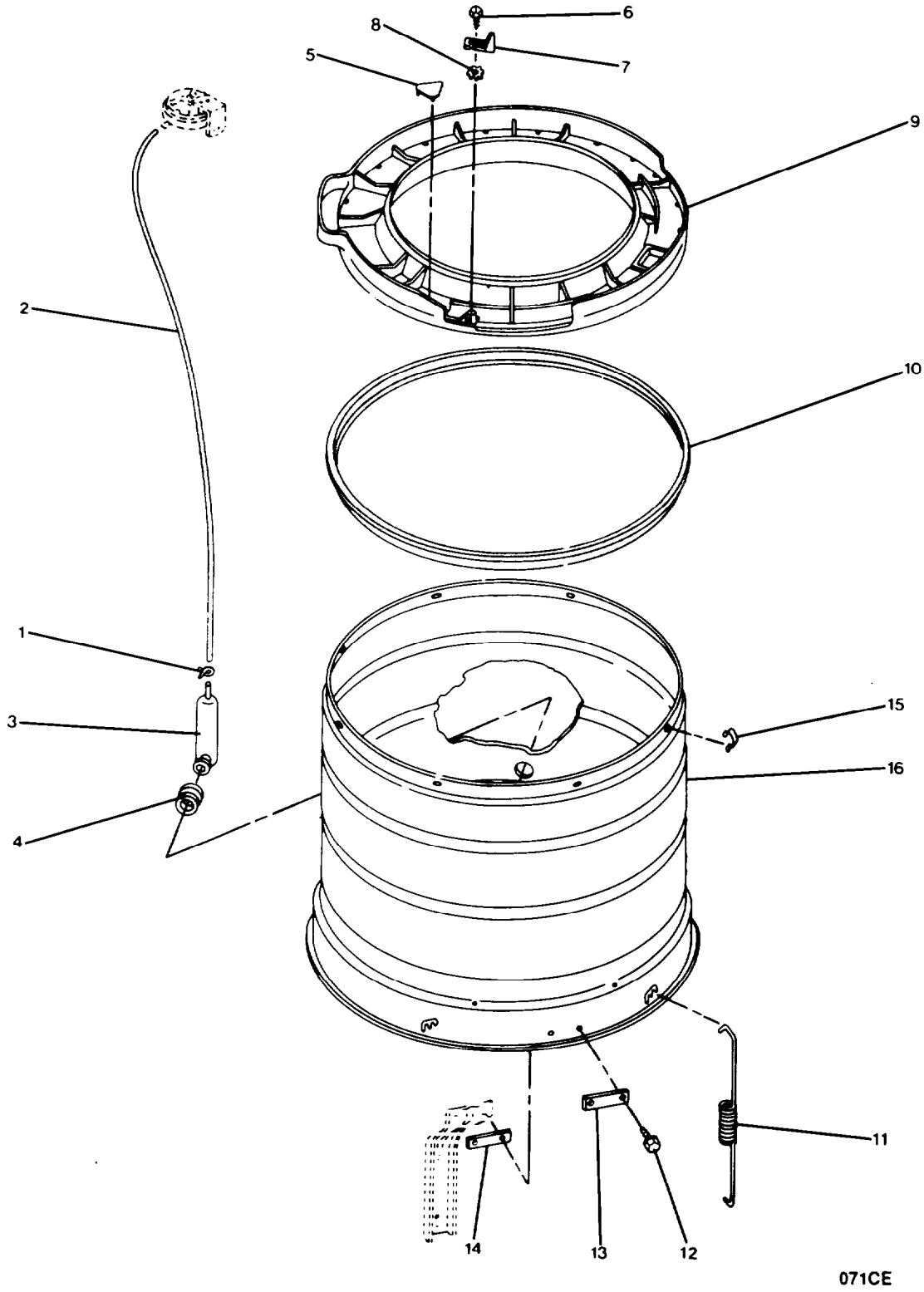

FIGURE 422. Washer: Outer Tub, Cover and Pressure Hose.

(1) ITEM NO	(2) SMR CODE	(3) FSCM	(4) PART NUMBER	(5) DESCRIPTION AND USABLE ON CODES(UOC)	(6) QTY
				GROUP 18 BASIC CRAFT	
				FIG. 422 WASHER: OUTER TUB, COVER AND PRESSURE HOSE	
1	XDFZZ	59618	22294	. . ..CLAMP,HOSE	1
2	XDFZZ	59618	29212	. . . . HOSE,PRESSURE	1
3	XDFZZ	59618	29116	. . . . ACCUMULATOR,PRESSUR	1
4	XDFZZ	59618	29175	. . ..GROMMET	1
5	XDFZZ	59618	29901	. . . . PLUG	1
6	XDFZZ	59618	25723	. . . . SCREW,CAP,HEXAGON H	1
7	XDFZZ	59618	27247	. . ..TRIGGER	1
8	XDFZZ	59618	03815	. . ..WASHER,LOCK	1
9	XDFZZ	59618	29555	. . ..COVER,OUTER TUB	1
10	XDFZZ	59618	27184	. . . . GASKET (COVER)	1
11	XDFZZ	59618	27239	. . . . SPRING,CENTERING	1
12	XDFZZ	59618	27205	. . . . SCREW,ASSEMBLED WAS	6
13	XDFZZ	59618	27926	. . ..PLATE,LEG	3
14	XDFZZ	59618	27927	. . . . PLATE,LEG	3
15	XDFZZ	59618	27017	. . ..CLIP,SPRING	1
16	XDFZZ	59618	29233	. . ..TUB,OUTER	1

END OF FIGURE

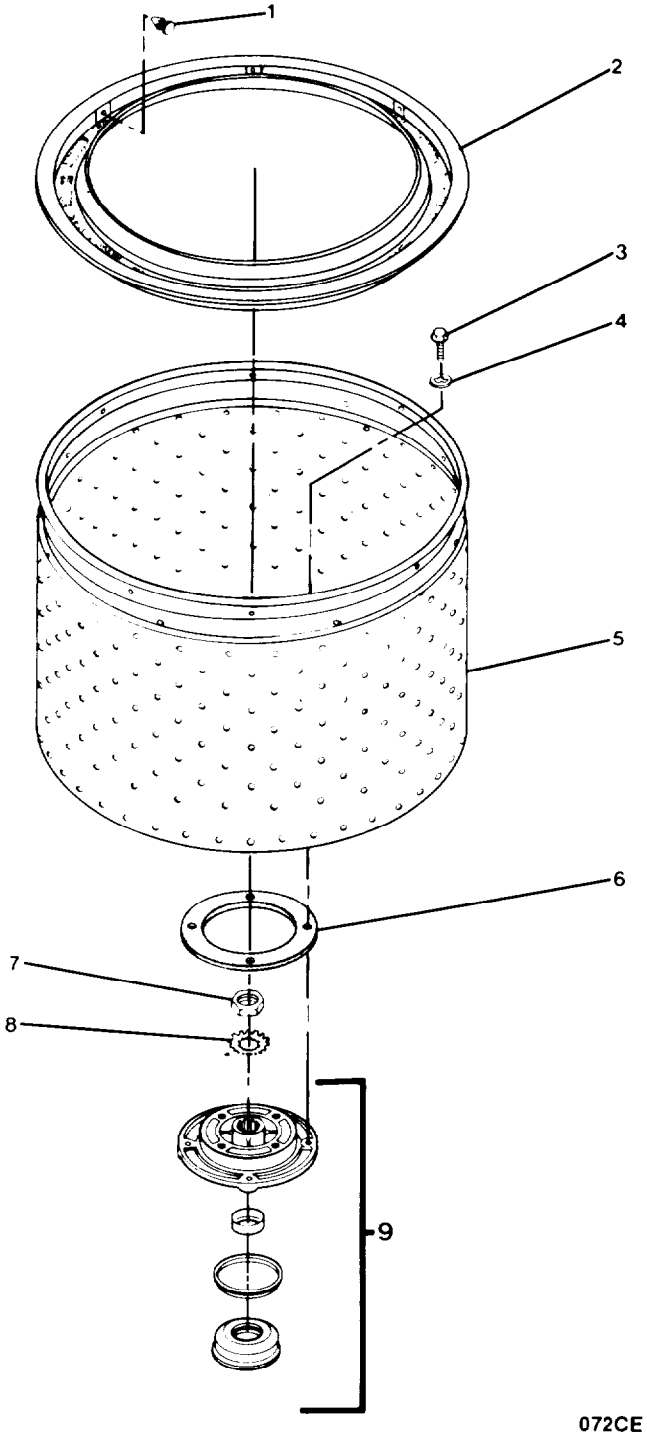

FIGURE 423. Washer: Lint Filter, Wash Tub, and Hub Group.

(1) ITEM NO	(2) SMR CODE	(3) FSCM	(4) PART NUMBER	(5) DESCRIPTION AND USABLE ON CODES(UOC)	(6) QTY
				GROUP 18 BASIC CRAFT	
				FIG. 423 WASHER: LINT FILTER, WASH TUB AND HUB GROUP	
1	XDFZZ	59618	29474	. . . . FASTENER	8
2	XDFZZ	59618	27123	. . . . FILTER,LINT	1
3	XDFZZ	59618	27202	. . . . SCREW,CAP,HEXAGON H	4
4	XDFZZ	59618	28094	. . . ..GASKET	4
5	XDFZZ	59618	28138	. . ..WASHTUB	1
6	XDFZZ	59618	27125	. . ..GASKET	1
7	XDFZZ	59618	28111	. . ..NUT,PLAIN,HEXAGON	1
8	XDFZZ	59618	27163	. . ..WASHER,LOCK	1
9	XDFZZ	59618	356P3	. . ..SEAL,PLAIN,ENCASED	1

END OF FIGURE

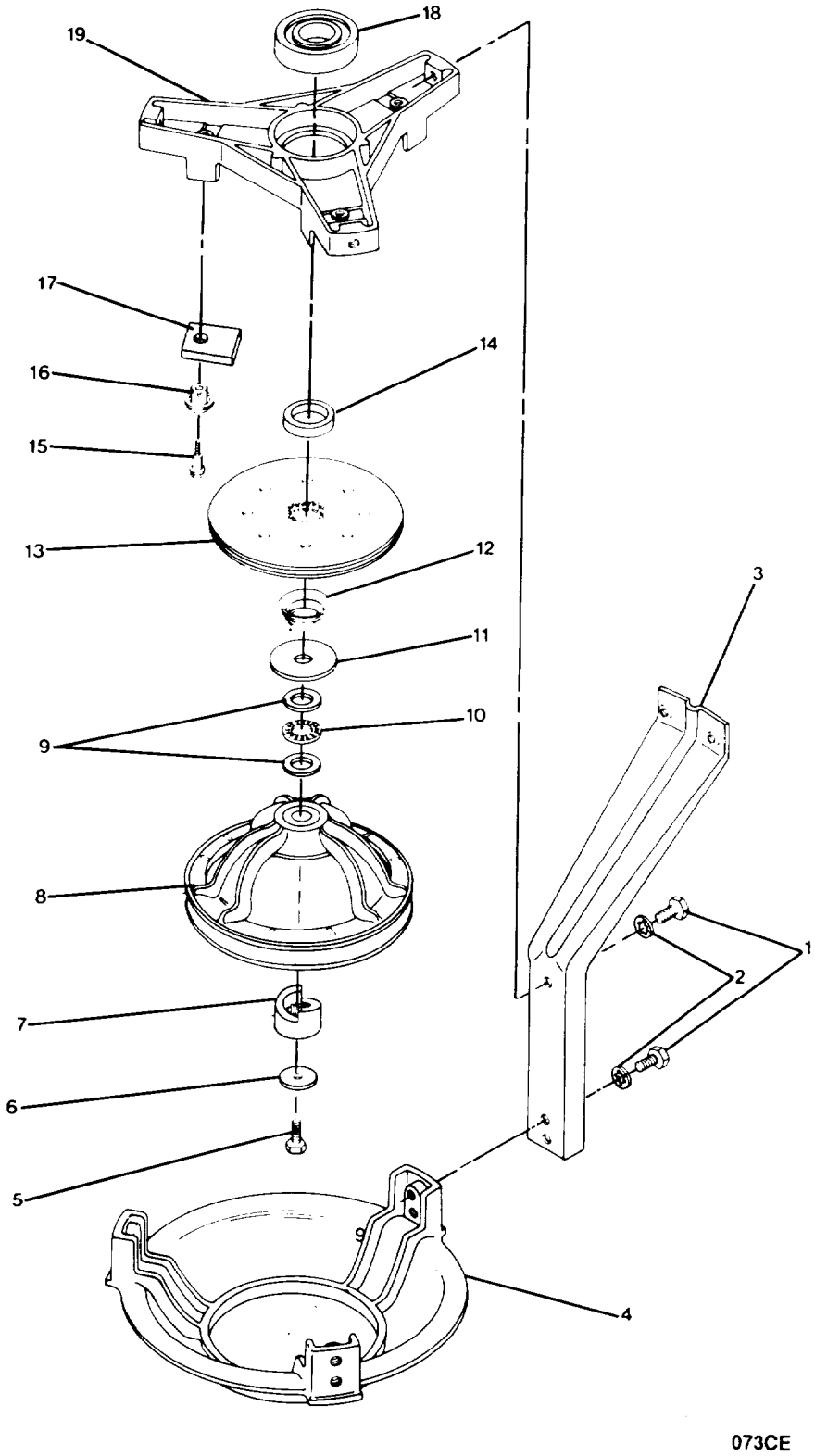

FIGURE 424. Washer: Bearing Housing, Brake, Pulley, and Pivot Dome Group.

(1) ITEM NO	(2) SMR CODE	(3) FSCM	(4) PART NUMBER	(5) DESCRIPTION AND USABLE ON CODES(UOC)	(6) QTY
				GROUP 18 BASIC CRAFT	
				FIG. 424 WASHER: BEARING, HOUSING BRAKE, PULLEY AND PIVOT DOME GROUP	
1	XDFZZ	59618	30016	. . ..SCREW,CAP,HEXAGON H	9
2	XDFZZ	59618	04366	. . ..WASHER,LOCK	9
3	XDFZZ	59618	27090	. . . ..LEG	3
4	XDFZZ	59618	27124	. . ..DOME,PIVOT	1
5	XDFZZ	59618	27220	. . ..SCREW,MACHINE	1
6	XDFZZ	59618	26509	. . ..WASHER,FLAT	1
7	XDFZZ	59618	27018	. . . ..HELIX	1
8	XDFZZ	59618	27111	. . ..PULLEY,GROOVE	1
9	XDFZZ	59618	27024	. . ..RING,BEARING,OUTER	2
10	XDFZZ	59618	27025	. . ..RETAINER AND ROLLER	1
11	XDFZZ	59618	27015	. . ..WASHER,FLAT	1
12	XDFZZ	59618	27014	. . ..SPRING,HELICAL,COMP	1
13	XDFZZ	59618	26556	. . ..BRAKE ASSEMBLY	1
14	XDFZZ	59618	27176	. . ..SPACER	1
15	XDFZZ	59618	26547	. . . . SCREW,SHOULDER	3
16	XDFZZ	59618	29993	. . ..SLEEVE	3
17	XDFZZ	59618	348P3	. . ..PAD,BRAKE	3
18	XDFZZ	59618	28944	. . ..BEARING	1
19	XDFZZ	59618	28913	. . ..HOUSING ASSEMBLY,BE	1

END OF FIGURE

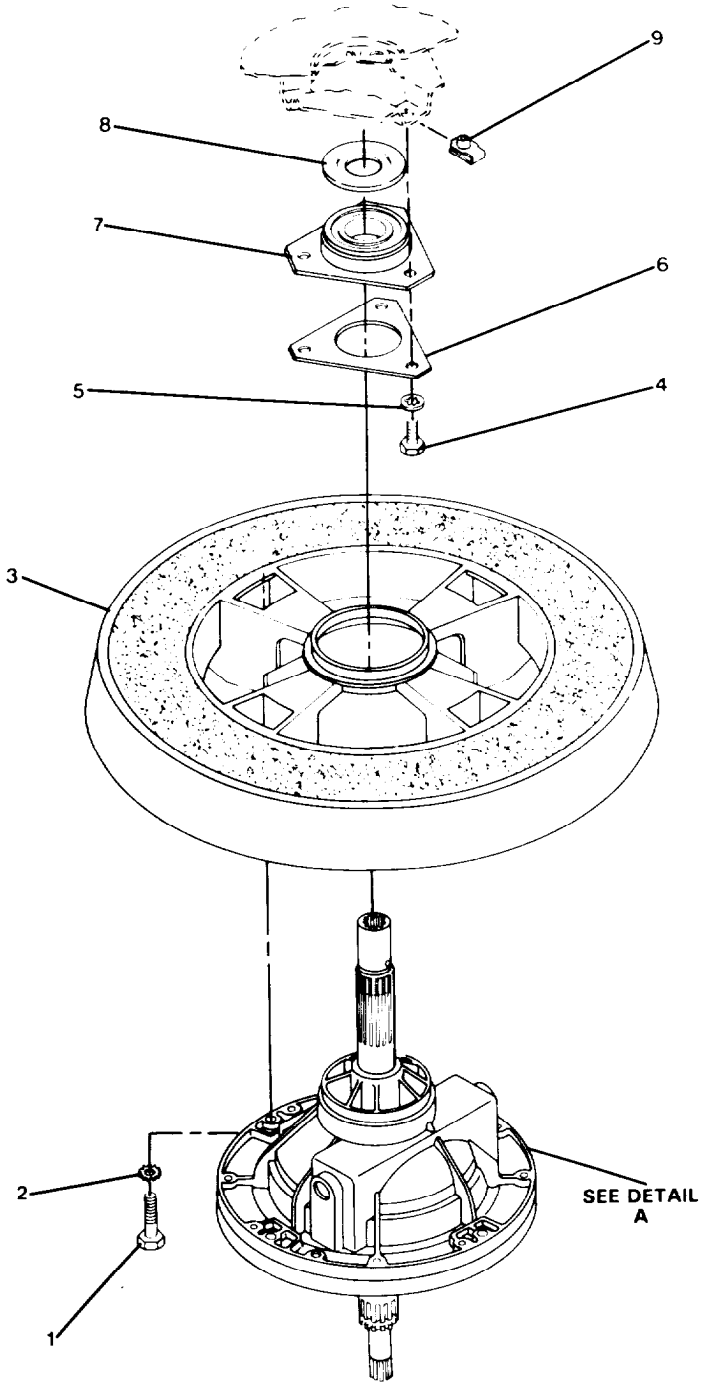

FIGURE 425. Transmission Group (Sheet 1 of 2).

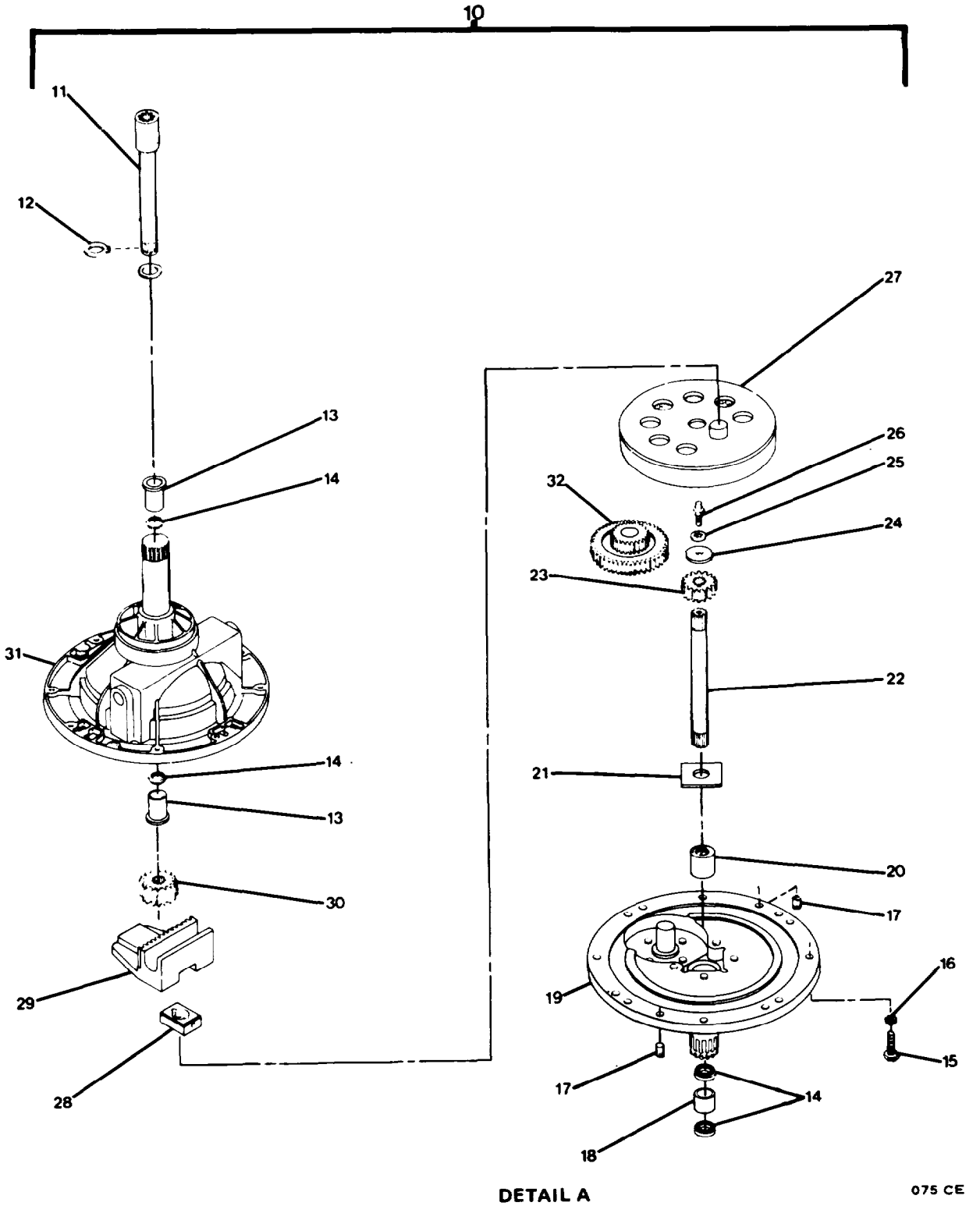

FIGURE 425. Transmission Group (Sheet 2 of 2).

(1) ITEM NO	(2) SMR CODE	(3) FSCM	(4) PART NUMBER	(5) DESCRIPTION AND USABLE ON CODES(UOC)	(6) QTY
				GROUP 18 BASIC CRAFT	
				FIG. 425 TRANSMISSION GROUP	
1	XDFZZ	59618	27200	. . . . SCREW,CAP,HEXAGON H	4
2	XDFZZ	59618	02431	. . ..WASHER,LOCK	4
3	XDFZZ	59618	29117	. . ..RING,BALANCE	1
4	XDFZZ	59618	01355	. . ..SCREW,CAP,HEXAGON H	3
5	XDFZZ	59618	04366	. . ..WASHER,LOCK	3
6	XDFZZ	59618	27166	. . ..WASHER	1
7	XDFZZ	59618	27182	. . ..HOUSING ASSEMBLY,BE	1
8	XDFZZ	59618	27187	. . . .FLINGER	1
9	XDFZZ	59618	27222	. . . . NUT,RETAINER	3
10	PAOFF	59618	28430	. . ..TRANSMISSION,MECHAN	1
11	XDFZZ	59618	368P3	. . . ..COUPLING AND SHAFT (WITH SHIM WASHER)	1
12	XDFZZ	59618	27197	. . . ..RING,RETAINING	1
13	XDFZZ	59618	27021	. . . ..BEARING	2
14	XDFZZ	59618	28114	. . . . . SEAL,PLAIN,ENCASED	4
15	XDFZZ	59618	20253	. . . . . SCREW,CAP,HEXAGON H	4
16	XDFZZ	59618	02431	. . . ..WASHER,LOCK	4
17	XDFZZ	59618	27172	. . . . . PIN,DOWEL	2
18	XDFZZ	59618	27022	. . . ..BEARING,SLEEVE	1
19	XDFZZ	59618	27192	. . . ..COVER,TRANSMISSION	1
20	XDFZZ	59618	27026	. . . . . CLUTCH,ROLLER	1
21	XDFZZ	59618	27016	. . . ..WASHER	1
22	XDFZZ	59618	27081	. . . ..SHAFT	1
23	XDFZZ	59618	29156	. . . ..PINION,DRIVE	1
24	XDFZZ	59618	26509	. . . ..WASHER,FLAT	1
25	XDFZZ	59618	21456	. . . ..WASHER,LOCK	1
26	XDFZZ	59618	27030	. . . . . SCREW,SPECIAL	1
27	XDFZZ	59618	26577	. . . ..GEAR,INTERNAL	1
28	XDFZZ	59618	26493	. . . . . SLIDE	1
29	XDFZZ	59618	27001	. . . . . RACK	1
30	XDFZZ	59618	27003	. . . . . PINION,AGITATOR	1
31	XDFZZ	59618	28435	. . . ..CASE ASSEMBLY,TRANS	1
32	XDFZZ	59618	27002	. . . . . GEAR,REDUCTION	1

END OF FIGURE

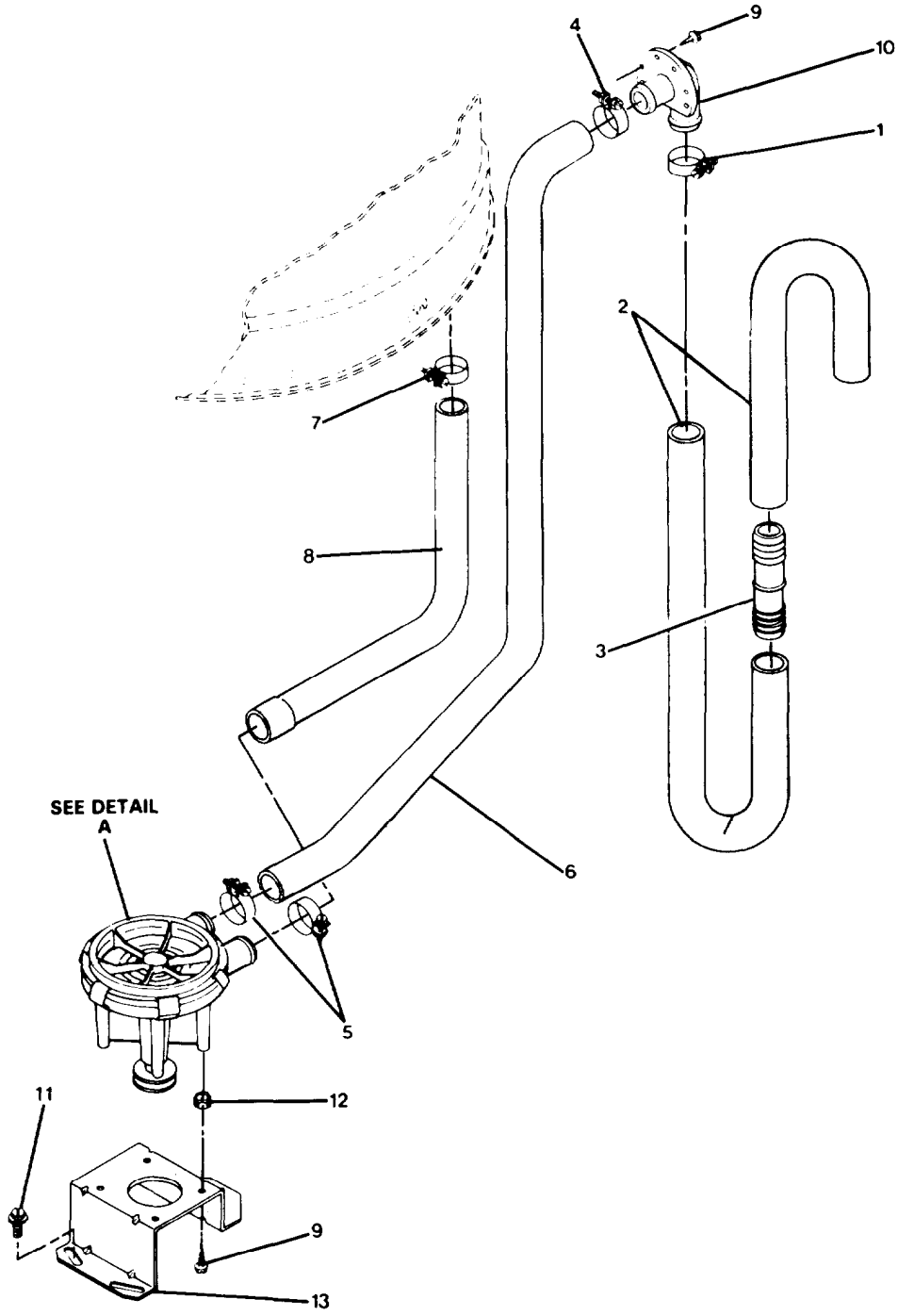

FIGURE 426. Pump Assembly, and Hoses Group (Sheet 1 of 2).

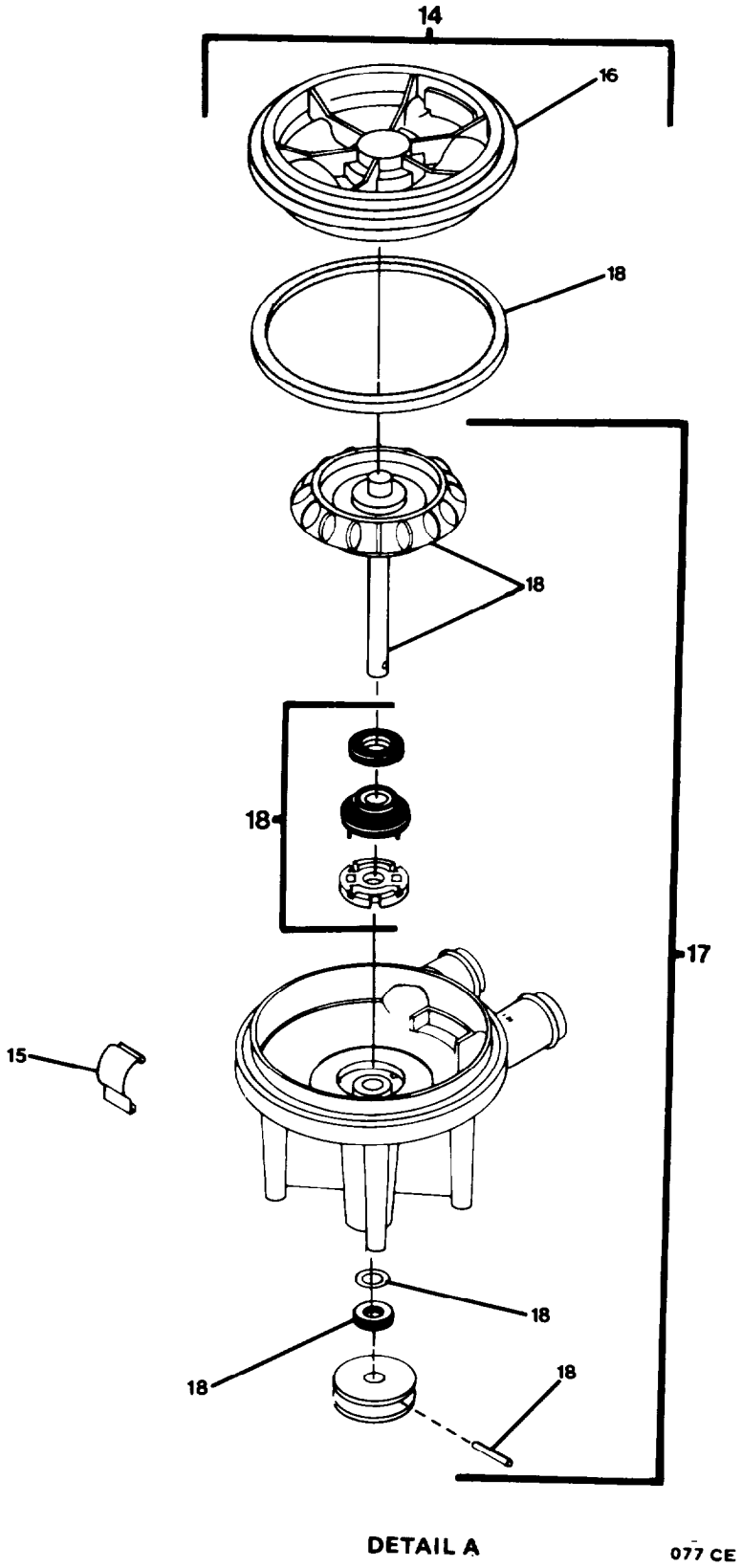

FIGURE 426. Pump Assembly, and Hoses Group (Sheet 2 of 2).

(1) ITEM NO	(2) SMR CODE	(3) FSCM	(4) PART NUMBER	(5) DESCRIPTION AND USABLE ON CODES(UOC)	(6) QTY
				GROUP 18 BASIC CRAFT	
				FIG. 426 PUMP AND HOSES GROUP	
1	XDFZZ	59618	20211	. . ..CLAMP,LOOP	1
2	XDFZZ	59618	28293	. . ..HOSE,NONMETALLIC	2
3	XDFZZ	59618	25863	. . ..COUPLING,HOSE	1
4	XDFZZ	59618	20391	. . ..CLAMP,HOSE	1
5	XDFZZ	59618	27153	. . . . CLAMP,HOSE	2
6	XDFZZ	59618	27161	. . ..HOSE,NONMETALLIC	1
7	XDFZZ	59618	27151	. . . . CLAMP,HOSE	1
8	XDFZZ	59618	27160	. . ..HOSE,PREFORMED	1
9	XDFZZ	59618	51784	. . ..SCREW,CAP,HEXAGON H	10
10	XDFZZ	59618	23553	. . ..ELBOW,TUBE TO HOSE	1
11	XDFZZ	59618	27157	. . ..SCREW,MACHINE	4
12	XDFZZ	59618	27063	. . . . ON-SERT	4
13	XDFZZ	59618	27105	. . ..BRACKET	1
14	XDOFF	59618	27237	. . . . PUMP CENTRIFUGAL	1
15	XDFZZ	59618	27062	. . . ..CLIP,SPRING TENSION	6
16	XDFZZ	59618	27233	. . . ..COVER,PUMP	1
17	XDFZZ	59618	27236	. . . ..PUMP BODY AND IMPEL	1
18	PAFZZ	59618	349P3	. . . ..PARTS KIT,PUMP (NEEDED FOR COMPLETE REPAIR OF PUMP,CENTRIFUGAL)	1

END OF FIGURE

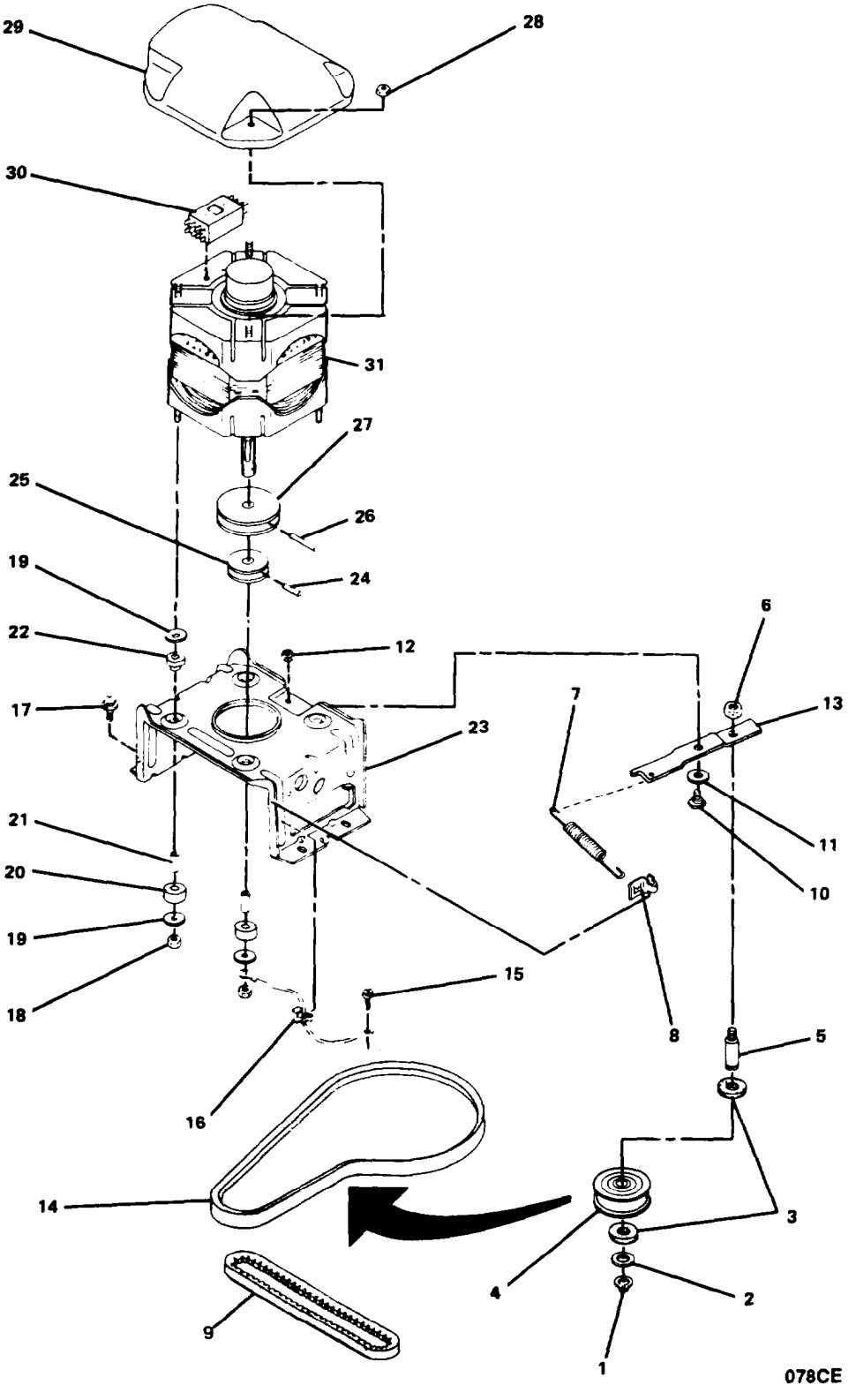

FIGURE 427. Motor and Idler Group.

(1) ITEM NO	(2) SMR CODE	(3) FSCM	(4) PART NUMBER	(5) DESCRIPTION AND USABLE ON CODES(UOC)	(6) QTY
				GROUP 18 BASIC CRAFT	
				FIG. 427 MOTOR AND IDLER GROUP	
1	XDFZZ	59618	23748	. . . . RING,RETAINING	1
2	XDFZZ	59618	52549	. . ..WASHER,FLAT	1
3	XDFZZ	59618	29443	. . ..WASHER,FELT	2
4	XDFZZ	59618	28800	. . ..PULLEY,IDLER	1
5	XDFZZ	59618	28802	. . ..SHAFT,IDLER	1
6	XDFZZ	59618	28803	. . ..NUT,LOCK	1
7	XDFZZ	59618	28807	. . ..SPRING	1
8	XDFZZ	59618	28849	. . . .CLIP	1
9	PAFZZ	59618	27155	. . . .BELT,V	1
10	XDFZZ	59618	27229	. . . . BOLT,SHOULDER	1
11	XDFZZ	59618	81392	. . ..WASHER,FLAT	1
12	XDFZZ	59618	52566	. . . .NUT,LOCK	1
13	XDFZZ	59618	29705	. . . . LEVER,IDLER	1
14	PAFZZ	59618	28808	. . . . BELT,V (AGITATE AND SPIN)	1
15	XDFZZ	59618	26592	. . . . SCREW,CAP,HEXAGON H	1
16	XDFZZ	59618	00161	. ..CLIP,GROUND	1
17	XDFZZ	59618	27157	. . ..SCREW,MACHINE	4
18	XDFZZ	59618	23604	. . . . NUT,LOCK	4
19	XDFZZ	59618	03888	. . ..WASHER,FLAT	8
20	XDFZZ	59618	01953	. . . . MOUNT,RESILIENT (LOWER)	4
21	XDFZZ	59618	27181	. . ..SPACER	4
22	XDFZZ	59618	01952A	. . . . MOUNT,RESILIENT (UPPER)	4
23	XDFZZ	59618	28791	. . ..BRACKET,MOTOR	1
24	XDFZZ	59618	10416	. . . . PIN,STRAIGHT,HEADLE	1
25	XDFZZ	59618	27104	. . ..PULLEY,MOTOR	1
26	XDFZZ	59618	23750	. . . . PIN,SPRING	1
27	XDFZZ	59618	27171	. . ..PULLEY,MOTOR	1
28	XDFZZ	59618	27201	. . ..NUT,LOCK	4
29	XDFZZ	59618	27136	. . ..SHIELD,MOTOR	1
30	XDFZZ	59618	24142	. . . . SWITCH,PUSH	1
31	PAFZZ	59618	27179	. . . . MOTOR,ALTERNATING C	1

END OF FIGURE

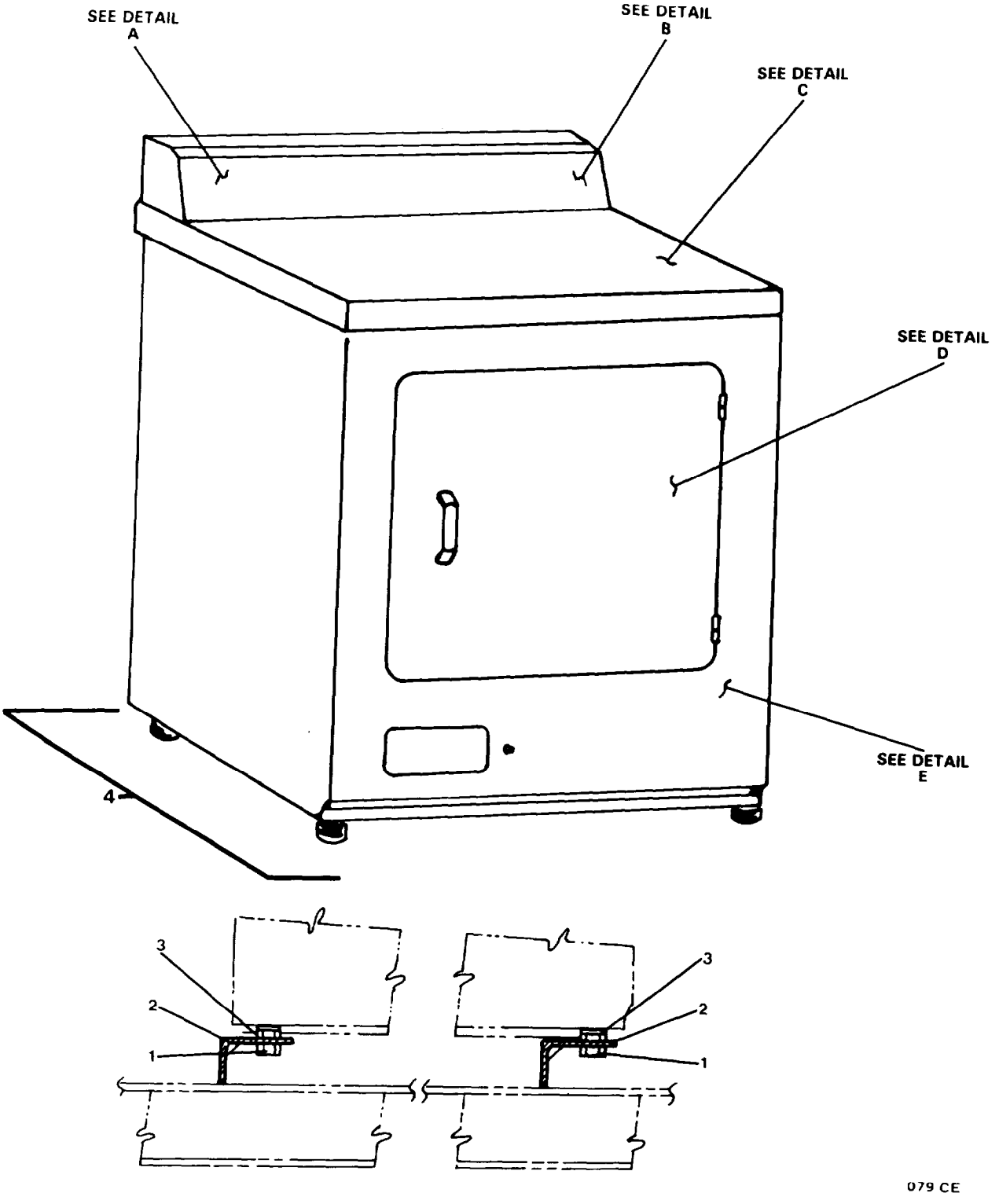

FIGURE 428. Dryer, Tumbler, Laundry, Commercial (Sheet 1 of 6).

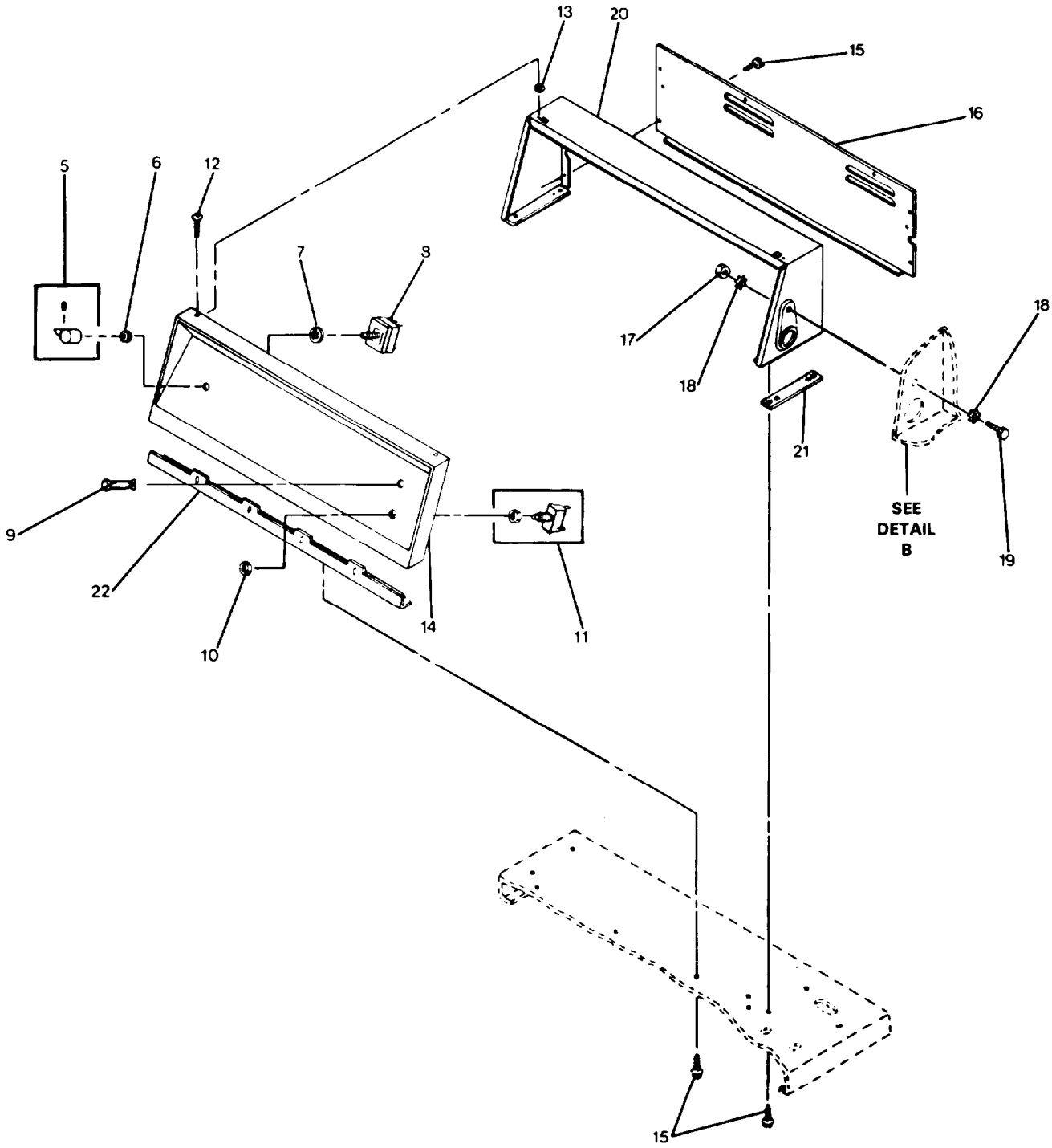

FIGURE 428. Dryer, Tumbler, Laundry, Commercial (Sheet 2 of 6).

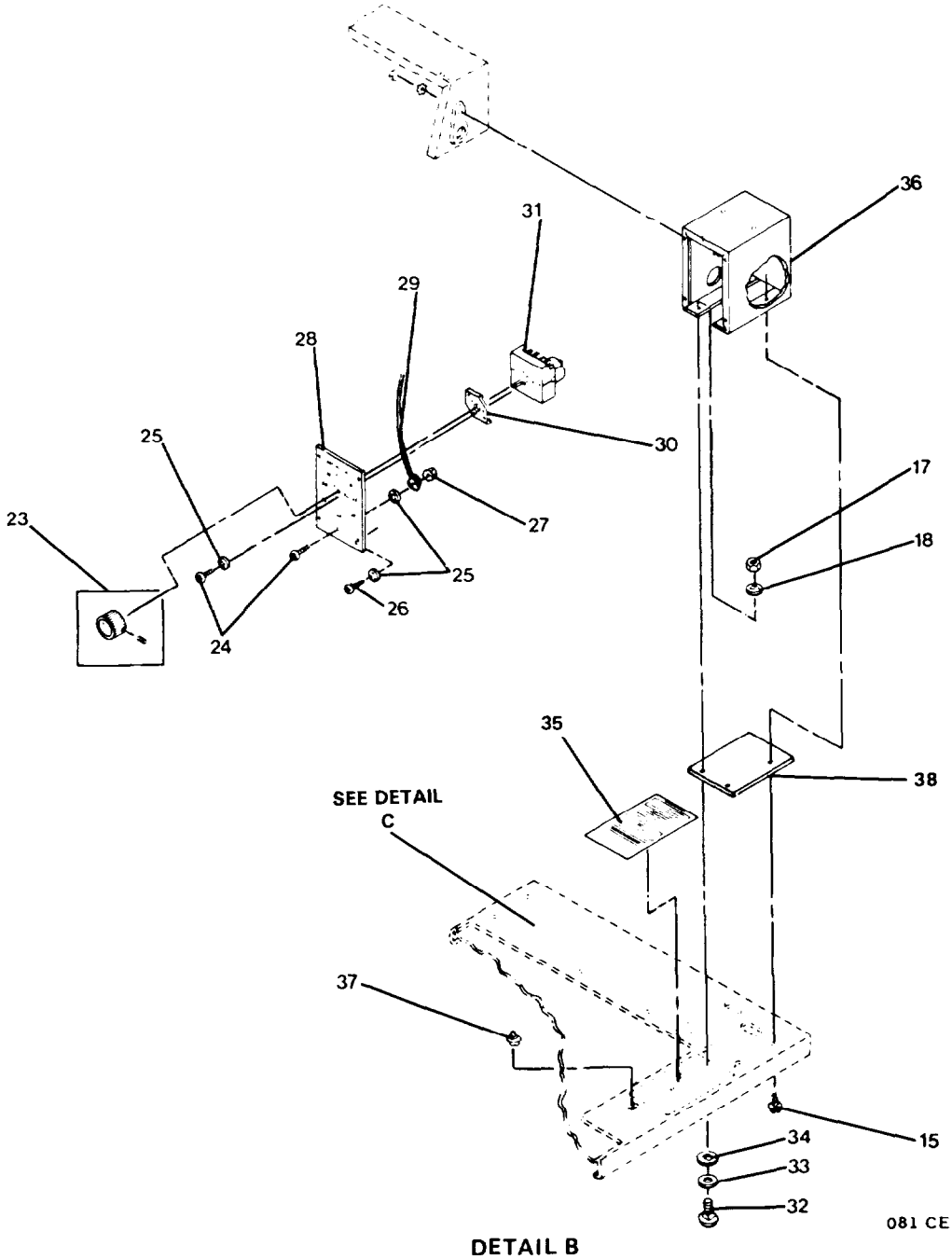

DETAIL B
TIMER ASSEMBLY

FIGURE 428. Dryer, Tumbler, Laundry, Commercial (Sheet 3 of 6).

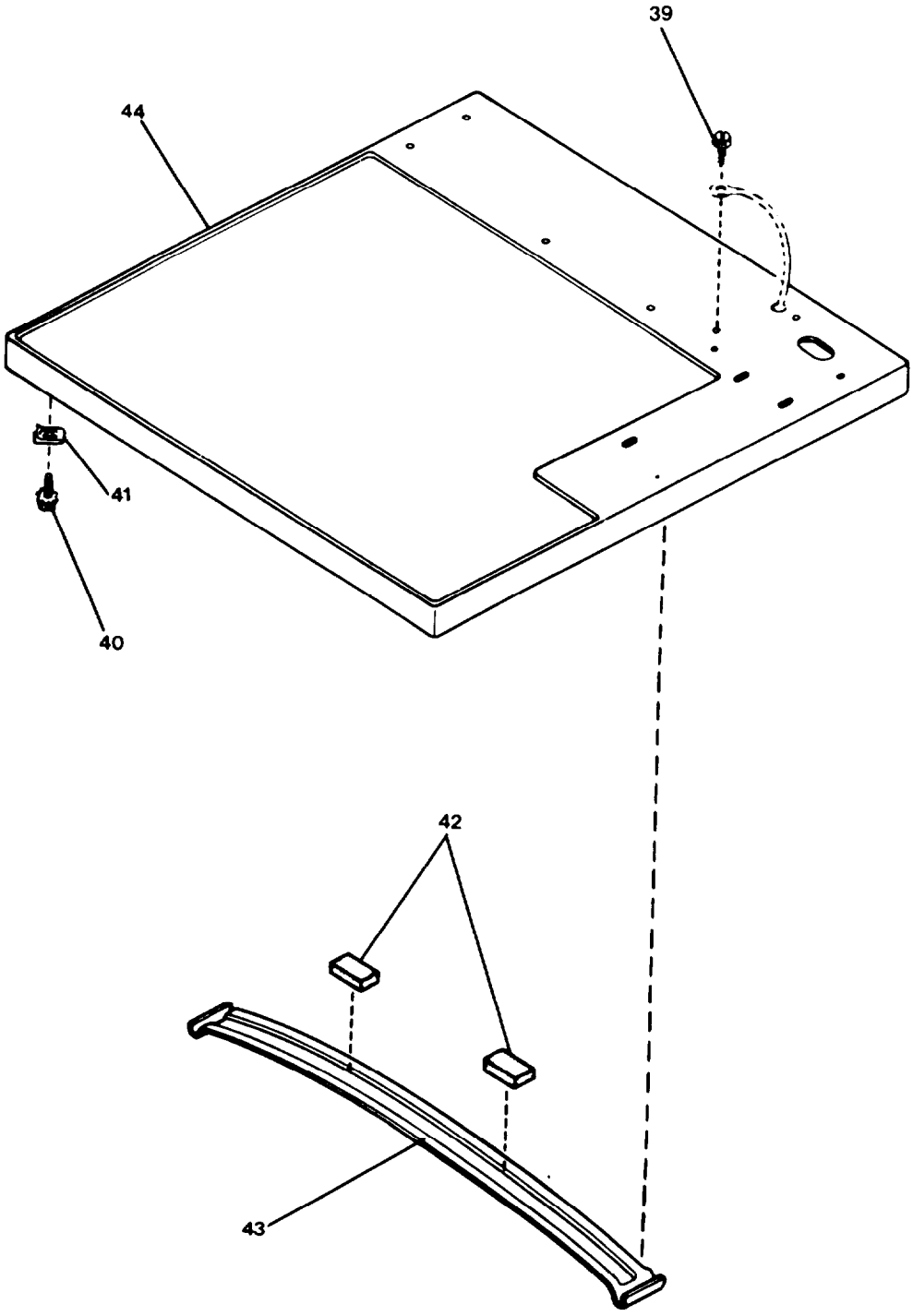

DETAIL C
CABINET TOP ASSEMBLY

082CE

FIGURE 428. Dryer, Tumbler, Laundry, Commercial (Sheet 4 of 6).

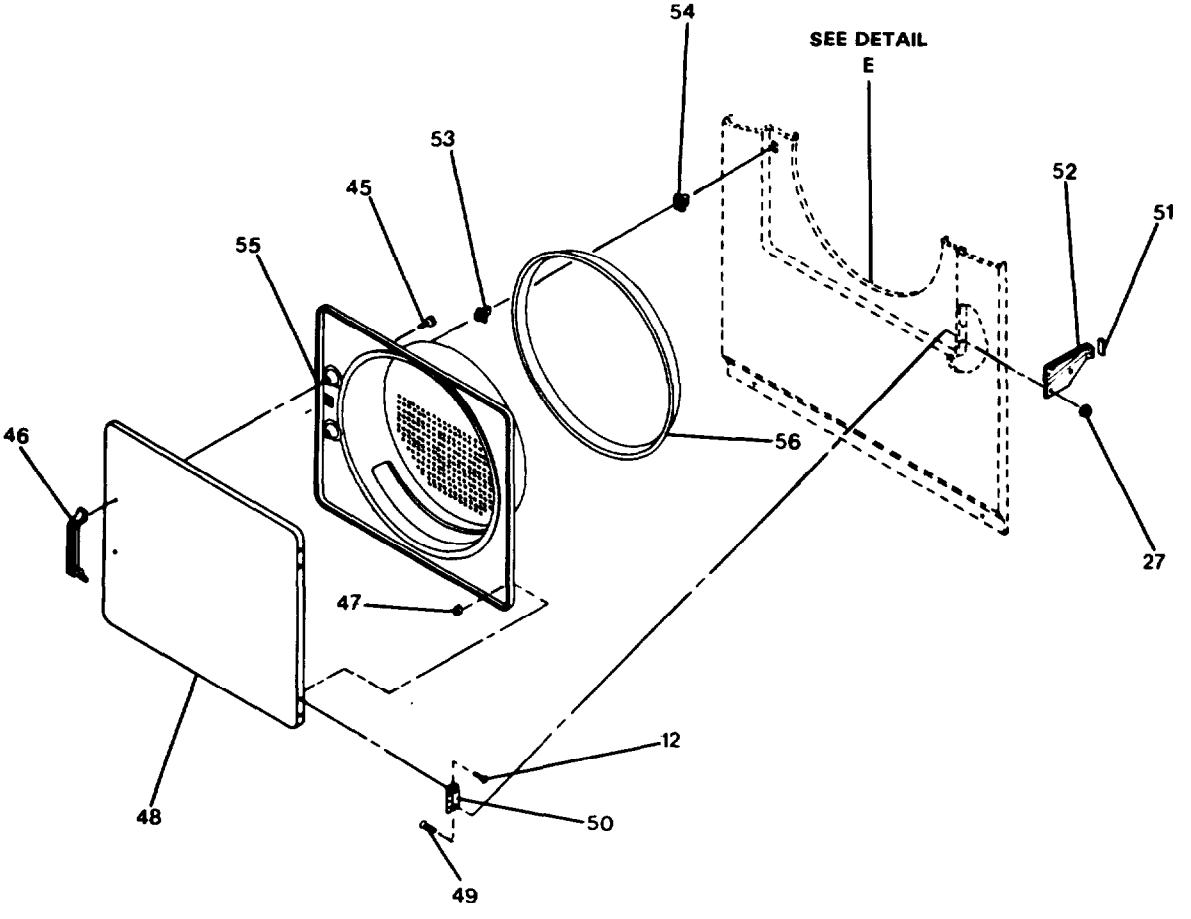

DETAIL D
LOADING DOOR ASSEMBLY

083CE

FIGURE 428. Dryer, Tumbler, Laundry, Commercial (Sheet 5 of 6).

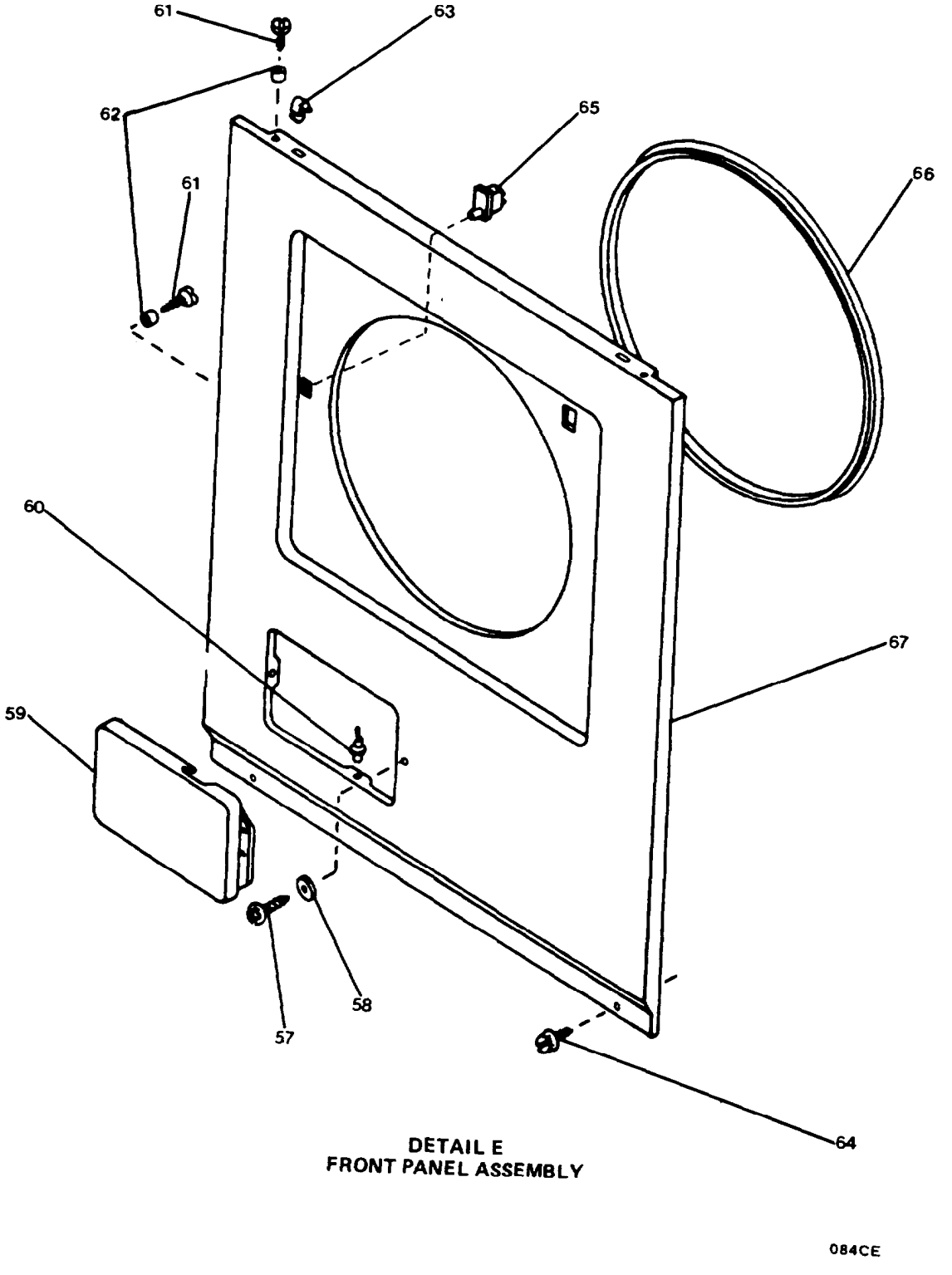

FIGURE 428. Dryer, Tumbler, Laundry, Commercial (Sheet 6 of 6).

(1) ITEM NO	(2) SMR CODE	(3) FSCM	(4) PART NUMBER	(5) DESCRIPTION AND USABLE ON CODES(UOC)	(6) QTY
				GROUP 18 BASIC CRAFT	
				FIG. 428 DRYER, TUMBLER, LAUNDRY, COMMERCIAL	
1	XDOZZ	77408	D0-6150-1372	. . BOLT,MACHINE	4
2	XDOZZ	77408	D0-6170-8039	..NUT,PLAIN,HEXAGON	4
3	XDOZZ	77408	D0-5925-8039	..WASHER,LOCK	4
4	PBOFF	59618	SE-4732	. . DRYER TUMBLER,LAUND (COMMERCIAL)	1
5	XDFZZ	59618	25688	. . . KNOB	1
6	XDFZZ	59618	24205	. ..NUT,KNURLED	1
7	XDFZZ	59618	91176	. ..WASHER,LOCK	1
8	PAFZZ	59618	56576	. . . SWITCH,TEMPERATURE	1
9	PAFZZ	59618	25851	. . . LIGHT,INDICATOR	1
10	XDFZZ	59618	52947	. . . NUT,PLAIN,HEXAGON	1
11	PAFZZ	59618	55882	. . . SWITCH,PUSH	1
12	XDFZZ	59618	52864	. ..SCREW,MACHINE	6
13	XDFZZ	59618	24522	. . . NUT,SPEED	2
14	XDFZZ	59618	56685	. . . PANEL,CONTROL	1
15	XDFZZ	59618	55985	. ..SCREW,CAP,HEXAGON H	11
16	XDFZZ	59618	56166	. ..COVER,REAR	1
17	XDFZZ	59618	20275	. . . NUT,PLAIN,HEXAGON	3
18	XDFZZ	59618	02431	. . . WASHER,LOCK	4
19	XDFZZ	59618	02916	. ..SCREW,CAP,HEXAGON H	1
20	XDFZZ	59618	56167W	. . . HOOD,CONTROL	1
21	XDFZZ	59618	23028	. ..GASKET	2
22	XDFZZ	59618	56173	. . . SUPPORT,CONTROL PAN	1
23	XDFZZ	59618	54678	. ..KNOB ASSEMBLY,TIMER	1
24	XDFZZ	59618	03203	. ..SCREW,MACHINE	2
25	XDFZZ	59618	21734	. ..WASHER,LOCK	6
26	XDFZZ	59618	51778	. ..SCREW,MACHINE	4
27	XDFZZ	59618	51236	. ..NUT,LOCK	3
28	XDFZZ	59618	57659W	. ..PLATE,TIMER	1
29	XDFZZ	59618	20680	. ..WIRE,GROUND (GREEN)	2
30	XDFZZ	59618	56502	. . . SPACER,TIMER	1
31	XDFZZ	59618	56503	. ..TIMER STOP	1
32	XDFZZ	59618	02505	. . . BOLT,CARRIAGE	2
33	XDFZZ	59618	20279	. ..WASHER,FLAT	2
34	XDFZZ	59618	23225	. ..WASHER	2
35	XDFZZ	59618	27864	. . . GASKET	1
36	XDFZZ	59618	27870W	. . . CASE,TIMER	1
37	XDFZZ	59618	26351	. ..RIVET	1
38	XDFZZ	59618	56566	. . . DECAL,INSTRUCTION	1
39	XDFZZ	59618	51924	. ..SCREW,CAP,HEXAGON H	1
40	XDFZZ	59618	23008	. . . SCREW,ASSEMBLED WAS	4
41	XDFZZ	59618	20249	. ..NUT,SPEED	4
42	XDFZZ	59618	56968	. . . MOUNT,RESILIENT	2
43	XDFZZ	59618	56486	. . . BRACE,TOP	1
44	XDFZZ	59618	57078W	. ..TOP,CABINET	1
45	XDFZZ	59618	52150	. ..SCREW,CAP,HEXAGON H	2
46	XDFZZ	59618	54068	. . . HANDLE,DOOR,DRYER	1
47	XDFZZ	59618	23407	. . . NUT,SPEED	4

(1) ITEM NO	(2) SMR CODE	(3) FSCM	(4) PART NUMBER	(5) DESCRIPTION AND USABLE ON CODES(UOC)	(6) QTY
48	XDFZZ	59618	56021W	. ..PANEL,OUTER DOOR	1
49	XDFZZ	59618	22649	. ..SCREW,MACHINE	4
50	XDFZZ	59618	56045	. ..HINGE	2
51	XDFZZ	59618	56128	. ..PAD	1
52	XDFZZ	59618	56129	. . . BRACKET,SUPPORT	1
53	XDFZZ	59618	54661	. ..STRIKER,DOOR,DRYER	1
54	XDFZZ	59618	54660	. . . CATCH,DOOR,DRYER	1
55	XDFZZ	59618	56018	. ..PANEL,INNER DOOR	1
56	XDFZZ	59618	56163	. ..SEAL,NONMETALLIC SP	1
57	XDFZZ	59618	57444	. ..SCREW,MACHINE	1
58	XDFZZ	59618	21147	. ..WASHER,FLAT	1
59	XDFZZ	59618	57446W	. ..DOOR,ACCESS	1
60	XDFZZ	59618	56534	. ..RIVET,SUPPORT	1
61	XDFZZ	59618	56086	. . . SCREW,MACHINE	4
62	XDFZZ	59618	56079	. ..BUSHING,SLEEVE	4
63	XDFZZ	59618	56080	. ..CLIP,HOLD-DOWN	2
64	XDFZZ	59618	25723	. ..SCREW,CAP,HEXAGON H	2
65	PAFZZ	59618	56052	. . . SWITCH	1
66	XDFZZ	59618	56091	. . . SEAL,PLAIN,ENCASED	1
67	XDFZZ	59618	56051W	. ..PANEL,FRONT,DRYER	1

END OF FIGURE

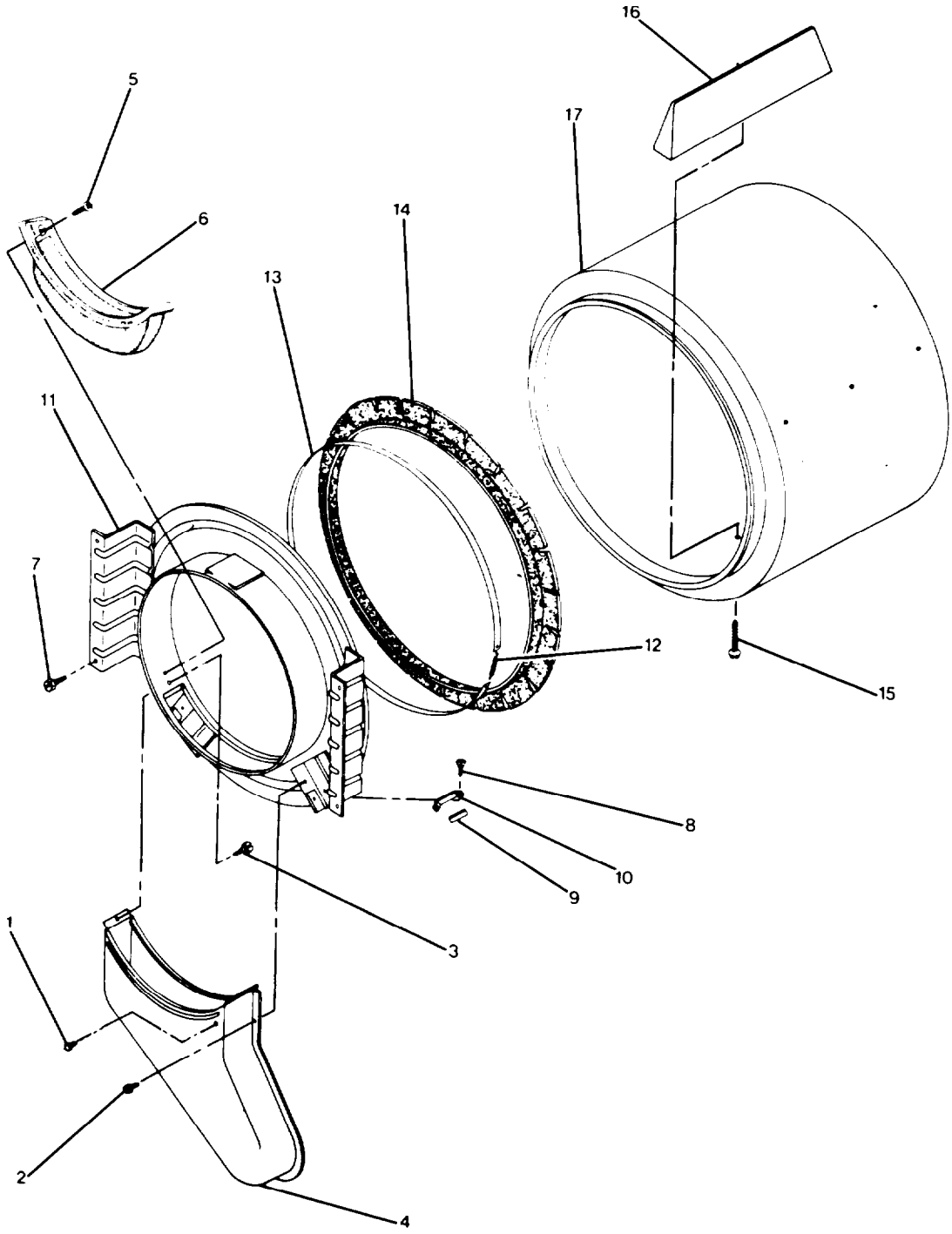

FIGURE 429. Dryer: Front Bulkhead and Cylinder Roller Group.

(1) ITEM NO	(2) SMR CODE	(3) FSCM	(4) PART NUMBER	(5) DESCRIPTION AND USABLE ON CODES(UOC)	(6) QTY
				GROUP 18 BASIC CRAFT	
				FIG. 429 FRONT BULKHEAD AND CYLINDER ROLLER GROUP	
1	XDFZZ	59618	56938	. . ..BUMPER	1
2	XDFZZ	59618	25724	. . ..SCREW,CAP,HEXAGON H	1
3	XDFZZ	59618	23628	. . ..SCREW,CAP,HEXAGON H	1
4	XDFZZ	59618	56027	. . . . DUCT-AIR,DRYER	1
5	XDFZZ	59618	25232	. . . . SCREW,MACHINE	1
6	PAFZZ	59618	57025	. . . ..FILTER,LINT	1
7	XDFZZ	59618	25723	. . ..SCREW,CAP,HEXAGON H	4
8	XDFZZ	59618	23962	. . ..SCREW,CAP,HEXAGON H	8
9	XDFZZ	59618	58049	. . ..PAD,FELT	4
10	XDFZZ	59618	57005	. . . . GLIDE,CYLINDER	4
11	XDFZZ	59618	57019	. . ..BULKHEAD,FRONT	1
12	XDFZZ	59618	52310	. . . . SPRING	1
13	XDFZZ	59618	56090	. . . . STRAP,RETAINING	1
14	XDFZZ	59618	56088	. . ..SEAL,PLAIN,ENCASED	1
15	XDFZZ	59618	56131	. . ..SCREW,CAP,HEXAGON H	6
16	XDFZZ	59618	56013	. . ..BAFFLE,CYLINDER,DRY	2
17	XDFZZ	59618	56175	. . . . CYLINDER ASSEMBLY D	1

END OF FIGURE

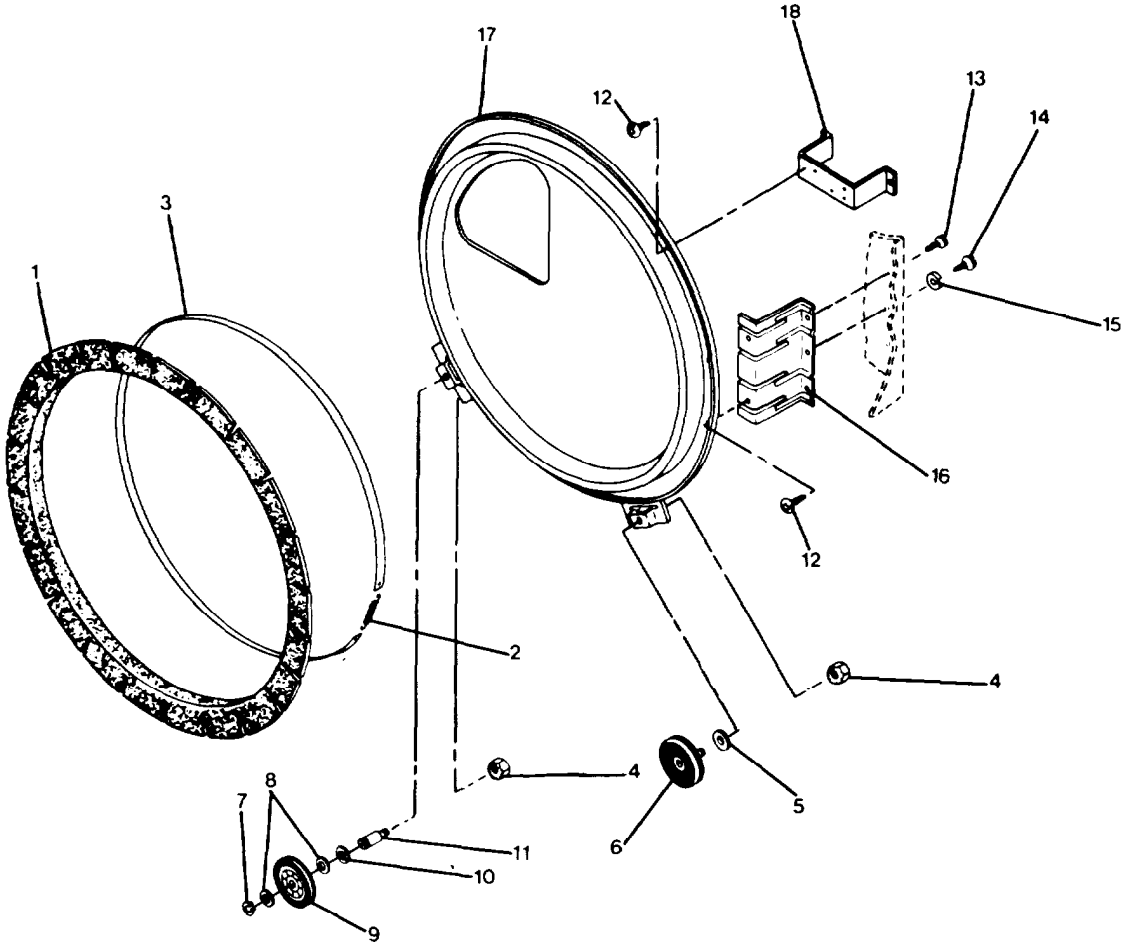

FIGURE 430. Dryer: Rear Bulkhead and Cylinder Roller Group (Sheet 1 of 2).

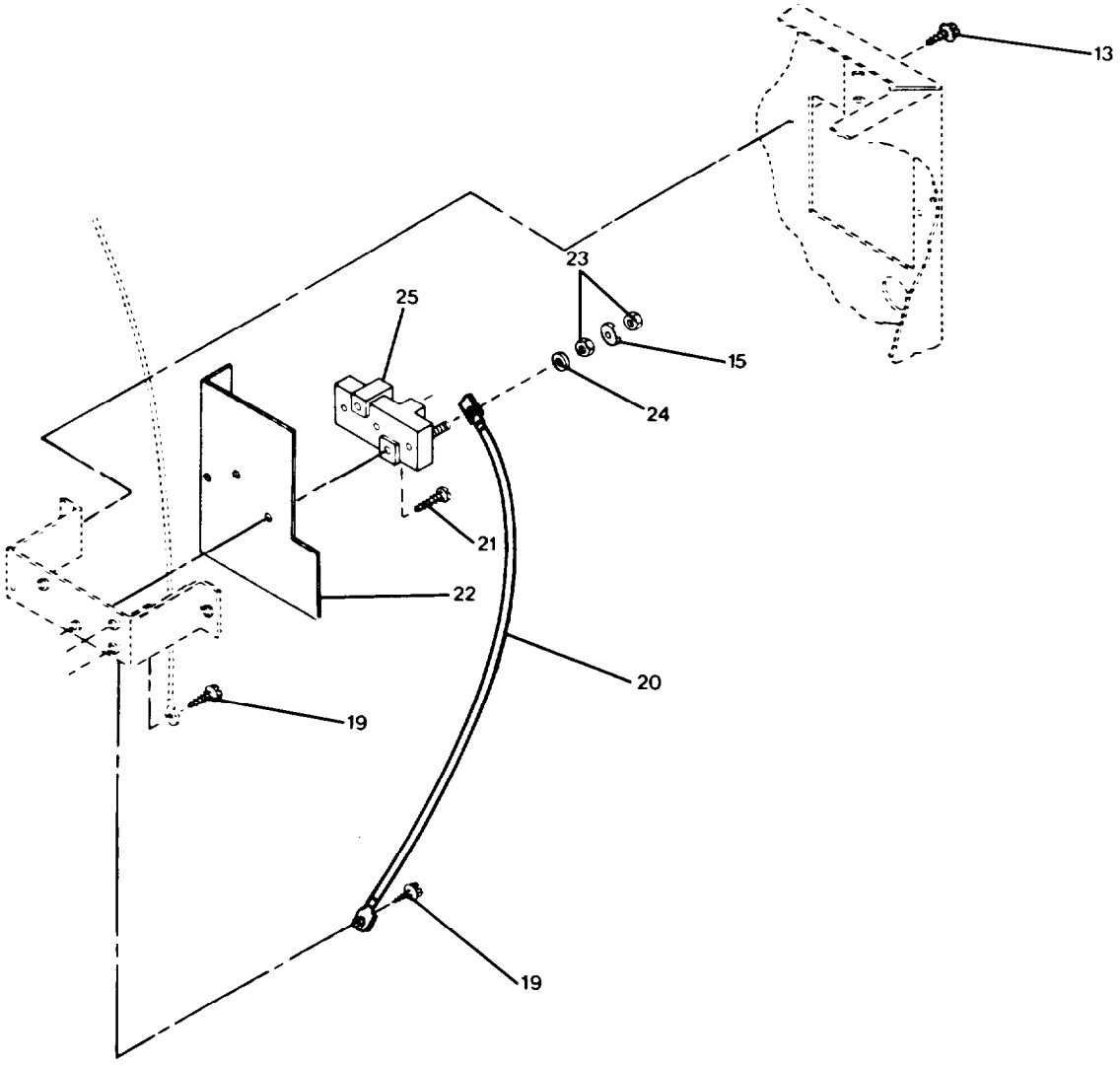

088CE

FIGURE 430. Dryer: Rear Bulkhead and Cylinder Roller Group (Sheet 2 of 2).

(1) ITEM NO	(2) SMR CODE	(3) FSCM	(4) PART NUMBER	(5) DESCRIPTION AND USABLE ON CODES(UOC)	(6) QTY
				GROUP 18 BASIC CRAFT	
				FIG. 430 DRYER: REAR BULKHEAD AND CYLINDER ROLLER GROUP	
1	XDFZZ	59618	56088	. . ..SEAL,PLAIN,ENCASED	1
2	XDFZZ	59618	52310	. . ..SPRING	1
3	XDFZZ	59618	56090	. . ..STRAP,RETAINING	1
4	XDFZZ	59618	56156	. . ..NUT,LOCK	2
5	XDFZZ	59618	20279	. . ..WASHER,FLAT	1
6	XDFZZ	59618	56285	. . ..ROLLER	1
7	XDFZZ	59618	23748	. . ..RING,RETAINING	1
8	XDFZZ	59618	52549	. . ..WASHER,FLAT	2
9	XDFZZ	59618	56457	. . . . ROLLER	1
10	XDFZZ	59618	23886	. . . ..WASHER,THRUST	1
11	XDFZZ	59618	56461	. . . . BOLT	1
12	XDFZZ	59618	56078	. . ..SCREW,MACHINE	5
13	XDFZZ	59618	25723	. . ..SCREW,CAP,HEXAGON H	6
14	XDFZZ	59618	52909	. . . . SCREW,CAP,HEXAGON H	2
15	XDFZZ	59618	51474	. . ..WASHER,CUPPED	5
16	XDFZZ	59618	56055	. . . . BULKHEAD,DRYER	2
17	XDFZZ	59618	56540	. . ..BULKHEAD,REAR,DRYER	1
18	XDFZZ	59618	56048	. . ..BRACKET	1
19	XDFZZ	59618	51784	. . ..SCREW,CAP,HEXAGON H	2
20	XDFZZ	59618	20680	. . ..WIRE,GROUND (GREEN)	2
21	XDFZZ	59618	Q6535	. . ..SCREW,MACHINE	2
22	XDFZZ	59618	56087	. . ..COVER,TERMINAL BOAR	1
23	XDFZZ	59618	Q6163	. . . . NUT,PLAIN,HEXAGON	6
24	XDFZZ	59618	56552	. . ..WASHER,FLAT	3
25	XDFZZ	59618	50854	. . . . TERMINAL BOARD	1

END OF FIGURE

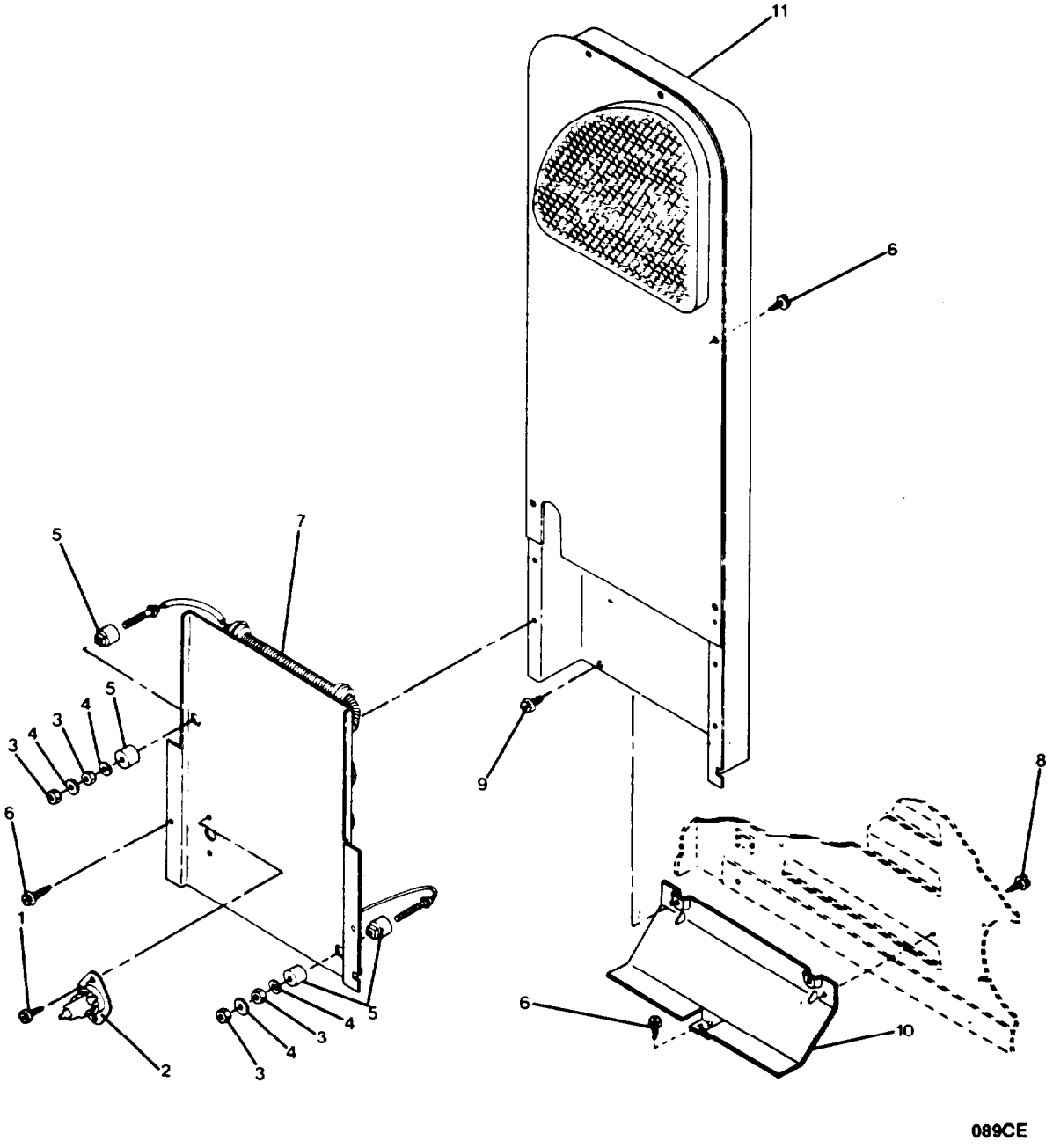

FIGURE 431. Dryer: Heater Box Group.

(1) ITEM NO	(2) SMR CODE	(3) FSCM	(4) PART NUMBER	(5) DESCRIPTION AND USABLE ON CODES(UOC)	(6) QTY
				GROUP 18 BASIC CRAFT	
				FIG. 431 DRYER: HEATER BOX GROUP	
1	XDFZZ	59618	23222	. . . . SCREW,CAP,HEXAGON H	2
2	XDFZZ	59618	56082	. . . ..SWITCH,THERMOSTATIC	1
3	XDFZZ	59618	56563	. . . ..NUT,PLAIN,HEXAGON	4
4	XDFZZ	59618	56552	. . . ..WASHER,FLAT	4
5	XDFZZ	59618	57408	. . . ..INSULATOR,BUSHING	4
6	XDFZZ	59618	56264	. . . ..SCREW,CAP,HEXAGON H	7
7	PAFZZ	59618	56179	. . . ..HEATING ELEMENT,ELE	1
8	XDFZZ	59618	25723	. . . ..SCREW,CAP,HEXAGON H	1
9	XDFZZ	59618	51780	. . . ..SCREW,CAP,HEXAGON H	1
10	XDFZZ	59618	58048	. . . .SHIELD,HEAT	1
11	XDFZZ	59618	56029	. . . ..HEATER-BOX,DRYER	1

END OF FIGURE

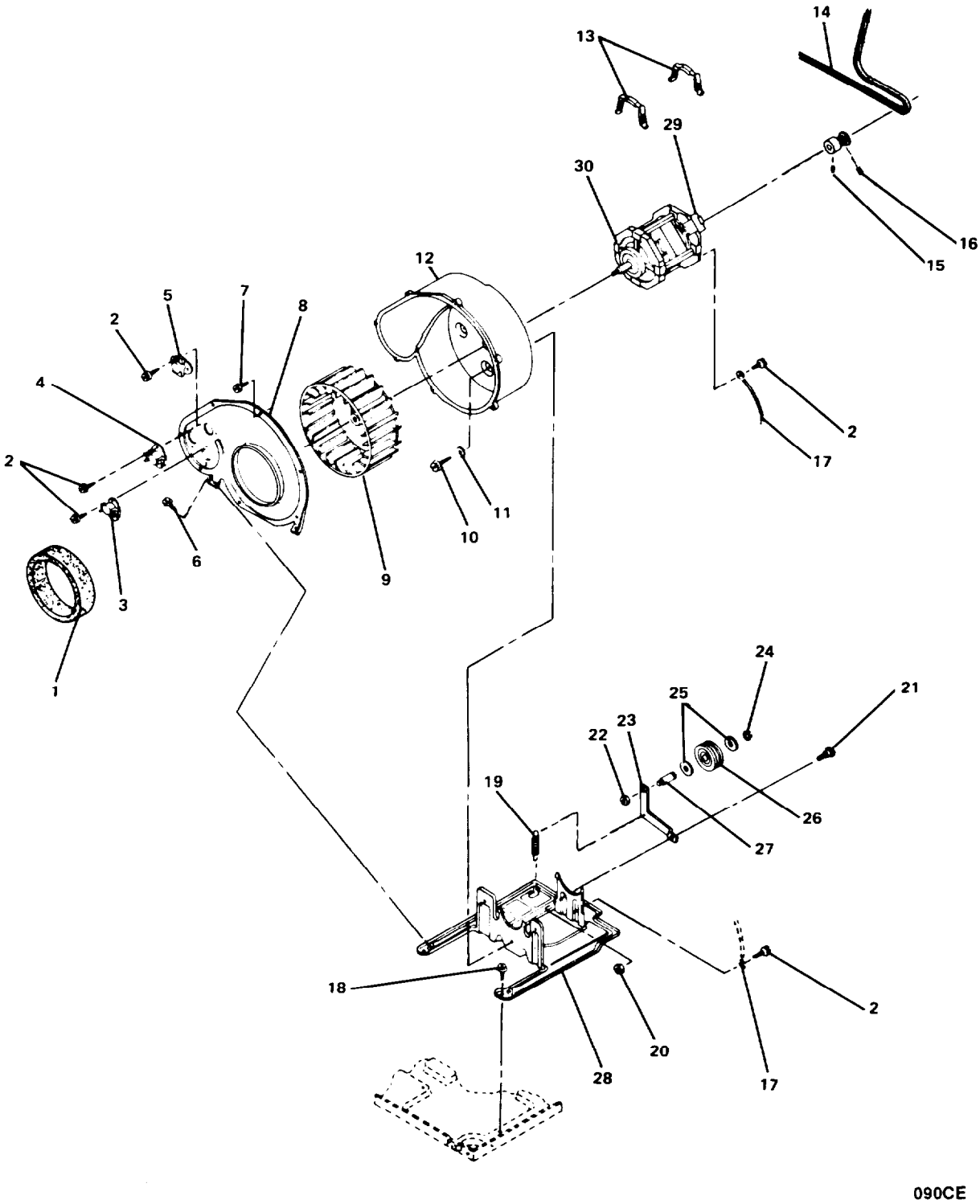

FIGURE 432. Dryer: Motor and Exhaust Fan Group.

(1) ITEM NO	(2) SMR CODE	(3) FSCM	(4) PART NUMBER	(5) DESCRIPTION AND USABLE ON CODES(UOC)	(6) QTY
				GROUP 18 BASIC CRAFT	
				FIG. 432 DRYER: MOTOR AND EXHAUST FAN GROUP	
1	XDFZZ	59618	56065	. . ..SEAL,PLAIN,ENCASED	1
2	XDFZZ	59618	23222	. . ..SCREW,CAP,HEXAGON H	7
3	PAFZZ	59618	56470	. . ..SWITCH,THERMOSTATIC	1
4	PAFZZ	59618	57015	. . ..SWITCH,THERMOSTATIC (HIGH)	1
5	PAFZZ	59618	56591	. . ..SWITCH,THERMOSTATIC (LOW LIMIT)	1
6	XDFZZ	59618	55985	. . ..SCREW,CAP,HEXAGON H	2
7	XDFZZ	59618	23962	. . ..SCREW,CAP,HEXAGON H	7
8	XDFZZ	59618	56059	. . ..COVER,FAN,EXHAUST	1
9	XDFZZ	59618	56000	. . ..IMPELLER,FAN,CENTRI	1
10	XDFZZ	59618	56264	. . . . SCREW,CAP,HEXAGON H	3
11	XDFZZ	59618	20492	. . ..WASHER	3
12	XDFZZ	59618	56020	. . . . HOUSING,FAN,DRYER	1
13	XDFZZ	59618	58047	. . . . CLIP,MOTOR	2
14	PAFZZ	59618	56095	. . . .BELT,V	1
15	XDFZZ	59618	52906	. . . . SETSCREW	1
16	XDFZZ	59618	56133	. . ..PULLEY GROOVE	1
17	XDFZZ	59618	20680	. . ..WIRE,GROUND	2
18	XDFZZ	59618	25723	. . . . SCREW,CAP,HEXAGON H	2
19	XDFZZ	59618	56076	. . ..SPRING	1
20	XDFZZ	59618	52566	. . ..NUT,LOCK	1
21	XDFZZ	59618	56587	. . ..BOLT,SHOULDER	1
22	XDFZZ	59618	56156	. . ..NUT,LOCK	1
23	XDFZZ	59618	56057	. . ..LEVER,IDLER	1
24	XDFZZ	59618	23748	. . ..RING,RETAINING	1
25	XDFZZ	59618	52549	. . ..WASHER,FLAT	2
26	XDFZZ	59618	54414	. . ..PULLEY,GROOVE	1
27	XDFZZ	59618	56461	. . ..BOLT	1
28	XDFZZ	59618	58045	. . ..BRACKET,MOTOR MOUNT	1
29	PAFZZ	59618	53249	. ..SWITCH,ELECTRICAL	1
30	XDFZZ	59618	58044	. . ..MOTOR	1

END OF FIGURE

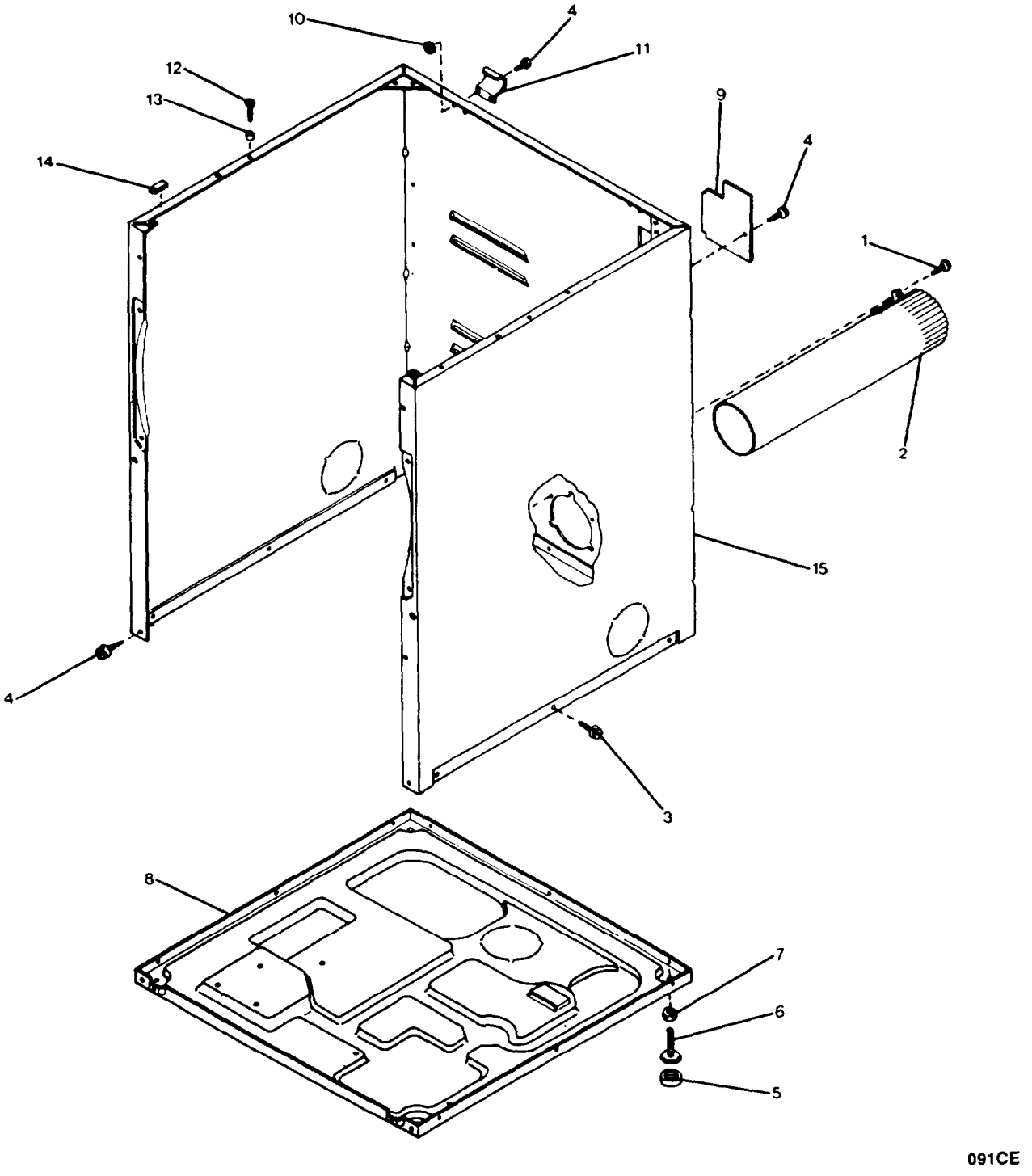

FIGURE 433. Dryer: Cabinet, Exhaust Duct, and Base Group.

(1) ITEM ND	(2) SMR CODE	(3) FSCM	(4) PART NUMBER	(5) DESCRIPTION AND USABLE ON CODES(UOC)	(6) QTY
				GROUP 18 BASIC CRAFT	
				FIG. 433 DRYER: CABINET, EXHAUST DUCT AND BASE GROUP	
1	XDFZZ	59618	25724	. . ..SCREW,CAP,HEXAGON H	1
2	XDFZZ	59618	56118	. . ..DUCT,EXHAUST,DRYER	1
3	XDFZZ	59618	51784	. . ..SCREW,CAP,HEXAGON H	9
4	XDFZZ	59618	25723	. . ..SCREW,CAP,HEXAGON H	5
5	XDFZZ	59618	70282	. . ..PAD,RUBBER	4
6	XDFZZ	59618	52696	. . ..LEG,LEVELING	4
7	XDFZZ	59618	20274	. . ..NUT,PLAIN,HEXAGON	4
8	XDFZZ	59618	56074	. . ..BASE	1
9	XDFZZ	59618	56044	. . ..PLATE,ACCESS	1
10	XDFZZ	59618	23951	. . ..NUT,LOCK	2
11	XDFZZ	59618	56043	. . ..HINGE	1
12	XDFZZ	59618	56086	. . ..SCREW,MACHINE	4
13	XDFZZ	59618	56079	. . . . BUSHING,SLEEVE	4
14	XDFZZ	59618	56128	. . ..PAD	2
15	XDFZZ	59618	57070W	. . ..CABINET	1

END OF FIGURE

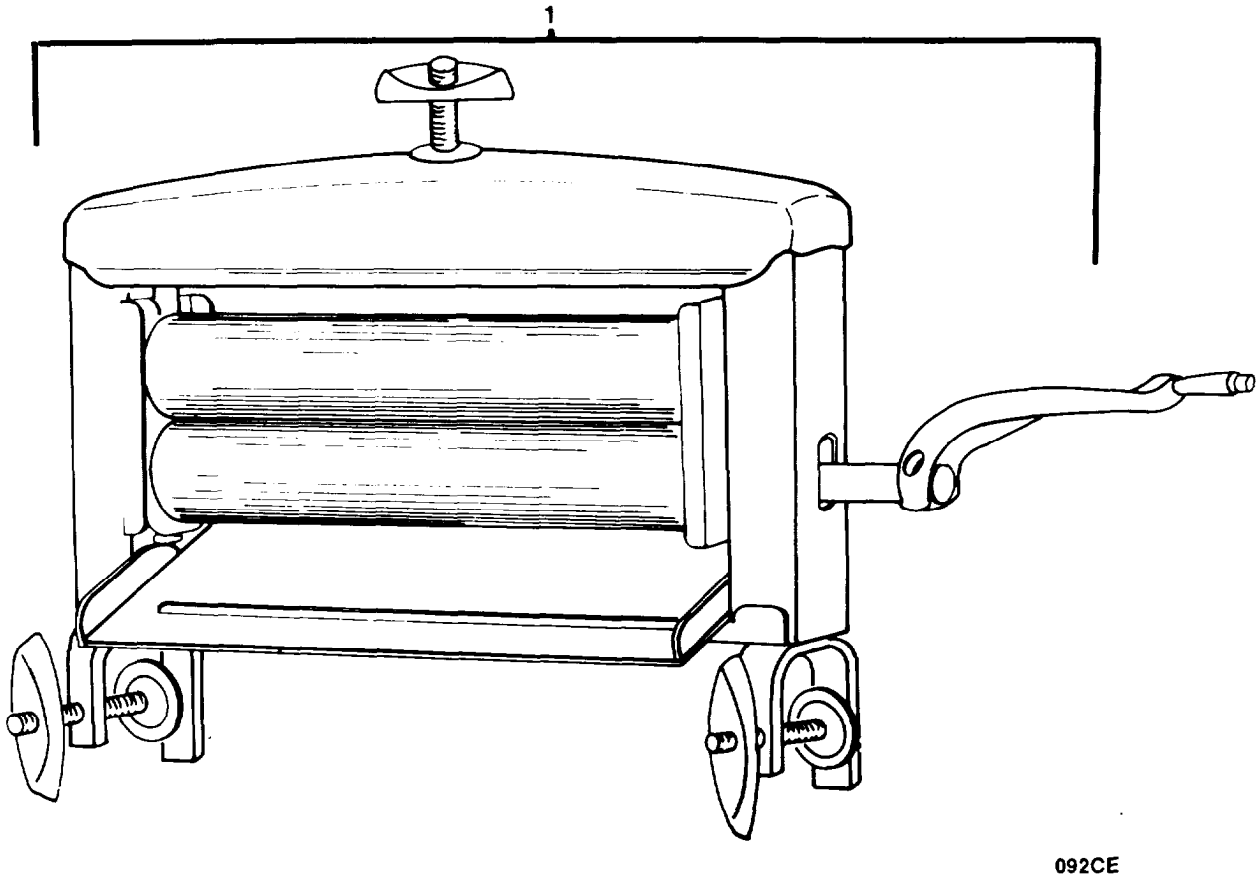

FIGURE 434. Clothes Wringer.

(1) ITEM NO	(2) SMR CODE	(3) FSCM	(4) PART NUMBER	(5) DESCRIPTION AND USABLE ON CODES(UOC)	(6) QTY
				GROUP 18 BASIC CRAFT	
				FIG. 434 CLOTHES WRINGER	
1	XDOZZ	50962	76-3	..WRINGER,CLOTHES	1
				END OF FIGURE	

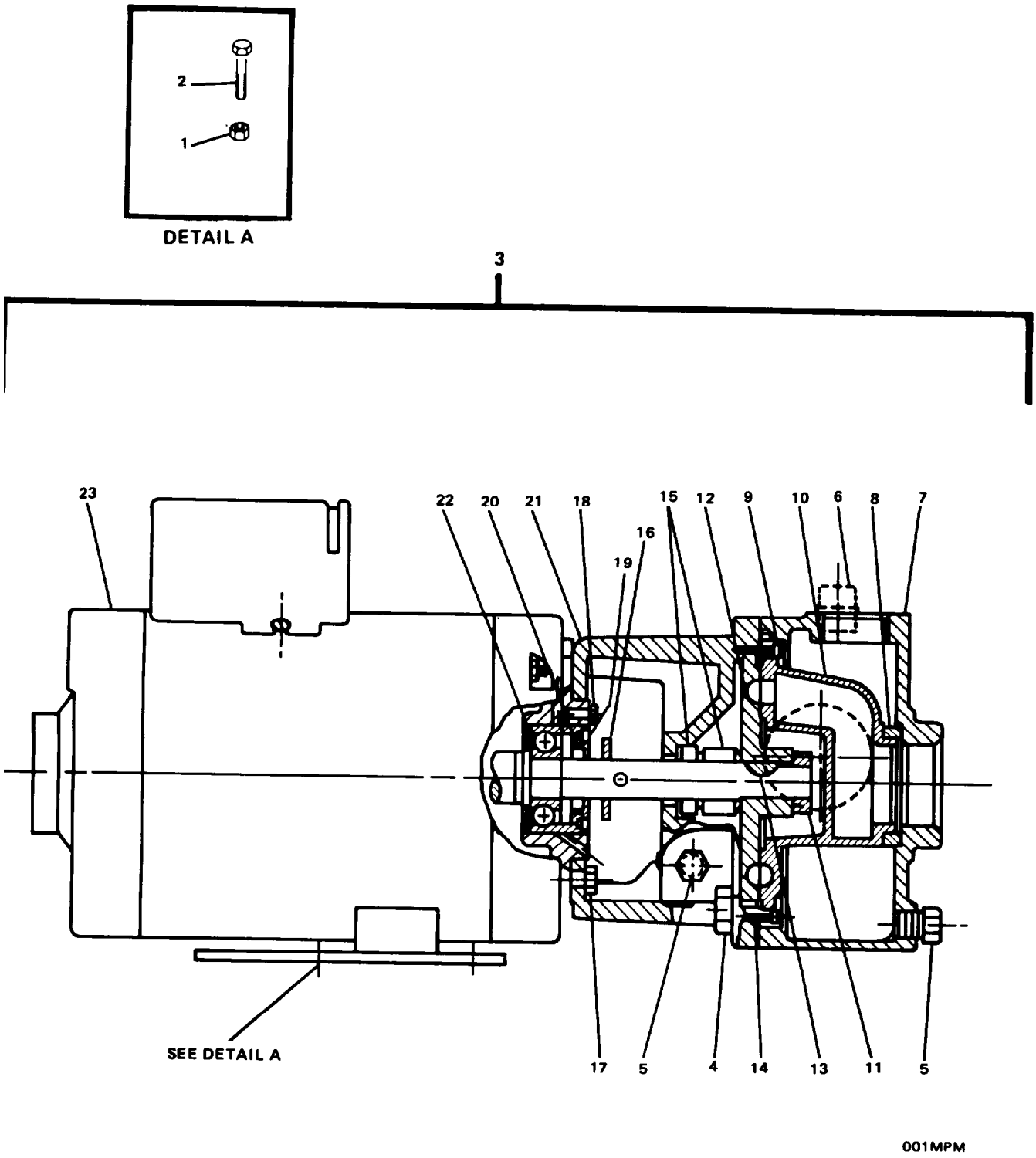

FIGURE 435. Pump Unit, Centrifugal (Fresh Water).

(1) ITEM NO	(2) SMR CODE	(3) FSCM	(4) PART NUMBER	(5) DESCRIPTION AND USABLE ON CODES(UOC)	(6) QTY
				GROUP 18 BASIC CRAFT	
				FIG. 435 PUMP UNIT, CENTRIFUGAL (FRESH WATER)	
	XCOFF	77408	8200005	.MISC. PUMPS/MOTORS	1
1	XDOZZ	77408	D0-6800-8033	. .NUT,SELF-LOCKING,HE	8
2	XDOZZ	77408	D0-6150-1010	..BOLT,MACHINE	8
3	PAOFF	62321	330CS9M-AB-SP	..PUMP UNIT,CENTRIFUG(FRESH WATER) (27USGPM AT 40 PSIG)	2
4	XDFZZ	62321	8771	. . . SCREW,CAP,HEXAGON H	4
5	XDFZZ	62321	4236	. ..PLUG,PIPE	2
6	XDFZZ	62321	2953	. . .PLUG	1
7	XDFZZ	62321	9790-C	. . .CASE	1
8	PAFZZ	62321	4231	. . .BUSHING,RUBBER	1
9	XDFZZ	62321	2535	. ..SCREW,MACHINE	2
10	PAFZZ	62321	9789-9	. ..HOUSING,LIQUID PUMP (FRESH WATER)	1
11	XDFZZ	62321	1404	. ..NUT,PLAIN,HEXAGON	1
12	PAFZZ	62321	SA-9788HT-9	. ..IMPELLER,PUMP,CENTR	1
13	XDFZZ	62321	1457	. . .KEY	1
14	PAFZZ	30397	1-255-5716	. ..PACKING,PREFORMED	1
15	PAFZZ	62321	8991	. ..SEAL,PLAIN	1
16	XDFZZ	62321	8324	. . . WASHER	1
17	XDFZZ	62321	3121-A	. ..SCREW,CAP,HEXAGON H	4
18	XDFZZ	62321	7577	. . . SCREW,CAP,HEXAGON H	1
19	XDFZZ	62321	7576	. . . LOCK,PUMP	1
20	XDFZZ	62321	9781	. . . SCREW,IMPELLER ADJU	1
21	XDFZZ	62321	9787-A	. . . SEAL	1
22	PAFZZ	62321	9144	. . . BEARING,BALL,ANNULA	1
23	PAOZZ	62321	23255F	. ..MOTOR,ALTERNATING C	1

END OF FIGURE

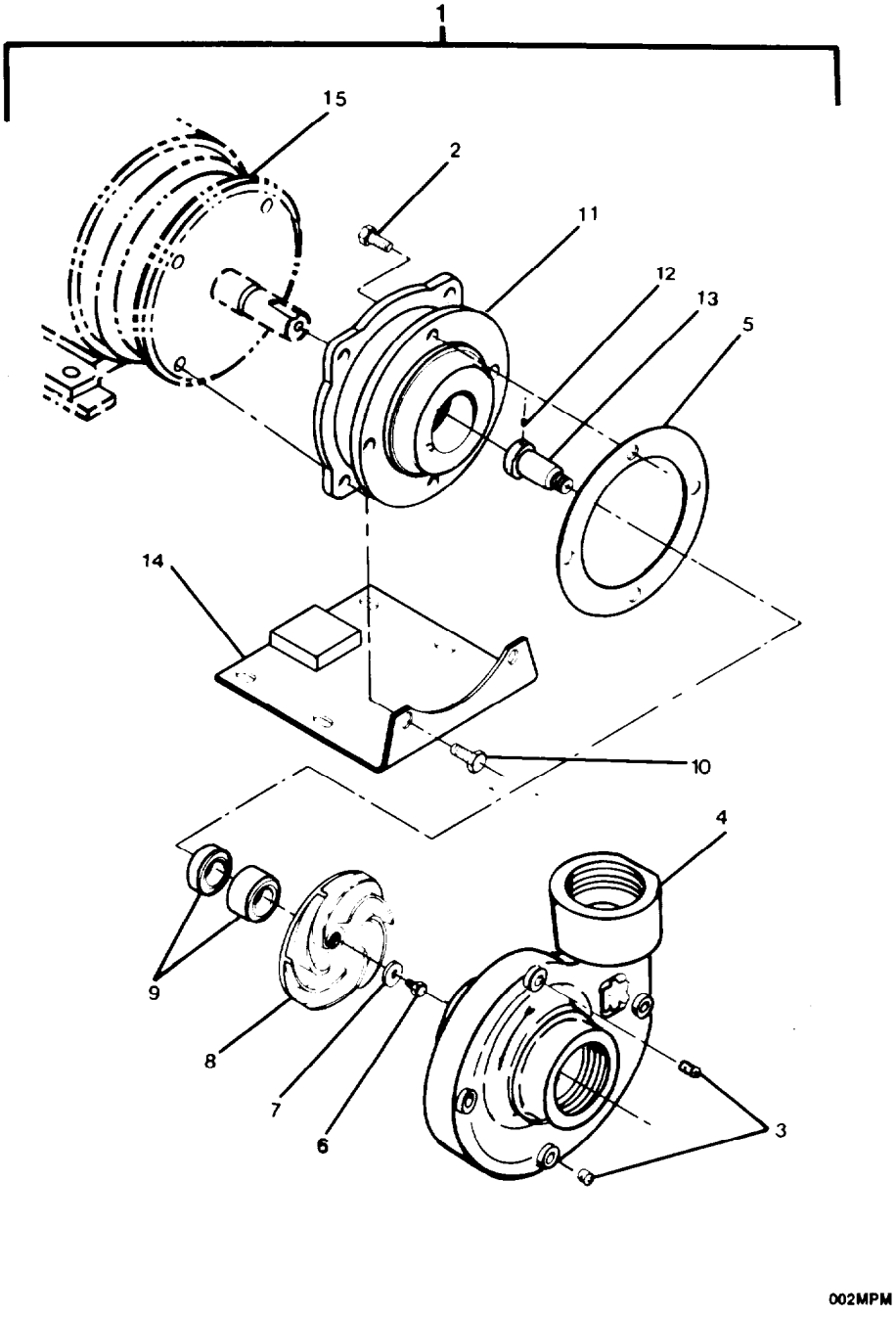

FIGURE 436. Pump Unit, Centrifugal (Fresh Water Booster).

(1) ITEM NO	(2) SMR CODE	(3) FSCM	(4) PART NUMBER	(5) DESCRIPTION AND USABLE ON CODES(UOC)	(6) QTY
				GROUP 18 BASIC CRAFT	
				FIG. 436 PUMP UNIT, CENTRIFUGAL (FRESH WATER BOOSTER)	
1	PAOFF	88032	SMP-1000	..PUMP UNIT,CENTRIFUG (FRESH WATER BOOSTER) (10GPM AT 10 PSI)	1
2	XDFZZ	88032	35A2A	. ..SCREW,CAP,HEXAGON H	4
3	XDFZZ	88032	34A7	. ..PLUG,MACHINE THREAD	2
4	XDFZZ	88032	2469	. . .CASING	1
5	PAFZZ	88032	2584	. . .GASKET	1
6	XDFZZ	88032	0210	. ..BOLT,MACHINE	1
7	XDFZZ	88032	3214	. . . WASHER	1
8	PAFZZ	88032	1129	...IMPELLER,PUMP,CENTR	1
9	PAFZZ	71724	CFSP52322	...SEAL ASSEMBLY,SHAFT	1
10	XDFZZ	88032	35A2C	. . . SCREW,CAP,HEXAGON H	4
11	XDFZZ	88032	1063	. ..HEAD,SUPPORT	1
12	XDFZZ	88032	109A2	. ..SETSCREW	1
13	PAFZZ	88032	1829	. ..SHAFT,SHOULDERED	1
14	XDFZZ	88032	1295	. ..FOOT,MOTOR	1
15	PAOZZ	88032	0743	. ..MOTOR,ALTERNATING C	1

END OF FIGURE

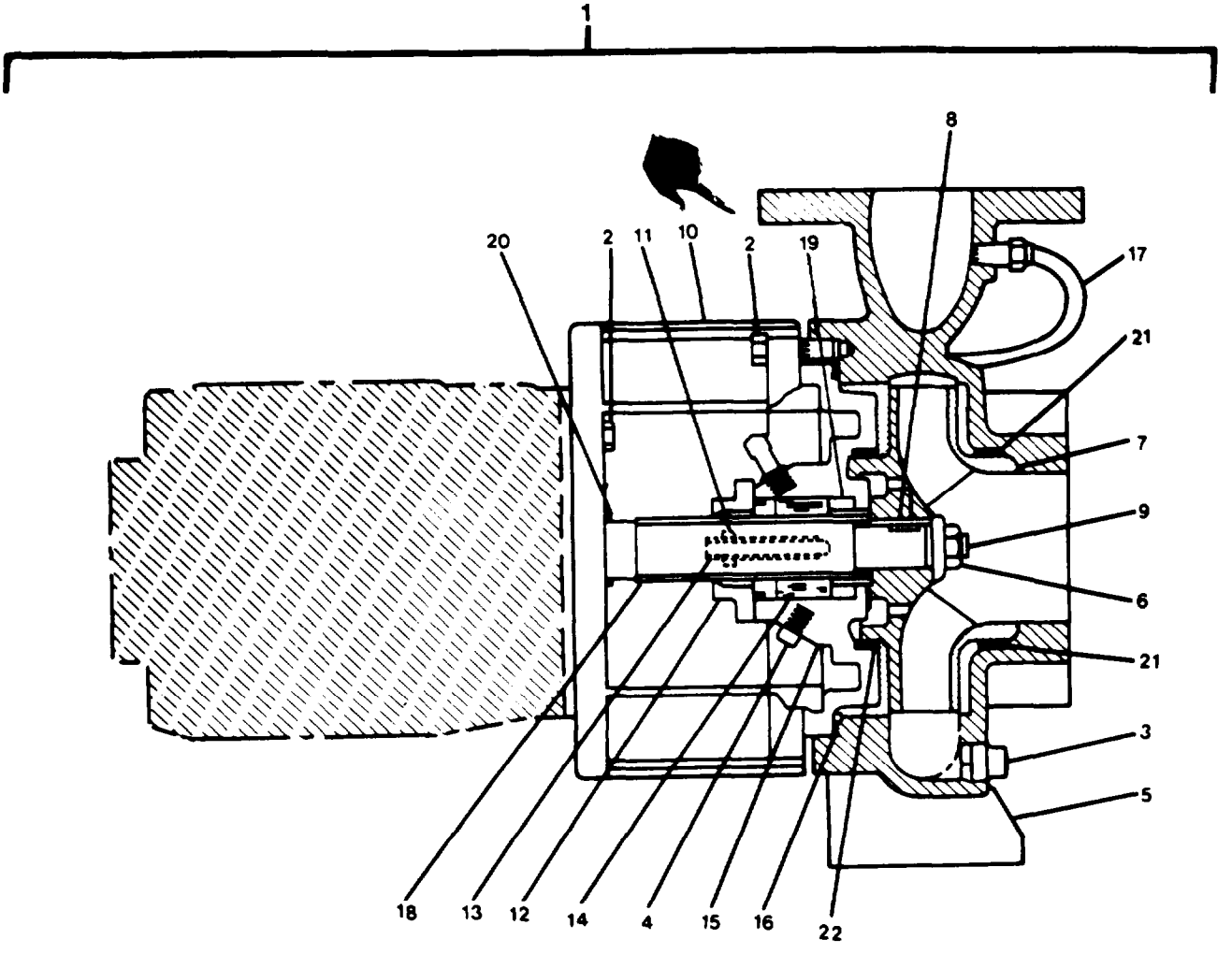

FIGURE 437. Pump Unit, Centrifugal (Auxiliary Seawater Cooling).

(1) ITEM NO	(2) SMR CODE	(3) CAGEC	(4) PART NUMBER	(5) DESCRIPTION AND USABLE ON CODES (UOC)	(6) QTY
				GROUP 18 BASIC CRAFT	
				FIG. 437 PUMP UNIT, CENTRIFUGAL (AUXILIARY SEAWATER COOLING)	
1	PAOFF	62148	1-5200-60836 03-(PYN3)	..PUMP UNIT, CENTRIFUG (AUXILIARY SEAWATER COOLING) (140 GPM AT 60 PSI, 200 GPM AT 45 PSI)	1
2	XDFZZ	62148	1-904-0	...SCREW,CAP,HEXAGON H	12
3	XDFZZ	62148	1-910-0	...PLUG	2
4	XDFZZ	62148	6-910-0	...PLUG	1
5	XDFZZ	62148	2-001-0	...CASING	1
6	XDFZZ	62148	4-023-0	...NUT,IMPELLER	1
7	PAFZZ	62148	4-002-0	...IMPELLER,PUMP,CENTR	1
8	XDFZZ	62148	4-911-0	...KEY,IMPELLER	1
9	XDFZZ	62148	4-908-0	...SHAFT,SHOULDERED	1
10	XDFZZ	62148	1-534-0	...ADAPTER,MOTOR	1
11	XDFZZ	62148	6-903-0	...NUT,GLAND	2
12	XDFZZ	62148	6-014-0	...GLAND	1
13	XDFZZ	62148	6-908-0	...STUD,GLAND	1
14	PAFZZ	62148	6-400-0	...SEAL,MECHANICAL	1
15	XDFZZ	62148	2-036-0	...COVER,STUFFING BOX	1
16	PAFZZ	62148	2-914-0	...PACKING, PREFORMED	1
17	PAFZZ	62148	1-652-0	...TUBE ASSEMBLY,METAL	1
18	XDFZZ	62148	1-009-0	...SLEEVE,SHAFT	1
19	XDFZZ	62148	1-154-0	...SPACER,SLEEVE	1
20	XDFZZ	62148	1-136-0	...DEFLECTOR,SYN RUBBE	1
21	PAFZZ	62148	2-003-5	...RING,WEARING (SUCTION)	1
22	PAFZZ	62148	2-003-6	...RING, WEARING (STUFFING BOX)	1

END OF FIGURE

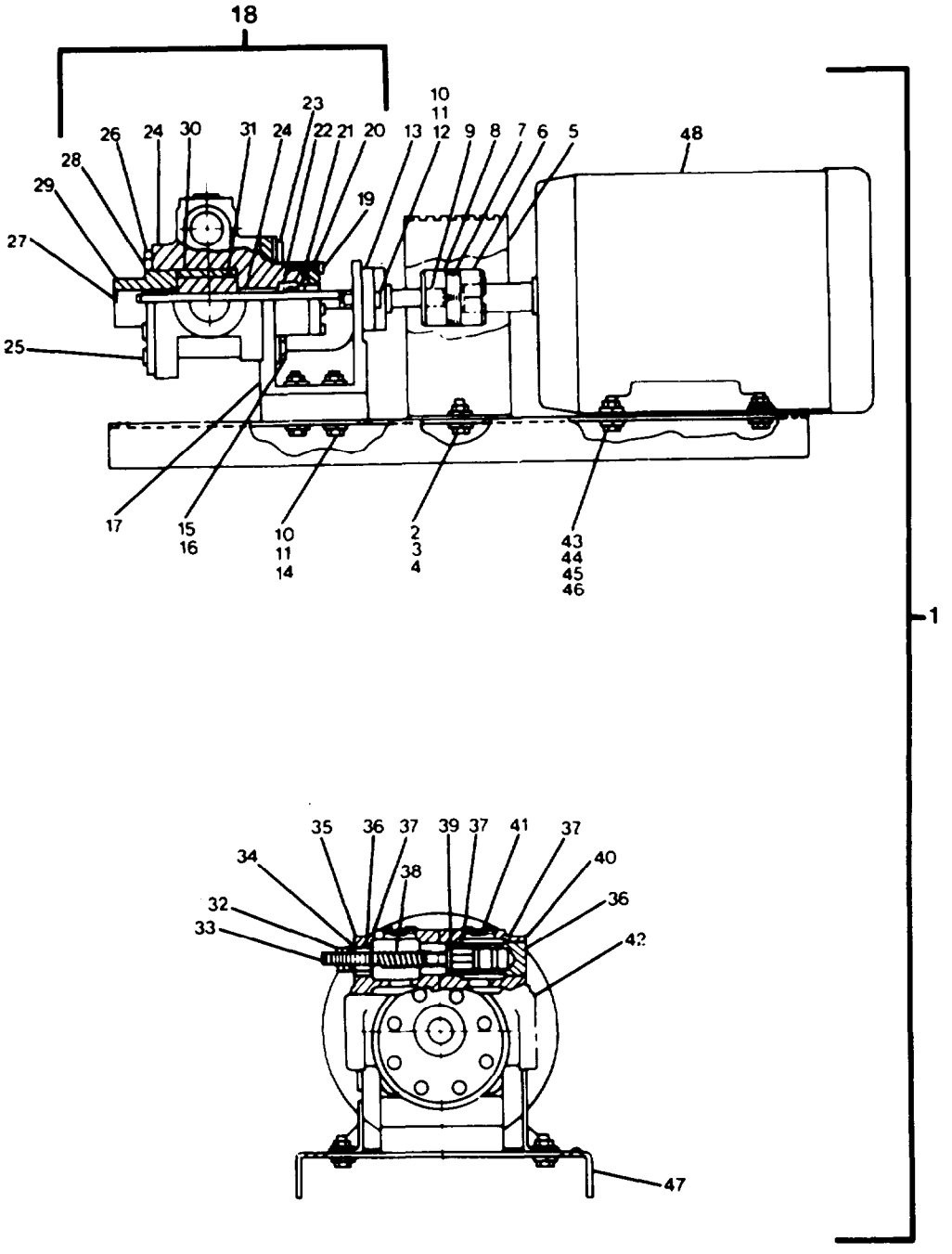

FIGURE 438. Pump Unit, Rotary (Fuel Oil Transfer).

(1) ITEM NO	(2) SMR CODE	(3) FSCM	(4) PART NUMBER	(5) DESCRIPTION AND USABLE ON CODES(UOC)	(6) QTY
				GROUP 18 BASIC CRAFT	
				FIG. 438 PUMP UNIT, ROTARY (FUEL OIL TRANSFER)	
1	PAOFF	70834	20R007001	..PUMP UNIT,ROTARY (FUEL OIL TRANSFER)	2
2	XDFZZ	70834	JE14	..NUT,PLAIN,HEXAGON	2
3	XDFZZ	70834	ZA362	..WASHER,LOCK	2
4	XDFZZ	70834	PC262	. . . SCREW,CAP,HEXAGON H	2
5	XDFZZ	70834	F97	. . . COUPLING GUARD	1
6	XDFZZ	70834	L75.8	. . . COUPLING HALF	1
7	XDFZZ	70834	L75	. . . COUPLING SPIDER	1
8	XDFZZ	70834	L75.6	..COUPLING HALF	1
9	PAFZZ	70834	F39C	. . . KEY,MACHINE (DRIVE)	1
10	XDFZZ	70834	UB17	..NUT,PLAIN,HEXAGON	6
11	XDFZZ	70834	TX31	..WASHER,LOCK	12
12	XDFZZ	70834	ZA85	..SCREW,CAP,HEXAGON H	2
13	XDFZZ	70834	F110	..BEARING,OUTBOARD	1
14	XDFZZ	70834	KG261	. . . SCREW,CAP,HEXAGON H	4
15	XDFZZ	70834	KP172	..SCREW,CAP,HEXAGON H	4
16	XDFZZ	70834	KG255	..WASHER,LOCK	4
17	XDFZZ	70834	S1040.6	..BRACKET,SHAFT	1
18	PAOFF	70834	20DR	. . . PUMP,ROTARY (FUEL OIL TRANSFER).	1
19	XDFZZ	70834	D90HC.7	. . ..SCREW,CAP,HEXAGON H	4
20	XDFZZ	70834	F22MC	. . ..GLAND	1
21	PAFZZ	70834	F24E	. . ..PACKING,PREFORMED	1
22	PAFZZ	70834	F18AM	. . ..SEAL ASSEMBLY,SHAFT	1
23	XDFZZ	70834	ZA220	. . ..RING,SNAP	1
24	PAFZZ	70834	F11B	. . ..BEARING,SLEEVE (BRONZE)	2
25	XDFZZ	70834	PC262	. . ..SCREW,CAP,HEXAGON H	8
26	XDFZZ	70834	F41C	. . ..PIN,ROLL	1
27	PAFZZ	70834	DP43	. . ..PLUG,EXPANSION	1
28	PAFZZ	70834	F28E	. . ..PACKING,PREFORMED	1
29	XDFZZ	70834	D2030F1	. . . . COVER	1
30	PAFZZ	70834	D2026F1	. . ..ROTOR,PUMP	1
31	PAFZZ	70834	DR20C13M0C	. . ..GEARSHAFT,BEVEL	1
32	XDFZZ	70834	E64C	. . ..NUT,LOCK	1
33	XDFZZ	70834	F55C	. . ..SCREW,ADJUSTING	1
34	PAFZZ	70834	E68C	. . . .GASKET (SCREW)	1
35	XDFZZ	70834	F57C	. . ..BONNET	1
36	XDFZZ	70834	F59C	. . ..RING,RETAINING	2
37	PAFZZ	70834	F56E	. . ..PACKING,PREFORMED	3
38	XDFZZ	70834	F52S	. . ..SPRING	1
39	XDFZZ	70834	F51C	. . ..POPPET	1
40	XDFZZ	70834	F50C	. . ..CAGE	1
41	XDFZZ	70834	F65C	. . ..PLUG,PIPE	2
42	XDFZZ	70834	DR203MF	. . ..CASING	1
43	XDOZZ	70834	JE14	. . ..NUT,PLAIN,HEXAGON	4
44	XDOZZ	70834	ZA362	. . ..WASHER,LOCK	4
45	XDOZZ	70834	JE34	. . ..WASHER,FLAT	4
46	XDOZZ	70834	KL270	. . ..SCREW,CAP,HEXAGON H	4

(1) ITEM NO	(2) SMR CODE	(3) FSCM	(4) PART NUMBER	(5) DESCRIPTION AND USABLE ON CODES(UOC)	(6) QTY
47	XDOZZ	70834	S140BL	. . ..BASEPLATE	1
48	PAOZZ	70834	S54	. ..MOTOR,ALTERNATING C	1

END OF FIGURE

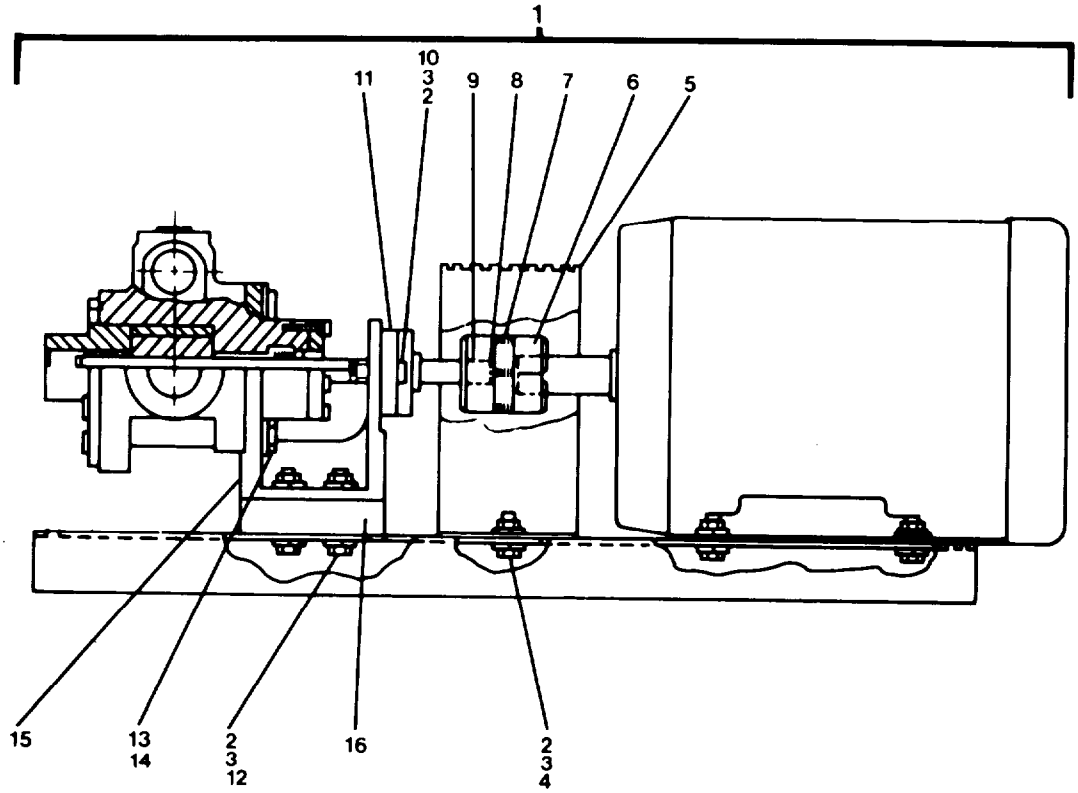

FIGURE 439. Pump Unit, Rotary (Pre Lube Oil Transfer).

(1) ITEM NO	(2) SMR CODE	(3) FSCM	(4) PART NUMBER	(5) DESCRIPTION AND USABLE ON CODES(UOC)	(6) QTY
				GROUP 18 BASIC CRAFT	
				FIG. 439 PUMP UNIT, ROTARY (PRELUBE OIL TRANSFER)	
1	PAOFF	70834	30R035001	. . PUMP,UNIT,ROTARY (PRELUBE OIL TRANSFER)	1
2	XDFZZ	70834	UB17	. ..NUT,PLAIN,HEXAGON	8
3	XDFZZ	70834	TX31	. ..WASHER,LOCK	16
4	XDFZZ	70834	KR364	. . . SCREW,CAP,HEXAGON H	2
5	XDFZZ	70834	H97	. . . COUPLING GUARD	1
6	XDFZZ	70834	L100.13	. ..COUPLING HALF	1
7	XDFZZ	70834	L100	. ..COUPLING SPIDER	1
8	XDFZZ	70834	L100.8	. ..COUPLING HALF	1
9	PAFZZ	70834	F39C	. ..KEY,MACHINE	1
10	XDFZZ	70834	ZA85	. . . SCREW,CAP,HEXAGON H	2
11	XDFZZ	70834	H110	. . . BEARING,OUTBOARD	1
12	XDFZZ	70834	KJ99	. . . SCREW,CAP,HEXAGON H	4
13	XDFZZ	70834	KP172	. ..SCREW,CAP,HEXAGON H	4
14	XDFZZ	70834	KG255	. . . WASHER,LOCK	4
15	XDFZZ	70834	S1040.8	. . . BRACKET,SHAFT	1
16	XDFZZ	70834	MS17	. . . SPACER	1

END OF FIGURE

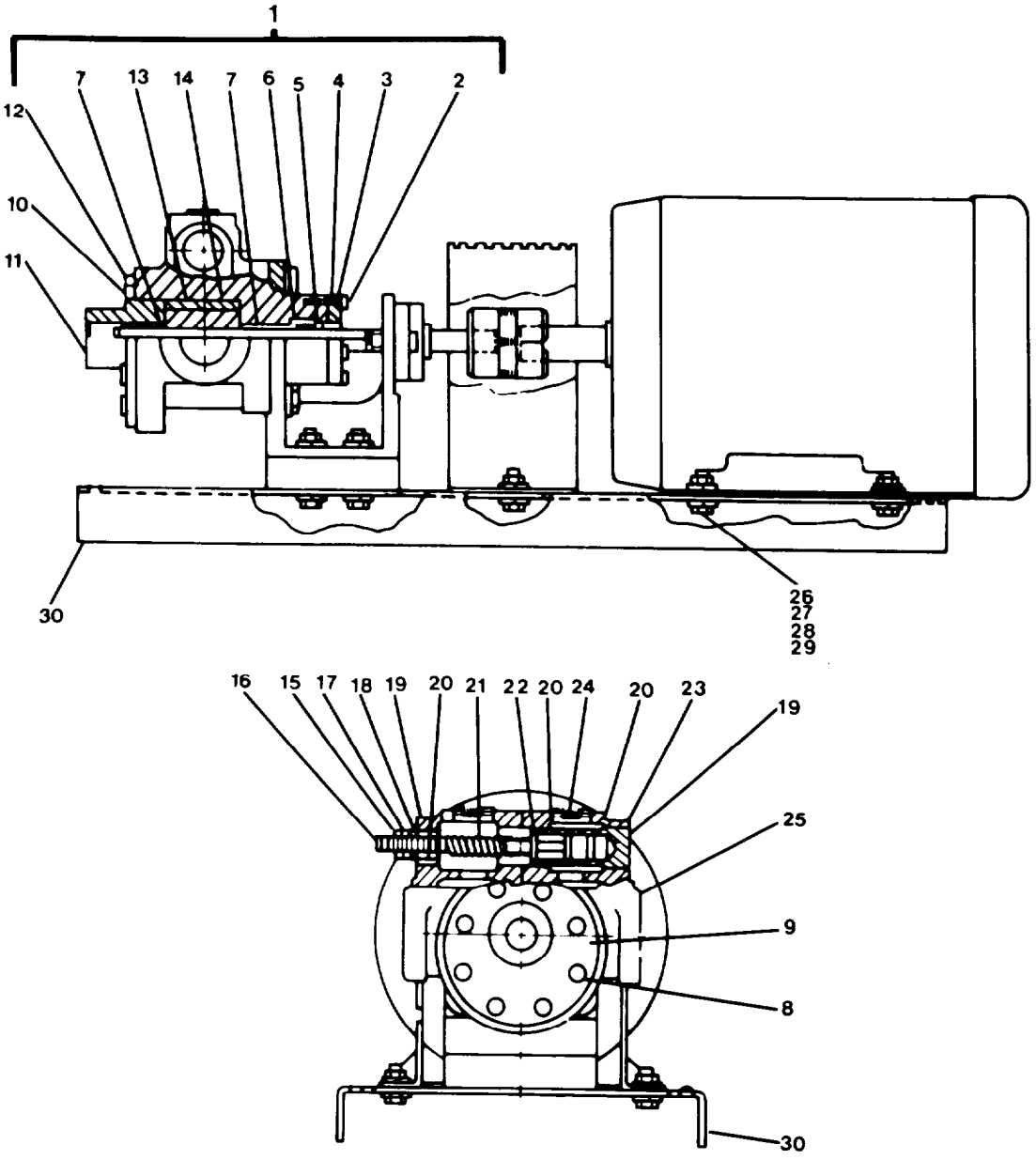

FIGURE 440. Pump, Rotary.

(1) ITEM NO	(2) SMR CODE	(3) FSCM	(4) PART NUMBER	(5) DESCRIPTION AND USABLE ON CODES(UOC)	(6) QTY
				GROUP 18 BASIC CRAFT	
				FIG. 440 PUMP, ROTARY	
1	PAOFF	70834	30DR	. ..PUMP,ROTARY (PRELUBE OIL TRANSFER PUMP)	1
2	XDFZZ	70834	D90HC.7	. . . . SCREW,CAP,HEXAGON H	4
3	XDFZZ	70834	H22MC	. . ..GLAND	1
4	PAFZZ	70834	F24E	. . ..PACKING,PREFORMED	1
5	PAFZZ	70834	H18AM	. . ..SEAL ASSEMBLY,SHAFT	1
6	XDFZZ	70834	H58C	. . ..RING,SNAP	1
7	PAFZZ	70834	H11B	. . ..BEARING,SLEEVE (BRONZE).	2
8	XDFZZ	70834	KR364	. . ..SCREW,CAP,HEXAGON H	8
9	XDFZZ	70834	D3030F1	. . ..COVER	1
10	PAFZZ	70834	H28E	. . ..PACKING,PREFORMED	1
11	PAFZZ	70834	H31C	. . ..PLUG,EXPANSION	1
12	XDFZZ	70834	F41C	. . ..PIN,ROLL	1
13	PAFZZ	70834	D3026F1	. . ..ROTOR,PUMP	1
14	PAFZZ	70834	D30C13MOC	. . ..GEARSHAFT,BEVEL	1
15	XDFZZ	70834	E64C	. . ..NUT,LOCK	1
16	XDFZZ	70834	F55C	. . . . SCREW,ADJUSTING	1
17	PAFZZ	70834	E68C	. . . . GASKET (SCREW)	1
18	XDFZZ	70834	F57C	. . ..BONNET	1
19	XDFZZ	70834	F59C	. . ..RING,RETAINING	2
20	PAFZZ	70834	F56E	. . . . PACKING,PREFORMED	3
21	XDFZZ	70834	H52S	. . ..SPRING	1
22	XDFZZ	70834	F51C	. . ..POPPET	1
23	XDFZZ	70834	H50C	. . . . CAGE	1
24	XDFZZ	70834	F68C	. . ..PLUG,PIPE	2
25	XDFZZ	70834	DR303MFI	. . . . CASING	1
26	XDOZZ	70834	UB17	. . ..NUT,PLAIN,HEXAGON	4
27	XDOZZ	70834	TX31	. . ..WASHER,LOCK	4
28	XDOZZ	70834	JE34	. . ..WASHER,FLAT	4
29	XDOZZ	70834	KG261	. . ..SCREW,CAP,HEXAGON H	4
30	XDOZZ	70834	SE13BL	. . . . BASEPLATE	1

END OF FIGURE

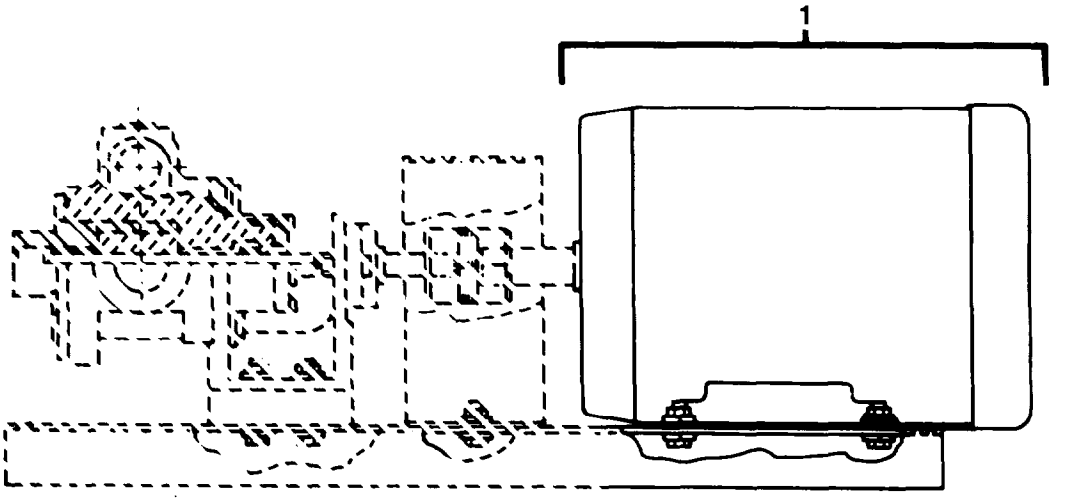

FIGURE 441. Motor, Alternation Current.

(1) ITEM NO	(2) SMR CODE	(3) FSCM	(4) PART NUMBER	(5) DESCRIPTION AND USABLE ON CODES(UOC)	(6) QTY
				GROUP 18 BASIC CRAFT	
				FIG. 441 MOTOR ALTERNATING CURRENT	
1	PAOZZ	70834	JEV	...MOTOR,ALTERNATING C (3HP,1200 RPM,3 PHASE, 230 VOLT)	1

END OF FIGURE

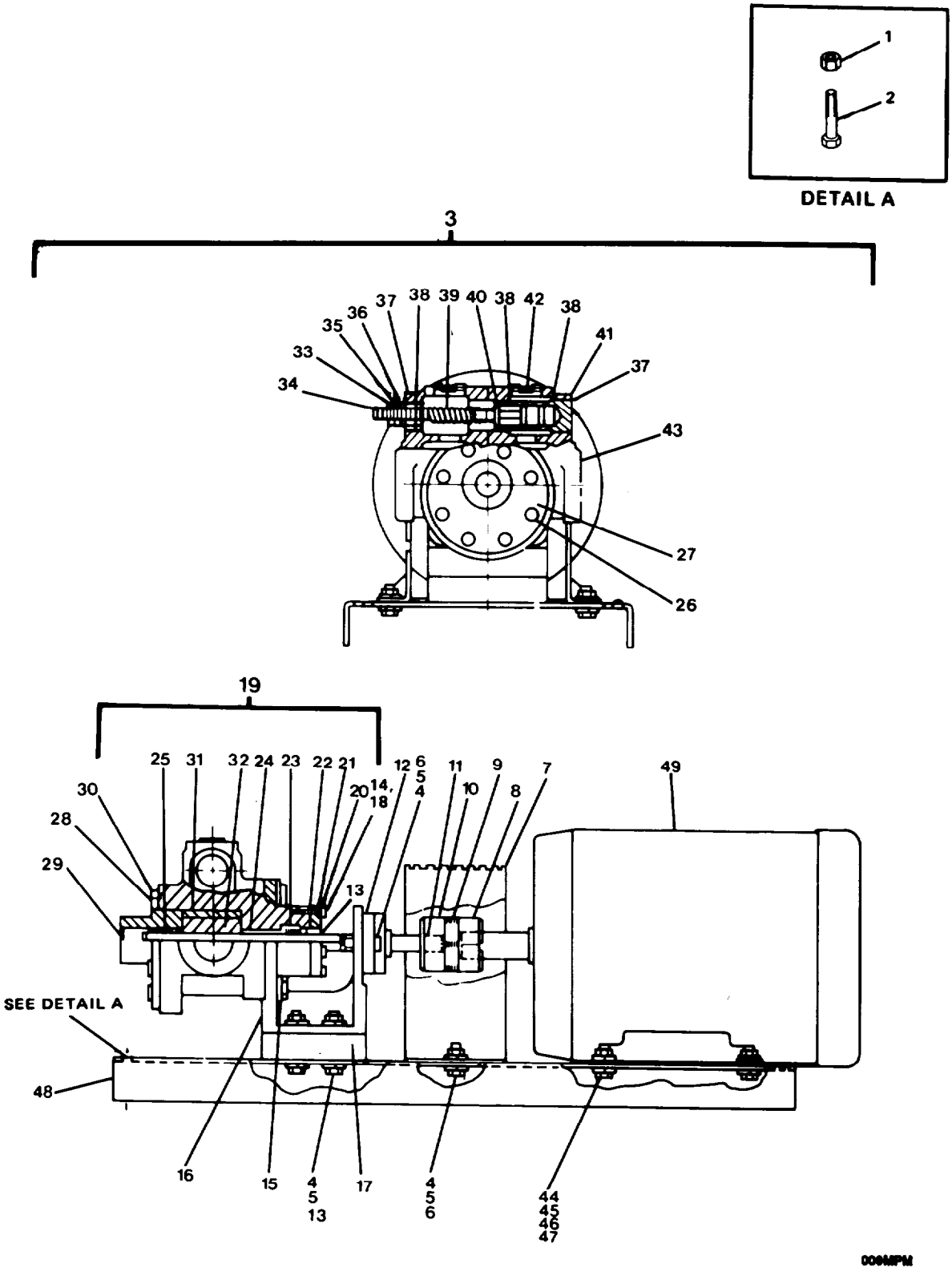

FIGURE 442. Pump Unit, Rotary (Dirty Lube Oil).

(1) ITEM NO	(2) SMR CODE	(3) FSCM	(4) PART NUMBER	(5) DESCRIPTION AND USABLE ON CODES(UOC)	(6) QTY
				GROUP 18 BASIC CRAFT	
				FIG. 442 PUMP UNIT, ROTARY (DIRTY LUBE OIL)	
1	XDOZZ	77408	D0-6800-8036	..NUT,SELF-LOCKING,HE	4
2	XDOZZ	77408	D0-6150-1180	. . BOLT,MACHINE	4
3	PAOFF	70834	20R007003	..PUMP UNIT,ROTARY (DIRTY LUBE OIL)(10USGPM AT 30 PSIG)	1
4	XDFZZ	70834	UB17	. ..NUT,PLAIN,HEXAGON	8
5	XDFZZ	70834	TX31	. ..WASHER,LOCK	16
6	XDFZZ	70834	KR364	. ..SCREW,CAP,HEXAGON H	2
7	XDFZZ	70834	H97	. ..COUPLING GUARD	1
8	XDFZZ	70834	L95.11	. ..COUPLING HALF	1
9	XDFZZ	70834	L95	. ..COUPLING SPIDER	1
10	XDFZZ	70834	L95.6	. ..COUPLING HALF	1
11	PAFZZ	70834	F39C	. ..KEY,MACHINE (DRIVE)	1
12	XDFZZ	70834	ZA85	. ..SCREW,CAP,HEXAGON H	2
13	XDFZZ	70834	F110	. ..BEARING,OUTBOARD	1
14	XDFZZ	70834	KH290	. ..SCREW,CAP,HEXAGON H	4
15	XDFZZ	70834	KP172	. ..SCREW,CAP,HEXAGON H	4
16	XDFZZ	70834	KG255	. ..WASHER,LOCK	4
17	XDFZZ	70834	S1040.6	. . . BRACKET,SHAFT	1
18	XDFZZ	70834	MS12	. . . SPACER	1
19	PAOFF	70834	20DR	. . . PUMP,ROTARY	1
20	XDFZZ	70834	D90HC.7	. . ..SCREW,CAP,HEXAGON H	4
21	XDFZZ	70834	F22MC	. . . . GLAND	1
22	PAFZZ	70834	F24E	. . ..PACKING,PREFORMED	1
23	PAFZZ	70834	F18AM	. . ..SEAL ASSEMBLY,SHAFT	1
24	XDFZZ	70834	ZA220	. . . . RING,SNAP	1
25	PAFZZ	70834	F11B	. . ..BEARING,SLEEVE	2
26	XDFZZ	70834	PC262	. . . . SCREW,CAP,HEXAGON H	8
27	XDFZZ	70834	D2030F1	. . . . COVER	1
28	PAFZZ	70834	F28E	. . ..PACKING,PREFORMED	1
29	PAFZZ	70834	DP43	. . ..PLUG,EXPANSION	1
30	XDFZZ	70834	F41C	. . ..PIN,ROLL	1
31	PAFZZ	70834	D2026F1	. . . . ROTOR,PUMP	1
32	PAFZZ	70834	DR20C13M0C	. . . . GEARSHAFT,BEVEL	1
33	XDFZZ	70834	E64C	. . . . NUT,LOCK	1
34	XDFZZ	70834	F55C	. . . . SCREW,ADJUSTING	1
35	PAFZZ	70834	E68C	. . ..GASKET (SCREW)	1
36	XDFZZ	70834	F57C	. . . . BONNET	1
37	XDFZZ	70834	F59C	. . ..RING,RETAINING	2
38	PAFZZ	70834	F56E	. . ..PACKING,PREFORMED	3
39	XDFZZ	70834	F52S	. . ..SPRING	1
40	XDFZZ	70834	F51C	. . . . POPPET	1
41	XDFZZ	70834	F50C	. . . . CAGE	1
42	XDFZZ	70834	F65C	. . . . PLUG,PIPE	2
43	XDFZZ	70834	DR203MF	. . ..CASING	1
44	XDOZZ	70834	UB17	. . . . NUT,PLAIN,HEXAGON	4
45	XDOZZ	70834	TX31	. . ..WASHER,LOCK	4
46	XDOZZ	70834	JE34	. . ..WASHER,FLAT	4

(1) ITEM NO	(2) SMR CODE	(3) FSCM	(4) PART NUMBER	(5) DESCRIPTION AND USABLE ON CODES(UOC)	(6) QTY
47	XDOZZ	70834	KG261	. . ..SCREW,CAP,HEXAGON H	4
48	XDOZZ	70834	S180BL	. . ..BASEPLATE	1
49	PAOZZ	70834	S55	. . . . MOTOR,ALTERNATING C	1

END OF FIGURE

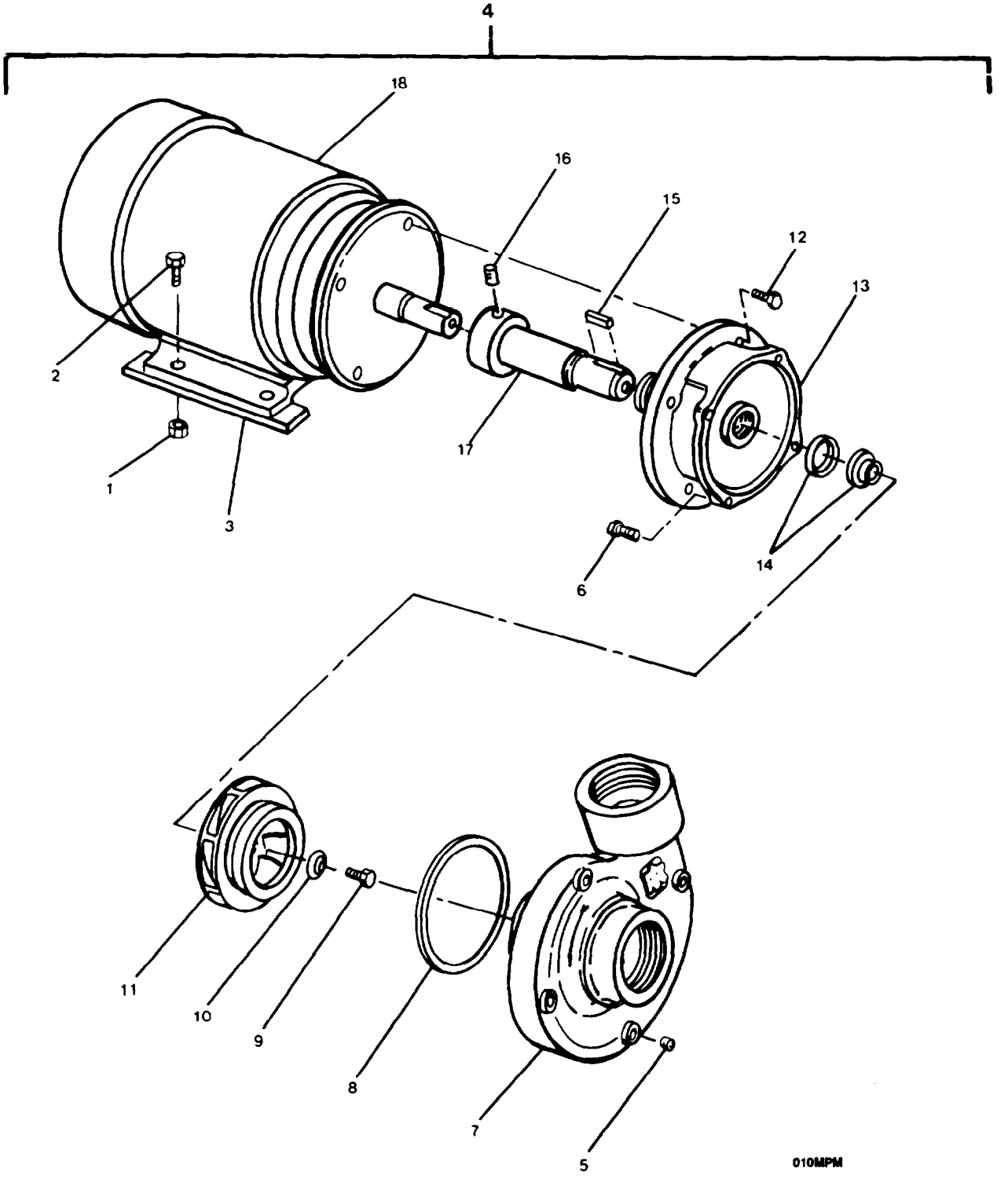

FIGURE 443. Pump, Rotary (Cooling Water, Reduction Gear).

(1) ITEM NO	(2) SMR CODE	(3) FSCM	(4) PART NUMBER	(5) DESCRIPTION AND USABLE ON CODES(UOC)	(6) QTY
				GROUP 18 BASIC CRAFT	
				FIG. 443 PUMP, ROTARY (COOLING WATER, REDUCTION GEAR)	
1	XDOZZ	88032	38A4A	..NUT,PLAIN,HEXAGON	4
2	XDOZZ	88032	35A2E	. . SCREW,CAP,HEXAGON H	4
3	XDOZZ	88032	0120	..PLATE,BASE	1
4	PAOFF	88032	SMP-2000	. . PUMP UNIT,CENTRIFUG (COOLING WATER, REDUCTION GEAR)	1
5	XDFZZ	88032	34A7	. . . PLUG,MACHINE THREAD	2
6	XDFZZ	88032	35A2A	. . . SCREW,CAP,HEXAGON H	4
7	XDFZZ	88032	2469	. ..CASING	1
8	PAFZZ	88032	2584	. . .GASKET	1
9	XDFZZ	88032	147A2	. ..SCREW,CAP,HEXAGON H	1
10	XDFZZ	88032	3214	. . .WASHER	1
11	PAFZZ	88032	1129	. . . IMPELLER,PUMP,CENTR	1
12	XDFZZ	88032	35A2C	. ..SCREW,CAP,HEXAGON H	4
13	XDFZZ	88032	1063	. . . HEAD,SUPPORT	1
14	PAFZZ	30760	1802	. . . SEAL ASSEMBLY,SHAFT	1
15	PAFZZ	01026	11A9	. . . KEY,MACHINE	1
16	XDFZZ	88032	109A2	. ..SETSCREW	1
17	PAFZZ	88032	1829	. . . SHAFT,SHOULDERED	1
18	PAOZZ	88032	0743	. ..MOTOR,ALTERNATING C	1

END OF FIGURE

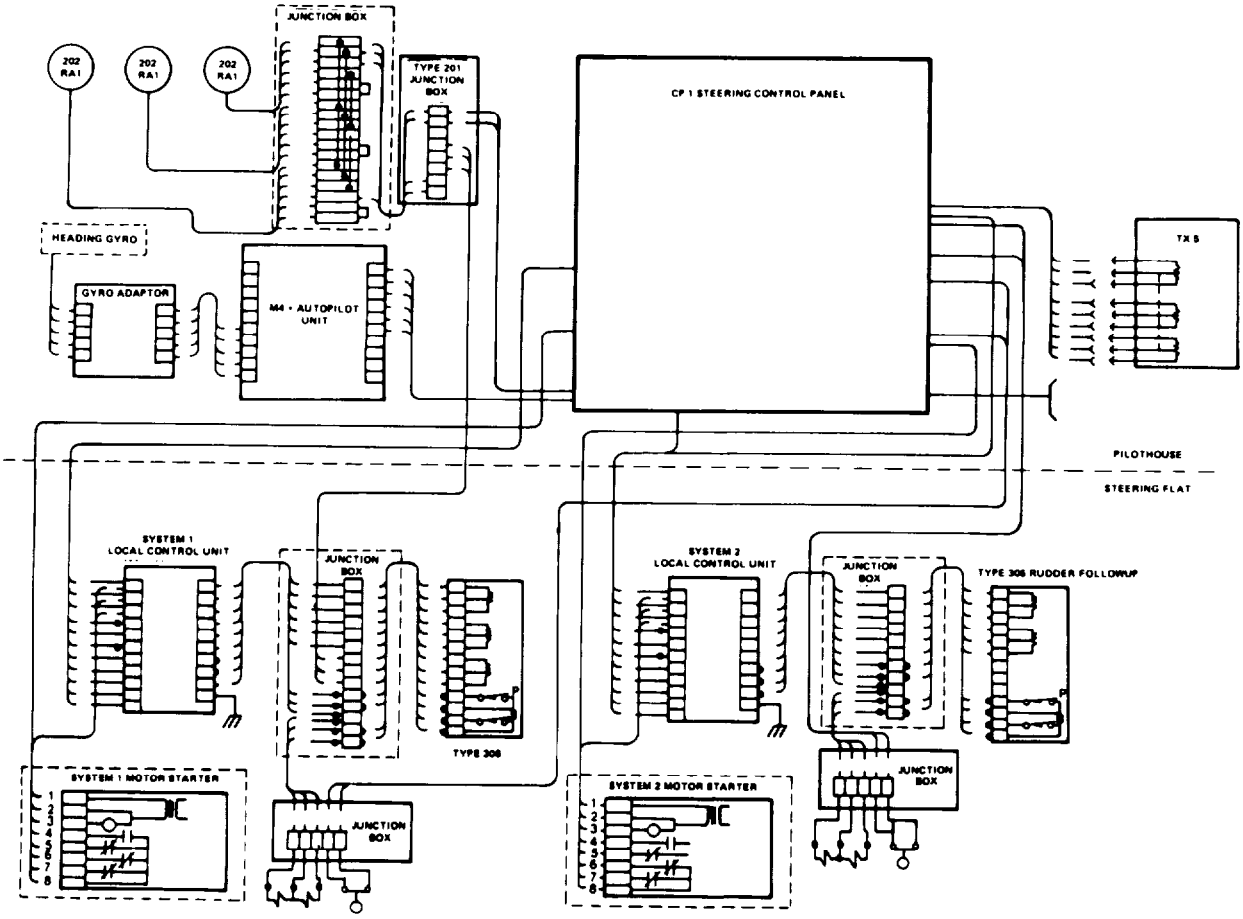

FIGURE 444. Steering Control & Autopilot System C-12-153.

(1) ITEM NO	(2) SMR CODE	(3) FSCM	(4) PART NUMBER	(5) DESCRIPTION AND USABLE ON CODES(UOC)	(6) QTY
				GROUP 18 BASIC CRAFT	
				FIG. 444 STEERING CONTROL & AUTO-PILOT SYSTEM C-12-253	
	XDFFF	37919	C-12-253	. . STEERING CONTROL AN	1
				END OF FIGURE	

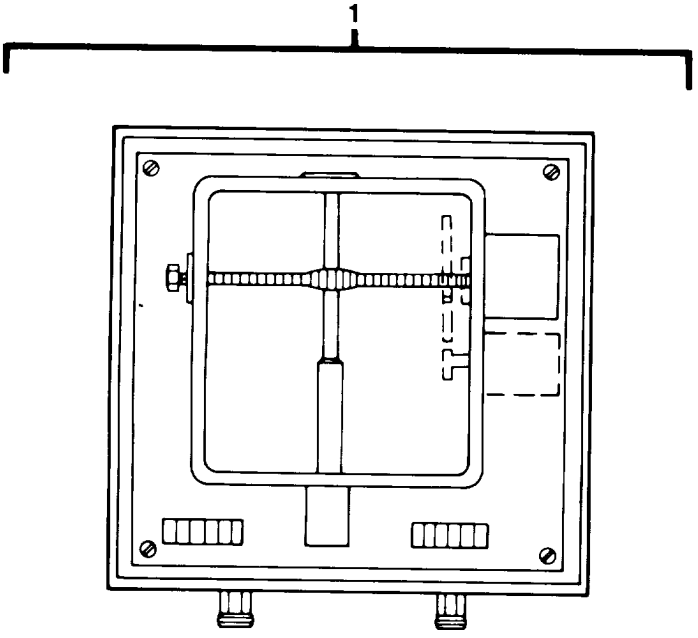

FIGURE 445. Gyro Interface Assembly, 510-173.

(1) ITEM NO	(2) SMR CODE	(3) FSCM	(4) PART NUMBER	(5) DESCRIPTION AND USABLE ON CODES(UOC)	(6) QTY
				GROUP 18 BASIC CRAFT	
				FIG. 445 GYRO INTERFACE ASSEMBLY 510-173	
1	PBFZZ	37919	510-173	. . . GYRO INTERFACE ASSY	1
				END OF FIGURE	

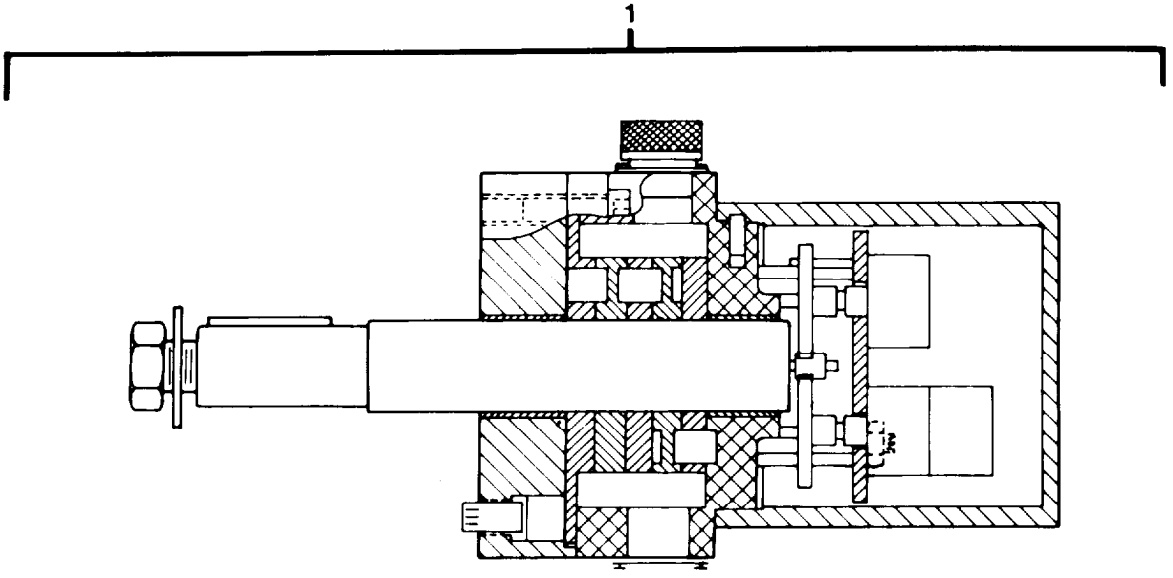

FIGURE 446. Helm Unit, Wheel Controller, 510-272.

(1) ITEM NO	(2) SMR CODE	(3) FSCM	(4) PART NUMBER	(5) DESCRIPTION AND USABLE ON CODES(UOC)	(6) QTY
				GROUP 18 BASIC CRAFT	
				FIG. 446 HELM UNIT, WHEEL CONTROLLER, 510-272	
1	PBFZZ	37919	510-272	...HELM UNIT,WHEEL CON	1

END OF FIGURE

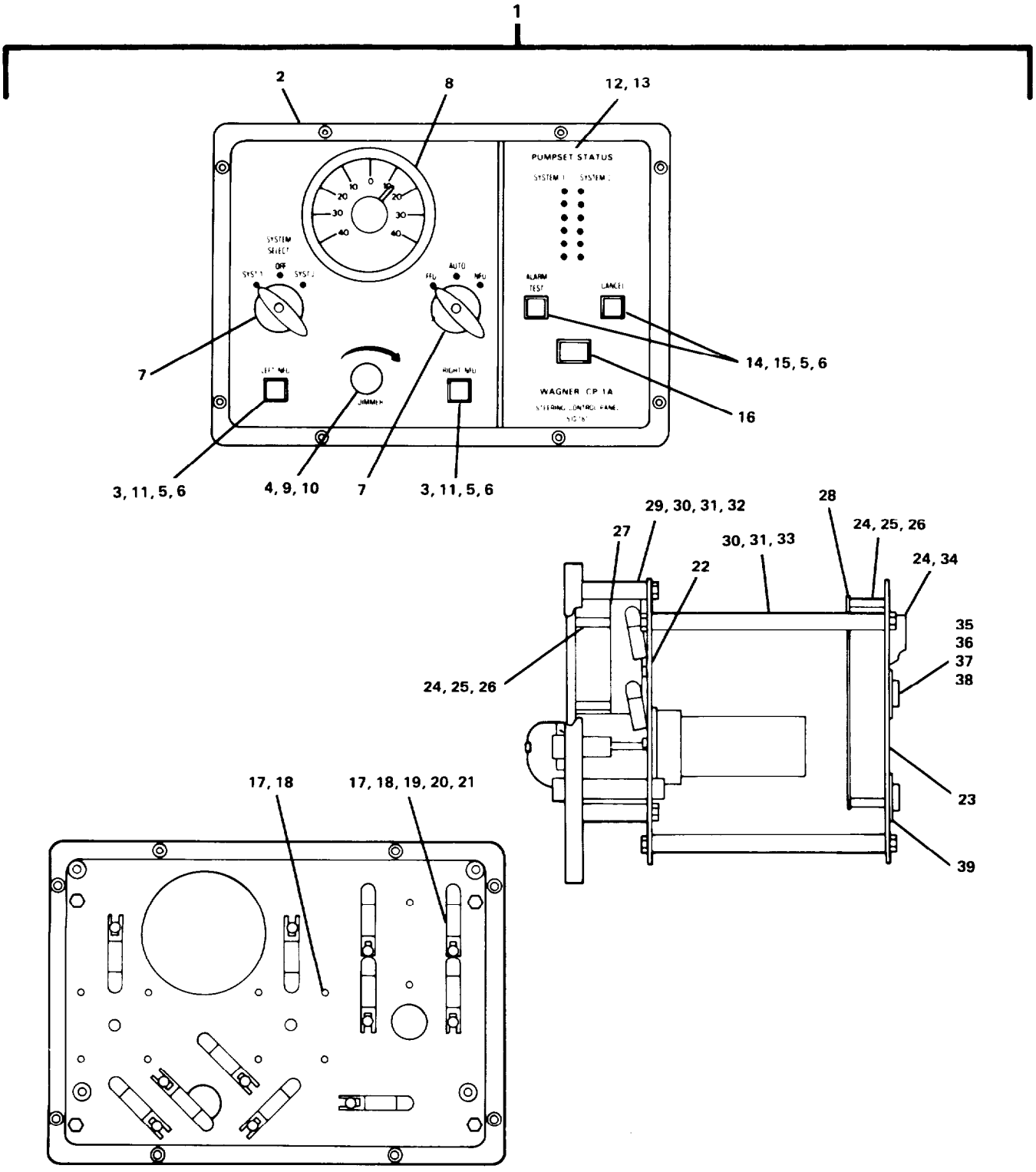

FIGURE 447. Panel Assembly, Steering Control, CP-1 (Sheet 1 of 2).

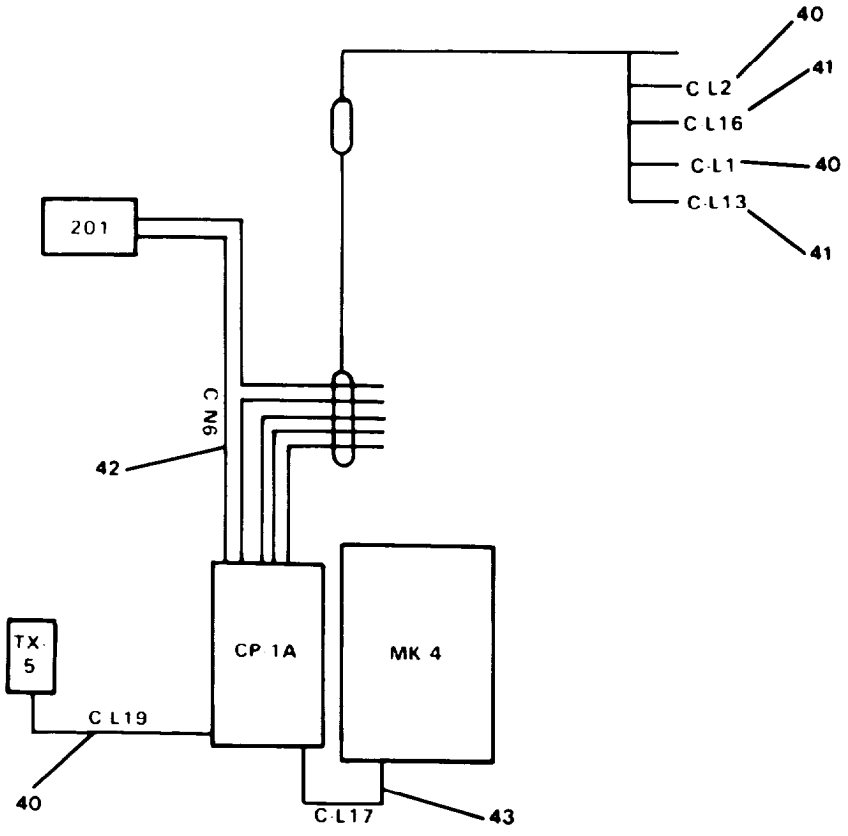

FIGURE 447. Panel Assembly, Steering Control, CP-1 (Sheet 2 of 2).

(1) ITEM NO	(2) SMR CODE	(3) FSCM	(4) PART NUMBER	(5) DESCRIPTION AND USABLE ON CODES(UOC)	(6) QTY
				GROUP 18 BASIC CRAFT	
				FIG. 447 PANEL ASSEMBLY, STEERING CONTROL, CP-1	
1	XDFFF	37919	CP-1	. . . PANEL ASSEMBLY STEE	1
2	XDFZZ	37919	690-702	. . . . PANEL STEERING CONT	1
3	PAFZZ	37919	210-071	. . . . SWITCH,PUSH	2
4	PAFZZ	37919	411-022	. . . . LENS,LIGHT (RED)	1
5	PAFZZ	37919	410-035	. . ..LAMP,INCANDESCENT (14 VOLT)	4
6	PAFZZ	37919	211-006	. . . . BOOT,DUST AND MOIST	4
7	PAFZZ	37919	200-040	. . . . SWITCH,ROTARY	2
8	PAFZZ	37919	510-132	. . . . INDICATOR,RUDDER OR	1
9	PAFZZ	37919	125-024	. . . . RESISTOR,VARIABLE,N	1
10	PAFZZ	37919	620-024	. . . . KNOB	1
11	PAFZZ	37919	411-023	. . . . LENS,LIGHT (GREEN)	1
12	XDFZZ	37919	655-200	. . . . PANEL,PLEXIGLASS BA	1
13	XDFZZ	37919	660-366	. . . . PLATE,IDENTIFICATIO	1
14	PAFZZ	37919	210-062	. . . . SWITCH,PUSH	2
15	PAFZZ	37919	210-070	. . . . LENS,LIGHT (WHITE)	2
16	PAFZZ	37919	480-017	. . . . SWITCH,PUSH	1
17	XDFZZ	37919	603-051	. . . . SCREW,MACHINE	19
18	XDFZZ	37919	604-030	. . . . WASHER,LOCK	19
19	XDFZZ	37919	411-003	. . . . LAMPHOLDER	11
20	PACZZ	37919	410-002	. . . . LAMP,INCANDESCENT (14 VOLT)	11
21	PACZZ	37919	411-018	. . . . COVER,LAMP (RED)	11
22	XDFZZ	37919	690-701	. . . . PLATE,SWITCH	1
23	XDFZZ	37919	690-700	. . . . PLATE,DISTRIBUTION	1
24	XDFZZ	37919	603-033	. . . . SCREW,MACHINE	32
25	XDFZZ	37919	604-001	. . . . WASHER,LOCK	32
26	XDFZZ	37919	600-006	. . . . SPACER	6
27	PAFZZ	37919	505-344	. . . . PRINTED CIRCUIT BOA (LED DISPLAY)	1
28	PAFZZ	37919	505-343	. . . . PRINTED CIRCUIT BOA (ALARM LOGIC)	1
29	XDFZZ	37919	603-113	. . . . SCREW,MACHINE	4
30	XDFZZ	37919	603-224	. . . . SCREW,CAP	12
31	XDFZZ	37919	604-034	. . . . WASHER,LOCK	12
32	XDFZZ	37919	690-794	. . . . SPACER	4
33	XDFZZ	37919	690-699	. . . . SPACER	4
34	XDFZZ	37919	430-058	. . . . STRIP,TERMINAL	4
35	XDFZZ	37919	603-188	. . . . SCREW,SELF-LOCKING	4
36	PAFZZ	37919	315-011	. . . . REGULATOR,VOLTAGE	1
37	XDFZZ	37919	604-037	. . . . INSULATOR	2
38	XDFZZ	37919	312-010	. . . . SOCKET	2
39	PAFZZ	37919	315-008	. . . . REGULATOR,VOLTAGE	1
40	XDFZZ	81349	LSMSCA-10	. . . . CABLE,POWER,ELECTRI (C-L2)	V
41	XDFZZ	81349	LSTSGA-4	. . ..CABLE,POWER,ELECTRI (C-L16)	V
42	XDFZZ	81349	LSDSGA-4	. . . . CABLE,POWER,ELECTRI (C-N6)	V
43	XDFZZ	81349	LSMSCA-7	. . . . CABLE,POWER,ELECTRI (C-L17)	V

END OF FIGURE

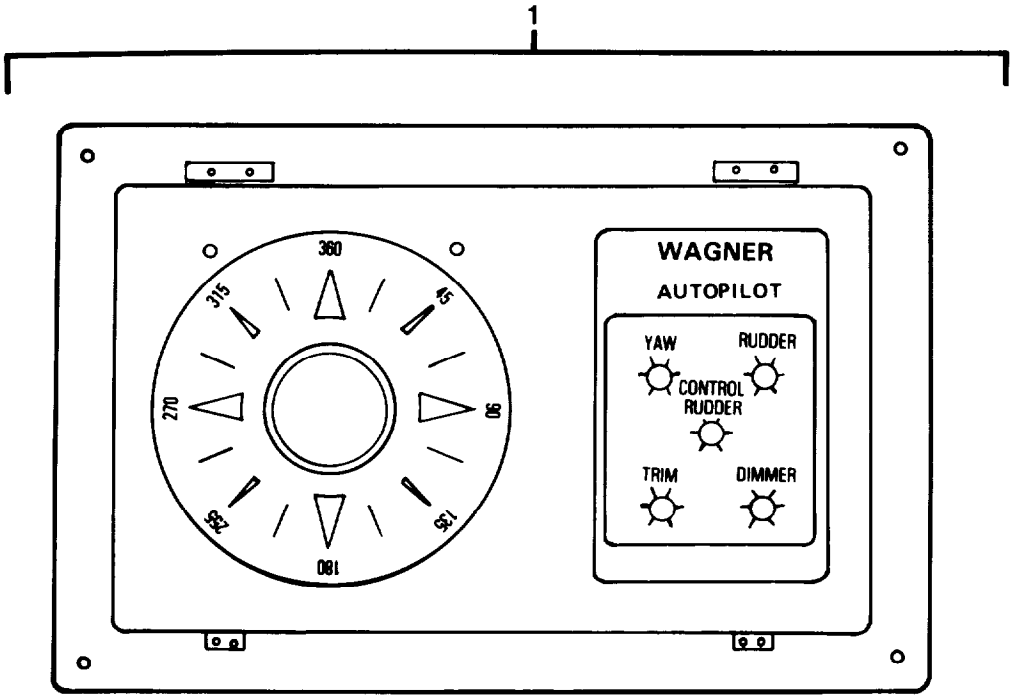

FIGURE 448. Autopilot Assembly, MK-4 (Sheet 1 of 2).

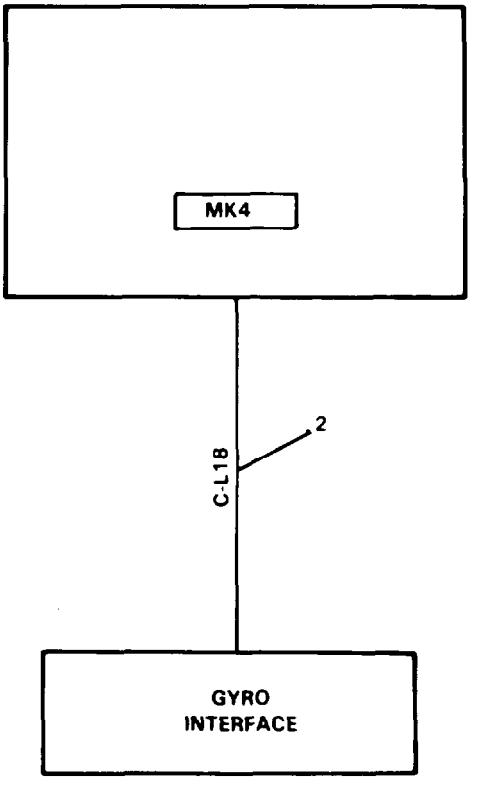

FIGURE 448. Autopilot Assembly, MK-4 (Sheet 2 of 2).

(1) ITEM NO	(2) SMR CODE	(3) FSCM	(4) PART NUMBER	(5) DESCRIPTION AND USABLE ON CODES(UOC)	(6) QTY
				GROUP 18 BASIC CRAFT	
				FIG. 448 AUTOPILOT ASSEMBLY, MK-4	
1	PBFFF	37919	MK-4	. . . AUTOPILOT CONTROL A	1
2	XDFZZ	81349	LSMSCA-7	. . . CABLE,POWER,ELECTRI (C-L18)	V

END OF FIGURE

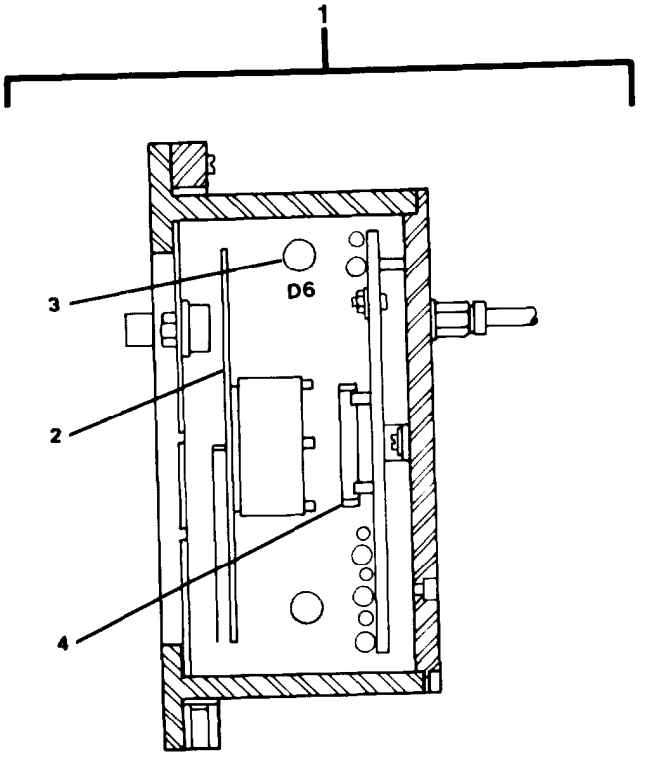

FIGURE 449. Rudder Indicator, 202 (Sheet 1 of 2).

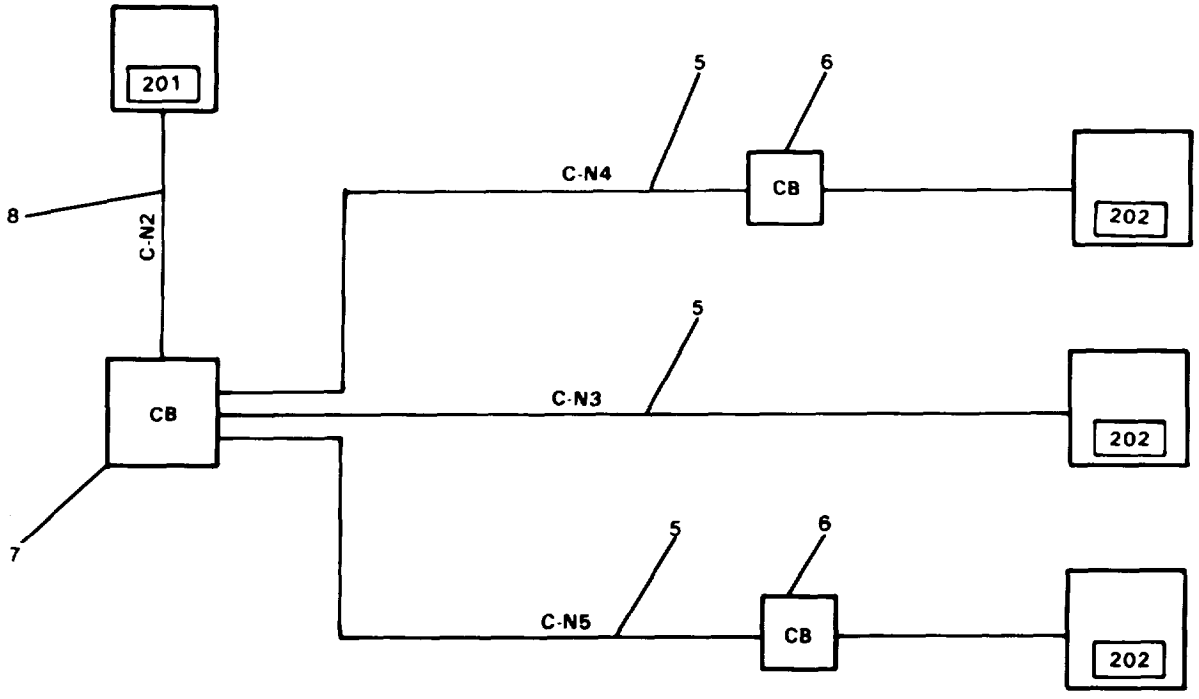

FIGURE 449. Rudder Indicator, 202 (Sheet 2 of 2).

(1) ITEM NO	(2) SMR CODE	(3) FSCM	(4) PART NUMBER	(5) DESCRIPTION AND USABLE ON CODES(UOC)	(6) CITY
				GROUP 18 BASIC CRAFT	
				FIG. 449 INDICATOR ASSEMBLY, 202	
1	XDFFF	37919	202	. . .INDICATOR,RUDDER	3
2	PAFZZ	37919	130-024	. . .PRINTED CIRCUIT BOA PART OF KIT P/N 740-026	1
3	PACZZ	37919	410-001	. . .LAMP,INCANDESCENT	2
4	PACZZ	37919	420-001	. . .FUSE,CARTRIDGE PART OF KIT P/N 740-026	1
5	XDFZZ	81349	LSMSCA-7	. . .CABLE,POWER,ELECTRI (C-N4)	V
6	XDFZZ	81349	M24558/3-528	. . .TERMINAL BOX	2
7	XDFZZ	81349	M24558/4-432-1	. . .TERMINAL BOX	1
8	XDFZZ	81349	LSFSGA-4	. . .CABLE,POWER,ELECTRI (C-N2)	V
	PAFZZ	37919	740-026	. . .REPAIR KIT,INDICATO (NEEDED FOR COMPLETE REPAIR OF INDICATOR ASSEMBLY)	1
				FUSE,CARTRIDGE (1) 449-4	
				PRINTED CIRCUIT BOA(1) 449-2	

END OF FIGURE

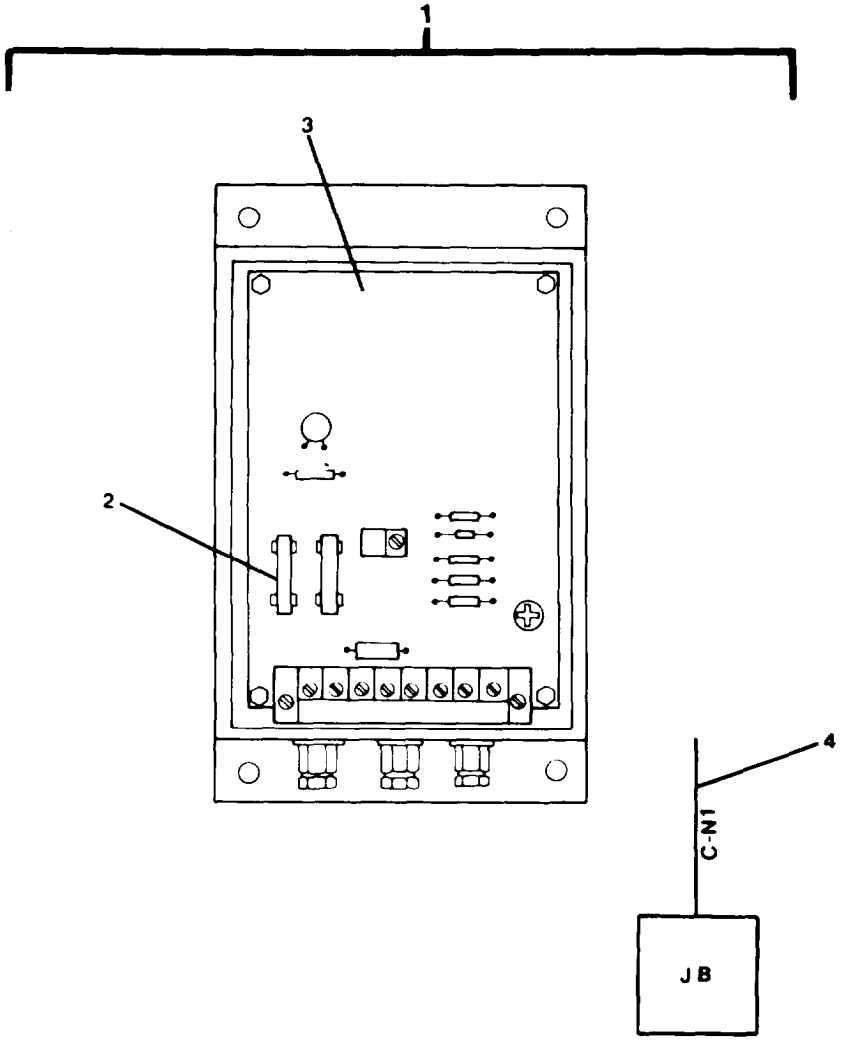

FIGURE 450. Junction Box, 201.

(1) ITEM NO	(2) SMR CODE	(3) FSCM	(4) PART NUMBER	(5) DESCRIPTION AND USABLE ON CODES(UOC)	(6) QTY
				GROUP 18 BASIC CRAFT	
				FIG. 450 JUNCTION BOX, 201	
1	XDFFF	37919	201	. . . JUNCTION BOX ASSEMB	1
2	PACZZ	37919	420-001	. . . FUSE,CARTRIDGE PART OF KIT P/N 740-027	2
3	PAFZZ	37919	505-030	. . . PRINTED CIRCUIT BOA PART OF KIT P/N 740-027	1
4	XDFZZ	81349	LSTSGA-4	. . . CABLE,POWER,ELECTRI (C-N1)	V
	PAFZZ	37919	740-027	. . . REPAIR KIT, JUNCTIO (NEEDED FOR COMPLETE REPAIR OF JUNCTION BOX)	1
				FUSE,CARTRIDGE (2) 450-2	
				PRINTED CIRCUIT BOA(1) 450-3	

END OF FIGURE

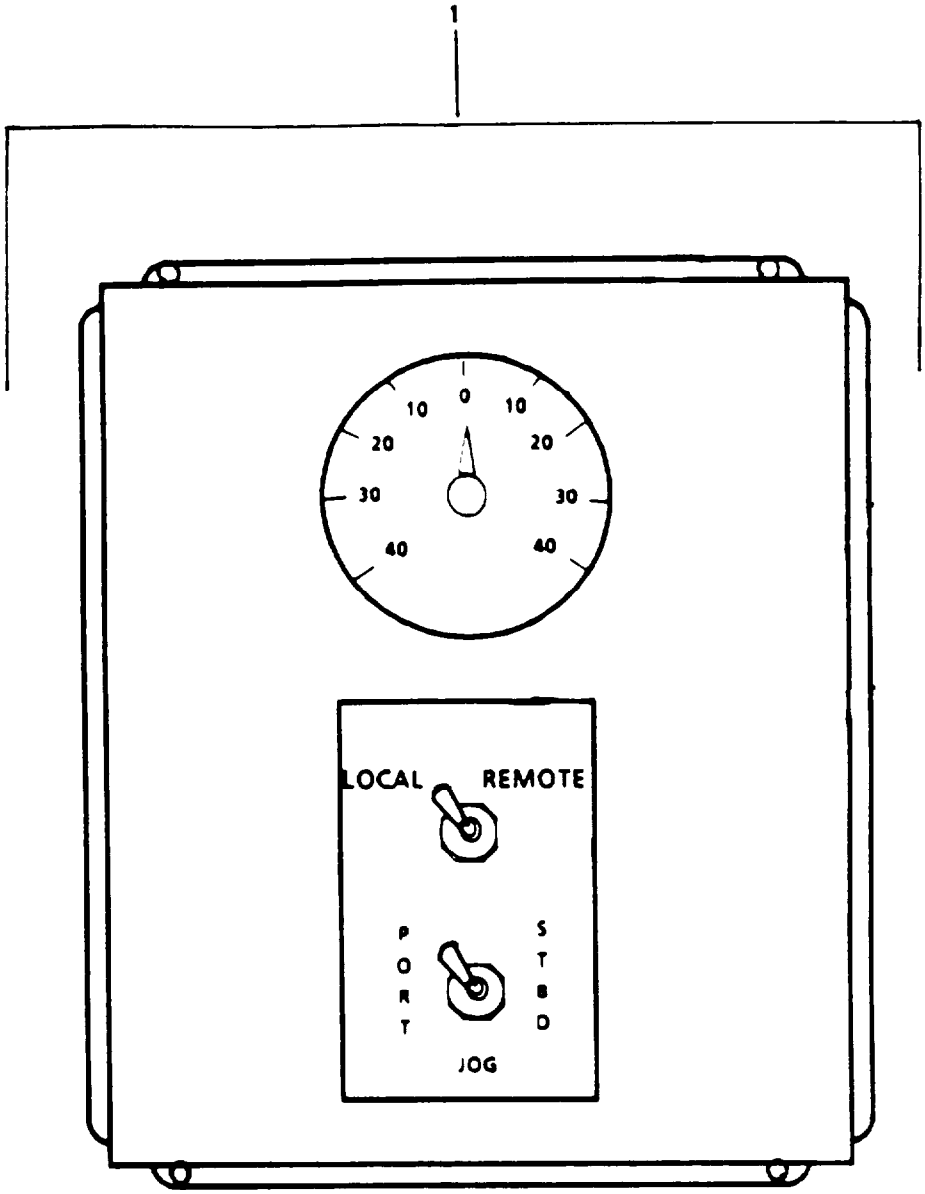

FIGURE 451. Isolator Control Unit. 510-415 (Sheet 1 of 3).

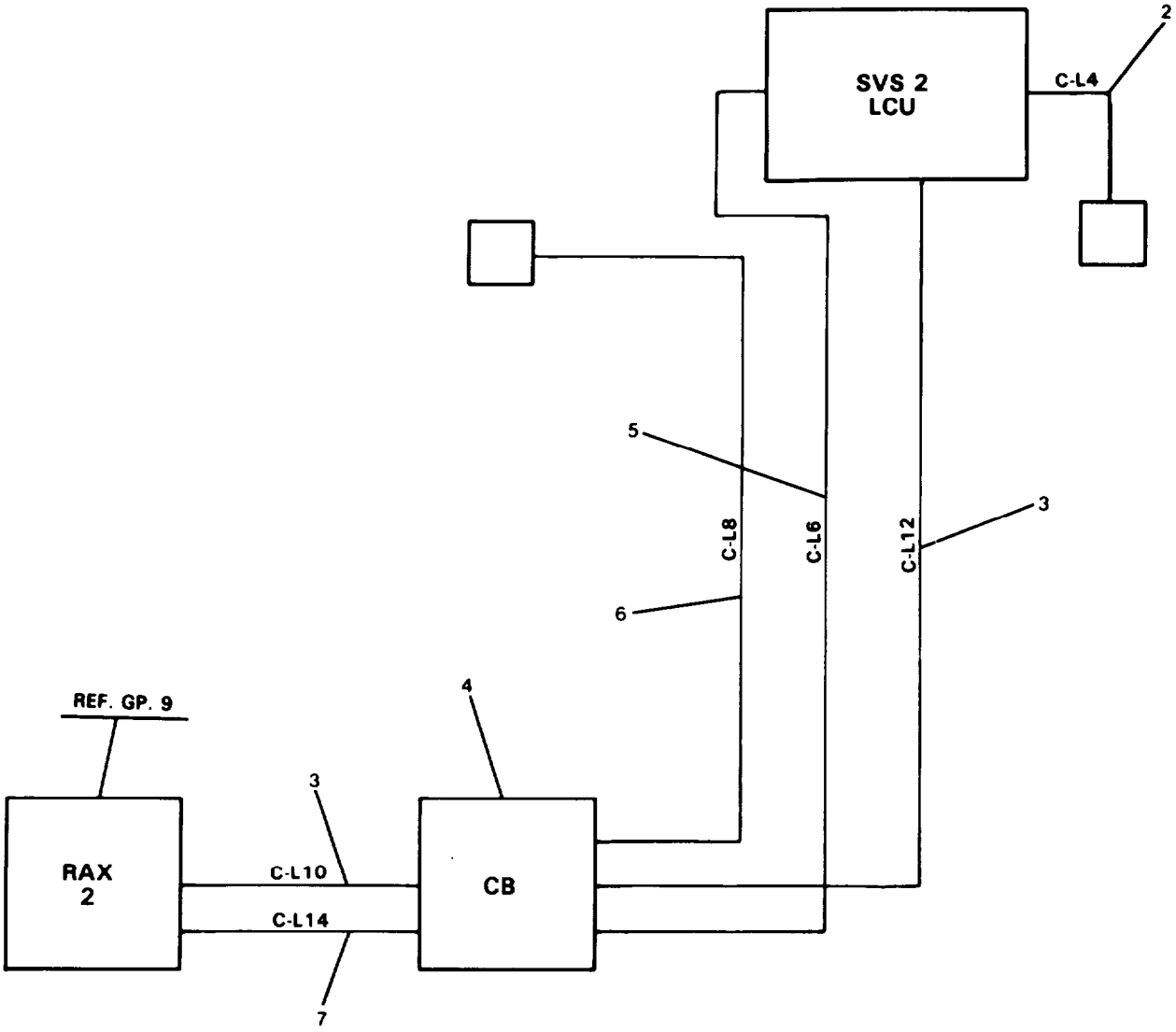

FIGURE 451. Isolator Control Unit, 510-415 (Sheet 2 of 3).

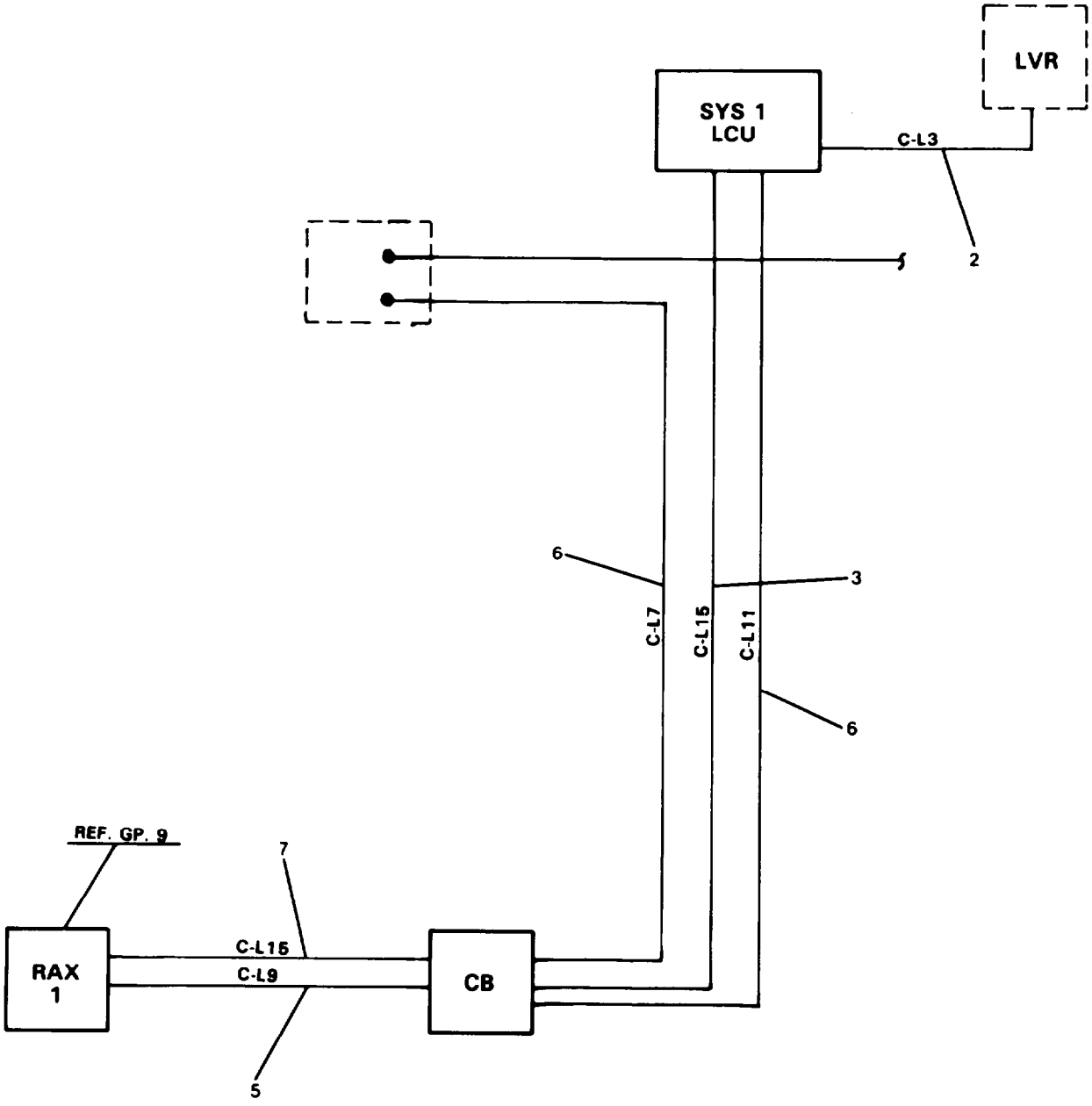

FIGURE 451. Isolator Control Unit, 510-415 (Sheet 3 of 3).

(1) ITEM NO	(2) SMR CODE	(3) FSCM	(4) PART NUMBER	(5) DESCRIPTION AND USABLE ON CODES(UOC)		(6) QTY
				GROUP 18 BASIC CRAFT		
				FIG. 451 ISOLATOR CONTROL UNIT, 510-415		
1	XDFFF	37919	510-415	. . . ISOLATION CONTROL U		2
2	XDFZZ	81349	LSDSGA-4	. . . CABLE,POWER,ELECTRI	(C-L4)	v
3	XDFZZ	81349	LSMSCA-7	. . . . CABLE,POWER,ELECTRI	(C-L12)	v
4	XDFZZ	81349	M24558/4-432-1	. . . . TERMINAL BOX		2
5	XDFZZ	81349	LSMSCA-10	. . . CABLE,POWER,ELECTRI	(C-L6)	V
6	XDFZZ	81349	LSTSGA-4	. . . CABLE,POWER,ELECTRI	(C-L8)	V
7	XDFZZ	81349	LSFSGA-4	. . . CABLE,POWER,ELECTRI	(C-L14)	v

END OF FIGURE

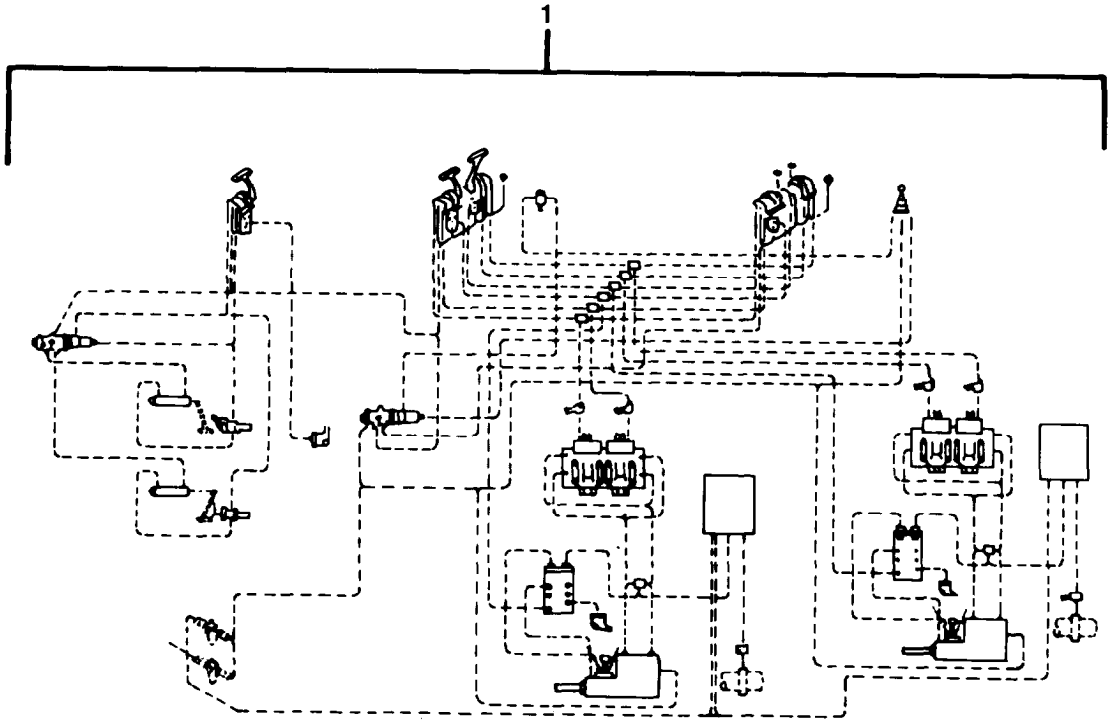

FIGURE 452. Two Station Twin Engine with Bow Thruster and Fire Control System. F010-10037.

(1) ITEM NO	(2) SMR CODE	(3) FSCM	(4) PART NUMBER	(5) DESCRIPTION AND USABLE ON CODES(UOC)	(6) QTY
				GROUP 18 BASIC CRAFT	
				FIG. 452 TWO STATION TWIN ENGINE WITH BOW THRUSTER AND FIRE CONTROL SYSTEM, F010-10037	
1	XCOOO	88233	F010-10037	..TWO STATION TWIN EN	1

END OF FIGURE

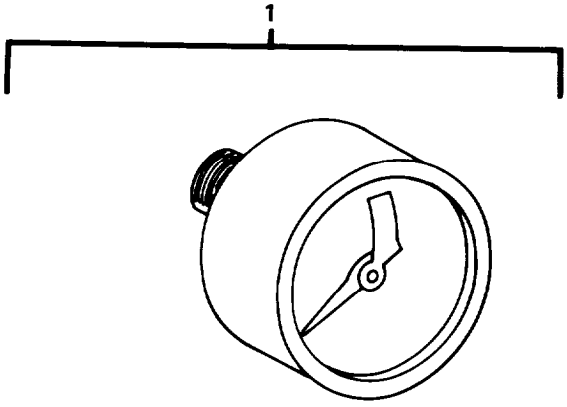

REF; PART OF CONTROL STATION, PILOT HOUSE

FIGURE 453. Venturi Meter.

(1) ITEM NO	(2) SMR CODE	(3) FSCM	(4) PART NUMBER	(5) DESCRIPTION AND USABLE ON CODES(UOC)	(6) QTY
				GROUP 18 BASIC CRAFT	
				FIG. 453 VENTURI METER	
1	PAOZZ	53477	H032-62	. . . VENTURI METER	2
				END OF FIGURE	

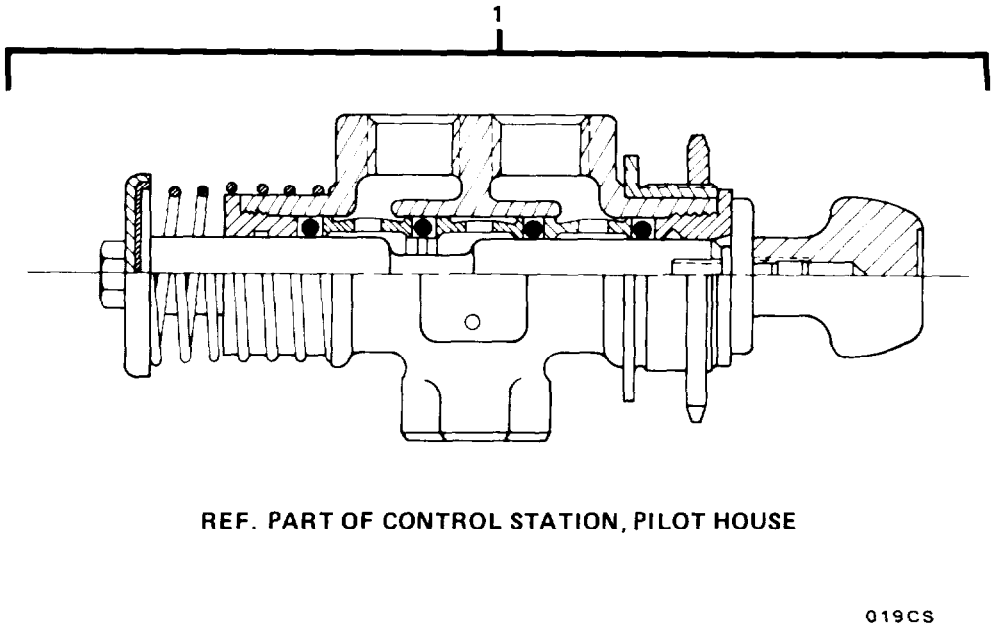

FIGURE 454. Valve, Linear Directional, M000-20362.

(1) ITEM NO	(2) SMR CODE	(3) FSCM	(4) PART NUMBER	(5) DESCRIPTION AND USABLE ON CODES(UOC)	(6) QTY
				GROUP 18 BASIC CRAFT	
				FIG 454 VALVE, LINEAR DIRECTIONAL, M000-20362	
1	PAOZZ	88233	M000-20362	. . .VALVE,LINEAR,DIRECT	1

END OF FIGURE

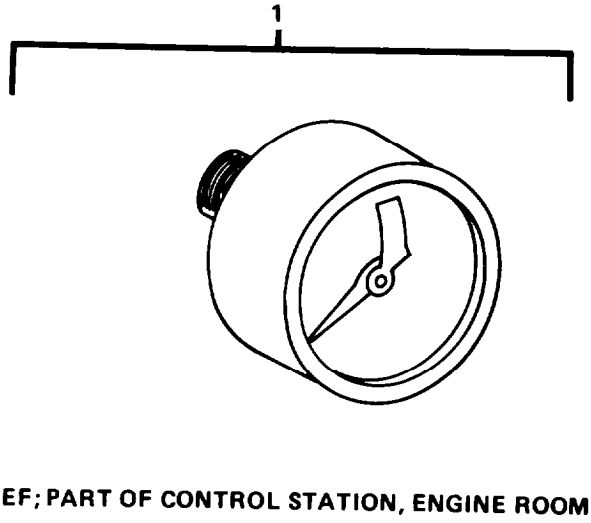

FIGURE 455. Venturi Meter.

(1) ITEM NO	(2) SMR CODE	(3) FSCM	(4) PART NUMBER	(5) DESCRIPTION AND USABLE ON CODES(UOC)	(6) QTY
				GROUP 18 BASIC CRAFT	
				FIG. 455 VENTURI METER	
1	PAOZZ	53477	H032-62	...VENTURI METER	1
				END OF FIGURE	

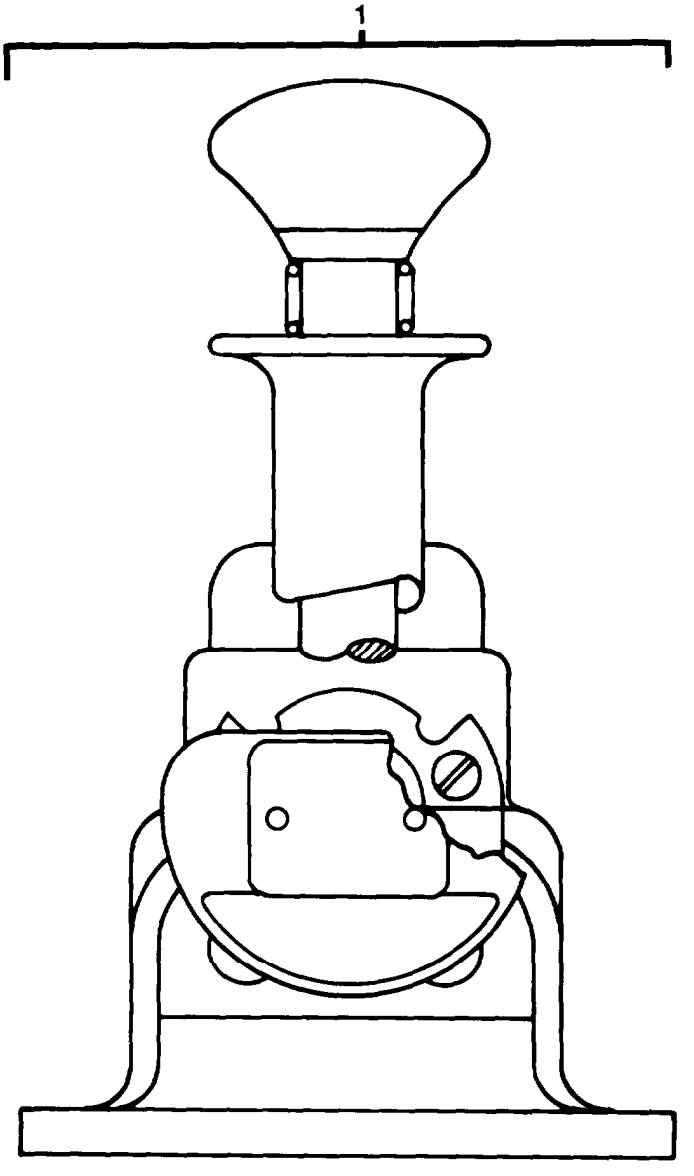

REF. PART OF CONTROL STATION, ENGINE ROOM

024CS

FIGURE 456. Valve, Directional, 4-Way, F041-0003.

(1) ITEM NO	(2) SMR CODE	(3) FSCM	(4) PART NUMBER	(5) DESCRIPTION AND USABLE ON CODES(UOC)	(6) QTY
				GROUP 18 BASIC CRAFT	
				FIG. 456 VALVE, DIRECTIONAL, 4-WAY, F041-0003	
1	PAOZZ	88233	F041-0003	. . . VALVE,DIRECTIONAL,F	1

END OF FIGURE

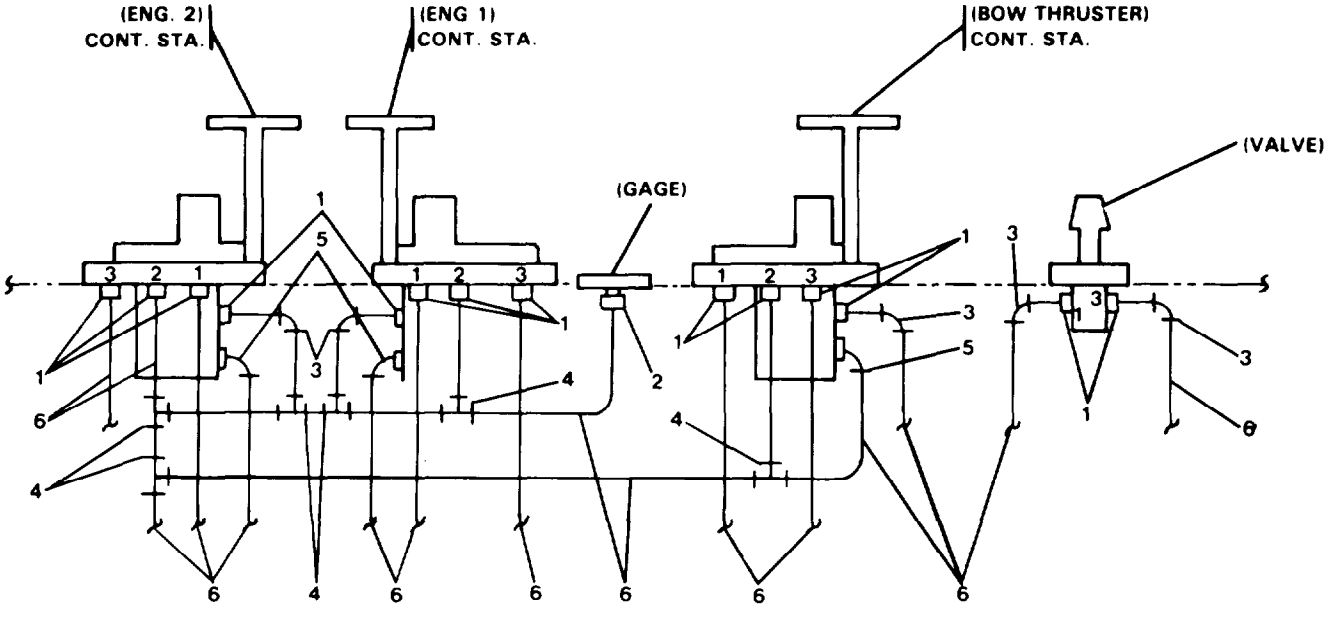

FIGURE 457. Control Station. Pilot House. F021-10111 (Sheet 1 of 3).

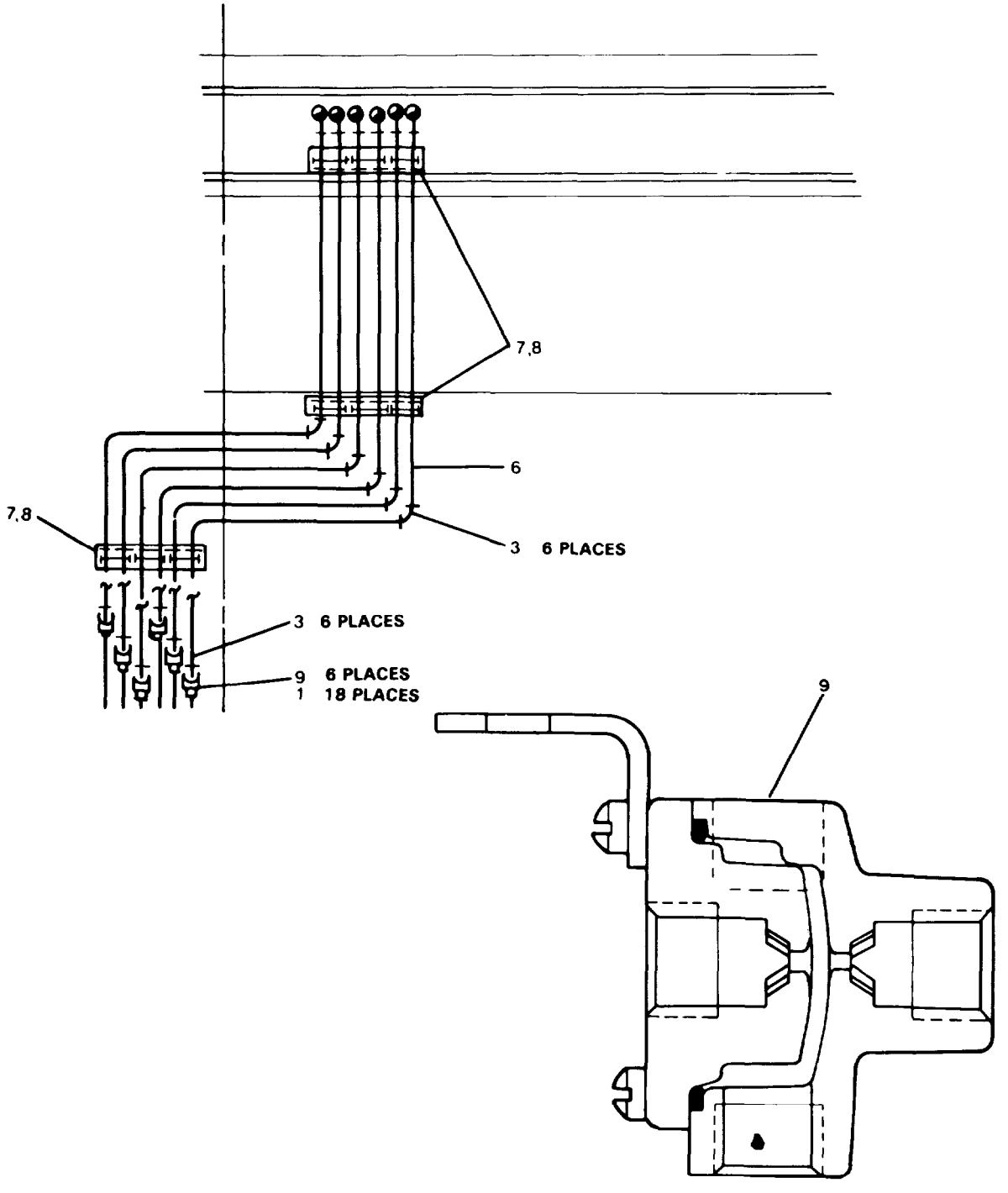

FIGURE 457. Control Station, Pilot House, F021-10111 (Sheet 2 of 3).

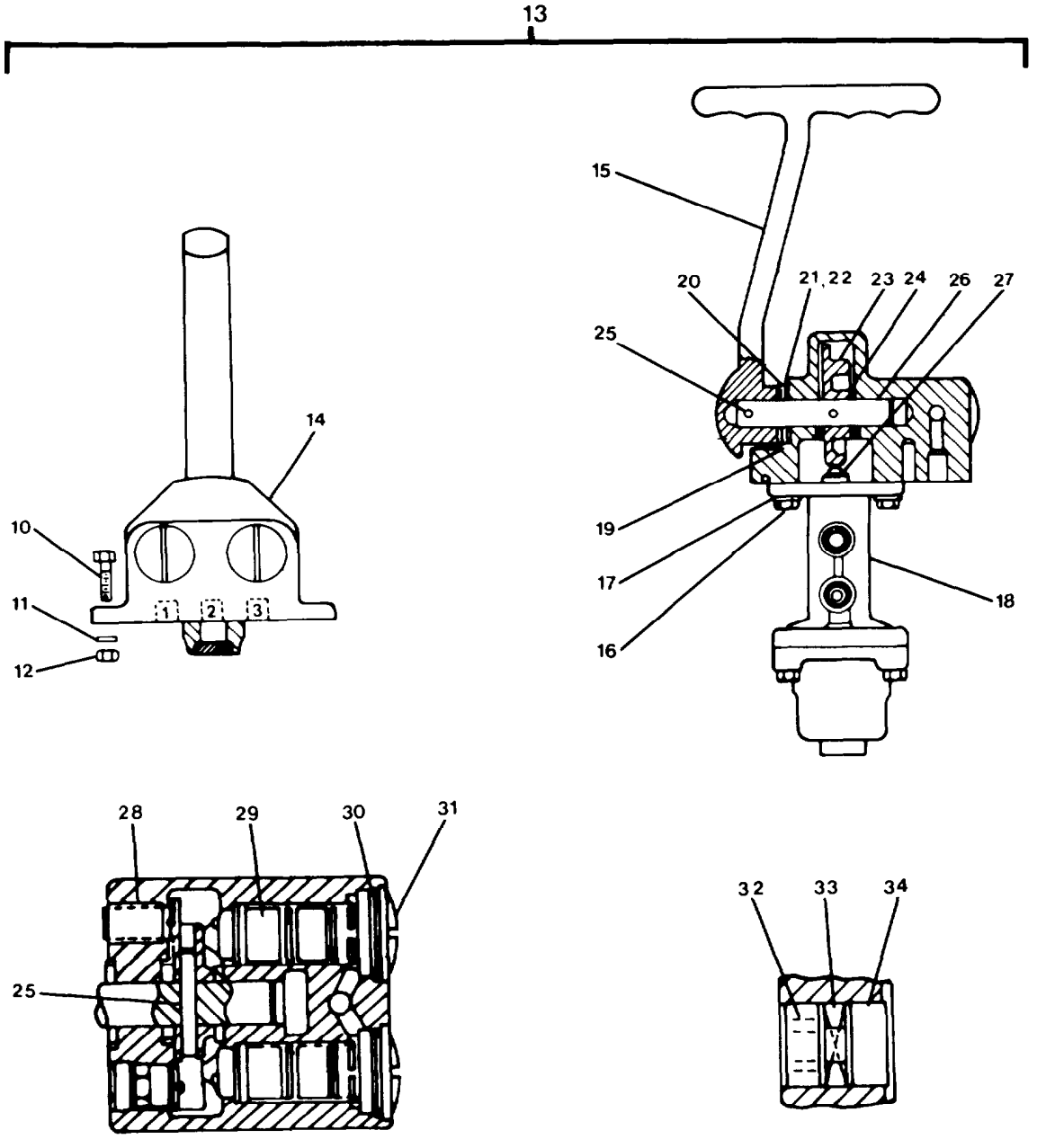

FIGURE 457. Control Station. Pilot House. F021-10111 (Sheet 3 of 3).

(1) ITEM NO	(2) SMR CODE	(3) FSCM	(4) PART NUMBER	(5) DESCRIPTION AND USABLE ON CODES(UOC)	(6) QTY
				GROUP 18 BASIC CRAFT	
				FIG. 457 CONTROL STATION, PILOT HOUSE, F021-10111	
1	XDOZZ	02570	B-600-1-4	. . . ADAPTER,STRAIGHT	32
2	XDOZZ	02570	B-600-7-4	. . . ADAPTER,STRAIGHT	1
3	XDOZZ	02570	B-600-9	. . . ELBOW,TUBE	17
4	XDOZZ	02570	B-600-3	. . . TEE,TUBE	6
5	XDOZZ	02570	B-600-2-4	. . . ELBOW,PIPE TO TUBE	3
6	XDOZZ	77408	71-3610-1020	. . . TUBE	V
7	XDOZZ	39428	2993T93	. . . SUPPORT,PIPE	5
8	XDOZZ	77408	62-3030-2322	. . . ANGLE	V
9	PAOZZ	88233	03650-9001	. . . VALVE,SHUTTLE	6
10	XDOZZ	88233	H194-20	. . . SCREW,MACHINE	4
11	XDOZZ	88233	H175-21	. . . WASHER,FLAT	4
12	XDOZZ	88233	H060-09	. . . NUT,PLAIN,HEXAGON	4
13	XDOOO	88233	F021-1011	. . . VALVE,ROTARY,DIRECT (CONTROL STATION, PILOT HOUSE)	3
14	XDOZZ	88233	B523-165	. . . HOUSING	1
15	XDOZZ	88233	B503-027	. . . HANDLE	1
16	XDOZZ	88233	H096-29	. . . SCREW,CAP,HEXAGON H	2
17	XDOZZ	88233	H175-16	. . . . WASHER,LOCK	2
18	XDOZZ	88233	F141-209-1	. . . . REGULATOR,VALVE	1
19	PAOZZ	88233	F023-147	. . . WASHER,SPRING TENS0 PART OF KIT	1
20	XDOZZ	88233	B993-153	. . . SPACER	1
21	PAOZZ	88233	H257-09	. . . BEARING,WASHER,THRU	4
22	PAOZZ	88233	H004-92	. . . . BEARING,ROLLER NEED	1
23	XDOZZ	88233	B223-030	. . . . CAM,CONTROL	1
24	XDOZZ	88233	B993-200	. . . WASHER,FLAT	1
25	XDOZZ	88233	H072-88	. . . PIN,SPRING	2
26	XDOZZ	88233	B913-038	. . . . SHAFT,CAM	1
27	XDOZZ	88233	B632-008	. . . PLUNGE R ASSEMBLY	1
28	XDOZZ	88233	H081-12	. . . . PLUNGER	1
29	PAOZZ	88233	B912-016	. . . POPPET,VALVE PART OF KIT P/N B732-9101	2
30	PAOZZ	88233	H136-54	. . . . PACKING,PREFORMED PART OF KIT P/N B732-9101	2
31	XDOZZ	88233	B233-101	. . . CAP	2
32	XDOZZ	88233	H105-14	. . . . SCREW,CAP,SOCKET HE	1
33	XDOZZ	88233	F023-144	. . . WASHER,SPRING	3
34	XDOZZ	88233	B383-002	. . . . DISK,FRICTION	1
	PAOZZ	88233	B732-9101	. . . . REPAIR KIT,CONTROL (NEEDED FOR COMPLETE REPAIR OF CONTROL STATION, PILOT HOUSE AND CONTROL STATION, ENGINE ROOM)	2
				PACKING,PREFORMED (2) 457-30	
				POPPET,VALVE (2) 457-29	
				WASHER,SPRING TENSO(1) 457-19	

END OF FIGURE

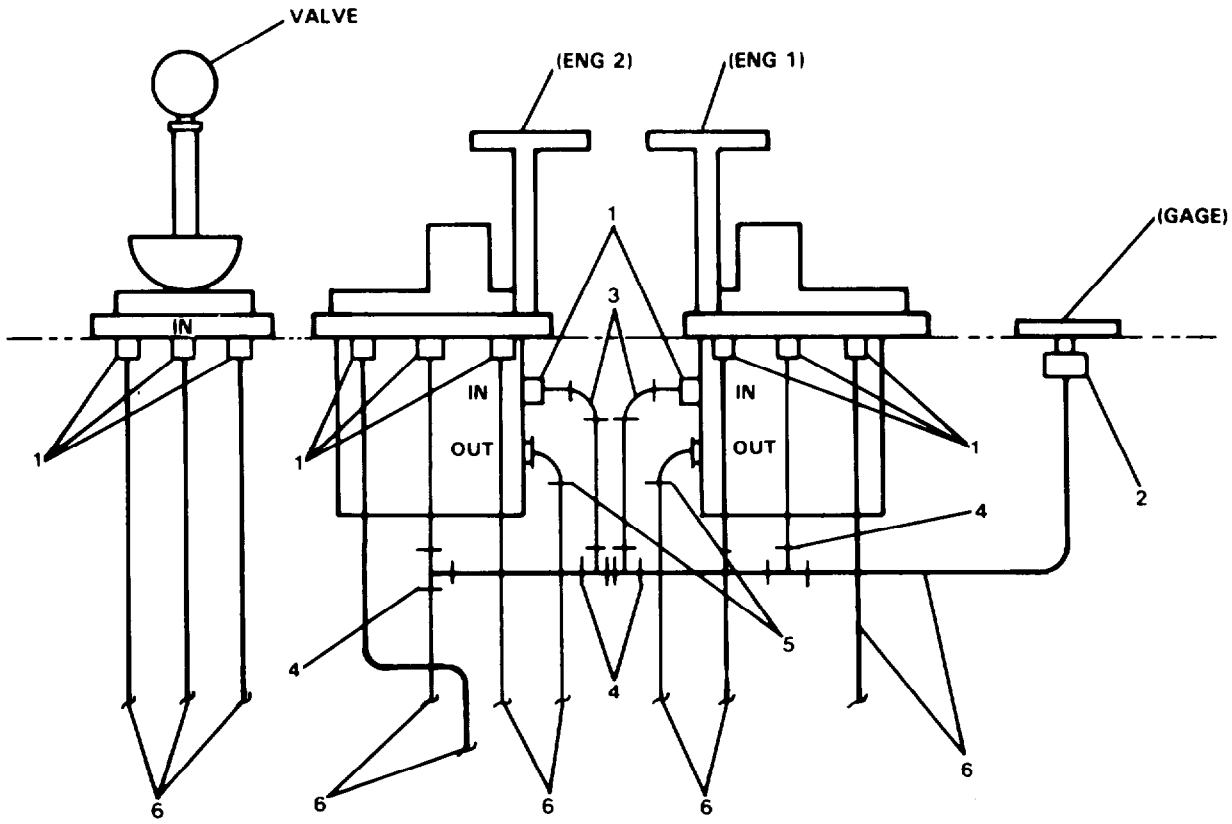

FIGURE 458. Control Station. Engine Room, F021-10111 (Sheet 1 of 3).

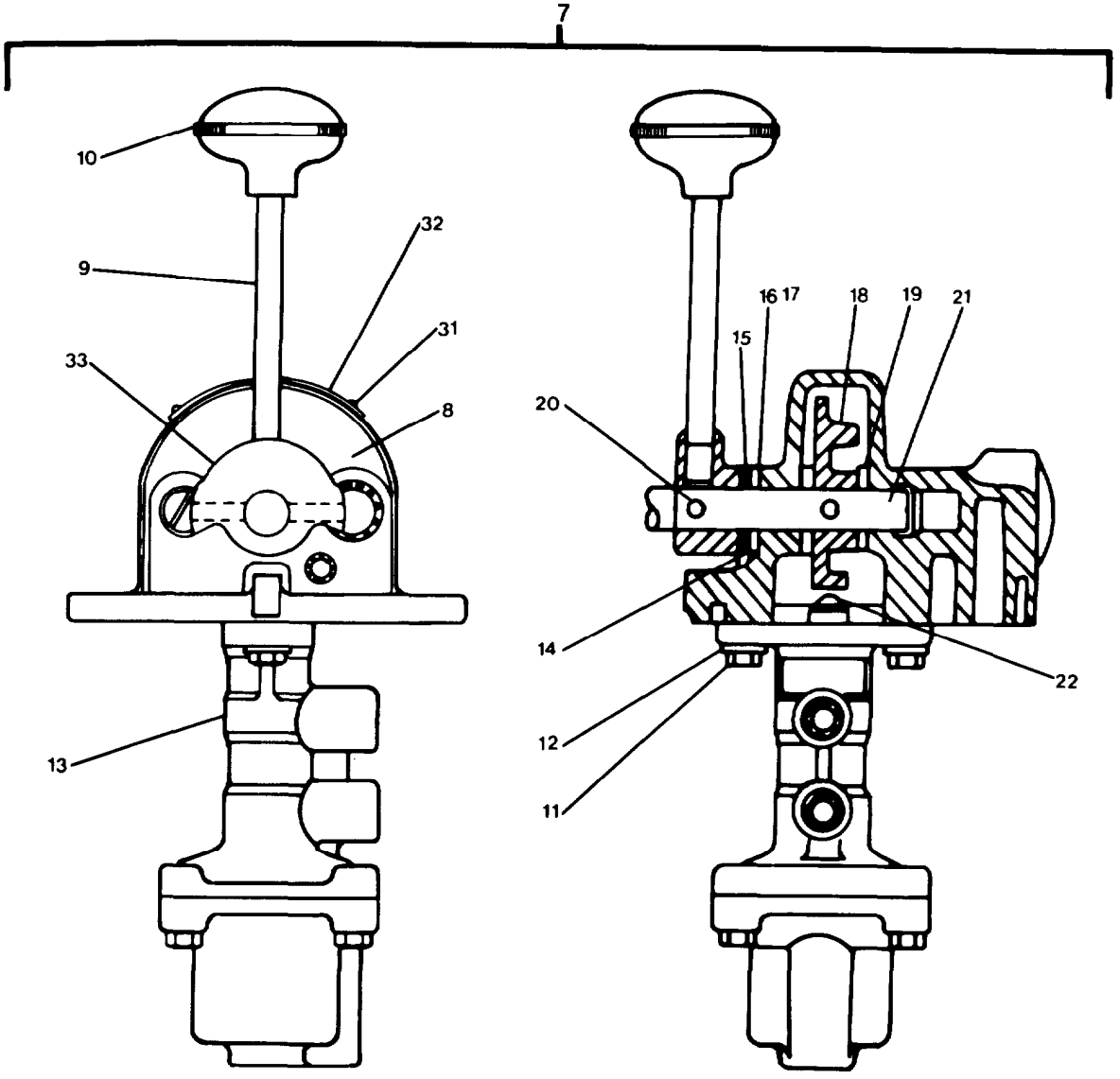

FIGURE 458. Control Station, Engine Room, F021-10111 (Sheet 2 of 3).

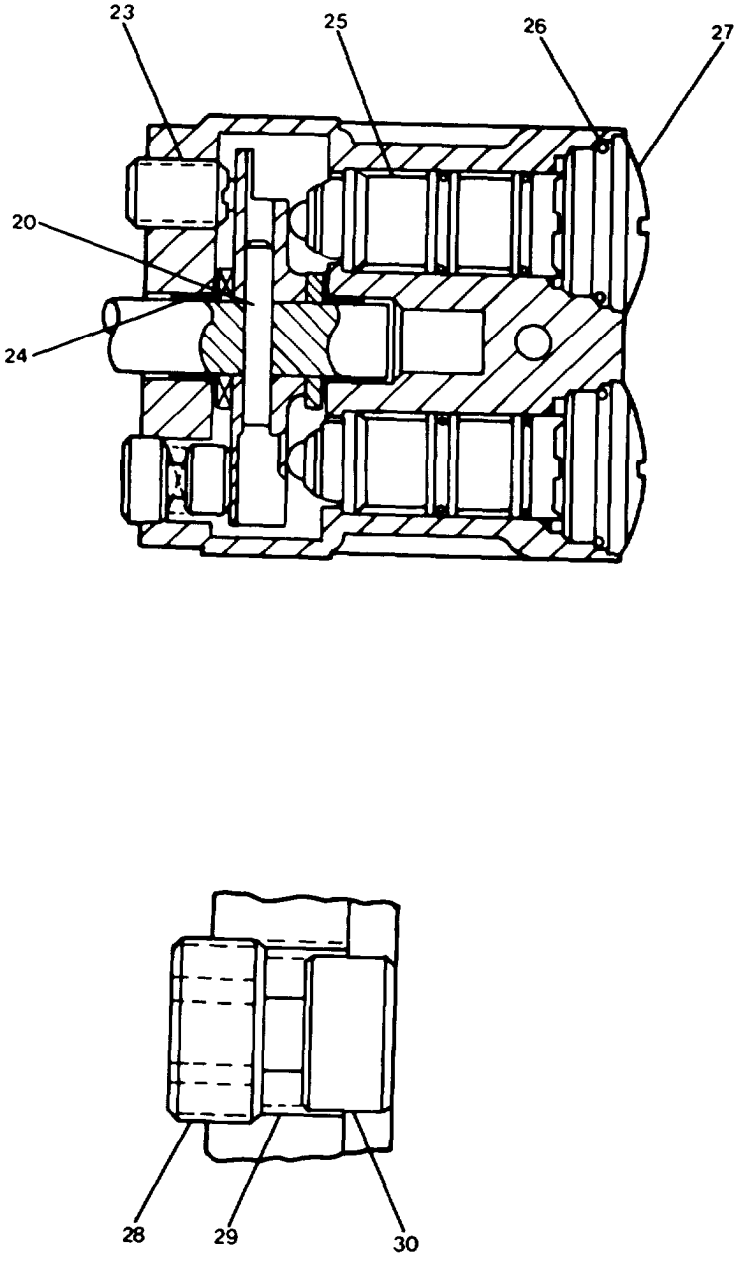

FIGURE 458. Control Station. Engine Room. F021-10111 (Sheet 3 of 3),

(1) ITEM NO	(2) SMR CODE	(3) FSCM	(4) PART NUMBER	(5) DESCRIPTION AND USABLE ON CODES(UOC)	(6) QTY
				GROUP 18 BASIC CRAFT	
				FIG. 458 CONTROL STATION, ENGINE ROOM, F021-10111	
1	XDOZZ	02570	B-600-1-4	. . . ADAPTER,STRAIGHT	11
2	XDOZZ	02570	B-600-7-4	. . . ADAPTER,STRAIGHT	1
3	XDOZZ	02570	B-600-9	. . . ELBOW,TUBE	2
4	XDOZZ	02570	B-600-3	. . . TEE,TUBE	4
5	XDOZZ	02570	B-600-2-4	. . .ELBOW,PIPE TO TUBE	2
6	XDOZZ	02570	71-3610-1020	. . . TUBE	V
7	XDOOO	88233	F021-10321	. . . CONTROL STATION,ENG	2
8	XDOZZ	88233	B502-037	. . . . HOUSING	1
9	XDOZZ	88233	B913-039	. . . . HANDLE,SHAFT	1
10	XDOZZ	88233	H050-31	. . . . KNOB	1
11	XDOZZ	88233	H096-29	. . . . SCREW,CAP,HEXAGON H	2
12	XDOZZ	88233	H175-16	. . . . WASHER,LOCK	2
13	XDOZZ	88233	F141-211	. . . . REGULATOR,VALVE	1
14	PAOZZ	88233	F023-147	. . . . WASHER,SPRING TENS1	1
15	XDOZZ	88233	B993-153	. . . . SPACER	1
16	PAOZZ	88233	H257-09	. . . . BEARING,WASHER,THRU	4
17	PAOZZ	88233	H004-92	. . . . BEARING,ROLLER NEED	2
18	XDOZZ	88233	B223-030	. . . . CAM,CONTROL	1
19	XDOZZ	88233	B993-200	. . . WASHER,FLAT	1
20	XDOZZ	88233	H072-88	. . . . PIN,SPRING	2
21	XDOZZ	88233	B913-038	. . . . SHAFT,CAM	1
22	XDOZZ	88233	B632-008	. . . . PLUNGER ASSEMBLY	1
23	XDOZZ	88233	H081-12	. . . . PLUNGER	1
24	PAOZZ	88233	H004-115	. . . . BEARING,SLEEVE	2
25	PAOZZ	88233	B912-016	. . . . POPPET,VALVE	2
26	PAOZZ	88233	H136-54	. . . . PACKING,PREFORMED	2
27	XDOZZ	88233	B233-106	. . . . CAP	2
28	XDOZZ	88233	H105-14	. . . . SCREW,CAP,SOCKET HE	1
29	XDOZZ	88233	F023-144	. . . . WASHER,SPRING	3
30	XDOZZ	88233	B383-002	. . . . DISK,FRICTION	1
31	XDOZZ	88233	H104-02	. . . . SCREW,DRIVE	4
32	XDOZZ	88233	B633-181	. . . . PLATE,IDENTIFICATIO	1
33	XDOZZ	88233	B233-114	. . . . CAP	1

END OF FIGURE

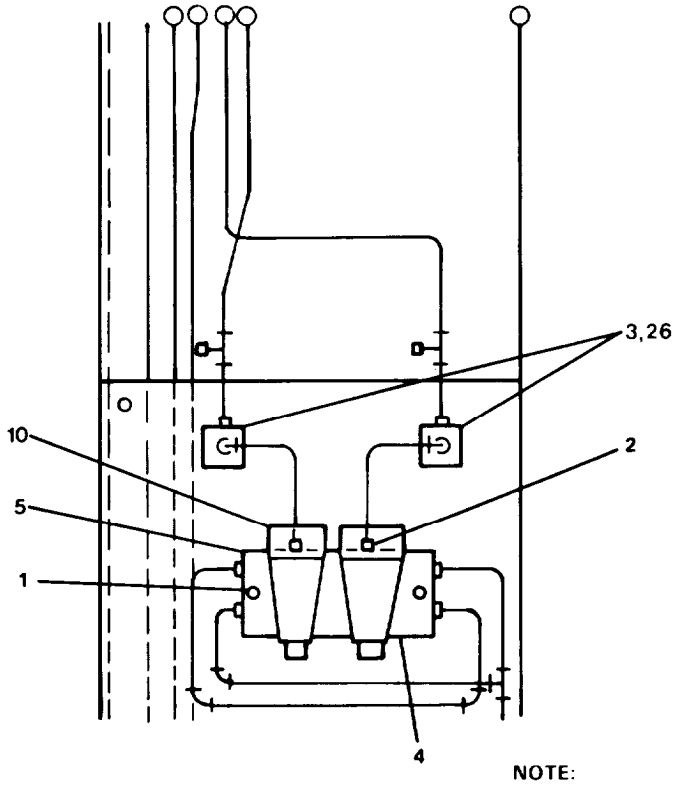

NOTE:
ITEM 5- SEE SHEET 2
ITEM 10- SEE SHEET 3
ITEM 26- SEE SHEET 4

FIGURE 459. Gear Mate Control System, F011-106 (Sheet 1 of 4).

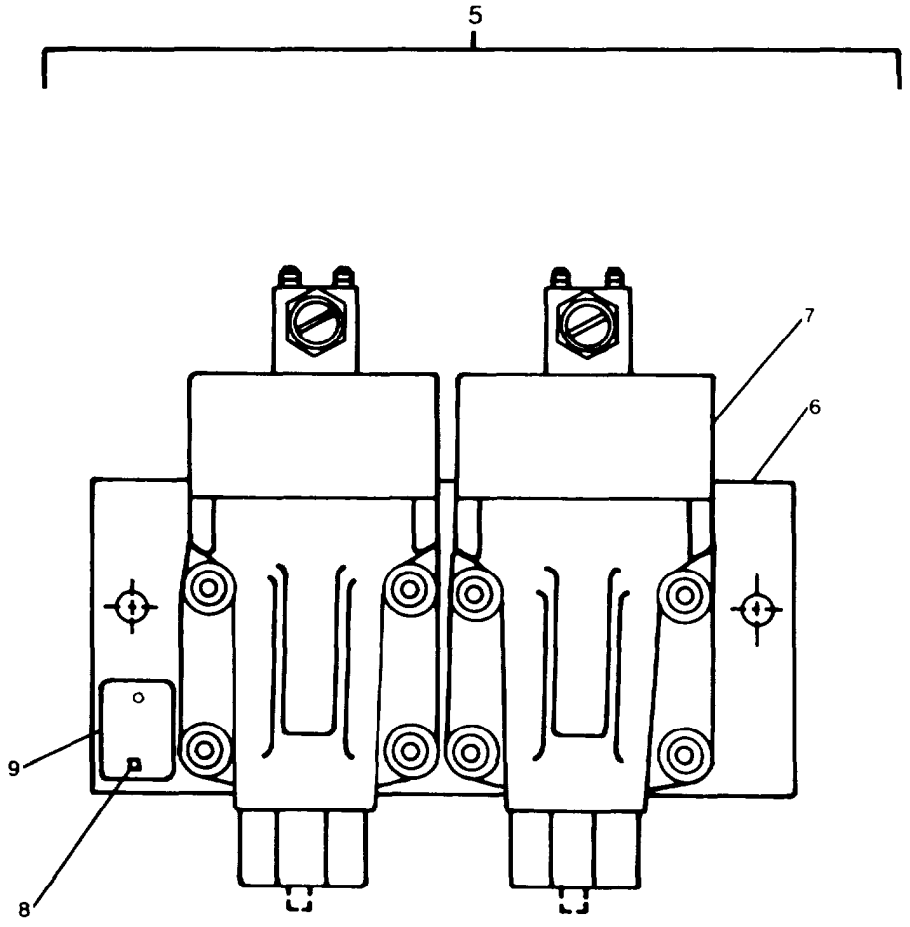

FIGURE 459. Gear Mate Control System. F011-106 (Sheet 2 of 4).

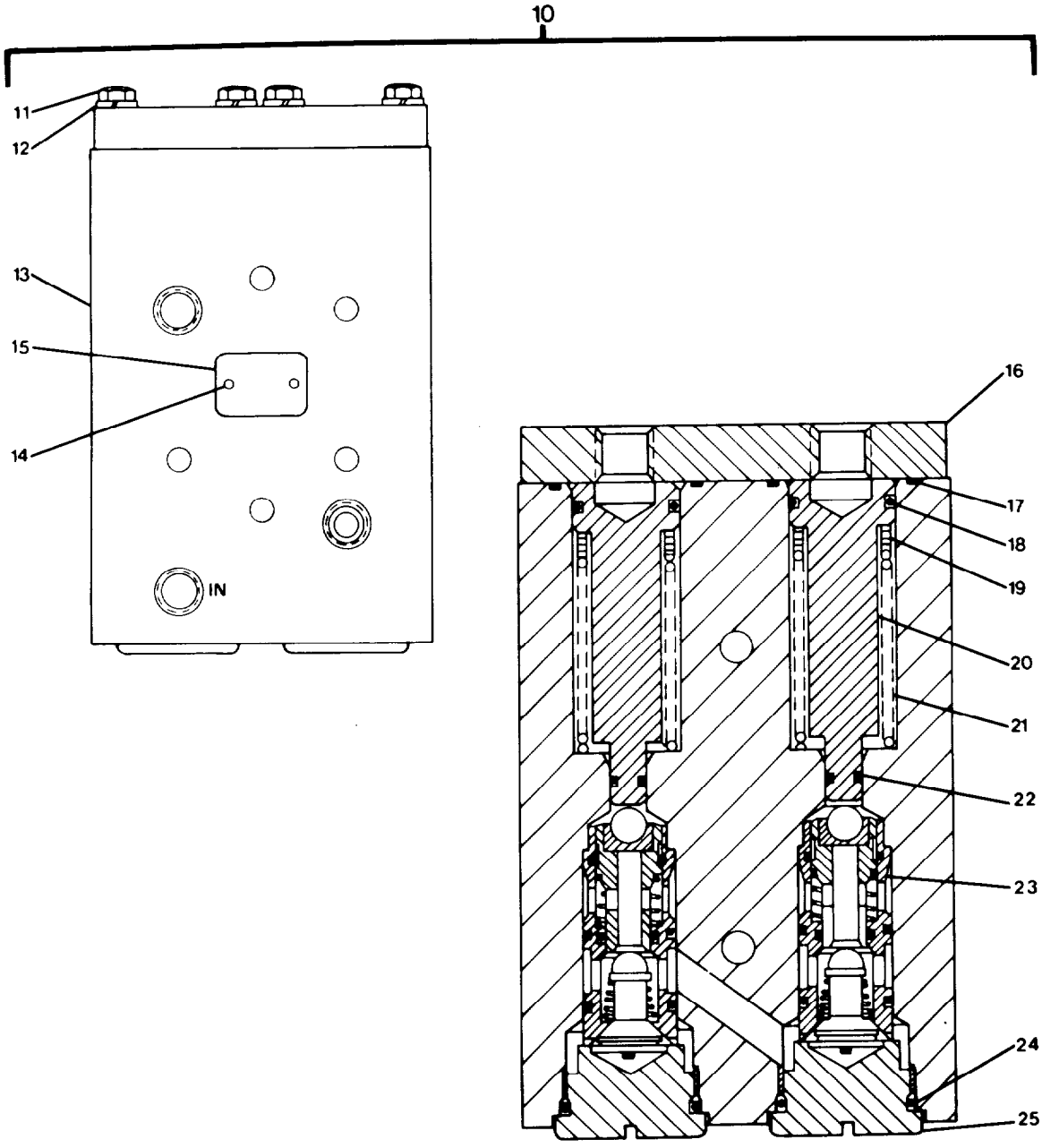

FIGURE 459. Gear Mate Control System. F011-106 (Sheet 3 of 4).

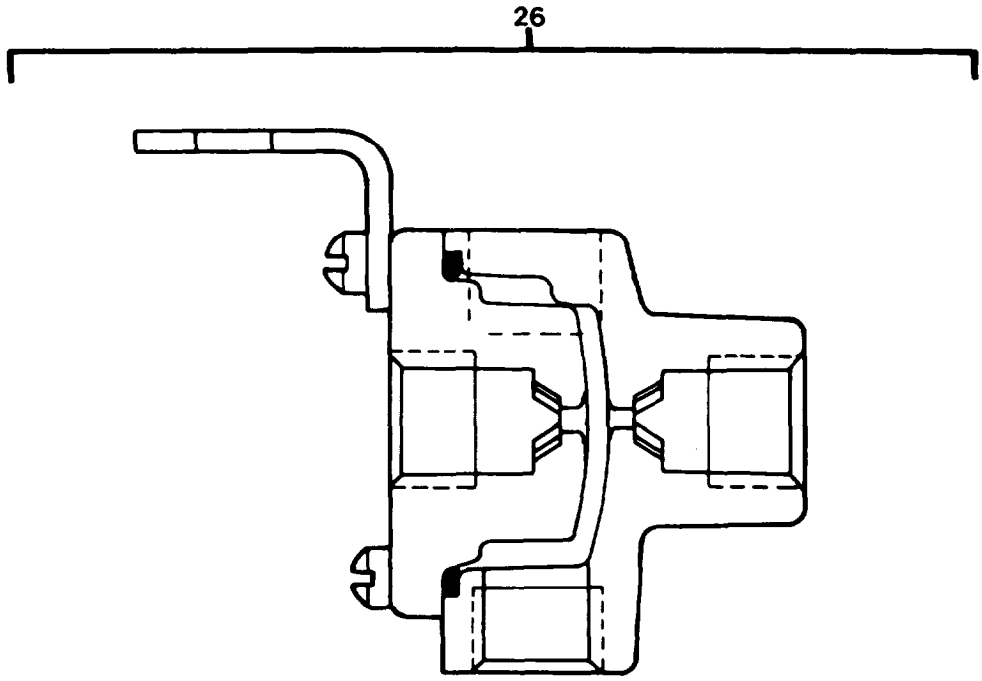

FIGURE 459. Gear Mate Control System, F011-106 (Sheet 4 of 4).

(1) ITEM NO	(2) SMR CODE	(3) FSCM	(4) PART NUMBER	(5) DESCRIPTION AND USABLE ON CODES(UOC)	(6) QTY
				GROUP 18 BASIC CRAFT	
				FIG. 459 GEAR MATE CONTROL SYSTEM, F011-106	
1	XDOZZ	77408	D0-2520-1012	. . . BOLT,MACHINE	2
2	XDOZZ	77408	D0-2719-8033	. . . SCREW,CAP,HEXAGON H	2
3	XDOZZ	02570	B-600-1-4	. . . ADAPTER,STRAIGHT	8
4	XDOOO	88233	F011-106	. . . GEARMATE CONTROL SY	1
5	XDOOO	88233	F011-002	. . . . PANEL,GEARMATE CONT	1
6	XDOZZ	88233	B723-317	. . . PLATE,MANIFOLD	1
7	PAOZZ	88233	N404-31-093	. . . . . VALVE,THREE-WAY	2
8	XDOZZ	88233	H104-02	. . . . . SCREW,DRIVE	2
9	XDOZZ	88233	M293-007	. . . PLATE,IDENTIFICATIO	1
10	XDOOO	88233	F011-126	. . . . THROTTLE INTERLOCK	1
11	XDOZZ	88233	H096-12	. . . . . SCREW,CAP,HEXAGON H	4
12	XDOZZ	88233	H175-12	. . . WASHER,LOCK	4
13	XDOZZ	88233	B123-043	. . . BODY	1
14	XDOZZ	88233	H104-02	. . . . . SCREW,DRIVE	2
15	XDOZZ	88233	M293-007	. . . . . PLATE,IDENTIFICATIO	1
16	XDOZZ	88233	B723-263	. . . PLATE,END	1
17	PAOZZ	88233	H142-19	. . . SEAL PART OF KIT P/N B732-934	2
18	PAOZZ	88233	H239-25	. . . . . PACKING,PREFORMED PART OF KIT P/N B732-934	2
19	XDOZZ	88233	B993-218	. . . . . SPACER	10
20	XDOZZ	88233	B713-187	. . . PISTON	2
21	PAOZZ	88233	F023-167	. . . SPRING,HELICAL,COMP	2
22	PAOZZ	88233	H134-14	. . . . . PACKING,PREFORMED PART OF KIT P/N B732-934	2
23	PAOZZ	88233	B912-016	. . . POPPET,VALVE	2
24	PAOZZ	88233	H136-54	. . . PACKING,PREFORMED PART OF KIT P/N B732-934	2
25	XDOZZ	88233	B233-126	. . . . . CAP,VALVE	2
26	PAOZZ	88233	03650-9001	. . . . VALVE,SHUTTLE	2
	PAOZZ	88233	B732-934	. . . . REPAIR KIT, THROTTL (NEEDED FOR COMPLETE REPAIR OF THROTTLE INTERLOCK)	2
				PACKING,PREFORMED (2) 459-18	
				PACKING,PREFDRMED (2) 459-22	
				PACKING,PREFORMED (2) 459-24	
				SEAL (2) 459-17	

END OF FIGURE

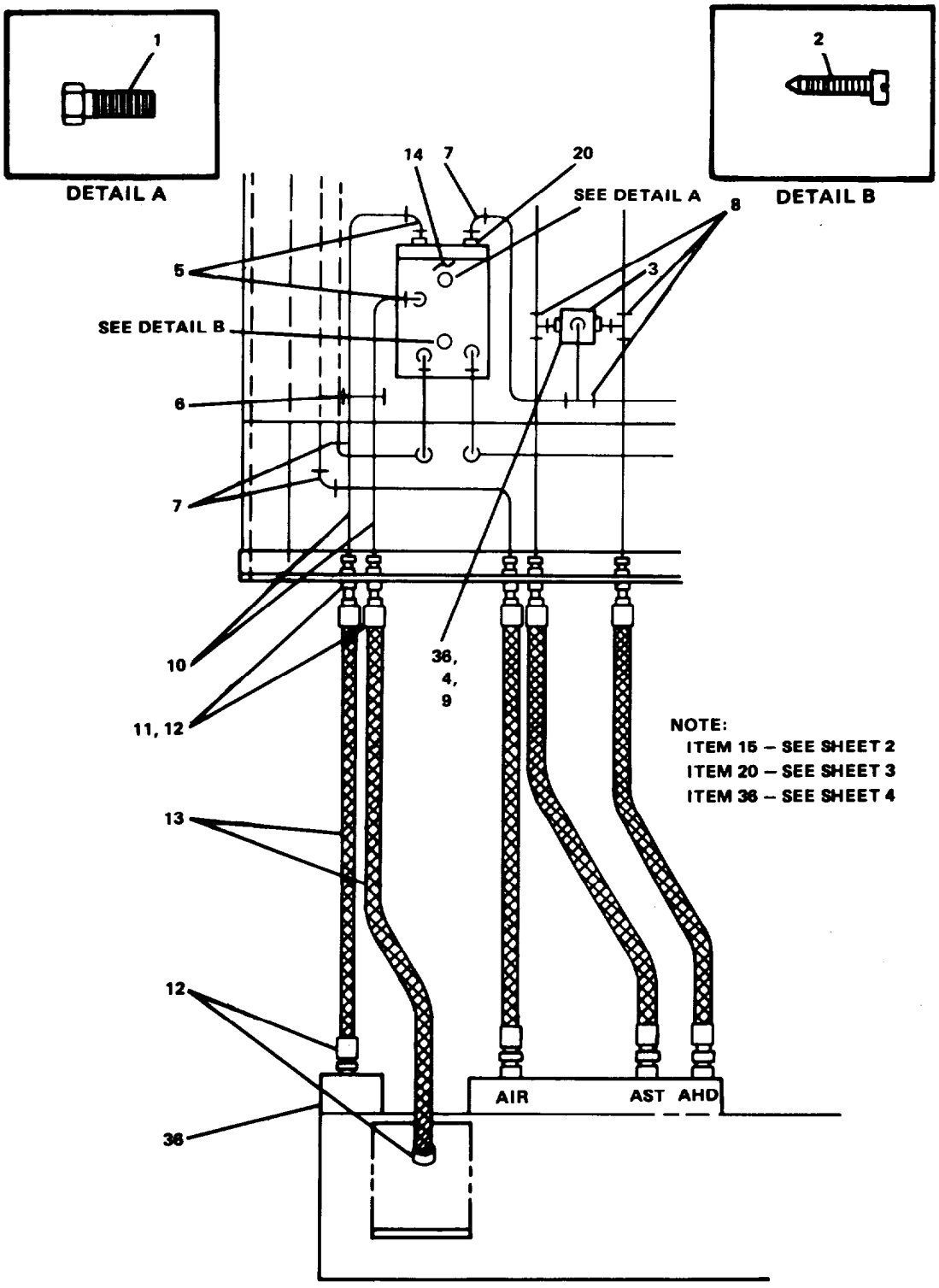

FIGURE 460. Gear Mate Control System, E011-106 (Sheet 1 of 4).

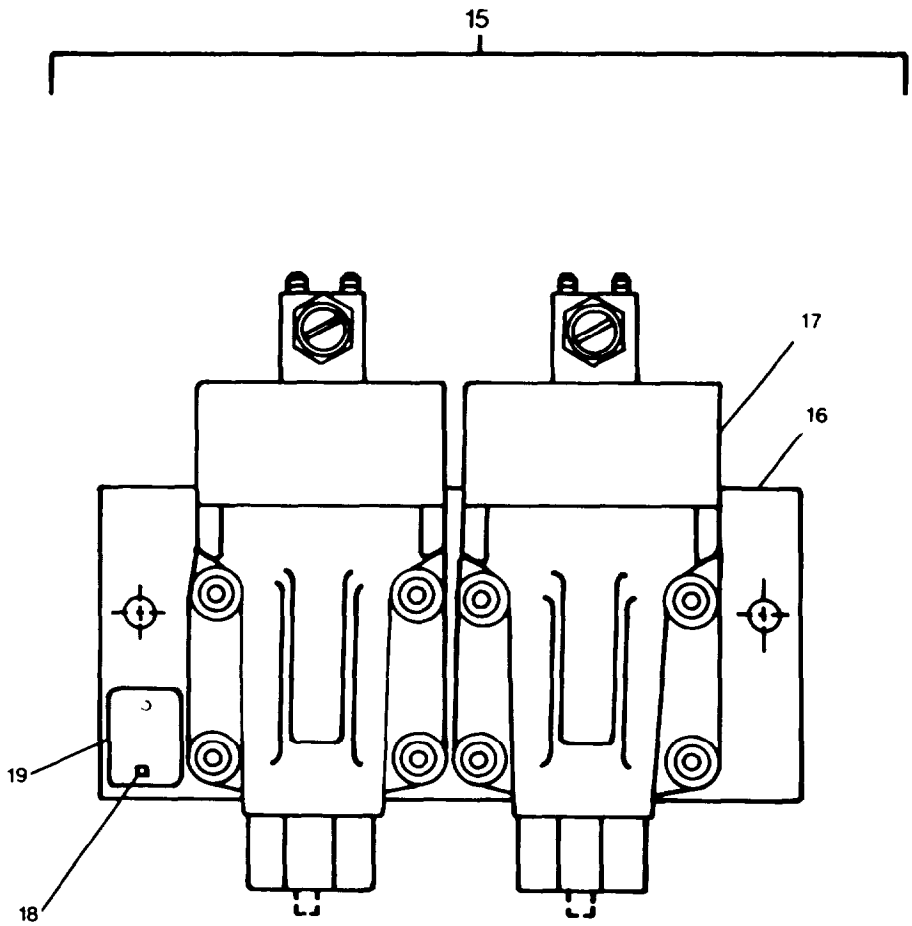

FIGURE 460. Gear Mate Control System. F011-106 (Sheet 2 of 4).

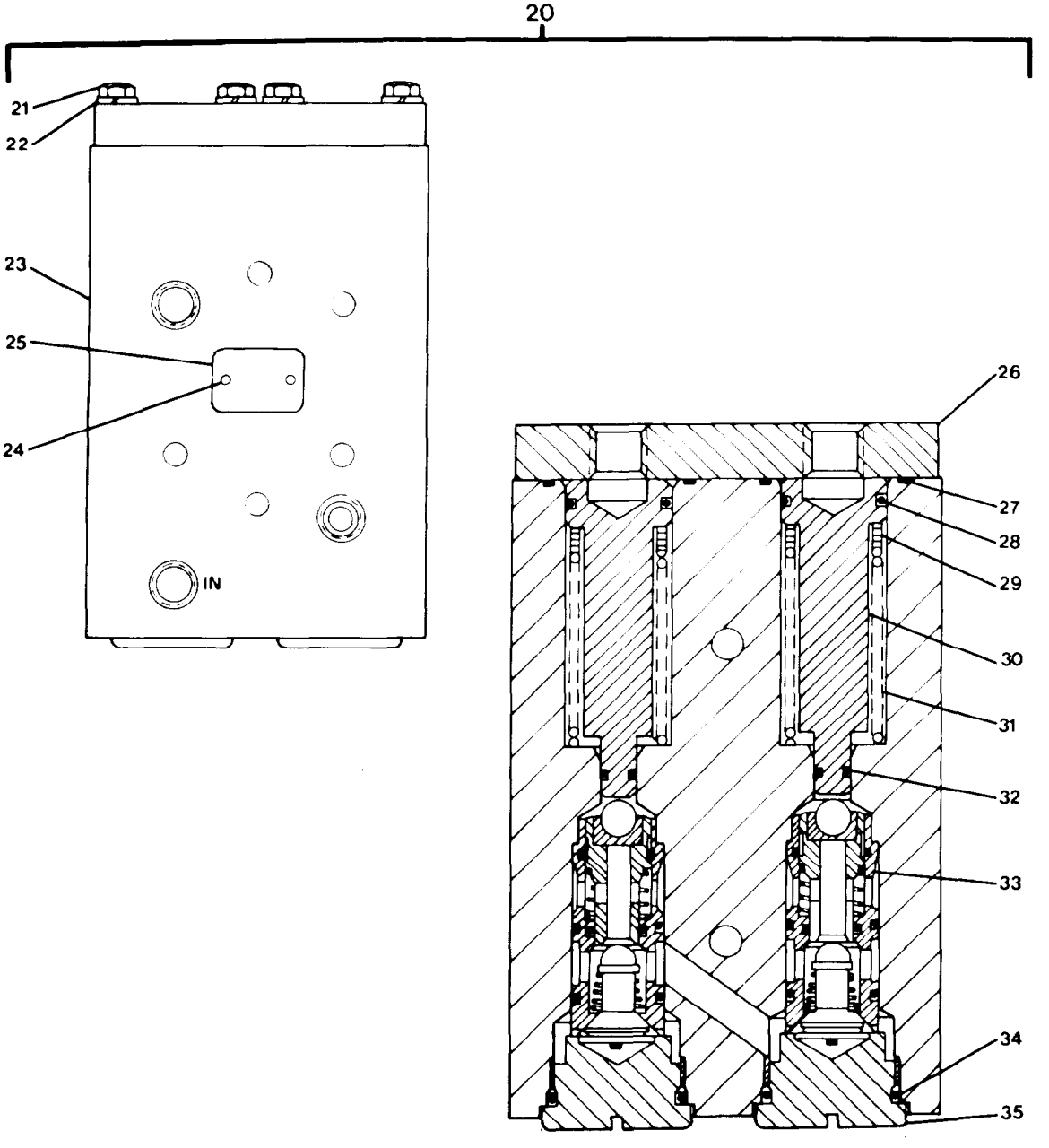

FIGURE 460. Gear Mate Control System, F011-106 (Sheet 3 of 4).

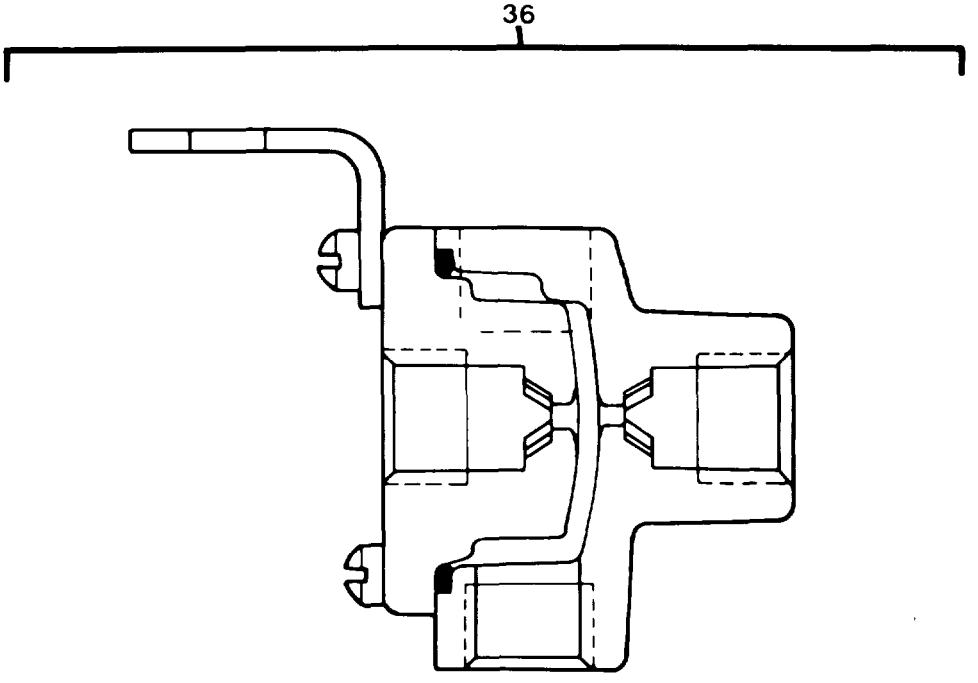

FIGURE 460. Gear Mate Control System, F011-106 (Sheet 4 of 4).

(1) ITEM NO	(2) SMR CODE	(3) FSCM	(4) PART NUMBER	(5) DESCRIPTION AND USABLE ON CODES(UOC)	(6) QTY
				GROUP 18 BASIC CRAFT	
				FIG. 460 GEAR MATE CONTROL SYSTEM, F011-106	
1	XDOZZ	77408	D0-2520-1022	. . . BOLT,MACHINE	2
2	XDOZZ	77408	D0-2719-8033	. . . SCREW,CAP,HEXAGON H	2
3	XDOZZ	02570	S-600-1-4	. . . ADAPTER,STRAIGHT	2
4	XDOZZ	02570	B-600-1-4	. . . ADAPTER,STRAIGHT	5
5	XDOZZ	02570	S-600-9	. . . ELBOW,TUBE	2
6	XDOZZ	39428	2993T93	. . . SUPPORT,PIPE	1
7	XDOZZ	02570	B-600-9	. . . ELBOW,TUBE	5
8	XDOZZ	02570	B-600-3	. . . TEE,TUBE	3
9	XDOZZ	02570	B-600-2-4	. . . ELBOW,PIPE TO TUBE	1
10	XDOZZ	77408	70-5297-4660	. . . TUBE	V
11	XDOZZ	02570	B-600-7-4	. . . ADAPTER,STRAIGHT	5
12	XDOZZ	01276	412-4-6B	. . . ADAPTER,STRAIGHT	10
13	XDOZZ	01276	FC234-06	. . . HOSE,NONMETALLIC	V
14	XDOOO	88233	F011-106	. . . GEARMATE CONTROL SY	1
15	XDOOO	88233	F011-002	. . . . PANEL,GEARMATE CONT	1
16	XDOZZ	88233	B723-317	. . . . . PLATE,MANIFOLD	1
17	PAOZZ	88233	N404-31-093	. . . . . VALVE,THREE-WAY	2
18	XDOZZ	88233	H104-02	. . . . . SCREW,DRIVE	2
19	XDOZZ	88233	M293-007	. . . . . PLATE,IDENTIFICATIO	1
20	XDOOO	88233	F011-126	. . . . THROTTLE INTERLOCK	1
21	XDOZZ	88233	H096-12	. . . . . SCREW,CAP,HEXAGON H	4
22	XDOZZ	88233	H175-12	. . . . . WASHER,LOCK	4
23	XDOZZ	88233	B123-043	. . . . . BODY	1
24	XDOZZ	88233	H104-02	. . . . . SCREW,DRIVE	2
25	XDOZZ	88233	M293-007	. . . . . PLATE,IDENTIFICATIO	1
26	XDOZZ	88233	B723-263	. . . . . PLATE,END	1
27	PAOZZ	88233	H142-19	. . . . . SEAL	2
28	PAOZZ	88233	H239-25	. . . . . PACKING,PREFORMED	2
29	XDOZZ	88233	B993-218	. . . . . SPACER	10
30	XDOZZ	88233	B713-187	. . . . . PISTON	2
31	PAOZZ	88233	F023-167	. . . . . SPRING,HELICAL,COMP	2
32	PAOZZ	88233	H134-14	. . . . . PACKING,PREFORMED	2
33	PAOZZ	88233	B912-016	. . . . . POPPET,VALVE	2
34	PAOZZ	88233	H136-54	. . . . . PACKING,PREFORMED	2
35	XDOZZ	88233	B233-126	. . . . . CAP,VALVE	2
36	PAOZZ	88233	03650-9001	. . . . VALVE,SHUTTLE	2

END OF FIGURE

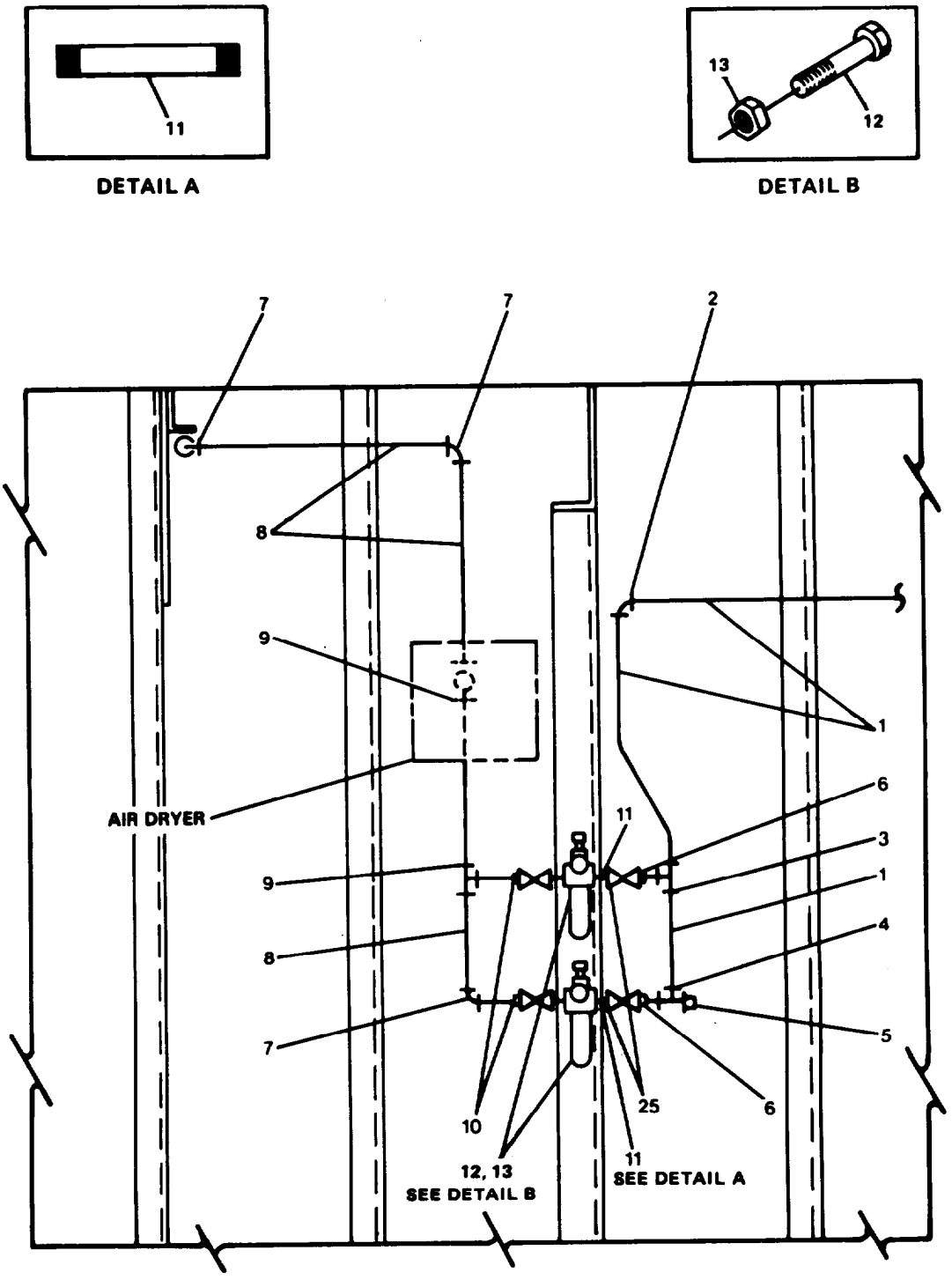

FIGURE 461. Air Preparation System. F011-120 (Sheet 1 of 2).

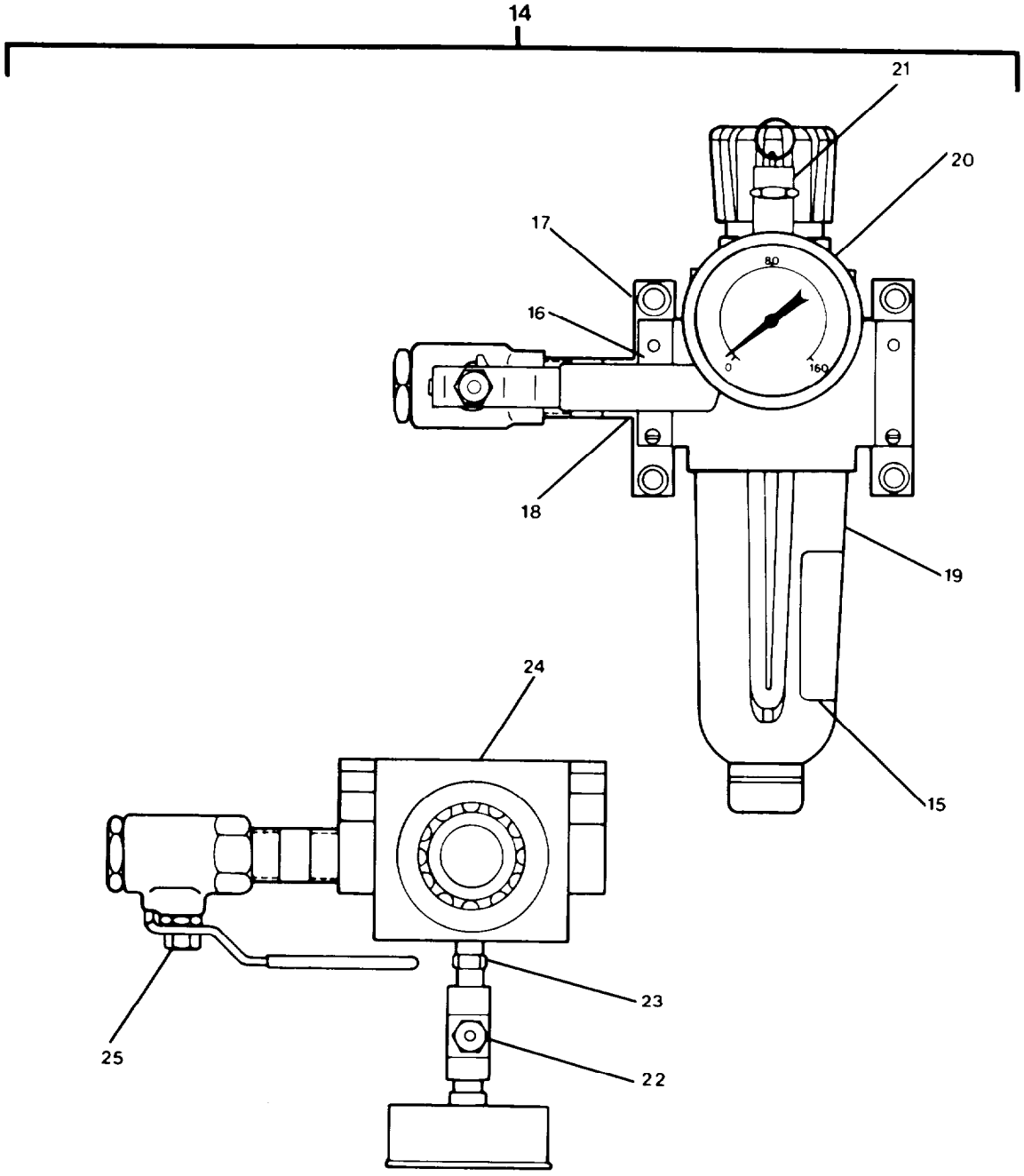

FIGURE 461. Air Preparation System. F011-120 (Sheet 2 of 2).

(1) ITEM NO	(2) SMR CODE	(3) FSCM	(4) PART NUMBER	(5) DESCRIPTION AND USABLE ON CODES(UOC)	(6) QTY
				GROUP 18 BASIC CRAFT	
				FIG. 461 AIR PREPARATION SYSTEM, F011-120	
1	XDOZZ	77408	71-3610-1020	... TUBE	V
2	XDOZZ	02570	B-600-9	... ELBOW,TUBE	1
3	XDOZZ	02570	B-600-3	... TEE,TUBE	1
4	XDOZZ	02570	B-600-3TFT	... TEE,PIPE TO TUBE	1
5	XDOZZ	72423	4174	... PLUG,PIPE	1
6	XDOZZ	02570	B-600-1-8	... ADAPTER,STRAIGHT	2
7	XDOZZ	02570	B-810-9	... ELBOW,TUBE	3
8	XDOZZ	77408	71-3610-4685	... TUBE	V
9	XDOZZ	02570	B-810-3	... TEE,TUBE	2
10	XDOZZ	77408	B-810-1-8	... ADAPTER,STRAIGHT	2
11	XDOZZ	77408	21-0810-1380	... NIPPLE,PIPE	2
12	XDOZZ	77408	D0-2520-0850	... BOLT,MACHINE	4
13	XDOZZ	77408	D0-2719-8029	... NUT,SELF-LOCKING,HE	4
14	XDOOO	88233	F011-120	... AIR PREPARATION SYS	2
15	XDOZZ	88233	B633-033	.... PLATE,IDENTIFICATIO	1
16	XDOZZ	88233	9454-4000	.... PORT CONNECTOR	1
17	XDOZZ	88233	9450-1000	.... WALL MOUNTING	1
18	XDOZZ	88233	H076-108	.... NIPPLE,PIPE	1
19	XDOZZ	88233	4599-6200	.... FILTER,FLUID	1
20	PAOZZ	53477	H032-62	.... VENTURI METER	1
21	PAOZZ	53477	H172-106	.... VALVE,SAFETY RELIEF	1
22	XDOZZ	88233	H077-02	.... TEE	1
23	XDOZZ	88233	H076-10	.... NIPPLE	1
24	XDOZZ	88233	H074-07	.... PLUG,PIPE	1
25	PAOZZ	53477	H172-105	.... VALVE,BALL	1
	PAOZZ	53477	B732-920	.... PART S KIT,FLUID PRE (NEEDED FOR COMPLETE REPAIR OF AIR PREPARATION SYSTEM)	2

END OF FIGURE

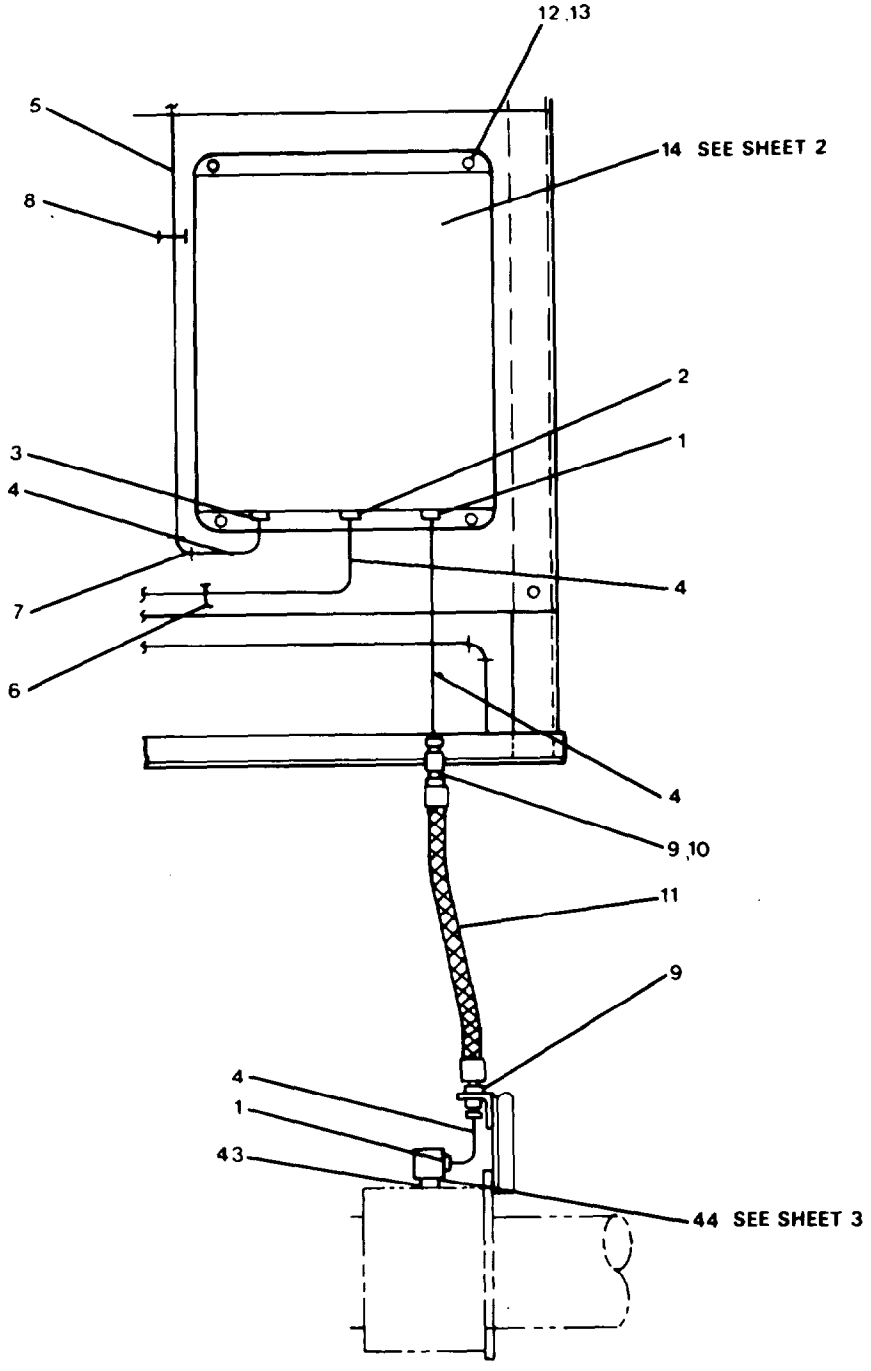

FIGURE 462. Brake Panel Assembly, F011-111 (Sheet 1 of 3).

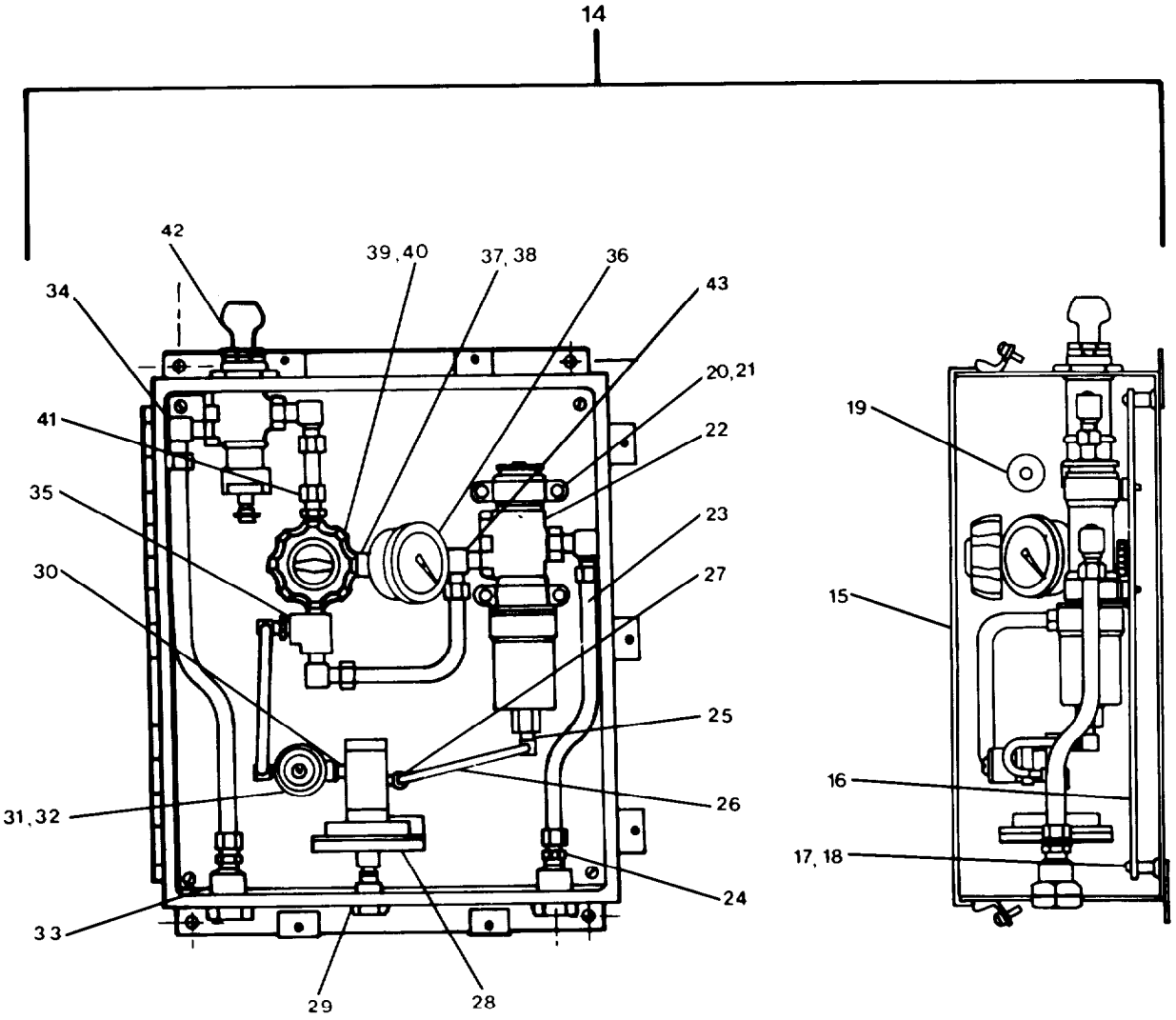

FIGURE 462. Brake Panel Assembly, F011-111 (Sheet 2 of 3).

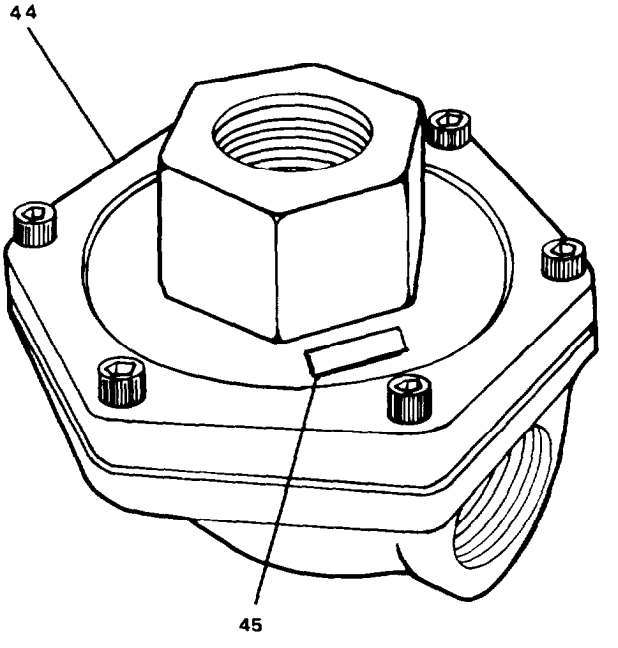

FIGURE 462. Brake Panel Assembly, F011-111 (Sheet 3 of 3).

(1) ITEM NO	(2) SMR CODE	(3) FSCM	(4) PART NUMBER	(5) DESCRIPTION AND USABLE ON CODES(UOC)	(6) QTY
				GROUP 18 BASIC CRAFT	
				FIG. 462 BRAKE PANEL ASSEMBLY, F011-111	
1	XDOZZ	02570	B-600-1-8	. . . ADAPTER,STRAIGHT	2
2	XDOZZ	02570	B-600-1-6	. . . ADAPTER,STRAIGHT	1
3	XDOZZ	02570	B-810-1-8	. . . ADAPTER,STRAIGHT	1
4	XDOZZ	77408	71-3610-1020	. . . TUBE	V
5	XDOZZ	77408	71-3610-4685	. . . TUBE	V
6	XDOZZ	39428	2993T83	. . . SUPPORT,PIPE	1
7	XDOZZ	02570	B-810-9	. . . ELBOW,TUBE	1
8	XDOZZ	39428	2993T84	. . . SUPPORT,PIPE	1
9	XDOZZ	02570	B-600-7-4	. . . ADAPTER,STRAIGHT	2
10	XDOZZ	01276	412-4-6B	. . . ADAPTER,STRAIGHT	2
11	XDOZZ	01276	FC234-06	. . . HOSE,NONMETALLIC	V
12	XDOZZ	77408	D0-2520-0848	. . . BOLT,MACHINE	4
13	XDOZZ	77408	D0-2719-8029	. . . NUT,SELF-LOCKING,HE	4
14	XDOOO	88233	F011-111	. . . VALVE,REGULATING SY	2
15	XDOZZ	88233	B173-049	. . . . ENCLOSURE	1
16	XDOZZ	88233	B723-302	. . . . PLATE,MOUNTING	1
17	XDOZZ	88233	H113-33	. . . . SCREW,MACHINE	4
18	XDOZZ	88233	H174-02	. . . . WASHER,LOCK	4
19	XDOZZ	88233	H038-04	. . . . GROMMET	1
20	XDOZZ	88233	H118-07	. . . . SCREW,MACHINE	4
21	XDOZZ	88233	H174-04	. . . . WASHER,LOCK	4
22	XDOZZ	88233	M085-318-26	. . . .VALVE,LINEAR DIRECT	1
23	XDOZZ	88233	H171-22	. . . . TUBING	4
24	XDOZZ	88233	H167-108	. . . . ADAPTER,STRAIGHT	2
25	XDOZZ	88233	H167-08	. . . . ADAPTER,STRAIGHT	3
26	XDOZZ	88233	H171-12	. . . .TUBING	2
27	XDOZZ	88233	H167-07	. . . . ADAPTER,STRAIGHT	1
28	XDOZZ	88233	41462-1000	. . . . VALVE,THREE-WAY	1
29	XDOZZ	88233	H231-63	. . . . ADAPTER,STRAIGHT	1
30	XDOZZ	88233	H076-09	. . . . ADAPTER,STRAIGHT	2
31	PAOZZ	88233	05852-2040	. . . .VALVE,REGULATING,FL PART OF KIT P/N B732-687	1
32	XDOZZ	88233	H074-41	. . . . ADAPTER,STRAIGHT	1
33	XDOZZ	88233	H231-99	. . . . ADAPTER,STRAIGHT	2
34	XDOZZ	88233	H167-146	. . . . ADAPTER,STRAIGHT	5
35	XDOZZ	88233	H077-74	. . . . ADAPTER,STRAIGHT	1
36	PAOZZ	88233	03560-0300	. . . . GAGE,PRESSURE,DIAL	1
37	XDOZZ	88233	H075-07	. . . . ADAPTER,STRAIGHT	2
38	XDOZZ	88233	H075-103	. . . . ADAPTER,STRAIGHT	1
39	XDOZZ	88233	03561-3000	. . . . VALVE,REGULATING,SY	1
40	XDOZZ	88233	H074-05	. . . . PLUG,PIPE	1
41	XDOZZ	88233	H167-148	. . . . ADAPTER,STRAIGHT	1
42	XDOZZ	88233	M051-324-58	. . . . VALVE,THREE-WAY	1
43	XDOZZ	01276	2083-8-6-B	. . . ADAPTER,STRAIGHT	1
44	PAOZZ	88233	3007-9500	. . . VALVE,QUICK EXHAUST	1
45	XDOZZ	88233	B633-033	. . . PLATE,IDENTIFICATIO	1
	PAOZZ	88233	B732-687	. . . . PARTS KIT,PANEL (NEEDED FOR	1

(1) ITEM NO	(2) SMR CODE	(3) FSCM	(4) PART NUMBER	(5) DESCRIPTION AND USABLE ON CODES(UOC)	(6) QTY
				COMPLETE REPAIR OF PANEL).....	
				VALVE,REGULATING,FL(	1) 462-31

END OF FIGURE

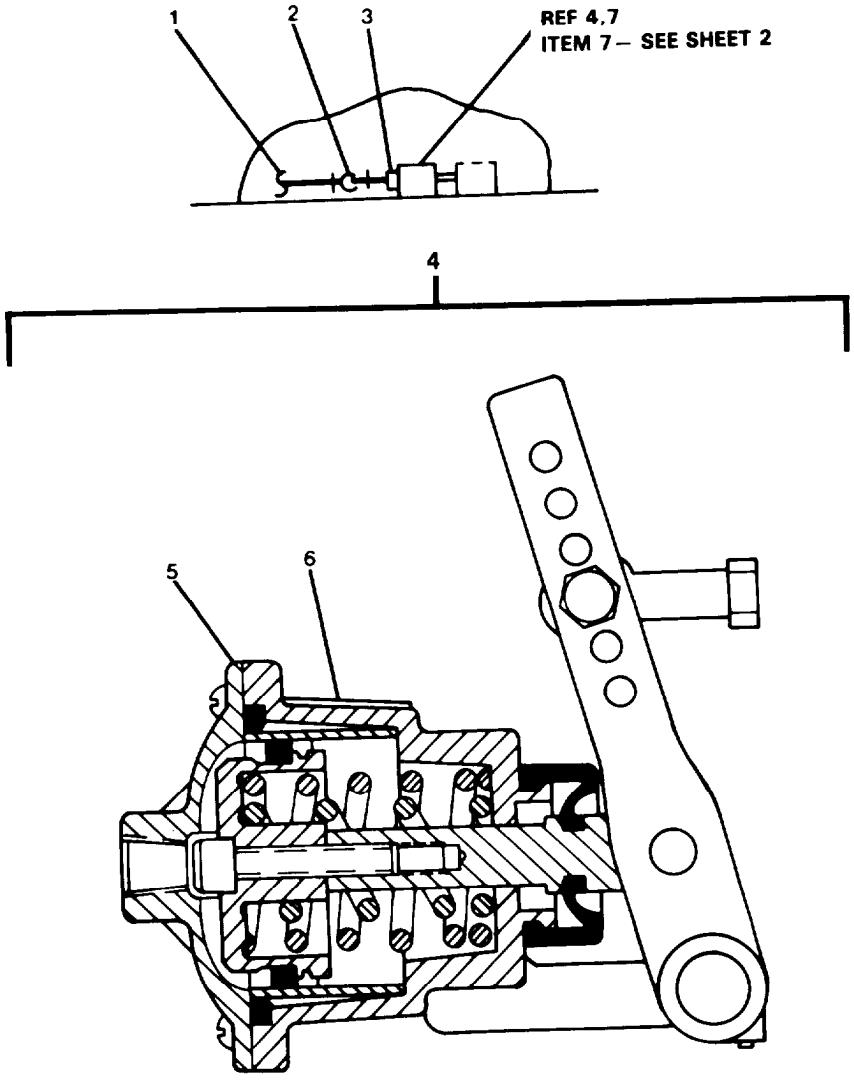

FIGURE 463. Governor Actuator Assembly, B202-1009 (Sheet 1 of 2).

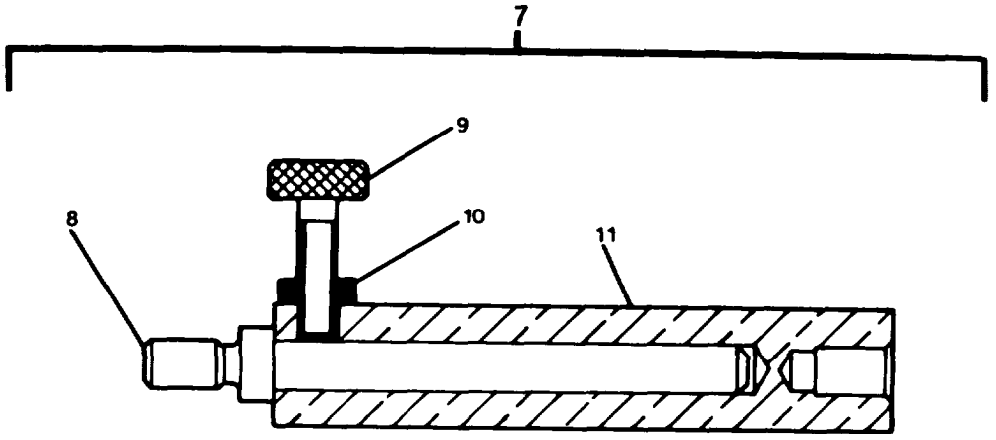

FIGURE 463. Governor Actuator Assembly, B202-1009. (Sheet 2 of 2)

(1) ITEM NO	(2) SMR CODE	(3) FSCM	(4) PART NUMBER	(5) DESCRIPTION AND USABLE ON CODES(UOC)	(6) QTY
				GROUP 18 BASIC CRAFT	
				FIG. 463 GOVERNOR ACTUATOR ASSEMBLY B202-1009	
1	XDOZZ	77408	78-3610-1020	. . . TUBE	V
2	XDOZZ	02570	B-600-9	. . . ELBOW,TUBE	2
3	XDOZZ	02570	B-600-1-4	. . . ADAPTER,STRAIGHT	1
4	XDOOO	88233	B202-1009	. . . GOVERNOR ACTUATOR A	3
5	XDOZZ	11331	WM388U1C2B	. . . . CYLINDER ASSEMBLY,A	1
6	XDOZZ	88233	B633-033	. . . . PLATE,IDENTIFICATIO	1
7	XDOOO	88233	D320-40001	. . . MANUAL OVER-RIDE,GO	3
8	XDOZZ	88233	D020-30001	. . . . SHAFT	1
9	XDOZZ	88233	C910-30006	. . . SCREW,KNURLED HEAD	1
10	XDOZZ	88233	H064-16	. . . . NUT,LOCK	1
11	XDOZZ	88233	D030-30010	. . . SLEEVE	1

END OF FIGURE

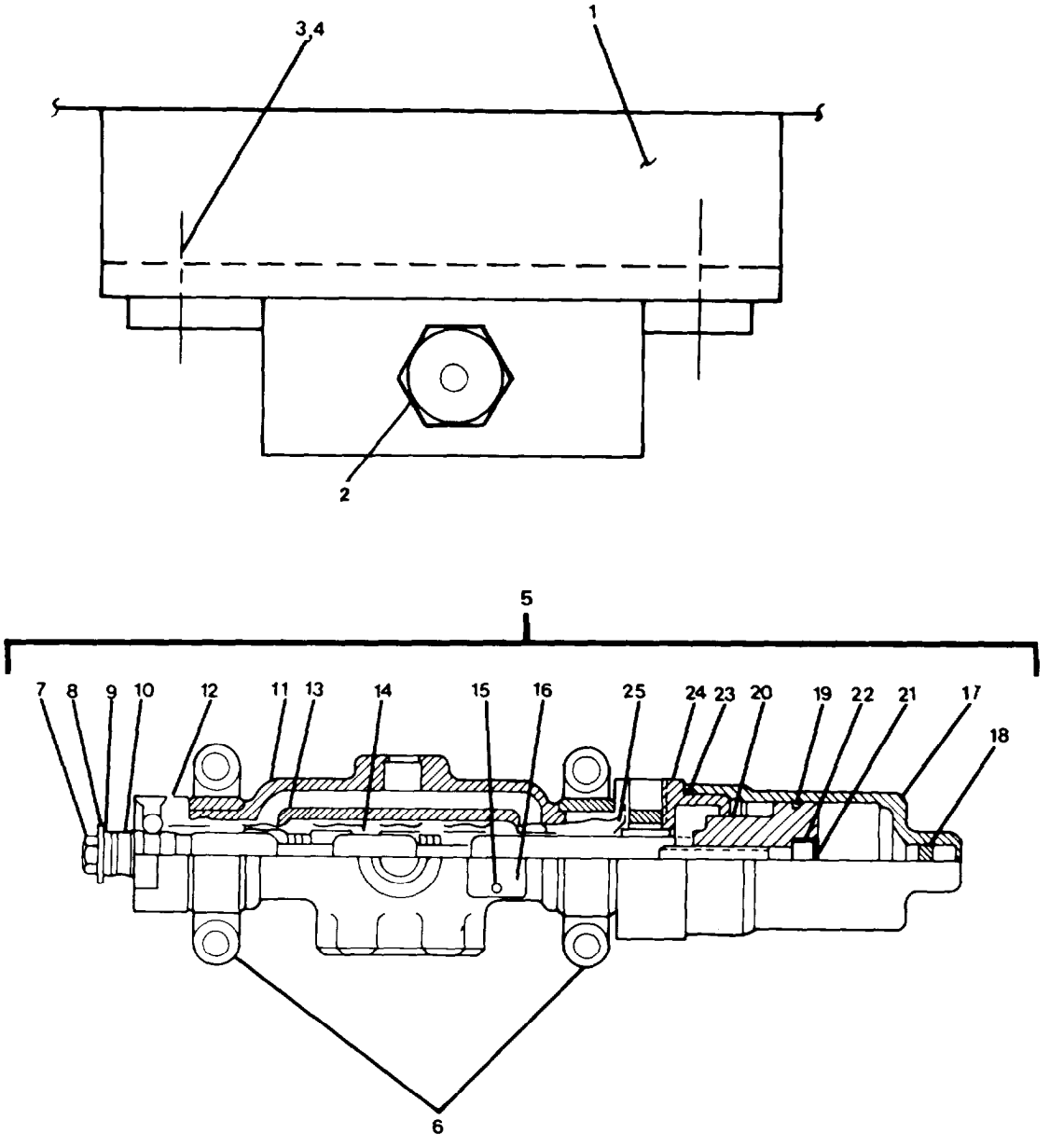

FIGURE 464. Valve, 4-Way, M000-20287.

(1) ITEM NO	(2) SMR CODE	(3) FSCM	(4) PART NUMBER	(5) DESCRIPTION AND USABLE ON CODES(UOC)	(6) QTY
				GROUP 18 BASIC CRAFT	
				FIG. 464 VALVE, 4-WAY, M000-20287	
1	XDOZZ	77408	62-3030-3678	. . . ANGLE	1
2	XDOZZ	02570	B-600-1-4	. . . ADAPTER,STRAIGHT	5
3	XDOZZ	77408	D0-2520-0850	. . . BOLT,MACHINE	4
4	XDOZZ	77408	D0-2719-8029	. . . NUT,SELF-LOCKING,HE	4
5	XDOOO	88233	M000-20287	. . . VALVE,LINEAR DIRECT	1
6	XDOZZ	88233	M073-016	. . . . BRACKET	2
7	XDOZZ	88233	H096-26	. . . . SCREW,MACHINE	1
8	XDOZZ	88233	M563-002	. . . . STOP,STEM	1
9	XDOZZ	88233	H177-05	. . . . WASHER,LOCK	1
10	XDOZZ	88233	M370-30019	. . . . STEM	1
11	XDOZZ	88233	M053-003	. . . . BODY,VALVE	1
12	XDOZZ	88233	M012-001	. . . . BEARING ASSEMBLY	1
13	XDOZZ	88233	M313-004	. . . . SPACER	5
14	PAOZZ	88233	H134-66	. . . . PACKING,PREFORMED	6
15	XDOZZ	88233	H104-02	. . . . SCREW,DRIVE	2
16	XDOZZ	88233	M293-007	. . . . PLATE,IDENTIFICATIO	1
17	XDOZZ	88233	M243-012	. . . . HOUSING	1
18	XDOZZ	88233	M363-002	. . . . PLUG	2
19	PAOZZ	88233	H136-93	. . . . PACKING,PREFORMED	1
20	XDOZZ	88233	M343-021	. . . . PISTON	1
21	XDOZZ	88233	H101-21	. . . . SCREW,MACHINE	1
22	XDOZZ	88233	H175-14	. . . . WASHER,FLAT	1
23	PAOZZ	88233	M223-006	. . . . GASKET	1
24	XDOZZ	88233	M383-009	. . . . RETAINER	1
25	PAOZZ	88233	H135-27	. . . . PACKING,PREFORMED	1

END OF FIGURE

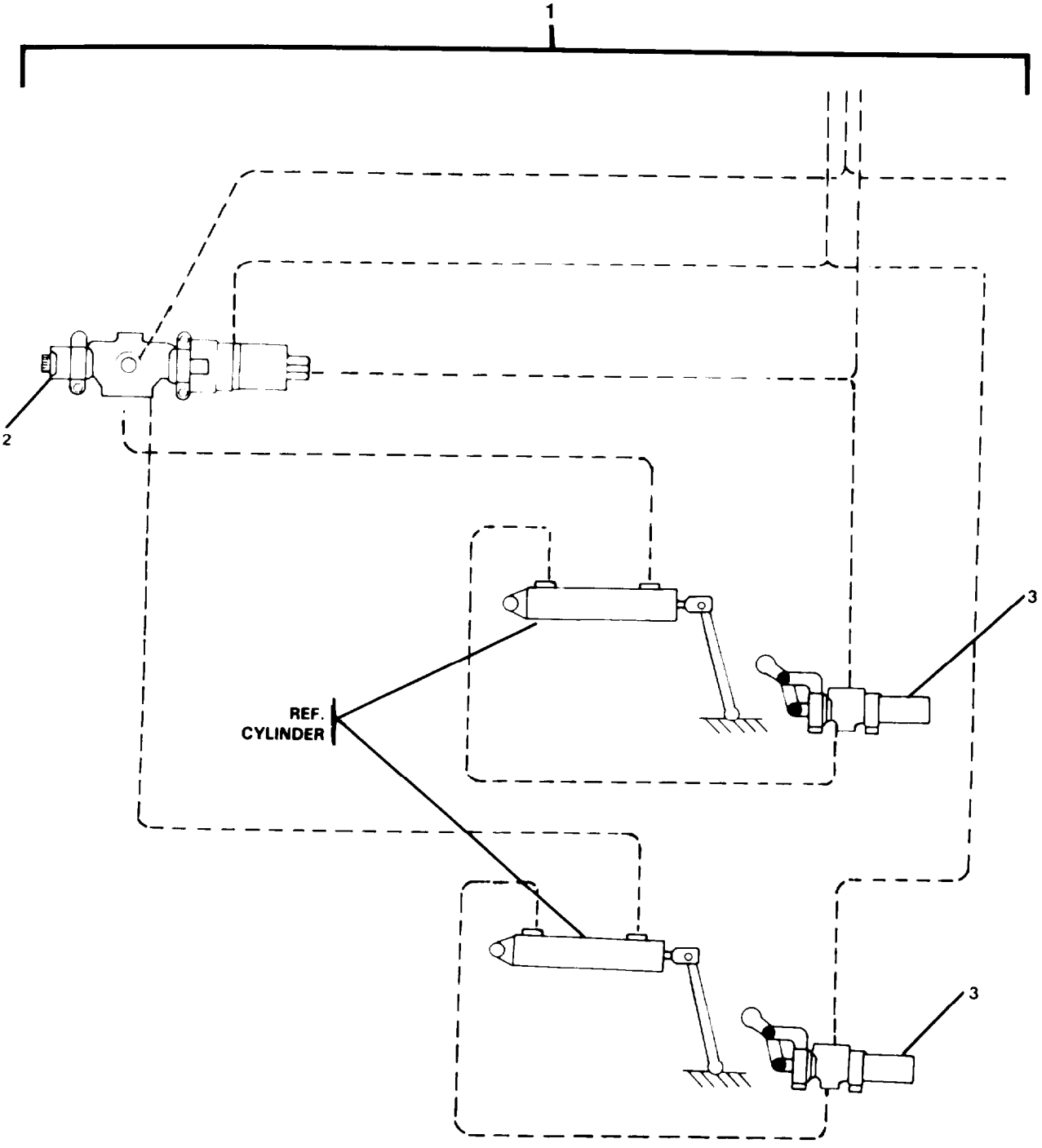

FIGURE 465. Bowthruster/Fire Pump, Valve System.

(1) ITEM NO	(2) SMR CODE	(3) FSCM	(4) PART NUMBER	(5) DESCRIPTION AND USABLE ON CODES(UOC)	(6) QTY
				GROUP 18 BASIC CRAFT	
				FIG. 465 BOWTHRUSTER/FIRE PUMP, VALVE SYSTEM	
1	XDOOO	88233	F010-10037-14-15	. . . BOWTHRUSTER/FIRE PU	1
2	PAOZZ	88233	M000-20431	. . . VALVE,FOUR-WAY	1
3	PAOZZ	88233	M095-218-03	. . . VALVE,ROLLER OPERAT	2

END OF FIGURE

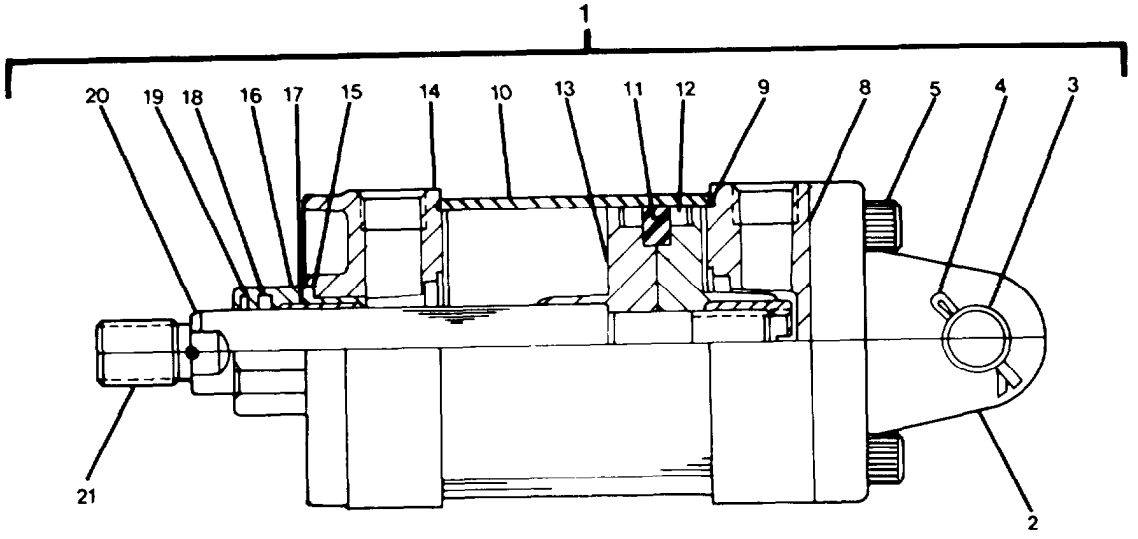

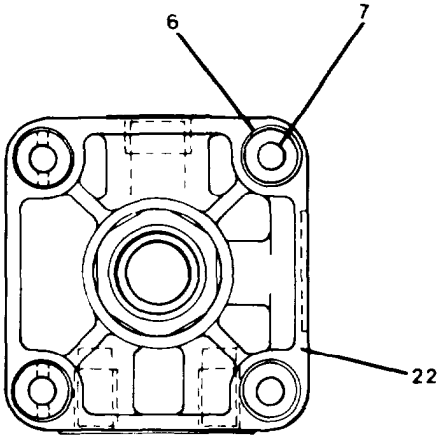

FIGURE 466. Cylinder Assembly FWD00-00113.

(1) ITEM NO	(2) SMR CODE	(3) FSCM	(4) PART NUMBER	(5) DESCRIPTION AND USABLE ON CODES(UOC)	(6) QTY
				GROUP 18 BASIC CRAFT	
				FIG. 466 CYLINDER ASSEMBLY FWD00-00113	
1	XDOOO	88233	FWD00-0013	....CYLINDER ASSEMBLY	2
2	XDOZZ	88233	B273-124	.....BRACKET,CLEVIS	1
3	XDOZZ	88233	B693-110	.....PIN,PIVOT	2
4	XDOZZ	88233	H069-44	.....PIN,COTTER	4
5	XDOZZ	88233	H101-54	.....SCREW,SOCKET HEAD	4
6	XDOZZ	88233	B663-071	.....NUT,TIE ROD	8
7	XDOZZ	88233	B843-344	.....ROD,TIE	4
8	XDOZZ	88233	B482-349	.....CAP	1
9	PAOZZ	88233	H134-113	.....PACKING,PREFORMED PART OF KIT P/N B730-21003	2
10	XDOZZ	88233	F153-168	.....TUBE,CYLINDER	1
11	PAOZZ	88233	B813-119	.....RING,WEARING PART OF KIT P/N B730-21003	1
12	PAOZZ	88233	H145-64	.....PACKING,PREFORMED PART OF KIT P/N B730-21003	2
13	XDOZZ	88233	B713-170	.....PISTON	2
14	XDOZZ	88233	B482-332	.....HEAD,CYLINDER	1
15	PAOZZ	88233	H136-21	.....PACKING,PREFORMED PART OF KIT P/N B730-21003	1
16	XDOZZ	88233	B493-141	.....GUIDE,ROD	1
17	PAOZZ	88233	H004-91	.....ROD,BEARING PART OF KIT P/N B730-21003	1
18	PAOZZ	88233	H145-26	. . .PACKING,PREFORMED PART OF KIT P/N B730-21003	1
19	PAOZZ	88233	H092-134	.....PACKING,PREFORMED PART OF KIT P/N B730-21003	1
20	XDOZZ	88233	B833-359	.....ROD,PISTON	1
21	XDOZZ	88233	B273-133	.....CLEVIS,ROD	1
22	XDOZZ	88233	B273-130	.....EYE BRACKET	1
	PAOZZ	88233	B730-21003	....REPAIR KIT, CYLINDE (NEEDED FOR COMPLETE REPAIR OF CYLINDER ASSEMBLY)	1
				PACKING,PREFORMED (2) 466-9	
				PACKING,PREFORMED (2) 466-12	
				PACKING,PREFORMED (1) 466-15	
				PACKING,PREFORMED (1) 466-18	
				PACKING,PREFORMED (1) 466-19	
				RING,WEARING (1) 466-11	
				ROD,BEARING (1) 466-17	

END OF FIGURE

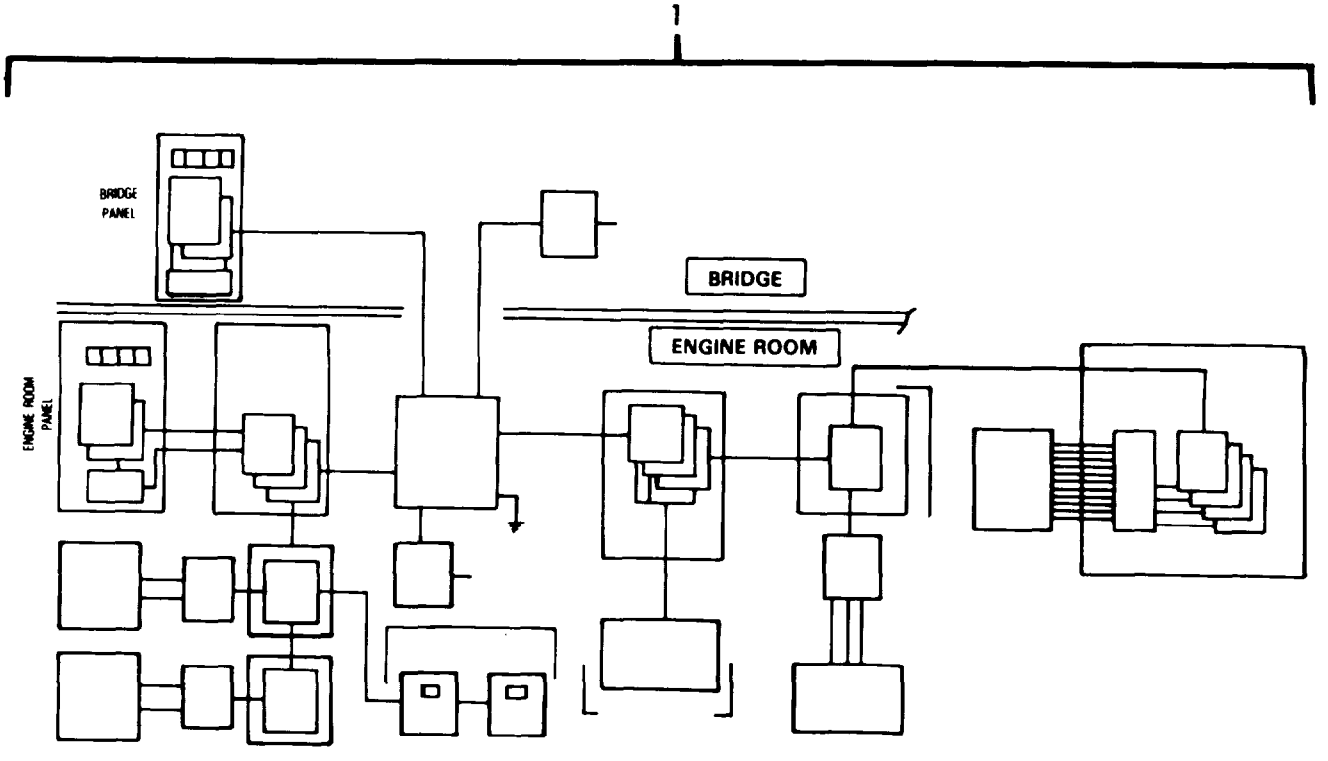

FIGURE 467. Machinery Plant Monitoring & Alarm System, 01-10200-000.

(1) ITEM NO	(2) SMR CODE	(3) FSCM	(4) PART NUMBER	(5) DESCRIPTION AND USABLE ON CODES(UOC)	(6) QTY
				GROUP 18 BASIC CRAFT	
				FIG. 467 MACHINERY PLANT MONITORING & ALARM SYSTEM, 01-10200-000	
1	XDFFF	73396	01-10200-000	..MACHINERY PLANT MON	1

END OF FIGURE

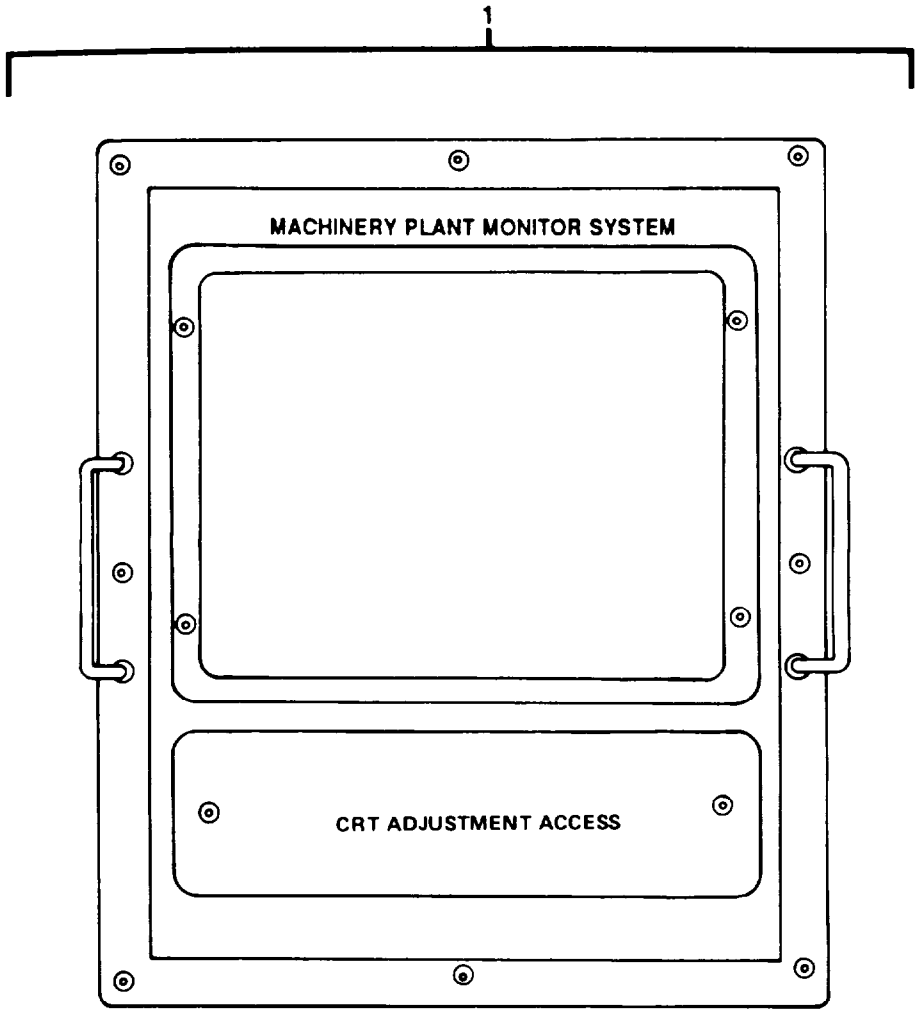

FIGURE 468. Monitor, Video, 03-09506-000.

(1) ITEM NO	(2) SMR CODE	(3) FSCM	(4) PART NUMBER	(5) DESCRIPTION AND USABLE ON CODES(UOC)	(6) QTY
				GROUP 18 BASIC CRAFT	
				FIG. 468 MONITOR, VIDEO, 03-09506-000	
1	XDFZZ	73396	03-09506-000	...MONITOR,VIDEO,CATHO	2

END OF FIGURE

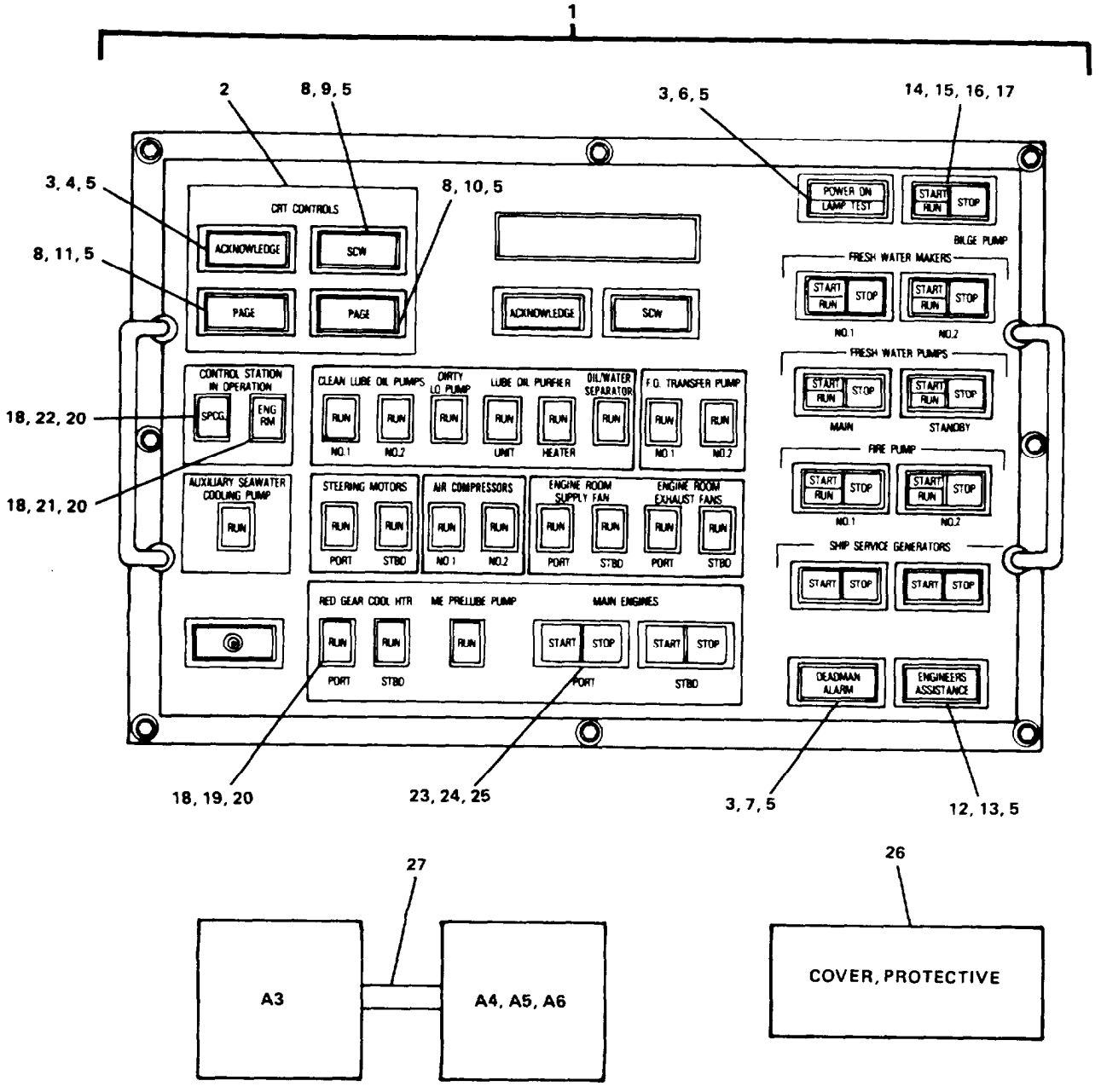

FIGURE 469. Panel Assembly, Engine Room, 02-10240-000.

(1) ITEM NO	(2) SMR CODE	(3) FSCM	(4) PART NUMBER	(5) DESCRIPTION AND USABLE ON CODES(UOC)	(6) QTY
				GROUP 18 BASIC CRAFT	
				FIG. 469 PANEL ASSEMBLY, ENGINE ROOM, 02-10240-000	
1	XDFFF	73396	02-10240-000	. . . PANEL ASSEMBLY,ENGI	1
2	XDFZZ	73396	81-00110-000	. . . . PANEL,ENGINE ROOM	1
3	PACZZ	73396	71-1022-000	. . . . . SWITCH,PUSH	4
4	PACZZ	73396	71-1022-106	. . . . . LENS,LIGHT (ACKNOWLEDGE)	2
5	PACZZ	73396	71-1021-000	. . . . . LAMP,INCANDESCENT (28 VOLT)	17
6	PACZZ	73396	71-1023-100	. . . . . LENS,LIGHT (POWER ON LAMP TEST)	1
7	PACZZ	73396	71-1022-107	. . . . . LENS,LIGHT (DEADMAN ALARM)	1
8	PACZZ	73396	71-1023-000	. . . . . SWITCH,PUSH	4
9	PACZZ	73396	71-1023-101	. . . . . LENS,LIGHT (SCAN)	2
10	PACZZ	73396	71-1023-102	. . . . . LENS,LIGHT (MINUS PAGE)	1
11	PACZZ	73396	71-1023-103	. . . . . LENS,LIGHT (PLUS PAGE)	1
12	PACZZ	73396	71-1028-000	. . . . . SWITCH,PUSH	1
13	PACZZ	73396	71-1022-108	. . . . . LENS,LIGHT (ENGINEERS ASSIST).	1
14	PACZZ	73396	71-1529-000	. . . . . SWITCH,PUSH	2
15	PACZZ	73396	71-1529-100	. . . . . LENS,LIGHT	7
16	PACZZ	73396	71-1529-002	. . . . . LENS,LIGHT (STOP)	7
17	PACZZ	73396	71-1021-000	. . . . . LAMP,INCANDESCENT (28 VOLT)	7
18	PACZZ	73396	71-1026-000	. . . . . LIGHT,INDICATOR	22
19	PACZZ	73396	71-1026-001	. . . . . LENS,LIGHT (RUN)	20
20	PACZZ	73396	71-1021-001	. . . . . LAMP,INCANDESCENT (28 VOLT)	22
21	PACZZ	73396	71-1026-002	. . . . . LENS,LIGHT (ENGINE ROOM)	1
22	PACZZ	73396	71-1026-003	. . . . . LENS,LIGHT (BRIDGE)	1
23	PACZZ	73396	71-1025-000	. . . . . SWITCH,PUSH	4
24	PACZZ	73396	71-1529-001	. . . . . LENS,LIGHT (START)	4
25	PACZZ	73396	71-1529-002	. . . . . LENS,LIGHT	4
26	XDCZZ	73396	71-1529-003	. . . . . COVER,PROTECTIVE	1
27	PAFZZ	73396	65-5000-000	. . . . . CABLE,POWER,ELECTRI (SPECIAL)	2

END OF FIGURE

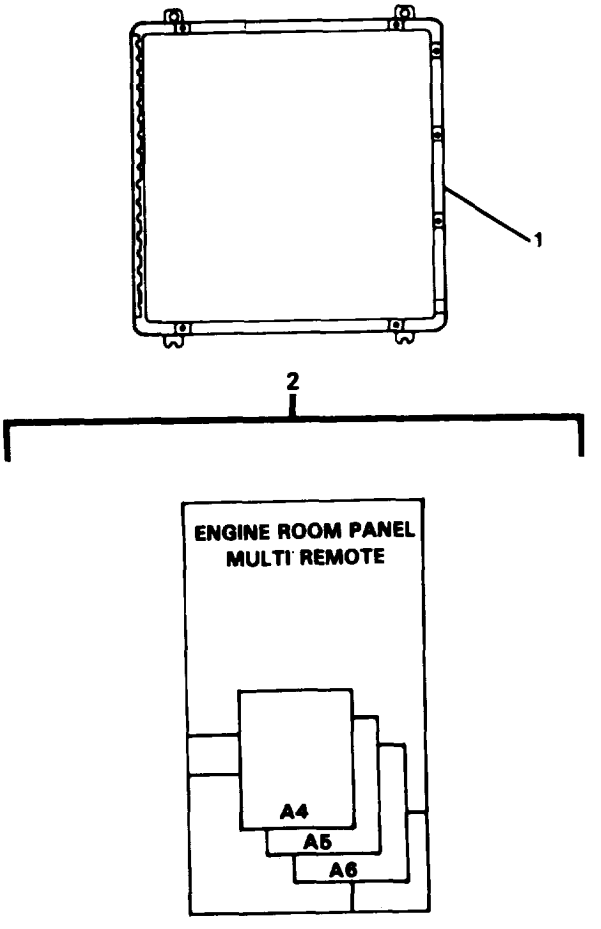

FIGURE 470. Multi-Remote Module, 02-09507-100 (Sheet 1 of 2).

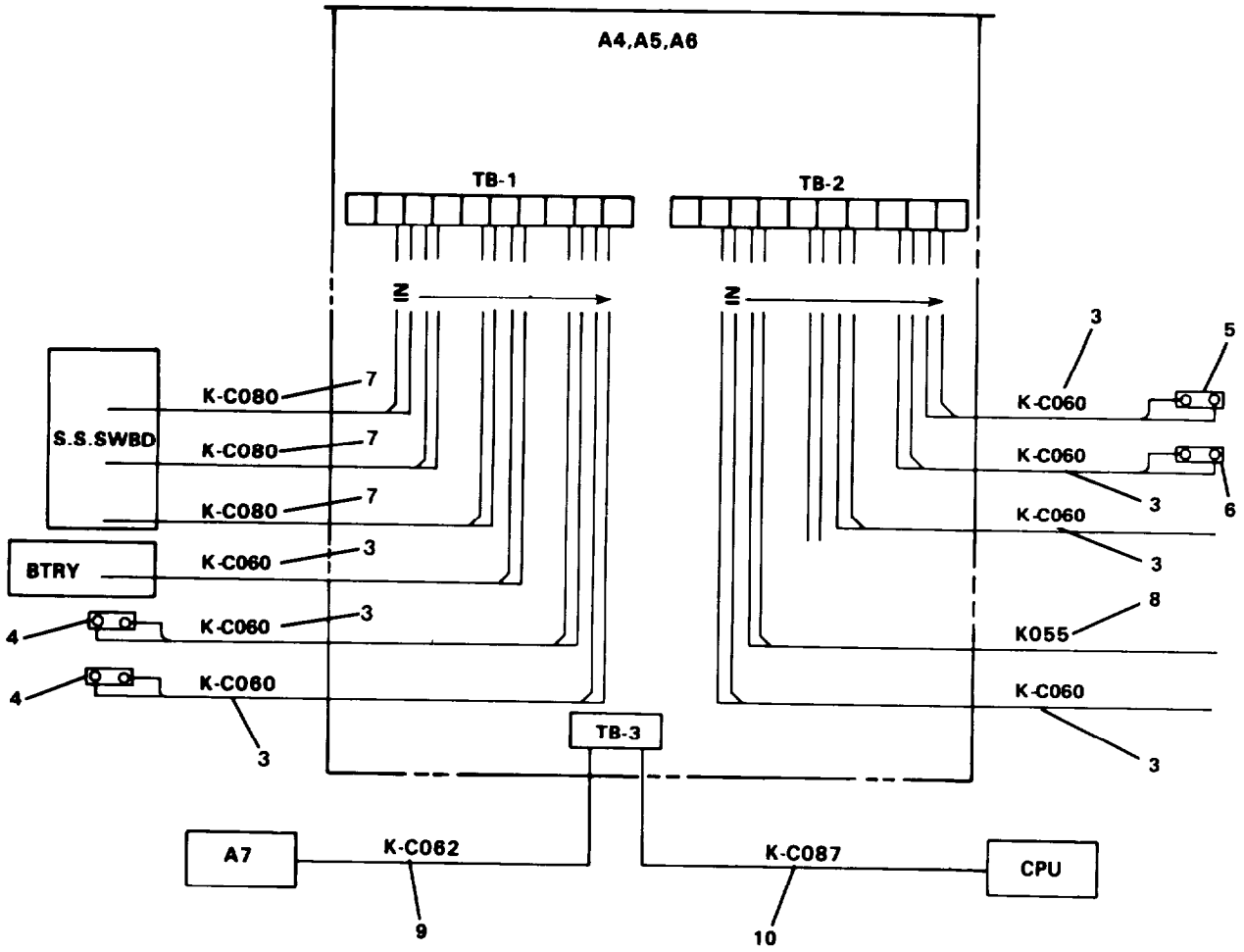

FIGURE 470. Multi-Remote Module. 02-09507-100 (Sheet 2 of 2).

(1) ITEM NO	(2) SMR CODE	(3) FSCM	(4) PART NUMBER	(5) DESCRIPTION AND USABLE ON CODES(UOC)		(6) QTY
				GROUP 18 BASIC CRAFT		
				FIG. 470 MULTI-REMOTE MODULE, 02-09507-100		
1	XDFZZ	73396	83-00120-000	,. . ENCLOSURE		1
2	XDFFF	73396	02-09507-100	. . . MULTI-REMOTE MODULE		1
3	XDFZZ	81349	LSDSGU-4	. . . . CABLE,POWER,ELECTRI	(K-C060)	V
4	PACZZ	73396	61-4250-000	. . . . SWITCH,PRESSURE		2
5	XDCZZ	73396	61-1700-003	. . . . SWITCH,LIQUID LEVEL		1
6	XDCZZ	73396	61-1700-002	. . . . SWITCH,LIQUID LEVEL		1
7	XDFZZ	81349	LSMSCU-7	. . . . CABLE,POWER,ELECTRI	(K-C080)	V
8	XDFZZ	81349	FSS-4	. . . . CABLE,POWER,ELECTRI	(K-C055)	V
9	XDFZZ	81349	FSS-2	. . . . CABLE,POWER,ELECTRI	(K-C062)	V
10	XDFZZ	81349	5529/12	. . . . CABLE,POWER,ELECTRI	(K-C087)	V

END OF FIGURE

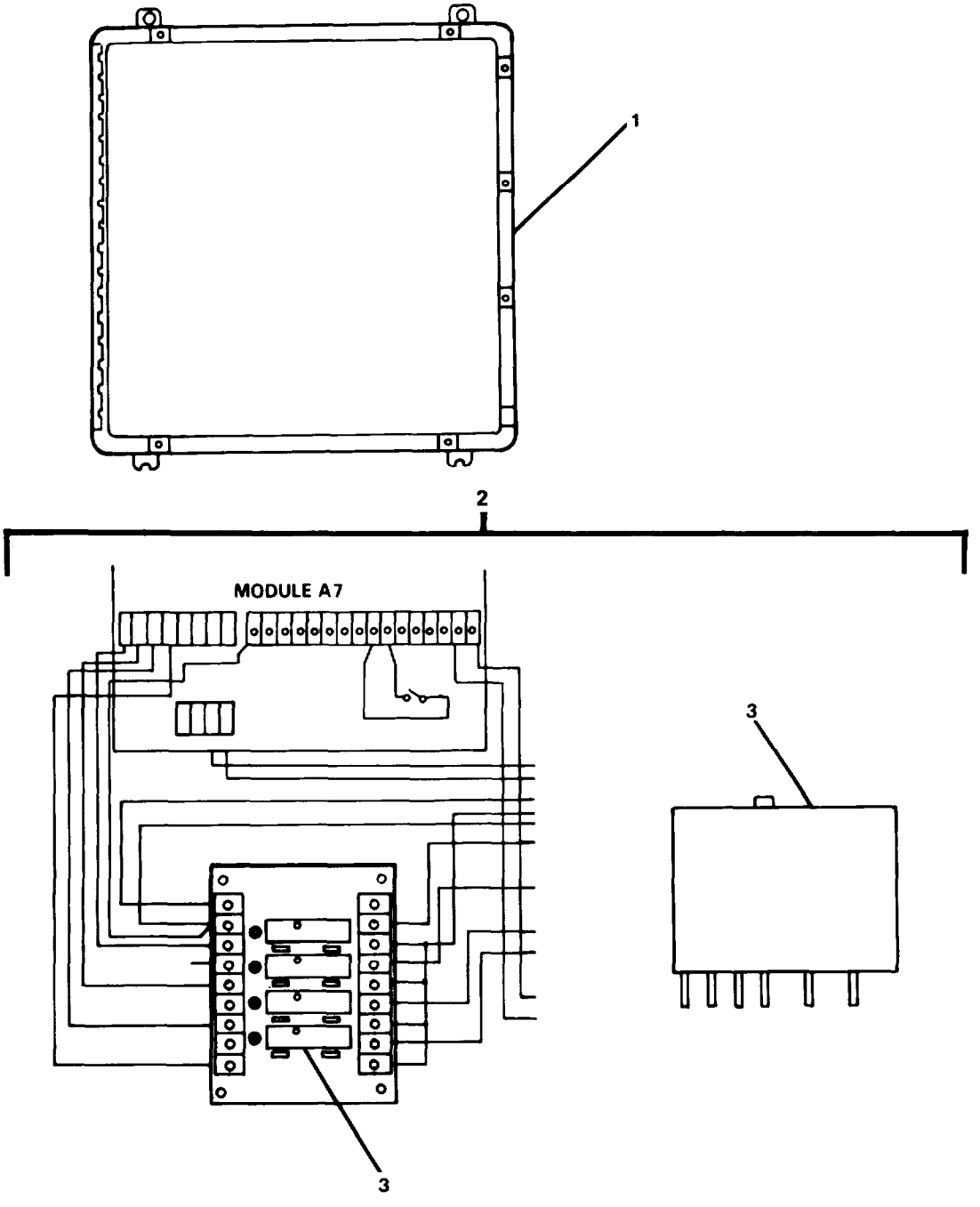

FIGURE 471. Remote Module. Port Engine. 02-09510-000 (Sheet 1 of 2).

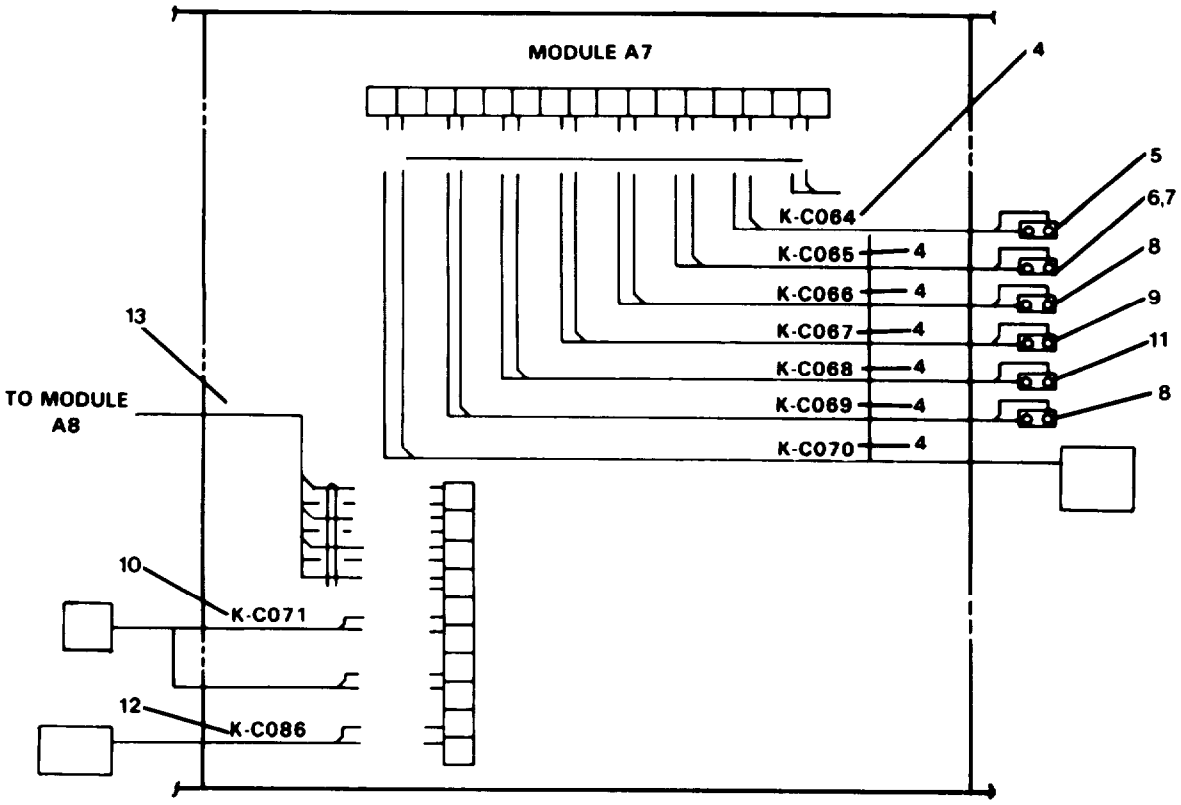

FIGURE 471. Remote Module. Port Engine. 02-09510-000 (Sheet 2 of 2).

(1) ITEM NO	(2) SMR CODE	(3) FSCM	(4) PART NUMBER	(5) DESCRIPTION AND USABLE ON CODES(UOC)		(6) QTY
				GROUP 18 BASIC CRAFT		
				FIG. 471 REMOTE MODULE, PORT ENGINE 02-09510-000		
1	XDFZZ	73396	83-00100-000	. . . ENCLOSURE		1
2	XDFFF	73396	02-09510-000	. . . REMOTE MODULE,PORT		1
3	PACZZ	73396	91-2003-0000	. . . . SWITCH,SOLID STATE		4
4	XDFZZ	81349	LSDSGU-4	. . . . CABLE,POWER,ELECTRI	(KL-C064)	V
5	XDCZZ	73396	61-1700-001	. . . . SWITCH,LIQUID LEVEL		1
6	XDFZZ	04034	85733	. . . . CLAMP ASSEMBLY		1
7	PACZZ	04034	86435	. . . . SWITCH,SOLID STATE		1
8	XDCZZ	73396	61-2050-000	. . . . SWITCH,LIQUID LEVEL		1
9	PACZZ	01121	836-A2J	. . . . SWITCH,PRESSURE		1
10	XDFZZ	81349	FSS-4	. . . . CABLE,POWER,ELECTRI	(K-C071)	V
11	PACZZ	19253	P1S-3030	. . . . SWITCH,PRESSURE		1
12	XDFZZ	81349	LS2SWU-3	. . . . CABLE,POWER,ELECTRI	(K-C086)	V
13	XDFZZ	81349	FSS-2	. . . . CABLE,POWER,ELECTRI	(K-C063)	V

END OF FIGURE

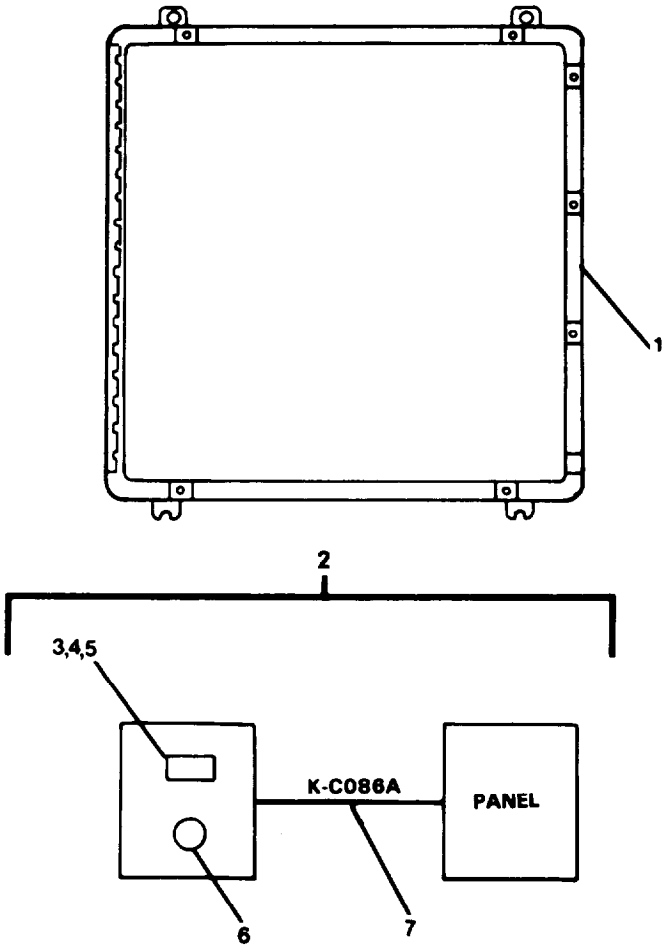

FIGURE 472. Panel. Annunciator. Engineer's Quarters 02-09710-001.

(1) ITEM NO	(2) SMR CODE	(3) FSCM	(4) PART NUMBER	(5) DESCRIPTION AND USABLE ON CODES(UOC)	(6) QTY
				GROUP 18 BASIC CRAFT	
				FIG. 472 PANEL, ANNUNCIATOR, ENGINEER'S QUARTERS, 02-09710-001	
1	XDFZZ	73396	11-0003-001	. . .ENCLOSURE	1
2	XDFFF	73396	02-09710-001	. . .PANEL,ANNUNCIATOR,E	1
3	PACZZ	73396	71-1022-000	. . . .SWITCH,PUSH	1
4	PACZZ	73396	71-1022-108	. . . .LENS,LIGHT (ENGINEERS ASSIST)	1
5	PACZZ	73396	71-1021-000	. . . . LAMP,INCANDESCENT (28 VOLT)	2
6	PACZZ	73396	41-1000-003	. . . .ALARM,AUDIBLE	1
7	XDFZZ	81349	FSS-4	. . . .CABLE,POWER,ELECTRI (KC086A)	V

END OF FIGURE

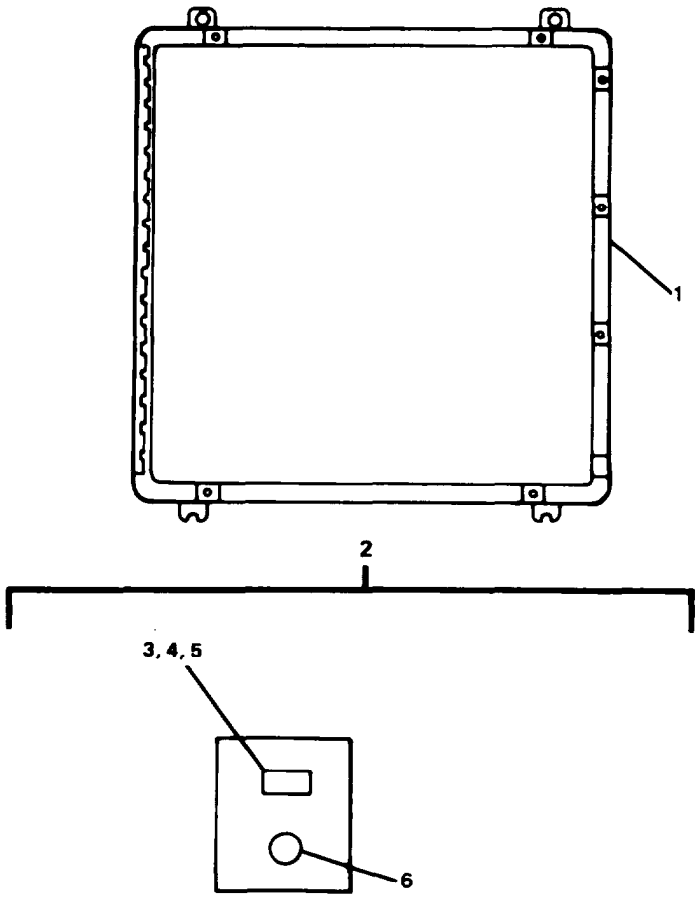

FIGURE 473. Panel, Annunciator, Galley, 02-09710-002.

(1) ITEM NO	(2) SMR CODE	(3) FSCM	(4) PART NUMBER	(5) DESCRIPTION AND USABLE ON CODES(UOC)	(6) QTY
				GROUP 18 BASIC CRAFT	
				FIG. 473 PANEL, ANNUNCIATOR, GALLEY 02-09710-002	
1	XDFZZ	73396	11-0003-001	. . .ENCLOSURE	1
2	XDFFF	73396	02-09710-002	. . .PANEL,ANNUNCIATOR,G	1
3	PAFZZ	73396	71-1022-000	. . . SWITCH,PUSH	1
4	PAFZZ	73396	71-1022-108	. . .LENS,LIGHT (ENGINEERS ASSIST)	1
5	PAFZZ	73396	71-1021-000	. . .LAMP,INCANDESCENT (28 VOLT)	2
6	PAFZZ	73396	41-1000-003	. . .ALARM,AUDIBLE	1

END OF FIGURE

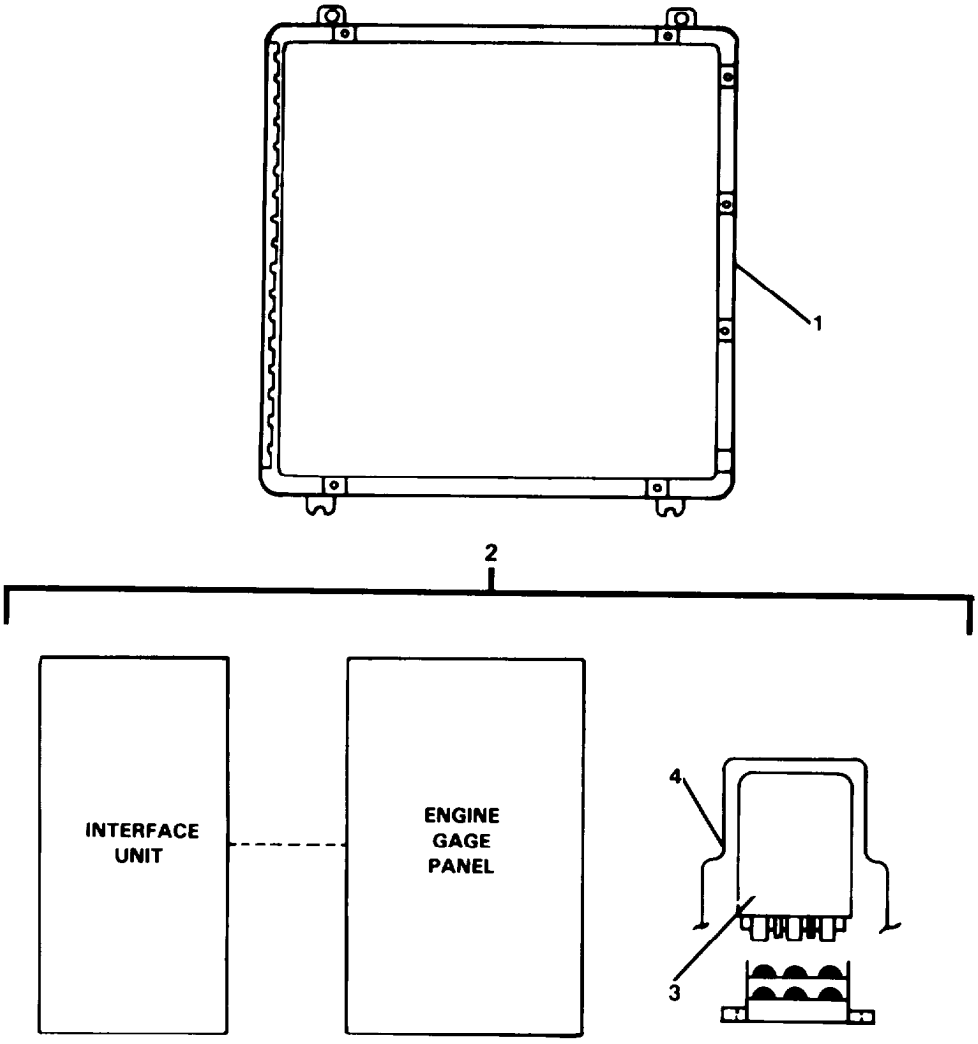

FIGURE 474. Interface Unit. 02-09000-000.

(1) ITEM NO	(2) SMR CODE	(3) FSCM	(4) PART NUMBER	(5) DESCRIPTION AND USABLE ON CODES(UOC)	(6) QTY
				GROUP 18 BASIC CRAFT	
				FIG. 474 INTERFACE UNIT, 02-09000-000	
1	XDFZZ	73396	11-0003-000	. . . ENCLOSURE	1
2	XDCOO	73396	02-09000-000	. . . INTERFACE UNIT ASSE	1
3	PACZZ	73396	91-1000-000	. . . . RELAY,ELECTROMAGNET	3
4	XDCZZ	73396	91-5001-001	. . . . RETAINER,RELAY	3

END OF FIGURE

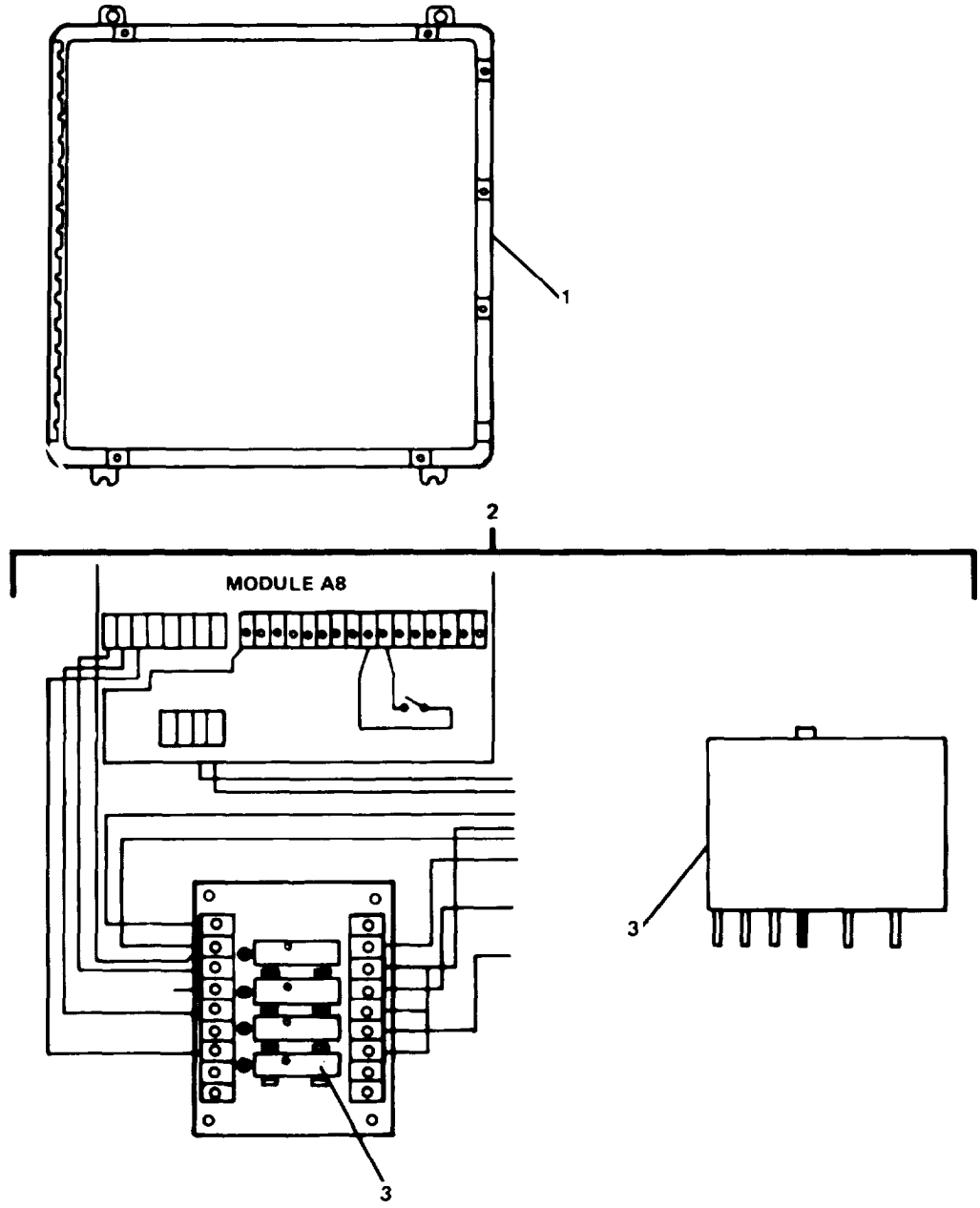

FIGURE 475. Remote Module. Starboard Engine. 02-095109-000 (Sheet 1 of 2).

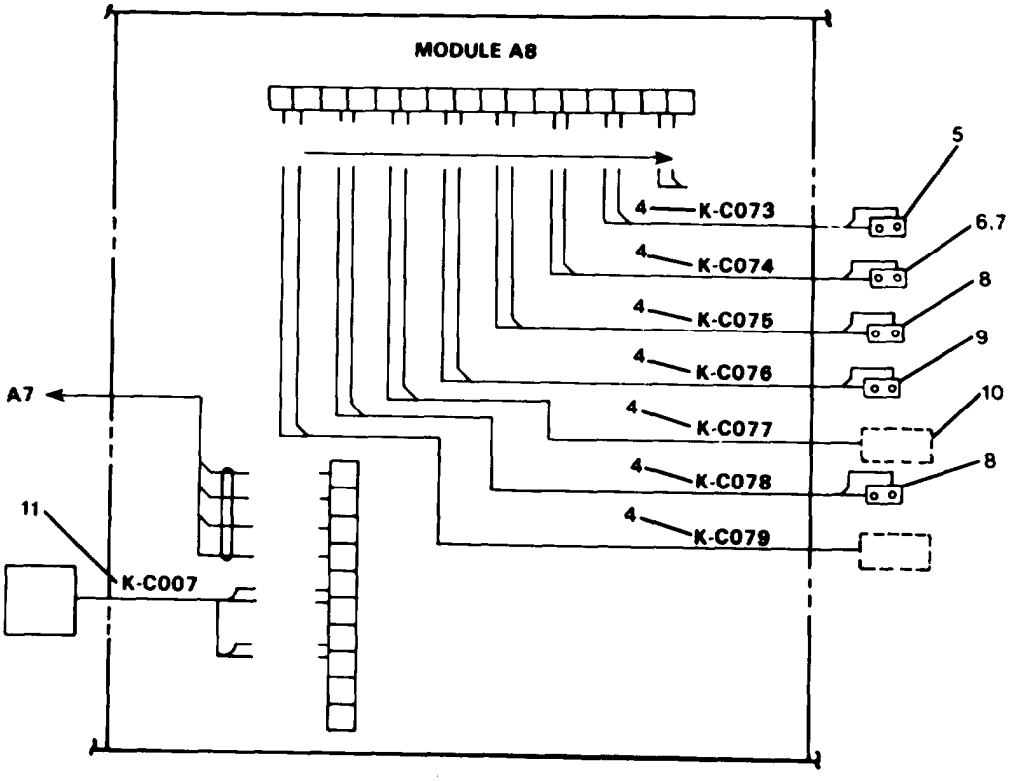

FIGURE 475. Remote Module. Starboard Engine. 02-09510-000 (Sheet 2 of 2).

(1) ITEM NO	(2) SMR CODE	(3) FSCM	(4) PART NUMBER	(5) DESCRIPTION AND USABLE ON CODES(UOC)	(6) QTY
				GROUP 18 BASIC CRAFT	
				FIG. 475 REMOTE MODULE, STARBOARD ENGINE, 02-095109-000	
1	XDFZZ	73396	83-00100-000	... ENCLOSURE	1
2	XDFFF	73396	02-09510-000	... REMOTE MODULE,STARB	1
3	PACZZ	73396	91-2003-000	.... SWITCH,SOLID STATE	2
4	XDFZZ	81349	LSDSGU-4	.... CABLE,POWER,ELECTRI (K-C073)	V
5	XDCZZ	73396	61-1700-001	.... SWITCH,LIQUID LEVEL	1
6	XDFZZ	04034	85733	.... CLAMP ASSEMBLY	1
7	PACZZ	04034	86435	.... SWITCH,SOLID STATE	1
8	XDCZZ	73396	61-2050-000	.... SWITCH,LIQUID LEVEL	2
9	PACZZ	01121	836-A2J	.... SWITCH,PRESSURE	1
10	PACZZ	19253	P1S-3030	.... SWITCH,PRESSURE	1
11	XDFZZ	81349	FSS-4	.... CABLE,POWER,ELECTRI (K-C007)	V

END OF FIGURE

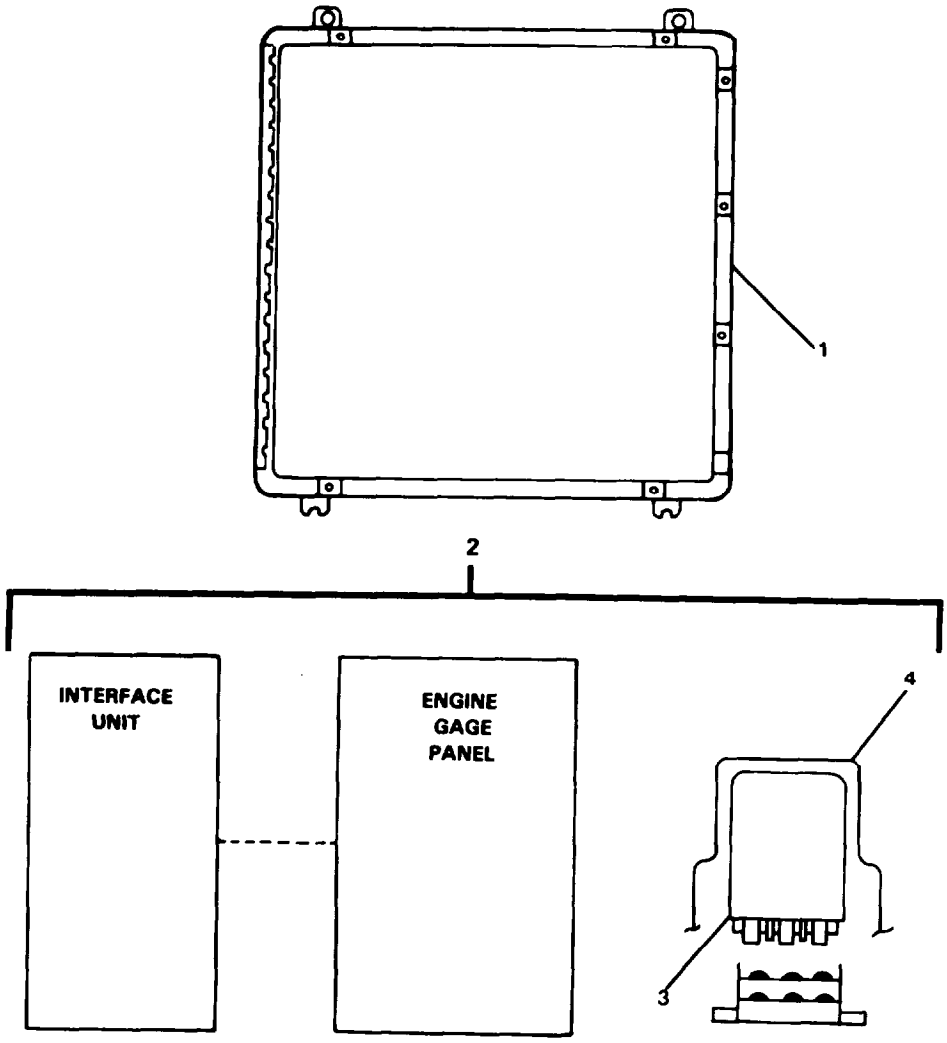

FIGURE 476. Interface Unit 02-09000-000.

(1) ITEM NO	(2) SMR CODE	(3) FSCM	(4) PART NUMBER	(5) DESCRIPTION AND USABLE ON CODES(UOC)	(6) QTY
				GROUP 18 BASIC CRAFT	
				FIG. 476 INTERFACE UNIT, 02-09000-000	
1	XDCZZ	73396	11-0003-000	... ENCLOSURE	1
2	XDCOO	73396	02-09000-000	... INTERFACE UNIT ASSE	1
3	PACZZ	73396	91-1000-000	.... RELAY,ELECTROMAGNET	3
4	XDCZZ	73396	91-5001-001	.... RETAINER,RELAY	3

END OF FIGURE

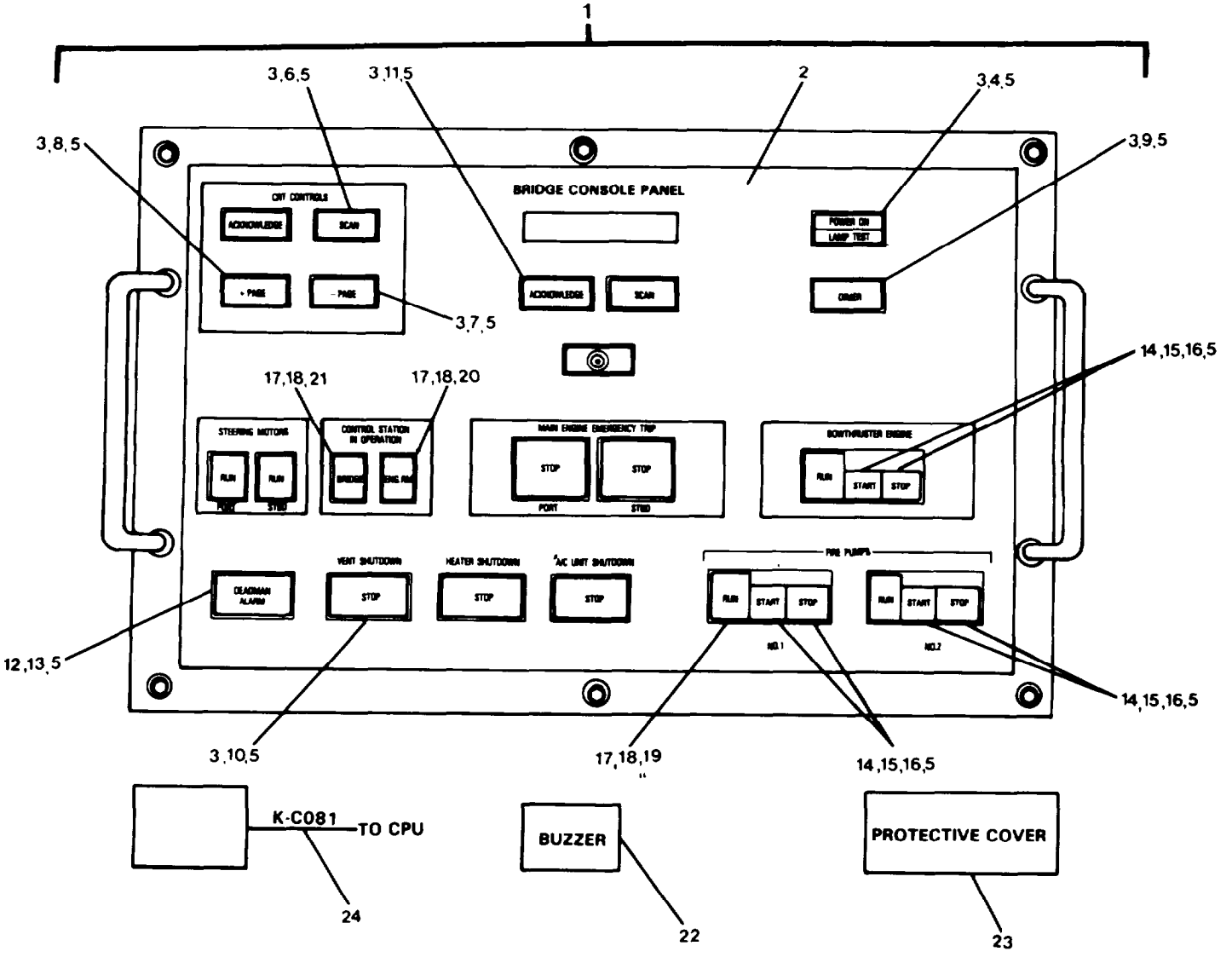

FIGURE 477. Panel Assembly. Bridge. 02-10230-000.

(1) ITEM NO	(2) SMR CODE	(3) FSCM	(4) PART NUMBER	(5) DESCRIPTION AND USABLE ON CODES(UOC)	(6) QTY
				GROUP 18 BASIC CRAFT	
				FIG. 477 PANEL ASSEMBLY, BRIDGE 02-10230-000	
1	XDFFF	73396	02-10230-000	. . . PANE L ASSEMBLY,BRID	1
2	XDFZZ	73396	81-00100-000	. . . . PANEL,BRIDGE CONTRO	1
3	PACZZ	73396	71-1022-000	. . . . . SWITCH,PUSH	13
4	PACZZ	73396	71-1022-100	. . . . . LENS,LIGHT (POWER ON LAMP TEST)	1
5	PACZZ	73396	71-1021-000	. . . . . LAMP,INCANDESCENT (28 VOLT)	34
6	PACZZ	73396	71-1022-101	. . . . . LENS,LIGHT (SCAN)	2
7	PACZZ	73396	71-1022-102	. . . . . LENS,LIGHT (MINUS PAGE)	1
8	PACZZ	73396	71-1022-103	. . . . . LENS,LIGHT (PLUG PAGE)	1
9	PACZZ	73396	71-1022-104	. . . . . LENS,LIGHT (DIMMER)	1
10	PACZZ	73396	71-1022-105	. . . . . LENS,LIGHT (STOP)	5
11	PACZZ	73396	71-1022-106	. . . . . LENS,LIGHT (ACKNOWLEDGE)	2
12	PACZZ	73396	71-1028-000	. . . . . SWITCH,PUSH	1
13	PACZZ	73396	71-1022-107	. . . . . LENS,LIGHT (DEADMAN ALARM)	1
14	PACZZ	73396	71-1529-000	. . . . . SWITCH,PUSH	3
15	PACZZ	73396	71-1529-001	. . . . . LENS,LIGHT (START)	3
16	PACZZ	73396	71-1529-002	. . . . . LENS,LIGHT (STOP)	3
17	PACZZ	73396	71-1026-000	. . . . . LIGHT,INDICATOR	7
18	PACZZ	73396	71-1021-001	. . . . . LAMP,INCANDESCENT (28 VOLT)	7
19	PACZZ	73396	71-1026-001	. . . . . LENS,LIGHT (RUN)	5
20	PACZZ	73396	71-1026-002	. . . . . LENS,LIGHT (ENGINE ROOM)	1
21	PACZZ	73396	71-1026-003	. . . . . LENS,LIGHT (BRIDGE)	1
22	PACZZ	73396	41-1005-000	. . . . . ALARM,AUDIBLE (BUZZER)	1
23	XDCZZ	73396	71-1529-003	. . . . . COVER,PROTECTIVE	1
24	XDFZZ	77408	5529/12	. . . . . CABLE,POWER,ELECTRI (K-C081)	V

END OF FIGURE

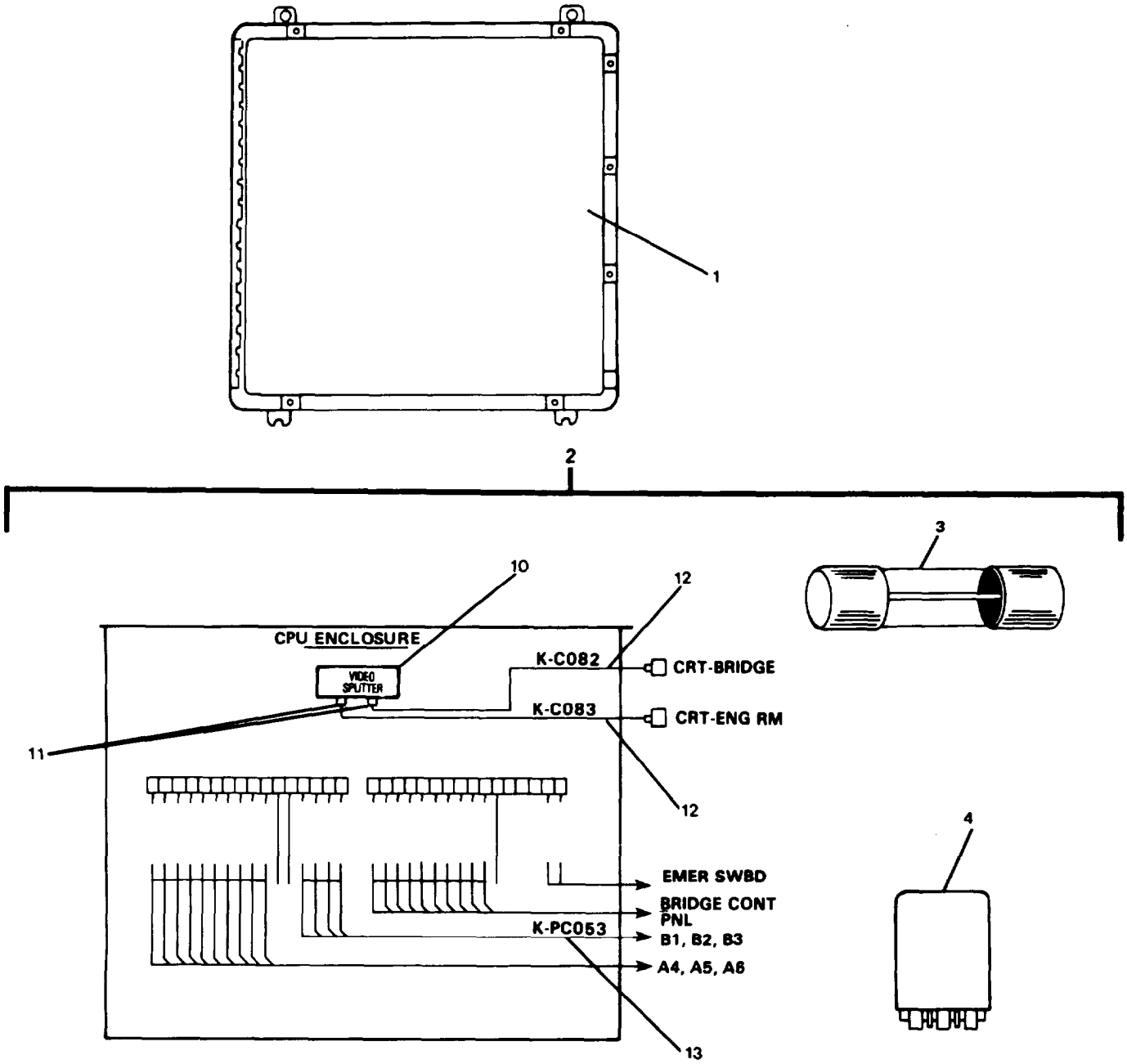

FIGURE 478. Central Processing Unit. 02-10215-000 (Sheet 1 of 4).

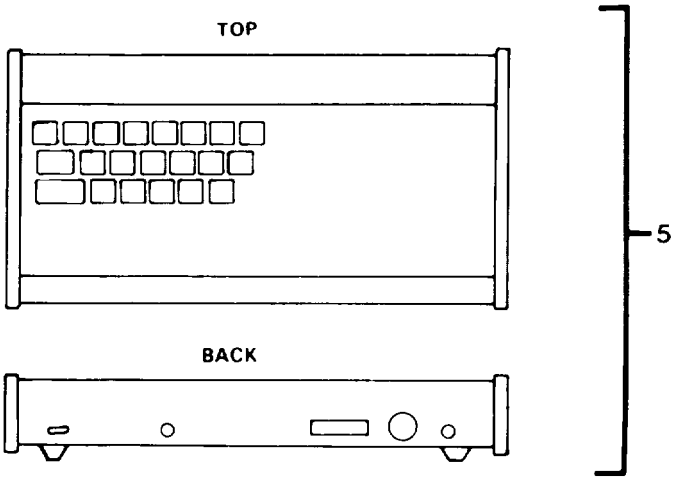

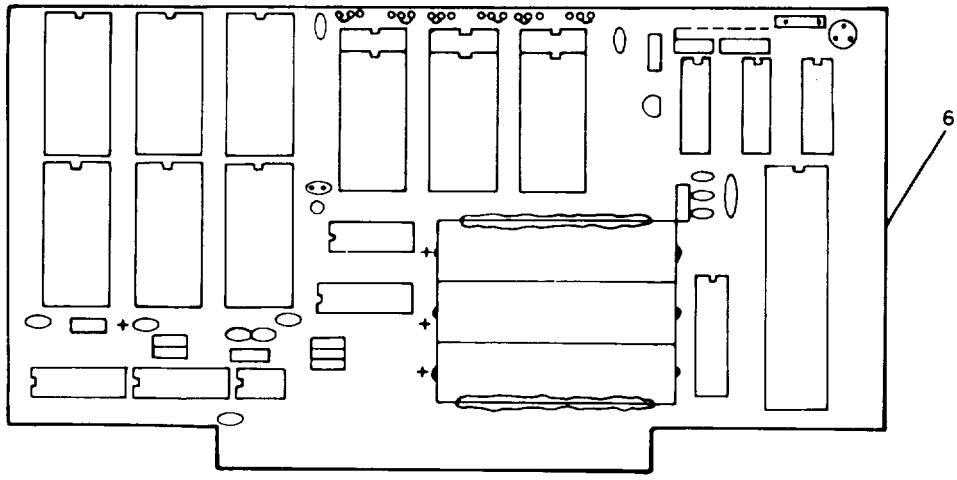

FIGURE 478. Central Processing Unit, 02-10215-000 (Sheet 2 of 4).

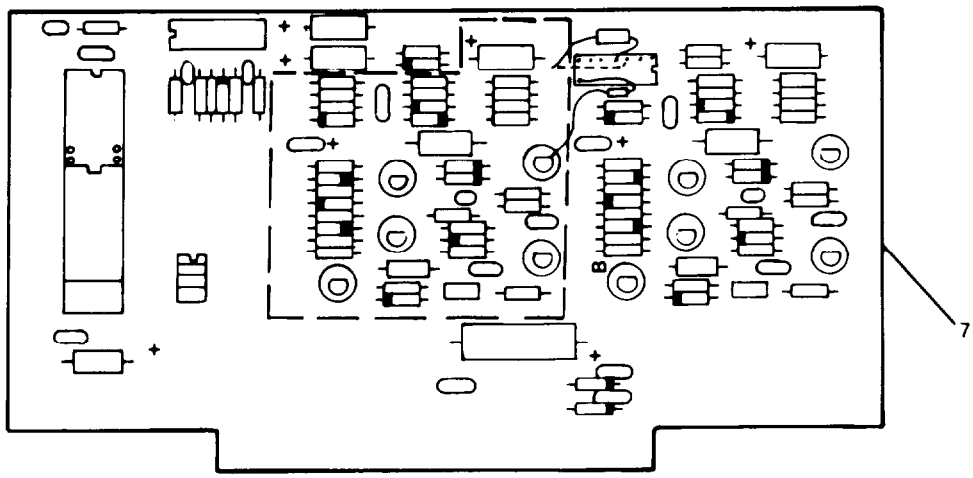

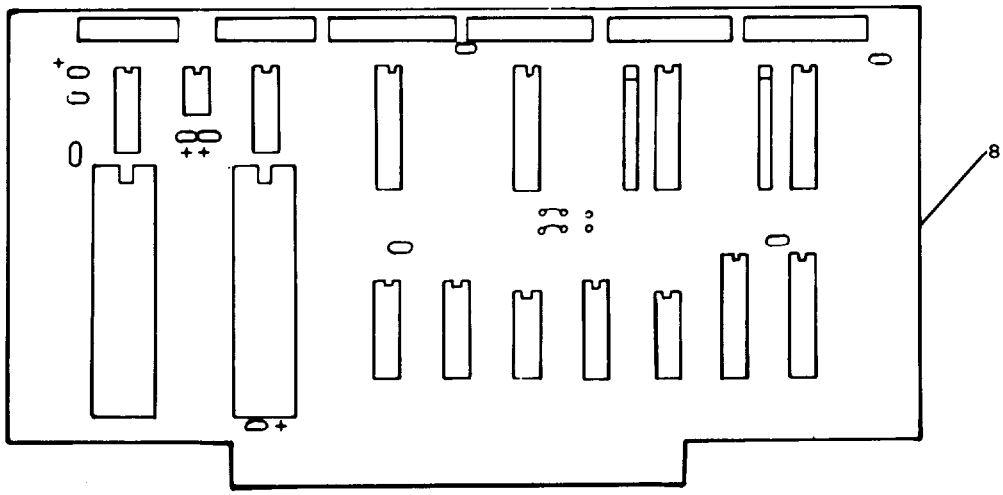

FIGURE 478. Central Processing Unit. 02-10215-000 (Sheet 3 of 4).

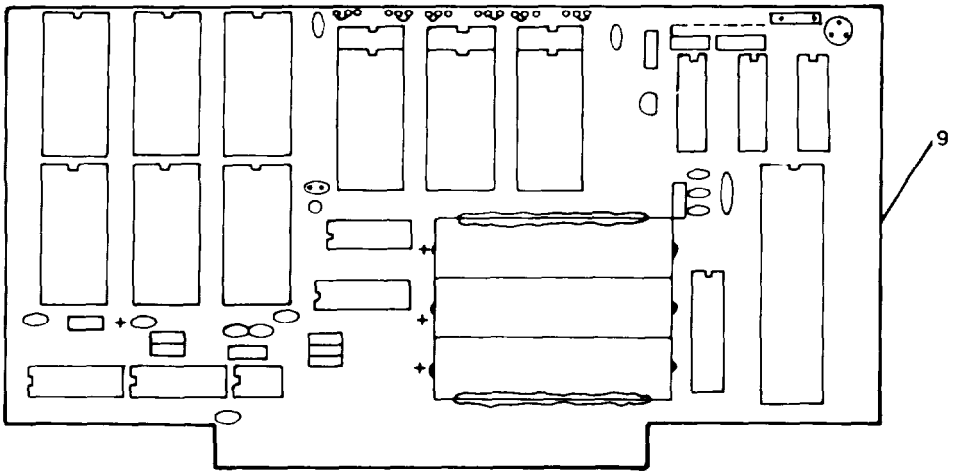

FIGURE 478. Central Processing Unit. 02-10215-000 (Sheet 4 of 4).

(1) ITEM NO	(2) SMR CODE	(3) FSCM	(4) PART NUMBER	(5) DESCRIPTION AND USABLE ON CODES(UOC)	(6) QTY
				GROUP 18 BASIC CRAFT	
				FIG. 478 CENTRAL PROCESSING UNIT, 02-10215-000	
1	XDFZZ	73396	83-00100-000	. . . ENCLOSURE	1
2	XDFFF	73396	02-10215-000	. . . CENTRAL PROCESSING	1
3	PACZZ	73396	68-00009-003	. . . . FUSE,CARTRIDGE (3 AMP)	2
4	PACZZ	73396	51-0000-9-003	. . . . RELAY,ELECTROMAGNET	7
5	PAFZZ	73396	03-09505-000	. . . . KEYBOARD,DATA ENTRY	1
6	PAFZZ	73396	05-10301-000	. . . . PRINTED CIRCUIT BOA (Z-8)	2
7	PAFZZ	73396	05-09502-000	. . . . PRINTED CIRCUIT BOA MASTER CARD	2
8	PAFZZ	73396	05-09503-000	. . . .. PRINTED CIRCUIT BOA MULTI CARD	2
9	PAFZZ	73396	05-09505-100	. . . .. PRINTED CIRCUIT BOA POWER SUPPLY	2
10	XDFZZ	73396	65-3000-002	. . . . SPLITTER,VIDEO	1
11	XDFZZ	01113	F-59A	. . . . CONNECTOR,PLUG,ELEC	2
12	XDFZZ	81349	RG59U	. . . . CABLE,RADIO,FREQUEN (K-C082)	V
13	XDFZZ	81349	FSS-2	. . . .. CABLE,POWER,ELECTRI (K-C053)	V

END OF FIGURE

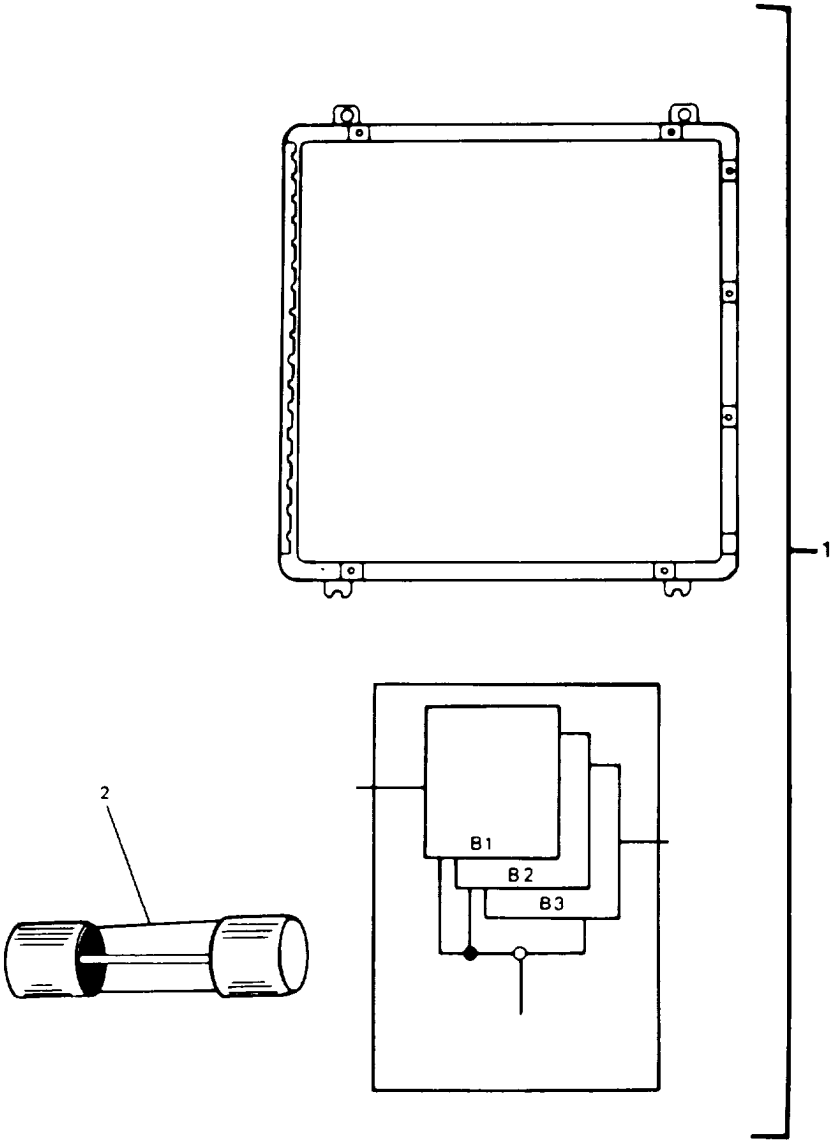

FIGURE 479. Analog Remote Module Assembly 02-10210-000 (Sheet 1 of 9).

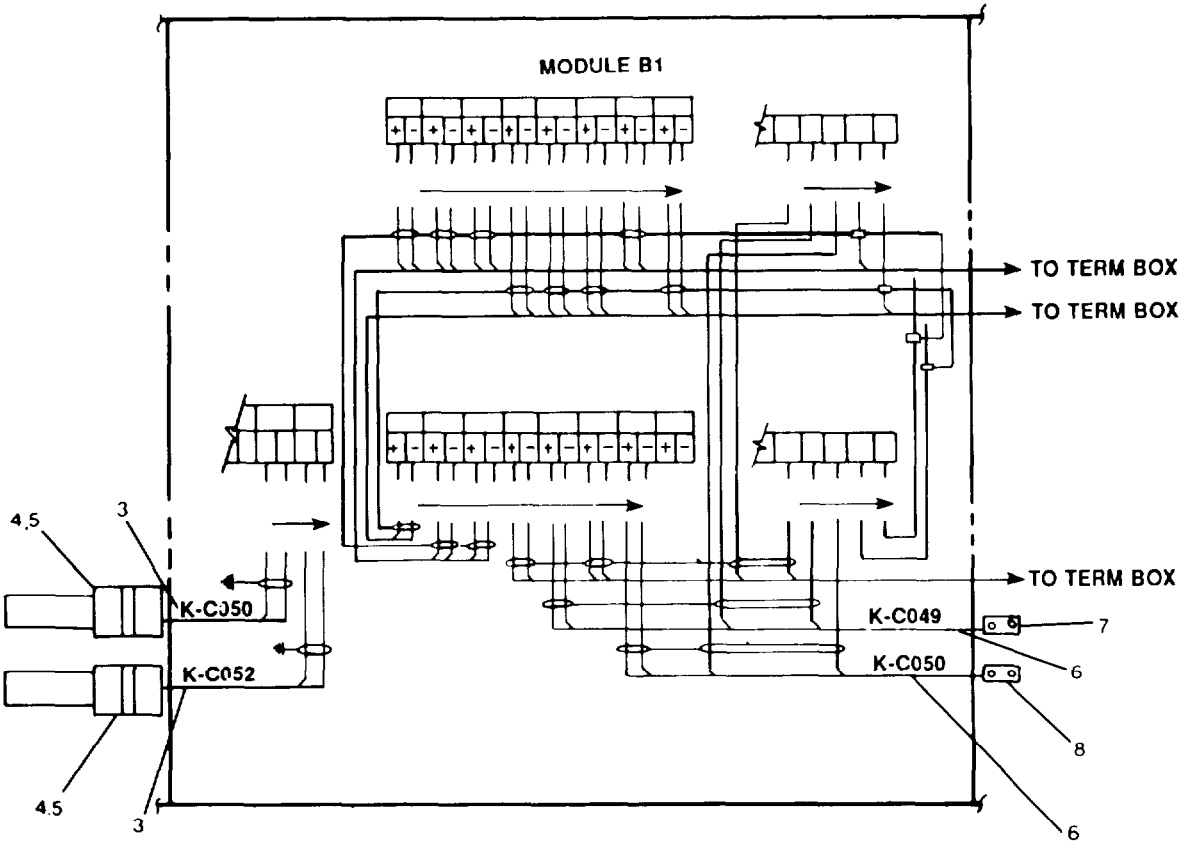

FIGURE 479. Analog Remote Module Assembly 02-10210-000 (Sheet 2 of 9).

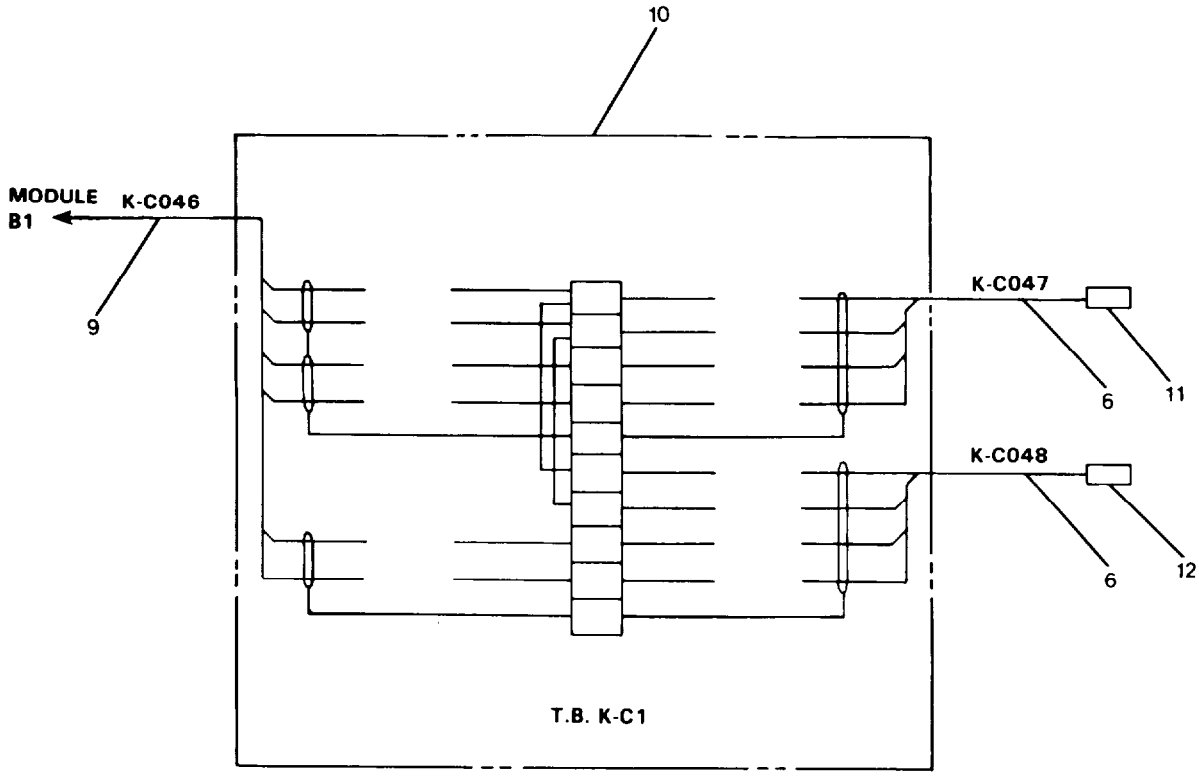

FIGURE 479. Analog Remote Module Assembly 02-10210-000 (Sheet 3 of 9).

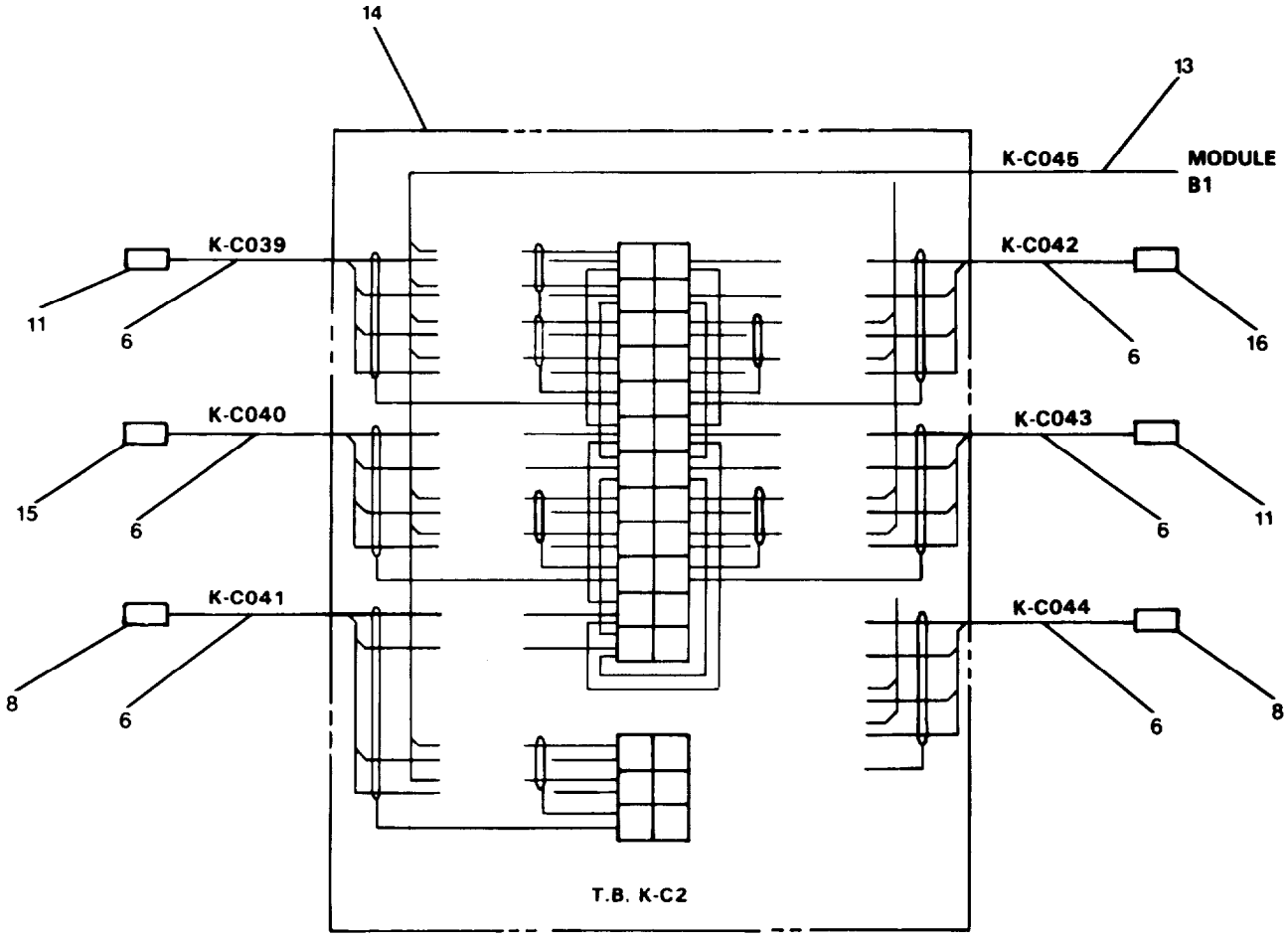

FIGURE 479. Analog Remote Module Assembly 02-10210-000 (Sheet 4 of 9).

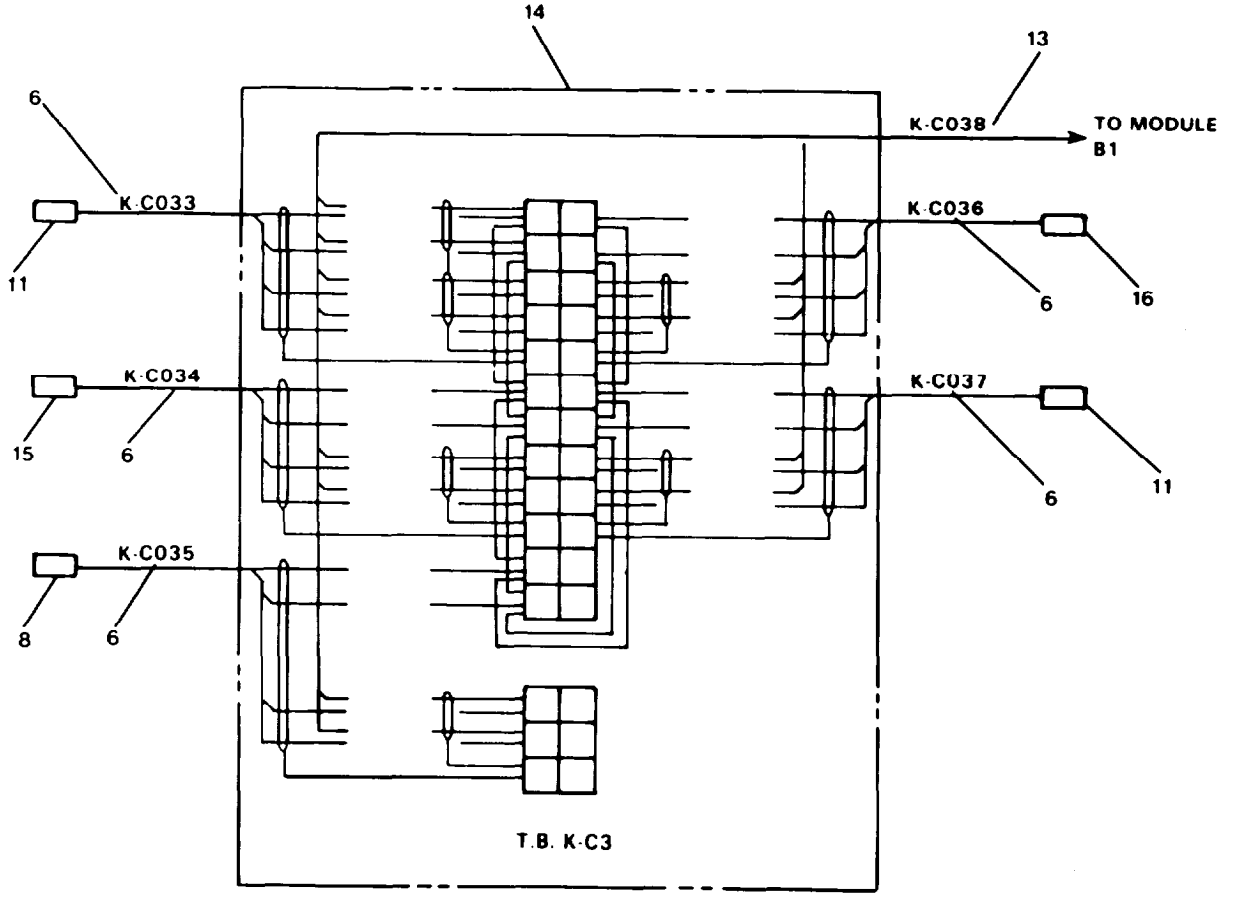

FIGURE 479. Analog Remote Module Assembly 02-10210-000 (Sheet 5 of 9).

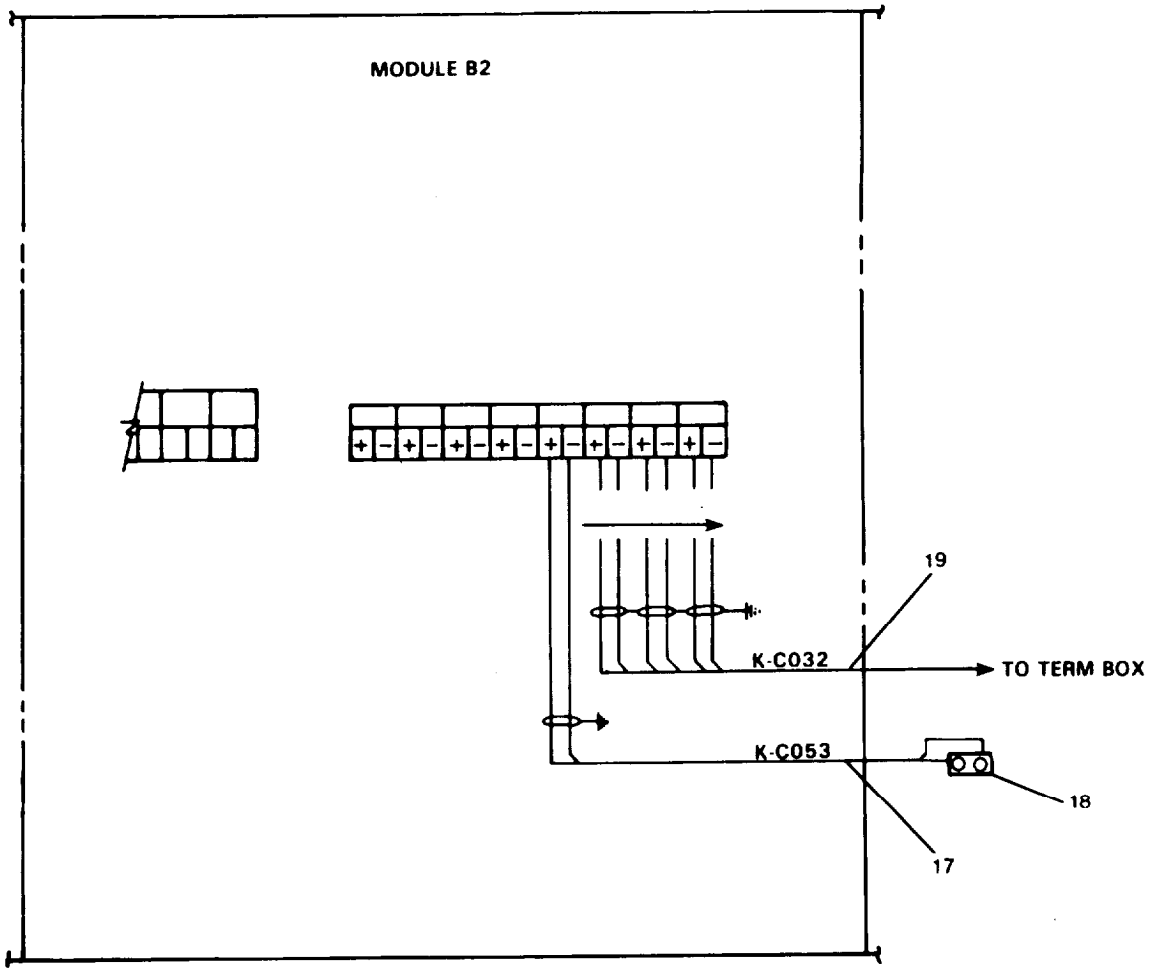

FIGURE 479. Analog Remote Module Assemby 02-10210-000 (Sheet 6 of 9).

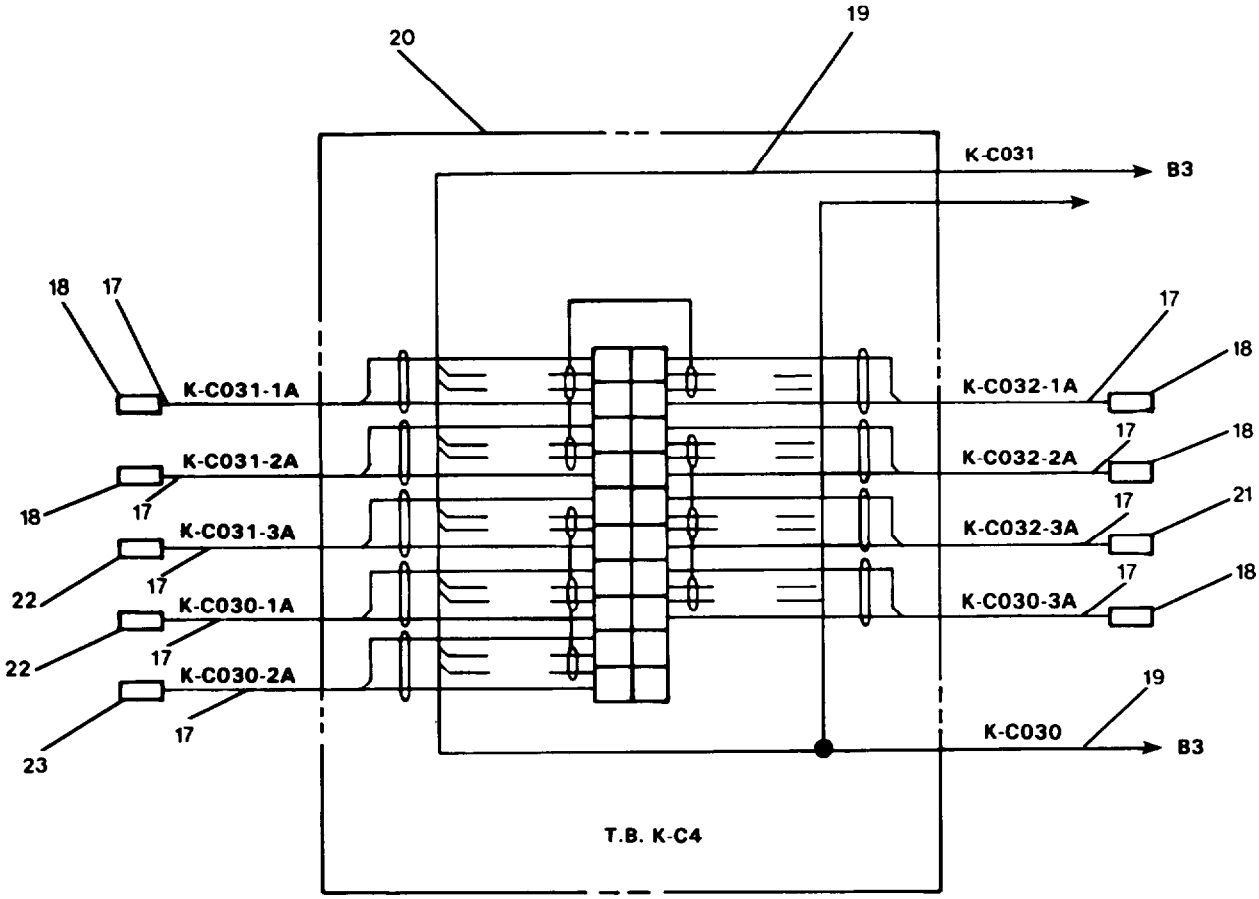

FIGURE 479. Analog Remote Module Assembly 02-10210-000 (Sheet 7 of 9).

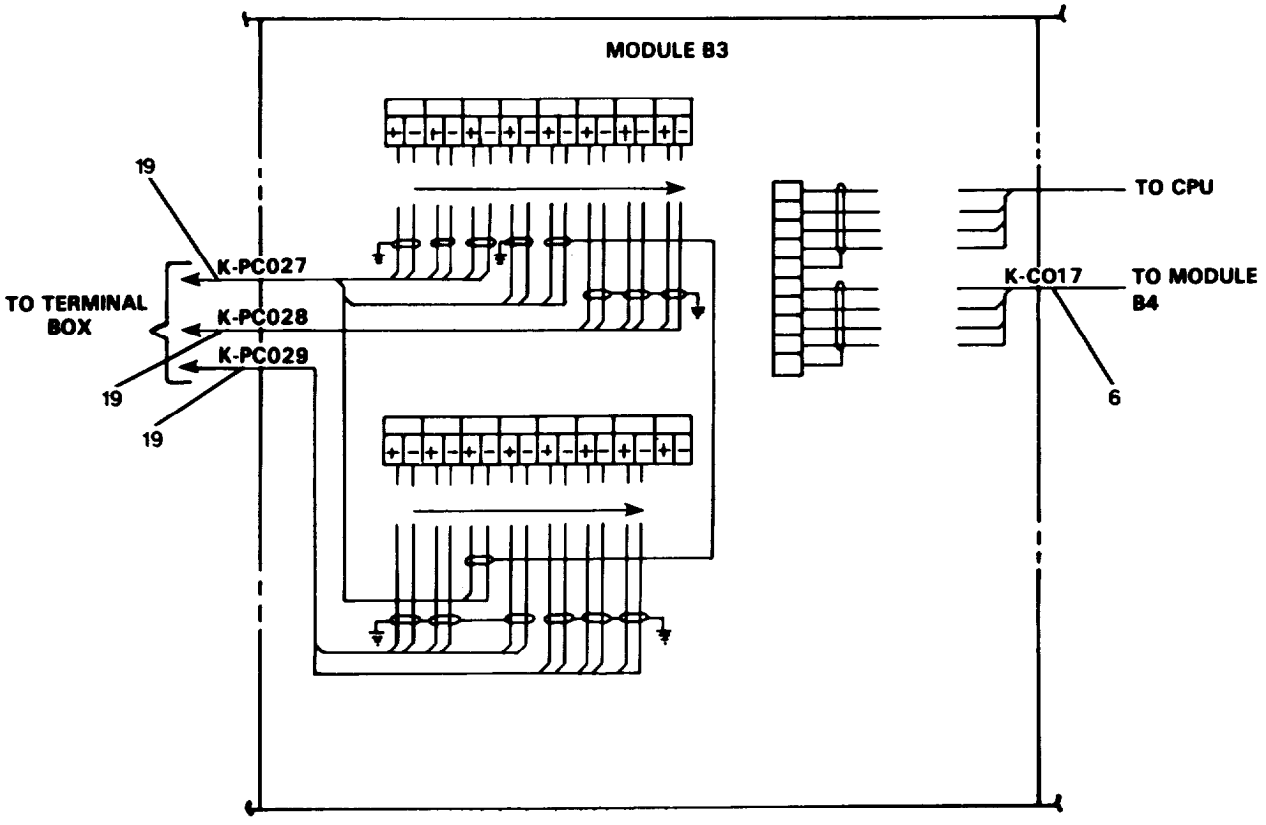

FIGURE 479. Analog Remote Module Assembly 02-10210-000 (Sheet 8 of 9).

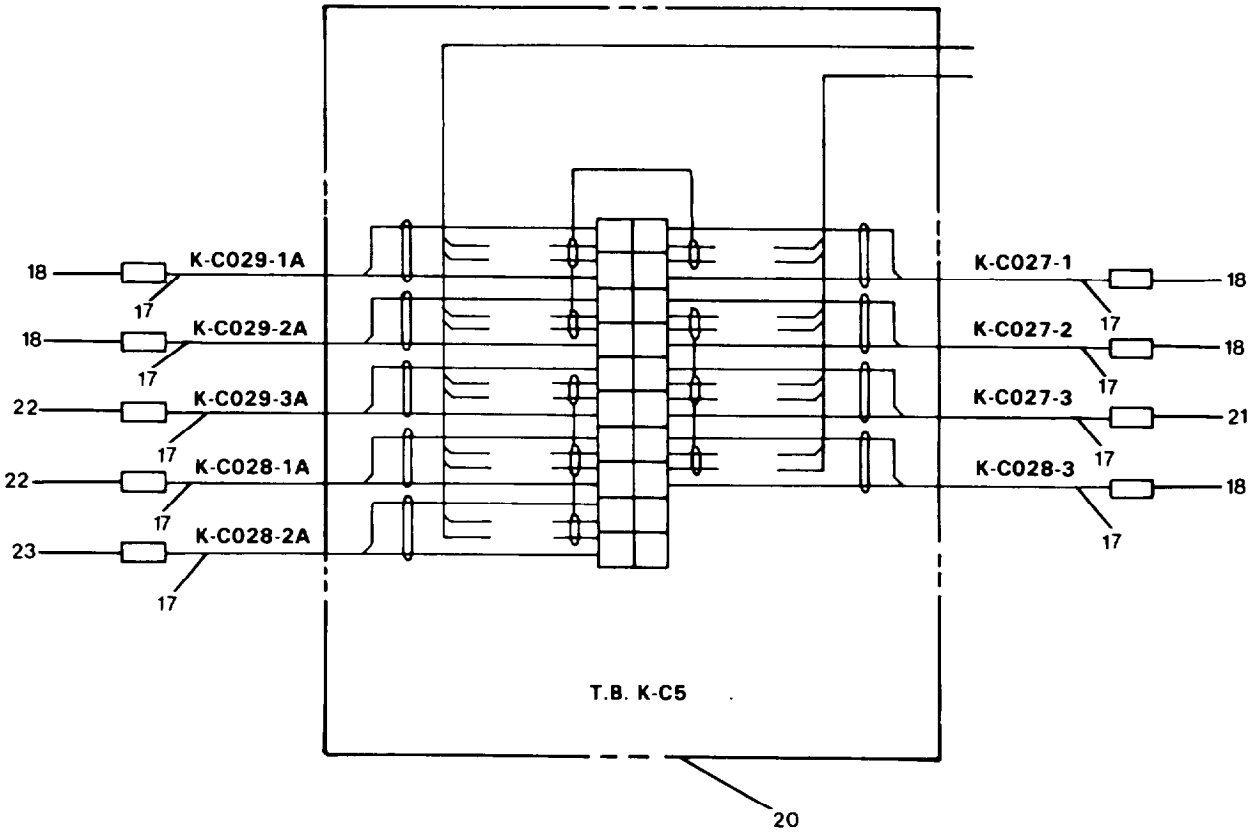

FIGURE 479. Analog Remote Module Assembly 02-10210-000 (Sheet 9 of 9).

(1) ITEM NO	(2) SMR CODE	(3) FSCM	(4) PART NUMBER	(5) DESCRIPTION AND USABLE ON CODES(UOC)	(6) QTY
				GROUP 18 BASIC CRAFT	
				FIG. 479 REMOTE MODULE ASSEMBLY 02-10210-000	
1	XDFFF	73396	02-10210-000	...ANALOG REMOTE MODUL	1
2	PACZZ	73396	68-00009-001	....FUSE,CARTRIDGE (1 AMP)	3
3	XDFZZ	81349	DSS-2	....CABLE,POWER,ELECTRI (K-C051)	V
4	PAFZZ	73396	62-7008-000	....TACHOMETER,ELECTRIC	2
5	PAFZZ	73396	62-7008-001	....CONNECTOR,TACHOMETE	2
6	XDFZZ	81349	FSS-2	....CABLE,POWER,ELECTRI (K-C049)	V
7	PACZZ	73396	62-2300-000	....TRANSMITTER,PRESSUR	1
8	PACZZ	73396	62-2150-000	....TRANSMITTER,PRESSUR	4
9	XDFZZ	81349	LS2SWU-3	....CABLE,POWER,ELECTRI (K-C046)	V
10	XDFZZ	81349	M24558/3-528	....TERMINAL BOX	1
11	PACZZ	73396	62-2100-000	.... TRANSMITTER,PRESSUR	5
12	PACZZ	73396	62-2300-000	....TRANSMITTER,PRESSUR	1
13	XDFZZ	81349	LS2SWU-7	....CABLE,POWER,ELECTRI (K-CO45)	V
14	XDFZZ	81349	M24558/5-434	....TERMINAL BOX	2
15	PACZZ	73396	62-2061-000	....TRANSMITTER,PRESSUR	2
16	PAFZZ	73396	62-2500-000	....TRANSMITTER,PRESSUR	2
17	XDFZZ	77408	5711/1601	....CABLE,POWER,ELECTRI (K-C053)	V
18	PACZZ	73396	62-6005-001	....SENSOR,TEMPERATURE	11
19	XDFZZ	77408	5721/2004	....CABLE,POWER,ELECTRI (K-C032)	V
20	XDFZZ	81349	M24558/4-432-1	....TERMINAL BOX	1
21	PACZZ	73396	62-6009-001	....SENSOR,TEMPERATURE	2
22	PACZZ	73396	62-6007-001	....SENSOR,TEMPERATURE	4
23	PACZZ	73396	62-6010-001	....SENSOR,TEMPERATURE	2

END OF FIGURE

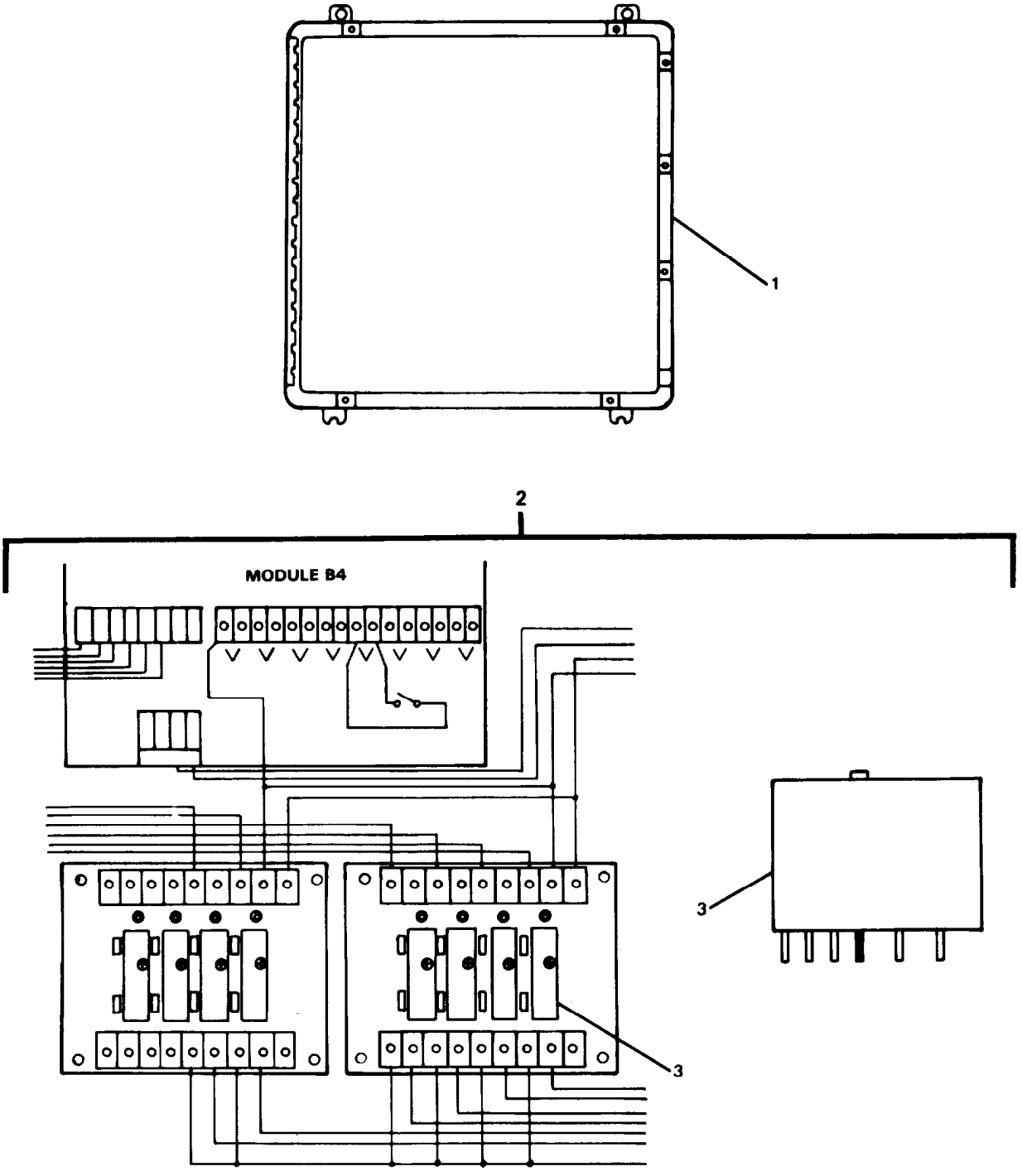

FIGURE 480. Remote Module, Generators, 02-09510-000 (Sheet 1 of 2).

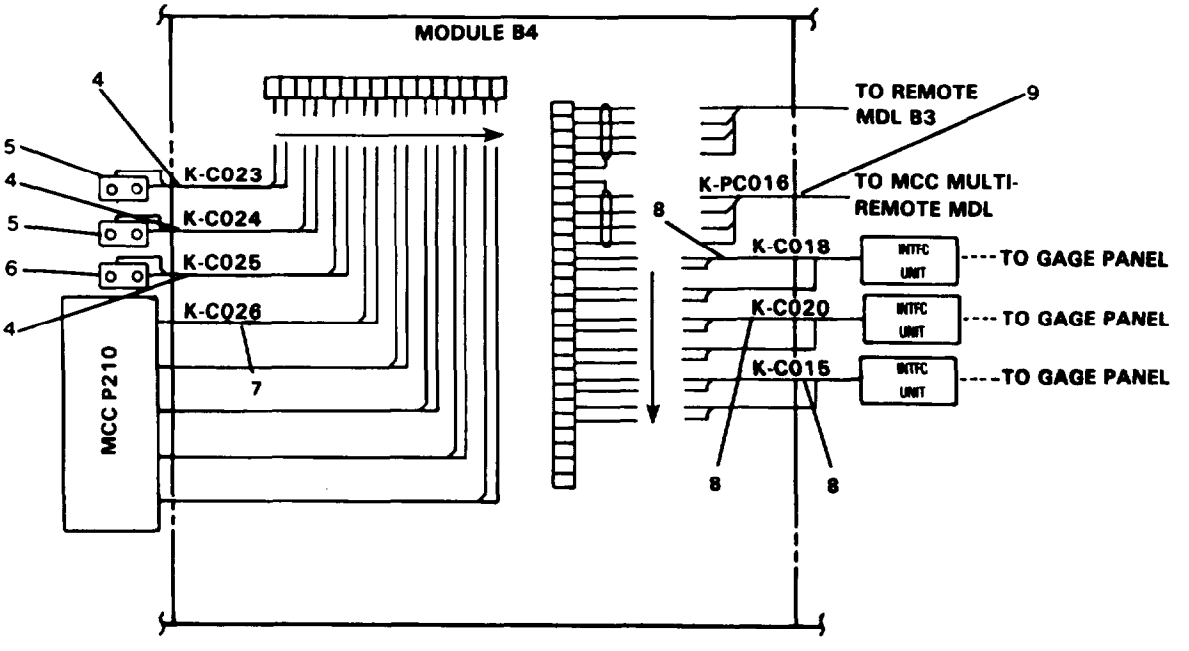

FIGURE 480. Remote Module. Generators. 02-09510-000 (Sheet 2 of 2).

(1) ITEM NO	(2) SMR CODE	(3) FSCM	(4) PART NUMBER	(5) DESCRIPTION AND USABLE ON CODES(UOC)	(6) QTY
				GROUP 18 BASIC CRAFT	
				FIG. 480 REMOTE MODULE, GENERATORS, 02-09510-000	
1	XDFZZ	73396	83-00100-000	...ENCLOSURE	1
2	XDFFF	73396	02-09510-000	...REMOTE MODULE, GENER	1
3	PACZZ	73396	91-2003-000	....SWITCH, SOLID STATE	6
4	XDFZZ	81349	LSDSGU-4	....CABLE, POWER, ELECTRI (K-C023)	V
5	PACZZ	73396	61-2050-000	....SWITCH, LIQUID LEVEL	2
6	PACZZ	73396	61-1700-003	....SWITCH, LIQUID LEVEL	1
7	XDFZZ	81349	LSMSCU-10	....CABLE, POWER, ELECTRI (K-C026)	V
8	XDFZZ	81349	F S S - 4	....CABLE, POWER, ELECTRI (K-C018)	v
9	XDFZZ	81349	FSS-2	....CABLE, POWER, ELECTRI (K-PC016)	v

END OF FIGURE

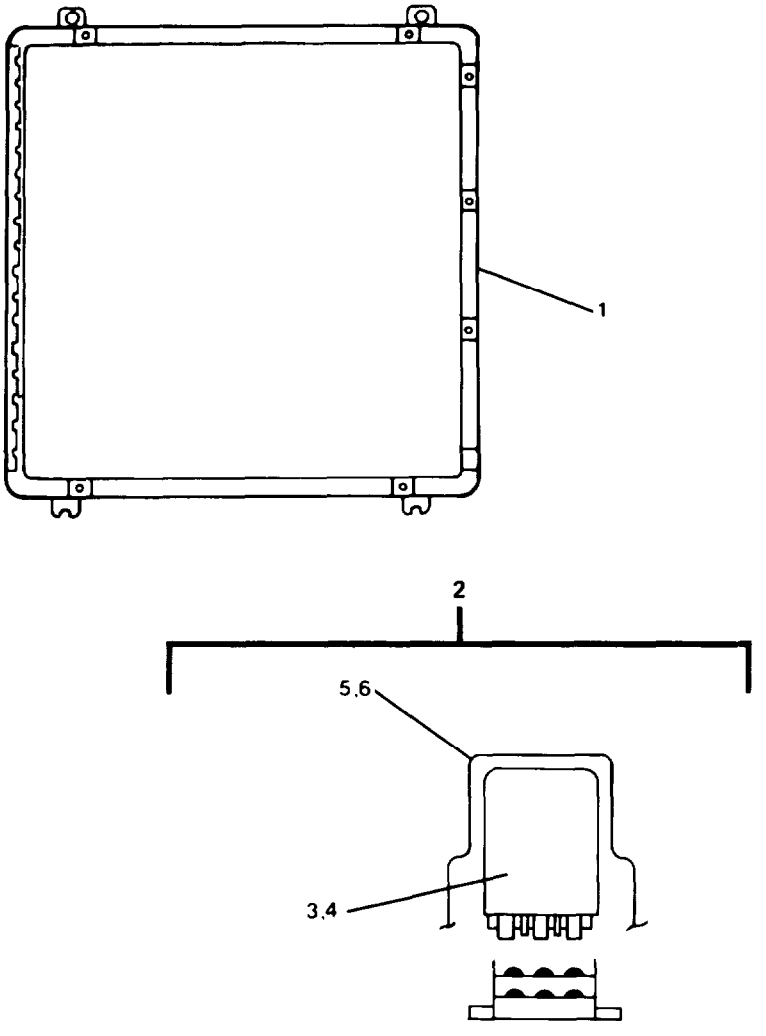

FIGURE 481. Interface Unit. 02-9100-000.

(1) ITEM NO	(2) SMR CODE	(3) FSCM	(4) PART NUMBER	(5) DESCRIPTION AND USABLE ON CODES(UOC)	(6) QTY
				GROUP 18 BASIC CRAFT	
				FIG. 481 INTERFACE UNIT, 02-9100-000	
1	XDFZZ	73396	11-0003-000	...ENCLOSURE	1
2	XDFFF	73396	02-09100-000	...INTERFACE UNIT ASSE	1
3	PACZZ	73396	91-1000-000	....RELAY,ELECTROMAGNET	2
4	PACZZ	73396	91-1011-000	....RELAY,ELECTROMAGNET	1
5	XDCZZ	73396	91-5001-001	....RETAINER,RELAY	2
6	XDCZZ	73396	91-5002-001	....RETAINER,RELAY	1

END OF FIGURE

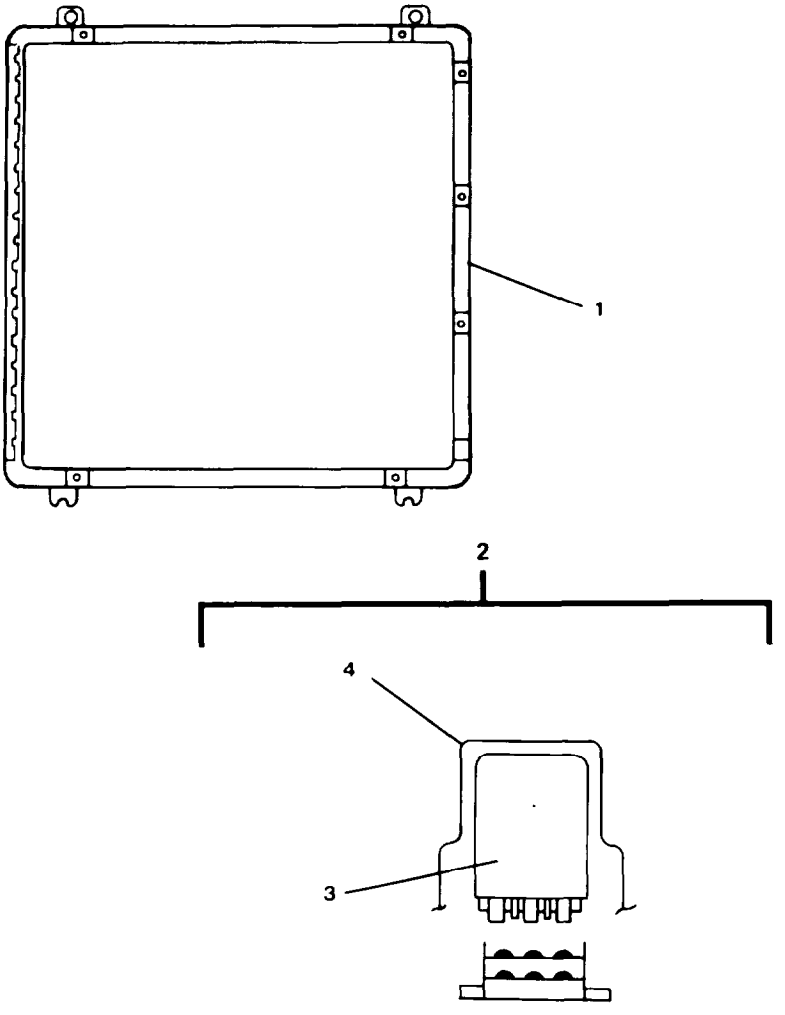

FIGURE 482. Interface Unit. 02-09000-000.

(1) ITEM NO	(2) SMR CODE	(3) FSCM	(4) PART NUMBER	(5) DESCRIPTION AND USABLE ON CODES(UOC)	(6) QTY
				GROUP 18 BASIC CRAFT	
				FIG. 482 INTERFACE UNIT, 02-09000-000	
1	XDFZZ	73396	11-0003-000	...ENCLOSURE	1
2	XDFFF	73396	02-09000-000	... INTERFACE UNIT ASSE	1
3	PACZZ	73396	91-1000-000	....RELAY,ELECTROMAGNET	3
4	XDCZZ	73396	91-5001-001	....RETAINER,RELAY	3

END OF FIGURE

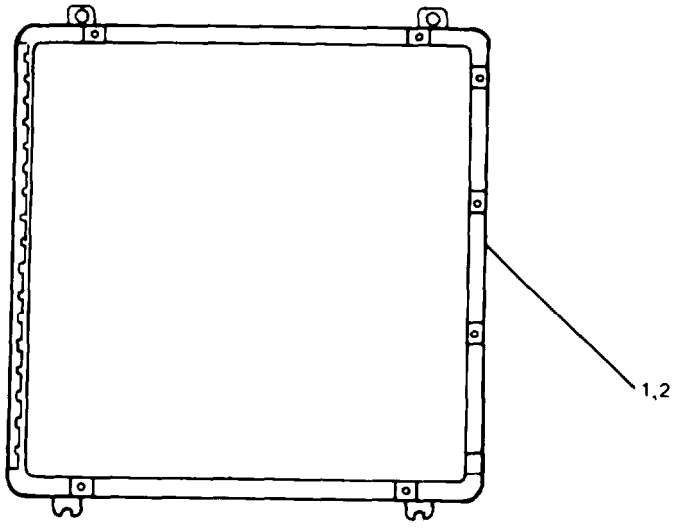

FIGURE 483. Interface Unit. 02-09200-000.

(1) ITEM NO	(2) SMR CODE	(3) FSCM	(4) PART NUMBER	(5) DESCRIPTION AND USABLE ON CODES(UOC)	(6) QTY
				GROUP 18 BASIC CRAFT	
				FIG. 483 INTERFACE UNIT, 02-09200-000	
1	XDFZZ	73396	11-0003-000	...ENCLOSURE	1
2	XDFFF	73396	02-09200-000	...INTERFACE UNIT ASSE	1

END OF FIGURE

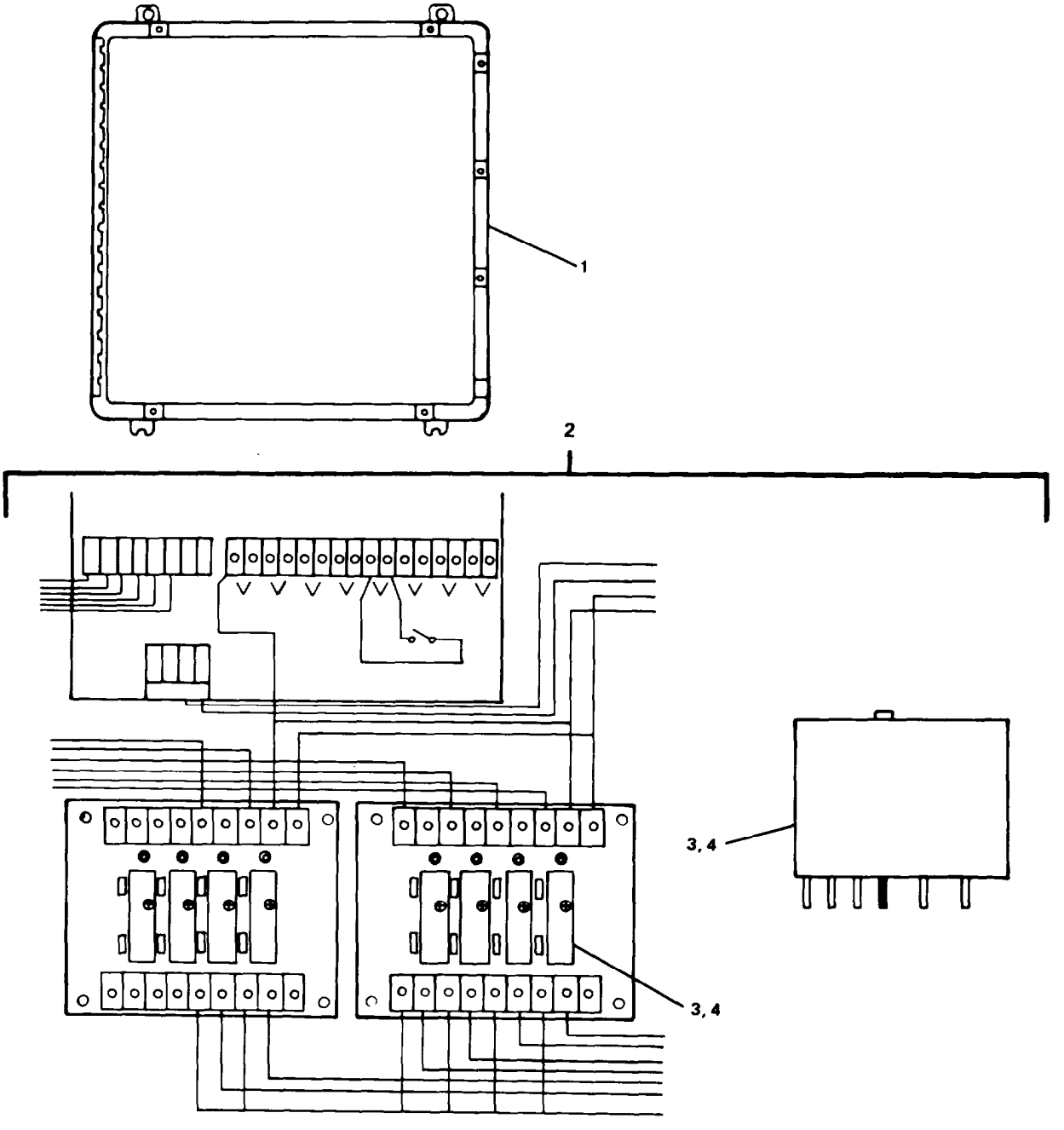

FIGURE 484. Multi-Remote Module, 02-09507-100 (Sheet 1 of 5).

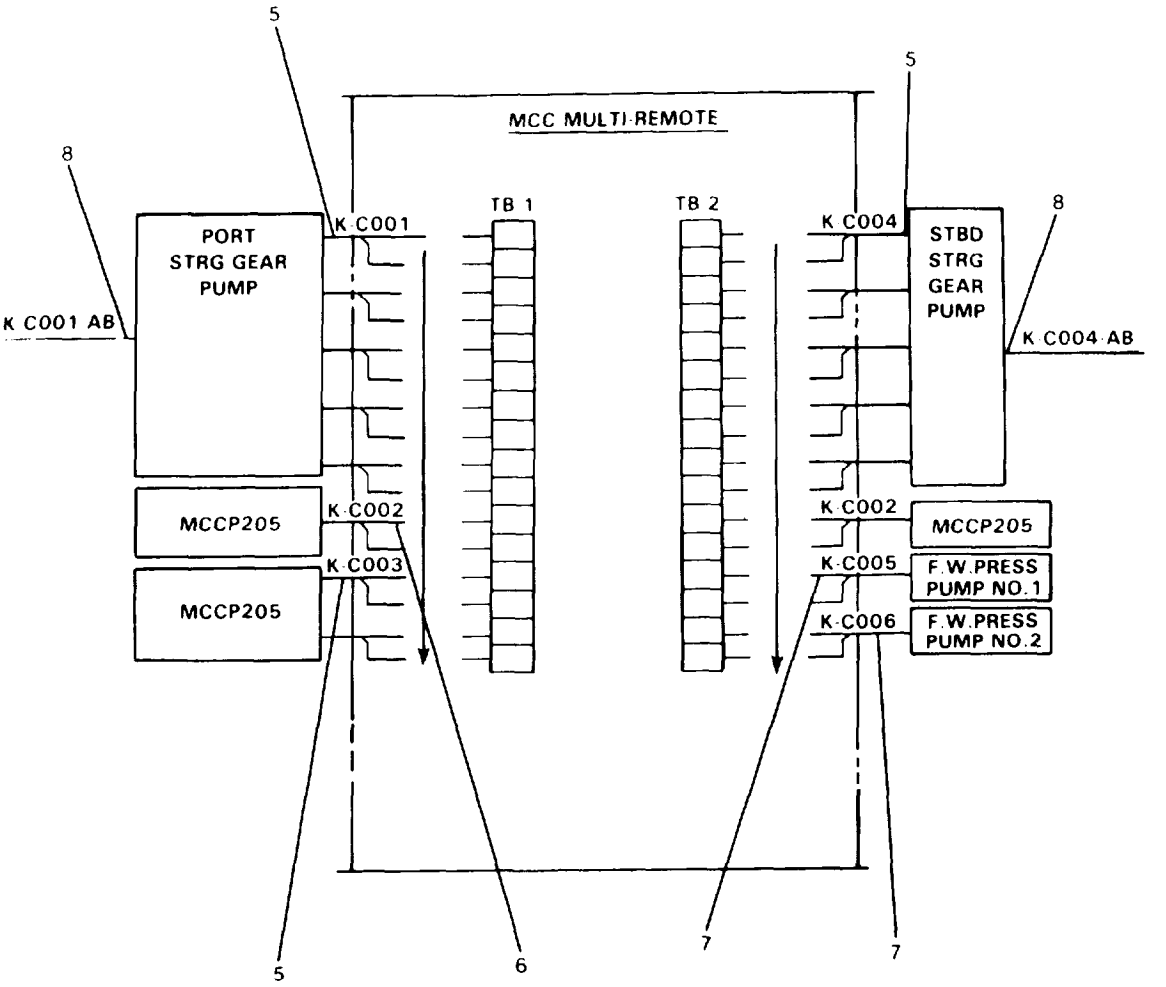

FIGURE 484. Multi-Remote Module. 02-09507-100 (Sheet 2 of 5).

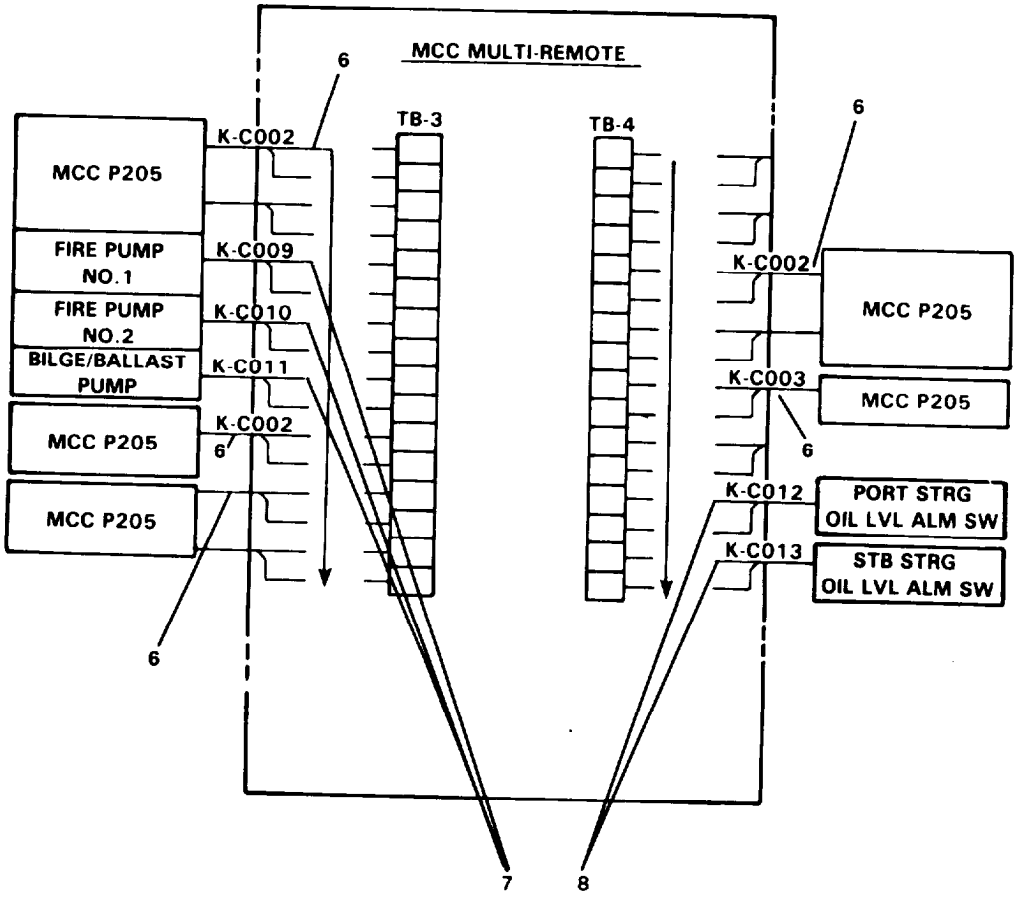

FIGURE 484. Multi-Remote Module. 02-09507-100 (Sheet 3 of 5).

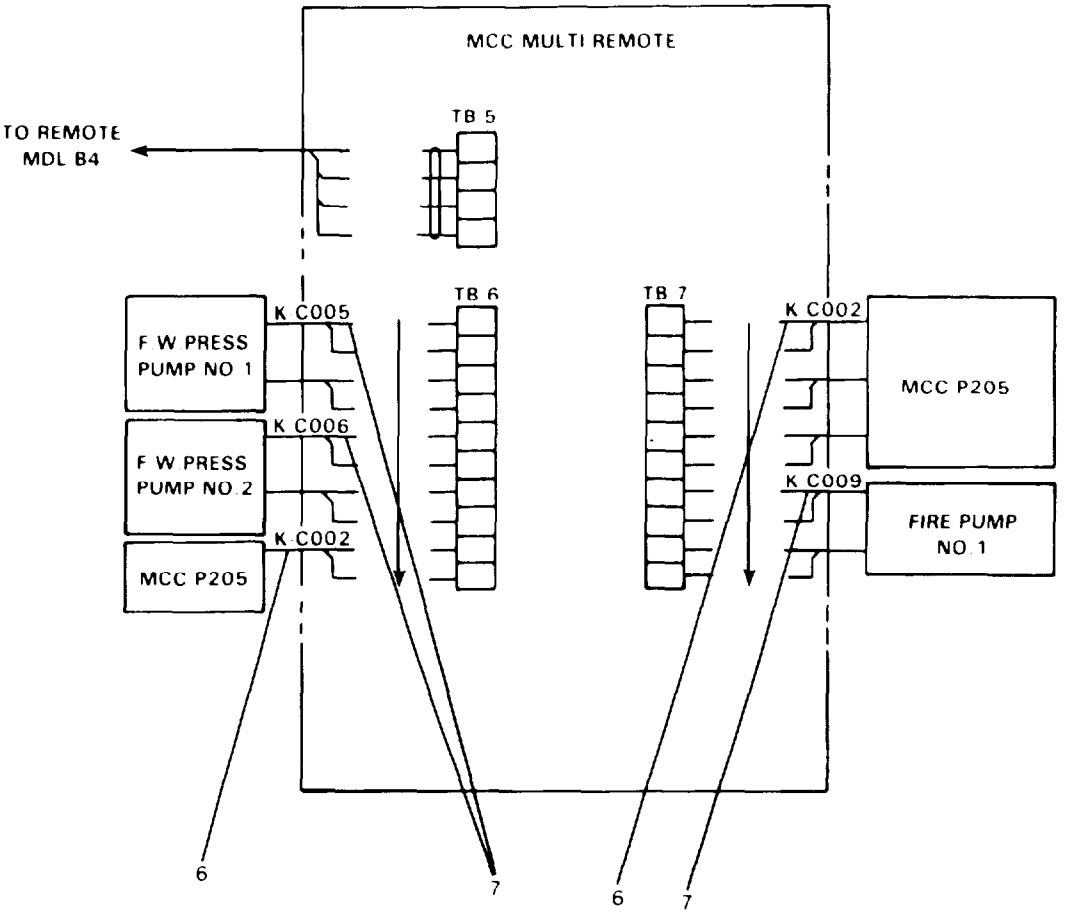

FIGURE 484. Multi-Remote Module, 02-09507-100 (Sheet 4 of 5).

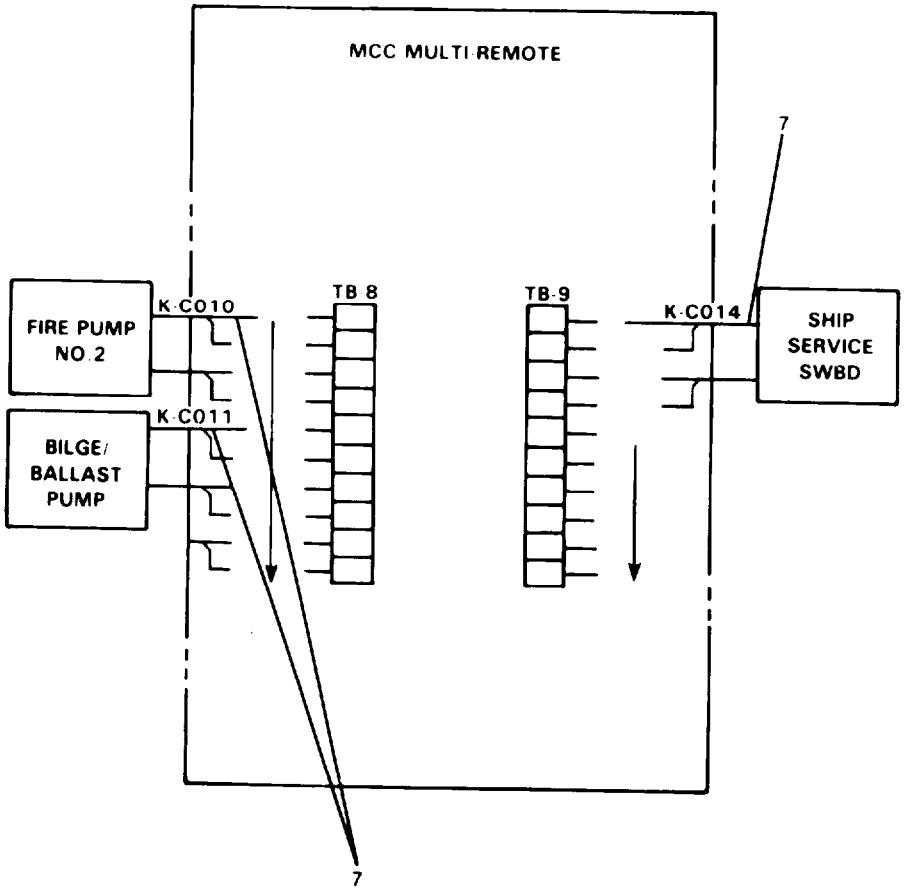

FIGURE 484. Multi-Remote Module. 02-09507-100 (Sheet 5 of 5).

(1) ITEM NO	(2) SMR CODE	(3) FSCM	(4) PART NUMBER	(5) DESCRIPTION AND USABLE ON CODES(UOC)	(6) QTY
				GROUP 18 BASIC CRAFT	
				FIG. 484 MULTI-REMOTE MODULE, 02-09507-100	
1	XDFZZ	73396	83-00120-000	...ENCLOSURE	1
2	XDFFF	73396	02-09507-100	...MULTI-REMOTE MODULE	1
3	PACZZ	73396	91-2003-000	....SWITCH, SOLID STATE	3
4	PACZZ	73396	91-2000-000	....SWITCH, SOLID STATE	15
5	XDFZZ	81349	LSMSCU-10	....CABLE, POWER, ELECTRI (K-C001)	V
6	XDFZZ	81349	LSMSCU-30	....CABLE, POWER, ELECTRI (K-C002)	V
7	XDFZZ	81349	LSMSCU-7	....CABLE, POWER, ELECTRI (K-C010)	V
8	XDFZZ	81349	LSDSGU-4	....CABLE, POWER, ELECTRI (K-C001-AB)	V

END OF FIGURE

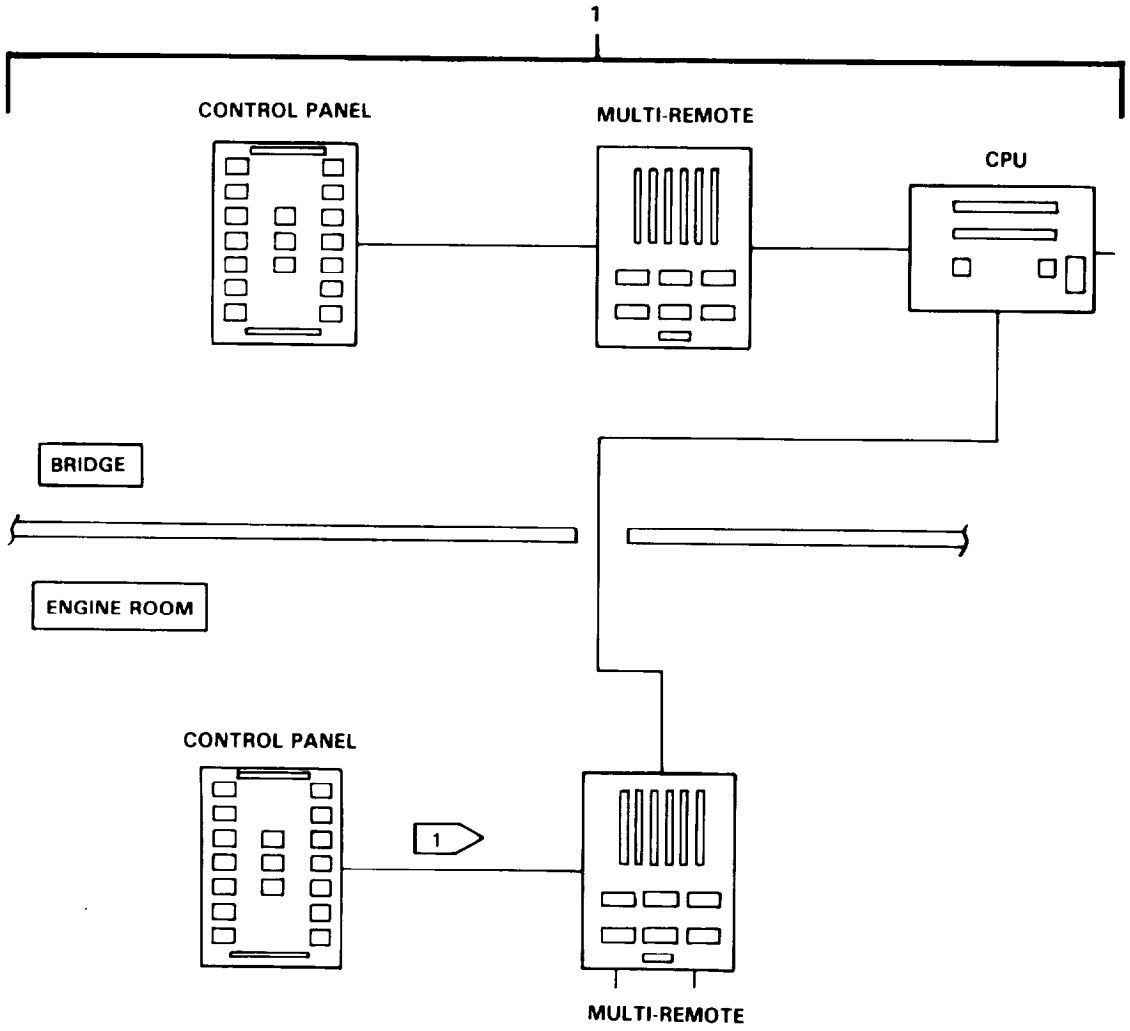

FIGURE 485. Engine Order Telegraph System. 01-10300-000.

(1) ITEM NO	(2) SMR CODE	(3) FSCM	(4) PART NUMBER	(5) DESCRIPTION AND USABLE ON CODES(UOC)	(6) QTY
				GROUP 18 BASIC CRAFT	
				FIG. 485 ENGINE ORDER TELEGRAPH SYSTEM, 01-10300-000	
1	XDFFF	73396	01-10300-000	..ENGINE ORDER TELEGR	1
				END OF FIGURE	

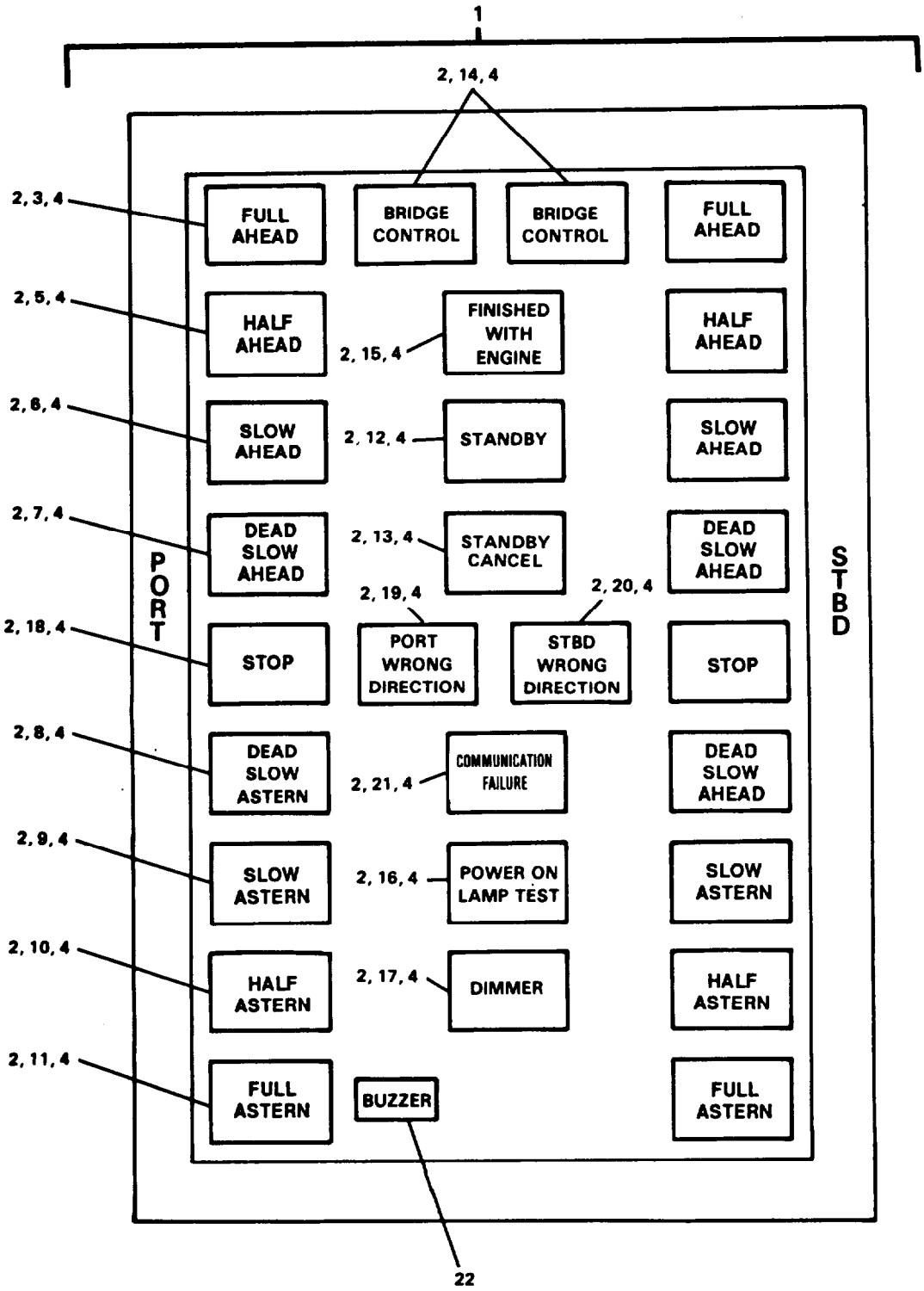

FIGURE 486. Panel Assembly. Bridge. 01-10310-000 (Sheet 1 of 2).

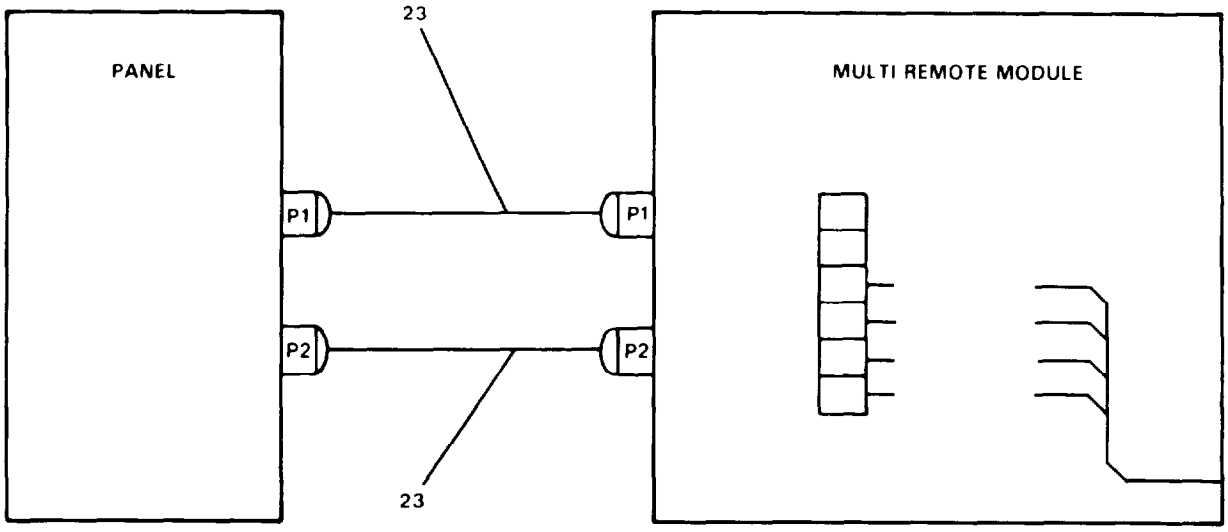

FIGURE 486. Panel Assembly, Bridge, 01-10310-000 (Sheet 2 of 2).

(1) ITEM NO	(2) SMR CODE	(3) FSCM	(4) PART NUMBER	(5) DESCRIPTION AND USABLE ON CODES(UOC)	(6) QTY
				GROUP 18 BASIC CRAFT	
				FIG. 486 PANEL ASSEMBLY, BRIDGE, 01-10310-000	
1	XDFFF	73396	01-10310-000	...PANEL ASSEMBLY, BRID	1
2	PACZZ	73396	71-1022-000	.... SWITCH,PUSH	28
3	PACZZ	73396	71-1022-001	....LENS,LIGHT (FULL AHEAD)	2
4	PACZZ	73396	71-1021-000	....LAMP,INCANDESCENT (28 VOLT)	56
5	PACZZ	73396	71-1022-002	....LENS,LIGHT (HALF AHEAD)	2
6	PACZZ	73396	71-1022-003	....LENS,LIGHT (SLOW AHEAD)	2
7	PACZZ	73396	71-1022-004	....LENS,LIGHT (DEAD SLOW AHEAD)	2
8	PACZZ	73396	71-1022-005	....LENS,LIGHT (DEAD SLOW ASTERN)	2
9	PACZZ	73396	71-1022-006	....LENS,LIGHT (SLOW ASTERN)	2
10	PACZZ	73396	71-1022-007	....LENS,LIGHT (HALF ASTERN)	2
11	PACZZ	73396	71-1022-008	....LENS,LIGHT (FULL ASTERN)	2
12	PACZZ	73396	71-1022-009	....LENS,LIGHT (STANDBY)	1
13	PACZZ	73396	71-1022-010	....LENS,LIGHT (CANCEL STANDBY)	1
14	PACZZ	73396	71-1022-011	....LENS,LIGHT (BRIDGE CONTROL)	2
15	PACZZ	73396	71-1022-012	....LENS,LIGHT (FINISHED WITH ENGINE 1	1
16	PACZZ	73396	71-1022-013	....LENS,LIGHT (POWER ON LAMP TEST)	1
17	PACZZ	73396	71-1022-014	....LENS,LIGHT (DIMMER)	1
18	PACZZ	73396	71-1022-015	....LENS,LIGHT (STOP)	2
19	PACZZ	73396	71-1022-016	....LENS,LIGHT (PORT WRONG DIRECTION)	1
20	PACZZ	73396	71-1022-017	....LENS,LIGHT (STBD WRONG DIRECTION)	1
21	PACZZ	73396	71-1022-018	....LENS,LIGHT (COMMUNICATION FAILURE)	1
22	PACZZ	73396	41-1000-002	.... ALARM,AUDIBLE (BUZZER)	1
23	XDFZZ	73396	65-5000-000	....CABLE,POWER,ELECTRI (SPECIAL)	2

END OF FIGURE

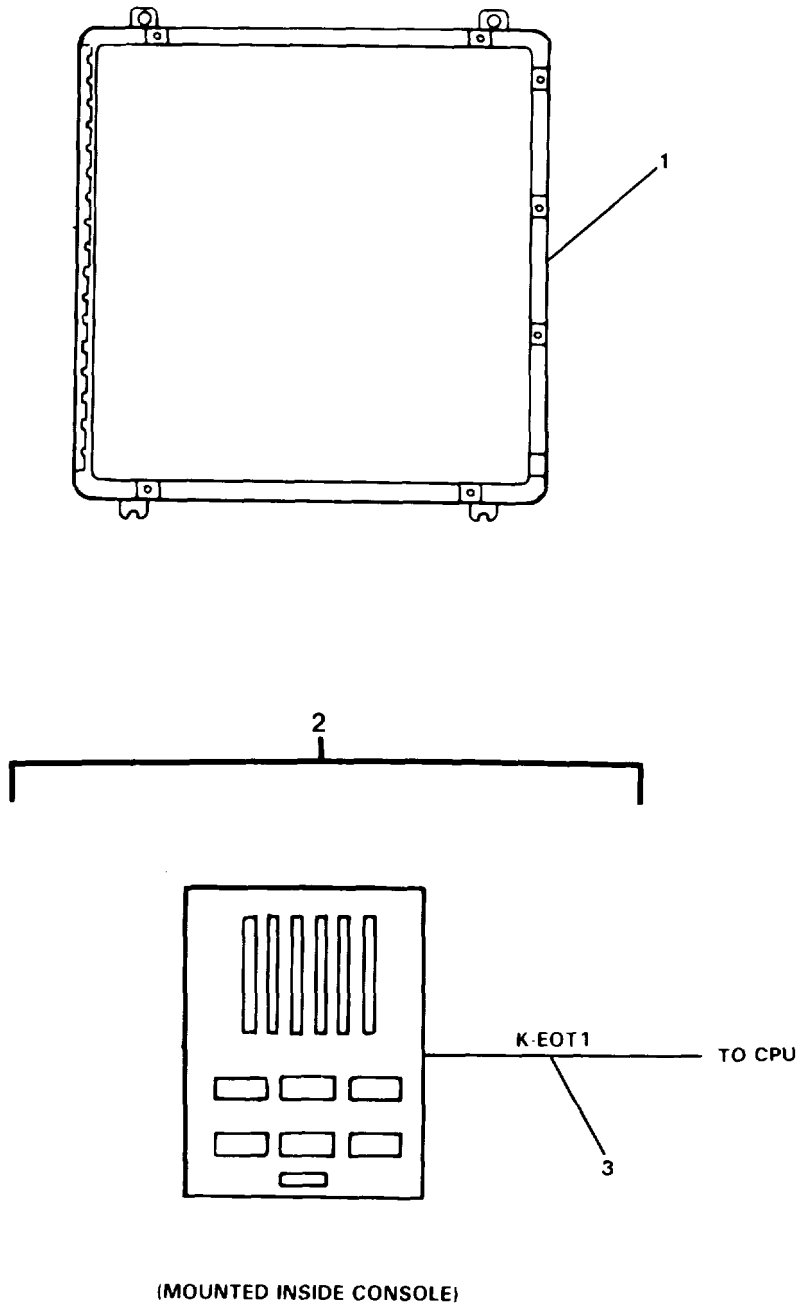

FIGURE 487. Remote Module, Bridge, 02-09507-100.

(1) ITEM NO	(2) SMR CODE	(3) FSCM	(4) PART NUMBER	(5) DESCRIPTION AND USABLE ON CODES(UOC)	(6) QTY
				GROUP 18 BASIC CRAFT	
				FIG. 487 REMOTE MODULE, BRIDGE, 02-09507-100	
1	XDFZZ	73396	83-00120-000	....ENCLOSURE	1
2	XDFFF	73396	02-09507-100	...MULTI-REMOTE MODULE	1
3	XDFZZ	81349	FSS-2	....CABLE,POWER,ELECTRI (K-EOT-1)	V

END OF FIGURE

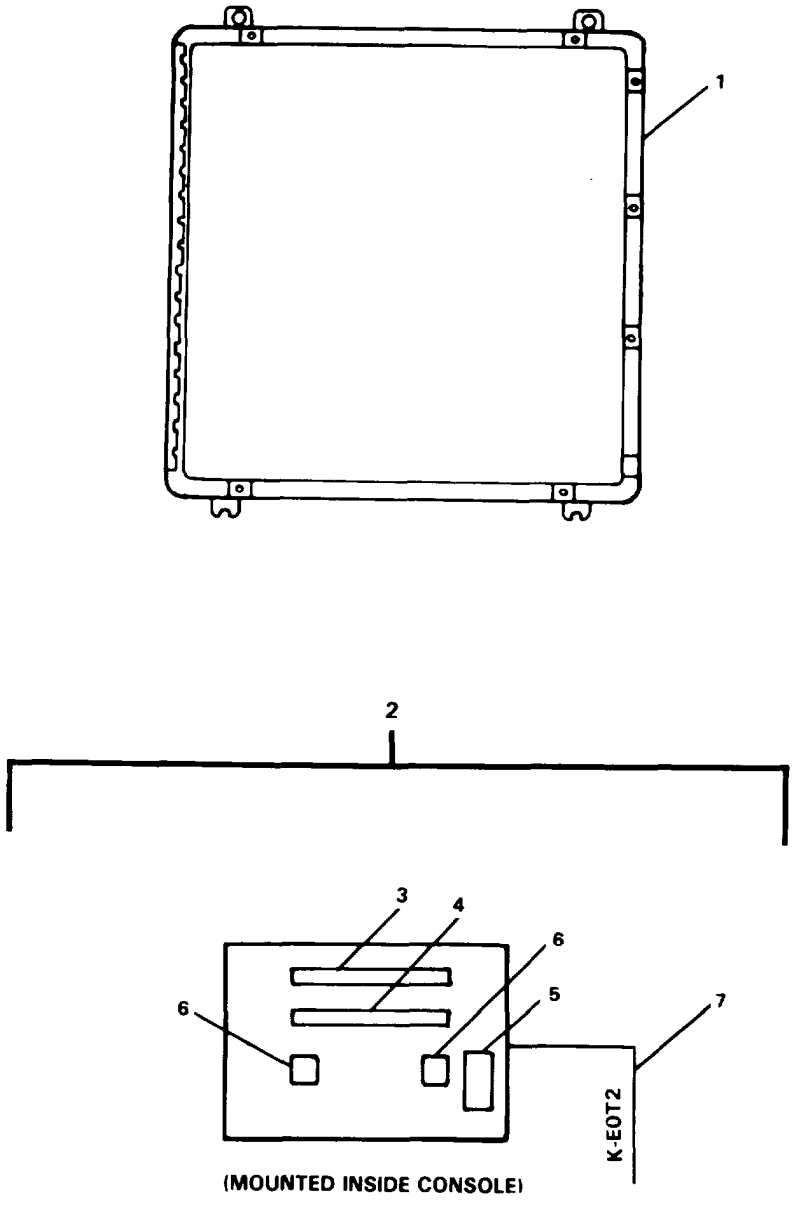

FIGURE 488. Central Processinn Unit, 02-10350-000.

(1) ITEM NO	(2) SMR CODE	(3) FSCM	(4) PART NUMBER	(5) DESCRIPTION AND USABLE ON CODES(UOC)	(6) QTY
				GROUP 18 BASIC CRAFT	
				FIG. 488 CENTRAL PROCESSING UNIT, 02-10350-000	
1	XDFZZ	73396	83-00120-000	....ENCLOSURE	1
2	XDFFF	73396	02-10350-000	...CENTRAL PROCESSING	1
3	PAFZZ	73396	05-09601-000	....PRINTED CIRCUIT BOA (CPU)	1
4	PAFZZ	73396	05-09506-000	....PRINTED CIRCUIT BOA (Z-8)	1
5	PAFZZ	73396	05-09502-000	....PRINTED CIRCUIT BOA (MASTER)	1
6	PACZZ	73396	91-6009-003	....FUSE,CARTRIDGE	1
7	XDFZZ	81349	FSS-2	....CABLE,POWER,ELECTRI (K-EOT-21 V	

END OF FIGURE

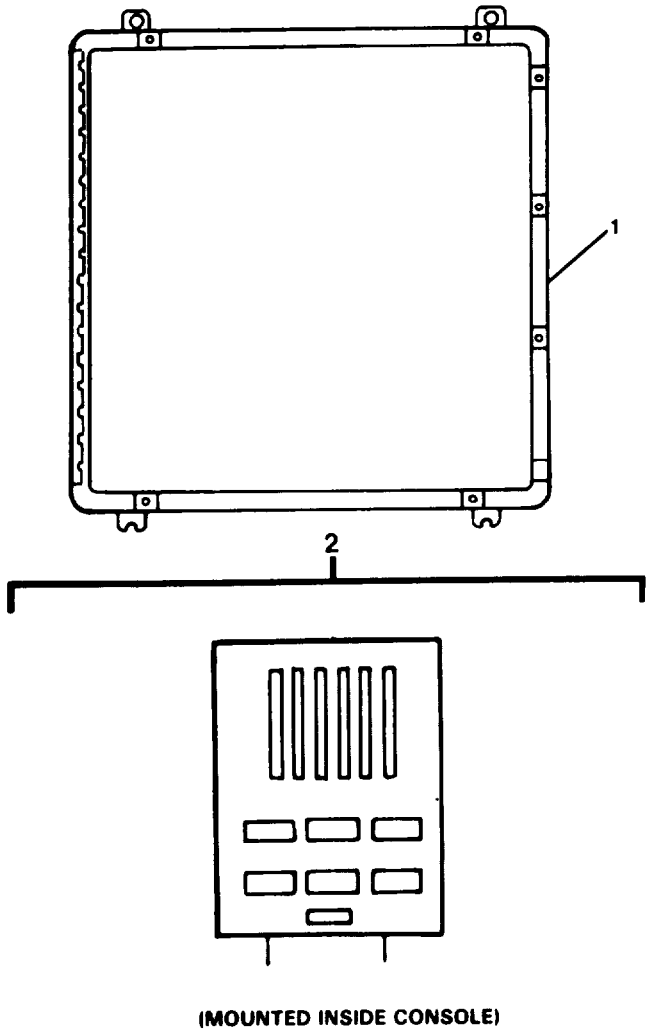

FIGURE 489. Multi-Remote Module, Engine Room, 02-09507-100 (Sheet 1 of 2).

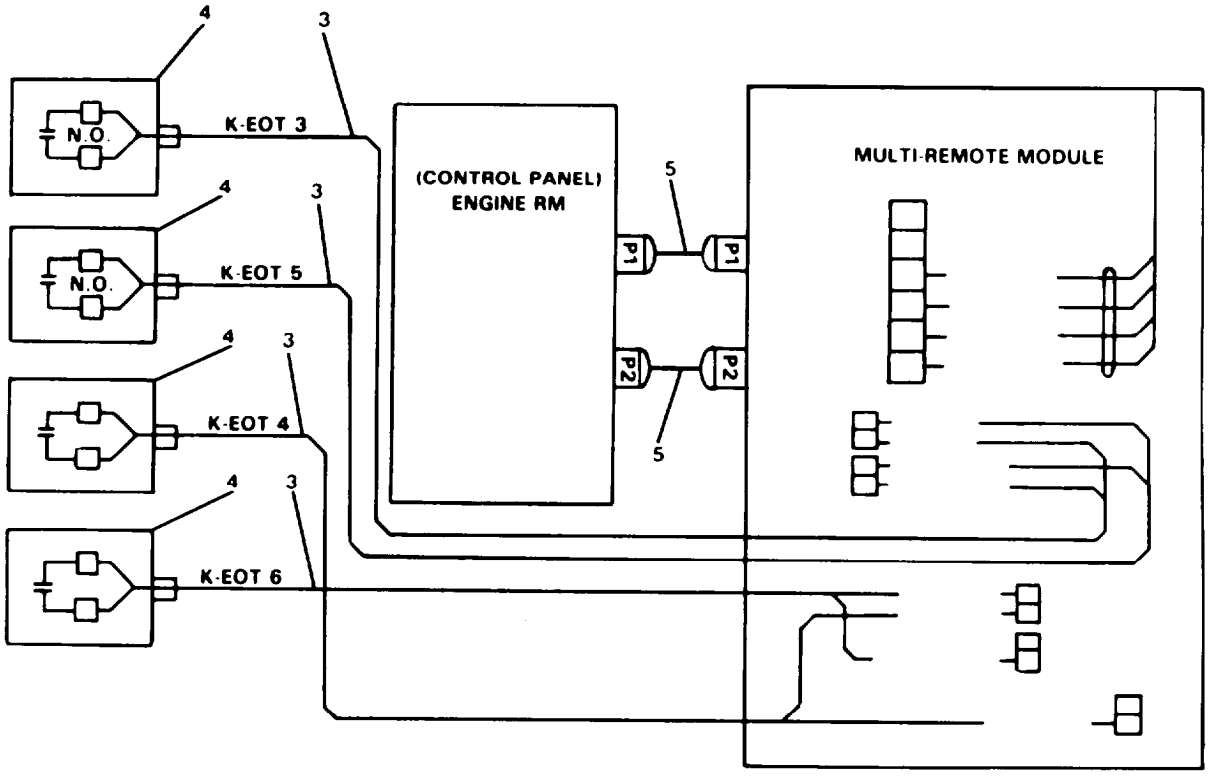

FIGURE 489. Multi-Remote Module. Engine Room. 02-09507-100 (Sheet 2 of 2).

(1) ITEM NO	(2) SMR CODE	(3) FSCH	(4) PART NUMBER	(5) DESCRIPTION AND USABLE ON CODES(UOC)	(6) QTY
				GROUP 18 BASIC CRAFT	
				FIG. 489 MULTI-REMOTE MODULE ENGINE ROOM, 02-09507-100	
1	XDFZZ	73396	83-00120-000	...ENCLOSURE	1
2	XDFFF	73396	02-09507-100	...MULTI-REMOTE MODULE	1
3	XDFZZ	81349	LSDSGU-4	....CABLE,POWER,ELECTRI (K-EOT3)	V
4	PACZZ	73396	61-4250-000	....SWITCH,PRESSURE	4
5	XDFZZ	81349	LSDSGU-4	....CABLE,POWER,ELECTRI (K-EOT5)	V

END OF FIGURE

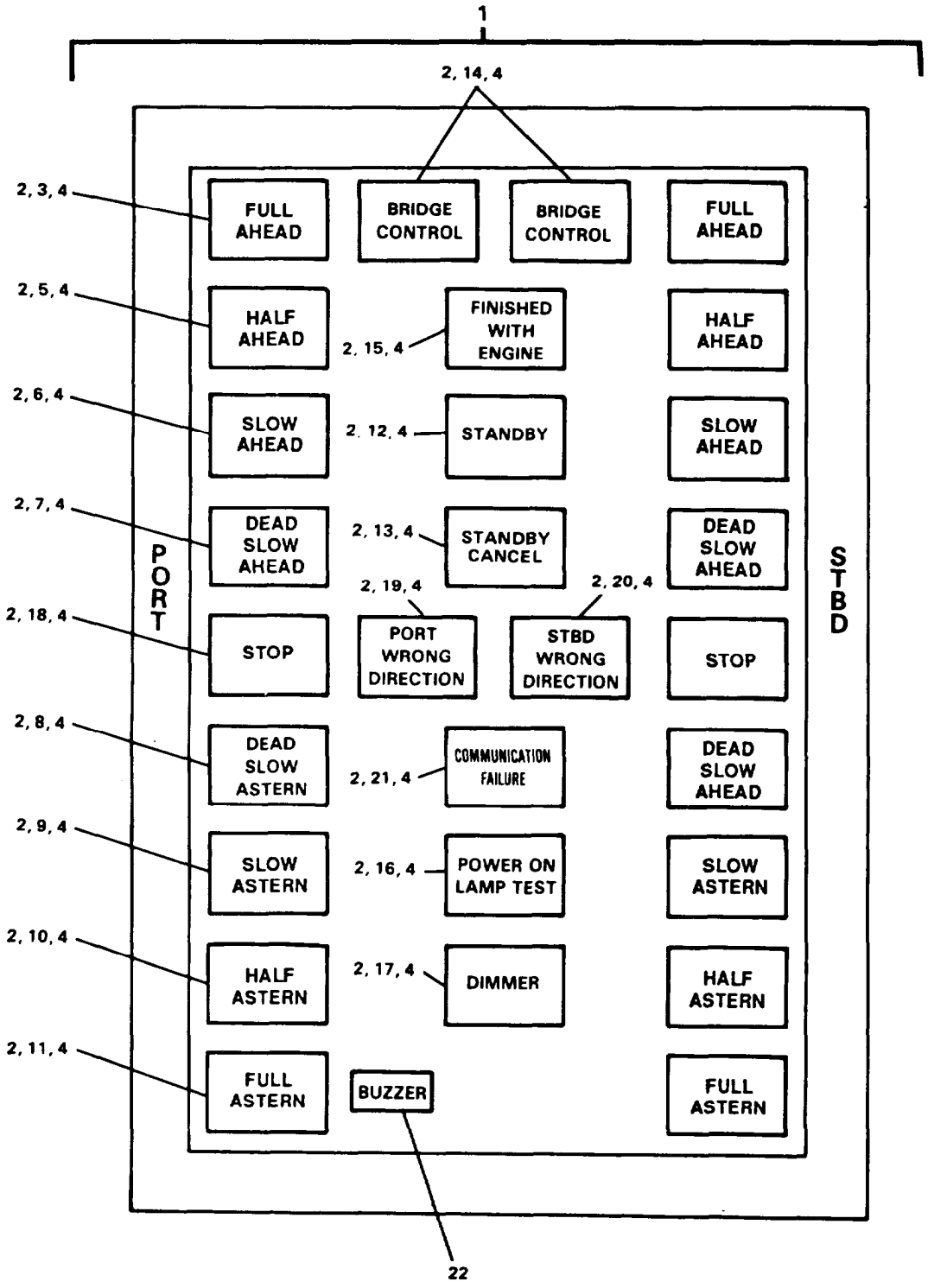

FIGURE 490. Panel Assembly, Engine Room, 02-10310-000.

(1) ITEM NO	(2) SMR CODE	(3) FSCM	(4) PART NUMBER	(5) DESCRIPTION AND USABLE ON CODES(UOC)	(6) QTY
				GROUP 18 BASIC CRAFT	
				FIG. 490 PANEL ASSEMBLY, ENGINE ROOM, 02-10310-000	
1	XDFFF	73396	02-10310-000	...PANEL ASSEMBLY,ENGI	1
2	PACZZ	73396	71-1022-000	....SWITCH,PUSH	28
3	PACZZ	73396	71-1022-001	....LENS,LIGHT (FULL AHEAD)	2
4	PACZZ	73396	71-1021-000	....LAMP,INCANDESCENT (28 VOLT)	56
5	PACZZ	73396	71-1022-002	....LENS,LIGHT (HALF AHEAD)	2
6	PACZZ	73396	71-1022-003	....LENS,LIGHT (SLOW AHEAD)	2
7	PACZZ	73396	71-1022-004	....LENS,LIGHT (DEAD SLOW AHEAD)	2
8	PACZZ	73396	71-1022-005	....LENS,LIGHT (DEAD SLOW ASTERN)..	2
9	PACZZ	73396	71-1022-006	....LENS,LIGHT (SLOW ASTERN)	2
10	PACZZ	73396	71-1022-007	....LENS,LIGHT (HALF ASTERN)	2
11	PACZZ	73396	71-1022-008	....LENS,LIGHT (FULL ASTERN)	2
12	PACZZ	73396	71-1022-009	....LENS,LIGHT (STANDBY)	1
13	PACZZ	73396	71-1022-010	....LENS,LIGHT (CANCEL STANDBY)	1
14	PAFZZ	73396	71-1022-011	....LENS,LIGHT (BRIDGE CONTROL)	2
15	PACZZ	73396	71-1022-012	....LENS,LIGHT (FINISHED WITH ENGINE)	1
16	PACZZ	73396	71-1022-013	....LENS,LIGHT (POWER ON LAMP TEST)	1
17	PACZZ	73396	71-1022-014	....LENS,LIGHT (DIMMER)	1
18	PACZZ	73396	71-1022-015	....LENS,LIGHT (STOP)	2
19	PACZZ	73396	71-1022-016	....LENS,LIGHT (PORT WRONG DIRECTION)	1
20	PACZZ	73396	71-1022-017	....LENS,LIGHT (STBD WRONG DIRECTION)	1
21	PACZZ	73396	71-1022-018	....LENS,LIGHT (COMMUNICATION FAILURE)	1
22	PACZZ	73396	41-1000-002	....ALARM,AUDIBLE (BUZZER)	1

END OF FIGURE

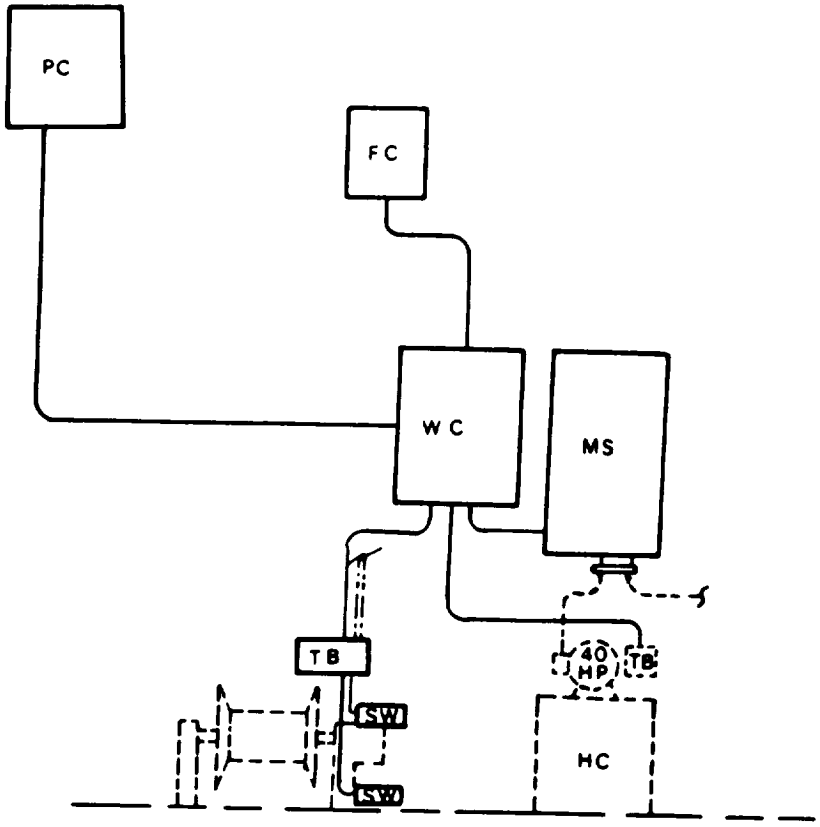

LEGEND

PC - PILOTMOUSE CONTROL
FC - FORECASTLE CONTROL
WC -- WINCHROOM CONTROL
HC - HYDRAULIC CONTROL
SW- SWITCH
TB - TERMINAL
MS - MOTOR STARTER

FIGURE 491. Bow Ramp Control System , 21-69071.

(1) ITEM NO	(2) SMR CODE	(3) FSCM	(4) PART NUMBER	(5) DESCRIPTION AND USABLE ON CODES(UDC)	(6) QTY
				GROUP 18 BASIC CRAFT	
				FIG. 491 BOW RAMP CONTROL SYSTEM, 21-69071	
1	XDOOO	1CC45	21-69071	.. BOW RAMP CONTROL SY	1

END OF FIGURE

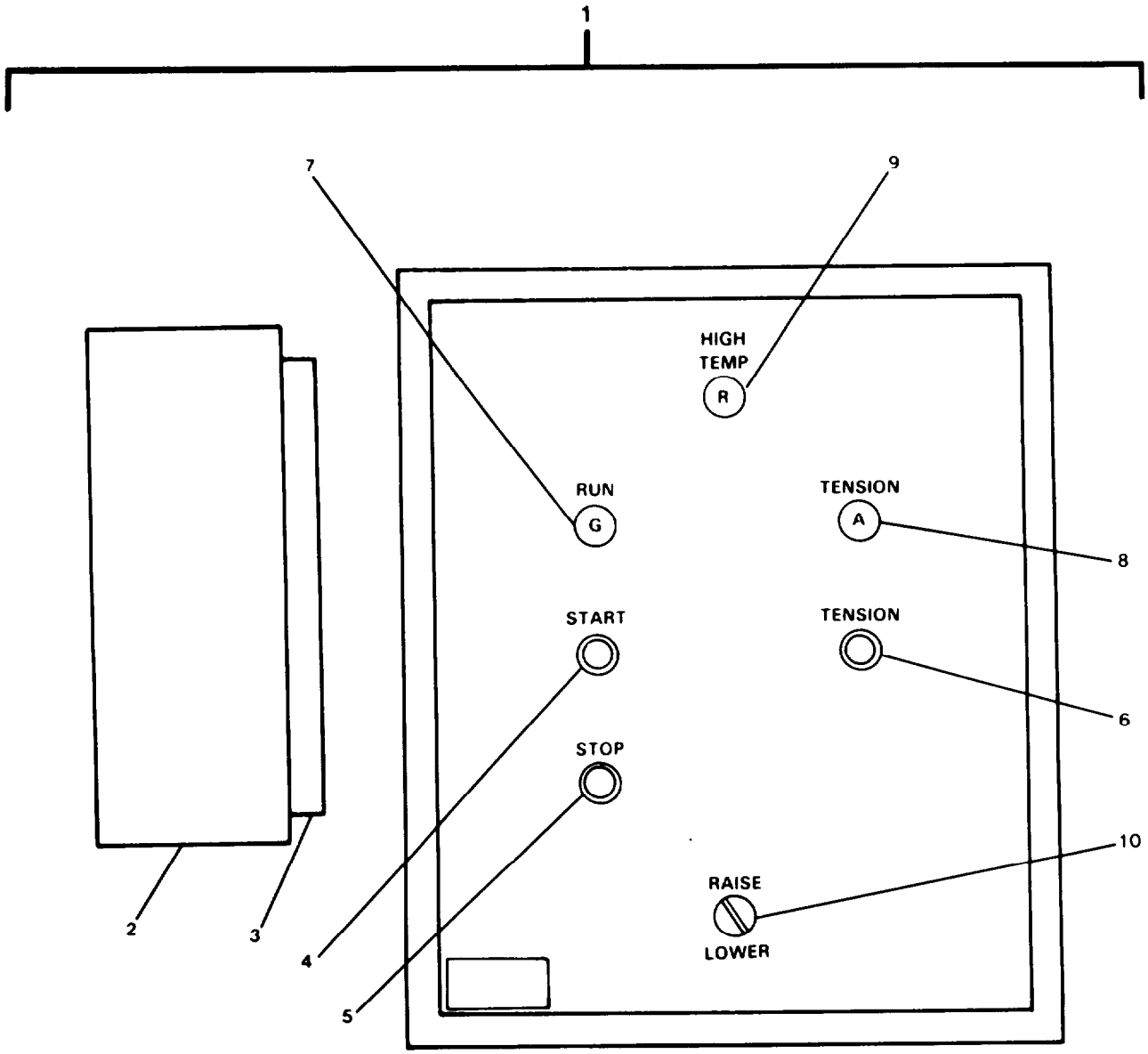

FIGURE 492. Panel Control, Winch Room, A24P20 (Sheet 1 of 2).

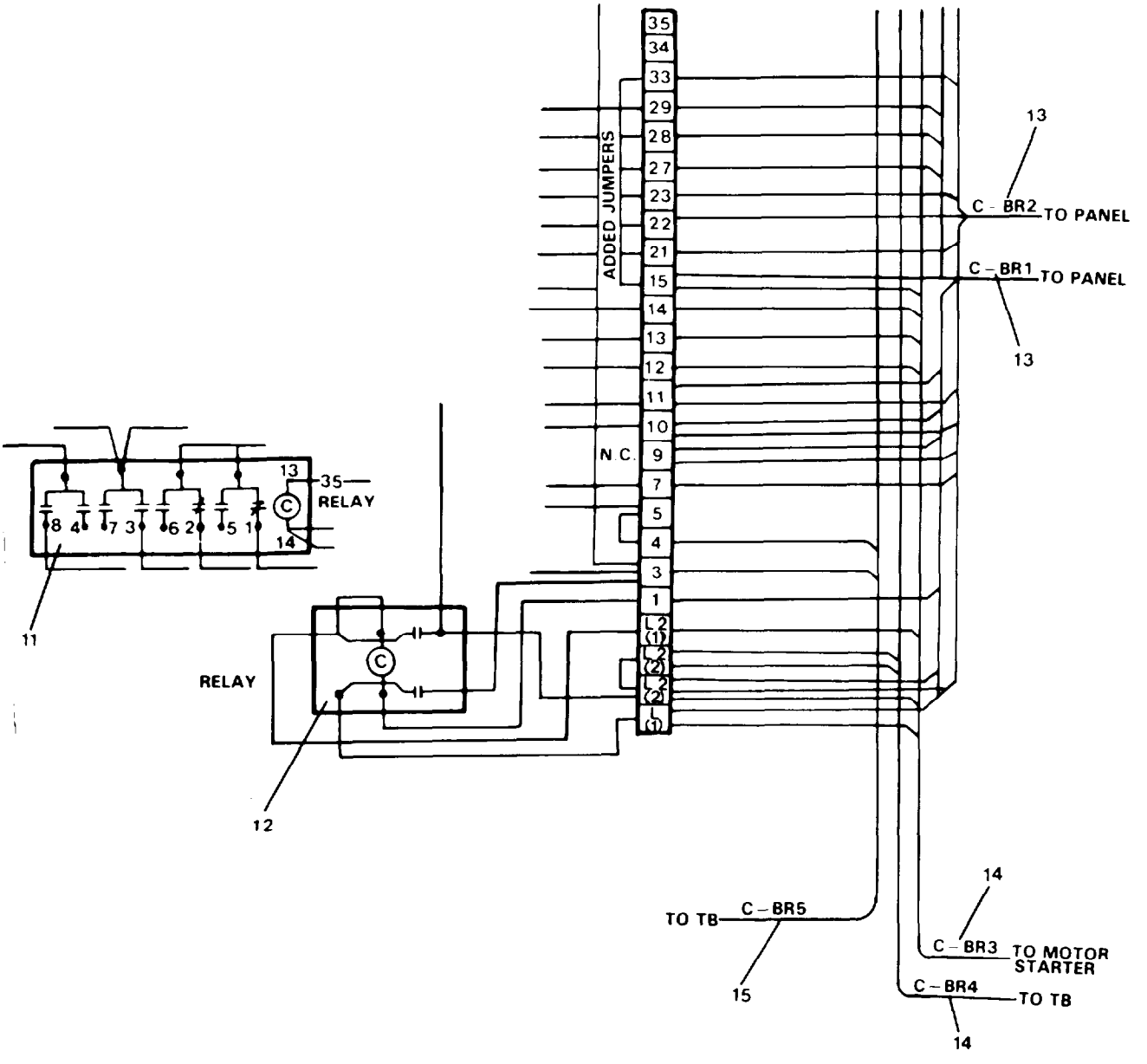

FIGURE 492. Panel Control, Winch Room, A24P20 (Sheet 2 of 2).

(1) ITEM NO	(2) SMR CODE	(3) FSCM	(4) PART NUMBER	(5) DESCRIPTION AND USABLE ON CODES(UOC)	(6) QTY
				GROUP 18 BASIC CRAFT	
				FIG. 492 PANEL CONTROL, WINCH ROOM, A24P20	
1	X0000	00843	A24P20	... PANEL,CONTROL (WINCH ROOM)	1
2	XDOZZ	00843	A24H20BLP	... ENCLOSURE	1
3	XDCZZ	06383	C2	... COVER	1
4	PACZZ	01121	800H-R1A	... SWITCH,PUSH (GREEN)	1
5	PACZZ	01121	800H-R6A4	... SWITCH,PUSH (RED)	1
6	PACZA	01121	800H-R2A	... SWITCH,PUSH (BLACK)	1
7	PACZZ	01121	800H-PR16G	... LIGHT,INDICATOR (GREEN)	1
8	PACZZ	01121	800H-PR16A	... SWITCH,PUSH (AMBER)	1
9	PACZZ	01121	800H-PR16R	... LIGHT,INDICATOR (RED)	1
10	PACZZ	01121	800T-T2SB21	... SWITCH,TOGGLE	1
11	PACZZ	01121	700HC24A1	... RELAY,ELECTROMAGNET	11
12	PACZZ	01121	700HG47A1	... RELAY,ELECTROMAGNET	1
13	XDOZZ	81349	LSMSCU-14	... CABLE,POWER,ELECTRI (C-BR1)	V
14	XDOZZ	81349	LSMSCU-10	... CABLE,POWER,ELECTRI (C-BR3)	V
15	XDOZZ	81349	LSFSGU-4	... CABLE,POWER,ELECTRI (C-BR5)	V

END OF FIGURE

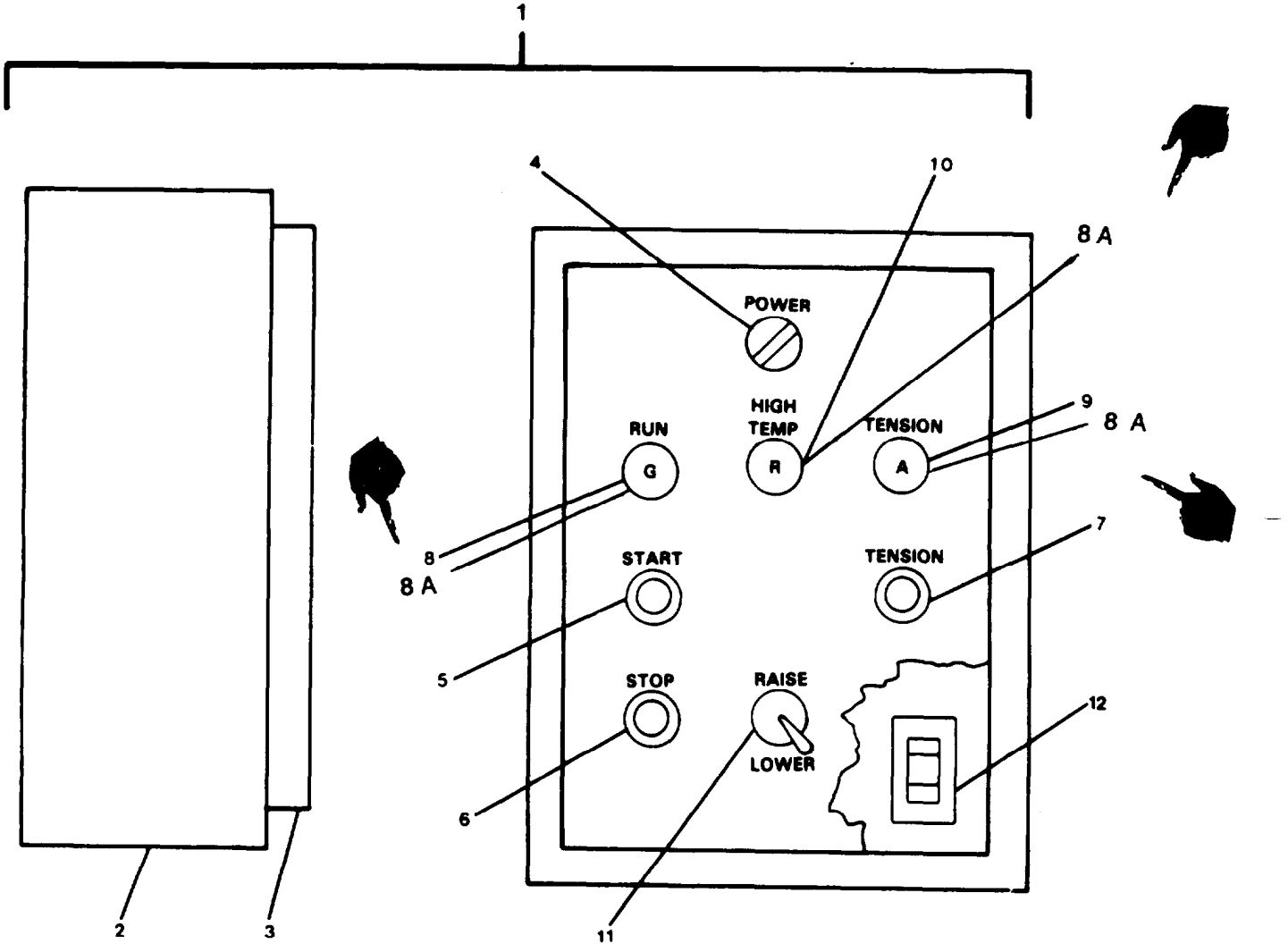

FIGURE 493. Panel Control, Pilothouse, A12P10.

(1) ITEM NO	(2) SMR CODE	(3) CAGEC	(4) PART NUMBER	(5) DESCRIPTION AND USABLE ON CODES (UOC)	(6) QTY
				GROUP 18 BASIC CRAFT	
				FIG. 493 PANEL CONTROL, PILOTHOUSE, A12P10	
1	XDOOO	00843	A12P10	••• PANEL, CONTROL (PILOT HOUSE)	1
2	XDOZZ	00843	A1210NF	•••• ENCLOSURE	1
3	XDCZZ	06383	C1	•••• COVER	1
4	PACZZ	01121	800H-HR2A2	•••• SWITCH,ROTARY	1
5	PACZZ	01121	800H-R1A	•••• SWITCH, PUSH (GREEN)	1
6	PACZZ	01121	800H-R6A	•••• SWITCH, PUSH (RED)	1
7	PACZZ	01121	800H-R2A	•••• SWITCH, PUSH (BLACK)	1
8	PACZZ	01121	800H-PR16G	•••• LIGHT, INDICATOR (GREEN)	1
8A	PACZZ	01121	800T-N212	•••• LIGHT, BULB	3
9	PACZZ	01121	800H-PR16A	•••• SWITCH, PUSH (AMBER)	1
10	PACZZ	01121	800H-PR16R	•••• LIGHT INDICATOR (RED)	1
11	PACZZ	01121	800T-T2SB21	•••• SWITCH, TOGGLE	1
12	PACZZ	81349	F15B250V5A	•••• FUSE, CARTRIDGE	1

END OF FIGURE

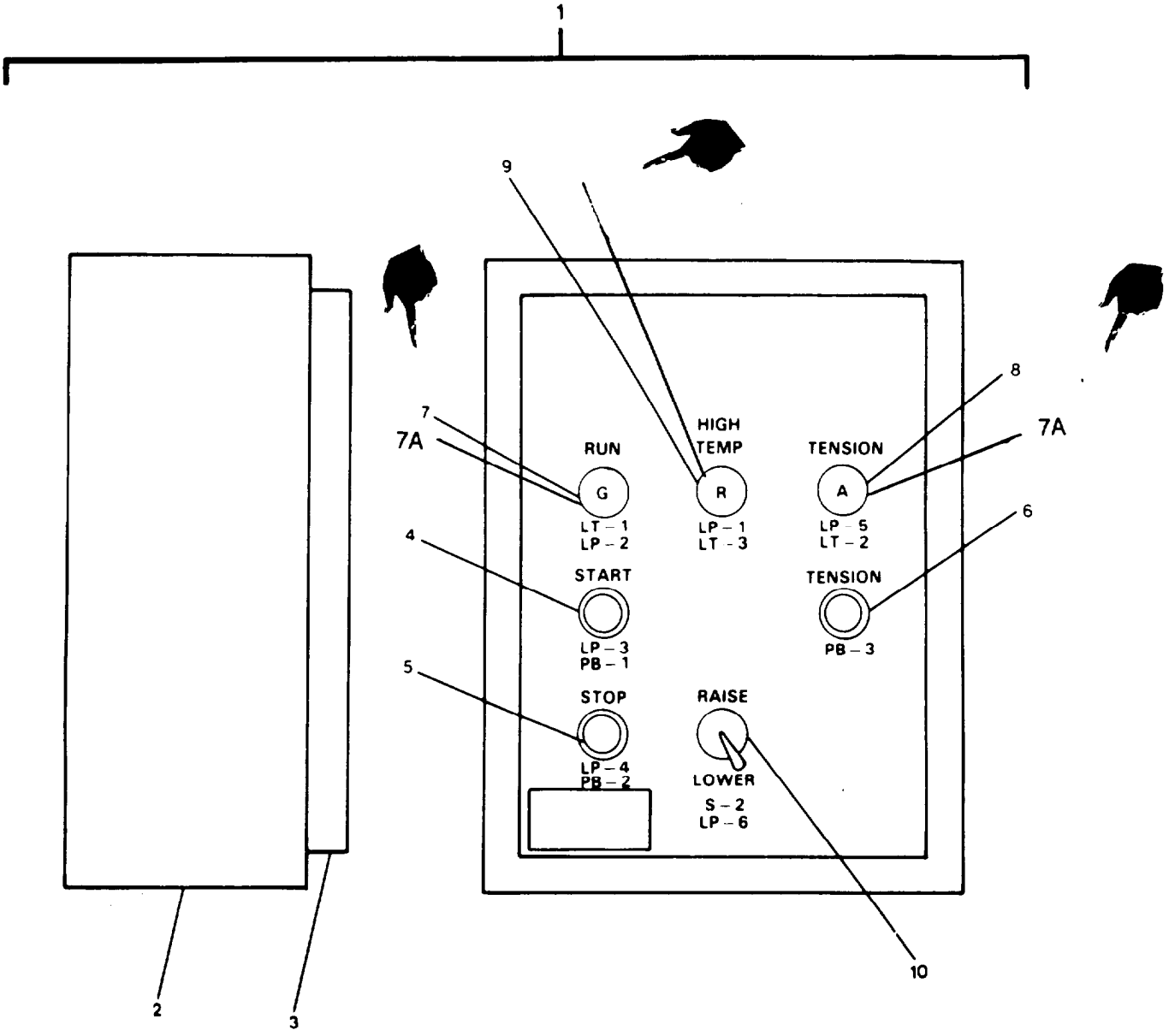

FIGURE 494. Panel Control Forecastle, A12P10

(1) ITEM NO	(2) SMR CODE	(3) CAGEC	(4) PART NUMBER	(5) DESCRIPTION AND USABLE ON CODES(UOC)	(6) QTY
				GROUP 18 BASIC CRAFT	
				FIG. 494 PANEL CONTROL, FORECASTLE, A12P10	
1	XDOOO	00843	A12P10	••• PANEL, CONTROL (FORECASTLE)	1
2	XDOZZ	00843	A1210NF	••••ENCLOSURE	1
3	XDCZZ	06383	C1	••••COVER	1
4	PACZZ	01121	800H-R1A	••••SWITCH, PUSH (GREEN)	1
5	PACZZ	01121	800H-R6A	••••SWITCH, PUSH (RED)	1
6	PACZZ	01121	800H-R2A	••• SWITCH, PUSH (BLACK)	1
7	PACZZ	01121	800H-PR16G	•••• LIGHT, INDICATOR (GREEN)	1
7A	PACZZ	01121	800T-N212	•••••LIGHT, BULB	3
8	PACZZ	01121	800H-PR16A	••••SWITCH, PUSH (AMBER)	1
9	PACZZ	01121	800H-PR16R	••••LIGHT INDICATOR (RED)	1
10	PACZZ	01121	800T-T2SB21	••••SWITCH, TOGGLE	1

END OF FIGURE

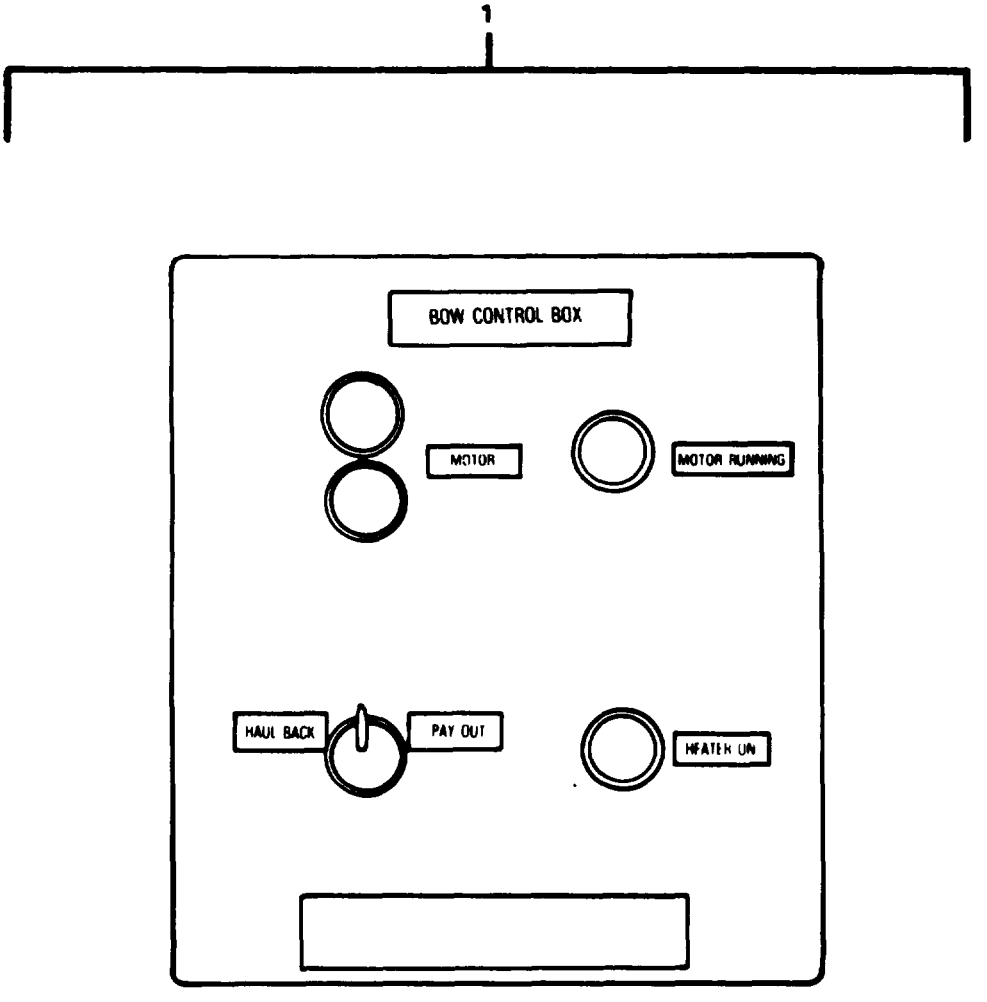

FIGURE 495. Motor Controller. Bow Ramp, 256314/D3.

(1) ITEM NO	(2) SMR CODE	(3) FSCM	(4) PART NUMBER	(5) DESCRIPTION AND USABLE ON CODES(UOC)	(6) QTY
				GROUP 18 BASIC CRAFT	
				FIG. 495 MOTOR CONTROLLER, BOW RAMP, 256314/D3	
1	XDOZZ	27192	256314-D3	...MOTOR CONTROLLER BO	1
				END OF FIGURE	

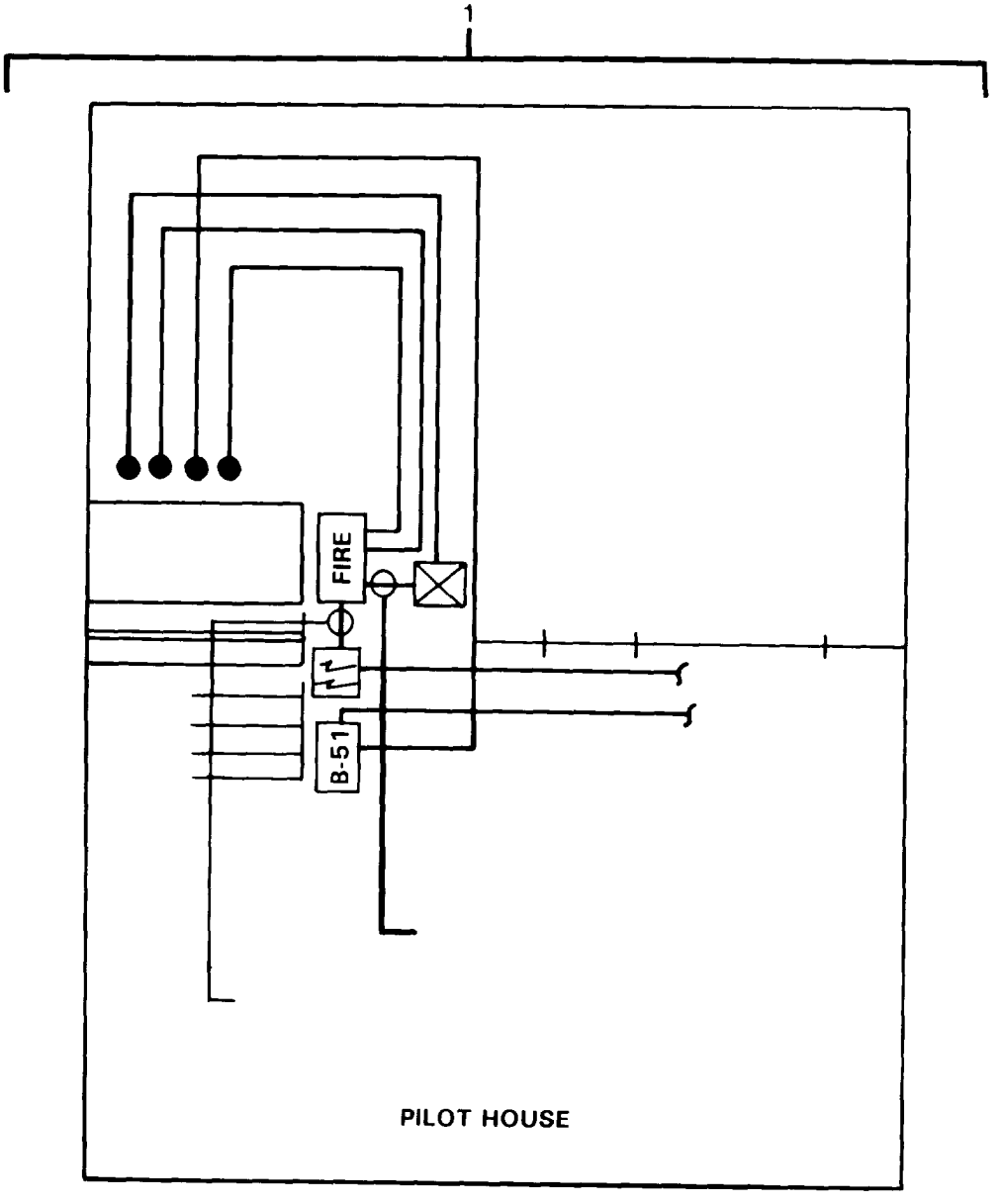

FIGURE 496. Fire Detection System. 8436017 (Sheet 1 of 3).

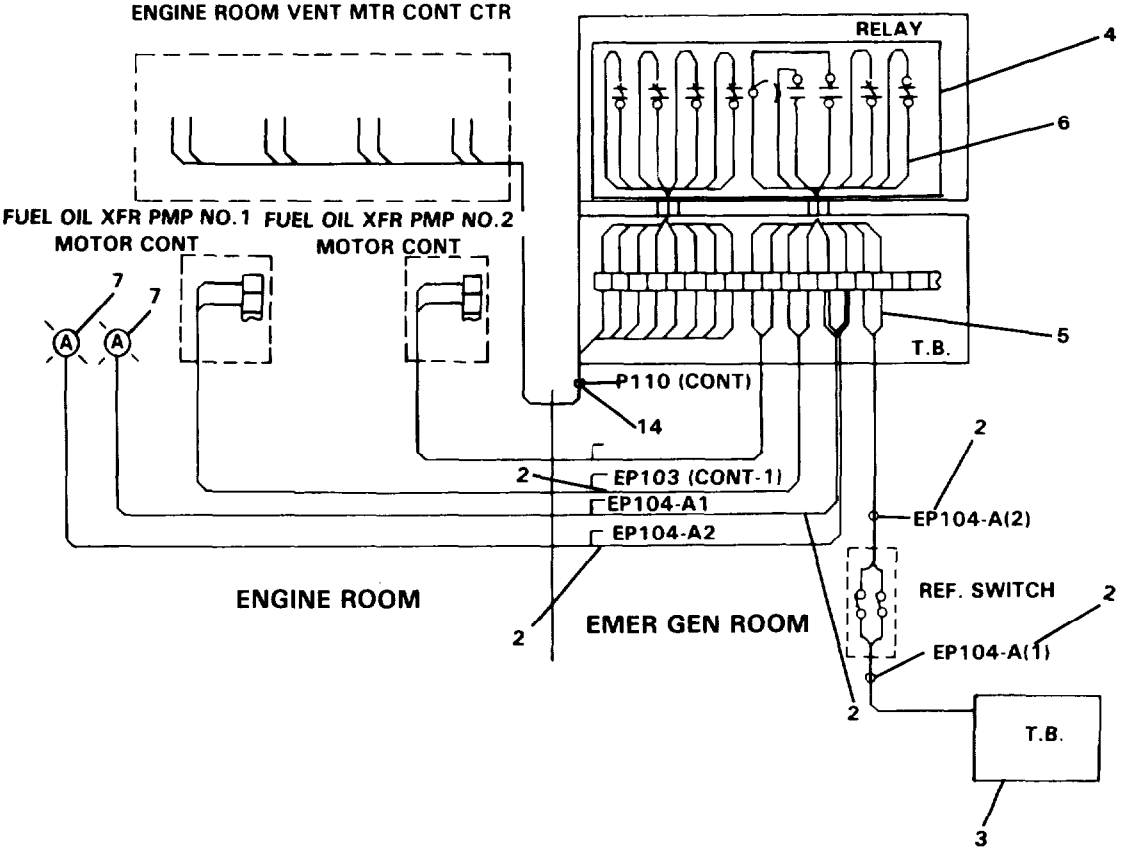

FIGURE 496. Fire Detection System, 8436017 (Sheet 2 of 3).

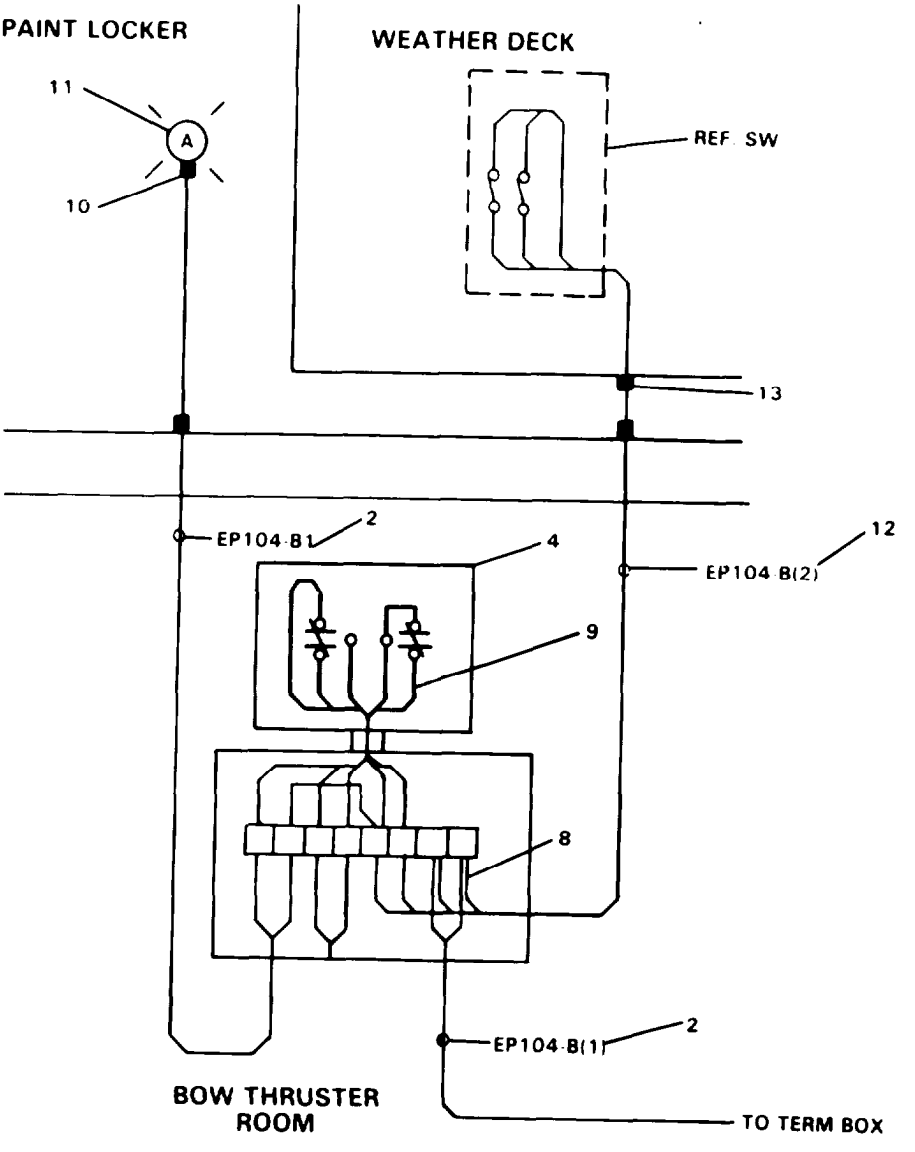

FIGURE 496. Fire Detection System, 8436017 (Sheet 3 of 3).

(1) ITEM NO	(2) SMR CODE	(3) FSCM	(4) PART NUMBER	(5) DESCRIPTION AND USABLE ON CODES(UOC)	(6) QTY
				GROUP 18 BASIC CRAFT	
				FIG. 496 FIRE DETECTION SYSTEM, 8436017	
1	XDFFF	77408	8436017	..FIRE DETECTION SYST	1
2	XDFZZ	81349	LSDSGA-4	...CABLE,POWER,ELECTRI (EP104-A(1))	V
3	XDFZZ	81349	M24558/18-001	...TERMINAL BOX	1
4	XDFZZ	81349	9991-UE-7	...ENCLOSURE	1
5	XDFZZ	81349	M24558/4-432-1	...TERMINAL BOX	1
6	PAOZZ	14799	8501-X0-80-120	...RELAY,SOLID STATE	1
7	PAOZZ	19557	50A-N5	...LIGHT,WARNING	2
8	XDFZZ	81349	MIL-T-245582	...TERMINAL BOX	1
9	PAOZZ	14799	8501-X0-20-120	...RELAY,SOLID STATE	1
10	XDFZZ	75282	JLE-12	...CONNECTOR BOX	1
11	PAOZZ	19557	52EXA-N5	...LIGHT,WARNING (STROBE BEACON)	1
12	XDFZZ	81349	LSFSGU-4	...CABLE,POWER,ELECTRI (EP104-B(2))	V
13	XDOZZ	75282	ENY-1	...ADAPTER STRAIGHT	4
14	XDFZZ	81349	LSMSGU-10	...CABLE,POWER,ELECTRI (P110(CONT))	V

END OF FIGURE

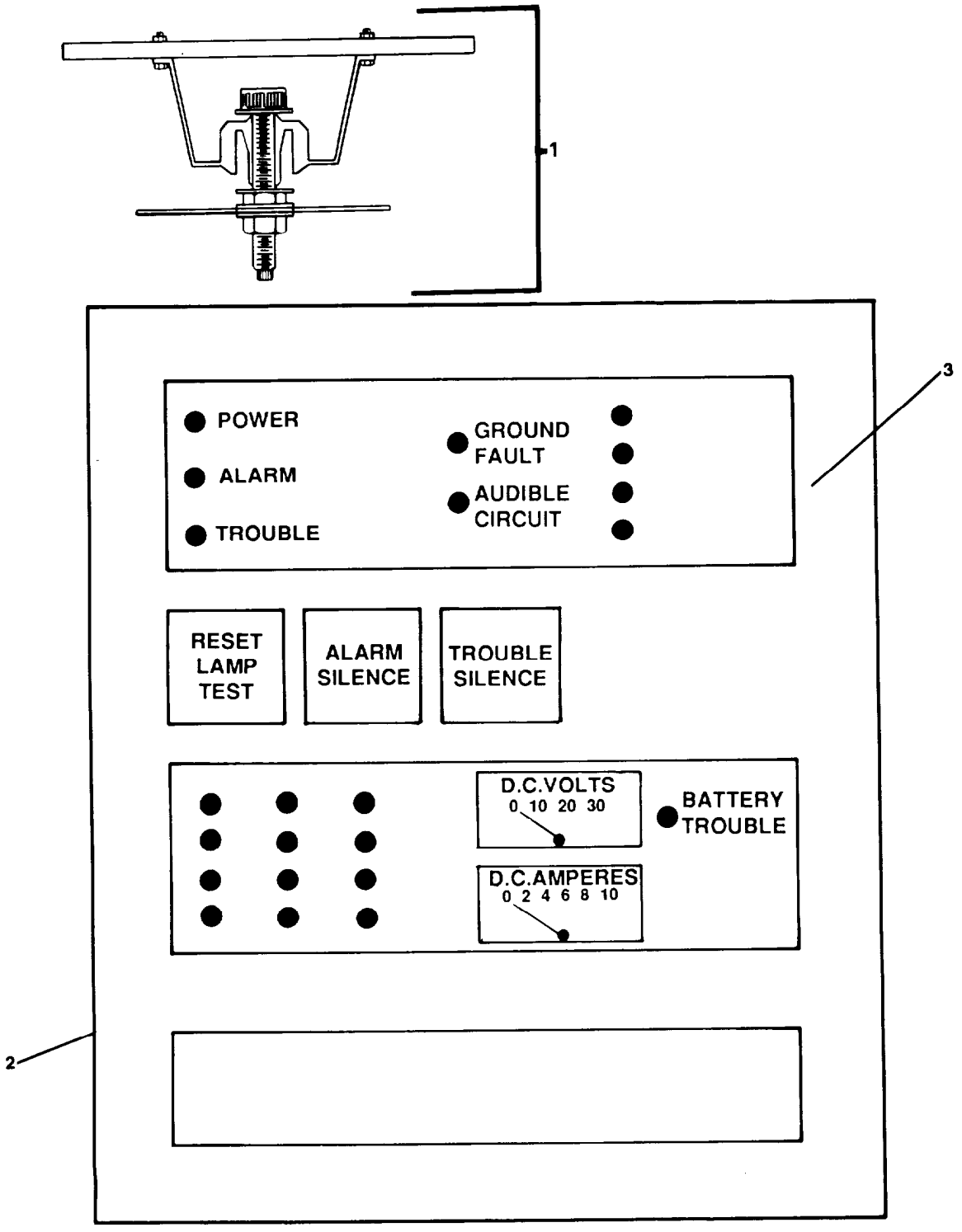

FIGURE 497. Control Panel, Fire Detection w/Thermostats (Sheet 1 of 6).

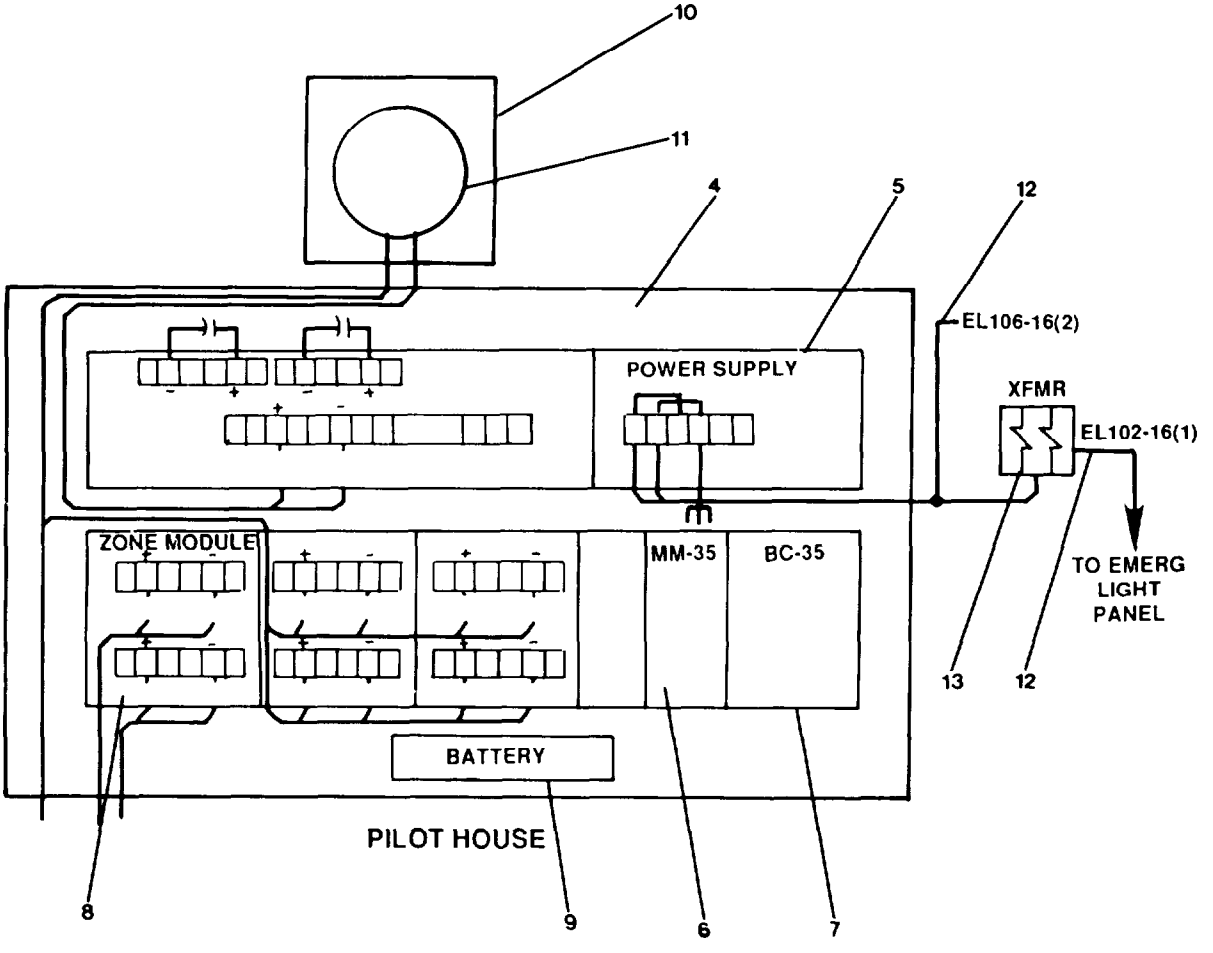

FIGURE 497. Control Panel, Fire Detection w/Thermostats (Sheet 2 of 6).

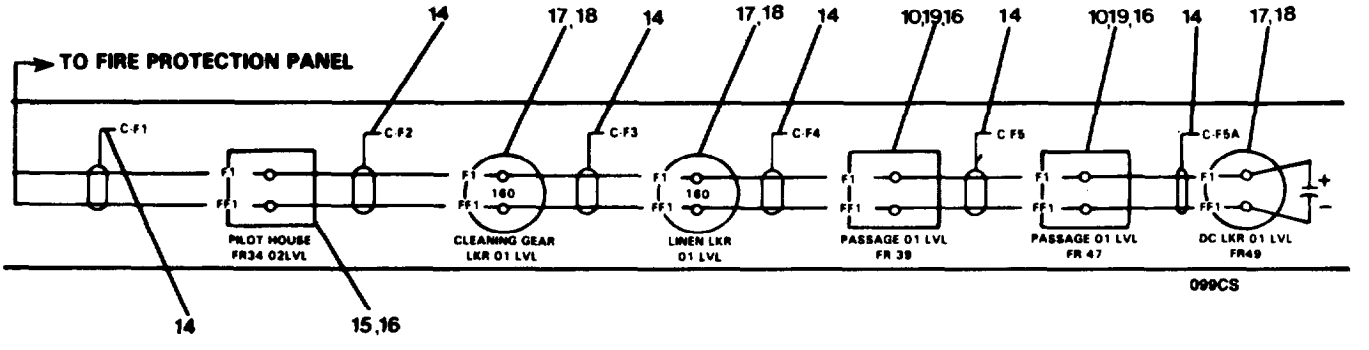

FIRE ZONE 6
02 & 01 LEVEL

FIGURE 497. Control Panel, Fire Detection w/Thermostats (Sheet 3 of 6).

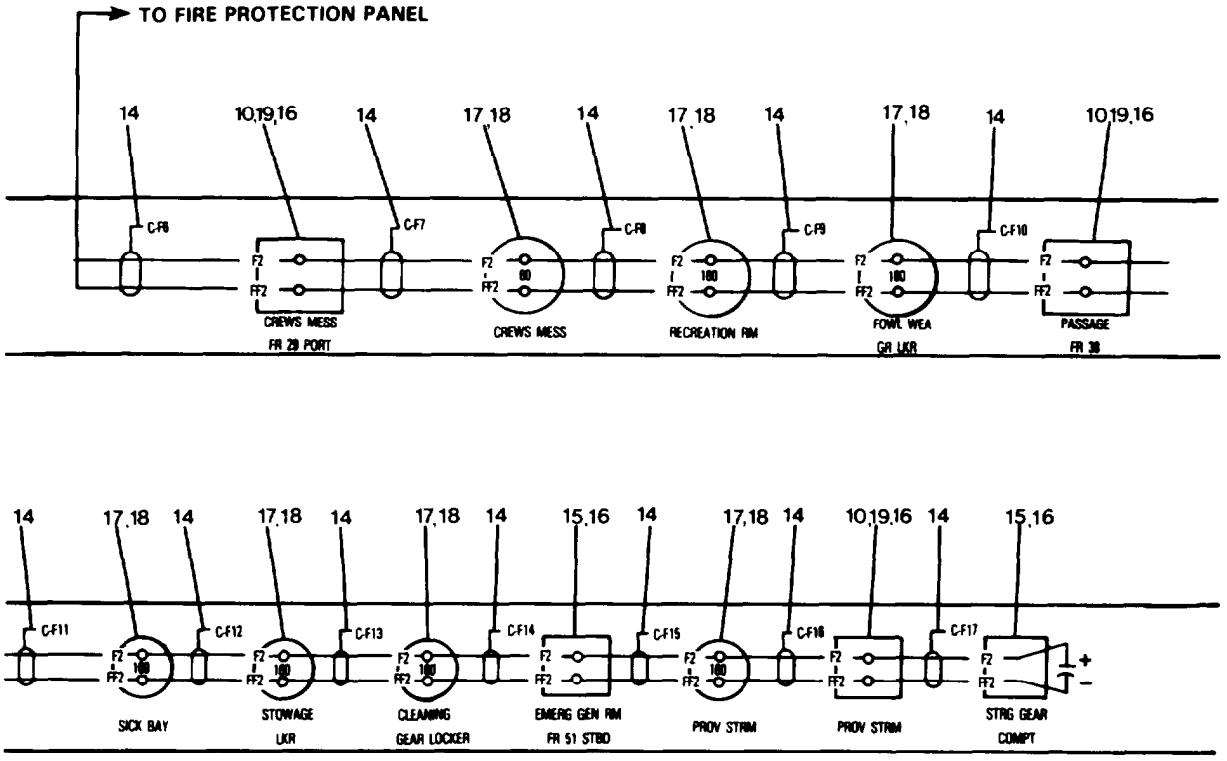

FIRE ZONE 5
MAIN DECK

FIGURE 497. Control Panel, Fire Detection w/Thermostats (Sheet 4 of 6).

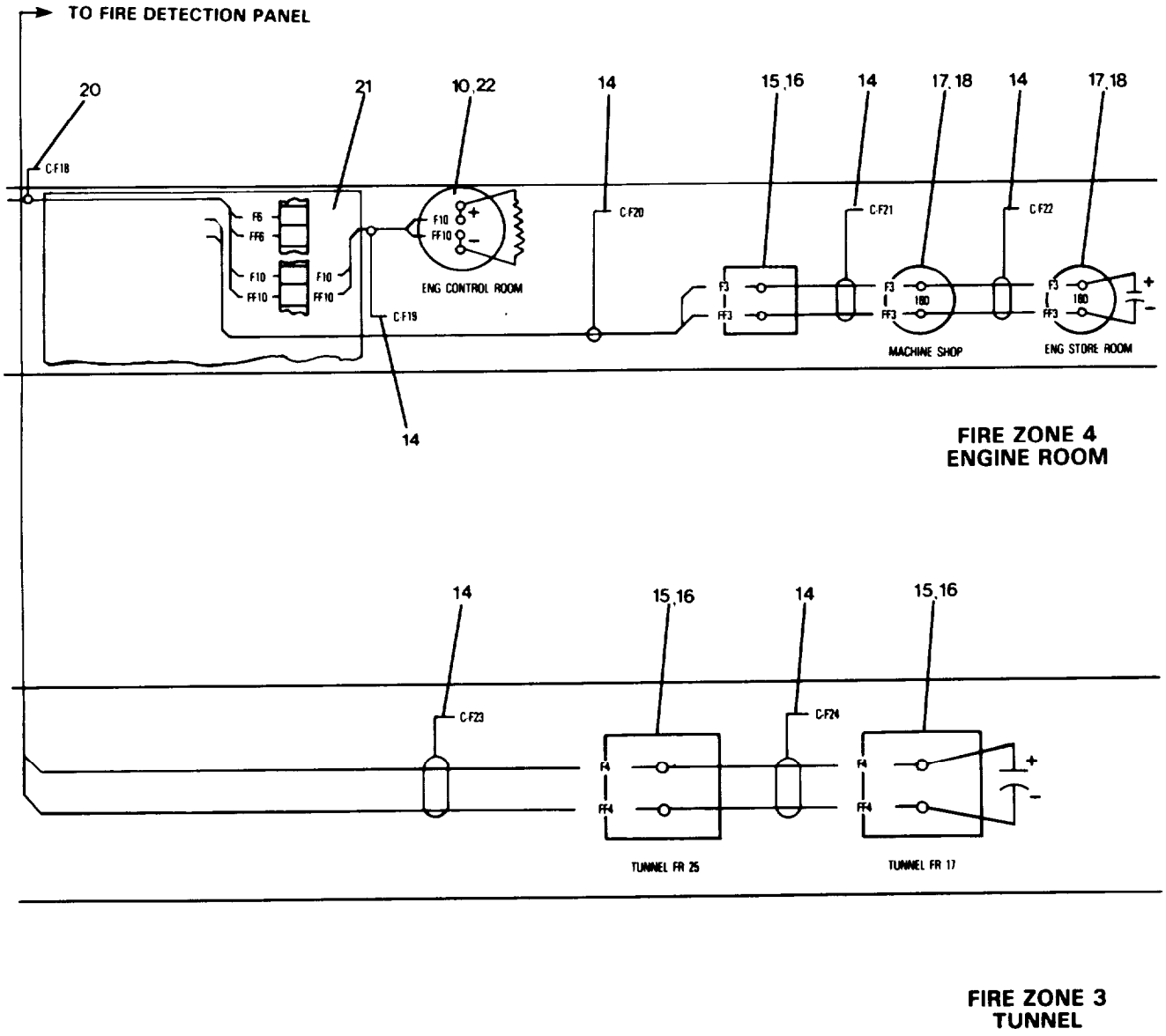

FIGURE 497. Control Panel, Fire Detection w/Thermostats (Sheet 5 of 6).

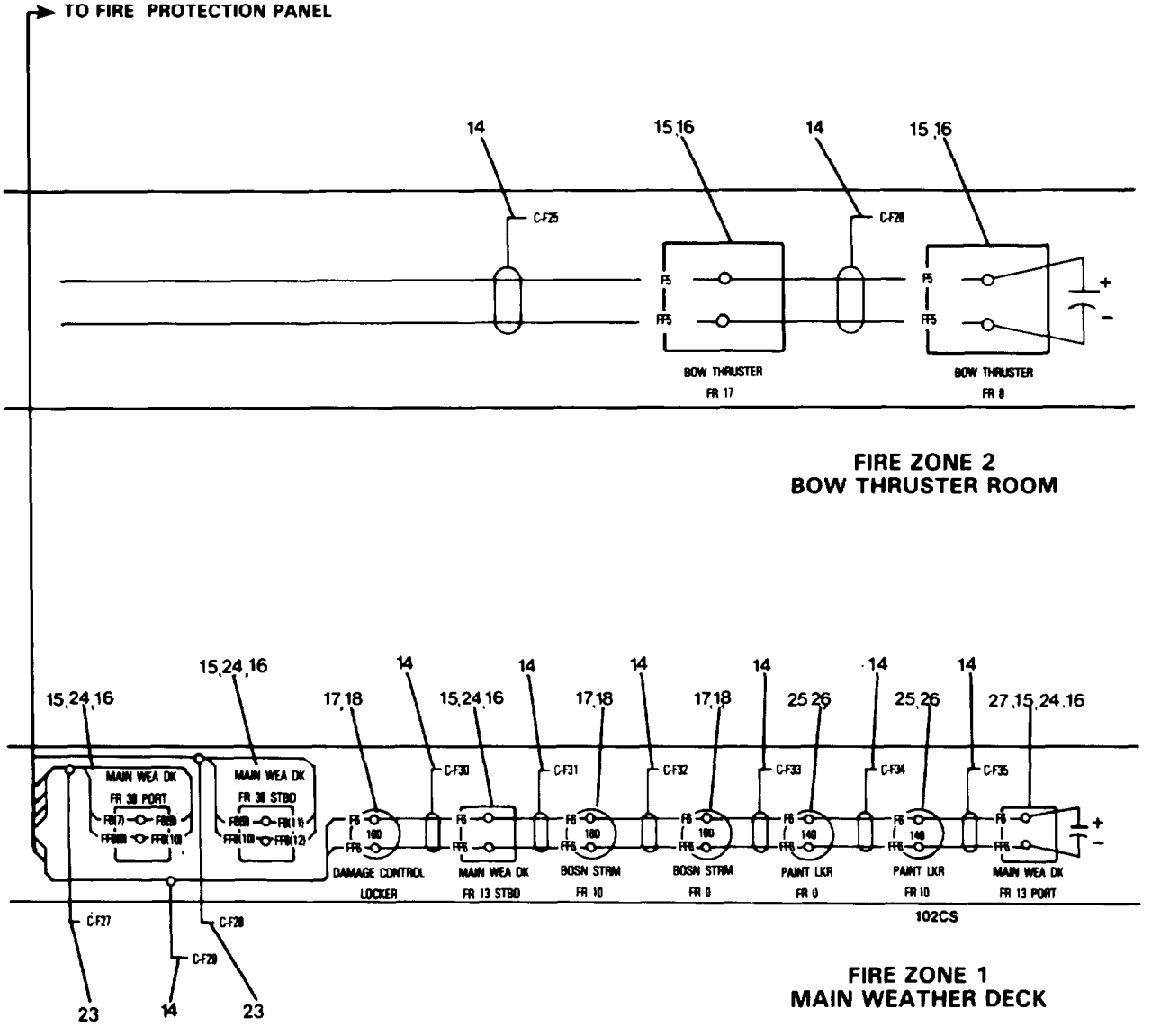

FIGURE 497. Control Panel, Fire Detection w/Thermostats (Sheet 6 of 6).

(1) ITEM NO	(2) SMR CODE	(3) FSCM	(4) PART NUMBER	(5) DESCRIPTION AND USABLE ON CODES(UOC)	(6) QTY
				GROUP 18 BASIC CRAFT	
				FIG. 497 CONTROL PANEL, FIRE DETECTION W/THERMOSTATS	
1	XDFZZ	05351	EB-330	...MOUNTING KIT,ISOLAT	4
2	XDFZZ	05351	EB-33	...BOX,WITH MOUNTING R	1
3	XDOZZ	05351	ED-33	...DOOR COVER	1
4	XDFFF	05351	CP-35	...CONTROL PANEL,FIRE	1
5	PAOZZ	05351	PS-35	....POWER SUPPLY	1
6	PAFZZ	05351	MM-35	....VOLTMETER (MODULE,METER)	1
7	PAFZZ	05351	BC-35	....TRANSFORMER,POWER (BATTERY CHARGER TRANSFER)	1
8	PAFZZ	05351	ZU-35TS	....MODULE,ZONE	3
9	PAFZZ	05351	BM-31	....BATTERY,STORAGE	1
10	XDFZZ	28488	18.2	....JUNCTION BOX	7
11	PAFZZ	05351	BDC-624	....BELL,ELECTRICAL	1
12	XDFZZ	81349	LSDSGA-4	....CABLE,POWER,ELECTRI (EL106-16(2))	V
13	PAFZZ	14799	7450-1.55	....TRANSFORMER,POWER (ISOLATION)	1
14	XDFZZ	81349	LSDSGA-3	....CABLE,POWER,ELECTRI (C-F1)	V
15	XDFZZ	05351	MC-56	....BOX,MOUNTING,SURFAC	12
16	PAOZZ	05351	MS-51	....SWITCH,LEVER	7
17	XDFZZ	28488	125	....JUNCTION BOX	15
18	PAOZZ	73168	27021-0	....SWITCH,THERMOSTATIC	15
19	XDOZZ	28488	771	....COVER,JUNCTION BOX	5
20	XDFZZ	81349	LSMSCU-14	....CABLE,POWER,ELECTRI (C-F18)	V
21	XDFZZ	81349	M24558/4-432-1	....TERMINAL BOX	1
22	PAOZZ	05351	BDC-1024	....BELL,ELECTRICAL	1
23	XDFZZ	81349	LSFSGU-4	....CABLE,POWER,ELECTRI (C-F27)	V
24	XDFZZ	00843	A-1066JFGQRPW	....ENCLOSURE,WATERTIGH	4
25	XDFZZ	75282	JLC-11	....JUNCTION BOX	1
26	PAOZZ	73168	27121-20	....SWITCH,THERMOSTATIC	1
27	XDFZZ	75282	ENY-1	....ADAPTER STRAIGHT	6

END OF FIGURE

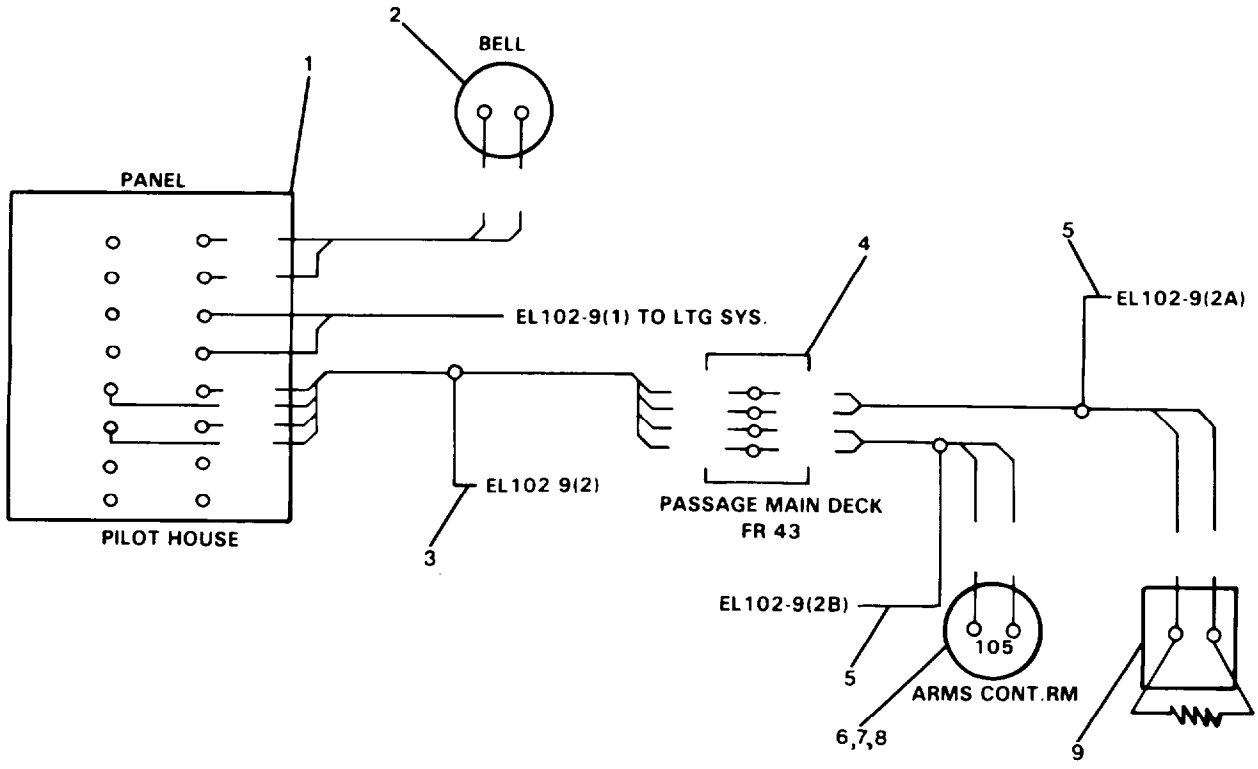

FIGURE 498. Panel, Alarm, Shipboard, IC/B51.

(1) ITEM NO	(2) SMR CODE	(3) FSCM	(4) PART NUMBER	(5) DESCRIPTION AND USABLE ON CODES(UOC)	(6) QTY
				GROUP 18 BASIC CRAFT	
				FIG. 498 PANEL, ALARM, SHIPBOARD, IC/B51	
1	XDFFF	81349	IC/B51	...PANEL,ALARM,SHIPBOA	1
2	PADZZ	19557	340-4N5	....BELL,ELECTRICAL	1
3	XDFZZ	81349	LSFSGU-4	....CABLE,POWER,ELECTRI (EL102-9(2))	V
4	XDFZZ	81349	M24558/18-001	....TERMINAL BOX	1
5	XDFZZ	81349	LSDSGA-4	....CABLE,POWER,ELECTRI (EL102-9(2B))	V
6	XDFZZ	28488	125	....JUNCTION BOX	1
7	XDFZZ	81349	MIL-W-16878/3	....WIRE,ELECTRICAL	V
8	PAOZZ	81349	IC/J-105	....SWITCH,THERMOSTATIC	1
9	PAOZZ	81349	IC/W	....WATER SWITCH	1

END OF FIGURE

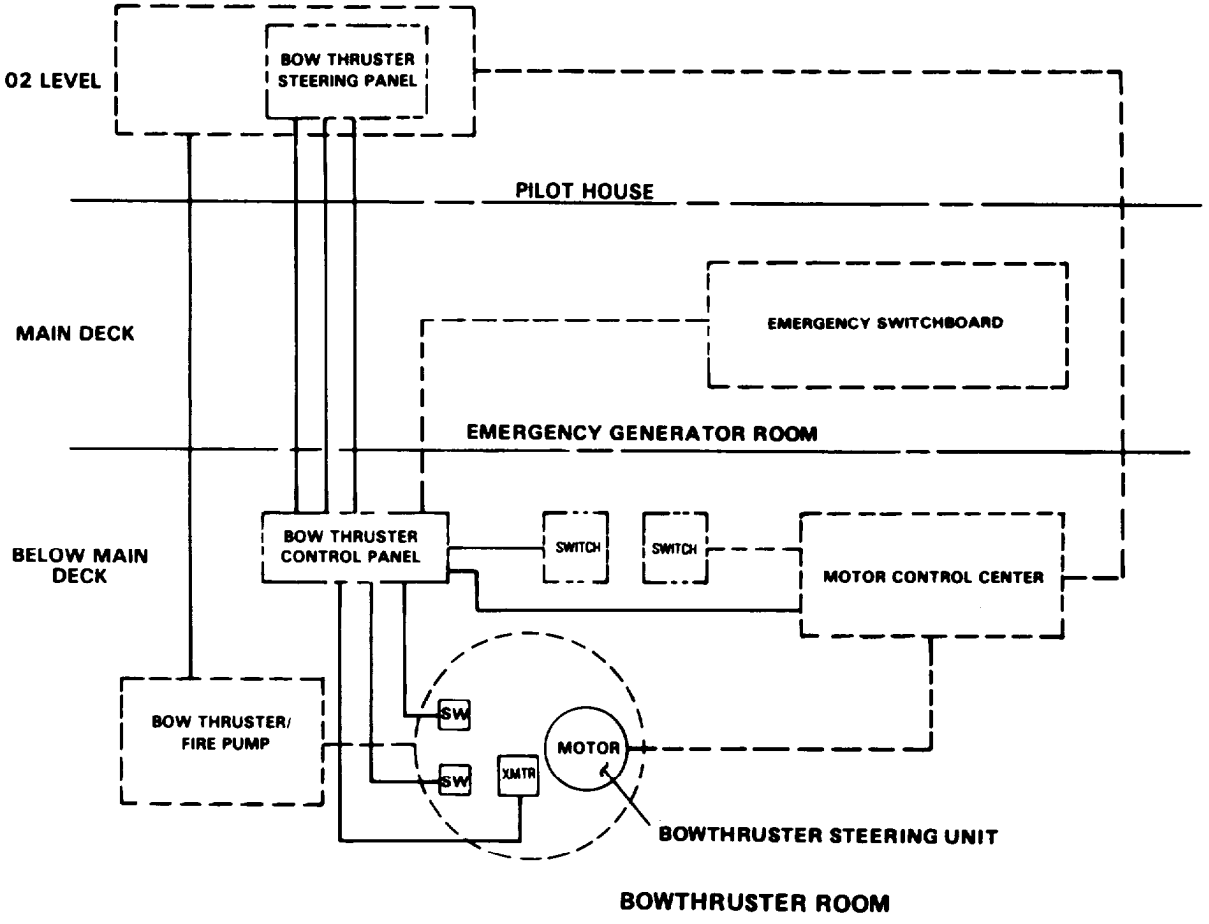

FIGURE 499. Bowthruster Control System, 8321008.

(1) ITEM NO	(2) SMR CODE	(3) FSCM	(4) PART NUMBER	(5) DESCRIPTION AND USABLE ON CODES(UOC)	(6) QTY
				GROUP 18 BASIC CRAFT	
				FIG. 499 BOWTHRUSTER CONTROL SYSTEM 8321008	
	XDOOO	77408	8321008	..BOWTHRUSTER CONTROL	1
				END OF FIGURE	

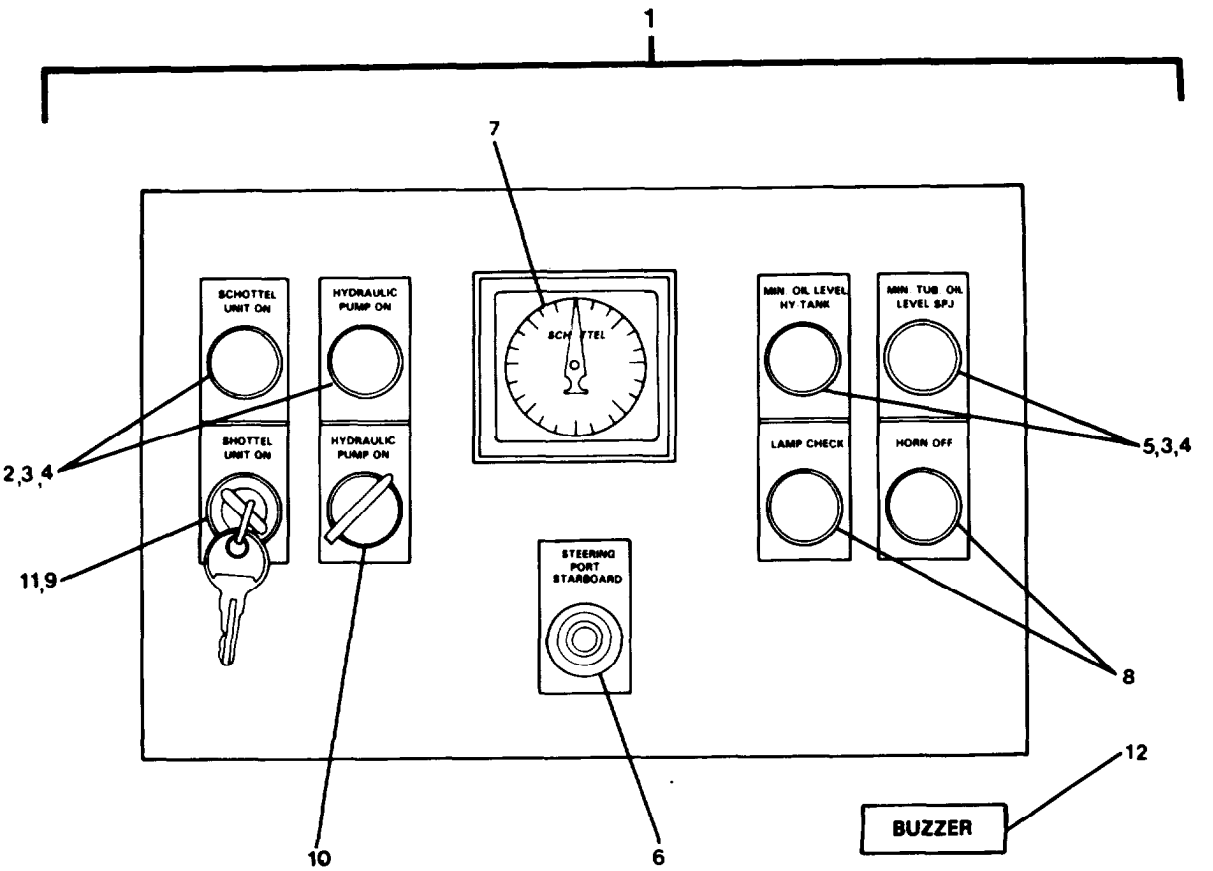

NOTE:

BUZZER LOCATED UNDER PANEL

FIGURE 500. Panel Assembly, Steering Control, 1080885 (Sheet 1 of 2).

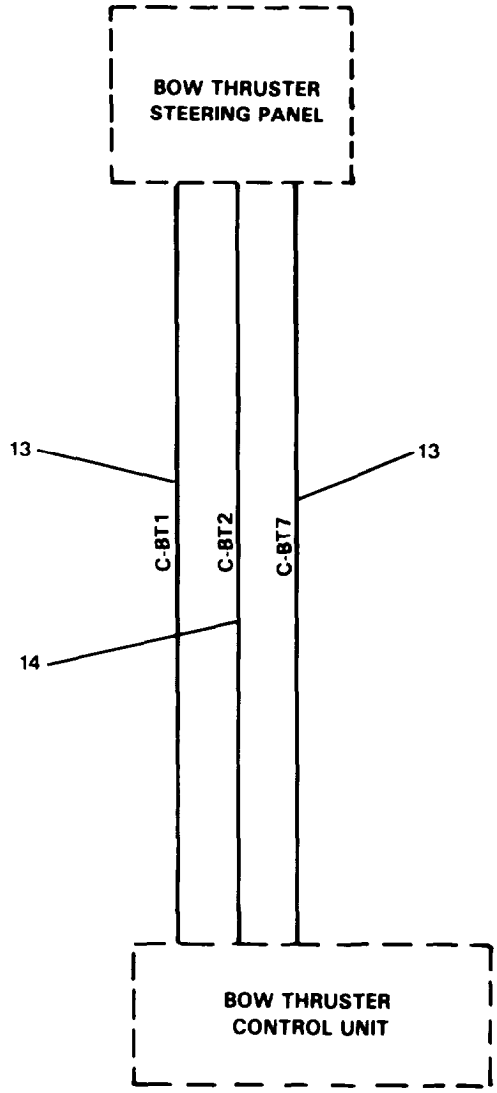

FIGURE 500. Panel Assembly, Steering Control, 1080885 (Sheet 2 of 2).

(1) ITEM NO	(2) SMR CODE	(3) FSCM	(4) PART NUMBER	(5) DESCRIPTION AND USABLE ON CODES(UOC)		(6) QTY
				GROUP 18 BASIC CRAFT		
				FIG. 500 PANEL ASSEMBLY, STEERING CONTROL, 1080885		
1	XDOOO	32862	1080885	...PANEL ASSEMBLY,STEE		1
2	PACZZ	32862	1054985	....LENS,LIGHT (GREEN)		2
3	PACZZ	32862	1054978	....LIGHT,INDICATOR		4
4	PACZZ	32862	1063250	....LAMP,INCANDESCENT		4
5	PACZZ	32862	1051399	....LENS,LIGHT (RED)		2
6	PACZZ	32862	1060377	....SWITCH,STEERING		1
7	XDCZZ	32862	1042417	....GAGE		1
8	PACZZ	32862	1054979	....PUSHBUTTON		2
9	PACZZ	32862	1051704	....SWITCH,LOCK		6
10	PACZZ	32862	1054919	....LEVER,SWITCH		1
11	XDOZZ	32862	1057447	....COVER,LOCK SWITCH		1
12	XDCZZ	32862	1032141	....BUZZER		1
13	XDOZZ	81349	LS7SGA-4	....CABLE,POWER,ELECTRI	(C-BT1)	V
14	XDOZZ	81349	2SWAU-3	....CABLE,SPECIAL,PURPO	(C-BT2)	V

END OF FIGURE

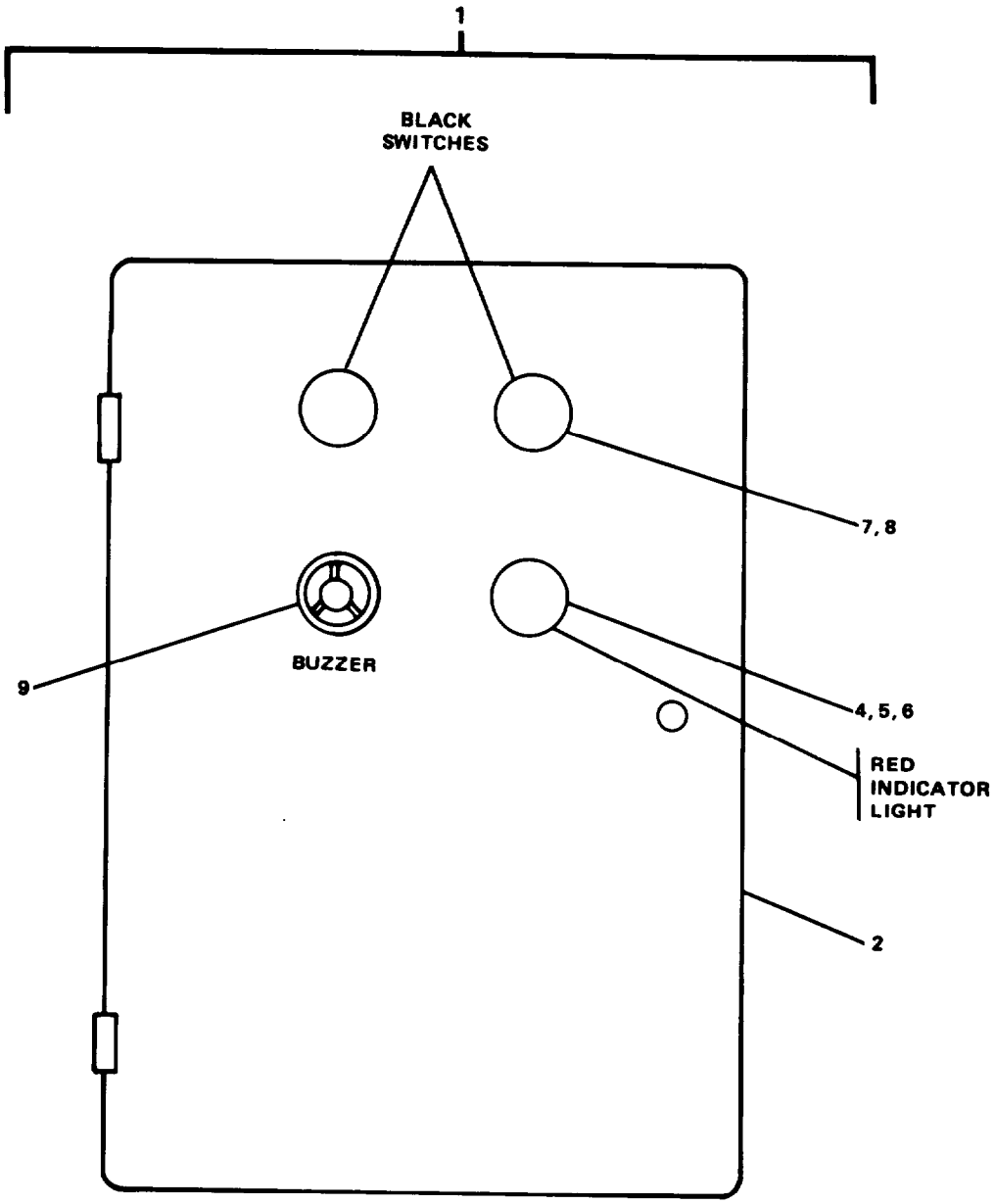

FIGURE 501. Control Unit Assembly, 1080886 (Sheet 1 of 3).

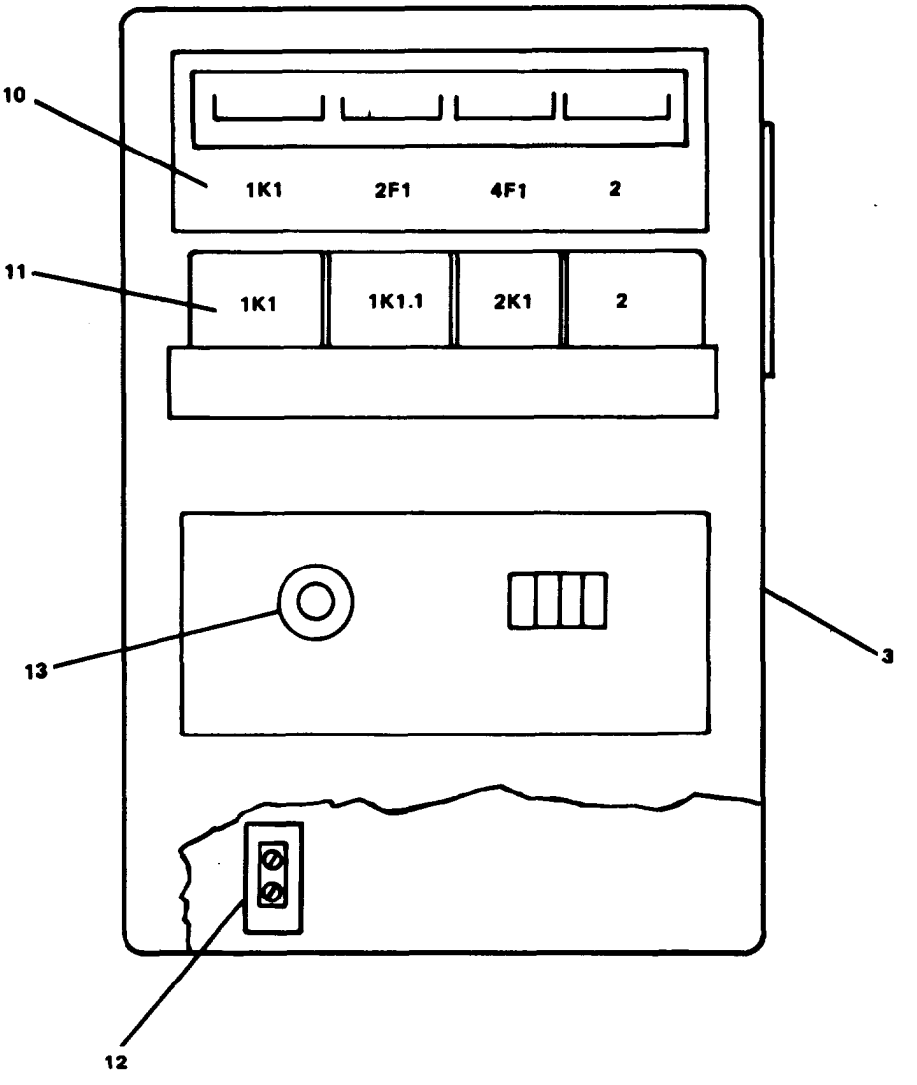

FIGURE 501. Control Unit Assembly, 1080886 (Sheet 2 of 3).

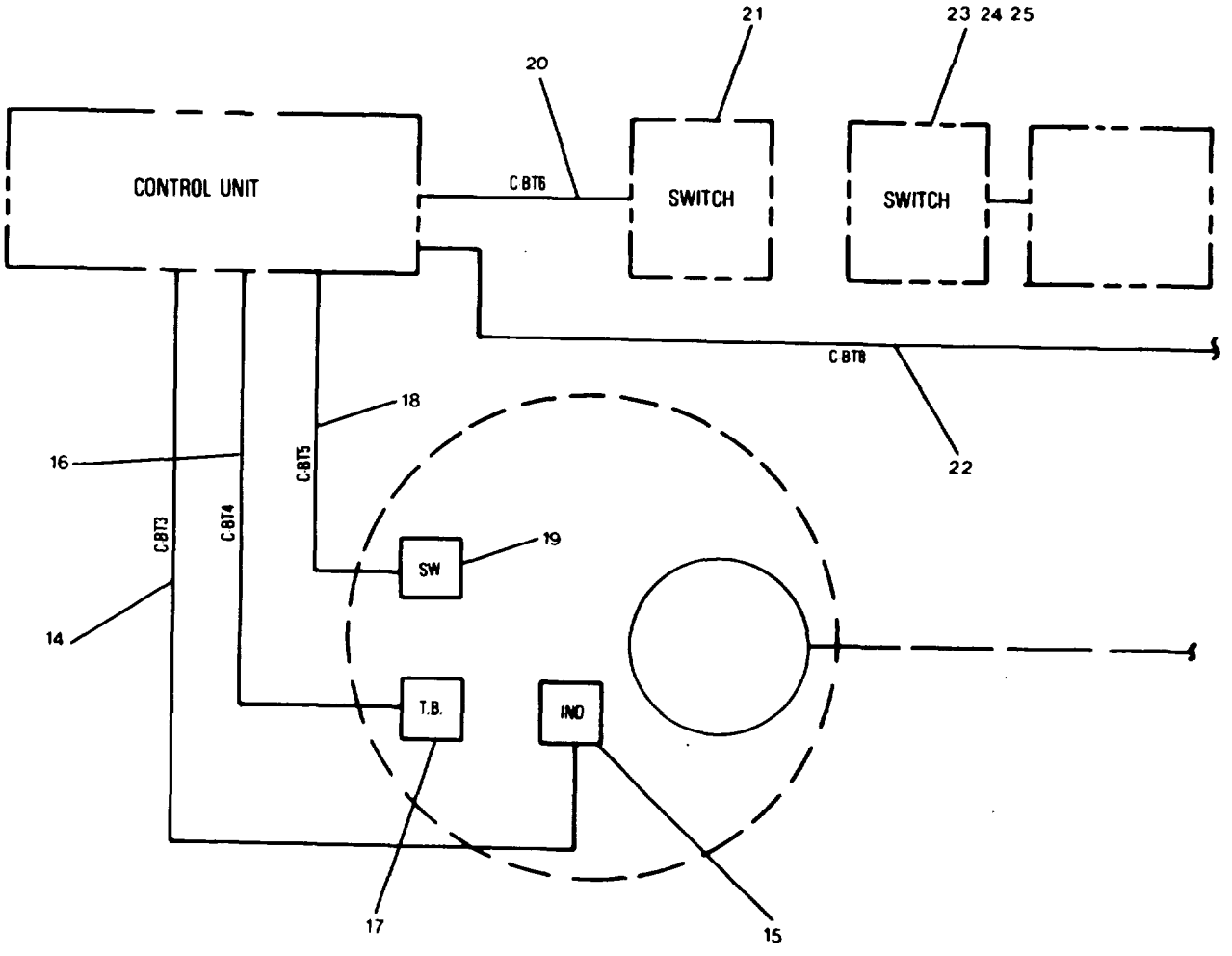

FIGURE 501. Control Unit Assembly, 1080886 (Sheet 3 of 3).

(1) ITEM NO	(2) SMR CODE	(3) FSCM	(4) PART NUMBER	(5) DESCRIPTION AND USABLE ON CODES(UOC)		(6) QTY
				GROUP 18 BASIC CRAFT		
				FIG. 501 CONTROL UNIT ASSEMBLY, 1080886		
1	XDOOO	32862	1080886	CONTROL UNIT ASSEMB		1
2	XDOZZ	32862	1052976	COVER,CONTROL UNIT		1
3	XDOZZ	32862	1058757	BOX,CONTROL UNIT		1
4	PACZZ	32862	1051399	LENS,LIGHT (RED)		1
5	PACZZ	32862	1054978	LIGHT,INDICATOR		1
6	PACZZ	32862	1063250	LAMP,INCANDESCENT		1
7	PACZZ	32862	1054979	PUSHBUTTON		2
8	PACZZ	32862	1051704	SWITCH,LOCK		2
9	PACZZ	32862	1032141	BUZZER		1
10	PACZZ	32862	1069895	FUSE,CARTRIDGE		4
11	PACZZ	32862	1026045	RELAY		4
12	XDOZZ	39428	7527K62	TERMINAL BLOCK		1
13	PACZZ	13445	M522STK	SWITCH,ROTARY		1
14	XDOZZ	81349	2SWAU-3	CABLE,SPECIAL PURPO	(C-BT3)	V
15	PACZZ	32862	4081468	INDICATOR,TRANSMITT		1
16	XDOZZ	81349	LS7SGA-4	CABLE,POWER,ELECTRI	(C-BT4)	V
17	PAOZZ	32862	1011586	TERMINAL BOX		1
18	XDOZZ	81349	LSDSGA-4	CABLE,POWER,ELECTRI	(C-BT5)	V
19	PACZZ	32862	1012099	SWITCH,LEVEL		1
20	XDOZZ	81349	LSFSGA-4	CABLE,POWER,ELECTRI	(C-BT6)	V
21	PACZZ	81349	S2JRM3B2	SWITCH,ROTARY		1
22	XDOZZ	81349	LSDSGA-9	CABLE,POWER,ELECTRI	(C-BT8)	V
23	PACZZ	88026	10250T3011	SWITCH,LEVER		1
24	XDCZZ	88026	10250T2	SWITCH,PUSH		1

END OF FIGURE

Section III. SPECIAL TOOLS LIST

(Not Applicable)

CROSS-REFERENCEINDEXES

NATIONAL STOCK NUMBER INDEX

STOCKNUMBER	FIG.	ITEM
5930-00-007-0678	493	6
	494	5
5930-00-008-0495	368	13
5930-00-033-6729	498	9
5930-00-067-5808	492	8
	493	9
	494	8
5945-00-067-8582	339	9
5920-00-140-0096	368	18
	369	25
4820-00-148-8584	344	19
	345	15
5920-00-199-9498	339	11
5920-00-243-3787	381	12
6130-00-244-1406	370	33
6350-00-269-7978	350	25
	351	32
	352	24
	354	27
	355	27
4540-00-269-8078	408	8
5920-00-280-4013	493	12
6350-00-295-2847	351	33
	353	31
	356	30
5930-00-369-4140	492	4
	493	5
	494	4
6350-00-383-1189	498	2
6220-00-399-7105	380	10
4820-00-417-1120	342	12
	344	5
5365-00-417-8925	435	8
5330-00-420-9623	337	25
5330-00-451-9557	344	13
	345	19
5330-00-459-0881	464	23
6130-00-485-5885	368	43
	369	52
6680-00-485-5887	368	44
	369	53
5930-00-498-8702	492	10
	493	11
	494	10
5330-00-500-2980	368	11
	369	11
5330-00-500-2981	369	22
5330-00-500-2982	368	14
	369	14
6350-00-508-0855	351	34
5920-00-518-1793	381	21
5330-00-520-1593	464	14
5930-00-548-8042	356	4
5930-00-565-5153	498	8
4320-00-592-9427	436	8
	443	11
5330-00-595-6328	383	44
5910-00-605-6704	368	81
	369	108
5930-00-655-1575	381	32
5330-00-716-6781	435	14
5930-00-784-8989	408	4
	408	28
5930-00-828-0004	408	79
5965-00-840-8849	350	6
	351	7
	352	6
	353	7
	354	22
	355	22
	356	26
5930-00-878-6734	368	12
	369	12
5905-00-892-0304	368	68
	369	94
	370	16
5965-00-900-6401	350	22
	351	28
	352	21
	353	28
	354	24
	355	24
	356	28
4330-00-931-2473	337	6
6240-00-939-7859	368	20
	369	27
5930-00-966-7191	501	13
4330-00-973-3909	337	7
5930-00-984-5274	492	6
	493	7
	494	6
5935-00-998-9094	370	41
6680-01-005-1939	369	61
5930-01-016-0178	493	4
6210-01-016-6082	492	7
	493	8
	494	7
6210-01-016-6083	492	9
	493	10
	494	9
6210-01-023-0393	381	14

CROSS-REFERENCE INDEXES

NATIONAL STOCK NUMBER INDEX

STOCK NUMBER	FIG.	ITEM
6350-01-036-9626	497	11
5330-01-037-5914	436	9
	443	14
5950-01-039-7145	370	37
3110-01-041-6124	435	22
5330-01-042-2394	368	23
	369	31
5330-01-042-2830	369	5
6210-01-053-5200	368	7
	369	7
6110-01-058-1918	368	45
	369	54
5330-01-058-3721	337	5
6320-01-062-7496	361	15
	362	15
	363	15
	364	15
	365	15
	366	15
	367	15
3010-01-070-5220	346	16
	347	18
5330-01-073-2875	346	17
	347	19
6210-01-083-4188	368	19
	369	26
5330-01-087-6951	370	7
5330-01-093-5014	370	12
5910-01-107-3565	385	51
5930-01-109-4195	393	1
5950-01-112-4835	368	79
	369	106
5945-01-114-8589	339	6
3040-01-116-4941	392	29
4820-01-117-7892	337	23
3010-01-119-9127	392	11
5945-01-125-4375	392	28
5930-01-127-9268	370	13
6210-01-128-4556	428	9
3510-01-131-9654	429	6
3030-01-133-7733	427	9
6210-01-136-1307	419	12
5930-01-136-1967	432	3
3040-01-138-8212	426	18
5930-01-140-9490	419	10
3030-01-150-3662	432	14
5910-01-150-8210	396	29
5330-01-152-0088	383	43
	386	13
5315-01-154-0630	443	15
5930-01-154-3618	428	65
6680-01-155-8418	453	1
	455	1
	461	20
5930-01-156-5521	432	29
5930-01-156-5587	428	11
6240-01-162-4086	383	17
5930-01-165-2756	411	64
5930-01-167-1469	392	13
6210-01-169-1615	409	18
5995-01-169-1680	361	14
	362	14
	363	14
	364	14
	365	14
	366	14
	367	14
4510-01-171-4955	420	13
5330-01-173-5807	435	15
5330-01-173-6662	368	5
5930-01-176-9474	393	
5930-01-177-5194	411	76
5355-01-177-8103	409	4
7310-01-181-8724	409	25
5910-01-182-8697	411	70
5985-01-185-0314	323	1
5905-01-188-2358	385	61
5930-01-188-8843	388	4
4720-01-192-8116	319	28
	320	30
6685-01-196-2151	337	19
6240-01-202-2482	447	21
6240-01-202-2492	449	3
6680-01-204-0080	342	11
	345	12
5305-01-204-8748	350	13
	351	18
	352	13
	353	18
	354	13
	355	13
	356	9
5950-01-205-4896	368	78
	369	105
5355-01-213-6701	447	10
6350-01-220-5862	497	22
4320-01-223-3464	346	12
5330-01-224-8595	437	14
4820-01-226-3256	461	25
4330-01-226-3751	461	

CROSS-REFERENCE INDEXES

NATIONAL STOCK NUMBER INDEX

STOCK NUMBER	FIG.	ITEM
4820-01-227-1010	461	21
4540-01-228-1018	431	7
5930-01-231-4542	497	16
5930-01-232-8712	492	5
5999-01-233-5915	450	3
5945-01-234-3037	339	7
4210-01-237-6446	320	51
5920-01-237-8039	370	18
5945-01-246-4649	496	9
4820-01-248-8880	454	1
2030-01-250-4581	462	
4810-01-263-0945	319	30
	320	32
5930-01-265-5483	388	3
6210-01-267-5476	496	7
5920-01-268-0398	385	42
5930-01-268-0413	383	91
5910-01-268-4015	384	14
6645-01-268-4045	385	11
6625-01-268-4047	385	16
5950-01-268-5245	384	23
5950-01-268-5246	384	7
4140-01-268-9129	385	5
5330-01-269-6323	396	5
5330-01-270-1166	383	5
5330-01-270-1167	383	37
5945-01-270-6105	351	17
	353	17
	356	22
6680-01-271-2885	357	12
	358	12
	359	12
5950-01-271-8131	385	52
5950-01-271-8155	385	41
5910-01-272-3541	385	35
5910-01-272-6232	385	28
5945-01-272-7290	385	25
5340-01-272-9841	350	14
	351	19
	352	14
	353	19
	356	8
5325-01-272-9951	368	76
	369	103
4210-01-273-0336	319	11
	320	12
5330-01-274-7136	350	4
	352	4
5330-01-276-4678	390	16
5999-01-276-4721	390	14
5805-01-278-9956	354	14
4210-01-281-1130	319	41
4820-01-281-2408	319	16
	320	17
6130-01-284-1575	497	5
5930-01-286-9665	351	15
	353	15
4210-01-286-9725	320	26
5961-01-290-7668	385	46
4320-01-295-3427	328	1
3010-01-298-0768	332	1
5805-01-298-2595	350	1
5805-01-298-2596	353	1
5805-01-298-2597	354	1
5805-01-298-2598	355	1
5805-01-298-2599	356	1
3040-01-298-8828	331	1
5330-01-312-3768	354	9
	355	9

CROSS-REFERENCE INDEXES

PART NUMBER INDEX

FSCM	PART NUMBER	STOCK NUMBER	FIG.	ITEM
00843	A-1066JFGQRPW		497	24
60438	A-107364		411	4
28199	A-11445-18		381	31
28199	A-18646		381	7
28199	A-18648-11		381	19
28199	A-186481		381	16
28199	A-18649		381	33
28199	A-18650		381	23
95405	A-19		380	6
59431	AE2415A		413	15
59431	AE2415AC		413	14
59431	AE4430A		412	15
59431	AE4430AC		412	14
59431	AE4440		416	15
59431	AE4440AC		416	14
50431	AJ2425A		417	15
59431	AJ2425AC		417	14
88044	AN960-C616		337	4
80871	AR-2524LT		334	3
77408	ASTM A-197		319	12
			319	18
			319	20
			319	21
			319	26
			319	36
			319	37
			319	38
			319	39
			319	40
			319	42
			320	13
			320	19
			320	21
			320	23
			320	27
			320	28
			320	36
			320	38
			320	40
			320	42
			320	43
			320	44
			320	46
			320	48
			320	50
			320	53
			320	55
			320	56
77408	ASTM A-234		320	54
77408	ASTM A-397		320	39
77408	ASTM A-53		319	8

CROSS-REFERENCE INDEXES

PART NUMBER INDEX

FSCM	PART NUMBER	STOCK NUMBER	FIG.	ITEM
77408	ASTM A-53		319	13
			319	19
			319	24
			319	35
			320	8
			320	14
			320	20
			320	25
			320	37
			320	41
			320	45
			320	47
			320	52
00843	A12P10		493	1
			494	1
00843	A1210NF		493	2
			494	2
00843	A24H20BLP		492	2
00843	A24P20		492	1
78770	A710E8751	5355-01-177-8103	409	4
73274	B-D 602		351	30
91319	B-GONG-10		395	2
60438	B-109756		411	15
60438	B-109762		411	40
60438	B-111144		411	34
60438	B-111154		411	19
60438	B-113903		411	43
60438	B-113906		411	37
60438	B-114103		411	42
60438	B-114112		411	46
60438	B-114114		411	38
60438	B-114146		411	36
60438	B-114297		411	50
60438	B-114525-1		411	60
60438	B-117542-21		411	81
60438	B-118162		411	9
60438	B-118175		411	28
60438	B-122727-1		411	58
60438	B-123128		411	77
60438	B-18682-1		411	54
02570	B-600-1-4		457	1
			458	1
			459	3
			460	4
			463	3
			464	2
02570	B-600-1-6		462	2
02570	B-600-1-8		461	6
			462	1
02570	B-600-2-4		457	5
			458	5

CROSS-REFERENCE INDEXES

PART NUMBER INDEX

FSCM	PART NUMBER	STOCK NUMBER	FIG.	ITEM
02570	B-600-2-4		460	9
02570	B-600-3		457	4
			458	4
			460	8
			461	3
02570	B-600-3TFT		461	4
02570	B-600-7-4		457	2
			458	2
			460	11
			462	9
02570	B-600-9		457	3
			458	3
			460	7
			461	2
			463	2
60438	B-76902		411	84
60438	B-76948		411	29
60438	B-76953		411	55
60438	B-76956		411	41
77408	B-810-1-8		461	10
			462	3
02570	B-810-3		461	9
02570	B-810-9		461	7
			462	7
28873	B-87711-148-1	5930-01-177-5194	411	76
53918	BA50		342	32
78770	BB-325/750		414	1
60438	BB-5-30		411	66
60438	BB-5-5		411	63
05351	BC-35		497	7
05351	BDC-1024	6350-01-220-5862	497	22
05351	BDC-624	6350-01-036-9626	497	11
05351	BM-31		497	9
53918	B006		339	1
			340	1
			341	1
53918	B018		347	7
53918	B028		342	1
			344	1
			345	1
53918	B037		346	5
53918	B093		342	18
53918	BU29		342	17
78770	B10012		414	2
78770	B10015		414	14
78770	B10203		414	13
78770	B10204		414	10
78770	B10205		414	11
78770	B10212		414	8
78770	B10215		414	7
78770	B10225		414	3

CROSS-REFERENCE INDEXES

PART NUMBER INDEX

FSCM	PART NUMBER	STOCK NUMBER	FIG.	ITEM
78770	B10228		414	5
78770	B10229		414	6
78770	B10230		414	9
78770	B10330		414	4
78770	B10517		414	16
88233	B123-043		459	13
			460	23
78770	B14143		414	15
78770	B14173		414	12
78770	B14223		414	19
78770	B14258		414	17
78770	B14276		414	18
88233	B173-049		462	15
7L611	B20T		410	1
88233	B202-1009		463	4
88233	B223-030		457	23
			458	18
88233	B233-101		457	31
88233	B233-106		458	27
88233	B233-114		458	33
88233	B233-126		459	25
			460	35
88233	B273-124		466	2
88233	B273-130		466	22
88233	B273-133		466	21
78770	B301A8817		408	20
78770	B301A8829		409	15
78770	B301A8843		408	57
78770	B301A8861		409	6
78770	B301A8863		409	12
78770	B301G8839		409	8
88233	B383-002		457	34
			458	30
10741	B4564-26		383	103
88233	B482-332		466	14
88233	B482-349		466	8
88233	B493-141		466	16
88233	B502-037		458	8
88233	B503-027		457	15
88233	B523-165		457	14
88233	B632-008		457	27
			458	22
88233	B633-033		461	15
			462	45
			463	6
88233	B633-181		458	32
88233	B663-071		466	6
88233	B693-110		466	3
88233	B713-170		466	13
88233	B713-187		459	20
			460	30

CROSS-REFERENCE INDEXES

PART NUMBER INDEX

FSCM	PART NUMBER	STOCK NUMBER	FIG.	ITEM
88233	B723-263		459	16
			460	26
88233	B723-302		462	16
88233	B723-317		459	6
			460	16
88233	B730-21003		466	
88233	B732-687	2030-01-250-4581	462	
88233	B732-9101		457	
53477	B732-920	4330-01-226-3751	461	
88233	B732-934		459	
88233	B813-119		466	11
88233	B833-359		466	20
88233	B843-344		466	7
88233	B912-016		457	29
			458	25
			459	23
			460	33
88233	B913-038		457	26
			458	21
88233	B913-039		458	9
88233	B993-153		457	20
			458	15
88233	B993-200		457	24
			458	19
88233	B993-218		459	19
			460	29
60438	C-108197-5		411	3
28873	C-111688-4	5930-01-165-2756	411	64
60438	C-114190-4		411	23
60438	C-114214		411	27
60438	C-114243		411	78
60438	C-119884		411	87
37919	C-12-253		444	
60438	C-120145		411	24
60438	C-120782		411	13
60438	C-122342-3		411	83
60438	C-123686-3		411	12
60438	C-22275-211		411	67
28199	C-2404		381	38
60438	C-70486-1		411	71
60438	C-76970		411	6
87405	CC-15	4330-00-931-2473	337	6
71724	CFSP52322	5330-01-037-5914	436	9
37919	CP-1		447	1
05351	CP-35		497	4
10741	CR4579-20		383	24
			384	9
			385	24
10741	CR4579-25		383	69
			385	49
10741	CR4579-35		383	70

CROSS-REFERENCE INDEXES

PART NUMBER INDEX

FSCM	PART NUMBER	STOCK NUMBER	FIG.	ITEM
10741	CR4579-45		385	38
53198	CU92		344	8
			345	8
59431	C052S		412	21
			413	21
			416	21
			417	20
06383	C1		493	3
			494	3
14852	C1288E01		412	36
			416	36
14852	C1297A01		413	45
14852	C1297A03		417	44
06383	C2		492	3
14852	C23706A2		412	40
			416	40
14852	C23728A1		413	54
14852	C23730A1		417	53
14852	C2552161		413	48
14852	C25523A1		412	39
			416	39
			417	47
78770	C714B0096		408	63
88233	C910-30006		463	9
60438	D-114236		411	57
60438	D-114452		411	53
60438	D-118935		411	47
60438	D-118939		411	52
60438	D-119890		411	88
28199	D-1884		381	4
28199	D-1890		381	37
28199	D-1893-11		381	36
60438	D-275913-2		411	18
60438	D-65477-103-1		411	68
28873	D-70487-15	5910-01-182-8697	411	70
60438	D-76961		411	48
70834	DP43		438	27
			442	29
70834	DR20C13MOC		438	31
			442	32
70834	DR203MF		438	42
			442	43
70834	DR303MFI		440	25
81349	DSS-2		479	3
81349	DSS-4		371	13
			372	11
			373	14
			374	11
			375	11
			376	14
			377	14

CROSS-REFERENCE INDEXES

PART NUMBER INDEX

FSCM	PART NUMBER	STOCK NUMBER	FIG.	ITEM
81349	DSS-4		378	14
			379	11
			379	14
			380	7
77408	D0-2520-0848		462	12
77408	D0-2520-0850		461	12
			464	3
77408	D0-2520-1012		459	1
77408	D0-2520-1022		460	1
77408	D0-2719-8029		461	13
			462	13
			464	4
77408	D0-2719-8033		459	2
			460	2
77408	D0-5925-8039		419	2
			428	3
77408	D0-6150-1010		435	2
77408	D0-6150-1180		442	2
77408	D0-6150-1372		419	3
			428	1
77408	D0-6170-8039		419	1
			428	2
77408	D0-6800-8033		435	1
77408	D0-6800-8036		442	1
88233	D020-30001		463	8
88233	D030-30010		463	11
70834	D2026F1		438	30
			442	31
70834	D2030F1		438	29
			442	27
70834	D30C13M0C		440	14
70834	D3026F1		440	13
70834	D3030F1		440	9
88233	D320-40001		463	7
70834	D90HC.7		438	19
			440	2
			442	20
60438	E-111835-3		411	62
60438	E-118328		411	44
60438	E-119888		411	89
60438	E-120379		411	21
60438	E-123721-2		411	16
60438	E-290969		411	7
05351	EB-33		497	2
05351	EB-330		497	1
53918	EB58		342	9
			344	9
			345	27
53918	EB60		342	13
			344	6
			345	6

CROSS-REFERENCE INDEXES

PART NUMBER INDEX

FSCM	PART NUMBER	STOCK NUMBER	FIG.	ITEM
53918	EB73		342	20
53918	EC44		344	25
05351	ED-33		497	3
75282	ENY-1		496	13
			497	27
08458	EN27		339	18
00096	E1792		321	18
70834	E64C		438	32
			440	15
			442	33
70834	E68C		438	34
			440	17
			442	35
01113	F-59A		478	11
01276	FC234-06		460	13
			462	11
60438	FE-15-5		411	82
60438	FE-18-16		411	80
60438	FE-21-9		411	79
10741	FE1866		383	41
66682	FG-152		412	13
			413	13
			416	13
			417	10
28199	FHS632-10		381	24
28199	FHS832-8		381	11
7L611	FIG 402 RPSTL		407	1
10741	FL1225		383	3
54590	FMR490D		322	1
81349	FSS-2		470	9
			471	13
			478	13
			479	6
			480	9
			487	3
			488	7
81349	FSS-4		371	16
			373	17
			374	15
			376	17
			377	17
			378	17
			470	8
			471	10
			472	7
			475	11
			480	8
88233	FWD00-0013		466	1
88233	F010-10037		452	1
88233	F010-10037-14-15		465	1
88233	F011-002		459	5

CROSS-REFERENCE INDEXES

PART NUMBER INDEX

FSCM	PART NUMBER	STOCK NUMBER	FIG.	ITEM
88233	F011-002		460	15
88233	F011-106		459	4
			460	14
88233	F011-111		462	14
88233	F011-120		461	14
88233	F011-126		459	10
			460	20
81349	F02B250V1-2A	5920-00-199-9498	339	11
88233	F021-1011		457	13
88233	F021-10321		458	7
88233	F023-144		457	33
			458	29
88233	F023-147		457	19
			458	14
88233	F023-167		459	21
			460	31
81349	F03A250V10AS	5920-00-243-3787	381	12
81349	F03A250V2AS	5920-00-140-0096	368	18
			369	25
81349	F03A250V3AS	5920-00-518-1793	381	21
88233	F041-0003		456	1
70834	F11B		438	24
			442	25
70834	F110		438	13
			442	13
88233	F141-209-1		457	18
88233	F141-211		458	13
81349	F15B250V5A	5920-00-280-4013	493	12
88233	F153-168		466	10
70834	F18AM		438	22
			442	23
66682	F20-2M-ADS		413	1
70834	F22MC		438	20
			442	21
70834	F24E		438	21
			440	4
			442	22
70834	F28E		438	28
			442	28
66682	F30-2M-ADS		417	1
70834	F39C		438	9
			439	9
			442	11
70834	F41C		438	26
			440	12
			442	30
70834	F50C		438	40
			442	41
70834	F51C		438	39
			440	22
			442	40

CROSS-REFERENCE INDEXES

PART NUMBER INDEX

FSCM	PART NUMBER	STOCK NUMBER	FIG.	ITEM
70834	F52S		438	38
			442	39
70834	F55C		438	33
			440	16
			442	34
70834	F56E		438	37
			440	20
			442	38
70834	F57C		438	35
			440	18
			442	36
70834	F59C		438	36
			440	19
			442	37
70834	F65C		438	41
			442	42
70834	F68C		440	24
78770	F706A8727		408	39
78770	F706A8805		408	21
			409	20
78770	F706A8807		408	81
			409	19
78770	F706A8809		408	26
			409	22
78770	F716A8703		408	72
78770	F716A8803		408	25
			408	35
78770	F716A8811		409	10
78770	F716A8813		408	29
70834	F97		438	5
28199	G-103		381	15
28199	G-110-18		381	25
28199	G-153		381	22
28199	G-46		381	30
53918	GA19		344	24
			345	25
53918	GA22		342	33
53918	GG28		340	5
53918	GG31		340	6
95405	GKT1005		380	3
95405	GKT1016		380	5
95405	GKT1032		380	2
28199	G102		381	20
66127	G47		381	13
81349	H-200/U	5965-00-900-6401	350	22
			351	28
			352	21
			353	28
			354	24
			355	24
			356	28

CROSS-REFERENCE INDEXES

PART NUMBER INDEX

FSCM	PART NUMBER	STOCK NUMBER	FIG.	ITEM
81349	H-203/U	5965-00-840-8849	350	6
			351	7
			352	6
			353	7
			354	22
			355	22
			356	26
04845	HYA-188-042		336	1
88233	H004-115		458	24
88233	H004-91		466	17
88233	H004-92		457	22
			458	17
53477	H032-62	6680-01-155-8418	453	1
			455	1
			461	20
88233	H038-04		462	19
88233	H050-31		458	10
88233	H060-09		457	12
88233	H064-16		463	10
88233	H069-44		466	4
88233	H072-88		457	25
			458	20
88233	H074-05		462	40
88233	H074-07		461	24
88233	H074-41		462	32
88233	H075-07		462	37
88233	H075-103		462	38
88233	H076-09		462	30
88233	H076-10		461	23
88233	H076-108		461	18
88233	H077-02		461	22
88233	H077-74		462	35
88233	H081-12		457	28
			458	23
88233	H092-134		466	19
88233	H096-12		459	11
			460	21
88233	H096-26		464	7
88233	H096-29		457	16
			458	11
88233	H101-21		464	21
88233	H101-54		466	5
88233	H104-02		458	31
			459	8
			459	14
			460	18
			460	24
			464	15
88233	H105-14		457	32
			458	28
70834	H11B		440	7

CROSS-REFERENCE INDEXES

PART NUMBER INDEX

FSCM	PART NUMBER	STOCK NUMBER	FIG.	ITEM
70834	H110		439	11
88233	H113-33		462	17
88233	H118-07		462	20
88233	H134-113		466	9
88233	H134-14		459	22
			460	32
88233	H134-66	5330-00-520-1593	464	14
88233	H135-27		464	25
88233	H136-21		466	15
88233	H136-54		457	30
			458	26
			459	24
			460	34
88233	H136-93		464	19
88233	H142-19		459	17
			460	27
88233	H145-26		466	18
88233	H145-64		466	12
88233	H167-07		462	27
88233	H167-08		462	25
88233	H167-108		462	24
88233	H167-146		462	34
88233	H167-148		462	41
88233	H171-12		462	26
88233	H171-22		462	23
53477	H172-105	4820-01-226-3256	461	25
53477	H172-106	4820-01-227-1010	461	21
88233	H174-02		462	18
88233	H174-04		462	21
88233	H175-12		459	12
			460	22
88233	H175-14		464	22
88233	H175-16		457	17
			458	12
88233	H175-21		457	11
88233	H177-05		464	9
70834	H18AM		440	5
88233	H194-20		457	10
70834	H22MC		440	3
88233	H231-63		462	29
88233	H231-99		462	33
88233	H239-25		459	18
			460	28
88233	H257-09		457	21
			458	16
70834	H28E		440	10
70834	H31C		440	11
70834	H50C		440	23
70834	H52S		440	21
70834	H58C		440	6
70834	H97		439	5

CROSS-REFERENCE INDEXES

PART NUMBER INDEX

FSCM	PART NUMBER	STOCK NUMBER	FIG.	ITEM
70834	H97		442	7
81349	IC/B51		498	1
81349	IC/H1S4	6350-00-508-0855	351	34
81349	IC/J-105	5930-00-565-5153	498	8
81349	IC/W	5930-00-033-6729	498	9
81349	IC/Z1S4	6350-00-295-2847	351	33
			353	31
			356	30
28199	ICB2S4EXP	6350-00-269-7978	350	25
			351	32
			352	24
			354	27
			355	27
95405	INX4034		380	4
70834	JEV		441	1
70834	JE14		438	2
			438	43
70834	JE34		438	45
			440	28
			442	46
75282	JLC-11		497	25
75282	JLE-12		496	10
75214	KB-20		390	5
70834	KG255		438	16
			439	14
			442	16
70834	KG261		438	14
			440	29
			442	47
70834	KH290		442	14
70834	KJ99		439	12
70834	KL270		438	46
70834	KP172		438	15
			439	13
			442	15
77342	KRP11DG24VDC	5945-00-067-8582	339	9
70834	KR364		439	4
			440	8
			442	6
3N065	LA7-D0954		339	8
3N065	LCI-EC03M		339	13
81349	LH89/1-LC35RT2	6210-01-053-5100	368	7
			369	7
52090	LR1-D09307	5945-01-234-3037	339	7
81349	LSDSGA-3		497	14
81349	LSDSGA-4		447	42
			451	2
			496	2
			497	12
			498	5
			501	18

CROSS-REFERENCE INDEXES

PART NUMBER INDEX

FSCM	PART NUMBER	STOCK NUMBER	FIG.	ITEM
81349	LSDSGA-9		501	22
81349	LSDSGU-4		374	17
			470	3
			471	4
			475	4
			480	4
			484	8
			489	3
			489	5
81349	LSFSGA-4		449	8
			451	7
			501	20
81349	LSFSGU-4		492	15
			496	12
			497	23
			498	3
81349	LSMSCA-10		447	40
			451	5
81349	LSMSCA-7		447	43
			448	2
			449	5
			451	3
81349	LSMSCU-10		480	7
			484	5
			492	14
81349	LSMSCU-14		492	13
			497	20
81349	LSMSCU-30		484	6
81349	LSMSCU77		470	7
			484	7
81349	LSMSGU-10		496	14
81349	LSTSGA-4		447	41
			450	4
			451	6
81349	LS2SWU-3		471	12
			479	9
81349	LS2SWU-7		479	13
81349	LS7SGA-4		500	13
			501	16
66682	L10-X003		412	9
			413	9
			416	9
			417	13
70834	L100		439	7
70834	L100.13		439	6
70834	L100.8		434	8
70834	L75		438	7
70834	L75.6		438	8
70834	L75.8		438	6
70834	L95		442	9
70834	L95.11		442	8

CROSS-REFERENCE INDEXES

PART NUMBER INDEX

FSCM	PART NUMBER	STOCK NUMBER	FIG.	ITEM
70834	L95.6		442	10
08347	M-0-71603		418	49
08347	M-0-97844		418	11
7L611	M-1252		410	21
60438	M-20622		411	11
75214	M-478		394	1
60438	M-88298		411	32
05351	MC-56		497	15
28535	MD2-SSC-1		406	1
81349	MIL-B-674		395	1
81349	MIL-T-245582		496	8
81349	MIL-W-16878/3		498	7
37919	MK-4		448	1
05351	MM-35		497	6
01113	MODEL 4320		322	3
82692	MR-106-36D	5985-01-l 85-0314	323	1
78770	MR36D1		408	1
05351	MS-51	5930-O l-23 l-4542	497	16
70834	MS12		442	18
96906	MS15795-807		381	10
70834	MS17		439	16
96906	MS21912-4K		337	22
96906	MS21914-4J		337	20
96906	MS21921-4J		337	16
96906	MS21922-4C		337	17
96906	MS24659-22D	5930-00-878-6734	368	12
			369	12
96906	MS29513-452	5330-00-420-9623	337	25
96906	MS35059-22	5930-00-655-1575	381	32
96906	MS35307-301		337	14
96906	MS35307-305		337	11
96906	MS35338-79		381	3
96906	MS35338-80		381	9
96906	MS51860-53SS		337	21
96906	MS51922-19		337	3
96906	MS51922-2		337	12
73274	MWT-R-19	5805-01-298-2597	354	1
73274	MWT-R-8	5805-01-298-2598	355	1
7L611	M0-16076		410	67
7L611	M0-16080		410	45
7L611	M0-16081		410	44
7L611	M0-17364		410	66
7L611	M0-17365		410	65
7L611	M0-17366		410	73
			410	77
			410	114
7L611	M0-17367		410	72
7L611	M0-17368		410	52
7L611	M0-17369		410	86
7L611	M0-17370		410	89
7L611	M0-17371		410	91
7L611	M0-17372		410	93

CROSS-REFERENCE INDEXES

PART NUMBER INDEX

FSCM	PART NUMBER	STOCK NUMBER	FIG.	ITEM
7L611	M0-17373		410	108
7L611	M0-17374		410	101
7L611	M0-17375		410	99
7L611	M0-17376		410	100
7L611	M0-17377		410	98
7L611	M0-17378		410	97
7L611	M0-17379		410	7
7L611	M0-17380		410	8
7L611	M0-17381		410	60
7L611	M0-17382		410	62
7L611	M0-17383		410	50
7L611	M0-17384		410	35
7L611	M0-17385		410	37
7L611	M0-17386		410	38
88233	M000-20287		464	5
88233	M000-20362	4820-01-248-8880	454	1
88233	M000-20431		465	2
88233	M012-001		464	12
88233	M051-324-58		462	42
88233	M053-003		464	11
88233	M073-016		464	6
88233	M085-318-26		462	22
88233	M095-218-03		465	3
7L611	M1-1253-C		410	116
7L611	M1-1254-C		410	118
7L611	M1-1263-A		410	48
7L611	M1-1279-B		410	96
7L611	M1-1280-A		410	83
7L611	M1-1288		410	110
7L611	M1-1292		410	56
7L611	M1-1293		410	112
7L611	M1-1320		410	123
7L611	M1-1322		410	122
7L611	M1-1344		410	137
7L611	M1-1346		410	124
7L611	M1-1348-B		410	129
7L611	M1-1396-A		410	47
7L611	M1-1404-B		410	109
7L611	M1-1408-A		410	59
7L611	M1-1427		410	134
7L611	M1-1438-A		410	30
7L611	M1-1462		410	149
7L611	M1-1491		410	19
7L611	M1-1492-B		410	68
7L611	M1-15056		410	133
7L611	M1-15074		410	84
7L611	M1-15075		410	79
7L611	M1-15076		410	81
7L611	M1-15077		410	80
7L611	M1-15078		410	83
7L611	M1-15079		410	104

CROSS-REFERENCE INDEXES

PART NUMBER INDEX

FSCM	PART NUMBER	STOCK NUMBER	FIG.	ITEM
7L611	M1-15083		410	78
7L611	M1-15095		410	120
7L611	M1-15117		410	25
7L611	M1-15138		410	141
7L611	M1-15141		410	17
7L611	M1-15142		410	22
7L611	M1-15143		410	20
7L611	M1-15144		410	18
7L611	M1-15145		410	23
7L611	M1-1528		410	138
7L611	M1-15314		410	34
7L611	M1-15315		410	95
7L611	M1-15316		410	10
7L611	M1-15323		410	121
7L611	M1-15339		410	131
7L611	M1-15345		410	125
7L611	M1-15346		410	136
7L611	M1-15358		410	16
7L611	M1-15366		410	24
7L611	M1-15385		410	140
7L611	M1-1559		410	82
7L611	M1-1560		410	105
7L611	M1-1603		410	126
7L611	M1-1658		410	49
			410	117
7L611	M1-1659		410	61
7L611	M1-1681		410	28
7L611	M1-18562		410	157
7L611	M1-1884-B		410	102
7L611	M1-1933		410	32
7L611	M1-1934		410	87
7L611	M1-1957		410	13
7L611	M1-3331-B		410	111
7L611	M1-3334		410	36
7L611	M1-3451		410	5
7L611	M1-3476		410	128
7L611	M1-3488		410	115
7L611	M1-3514		410	127
7L611	M1-3538		410	145
7L611	M1-3573		410	14
7L611	M1-95032		410	33
7L611	M1-95650		410	26
7L611	M1-95654		410	12
7L611	M2-1250-D		410	46
7L611	M2-1258-D		410	88
7L611	M2-1259-E		410	103
7L611	M2-1260-F		410	92
7L611	M2-1261-E		410	90
7L611	M2-1262-G		410	39
7L611	M2-1264-C		410	54
7L611	M2-1265-C		410	94

CROSS-REFERENCE INDEXES

PART NUMBER INDEX

FSCM	PART NUMBER	STOCK NUMBER	FIG.	ITEM
7L611	M2-1271-D		410	106
7L611	M2-1284-A		410	40
7L611	M2-1407-B		410	70
7L611	M2-1422		410	146
7L611	M2-1428-B		410	132
7L611	M2-1436		410	139
7L611	M2-1458		410	9
7L611	M2-1503		410	154
7L611	M2-3321		410	6
7L611	M2-3327		410	11
7L611	M2-3332-D		410	63
7L611	M2-3345-B		410	107
7L611	M2-3359		410	135
7L611	M2-3427		410	15
88233	M223-006	5330-00-459-0881	464	23
81349	M24174/3-001	6220-00-399-7105	380	10
88233	M243-012		464	17
81349	M24558/18-001		496	3
			498	4
81349	M24558/3-528		449	6
			479	10
81349	M24558/4-432.1		373	18
			374	16
81349	M24558/4-432-1		449	7
			451	4
			479	20
			496	5
			497	21
81349	M24558/5-434		479	14
81349	M2726/37-001		372	13
			374	13
			375	13
			379	13
			380	9
81349	M2726/38-001		372	12
			374	12
			379	12
			380	8
88233	M293-007		459	9
			459	15
			460	19
			460	25
			464	16
7L611	M3-1248-E		410	43
7L611	M3-1961		410	3
7L611	M3-3333-A		410	31
88233	M313-004		464	13
88233	M343-021		464	20
88233	M363-002		464	18
88233	M370-30019		464	10
88233	M383-009		464	24

CROSS-REFERENCE INDEXES

PART NUMBER INDEX

FSCM	PART NUMBER	STOCK NUMBER	FIG.	ITEM
7L611	M4-1401		410	155
7L611	M4-1416		410	153
7L611	M4-1417		410	130
7L611	M4-1959-A		410	74
75214	M411		392	1
75214	M461	5930-01-109-4195	393	1
75214	M477		391	1
7L611	M5-1960-C		410	75
7L611	M5-3330-D		410	27
13445	M522STK	5930-00-966-7191	501	13
96906	M551819-5SS		337	18
88233	M563-002		464	8
09051	NAB		397	1
53918	NJ39		342	8
			344	26
			345	26
53918	NJ40		342	14
			344	7
			345	7
53918	NJ67		346	3
			347	6
53918	NJ68		347	2
53918	NJ69		347	4
53918	NJ78		342	22
			345	14
53918	NJ80		344	20
			345	16
53918	NJ81		346	1
53918	NJ86		342	21
53918	NU05		339	2
			340	2
			341	2
			342	25
53918	NU07		346	6
53918	NU12		347	8
53918	NU25		342	2
			344	2
			345	2
53918	NU75		343	2
			344	11
			345	17
88233	N404-31-093		459	7
			460	17
53918	DCA-1A		341	4
53918	OR80		344	12
			345	18
80871	OTB2-00-066		325	1
25628	OT15		404	1
60438	P-66621-3		411	73
70834	PC262		438	4
			438	25

CROSS-REFERENCE INDEXES

PART NUMBER INDEX

FSCM	PART NUMBER	STOCK NUMBER	FIG.	ITEM
70834	PC262		442	26
53918	PI16		342	6
			344	17
53918	PK80		344	14
			345	20
53918	PK86		345	22
60438	PL-13891		411	25
60438	PL-13892		411	85
60438	PL-15572		411	49
60438	PL-16269		411	69
60438	PL-16270		411	14
60438	PL-16505-1		411	59
60438	PL-18497-1		411	2
53918	PL27		344	21
05351	PS-35	6130-01-284-1575	497	5
75214	PT1-5		390	15
75214	PT120-1	5999-01-276-4721	390	14
75214	PT121-1	5330-01-276-4678	390	16
75214	PT32-4		390	4
7L611	P1-17212		410	156
7L611	P1-17227		410	158
7L611	P1-5052		410	152
19253	P1S-3030		471	11
			475	10
53918	P174		342	19
75214	P248-13		392	30
75214	P248-15		391	21
75214	P249-7		392	18
75214	P250-2	3040-01-116-4941	392	29
75214	P252-12	3010-01-119-9127	392	11
75214	P253-5	5930-01-167-1469	392	13
75214	P254-4	5945-01-125-4375	392	28
75214	P256-10		391	14
75214	P256-3		392	25
75214	P256-6		391	17
75214	P256-7		391	16
75214	P256-8		391	15
75214	P256-9		391	18
75214	P257-1		393	20
75214	P258-1		393	31
75214	P259-1		393	17
75214	P260-1		393	5
75214	P261-1		393	3
75214	P262-1		393	7
75214	P263-1	5930-01-176-9474	393	
75214	P264-1		393	23
75214	P268-1		392	7
75214	P285-2		393	27
75214	P325-1		393	13
75214	P326-1		393	9
75214	P33-2		390	9

CROSS-REFERENCE INDEXES

PART NUMBER INDEX

FSCM	PART NUMBER	STOCK NUMBER	FIG.	ITEM
75214	P34-2		390	17
75214	P353-1		393	30
75214	P357-2		392	6
75214	P358-1		393	8
75214	P359-4		392	17
75214	P360-10		392	15
75214	P360-14		392	22
75214	P361-4		392	16
75214	P363-3		392	23
75214	P369-1		393	16
75214	P373-1		393	29
75214	P378-1		393	28
75214	P383-5		393	10
75214	P401-1		393	18
75214	P402-1		393	4
75214	P418-1		393	24
75214	P432-1		393	15
75214	P435-2		392	4
75214	P437-4		392	8
75214	P438-1		392	27
75214	P464-1		392	20
75214	P490-1		391	5
75214	P500-1		391	11
75214	P501-1		391	12
75214	P502-1		391	8
75214	P503-1		391	19
75214	P503-2		391	20
75214	P504-1		390	3
75214	P66-7		392	5
59618	Q6163		430	23
59618	Q6516		419	70
59618	Q6535		430	21
14852	RC-20SE		400	1
04034	RE-31326		370	4
04034	RE-39240-7/M1-M7 -38100		368	1
82692	RG-11A/U		323	7
81349	RG59U		478	12
60438	RP-2-25		411	22
60438	RP-2-40		411	30
10741	RS-150-S		386	20
81349	RV4SAYSB252A	5905-00-892-0304	368	68
			369	94
			370	16
66682	R20-2M-S		412	1
66682	R30-2M-S		416	1
66682	R67-1907		412	10
			413	10
			416	7
			417	11
02570	S-600-1-4		460	3

CROSS-REFERENCE INDEXES

PART NUMBER INDEX

FSCM	PART NUMBER	STOCK NUMBER	FIG.	ITEM
02570	S-600-9		460	5
62321	SA-9788HT-9		435	12
60438	SC-18-72		411	35
60438	SC-22-18		411	17
60438	SC-23-10		411	26
60438	SC-47-73		411	33
60438	SC-62-47		411	45
60438	SC-7-39		411	86
60438	SD-24-1		411	56
			411	74
60438	SD-24-13		411	51
60438	SD-24-16		411	72
60438	SD-24-46		411	20
60438	SD-24-47		411	5
60438	SD-24-48		411	8
60438	SD-24-49		411	39
60438	SD-9-34		411	61
59618	SE-4732		428	4
73274	SELR (MOD)-19		351	1
73274	SELR (MOD)-8	5805-01-298-2596	353	1
73274	SER (MOD)-19	5805-01-298-2595	350	1
73274	SER (MOD)-8		352	1
70834	SE13BL		440	30
73274	SFLR (MOD)-19	5805-01-298-2599	356	1
73124	SF052100P141AM		335	2
59431	SG114		412	22
			413	22
			416	22
			417	21
00096	SK 9-N		321	21
00096	SK239-2 C		321	15
60438	SL-2-10		411	65
10741	SL1085		383	11
10741	SL1490		387	23
10741	SL1590		383	85
10741	SL1591		383	84
10741	SL16X		383	2
10741	SL1652		383	9
10741	SL2107		387	22
10741	SL2536X		383	46
10741	SL2982		387	3
10741	SL2991		387	4
10741	SL2992		387	10
10741	SL3110	5330-01-270-1166	383	5
10741	SL3329		386	19
10741	SL3455XA		387	1
2B488	SMH-C		339	10
88032	SMP-1000		436	1
88032	SMP-2000		443	4
28199	SQ60311		381	26
10741	SSD42SSBS		385	12

CROSS-REFERENCE INDEXES

PART NUMBER INDEX

FSCM	PART NUMBER	STOCK NUMBER	FIG.	ITEM
53918	ST17		344	16
53918	ST21		345	23
73124	ST650042		335	3
53918	SW05		346	4
53918	SX77		342	16
81349	SYM2841TYG-15A		350	24
			351	31
			352	23
			353	30
			354	26
			355	26
7L611	S0-16083		410	53
70834	S1040.6		438	17
			442	17
70834	S1040.8		439	15
70834	S140BL		438	47
70834	S180BL		442	48
81349	S2JRM3B2		501	21
70834	S54		438	48
70834	S55		442	49
14852	TA-130		412	24
14852	TA-170		416	24
04034	TD-86206		369	112
14852	TL 160		417	24
14852	TL 90		413	25
80871	TM0-3061SE-2XX		334	2
78770	TP120		402	1
81306	TUB000XR		415	1
53918	TU62		344	10
70834	TX31		438	11
			439	3
			440	27
			442	5
			442	45
59431	T6061		413	23
			417	22
70834	UB17		438	10
			439	2
			440	26
			442	4
			442	44
08347	UC-1		418	1
60438	V-10928-2		411	31
60438	V-21046-3		411	10
53198	VB57		345	5
53918	VB62		342	5
53918	VC65		342	7
			344	18
			345	11
53198	VD33		345	10
53198	VD80		345	13

CROSS-REFERENCE INDEXES

PART NUMBER INDEX

FSCM	PART NUMBER	STOCK NUMBER	FIG.	ITEM
53918	VE14		347	3
53918	VE16		342	23
53918	VGS10		338	1
04034	VLI-86200-36		360	1
04034	VLI-86501-20		359	1
04034	VLI-86501-44		357	1
04034	VLI-86501-97		358	1
08347	W-0-14246		418	44
08347	W-0-70087		418	67
08347	W-0-70093		418	65
08347	W-0-70094		418	41
08347	W-0-70096		418	97
08347	W-0-70098		418	96
08347	W-0-70100		418	93
08347	W-0-70101		418	92
08347	W-0-70102		418	89
08347	W-0-70103		418	98
08347	W-O-70106		418	95
08347	W-0-70107		418	86
08347	W-0-70108		418	85
08347	W-0-70109		418	94
08347	W-0-70110		418	81
08347	W-0-70111		418	87
08347	W-0-70112		418	76
08347	W-0-70113		418	77
08347	W-0-70114		418	73
08347	W-0-70115		418	60
08347	W-0-70116		418	61
08347	W-0-70117		418	58
08347	W-0-70121		418	53
08347	W-0-70122		418	52
08347	W-0-70134		418	8
08347	W-0-70140		418	10
08347	W-0-70152		418	40
08347	W-0-70153		418	39
08347	W-0-70154		418	38
08347	W-0-70155		418	26
08347	W-0-70156		418	27
08347	W-0-70189		418	45
08347	W-0-70192		418	48
08347	W-0-70200		418	17
08347	W-0-70201		418	29
08347	W-0-70202		418	31
08347	W-0-70204		418	15
08347	W-0-70205		418	19
08347	W-0-70284		418	18
08347	W-0-70286		418	14
08347	W-0-70293		418	35
08347	W-070346		418	32
08347	W-0-70347		418	33
08347	W-0-70348		418	20

CROSS-REFERENCE INDEXES

PART NUMBER INDEX

FSCM	PART NUMBER	STOCK NUMBER	FIG.	ITEM
08347	W-0-70370		418	30
08347	W-0-70392		418	21
08347	W-0-70393		418	22
08347	W-0-70395		418	16
08347	W-0-70434		418	50
08347	W-0-70436		418	36
08347	W-0-70437		418	7
08347	W-0-96551		418	37
08347	W-1-07209		418	42
08347	W-1-07768		418	47
08347	W-1-07957		418	43
08347	W-1-70043		418	75
08347	W-1-70044		418	57
08347	W-1-70045		418	59
08347	W-1-70046		418	71
08347	W-1-70047		418	62
08347	W-1-70048		418	74
08347	W-1-70058		418	24
08347	W-1-70060		418	64
08347	W-1-70066		418	55
08347	W-1-70067		418	79
08347	W-1-70072		418	82
08347	W-1-70073		418	91
08347	W-1-70075		418	88
08347	W-1-70078		418	84
08347	W-1-70084		418	69
08347	W-I-70085		418	63
08347	W-1-70086		418	66
08347	W-1-70120		418	54
08347	W-1-70190		418	51
08347	W-1-70191		418	46
08347	W-1-70295		418	6
08347	W-1-70296		418	4
08347	W-1-70765		418	23
08347	W-1-70765-AJ		418	13
08347	W-1-70767		418	72
08347	W-2-70056		418	56
08347	W-2-70059		418	25
08347	W-2-70074		418	90
08347	W-2-70082		418	70
08347	W-2-70083		418	68
08347	W-2-70090		418	78
08347	W-2-70388		418	34
08347	W-2-70441		418	28
08347	W-2-99710		418	9
08347	W-3-70071		418	83
08347	W-3-70294		418	2
08347	W-3-70440		418	3
08347	W-3-99726		418	5
08347	W-4-07001		418	12
08347	W-4-70069		418	80

CROSS-REFERENCE INDEXES

PART NUMBER INDEX

FSCM	PART NUMBER	STOCK NUMBER	FIG.	ITEM
08347	W-4-70070		418	99
59618	WA-4721		419	4
53918	WA02		339	3
			340	3
			341	3
			342	26
53918	WA04		346	7
53918	WA12		347	9
53918	WA14		343	3
53918	WA16		342	3
			344	3
			345	3
60438	WL-7-12		411	75
11331	WM388U1C2B		463	5
7L611	W0-14862		410	76
7L611	W0-16074		410	64
71611	W0-16075		410	69
7L611	W0-16078		410	58
7L611	W0-16079		410	57
7L611	W0-16082		410	55
7L611	W0-16084		410	42
7L611	W0-16085		410	41
7L611	W0-16086		410	29
7L611	W0-20279		410	4
7L611	W0-7012		410	143
7L611	W1-12549		410	2
7L611	W1-12561		410	51
7L611	W1-13059		410	71
7L611	W1-16361		410	144
7L611	W1-5994		410	148
7L611	W1-7657		410	142
7L611	W1-8096		410	150
7L611	W1-9548		410	147
75214	W10-16		392	2
75214	W10-28		392	9
75214	W12-1		393	19
75214	W14-4		393	21
75214	W18-2		393	25
7L611	W2-20878		410	151
75214	W27-10		391	7
75214	W27-12		391	10
			392	10
75214	W27-2		391	3
			392	3
75214	W38-142		392	26
75214	W38-2		391	9
75214	W38-36		392	14
75214	W38-38		392	24
75214	W38-4		392	21
75214	W38-43		392	12
75214	W38-48		391	13

CROSS-REFERENCE INDEXES

PART NUMBER INDEX

FSCM	PART NUMBER	STOCK NUMBER	FIG.	ITEM
75214	W38-51		391	6
75214	W39-2		393	2
75214	W40-9		391	2
75214	W43-14		391	4
75214	W43-18		390	8
75214	W50-1		393	11
75214	W51-1		393	12
75214	W52-1		393	22
75214	W77-1		392	19
75214	W78-12		390	7
			393	26
75214	W78-18		390	13
75214	W78-5		390	2
75214	W9-11		393	14
75214	W9-13		393	6
75214	W90-15		390	12
75214	W91-8		390	11
75214	W95-3		390	6
75214	W95-4		390	10
75214	W95-5		390	1
04034	XM-36460-36-4300 -0-L		366	2
04034	XM-36460-52-2700 -0-L		367	2
04034	XM-36480-112-100 0-0-L		362	2
04034	XM-36480-120-100 O-O-L		361	2
04034	XM-36480-125-100 0-W-L		365	2
04034	XM-36480-47-3000 -W-L		363	2
04034	XM-36480-95-1500 -0-L		364	2
10741	X9396LG		386	1
10741	X9396LG-RF		382	1
70834	ZA220		438	23
			442	24
70834	ZA362		438	3
			438	44
70834	ZA85		438	12
			439	10
			442	12
05351	ZU-35TS		497	8
80871	0001-0040-820		333	42
80871	0001-0104-820		329	11
80871	0001-0139-000		327	10
			333	21
80871	0001-0140-000		333	9
80871	0001-0326-280		329	12
80871	0004-1917-740		329	10

CROSS-REFERENCE INDEXES

PART NUMBER INDEX

FSCM	PART NUMBER	STOCK NUMBER	FIG.	ITEM
80871	0004-2076-700		333	38
80871	0004-2361-758		329	4
80871	0004-2463-770		332	19
80871	0004-5197-770		332	5
80871	0004-5445-740		327	11
			333	11
80871	0004-5447-740		333	10
80871	0004-5768-910		332	6
80871	0004-5769-910		332	18
80871	0004-5811-750		329	20
80871	0004-5949-830		328	8
80871	0006-4271-160		331	14
80871	0006-4331-010		333	3
80871	0006-4415-160		333	33
80871	0007-1792-550		328	15
80871	0007-1796-550		333	46
80871	0007-1988-750		331	6
80871	0007-1989-750		330	4
80871	0007-2124-750		329	15
80871	0007-2387-750		329	19
			333	23
80871	0007-2485-750		331	13
80871	0007-2508-750		333	40
80871	0007-2560-750		329	26
80871	0007-2572-750		329	18
80871	0007-2926-750		329	23
80871	0007-2942-750		330	7
80871	0008-1708-010		331	18
80871	0008-2501-800		331	2
80871	0008-2502-200		331	5
80871	0008-2504-300		331	9
80871	0008-2509-030		331	7
80871	0008-2533-000		331	8
80871	0010-4006-000		331	15
80871	0011-3203-470		331	17
80871	0011-6202-000		332	8
80871	0011-6204-000		332	20
80871	0011-6205-110		331	10
80871	0011-8065-000		331	16
80871	0013-0278-150		330	14
80871	0013-0280-150		327	9
			333	20
80871	0013-0291-150		327	15
			333	14
59618	00161		427	16
80871	0018-0971-050		329	6
80871	0018-1331-600		333	13
80871	0018-1676-600		329	5
80871	0018-1683-000		327	12
80871	0018-1701-280		329	7
80871	0018-4841-010		327	6

CROSS-REFERENCE INDEXES

PART NUMBER INDEX

FSCM	PART NUMBER	STOCK NUMBER	FIG.	ITEM
80871	0018-4841-010		333	18
80871	0018-4841-020		327	3
			333	16
80871	0018-4841-750		327	5
			333	17
80871	0019-0235-150		329	1
80871	0019-0282-150		333	2
80871	0019-0805-000		329	2
80871	0019-1131-000		329	27
80871	0019-1390-150		333	34
80871	0019-1741-800		333	43
80871	0019-3973-060		328	4
80871	0019-4547-090		329	13
80871	0019-6113-150		328	13
80871	0019-6120-150		332	13
80871	0019-6125-150		329	16
80871	0019-6526-150		328	9
80871	0019-6540-150		327	8
80871	0019-6790-150		327	2
80871	0019-6903-150		329	24
			331	3
			332	2
			333	35
80871	0019-6907-150		330	12
80871	0019-6970-150		333	8
80871	0019-6972-150		327	14
			333	19
80871	0019-7037-150		333	24
80871	0019-7736-150		333	7
80871	0019-8910-030		333	45
80871	0019-9063-150		332	10
			333	26
80871	0021-3017-750		333	5
80871	0021-3525-000		333	30
80871	0021-3552-030		333	31
80871	0026-1325-160		332	3
80871	0026-1325-190		331	4
			332	16
80871	0026-1344-030		332	14
80871	0026-1353-030		333	25
80871	0026-1562-120		333	36
80871	0026-1824-300		330	13
80871	0026-2129-030		333	6
80871	0026-2130-030		333	4
80871	0026-5699-400		333	29
80871	0026-5716-300		333	27
80871	0026-5854-170		332	7
80871	0026-5859-170		329	21
80871	0028-0136-308		330	8
73396	01-10200-000		467	1
73396	01-10300-000		485	1

CROSS-REFERENCE INDEXES

PART NUMBER INDEX

FSCM	PART NUMBER	STOCK NUMBER	FIG.	ITEM
73396	01-10310-000		486	1
88032	0120		443	3
59618	01355		425	4
7L611	019CE		410	85
59618	01952A		427	22
59618	01953		427	20
73396	02-09000-000		474	2
			476	2
			482	2
73396	02-09100-000		481	2
73396	02-09200-000		483	2
73396	02-09507-100		470	2
			484	2
			487	2
			489	2
73396	02-09510-000		471	2
			475	2
			480	2
73396	02-09710-001		472	2
73396	02-09710-002		473	2
73396	02-10210-000		479	1
73396	02-10215-000		478	2
73396	02-10230-000		477	1
73396	02-10240-000		469	1
73396	02-10310-000		490	1
73396	02-10350-000		488	2
7L611	021CE		410	113
88032	0210		436	6
7L611	022CE		410	119
59618	02431		419	29
			425	2
			425	16
			428	18
59618	02505		419	45
			428	32
59618	02916		419	30
			428	19
73396	03-09505-000		478	5
73396	03-09506-000		468	1
59618	03203		428	24
88233	03560-0300		462	36
88233	03561-3000		462	39
88233	03650-9001		457	9
			459	26
			460	36
59618	03815		422	8
59618	03888		427	19
59618	04366		424	2
			425	5
59618	04704		421	10
73396	05-09502-000		478	7

CROSS-REFERENCE INDEXES

PART NUMBER INDEX

FSCM	PART NUMBER	STOCK NUMBER	FIG.	ITEM
73396	05-09502-000		488	5
73396	05-09503-000		478	8
73396	05-09505-100		478	9
73396	05-09506-000		488	4
73396	05-09601-000		488	3
73396	05-10301-000		478	6
88233	05852-2040		462	31
88032	0743		436	15
			443	18
96073	0803-0280		396	19
96073	0803-0281		396	18
80871	0820-3397-000		332	12
96073	0828-2395		396	63
80871	1.40		326	3
80871	1.48		326	2
80871	1.56		326	4
80871	1.58		326	5
80871	1.60		326	6
80871	1.74		326	7
62148	1-009-0		437	18
62148	1-136-0		437	20
62148	1-154-0		437	19
30397	1-255-5716	5330-00-716-6781	435	14
62148	1-5200-60836-03(PYN3)		437	1
62148	1-534-0		437	10
62148	1-652-0		437	17
62148	1-904-0		437	2
62148	1-910-0		437	3
73274	1A		352	5
			353	6
			355	11
73274	1D		350	5
			351	6
			354	11
			356	3
10741	10B428		384	18
10741	10CR632		385	2
10741	10CR832		383	6
			385	6
59418	10G006A13		412	16
17087	1002TB		399	1
32862	1011586		501	17
32862	1012099		501	19
88026	10250T2		501	24
88026	10250T3011		501	23
32862	1026045		501	11
32862	1032141		500	12
			501	9
59618	10416		427	24
32862	1042417		500	7
71468	10426		370	40

CROSS-REFERENCE INDEXES

PART NUMBER INDEX

FSCM	PART NUMBER	STOCK NUMBER	FIG.	ITEM
59618	10429		421	13
32862	1051399		500	5
			501	4
32862	1051704		500	9
			501	8
32862	1052976		501	2
32862	1054919		500	10
32862	1054978		500	3
			501	5
32862	1054979		500	8
			501	7
32862	1054985		500	2
32862	1057447		500	11
32862	1058757		501	3
32862	1060377		500	6
08718	10626	5935-00-998-9094	370	41
88032	1063		436	11
			443	13
32862	1063250		500	4
			501	6
32862	1069895		501	10
32862	1080885		500	1
32862	1080886		501	1
88032	109A2		436	12
			443	16
73396	11-0003-000		474	1
			476	1
			481	1
			482	1
			483	1
73396	11-0003-001		472	1
			473	1
01026	11A9	5315-01-154-0630	443	15
10741	11CR518		383	65
10741	11CR616		385	37
10741	11CR624		384	5
04034	11117		368	49
			369	65
			370	26
88032	1129	4320-00-592-9427	436	8
			443	11
04034	119836		360	4
34221	12P10		339	17
28488	125		497	17
			498	6
37919	125-024		447	9
00096	126 C		321	40
66682	1267		412	3
			413	3
			416	3
			417	3

CROSS-REFERENCE INDEXES

PART NUMBER INDEX

FSCM	PART NUMBER	STOCK NUMBER	FIG.	ITEM
53918	1279-1		342	35
53918	1279-20		342	28
53918	1279-21		342	29
53918	1279-23		342	30
53918	1279-24		342	31
53918	1279-25		342	24
53918	1279-26		342	27
53918	1279-30		342	15
53918	1279-4		342	4
73274	128-18-1		356	15
73274	128-18-15		356	14
73274	128-18-19		356	21
73274	128-18-2		356	2
73274	128-18-20		356	27
73274	128-18-23		356	17
73274	128-18-27		356	16
73274	128-18-28		356	19
73274	128-18-29		356	10
73274	128-18-3		356	23
73274	128-18-30		356	12
73274	128-18-31		356	11
73274	128-18-4		356	25
53918	1282-L		339	4
53918	1282-L-10		339	5
53918	1282-L-11		339	16
53918	1284-2		340	4
53918	1291		343	1
53918	1291-1		343	7
53918	1292-B		343	6
53918	1292-C		343	5
53918	1292-D		343	4
88032	1295		436	14
73274	13		350	21
			352	20
37919	130-024		449	2
53918	1332		345	4
53918	1332-1		345	24
53918	1333-1		344	23
53918	1333-4		344	4
51064	1334-1		347	10
53918	1334-1-2		347	1
53918	1334-1-3		347	5
51064	1334-2		346	8
53918	1334-2-5		346	2
53918	1335-E		348	1
96073	1341-0354		396	1
96073	1373-0122		396	28
96073	1373-0124		396	24
96073	1373-0125		396	23
96073	1373-0128		396	85
96073	1373-0303		396	56

CROSS-REFERENCE INDEXES

PART NUMBER INDEX

FSCM	PART NUMBER	STOCK NUMBER	FIG.	ITEM
96073	1373-0304		396	54
96073	1373-0462	5910-01-150-8210	396	29
96073	1373-0469		396	39
96073	1373-0476		396	32
96073	1373-0611		396	59
96073	1373-0612		396	61
96073	1373-0632		396	60
96073	1373-0638		396	40
96073	1373-0646		396	27
96073	1373-0660		396	89
96073	1373-0756		396	64
96073	1373-0783	5330-01-269-6323	396	5
96073	1373-0799		396	30
96073	1373-0836		396	78
96073	1373-0958		396	12
96073	1373-1072		396	62
96073	1373-1089		396	13
96073	1373-1305		396	91
96073	1373-1320		396	90
96073	1373-1443		396	88
96073	1373-1575		396	35
96073	1373-1742		396	44
96073	1373-1972		396	22
96073	1373-2075		396	81
96073	1373-2077		396	77
96073	1373-2087		396	48
96073	1373-2146		396	20
96073	1373-2251		396	14
96073	1373-2253		396	15
96073	1373-2461		396	33
			396	84
96073	1373-2521		396	11
96073	1373-2923		396	79
96073	1373-3979		396	38
96073	1373-4016		396	37
96073	1373-4084		396	41
96073	1373-4112		396	21
96073	1373-4113		396	46
96073	1373-4122		396	80
96073	1373-4455		396	71
96073	1373-4469		396	66
96073	1373-4473		396	76
96073	1373-4517		396	55
96073	1373-4627		396	72
96073	1373-4633		396	58
96073	1373-4638		396	73
96073	1373-4640		396	31
96073	1373-4641		396	10
96073	1373-4648		396	25
96073	1373-4649		396	49
96073	1373-4655		396	7

CROSS-REFERENCE INDEXES

PART NUMBER INDEX

FSCM	PART NUMBER	STOCK NUMBER	FIG.	ITEM
96073	1373-4657		396	42
96073	1373-4664		396	36
96073	1373-4665		396	51
96073	1373-4673		396	16
96073	1373-4674		396	17
96073	1373-4675		396	34
96073	1373-4695		396	52
96073	1373-4696		396	75
96073	1373-4697		396	9
96073	1373-4698		396	8
96073	1373-4703		396	4
96073	1373-4762		396	67
96073	1373-4763		396	68
96073	1373-4767		396	70
96073	1373-4988		396	74
96073	1373-5100		396	86
96073	1373-5145		396	57
96073	1373-5150		396	65
96073	1373-5152		396	6
96073	1388-0043		396	87
96073	1388-0126		396	69
00096	14-C C		321	12
00096	14-1-1 C		321	10
00096	14-2 C		321	13
00096	14-5 C		321	38
00096	14-5 C MOD		321	39
00096	14-5-12 C		321	11
78770	14C4A-39		408	96
59431	1402		412	23
			416	23
62321	1404		435	11
78770	1411D8809		409	14
78770	1411D8813		408	85
78770	1429A7015		408	82
78770	1433B8701	6210-01-169-1615	409	18
78770	1435		398	1
04034	14476		368	80
			369	107
			370	10
95405	1453		380	1
78770	1454J8801		408	33
78770	1455A8927		409	28
62321	1457		435	13
10741	1467D		387	21
88032	147A2		443	9
00096	148-11 C		321	6
00096	148-12 C		321	7
00096	148-5 N		321	46
78770	1501D8803		408	94
78770	1502-8707		409	11
90689	15032		370	11

CROSS-REFERENCE INDEXES

PART NUMBER INDEX

FSCM	PART NUMBER	STOCK NUMBER	FIG.	ITEM
78770	1523B0001		409	16
78770	1523B0003		409	5
78770	1523B8903		409	30
00096	153-19 C		321	32
04034	15311		370	2
71400	15483	5920-01-237-8039	370	18
73559	15709		370	14
04034	16146		368	10
			369	10
53918	1638		342	34
04034	16391		361	3
			362	3
			363	3
			364	3
			365	3
			366	3
			367	3
00096	164-4 C		321	16
71468	16600		370	42
04034	17287	5330-00-500-2980	368	11
			369	11
04034	17308		369	20
66682	174		412	2
			413	2
			416	2
			417	2
00096	178-55-1 C		321	36
28488	18.2		497	10
78770	18A1A-119		408	87
78770	18A1A-140		408	78
78770	18A1A-34		408	92
78770	18A1A-47		408	76
78770	18A1A-52		408	75
78770	18A1A-55		408	67
78770	18A1A-57		408	62
78770	18A1A-62		408	50
78770	18A1A-63		408	66
78770	18A1A-71		408	47
78770	18A1C-100		408	77
78770	18A1C-13		408	52
78770	18A1C-18		408	53
78770	18A1C-23		408	95
78770	18A1C-39		408	86
78770	18A1C-46		408	90
78770	18A1C-52		408	65
78770	18A1C-59		408	64
78770	18A1C-65		408	88
78770	18A1C-67		408	55
78770	18A1C-97		408	61
78770	18A1E-12		408	74
78770	18A1E-15		408	73

CROSS-REFERENCE INDEXES

PART NUMBER INDEX

FSCM	PART NUMBER	STOCK NUMBER	FIG.	ITEM
78770	18A1E-17		408	71
78770	18A1S-10		408	68
78770	18A1S-14		408	54
78770	18A1S-15		408	51
78770	18A1S-17		408	48
78770	18A1S-19		408	84
78770	18A1S-2		408	91
78770	18A1S-45		408	49
78770	18A1S-5		408	93
78770	18A1S-74	5930-00-828-0004	408	79
78770	18A1S-9		408	69
30760	1802	5330-01-037-5914	443	14
88032	1829		436	13
			443	17
04034	19326		361	5
			362	5
			363	5
			364	5
			365	5
			366	5
			367	5
71785	19563		370	24
62148	2-001-0		437	5
62148	2-003-5		437	21
62148	2-003-6		437	22
62148	2-036-o		437	15
02697	2-206 N674-70	5330-00-451-9557	344	13
			345	19
62148	2-914-0		437	16
81349	2SWAU-3		500	14
			501	14
66682	20 1/2-23 1/2		416	10
			417	7
66682	20 1/2-50		416	11
			417	8
28199	20-081		381	29
78770	20A1A-181		408	83
78770	20A1A-51		408	37
78770	20A1A-64		408	36
78770	20A1A-66		408	44
78770	20A1C-18		408	46
78770	20A1C-19		408	45
78770	20A1C-53		408	30
78770	20A1G-7		408	15
78770	20A1G-8		408	16
78770	20A1G-9		408	14
78770	20A2A-125		408	32
78770	20A2A-240		408	34
78770	20A2G-7		408	13
78770	20A2G-8		408	17
78770	20B1A-30		408	3

CROSS-REFERENCE INDEXES

PART NUMBER INDEX

FSCM	PART NUMBER	STOCK NUMBER	FIG.	ITEM
78770	20B2A-150		408	12
78770	20B2A-74		408	2
78770	20B2A-77		408	40
78770	20B2A-78		408	43
78770	20B2E-10		408	7
78770	20B2E-15		408	10
78770	20B2E-16		408	5
78770	20B2E-6	4540-00-269-8078	408	8
78770	20B2E-8		408	9
70834	20DR		438	18
			442	19
78770	20M1E-2		408	18
78770	20M1E-6		408	19
78770	20M1G-1		408	23
78770	20M1G-2		408	22
78770	20M1G-3		408	27
78770	20M1G-4		408	24
70834	20R007001		438	1
70834	20R007003		442	3
37919	200-040		447	7
10741	2001C		385	57
10741	2001D		385	27
25204	200358		337	9
25204	200359		337	10
59618	20057		421	9
83190	201		401	1
			450	1
25204	201333	5330-01-058-3721	337	5
25204	201720	4820-01-117-7892	337	23
37919	202		449	1
59618	20211		426	1
25204	202327	6685-01-196-2151	337	19
25204	202391		337	2
59618	20243		421	6
59618	20249		419	53
			428	41
59618	20253		425	15
25204	202550		337	15
59618	20274		433	7
59618	20275		419	28
			419	43
			428	17
59618	20279		428	33
			430	5
59618	20310		419	6
59618	20391		426	4
25204	203927		337	8
59618	20409		419	88
59618	20492		432	11
59618	20493		419	23
59618	20680		428	29

CROSS-REFERENCE INDEXES

PART NUMBER INDEX

FSCM	PART NUMBER	STOCK NUMBER	FIG.	ITEM
59618	20680		430	20
			432	17
00096	207-1-2 C		321	20
00096	207-3-2 C		321	19
00096	207-3-3 C		321	44
01276	2083-8-6-B		462	43
77408	21-0810-1380		461	11
1CC45	21-69071		491	1
37919	210-062		447	14
37919	210-070		447	15
37919	210-071		447	3
00096	210-24 C		321	42
53918	21020		348	20
53918	21022		348	6
37919	211-006		447	6
59618	21147		428	58
80871	2125-1001-000		333	47
80871	2125-1031-000		333	32
80871	2125-1074-000		328	5
80871	2125-1159-060		327	1
80871	2125-1444-000		333	12
80871	2125-1444-030		327	7
80871	2125-2831-000		327	17
			333	22
80871	2125-2831-010		327	4
80871	2125-2831-020		327	18
80871	2125-2832-000		327	13
80871	2125-3365-000		332	15
80871	2125-3375-000		332	17
80871	2125-3375-010		332	4
80871	2125-3376-000		331	12
80871	2125-3400-000		332	21
80871	2125-3420-010		331	11
80871	2125-3438-000		328	6
80871	2125-3449-010		332	9
80871	2125-3468-000		332	11
80871	2125-3488-000		333	41
80871	2125-3493-000		333	44
80871	2125-4001-000		333	1
80871	2125-4003-000	3040-01-298-8828	331	1
80871	2125-4003-010	3010-01-298-0768	332	1
80871	2125-6600-L		330	1
80871	2125-6601-000		330	15
80871	2125-6610-000		330	6
80871	2125-6620-L		330	10
80871	2125-6631-000		330	5
80871	2125-6631-010		330	2
80871	2125-6663-000		330	9
80871	2125-6691-000		330	3
80871	2125-6695-000		330	11
80871	2125-7712-000		329	22

CROSS-REFERENCE INDEXES

PART NUMBER INDEX

FSCM	PART NUMBER	STOCK NUMBER	FIG.	ITEM
80871	2125-8800-000		329	3
80871	2125-8801-000		329	29
80871	2125-8809-000		329	17
80871	2125-8811-000		329	25
80871	2125-8851-000		329	28
59618	21456		419	44
			425	25
59618	21541		419	46
80871	2160-3487-000		333	37
80871	2160-3497-010		333	39
80871	2160-8768-000		329	8
80871	2160-8817-000		329	9
80871	2160-8850-000		329	14
80871	2161-1126-000		333	28
59618	21623		419	16
59618	21685		419	61
59618	21734		419	40
			428	25
59618	21749		419	87
59618	21752		419	56
80871	2178-1108-000		327	16
			333	15
59618	21899		419	89
59618	21903		419	55
73274	22	5305-01-204-8748	350	13
			351	18
			352	13
			353	18
			354	13
			355	13
			356	9
04034	22045		368	40
04034	22139		357	9
			358	9
			359	9
			360	6
59618	22294		422	1
04034	22401		369	19
04034	22405		369	49
			370	39
04034	22423		368	69
			369	95
78770	2262A8723		409	17
59618	22649		428	49
56289	22791		370	27
10741	2285AA	5330-00-595-6328	383	44
10741	2285K	5330-01-152-0088	383	43
			386	13
10741	2285TT		386	17
59618	23008		419	52
			428	40

CROSS-REFERENCE INDEXES

PART NUMBER INDEX

FSCM	PART NUMBER	STOCK NUMBER	FIG.	ITEM
10741	2301		383	97
59618	23028		419	27
			428	21
61204	23071001		371	5
			373	5
61204	23072001		378	5
61204	23073001		376	5
61204	23074001		377	5
59618	23222		419	32
			419	76
			431	1
			432	2
59618	23223		419	17
59618	23225		419	47
			428	34
62321	23255F		435	23
04034	23273	5330-00-500-2982	368	14
			369	14
10741	2329QQ		385	62
10741	2329UU		385	31
10741	2334A		383	78
			383	81
59618	23407		428	47
59618	23553		426	10
03670	23574		319	33
96073	2360-8209		396	3
59618	23604		427	18
96073	2361-0197		396	2
59618	23628		429	3
59618	23748		427	1
			430	7
			432	24
59618	23750		427	26
59618	23886		430	10
59618	23951		433	10
59618	23962		419	22
			420	4
			429	8
			432	7
73274	24	5340-01-272-9841	350	14
			351	19
			352	14
			353	19
			356	8
59618	24122		420	14
59618	24126		420	18
59618	24128		420	16
59618	24129		420	17
59618	24130		420	20
59618	24131		420	21
59618	24132		420	22

CROSS-REFERENCE INDEXES

PART NUMBER INDEX

FSCM	PART NUMBER	STOCK NUMBER	FIG.	ITEM
59618	24134		420	23
59618	24142		427	30
59618	24158		420	19
59618	24159		420	24
59618	24205		419	8
			428	6
10741	2448A		386	7
59618	24522		419	18
			428	13
00096	246-10 C		321	5
88032	2469		436	4
			443	7
73274	25	5805-01-278-9956	354	14
			355	14
00096	25-4 C		321	41
10741	2509AB		388	10
10741	2509MM		385	22
10741	2509T		385	17
10741	2509WW		383	59
59618	25232		429	5
62321	2535		435	9
27192	256314-D3		495	1
59618	25688		419	7
			428	5
59618	25723		422	6
			428	64
			429	7
			430	13
			431	8
			432	18
			433	4
59618	25724		419	33
			429	2
			433	1
59618	25817C		420	15
88032	2584		436	5
			443	8
59618	25845		419	20
59618	25851	6210-01-128-4556	428	9
59618	25863		426	3
66682	26-22E		412	7
			413	7
53918	26033		348	9
59618	26256		419	36
59618	26351		419	51
			428	37
59618	26493		425	28
59618	26509		424	6
			425	24
04034	26534		361	7
			362	7

CROSS-REFERENCE INDEXES

PART NUMBER INDEX

FSCM	PART NUMBER	STOCK NUMBER	FIG.	ITEM
04034	26534		363	7
			364	7
			365	7
			366	7
			367	7
59618	26547		424	15
59618	26556		424	13
59618	26577		425	27
59618	26592		427	15
10741	2660B		383	40
10741	2660C		383	34
10741	2660G		387	17
04034	26657		368	8
			369	8
			370	43
10741	2666A		383	80
10741	2666F		383	77
59618	27001		425	29
59618	27002		425	32
59618	27003		425	30
59618	27014		424	12
59618	27015		424	11
59618	27016		425	21
59618	27017		422	15
59618	27018		424	7
59618	27021		425	13
73168	27021-0		497	18
59618	27022		425	18
59618	27024		424	9
59618	27025		424	10
59618	27026		425	20
59618	27030		425	26
59618	27062		426	15
59618	27063		426	12
59618	27072W		419	85
59618	27081		425	22
59618	27090		424	3
59618	27103		419	78
59618	27104		427	25
59618	27105		426	13
59618	27111		424	8
59618	27118		420	6
59618	27120		421	4
73168	27121-20		497	26
59618	27123		423	2
59618	27124		424	4
59618	27125		423	6
59618	27126		420	12
59618	27136		427	29
59618	27149		419	58
59618	27151		426	7

CROSS-REFERENCE INDEXES

PART NUMBER INDEX

FSCM	PART NUMBER	STOCK NUMBER	FIG.	ITEM
59618	27152		420	3
59618	27153		426	5
59618	27155	3030-01-133-7733	427	9
59618	27156	4510-01-171-4955	420	13
59618	27157		426	11
			427	17
59618	27160		426	8
59618	27161		426	6
59618	27163		423	8
59618	27164		421	14
59618	27166		425	6
59618	27171		427	27
59618	27172		425	17
59618	27174		421	7
59618	27176		424	14
59618	27179		427	31
59618	27181		427	21
59618	27182		425	7
59618	27183		420	2
59618	27184		422	10
59618	27187		425	8
59618	27188		421	1
59618	27189		421	3
59618	27192		425	19
59618	27193W		419	24
59618	27196		419	83
59618	27197		421	15
			425	12
59618	27200		425	1
59618	27201		427	28
59618	27202		421	11
			423	3
59618	27203		419	57
59618	27205		422	12
59618	27220		424	5
59618	27222		425	9
59618	27223		419	25
59618	27229		427	10
59618	27233		426	16
59618	27236		426	17
59618	27237		426	14
59618	27239		422	11
59618	27247		422	7
59618	27248		419	71
59618	27250		419	75
59618	27328		419	37
04034	27337		361	13
			362	13
			363	13
			364	13
			365	13

CROSS-REFERENCE INDEXES

PART NUMBER INDEX

FSCM	PART NUMBER	STOCK NUMBER	FIG.	ITEM
04034	27337		366	13
			367	13
59618	27602		419	68
59618	27603		419	69
59618	27610		419	73
59618	27612		419	72
59618	27625		419	60
59618	27626		419	59
59618	27643		420	1
59618	27761	5930-01-140-9490	419	10
59618	27762		419	11
59618	27769	6210-01-136-1307	419	12
66682	2778		412	8
			413	8
			416	8
			417	12
59618	27837		419	74
59618	27864		419	49
			428	35
59618	27869W		419	41
59618	27870W		419	50
			428	36
59618	27926		422	13
59618	27927		422	14
73274	28		351	9
			353	9
59618	28071W		419	63
59618	28074		419	42
59618	28091		421	8
59618	28094		423	4
59618	28102		419	84
71468	28106		370	48
71468	28107		370	49
71468	28108		370	44
71468	28109		370	45
59618	28111		423	7
71468	28113		370	47
59618	28114		425	14
59618	28138		423	5
59618	28193		419	64
59618	28291		419	65
59618	28293		426	2
59618	28325W		419	91
59618	28345		421	2
59618	28430		425	10
59618	28435		425	31
59618	28615		419	26
04034	28681		368	47
			369	63
			370	23
59618	28716		419	48

CROSS-REFERENCE INDEXES

PART NUMBER INDEX

FSCM	PART NUMBER	STOCK NUMBER	FIG.	ITEM
04034	28736	5330-01-093-5014	370	12
59618	28791		427	23
59618	28800		427	4
59618	28802		427	5
59618	28803		427	6
59618	28807		427	7
59618	28808		427	14
59618	28835		419	82
59618	28837		419	86
59618	28840W		419	62
59618	28849		427	8
59618	28913		424	19
59618	28933		421	12
59618	28934		421	5
59618	28944		424	18
10741	2896	5910-01-268-4015	384	14
66682	29-50 1/2		412	11
			413	11
59618	29042		419	67
59618	29043		419	66
59618	29116		422	3
59618	29117		425	3
04034	29148		370	38
59618	29154		420	9
59618	29156		425	23
59618	29175		422	4
59618	29176		420	5
59618	29182		420	7
59618	29210		420	8
59618	29212		422	2
59618	29233		422	16
04034	29308		368	24
			369	32
59618	29443		427	3
59618	29474		423	1
62321	2953		435	6
59618	29543		419	13
59618	29544		419	14
59618	29545		419	15
59618	29550		419	34
59618	29555		422	9
04034	29566		370	46
59618	29661		419	19
59618	29705		427	13
81306	297462		415	52
59618	29757		419	90
59618	29901		422	5
39428	2993T83		462	6
39428	2993T84		462	8
39428	2993T93		457	7
			460	6

CROSS-REFERENCE INDEXES

PART NUMBER INDEX

FSCM	PART NUMBER	STOCK NUMBER	FIG.	ITEM
04034	29948		357	4
			358	4
			359	4
59618	29993		424	16
80871	3.00		326	34
80871	3.88		326	33
75214	3-5501		389	
78770	3B82D8737		409	23
00096	30-5 C		321	49
00096	30-5A C		321	9
10741	30CR1011-40		386	2
10741	30CR420-14		383	29
10741	30CR420-20		383	94
10741	30CR420-8		385	39
70834	30DR		440	1
70834	30R035001		439	1
59618	30016		424	1
04034	30054	5930-00-008-0495	368	13
88233	3007-9500		462	44
78770	3024A8813		408	42
78770	3027B0001		409	9
04034	30424		368	74
			369	101
04034	30674	5325-01-272-9951	368	76
			369	103
61204	3070009		372	1
			379	1
61204	3070209		374	1
			375	1
61204	3076009		371	1
			373	1
61204	3077009		378	1
61204	3078209		377	1
61204	3079109		376	1
04034	30801		370	32
04034	30803		370	22
73274	31		350	15
			352	15
			354	15
			355	15
10741	31CR1024-6		387	2
10741	31CR420-12		387	11
10741	31CR420-8		383	74
04034	31097		368	50
			369	66
			370	25
04034	31098		368	51
			369	67
37919	312-010		447	38
62321	3121-A		435	17
04034	31407	5330-01-087-6951	370	7

CROSS-REFERENCE INDEXES

PART NUMBER INDEX

FSCM	PART NUMBER	STOCK NUMBER	FIG.	ITEM
02660	31417		370	34
04034	31419		370	36
04034	31427		370	8
37919	315-008		447	39
37919	315-011		447	36
04034	31672		370	6
03670	31810		319	29
03670	31811		320	31
11502	31843		370	29
73274	32A	5945-01-270-6105	351	17
			353	17
			356	22
51064	320-1569-002		347	16
51064	320-1612-000	3010-01-070-5220	346	16
			347	18
51064	320-2361-000	4320-01-223-3464	346	12
51064	320-2424-000	5330-01-073-2875	346	17
			347	19
51064	320-4069-002		346	13
			347	15
51064	320-4069-003		346	15
			347	17
51064	320-4559-002		346	14
51064	320-6382-000		346	22
			347	22
03670	32096	4810-01-263-0945	319	30
			320	32
03670	32100		320	35
88032	3214		436	7
			443	10
04034	32230		361	4
			362	4
			363	4
			364	4
			365	4
			366	4
			367	4
03670	32336	4720-01-192-8116	319	28
			320	30
03670	32338		319	27
			320	29
04034	32458		370	52
10741	3246		384	21
04034	32463		370	5
03670	32659	4210-01-281-1130	319	41
			320	57
77408	32662		320	49
03670	32663	4210-01-237-6446	320	51
04034	32759		368	46
			369	62
04034	32767		368	3

CROSS-REFERENCE INDEXES

PART NUMBER INDEX

FSCM	PART NUMBER	STOCK NUMBER	FIG.	ITEM
04034	32767		369	3
04034	32799		368	21
			369	28
			370	1
04034	32801		369	17
04034	32803		368	48
			369	64
04034	32962		368	42
			369	51
04034	32987		370	53
04034	32988		370	54
04034	32989		370	51
51064	330-04528-000		346	23
51064	330-1006-001		347	14
51064	330-1064-002		346	10
			347	12
51064	330-1545-002		346	11
62321	330CS9M-AB-SP		435	3
04034	33011		370	55
00096	331 N		321	33
51064	33260		346	18
03670	33262		319	43
			320	60
03670	33263		319	45
			320	62
04034	33323		368	25
			369	33
04034	33729		370	9
04034	33914		370	15
04034	33979		368	28
			369	36
04034	33980		368	4
			369	4
			369	29
88032	34A7		436	3
			443	5
19557	340-4N5	6350-00-383-1189	498	2
04034	34029		369	18
10741	3427		385	44
04034	34365		368	27
			369	35
51064	34461		347	23
59618	348P3		424	17
59618	349P3	3040-01-138-8212	426	18
88032	35A2A		436	2
			443	6
88032	35A2C		436	10
			443	12
88032	35A2E		443	2
04034	35017		368	39
			369	48

CROSS-REFERENCE INDEXES

PART NUMBER INDEX

FSCM	PART NUMBER	STOCK NUMBER	FIG.	ITEM
00096	351-11 C		321	30
00096	351-14 N		321	45
80871	354		328	7
80871	356		328	3
59618	356P3		423	9
80871	357		328	2
80871	358		328	10
03670	36075		320	33
04034	36115		368	52
			369	68
04034	36328		368	59
			369	75
04034	36383		357	8
			358	8
			359	8
			360	5
04034	36411		361	11
			362	11
			363	11
			364	11
			365	11
			366	11
			367	11
04034	36413		361	1
			362	1
			363	1
			364	1
			365	1
			366	1
			367	1
04034	36424	6320-01-062-7496	361	15
			362	15
			363	15
			364	15
			365	15
			366	15
			367	15
04034	36462		361	8
			362	8
			363	8
			364	8
			365	8
			366	8
			367	8
79136	36464		361	9
			362	9
			363	9
			364	9
			365	9
			366	9
			367	9

CROSS-REFERENCE INDEXES

PART NUMBER INDEX

FSCM	PART NUMBER	STOCK NUMBER	FIG.	ITEM
71468	36468		361	10
			362	10
			363	10
			364	10
			365	10
			366	10
			367	10
04034	36481		361	6
			362	6
			363	6
			364	6
			365	6
80871	366		328	24
04034	36631		368	57
			369	73
04034	36632		368	58
			369	74
80871	367		328	23
10741	3677B		386	18
04034	36794		368	17
			369	24
			370	17
59618	368P3		425	11
04034	36805	5930-01-127-9268	370	13
04034	36827		368	77
04034	36832		370	31
04034	36843	6240-00-939-7859	368	20
			369	27
10741	3685		387	14
10741	3686		387	16
04034	36880-30-LP	5995-01-169-1680	361	14
			362	14
			363	14
			364	14
			365	14
			366	14
			367	14
10741	3700X		386	21
04034	37004		368	16
			369	16
04034	37006		368	73
			369	99
04034	37031	5950-01-039-7145	370	37
04034	37041		368	2
04034	37044	5330-01-173-6662	368	5
04034	37046		368	22
			369	30
04034	37047	5330-01-042-2394	368	23
			369	31
04034	37059		369	13
04034	37061		369	2

CROSS-REFERENCE INDEXES

PART NUMBER INDEX

FSCM	PART NUMBER	STOCK NUMBER	FIG.	ITEM
04034	37064	5330-01-042-2830	369	5
04034	37072		368	72
			369	98
04034	37073		368	71
			369	97
04034	37074		368	70
			369	96
04034	37075	6210-01-083-4188	368	19
			369	26
			370	19
04034	37077		369	100
04034	37079	5910-00-605-6704	368	81
			369	108
04034	37080		369	21
04034	37081	5330-00-500-2981	369	22
04034	37082		368	9
			369	9
04034	37084		368	66
			369	92
04034	37088		368	67
			369	93
04034	37089		368	54
			369	70
04034	37090		368	53
			369	69
04034	37091		368	84
			369	111
04034	37092		368	83
			369	110
04034	37093		368	56
			369	72
04034	37094		368	55
			369	71
04034	37096		368	41
			369	50
04034	37098		368	30
			369	38
04034	37099		369	55
80871	371		328	14
80871	372		328	22
96620	3720PU		371	14
			373	15
			375	12
			376	15
			377	15
			378	15
10741	3721B		386	23
04034	37249		368	60
			369	76
04034	37250		368	61
			369	77

CROSS-REFERENCE INDEXES

PART NUMBER INDEX

FSCM	PART NUMBER	STOCK NUMBER	FIG.	ITEM
04034	37251		368	62
			369	78
04034	37252		368	63
			369	79
04034	37253		369	80
04034	37254		369	81
04034	37255		369	82
04034	37256		369	83
04034	37257		369	84
04034	37258		369	85
04034	37259		369	86
04034	37260		369	87
04034	37261		368	75
			369	102
04034	37262		368	65
			369	88
04034	37263		369	89
04034	37264		368	64
			369	90
04034	37265		369	91
80871	373		328	21
80871	374		328	20
80871	375		328	19
80871	376		328	17
04034	37652	5950-01-205-4896	368	78
			369	105
04034	37653	5950-01-112-4835	368	79
			369	106
80871	377		328	18
00096	3770		321	47
00096	3771		321	48
80871	378		328	16
10741	3782-2		383	87
10741	3782-3		383	57
			385	21
04034	37920		368	26
			369	34
04034	37929		368	29
			369	37
04034	37971		368	32
			369	40
04034	37972		368	33
			369	41
04034	37973		368	34
			369	42
04034	37974		368	35
			369	43
04034	37975		368	36
			369	44
04034	37976		368	37
			369	45

CROSS-REFERENCE INDEXES

PART NUMBER INDEX

FSCM	PART NUMBER	STOCK NUMBER	FIG.	ITEM
04034	37977		368	38
			369	46
04034	37978		369	47
04034	37979		369	57
04034	37980		369	58
04034	37981		369	59
04034	37982		369	60
04034	37987		368	31
			369	39
04034	37988		369	56
88032	38A4A		443	1
81349	38TB11		350	18
			351	24
			352	19
			353	24
			356	18
81349	38TB4		350	20
			351	22
			353	22
			356	20
04034	38005	6130-00-485-5885	368	43
			369	52
04034	38100	6110-01-058-1928	368	45
			369	54
04034	38105	6680-00-485-5887	368	44
			369	53
04034	38139	6680-01-005-1939	369	61
53918	392	6680-01-204-0080	342	11
			345	12
04034	39260-12M1-M8-38		369	1
	100/M9-M12-38139			
04034	39427		370	20
04034	39713		368	15
			369	15
80871	4.00		326	37
80871	4.18		326	36
80871	4.19		326	35
62148	4-002-0		437	7
62148	4-023-0		437	6
62148	4-908-0		437	9
62148	4-911-0		437	8
28199	40-260-13		381	17
28199	40-260-14		381	18
28199	40-260-24		381	28
28199	40-260-26		381	27
28199	40-260-52		381	6
28199	40-260-55		381	5
04034	40012		370	35
78770	4005A8801		408	31
03670	40060		319	7
			320	7

CROSS-REFERENCE INDEXES

PART NUMBER INDEX

FSCM	PART NUMBER	STOCK NUMBER	FIG.	ITEM
03670	40094		319	14
			320	15
77408	40276		319	17
			320	18
03670	40309		319	15
			320	16
10741	4053		385	45
04034	40720		369	23
32862	4081468		501	15
73274	41		351	12
			353	12
			356	5
73396	41-1000-002		486	22
			490	22
73396	41-1000-003		472	6
			473	6
73396	41-1005-000		477	22
37919	410-001	6240-01-202-2492	449	3
37919	410-002		447	20
37919	410-035		447	5
71600	41021		370	21
37919	411-003		447	19
37919	411-018	6240-01-202-2482	447	21
37919	41l-022		447	4
37919	411-023		447	11
10741	4110A3	5920-01-268-0398	385	42
78770	4111A0103		408	41
78770	4111A4037		408	58
78770	4111A4039		408	59
78770	4111A4041		408	60
78770	4111A8733	5930-00-784-8989	408	4
			408	28
78770	4111A8819		408	56
78770	4111A8824		408	11
10741	4113A30		385	33
78770	4118B8801		408	38
78770	4118B8802		408	6
01276	412-4-6B		460	12
			462	10
04034	41415	6130-00-244-1406	370	33
14852	4145-W		413	39
			417	38
03670	41451	4820-01-281-2408	319	16
			320	17
88233	41462-1000		462	28
10741	4150		388	12
03670	41527		319	10
			320	11
78770	4161A8715		408	80
78770	4161A8901		408	89
77408	41732		319	25

CROSS-REFERENCE INDEXES

PART NUMBER INDEX

FSCM	PART NUMBER	STOCK NUMBER	FIG.	ITEM
03670	41732	4210-01-286-9725	320	26
10741	4174		386	22
			461	5
51267	417405000		405	1
10741	4176		386	6
03670	41908		319	47
			320	64
03670	41917		319	46
			320	63
10741	4198PS		385	1
73274	42		351	14
			353	14
			356	7
28199	42-260 TY464		381	1
28199	42-260-1		381	35
28199	42-260-12		381	2
28199	42-260-8		381	8
37919	420-001		449	4
			450	2
00096	4210		321	25
10741	4211		383	27
10741	4212X	5910-01-272-6232	385	28
03670	42128		319	5
			320	6
53918	423-4		342	10
			344	22
			345	9
62321	4231	5365-00-417-8925	435	8
62321	4236		435	5
03670	42424	4210-01-273-0336	319	11
			320	12
03670	42486		319	4
			320	4
03670	42678		319	9
			320	9
04034	42922		369	104
73274	43		351	13
			353	13
			356	6
66682	43-065		412	12
			413	12
			416	12
			417	9
37919	430-058		447	34
14852	4300-F		413	46
			417	45
04034	43075		368	6
			369	6
03670	43118		319	22
			320	22
03670	43166		320	10

CROSS-REFERENCE INDEXES

PART NUMBER INDEX

FSCM	PART NUMBER	STOCK NUMBER	FIG.	ITEM
14852	4334B002		412	35
			416	35
14852	4335B001		413	47
			417	46
10741	4340		383	25
10741	4341		383	96
10741	4342		383	47
10741	4343X		384	2
93335	43536		403	1
14852	4354-D		412	38
			416	38
14852	4354E003		413	55
14852	4355E001		412	41
			416	41
14852	4355E003		417	54
14852	4363B001		413	61
			417	60
14852	4363B002		413	62
			417	61
14852	4366E001		413	34
			417	33
14852	4380-A		412	47
			416	47
10741	4383X		383	76
10741	4384X		383	79
10741	4386		385	50
10741	4389		388	2
10741	4390X	5961-01-290-7668	385	46
14852	4392-X		412	30
			413	30
			416	30
			417	29
10741	4393		388	13
10741	4394X	5950-01-271-8131	385	52
10741	4395X	5950-01-271-8155	385	41
14852	4399-B		412	28
			413	29
			416	28
			417	28
73274	44	5930-01-286-9665	351	15
			353	15
10741	4400		385	58
10741	4402X		385	60
10741	4404X	5910-01-272-3541	385	35
10741	4405	5910-01-107-3565	385	51
71400	4407		339	12
10741	4407X	5950-01-268-5245	384	23
10741	4434X		383	56
		4140-01-268-9129	385	5
10741	4435X		383	73
10741	4436X		383	64

CROSS-REFERENCE INDEXES

PART NUMBER INDEX

FSCM	PART NUMBER	STOCK NUMBER	FIG.	ITEM
10741	4437X		383	62
10741	4438X		383	63
00096	444-12 C		321	23
10741	4441X-RF		388	1
10741	4500X		383	100
10741	4502X		383	16
10741	4506X		383	15
10741	4512X		385	59
03670	45120		319	1
			320	1
10741	4524		385	47
03670	45244		319	2
			320	2
10741	4525		385	36
10741	4526		383	101
10741	4528		383	53
03670	45333		319	6
			320	5
00096	454-9 C		321	22
81306	454512		415	55
04034	45484		370	3
10741	4565-60		386	11
10741	4574-10		385	19
10741	4574-12		383	39
			383	72
10741	4574-16		383	14
			383	104
			385	40
10741	4574-22		383	67
10741	4574-24		383	32
10741	4574-7		385	14
10741	4574-8		383	90
10741	4577-14		386	4
10741	4577-6		383	86
10741	4578-32		385	15
10741	4578-34		383	51
			383	55
			385	3
			388	9
10741	4578-35		383	7
			384	11
			385	7
			387	9
10741	4578-36		383	19
			384	4
			386	9
10741	4578-38		383	13
			384	19
			385	30
10741	4578-39		383	66
10741	4578-40		384	6

CROSS-REFERENCE INDEXES

PART NUMBER INDEX

FSCM	PART NUMBER	STOCK NUMBER	FIG.	ITEM
10741	4578-44		386	3
88233	4599-6200		461	19
10741	4608		388	14
10741	4612		383	93
10741	4619		386	10
10741	4625		386	5
03670	46250		319	23
			320	24
00096	463 C		321	24
10741	4634X		384	1
10741	4675		386	24
95263	47-3M	6210-01-023-0393	381	14
00096	471-3 C		321	1
00096	471-6 C		321	3
00096	471-6A C		321	2
10741	4722	5945-01-272-7290	385	25
10741	4728		386	14
10741	4729		386	12
37919	480-017		447	16
55442	480D10-12	5945-01-114-8589	339	6
96620	495-45AU		371	15
			373	16
			374	14
			376	16
			377	16
			378	16
80871	5.02		326	23
80871	5.03		326	21
80871	5.09		326	22
80871	5.10		326	12
80871	5.19		326	11
80871	5.44		326	18
80871	5.49		326	17
80871	5.66		326	19
80871	5.67		326	20
80871	5.70		326	16
80871	5.71		326	15
80871	5.78		326	14
80871	5.79		326	13
80871	5.83		326	10
80871	5.84		326	9
80871	5.89		326	8
77408	50-0435-0100		371	17
			378	18
73274	50-19A	5330-01-274-7136	350	4
			352	4
73274	50-19B		351	5
			353	5
73274	50-19D	5330-01-312-3768	354	9
			355	9
73274	50-73		356	13

CROSS-REFERENCE INDEXES

PART NUMBER INDEX

FSCM	PART NUMBER	STOCK NUMBER	FIG.	ITEM
73274	50-96		354	7
			355	7
73274	50-97		354	5
			355	5
73274	50-98		354	6
			355	6
19557	50A-N5	6210-01-267-5476	496	7
53918	50016		341	6
14852	5021-S		412	45
			413	58
			416	45
			417	57
10741	5047		383	45
37919	505-030	5999-01-233-5915	450	3
37919	505-343		447	28
37919	505-344		447	27
14852	5054-D		412	42
			413	60
			416	42
			417	59
04034	50727		361	12
			362	12
			363	12
			364	12
			365	12
			366	12
			367	12
10741	5079A		388	15
10741	5080		385	18
59618	50854		430	25
82692	50903		323	5
82692	50908		323	4
82692	50909		323	13
82692	50910		323	14
82692	50911		323	12
82692	50912		323	10
82692	50914		323	8
82692	50915		323	15
82692	50916		323	2
82692	50917		323	3
82692	50921		323	17
82692	50922		323	18
82692	50924		323	16
73396	51-0000-9-003		478	4
73274	51-204		354	3
			355	3
73274	51-22		354	21
			355	21
37919	510-132		447	8
37919	510-173		445	1
37919	510-272		446	1

CROSS-REFERENCE INDEXES

PART NUMBER INDEX

FSCM	PART NUMBER	STOCK NUMBER	FIG.	ITEM
37919	510-415		451	1
14852	5101-B		412	43
			413	56
			416	43
			417	55
60438	512		411	1
59618	51236		428	27
59618	51474		430	15
59431	51531-2		412	17
			413	17
			416	17
59431	51551		417	17
59618	51778		419	39
			428	26
59618	51780		419	77
			431	9
59618	51784		426	9
			430	19
			433	3
10741	5190		383	98
59618	51924		428	39
73274	52-02-10		350	8
			352	8
73274	52-02-11		350	9
			352	9
73274	52-02-12		350	10
			352	10
73274	52-02-19		350	11
			352	11
73274	52-02-20		350	3
			352	3
73274	52-02-26		350	2
			352	2
73274	52-02-28		350	7
			352	7
73274	52-02-29		350	16
			352	16
73274	52-02-30		350	17
			352	17
73274	52-02-31		350	12
			352	12
73274	52-02-6		350	19
			352	18
19557	52EXA-N5		496	11
59618	52150		428	45
03670	52201		319	44
			320	61
59618	52310		429	12
			430	2
89020	525		339	14
59618	52549		427	2

CROSS-REFERENCE INDEXES

PART NUMBER INDEX

FSCM	PART NUMBER	STOCK NUMBER	FIG.	ITEM
59618	52549		430	8
			432	25
59618	52566		427	12
			432	20
59618	52696		433	6
00096	527-14-3-1 N		321	17
04034	52823		360	8
59618	52864		419	5
			428	12
59618	52906		432	15
59618	52909		430	14
59618	52947		428	10
73274	53-03	5930-00-548-8042	356	4
89020	530		339	15
59618	53249	5930-01-156-5521	432	29
53800	53293		322	2
04034	53585		366	6
			367	6
59618	53738		419	38
59618	54038		420	11
59618	54068		428	46
14852	5408-B		413	31
			417	30
10741	5412		387	18
14852	5433-D		413	42
			417	41
14852	5436-F		413	38
			417	37
14852	5441-C		412	29
			413	43
			416	29
			417	42
14852	5441-F		412	44
			413	57
			416	44
			417	56
59618	54414		432	26
14852	5445-B		413	40
			417	39
14852	5446-A		412	33
			416	33
59618	54660		428	54
59618	54661		428	53
59618	54678		428	23
14852	5485-B		413	49
			417	48
14852	5487-B		412	31
			413	35
			416	31
			417	34
14852	5488-B		412	25

CROSS-REFERENCE INDEXES

PART NUMBER INDEX

FSCM	PART NUMBER	STOCK NUMBER	FIG.	ITEM
14852	5488-B		413	26
			416	25
			417	25
14852	5491-F		412	27
			413	28
			416	27
			417	27
00096	552-2 C		321	4
14852	5528-G		413	32
			417	31
81349	5529/12		470	10
			477	24
14852	5534-G		413	33
			417	32
14852	5540-R		412	32
			416	32
14852	5543-J		413	52
			417	51
14852	5561-T		412	48
			416	48
14852	5575-P		413	36
			417	35
10741	5579		387	5
10741	5580		387	7
10741	5581		387	19
10741	5582		387	15
10741	5583		387	20
10741	5584		387	13
59618	55882	5930-01-156-5587	428	11
10741	5592AX		386	16
10741	5593A		386	25
59618	55985		428	15
			432	6
59618	56000		432	9
59618	56013		429	16
59618	56018		428	55
59618	56020		432	12
59618	56021W		428	48
59618	56027		429	4
59618	56029		431	11
59618	56043		433	11
59618	56044		433	9
59618	56045		428	50
59618	56048		430	18
59618	56051W		428	67
59618	56052	5930-01-154-3618	428	65
59618	56055		430	16
59618	56057		432	23
59618	56059		432	8
59618	56065		432	1
59618	56074		433	8

CROSS-REFERENCE INDEXES

PART NUMBER INDEX

FSCM	PART NUMBER	STOCK NUMBER	FIG.	ITEM
59618	56076		432	19
59618	56078		430	12
59618	56079		419	80
			428	62
			433	13
59618	56080		428	63
59618	56082		431	2
59618	56086		419	79
			428	61
			433	12
59618	56087		430	22
59618	56088		429	14
			430	1
59618	56090		429	13
			430	3
59618	56091		428	66
59618	56095	3030-01-150-3662	432	14
59618	56118		433	2
59618	56128		419	81
			428	51
			433	14
59618	56129		428	52
59618	56131		429	15
59618	56133		432	16
59618	56156		430	4
			432	22
59618	56163		428	56
59618	56166		428	16
59618	56167W		428	20
59618	56173		428	22
59618	56175		429	17
59618	56179	4540-01-228-1018	431	7
59618	56264		431	6
			432	10
59618	56285		430	6
59618	56392		419	21
			420	10
59618	56457		430	9
59618	56461		430	11
			432	27
59618	56470	5930-01-136-1967	432	3
59618	56486		428	43
59618	56502		428	30
59618	56503		428	31
59618	56534		419	54
			428	60
59618	56540		430	17
59618	56552		430	24
			431	4
59618	56563		431	3
59618	56566		428	38

CROSS-REFERENCE INDEXES

PART NUMBER INDEX

FSCM	PART NUMBER	STOCK NUMBER	FIG.	ITEM
59618	56576		428	8
59618	56587		432	21
59618	56591		432	5
59618	56685		428	14
95405	5684-T10		383	107
59618	56938		429	1
59618	56968		428	42
59618	57005		429	10
59618	57015		432	4
59618	57019		429	11
59618	57025	3510-01-131-9654	429	6
59618	57070W		433	15
59618	57078W		428	44
14852	5708-L		413	50
			417	50
14852	5709-L		413	51
			417	49
77408	5711/1601		479	17
77408	5721/2004		479	19
59618	57408		431	5
59618	57444		428	57
59618	57446W		428	59
59618	57659W		428	28
03670	57699		319	32
03670	57702		320	58
14852	5797-J		412	37
			413	44
			416	37
			417	43
59618	58044		432	30
59618	58045		432	28
59618	58047		432	13
59618	58048		431	10
59618	58049		429	9
80871	5989-4340-579		326	1
80871	6.02		326	32
80871	6.10		326	30
80871	6.20		326	29
80871	6.29		326	28
80871	6.74		326	31
62148	6-014-0		437	12
00096	6-10P C		321	29
92392	6-400-0	5330-01-224-8595	437	14
62148	6-903-0		437	11
62148	6-908-0		437	13
62148	6-910-0		437	4
66682	60		412	5
			413	5
			416	5
			417	5
10741	60CR1024-10		383	82

CROSS-REFERENCE INDEXES

PART NUMBER INDEX

FSCM	PART NUMBER	STOCK NUMBER	FIG.	ITEM
10741	60CR1024-12		383	18
10741	60CR1024-6		383	38
			384	3
			385	48
			386	8
10741	60CR420-10		383	12
10741	60CR420-24		383	33
10741	60CR420-6		383	61
10741	60CR420-8		383	28
			385	29
10741	60CR632-10		385	4
10741	60CR632-16		383	89
10741	60CR632-32		383	54
10741	60CR632-6		385	10
10741	60CR632-8		388	8
10741	60CR832-10		383	58
			385	20
10741	60CR832-12		385	8
10741	60CR832-14		384	15
10741	60CR832-4		383	21
			384	8
			387	8
10741	60CR832-6		383	23
			383	26
			385	26
10741	60CR832-8		383	8
			384	10
37919	600-006		447	26
10741	600-015-718		386	15
75382	600-15		354	19
			355	19
28199	600J		381	34
82692	600009-39E-1		323	9
82692	600009-39E-11		323	11
82692	600009-39E-4		323	19
82692	600009-39E-8		323	6
25204	600617	4330-00-973-3909	337	7
75382	601-02		356	24
25204	601285		337	24
25204	601353		337	13
51064	602-0020-161		346	19
			347	21
51064	602-0030-241		346	21
			347	20
37919	603-033		447	24
37919	603-051		447	17
37919	603-113		447	29
37919	603-188		447	35
37919	603-224		447	30
37919	604-001		447	25
37919	604-030		447	18

CROSS-REFERENCE INDEXES

PART NUMBER INDEX

FSCM	PART NUMBER	STOCK NUMBER	FIG.	ITEM
37919	604-034		447	31
37919	604-037		447	37
81306	608009		415	43
81306	608022		415	48
81306	608039		415	63
81306	608051		415	26
81306	608090		415	72
81306	608091		415	73
81306	608572		415	5
81306	608723		415	89
81306	608733		415	83
81306	608782		415	17
81306	608783		415	16
81306	608784		415	3
81306	608785		415	4
81306	608824		415	12
81306	608846		415	21
81306	608849		415	44
10741	6094	6645-01-268-4045	385	11
73396	61-1700-001		471	5
			475	5
73396	61-1700-002		470	6
73396	61-1700-003		470	5
			480	6
73396	61-2050-000		471	8
			475	8
			480	5
73396	61-4250-000		470	4
			489	4
10741	61CR632-6		385	43
51064	610-0120-021		346	20
			347	13
00096	612-1 C		321	34
00096	612-16 C		321	35
00096	612-8 CG		321	14
53918	614-505		345	21
75382	615-112		354	17
			355	17
75382	615-1327		354	18
			355	18
10741	6158		383	42
51064	619-0860-101		346	9
			347	11
73396	62-2061-000		479	15
73396	62-2100-000		479	11
73396	62-2150-000		479	8
73396	62-2300-000		479	7
			479	12
73396	62-2500-000		479	16
77408	62-3030-2322		457	8
77408	62-3030-3678		464	1

CROSS-REFERENCE INDEXES

PART NUMBER INDEX

FSCM	PART NUMBER	STOCK NUMBER	FIG.	ITEM
73396	62-6005-001		479	18
73396	62-6007-001		479	22
73396	62-6009-001		479	21
73396	62-6010-001		479	23
73396	62-7008-000		479	4
73396	62-7008-001		479	5
37919	620-024	5355-01-213-6701	447	10
53918	622-100		344	15
10741	6289		385	56
10741	6291		385	32
61204	63070049		371	10
			372	9
			373	10
			374	9
			375	9
			376	10
			377	10
			378	10
			379	9
10741	6346		385	34
10741	6446B		383	102
			388	11
73396	65-3000-002		478	10
73396	65-5000-000		469	27
			486	23
37919	655-200		447	12
14852	65504002		412	26
			413	27
			416	26
			417	26
66682	66		412	6
			413	6
			416	6
			417	6
00096	66-5 C		321	37
37919	660-366		447	13
73396	68-00009-001		479	2
73396	68-00009-003		478	3
66682	6812		412	4
			413	4
			416	4
			417	4
10741	6878		383	48
10741	6879		383	35
37919	690-699		447	33
37919	690-700		447	23
37919	690-701		447	22
37919	690-702		447	2
37919	690-794		447	32
25204	690224		337	1
80871	7.04		326	27

CROSS-REFERENCE INDEXES

PART NUMBER INDEX

FSCM	PART NUMBER	STOCK NUMBER	FIG.	ITEM
80871	7.12		326	26
80871	7.40		326	25
80871	7.49		326	24
78770	7A2S-7		408	70
81349	7SGU-4		371	18
			378	19
			383	108
72219	70-103-01	4820-00-417-1120	342	12
			344	5
77408	70-5297-4660		460	10
01121	700HC24A1		492	11
01121	700HG47A1		492	12
72219	70105-01	4820-00-148-8584	344	19
			345	15
04034	70154		370	50
59618	70282		433	5
73396	71-1021-000		469	5
			469	17
			472	5
			473	5
			477	5
			486	4
			490	4
73396	71-1021-001		469	20
			477	18
73396	71-1022-000		469	3
			472	3
			473	3
			477	3
			486	2
			490	2
73396	71-1022-001		486	3
			490	3
73396	71-1022-002		486	5
			490	5
73396	71-1022-003		486	6
			490	6
73396	71-1022-004		486	7
			490	7
73396	71-1022-005		486	8
			490	8
73396	71-1022-006		486	9
			490	9
73396	71-1022-007		486	10
			490	10
73396	71-1022-008		486	11
			490	11
73396	71-1022-009		486	12
			490	12
73396	71-1022-010		486	13
			490	13

CROSS-REFERENCE INDEXES

PART NUMBER INDEX

FSCM	PART NUMBER	STOCK NUMBER	FIG.	ITEM
73396	71-1022-011		486	14
			490	14
73396	71-1022-012		486	15
			490	15
73396	71-1022-013		486	16
			490	16
73396	71-1022-014		486	17
			490	17
73396	71-1022-015		486	18
			490	18
73396	71-1022-016		486	19
			490	19
73396	71-1022-017		486	20
			490	20
73396	71-1022-018		486	21
			490	21
73396	71-1022-100		477	4
73396	71-1022-101		477	6
73396	71-1022-102		477	7
73396	71-1022-103		477	8
73396	71-1022-104		477	9
73396	71-1022-105		477	10
73396	71-1022-106		469	4
			477	11
73396	71-1022-107		469	7
			477	13
73396	71-1022-108		469	13
			472	4
			473	4
73396	71-1023-000		469	8
73396	71-1023-100		469	6
73396	71-1023-101		469	9
73396	71-1023-102		469	10
73396	71-1023-103		469	11
73396	71-1025-000		469	23
73396	71-1026-000		469	18
			477	17
73396	71-1026-001		469	19
			477	19
73396	71-1026-002		469	21
			477	20
73396	71-1026-003		469	22
			477	21
73396	71-1028-000		469	12
			477	12
73396	71-1529-000		469	14
			477	14
73396	71-1529-001		469	24
			477	15
73396	71-1529-002		469	16
			469	25

CROSS-REFERENCE INDEXES

PART NUMBER INDEX

FSCM	PART NUMBER	STOCK NUMBER	FIG.	ITEM
73396	71-1529-002		477	16
73396	71-1529-003		469	26
			477	23
73396	71-1529-100		469	15
77408	71-3610-1020		457	6
			458	6
			461	1
			462	4
77408	71-3610-4685		461	8
			462	5
10741	7120		383	83
03670	71862		319	34
03670	71863		320	34
14852	72102001		413	53
14852	72102003		417	52
78770	7224		409	1
78770	7224B0001		409	27
78770	7224B0011		409	31
78770	7224B0013		409	13
78770	7224B0901		409	29
78770	7236B0013		409	3
78770	7236B0017		409	2
78770	7236B1001		409	26
78770	7236B1005		409	24
78770	7236B3033		409	7
78770	7236B8714	7310-01-181-8724	409	25
78770	7236B8901		409	21
37919	740-026		449	
37919	740-027		450	
14799	7450-1.55		497	13
39428	7527K62		501	12
62321	7576		435	19
62321	7577		435	18
50962	76-3		434	1
00096	7616		321	26
00096	7618		321	27
00096	7621		321	28
03670	76610		319	31
03670	76645		320	59
03670	76924		319	3
			320	3
53918	770		348	2
53918	770-22		348	18
28488	771		497	19
81306	775071		415	85
81306	775643		415	80
81306	775665		415	35
81306	775740		415	36
81306	775785		415	24
81306	776035		415	53
81306	776036		415	50

CROSS-REFERENCE INDEXES

PART NUMBER INDEX

FSCM	PART NUMBER	STOCK NUMBER	FIG.	ITEM
81306	776076		415	20
81306	776118		415	45
81306	776119		415	46
81306	776188		415	70
81306	776191		415	25
81306	776261		415	40
81306	776262		415	74
81306	776327		415	58
81306	776338		415	57
81306	776356		415	41
81306	776395		415	37
81306	776523		415	39
81306	776559		415	6
81306	776593		415	49
81306	776780		415	61
81306	776839		415	56
81306	776989		415	23
81306	777035		415	64
81306	777070		415	62
81306	777108		415	22
81306	777124		415	51
81306	777172		415	34
81306	777180		415	69
81306	777328		415	33
81306	777345		415	30
81306	777383		415	11
81306	777444		415	92
81306	777458		415	71
81306	777465		415	38
81306	777533		415	84
81306	777595		415	88
81306	777642		415	18
81306	777691		415	93
81306	777758		415	91
81306	777762		415	31
81306	777811		415	67
81306	777849		415	65
81306	777850		415	66
81306	777876		415	86
81306	778575		415	47
77408	78-3610-1020		463	1
81306	780021		415	90
81306	780034		415	81
81306	780036		415	82
81306	780082		415	76
81306	7801064		415	59
81306	780125		415	75
81306	780131		415	77
81306	780137		415	78
81306	780138		415	2
81306	780139		415	79

CROSS-REFERENCE INDEXES

PART NUMBER INDEX

FSCM	PART NUMBER	STOCK NUMBER	FIG.	ITEM
81306	780179		415	9
81306	780180		415	8
81306	780188		415	29
81306	780189		415	28
81306	780230		415	7
81306	780263		415	32
81306	780378		415	60
81306	780387		415	14
81306	780388		415	27
81306	780390		415	15
81306	780392		415	10
81306	780398		415	13
81306	780413		415	87
81306	780420		415	68
81306	780421		415	19
81306	780477		415	54
04034	79741		357	7
			358	7
			359	7
04034	-79943		368	82
			369	109
10741	80CR420-4		387	6
10741	80CR420-8		385	53
10741	80CR832-10		384	13
10741	80CR832-4		387	12
01121	800H-HR2A2	5930-01-016-0178	493	4
01121	800H-PR16A	5930-00-067-5808	492	8
			493	9
			494	8
01121	800H-PR16G	6210-01-016-6082	492	7
			493	8
			494	7
01121	800H-PR16R	6210-01-016-6083	492	9
			493	10
			494	9
01121	800H-R1A	5930-00-369-4140	492	4
			493	5
			494	4
01121	800H-R2A--	5930-00-984-5274	492	6
			493	7
			494	6
01121	800H-R6A	5930-00-007-0678	493	6
			494	5
01121	800H-R6A4	5930-01-232-8712	492	5
01121	800T-N212		493	8A
			494	7A
01121	800T-T2SB21	5930-00-498-8702	492	10
			493	11
			494	10
53918	80173		348	27
53918	80174		348	12
53918	80175		348	23
53918	80185		348	31

CROSS-REFERENCE INDEXES

PART NUMBER INDEX

FSCM	PART NUMBER	STOCK NUMBER	FIG.	ITEM
53918	80186		348	16
53918	80191		348	22
53918	80192		348	21
53918	80195		348	7
53918	80196		348	5
53918	80197		348	3
53918	80198		348	26
53918	80199		348	8
00096	802-5		321	43
53918	80200		348	4
53918	80206		348	17
53918	80212		348	15
53918	80215		348	24
53918	80221		348	13
53918	80222		348	28
53918	80224		348	10
53918	80236		348	25
53918	80237		348	14
73274	803-02-1		354	2
			355	2
73274	803-02-2		354	10
			355	10
73274	803-02-20		354	23
			355	23
73274	803-02-21		354	8
			355	8
73274	803-02-22		354	16
			355	16
73274	803-02-23		354	12
			355	12
73274	803-02-24		354	20
			355	20
73274	803-02-6		354	4
			355	4
10741	8034		385	13
59618	80399		419	35
80871	8054-9125-010		328	11
80871	8054-9200-060	4320-01-295-3427	328	1
80871	8054-9415-070		328	12
04034	80674		370	30
53918	80992		348	11
53918	80993		348	29
53918	80994		348	30
53918	80996		348	19
73396	81-00100-000		477	2
73396	81-00110-000		469	2
59431	810A18-A		417	16
59431	810G006A13		413	16
			416	16
53918	81007		341	5
59618	81392		427	11

CROSS-REFERENCE INDEXES

PART NUMBER INDEX

FSCM	PART NUMBER	STOCK NUMBER	FIG.	ITEM
59431	8145-00		413	24
			417	23
53711	815F1853040SYM29 24.1		350	23
			351	29
			352	22
			353	29
			354	25
			355	25
			356	29
59431	820RR12B79		413	19
77408	8200005		435	
77408	8262011/8529025		324	1
59431	82628		412	19
59431	82632		416	19
73396	83-00100-000		471	1
			475	1
			478	1
			480	1
73396	83-00120-000		470	1
			484	1
			487	1
			488	1
			489	1
59431	8300MRPD86		416	20
59431	8300MRTD88		413	20
61204	83070003		371	2
			372	2
			373	2
			374	2
			375	2
			376	2
			377	2
			378	2
			379	2
61204	83070009		371	12
			372	10
			373	13
			374	10
			375	10
			376	13
			377	13
			378	13
			379	10
61204	83070017		371	6
			372	5
			373	6
			378	6
			379	5
61204	83070018		376	6
61204	83070019		374	5

CROSS-REFERENCE INDEXES

PART NUMBER INDEX

FSCM	PART NUMBER	STOCK NUMBER	FIG.	ITEM
61204	83070019		375	5
			377	6
61204	83070021		372	8
			373	12
			374	8
			375	8
			376	12
			377	12
			378	12
			379	8
61204	83070022		371	8
			372	7
			373	8
			374	7
			375	7
			376	8
			377	8
			378	8
			379	7
61204	83075011		371	9
			373	9
			376	9
			377	9
			378	9
61204	83075013		371	11
			373	11
			378	11
61204	83075014		376	11
61204	83075015		377	11
77408	832004-5		502	1
77408	8321008		499	
62321	8324		435	16
01121	836-A2J		471	9
			475	9
59431	83940		412	20
59431	83960		417	19
00096	84-1 C		321	8
77408	8432016		349	
10741	8433		385	9
77408	8435005		322	
77408	8436017		496	1
73274	85-09-1		351	4
			353	4
73274	85-09-16		351	10
			353	10
73274	85-09-2		351	3
			353	3
73274	85-09-20		351	21
			353	21
73274	85-09-21		351	26
			353	26

CROSS-REFERENCE INDEXES

PART NUMBER INDEX

FSCM	PART NUMBER	STOCK NUMBER	FIG.	ITEM
73274	85-09-22		351	25
			353	25
73274	85-09-25		351	20
			353	20
73274	85-09-26		351	2
			353	2
73274	85-09-27		351	16
			353	16
73274	85-09-28		351	8
			353	8
73274	85-09-33		351	23
			353	23
73274	85-09-8		351	11
			353	11
73274	85-09-9		351	27
			353	27
59431	85PS165A47		417	18
10741	8501		385	23
14799	8501-X0-20-120	5945-01-246-4649	496	9
14799	8501-X0-80-120		496	6
04034	85143		357	16
			358	16
			359	16
			360	15
04034	85465		360	13
77408	8555033		318	
04034	85579		357	2
			358	2
			359	2
			360	2
59431	85635-2		412	18
59431	85657-1		416	18
59431	85709		413	18
04034	85733		471	6
			475	6
04034	86047		360	11
04034	86104		357	11
			358	11
			359	11
			360	10
04034	86198		360	3
10741	8621	5930-01-265-5483	388	3
04034	86258		360	12
04034	86375		357	14
			358	14
			359	14
77408	8640030		321	
04034	86434		357	10
			358	10
			359	10
04034	86435		471	7

CROSS-REFERENCE INDEXES

PART NUMBER INDEX

FSCM	PART NUMBER	STOCK NUMBER	FIG.	ITEM
04034	86435		475	7
04034	86436		357	6
			358	6
			359	6
04034	86474		360	14
04034	86509		357	13
			358	13
			359	13
04034	86523	6680-01-271-2885	357	12
			358	12
			359	12
04034	86556		357	3
			358	3
			359	3
04034	86666		357	5
			358	5
			359	5
00096	870-20 C		321	31
04034	87246		357	15
			358	15
			359	15
04034	87305		360	9
04034	87426		360	7
03670	8766414-1		320	
03670	8766414-2		319	
62321	8771		435	4
77408	8821043		317	1
81306	882666		415	42
62321	8991	5330-01-173-5807	435	15
61204	90400172		371	7
			373	7
			376	7
			377	7
			378	7
61204	90400290		372	6
			374	6
			375	6
			379	6
73396	91-1000-000		474	3
			476	3
			481	3
			482	3
73396	91-1011-000		481	4
73396	91-2000-000		484	4
73396	91-2003-000		475	3
			480	3
			484	3
73396	91-2003-0000		471	3
73396	91-5001-001		474	4
			476	4
			481	5

CROSS-REFERENCE INDEXES

PART NUMBER INDEX

FSCM	PART NUMBER	STOCK NUMBER	FIG.	ITEM
73396	91-5001-001		482	4
73396	91-5002-001		481	6
73396	91-6009-003		488	6
59618	91093		419	31
59618	91176		419	9
			428	7
14852	91179001		412	46
			413	59
			416	46
			417	58
14852	91184002		413	63
14852	91186002		412	49
			416	49
			417	62
14852	91189001		413	41
			417	40
14852	91190001		413	37
			417	36
80871	9131-1235-009		334	1
73124	9131-1541-003		335	1
11502	91331		370	28
62321	9144	3110-01-041-6124	435	22
14852	91815001		412	34
			416	34
10741	9291	5330-01-270-1167	383	37
10741	9295X		383	49
10741	9298		383	71
10741	9312X		383	1
10741	9321		383	68
10741	9324		383	36
10741	9326X		383	52
10741	9327		383	88
10741	9333		383	105
10741	9337		383	95
10741	9338		383	92
10741	9339X	5950-01-268-5246	384	7
10741	9340		384	12
10741	9347		384	17
10741	9348		384	16
10741	9349		384	20
10741	9350		384	22
10741	9353X		383	4
10741	9367		383	60
			385	54
88233	9450-1000		461	17
10741	9453		383	30
88233	9454-4000		461	16
10741	9457		383	31
10741	9465		383	99
10741	9472		383	75
61204	95000074		371	3

CROSS-REFERENCE INDEXES

PART NUMBER INDEX

FSCM	PART NUMBER	STOCK NUMBER	FIG.	ITEM
61204	95000074		372	3
			373	3
			374	3
			375	3
			376	3
			377	3
			378	3
			379	3
61204	95800146		371	4
			372	4
			373	4
			374	4
			375	4
			376	4
			377	4
			378	4
			379	4
10741	9589		385	55
10741	9591	6625-01-268-4047	385	16
10741	9669		383	10
10741	9719x		383	20
10741	9723X	5905-01-188-2358	385	61
10741	9731	5930-01-268-0413	383	91
10741	9744		383	22
10741	9779		383	50
62321	9781		435	20
62321	9787-A		435	21
62321	9789-9		435	10
62321	9790-C		435	7
10741	9796		388	7
10741	9798		388	5
10741	9799		383	106
10741	9800	6240-01-162-4086	383	17
10741	9813		388	6
10741	9855	5930-01-188-8843	388	4
96073	9951-1779		396	53
96073	9951-2068		396	83
96073	9951-2078		396	82
96073	9951-2212		396	26
96073	9951-2558		396	47
96073	9951-2900		396	50
96073	9951-2957		396	43
96073	9951-2958		396	45
81349	9991-UE-7		496	4

CROSS-REFERENCE INDEXES

FIGURE AND ITEM NUMBER INDEX

FIG.	ITEM	STOCK NUMBER	FSCM	PART NUMBER
317	1		77408	8821043
318			77408	8555033
319			03670	8766414-2
319	1		03670	45120
319	2		03670	45244
319	3		03670	76924
319	4		03670	42486
319	5		03670	42128
319	6		03670	45333
319	7		03670	40060
319	8		77408	ASTM A-53
319	9		03670	42678
319	10		03670	41527
319	11	4210-01-273-0336	03670	42424
319	12		77408	ASTM A-197
319	13		77408	ASTM A-53
319	14		03670	40094
319	15		03670	40309
319	16	4820-01-281-2408	03670	41451
319	17		77408	40276
319	18		77408	ASTM A-197
319	19		77408	ASTM A-53
319	20		77408	ASTM A-197
319	21		77408	ASTM A-197
319	22		03670	43118
319	23		03670	46250
319	24		77408	ASTM A-53
319	25		77408	41732
319	26		77408	ASTM A-197
319	27		03670	32338
319	28	4720-01-192-8116	03670	32336
319	29		03670	31810
319	30	4810-01-263-0945	03670	32096
319	31		03670	76610
319	32		03670	57699
319	33		03670	23574
319	34		03670	71862
319	35		77408	ASTM A-53
319	36		77408	ASTM A-197
319	37		77408	ASTM A-197
319	38		77408	ASTM A-197
319	39		77408	ASTM A-197
319	40		77408	ASTM A-197
319	41	4210-01-281-1130	03670	32659
319	42		77408	ASTM A-197
319	43		03670	33262
319	44		03670	52201
319	45		03670	33263
319	46		03670	41917
319	47		03670	41908
320			03670	8766414-1

CROSS-REFERENCE INDEXES

FIGURE AND ITEM NUMBER INDEX

FIG.	ITEM	STOCK NUMBER	FSCM	PART NUMBER
320	1		03670	45120
320	2		03670	45244
320	3		03670	76924
320	4		03670	42486
320	5		03670	45333
320	6		03670	42128
320	7		03670	40060
320	8		77408	ASTM A-53
320	9		03670	42678
320	10		03670	43166
320	11		03670	41527
320	12	4210-01-273-0336	03670	42424
320	13		77408	ASTM A-197
320	14		77408	ASTM A-53
320	15		03670	40094
320	16		03670	40309
320	17	4820-01-281-2408	03670	41451
320	18		03670	40276
320	19		77408	ASTM A-197
320	20		77408	ASTM A-53
320	21		77408	ASTM A-197
320	22		03670	43118
320	23		77408	ASTM A-197
320	24		03670	46250
320	25		77408	ASTM A-53
320	26	4210-01-286-9725	03670	41732
320	27		77408	ASTM A-197
320	28		77408	ASTM A-197
320	29		03670	32338
320	30	4720-01-192-8116	03670	32336
320	31		03670	31811
320	32	4810-01-263-0945	03670	32096
320	33		03670	36075
320	34		03670	71863
320	35		03670	32100
320	36		77408	ASTM A-197
320	37		77408	ASTM A-53
320	38		77408	ASTM A-197
320	39		77408	ASTM A-397
320	40		77408	ASTM A-197
320	41		77408	ASTM A-53
320	42		77408	ASTM A-197
320	43		77408	ASTM A-197
320	44		77408	ASTM A-197
320	45		77408	ASTM A-53
320	46		77408	ASTM A-197
320	47		77408	ASTM A-53
320	48		77408	ASTM A-197
320	49		77408	32662
320	50		77408	ASTM A-197
320	51	4210-01-237-6446	03670	32663

CROSS-REFERENCE INDEXES

FIGURE AND ITEM NUMBER INDEX

FIG.	ITEM	STOCK NUMBER	FSCM	PART NUMBER
320	52		77408	ASTM A-53
320	53		77408	ASTM A-197
320	54		77408	ASTM A-234
320	55		77408	ASTM A-197
320	56		77408	ASTM A-197
320	57		03670	32659
320	58		03670	57702
320	59		03670	76645
320	60		03670	33262
320	61		03670	52201
320	62		03670	33263
320	63		03670	41917
320	64		03670	41908
321			77408	8640030
321	1		00096	471-3 C
321	2		00096	471-6A C
321	3		00096	471-6 C
321	4		00096	552-2 C
321	5		00096	246-10 C
321	6		00096	148-11 C
321	7		00096	148-12 C
321	8		00096	84-1 C
321	9		00096	30-5A C
321	10		00096	14-1-1 C
321	11		00096	14-5-12 C
321	12		00096	14-C C
321	13		00096	14-2 C
321	14		00096	612-8 CG
321	15		00096	SK239-2 C
321	16		00096	164-4 C
321	17		00096	527-14-3-1 N
321	18		00096	E1792
321	19		00096	207-3-2 C
321	20		00096	207-1-2 C
321	21		00096	SK 9-N
321	22		00096	454-9 C
321	23		00096	444-12 C
321	24		00096	463 C
321	25		00096	4210
321	26		00096	7616
321	27		00096	7618
321	28		00096	7621
321	29		00096	6-10P C
321	30		00096	351-11 C
321	31		00096	870-20 C
321	32		00096	153-19 C
321	33		00096	331 N
321	34		00096	612-1 C
321	35		00096	612-16 C
321	36		00096	178-55-1 C
321	37		00096	66-5 C

CROSS-REFERENCE INDEXES

FIGURE AND ITEM NUMBER INDEX

FIG.	ITEM	STOCK NUMBER	FSCM	PART NUMBER
321	38		00096	14-5 C
321	39		00096	14-5 C MOD
321	40		00096	126 C
321	41		00096	25-4 C
321	42		00096	210-24 C
321	43		00096	802-5
321	44		00096	207-3-3 C
321	45		00096	351-14 N
321	46		00096	148-5 N
321	47		00096	3770
321	48		00096	3771
321	49		00096	30-5 c
322			77408	8435005
322	1		54590	FMR490D
322	2		53800	53293
322	3		01113	MODEL 4320
323	1	5985-01-185-0314	82692	MR-106-36D
323	2		82692	50916
323	3		82692	50917
323	4		82692	50908
323	5		82692	50903
323	6		82692	600009-39E-8
323	7		82692	RG-11A/U
323	8		82692	50914
323	9		82692	600009-39E-1
323	10		82692	50912
323	11		82692	600009-39E-11
323	12		82692	50911
323	13		82692	50909
323	14		82692	50910
323	15		82692	50915
323	16		82692	50924
323	17		82692	50921
323	18		82692	50922
323	19		82692	600009-39E-4
324	1		77408	8262011/8529025
325	1		80871	0TB2-00-066
326	1		80871	5989-4340-579
326	2		80871	1.48
326	3		80871	1.40
326	4		80871	1.56
326	5		80871	1.58
326	6		80871	1.60
326	7		80871	1.74
326	8		80871	5.89
326	9		80871	5.84
326	10		80871	5.83
326	11		80871	5.19
326	12		80871	5.10
326	13		80871	5.79
326	14		80871	5.78

CROSS-REFERENCE INDEXES

FIGURE AND ITEM NUMBER INDEX

FIG.	ITEM	STOCK NUMBER	FSCM	PART NUMBER
326	15		80871	5.71
326	16		80871	5.70
326	17		80871	5.49
326	18		80871	5.44
326	19		80871	5.66
326	20		80871	5.67
326	21		80871	5.03
326	22		80871	5.09
326	23		80871	5.02
326	24		80871	7.49
326	25		80871	7.40
326	26		80871	7.12
326	27		80871	7.04
326	28		80871	6.29
326	29		80871	6.20
326	30		80871	6.10
326	31		80871	6.74
326	32		80871	6.02
326	33		80871	3.88
326	34		80871	3.00
326	35		80871	4.19
326	36		80871	4.18
326	37		80871	4.00
327	1		80871	2125-1159-060
327	2		80871	0019-6790-150
327	3		80871	0018-4841-020
327	4		80871	2125-2831-010
327	5		80871	0018-4841-750
327	6		80871	0018-4841-010
327	7		80871	2125-1444-030
327	8		80871	0019-6540-150
327	9		80871	0013-0280-150
327	10		80871	0001-0139-000
327	11		80871	0004-5445-740
327	12		80871	0018-1683-000
327	13		80871	2125-2832-000
327	14		80871	0019-6972-150
327	15		80871	0013-0291-150
327	16		80871	2178-1108-000
327	17		80871	2125-2831-000
327	18		80871	2125-2831-020
328	1	4320-01-295-3427	80871	8054-9200-060
328	2		80871	357
328	3		80871	356
328	4		80871	0019-3973-060
328	5		80871	2125-1074-000
328	6		80871	2125-3438-000
328	7		80871	354
328	8		80871	0004-5949-830
328	9		80871	0019-6526-150
328	10		80871	358

CROSS-REFERENCE INDEXES

FIGURE AND ITEM NUMBER INDEX

FIG.	ITEM	STOCK NUMBER	FSCM	PART NUMBER
328	11		80871	8054-9125-010
328	12		80871	8054-9415-070
328	13		80871	0019-6113-150
328	14		80871	371
328	15		80871	0007-1792-550
328	16		80871	378
328	17		80871	376
328	18		80871	377
328	19		80871	375
328	20		80871	374
328	21		80871	373
328	22		80871	372
328	23		80871	367
328	24		80871	366
329	1		80871	0019-0235-150
329	2		80871	0019-0805-000
329	3		80871	2125-8800-000
329	4		80871	0004-2361-758
329	5		80871	0018-1676-600
329	6		80871	0018-0971-050
329	7		80871	0018-1701-280
329	8		80871	2160-8768-000
329	9		80871	2160-8817-000
329	10		80871	0004-1917-740
329	11		80871	0001-0104-820
329	12		80871	0001-0326-280
329	13		80871	0019-4547-090
329	14		80871	2160-8850-000
329	15		80871	0007-2124-750
329	16		80871	0019-6125-150
329	17		80871	2125-8809-000
329	18		80871	0007-2572-750
329	19		80871	0007-2387-750
329	20		80871	0004-5811-750
329	21		80871	0026-5859-170
329	22		80871	2125-7712-000
329	23		80871	0007-2926-750
329	24		80871	0019-6903-150
329	25		80871	2125-8811-000
329	26		80871	0007-2560-750
329	27		80871	0019-1131-000
329	28		80871	2125-8851-000
329	29		80871	2125-8801-000
330	1		80871	2125-6600-L
330	2		80871	2125-6631-010
330	3		80871	2125-6691-000
330	4		80871	0007-1989-750
330	5		80871	2125-6631-000
330	6		80871	2125-6610-000
330	7		80871	0007-2942-750
330	8		80871	0028-0136-308

CROSS-REFERENCE INDEXES

FIGURE AND ITEM NUMBER INDEX

FIG.	ITEM	STOCK NUMBER	FSCM	PART NUMBER
330	9		80871	2125-6663-000
330	10		80871	2125-6620-L
330	11		80871	2125-6695-000
330	12		80871	0019-6907-150
330	13		80871	0026-1824-300
330	14		80871	0013-0278-150
330	15		80871	2125-6601-000
331	1	3040-01-298-8828	80871	2125-4003-000
331	2		80871	0008-2501-800
331	3		80871	0019-6903-150
331	4		80871	0026-1325-190
331	5		80871	0008-2502-200
331	6		80871	0007-1988-750
331	7		80871	0008-2509-030
331	8		80871	0008-2533-000
331	9		80871	0008-2504-300
331	10		80871	0011-6205-110
331	11		80871	2125-3420-010
331	12		80871	2125-3376-000
331	13		80871	0007-2485-750
331	14		80871	0006-4271-160
331	15		80871	0010-4006-000
331	16		80871	0011-8065-000
331	17		80871	0011-3203-470
331	18		80871	0008-1708-010
332	1	3010-01-298-0768	80871	2125-4003-010
332	2		80871	0019-6903-150
332	3		80871	0026-1325-160
332	4		80871	2125-3375-010
332	5		80871	0004-5197-770
332	6		80871	0004-5768-910
332	7		80871	0026-5854-170
332	8		80871	0011-6202-000
332	9		80871	2125-3449-010
332	10		80871	0019-9063-150
332	11		80871	2125-3468-000
332	12		80871	0820-3397-000
332	13		80871	0019-6120-150
332	14		80871	0026-1344-030
332	15		80871	2125-3365-000
332	16		80871	0026-1325-190
332	17		80871	2125-3375-000
332	18		80871	0004-5769-910
332	19		80871	0004-2463-770
332	20		80871	0011-6204-000
332	21		80871	2125-3400-000
333	1		80871	2125-4001-000
333	2		80871	0019-0282-150
333	3		80871	0006-4331-010
333	4		80871	0026-2130-030
333	5		80871	0021-3017-750

CROSS-REFERENCE INDEXES

FIGURE AND ITEM NUMBER INDEX

FIG.	ITEM	STOCK NUMBER	FSCM	PART NUMBER
333	6		80871	0026-2129-030
333	7		80871	0019-7736-150
333	8		80871	0019-6970-150
333	9		80871	0001-0140-000
333	10		80871	0004-5447-740
333	11		80871	0004-5445-740
333	12		80871	2125-1444-000
333	13		80871	0018-1331-600
333	14		80871	0013-0291-150
333	15		80871	2178-1108-000
333	16		80871	0018-4841-020
333	17		80871	0018-4841-750
333	18		80871	0018-4841-010
333	19		80871	0019-6972-150
333	20		80871	0013-0280-150
333	21		80871	0001-0139-000
333	22		80871	2125-2831-000
333	23		80871	0007-2387-750
333	24		80871	0019-7037-150
333	25		80871	0026-1353-030
333	26		80871	0019-9063-150
333	27		80871	0026-5716-300
333	28		80871	2161-1126-000
333	29		80871	0026-5699-400
333	30		80871	0021-3525-000
333	31		80871	0021-3552-030
333	32		80871	2125-1031-000
333	33		80871	0006-4415-160
333	34		80871	0019-1390-150
333	35		80871	0019-6903-150
333	36		80871	0026-1562-120
333	37		80871	2160-3487-000
333	38		80871	0004-2076-700
333	39		80871	2160-3497-010
333	40		80871	0007-2508-750
333	41		80871	2125-3488-000
333	42		80871	0001-0040-820
333	43		80871	0019-1741-800
333	44		80871	2125-3493-000
333	45		80871	0019-8910-030
333	46		80871	0007-1796-550
333	47		80871	2125-1001-000
334	1		80871	9131-1235-009
334	2		80871	TM0-3061SE-2XX
334	3		80871	AR-2524LT
335	1		73124	9131-1541-003
335	2		73124	SF052100P141AM
335	3		73124	ST650042
336	1		04845	HYA-188-042
337	1		25204	690224
337	2		25204	202391

CROSS REFERENCE INDEXES

FIGURE AND ITEM NUMBER INDEX

FIG.	ITEM	STOCK NUMBER	FSCM	PART NUMBER
337	3		96906	MS51922-19
337	4		88044	AN960-C616
337	5	5330-01-058-3721	25204	201333
337	6	4330-00-931-2473	87405	CC-15
337	7	4330-00-973-3909	25204	600617
337	8		25204	203927
337	9		25204	200358
337	10		25204	200359
337	11		96906	MS35307-305
337	12		96906	MS51922-2
337	13		25204	601353
337	14		96906	MS35307-301
337	15		25204	202550
337	16		96906	MS21921-4J
337	17		96906	MS21922-4C
337	18		96906	M551819-5SS
337	19	6685-01-196-2151	25204	202327
337	20		96906	MS21914-4J
337	21		96906	MS51860-53SS
337	22		96906	MS21912-4K
337	23	4820-01-117-7892	25204	201720
337	24		25204	601285
337	25	5330-00-420-9623	96906	MS29513-452
338	1		53918	VGS10
339	1		53918	BO06
339	2		53918	NU05
339	3		53918	WA02
339	4		53918	1282-L
339	5		53918	1282-L-10
339	6	5945-01-114-8589	55442	480D10-12
339	7	5945-01-234-3037	52090	LR1-D09307
339	8		3N065	LA7-D0954
339	9	5945-00-067-8582	77342	KRP11DG24VDC
339	10		28488	SMH-C
339	11	5920-00-199-9498	81349	F02B250V11-2A
339	12		71400	4407
339	13		3N065	LCI-EC03M
339	14		89020	525
339	15		89020	530
339	16		53918	1282-L-11
339	17		34221	12P10
339	18		08458	EN27
340	1		53918	BO06
340	2		53918	NU05
340	3		53918	WA02
340	4		53918	1284-2
340	5		53918	GG28
340	6		53918	GG31
341	1		53918	BO06
341	2		53918	NU05
341	3		53918	WA02
341	4		53918	OCA-1A

U.S. GOVERNMENT PRINTING OFFICE: 1992 - 654-028/60383 PIN: 066806-001

CROSS-REFERENCE INDEXES

FIGURE AND ITEM NUMBER INDEX

FIG.	ITEM	STOCK NUMBER	FSCM	PART NUMBER
341	5		53918	81007
341	6		53918	50016
342	1		53918	B028
342	2		53918	NU25
342	3		53918	WA16
342	4		53918	1279-4
342	5		53918	VB62
342	6		53918	PI16
342	7		53918	VC65
342	8		53918	NJ39
342	9		53918	EB58
342	10		53918	423-4
342	11	6680-01-204-0080	53918	392
342	12	4820-00-417-1120	72219	70-103-01
342	13		53918	EB60
342	14		53918	NJ40
342	15		53918	1279-30
342	16		53918	SX77
342	17		53918	BU29
342	18		53918	B093
342	19		53918	P174
342	20		53918	EB73
342	21		53918	NJ86
342	22		53918	NJ78
342	23		53918	VE16
342	24		53918	1279-25
342	25		53918	NU05
342	26		53918	WA02
342	27		53918	1279-26
342	28		53918	1279-20
342	29		53918	1279-21
342	30		53918	1279-23
342	31		53918	1279-24
342	32		53918	BA50
342	33		53918	GA22
342	34		53918	1638
342	35		53918	1279-1
343	1		53918	1291
343	2		53918	NU75
343	3		53918	WA14
343	4		53918	1292-D
343	5		53918	1292-C
343	6		53918	1292-B
343	7		53918	1291-1
344	1		53918	B028
344	2		53918	NU25
344	3		53918	WA16
344	4		53918	1333-4
344	5	4820-00-417-1120	72219	70-103-01
344	6		53918	EB60
344	7		53918	NJ40

CROSS-REFERENCE INDEXES

FIGURE AND ITEM NUMBER INDEX

FIG.	ITEM	STOCK NUMBER	FSCM	PART NUMBER
344	8		53198	CU92
344	9		53918	EB58
344	10		53918	TU62
344	11		53918	NU75
344	12		53918	OR80
344	13	5330-00-451-9557	02697	2-206 N674-70
344	14		53918	PK80
344	15		53918	622-100
344	16		53918	ST17
344	17		53918	PI16
344	18		53918	VC65
344	19	4820-00-148-8584	72219	70105-01
344	20		53918	NJ80
344	21		53918	PL27
344	22		53918	423-4
344	23		53918	1333-1
344	24		53918	GA19
344	25		53918	EC44
344	26		53918	NJ39
345	1		53918	B028
345	2		53918	NU25
345	3		53918	WA16
345	4		53918	1332
345	5		53198	VB57
345	6		53918	EB60
345	7		53918	NJ40
345	8		53198	CU92
345	9		53918	423-4
345	10		53198	VD33
345	11		53198	VC65
345	12	6680-01-204-0080	53918	392
345	13		53198	VD80
345	14		53918	NJ78
345	15	4820-00-148-8584	72219	70105-01
345	16		53918	NJ80
345	17		53918	NU75
345	18		53918	OR80
345	19	5330-00-451-9557	02697	2-206 N674-70
345	20		53918	PK80
345	21		53918	614-505
345	22		53918	PK86
345	23		53918	ST21
345	24		53918	1332-1
345	25		53918	GA19
345	26		53918	NJ39
345	27		53918	EB58
346	1		53918	NJ81
346	2		53918	1334-2-5
346	3		53918	NJ67
346	4		53918	SW05
346	5		53918	B037

CROSS-REFERENCE INDEXES

FIGURE AND ITEM NUMBER INDEX

FIG.	ITEM	STOCK NUMBER	FSCM	PART NUMBER
346	6		53918	NU07
346	7		53918	WA04
346	8		51064	1334-2
346	9		51064	619-0860-101
346	10		51064	330-1064-002
346	11		51064	330-1545-002
346	12	4320-01-223-3464	51064	320-2361-000
346	13		51064	320-4069-002
346	14		51064	320-4559-002
346	15		51064	320-4069-003
346	16	3010-01-070-5220	51064	320-1612-000
346	17	5330-01-073-2875	51064	320-2424-000
346	18		51064	33260
346	19		51064	602-0020-161
346	20		51064	610-0120-021
346	21		51064	602-0030-241
346	22		51064	320-6382-000
346	23		51064	330-04528-000
347	1		53918	1334-1-2
347	2		53918	NJ68
347	3		53918	VE14
347	4		53918	NJ69
347	5		53918	1334-1-3
347	6		53918	NJ67
347	7		53918	B018
347	8		53918	NU12
347	9		53918	WA12
347	10		51064	1334-1
347	11		51064	619-0860-101
347	12		51064	330-1064-002
347	13		51064	610-0120-021
347	14		51064	330-1006-001
347	15		51064	320-4069-002
347	16		51064	320-1569-002
347	17		51064	320-4069-003
347	18	3010-01-070-5220	51064	320-1612-000
347	19	5330-01-073-2875	51064	320-2424-000
347	20		51064	602-0030-241
347	21		51064	602-0020-161
347	22		51064	320-6382-000
347	23		51064	34461
348	1		53918	1335-E
348	2		53918	770
348	3		53918	80197
348	4		53918	80200
348	5		53918	80196
348	6		53918	21022
348	7		53918	80195
348	8		53918	80199
348	9		53918	26033
348	10		53918	80224

CROSS-REFERENCE INDEXES

FIGURE AND ITEM NUMBER INDEX

FIG.	ITEM	STOCK NUMBER	FSCM	PART NUMBER
348	11		53918	80992
348	12		53918	80174
348	13		53918	80221
348	14		53918	80237
348	15		53918	80212
348	16		53918	80186
348	17		53918	80206
348	18		53918	770-22
348	19		53918	80996
348	20		53918	21020
348	21		53918	80192
348	22		53918	80191
348	23		53918	80175
348	24		53918	80215
348	25		53918	80236
348	26		53918	80198
348	27		53918	80173
348	28		53918	80222
348	29		53918	80993
348	30		53918	80994
348	31		53918	80185
349			77408	8432016
350	1	5805-01-298-2595	73274	SER (MOD)-19
350	2		73274	52-02-26
350	3		73274	52-02-20
350	4	5330-01-274-7136	73274	50-19A
350	5		73274	1D
350	6	5965-00-840-8849	81349	H-203/U
350	7		73274	52-02-28
350	8		73274	52-02-10
350	9		73274	52-02-11
350	10		73274	52-02-12
350	11		73274	52-02-19
350	12		73274	52-02-31
350	13	5305-01-204-8748	73274	22
350	14	5340-01-272-9841	73274	24
350	15		73274	31
350	16		73274	52-02-29
350	17		73274	52-02-30
350	18		81349	38TB11
350	19		73274	52-02-6
350	20		81349	38TB4
350	21		73274	13
350	22	5965-00-900-6401	81349	H-200/U
350	23		53711	815F1853040SYM29 24.1
350	24		81349	SYM2841TYG-15A
350	25	6350-00-269-7978	28199	ICB2S4EXP
351	1		73274	SELR (MOD)-19
351	2		73274	85-09-26
351	3		73274	85-09-2

CROSS-REFERENCE INDEXES

FIGURE AND ITEM NUMBER INDEX

FIG.	ITEM	STOCK NUMBER	FSCM	PART NUMBER
351	4		73274	85-09-1
351	5		73274	50-19B
351	6		73274	1D
351	7	5965-00-840-8849	81349	H-203/U
351	8		73274	85-09-28
351	9		73274	28
351	10		73274	85-09-16
351	11		73274	85-09-8
351	12		73274	41
351	13		73274	43
351	14		73274	42
351	15	5930-01-286-9665	73274	44
351	16		73274	85-09-27
351	17	5945-01-270-6105	73274	32A
351	18	5305-01-204-8748	73274	22
351	19	5340-01-272-9841	73274	24
351	20		73274	85-09-25
351	21		73274	85-09-20
351	22		81349	38TB4
351	23		73274	85-09-33
351	24		81349	38TB11
351	25		73274	85-09-22
351	26		73274	85-09-21
351	27		73274	85-09-9
351	28	5965-00-900-6401	81349	H-200/U
351	29		53711	815F1853040SYM29 24.1
351	30		73274	B-D 602
351	31		81349	SYM2841TYG-15A
351	32	6350-00-269-7978	28199	ICB2S4EXP
351	33	6350-00-295-2847	81349	IC/Z1S4
351	34	6350-00-508-0855	81349	IC/H1S4
352	1		73274	SER (MOD)-8
352	2		73274	52-02-26
352	3		73274	52-02-20
352	4	5330-01-274-7136	73274	50-19A
352	5		73274	1A
352	6	5965-00-840-8849	81349	H-203/U
352	7		73274	52-02-28
352	8		73274	52-02-10
352	9		73274	52-02-11
352	10		73274	52-02-12
352	11		73274	52-02-19
352	12		73274	52-02-31
352	13	5305-01-204-8748	73274	22
352	14	5340-01-272-9841	73274	24
352	15		73274	31
352	16		73274	52-02-29
352	17		73274	52-02-30
352	18		73274	52-02-6
352	19		81349	38TB11

CROSS-REFERENCE INDEXES

FIGURE AND ITEM NUMBER INDEX

FIG.	ITEM	STOCK NUMBER	FSCM	PART NUMBER
352	20		73274	13
352	21	5965-00-900-6401	81349	H-200/U
352	22		53711	815F1853040SYM29 24.1
352	23		81349	SYM2841TYG-15A
352	24	6350-00-269-7978	28199	ICBZS4EXP
353	1	5805-01-298-2596	73274	SELR (MOD)-8
353	2		73274	85-09-26
353	3		73274	85-09-2
353	4		73274	85-09-1
353	5		73274	50-19B
353	6		73274	1A
353	7	5965-00-840-8849	81349	H-203/U
353	8		73274	85-09-28
353	9		73274	28
353	10		73274	85-09-16
353	11		73274	85-09-8
353	12		73274	41
353	13		73274	43
353	14		73274	42
353	15	5930-01-286-9665	73274	44
353	16		73274	85-09-27
353	17	5945-01-270-6105	73274	32A
353	18	5305-01-204-8748	73274	22
353	19	5340-01-272-9841	73274	24
353	20		73274	85-09-25
353	21		73274	85-09-20
353	22		81349	38TB4
353	23		73274	85-09-33
353	24		81349	38TB11
353	25		73274	85-09-22
353	26		73274	85-09-21
353	27		73274	85-09-9
353	28	5965-00-900-6401	81349	H-200/U
353	29		53711	815F1853040SYM29 24.1
353	30		81349	SYM2841TYG-15A
353	31	6350-00-295-2847	81349	IC/Z1S4
354	1	5805-01-298-2597	73274	MWT-R-19
354	2		73274	803-02-1
354	3		73274	51-204
354	4		73274	803-02-6
354	5		73274	50-97
354	6		73274	50-98
354	7		73274	50-96
354	8		73274	803-02-21
354	9	5330-01-312-3768	73274	50-19D
354	10		73274	803-02-2
354	11		73274	1D
354	12		73274	803-02-23
354	13	5305-01-204-8748	73274	22

CROSS-REFERENCE INDEXES

FIGURE AND ITEM NUMBER INDEX

FIG.	ITEM	STOCK NUMBER	FSCM	PART NUMBER
354	14	5805-01-278-9956	73274	25
354	15		73274	31
354	16		73274	803-02-22
354	17		75382	615-112
354	18		75382	615-1327
354	19		75382	600-15
354	20		73274	803-02-24
354	21		73274	51-22
354	22	5965-00-840-8849	81349	H-203/U
354	23		73274	803-02-20
354	24	5965-00-900-6401	81349	H-200/U
354	25		53711	815F1853040SYM29 24.1
354	26		81349	SYM2841TYG-15A
354	27	6350-00-269-7978	28199	ICB2S4EXP
355	1	5805-01-298-2598	73274	MWT-R-8
355	2		73274	803-02-1
355	3		73274	51-204
355	4		73274	803-02-6
355	5		73274	50-97
355	6		73274	50-98
355	7		73274	50-96
355	8		73274	803-02-21
355	9	5330-01-312-3768	73274	50-19D
355	10		73274	803-02-2
355	11		73274	1A
355	12		73274	803-02-23
355	13	5305-01-204-8748	73274	22
355	14		73274	25
355	15		73274	31
355	16		73274	803-02-22
355	17		75382	615-112
355	18		75382	615-1327
355	19		75382	600-15
355	20		73274	803-02-24
355	21		73274	51-22
355	22	5965-00-840-8849	81349	H-203/U
355	23		73274	803-02-20
355	24	5965-00-900-6401	81349	H-200/U
355	25		53711	815F1853040SYM29 24.1
355	26		81349	SYM2841TYG-15A
355	27	6350-00-269-7978	28199	ICB2S4EXP
356	1	5805-01-298-2599	73274	SFLR (MOD)-19
356	2		73274	128-18-2
356	3		73274	1D
356	4	5930-00-548-8042	73274	53-03
356	5		73274	41
356	6		73274	43
356	7		73274	42
356	8	5340-01-272-9841	73274	24

CROSS-REFERENCE INDEXES

FIGURE AND ITEM NUMBER INDEX

FIG.	ITEM	STOCK NUMBER	FSCM	PART NUMBER
356	9	5305-01-204-8748	73274	22
356	10		73274	128-18-29
356	11		73274	128-18-31
356	12		73274	128-18-30
356	13		73274	50-73
356	14		73274	128-18-15
356	15		73274	128-18-1
356	16		73274	128-18-27
356	17		73274	128-18-23
356	18		81349	38TB11
356	19		73274	128-18-28
356	20		81349	38TB4
356	21		73274	128-18-19
356	22	5945-01-270-6105	73274	32A
356	23		73274	128-18-3
356	24		75382	601-02
356	25		73274	128-18-4
356	26	5965-00-840-8849	81349	H-203/U
356	27		73274	128-18-20
356	28	5965-00-900-6401	81349	H-200/U
356	29		53711	815F1853040SYM29 24.1
356	30	6350-00-295-2847	81349	IC/ZlS4
357	1		04034	VLI-86501-44
357	2		04034	85579
357	3		04034	86556
357	4		04034	29948
357	5		04034	86666
357	6		04034	86436
357	7		04034	79741
357	8		04034	36383
357	9		04034	22139
357	10		04034	86434
357	11		04034	86104
357	12	6680-01-271-2885	04034	86523
357	13		04034	86509
357	14		04034	86375
357	15		04034	87246
357	16		04034	85143
358	1		04034	VLI-86501-97
358	2		04034	85579
358	3		04034	86556
358	4		04034	29948
358	5		04034	86666
358	6		04034	86436
358	7		04034	79741
358	8		04034	36383
358	9		04034	22139
358	10		04034	86434
358	11		04034	86104
358	12	6680-01-271-2885	04034	86523

CROSS-REFERENCE INDEXES

FIGURE AND ITEM NUMBER INDEX

FIG.	ITEM	STOCK NUMBER	FSCM	PART NUMBER
358	13		04034	86509
358	14		04034	86375
358	15		04034	87246
358	16		04034	85143
359	1		04034	VLI-86501-20
359	2		04034	85579
359	3		04034	86556
359	4		04034	29948
359	5		04034	86666
359	6		04034	86436
359	7		04034	79741
359	8		04034	36383
359	9		04034	22139
359	10		04034	86434
359	11		04034	86104
359	12	6680-01-271-2885	04034	86523
359	13		04034	86509
359	14		04034	86375
359	15		04034	87246
359	16		04034	85143
360	1		04034	VLI-86200-36
360	2		04034	85579
360	3		04034	86198
360	4		04034	119836
360	5		04034	36383
360	6		04034	22139
360	7		04034	87426
360	8		04034	52823
360	9		04034	87305
360	10		04034	86104
360	11		04034	86047
360	12		04034	86258
360	13		04034	85465
360	14		04034	86474
360	15		04034	85143
361	1		04034	36413
361	2		04034	XM-36480-120-100 0-0-L
361	3		04034	16391
361	4		04034	32230
361	5		04034	19326
361	6		04034	36481
361	7		04034	26534
361	8		04034	36462
361	9		79136	36464
361	10		71468	36468
361	11		04034	36411
361	12		04034	50727
361	13		04034	27337
361	14	5995-01-169-1680	04034	36880-30-LP
361	15	6320-01-062-7496	04034	36424

CROSS-REFERENCE INDEXES

FIGURE AND ITEM NUMBER INDEX

FIG.	ITEM	STOCK NUMBER	FSCM	PART NUMBER
362	1		04034	36413
362	2		04034	XM-36480-112-1000-0-L
362	3		04034	16391
362	4		04034	32230
362	5		04034	19326
362	6		04034	36481
362	7		04034	26534
362	8		04034	36462
362	9		79136	36464
362	10		71468	36468
362	11		04034	36411
362	12		04034	50727
362	13		04034	27337
362	14	5995-01-169-1680	04034	36880-30-LP
362	15	6320-01-062-7496	04034	36424
363	1		04034	36413
363	2		04034	XM-36480-47-3000-W-L
363	3		04034	16391
363	4		04034	32230
363	5		04034	19326
363	6		04034	36481
363	7		04034	26534
363	8		04034	36462
363	9		79136	36464
363	10		71468	36468
363	11		04034	36411
363	12		04034	50727
363	13		04034	27337
363	14	5995-01-169-1680	04034	36880-30-LP
363	15	6320-01-062-7496	04034	36424
364	1		04034	36413
364	2		04034	XM-36480-95-1500-0-L
364	3		04034	16391
364	4		04034	32230
364	5		04034	19326
364	6		04034	36481
364	7		04034	26534
364	8		04034	36462
364	9		79136	36464
364	10		71468	36468
364	11		04034	36411
364	12		04034	50727
364	13		04034	27337
364	14	5995-01-169-1680	04034	36880-30-LP
364	15	6320-01-062-7496	04034	36424
365	1		04034	36413
365	2		04034	XM-36480-125-1000-W-L

CROSS-REFERENCE INDEXES

FIGURE AND ITEM NUMBER INDEX

FIG.	ITEM	STOCK NUMBER	FSCM	PART NUMBER
365	3		04034	16391
365	4		04034	32230
365	5		04034	19326
365	6		04034	36481
365	7		04034	26534
365	8		04034	36462
365	9		79136	36464
365	10		71468	36468
365	11		04034	36411
365	12		04034	50727
365	13		04034	27337
365	14	5995-01-169-1680	04034	36880-30-LP
365	15	6320-01-062-7496	04034	36424
366	1		04034	36413
366	2		04034	XM-36460-36-4300 -0-L
366	3		04034	16391
366	4		04034	32230
366	5		04034	19326
366	6		04034	53585
366	7		04034	26534
366	8		04034	36462
366	9		79136	36464
366	10		71468	36468
366	11		04034	36411
366	12		04034	50727
366	13		04034	27337
366	14	5995-01-169-1680	04034	36880-30-LP
366	15	6320-01-062-7496	04034	36424
367	1		04034	36413
367	2		04034	XM-36460-52-2700 -0-L
367	3		04034	16391
367	4		04034	32230
367	5		04034	19326
367	6		04034	53585
367	7		04034	26534
367	8		04034	36462
367	9		79136	36464
367	10		71468	36468
367	11		04034	36411
367	12		04034	50727
367	13		04034	27337
367	14	5995-01-169-1680	04034	36880-30-LP
367	15	6320-01-062-7496	04034	36424
368	1		04034	RE-39240-7/M1-M7 -38100
368	2		04034	37041
368	3		04034	32767
368	4		04034	33980
368	5	5330-01-173-6662	04034	37044

CROSS-REFERENCE INDEXES

FIGURE AND ITEM NUMBER INDEX

FIG.	ITEM	STOCK NUMBER	FSCM	PART NUMBER
368	6		04034	43075
368	7	6210-01-053-5100	81349	LH89/1-LC35RT2
368	8		04034	26657
368	9		04034	37082
368	10		04034	16146
368	11	5330-00-500-2980	04034	17287
368	12	5930-00-878-6734	96906	MS24659-22D
368	13	5930-00-008-0495	04034	30054
368	14	5330-00-500-2982	04034	23273
368	15		04034	39713
368	16		04034	37004
368	17		04034	36794
368	18	5920-00-140-0096	81349	F03A250V2AS
368	19	6210-01-083-4188	04034	37075
368	20	6240-00-939-7859	04034	36843
368	21		04034	32799
368	22		04034	37046
368	23	5330-01-042-2394	04034	37047
368	24		04034	29308
368	25		04034	33323
368	26		04034	37920
368	27		04034	34365
368	28		04034	33979
368	29		04034	37929
368	30		04034	37098
368	31		04034	37987
368	32		04034	37971
368	33		04034	37972
368	34		04034	37973
368	35		04034	37974
368	36		04034	37975
368	37		04034	37976
368	38		04034	37977
368	39		04034	35017
368	40		04034	22045
368	41		04034	37096
368	42		04034	32962
368	43	6130-00-485-5885	04034	38005
368	44	6680-00-485-5887	04034	38105
368	45	6110-01-058-1918	04034	38100
368	46		04034	32759
368	47		04034	28681
368	48		04034	32803
368	49		04034	11117
368	50		04034	31097
368	51		04034	31098
368	52		04034	36115
368	53		04034	37090
368	54		04034	37089
368	55		04034	37094
368	56		04034	37093

CROSS-REFERENCE INDEXES

FIGURE AND ITEM NUMBER INDEX

FIG.	ITEM	STOCK NUMBER	FSCM	PART NUMBER
368	57		04034	36631
368	58		04034	36632
368	59		04034	36328
368	60		04034	37249
368	61		04034	37250
368	62		04034	37251
368	63		04034	37252
368	64		04034	37264
368	65		04034	37262
368	66		04034	37084
368	67		04034	37088
368	68	5905-00-892-0304	81349	RV4SAYSB252A
368	69		04034	22423
368	70		04034	37074
368	71		04034	37073
368	72		04034	37072
368	73		04034	37006
368	74		04034	30424
368	75		04034	37261
368	76	5325-01-272-9951	04034	30674
368	77		04034	36827
368	78	5950-01-205-4896	04034	37652
368	79	5950-01-112-4835	04034	37653
368	80		04034	14476
368	81	5910-00-605-6704	04034	37079
368	82		04034	79943
368	83		04034	37092
368	84		04034	37091
369	1		04034	39260-12M1-M8-38100/M9-M12-38139
369	2		04034	37061
369	3		04034	32767
369	4		04034	33980
369	5	5330-01-042-2830	04034	37064
369	6		04034	43075
369	7	6210-01-053-5100	81349	LH89/1-LC35RT2
369	8		04034	26657
369	9		04034	37082
369	10		04034	16146
369	11	5330-00-500-2980	04034	17287
369	12	5930-00-878-6734	96906	MS24659-22D
369	13		04034	37059
369	14	5330-00-500-2982	04034	23273
369	15		04034	39713
369	16		04034	37004
369	17		04034	32801
369	18		04034	34029
369	19		04034	22401
369	20		04034	17308
369	21		04034	37080
369	22	5330-00-500-2981	04034	37081

CROSS-REFERENCE INDEXES

FIGURE AND ITEM NUMBER INDEX

FIG.	ITEM	STOCK NUMBER	FSCM	PART NUMBER
369	23		04034	40720
369	24		04034	36794
369	25	5920-00-140-0096	81349	F03A250V2AS
369	26	6210-01-083-4188	04034	37075
369	27	6240-00-939-7859	04034	36843
369	28		04034	32799
369	29		04034	33980
369	30		04034	37046
369	31	5330-01-042-2394	04034	37047
369	32		04034	29308
369	33		04034	33323
369	34		04034	37920
369	35		04034	34365
369	36		04034	33979
369	37		04034	37929
369	38		04034	37098
369	39		04034	37987
369	40		04034	37971
369	41		04034	37972
369	42		04034	37973
369	43		04034	37974
369	44		04034	37975
369	45		04034	37976
369	46		04034	37977
369	47		04034	37978
369	48		04034	35017
369	49		04034	22405
369	50		04034	37096
369	51		04034	32962
369	52	6130-00-485-5885	04034	38005
369	53	6680-00-485-5887	04034	38105
369	54	6110-01-058-1918	04034	38100
369	55		04034	37099
369	56		04034	37988
369	57		04034	37979
369	58		04034	37980
369	59		04034	37981
369	60		04034	37982
369	61	6680-01-005-1939	04034	38139
369	62		04034	32759
369	63		04034	28681
369	64		04034	32803
369	65		04034	11117
369	66		04034	31097
369	67		04034	31098
369	68		04034	36115
369	69		04034	37090
369	70		04034	37089
369	71		04034	37094
369	72		04034	37093
369	73		04034	36631

CROSS-REFERENCE INDEXES

FIGURE AND ITEM NUMBER INDEX

FIG	ITEM	STOCK NUMBER	FSCM	PART NUMBER
369	74		04034	36632
369	75		04034	36328
369	76		04034	37249
369	77		04034	37250
369	78		04034	37251
369	79		04034	37252
369	80		04034	37253
369	81		04034	37254
369	82		04034	37255
369	83		04034	37256
369	84		04034	37257
369	85		04034	37258
369	86		04034	37259
369	87		04034	37260
369	88		04034	37262
369	89		04034	37263
369	90		04034	37264
369	91		04034	37265
369	92		04034	37084
369	93		04034	37088
369	94	5905-00-892-0304	81349	RV4SAYSB252A
369	95		04034	22423
369	96		04034	37074
369	97		04034	37073
369	98		04034	37072
369	99		04034	37006
369	100		04034	37077
369	101		04034	30424
369	102		04034	37261
369	103	5325-01-272-9951	04034	30674
369	104		04034	42922
369	105	5950-01-205-4896	04034	37652
369	106	5950-01-112-4835	04034	37653
369	107		04034	14476
369	108	5910-00-605-6704	04034	37079
369	109		04034	79943
369	110		04034	37092
369	111		04034	37091
369	112		04034	TD-86206
370	1		04034	32799
370	2		04034	15311
370	3		04034	45484
370	4		04034	RE-31326
370	5		04034	32463
370	6		04034	31672
370	7	5330-01-087-6951	04034	31407
370	8		04034	31427
370	9		04034	33729
370	10		04034	14476
370	11		90689	15032
370	12	5330-01-093-5014	04034	28736

CROSS-REFERENCE INDEXES

FIGURE AND ITEM NUMBER INDEX

FIG.	ITEM	STOCK NUMBER	FSCM	PART NUMBER
370	13	5930-01-127-9268	04034	36805
370	14		73559	15709
370	15		04034	33914
370	16	5905-00-892-0304	81349	RV4SAYSB252A
370	17		71400	36794
370	18	5920-01-237-8039	71400	15483
370	19		71744	37075
370	20		04034	39427
370	21		71600	41021
370	22		04034	30803
370	23		04034	28681
370	24		71785	19563
370	25		04034	31097
370	26		04034	11117
370	27		56289	22791
370	28		11502	91331
370	29		11502	31843
370	30		04034	80674
370	31		04034	36832
370	32		04034	30801
370	33	6130-00-244-1406	04034	41415
370	34		02660	31417
370	35		04034	40012
370	36		04034	31419
370	37	5950-01-039-7145	04034	37031
370	38		04034	29148
370	39		04034	22405
370	40		71468	10426
370	41	5935-00-998-9094	08718	10626
370	42		71468	16600
370	43		04034	26657
370	44		71468	28108
370	45		71468	28109
370	46		04034	29566
370	47		71468	28113
370	48		71468	28106
370	49		71468	28107
370	50		04034	70154
370	51		04034	32989
370	52		04034	32458
370	53		04034	32987
370	54		04034	32988
370	55		04034	33011
371	1		61204	3076009
371	2		61204	83070003
371	3		61204	95000074
371	4		61204	95800146
371	5		61204	23071001
371	6		61204	83070017
371	7		61204	90400172
371	8		61204	83070022

CROSS-REFERENCE INDEXES

FIGURE AND ITEM NUMBER INDEX

FIG.	ITEM	STOCK NUMBER	FSCM	PART NUMBER
371	9		61204	83075011
371	10		61204	63070049
371	11		61204	83075013
371	12		61204	83070009
371	13		81349	DSS-4
371	14		96620	3720PU
371	15		96620	495-45AU
371	16		81349	FSS-4
371	17		77408	50-0435-0100
371	18		81349	7SGU-4
372	1		61204	3070009
372	2		61204	83070003
372	3		61204	95000074
372	4		61204	95800146
372	5		61204	83070017
372	6		61204	90400290
372	7		61204	83070022
372	8		61204	83070021
372	9		61204	63070049
372	10		61204	83070009
372	11		81349	DSS-4
372	12		81349	M2726/38-001
372	13		81349	M2726/37-001
373	1		61204	3076009
373	2		61204	83070003
373	3		61204	95000074
373	4		61204	95800146
373	5		61204	23071001
373	6		61204	83070017
373	7		61204	90400172
373	8		61204	83070022
373	9		61204	83075011
373	10		61204	63070049
373	11		61204	83075013
373	12		61204	83070021
373	13		61204	83070009
373	14		81349	DSS-4
373	15		96620	3720PU
373	16		96620	495-45AU
373	17		81349	FSS-4
373	18		81349	M24558/4-432.1
374	1		61204	3070209
374	2		61204	83070003
374	3		61204	95000074
374	4		61204	95800146
374	5		61204	83070019
374	6		61204	90400290
374	7		61204	83070022
374	8		61204	83070021
374	9		61204	63070049
374	10		61204	83070009

CROSS-REFERENCE INDEXES

FIGURE AND ITEM NUMBER INDEX

FIG.	ITEM	STOCK NUMBER	FSCM	PART NUMBER
374	11		81349	DSS-4
374	12		81349	M2726/38-001
374	13		81349	M2726/37-001
374	14		96620	495-45AU
374	15		81349	FSS-4
374	16		81349	M24558/4-432.1
374	17		81349	LSDSGU-4
375	1		61204	3070209
375	2		61204	83070003
375	3		61204	95000074
375	4		61204	95800146
375	5		61204	83070019
375	6		61204	90400290
375	7		61204	83070022
375	8		61204	83070021
375	9		61204	63070049
375	10		61204	83070009
375	11		81349	DSS-4
375	12		96620	3720PU
375	13		81349	M2726/37-001
376	1		61204	3079109
376	2		61204	83070003
376	3		61204	95000074
376	4		61204	95800146
376	5		61204	23073001
376	6		61204	83070018
376	7		61204	90400172
376	8		61204	83070022
376	9		61204	83075011
376	10		61204	63070049
376	11		61204	83075014
376	12		61204	83070021
376	13		61204	83070009
376	14		81349	DSS-4
376	15		96620	3720PU
376	16		96620	495-45AU
376	17		81349	FSS-4
377	1		61204	3078209
377	2		61204	83070003
377	3		61204	95000074
377	4		61204	95800146
377	5		61204	23074001
377	6		61204	83070019
377	7		61204	90400172
377	8		61204	83070022
377	9		61204	83075011
377	10		61204	63070049
377	11		61204	83075015
377	12		61204	83070021
377	13		61204	83070009
377	14		81349	DSS-4

CROSS-REFERENCE INDEXES

FIGURE AND ITEM NUMBER INDEX

FIG.	ITEM	STOCK NUMBER	FSCM	PART NUMBER
377	15		96620	3720PU
377	16		96620	495-45AU
377	17		81349	FSS-4
378	1		61204	3077009
378	2		61204	83070003
378	3		61204	95000074
378	4		61204	95800146
378	5		61204	23072001
378	6		61204	83070017
378	7		61204	90400172
378	8		61204	83070022
378	9		61204	83075011
378	10		61204	63070049
378	11		61204	83075013
378	12		61204	83070021
378	13		61204	83070009
378	14		81349	DSS-4
378	15		96620	3720PU
378	16		96620	495-45AU
378	17		81349	FSS-4
378	18		77408	50-0435-0100
378	19		81349	7SGU-4
379	1		61204	3070009
379	2		61204	83070003
379	3		61204	95000074
379	4		61204	95800146
379	5		61204	83070017
379	6		61204	90400290
379	7		61204	83070022
379	8		61204	83070021
379	9		61204	63070049
379	10		61204	83070009
379	11		81349	DSS-4
379	12		81349	M2726/38-001
379	13		81349	M2726/37-001
379	14		81349	DSS-4
380	1		95405	1453
380	2		95405	GKT1032
380	3		95405	GKT1005
380	4		95405	INX4034
380	5		95405	GKT1016
380	6		95405	A-19
380	7		81349	DSS-4
380	8		81349	M2726/38-001
380	9		81349	M2726/37-001
380	10	6220-00-399-7105	81349	M24174/3-001
381	1		28199	42-260 TY464
381	2		28199	42-260-12
381	3		96906	MS35338-79
381	4		28199	D-1884
381	5		28199	40-260-55

CROSS-REFERENCE INDEXES

FIGURE AND ITEM NUMBER INDEX

FIG.	ITEM	STOCK NUMBER	FSCM	PART NUMBER
381	6		28199	40-260-52
381	7		28199	A-18646
381	8		28199	42-260-8
381	9		96906	MS35338-80
381	10		96906	MS15795-807
381	11		28199	FHS832-8
381	12	5920-00-243-3787	81349	F03A250V10AS
381	13		66127	G47
381	14	6210-01-023-0393	95263	47-3M
381	15		28199	G-103
381	16		28199	A-186481
381	17		28199	40-260-13
381	18		28199	40-260-14
381	19		28199	A-18648-11
381	20		28199	G102
381	21	5920-00-518-1793	81349	F03A250V3AS
381	22		28199	G-153
381	23		28199	A-18650
381	24		28199	FHS632-10
381	25		28199	G-110-18
381	26		28199	SQ60311
381	27		28199	40-260-26
381	28		28199	40-260-24
381	29		28199	20-081
381	30		28199	G-46
381	31		28199	A-11445-18
381	32	5930-00-655-1575	96906	MS35059-22
381	33		28199	A-18649
381	34		28199	600J
381	35		28199	42-260-1
381	36		28199	D-1893-11
381	37		28199	D-1890
381	38		28199	C-2404
382	1		10741	X9396LG-RF
383	1		10741	9312X
383	2		10741	SL16X
383	3		10741	FL1225
383	4		10741	9353x
383	5	5330-01-270-1166	10741	SL3110
383	6		10741	10CR832
383	7		10741	4578-35
383	8		10741	60CR832-8
383	9		10741	SL1652
383	10		10741	9669
383	11		10741	SL1085
383	12		10741	60CR420-10
383	13		10741	4578-38
383	14		10741	4574-16
383	15		10741	4506X
383	16		10741	4502X
383	17	6240-01-162-4086	10741	9800

CROSS-REFERENCE INDEXES

FIGURE AND ITEM NUMBER INDEX

FIG.	ITEM	STOCK NUMBER	FSCM	PART NUMBER
383	18		10741	60CR1024-12
383	19		10741	4578-36
383	20		10741	9719X
383	21		10741	60CR832-4
383	22		10741	9744
383	23		10741	60CR832-6
383	24		10741	CR4579-20
383	25		10741	4340
383	26		10741	60CR832-6
383	27		10741	4211
383	28		10741	60CR420-8
383	29		10741	30CR420-14
383	30		10741	9453
383	31		10741	9457
383	32		10741	4574-24
383	33		10741	60CR420-24
383	34		10741	2660C
383	35		10741	6879
383	36		10741	9324
383	37	5330-01-270-1167	10741	9291
383	38		10741	60CR1024-6
383	39		10741	4574-12
383	40		10741	2660B
383	41		10741	FE1866
383	42		10741	6158
383	43	5330-01-152-0088	10741	2285K
383	44	5330-00-595-6328	10741	2285AA
383	45		10741	5047
383	46		10741	SL2536X
383	47		10741	4342
383	48		10741	6878
383	49		10741	9295X
383	50		10741	9779
383	51		10741	4578-34
383	52		10741	9326X
383	53		10741	4528
383	54		10741	60CR632-32
383	55		10741	4578-34
383	56		10741	4434X
383	57		10741	3782-3
383	58		10741	60CR832-10
383	59		10741	2509WW
383	60		10741	9367
383	61		10741	60CR420-6
383	62		10741	4437X
383	63		10741	4438X
383	64		10741	4436X
383	65		10741	11CR518
383	66		10741	4578-39
383	67		10741	4574-22
383	68		10741	9321

CROSS-REFERENCE INDEXES

FIGURE AND ITEM NUMBER INDEX

FIG.	ITEM	STOCK NUMBER	FSCM	PART NUMBER
383	69		10741	CR4579-25
383	70		10741	CR4579-35
383	71		10741	9298
383	72		10741	4574-12
383	73		10741	4435X
383	74		10741	31CR420-8
383	75		10741	9472
383	76		10741	4383X
383	77		10741	2666F
383	78		10741	2334A
383	79		10741	4384X
383	80		10741	2666A
383	81		10741	2334A
383	82		10741	60CR1024-10
383	83		10741	7120
383	84		10741	SL1591
383	85		10741	SL1590
383	86		10741	4577-6
383	87		10741	3782-2
383	88		10741	9327
383	89		10741	60CR632-16
383	90		10741	4574-8
383	91	5930-01-268-0413	10741	9731
383	92		10741	9338
383	93		10741	4612
383	94		10741	30CR420-20
383	95		10741	9337
383	96		10741	4341
383	97		10741	2301
383	98		10741	5190
383	99		10741	9465
383	100		10741	4500X
383	101		10741	4526
383	102		10741	6446B
383	103		10741	B4564-26
383	104		10741	4574-16
383	105		10741	9333
383	106		10741	9799
383	107		95405	5684-T10
383	108		81349	7SGU-4
384	1		10741	4636X
384	2		10741	4343x
384	3		10741	60CR1024-6
384	4		10741	4578-36
384	5		10741	11CR624
384	6		10741	4578-40
384	7	5950-01-268-5246	10741	9339X
384	8		10741	60CR832-4
384	9		10741	CR4579-20
384	10		10741	60CR832-8
384	11		10741	4578-35

CROSS-REFERENCE INDEXES

FIGURE AND ITEM NUMBER INDEX

FIG.	ITEM	STOCK NUMBER	FSCM	PART NUMBER
384	12		10741	9340
384	13		10741	80CR832-10
384	14	5910-01-268-4015	10741	2896
384	15		10741	60CR832-14
384	16		10741	9348
384	17		10741	9347
384	18		10741	10B428
384	19		10741	4578-38
384	20		10741	9349
384	21		10741	3246
384	22		10741	9350
384	23	5950-01-268-5245	10741	4407X
385	1		10741	4198PS
385	2		10741	10CR632
385	3		10741	4578-34
385	4		10741	60CR632-10
385	5	4140-01-268-9129	10741	4434X
385	6		10741	10CR832
385	7		10741	4578-35
385	8		10741	60CR832-12
385	9		10741	8433
385	10		10741	60CR632-6
385	11	6645-01-268-4045	10741	6094
385	12		10741	SSD42SSBS
385	13		10741	8034
385	14		10741	4574-7
385	15		10741	4578-32
385	16	6625-01-268-4047	10741	9591
385	17		10741	2509T
385	18		10741	5080
385	19		10741	4574-10
385	20		10741	60CR832-10
385	21		10741	3782-3
385	22		10741	2509MM
385	23		10741	8501
385	24		10741	CR4579-20
385	25	5945-01-272-7290	10741	4722
385	26		10741	60CR832-6
385	27		10741	2001D
385	28	5910-01-272-6232	10741	4212X
385	29		10741	60CR420-8
385	30		10741	4578-38
385	31		10741	2329UU
385	32		10741	6291
385	33		10741	4113A30
385	34		10741	6346
385	35	5910-01-272-3541	10741	4404X
385	36		10741	4525
385	37		10741	11CR616
385	38		10741	CR4579-45
385	39		10741	30CR420-8

CROSS-REFERENCE INDEXES

FIGURE AND ITEM NUMBER INDEX

FIG.	ITEM	STOCK NUMBER	FSCM	PART NUMBER
385	40		10741	4574-16
385	41	5950-01-271-8155	10741	4395X
385	42	5920-01-268-0398	10741	4110A3
385	43		10741	61CR632-6
385	44		10741	3427
385	45		10741	4053
385	46	5961-01-290-7668	10741	4390X
385	47		10741	4524
385	48		10741	60CR1024-6
385	49		10741	CR4579-25
385	50		10741	4386
385	51	5910-01-107-3565	10741	4405
385	52	5950-01-271-8131	10741	4394X
385	53		10741	80CR420-8
385	54		10741	9367
385	55		10741	9589
385	56		10741	6289
385	57		10741	2001C
385	58		10741	4400
385	59		10741	4512X
385	60		10741	4402X
385	61	5905-01-188-2358	10741	9723X
385	62		10741	2329QQ
386	1		10741	X9396LG
386	2		10741	30CR1011-40
386	3		10741	4578-44
386	4		10741	4577-14
386	5		10741	4625
386	6		10741	4176
386	7		10741	2448A
386	8		10741	60CR1024-6
386	9		10741	4578-36
386	10		10741	4619
386	11		10741	4565-60
386	12		10741	4729
386	13	5330-01-152-0088	10741	2285K
386	14		10741	4728
386	15		10741	600-015-718
386	16		10741	5592AX
386	17		10741	2285TT
386	18		10741	3677B
386	19		10741	SL3329
386	20		10741	RS-150-S
386	21		10741	3700X
386	22		10741	4174
386	23		10741	3721B
386	24		10741	4675
386	25		10741	5593A
387	1		10741	SL3455XA
387	2		10741	31CR1024-6
387	3		10741	SL2982

CROSS-REFERENCE INDEXES

FIGURE AND ITEM NUMBER INDEX

FIG.	ITEM	STOCK NUMBER	FSCM	PART NUMBER
387	4		10741	SL2991
387	5		10741	5579
387	6		10741	80CR420-4
387	7		10741	5580
387	8		10741	60CR832-4
387	9		10741	4578-35
387	10		10741	SL2992
387	11		10741	31CR420-12
387	12		10741	80CR832-4
387	13		10741	5584
387	14		10741	3685
387	15		10741	5582
387	16		10741	3686
387	17		10741	2660G
387	18		10741	5412
387	19		10741	5581
387	20		10741	5583
387	21		10741	1467D
387	22		10741	SL2107
387	23		10741	SL1490
388	1		10741	4441X-RF
388	2		10741	4389
388	3	5930-01-265-5483	10741	8621
388	4	5930-01-188-8843	10741	9855
388	5		10741	9798
388	6		10741	9813
388	7		10741	9796
388	8		10741	60CR632-8
388	9		10741	4578-34
388	10		10741	2509AB
388	11		10741	6446B
388	12		10741	4150
388	13		10741	4393
388	14		10741	4608
388	15		10741	5079A
389			75214	3-5501
390	1		75214	W95-5
390	2		75214	W78-5
390	3		75214	P504-1
390	4		75214	PT32-4
390	5		75214	KB-20
390	6		75214	W95-3
390	7		75214	W78-12
390	8		75214	W43-18
390	9		75214	P33-2
390	10		75214	W95-4
390	11		75214	W91-8
390	12		75214	W90-15
390	13		75214	W78-18
390	14	5999-01-276-4721	75214	PT120-1
390	15		75214	PT1-5

CROSS-REFERENCE INDEXES

FIGURE AND ITEM NUMBER INDEX

FIG.	ITEM	STOCK NUMBER	FSCM	PART NUMBER
390	16	5330-01-276-4678	75214	PT121-1
390	17		75214	P34-2
391	1		75214	M477
391	2		75214	W40-9
391	3		75214	W27-2
391	4		75214	W43-14
391	5		75214	P490-1
391	6		75214	W38-51
391	7		75214	W27-10
391	8		75214	P502-1
391	9		75214	W38-2
391	10		75214	W27-12
391	11		75214	P500-1
391	12		75214	P501-1
391	13		75214	W38-48
391	14		75214	P256-10
391	15		75214	P256-8
391	16		75214	P256-7
391	17		75214	P256-6
391	18		75214	P256-9
391	19		75214	P503-1
391	20		75214	P503-2
391	21		75214	P248-15
392	1		75214	M411
392	2		75214	W10-16
392	3		75214	W27-2
392	4		75214	P435-2
392	5		75214	P66-7
392	6		75214	P357-2
392	7		75214	P268-1
392	8		75214	P437-4
392	9		75214	W10-28
392	10		75214	W27-12
392	11	3010-01-119-9127	75214	P252-12
392	12		75214	W38-43
392	13	5930-01-167-1469	75214	P253-5
392	14		75214	W38-36
392	15		75214	P360-10
392	16		75214	P361-4
392	17		75214	P359-4
392	18		75214	P249-7
392	19		75214	W77-1
392	20		75214	P464-1
392	21		75214	W38-4
392	22		75214	P360-14
392	23		75214	P363-3
392	24		75214	W38-38
392	25		75214	P256-3
392	26		75214	W38-142
392	27		75214	P438-1
392	28	5945-01-125-4375	75214	P254-4

CROSS-REFERENCE INDEXES

FIGURE AND ITEM NUMBER INDEX

FIG.	ITEM	STOCK NUMBER	FSCM	PART NUMBER
392	29	3040-01-116-4941	75214	P250-2
392	30		75214	P248-13
393		5930-01-176-9474	75214	P263-1
393	1	5930-01-109-4195	75214	M461
393	2		75214	W39-2
393	3		75214	P261-1
393	4		75214	P402-1
393	5		75214	P260-1
393	6		75214	W9-13
393	7		75214	P262-1
393	8		75214	P358-1
393	9		75214	P326-1
393	10		75214	P383-5
393	11		75214	W50-1
393	12		75214	W51-1
393	13		75214	P325-1
393	14		75214	W9-11
393	15		75214	P432-1
393	16		75214	P369-1
393	17		75214	P259-1
393	18		75214	P401-1
393	19		75214	W12-1
393	20		75214	P257-1
393	21		75214	W14-4
393	22		75214	W52-1
393	23		75214	P264-1
393	24		75214	P418-1
393	25		75214	W18-2
393	26		75214	W78-12
393	27		75214	P285-2
393	28		75214	P378-1
393	29		75214	P373-1
393	30		75214	P353-1
393	31		75214	P258-1
394	1		75214	M-478
395	1		81349	MIL-B-674
395	2		91319	B-GONG-10
396	1		96073	1341-0354
396	2		96073	2361-0197
396	3		96073	2360-8209
396	4		96073	1373-4703
396	5	5330-01-269-6323	96073	1373-0783
396	6		96073	1373-5152
396	7		96073	1373-4655
396	8		96073	1373-4698
396	9		96073	1373-4697
396	10		96073	1373-4641
396	11		96073	1373-2521
396	12		96073	1373-0958
396	13		96073	1373-1089
396	14		96073	1373-2251

CROSS-REFERENCE INDEXES

FIGURE AND ITEM NUMBER INDEX

FIG.	ITEM	STOCK NUMBER	FSCM	PART NUMBER
396	15		96073	1373-2253
396	16		96073	1373-4673
396	17		96073	1373-4674
396	18		96073	0803-0281
396	19		96073	0803-0280
396	20		96073	1373-2146
396	21		96073	1373-4112
396	22		96073	1373-1972
396	23		96073	1373-0125
396	24		96073	1373-0124
396	25		96073	1373-4648
396	26		96073	9951-2212
396	27		96073	1373-0646
396	28		96073	1373-0122
396	29	5910-01-150-8210	96073	1373-0462
396	30		96073	1373-0799
396	31		96073	1373-4640
396	32		96073	1373-0476
396	33		96073	1373-2461
396	34		96073	1373-4675
396	35		96073	1373-1575
396	36		96073	1373-4664
396	37		96073	1373-4016
396	38		96073	1373-3979
396	39		96073	1373-0469
396	40		96073	1373-0638
396	41		96073	1373-4084
396	42		96073	1373-4657
396	43		96073	9951-2957
396	44		96073	1373-1742
396	45		96073	9951-2958
396	46		96073	1373-4113
396	47		96073	9951-2558
396	48		96073	1373-2087
396	49		96073	1373-4649
396	50		96073	9951-2900
396	51		96073	1373-4665
396	52		96073	1373-4695
396	53		96073	9951-1779
396	54		96073	1373-0304
396	55		96073	1373-4517
396	56		96073	1373-0303
396	57		96073	1373-5145
396	58		96073	1373-4633
396	59		96073	1373-0611
396	60		96073	1373-0632
396	61		96073	1373-0612
396	62		96073	1373-1072
396	63		96073	0828-2395
396	64		96073	1373-0756
396	65		96073	1373-5150

CROSS-REFERENCE INDEXES

FIGURE AND ITEM NUMBER INDEX

FIG.	ITEM	STOCK NUMBER	FSCM	PART NUMBER
396	66		96073	1373-4469
396	67		96073	1373-4762
396	68		96073	1373-4763
396	69		96073	1388-0126
396	70		96073	1373-4767
396	71		96073	1373-4455
396	72		96073	1373-4627
396	73		96073	1373-4638
396	74		96073	1373-4988
396	75		96073	1373-4696
396	76		96073	1373-4473
396	77		96073	1373-2077
396	78		96073	1373-0836
396	79		96073	1373-2923
396	80		96073	1373-4122
396	81		96073	1373-2075
396	82		96073	9951-2078
396	83		96073	9951-2068
396	84		96073	1373-2461
396	85		96073	1373-0128
396	86		96073	1373-5100
396	87		96073	1388-0043
396	88		96073	1373-1443
396	89		96073	1373-0660
396	90		96073	1373-1320
396	91		96073	1373-1305
397	1		09051	NAB
398	1		78770	1435
399	1		17087	1002TB
400	1		14852	RC-20SE
401	1		83190	201
402	1		78770	TP120
403	1		93335	43536
404	1		25628	OT15
405	1		51267	417405000
406	1		28535	MD2-SSC-1
407	1		7L611	FIG 402 RPSTL
408	1		78770	MR36D1
408	2		78770	20B2A-74
408	3		78770	20B1A-30
408	4	5930-00-784-8989	78770	4111A8733
408	5		78770	20B2E-16
408	6		78770	4118B8802
408	7		78770	20B2E-10
408	8	4540-00-269-8078	78770	20B2E-6
408	9		78770	20B2E-8
408	10		78770	20B2E-15
408	11		78770	4111A8824
408	12		78770	20B2A-150
408	13		78770	20A2G-7
408	14		78770	20A1G-9

CROSS-REFERENCE INDEXES

FIGURE AND ITEM NUMBER INDEX

FIG.	ITEM	STOCK NUMBER	FSCM	PART NUMBER
408	15		78770	20A1G-7
408	16		78770	20A1G-8
408	17		78770	20A2G-8
408	18		78770	20M1E-2
408	19		78770	20M1E-6
408	20		78770	B301A8817
408	21		78770	F706A8805
408	22		78770	20M1G-2
408	23		78770	20M1G-1
408	24		78770	20M1G-4
408	25		78770	F716A8803
408	26		78770	F706A8809
408	27		78770	20M1G-3
408	28	5930-00-784-8989	78770	4111A8733
408	29		78770	F716A8813
408	30		78770	20A1C-53
408	31		78770	4005A8801
408	32		78770	20A2A-125
408	33		78770	1454J8801
408	34		78770	20A2A-240
408	35		78770	F716A8803
408	36		78770	20A1A-64
408	37		78770	20A1A-51
408	38		78770	4118B8801
408	39		78770	F706A8727
408	40		78770	20B2A-77
408	41		78770	4111A0103
408	42		78770	3024A8813
408	43		78770	20B2A-78
408	44		78770	20A1A-66
408	45		78770	20A1C-19
408	46		78770	20A1C-18
408	47		78770	18A1A-71
408	48		78770	18A1S-17
408	49		78770	1BA1S-45
408	50		78770	1BA1A-62
408	51		78770	18A1S-15
408	52		78770	18A1C-13
408	53		78770	18A1C-18
408	54		78770	18A1S-14
408	55		78770	18A1C-67
408	56		78770	4111A8819
408	57		78770	B301A8843
408	58		78770	4111A4037
408	59		78770	4111A4039
408	60		78770	4111A4041
408	61		78770	18A1C-97
408	62		78770	18A1A-57
408	63		78770	C714B0096
408	64		78770	18A1C-59
408	65		78770	18A1C-52

CROSS-REFERENCE INDEXES

FIGURE AND ITEM NUMBER INDEX

FIG.	ITEM	STOCK NUMBER	FSCM	PART NUMBER
408	66		78770	18A1A-63
408	67		78770	18A1A-55
408	68		78770	18A1S-10
408	69		78770	18A1S-9
408	70		78770	7A2S-7
408	71		78770	18A1E-17
408	72		78770	F716A8703
408	73		78770	18A1E-15
408	74		78770	18A1E-12
408	75		78770	18A1A-52
408	76		78770	18A1A-47
408	77		78770	18A1C-100
408	78		78770	18A1A-140
408	79	5930-00-828-0004	78770	18A1S-74
408	80		78770	4161A8715
408	81		78770	F706A8807
408	82		78770	1429A7015
408	83		78770	20A1A-181
408	84		78770	18A1S-19
408	85		78770	1411D8813
408	86		78770	18A1C-39
408	87		78770	18A1A-119
408	88		78770	18A1C-65
408	89		78770	4161A8901
408	90		78770	18A1C-46
408	91		78770	18A1S-2
408	92		78770	18A1A-34
408	93		78770	18A1S-5
408	94		78770	1501D8803
408	95		78770	18A1C-23
408	96		78770	14C4A-39
409	1		78770	7224
409	2		78770	7236B0017
409	3		78770	7236B0013
409	4	5355-01-177-8103	78770	A710E8751
409	5		78770	1523B0003
409	6		78770	B301A8861
409	7		78770	7236B3033
409	8		78770	B30168839
409	9		78770	3027B0001
409	10		78770	F716A8811
409	11		78770	1502-8707
409	12		78770	B301A8863
409	13		78770	7224B0013
409	14		78770	1411D8809
409	15		78770	B301A8829
409	16		78770	1523B001
409	17		78770	2262A8723
409	18	6210-01-169-1615	78770	1433B8701
409	19		78770	F706A8807
409	20		78770	F706A8805

CROSS-REFERENCE INDEXES

FIGURE AND ITEM NUMBER INDEX

FIG.	ITEM	STOCK NUMBER	FSCM	PART NUMBER
409	21		78770	7236B8901
409	22		78770	F706A8809
409	23		78770	3B82D8737
409	24		78770	7236B1005
409	25	7310-01-181-8724	78770	7236B8714
409	26		78770	7236B1001
409	27		78770	7224B001
409	28		78770	1455A8927
409	29		78770	7224B0901
409	30		78770	1523B8903
409	31		78770	7224B0011
410	1		7L611	B20T
410	2		7L611	W1-12549
410	3		7L611	M3-1961
410	4		7L611	W0-20279
410	5		7L611	M1-3451
410	6		7L611	M2-3321
410	7		7L611	M0-17379
410	8		7L611	M0-17380
410	9		7L611	M2-1458
410	10		7L611	M1-15316
410	11		7L611	M2-3327
410	12		7L611	M1-95654
410	13		7L611	M1-1957
410	14		7L611	M1-3573
410	15		7L611	M2-3427
410	16		7L611	M1-15358
410	17		7L611	M1-15141
410	18		7L611	M1-15144
410	19		7L611	M1-1491
410	20		7L611	M1-15143
410	21		7L611	M-1252
410	22		7L611	M1-15142
410	23		7L611	M1-15145
410	24		7L611	M1-15366
410	25		7L611	M1-15117
410	26		7L611	M1-95650
410	27		7L611	M5-3330-D
410	28		7L611	M1-1681
410	29		7L611	W0-16086
410	30		7L611	M1-1438-A
410	31		7L611	M3-3333-A
410	32		7L611	M1-1933
410	33		7L611	M1-95032
410	34		7L611	M1-15314
410	35		7L611	M0-17384
410	36		7L611	M1-3334
410	37		7L611	M0-17385
410	38		7L611	M0-17386
410	39		7L611	M2-1262-G
410	40		7L611	M2-1284-A

CROSS-REFERENCE INDEXES

FIGURE AND ITEM NUMBER INDEX

FIG.	ITEM	STOCK NUMBER	FSCM	PART NUMBER
410	41		7L611	W0-16085
410	42		7L611	W0-16084
410	43		7L611	M3-1248-E
410	44		7L611	M0-16081
410	45		7L611	M0-16080
410	46		7L611	M2-1250-D
410	47		7L611	M1-1396-A
410	48		7L611	M1-1263-A
410	49		7L611	M1-1658
410	50		7L611	M0-17383
410	51		7L611	W1-12561
410	52		7L611	M0-17368
410	53		7L611	S0-16083
410	54		7L611	M2-1264-C
410	55		7L611	W0-16082
410	56		7L611	M1-1292
410	57		7L611	W0-16079
410	58		7L611	W0-16078
410	59		7L611	M1-1408-A
410	60		7L611	M0-17381
410	61		7L611	M1-1659
410	62		7L611	M0-17382
410	63		7L611	M2-3332-D
410	64		7L611	W0-16074
410	65		7L611	M0-17365
410	66		7L611	M0-17364
410	67		7L611	M0-16076
410	68		7L611	M1-1492-B
410	69		7L611	W0-16075
410	70		7L611	M2-1407-B
410	71		7L611	W1-13059
410	72		7L611	M0-17367
410	73		7L611	M0-17366
410	74		7L611	M4-1959-A
410	75		7L611	M5-1960-C
410	76		7L611	W0-14862
410	77		7L611	M0-17366
410	78		7L611	M1-15083
410	79		7L611	M1-15075
410	80		7L611	M1-15077
410	81		7L611	M1-15076
410	82		7L611	M1-1559
410	83		7L611	M1-1280-A
410	83		7L611	M1-15078
410	84		7L611	M1-15074
410	85		7L611	019CE
410	86		7L611	M0-17369
410	87		7L611	M1-1934
410	88		7L611	M2-1258-D
410	89		7L611	M0-17370
410	90		7L611	M2-1261-E

CROSS-REFERENCE INDEXES

FIGURE AND ITEM NUMBER INDEX

FIG.	ITEM	STOCK NUMBER	FSCM	PART NUMBER
410	91		7L611	M0-17371
410	92		7L611	M2-1260-F
410	93		7L611	M0-17372
410	94		7L611	M2-1265-C
410	95		7L611	M1-15315
410	96		7L611	M1-1279-B
410	97		7L611	M0-17378
410	98		7L611	M0-17377
410	99		7L611	M0-17375
410	100		7L611	M0-17376
410	101		7L611	M0-17374
410	102		7L611	M1-1884-B
410	103		7L611	M2-1259-E
410	104		7L611	M1-15079
410	105		7L611	M1-1560
410	106		7L611	M2-1271-D
410	107		7L611	M2-3345-B
410	108		7L611	M0-17373
410	109		7L611	M1-1404-B
410	110		7L611	M1-1288
410	111		7L611	M1-3331-B
410	112		7L611	M1-1293
410	113		7L611	021CE
410	114		7L611	M0-17366
410	115		7L611	M1-3488
410	116		7L611	M1-1253-C
410	117		7L611	M1-1658
410	118		7L611	M1-1254-C
410	119		7L611	022CE
410	120		7L611	M1-15095
410	121		7L611	M1-15323
410	122		7L611	M1-1322
410	123		7L611	M1-1320
410	124		7L611	M1-1346
410	125		7L611	M1-15345
410	126		7L611	M1-1603
410	127		7L611	M1-3514
410	128		7L611	M1-3476
410	129		7L611	M1-1348-B
410	130		7L611	M4-1417
410	131		7L611	M1-15339
410	132		7L611	M2-1428-B
410	133		7L611	M1-15056
410	134		7L611	M1-1427
410	135		7L611	M2-3359
410	136		7L611	M1-15346
410	137		7L611	M1-1344
410	138		7L611	M1-1528
410	139		7L611	M2-1436
410	140		7L611	M1-15385
410	141		7L611	M1-15138

CROSS-REFERENCE INDEXES

FIGURE AND ITEM NUMBER INDEX

FIG.	ITEM	STOCK NUMBER	FSCM	PART NUMBER
410	142		7L611	W1-7657
410	143		7L611	W0-7012
410	144		7L611	W1-16361
410	145		7L611	M1-3538
410	146		7L611	M2-1422
410	147		7L611	W1-9548
410	148		7L611	W1-5994
410	149		7L611	M1-1462
410	150		7L611	W1-8096
410	151		7L611	W2-20878
410	152		7L611	P1-5052
410	153		7L611	M4-1416
410	154		7L611	M2-1503
410	155		7L611	M4-1401
410	156		7L611	P1-17212
410	157		7L611	M1-18562
410	158		7L611	P1-17227
411	1		60438	512
411	2		60438	PL-18497-1
411	3		60438	C-108197-5
411	4		60438	A-107364
411	5		60438	SD-24-47
411	6		60438	C-76970
411	7		60438	E-290969
411	8		60438	SD-24-48
411	9		60438	B-118162
411	10		60438	V-21046-3
411	11		60438	M-20622
411	12		60438	C-123686-3
411	13		60438	C-120782
411	14		60438	PL-16270
411	15		60438	B-109756
411	16		60438	E-123721-2
411	17		60438	SC-22-18
411	18		60438	D-275913-2
411	19		60438	B-111154
411	20		60438	SD-24-46
411	21		60438	E-120379
411	22		60438	RP-2-25
411	23		60438	C-114190-4
411	24		60438	C-120145
411	25		60438	PL-13891
411	26		60438	SC-23-10
411	27		60438	C-114214
411	28		60438	B-118175
411	29		60438	B-76948
411	30		60438	RP-2-40
411	31		60438	V-10928-2
411	32		60438	M-88298
411	33		60438	SC-47-73
411	34		60438	B-111144

CROSS-REFERENCE INDEXES

FIGURE AND ITEM NUMBER INDEX

FIG.	ITEM	STOCK NUMBER	FSCM	PART NUMBER
411	35		60438	SC-18-72
411	36		60438	B-114146
411	37		60438	B-113906
411	38		60438	B-114114
411	39		60438	SD-24-49
411	40		60438	B-109762
411	41		60438	B-76956
411	42		60438	B-114103
411	43		60438	B-113903
411	44		60438	E-118328
411	45		60438	SC-62-47
411	46		60438	B-114112
411	47		60438	D-118935
411	48		60438	D-76961
411	49		60438	PL-15572
411	50		60438	B-114297
411	51		60438	SD-24-13
411	52		60438	D-118939
411	53		60438	D-114452
411	54		60438	B-18682-1
411	55		60438	B-76953
411	56		60438	SD-24-1
411	57		60438	D-114236
411	58		60438	B-122727-1
411	59		60438	PL-16505-1
411	60		60438	B-114525-1
411	61		60438	SD-9-34
411	62		60438	E-111835-3
411	63		60438	BB-5-5
411	64	5930-01-165-2756	28873	C-111688-4
411	65		60438	SL-2-10
411	66		60438	BB-5-30
411	67		60438	C-22275-211
411	68		60438	D-65477-103-1
411	69		60438	PL-16269
411	70	5910-01-182-8697	28873	D-70487-15
411	71		60438	C-70486-1
411	72		60438	SD-24-16
411	73		60438	P-66621-3
411	74		60438	SD-24-1
411	75		60438	WL-7-12
411	76	5930-01-177-5194	28873	B-87711-148-1
411	77		60438	B-123128
411	78		60438	C-114243
411	79		60438	FE-21-9
411	80		60438	FE-18-16
411	81		60438	B-117542-21
411	82		60438	FE-15-5
411	83		60438	C-122342-3
411	84		60438	B-76902
411	85		60438	PL-13892

CROSS-REFERENCE INDEXES

FIGURE AND ITEM NUMBER INDEX

FIG.	ITEM	STOCK NUMBER	FSCM	PART NUMBER
411	86		60438	SC-7-39
411	87		60438	C-119884
411	88		60438	D-119890
411	89		60438	E-119888
412	1		66682	R20-2M-S
412	2		66682	174
412	3		66682	1267
412	4		66682	6812
412	5		66682	60
412	6		66682	66
412	7		66682	26-22E
412	8		66682	2778
412	9		66682	L10-X003
412	10		66682	R67-1907
412	11		66682	29-50 1/2
412	12		66682	43-065
412	13		66682	FG-152
412	14		59431	AE4430AC
412	15		59431	AE4430A
412	16		59418	10G006A13
412	17		59431	51531-2
412	18		59431	85635-2
412	19		59431	82628
412	20		59431	83940
412	21		59431	C052S
412	22		59431	SG114
412	23		59431	1402
412	24		14852	TA-130
412	25		14852	5488-B
412	26		14852	65504002
412	27		14852	5491-F
412	28		14852	4399-B
412	29		14852	5441-C
412	30		14852	4392-X
412	31		14852	5487-B
412	32		14852	5540-R
412	33		14852	5446-A
412	34		14852	91815001
412	35		14852	4334B002
412	36		14852	C1288E01
412	37		14852	5797-J
412	38		14852	4354-D
412	39		14852	C25523A1
412	40		14852	C23706A2
412	41		14852	4355E001
412	42		14852	5054-D
412	43		14852	5101-B
412	44		14852	5441-F
412	45		14852	5021-S
412	46		14852	91179001
412	47		14852	4380-A

CROSS-REFERENCE INDEXES

FIGURE AND ITEM NUMBER INDEX

FIG.	ITEM	STOCK NUMBER	FSCM	PART NUMBER
412	48		14852	5561-T
412	49		14852	91186002
413	1		66682	F20-2M-ADS
413	2		66682	174
413	3		66682	1267
413	4		66682	6812
413	5		66682	60
413	6		66682	66
413	7		66682	26-22E
413	8		66682	2778
413	9		66682	L10-X003
413	10		66682	R67-1907
413	11		66682	29-50 1/2
413	12		66682	43-065
413	13		66682	FG-152
413	14		59431	AE2415AC
413	15		59431	AE2415A
413	16		59431	810G006A13
413	17		59431	51531-2
413	18		59431	85709
413	19		59431	820RR12B79
413	20		59431	8300MRTD88
413	21		59431	C052S
413	22		59431	SG114
413	23		59431	T6061
413	24		59431	8145-00
413	25		14852	TL 90
413	26		14852	5488-B
413	27		14852	65504002
413	28		14852	5491-F
413	29		14852	4399-B
413	30		14852	4392-X
413	31		14852	5408-B
413	32		14852	5528-G
413	33		14852	5534-G
413	34		14852	4366E001
413	35		14852	5487-B
413	36		14852	5575-P
413	37		14852	91190001
413	38		14852	5436-F
413	39		14852	4145-W
413	40		14852	5445-B
413	41		14852	91189001
413	42		14852	5433-D
413	43		14852	5441-C
413	44		14852	5797-J
413	45		14852	C1297A01
413	46		14852	4300-F
413	47		14852	4335B001
413	48		14852	C2552161
413	49		14852	5485-B

CROSS-REFERENCE INDEXES

FIGURE AND ITEM NUMBER INDEX

FIG.	ITEM	STOCK NUMBER	FSCM	PART NUMBER
413	50		14852	5708-L
413	51		14852	5709-L
413	52		14852	5543-J
413	53		14852	72102001
413	54		14852	C23728A1
413	55		14852	4354E003
413	56		14852	5101-B
413	57		14852	5441-F
413	58		14852	5021-S
413	59		14852	91179001
413	60		14852	5054-D
413	61		14852	4363B001
413	62		14852	4363B002
413	63		14852	91184002
414	1		78770	BB-325/750
414	2		78770	B10012
414	3		78770	B10225
414	4		78770	B10330
414	5		78770.	B10228
414	6		78770	B10229
414	7		78770	B10215
414	8		78770	B10212
414	9		78770	B10230
414	10		78770	B10204
414	11		78770	B10205
414	12		78770	B14173
414	13		78770	B10203
414	14		78770	B10015
414	15		78770	B14143
414	16		78770	B10517
414	17		78770	B14258
414	18		78770	B14276
414	19		78770	B14223
415	1		81306	TUB000XR
415	2		81306	780138
415	3		81306	608784
415	4		81306	608785
415	5		81306	608572
415	6		81306	776559
415	7		81306	780230
415	8		81306	780180
415	9		81306	780179
415	10		81306	780392
415	11		81306	777383
415	12		81306	608824
415	13		81306	780398
415	14		81306	780387
415	15		81306	780390
415	16		81306	608783
415	17		81306	608782
415	18		81306	777642

CROSS-REFERENCE INDEXES

FIGURE AND ITEM NUMBER INDEX

FIG.	ITEM	STOCK NUMBER	FSCM	PART NUMBER
415	19		81306	780421
415	20		81306	776076
415	21		81306	608846
415	22		81306	777108
415	23		81306	776989
415	24		81306	775785
415	25		81306	776191
415	26		81306	608051
415	27		81306	780388
415	28		81306	780189
415	29		81306	780188
415	30		81306	777345
415	31		81306	777762
415	32		81306	780263
415	33		81306	777328
415	34		81306	777172
415	35		81306	775665
415	36		81306	775740
415	37		81306	776395
415	38		81306	777465
415	39		81306	776523
415	40		81306	776261
415	41		81306	776356
415	42		81306	882666
415	43		81306	608009
415	44		81306	608849
415	45		81306	776118
415	46		81306	776119
415	47		81306	778575
415	48		81306	608022
415	49		81306	776593
415	50		81306	776036
415	51		81306	777124
415	52		81306	297462
415	53		81306	776035
415	54		81306	780477
415	55		81306	454512
415	56		81306	776839
415	57		81306	776338
415	58		81306	776327
415	59		81306	7801064
415	60		81306	780378
415	61		81306	776780
415	62		81306	777070
415	63		81306	608039
415	64		81306	777035
415	65		81306	777849
415	66		81306	777850
415	67		81306	777811
415	68		81306	780420
415	69		81306	777180

CROSS-REFERENCE INDEXES

FIGURE AND ITEM NUMBER INDEX

FIG.	ITEM	STOCK NUMBER	FSCM	PART NUMBER
415	70		81306	776188
415	71		81306	777458
415	72		81306	608090
415	73		81306	608091
415	74		81306	776262
415	75		81306	780125
415	76		81306	780082
415	77		81306	780131
415	78		81306	780137
415	79		81306	780139
415	80		81306	775643
415	81		81306	780034
415	82		81306	780036
415	83		81306	608733
415	84		81306	777533
415	85		81306	775071
415	86		81306	777876
415	87		81306	780413
415	88		81306	777595
415	89		81306	608723
415	90		81306	780021
415	91		81306	777758
415	92		81306	777444
415	93		81306	777691
416	1		66682	R30-2M-S
416	2		66682	174
416	3		66682	1267
416	4		66682	6812
416	5		66682	60
416	6		66682	66
416	7		66682	R67-1907
416	8		66682	2778
416	9		66682	L10-X003
416	10		66682	20 1/2-23 1/2
416	11		66682	20 1/2-50
416	12		66682	43-065
416	13		66682	FG-152
416	14		59431	AE4440AC
416	15		59431	AE4440
416	16		59431	810G006A13
416	17		59431	51531-2
416	18		59431	85657-1
416	19		59431	82632
416	20		59431	8300MRPD86
416	21		59431	C052S
416	22		59431	SG114
416	23		59431	1402
416	24		14852	TA-170
416	25		14852	5488-B
416	26		14852	65504002
416	27		14852	5491-F

CROSS-REFERENCE INDEXES

'FIGURE AND ITEM NUMBER INDEX

FIG.	ITEM	STOCK NUMBER	FSCM	PART NUMBER
416	28		14852	4399-B
416	29		14852	5441-C
416	30		14852	4392-X
416	31		14852	5487-B
416	32		14852	5540-R
416	33		14852	5446-A
416	34		14852	91815001
416	35		14852	4334B002
416	36		14852	C1288E01
416	37		14852	5797-J
416	38		14852	4354-D
416	39		14852	C25523A1
416	40		14852	C23706A2
416	41		14852	4355E001
416	42		14852	5054-D
416	43		14852	5101-B
416	44		14852	5441-F
416	45		14852	5021-S
416	46		14852	91179001
416	47		14852	4380-A
416	48		14852	5561-T
416	49		14852	91186002
417	1		66682	F30-2M-ADS
417	2		66682	174
417	3		66682	1267
417	4		66682	6812
417	5		66682	60
417	6		66682	66
417	7		66682	20 1/2-23 1/2
417	8		66682	20 1/2-50
417	9		66682	43-065
417	10		66682	FG-152
417	11		66682	R67-1907
417	12		66682	2778
417	13		66682	L10-X003
417	14		59431	AJ2425AC
417	15		50431	AJ2425A
417	16		59431	810A18-A
417	17		59431	51551
417	18		59431	85PS165A47
417	19		59431	83960
417	20		59431	C052S
417	21		59431	SG114
417	22		59431	T6061
417	23		59431	8145-00
417	24		14852	TL 160
417	25		14852	5488-B
417	26		14852	65504002
417	27		14852	5491-F
417	28		14852	4399-B
417	29		14852	4392-X

CROSS-REFERENCE INDEXES

FIGURE AND ITEM NUMBER INDEX

FIG.	ITEM	STOCK NUMBER	FSCM	PART NUMBER
417	30		14852	5408-B
417	31		14852	5528-G
417	32		14852	5534-G
417	33		14852	4366E001
417	34		14852	5487-B
417	35		14852	5575-P
417	36		14852	91190001
417	37		14852	5436-F
417	38		14852	4145-W
417	39		14852	5445-B
417	40		14852	91189001
417	41		14852	5433-D
417	42		14852	5441-C
417	43		14852	5797-J
417	44		14852	C1297A03
417	45		14852	4300-F
417	46		14852	4335B001
417	47		14852	C25523A1
417	48		14852	5485-B
417	49		14852	5709-L
417	50		14852	5708-L
417	51		14852	5543-J
417	52		14852	72102003
417	53		14852	C23730A1
417	54		14852	4355E003
417	55		14852	5101-B
417	56		14852	5441-F
417	57		14852	5021-S
417	58		14852	91179001
417	59		14852	5054-D
417	60		14852	4363B001
417	61		14852	4363B002
417	62		14852	91186002
418	1		08347	UC-1
418	2		08347	W-3-70294
418	3		08347	W-3-70440
418	4		08347	W-1-70296
418	5		08347	W-3-99726
418	6		08347	W-1-70295
418	7		08347	W-0-70437
418	8		08347	W-0-70134
418	9		08347	W-2-99710
418	10		08347	W-0-70140
418	11		08347	M-0-97844
418	12		08347	W-4-07001
418	13		08347	W-1-70765-AJ
418	14		08347	W-0-70286
418	15		08347	W-0-70204
418	16		08347	W-0-70395
418	17		08347	W-0-70200
418	18		08347	W-0-70284

CROSS-REFERENCE INDEXES

FIGURE AND ITEM NUMBER INDEX

FIG.	ITEM	STOCK NUMBER	FSCM	PART NUMBER
418	19		08347	W-0-70205
418	20		08347	W-0-70348
418	21		08347	W-0-70392
418	22		08347	W-0-70393
418	23		08347	W-1-70765
418	24		08347	W-1-70058
418	25		08347	W-2-70059
418	26		08347	W-0-70155
418	27		08347	W-0-70156
418	28		08347	W-2-70441
418	29		08347	W-0-70201
418	30		08347	W-0-70370
418	31		08347	W-0-70202
418	32		08347	W-0-70346
418	33		08347	W-0-70347
418	34		08347	W-2-70388
418	35		08347	W-0-70293
418	36		08347	W-0-70436
418	37		08347	W-0-96551
418	38		08347	W-0-70154
418	39		08347	W-0-70153
418	40		08347	W-0-70152
418	41		08347	W-0-70094
418	42		08347	W-1-07209
418	43		08347	W-1-07957
418	44		08347	W-0-14246
418	45		08347	W-0-70189
418	46		08347	W-1-70191
418	47		08347	W-1-07768
418	48		08347	W-0-70192
418	49		08347	M-0-71603
418	50		08347	W-0-70434
418	51		08347	W-1-70190
418	52		08347	W-0-70122
418	53		08347	W-0-70121
418	54		08347	W-1-70120
418	55		08347	W-1-70066
418	56		08347	W-2-70056
418	57		08347	W-1-70044
418	58		08347	W-0-70117
418	59		08347	W-1-70045
418	60		08347	W-0-70115
418	61		08347	W-0-70116
418	62		08347	W-1-70047
418	63		08347	W-1-70085
418	64		08347	W-1-70060
418	65		08347	W-0-70093
418	66		08347	W-1-70086
418	67		08347	W-0-70087
418	68		08347	W-2-70083
418	69		08347	W-1-70084

CROSS-REFERENCE INDEXES

FIGURE AND ITEM NUMBER INDEX

FIG.	ITEM	STOCK NUMBER	FSCM	PART NUMBER
418	70		08347	W-2-70082
418	71		08347	W-1-70046
418	72		08347	W-1-70767
418	73		08347	W-0-70114
418	74		08347	W-1-70048
418	75		08347	W-1-70043
418	76		08347	W-0-70112
418	77		08347	W-0-70113
418	78		08347	W-2-70090
418	79		08347	W-1-70067
418	80		08347	W-4-70069
418	81		08347	W-0-70110
418	82		08347	W-1-70072
418	83		08347	W-3-70071
418	84		08347	W-1-70078
418	85		08347	W-0-70108
418	86		08347	W-0-70107
418	87		08347	W-0-70111
418	88		08347	w-1-70075
418	89		08347	W-0-70102
418	90		08347	W-2-70074
418	91		08347	W-1-70073
418	92		08347	W-0-70101
418	93		08347	W-0-70100
418	94		08347	W-0-70109
418	95		08347	W-0-70106
418	96		08347	W-0-70098
418	97		08347	W-0-70096
418	98		08347	W-0-70103
418	99		08347	W-4-70070
419	1		77408	D0-6170-8039
419	2		77408	D0-5925-8039
419	3		77408	D0-6150-1372
419	4		59618	WA-4721
419	5		59618	52864
419	6		59618	20310
419	7		59618	25688
419	8		59618	24205
419	9		59618	91176
419	10	5930-01-140-9490	59618	27761
419	11		59618	27762
419	12	6210-01-136-1307	59618	27769
419	13		59618	29543
419	14		59618	29544
419	15		59618	29545
419	16		59618	21623
419	17		59618	23223
419	18		59618	24522
419	19		59618	29661
419	20		59618	25845
419	21		59618	56392

CROSS-REFERENCE INDEXES

FIGURE AND ITEM NUMBER INDEX

FIG.	ITEM	STOCK NUMBER	FSCM	PART NUMBER
419	22		59618	23962
419	23		59618	20493
419	24		59618	27193W
419	25		59618	27223
419	26		59618	28615
419	27		59618	23028
419	28		59618	20275
419	29		59618	02431
419	30		59618	02916
419	31		59618	91093
419	32		59618	23222
419	33		59618	25724
419	34		59618	29550
419	35		59618	80399
419	36		59618	26256
419	37		59618	27328
419	38		59618	53738
419	39		59618	51778
419	40		59618	21734
419	41		59618	27869W
419	42		59618	28074
419	43		59618	20275
419	44		59618	21456
419	45		59618	02505
419	46		59618	21541
419	47		59618	23225
419	48		59618	28716
419	49		59618	27864
419	50		59618	27870W
419	51		59618	26351
419	52		59618	23008
419	53		59618	20249
419	54		59618	56534
419	55		59618	21903
419	56		59618	21752
419	57		59618	27203
419	58		59618	27149
419	59		59618	27626
419	60		59618	27625
419	61		59618	21685
419	62		59618	28840W
419	63		59618	28071W
419	64		59618	28193
419	65		59618	28291
419	66		59618	29043
419	67		59618	29042
419	68		59618	27602
419	69		59618	27603
419	70		59618	Q6516
419	71		59618	27248
419	72		59618	27612

CROSS-REFERENCE INDEXES

FIGURE AND ITEM NUMBER INDEX

FIG.	ITEM	STOCK NUMBER	FSCM	PART NUMBER
419	73		59618	27610
419	74		59618	27837
419	75		59618	27250
419	76		59618	23222
419	77		59618	51780
419	78		59618	27103
419	79		59618	56086
419	80		59618	56079
419	81		59618	56128
419	82		59618	28835
419	83		59618	27196
419	84		59618	28102
419	85		59618	27072W
419	86		59618	28837
419	87		59618	21749
419	88		59618	20409
419	89		59618	21899
419	90		59618	29757
419	91		59618	28325W
420	1		59618	27643
420	2		59618	27183
420	3		59618	27152
420	4		59618	23962
420	5		59618	29176
420	6		59618	27118
420	7		59618	29182
420	8		59618	29210
420	9		59618	29154
420	10		59618	56392
420	11		59618	54038
420	12		59618	27126
420	13	4510-01-171-4955	59618	27156
420	14		59618	24122
420	15		59618	25817C
420	16		59618	24128
420	17		59618	24129
420	18		59618	24126
420	19		59618	24158
420	20		59618	24130
420	21		59618	24131
420	22		59618	24132
420	23		59618	24134
420	24		59618	24159
421	1		59618	27188
421	2		59618	28345
421	3		59618	27189
421	4		59618	27120
421	5		59618	28934
421	6		59618	20243
421	7		59618	27174
421	8		59618	28091

CROSS-REFERENCE INDEXES

FIGURE AND ITEM NUMBER INDEX

FIG.	ITEM	STOCK NUMBER	FSCM	PART NUMBER
421	9		59618	20057
421	10		59618	04704
421	11		59618	27202
421	12		59618	28933
421	13		59618	10429
421	14		59618	27164
421	15		59618	27197
422	1		59618	22294
422	2		59618	29212
422	3		59618	29116
422	4		59618	29175
422	5		59618	29901
422	6		59618	25723
422	7		59618	27247
422	8		59618	03815
422	9		59618	29555
422	10		59618	27184
422	11		59618	27239
422	12		59618	27205
422	13		59618	27926
422	14		59618	27927
422	15		59618	27017
422	16		59618	29233
423	1		59618	29474
423	2		59618	27123
423	3		59618	27202
423	4		59618	28094
423	5		59618	28138
423	6		59618	27125
423	7		59618	28111
423	8		59618	27163
423	9		59618	356P3
424	1		59618	30016
424	2		59618	04366
424	3		59618	27090
424	4		59618	27124
424	5		59618	27220
424	6		59618	26509
424	7		59618	27018
424	8		59618	27111
424	9		59618	27024
424	10		59618	27025
424	11		59618	27015
424	12		59618	27014
424	13		59618	26556
424	14		59618	27176
424	15		59618	26547
424	16		59618	29993
424	17		59618	348P3
424	18		59618	28944
424	19		59618	28913

CROSS-REFERENCE INDEXES

FIGURE AND ITEM NUMBER INDEX

FIG.	ITEM	STOCK NUMBER	FSCM	PART NUMBER
425	1		59618	27200
425	2		59618	02431
425	3		59618	29117
425	4		59618	01355
425	5		59618	04366
425	6		59618	27166
425	7		59618	27182
425	8		59618	27187
425	9		59618	27222
425	10		59618	28430
425	11		59618	368P3
425	12		59618	27197
425	13		59618	27021
425	14		59618	28114
425	15		59618	20253
425	16		59618	02431
425	17		59618	27172
425	18		59618	27022
425	19		59618	27192
425	20		59618	27026
425	21		59618	27016
425	22		59618	27081
425	23		59618	29156
425	24		59618	26509
425	25		59618	21456
425	26		59618	27030
425	27		59618	26577
425	28		59618	26493
425	29		59618	27001
425	30		59618	27003
425	31		59618	28435
425	32		59618	27002
426	1		59618	20211
426	2		59618	28293
426	3		59618	25863
426	4		59618	20391
426	5		59618	27153
426	6		59618	27161
426	7		59618	27151
426	8		59618	27160
426	9		59618	51784
426	10		59618	23553
426	11		59618	27157
426	12		59618	27063
426	13		59618	27105
426	14		59618	27237
426	15		59618	27062
426	16		59618	27233
426	17		59618	27236
426	18	3040-01-138-8212	59618	349P3
427	1		59618	23748

CROSS-REFERENCE INDEXES

FIGURE AND ITEM NUMBER INDEX

FIG.	ITEM	STOCK NUMBER	FSCM	PART NUMBER
427	2		59618	52549
427	3		59618	29443
427	4		59618	28800
427	5		59618	28802
427	6		59618	28803
427	7		59618	28807
427	8		59618	28849
427	9	3030-01-133-7733	59618	27155
427	10		59618	27229
427	11		59618	81392
427	12		59618	52566
427	13		59618	29705
427	14		59618	28808
427	15		59618	26592
427	16		59618	00161
427	17		59618	27157
427	18		59618	23604
427	19		59618	03888
427	20		59618	01953
427	21		59618	27181
427	22		59618	01952A
427	23		59618	28791
427	24		59618	10416
427	25		59618	27104
427	26		59618	23750
427	27		59618	27171
427	28		59618	27201
427	29		59618	27136
427	30		59618	24142
427	31		59618	27179
428	1		77408	D0-6150-1372
428	2		77408	D0-6170-8039
428	3		77408	D0-5925-8039
428	4		59618	SE-4732
428	5		59618	25688
428	6		59618	24205
428	7		59618	91176
428	8		59618	56576
428	9	6210-01-128-4556	59618	25851
428	10		59618	52947
428	11	5930-01-156-5587	59618	55882
428	12		59618	52864
428	13		59618	24522
428	14		59618	56685
428	15		59618	55985
428	16		59618	56166
428	17		59618	20275
428	18		59618	02431
428	19		59618	02916
428	20		59618	56167W
428	21		59618	23028

CROSS-REFERENCE INDEXES

FIGURE AND ITEM NUMBER INDEX

FIG.	ITEM	STOCK NUMBER	FSCM	PART NUMBER
428	22		59618	56173
428	23		59618	54678
428	24		59618	03203
428	25		59618	21734
428	26		59618	51778
428	27		59618	51236
428	28		59618	57659W
428	29		59618	20680
428	30		59618	56502
428	31		59618	56503
428	32		59618	02505
428	33		59618	20279
428	34		59618	23225
428	35		59618	27864
428	36		59618	27870W
428	37		59618	26351
428	38		59618	56566
428	39		59618	51924
428	40		59618	23008
428	41		59618	20249
428	42		59618	56968
428	43		59618	56486
428	44		59618	57078W
428	45		59618	52150
428	46		59618	54068
428	47		59618	23407
428	48		59618	56021W
428	49		59618	22649
428	50		59618	56045
428	51		59618	56128
428	52		59618	56129
428	53		59618	54661
428	54		59618	54660
428	55		59618	56018
428	56		59618	56163
428	57		59618	57444
428	58		59618	21147
428	59		59618	57446W
428	60		59618	56534
428	61		59618	56086
428	62		59618	56079
428	63		59618	56080
428	64		59618	25723
428	65	5930-01-154-3618	59618	56052
428	66		59618	56091
428	67		59618	56051W
429	1		59618	56938
429	2		59618	25724
429	3		59618	23628
429	4		59618	56027
429	5		59618	25232

CROSS-REFERENCE INDEXES

FIGURE AND ITEM NUMBER INDEX

FIG.	ITEM	STOCK NUMBER	FSCM	PART NUMBER
429	6	3510-01-131-9654	59618	57025
429	7		59618	25723
429	8		59618	23962
429	9		59618	58049
429	10		59618	57005
429	11		59618	57019
429	12		59618	52310
429	13		59618	56090
429	14		59618	56088
429	15		59618	56131
429	16		59618	56013
429	17		59618	56175
430	1		59618	56088
430	2		59618	52310
430	3		59618	56090
430	4		59618	56156
430	5		59618	20279
430	6		59618	56285
430	7		59618	23748
430	8		59618	52549
430	9		59618	56457
430	10		59618	23886
430	11		59618	56461
430	12		59618	56078
430	13		59618	25723
430	14		59618	52909
430	15		59618	51474
430	16		59618	56055
430	17		59618	56540
430	18		59618	56048
430	19		59618	51784
430	20		59618	20680
430	21		59618	Q6535
430	22		59618	56087
430	23		59618	Q6163
430	24		59618	56552
430	25		59618	50854
431	1		59618	23222
431	2		59618	56082
431	3		59618	56563
431	4		59618	56552
431	5		59618	57408
431	6		59618	56264
431	7	4540-01-228-1018	59618	56179
431	8		59618	25723
431	9		59618	51780
431	10		59618	58048
431	11		59618	56029
432	1		59618	56065
432	2		59618	23222
432	3	5930-01-136-1967	59618	56470

CROSS-REFERENCE INDEXES

FIGURE AND ITEM NUMBER INDEX

FIG.	ITEM	STOCK NUMBER	FSCM	PART NUMBER
432	4		59618	57015
432	5		59618	56591
432	6		59618	55985
432	7		59618	23962
432	8		59618	56059
432	9		59618	56000
432	10		59618	56264
432	11		59618	20492
432	12		59618	56020
432	13		59618	58047
432	14	3030-01-150-3662	59618	56095
432	15		59618	52906
432	16		59618	56133
432	17		59618	20680
432	18		59618	25723
432	19		59618	56076
432	20		59618	52566
432	21		59618	56587
432	22		59618	56156
432	23		59618	56057
432	24		59618	23748
432	25		59618	52549
432	26		59618	54414
432	27		59618	56461
432	28		59618	58045
432	29	5930-01-156-5521	59618	53249
432	30		59618	58044
433	1		59618	25724
433	2		59618	56118
433	3		59618	51784
433	4		59618	25723
433	5		59618	70282
433	6		59618	52696
433	7		59618	20274
433	8		59618	56074
433	9		59618	56044
433	10		59618	23951
433	11		59618	56043
433	12		59618	56086
433	13		59618	56079
433	14		59618	56128
433	15		59618	57070W
434	1		50962	76-3
435			77408	8200005
435	1		77408	D0-6800-8033
435	2		77408	D0-6150-1010
435	3		62321	330CS9M-AB-SP
435	4		62321	8771
435	5		62321	4236
435	6		62321	2953
435	7		62321	9790-C
435				

CROSS-REFERENCE INDEXES

FIGURE AND ITEM NUMBER INDEX

FIG.	ITEM	STOCK NUMBER	FSCM	PART NUMBER
435	8	5365-00-417-8925	62321	4231
435	9		62321	2535
435	10		62321	9789-9
435	11		62321	1404
435	12		62321	SA-9788HT-9
435	13		62321	1457
435	14	5330-00-716-6781	30397	1-255-5716
435	15	5330-01-173-5807	62321	8991
435	16		62321	8324
435	17		62321	3121-A
435	18		62321	7577
435	19		62321	7576
435	20		62321	9781
435	21		62321	9787-A
435	22	3110-01-041-6124	62321	9144
435	23		62321	23255F
436	1		88032	SMP-1000
436	2		88032	35A2A
436	3		88032	34A7
436	4		88032	2469
436	5		88032	2584
436	6		88032	0210
436	7		88032	3214
436	8	4320-00-592-9427	88032	1129
436	9	5330-01-037-5914	71724	CFSP52322
436	10		88032	35A2C
436	11		88032	1063
436	12		88032	109A2
436	13		88032	1829
436	14		88032	1295
436	15		88032	0743
437	1		62148	1-5200-60836-03(PYN3)
437	2		62148	1-904-0
437	3		62148	1-910-0
437	4		62148	6-910-0
437	5		62148	2-001-0
437	6		62148	4-023-0
437	7		62148	4-002-0
437	8		62148	4-911-0
437	9		62148	4-908-0
437	10		62148	1-534-0
437	11		62148	6-903-0
437	12		62148	6-014-0
437	13		62148	6-908-0
437	14	5330-01-224-8595	92392	6-400-0
437	15		62148	2-036-0
437	16		62148	2-914-0
437	17		62148	1-652-0
437	18		62148	1-009-0
437	19		62148	1-154-0
437	20		62148	1-136-0

CROSS-REFERENCE INDEXES

FIGURE AND ITEM NUMBER INDEX

FIG.	ITEM	STOCK NUMBER	FSCM	PART NUMBER
437	21		62148	2-003-5
437	22		62148	2-003-6
438	1		70834	20R007001
438	2		70834	JE14
438	3		70834	ZA362
438	4		70834	PC262
438	5		70834	F97
438	6		70834	L75.8
438	7		70834	L75
438	8		70834	L75.6
438	9		70834	F39C
438	10		70834	UB17
438	11		70834	TX31
438	12		70834	ZA85
438	13		70834	F110
438	14		70834	KG261
438	15		70834	KP172
438	16		70834	KG255
438	17		70834	S1040.6
438	18		70834	20DR
438	19		70834	D90HC.7
438	20		70834	F22MC
438	21		70834	F24E
438	22		70834	F18AM
438	23		70834	ZA220
438	24		70834	F11B
438	25		70834	PC262
438	26		70834	F41C
438	27		70834	DP43
438	28		70834	F28E
438	29		70834	D2030F1
438	30		70834	D2026F1
438	31		70834	DR20C13M0C
438	32		70834	E64C
438	33		70834	F55C
438	34		70834	E68C
438	35		70834	F57C
438	36		70834	F59C
438	37		70834	F56E
438	38		70834	F52S
438	39		70834	F51C
438	40		70834	F50C
438	41		70834	F65C
438	42		70834	DR203MF
438	43		70834	JE14
438	44		70834	ZA362
438	45		70834	JE34
438	46		70834	KL270
438	47		70834	S140BL
438	48		70834	S54
439	1		70834	30R035001

CROSS-REFERENCE INDEXES

FIGURE AND ITEM NUMBER INDEX

FIG.	ITEM	STOCK NUMBER	FSCM	PART NUMBER
439	2		70834	UB17
439	3		70834	TX31
439	4		70834	KR364
439	5		70834	H97
439	6		70834	L100.13
439	7		70834	L100
439	8		70834	L100.8
439	9		70834	F39C
439	10		70834	ZA85
439	11		70834	H110
439	12		70834	KJ99
439	13		70834	KP172
439	14		70834	KG255
439	15		70834	S1040.8
439	16		70834	MS17
440	1		70834	30DR
440	2		70834	D90HC.7
440	3		70834	H22MC
440	4		70834	F24E
440	5		70834	H18AM
440	6		70834	H58C
440	7		70834	H11B
440	8		70834	KR364
440	9		70834	D3030F1
440	10		70834	H28E
440	11		70834	H31C
440	12		70834	F41C
440	13		70834	D3026F1
440	14		70834	D30C13M0C
440	15		70834	E64C
440	16		70834	F55C
440	17		70834	E68C
440	18		70834	F57C
440	19		70834	F59C
440	20		70834	F56E
440	21		70834	H52S
440	22		70834	F51C
440	23		70834	H50C
440	24		70834	F68C
440	25		70834	DR303MF1
440	26		70834	UB17
440	27		70834	TX31
440	28		70834	JE34
440	29		70834	KG261
440	30		70834	SE13BL
441	1		70834	JEV
442	1		77408	D0-6800-8036
442	2		77408	D0-6150-1180
442	3		70834	20R007003
442	4		70834	UB17
442	5		70834	TX31

CROSS-REFERENCE INDEXES

FIGURE AND ITEM NUMBER INDEX

FIG.	ITEM	STOCK NUMBER	FSCM	PART NUMBER
442	6		70834	KR364
442	7		70834	H97
442	8		70834	L95.11
442	9		70834	L95
442	10		70834	L95.6
442	11		70834	F39C
442	12		70834	ZA85
442	13		70834	F110
442	14		70834	KH290
442	15		70834	KP172
442	16		70834	KG255
442	17		70834	S1040.6
442	18		70834	MS12
442	19		70834	20DR
442	20		70834	D90HC.7
442	21		70834	F22MC
442	22		70834	F24E
442	23		70834	F18AM
442	24		70834	ZA220
442	25		70834	F11B
442	26		70834	PC262
442	27		70834	D2030F1
442	28		70834	F28E
442	29		70834	DP43
442	30		70834	F41C
442	31		70834	D2026F1
442	32		70834	DR20C13M0C
442	33		70834	E64C
442	34		70834	F55C
442	35		70834	E68C
442	36		70834	F57C
442	37		70834	F59C
442	38		70834	F56E
442	39		70834	F52S
442	40		70834	F51C
442	41		70834	F50C
442	42		70834	F65C
442	43		70834	DR203MF
442	44		70834	UB17
442	45		70834	TX31
442	46		70834	JE34
442	47		70834	KG261
442	48		70834	S180BL
442	49		70834	S55
443	1		88032	38A4A
443	2		88032	35A2E
443	3		88032	0120
443	4		88032	SMP-2000
443	5		88032	34A7
443	6		88032	35A2A
443	7		88032	2469

CROSS-REFERENCE INDEXES

FIGURE AND ITEM NUMBER INDEX

FIG.	ITEM	STOCK NUMBER	FSCM	PART NUMBER
443	8		88032	2584
443	9		88032	147A2
443	10		88032	3214
443	11	4320-00-592-9427	88032	1129
443	12		88032	35A2C
443	13		88032	1063
443	14	5330-01-037-5914	30760	1802
443	15	5315-01-154-0630	01026	11A9
443	16		88032	109A2
443	17		88032	1829
443	18		88032	0743
444			37919	C-12-253
445	1		37919	510-173
446	1		37919	510-272
447	1		37919	CP-1
447	2		37919	690-702
447	3		37919	210-071
447	4		37919	411-022
447	5		37919	410-035
447	6		37919	211-006
447	7		37919	200-040
447	8		37919	510-132
447	9		37919	125-024
447	10	5355-01-213-6701	37919	620-024
447	11		37919	411-023
447	12		37919	655-200
447	13		37919	660-366
447	14		37919	210-062
447	15		37919	210-070
447	16		37919	480-017
447	17		37919	603-051
447	18		37919	604-030
447	19		37919	411-003
447	20		37919	410-002
447	21	6240-01-202-2482	37919	411-018
447	22		37919	690-701
447	23		37919	690-700
447	24		37919	603-033
447	25		37919	604-001
447	26		37919	600-006
447	27		37919	505-344
447	28		37919	505-343
447	29		37919	603-113
447	30		37919	603-224
447	31		37919	604-034
447	32		37919	690-794
447	33		37919	690-699
447	34		37919	430-058
447	35		37919	603-188
447	36		37919	315-011
447	37		37919	604-037

CROSS-REFERENCE INDEXES

FIGURE AND ITEM NUMBER INDEX

FIG.	ITEM	STOCK NUMBER	FSCM	PART NUMBER
447	38		37919	312-010
447	39		37919	315-008
447	40		81349	LSMSCA-10
447	41		81349	LSTSGA-4
447	42		81349	LSDSGA-4
447	43		81349	LSMSCA-7
448	1		37919	MK-4
448	2		81349	LSMSCA-7
449			37919	740-026
449	1		37919	202
449	2		37919	130-024
449	3	6240-01-202-2492	37919	410-001
449	4		37919	420-001
449	5		81349	LSMSCA-7
449	6		81349	M24558/3-528
449	7		81349	M24558/4-432-1
449	8		81349	LSFSGA-4
450			37919	740-027
450	1		37919	201
450	2		37919	420-001
450	3	5999-01-233-5915	37919	505-030
450	4		81349	LSTSGA-4
451	1		37919	510-415
451	2		81349	LSDSGA-4
451	3		81349	LSMSCA-7
451	4		81349	M24558/4-432-1
451	5		81349	LSMSCA-10
451	6		81349	LSTSGA-4
451	7		81349	LSFSGA-4
452	1		88233	F010-10037
453	1	6680-01-155-8418	53477	H032-62
454	1	4820-01-248-8880	88233	M000-20362
455	1	6680-01-155-8418	53477	H032-62
456	1		88233	F041-0003
457			88233	B732-9101
457	1		02570	B-600-1-4
457	2		02570	B-600-7-4
457	3		02570	B-600-9
457	4		02570	B-600-3
457	5		02570	B-600-2-4
457	6		77408	71-3610-1020
457	7		39428	2993T93
457	8		77408	62-3030-2322
457	9		88233	03650-9001
457	10		88233	H194-20
457	11		88233	H175-21
457	12		88233	H060-09
457	13		88233	F021-1011
457	14		88233	B523-165
457	15		88233	B503-027
457	16		88233	H096-29

CROSS-REFERENCE INDEXES

FIGURE AND ITEM NUMBER INDEX

FIG.	ITEM	STOCK NUMBER	FSCM	PART NUMBER
457	17		88233	H175-16
457	18		88233	F141-209-1
457	19		88233	F023-147
457	20		88233	B993-153
457	21		88233	H257-09
457	22		88233	H004-92
457	23		88233	B223-030
457	24		88233	B993-200
457	25		88233	H072-88
457	26		88233	B913-038
457	27		88233	B632-008
457	28		88233	H081-12
457	29		88233	B912-016
457	30		88233	H136-54
457	31		88233	B233-101
457	32		88233	H105-14
457	33		88233	F023-144
457	34		88233	B383-002
458	1		02570	B-600-1-4
458	2		02570	B-600-7-4
458	3		02570	B-600-9
458	4		02570	B-600-3
458	5		02570	B-600-2-4
458	6		02570	71-3610-1020
458	7		88233	F021-10321
458	8		88233	B502-037
458	9		88233	B913-039
458	10		88233	H050-31
458	11		88233	H096-29
458	12		88233	H175-16
458	13		88233	F141-211
458	14		88233	F023-147
458	15		88233	B993-153
458	16		88233	H257-09
458	17		88233	H004-92
458	18		88233	B223-030
458	19		88233	B993-200
458	20		88233	H072-88
458	21		88233	B913-038
458	22		88233	B632-008
458	23		88233	H081-12
458	24		88233	H004-115
458	25		88233	B912-016
458	26		88233	H136-54
458	27		88233	B233-106
458	28		88233	H105-14
458	29		88233	F023-144
458	30		88233	B383-002
458	31		88233	H104-02
458	32		88233	B633-181
458	33		88233	B233-114

CROSS-REFERENCE INDEXES

FIGURE AND ITEM NUMBER INDEX

FIG.	ITEM	STOCK NUMBER	FSCM	PART NUMBER
459			88233	B732-934
459	1		77408	D0-2520-1012
459	2		77408	D0-2719-8033
459	3		02570	B-600-1-4
459	4		88233	F011-106
459	5		88233	F011-002
459	6		88233	B723-317
459	7		88233	N404-31-093
459	8		88233	H104-02
459	9		88233	M293-007
459	10		88233	F011-126
459	11		88233	H096-12
459	12		88233	H175-12
459	13		88233	B123-043
459	14		88233	H104-02
459	15		88233	M293-007
459	16		88233	B723-263
459	17		88233	H142-19
459	18		88233	H239-25
459	19		88233	B993-218
459	20		88233	B713-187
459	21		88233	F023-167
459	22		88233	H134-14
459	23		88233	B912-016
459	24		88233	H136-54
459	25		88233	B233-126
459	26		88233	03650-9001
460	1		77408	D0-2520-1022
460	2		77408	D0-2719-8033
460	3		02570	S-60.0-1-4
460	4		02570	B-600-1-4
460	5		02570	S-600-9
460	6		39428	2993T93
460	7		02570	B-600-9
460	8		02570	B-600-3
460	9		02570	B-600-2-4
460	10		77408	70-5297-4660
460	11		02570	B-600-7-4
460	12		01276	412-4-6B
460	13		01276	FC234-06
460	14		88233	F011-106
460	15		88233	F011-002
460	16		88233	B723-317
460	17		88233	N404-31-093
460	18		88233	H104-02
460	19		88233	M293-007
460	20		88233	F011-126
460	21		88233	H096-12
460	22		88233	H175-12
460	23		88233	B123-043
460	24		88233	H104-02

CROSS-REFERENCE INDEXES

FIGURE AND ITEM NUMBER INDEX

FIG.	ITEM	STOCK NUMBER	FSCM	PART NUMBER
460	25		88233	M293-007
460	26		88233	B723-263
460	27		88233	H142-19
460	28		88233	H239-25
460	29		88233	B993-218
460	30		88233	B713-187
460	31		88233	F023-167
460	32		88233	H134-14
460	33		88233	B912-016
460	34		88233	H136-54
460	35		88233	B233-126
460	36		88233	03650-9001
461		4330-01-226-3751	53477	B732-920
461	1		77408	71-3610-1020
461	2		02570	B-600-9
461	3		02570	B-600-3
461	4		02570	B-600-3TFT
461	5		72423	4174
461	6		02570	B-600-1-8
461	7		02570	B-810-9
461	8		77408	71-3610-4685
461	9		02570	B-810-3
461	10		77408	B-810-1-8
461	11		77408	21-0810-1380
461	12		77408	D0-2520-0850
461	13		77408	D0-2719-8029
461	14		88233	F011-120
461	15		88233	B633-033
461	16		88233	9454-4000
461	17		88233	9450-1000
461	18		88233	H076-108
461	19		88233	4599-6200
461	20	6680-01-155-8418	53477	H032-62
461	21	4820-01-227-1010	53477	H172-106
461	22		88233	H077-02
461	23		88233	H076-10
461	24		88233	H074-07
461	25	4820-01-226-3256	53477	H172-105
462		2030-01-250-4581	88233	B732-687
462	1		02570	B-600-1-8
462	2		02570	B-600-1-6
462	3		02570	B-810-1-8
462	4		77408	71-3610-1020
462	5		77408	71-3610-4685
462	6		39428	2993T83
462	7		02570	B-810-9
462	8		39428	2993T84
462	9		02570	B-600-7-4
462	10		01276	412-4-6B
462	11		01276	FC234-06
462	12		77408	D0-2520-0848

CROSS-REFERENCE INDEXES

FIGURE AND ITEM NUMBER INDEX

FIG.	ITEM	STOCK NUMBER	FSCM	PART NUMBER
462	13		77408	D0-2719-8029
462	14		88233	F011-111
462	15		88233	B173-049
462	16		88233	B723-302
462	17		88233	H113-33
462	18		88233	H174-02
462	19		88233	H038-04
462	20		88233	H118-07
462	21		88233	H174-04
462	22		88233	M085-318-26
462	23		88233	H171-22
462	24		88233	H167-108
462	25		88233	H167-08
462	26		88233	H171-12
462	27		88233	H167-07
462	28		88233	41462-1000
462	29		88233	H231-63
462	30		88233	H076-09
462	31		88233	05852-2040
462	32		88233	H074-41
462	33		88233	H231-99
462	34		88233	H167-146
462	35		88233	H077-74
462	36		88233	03560-0300
462	37		88233	H075-07
462	38		88233	H075-103
462	39		88233	03561-3000
462	40		88233	H074-05
462	41		88233	H167-148
462	42		88233	M051-324-58
462	43		01276	2083-8-6-B
462	44		88233	3007-9500
462	45		88233	B633-033
463	1		77408	78-3610-1020
463	2		02570	B-600-9
463	3		02570	B-600-1-4
463	4		88233	B202-1009
463	5		11331	WM388U1C2B
463	6		88233	B633-033
463	7		88233	D320-40001
463	8		88233	D020-30001
463	9		88233	C910-30006
463	10		88233	H064-16
463	11		88233	D030-30010
464	1		77408	62-3030-3678
464	2		02570	B-600-1-4
464	3		77408	D0-2520-0850
464	4		77408	D0-2719-8029
464	5		88233	M000-20287
464	6		88233	M073-016
464	7		88233	H096-26

CROSS-REFERENCE INDEXES

FIGURE AND ITEM NUMBER INDEX

FIG.	ITEM	STOCK NUMBER	FSCM	PART NUMBER
464	8		88233	M563-002
464	9		88233	H177-05
464	10		88233	M370-30019
464	11		88233	M053-003
464	12		88233	M012-001
464	13		88233	M313-004
464	14	5330-00-520-1593	88233	H134-66
464	15		88233	H104-02
464	16		88233	M293-007
464	17		88233	M243-012
464	18		88233	M363-002
464	19		88233	H136-93
464	20		88233	M343-021
464	21		88233	H101-21
464	22		88233	H175-14
464	23	5330-00-459-0881	88233	M223-006
464	24		88233	M383-009
464	25		88233	H135-27
465	1		88233	F010-10037-14-15
465	2		88233	M000-20431
465	3		88233	M095-218-03
466			88233	B730-21003
466	1		88233	FWD00-0013
466	2		88233	B273-124
466	3		88233	B693-110
466	4		88233	H069-44
466	5		88233	H101-54
466	6		88233	B663-071
466	7		88233	B843-344
466	8		88233	B482-349
466	9		88233	H134-113
466	10		88233	F153-168
466	11		88233	B813-119
466	12		88233	H145-64
466	13		88233	B713-170
466	14		88233	B482-332
466	15		88233	H136-21
466	16		88233	B493-141
466	17		88233	H004-91
466	18		88233	H145-26
466	19		88233	H092-134
466	20		88233	B833-359
466	21		88233	B273-133
466	22		88233	B273-130
467	1		73396	01-10200-000
468	1		73396	03-09506-000
469	1		73396	02-10240-000
469	2		73396	81-00110-000
469	3		73396	71-1022-000
469	4		73396	71-1022-106
469	5		73396	71-1021-000

CROSS-REFERENCE INDEXES

FIGURE AND ITEM NUMBER INDEX

FIG.	ITEM	STOCK NUMBER	FSCM	PART NUMBER
469	6		73396	71-1023-100
469	7		73396	71-1022-107
469	8		73396	71-1023-000
469	9		73396	71-1023-101
469	10		73396	71-1023-102
469	11		73396	71-1023-103
469	12		73396	71-1028-000
469	13		73396	71-1022-108
469	14		73396	71-1529-000
469	15		73396	71-1529-100
469	16		73396	71-1529-002
469	17		73396	71-1021-000
469	18		73396	71-1026-000
469	19		73396	71-1026-001
469	20		73396	71-1021-001
469	21		73396	71-1026-002
469	22		73396	71-1026-003
469	23		73396	71-1025-000
469	24		73396	71-1529-001
469	25		73396	71-1529-002
469	26		73396	71-1529-003
469	27		73396	65-5000-000
470	1		73396	83-00120-000
470	2		73396	02-09507-100
470	3		81349	LSDSGU-4
470	4		73396	61-4250-000
470	5		73396	61-1700-003
470	6		73396	61-1700-002
470	7		81349	LSMSCU-7
470	8		81349	FSS-4
470	9		81349	FSS-2
470	10		81349	5529/12
471	1		73396	83-00100-000
471	2		73396	02-09510-000
471	3		73396	91-2003-0000
471	4		81349	LSDSGU-4
471	5		73396	61-1700-001
471	6		04034	85733
471	7		04034	86435
471	8		73396	61-2050-000
471	9		01121	836-A2J
471	10		81349	FSS-4
471	11		19253	P1S-3030
471	12		81349	LS2SWU-3
471	13		81349	FSS-2
472	1		73396	11-0003-001
472	2		73396	02-09710-001
472	3		73396	71-1022-000
472	4		73396	71-1022-108
472	5		73396	71-1021-000
472	6		73396	41-1000-003

CROSS-REFERENCE INDEXES

FIGURE AND ITEM NUMBER INDEX

FIG.	ITEM	STOCK NUMBER	FSCM	PART NUMBER
472	7		81349	FSS-4
473	1		73396	11-0003-001
473	2		73396	02-09710-002
473	3		73396	71-1022-000
473	4		73396	71-1022-108
473	5		73396	71-1021-000
473	6		73396	41-1000-003
474	1		73396	11-0003-000
474	2		73396	02-09000-000
474	3		73396	91-1000-000
474	4		73396	91-5001-001
475	1		73396	83-00100-000
475	2		73396	02-09510-000
475	3		73396	91-2003-000
475	4		81349	LSDSGU-4
475	5		73396	61-1700-001
475	6		04034	85733
475	7		04034	86435
475	8		73396	61-2050-000
475	9		01121	836-A2J
475	10		19253	P1S-3030
475	11		81349	FSS-4
476	1		73396	11-0003-000
476	2		73396	02-09000-000
476	3		73396	91-1000-000
476	4		73396	91-5001-001
477	1		73396	02-10230-000
477	2		73396	81-00100-000
477	3		73396	71-1022-000
477	4		73396	71-1022-100
477	5		73396	71-1021-000
477	6		73396	71-1022-101
477	7		73396	71-1022-102
477	8		73396	71-1022-103
477	9		73396	71-1022-104
477	10		73396	71-1022-105
477	11		73396	71-1022-106
477	12		73396	71-1028-000
477	13		73396	71-1022-107
477	14		73396	71-1529-000
477	15		73396	71-1529-001
477	16		73396	71-1529-002
477	17		73396	71-1026-000
477	18		73396	71-1021-001
477	19		73396	71-1026-001
477	20		73396	71-1026-002
477	21		73396	71-1026-003
477	22		73396	41-1005-000
477	23		73396	71-1529-003
477	24		77408	5529/12
478	1		73396	83-00100-000

CROSS-REFERENCE INDEXES

FIGURE AND ITEM NUMBER INDEX

FIG.	ITEM	STOCK NUMBER	FSCM	PART NUMBER
478	2		73396	02-10215-000
478	3		73396	68-00009-003
478	4		73396	51-0000-9-003
478	5		73396	03-09505-000
478	6		73396	05-10301-000
478	7		73396	05-09502-000
478	8		73396	05-09503-000
478	9		73396	05-09505-100
478	10		73396	65-3000-002
478	11		01113	F-59A
478	12		81349	RG59U
478	13		81349	FSS-2
479	1		73396	02-10210-000
479	2		73396	68-00009-001
479	3		81349	DSS-2
479	4		73396	62-7008-000
479	5		73396	62-7008-001
479	6		81349	FSS-2
479	7		73396	62-2300-000
479	8		73396	62-2150-000
479	9		81349	LS2SWU-3
479	10		81349	M24558/3-528
479	11		73396	62-2100-000
479	12		73396	62-2300-000
479	13		81349	LS2SWU-7
479	14		81349	M24558/5-434
479	15		73396	62-2061-000
479	16		73396	62-2500-000
479	17		77408	5711/1601
479	18		73396	62-6005-001
479	19		77408	5721/2004
479	20		81349	M24558/4-432-1
479	21		73396	62-6009-001
479	22		73396	62-6007-001
479	23		73396	62-6010-001
480	1		73396	83-00100-000
480	2		73396	02-09510-000
480	3		73396	91-2003-000
480	4		81349	LSDSGU-4
480	5		73396	61-2050-000
480	6		73396	61-1700-003
480	7		81349	LSMSCU-10
480	8		81349	FSS-4
480	9		81349	FSS-2
481	1		73396	11-0003-000
481	2		73396	02-09100-000
481	3		73396	91-1000-000
481	4		73396	91-1011-000
481	5		73396	91-5001-001
481	6		73396	91-5002-001
482	1		73396	11-0003-000

CROSS-REFERENCE INDEXES

FIGURE AND ITEM NUMBER INDEX

FIG.	ITEM	STOCK NUMBER	FSCM	PART NUMBER
482	2		73396	02-09000-000
482	3		73396	91-1000-000
482	4		73396	91-5001-001
483	1		73396	11-0003-000
483	2		73396	02-09200-000
484	1		73396	83-00120-000
484	2		73396	02-09507-100
484	3		73396	91-2003-000
484	4		73396	91-2000-000
484	5		81349	LSMSCU-10
484	6		81349	LSMSCU-30
484	7		81349	LSMSCU-7
484	8		81349	LSDSGU-4
485	1		73396	01-10300-000
486	1		73396	01-10310-000
486	2		73396	71-1022-000
486	3		73396	71-1022-001
486	4		73396	71-1021-000
486	5		73396	71-1022-002
486	6		73396	71-1022-003
486	7		73396	71-1022-004
486	8		73396	71-1022-005
486	9		73396	71-1022-006
486	10		73396	71-1022-007
486	11		73396	71-1022-008
486	12		73396	71-1022-009
486	13		73396	71-1022-010
486	14		73396	71-1022-011
486	15		73396	71-1022-012
486	16		73396	71-1022-013
486	17		73396	71-1022-014
486	18		73396	71-1022-015
486	19		73396	71-1022-016
486	20		73396	71-1022-017
486	21		73396	71-1022-018
486	22		73396	41-1000-002
486	23		73396	65-5000-000
487	1		73396	83-00120-000
487	2		73396	02-09507-100
487	3		81349	FSS-2
488	1		73396	83-00120-000
488	2		73396	02-10350-000
488	3		73396	05-09601-000
488	4		73396	05-09506-000
488	5		73396	05-09502-000
488	6		73396	91-6009-003
488	7		81349	FSS-2
489	1		73396	83-00120-000
489	2		73396	02-09507-100
489	3		81349	LSDSGU-4
489	4		73396	61-4250-000

CROSS-REFERENCE INDEXES

FIGURE AND ITEM NUMBER INDEX

FIG.	ITEM	STOCK NUMBER	FSCM	PART NUMBER
489	5		81349	LSDSGU-4
490	1		73396	02-10310-000
490	2		73396	71-1022-000
490	3		73396	71-1022-001
490	4		73396	71-1021-000
490	5		73396	71-1022-002
490	6		73396	71-1022-003
490	7		73396	71-1022-004
490	8		73396	71-1022-005
490	9		73396	71-1022-006
490	10		73396	71-1022-007
490	11		73396	71-1022-008
490	12		73396	71-1022-009
490	13		73396	71-1022-010
490	14		73396	71-1022-011
490	15		73396	71-1022-012
490	16		73396	71-1022-013
490	17		73396	71-1022-014
490	18		73396	71-1022-015
490	19		73396	71-1022-016
490	20		73396	71-1022-017
490	21		73396	71-1022-018
490	22		73396	41-1000-002
491	1		1CC45	21-69071
492	1		00843	A24P20
492	2		00843	A24H20BLP
492	3		06383	C2
492	4	5930-00-369-4140	01121	800H-R1A
492	5	5930-01-232-8712	01121	800H-R6A4
492	6	5930-00-984-5274	01121	800H-R2A
492	7	6210-01-016-6082	01121	800H-PR16G
492	8	5930-00-067-5808	01121	800H-PR16A
492	9	6210-01-016-6083	01121	800H-PR16R
492	10	5930-00-498-8702	01121	800T-T2SB21
492	11		01121	700HC24A1
492	12		01121	700HG47A1
492	13		81349	LSMSCU-14
492	14		81349	LSMSCU-10
492	15		81349	LSFSGU-4
493	1		00843	A12P10
493	2		00843	A1210NF
493	3		06383	C1
493	4	5930-01-016-0178	01121	800H-HR2A2
493	5	5930-00-369-4140	01121	800H-R1A
493	6	5930-00-007-0678	01121	800H-R6A
493	7	5930-00-984-5274	01121	800H-R2A
493	8	6210-01-016-6082	01121	800H-PR16G
493	8A		01121	800T-N212
493	9	5930-00-067-5808	01121	800H-PR16A
493	10	6210-01-016-6083	01121	800H-PR16R
493	11	5930-00-498-8702	01121	800T-T2SB21
493	12	5920-00-280-4013	81349	F15B250V5A

CROSS-REFERENCE INDEXES

FIGURE AND ITEM NUMBER INDEX

FIG.	ITEM	STOCK NUMBER	FSCM	PART NUMBER
494	1		00843	A12P10
494	2		C0843	A1210NF
494	3		06383	C1
494	4	5930-00-369-4140	01121	800H-R1A
494	5	5930-00-007-0678	01121	800H-R6A
494	6	5930-00-984-5274	01121	800H-R2A
494	7	6210-01-016-6082	01121	800H-PR16G
494	7A		01121	800T-N212
494	8	5930-00-067-5808	01121	800H-PR16A
494	9	6210-01-016-6083	01121	800H-PR16R
494	10	5930-00-498-8702	01121	800T-T2SB21
495	1		27192	256314-D3
496	1		77408	8436017
496	2		81349	LSDSGA-4
496	3		81349	M24558/18-001
496	4		81349	9991-UE-7
496	5		81349	M24558/4-432-1
496	6		14799	8501-X0-80-120
496	7	6210-01-267-5476	19557	50A-N5
496	8		81349	MIL-T-245582
496	9	5945-01-246-4649	14799	8501-X0-20-120
496	10		75282	JLE-12
496	11		19557	52EXA-N5
496	12		81349	LSFSGU-4
496	13		75282	ENY-1
496	14		81349	LSMSGU-10
497	1		05351	EB-330
497	2		05351	EB-33
497	3		05351	ED-33
497	4		05351	CP-35
497	5	6130-01-284-1575	05351	PS-35
497	6		05351	MM-35
497	7		05351	BC-35
497	8		05351	ZU-35TS
497	9		05351	BM-31
497	10		28488	18.2
497	11	6350-01-036-9626	05351	BDC-624
497	12		81349	LSDSGA-4
497	13		14799	7450-1.55
497	14		81349	LSDSGA-3
497	15		05351	MC-56
497	16	5930-01-231-4542	05351	MS-51
497	17		28488	125
497	18		73168	27021-0
497	19		28488	771
497	20		81349	LSMSCU-14
497	21		81349	M24558/4-432-1
497	22	6350-01-220-5862	05351	BDC-1024
497	23		81349	LSFSGU-4
497	24		00843	A-1066JFGQRPW
497	25		75282	JLC-11
497	26		73168	27121-20

CROSS-REFERENCE INDEXES

FIGURE AND ITEM NUMBER INDEX

FIG.	ITEM	STOCK NUMBER	FSCM	PART NUMBER
497	27		75282	ENY-1
498	1		81349	IC/B51
498	2	6350-00-383-1189	19557	340-4N5
498	3		81349	LSFSGU-4
498	4		81349	M24558/18-001
498	5		81349	LSDSGA-4
498	6		28488	125
498	7		81349	MIL-W-16878/3
498	8	5930-00-565-5153	81349	IC/J-105
498	9	5930-00-033-6729	81349	IC/W
499			77408	8321008
500	1		32862	1080885
500	2		32862	1054985
500	3		32862	1054978
500	4		32862	1063250
500	5		32862	1051399
500	6		32862	1060377
500	7		32862	1042417
500	8		32862	1054979
500	9		32862	1051704
500	10		32862	1054919
500	11		32862	1057447
500	12		32862	1032141
500	13		81349	LS7SGA-4
500	14		81349	2SWAU-3
501	1		32862	1080886
501	2		32862	1052976
501	3		32862	1058757
501	4		32862	1051399
501	5		32862	1054978
501	6		32862	1063250
501	7		32862	1054979
501	8		32862	1051704
501	9		32862	1032141
501	10		32862	1069895
501	11		32862	1026045
501	12		39428	7527K62
501	13	5930-00-966-7191	13445	M522STK
501	14		81349	2SWAU-3
501	15		32862	4081468
501	16		81349	LS7SGA-4
501	17		32862	1011586
501	18		81349	LSDSGA-4
501	19		32862	1012099
501	20		81349	LSFSGA-4
501	21		81349	S2JRM3B2
501	22		81349	LSDSGA-9
501	23		88026	10250T3011
501	24		88026	10250T2
502	1		77408	832004-5

By Order of the Secretary of the Army:

CARL E. VUONO
General, United States Army
Chief of Staff

Official:

WILLIAM J. MEEHAN, II
Brigadier General, United States Army
The Adjutant General

DISTRIBUTION:
To be distributed in accordance with DA Form 12-25A, Unit and Intermediate Direct and General Support Maintenance requirements for Landing Craft Utility, LUC-1466, Type III

*U.S. GOVERNMENT PRINTING OFFICE: 1989 654-126/02006

RECOMMENDED CHANGES TO EQUIPMENT TECHNICAL PUBLICATIONS

SOMETHING WRONG WITH THIS PUBLICATION?

FROM: (PRINT YOUR UNIT'S COMPLETE ADDRESS)
PFC JOHN DOE
COA, 3d ENGINEER BN
FT. LEONARDWOOD, MO 63108

DATE SENT

PUBLICATION NUMBER	PUBLICATION DATE	PUBLICATION TITLE
TM 55-1905-223-24P-3	10 OCT 1989	LANDING CRAFT UTILITY

BE EXACT PIN-POINT WHERE IT IS

PAGE NO	PARA-GRAPH	FIGURE NO	TABLE NO
6	2-1 a		
B1		4-3	
125	line	20	

IN THIS SPACE TELL WHAT IS WRONG AND WHAT SHOULD BE DONE ABOUT IT:

In line 6 of paragraph 2-1a the manual states the engine has 6 Cylinders. The engine on my set only has 4 Cylinders. Change the manual to show 4 Cylinders.

Callout 16 on figure 4-3 is pointing at a bolt. In key to figure 4-3, item 16 is called a shim - Please correct one or the other.

I ordered a gasket, item 19 on figure B-16 by NSN 2910-00-762-3001. I got a gasket but it doesn't fit. Supply says I got what I ordered, so the NSN is wrong. Please give me a good NSN

PRINTED NAME, GRADE OR TITLE, AND TELEPHONE NUMBER
JOHN DOE, PFC (268) 317-7111

SIGN HERE John Doe
JOHN DOE

DA FORM 1 JUL 79 2028-2

PREVIOUS EDITIONS ARE OBSOLETE.
DRSTS-M Overprint 1, 1 Nov 80

P.S.--IF YOUR OUTFIT WANTS TO KNOW ABOUT YOUR RECOMMENDATION MAKE A CARBON COPY OF THIS AND GIVE IT TO YOUR HEADQUARTERS

TEAR ALONG PERFORATED LINE

REVERSE OF DA FORM 2028-2 Reverse of DRSTS-M Overprint 2, 1 Nov 80

FILL IN YOUR UNIT'S ADDRESS

FOLD BACK

DEPARTMENT OF THE ARMY

OFFICIAL BUSINESS
PENALTY FOR PRIVATE USE $300

COMMANDER
U S ARMY TROOP SUPPORT COMMAND
ATTN: AMSTR-MCTS
4300 GOODFELLOW BOULEVARD
ST. LOUIS, MO 63120-1798

TEAR ALONG PERFORATED LINE

RECOMMENDED CHANGES TO EQUIPMENT TECHNICAL PUBLICATIONS

SOMETHING WRONG WITH THIS PUBLICATION?

FROM: (PRINT YOUR UNIT'S COMPLETE ADDRESS)

DATE SENT

PUBLICATION NUMBER	PUBLICATION DATE	PUBLICATION TITLE
TM 55-1905-223-24P-3	10 OCT 1989	LANDING CRAFT UTILITY

BE EXACT PIN-POINT WHERE IT IS

PAGE NO	PARA-GRAPH	FIGURE NO	TABLE NO

IN THIS SPACE TELL WHAT IS WRONG AND WHAT SHOULD BE DONE ABOUT IT:

PRINTED NAME, GRADE OR TITLE, AND TELEPHONE NUMBER

SIGN HERE

TEAR ALONG PERFORATED LINE

DA FORM 1 JUL 79 2028-2

PREVIOUS EDITIONS ARE OBSOLETE.

DRSTS-M Overprint 2, 1 Nov 80.

P.S.--IF YOUR OUTFIT WANTS TO KNOW ABOUT YOUR RECOMMENDATION MAKE A CARBON COPY OF THIS AND GIVE IT TO YOUR HEADQUARTERS.

REVERSE OF DA FORM 2028-2 Reverse of DRSTS-M Overprint 2, 1 Nov 80

FILL IN YOUR UNIT'S ADDRESS

FOLD BACK

DEPARTMENT OF THE ARMY

OFFICIAL BUSINESS
PENALTY FOR PRIVATE USE $300

COMMANDER
U S ARMY TROOP SUPPORT COMMAND
ATTN: AMSTR-MCTS
4300 GOODFELLOW BOULEVARD
ST. LOUIS, MO 63120-1798

TEAR ALONG PERFORATED LINE

RECOMMENDED CHANGES TO EQUIPMENT TECHNICAL PUBLICATIONS

THEN. . JOT DOWN THE DOPE ABOUT IT ON THIS FORM. CAREFULLY TEAR IT OUT. FOLD IT AND DROP IT IN THE MAIL!

SOMETHING WRONG WITH THIS PUBLICATION?

FROM: (PRINT YOUR UNIT'S COMPLETE ADDRESS)

DATE SENT

PUBLICATION NUMBER	PUBLICATION DATE	PUBLICATION TITLE
TM 55-1905-223-24P-3	10 OCT 1989	LANDING CRAFT UTILITY

BE EXACT PIN-POINT WHERE IT IS

PAGE NO	PARA-GRAPH	FIGURE NO	TABLE NO

IN THIS SPACE TELL WHAT IS WRONG AND WHAT SHOULD BE DONE ABOUT IT:

PRINTED NAME, GRADE OR TITLE, AND TELEPHONE NUMBER

SIGN HERE

DA FORM 1 JUL 79 2028-2

PREVIOUS EDITIONS ARE OBSOLETE.

DRSTS-M Overprint 2, 1 Nov 80.

P.S.--IF YOUR OUTFIT WANTS TO KNOW ABOUT YOUR RECOMMENDATION MAKE A CARBON COPY OF THIS AND GIVE IT TO YOUR HEADQUARTERS.

TEAR ALONG PERFORATED LINE

REVERSE OF DA FORM 2028-2 Reverse of DRSTS-M Overprint 2, 1 Nov 80

FILL IN YOUR UNIT'S ADDRESS

FOLD BACK

DEPARTMENT OF THE ARMY

OFFICIAL BUSINESS
PENALTY FOR PRIVATE USE $300

COMMANDER
U S ARMY TROOP SUPPORT COMMAND
ATTN: AMSTR-MCTS
4300 GOODFELLOW BOULEVARD
ST. LOUIS, MO 63120-1798

TEAR ALONG PERFORATED LINE

RECOMMENDED CHANGES TO EQUIPMENT TECHNICAL PUBLICATIONS

THEN. . JOT DOWN THE DOPE ABOUT IT ON THIS FORM, CAREFULLY TEAR IT OUT, FOLD IT AND DROP IT IN THE MAIL!

SOMETHING WRONG WITH THIS PUBLICATION?

FROM: (PRINT YOUR UNIT'S COMPLETE ADDRESS)

DATE SENT

PUBLICATION NUMBER	PUBLICATION DATE	PUBLICATION TITLE
TM 55-1905-223-24P-3	10 OCT 1989	LANDING CRAFT UTILITY

BE EXACT PIN-POINT WHERE IT IS

PAGE NO	PARA-GRAPH	FIGURE NO	TABLE NO

IN THIS SPACE TELL WHAT IS WRONG AND WHAT SHOULD BE DONE ABOUT IT:

PRINTED NAME, GRADE OR TITLE, AND TELEPHONE NUMBER

SIGN HERE

TEAR ALONG PERFORATED LINE

DA FORM 1 JUL 79 2028-2

PREVIOUS EDITIONS ARE OBSOLETE.

DRSTS-M Overprint 2, 1 Nov 80.

P.S.--IF YOUR OUTFIT WANTS TO KNOW ABOUT YOUR RECOMMENDATION MAKE A CARBON COPY OF THIS AND GIVE IT TO YOUR HEADQUARTERS.

REVERSE OF DA FORM 2028-2 Reverse of DRSTS-M Overprint 2, 1 Nov 80

FILL IN YOUR UNIT'S ADDRESS

FOLD BACK

DEPARTMENT OF THE ARMY

OFFICIAL BUSINESS
PENALTY FOR PRIVATE USE $300

COMMANDER
U S ARMY TROOP SUPPORT COMMAND
ATTN: AMSTR-MCTS
4300 GOODFELLOW BOULEVARD
ST. LOUIS, MO 63120-1798

TEAR ALONG PERFORATED LINE

The Metric System and Equivalents

Linear Measure

1 centimeter = 10 millimeters = .39 inch
1 decimeter = 10 centimeters = 3.94 inches
1 meter = 10 decimeters = 39.37 inches
1 dekameter = 10 meters = 32.8 feet
1 hectometer = 10 dekameters = 328.08 feet
1 kilometer = 10 hectometers = 3,280.8 feet

Weights

1 centigram = 10 milligrams = .15 grain
1 decigram = 10 centigrams = 1.54 grains
1 gram = 10 decigram = .035 ounce
1 dekagram = 10 grams = .35 ounce
1 hectogram = 10 dekagrams = 3..52 ounces
1 kilogram = 10 hectograms = 2.2 pounds
1 quintal = 100 kilograms = 220.46 pounds
1 metric ton = 10 quintals = 1.1 short tons

Liquid Measure

1 centiliter = 10 milliters = .34 fl. ounce
1 deciliter = 10 centiliters = 3.38 fl. ounces
1 liter = 10 deciliters = 33.81 fl. ounces
1 dekaliter = 10 liters = 2.64 gallons
1 hectoliter = 10 dekaliters = 26.42 gallons
1 kiloliter = 10 hectoliters = 264.18 gallons

Square Measure

1 sq. centimeter = 100 sq. millimeters = .155 sq. inch
1 sq. decimeter = 100 sq. centimeters = 15.5 sq. inches
1 sq. meter (centare) = 100 sq. decimeters = 10.76 sq. feet
1 sq. dekameter (are) = 100 sq. meters = 1,076.4 sq. feet
1 sq. hectometer (hectare) = 100 sq. dekameters = 2.47 acres
1 sq. kilometer = 100 sq. hectometers = .386 sq. mile

Cubic Measure

1 cu. centimeter = 1000 cu. millimeters = .06 cu. inch
1 cu. decimeter = 1000 cu. centimeters = 61.02 cu. inches
1 cu. meter = 1000 cu. decimeters = 35.31 cu. feet

Approximate Conversion Factors

To change	TO	Multiply by
inches	centimeters	2.540
feet	meters	.305
yards	meters	.914
miles	kilometers	1.609
square inches	square centimeters	6.451
square feet	square meters	.093
square yards	square meters	.836
square miles	square kilometers	2.590
acres	square hectometers	.405
cubic feet	cubic meters	.028
cubic yards	cubic meters	.765
fluid ounces	milliliters	29,573
pints	liters	.473
quarts	liters	.946
gallons	liters	3.785
ounces	grams	28.349
pounds	kilograms	.454
short tons	metric tons	.907
pound-feet	newton-meters	1.356
pound-inches	newton-meters	.11296

To change	TO	Multiply by
ounce-inches	newton-meters	.007062
centimeters	inches	.394
meters	feet	3.280
meters	yards	1.094
kilometers	miles	.621
square centimeters	square inches	.155
square meters	square feet	10.764
square meters	square yards	1.196
square kilometers	square miles	.386
square hectometers	acres	2.471
cubic meters	cubic feet	35.315
cubic meters	cubic yards	1.308
milliliters	fluid ounces	.034
liters	pints	2.113
liters	quarts	1.057
liters	gallons	.264
grams	ounces	.035
kilograms	pounds	2.205
metric tons	short tons	1.102

Temperature (Exact)

°F Fahrenheit temperature	5/9 (after subtracting 32)	Celsius temperature	°C