TM 10-5410-284-13&P
TM 10602A-13&P

TECHNICAL MANUAL

OPERATOR'S, UNIT AND DIRECT SUPPORT MAINTENANCE MANUAL, INCLUDING REPAIR PARTS AND SPECIAL TOOLS LIST FOR

LIGHTWEIGHT MAINTENANCE ENCLOSURE (LME)

NSN 5410-01-456-3637

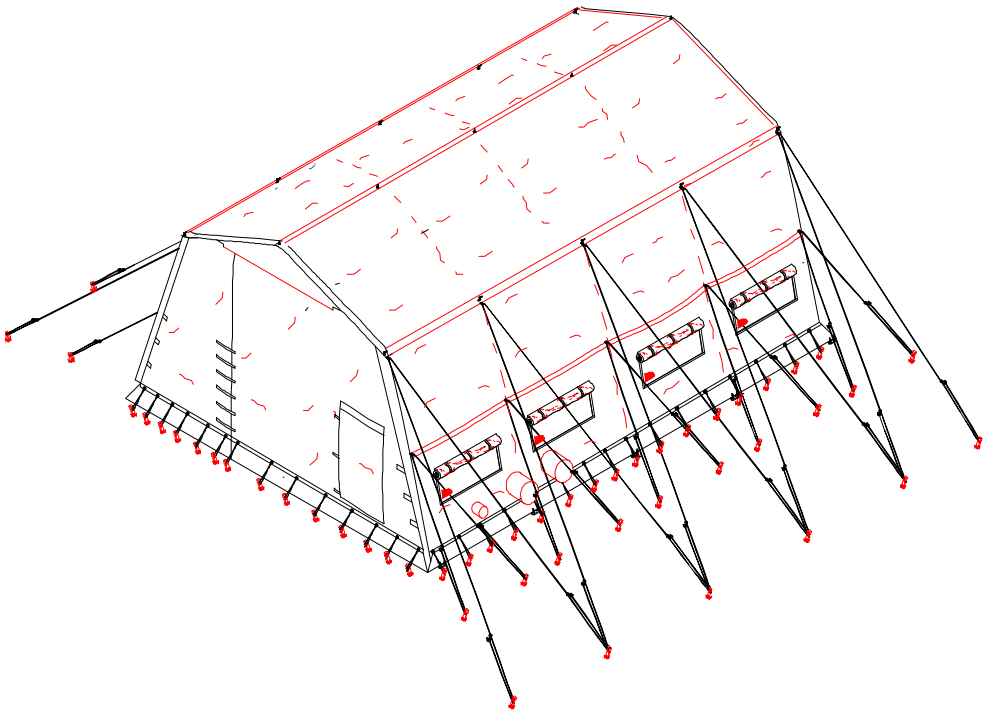

DISTRIBUTION STATEMENT A - Approved for public release: Distribution is unlimited.

HEADQUARTERS, DEPARTMENT OF THE ARMY

30 July 1999
PCN 18210602000

WARNING

LME Users should contact their local support U.S. Army Medical Department Activity, Enviromental Medicine, to assess potential health hazards posed during normal maintenace and operations within the LME to include, acoustics energy, chemical substances, engine combustion products, paints ans solvents, fuels and oils, welding fumes and optical radiation during welding operations. Control of these potential hazards requires the use of good work practices and compliance with warning instructions in the TM.

WARNING

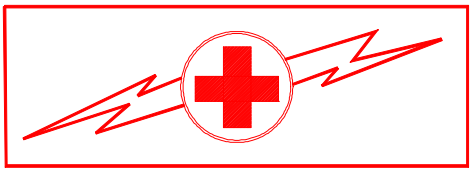

HIGH VOLTAGE is used in the operation of this equipment. **DEATH ON CONTACT** may result if personnel fail to observe safety precautions.

Never work on electrical equipment unless there is at least one other person nearby who is familiar with the operation and hazards of the equipment. That person should also be competent in giving first aid. Ask maintenance personnel about any hazardous areas of the LME prior to doing any maintenance.

External power must be shut off before performing any maintenance.

Be careful not to contact high-voltage connections when removing, installing or operating this equipment.

Whenever possible, keep one hand away from the equipment to reduce the hazard of current flowing through vital organs of the body. Voltages as low as 50 volts may cause death.

LIFTING/MOVING

Read lifting requirements printed on transport covers and bags for weight and personnel requirements. Ensure sufficient personnel are available when performing all lifting or carrying operations. Lifting should be done on command to ensure personnel work in unison. Lifting should be done using the legs and from a squat position. Use caution when carrying or moving assemblies. Be aware of other personnel that may be nearby and in range of swinging components.

PINCHING/CRUSHING

Frame hinge joints are capable of pinching or crushing hands or fingers. Use extreme caution when working near hinge joints during assembly of the frame.

WARNING

When end loading and unloading is required, LONG FORKS must be used. Serious injury to personnel may result from imbalanced load.

WARNING

Use care when unfolding frame assemblies. Hands and fingers can be pinched when placed on hinge joints, causing painful injuries.

WARNING

Do not apply the following repair to a fabric panel of an erected LME when it is located above working height. Strike, or lower the LME as described in Chapter 2 to affect repairs above normal working height. Serious injury to personnel may occur from falls.

WARNING

If the lights are in use, limit inspection of the individual lights to a visual inspection from the ground to avoid injuries from falls.

WARNING

Lethal voltage is present when the power distribution box is connected to a power source. Disconnect the power source before affecting any repairs to the box. Serious injury or death to personnel may result from touching any component under power.

WARNING

All tent stakes and steel tent pins must be in place and secure, and all guy lines must be taut in order to ensure safe operation of the LME.

For artificial respiration, refer to FM 21-11.

LIST OF EFFECTIVE PAGES/WORK PACKAGES

Dates of issue for original manual is:

Original ….0…30 July 1999

TOTAL NUMBER OF PAGES FOR FRONT AND REAR MATTER IS 26 AND TOTAL NUMBER OF WORK PACKAGES IS 45, CONSISTING OF THE FOLLOWING:

Page/WP No.	*Change No.	Page/WP No.	*Change No.
Title	0	WP 0026 00 (1 pg)	0
Warning a/b	0	WP 0027 00 (8 pgs)	0
i thru iii	0	Chp 6 title page	0
iv blank		WP 0028 00 (1 pg)	0
Chp 1 title page	0	WP 0029 00 (6 pgs)	0
WP 0001 00 (3 pgs)	0	WP 0030 00 (7 pgs)	0
WP 0002 00 (5 pgs)	0	WP 0031 00 (2 pgs)	0
WP 0003 00 (1 pg)	0	WP 0032 00 (2 pgs)	0
Chp 2 title page	0	WP 0033 00 (2 pgs)	0
WP 0004 00 (1 pg)	0	WP 0034 00 (2 pgs)	0
WP 0005 00 (37 pgs)	0	WP 0035 00 (2 pgs)	0
WP 0006 00 (1 pg)	0	WP 0036 00 (2 pgs)	0
Chp 3 title page	0	WP 0037 00 (2 pgs)	0
WP 0007 00 (1 pg)	0	WP 0038 00 (2 pgs)	0
WP 0008 00 (5 pgs)	0	WP 0039 00 (2 pgs)	0
Chp 4 title page	0	WP 0040 00 (2 pgs)	0
WP 0009 00 (4 pgs)	0	WP 0041 00 (1 pg)	0
WP 0010 00 (9 pgs)	0	WP 0042 00 (1 pg)	0
WP 0011 00 (2 pgs)	0	WP 0043 00 (7 pgs)	0
WP 0012 00 (1 pg)	0	WP 0044 00 (1 pg)	0
WP 0013 00 (1 pg)	0	WP 0045 00 (1 pg)	0
WP 0014 00 (1 pg)	0	Glossary-1/2blank	0
WP 0015 00 (1 pg)	0	Index-1 thru Index-4	0
WP 0016 00 (1 pg)	0		
WP 0017 00 (1 pg)	0		
WP 0018 00 (4 pgs)	0		
WP 0019 00 (4 pgs)	0		
WP 0020 00 (1 pg)	0		
WP 0021 00 (1 pg)	0		
WP 0022 00 (1 pg)	0		
WP 0023 00 (3 pgs)	0		
WP 0024 00 (3 pgs)	0		
Chp 5 title page	0		
WP 0025 00 (1 pg)	0		

* Zero in this column indicates an original page or work package

TECHNICAL MANUAL

OPERATOR'S, UNIT, AND DIRECT SUPPORT MAINTENANCE MANUAL INCLUDING REPAIR PARTS AND SPECIAL TOOLS LIST FOR LIGHTWEIGHT MAINTENANCE ENCLOSURE (LME)

NSN 5410-01-456-3637

You can help improve this manual. If you find any mistakes or if you know of a way to improve the procedures, please let us know. Mail your letter together with DA Form 2028 (Recommended Changes to Publications and Blank Forms), located in the back of this manual, directly to: Commander, U.S. Army Soldier and Biological Chemical Command, ATTN: AMSSB-RIM-EC(N), Kansas Street, Natick, MA 01760-5052. You may also send in your recommended changes via electronic mail directly to <amsscsr@natick-amed02.army.mil> A reply will be furnished to you. Instructions for sending an electronic 2028 may be found at the back of this manual immediately preceding the hard copy 2028.

DISTRIBUTION STATEMENT A - Approved for public release: Distribution is unlimited.

TABLE OF CONTENTS

Chapter / Section **Work Package**

CHAPTER 1
INTRODUCTION 0001 00
General Information 0001 00
Equipment Description 0002 00
Theory of Operation 0003 00

CHAPTER 2
OPERATING INSTRUCTIONS 0004 00
Description and Use of Operator's Controls and Indicators 0004 00
Assembly and Preparation for Use 0005 00
Operations under Usual Conditions 0005 00
Operations under Unusual Conditions 0006 00

CHAPTER 3
OPERATOR TROUBLESHOOTING PROCEDURES 0007 00
Malfunction Symptom Index 0007 00
Troubleshooting Procedures 0008 00

HEADQUARTERS, DEPARTMENT OF THE ARMY

CHAPTER 4

UNIT MAINTENANCE INSTRUCTIONS 0009 00

Service upon Receipt 0009 00
Preventive Maintenance Checks and Services (PMCS) 0010 00
Upper Arch Assembly 0011 00
Lower Arch Assembly 0012 00
Lower Leg Assembly 0013 00
Door Header Assembly 0014 00
Cable Header Assembly 0015 00
Sider Assembly 0016 00
Purlin 0017 00
Fabric Assembly, End Panel 0018 00
Fabric Assembly, Intermediate Section 0019 00
Extension of Length 0020 00
Foot Loop 0021 00
Assembly, 50 Watt Military Light 0022 00
Power Distribution Box 0023 00
Transport Covers and Bags 0024 00

CHAPTER 5

DIRECT SUPPORT MAINTENANCE INSTRUCTIONS 0025 00

Introduction 0025 00
Assembly, 50 Watt Military Light 0026 00
Power Distribution Box 0027 00

CHAPTER 6

SUPPORTING INFORMATION 0028 00

References 0028 00
Maintenance Allocation Chart 0029 00
Repair Parts and Special Tools List 0030 00
Frame Assembly 0031 00
Fabric Assembly, End Panel 0032 00
Fabric Assembly, Intermediate Section 0033 00
Extension of Length 0034 00
Assembly, 50 Watt Military Light 0035 00
Power Distribution Box 0036 00
Transport Bags and Covers 0037 00
Tent Pins and Guy Lines 0038 00
Bulk Materials Repair Parts List 0039 00
Repair Kit Repair Parts List 0040 00
National Stock Number Index 0041 00
Part Number Index 0042 00
Components of End Item (COEI) and Basic Issue Items (BII) List 0043 00
Additional Authorization List (AAL) 0044 00
Expendable and Durable Items List 0045 00

GLOSSARY . . . . . GLOSSARY 1

ALPHABETICAL INDEX INDEX-1

LIST OF TABLES

Table No.	Title	Work Package
0002 00-1	Equipment Data	0002 00
0004 00-1	Power Distribution Box Controls and Indicators	0004 00
0008 00-1	Troubleshooting Procedures	0008 00
0009 00-1	Inspection criteria for packing	0009 00
0009 00-2	LME Component Inspection	0009 00
0010 00-1	Preventive Maintenance Checks and Services	0010 00
0027 00-1	Maintenance Allocation Chart for LME	0028 00
0027 00-2	Tools and Test Equipment for LME	0028 00
0027 00-3	Remarks for LME	0028 00
0041 00-1	Components of End Item	0043 00
0041 00-2	Basic Issue Items List	0043 00
0042 00-1	Additional Authorization List	0044 00

HOW TO USE THIS MANUAL

This Manual contains General Information, Operating Instructions, Operator Preventive Maintenance Checks and Services (PMCS), Troubleshooting, and Maintenance/Repair instructions for the Lightweight Maintenance Enclosure (LME).

Chapter 1 contains introductory information on the LME and its associated equipment as well as Theory of Operation. Chapter 2 includes operating instructions under usual and unusual conditions. Chapter 3 contents include operator troubleshooting, PMCS, and service procedures. Chapter 4 contains Unit Maintenance instructions. Direct Support maintenance information can be found in Chapter 5. Chapter 6 contains references and other supporting information. Chapter 6 also includes the Repair Parts and Special Tools List (RPSTL) which identifies those parts or tools which are unique to the operation and maintenance of this equipment.

Manual Organization and Page Numbering System. The Manual is divided into six major chapters that detail the topics mentioned above. Within each chapter are work packages covering a wide range of topics. Each work package is numbered sequentially starting at page 1. The work package has its own page numbering scheme and is independent of the page numbering used by other work packages. Each page of a work package has a page number of the form XXXX YY-ZZ where XXXX is the work package number (e.g. 0010 is work package 10) and YY is the revision number for that work package and ZZ represents the number of the page within that work package. A page number such as 0010 00-1/2 blank means that page 1 contains information but page 2 of that work package has been intentionally left blank.

Finding Information. The manual has a master Table of Contents as well as separate chapter Tables of Content. The master Table of Contents on page ii and iii permits the reader to find information in the manual quickly. The reader should start here first when looking for a specific topic. The master Table of Contents lists the topics contained within a chapter and where it can be found. Refer to the table of contents at the beginning of each chapter for a detailed listing of each topic and its work package sequence number.

Figures. Figures in this manual are not numbered, they are located immediately following the paragraph which contains their callouts.

An Alphabetical Index can be found at the back of the manual, and lists specific topics with the corresponding work package.

A Glossary of Terms is provided to explain terms and words which are unique to this equipment.

CHAPTER 1

INTRODUCTION
OF
LIGHTWEIGHT MAINTENANCE ENCLOSURE

LIGHTWEIGHT MAINTENANCE ENCLOSURE (LME)
TABLE OF CONTENTS

Subject	Page
SCOPE	0001 00-1
MAINTENANCE FORMS RECORDS AND REPORTS	0001 00-1
REPORTING EQUIPMENT IMPROVEMENT RECOMMENDATIONS (EIRs)	0001 00-1
CORROSION PREVENTION AND CONTROL (CPC)	0001 00-1
DESTRUCTION OF ARMY MATERIEL TO PREVENT ENEMY USE	0001 00-1
PREPARATION FOR STORAGE AND SHIPMENT	0001 00-2
WARRANTY DATA	0001 00-2
NOMENCLATURE CROSS-REFERENCE LIST	0001 00-2
LIST OF ABBREVIATIONS/ACRONYMS	0001 00-2
SAFETY, CARE AND HANDLING, WARNINGS, CAUTIONS AND NOTES	0001 00-2
EQUIPMENT CHARACTERISTICS, CAPABILITIES AND FEATURES	0001 00-3
LOCATION AND DESCRIPTION OF MAJOR COMPONENTS	0002 00-1
DIFFERENCES BETWEEN MODELS	0002 00-5
EQUIPMENT DATA	0002 00-5
EQUIPMENT CONFIGURATION	0002 00-5
COMMON TOOLS AND EQUIPMENT	0002 00-5
THEORY OF OPERATION	0003 00-1

SCOPE.

This Technical Manual contains instructions for the operation as well as preventive and corrective maintenance for the Lightweight Maintenance Enclosure (LME). The LME was designed to provide a highly mobile, quickly deployable forward field maintenance shelter for wheeled and tracked vehicles in all environmental conditions.

Type of Manual: Operator's, Unit, and Direct Support Maintenance
Model Number and Equipment Name: Type I, Class I, Lightweight Maintenance Enclosure (LME).
Purpose of Equipment: The LME enhances combat readiness by providing a forward field maintenance shelter for wheeled and tracked vehicles in all environmental conditions.

MAINTENANCE FORMS RECORDS AND REPORTS.

Department of the Army forms and procedures used for LME maintenance will be those prescribed by DA PAM 738-750, Functional Users Manual for The Army Maintenance Management System (TAMMS) (Maintenance Management Update).

REPORTING EQUIPMENT IMPROVEMENT RECOMMENDATIONS (EIRs).

If your LME needs improvement, let us know. Send us an EIR. You, the user, are the only one who can tell us what you don't like about your equipment. Let us know why you don't like the design or performance. Put it on an SF368 Product Quality Deficiency Report . Mail it to: Commander, U.S. Army Soldier and Biological Chemical Command, ATTN: AMSSB-RIM-EC(N), Kansas St. Natick MA 01760. We will send a reply to your report.

CORROSION PREVENTION AND CONTROL (CPC).

Corrosion Prevention and Control (CPC) of Army materiel is a continuing concern. It is important that any corrosion problems with this item be reported so that the problem can be corrected and improvements can be made to prevent the problem in future items.

While corrosion is typically associated with rusting of metals, it can also include deterioration of other materials, such as rubber or plastic. Unusual cracking, softening, swelling or breaking of these materials may be a corrosion problem.

If a corrosion problem is identified, it can be reported using SF 368, Product Quality Deficiency Report. Use of key words such as "corrosion", "rust", "deterioration" or "cracking" will ensure that the information is identified as a CPC problem. This form should be submitted to the address specified in DA Pam 738-750.

DESTRUCTION OF ARMY MATERIEL TO PREVENT ENEMY USE.

For procedures to destroy this equipment to prevent its use by the enemy, refer to TM 750-244-2, Procedures for Destruction of Material to Prevent Enemy Use.

PREPARATION FOR STORAGE AND SHIPMENT.

Refer to Work Package 0005 00 for procedures to prepare the LME for storage and shipment.

WARRANTY DATA.

The LME is warranted for 1 year from the date of manufacture. Report all defects to your supervisor who will take appropriate action.

NOMENCLATURE CROSS-REFERENCE LIST.

Common Name	Official Name
Tent	Lightweight Maintenance Enclosure
Power Box	Power Distribution Box
Lights	Assembly, 50 Watt Military Light

LIST OF ABBREVIATIONS/ACRONYMS.

AC	Alternating Current
BII	Basic Issue Item
COEI	Component of End Item
CPC	Corrosion Prevention Control
CTA	Common Table of Allowances
ECU	Environmental Control Unit
EIR	Equipment Improvement Recommendation
Hz	Hertz
KW	Kilowatt
LME	Lightweight Maintenance Enclosure
MOS	Military Occupational Specialty
MTOE	Modified Table of Organization and Equipment
NBC	Nuclear, Biological, Chemical
PMCS	Preventive Maintenance Checks and Services
PDB	Power Distribution Box
POL	Petroleum, Oil and Lubricant
RPSTL	Repair Parts and Special Tools List
TOE	Table of Organization and Equipment
U/M	Unit of Measure
UOC	Usable On Code

SAFETY, CARE AND HANDLING, WARNINGS, CAUTIONS AND NOTES.

Always pay attention to Warnings, Cautions and Notes appearing throughout the manual. They will appear prior to applicable procedures. Ensure you read and understand their content to prevent serious injury to yourself and others, or damage to equipment.

EQUIPMENT CHARACTERISTICS, CAPABILITIES AND FEATURES.

The LME features a modular frame assembly that consists of collapsible aluminum sections that unfold and assemble into a single rigid structure. The LME can be set up quickly under normal operating conditions by MOS non-specific personnel.

Characteristics	Capabilities
Lightweight Structure	Can be erected within 1 hr by 12 personnel
No special tool requirements to erect	Accommodates large tracked and wheeled vehicles
Modular construction	Internal fluorescent lighting
Internal power distribution box	Accommodates heating or cooling ducts
Separate personnel and vehicle entrances	Side windows / ventilation
Can be set up by MOS non-specific personnel	Internal coated fabric sections maximize light diffusion
	Flexible configuration

END OF WORK PACKAGE

LOCATION AND DESCRIPTION OF MAJOR COMPONENTS.

The major components of the tent fabric sections are identified in Figure 0002 00-1, and described in the following paragraphs.

End Panel (1) - Two end fabric panels made of flame resistant, mildew resistant polyester duck enclose the ends of the structure. These attach with grommets and becket lacing, to the large intermediate fabric panels. A hook and pile wind flap covers the becket lacing, making the joint weather- proof.

Intermediate Section (2)- Two large rectangular fabric panels, made of flame resistant, mildew resistant polyester duck, make up the bulk of the LME enclosure. The panels are secured together using built-in grommets and becket lacing. A hook and pile wind flap covers the becket lacing, making it weather proof. The fabric is coated white on the inside for maximum light distribution and green on the outside for low visibility.

Extension of Length (3) - The fabric extension of length is made of the same flame resistant, mildew resistant polyester duck material as the intermediate and end fabric panels. Its purpose is to connect the intermediate sections of two completed LMEs. The extension of length is available as an additional item.

Windows (4) - Two rectangular windows are built into each intermediate fabric section. Each window consists of a screen section for ventilation and a clear plastic section secured by hook and pile fasteners. The clear plastic provides light while maintaining weather security. A roll - down exterior curtain which is part of the intermediate fabric section covers each window section, making them weather-proof and light secure.

Ducts (5)- Three ducts are built into each intermediate fabric section near ground level. The two large ducts can be used to provide heating or ventilation and the small duct for external power cable access. The ducts can be closed using tie straps to make them weather-proof and light secure.

Vehicle Access Door (6) - A large vehicle access door is built into each end fabric panel. This door is attached to the door header track, allowing the upper section of the door to slide. The door can be secured in the open position using buckles that are attached to the end fabric panels. When closed, the vehicle access door is weather-proof and light secure.

Personnel Access Door (7) - A smaller personnel access door is also built into each end fabric panel. This allows access into the structure without opening the large vehicle door. The personnel access door is secured with hook and pile fasteners, making it weather- proof and light secure.

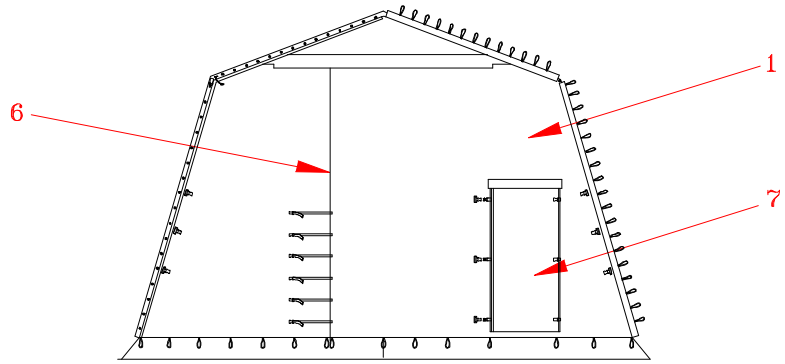
1
6
7

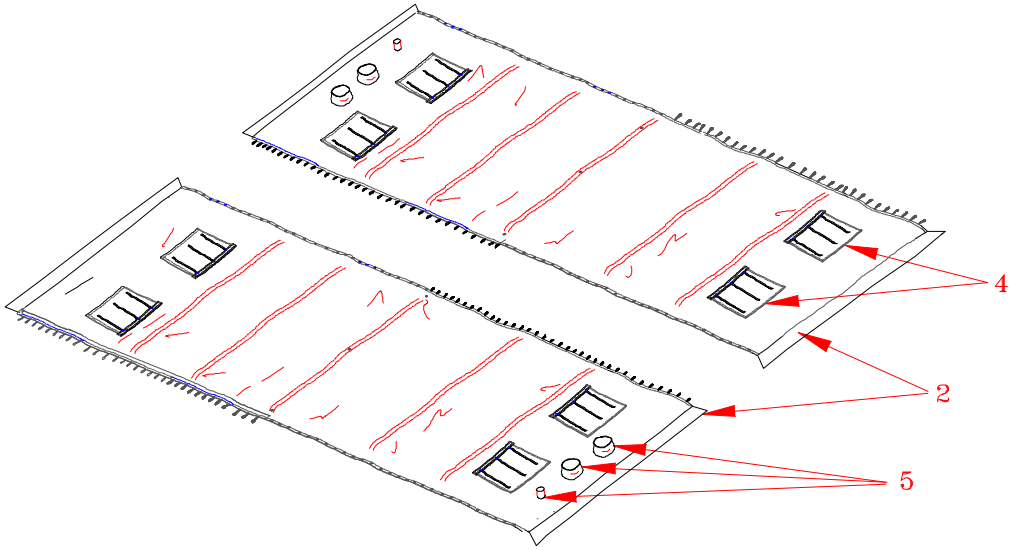
4
2
5

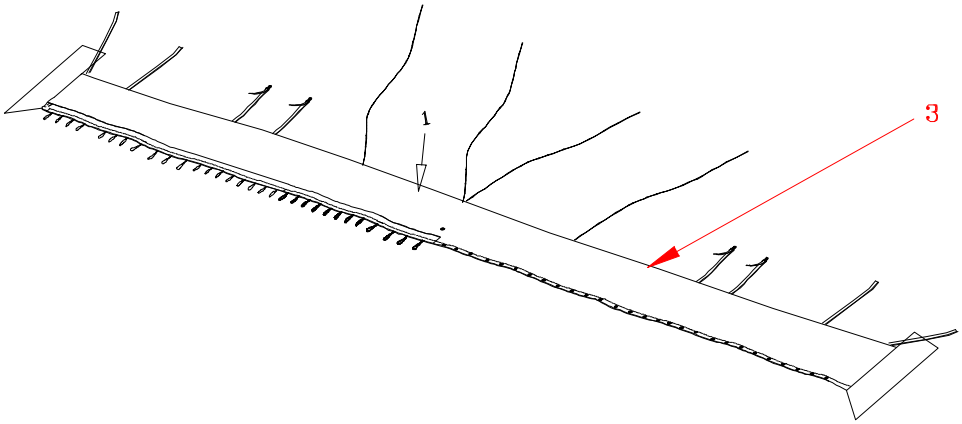
1
3

LOCATION AND DESCRIPTION OF MAJOR COMPONENTS (Cont'd)

The Lightweight Maintenance Enclosure (LME) frame sections are made of aluminum components and assemblies. These are secured by means of turn-and-lock mechanisms or attached quick release pins. No special tools are required to erect the LME. These components, together with the power distribution box and light set are illustrated in Figure 0002 00-2 and described in the following paragraphs.

Upper Arch Assembly (1) - The upper arch assembly forms the ridge of the structure. It folds for storage and has a built-in ridge post for securing the grommet of the intermediate fabric panel.

Lower Arch Assembly (2) - The lower arch assembly forms the eave section of the structure. It plugs into the lower end of the upper arch assembly and is secured with the attached quick release pin. The hinged portion has a built-in eave post for securing the eave grommet on the intermediate and end fabric panels.

Lower Leg Assembly (3) - The lower leg assembly plugs into the lower end of the lower arch assembly and is secured using the attached quick release pin. The foot pad has a stud which is pressed into the ground to help stabilize the structure.

Purlin Assembly (4) - The Purlin Assemblies are made of tubular aluminum approximately 96 inches long and 1½ inches in diameter. "U" shaped brackets are riveted near each end of the purlin. These provide a hinge point for the folding braces which lock the purlin to the arch frame assembly. At the end of each folding brace is a rotating shackle which is inserted into a matching hole in the arch frame assembly.

Door Header Assembly (5) - The door header assembly is used to strengthen the arch frame assembly and to mount the vehicle access door. It is secured using the attached quick release pins.

Cable Header Assembly (6) - The cable header assembly is made from stranded steel cable with steel fittings at the ends. It is used to strengthen the remaining arch frame assemblies and is secured with quick release pins.

Sider Assembly (7) - The sider assemblies add strength to the eave sections of the structure. The upper slotted end of the sider is installed over the pins on the arch frame assembly and the sider is swung outward. When the holes in the sider align with the holes in the arch frame assembly, it is secured with the attached quick release pin.

Power Distribution Box (8) - The box is mounted on the frame structure and brings external power into the LME. The power distribution box contains a lighted switch which controls the light string. Four ground fault protected convenience outlets have separate circuit breakers. A 25 foot extension cord is provided to connect the lights to the Power Distribution Box. A 10 foot extension cord is provided for the use of power tools by personnel.

Lights (9)- Four fluorescent lights (9) are provided with the LME. Each light consists of a fluorescent bulb mounted in a reinforced plastic tube with a molded cap and cable assembly at each end. The lights are suspended, one to each bay, using the eight light support straps (10) provided.

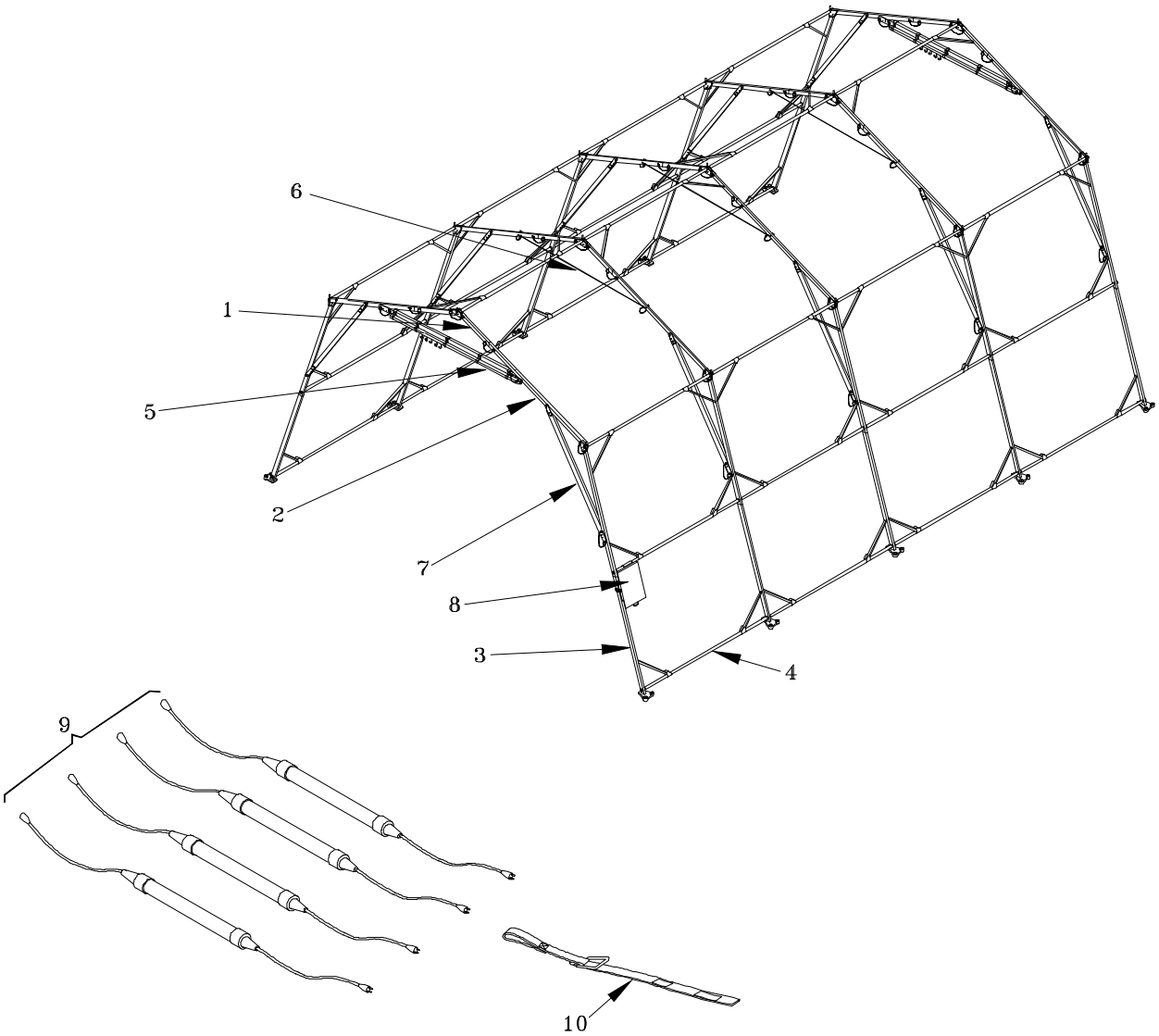
6
1
5
2
7
8
3
4
9
10

DIFFERENCES BETWEEN MODELS.

The LME may be provided in Monotone Camouflage Green 483 (Class I) or Monotone Desert Tan 459 (Class II, US Air Force). This Manual will address only the Class I (Green) item. Fabric color will have no effect on operation or maintenance.

EQUIPMENT DATA

Table 0002 00-1 provides dimensional, weight, cube, and operational, electrical and mechanical aspects of the Lightweight Maintenance Enclosure (LME).

Table 0002 00-1 Equipment Data

ITEM	DIMENSIONS	WEIGHT (lbs)/CUBE(ft^3)	LIFT LIMIT
LME	Height (at Eaves) 11' 8 7/8" Height (at Ridge) 15' 1" Width (at Base) 23' 11 5/16" Length (at Base) 32'	1659/109 (Crated) 1339 /109 (Uncrated)	
Tent Stakes Bags		78	2 persons
Tent Frame Bags	Tent Frame Bags vary in size from 8 to 11 inches in width and a maximum length of 96 inches.		
No. 1		149	8 persons
No. 2		149	8 persons
No. 3		149	8 persons
No. 4		149	8 persons
No. 5		153	8 persons
Tent Fabric Covers	9'8,5" x 8'8.5"		
Cover No. 1		208	8 persons
Cover No. 2 w/repair kit		212	8 persons
Power Distribution Box	16"x11"x3.5"	16	1 person
Power requirements	110 VAC 50/60Hz		

EQUIPMENT CONFIGURATION

Its modular construction allows the LME to be set up as a single unit, or in multiple units, using the fabric extension to cover the area between each structure.

COMMON TOOLS AND EQUIPMENT

For authorized common tools and equipment, refer to the Modified Table of Organization and Equipment (MTOE), CTA 50-970, Expendable/Durable Items (Except: Medical, Class V, Repair Parts, and Heraldic Items), or CTA 8-100, Army Medical Department Expendable/Durable Items, as applicable to your unit. Repair parts are listed and illustrated in Work Package 0028 of this manual.

END OF WORK PACKAGE

THEORY OF OPERATION

The LME is a self contained, portable enclosure intended to accommodate wheeled and tracked vehicle field maintenance operations. It is a frame supported enclosure that can be erected without the use of special tools. A system of guy ropes and tie-downs enhances structure stability in high winds. Access to the structure is gained through a vehicle door as well as personnel door at each end.

The fabric is coated white on the inside to enhance light distribution and woodland green or desert tan on the outside for camouflage and low visibility. The structure, when properly closed, is light secure and weather-proof. Duct connectors incorporated into the side walls near ground level allow heating or air conditioning duct attachment as required, or can be closed when not used.

Windows on each side of the structure can be opened for ventilation, leaving a screen in place, or can have a clear plastic section installed using hook and pile fasteners to admit daylight. A fabric cover on the outside of each window can be rolled down and secured using hook and pile fasteners to maintain light security.

The modular design of the LME permits complexing of multiple structures to accommodate a variety of operational requirements and uses such as staging areas or as emergency shelter in disaster relief operations.

The frame structure consists of lightweight components that are locked together using attached quick release pins and turn-and-lock mechanisms. The components fold for storage and shipping in the transport covers provided. The arch frame assemblies consist of upper arch, lower arch and lower leg subassemblies that are locked together using attached quick release pins. The header and sider assemblies provide lateral strength to the frame assemblies.

Purlins are used to space the arch frame assemblies apart. As each frame assembly is erected, the purlins are used to join them into self standing bays. The structure is completed when all the bays are standing. Door header assemblies are used at each end of the structure and cable header assemblies are used on the frame assemblies in the middle of the structure. Sider assemblies provide strength to the eave sections of the arch assemblies.

Four fabric panels enclose the LME. Two large intermediate fabric panels form the roof section and are held together using becket lacing and hook and pile wind flaps for security. Two end fabric panels enclose the ends of the structure and provide access through vehicle or personnel doors. The vehicle access doors can be secured open using buckles provided in the fabric panels.

External electrical power is provided to the LME through a power distribution box which is mounted on the frame structure. The distribution box contains a lighted switch to control the string of fluorescent lights that provide interior lighting. Four ground fault protected convenience outlets for power tool use have separate circuit breakers. The fluorescent lights are secured to the structure using straps provided.

END OF WORK PACKAGE

CHAPTER 2

OPERATOR INSTRUCTIONS
FOR
LIGHTWEIGHT MAINTENANCE ENCLOSURE

LIGHTWEIGHT MAINTENANCE ENCLOSURE (LME)
TABLE OF CONTENTS

Subject	Page
GENERAL	0004 00-1
POWER DISTRIBUTION BOX CONTROLS AND INDICATORS	0004 00-1
PACKING	0005 00-1
SITING REQUIREMENTS	0005 00-1
ASSEMBLY AND PREPARATION FOR USE	0005 00-2
Frame Assembly	0005 00-2
Fabric Panel Installation	0005 00-6
Lifting the Structure	0005 00-9
Lighting	0005 00-10
Staking the Structure	0005 00-15
Connecting External Power	0005 00-16
DECALS AND INSTRUCTION PLATES	0005 00-18
Fabric Panels	0005 00-18
Transport Covers and Bags	0005 00-18
Frame Assembly	0005 00-18
Power Distribution Box	0005 00-20
Lights	0005 00-21
OPERATING PROCEDURES	0005 00-22
Operation of Doors	0005 00-22
Operation of Windows	0005 00-22
Operation of Power Distribution Box	0005 00-22
Operation of Lights	0005 00-22
PREPARATION FOR MOVEMENT	0005 00-23
Preparation for Striking	0005 00-23
Striking the LME	0005 00-22
Storage and Shipment	0005 00-30
OPERATION IN UNUSUAL ENVIRONMENT/WEATHER CONDITIONS	0006 00-01
High Winds	0006 00-01
Rain/Wet Climate	0006 00-01
Snow and Extreme Cold	0006 00-01
Extreme Heat	0006 00-01
Damaged or bent purlins	0006 00-01

GENERAL

The following paragraphs contain illustrations that show the location of each control and indicator on the LME. Each control and indicator is clearly labeled as it appears on the equipment. Find numbers on the illustration are keyed to the tabular listing which contains the name of each control and indicator.

POWER DISTRIBUTION BOX CONTROLS AND INDICATORS

Table 0004 00-1 describes the controls and indicators for the power distribution box.

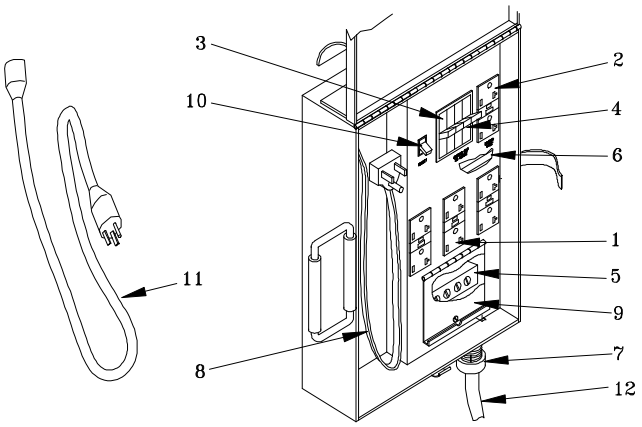

Table 0004 00-1 Power Distribution Box Controls and Indicators

KEY	CONTROL AND INDICATOR	FUNCTION
1	GROUND FAULT RECEPTACLE 20A 120VAC (3)	UTILITY RECEPTACLES
2	GROUND FAULT RECEPTACLE 20A 120VAC	LIGHTS ONLY RECEPTACLE
3	CIRCUIT BREAKER 10A 120VAC	PROTECTS/RESETS LIGHTS ONLY RECEPTACLE
4	CIRCUIT BREAKER 20A 120VAC (3)	PROTECTS/RESETS UTILITY RECEPTACLES
5	TERMINAL BLOCK 70A 120VAC	FACILITATES CONNECTION OF EXTERNAL POWER
6	NEUTRAL BLOCK 70A 120VAC	FACILITATES CONNECTION OF EXT PWR NEUTRAL WIRE
7	CORD GRIP	SECURES EXTERNAL POWER CORD
8	EXTENSION CORD 25'	CONNECTS LIGHTS TO POWER DISTRIBUTION BOX
9	TERMINAL ACCESS COVER	PROVIDES ACCESS TO THE BOX
10	LIGHTED TOGGLE SWITCH 15A 120VAC	TURNS LIGHTS ON AND OFF
11	EXTENSION CORD, 10'	POWER TO AUXILIARY TOOLS
12	POWER SUPPLY CABLE	PROVIDED BY/WITH GENERATOR, NOT PART OF SYSTEM

END OF WORK PACKAGE

PACKING

The LME is shipped in separate transport covers and bags, each of which is labeled with its contents and lifting requirements. Always ensure that sufficient personnel are available for lifting and carrying the components. Refer to the applicable procedures in this manual or the panel illustration on the inside of the end fabric panels for assembly and setup procedures. Identify and inventory all components before beginning to set up the LME.

SITING REQUIREMENTS

During site selection for the LME the following considerations are relevant:

The function to be performed with the LME. For example, when used as a maintenance facility, vehicular access and proximity to a roadway is important. However, when used as a troop assembly or billeting facility, concealment and other factors may be more important.

The site must be free of debris. The ground should be level, varying no more than three (3) inches in ten (10) feet on unprepared soil.

Choose a site that affords some protection from prevailing winds.

The site should also be firm and dry, away from any potential flood areas, as well as clear of trees which may create problems in high winds.

The LME is 23' 11 5/16" wide at the base and 32 feet long, requiring an area approximately 40x40 ft (1600 sq ft) to erect the structure, not including the additional space required to emplace the stakes and guy lines as shown below:

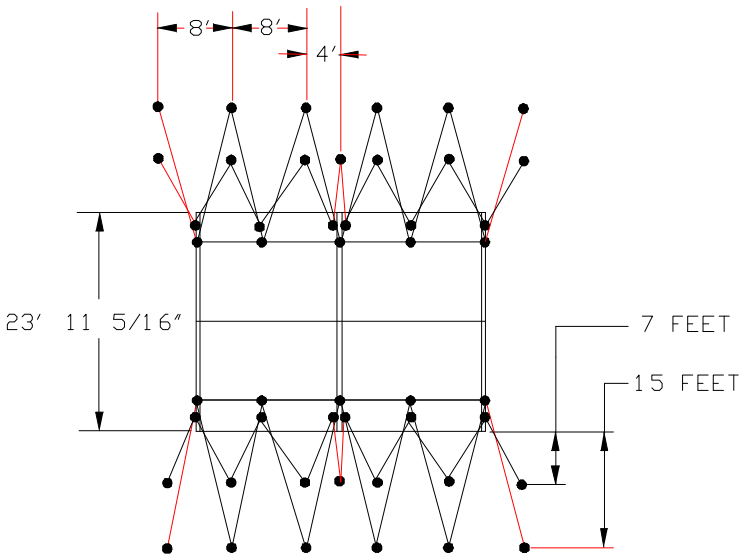

Figure 0005 00-1 Staking Diagram

ASSEMBLY AND PREPARATION FOR USE

In preparation for assembly, place the frame and fabric transport covers near the selected site. The initial task in erecting the LME is to assemble the frame and fabric components for concurrent assembly.

WARNING

The frame hinge joints can pinch or crush hands or fingers. Use care when placing hands near these joints. Be careful when carrying components near other personnel.

CAUTION

Do not twist or turn frame components when handling. Damage to equipment may result.

Frame Assembly. To assemble the frame proceed as follows:

Place one upper arch assembly (1), two lower arch assemblies (2) and one door header assembly (3) in position as shown. Lock the upper arch assembly (1) into position using the attached quick release pin (4). Insert the tongue (5) of one lower arch assembly (2) into the leg (6) of the upper arch assembly (1) and lock it in place with the attached quick release pin (7). Now unfold the lower arch assembly (2) but do not lock into position at this time. Repeat this procedure for the other leg (8).

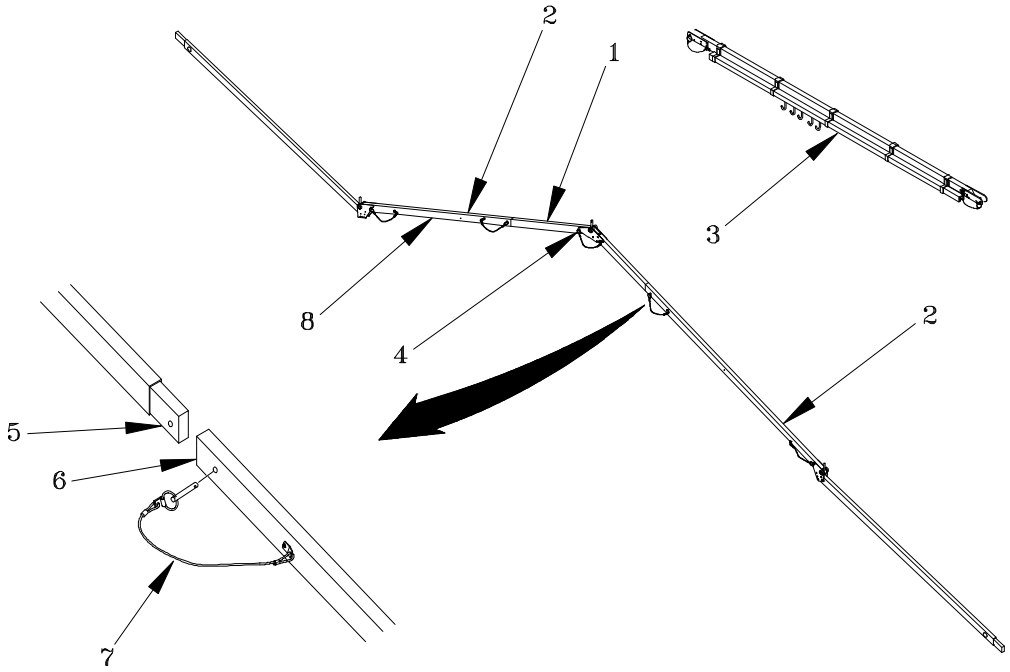

Install the door header assembly (1) by aligning its holes (2) with those in the lower arch assembly (3) with the carrier hooks (4) facing towards the outside of the LME. Secure with the attached quick release pin (5). Position the assembly flat on the ground.

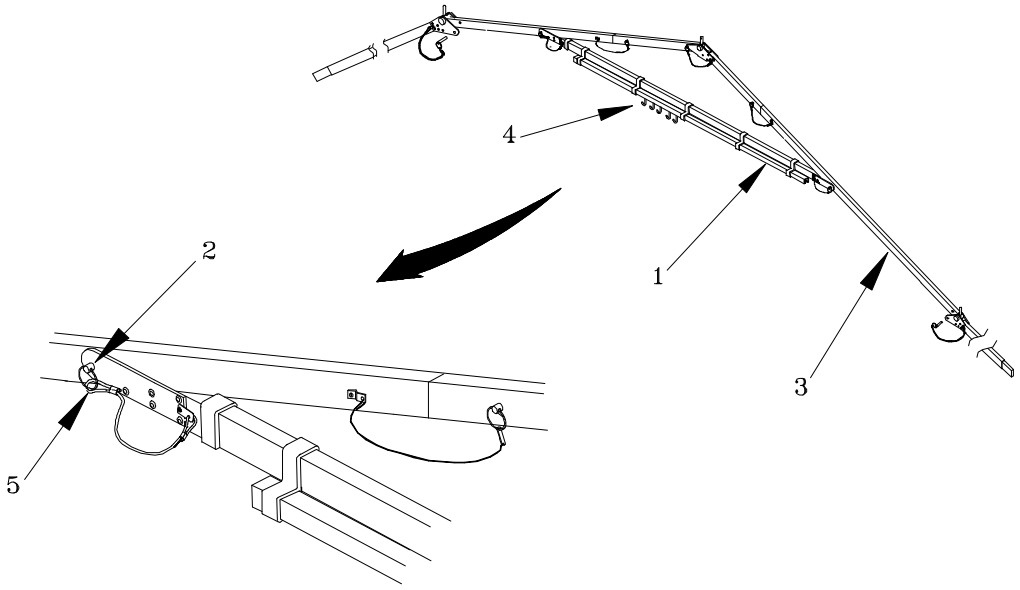

Repeat the steps in (2) above, installing a cable header assembly into the upper arch assembly, instead of a door header assembly. Continue this procedure until all five assemblies are completed. Position them flat on the ground, with one assembly containing the door header at each end of the arrangement, and those containing the cable headers in between.

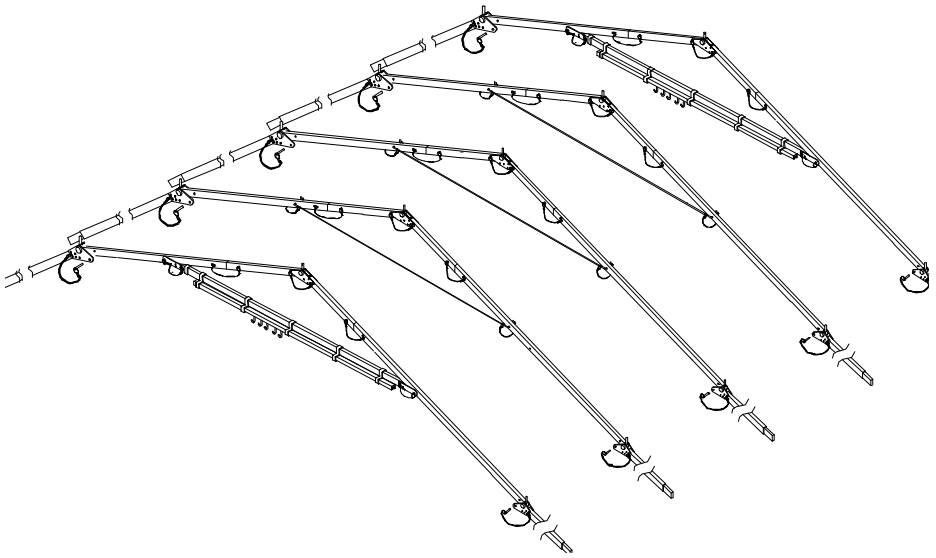

Stand one arch frame assembly (1) containing the door header (2) upright and position one arch frame assembly (3) containing the cable header (4) using a purlin (5) as a measuring guide.

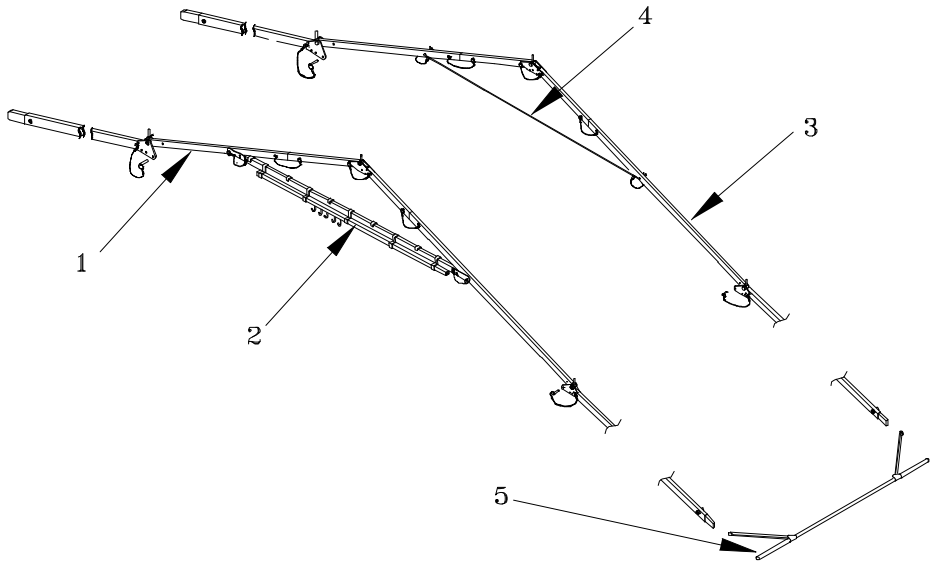

Beginning at the ridge (1), install the purlins (2) using the turn-and-lock procedure. Attach the moveable braces (3) into the notches (4) provided in the arch frame assemblies (5), also using the turn-and-lock procedure. The purlins (2) at the eave (6) should be installed second, followed by the purlins at the mid-height location (7). When all five purlins are installed the bay is self-standing.

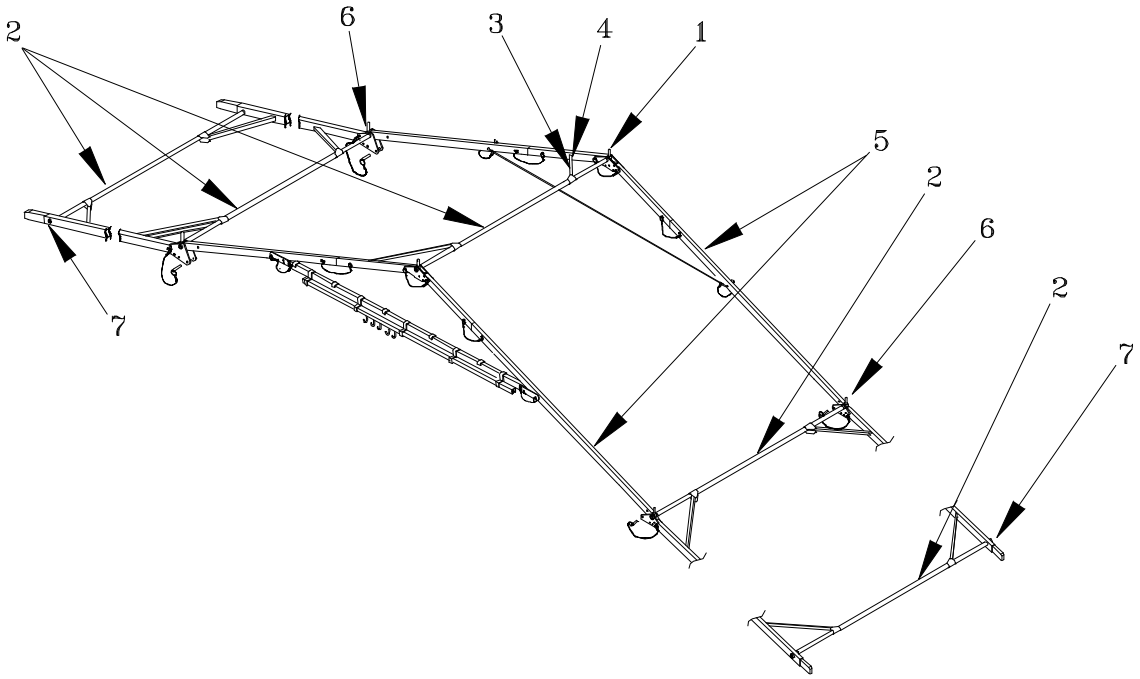

Stand the next arch frame assembly upright and repeat the procedure until all bays are completed. Alternate the purlin brace direction (1) on the ridge purlins (2), changing sides from bay to bay. Pre-position all lower leg assemblies (3) and purlin assemblies (2) as shown but do not attach them.

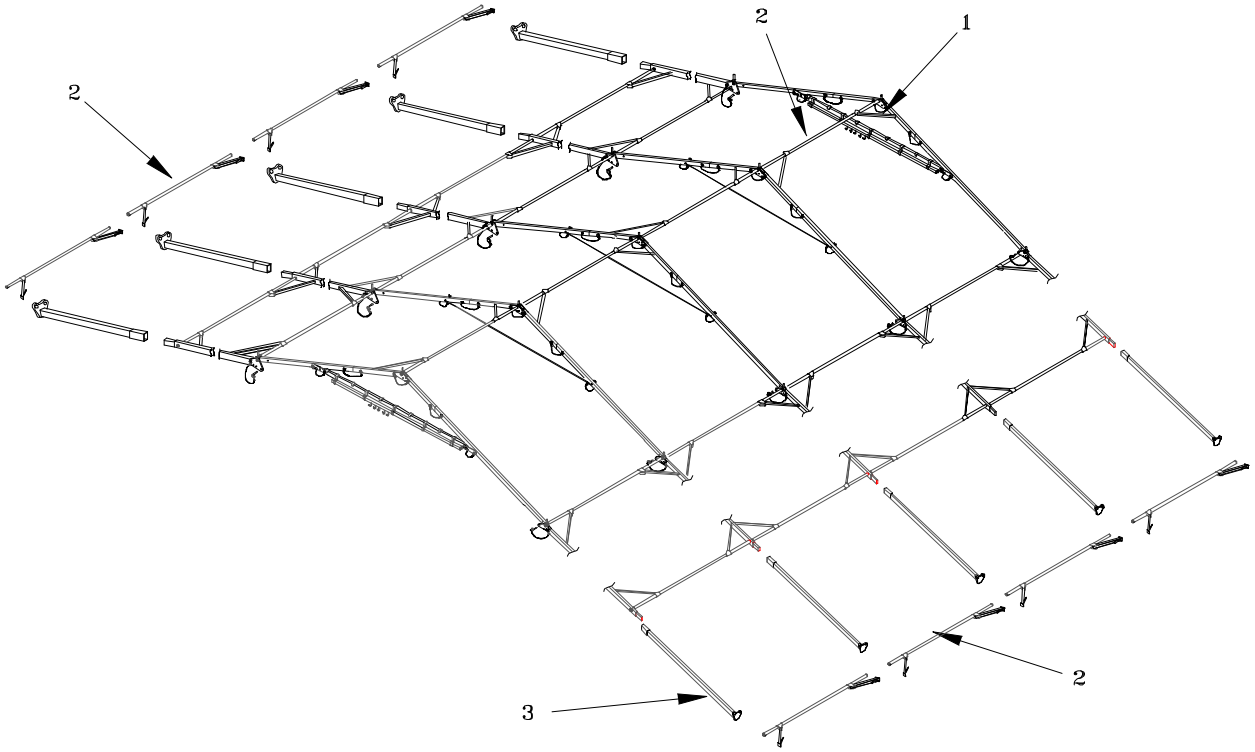

F abric Panel Installation. To lace the fabric panels together and place them on the frame proceed as follows:

Place two intermediate fabric panels (1) on the ground as shown. Lace the two panels together using the becket lacing method (2). This procedure requires alignment of the sewn-in grommets (3) in one fabric panel, with the sewn-in becket laces (4) in the fabric panel to be joined.

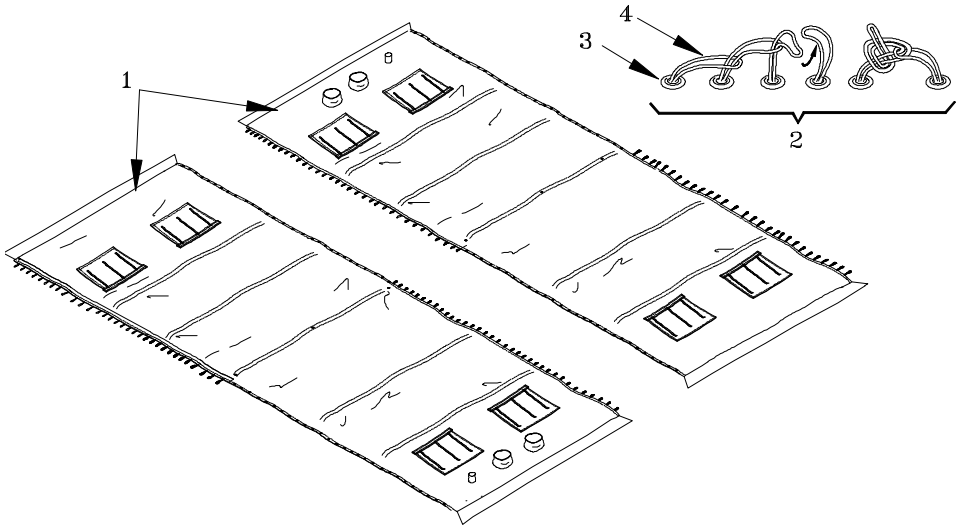

Beginning at the ridge (1), center large grommet, pull the first becket lace (2) through the aligned grommet (3). Then, grasp the second becket lace (4) and thread it through the grommet (5) and loop of the first becket lace (2), pulling it tight toward the eave (6). Grasp the third becket lace (7) and thread it through the aligned grommet (8) and the loop (9) of the second becket lace (4) pulling it tight toward the eave (6). Continue this procedure until the eave (6) is reached. As the lacing progresses, close the hook and pile wind flap (10).

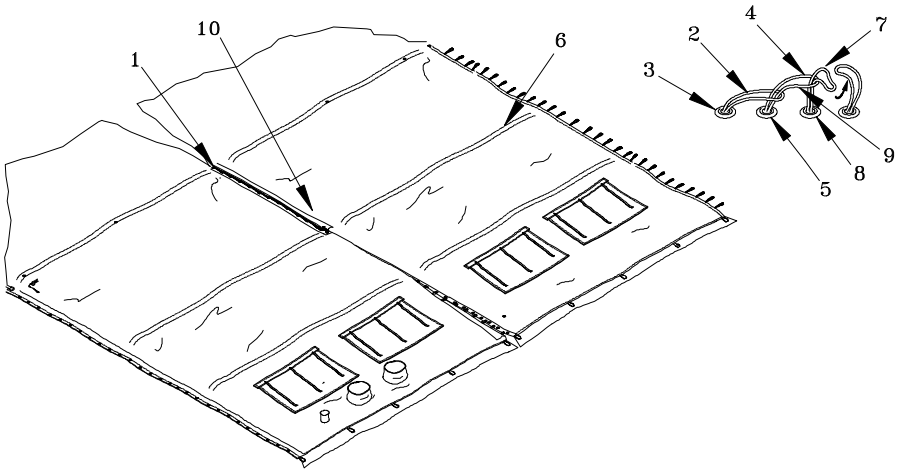

Upon reaching the last becket lace (1), insert the next-to-last becket lace (2) through the loop of the last becket lace (1). Pull the next-to-last becket lace tight back toward the ridge and tie it off with a half-hitch knot. Seal the remaining section of the hook and pile wind flap (3).

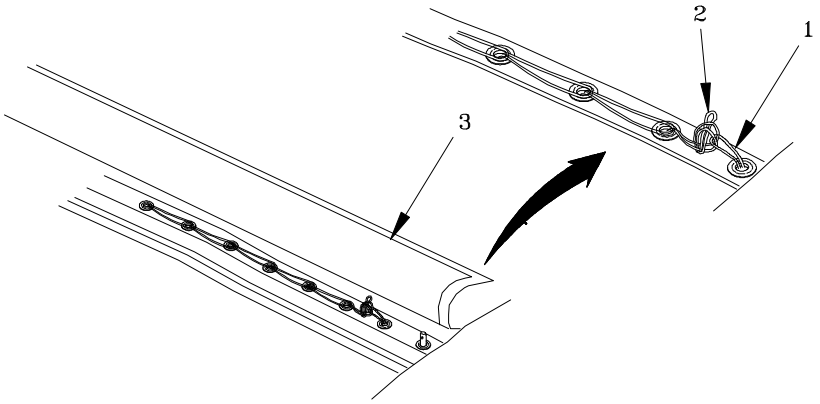

Partially roll the assembly from both sides to mid-height, just above the windows (STEP 1). Buckle and secure. Continue rolling the assembly to the ridge so that the center grommets(1) are visible between the rolls (2) (STEP 2).

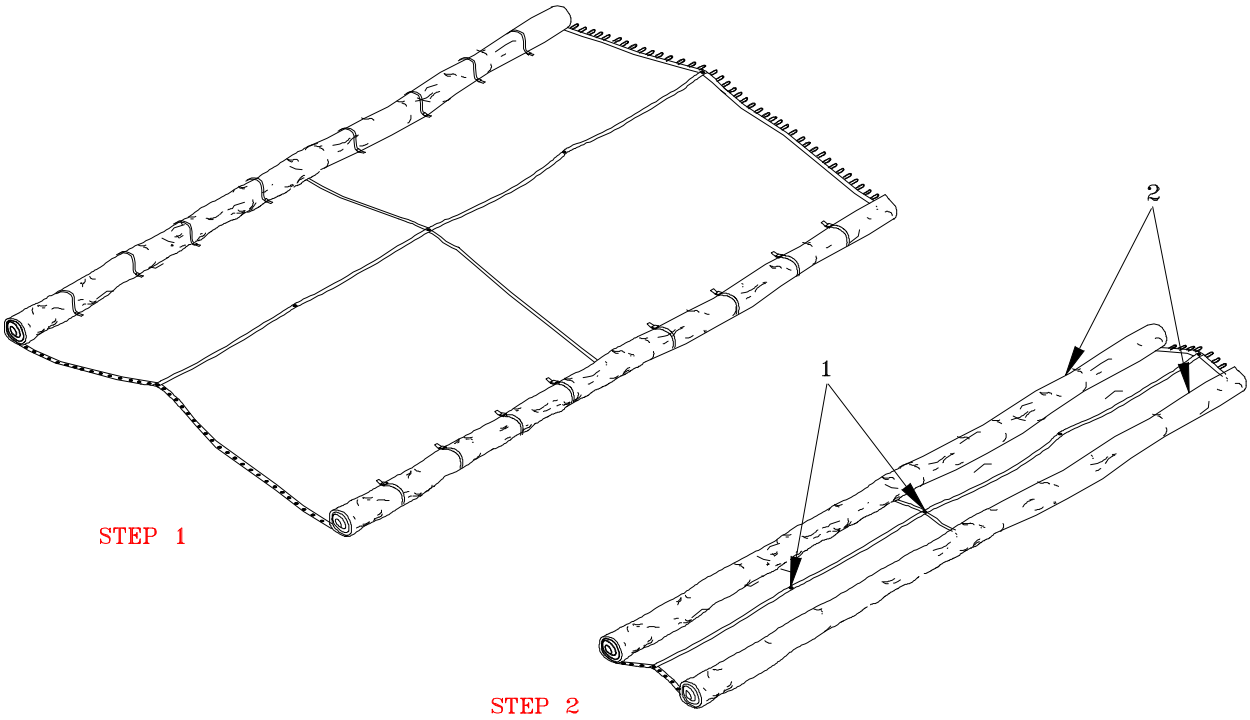

OPERATION UNDER USUAL CONDITIONS

Gather personnel and, on command, lift the fabric assembly and carry it into position over the ridge (1), stepping carefully through the frame (2), place the ridge grommets (3) over the ridge posts (4).Secure with hitch clip pins (5) attached to fabric assembly.

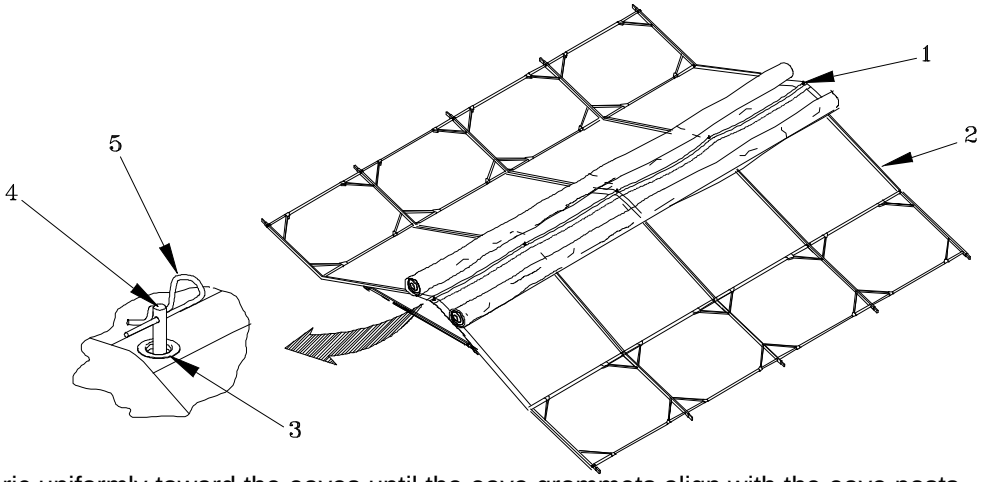

Unroll the fabric uniformly toward the eaves until the eave grommets align with the eave posts. Pull the fabric away from the eaves to avoid pinching the fabric.Secure with hitch clip pins attached to fabric assembly.

Place one End Fabric Panel near the end of the structure.

Remove the hitch clip pins (1) on the end arch assemblies. Lift the Intermediate Fabric Panel center grommet (2) off the ridge post (3). Place the End Fabric Panel center grommet (4) over the ridge post (3). Replace the Intermediate Fabric Panel center grommet (2) over the ridge post . Secure with the hitch clip pin (1). Repeat the procedure at both eaves. Begin lacing the End Fabric Panel to the Intermediate Fabric Panel, starting at the ridge and proceeding toward the eaves, closing the weatherseal flap (5) as the lacing progresses. Repeat the procedure at the other end of the structure (6).

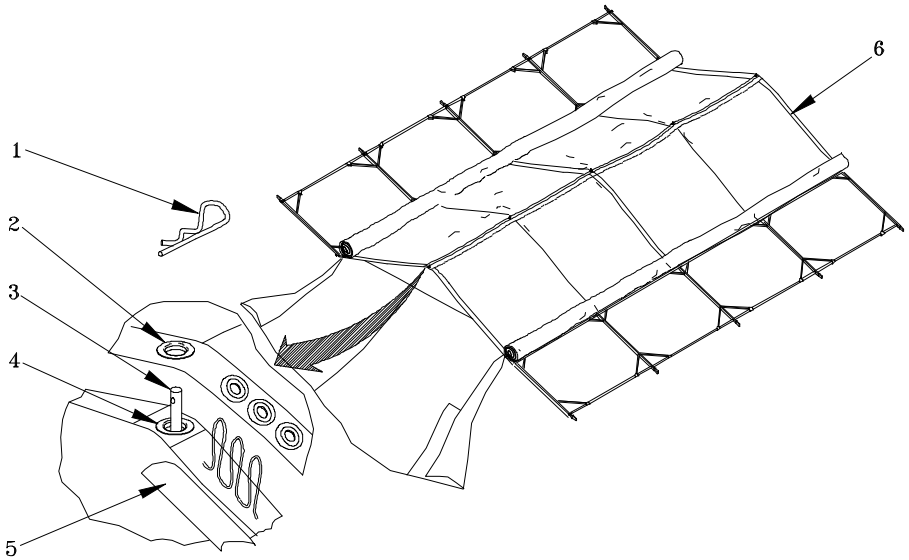

Lifting the Structure. To raise the LME to its full position, gather and coordinate procedures, then proceed as follows:

WARNING

To carry the fabric assemblies and raise the frame structure requires 12 persons. Serious injuries may result if less than 12 persons attempt these tasks. All lifts should be done on command, using proper lifting techniques to prevent injury to personnel.

CAUTION

The structure must be lifted uniformly. Do not twist or turn frame components when handling. Damage to equipment may result. Ensure all quick release pins in the lower arch assemblies are disengaged before lifting.Keep material clear of hinge joints during lifting.

LIFT 1

Place personnel outside the structure, two at each arch frame assembly (1) and two available to swing the lower arch assemblies (2) out. Grasp the purlins (3) near the arch frame assemblies (1) for safety. On command, lift one side of the structure and swing the lower arch assemblies (2) out, locking them into position with the attached quick release pins (4).
Position the inside blackout flap (5) over the door header and attach the hook and pile (6) as shown. Place the five grommets in one vehicle door section over the five carrier hooks in the door header. Repeat for the other vehicle door section. Thread the braided draw cord attached to the inner door section through the “D” ring on the underneath side of the door header and down through the “D” ring attached to the inner door section near the personnel door. Repeat at other end of structure.

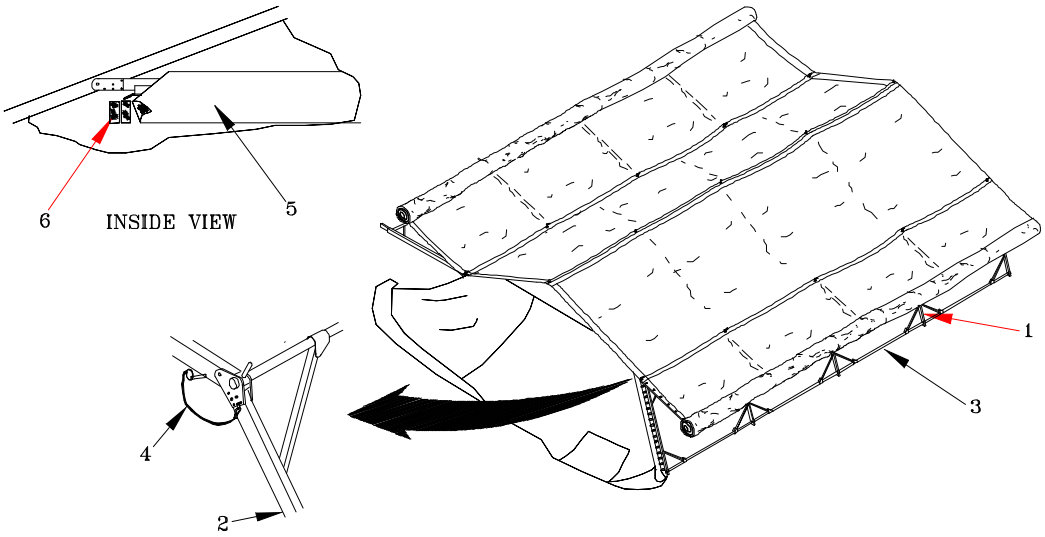

Lighting. To install the lights, proceed as follows:

Install the light support straps (1) by laying the looped end over ther ridge purlin. Run the free end thru the large loop (2) and let the free end hang. Repeat the procedure for the second strap. Repeat the procedure for the remaining three bays.

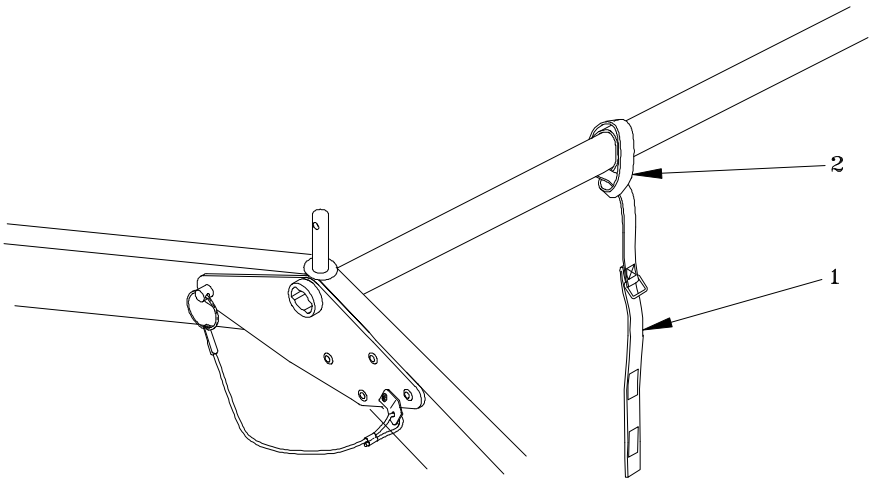

Position the lights (1) with the male plug end (2) closest to the personnel door.

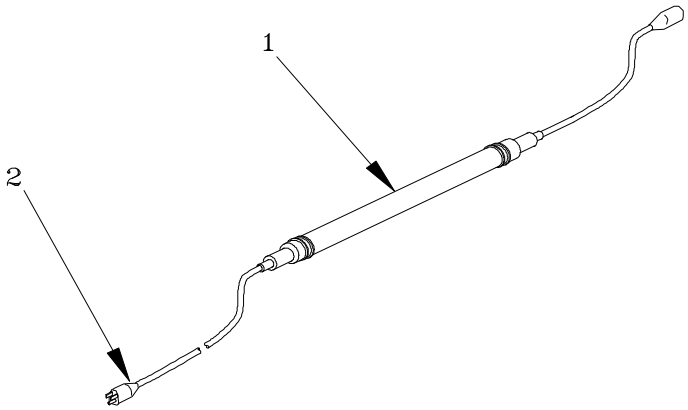

LIGHTWEIGHT MAINTENANCE ENCLOSURE (LME) **0005 00**

OPERATION UNDER USUAL CONDITIONS

Wrap a light support strap free end (1) under each end of light (2), on the rubber end handles (3), through the loop strap fastener (4), and engage the pile fastener. Mount the remaining lights, properly connecting the plugs to the receptacles.

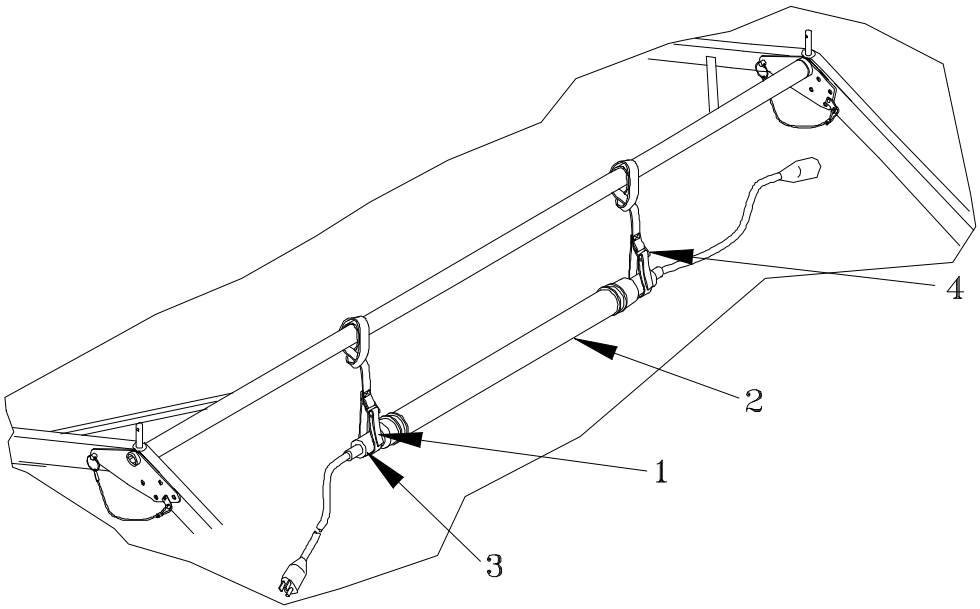

Connect the receptacle (1) of the 25 foot cord (2) stored in the power distribution box (3), to the male plug of light unit 1.

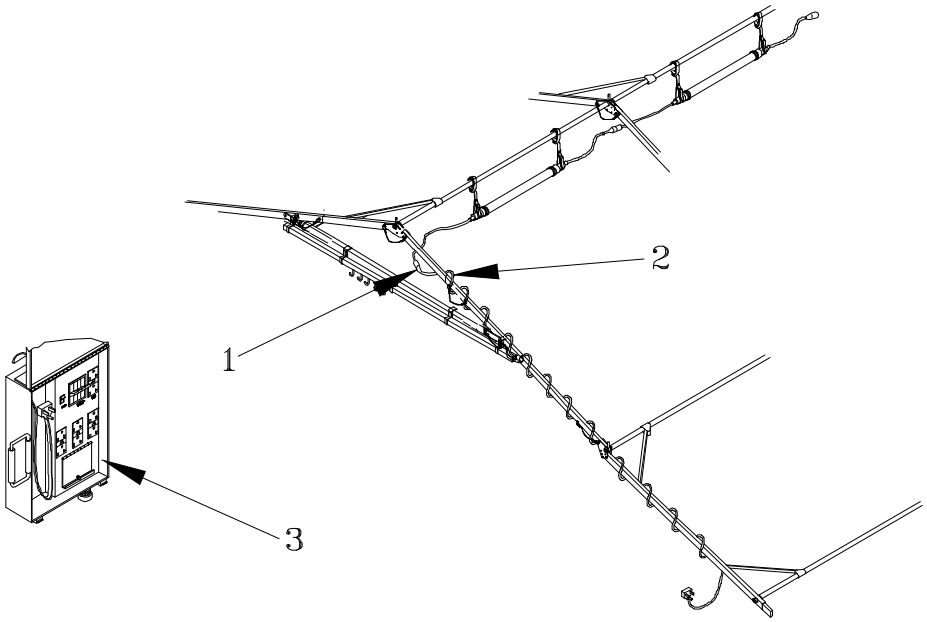

Wrap the 25 foot cord (1) around end arch frame assembly (2), moving outward and down the outer leg (3), leaving the plug (4) no more than 4 feet from the ground when the LME is fully erected. Facing the entrance (5), this must be on the right side of the frame assembly (6).

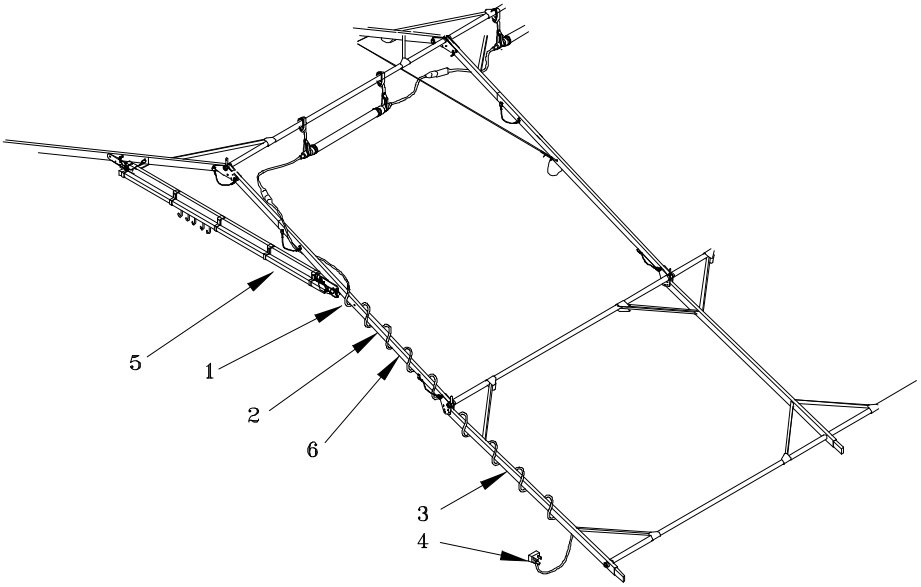

LIFT 2

Gather personnel at the other side of the structure and repeat the steps described in LIFT 1.

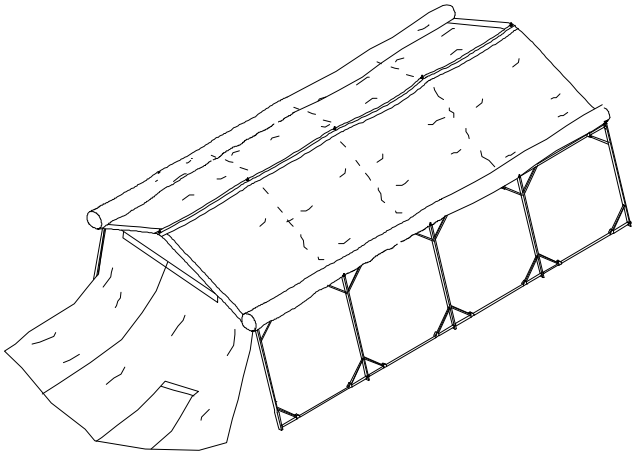

LIGHTWEIGHT MAINTENANCE ENCLOSURE (LME) **0005 00**

OPERATION UNDER USUAL CONDITIONS

Install all sider assemblies (1) by sliding the upper, slotted end (2), over the pins (3) provided and rotating the bottom end (4) out until the holes (5) in the sider assemblies (1) align with the holes (6) in the arch assemblies. Lock the sider assemblies (1) in place using the attached quick release pins (7). Ensure intermediate panels are lowered to mid-wall height. Continue lacing toward the ground at the corners of the structure, closing the weatherseal flap (8) as lacing progresses, temporarily tie off becket lacing.

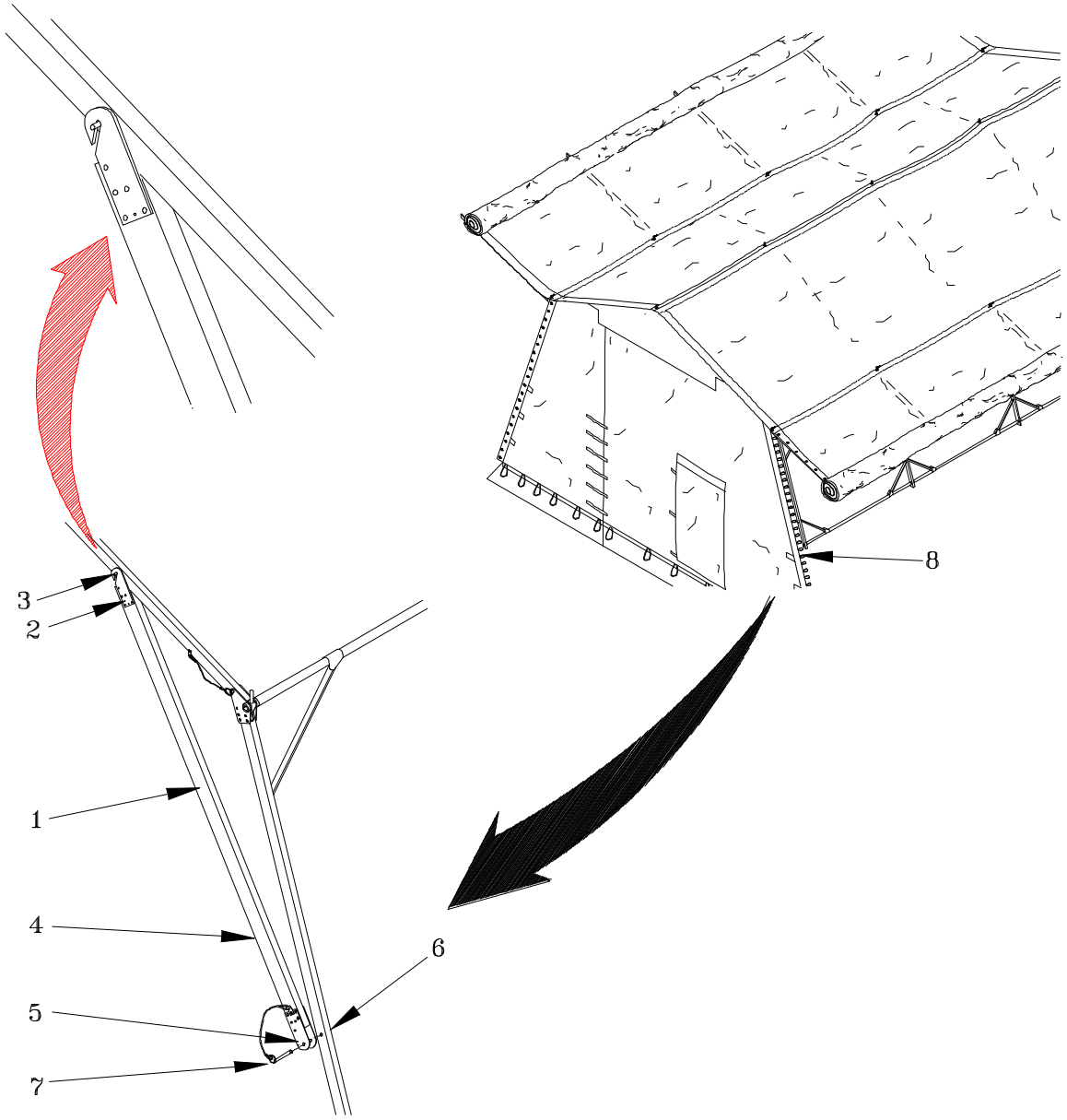

LIFT 3

Gather personnel on the exterior of the structure, two at each arch assembly as described in lift 1. On command, lift one side of the structure. Install the lower leg assemblies (1) with any and all personnel available and lock them in place using the attached quick release pins (2).

Starting at one end, Install the purlins (3) at the base of the lower leg assemblies (1) as shown. Unroll the intermediate panel fabric (4) onto the ground, and finish lacing the end wall panels (5) to the intermediate panels (4).

LIFT 4

Gather personnel at the other side of the structure and repeat the steps as described in lift 3.

Hang the power distribution box (7) onto the mid-height horizontal purlin adjacent to the personnel door and near the 25 foot cord. Open side strap (8). Slide box to the right until side bracket (9) wraps around vertical leg of frame. Secure with strap (8). When properly erected, the LME should measure 23' 11 5/16" wide at the base, measured outside of arch assembly to outside of arch assembly.

Complete lacing at the corners of the structure and wrap the interior straps (6) (attached to the interior of the Intermediate Fabric Section, around the purlins (3), to secure the fabric to the frame.

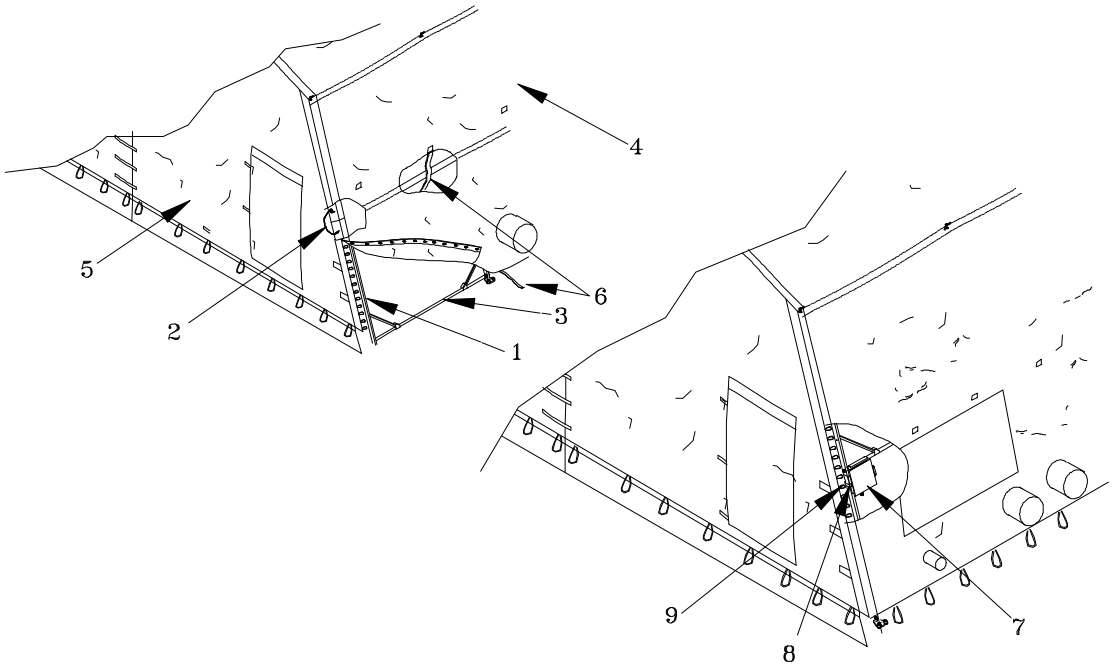

Staking the Structure. LME system performance depends on correct placement of the arch feet, use of all guy lines, proper staking and maintenance of guy line tension. The LME should measure 23' 11 5/16" measured outside to outside at the base of the lower legs. To properly stake the structure, proceed as follows:

Install two steel pins (1) in each of the arch frame feet (2) to secure the structure to the ground, leaving 1 to 2 inches of the pin exposed for ease of removal. Install 24" wooden stakes (3) as directed and attach guy lines (4) and tent slips (5). Install 16" wooden stakes (6) through the foot loops (7) on the base of the intermediate fabric panels (8) and along the end wall (9).
Fold sod cloths toward the inside of the LME and cover with dirt or sand to help prevent entry of insects and rodents. This will also prevent light from escaping during night operation.

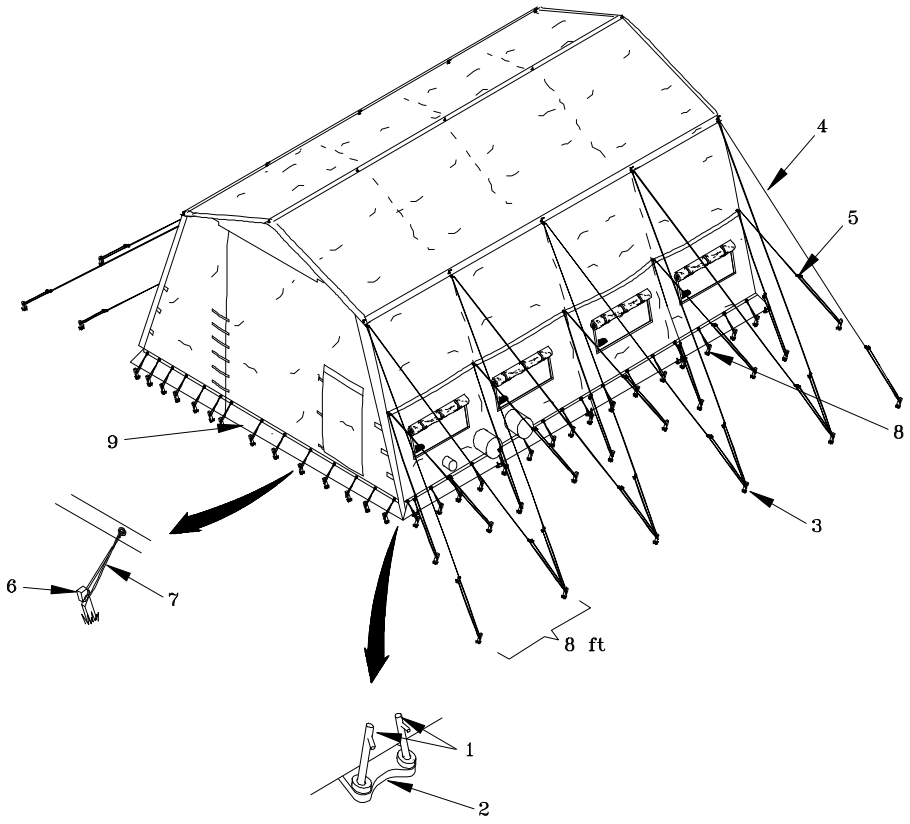

Extension of Length. The Extension of Length joins two Lightweight Maintenance Enclosures. If you are authorized to use the Extension of Length, refer to the Additional Authorization List (WP0044) for more information.

Ensure that the site for the new LME is clear, level and free of debris. Erect the new LME as near as possible to the existing one, allowing working space for personnel. Observe all warnings and cautions regarding lifting of the structure. Follow the procedures detailed in this work package regarding frame assembly and fabric installation, but do not install the End Fabric Section nearest the existing LME.

Install the Extension of Length (1) at the end of the structure nearest the existing LME (2), lacing it to the Intermediate Fabric Section.

Lift the structure as detailed earlier in this work package observing all warnings and cautions. Gather personnel and move the structure until both are aligned and touching.

Using the Painter's Pole (3) (also listed on the AAL), gently push the Extension of Length (1) up between the two structures until the fabric, guy lines and web straps are on the roof of the existing LME.

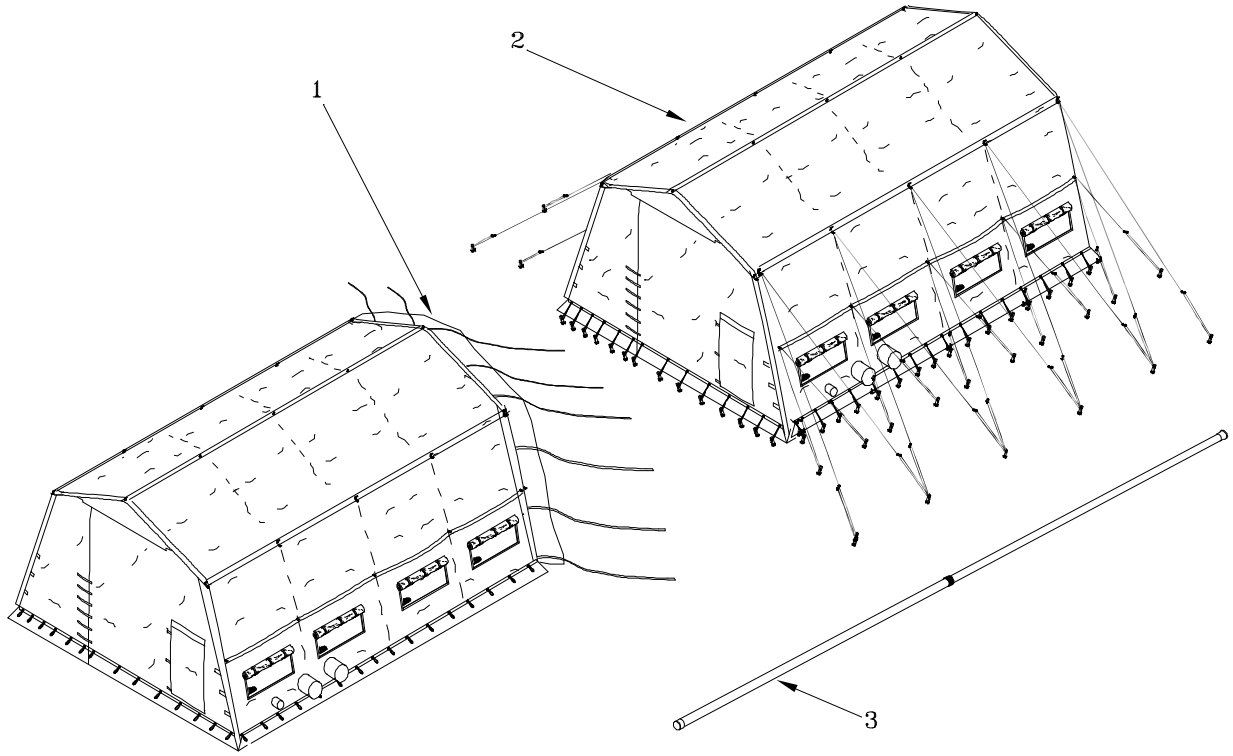

Route the center line guy line (4) around the eave post (5) and tie off the end. Route the mid-roof guy line (6) around the eave post (7) and tie off the end.

Pass the web strap (8) through the mid-height buckle (9) and secure. Pass the web strap (10) through the mid height buckle (11) and secure.

Lift the window flap (12) and attach the hook and pile strap (13). Close the window flap.

Pass the base strap (14) through or around something.

Repeat the procedure for both sides of the structure.

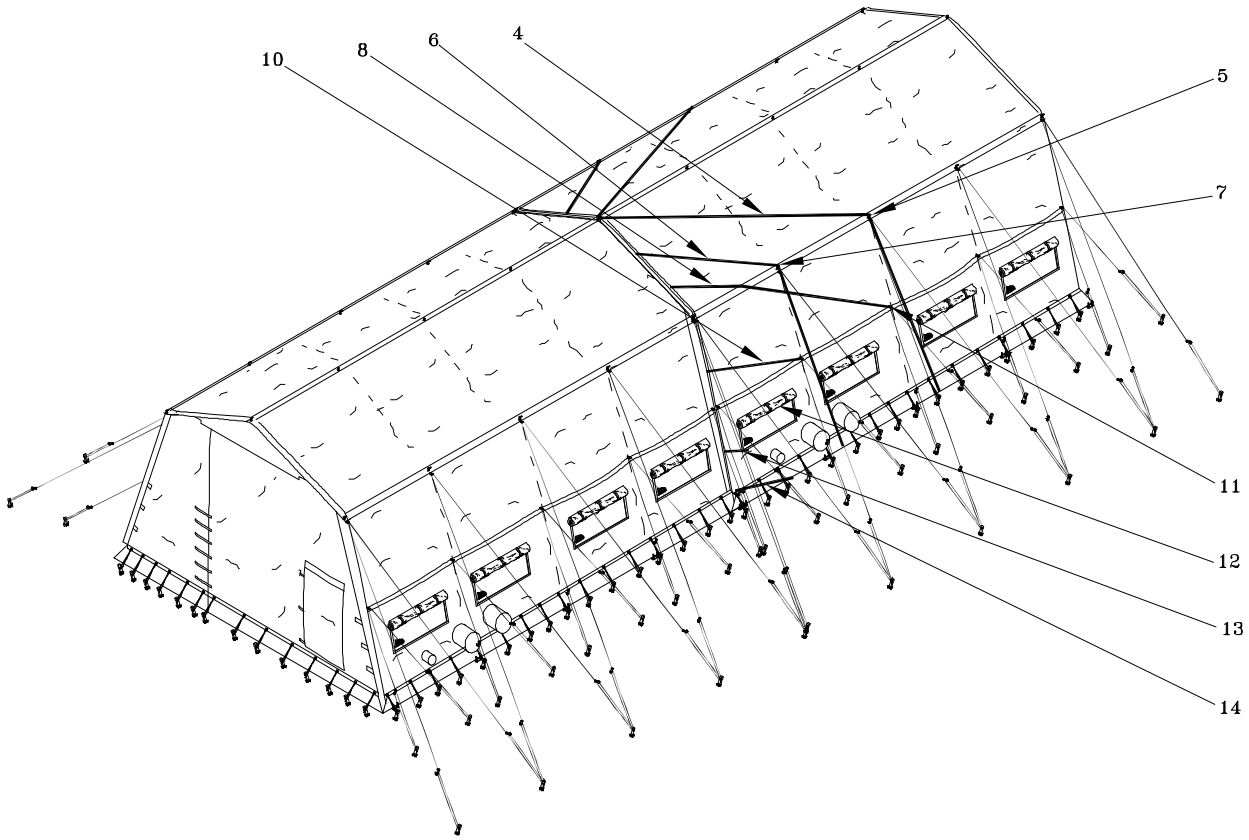

Connecting External Power. Open power distribution box main cover latch located on the bottom of the box (1) by depressing safety catch and pivoting cover (2) forward. Lift cover up all the way and secure it with the hook and pile fastener strap/pad (3).Then proceed as follows:

WARNING

Lethal voltage is present when the power distribution box is connected to a power source. The generator should be off while the following steps are performed. Serious injury or death by electrocution may result if this warning is not followed.

Strip the outer jacket of the generator cable (4) approximately 4 inches long. Using a wire stripping tool, strip individual wires (5) approximately ½ inch long.

Using a #2 flat head screwdriver, open terminal access cover (6), by turning 1/4 turn screw counter-clockwise.

Route cable in through cord grip (7).

Position wires as follows under set screws (8) and secure with same screwdriver by tightening screws clockwise:

BLACK WIRE	L1
RED WIRE	L2
BLUE WIRE	L3 (If provided)
WHITE WIRE	L0
GREEN WIRE	GROUND

Tighten cord grip (7) by hand until cable (4) is secure.

Close terminal access cover (6) and secure by turning 1/4 turn screw clockwise.

Plug male end of 25 foot light cord (9) into receptacle marked “LIGHTS ONLY”.

Power from generator may now be applied.

Test each receptacle by pressing the blue button (10) marked “TEST”.

Reset by pressing red button (11) marked “RESET”

Power Cable for the Lightweight Maintenance Enclosure

The LME as used by the Army does not use a 50 foot or 100 foot power cable which has an NSN. The power distribution box was designed to be used with a cable of approximately 25 to 50 feet in length. The cable does not have a connector at either end as the cable is connected to the power distribution box as shown. The same method of wire stripping and connection is used at the generator.

Military cable type CO-04-MGF 4/8 having four (4) conductors of number eight (8) wire size may be used, or the commercial equivalent. Flexible, medium duty commercial type SO having four (4) conductors of wire size number 8 is suitable to connect the power distribution box to the load terminals of the electric power generator.

The attachment of the cable to the power distribution box, generator load terminals and the operation of the electric power generator should be accomplished by a qualified generator operator in accordance with the Technical Manual for the generator being used.

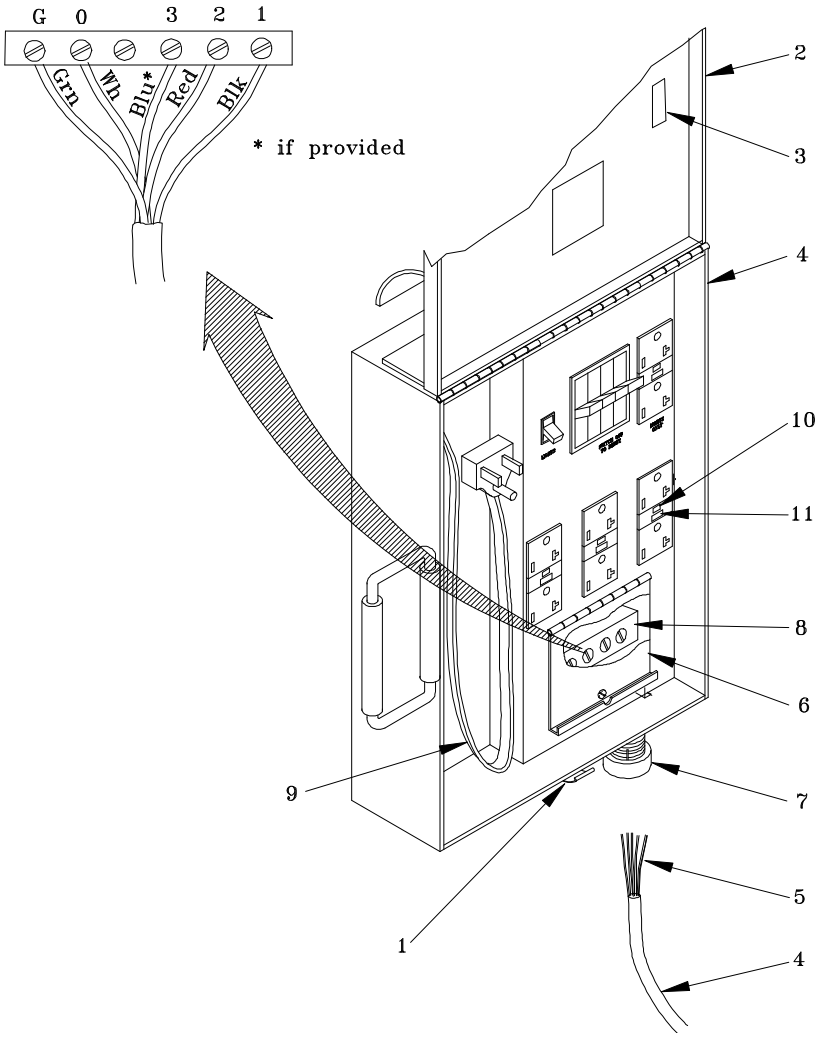

DECALS AND INSTRUCTION PLATES

The following labels, decals, and instruction plates are found on the LME components indicated.

Fabric Panels. Various fabric panels have identification and instruction labels attached as specified below:

The following identification labels are attached to the intermediate fabric panel, the end fabric panel, and the fabric length of extension.

US	Nationality Marking
INTERMEDIATE FABRIC PANEL	Part Nomenclature
DAAK60-97-D-9311	Contract Number
CMC-7893	Part Number
CAMEL MFG CO (80515)	Manufacturer and CAGE
TELE: (423) 562-0527	Manufacturer Phone No.

Transport Covers and Bags. The following identification labels are attached to all fabric and frame transport covers and the pin transport bag.

US	Nationality Marking
FABRIC TRANSPORT COVER	Part Nomenclature
DAAK60-97-D-9311	Contract Number
CMC-7951	Part Number
CAMEL MFG CO (80515)	Manufacturer and CAGE
TELE: (423) 562-0527	Manufacturer Phone No

Frame Assembly. The following identification label is attached to a lower leg of the frame assembly.

US	Nationality Marking
FRAME ASSEMBLY	Part Nomenclature
DAAK60-97-D-9311	Contract Number
CMC-7862	Part Number
CAMEL MFG CO (80515)	Manufacturer and CAGE
TELE: (423) 562-0527	Manufacturer Phone No

An instruction/erection label containing LME component identification, abbreviated setup/strike procedures, as well as WARNINGS and CAUTIONS is located on the inside of each end wall fabric assembly.

LIGHTWEIGHT MAINTENANCE ENCLOSURE (LME)

IDENTIFY ALL PARTS BEFORE PROCEEDING

FOR FURTHER DETAILS SEE TM 10-5410- 284 -13&P

US

SET-UP PROCEDURES

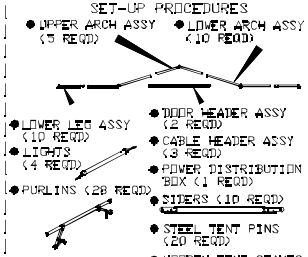

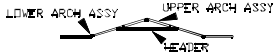

1 ASSEMBLE FRAMES ON GROUND

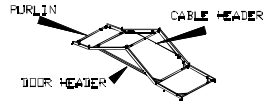

2 BUILD FIRST BAY

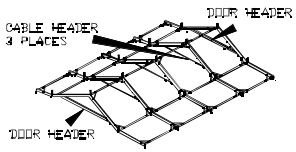

3 COMPLETE ASSEMBLY OF BAYS.

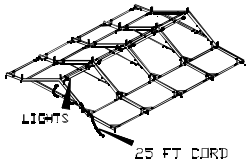

4 INSTALL LIGHT SUPPORT STRAPS. INSTALL AND CONNECT LIGHTS.

5 PLACE TWO INTERMEDIATE FABRIC PANELS ON GROUND AND LACE TOGETHER. ROLL ASSEMBLY LEAVING THE RIDGE GROMMETS EXPOSED. CARRY THE ASSEMBLY TO THE FRAME.

BECKET LACING

UPON REACHING THE LAST BECKET LACE AT THE EAVE, INSERT NEXT-TO-LAST BECKET LACE THROUGH LOOP OF THE LAST BECKET LACE. PULL THE NEXT-TO-LAST BECKET LACE BACK TOWARD THE RIDGE AND TIE OFF WITH A HALF-HITCH KNOT.
FOLLOW THE SAME LACING INSTRUCTIONS WHEN LACING FROM EAVE TO GROUND.

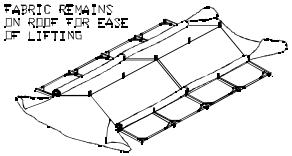

6 PLACE RIDGE GROMMETS OVER RIDGE POSTS. INSTALL END FABRIC PANELS AT THIS TIME. SECURE WITH HITCH CLIP PINS. LACE FROM RIDGE TO EAVE. PULL FABRIC AWAY FROM EAVES TO PREVENT PINCHING DURING LIFTING.

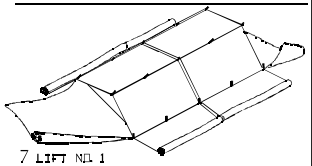

7 LIFT NO. 1

LIFT ONE SIDE. LOCK LOWER ARCH ASSEMBLIES. CONTINUE LACING END FABRIC UNTIL JUST ABOVE MIDWALL PURLINS POSITION, AND ATTACH TO DOOR HEADER. FASTEN VEHICLE DOORS ONTO CARRIERS LOCATED ON THE DOOR TRACK. LACE DRAWCORD LOCATED ON THE VEHICLE DOOR THROUGH THE D-RING ASSEMBLY LOCATED ON THE BOTTOM OF THE DOOR HEADER. PULL INSIDE VALANCE OVER TOP OF THE DOOR HEADER AND FIT AROUND FRAME SIDE ARCH. FASTEN TO END WALL WITH HOOK AND PILE FASTENERS.

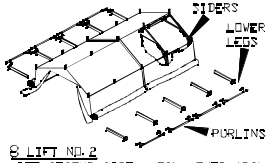

8 LIFT NO. 2

LIFT SECOND SIDE. LOCK LOWER ARCH ASSEMBLIES, CONTINUE LACING, INSTALL SIDER ASSEMBLIES.

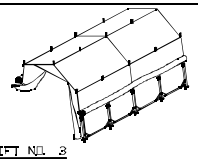

9 LIFT NO. 3

LIFT ONE SIDE, INSTALL LOWER LEGS AND LOCK INTO POSITION. INSTALL PURLINS AT BASE.

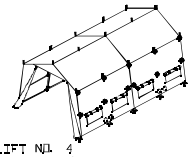

10 LIFT NO. 4

LIFT SECOND SIDE, INSTALL LOWER LEGS AND LOCK INTO POSITION. LOWER FRAME AND INSTALL BASE PURLINS. INSTALL 2 EACH 18 INCH STEEL PINS IN LOWER LEGS. SECURE FABRIC TO BASE PURLINS AND TO MID-WALL PURLINS, BOTH SIDES. INSTALL POWER DISTRIBUTION BOX AND CONNECT TO LIGHTS. MAKE SURE THE BASE OF THE LME MEASURES 23' 11 5/16' FROM OUTSIDE OF SIDE ARCH TO OUTSIDE OF SIDE ARCH FOR PROPER FIT.

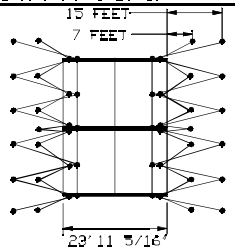

11 INSTALL 24 INCH WOODEN TENT STAKES, AND ATTACH GUY LINES. INSTALL 16 INCH WOODEN TENT STAKES THROUGH FOOT STRPS. COVER GROUND CLOTH WITH DIRT OR SAND. CONNECT EXTERNAL POWER.

US

WARNING

POSSIBILITY OF EXHAUST FUMES COULD EXIST, CAUSING LIFE THREATENING SITUATION.

CAUTION

TENT MUST BE OPERATED IN ACCORDANCE WITH TECHNICAL MANUAL OR LIFE THREATENING CONDITIONS MAY OCCUR.

WARNING

THIS TENT IS NOT A HAVEN IN A STORM. EVACUATE IN CASE OF HIGH WINDS.

WARNING

KEEP ALL FLAME AND HEAT SOURCES AWAY FROM THIS TENT FABRIC. THIS TENT MEETS THE FLAMMABILITY REQUIREMENT OF CFAI-84. THE FABRIC MAY BURN IF LEFT IN CONTINUOUS CONTACT WITH ANY FLAME SOURCE. THE APPLICATION OF ANY FOREIGN SUBSTANCE TO THE TENT FABRIC MAY RENDER THE FLAME-RESISANT PROPERTIES INEFFECTIVE.

MANUFACTURED BY:
CAMEL MFG CO.
CAGE CODE 80513
PIONEER, TN, 37847
TEL. (423)562-0527

STRIKE PROCEDURES

1. IDENTIFY AND LOCATE TRANSPORT BAGS AND COVERS
2. DISCONNECT EXTERNAL ELECTRICAL POWER TO POWER DISTRIBUTION BOX.
3. DISCONNECT LIGHT STRING CORD FROM POWER DISTRIBUTION BOX AND REMOVE POWER DISTRIBUTION BOX FROM TENT.
4. RELEASE GUYLINES AND DISCONNECT FROM TENT STAKES.
5. REMOVE WOODEN STAKES AND STEEL TENT PINS, CLEAN AND PLACE IN PIN TRANSPORT BAGS.
6. UNBUCKLE FABRIC FROM PURLINS INSIDE STRUCTURE AT BASE AND MIDWALL LOCATIONS.
7. UNLACE FABRIC ASSEMBLIES AT BOTH ENDS, AND AT THE JOINING OF THE INTERMEDIATE SECTIONS.

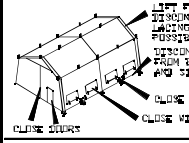

8. REMOVE LOWER PURLINS AT THE BASE ON ONE SIDE ONLY.
9. ROLL SIDE WALL FABRIC UP TO MIDWALL HEIGHT, AND SECURE WITH STRAPS, (BOTH SIDES).

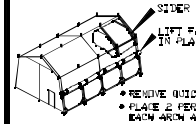

- REMOVE QUICK RELEASE PINS
- PLACE 2 PERSONNEL AT EACH ARCH ASSEMBLY.
- LIFT ONE SIDE, REMOVE LOWER LEGS, AND LOWER SIDE TO GROUND
- REPEAT FOR OTHER SIDE

10. AFTER LOWERING SECOND SIDE, REMOVE ALL SIDER ASSEMBLIES.
11. CONTINUE TO UNLACE FABRIC AT BOTH ENDS AND MIDDLE OF THE TENT.
12. REMOVE QUICK RELEASE PINS, LOWER ONE SIDE TO THE GROUND.
13. REPEAT STEPS 11 & 12 OPPOSITE SIDE.
14. UNLACE END FABRIC SECTION FROM INTERMEDIATE SECTION AT RIDGE OF TENT.
15. REMOVE FABRIC ENDS & INTERMEDIATE SECTIONS FROM FRAME ASSY, CLEAN, DRY, RE-FOLD & PACK IN PROPER TRANSPORT COVERS.

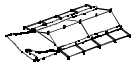

- ROLL FABRIC TO EAVES, DISCONNECT ALL BECKET LACING.
- LOWER SIDE TO GROUND.
- REPEAT FOR OTHER SIDE.

16. REMOVE LIGHTS & LIGHT STRAPS & PACK IN FOLDS OF FABRIC ASSEMBLIES, 2 PER ASSEMBLY. PACK EXTENSION CORDS IN POWER DISTRIBUTION BOX AND PACK IN TRANSPORT BAG. DISASSEMBLE FRAME FROM GROUND TO RIDGE AND PACK IN PROPER COVERS.

- DISASSEMBLE FRAME FROM GROUND TO RIDGE AND FROM END TO END.

Power Distribution Box. The following warning, instruction, and identification labels are attached to the power distribution box.

POWER DISTRIBUTION BOX
MODEL AM 2526
VOLTS: 120 VAC
MAXIMUM LOAD: 70 AMPS
CAMEL MFG CO.
176 LUTHER SEIBER LANE
PIONEER, TN, 37847, USA

OUTSIDE SURFACE OF COVER

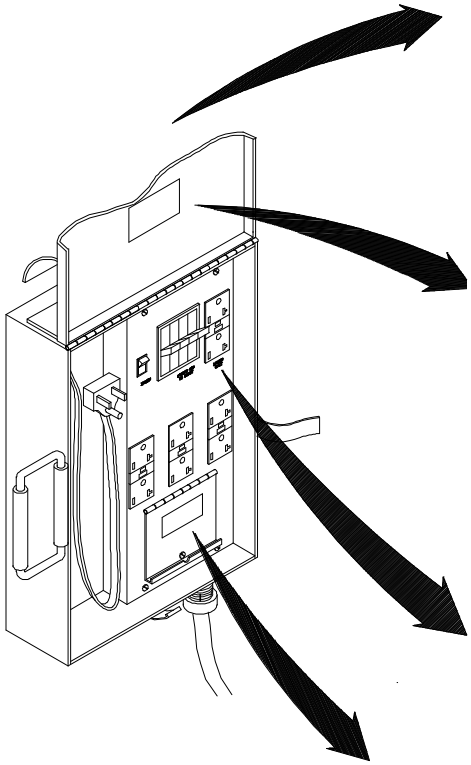

US MFG DATE CODE
CONTRACT #DAAK6097D9311
CAGE CODE 80515

CAMEL MFG CO.
176 LUTHER SEIBER LANE
PIONEER, TN, 37847, USA

LIGHTS	**SWITCH OFF TO RESET**	**LIGHTS ONLY**

WARNING: POTENTIAL SHOCK HAZARD!
BE SURE POWER SUPPLY TO THIS
UNIT IS OFF BEFORE SERVICING.
DO NOT INSERT OR REMOVE PLUGS
UNDER DAMP OR WET CONDITIONS.

Light Set. The following combination identification, instruction, and caution label is attached to each individual light.

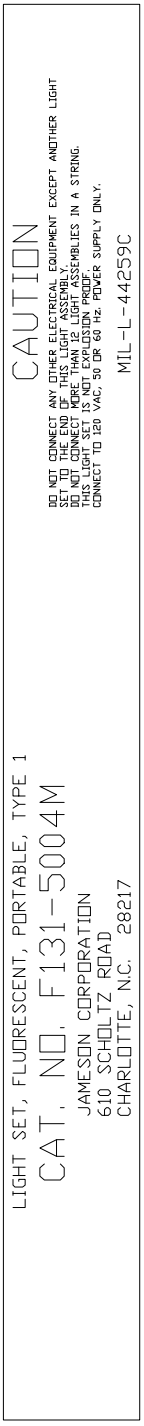

OPERATING PROCEDURES

CAUTION

The LME should not be operated with one end closed and one open. This causes a “wind sock” effect and can cause damage to the structure.

Operation of Doors. Personnel and vehicle doors are located at each end of the structure. These can be rolled to the inside and secured open with attached buckles if desired,0 or left closed in inclement weather or blackout conditions.

Operation of Windows. Four windows are located on each side of the structure. These consist of three layers: a fabric cover on the outside, a screen on the inside, and a clear plastic window in the middle. The fabric cover and the plastic windows are closed by hook and pile fasteners. The fabric cover can be held open with tie tapes. These must be rolled up towards the inside to prevent rain from being trapped within the folds.

Operation of Power Distribution Box. The operation of the power distribution box, once connected to a power source, consists of the following:

Operation of the interior lights using the LIGHTS switch. After the 25 ft light cord has been connected to the receptacle marked LIGHTS ONLY, the interior lights are turned on and off using this switch.

Operation of the circuit breakers. The circuit breakers are operated to reset the breakers that may have tripped due to circuit overload or short.

Operation of the “LIGHTS ONLY” receptacle. The 25 ft light cord is plugged into this receptacle only. It must be connected before the lights can be operated with the LIGHTS switch.

Operation of the utility receptacles. Electrical equipment and power tools operating on 120V may be plugged into these receptacles.

Operation of Lights. The lights are operated using the LIGHTS switch located in the Power Distribution Box.

PREPARATION FOR MOVEMENT

In preparation for striking of the LME, locate and identify all transport covers and light set storage containers. Place them within easy reach.

Preparation for Striking. Turn off all power distribution box circuit breakers (1). Disconnect external power supply at the source, then disconnect the external power supply cable (2) from the power distribution box (3). Remove power distribution box, close personnel doors (4) and windows (5) on the LME. Ensure vehicle doors are unfastened.

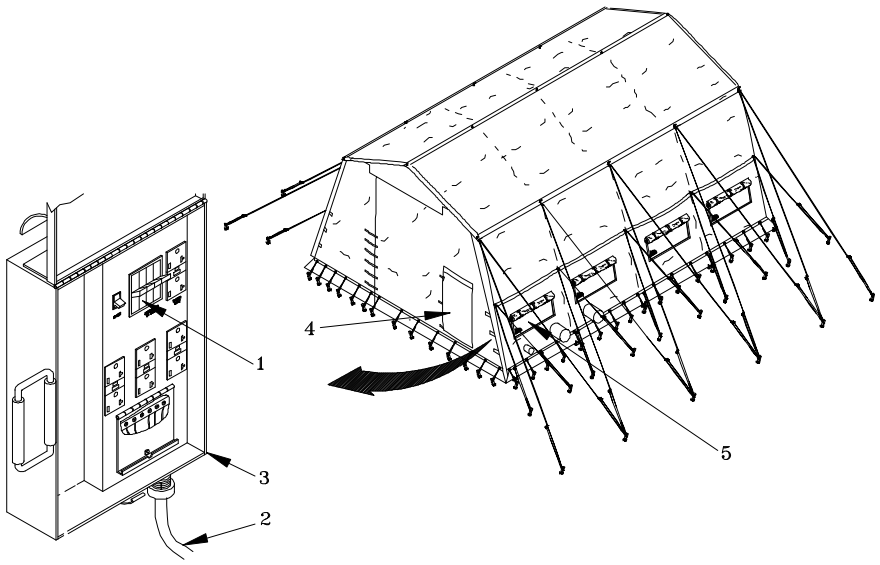

WARNING

To carry the fabric assemblies and lower the frame structure requires 12 persons. Serious injuries may result if less than 12 persons attempt these tasks. All lowering should be done on command, using proper liftinfg techniques to prevent injury to personnel.

WARNING

Failure to remove quick release quick release pins when instructed to do so may result injury to personnel.

CAUTION

The structure must be lowered uniformly. Do not twist or turn frame components when handling. Damage to equipment may result. Ensure all quick release pins in the arch assemblies are disengaged before lowering.

Striking the LME. Release the guy lines (1) and disconnect them from the wooden stakes (2). Coil the guy lines (1). Remove the wooden guy line stakes (2), the wooden stakes securing the bottom of the fabric assemblies to the ground (3) and the steel tent pins (4) from the frame feet (5). Clean the stakes and pins and place them in their pin transport bags (6).

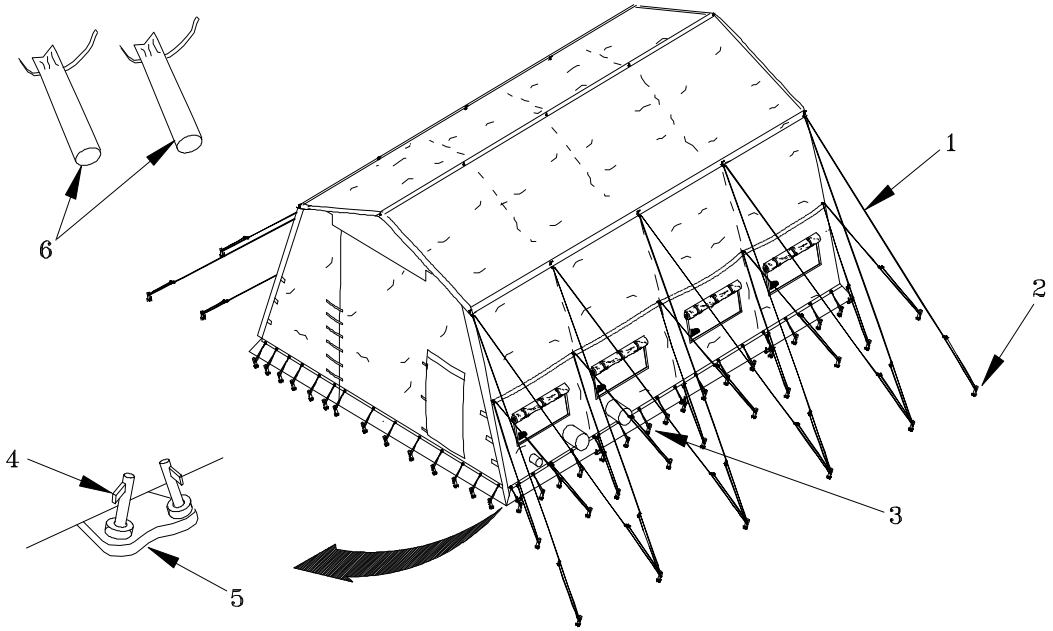

Unbuckle the fabric panels (1) from the base (2) and mid-height purlins (3) on the inside of the structure. Unlace the end fabric panel (4) at the joining of the intermediate and end fabric panels.

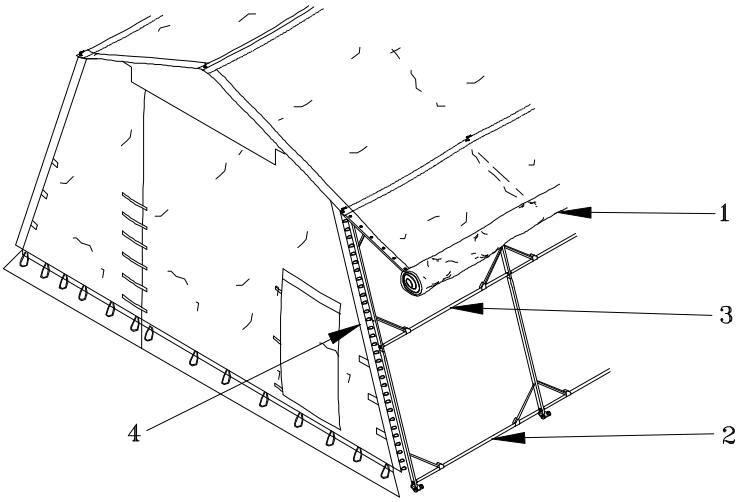

WARNING

To carry the fabric assemblies and lower the frame structure requires 12 persons. Serious injuries may result if less than 12 persons attempt these tasks. All lowering should be done on command, using proper liftinfg techniques to prevent injury to personnel.

WARNING

Failure to remove quick release quick release pins when instructed to do so may result injury to personnel.

CAUTION

The structure must be lowered uniformly. Do not twist or turn frame components when handling. Damage to equipment may result. Ensure all quick release pins in the arch assemblies are disengaged before lowering.

Roll both side walls (1) up to mid-height and secure them with the straps (2) and buckles (3) provided. Remove the base purlins (4) on the side of the structure being lowered to the ground. Then remove the quick release pins (5) holding the lower leg assemblies (6).

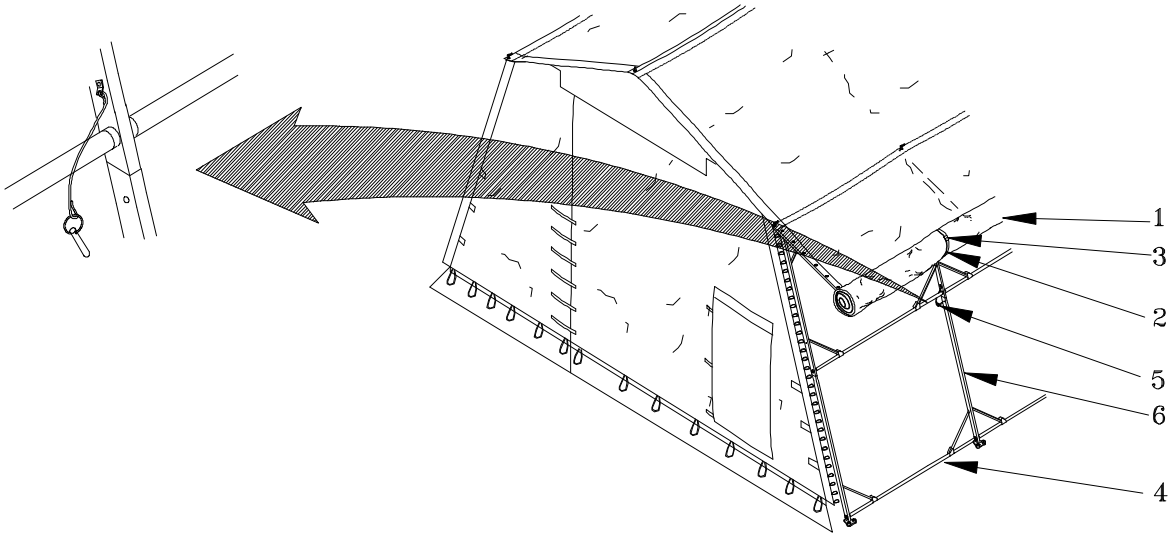

Gather personnel at the arch frame assemblies (1) and**,** on command, lift one side of the structure off the ground. Remove the lower leg assemblies (2) and lower the structure to the ground. Clean the legs (2) if necessary and pack them in the proper transport cover (3). Move personnel to the opposite side of the structure and repeat the procedure.

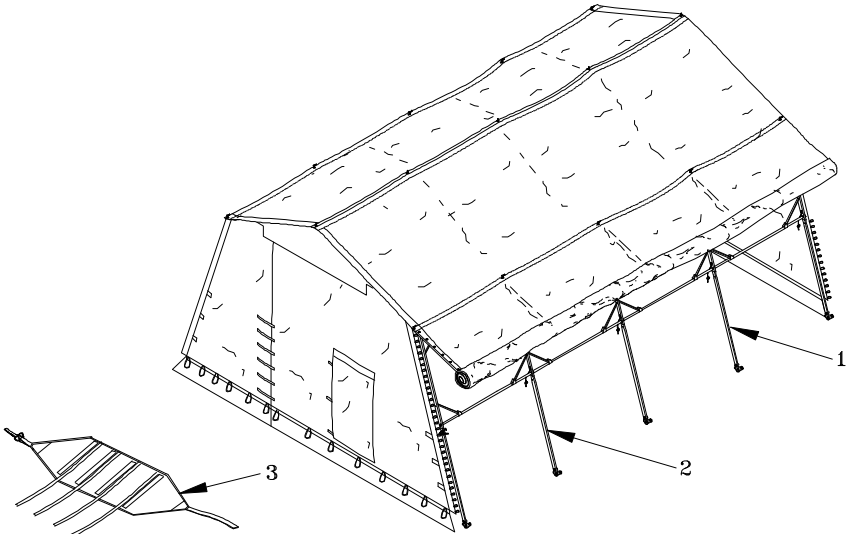

WARNING

To carry the fabric assemblies and lower the frame structure requires 12 persons. Serious injuries may result if less than 12 persons attempt these tasks. All lowering should be done on command, using proper liftinfg techniques to prevent injury to personnel.

WARNING

Failure to remove quick release quick release pins when instructed to do so may result injury to personnel.

CAUTION

The structure must be lowered uniformly. Do not twist or turn frame components when handling. Damage to equipment may result. Ensure all quick release pins in the arch assemblies are disengaged before lowering.

Unlace the end fabric panels (1) at the eaves from the intermediate fabric panels (2) at both ends of the structure. Remove all hitch clip pins (3) at the eaves (4), and roll the fabric (2) up onto the roof from both sides. Pull the fabric away from the eaves (4) to avoid pinching.

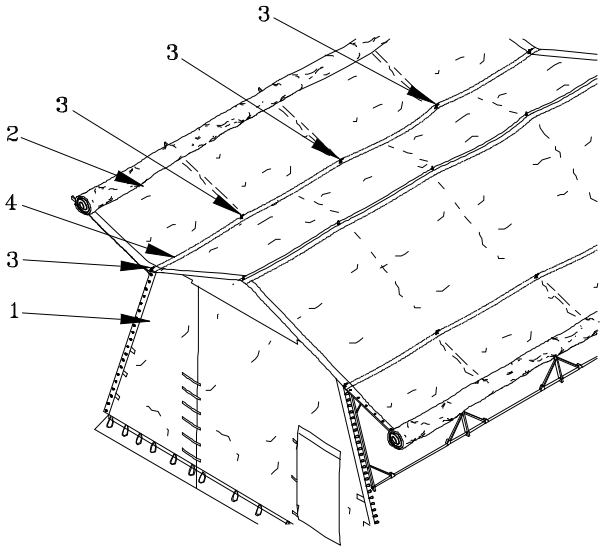

Remove all sider assemblies (1). Remove the quick release pins in the lower arch assemblies (2) on one side of the structure.

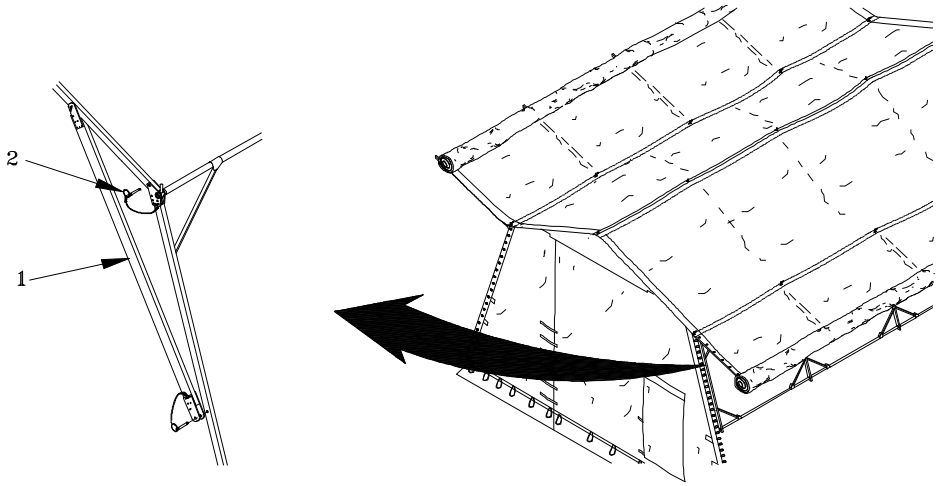

WARNING

Be sure to place personnel on theoutside of the frame beyond the bottom purlin before lifting the lower arch assembly legs as injury to personnel may result.

On command, lift one side (1) of the structure off the ground and swing the lower arch assembly legs (2) out. Lower the structure to the ground. Repeat the procedure on the other side.

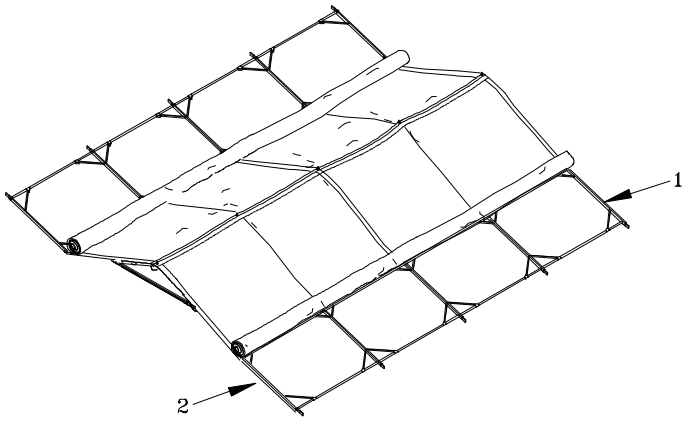

Remove the end fabric panels (1) at this time by disconnecting the remaining becket lacing (2), and lifting the ridge grommet (3) off the ridge post (4). Remove the end fabric panel to a clear area to be cleaned and folded.

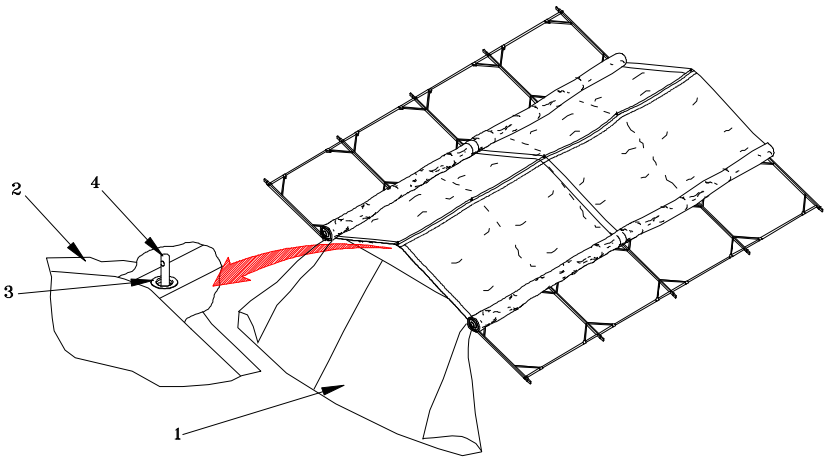

Roll the intermediate fabric panels (1) toward the ridge (2), disconnecting the becket lacing (3) while rolling the fabric. When within reach of the ridge, remove the ridge hitch clip pins (4) in the ridge posts (5).

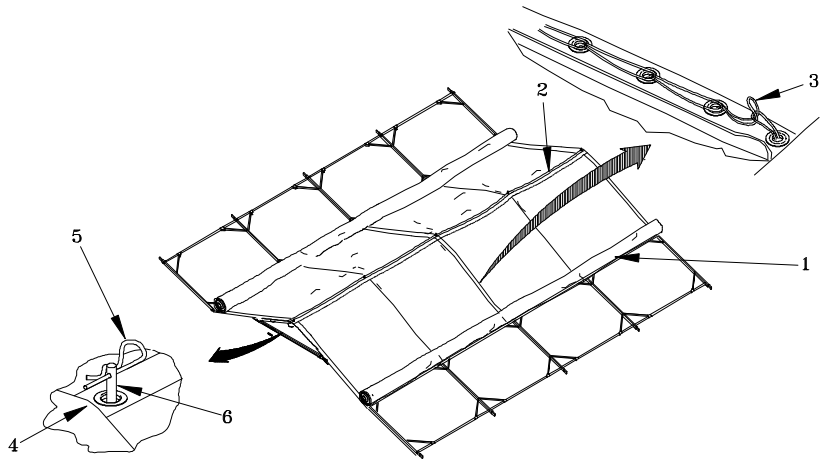

On command, lift the fabric panels (1) off the ridge posts (2). Stepping carefully through the frame (3), carry the fabric panels away from the structure. Pack the panels in their proper transport covers (4). The contents of each cover are clearly marked, both on the inside and outside of the cover. Unplug the 25' power cord (5) from the light string, unwrap it from the frame, and pack it in the power distribution box (6).

Pack the power distribution box (6) into its foam cushions (7), and then into its transport bag (8).

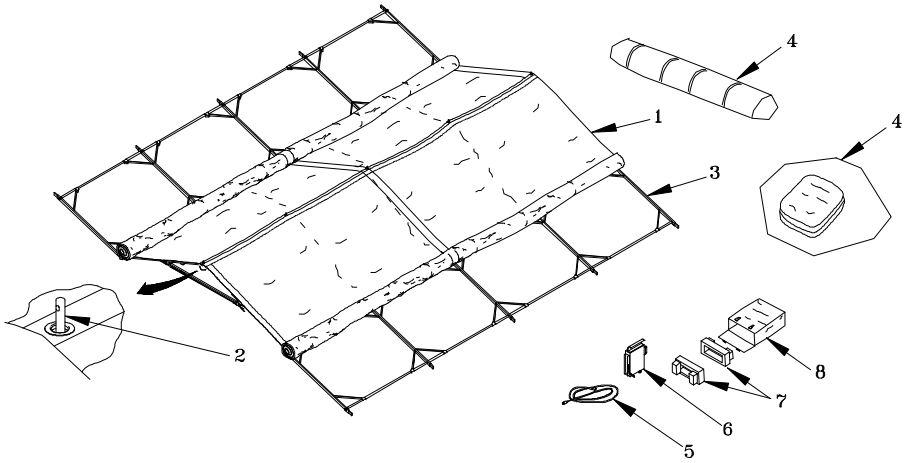

OPERATION UNDER USUAL CONDITIONS

Stepping into the frame structure, unplug all lights (1) in the light string. Disconnect the light support straps (2) supporting one light and place the light into the folds of the fabric sections (3). Remove the light support straps (2) from the purlin and wrap them around the lights, two per light. Repeat the procedure for all other lights, taking care not to damage them when removing them from the frame structure.

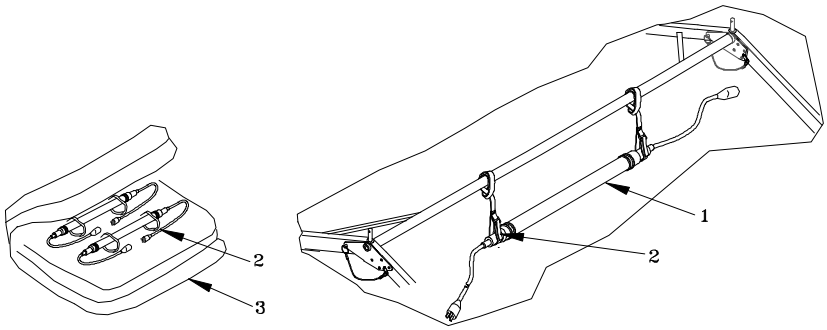

WARNING

Ensure sufficient personnel are available and placed properly to prevent any frame assemblies from falling when being disassembled. Use care when carrying or swinging assemblies around or carrying them to their transport bags. Be aware of personnel nearby to avoid injury.

The frame structure is disassembled from the ground to the ridge and from end to end. Remove the purlins (1) at the eaves (2), then remove the header assemblies (3). Remove the ridge purlins (4) ensuring personnel are in place to lower the arch assemblies (5) to the ground. Ensure that all packed transport covers are collected at one location and ready for shipment or storage.

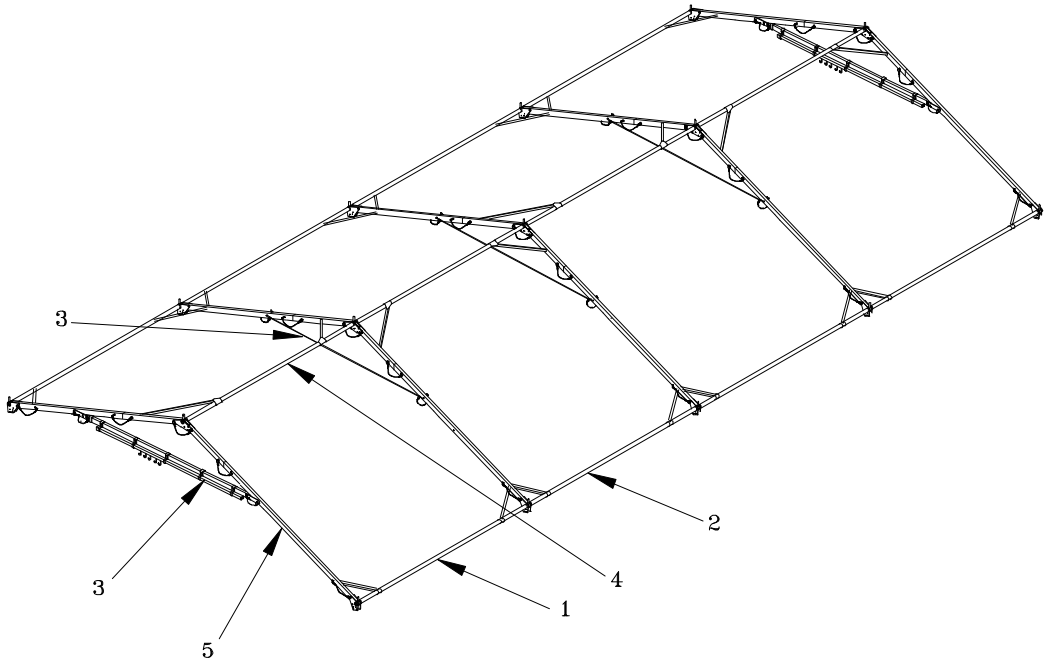

Storage and Shipment. If the LME is being prepared for storage, ensure that all components are clean and dry before packing them into the transport bags. Assemble and inventory all components using the components of end item listing (Work Package 0029) of this manual. After all components are accounted for, pack the transport bags into the shipping crate in which the LME was delivered, or a suitable substitute. Store the crate in a dry place if possible.

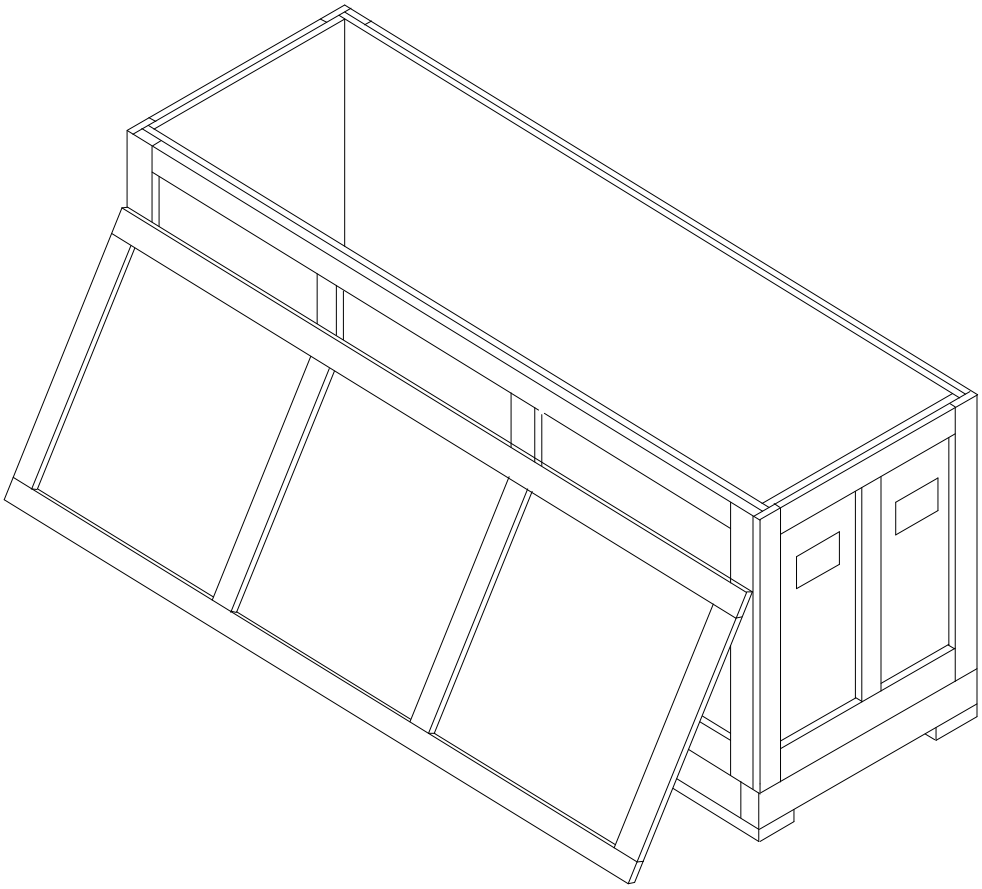

OPERATION IN UNUSUAL ENVIRONMENT/WEATHER CONDITIONS

Precautions can be taken to lessen the effect of unusual and potentially dangerous weather or other environmental conditions. The following steps are designed to prevent damage to the LME and avoid possible injury to personnel.

High winds. During operation in windy conditions:

* Check that all guy lines are in place, taught, and securely staked.
* Close and secure all doors and windows.
* Ensure bottom of intermediate and end fabric sections are staked securely to the ground.
* Check steel pins in the frame assembly feet for security.
* Frequently check tent pins and guy lines.

CAUTION

The LME should not be operated with one end closed and one open.
This causes a “wind sock” effect and can cause damage to the structure.

Rain/Wet Climate. During operation in rain and in wet climates:

* Close and secure all doors and windows.
* Repair known leaks in the fabric sections before heavy rains using the LME repair kit. (Refer to Appendix A).
* Keep guy lines relatively loose to allow for shrinkage due to dampness, unless high winds are also expected.
* Check the condition of the power distribution box frequently. If box is wet due to leaks, disconnect power.
* To minimize the effects of potential flooding, dig a trench around the LME to evacuate excess water.

Snow and extreme Cold.

* Remove snow from the roof using a snow rake (Refer to Paragraph 6.14). Gently push up on the roof from inside to remove snow that may have accumulated.
* Close and secure all doors and windows.
* When setting up the LME on snow covered ground, either remove snow or tamp it down to provide a firm footing.

Extreme Heat.

* Open all doors and tie them back.
* Open all windows and tie up the flaps.

Damaged or Bent Purlins.

*A ridge or eave purlin that has been damaged or bent but is still servicable should be moved to the lower part of the structure and used as a base purlin.

END OF WORK PACKAGE

CHAPTER 3

OPERATOR TROUBLESHOOTING PROCEDURES FOR LIGHTWEIGHT MAINTENANCE ENCLOSURE

LIGHTWEIGHT MAINTENANCE ENCLOSURE (LME)

TABLE OF CONTENTS

Subject	Page
MALFUNCTION SYMPTOM INDEX	0007 00-1
TROUBLESHOOTING PROCEDURES	0007 00-1
GENERAL INFORMATION	0007 00-1
No power at distribution box	0008 00-1
Lights inoperative	0008 00-2
Power outlets inoperative	0008 00-3
LME leaking	0008 00-4
LME will not stay taut	0008 00-5

MALFUNCTION SYMPTOM INDEX

The malfunction/symptom index is a quick reference index for finding troubleshooting procedures. Associated with each symptom name is a procedure sequence number representing the starting point in a troubleshooting sequence. Should any one symptom require more than one troubleshooting sequence to arrive at the most likely area of investigation, the additional starting point numbers are also provided.

As the troubleshooting activity progresses through to the conclusion of a particular sequence, a reference is made to the next logical troubleshooting sequence by procedural sequence number or by referring to the malfunction/symptom index to locate the next failure symptom procedure. This type of activity continues until successful fault isolation is achieved.

TROUBLESHOOTING PROCEDURES.

The troubleshooting procedures contain tables listing the malfunctions, tests or inspections, and corrective action required to return the LME to normal operation. Perform the steps in the order they appear in the tables.

Each procedure is headed by an initial setup. This setup outlines what is needed as well as certain conditions which must be met before starting the task. DO NOT START THE TASK UNTIL:

You understand the task

You understand what you are to do

You understand what is needed to do the work

You have the things you need

This manual cannot list all malfunctions that may occur, or all tests or inspections and corrective actions. If a malfunction is not listed or is not corrected by listed corrective actions, notify unit maintenance.

GENERAL INFORMATION.

If any circuit breaker on the power distribution box activates after having been pushed in, notify unit maintenance. There are no lubrication requirements for the LME.

MALFUNCTION/SYMPTOM	TROUBLESHOOTING PROCEDURE
No power at distribution box	1
Lights inoperative	2, 1
Power outlets inoperative	3, 1
LME leaking	4
LME will not stay taut	5

END OF WORK PAKAGE

LIGHTWEIGHT MAINTENANCE ENCLOSURE (LME) **0008 00**
TROUBLESHOOTING PROCEDURES

1. THIS PROCEDURE COVERS:
No power at distribution box

INITIAL SETUP:

Maintenance Level	Materials/Parts
Operator	None

Table 0008 00-1. Troubleshooting Procedures.

MALFUNCTION	TEST OR INSPECTION	CORRECTIVE ACTION
No power at power distribution box.	**WARNING** Lethal voltage is present when the power distribution box is connected to a power source. Disconnect the power source before touching any wires in the box.	
	1. Check external power supply to distribution box and proper connection to terminal block.	1. Ensure an external power source (commercial or generator, providing 110V AC) is properly connected to distribution box terminal block. Refer to Work Package 0005 00.
	2. Check circuit breakers.	2. Reset circuit breakers.
		3. If condition persists, notify unit maintenance.

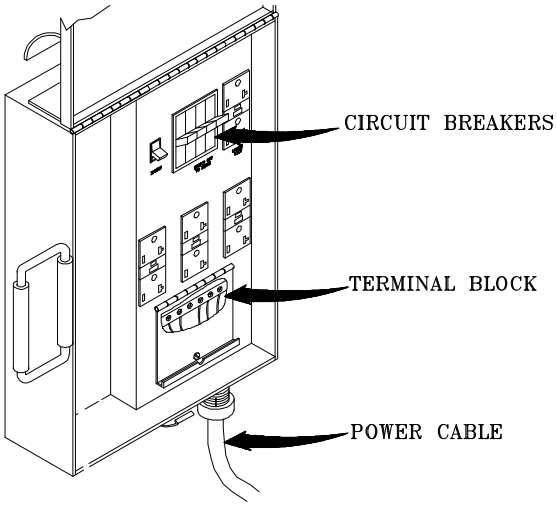

2. THIS PROCEDURE COVERS:
Lights inoperative

INITIAL SETUP:

Maintenance Level	Materials/Parts
Operator	Bulb, 50 watt, double tube, 4 pin

Table 0008 00--1. Troubleshooting Procedures - Continued

MALFUNCTION	TEST OR INSPECTION	CORRECTIVE ACTION
Lights inoperative	**WARNING** Lethal voltage is present when light set is connected to power source. Disconnect power before inspecting or repairing any part of the light set.	
	1. If all lights are inoperative, check external power and cable connection to distribution box as in procedure 1.	1. Ensure an external power source (commercial or a generator providing 110V AC) is connected to distribution box. Refer to Work Package 0005-00
	2. Check light circuit breaker at distribution box.	2. Reset light circuit breaker.
	3. If only individual light(s) are inoperative, check the power cable(s) for proper connection.	3. Reconnect power cable(s) correctly.
	4. Check fluorescent bulbs on individual, inoperative lights.	4. Replace fluorescent bulbs on individual, inoperative lights. Refer to Work Package 0020 00.
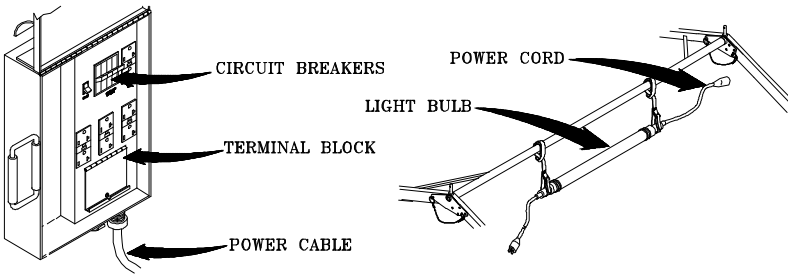		5. If condition persists or light circuit breaker activates repeatedly, notify unit maintenance.

3. THIS PROCEDURE COVERS:

Power outlets inoperative

INITIAL SETUP:

Maintenance Level	Materials/Parts
Operator	None

Table 0008 00-1. Troubleshooting Procedures - Continued

MALFUNCTION	TEST OR INSPECTION	CORRECTIVE ACTION
1. Power outlets inoperative.	**WARNING** Lethal voltage is present when the power distribution box is connected to a power source. Disconnect power before touching any wires in the power box.	
	1. If all power outlets are inoperative, check external power connection to distribution box as in procedure 1.	1. Ensure an external power source (commercial or a generator providing 110V AC) is connected to distribution box.
	2. Check power outlet circuit breakers.	2. Reset power outlet circuit breakers.
		3. If condition persists or power outlet circuit breakers activate repeatedly, notify unit maintenance.

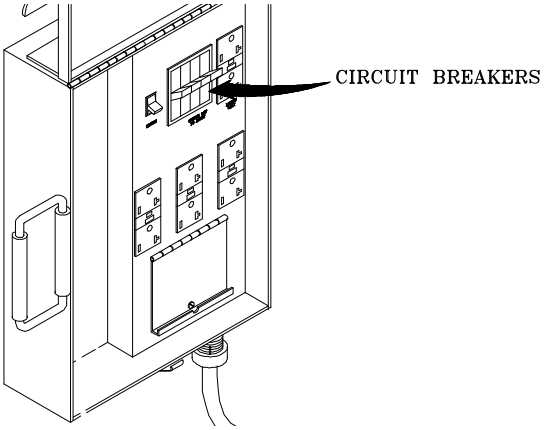

4. THIS PROCEDURE COVERS:
LME leaking

INITIAL SETUP:

Maintenance Level	Materials/Parts
Operator	LME Repair Kit

Table 0008 00-1. Troubleshooting Procedures - Continued

MALFUNCTION	TEST OR INSPECTION	CORRECTIVE ACTION
1. LME leaking.	1. Inspect fabric sections for rips, tears, or improperly secured wind flaps and doors.	1. Repair any rips and tears in fabric sections located within working height with the LME tent repair kit. Follow the directions in Work Package 0018 00. 2. Secure doors, and wind flaps within working height properly.
		3. If rips, tears or improperly installed windflaps above working height are causing the leaks, notify unit maintenance.

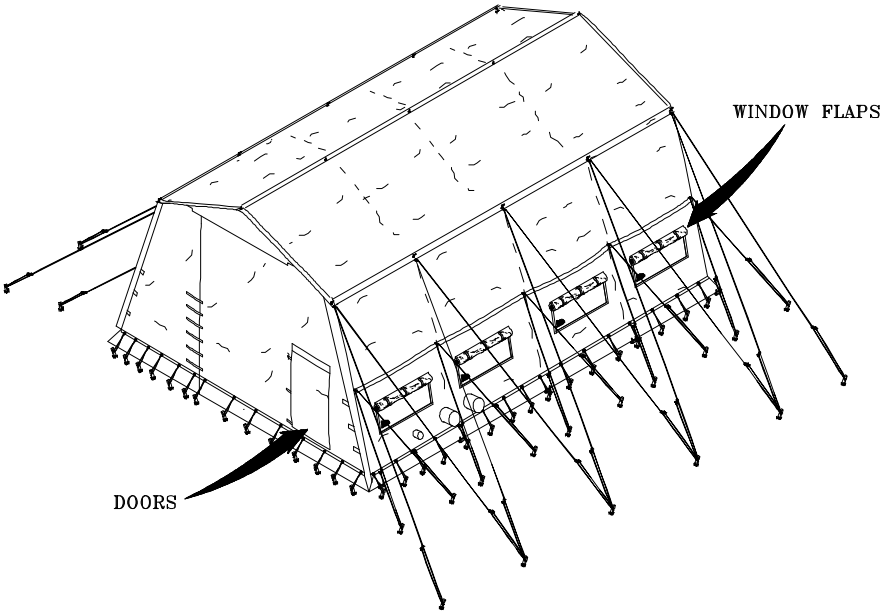

5. THIS PROCEDURE COVERS:
LME will not stay taut

INITIAL SETUP:

Maintenance Level	Materials/Parts
Operator	Sledgehammer

Table 0008 00-1. Troubleshooting Procedures - Continued

MALFUNCTION	TEST OR INSPECTION	CORRECTIVE ACTION
1. LME will not stay taut	1. Inspect guy lines and tent pins for security and proper attachment.	1. Re-secure and/or tighten loose guy lines. Reanchor loose tent pins as required.
		2. If condition persists, notify unit maintenance.

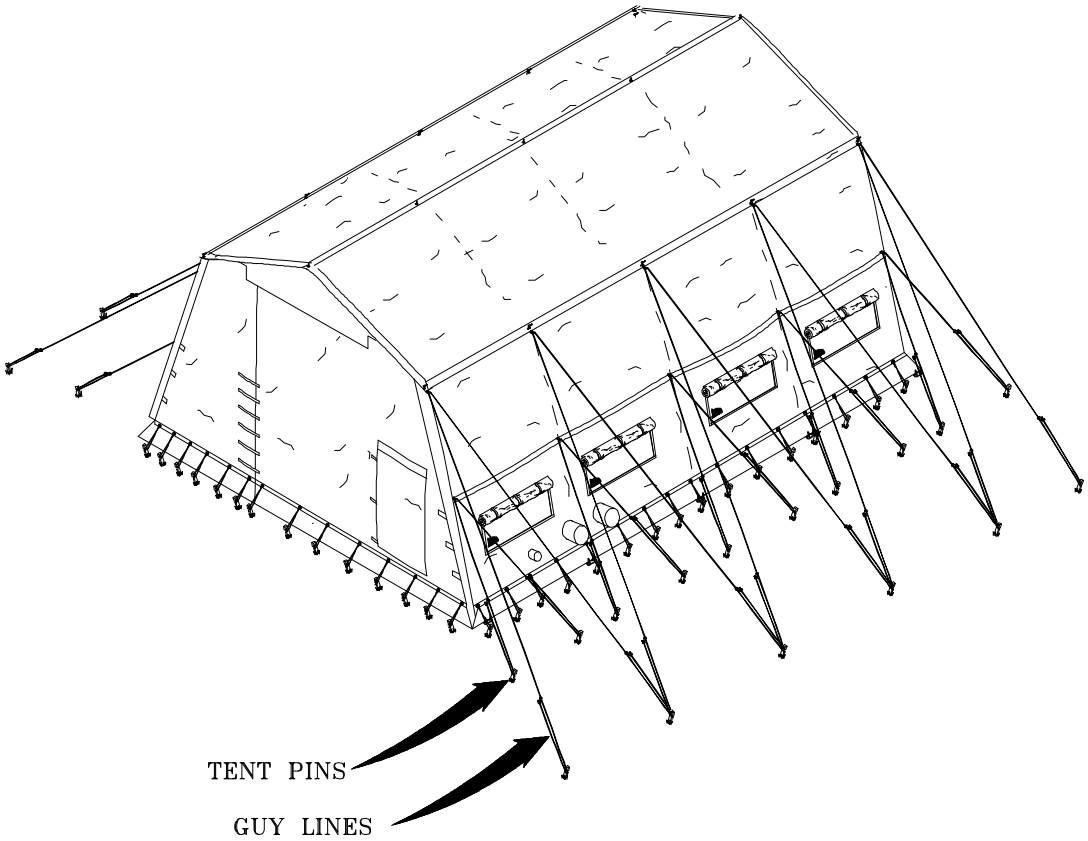

END OF WORK PACKAGE

CHAPTER 4

UNIT MAINTENANCE INSTRUCTIONS FOR LIGHTWEIGHT MAINTENANCE ENCLOSURE

LIGHTWEIGHT MAINTENANCE ENCLOSURE (LME)
TABLE OF CONTENTS

Subject	Page
UNPACKING	0009 00-1
INSPECTION (SHIPMENT)	0009 00-1
INTRODUCTION (PREVENTIVE MAINTENANCE CHECKS AND SERVICES)	0010 00-1
INSPECTION	0010 00-1
LUBRICATION SERVICE INTERVALS	0010 00-2
CLEANING	0010 00-2
UPPER ARCH ASSEMBLY	0011 00-1
LOWER ARCH ASSEMBLY	0012 00-1
LOWER LEG ASSEMBLY	0013 00-1
DOOR HEADER ASSEMBLY	0014 00-1
CABLE HEADER ASSEMBLY	0015 00-1
SIDER ASSEMBLY	0016 00-1
PURLIN	0017 00-1
FABRIC ASSEMBLY, END PANEL	0018 00-1
FABRIC ASSEMBLY, INTERMEDIATE SECTION	0019 00-1
EXTENSION OF LENGTH	0020 00-1
FOOT LOOP	0021 00-1
LIGHTS	0022 00-1
POWER DISTRIBUTION BOX	0023 00-1
TRANSPORT COVERS AND BAGS	0024 00-1

LIGHTWEIGHT MAINTENANCE ENCLOSURE (LME) **0009 00**
SERVICE UPON RECEIPT

THIS SECTION COVERS:
Unpacking and Inspection

INITIAL SETUP

Tools and Special Tools
Crowbar
Forklift (4,000 lbs.)
Hammer, Claw
Band Cutter
Materials/Parts
None

Personnel Required
Fork Lift Operator
8 Personnel (Non MOS specific)

UNPACKING

The LME is shipped in one wooden box (Fig 0009 00-1) atop a permanently attached four-way entry wooden skid. Its dimensions are 102.5 inches long, 44.5 inches high, and 41.5 inches wide, with a cube of 109 ft^3. The box contains the LME components packed into the transport covers and bags. A 4,000 lb fork lift is required to move the box. The following Warning (1) and Caution (2) are stenciled onto the box:

WARNING

When end loading and unloading is required, LONG FORKS must be used. Serious injury to personnel may result from imbalanced load.

CAUTION

When stacking, assure boxes are square. Damage to the container and equipment will result from structural failure of box.

Using a forklift, place the box (Fig 0009 00-1) containing the LME into an open area preferably under cover and with sufficient space to facilitate unpacking.

INSPECTION

Conduct a walk-around inspection of the box, noting any damage sustained during shipping or handling. Use criteria in Table 0009 00-1. Report all discrepancies in accordance with DA PAM 738-750.

Using a bandcutter, crowbar, and claw hammer, open the box carefully without destroying it, so that it can be re-used. Unpack the box and inventory its contents against the packing slip to see if the shipment is complete. Also inspect the equipment for damage incurred during shipment. Use criteria in Table 0009 00-2. If the equipment has been damaged, report the damage on SF 361, Transportation, Discrepancy Report, or SF 368, Quality Deficiency Report.

Check the equipment to see if it has been modified. If so, notify your supervisor.

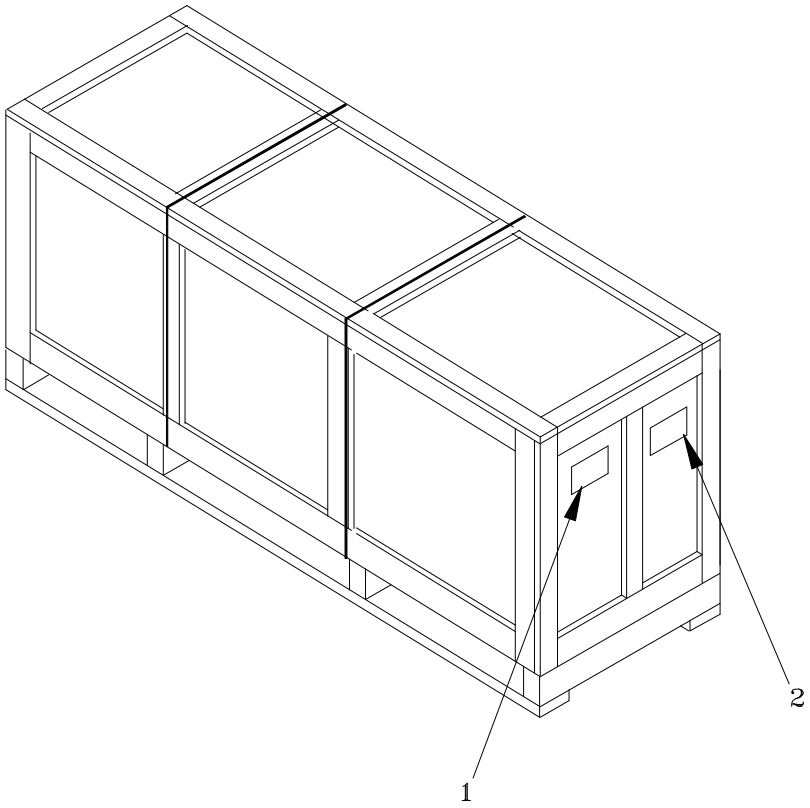

Figure 0009 00-1 Unpacking the LME

Table 0009 00-1 Inspection Criteria for Packaging

COMPONENT	ACCEPTABLE	REPARABLE	NON-REPARABLE
WOODEN BOXES AND CRATES			
Hardware	Operative and tight. Nails, screws, and strapping present and in good condition.	Inoperative or loose. Nails, screws, and strapping that can be replaced or sealed.	None
Ends	Free from damage.	Broken or missing nails and bands.	Damage that requires disassembly of box.
Wood	Splits less than three inches long, no closer than 1 inch to edge of board or adjoining split. The board must be secured by at least one nail on each side of the split when it extends to the end of the board.	Splits more than three inches but no closer than 1 inch to edge of board or adjoining split, or ½ inch wide, that can be repaired by use of corrugated fasteners.	Splits closer than 1 inch to edge of board or adjoining split or over ½ inch wide.
FABRIC AND FRAME TRANSPORT COVERS AND TENT PIN BAG			
Covers and Bags	Fabric has rips or tears less than ½ inch long and at least 1 inch away from a seam. All seams are tightly closed.	Fabric has rips or tears more than ½ inch long and at least 1 inch away from a seam. Some seams are not tightly closed or have thread remnant attached.	Rips and tears not reparable with LME repair kit.
Handles	Handles are securely attached.	Handles have some loose stitching or thread remnants.	Handles are not reparable with tentage repair kit.

Table 0009 00-2 LME Component Inspection.

LOCATION	ITEM	ACTION	REMARKS
1. Fabric Covers	Fabric Sections	1. Inspect for rips, tears, open seams and condition of hook and pile fasteners, loose or missing grommets or missing/ripped becket loops and fabric discoloration. 2. Inspect for damage to or improper attachment of window components or vehicle door curtain mechanism. Reject a fabric section that cannot be repaired with a tentage repair kit.	
2. Frame Covers	Frame Sections	Inspect frame sections for damage such as bents and deformations, missing parts, corrosion or loose hardware. Reject a frame section that does not unfold properly, or has any of the above conditions.	
3. Tent Pin Bag	Steel tent pins and wooden stakes	Inspect pins and stakes for correct quantity. Check for splits in wooden stakes and bent steel pins Reject entire tent pin bag with above conditions.	
4. Power Distribution Box Container	Power Distribution Box	1. Inspect Power Distribution Box for damage, such as deformations, loose or missing hardware, and corrosion. 2. Check main panel, circuit breakers and light switch for free and proper operation 3. Check condition of 25 ft and 10 ft extension cords. Reject a Power Distribution Box with any of the above conditions	
5.Lights	Lights	1. Inspect lights for damage to end caps and plastic cover, missing parts such as power cords, and presence of fluorescent bulbs. 2. Inspect extension cord for frayed insulation and missing/damaged plugs. Reject a damaged light set, or one with any of the above conditions	

END OF WORK PACKAGE

LIGHTWEIGHT MAINTENANCE ENCLOSURE (LME) **0010 00**
PREVENTIVE MAINTENANCE CHECK AND SERVICES (PMCS)

THIS SECTION COVERS:
Introduction, PMCS Procedures

INITIAL SETUP:
LME unpacked
Maintenance Level
Unit

INTRODUCTION

Preventive Maintenance Checks and Services (PMCS) are performed to keep the LME in good operating condition. The checks are used to find, correct, or report problems. Unit personnel are to do the PMCS jobs as shown in the PMCS table. PMCS are done every day the LME is operated, using the PMCS table. Pay attention to WARNING and CAUTION statements. A WARNING means someone could be hurt. A CAUTION means equipment could be damaged.

Before you begin using the LME, do **Before PMCS**

During use of the LME, do **During PMCS**

After using the LME, do **After PMCS**

Once a week, do **Weekly PMCS** if the LME has been in use

Do **Monthly PMCS** once a month if the LME has been in use

If you find something wrong when performing PMCS, fix it using troubleshooting and/or maintenance procedures.

The right-hand column of the PMCS table lists conditions that make the LME not fully mission capable. Write up the faults not fixed on DA Form 2404 for direct support maintenance. For further information on how to use this form, see DA PAM 738-750.

If tools required to perform PMCS are not listed in procedures, notify your supervisor.

INSPECTION

Look for signs of trouble. Senses help here. You can feel, smell, hear, or see many problems that can be eliminated before they get worse. Inspect to see if items are in good condition. Are components correctly installed and secured? Is any damage to the fabric or frame components visible ? Correct any faults or notify unit or direct support maintenance.

There are some common items to check on the LME. These include the following:

* Fabric sections, including windows, vehicle, and personnel doors.
* Frame sections, including attached hardware and quick release pins/lanyards.
* Lights, including power cords.
* Power distribution box, including circuit breakers, receptacles, switch, and power cord
* Transport Covers and Bags

LUBRICATION SERVICE INTERVALS

There are no lubrication requirements for the LME.

CLEANING

Proper cleaning of the LME components is an integral part of maintenance. It can help prevent possible problems in the future, so make it a habit to clean all LME components whenever necessary. The fabric sections must be dry before being stored. Clean all LME fabric components with a brush and mild soapy water, then let fabric air dry.

LIGHTWEIGHT MAINTENANCE ENCLOSURE (LME) **0010 00**
PREVENTIVE MAINTENANCE CHECK AND SERVICES (PMCS)

THIS SECTION COVERS:
PMCS Checks and Services

INITIAL SETUP:
Frame Assembly unpacked
Maintenance Level
Unit

Table 0010 00-1. Preventive Maintenance Checks and Services for LME.

ITEM NO.	INTERVAL	MAN-HOUR	ITEM TO BE CHECKED OR SERVICED	PROCEDURE	EQUIPMENT NOT READY/ AVAILABLE IF:
1	Before		Frame Assembly	Inspect frame components for damage, such as bents, cracks, dents. Check for missing parts such as quick release pins (1) and lanyards (2). Check for free movement of hinged parts (3). Check the lower leg assemblies (4) for damage to the feet (5). Check for condition of the eave (6) and ridge (7) gusset plates.	Frame component does not (un)fold. Frame parts bent or deformed. Quick release pins missing or broken. Feet on lower leg assemblies broken.

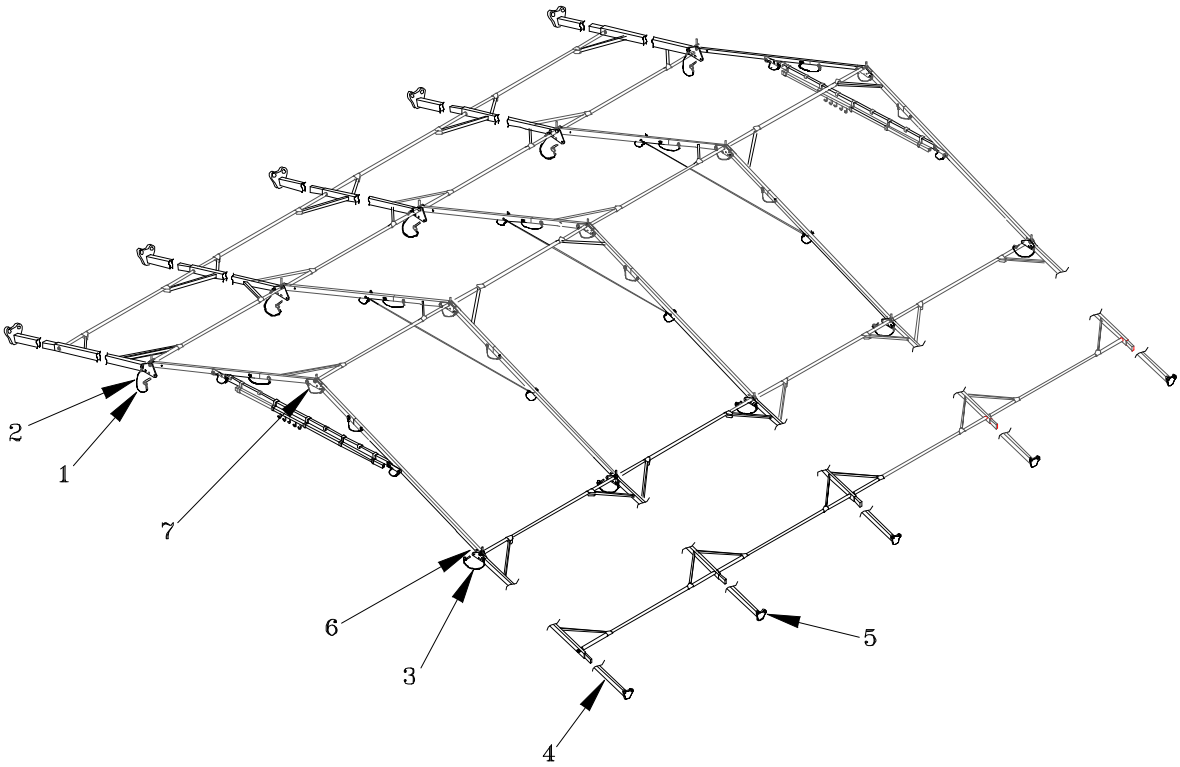

THIS SECTION COVERS:
PMCS Checks and Services

INITIAL SETUP:
Frame Assembly erected
Maintenance Level
Unit

Table 0010 00-1. Preventive Maintenance Checks and Services for LME - continued.

ITEM NO.	INTERVAL	MAN-HOUR	ITEM TO BE CHECKED OR SERVICED	PROCEDURE	EQUIPMENT NOT READY/ AVAILABLE IF:
2	During		Frame Assembly	Visually inspect frame components for damage, such as bents, cracks, dents. Check for missing parts such as quick release pins (1), and lanyards (2). Check the lower leg assemblies (3) for damage to the feet (4). Check for condition of the eave (5) and ridge (6) gusset plates.	Frame parts bent or deformed. Quick release pins missing or broken. Feet on lower leg assemblies broken.

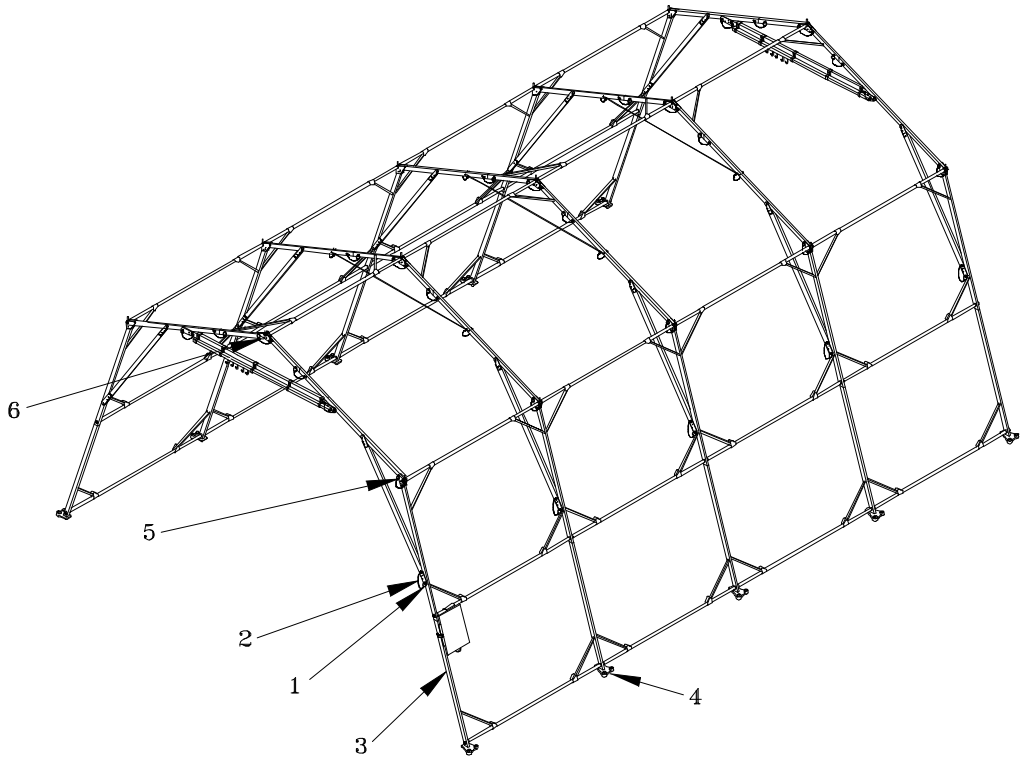

THIS SECTION COVERS:
PMCS Checks and Services

INITIAL SETUP:
Fabric Assemblies unpacked or set up
Maintenance Level
Unit

Table 0010 00-1. Preventive Maintenance Checks and Services for LME - continued.

ITEM NO.	INTERVAL	MAN-HOUR	ITEM TO BE CHECKED OR SERVICED	PROCEDURE	EQUIPMENT NOT READY/ AVAILABLE IF:
3	Before, During		Fabric Assemblies	Inspect fabric components for damage, such as rips, tears and open seams (1). Check for ripped or frayed web straps (2) and missing hardware (3). Check the window components (4) for proper operation and condition of hook and pile fasteners (5). Inspect becket lace loops (6) for fraying. Check for ripped or bent grommets (7). And missing hitch clip pins (8).	Rips, tears or open seams in fabric components. Missing becket loops, hitch clip pins, or torn grommets . Vehicle door inoperable.

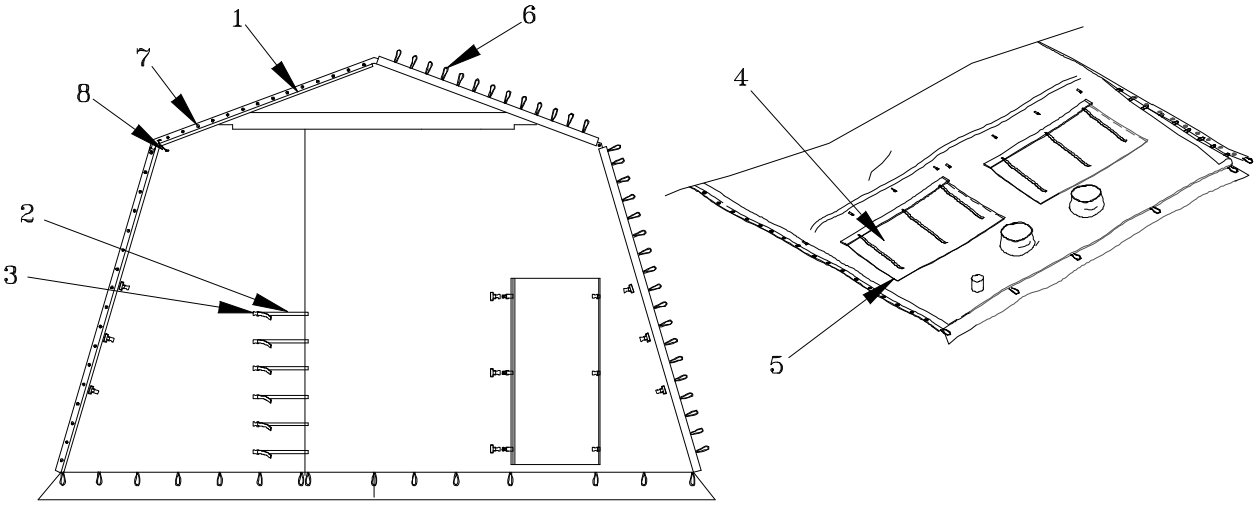

THIS SECTION COVERS:
PMCS Checks and Services

INITIAL SETUP:
Lights, unpacked or installed
Maintenance Level
Unit

Table 0010 00-1. Preventive Maintenance Checks and Services for LME - continued.

ITEM NO.	INTERVAL	MAN-HOUR	ITEM TO BE CHECKED OR SERVICED	PROCEDURE	EQUIPMENT NOT READY/ AVAILABLE IF:
4	Before, During		Lights	**WARNING** Lethal voltage is present if the lights are connected to the power distribution box. If the lights are in use during PMCS, limit procedure to a visual inspection. Serious injury or death by electrocution may occur if a live wire is touched. Inspect for missing or damaged components such as plastic covers (1) on individual lights, and end caps (2)., Inspect for missing or frayed light support straps (3) or missing hardware (4). Ensure that light bulbs (5) are installed.	lights damaged, web strap hangers missing or frayed, with hardware missing. No light bulbs available. Lights inoperative.

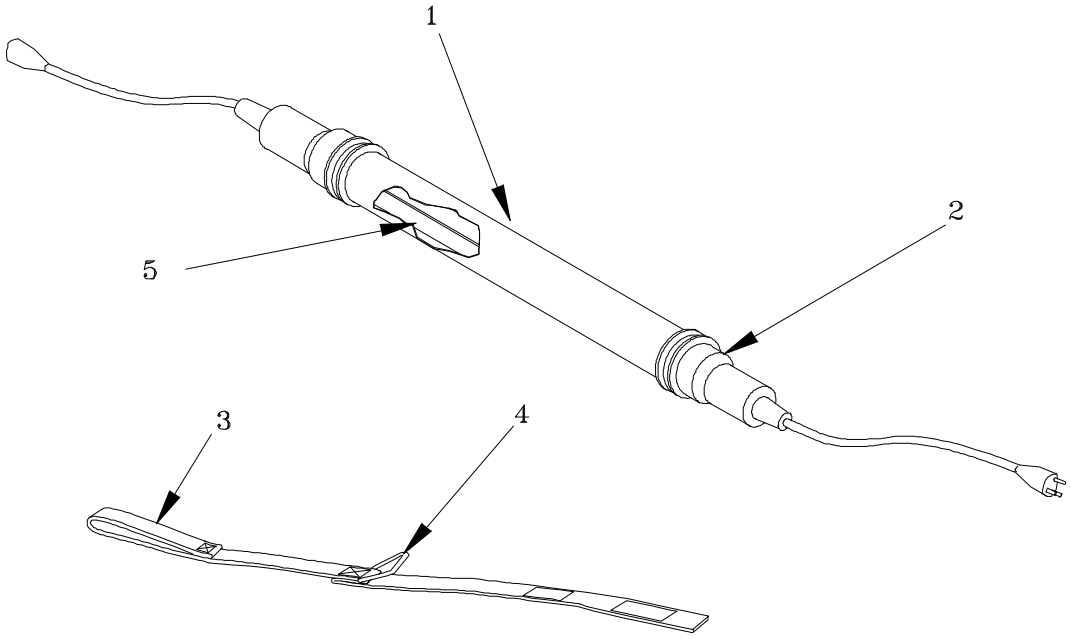

THIS SECTION COVERS:
PMCS Checks and Services

INITIAL SETUP:
Power Distribution Box unpacked or installed
Maintenance Level
Unit

Table 0010 00-1. Preventive Maintenance Checks and Services for LME - continued.

ITEM NO.	INTERVAL	MAN-HOUR	ITEM TO BE CHECKED OR SERVICED	PROCEDURE	EQUIPMENT NOT READY/ AVAILABLE IF:
5	Before, During		Power Distribution Box	**WARNING** Lethal voltage is present if the power distribution box is connected to a power source. If the box is in use during PMCS, limit procedure to a visual inspection. Serious injury or death by electrocution may occur if component under power is touched. Inspect the power distribution box for external damage to the housing (1) and main cover (2). Inspect the condition of the extension cords (3)&(4). (If cords are in use during PMCS, inspect as part of Lights), by checking for frayed areas and/or missing/damaged plugs (5). Check condition of power receptacles (6), light switch (7) and circuit breakers (8). Check for damage to terminal block (9).	Housing or main panel damaged. Light switch, power receptacle, or circuit breaker inoperative. Terminal block damaged.

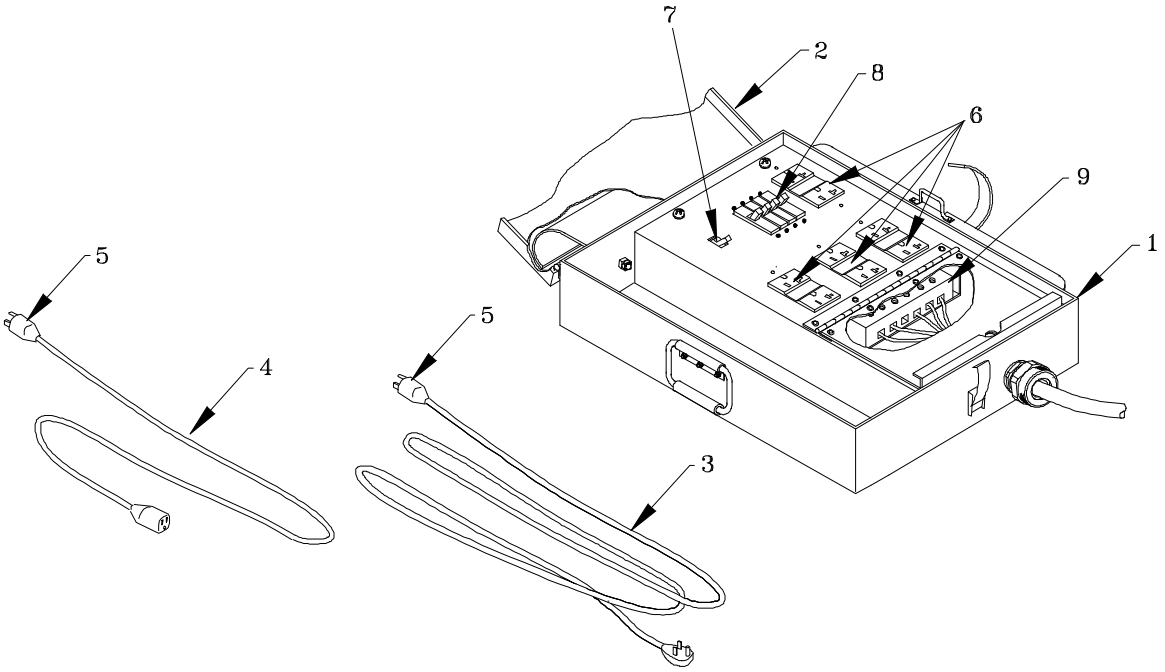

THIS SECTION COVERS:
PMCS Checks and Services

INITIAL SETUP:
Transport Covers and Bags
Maintenance Level
Unit

Table 0010 00-1. Preventive Maintenance Checks and Services for LME - continued

ITEM NO.	INTERVAL	MAN-HOUR	ITEM TO BE CHECKED OR SERVICED	PROCEDURE	EQUIPMENT NOT READY/ AVAILABLE IF:
6	Before		Transport Covers and Bags	Inspect frame and fabric transport covers (1), tent pin bag (2), and power distribution box bag (3) for rips, tears and open seams. Check for security of handles (4) and presence of labels (5). Check for condition of LME repair kit (6) in one of the fabric transport covers (1). Inspect for missing repair parts (Refer to Appendix A for a listing of its contents) .	Covers or bags are torn, seams are open, handles are missing.

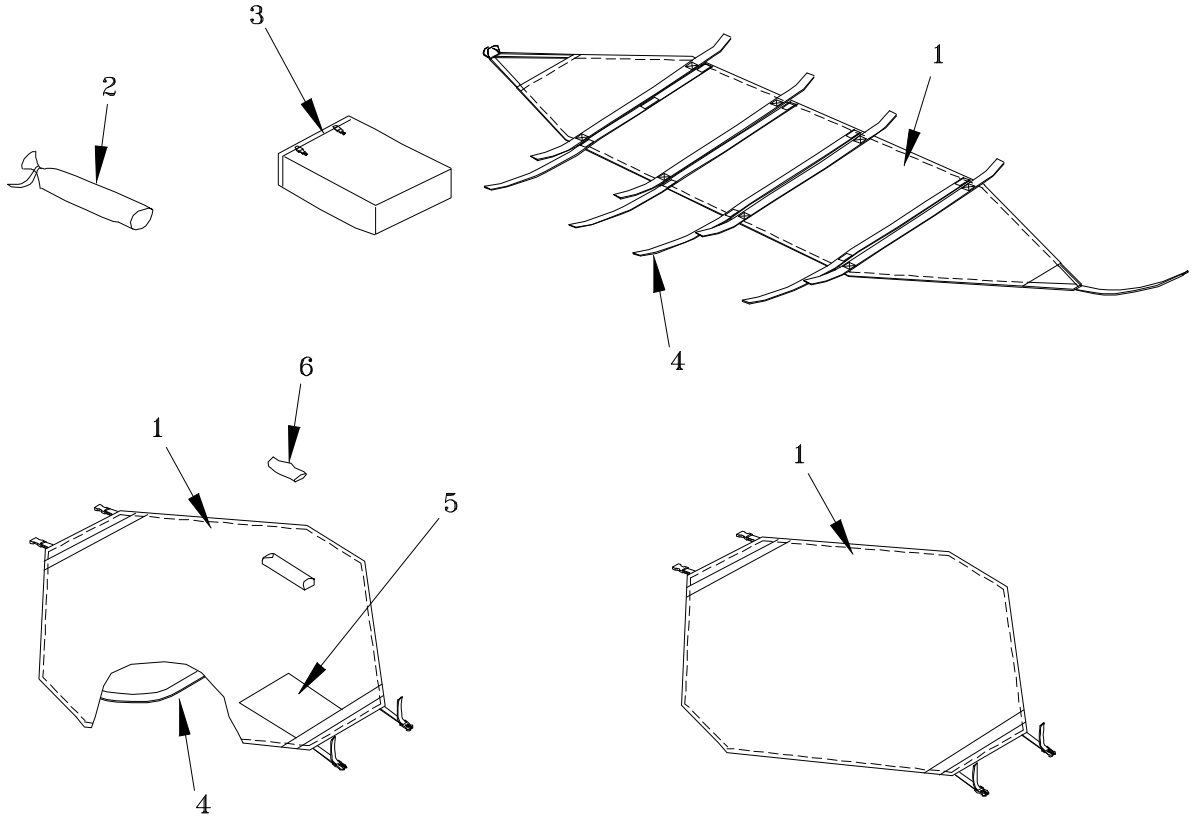

Table 0010 00-1. Preventive Maintenance Checks and Services for LME - continued.

MANDATORY REPLACEMENT PARTS LIST (LME)

ITEM NO.	PART NUMBER	NSN	NOMENCLATURE	QTY
			No Requirements	

END OF WORK PACKAGE

LIGHTWEIGHT MAINTENANCE ENCLOSURE (LME) **0011 00**
UPPER ARCH ASSEMBLY

THIS SECTION COVERS:
Inspect, Replace

INITIAL SETUP
Upper Arch Assembly unpacked

Maintenance Level **Materials/Parts**
Unit

Tools and Special Tools
Tool Kit, General Mechanic's (WP0029, Table 0027-2, Item 3)

GENERAL

This procedure contains information and instructions to keep the LME frame assembly in good working order by inspecting and replacing damaged parts, or the entire upper arch assembly.

WARNING

Use care when unfolding frame assemblies. Hands and fingers can be pinched when placed on hinge joints, causing painful injuries.

INSPECT

Unfold and inspect the upper arch assembly left (1) and right arch segments (2) for bents, damage to the connectors (3), cracks or deformations in the ridge gusset plates (4), and presence and proper functioning of the quick release pin and lanyard assembly (5).

If upper arch assembly is damaged, bent, or won't unfold, replace the entire upper arch assembly. If the quick release pin and lanyard assembly is missing or damaged, replace it.

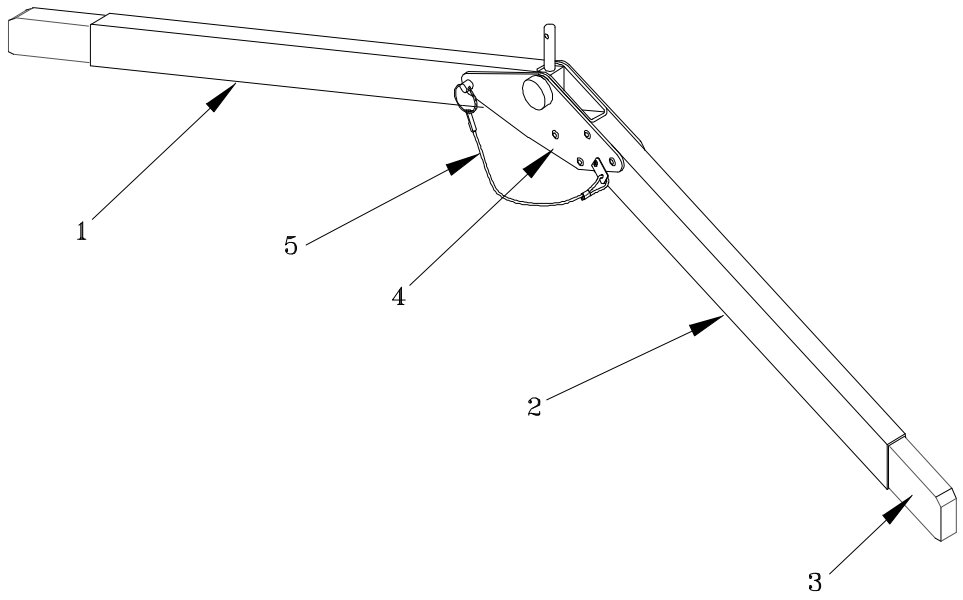

REPLACE

a. Remove. Remove the screw (1) holding the quick release pin and lanyard assembly (2) in place on the ridge gusset plate (3).

b. Install. Install a new quick release pin and lanyard assembly (2) into the ridge gusset plate (3) using the screw (1) previously removed.

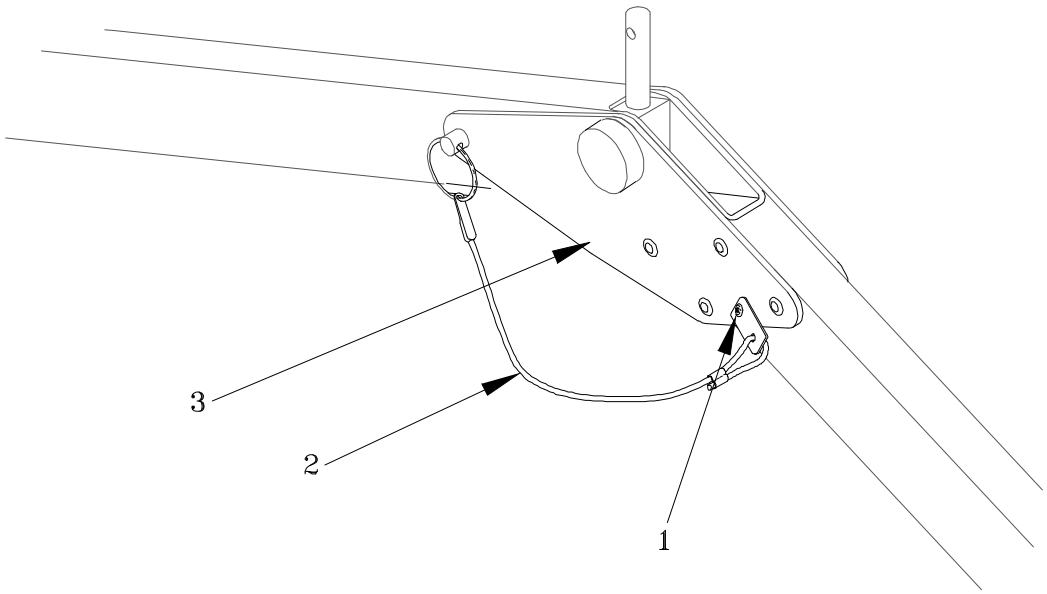

END OF TASK

LIGHTWEIGHT MAINTENANCE ENCLOSURE (LME) **0012 00**
LOWER ARCH ASSEMBLY

THIS SECTION COVERS:
Inspect, Replace

INITIAL SETUP
Lower Arch Assembly unpacked

Maintenance Level
Unit

Materials/Parts

Tools and Special Tools
Tool Kit, General Mechanic's (WP0029, Table 0027-2, Item 3)

GENERAL

This procedure contains information and instructions to keep the LME frame assembly in good working order by inspecting and replacing damaged parts, or the entire lower arch assembly.

WARNING

Use care when unfolding frame assemblies. Hands and fingers can be pinched when placed on hinge joints, causing painful injuries.

INSPECT

Unfold and inspect the lower arch assembly eave arch segment (1) and lower leg arch (2) for bents, damage to the connector (3), cracks or deformations in the eave gusset plates (4), and presence and proper functioning of the quick release pin and lanyard assemblies (5).

REPLACE

If lower arch assembly is damaged, bent, or won't unfold, replace the entire lower arch assembly. If the quick release pin and lanyard assemblies are missing or damaged, replace them as in Work Package 0011 00.

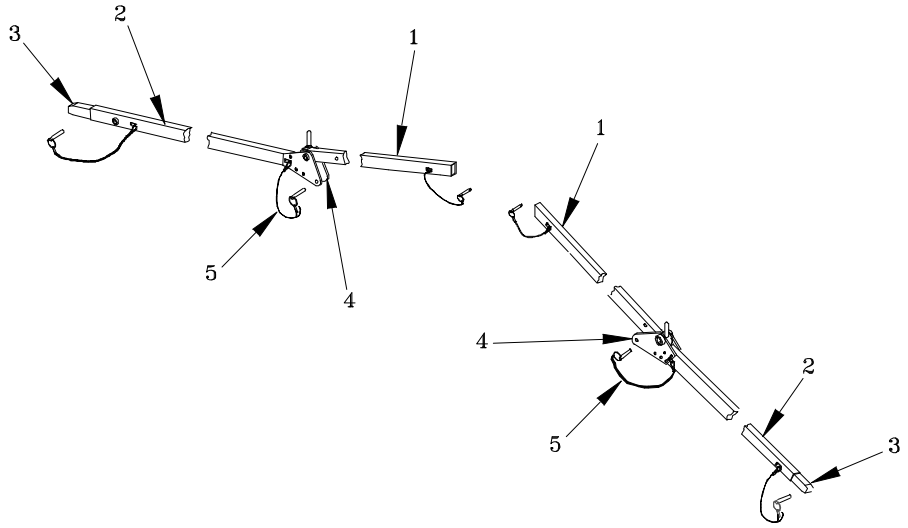

END OF WORK PACKAGE

LIGHTWEIGHT MAINTENANCE ENCLOSURE (LME) **0013 00**
LOWER LEG ASSEMBLY

THIS SECTION COVERS:
Inspect, Replace

INITIAL SETUP
Lower Leg Assembly unpacked

Maintenance Level **Materials/Parts**
Unit

Tools and Special Tools
Tool Kit, General Mechanic's (WP 0029, Table 0027-2, Item 3)

GENERAL

This procedure contains information and instructions to keep the lower leg assembly in good working order by inspecting and replacing damaged parts, or the entire lower leg assembly.

INSPECT

Inspect the lower leg assembly (1) for bents or deformations in the end sleeve (2), and foot (3).

REPLACE

If the lower leg assembly (1) is damaged, or bent, replace the entire door header assembly. If the foot is damaged, knock out the spring pins (4) and remove the foot (3). Insert a new foot (3) and replace the spring pins (4).

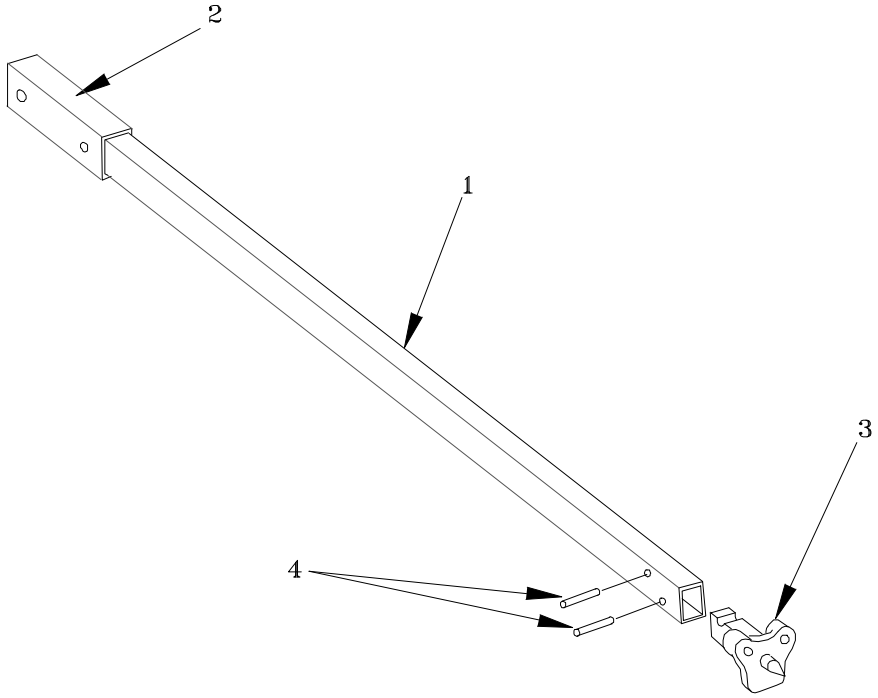

END OF WORK PACKAGE

LIGHTWEIGHT MAINTENANCE ENCLOSURE (LME) **0014 00**
DOOR HEADER ASSEMBLY

THIS SECTION COVERS:
Inspect, Replace

INITIAL SETUP
Door Header Assembly unpacked

Maintenance Level
Unit

Materials/Parts

Tools and Special Tools
Shop Equipment Automotive Maintenance and Repair
General Mechanic Tool Kit (WP0029, Table 0027-2, Item 3)

GENERAL

This procedure contains information and instructions to keep the LME frame assembly in good working order by inspecting and replacing damaged parts, or the entire door header assembly.

INSPECT

Inspect the door header (1) for bents, the pulleys (2), for free movement, or deformations in the end plates (3), and presence and proper functioning of the quick release pin and lanyard assemblies (4).

REPLACE

If door header assembly is damaged, bent, or pulleys won't operate, replace the entire door header assembly. If the quick release pin and lanyard assemblies are missing or damaged, replace them as in Work Package 0011 00.

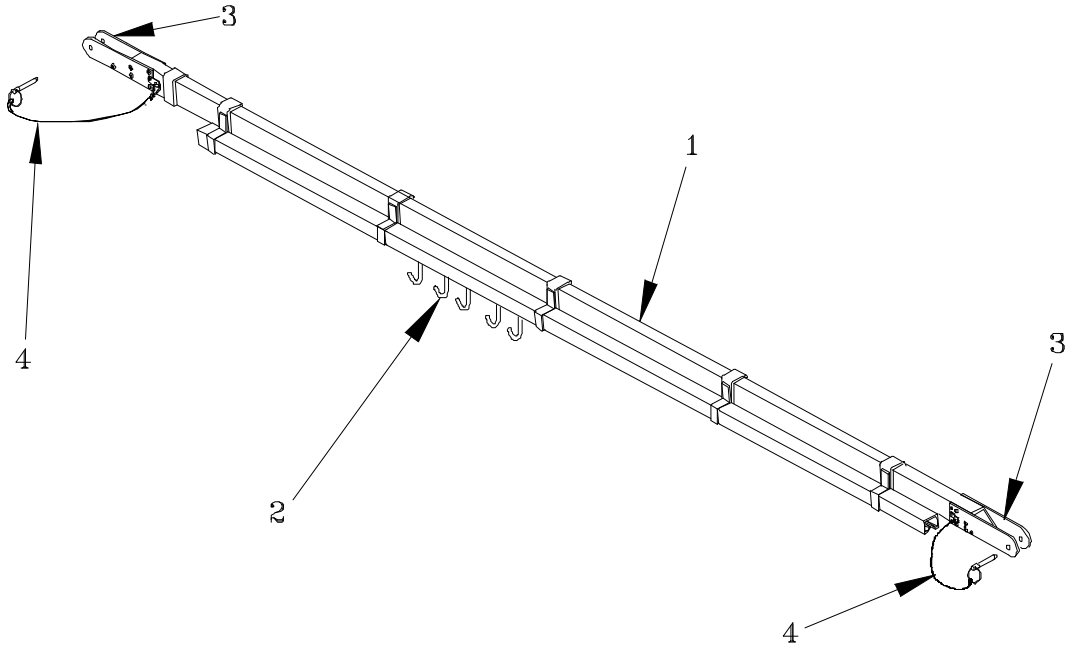

END OF WORK PACKAGE

LIGHTWEIGHT MAINTENANCE ENCLOSURE (LME) **0015 00**
CABLE HEADER ASSEMBLY

THIS SECTION COVERS:
Inspect, Replace

INITIAL SETUP
Cable Header Assembly unpacked

Maintenance Level **Materials/Parts**
Unit

Tools and Special Tools
Tool Kit, General Mechanic's (WP 0029, Table 0027-2, Item 3)

GENERAL

This procedure contains information and instructions to keep the LME frame assembly in good working order by inspecting and replacing the entire cable header assembly.

INSPECT

Inspect the cable header assembly vinyl covered wire rope (1) for fraying, secure attachment to the cable ends (2), and security of compression fittings (3).

REPLACE

If cable header assembly is damaged, bent, or has frayed wire, replace the entire cable header assembly.

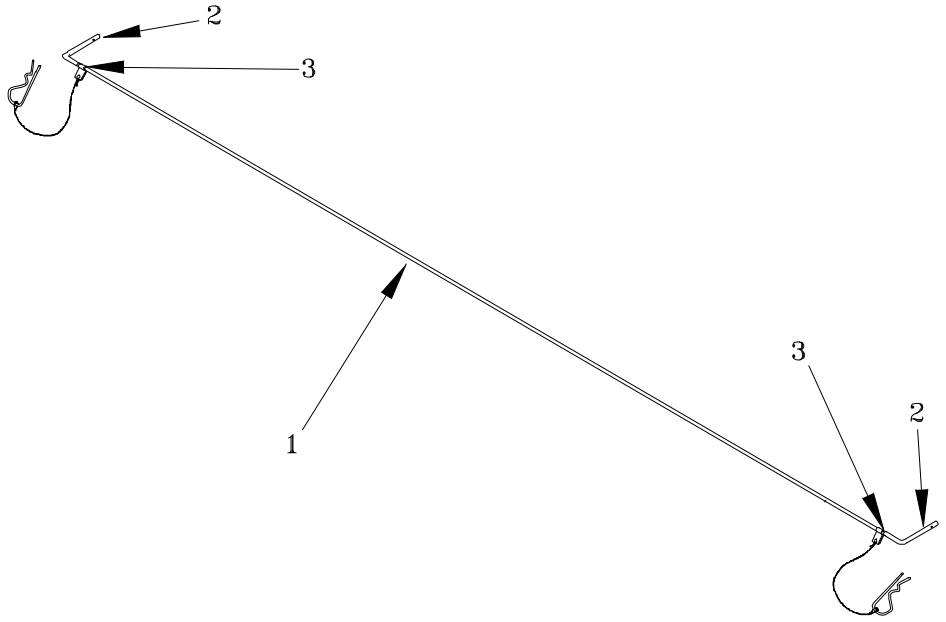

END OF WORK PACKAGE

LIGHTWEIGHT MAINTENANCE ENCLOSURE (LME) **0016 00**
SIDER ASSEMBLY

THIS SECTION COVERS:
Inspect, Replace

INITIAL SETUP
Sider Assembly unpacked

Maintenance Level **Materials/Parts**
Unit

Tools and Special Tools
Tool Kit, General Mechanic's (WP 0029, Table 0027-2, Item 3)

GENERAL

This procedure contains information and instructions to keep the LME frame assembly in good working order by inspecting and replacing damaged parts of, or the entire sider assembly.

INSPECT

Inspect the sider (1) and the end plates (2) for bents or deformations, and presence and proper functioning of the quick release pin and lanyard assembly (3).

REPLACE

If sider or end plates are damaged, or bent, replace the entire sider assembly. If the quick release pin and lanyard assemblies are missing or damaged, replace them as in Work Package 0011 00.

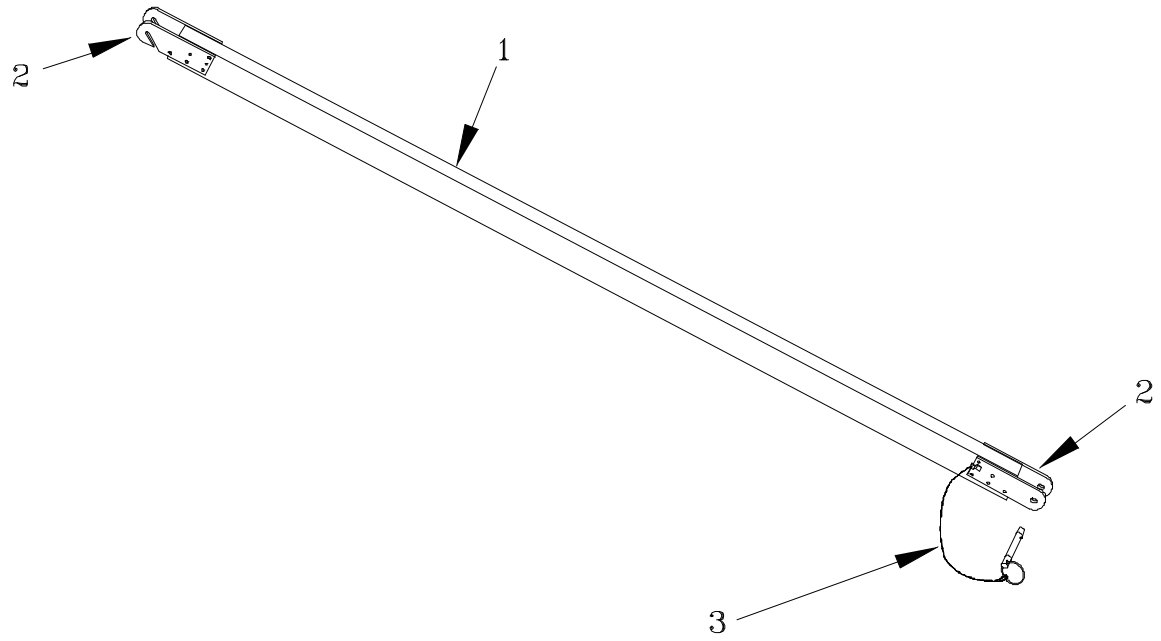

END OF WORK PACKAGE

LIGHTWEIGHT MAINTENANCE ENCLOSURE (LME) **0017 00**
PURLIN

THIS SECTION COVERS:
Inspect, Replace

INITIAL SETUP
Purlin unpacked
Maintenance Level **Materials/Parts**
Unit
Tools and Special Tools
Shop Equipment Automotive Maintenance and Repair
General MechanIcs Tool Kit (WP 0029, Table 0027-2, Item 3)

GENERAL

This procedure contains information and instructions to keep the LME frame assembly in good working order by inspecting and replacing the entire purlin assembly.

INSPECT

Inspect the purlin tube (1), retaining straps (2), diagonal braces (3) for bents and deformations. Check the turn-and-lock mechanisms on purlin tube ends (4) and braces (5) for proper functioning. Inspect retaining straps for fraying and hook and pile fasteners for serviceability.

REPLACE

If any part of the purlin is damaged to the extent that the purlin cannot be properly put in place, replace the entire purlin assembly.

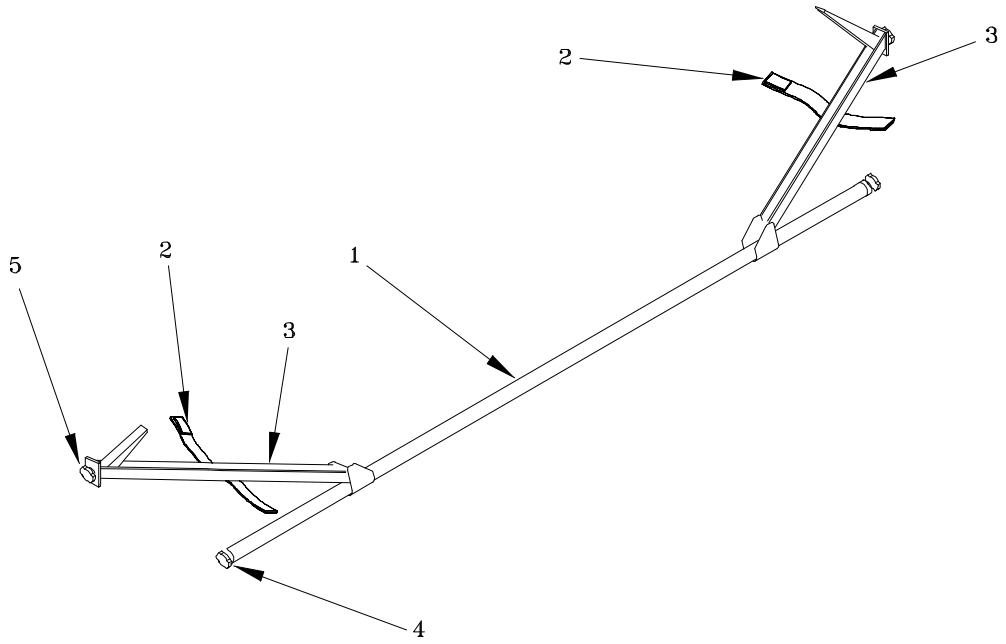

END OF WORK PACKAGE

LIGHTWEIGHT MAINTENANCE ENCLOSURE (LME) **0018 00**
FABRIC ASSEMBLY, END PANEL

THIS SECTION COVERS:
Inspect, Replace, Repair

INITIAL SETUP
Fabric Assembly, End Panel unpacked
Maintenance Level
Unit

Tools and Special Tools	**Materials/Parts**
LME Repair Kit (WP0029, Table 0027 00-2, Item 1)	
Tentage Repair Kit (WP0029, Table 0027 00-2, Item 2)	

GENERAL

This procedure contains information and instructions to keep the LME end fabric panel assembly in good working order by inspecting, repairing, or replacing the entire end fabric panel.

INSPECT

Inspect the fabric assembly end panel (1) for tears, cuts, perforations and open seams. Check condition of becket loops (2) and security and serviceability of grommets (3). Check serviceability of and condition of hook and pile fasteners (4). Check for presence of 'D'-Rings (5) and hitch clip pin and holder assemblies (6). Inspect seams along reinforcing webbing (7) for security.

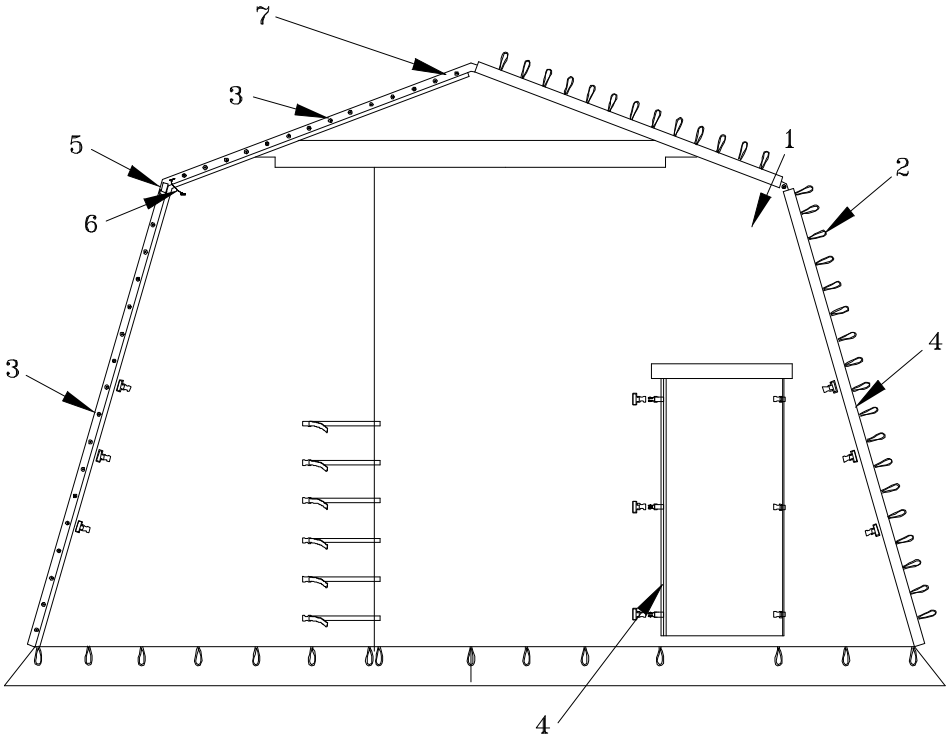

REPLACE

If the end fabric assembly has tears or cuts longer than 12 inches, or deteriorated becket loops, replace the entire end fabric assembly.

REPAIR

If cuts or tears of less than 12 inches but more than 6 inches are noted, seams are opening, or grommets are damaged, refer the end fabric assembly to direct support maintenance.

Repair any cuts, tears or perforations in the fabric of up to 6 inches long using the LME Repair Kit. Also make temporary repairs to seam openings (not longer than 6 inches) and loose hardware. Replace the hitch clip pin and holder if necessary.

WARNING

Do not apply the following repair to a fabric panel of an erected LME when it is located above working height. Strike, or lower the LME as described in Chapter 2 to affect repairs above normal working height. Serious injury to personnel may occur from falls.

Rips, Tears, Cuts and Perforations. To repair a rip, tear, cut or perforation in the fabric, proceed as follows:

Clean the area surrounding the damage.

Locate the LME Repair Kit and the 3" wide adhesive tape within it. Cut a piece of this tape slightly longer than the area to be fixed.

If the LME is in use, station another person on the inside of the panel with a flat hard surface held up to the damaged area to provide a working surface to effect the repair.

Peel the protective backing off the tape and apply it to the damaged area.

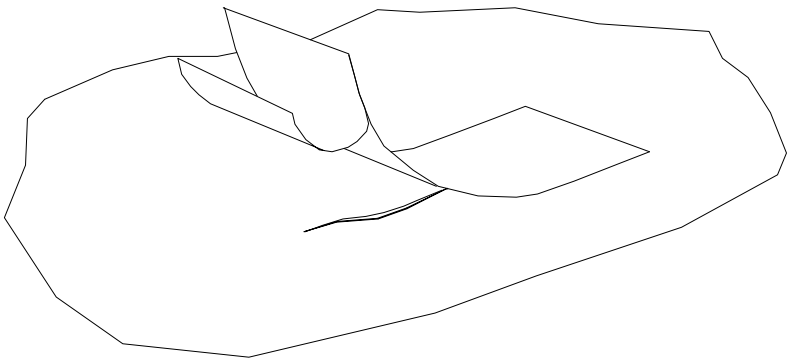

Open Seam and loose Hardware. To make temporary repairs to an open (less than 6 inches long) seam, or re-attach loose hardware proceed as follows:

Remove any loose thread hanging from the open seam.

Locate the LME Repair Kit and the needle pusher, thread, and needle.

Cut a sufficient length of thread and thread it through the needle.

Repair the damaged area with one of three common hand stitching methods shown below:

Flat Stitch. Pass the needle over and
Flat stitch. Pass the needle over and under an equal amount of material, each successive stitch entering the material from the opposite side.

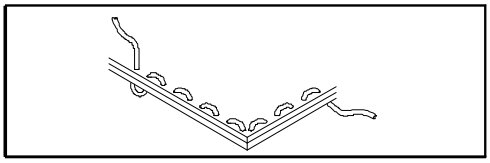

Backstitch. Make two small stitches in the same place to secure the cord end. Continue by inserting the needle into the preceding stitch and bringing it out on the same side of the material one stitch length in advance of the preceding stitch.

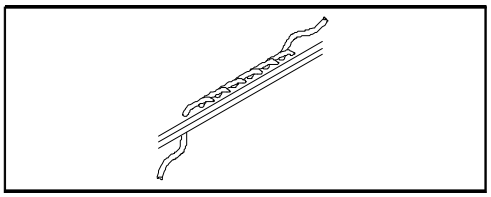

Round stitch. Use this stitch to temporarily repair grommets or secure other hardware. Insert the thread at right angles to the edge of the material and bring cord around edge before making the next stitch.

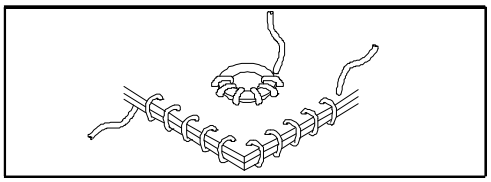

Hitch Clip Pin and Holder. To replace a hitch clip pin and holder, proceed as follows:

Remove remnants of old fibrous cord and thread securing cord, pin and holder to panel.

Cut length of new fibrous cord and stitch to panel using a zig-zag stitch.

Thread holder through other end of cord, fold cord over and stitch together using zig-zag stitch.

Insert pin into holder.

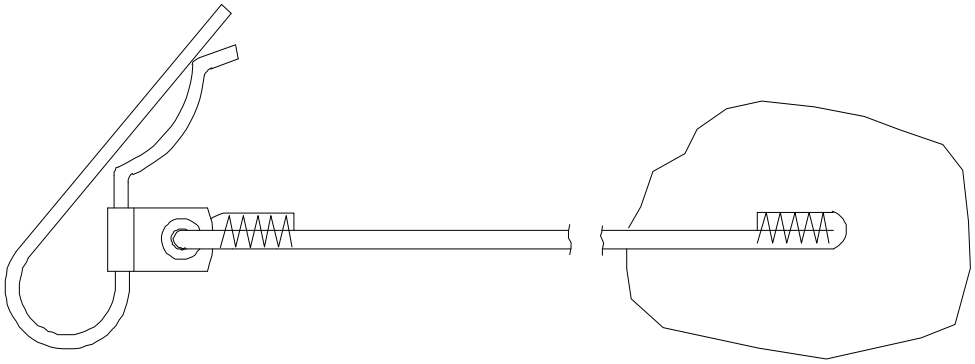

END OF WORK PACKAGE

LIGHTWEIGHT MAINTENANCE ENCLOSURE (LME) **0019 00**
FABRIC ASSEMBLY, INTERMEDIATE SECTION

THIS SECTION COVERS:
Inspect, Replace, Repair

INITIAL SETUP
Fabric Assembly, Intermediate Section, unpacked
Maintenance Level
Unit

Tools and Special Tools	**Materials/Parts**
LME Repair Kit (WP 0029, Table 0027 00-2, Item 1)	
Tentage Repair Kit (WP 0029, Table 0027 00-2, Item 2)	

GENERAL

This procedure contains information and instructions to keep the LME intermediate fabric panel assembly in good working order by inspecting, repairing, or replacing the entire intermediate fabric assembly.

INSPECT

Inspect the intermediate fabric assembly (1) for tears, cuts, perforations and open seams. Check condition of becket loops (2) and security and serviceability of grommets (3). Check serviceability of windows/screens (4) and condition of hook and pile fasteners (5). Check for presence of 'D'-Rings (6) and hitch clip pin and holder assemblies (7). Inspect seams along reinforcing webbing (8) for security.

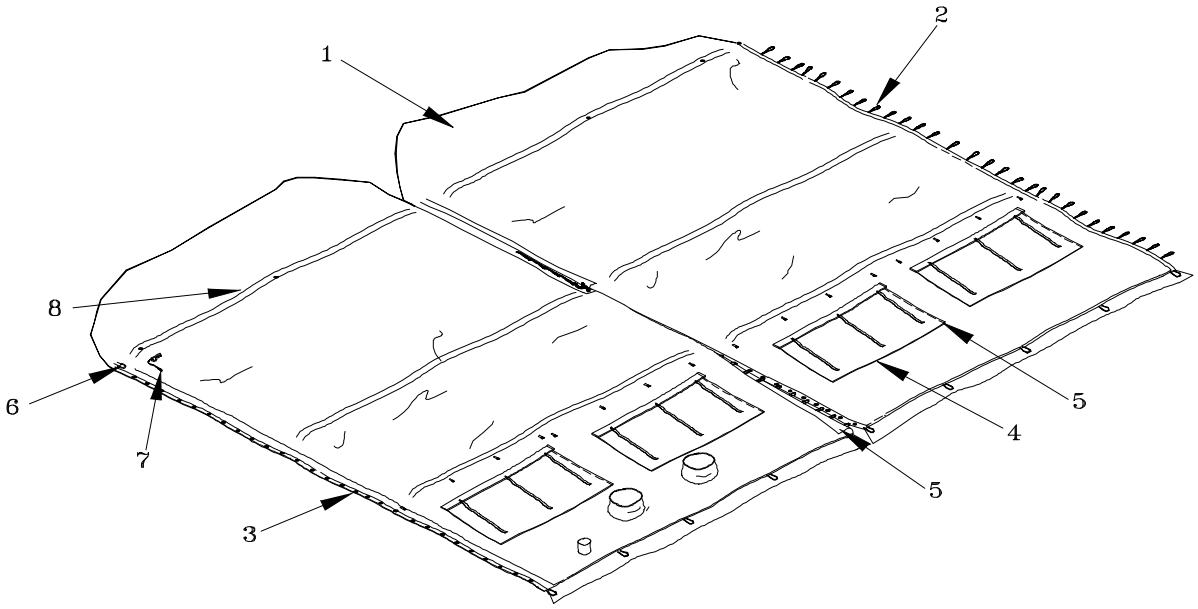

REPLACE

If the intermediate fabric assembly has tears or cuts longer than 12 inches, deteriorated becket loops, torn windows, screens, or window covers, replace the entire intermediate fabric assembly.

REPAIR

If cuts or tears of less than 12 inches but more than 6 inches are noted, seams are opening, or grommets are damaged, refer the intermediate fabric assembly to direct support maintenance.

Repair any cuts, tears or perforations in the fabric of up to 6 inches long using the LME Repair Kit. Also make temporary repairs to seam openings (not longer than 6 inches) and loose hardware. Replace the hitch clip pin and holder if necessary. Windows and screens may be temporarily repaired with tape until the intermediate fabric panel can be replaced.

WARNING

Do not apply the following repair to a fabric panel of an erected LME when it is located above working height. Strike, or lower the LME as described in Chapter 2 to affect repairs above normal working height. Serious injury to personnel may occur from falls.

Rips, Tears, Cuts and Perforations. To repair a rip, tear, cut or perforation in the fabric, proceed as follows:

Clean the area surrounding the damage.

Locate the LME Repair Kit and the 3" wide adhesive tape within it. Cut a piece of this tape slightly longer than the area to be fixed.

If the LME is in use, station another person on the inside of the panel with a flat hard surface held up to the damaged area to provide a working surface to effect the repair.

Peel the protective backing off the tape and apply it to the damaged area.

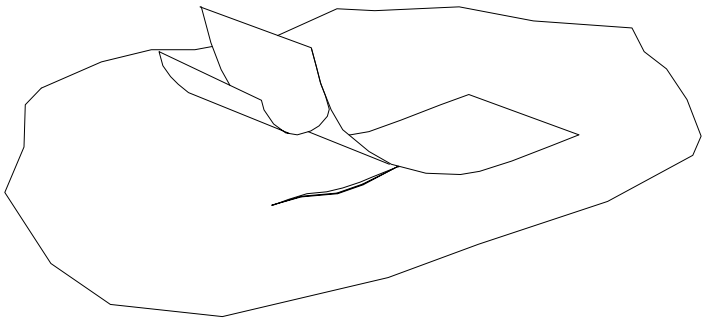

Open Seam and loose Hardware. To make temporary repairs to an open (less than 6 inches long) seam, or reattach loose hardware proceed as follows:

Remove any loose thread hanging from the open seam.

Locate the LME Repair Kit and the needle pusher, thread, and needle.

Cut a sufficient length of thread and thread it through the needle.

Repair the damaged area with one of three common hand stitching methods shown below:

Flat Stitch. Pass the needle over and under an equal amount of material, each successive stitch entering the material from the opposite side.

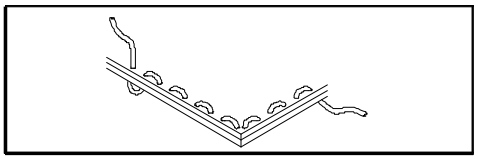

Backstitch. Make two small stitches in the same place to secure the cord end. Continue by inserting the needle into the preceding stitch and bringing it out on the same side of the material one stitch length in advance of the preceding stitch.

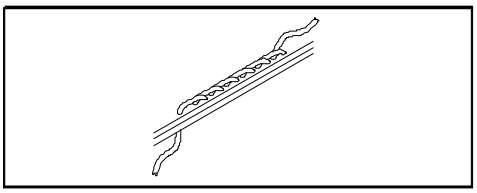

Round stitch. Use this stitch to temporarily repair grommets or secure other hardware. Insert the thread at right angles to the edge of the material and bring cord around edge before making the next stitch.

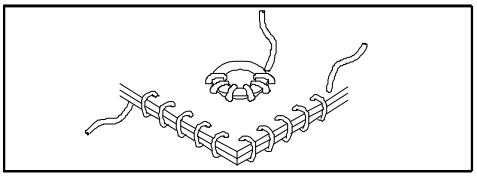

Hitch Clip Pin and Holder. To replace a hitch clip pin and holder, proceed as follows:

Remove remnants of old braided cord and thread securing cord, pin and holder to panel.

Cut length of new braided cord and stitch to panel using a zig-zag stitch.

Thread holder through other end of cord, fold cord over and stitch together using zig-zag stitch.

Insert pin into holder.

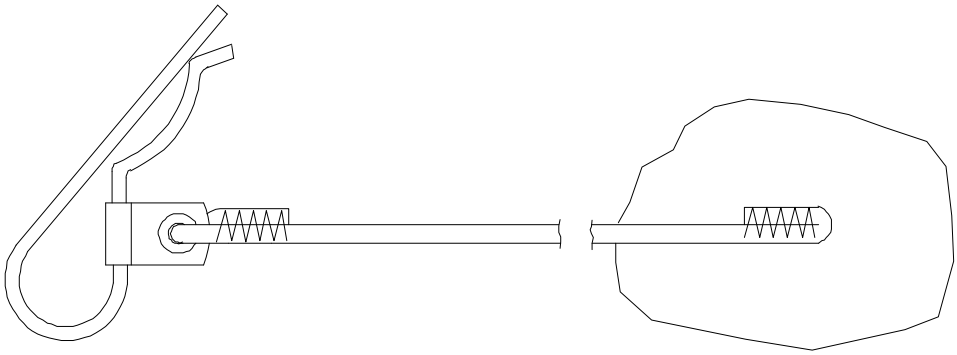

END OF WORK PACKAGE

LIGHTWEIGHT MAINTENANCE ENCLOSURE (LME) **0020 00**
EXTENSION OF LENGTH

THIS SECTION COVERS:
Inspect, Replace, Repair

INITIAL SETUP
Extension of Length unpacked
Maintenance Level **Materials/Parts**
Unit
Tools and Special Tools
LME Repair Kit (WP 0029, Table 0027 00-2, Item 1)
Tentage Repair Kit (WP0029, Table 0027 00-2, Item 2)

GENERAL

This procedure contains information and instructions to keep the extension of length in good working order by inspecting, repairing, or replacing the entire extension of length.

INSPECT

Inspect the extension of length (1) for tears, cuts, perforations and open seams. Check condition of becket loops (2) and security and serviceability of grommets (3). Inspect seams (4) along reinforcing webbing (5) for security.

REPLACE

If the extension of length has tears or cuts longer than 12 inches, deteriorated becket loops, or open seams, replace the entire extension of length.

REPAIR

If cuts or tears of less than 12 inches but more than 6 inches are noted, seams are opening, or grommets are damaged, refer the extension of length to direct support maintenance.

Repair any cuts, tears or perforations in the extension of length of up to 6 inches long as described in Work Package 0018 00, using the LME Repair Kit. Also make temporary repairs to seam openings (not longer than 6 inches) and loose hardware as described in Work Package 0018 00. Replace the hitch clip pin and holder if necessary, as described in Work Package 0018 00.

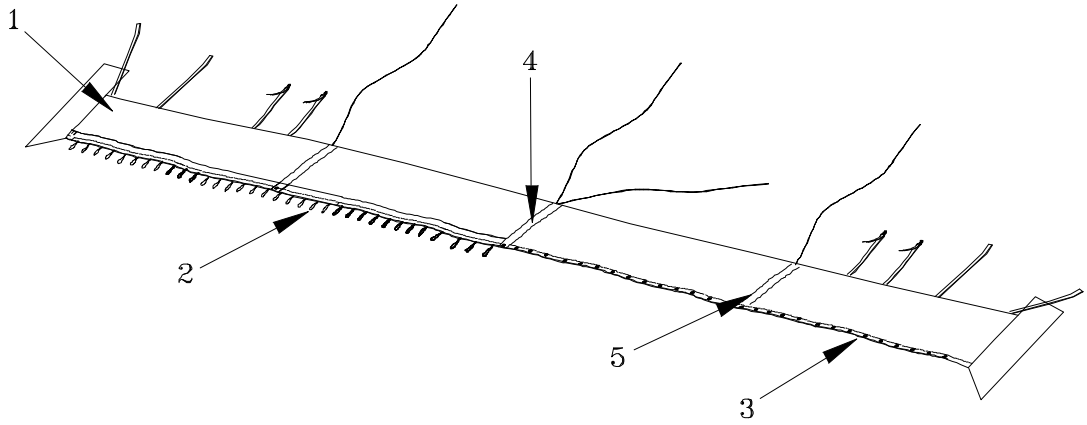

END OF WORK PACKAGE

LIGHTWEIGHT MAINTENANCE ENCLOSURE (LME) **0021 00**
FOOT LOOP

THIS SECTION COVERS:
Inspect, Replace

INITIAL SETUP
Foot Loop, installed

Maintenance Level
Unit

Materials/Parts
Rope, Manila, Type 1, Cl2, 1/4" Dia.

Tools and Special Tools
Tool Kit,General Mechanic's (WP 0029, Table 0027-2, Item 3)

GENERAL

This procedure contains information and instructions to keep the LME fabric assemblies in good working order by inspecting and replacing damaged foot loops.

INSPECT

Inspect the foot loop for fraying, cuts or loose knots.

If the foot loop is damaged or shows signs of deterioration, replace as follows.

REPLACE

Remove the damaged foot loop.

Cut a 19" length of Manila Rope (1), pass both ends through the grommet (2) and tie off using an overhand knot (3).

Ensure that the knot is tight. Draw the finished foot loop back through the grommet (2) until the knot is against the grommet.

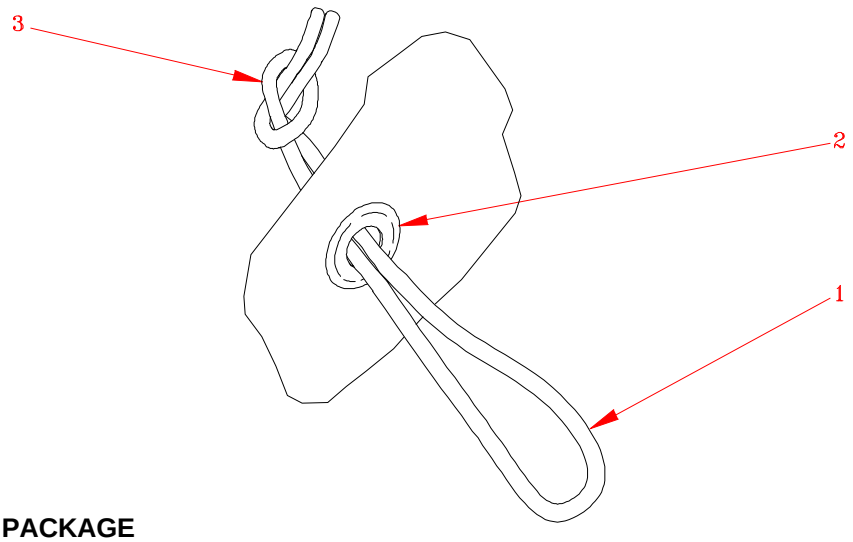

END OF WORK PACKAGE

LIGHTWEIGHT MAINTENANCE ENCLOSURE (LME) ASSEMBLY, 50 WATT MILITARY LIGHT **0022 00**

THIS SECTION COVERS:
Inspect, Replace, Test, Repair

INITIAL SETUP
Lights, unpacked or in operation
Maintenance Level
Unit
Materials/Parts
Tools and Special Tools
Tool Kit, General Mechanic's (WP 0028, Table 0027-2, Item 3)

GENERAL

This procedure contains information and instructions to keep the LME lights in good working order by inspecting, testing, repairing or replacing individual lights.

WARNING

If the lights are in use, limit inspection of the individual lights to a visual inspection from the ground to avoid injuries from falls.

INSPECT

Inspect individual light covers for cracks or discoloration. Inspect power cords on individual lights for frayed cords and broken or damaged plugs.

REPLACE

Replace a light that does not function properly after testing, or that has frayed power cord. Replace light bulbs in individual lights as necessary. Replace frayed, ripped or missing support straps as necessary.

TEST

Test each light (if not in use) by plugging the power cord into a 120V AC grounded outlet. If the lights are installed in the LME, test by operating the LIGHTS switch on the power distribution box (The box must be connected to a power source for the lights to work). If none of the installed lights operate, check the circuit breakers and reset if necessary.

REPAIR

Repair the lights by replacing individual components described under REPLACE, above.

END OF WORK PACKAGE

LIGHTWEIGHT MAINTENANCE ENCLOSURE (LME) **0023 00**
POWER DISTRIBUTION BOX

THIS SECTION COVERS:
Inspect, Replace

INITIAL SETUP
Power Distribution Box, in container or in operation
Maintenance Level
Unit
Materials/Parts No. 10-24 Nylon lock nut
Tools and Special Tools
Tool Kit, General Mechanic's (WP 0029, Table 0027-2, Item 3)

GENERAL

This procedure contains information and instructions to keep the LME power distribution box in good working order by inspecting and replacing the handle, cord grip, side strap assembly, or the entire power distribution box.

WARNING

Lethal voltage is present when the power distribution box is connected to a power source. Disconnect the power source before affecting any repairs to the box. Serious injury to personnel or death may result from touching any component under power.

INSPECT

Inspect the power distribution box housing (1) and handle (2) for damage. Check the side strap (3) for presence and condition. Open cover (4) and check latch (5) for proper operation. Visually inspect inside of power distribution box for cleanliness and corrosion. Notice condition of circuit breakers (6), power receptacles (7), and light switch (8). Refer a power distribution box with damaged or inoperative circuit breakers, receptacles, or light switch to direct support maintenance. Inspect the 25 foot (9) and the 10 foot (10) extension cords for cuts or damaged ends.

REPLACE

Replace a frayed or otherwise damaged side strap assembly (3) as required.

To replace a defective handle (2), remove the self-locking hex nuts (11) and truss head screws (12) securing handle (2) to the box (1). Retain truss head screws.

Remove old handle and place new handle into position.

Install and tighten three new self locking hex nuts (11). Install three truss head screws.

LIGHTWEIGHT MAINTENANCE ENCLOSURE (LME) **0023 00**
POWER DISTRIBUTION BOX

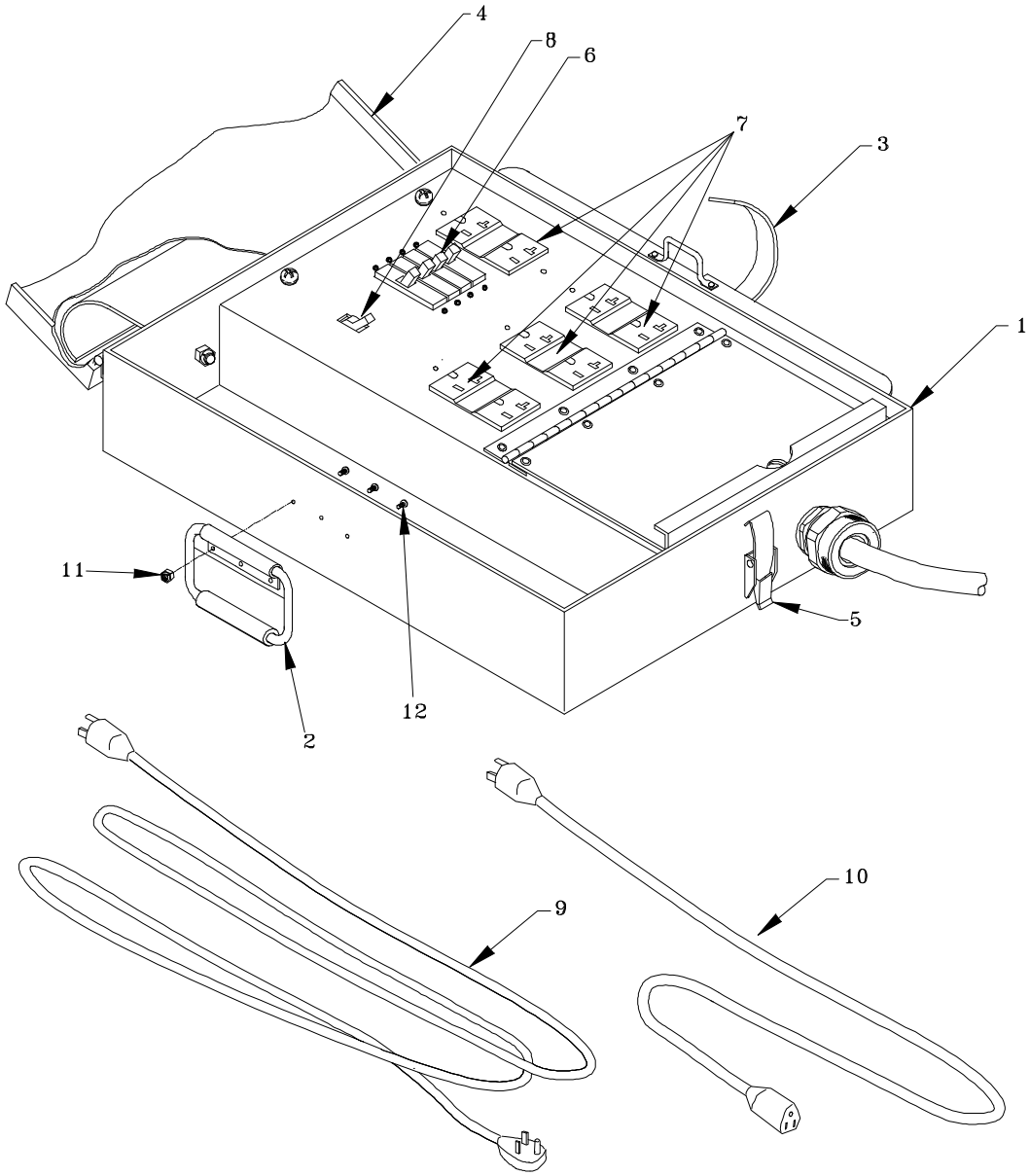

To replace a defective cord grip assembly, proceed as follows:

Disconnect external power cord (1) from termoinal block (2).

Loosen retainer nut (3) on cord grip assembly and pull wires out of cord grip assembly.

Loosen lock nut (4) holding cord grip assembly to box.

Remove cord grip assembly.

Place new cord grip assembly into position through bottom of box and secure with lock nut (4)_

Loosen cord grip assembly retainer nut (3) and insert external power cord (1).

Re-attach power cord to terminal block (2) and tighten cord grip assembly retainer nut (3)

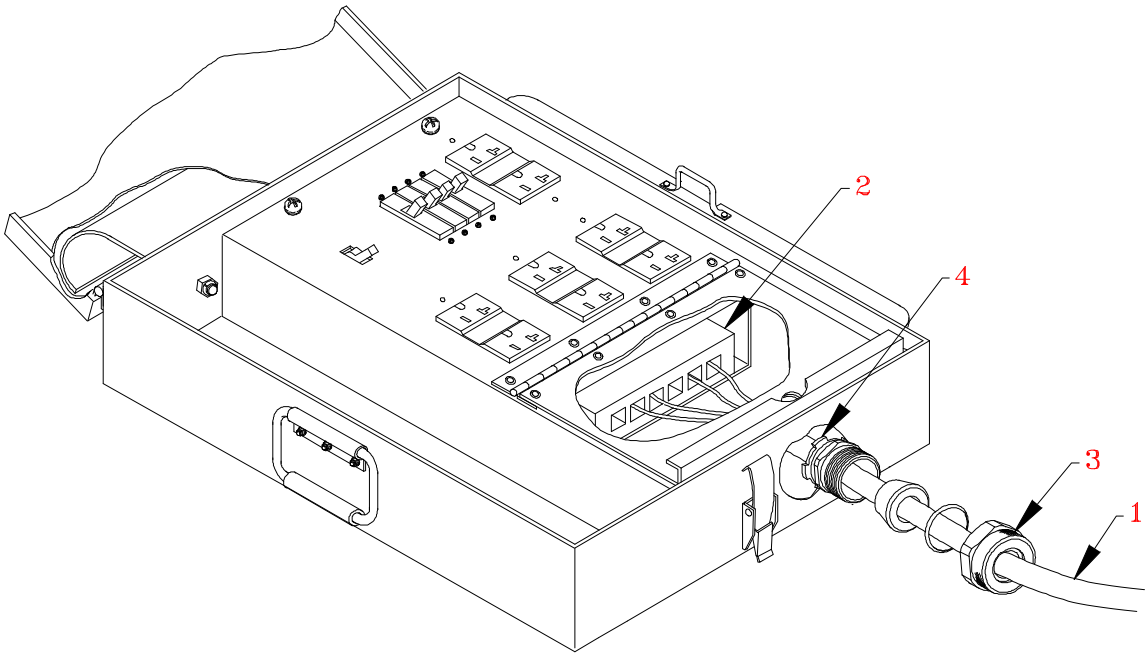

END OF WORK PACKAGE

LIGHTWEIGHT MAINTENANCE ENCLOSURE (LME) **0024 00**
TRANSPORT COVERS AND BAGS

THIS SECTION COVERS:
Inspect, Replace, Repair

INITIAL SETUP
Transport Covers and Bags, empty

Maintenance Level **Materials/Parts**
Unit

Tools and Special Tools
LME Repair Kit (WP 0029, Table 0027 00-2, Item 1)
Tentage Repair Kit (WP 0029, Table 0027 00-2, Item 2)

GENERAL

This procedure contains information and instructions to keep the LME transport covers and bags in good working order by inspecting, repairing, or replacing Individual covers and bags as necessary.

INSPECT

Inspect the transport covers and bags (1) for tears, cuts, rips and open seams. Check condition and secure attachment of the handles (2), binding tape (3), and hook and pile fasteners (4). Check condition of the repair kit pocket (5) inside one of the fabric transport covers. Inspect the repair kit (6) and its contents for serviceability. It should contain the following items:

2 each Pin, Quick Release, with lanyard
1 each Needle Pusher
1 yard, 3 inch wide Adhesive Tape, Grn-483
1 each Thread, Spool 2oz, TI, CIB,OD-7
3 each Needle, Sail, No. 16
Cloth, Coated Polyester, waterproof, Type II, C2, Color CG-483.

REPLACE

Replace a transport cover or bag that has tears, cuts or rips that cannot be repaired, ripped or missing handles, or is contaminated. Replace a repair kit if its contents are depleted or unusable.

REPAIR

If cuts or tears of more than 6 inches are noted, seams are opening, or binding tape is loose, refer the transport cover or bag to direct support maintenance.

Repair any cuts, tears or perforations in the fabric of up to 6 inches long using the LME Repair Kit. Also make temporary repairs to seam openings (not longer than 6 inches).

Rips, Tears, Cuts and Perforations. To repair a rip, tear, or cut in the fabric, proceed as follows:

Clean the area surrounding the damage.

Locate the LME Repair Kit and the 3" wide adhesive tape within it. Cut a piece of this tape slightly longer than the area to be fixed.

If the bag is in use, unpack it and have another person hold a flat hard surface on the inside of the bag against the damaged area to provide a working surface to effect the repair.

Peel the protective backing off the tape and apply it to the damaged area.

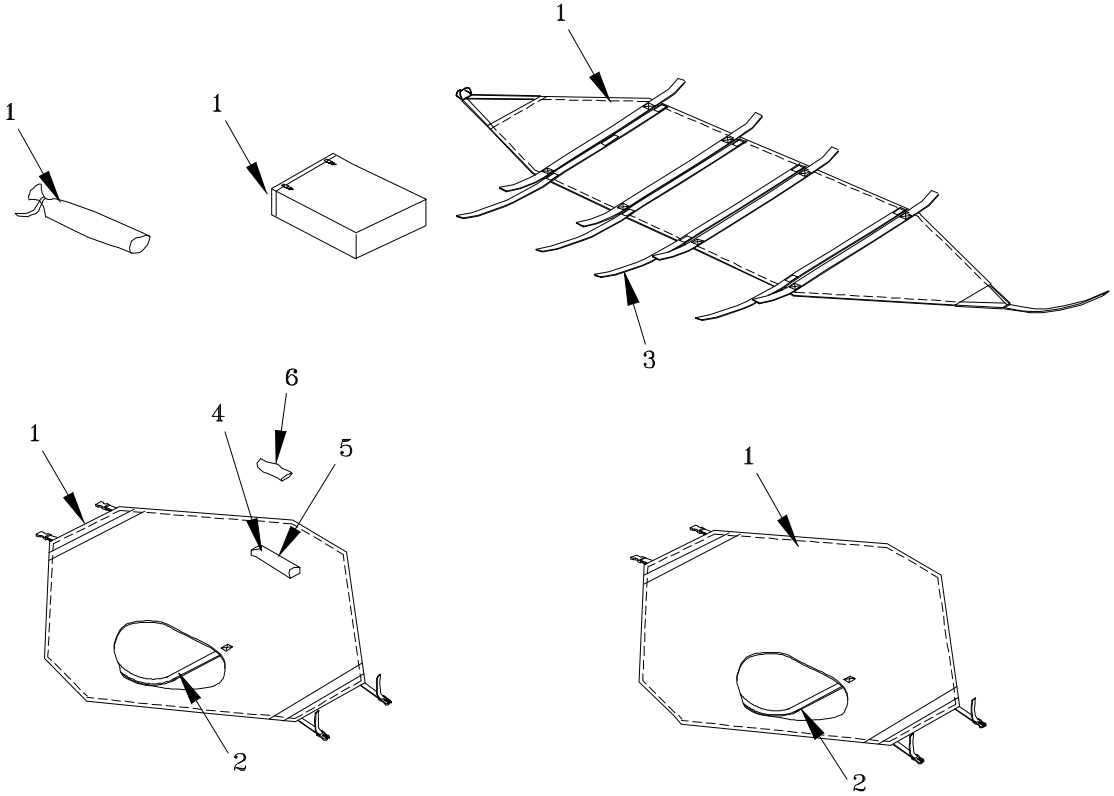

Open Seam and loose Hardware. To make temporary repairs to an open (less than 6 inches long) seam proceed as follows:

Remove any loose thread hanging from the open seam.

Locate the LME Repair Kit and the needle pusher, thread, and needle.

Cut a sufficient length of thread and thread it through the needle.

Repair the damaged area with one of three common hand stitching methods shown below:

Flat Stitch. Pass the needle over and under an equal amount of material, each successive stitch entering the material from the opposite side.

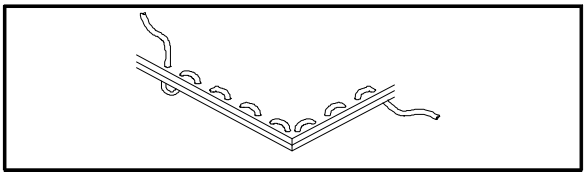

Backstitch. Make two small stitches in the same place to secure the cord end. Continue by inserting the needle into the preceding stitch and bringing it out on the same side of the material one stitch length in advance of the preceding stitch.

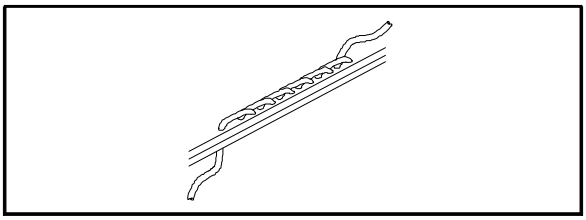

Round stitch. Use this stitch to temporarily repair grommets or secure other hardware. Insert the thread at right angles to the edge of the material and bring cord around edge before making the next stitch.

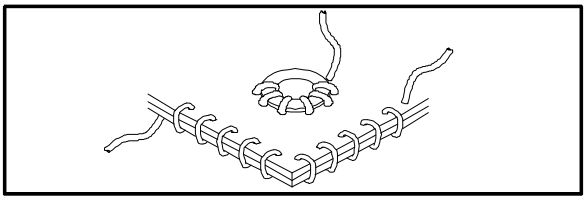

END OF WORK PACKAGE

CHAPTER 5

DIRECT SUPPORT MAINTENANCE INSTRUCTIONS FOR LIGHTWEIGHT MAINTENANCE ENCLOSURE

LIGHTWEIGHT MAINTENANCE ENCLOSURE (LME)
TABLE OF CONTENTS

Subject	Page
INTRODUCTION	0025 00-1
MACHINE STITCHING	0025 00-1
Thread Breaks	0025 00-1
Stitching Ends	0025 00-1
Skipped Stitches	0025 00-1
AUTOMATIC STITCHING	0025 00-1
INSPECTION	0025 00-1
ASSEMBLY, 50 WATT MILITARY LIGHT	0026 00-1
POWER DISTRIBUTION BOX	0027 00-1

LIGHTWEIGHT MAINTENANCE ENCLOSURE (LME) **0025 00**
DIRECT SUPPORT MAINTENANCE INTRODUCTION

THIS SECTION COVERS:
Introduction

INITIAL SETUP:

Maintenance Level
Direct Support

INTRODUCTION

Direct Support maintenance functions identified in this section consist of repairing rips, tears, perforations and open seams in LME fabric panels, and replacing components of the power distribution box. Procedures for machine stitching are provided in the following paragraphs. Specific tentage repair procedures are provided in FM 10-16. Pay attention to WARNING and CAUTION statements. A WARNING means someone could be hurt. A CAUTION means equipment could be damaged.

MACHINE STITCHING

All stitching, except bartacking shall conform to FED-STD 751. Type 301 and 401 stitching requires 5-8 stitches per inch. Bartacking shall be 1/8 inch in with and free of thread breaks and loose stitching.

Thread Breaks. Thread breaks in stitching shall be overstitched not less than 1 inch at each break on stitch type 301, and not less than 1 ½ inch at each break on stitch type 401. Thread breaks in type 401 may be overstitched with stitch type 301. Thread breaks noted during inspection must be repaired by overstitching the existing stitching starting from the distance of 1 inch beyond the break. The ends of repair stitching are not required to be backstitched.

Stitching Ends. The ends of type 301 stitching shall be overstitched not less than 1 inch except where ends are turned under in the hem or held down by other stitching. Where 301 stitchings performed automatically on stitch patterns such as box , box with cross stitch, “W” stitching, or straight line tacking, at least three tying, overlapping, or back stitches shall be used to secure the ends of stitching.

Skipped Stitches. Two or more consecutively skipped stitches occurring in type 301 stitching shall be overstitched not less than 1 inch. Any skipped stitches in type 401 stitching shall be overstitched not less than 1 ½ inches. Skipped stitches in 401 stitching may be overstitched with type 301 stitching. Skipped stitches noted during inspection shall be repaired as specified for thread breaks, above.

AUTOMATIC STITCHING

Automatic stitching machines may be used to perform any of the required stitch patterns provided the requirements of the stitch pattern, stitch per inch, size and type of thread are met, and at least three or more overlapping, tying or backstitches secure the ends of the stitching.

INSPECTION

When LME components are referred to Direct Support Maintenance, inspect the components using Table 0008 00-1 and correct any faults and deficiencies noted.

END OF WORK PACKAGE

LIGHTWEIGHT MAINTENANCE ENCLOSURE (LME) ASSEMBLY, 50 WATT MILITARY LIGHT **0026 00**

THIS SECTION COVERS:
Inspect, Replace, Test, Repair

INITIAL SETUP
Light Set, Fluorescent, in operation
Maintenance Level
Direct Support
Materials/Parts
Tools and Special Tools
Multimeter (WP 0029, Table 0027 00-2, Item 4)

GENERAL

This procedure contains information and instructions to keep the LME lights in good working order by inspecting, testing, repairing or replacing the entire light.

WARNING

If the lights are in use, limit inspection of the individual lights to a visual inspection from the ground to avoid injuries from falls.

INSPECT

Inspect the individual lights for damage. Check condition of power cords and plugs. Check circuit breaker and reset if necessary.

REPLACE

Replace a light that does not function properly or that has frayed power cord(s) and plug(s). Replace light bulbs in individual lights as necessary. Replace a defective light power receptacle or LIGHTS switch on the power distribution box as described in Work Package 0027 00.

WARNING

Lethal voltage is present when the power distribution box is connected to a power source. Disconnect the power source before testing any component of the power distribution box. Serious injury or death to personnel may result from touching any component under power.

TEST
Test the power receptacle marked ‘Lights Only’, the circuit breakers, and the LIGHTS switch, in that order, on the power distribution box for continuity, using a multimeter as described in Work Package 0026 00.

REPAIR
Repair the lights by replacing individual components described under REPLACE, above, or by replacing the power receptacle, circuit breaker, or LIGHTS switch as described in Work Package 0026 00.

END OF WORK PACKAGE

LIGHTWEIGHT MAINTENANCE ENCLOSURE (LME) **0027 00**
POWER DISTRIBUTION BOX

THIS SECTION COVERS:
Inspect, Replace, Test, Repair

INITIAL SETUP
Power Distribution Box in container, or in operation
Maintenance Level
Direct Support
Materials/Parts Tags,(WP0045 item 5))
Tools and Special Tools
Tool Kit, General Mechanic's (WP 0029, Table 0027-2, Item 3)
Multimeter (WP 0029, Table 0027 -2, Item 4)

GENERAL

This procedure contains information and instructions to keep the LME power distribution box in good working order by inspecting, testing, repairing or replacing the entire power distribution box assembly.

WARNING

Lethal voltage is present when the power distribution box is connected to a power source. Disconnect the power source before affecting any repairs to the box. Serious injury or death to personnel may result from touching any component under power.

INSPECT

Inspect the power distribution box components for proper operation, including condition of circuit breakers (1), power receptacles (2), LIGHTS switch (3), power cord (4),terminal block (5) and power distribution block (6).

REPLACE

Replace a damaged power distribution box that has sustained damage and does not operate properly. Replace an inoperative circuit breaker, GFCI receptacle, or light switch as required.

WARNING

Lethal voltage is present when the power distribution box is connected to a power source. Disconnect the power source before testing any component of the power distribution box. Serious injury or death to personnel may result from touching any component under power.

TEST

Test inoperative circuit breakers (1), power receptacles (2), and the LIGHTS switch (3) for continuity using a multimeter (7).

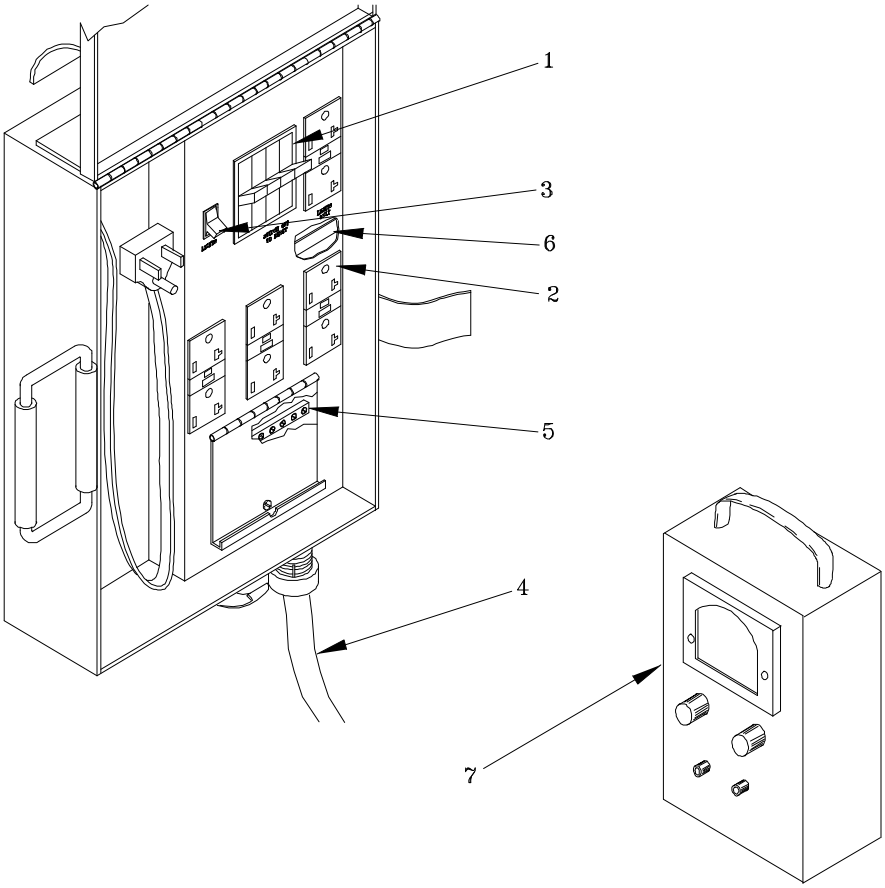

REPAIR

If no continuity is indicated, repair the power distribution box by replacing the defective component.

To replace a defective circuit breaker, proceed as follows:

Remove

Loosen flathead screws (1) to release wires from rear of circuit breaker. (Tag the wires)

Loosen and remove the 2 cross-tipped screws (2) and washers (3), securing the circuit breaker to the front panel.

Remove circuit breaker.

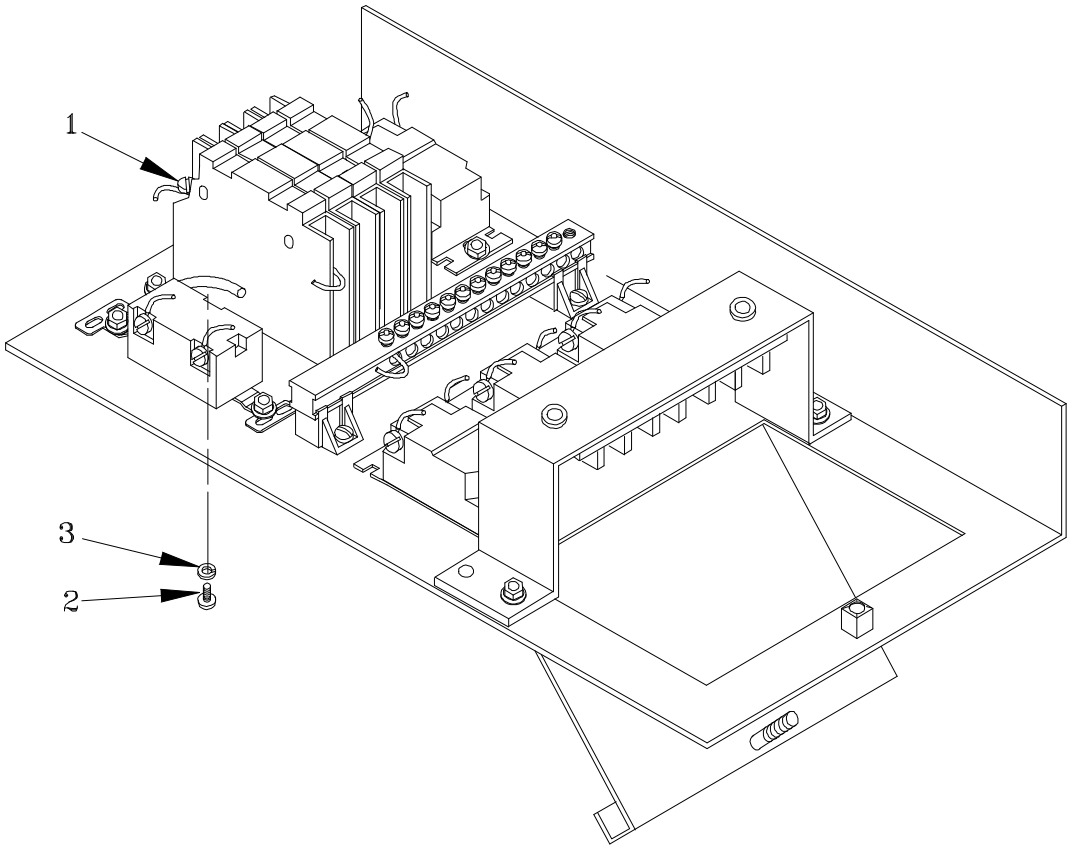

Install

Place new circuit breaker into position and secure with 2 cross-tipped screws (2) and washers (3) to the front of panel.

Re-attach tagged wires and secure with flathead screws (1).

To replace a defective light switch, proceed as follows:

Remove

Loosen cross-tipped screws (1) holding wires.

Remove the wires. (Tag the wires)

Remove pan head screws (2) and lock nuts (3) securing light switch (4) to panel, and retain screws.

Remove light switch from panel.

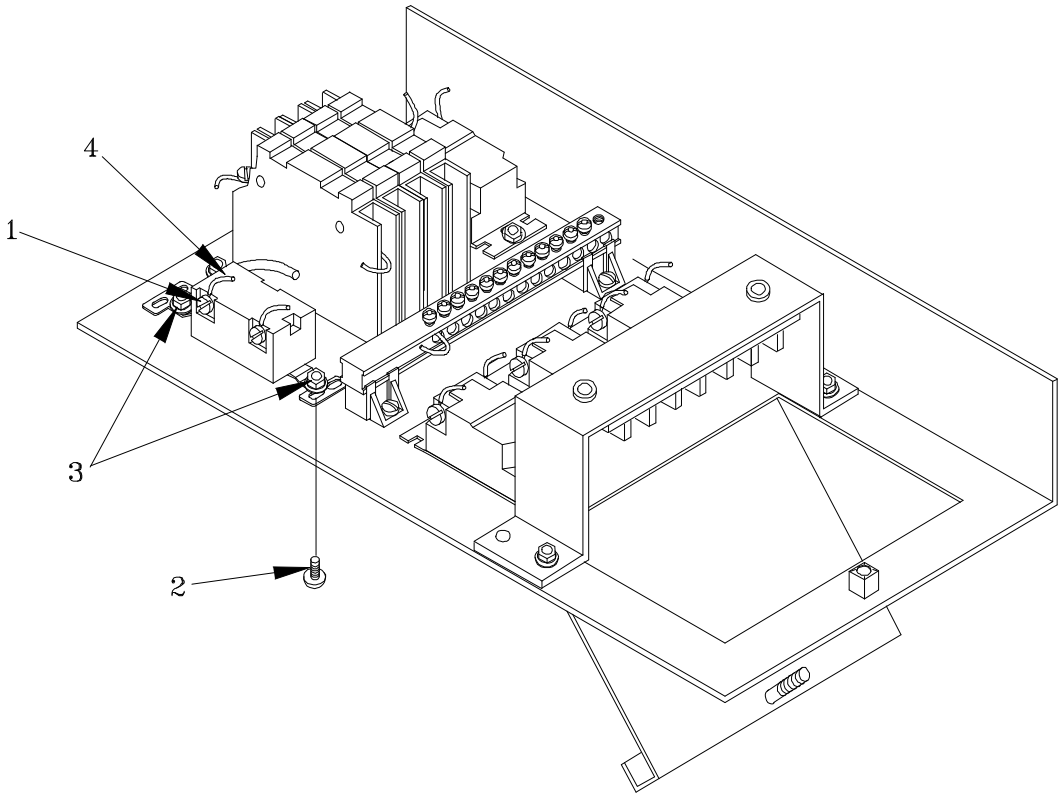

Install

Place new light switch (4) into position and secure with pan head screws (2) and lock nuts (3).

Re-attach tagged wires and secure with cross-tipped screws (1).

To Replace a defective light receptacle:

Remove

Remove pan head screws (1) and lock nuts (2) securing receptacle (3) to panel and retain nuts.

Lift receptacle off panel.

Loosen flathead screws (4).

Remove the wires. (Tag the wires)

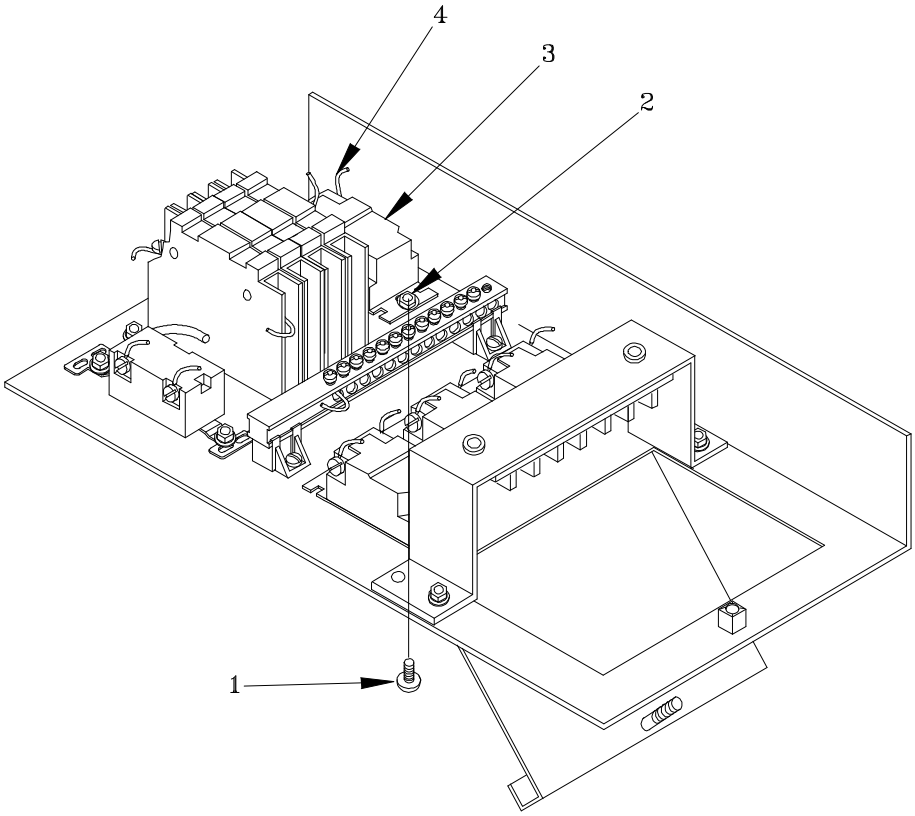

Install

Place new receptacle (3) on panel.

Tighten pan head screws (1) and lock nuts (2) to secure receptacle to panel.

Re-attach tagged wires with flathead screws (4).

To Replace defective GFCI receptacle:

Remove

Remove pan head screws(1) and lock nuts (2) securing the PDB distribution block assembly (3) to panel. Leave wires attached.

Move PDB distribution block assembly (3) out of the way.

Remove and replace GFCI receptacle as in light receptacle procedure above.

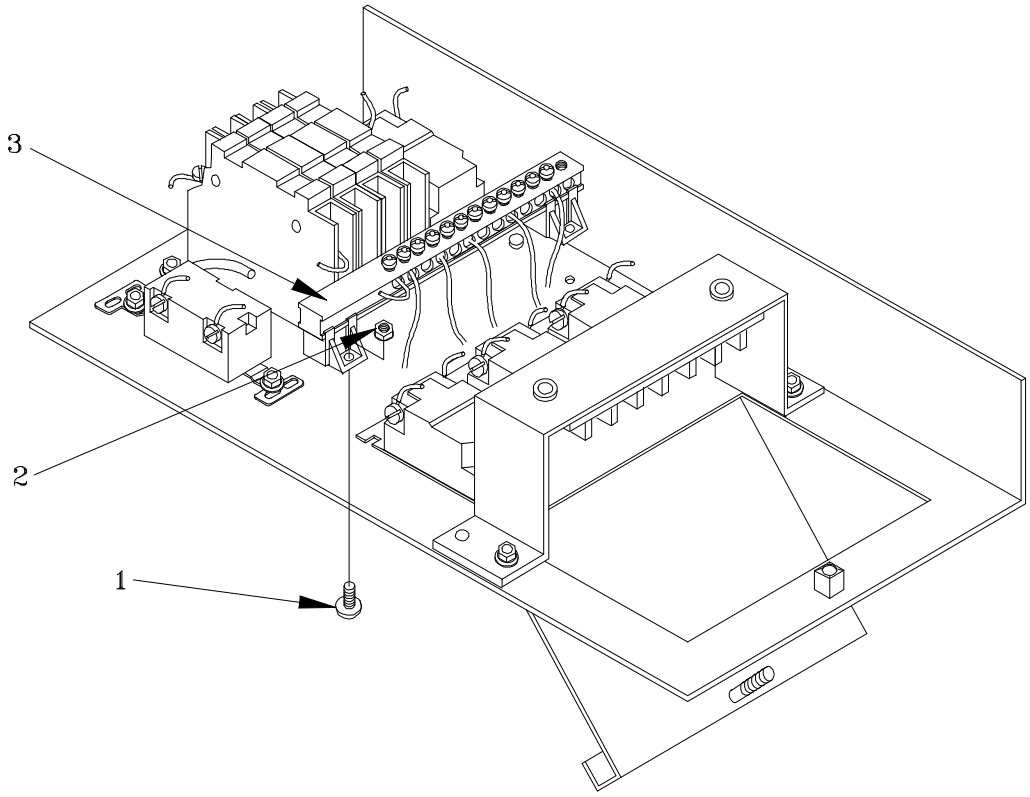

Install

Re-install PDB distribution block (3) with securing pan head screws (1) and lock nuts (2).

To Remove a defective terminal block:

Remove

Loosen flathead screws securing wires to terminal block, and remove wires. (Tag the wires)

Remove truss head screws (1)and lock nuts (2) securing PDB terminal block assembly (3) to component panel.

Separate terminal block from terminal plate by removing 2 hex socket screws (4) and lock nuts (5). Retain screws.

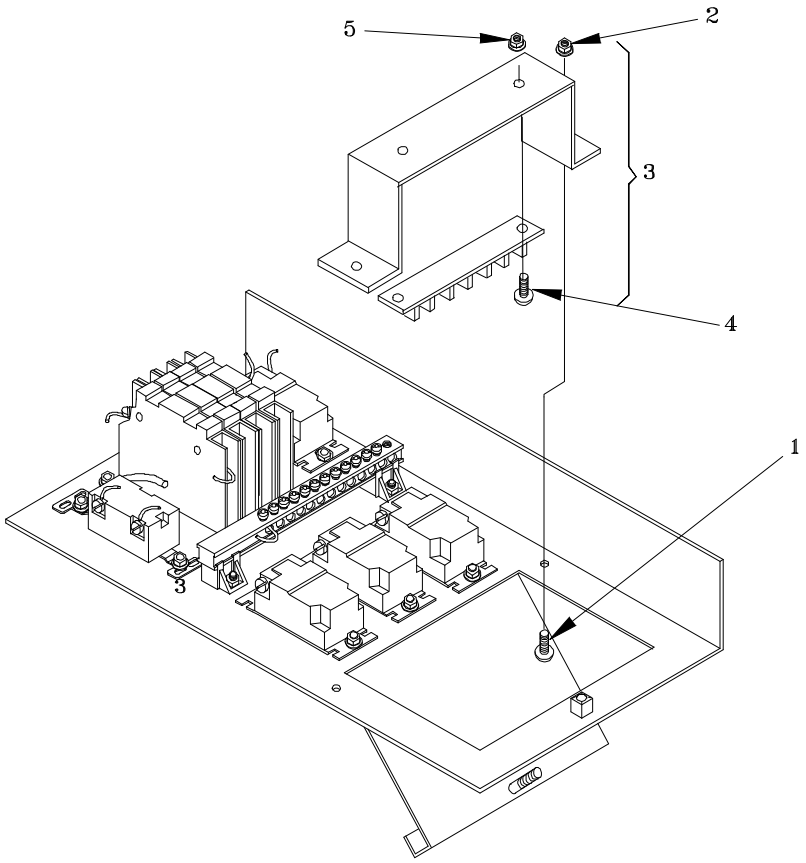

Install

Install new terminal block onto terminal plate with 2 hex socket screws (4) and lock nuts (5).

Install terminal block assembly (3) onto component panel using the 2 retained truss head screws (1) and lock nuts (2).

Re-install tagged wires onto terminal block and secure with flathead screws.

To replace a defective power distribution block assembly, proceed as follows:

Remove

Loosen screws (1) holding wires to block assembly (2).

Remove wires from block assembly (2), and tag.

Remove 2 truss head screws (3) and lock washers (4) holding distribution block (2) to panel.

Slide distribution block from panel. (Slide to side)

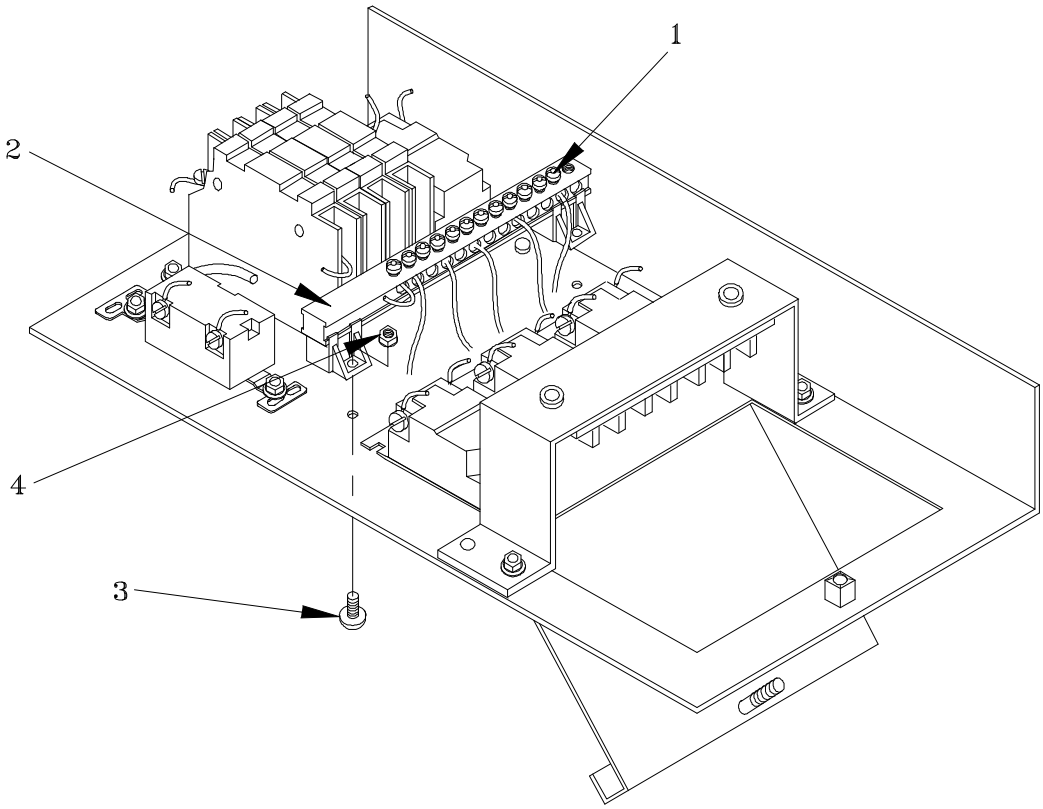

Install

Slide new distribution block in from side.

Re-secure 2 truss head screws (3) and lock washers (4) holding distribution (2) block to panel.

Re-attach tagged wires to distribution block by tightening screws (1).

END OF WORK PACKAGE

CHAPTER 6

SUPPORTING INFORMATION
FOR
LIGHTWEIGHT MAINTENANCE ENCLOSURE

LIGHTWEIGHT MAINTENANCE ENCLOSURE (LME)
TABLE OF CONTENTS

Subject	Page
REFERENCES	0028 00-1
FIELD MANUALS	0028 00-1
FORMS	0028 00-1
TECHNICAL MANUALS	0028 00-1
PAMPHLETS	0028 00-1
FEDERAL STANDARDS	0028 00-1
INTRODUCTION (MAINTENANCE ALLOCATION CHART)	0029 00-1
The Army Maintenance System MAC	0029 00-1
Maintenance Functions	0029 00-1
Explanation of Columns in the MAC	0029 00-2
Explanation of Columns in the Tools and Test Equipment Requirements	0029 00-3
Explanation of Columns in Remarks	0029 00-3
MAINTENANCE ALLOCATION CHART FOR LME	0029 00-4
TOOLS AND TEST EQUIPMENT REQUIREMENTS FOR LME	0029 00-5
REMARKS FOR LME	0029 00-5
REPAIR PARTS AND SPECIAL TOOLS LIST (RPSTL)	0030 00-1
Scope	0030 00-1
General	0030 00-1
Explanation of columns in the RPSTL	0030 00-1
Explanation of Cross Reference Index Format and Columns	0030 00-5
Special Information	0030 00-6
How to Locate Repair Parts	0030 00-6
BULK MATERIAL REPAIR PARTS LIST	0039 00-3
REPAIR KIT REPAIR PARTS LIST	0040 00-3
STOCK NUMBER INDEX	0041 00-1
PART NUMBER INDEX	0042 00-1
COMPONENTS OF END ITEM (COEI)	0043 00-1
Introduction	0043 00-1
Scope	0043 00-1
General	0043 00-1
COMPONENTS OF END ITEM (COEI) LIST	0043 00-2
BASIC ISSUE ITEMS LIST (BII)	0043 00-7
ADDITIONAL AUTHORIZATION LIST (AAL)	0044 00-1
Introduction	0044 00-1
Scope	0044 00-1
General	0044 00-1
ADDITIONAL AUTHORIZED LIST ITEMS	0044 00-1
EXPENDABLE AND DURABLE ITEMS LIST	0045 00-1
Introduction	0045 00-1
Scope	0045 00-1
General	0045 00-1
EXPENDABLE AND DURABLE ITEMS LIST	0045 00-1

SCOPE.

This section lists all field manuals, forms, technical manuals and miscellaneous publications referenced in this manual.

FIELD MANUALS.

Basic Cold Weather Manual	FM 31-70
First Aid for Soldiers	FM 21-11
Mountain Operations	FM 90-6
NBC Decontamination	FM 3-3
Northern Operations	FM 31-71
Operation and Maintenance of Ordnance Material in Cold Weather	FM 9-207
General Fabric Repair	FM 10-16

FORMS.

Equipment Control Record	DA Form 2408-9
Equipment Inspection and Maintenance Worksheet	DA Form 2404
Hand Receipt	DA Form 2062
Transportation Discreptancy Report	SF361
Product Quality Deficiency Report	SF 368
Recommended Changes to Equipment Technical Publications	DA Form 2028-2
Recommended Changes to Publications and Blank Forms	DA Form 2028

TECHNICAL MANUALS.

Destruction of Army Material to prevent Enemy Use	TM 750-244-2
Administrative Storage of Equipment	TM 740-90-1
Preservation, Packaging, and Packing of Military Supplies and Equipment	TM 38-230-2

PAMPHLETS

Functional User's Manual for the Army Maintenance Management System (TAMMS)	DA Pam 738-750

FEDERAL STANDARDS

Stitches, Seams and Stitchings	Fed Std 751

END OF WORK PACKAGE

INTRODUCTION.

The Army Maintenance System MAC

This introduction provides a general explanation of all maintenance and repair functions authorized at various maintenance levels under the standard Army Maintenance System concept.

The MAC (immediately following the introduction) designates overall authority and responsibility for the performance of maintenance functions on the identified end item or component. The application of the maintenance functions to the end item or component shall be consistent with the capacities and capabilities of the designated maintenance levels, which are shown on the MAC in column (4) as:

Unit - includes two subcolumns, C (operator/crew) and O (unit) maintenance
Direct Support - includes an F subcolumn
General Support - includes an H subcolumn
Depot - includes a D subcolumn

The tools and test equipment requirements (immediately following the MAC) list the tools and test equipment (both special tools and common tool sets) required for each maintenance function as referenced from the MAC.

The remarks (immediately following the tools and test equipment requirements) contain supplemental instructions and explanatory notes for a particular maintenance function.

Maintenance Functions

Maintenance functions will be limited to and are defined as follows:

Inspect. To determine the serviceability of an item by comparing its physical, mechanical, and/or electrical characteristics with established standards through examination (e.g., by sight, sound, or feel.)

Test. To verify serviceability by measuring the mechanical, pneumatic, hydraulic, or electrical characteristics of an item and comparing those characteristics with prescribed standards

Service. Operations required periodically to keep an item in proper operating condition, i.e. to clean (includes decontaminate, when required), to preserve, to drain, to paint, or to replenish fuel, lubricants, chemical fluids, or gases.

Adjust. To maintain or regulate, within prescribed limits, by bringing into proper or exact position, or by setting the operating characteristics to specified parameters.

Align. To adjust specified variable elements of an item to bring about optimum performance.

Calibrate. To determine and cause corrections to be made, or to be adjusted on instruments, tests, measuring, and diagnostic equipment used in precision measurement. Consists of comparisons of two instruments, one of which is a certified standard of known accuracy, to detect and adjust any discrepancy in the accuracy of the instrument being compared.

Remove/Install. To remove and install the same item when required to perform service or other maintenance functions. Install may be the act of emplacing, seating, or fixing into position a spare, repair part, or module (component or assembly) in a manner to allow the proper function of the equipment.

Replace. To remove an unserviceable item and install a serviceable counterpart in its place. "Replace" is authorized by the MAC and is shown as the 3rd position code of the SMR code.

Repair. The application of maintenance services, including fault location/troubleshooting, removal/installation, and disassembly/assembly procedures, and maintenance actions to identify troubles, and restore serviceability to an item by correcting specific damage, fault, malfunction, or failure in a part, subassembly, module (component or assembly), end item, or system.

NOTE

The following definitions are applicable to the 'repair' maintenance function:

Services-Inspect, test, service, adjust, align, calibrate, and/or replace.

Fault location/troubleshooting-The process of investigating and detecting the cause of equipment malfunctioning; the act of isolating a fault within a system or Unit Under Test (UUT).

Disassembly/assembly-The step by step breakdown (taking apart) of a spare/functional group coded item to the level of its least component, that is assigned an SMR code for the level of maintenance under consideration (i.e. identified as maintenance significant).

Actions-Welding, grinding, riveting, straightening, facing, machining, and or resurfacing,

Overhaul. That maintenance effort (service/action) prescribed to restore an item to a completely serviceable/operational condition as required by maintenance standards in appropriate technical publications (i.e., DMWR). Overhaul is normally the highest degree of maintenance performed by the Army. Overhaul does not normally return an item to like new condition.

Rebuild. Consists of those services/actions necessary for the restoration of unserviceable equipment to a like new condition in accordance with original manufacturing standards. Rebuild is the highest degree of material maintenance applied to Army equipment. The rebuild operation includes the act of returning to zero those age measurements (hours/miles, etc.) considered in classifying Army equipment/components.

Explanation of Columns in the MAC

Column 1, Group Number. Column 1 lists functional group code numbers, the purpose of which is to identify maintenance significant components, assemblies, subassemblies, and modules with the next higher assembly. End item group numbers are "00".

Column 2. Component/Assembly. Column 2 contains the names of components, assemblies,

subassemblies, and modules for which maintenance is authorized.

(3) Column 3, Maintenance Function. Column 3 lists the functions to be performed on the item listed in Column 2. (For detailed explanation of these functions, see paragraph b. above)

Column 4. Maintenance Level. Column 4 specifies, by the listing of a work time figure (expressed as man-hours shown as whole hours or decimals) in the appropriate subcolumn(s), the level of maintenance authorized to perform the function listed in Column (3). This figure represents the active time required to perform that maintenance function at the indicated level of maintenance. If the number or the complexity of the tasks within the listed maintenance function vary at different maintenance levels, appropriate work time figures will be shown for each level. The work time figure represents the average time required to restore an item (assembly, subassembly, component, module, end item, or system) to a serviceable condition under typical field operating conditions. This time includes item preparation (including any necessary disassembly/assembly time), troubleshooting/fault location time, and quality assurance/quality control time in addition to the time required to perform the specific tasks identified for the maintenance functions authorized in the maintenance allocation chart. The system designations for the various maintenance levels are shown below:

C ..... Operator or crew
O ..... Unit Maintenance
F ..... Direct Support Maintenance
H ..... General Support Maintenance
D ..... Depot Maintenance

Column 5, Tools and Equipment. Column 5 specifies, by code, those common tool sets (not individual tools) common TMDE, and special tools, special TMDE, and support equipment required to perform the designated function.

Column 6, Remarks. This column, when applicable, contains a letter code, in alphabetic order, which is keyed to the remarks contained in Table 0027 00-3.

Explanation of Columns in the Tools and Test Equipment Requirements

Column (1) - Tool or Test Equipment Reference Code. The tool or test equipment reference code correlates with a code used in column (5) of the MAC.

Column (2) - Maintenance Level. The lowest level of maintenance authorized to use the tool or test equipment.

Column (3) - Nomenclature. Name or identification of tool or test equipment.

Column (4) - National Stock Number (NSN). The NSN of the tool or test equipment.

Column (5) - Tool Number. The manufacturer’s part number, model number, or type number.

Explanation of Columns in Remarks

Column (1) - Remarks Code. The code recorded in Column (6) of the MAC.

Column (2) - Remarks. This column lists information pertinent to the maintenance function being performed as indicated in the MAC.

MAINTENANCE ALLOCATION CHART FOR LME.

Table 0027 00-1. MAC for LME.

(1) GROUP NUMBER	(2) COMPONENT/ ASSEMBLY	(3) MAINTENANCE FUNCTION	(4) MAINTENANCE LEVEL					(5) TOOLS AND EQUIPMENT REF CODE	(6) REMARKS CODE
			UNIT		DIRECT SUPPORT	GENERAL SUPPORT	DEPOT		
			C	O	F	H	D		
00	LME	INSPECT SERVICE REPLACE TEST REPAIR							
01	FRAME ASSEMBLY,LME	INSPECT REPLACE REPAIR	.5	 .25 .5				 3	A
0101	SUPPORT FRAME ASSEMBLIES (DOOR HEADER & CABLE HEADER)	INSPECT REPLACE REPAIR	.5	 .25 .5				 3	A
010101	UPPER ARCH ASSEMBLY	INSPECT REPLACE	.25	 .25					A
010102	LOWER ARCH ASSEMBLY	INSPECT REPLACE	.25	 .25					A
010103	DOOR HEADER ASSEMBLY	INSPECT REPLACE	.25	 .25				 3	A
010104	CABLE HEADER ASSEMBLY	INSPECT REPLACE	.25	 .25					A
010105	LOWER LEG ASSEMBLY	INSPECT REPLACE	.25	. .25				 3	A
010106	SIDER ASSEMBLY	INSPECT REPLACE	.25	 .25				 3	A
02	FABRIC ASSEMBLY, INTERMEDIATE SECTION	INSPECT REPLACE REPAIR	.25	 .25 .5	 1.0			 1,2,5	A
03	FABRIC ASSEMBLY, END PANEL	INSPECT REPLACE REPAIR	.25	 .25 .5	 1.0			 1,2,5	A

(1) GROUP NUMBER	(2) COMPONENT/ ASSEMBLY	(3) MAINTENANCE FUNCTION	(4) MAINTENANCE LEVEL					(5) TOOLS AND EQUIPMENT REF CODE	(6) REMARKS CODE
			UNIT		DIRECT SUPPORT	GENERAL SUPPORT	DEPOT		
			C	O	F	H	D		
04	EXTENSION OF LENGTH	INSPECT REPLACE REPAIR	.10	 .25 .5	 1.0			 1,2,5	 B
05	ASSEMBLY, LIGHT KIT	INSPECT REPLACE TEST REPAIR	.5	 .25	 .5 .5			 4 3	
06	POWER DISTRIBUTION BOX ASSEMBLY, 70 AMP	INSPECT REPLACE TEST REPAIR	.10	 .25 .5				 1,2,4	
07	FABRIC TRANSPORT COVER WITH REPAIR KIT	INSPECT REPLACE REPAIR	.10	 .25 .5				 1,2	
0701	FABRIC TRANSPORT COVER	INSPECT REPLACE REPAIR	.10	 .25 .5				 1,2	
0702	FRAME TRANSPORT COVERS	INSPECT REPLACE REPAIR	.10	 .25 .5				 1,2	
0703	TENT PIN TRANSPORT BAG ASSEMBLY, LME	INSPECT REPLACE REPAIR	.10	 .25 .5	 .5			 1,2,5	
08	TENT PINS AND GUY LINES	INSPECT REPLACE	.10	 .5					
0801	PIN, TENT, STEEL 18"	INSPECT REPLACE	.10	 .5					
0802	PIN, TENT, WOOD 16"	INSPECT REPLACE	.10	 .5					
0803	PIN, TENT, WOOD 24"	INSPECT REPLACE	.10	 .5					
0804	GUY LINE W/SLIP 14' 1"	INSPECT REPLACE	.10	 .5					
0805	GUY LINE W/SLIP 23' 1"	INSPECT REPLACE	.10	 .5					

TOOLS AND TEST EQUIPMENT REQUIREMENTS FOR LME.

Table 0027 00-2. Tools and Test Equipment for LME.

TOOL OR TEST EQUIPMENT REF CODE	MAINTENANCE LEVEL	NOMENCLATURE	NATIONAL STOCK NUMBER	TOOL NUMBER
1	O	LME REPAIR KIT		PN CMC-7970
2	O	TENTAGE REPAIR KIT	8340-00-282-5767	
3	O	TOOL KIT, GENERAL MECHANIC'S		
4	F	MULTIMETER	6625-01-139-2512	AN/PSM-45
5	F	SEWING MACHINE, INDUSTRIAL	3530-00-892-4631	

REMARKS FOR LME.

Table 0027 00-3. Remarks for LME.

REMARKS CODE	REMARKS
A	REPLACE, REPAIR TIMES ARE FOR COMPONENTS NOT PART OF AN ERECTED FRAME
B	REPAIR AT UNIT LEVEL IS LIMITED TO THE CAPABILITIES OF THE TENTAGE REPAIR KIT

END OF WORK PACKAGE

SCOPE

This RPSTL lists and authorizes spare and repair parts; special tools; special tests, measurement and diagnostic equipment (TMDE); and other special support equipment required for performance of unit and direct support maintenance of the LME. It authorizes the requisitioning, issue, and disposition of spares, repair parts, and special tools as indicated by the source, maintenance, and recoverability (SMR) codes.

GENERAL

In addition to this section, this RPSTL is divided into the following additional sections:

Repair Parts Sections. These sections contain lists of spares and repair parts authorized by this RPSTL for use in the performance of maintenance. These sections also incude parts which must be removed for replacement of the authorized parts. Parts lists are composed of functional groups in ascending alphanumeric sequence, with the parts in each group listed in ascending figure and item number sequence. Hardware is listed with the components used. Bulk materials are listed by item name in FIG. BULK at the end of the sections. Repair parts kits are listed separately in their own functional group and section. Repair parts for reparable special tools are also listed in a separate section. Items listed are shown on the associated illustrations.

Special Tools List Sections. Sections containing lists of special tools, special TMDE, and special support equipment authorized by this RPSTL (as indicated by Basis of Issue (BOI) information in the DESCRIPTION AND USABLE ON CODE (UOC) column). Tools that are components of common tool sets and/or Class VII are not listed.

Cross-Reference Index Sections. There are two cross-reference indexes in this RPSTL; the National Stock Number (NSN) Index, and the Part Number Index. The NSN index refers you to the figure and the item number. The part number index also refers you to the figure and item number.

EXPLANATION OF COLUMNS IN THE RPSTL

ITEM NO. (Column (1)). Indicates the number used to identify items called out in the illustration.

SMR Code (Column (2)). The Source, maintenance, and recoverability (SMR) code is a 5-position code containing supply / requisitioning information, maintenance category authorization criteria and disposition instruction, as shown in the following breakout.

Source Code	Maintenance Code		Recoverability Code
---		---	---
XX		XX	X
---		---	---
1st two Positions: How you get an item	3rd position Who can install replace or use the item	4th position Who can do complete repair* on the item	5th position: Who determines disposition action on an item

* Complete Repair: Maintenance capacity, capability, and authority to perform all corrective maintenance tasks of the “Repair” function in a use/user environment in order to restore serviceability to a failed item.

Source Code. The source code, tells you how to get an item needed for maintenance, repair, or overhaul of an end item/equipment. Explanation of source codes follows.

Source Code	Explanation
PA PB PC** PD PE PF** PG	Stock items; use the applicable NSN to request/requisition items with these source codes. They are authorized to the category indicated by the code entered in the third position of the SMR code. NOTE: Items coded PC are subject to deterioration.
KD KF KB	Items with these codes are not to be requested/requisitioned individually. They are part of a kit which is authorized to the maintenance category indicated in the 3rd position of the SMR code. The complete kit must be requisitioned and applied.
MO-(Made at unit/ AVUM Level) MF-(Made at DS/ AVIM Level) MH-(Made at GS Level) ML-(Made at Specialized Repair Act. (SRA)) MD-(Made at Depot)	Items with these codes are not to be requested/requisitioned individually. They must be made from bulk material that is identified by the part number in the DESCRIPTION AND USABLE ON CODE (UOC) column and listed in the Bulk Material group of the repair parts list in this RPSTL. If the item is authorized to you by the 3rd position code of the SMR code, but the source code indicates it is made at a higher level, order the item from the higher level of maintenance.
AO-(Assembled by Unit/AVUM Level) AF-(Assembled by DS/AVIM Level) AH-assembled by GS level AL-(Assembled by SRA) AD-(Assembled by Depot)	Items with these codes are not to be requested/requisitioned individually. The parts that make up the assembled item must be requisitioned or fabricated and assembled at the level of maintenance indicated by the source code. If the third position code of the SMR code authorizes you to replace the item, but the source code indicates the item is assembled at a higher level, order the item from the higher level of maintenance.

XA Do not requisition an "XA" coded item. Order its next higher assembly. (Also, refer to the NOTE below.)
XB If an "XB" item is not available from salvage, order it using the CAGEC and part number given.
XC Installation drawing, diagram, instruction sheet, field service drawing, that is identified by manufacturer's part number.

XD Item is not stocked. Order an "XD" coded item through normal supply channels using the CAGEC and part number given, if no NSN is available.

NOTE

Cannibalization or controlled exchange, when authorized, may be used as a source of supply for items with the above source codes, except for those source coded "XA" or those aircraft support items restricted by requirements of AR 750-1.

Maintenance Code. Maintenance codes tell you the level(s) of maintenance authorized to use and repair support items. The maintenance codes are entered in the third and fourth positions of the SMR Code as follows:

Third Position. The maintenance code entered in the third position tells you the lowest maintenance level authorized to remove, replace, and use the support item. The maintenance code entered in the third position will indicate authorization to one of the following levels of maintenance.

Maintenance Code	**Application/Explanation**
C	Crew or operator maintenance done within unit/AVUM maintenance.
O	Unit level/AVUM maintenance can remove, replace, and use the item.
F	Direct support/AVIM maintenance can remove, replace, and use the item.
H	General support maintenance can remove, replace, and use the item.
L	Specialized repair activity can remove, replace, and use the item.
D	Depot level can remove, replace, and use the item.

Fourth Position. The maintenance code entered in the fourth position tells whether or not the item is to be repaired and identifies the lowest maintenance level with the capability to do complete repair (i.e., perform all authorized repair functions).

NOTE

Some limited repair may be done on the item at a lower level of maintenance, if authorized by the Maintenance Allocation Chart (MAC) and SMR codes.)

Maintenance Code	**Application/Explanation**
O	Unit/AVUM is the lowest level that can do complete repair of the item.
F	Direct support/AVIM is the lowest level that can do complete repair of the item.

H General support is the lowest level that can do complete repair of the item.

L Specialized repair activity (designate the specialized repair activity) is the lowest level that can do complete repair of the item.

D Depot is the lowest level that can do complete repair of the item.

Z Nonrepairable. No repair is authorized.

B No repair is authorized. (No parts or special tools are authorized for the maintenance of a "B" coded item.) However, the item may be reconditioned by adjusting, lubricating, etc., at the user level.

Recoverability Code. Recoverability codes are assigned to items to indicate the disposition action on unserviceable items. The recoverability code is entered in the fifth position of the SMR Code as follows:

Code	Application/Explanation
Z	Nonrepairable item. When unserviceable, condemn and dispose of the item at the level of maintenance shown in 3rd position of SMR Code.
O	Repairable item. When uneconomically repairable, condemn and dispose of the item at organizational or aviation unit level.
F	Repairable item. When uneconomically repairable, condemn and dispose of the item at the direct support or aviation intermediate level.
H	Repairable item. When uneconomically repairable, condemn and dispose of the item at the general support level.
D	Repairable item. When beyond lower level repair capability, return to depot. Condemnation and disposal of item not authorized below depot level.
L	Repairable item. Condemnation and disposal not authorized below Specialized Repair Activity (SRA).
A	Item requires special handling or condemnation procedures because of specific reasons (e.g., precious metal content, high dollar value, critical material, or hazardous material). Refer to appropriate manuals/ directives for specific instructions.

NATIONAL STOCK NUMBER (NSN) (Column (3)). The NSN for the item is listed in this column.

CAGEC (Column (4)). The Commercial and Government Entity Code (CAGEC) is a 5-digit numeric code which is used to identify the manufacturer, distributor, or Government agency/activity that supplies the item.

PART NUMBER (Column (5)). Indicates the primary number used by the manufacture, (individual company, firm, corporation, or Government activity), which controls the design and characteristics of the

item by means of its engineering drawings, specifications, standards, and inspection requirements to identify an item or range of items.

NOTE

When an item with an assigned NSN is requisitioned, the part number for the item received may be different than the part number of the item being requisitioned.

DESCRIPTION AND USABLE ON CODE (UOC) (Column (6)). This column includes the following information:

The federal item name and , when required, a minimum description to identify the item.

Part numbers of bulk materials are referenced in this column in the line entry to be manufactured/fabricated.

Hardness Critical Item (HCI). A support item that provides the equipment with special protection from electromagnetic pulse (EMP) damage during a nucear attack.

The statement “END of FIGURE” appears just below the last item description in Column (5) for a given figure in both the repair parts list and special tools list.

QTY (Column (8)). The QTY (quantity per figure) column indicates the quantity of the item used in the breakout shown on the illustration/figure, which is prepared for a functional group, subfunctional group, or an assembly. A “V” appearing in this column instead of quantity indicates that the quantity is a variable with each application.

EXPLANATION OF CROSS REFERENCE INDEX FORMAT AND COLUMNS

National Stock Number (NSN) Index.

STOCK NUMBER Column. This column lists the NSN in national item identification number (NIIN) sequence. The NIIN consists of the last nine digits of the NSN, i.e.

_____NSN _____
5305-01-574-1467
NIIN

When using this column to locate an item, ignore the first four digits of the NSN. Use the complete NSN (13 digits) when requisitioning by stock number.

FIG. COLUMN. This column lists the number of the figure where the item is identified/located. The figures are in numerical order in Section II and Section III.

ITEM COLUMN. The Item number identifies the item associated with the figure listed in the adjacent FIG. Column. This item is also identified by the NSN listed on the same line.

PART NUMBER INDEX. Part numbers in this index are listed by part number in ascending alphanumeric

sequence (i.e. vertical arrangement of letter and number combination which place the first letter or digit of each group in order A through Z, followed by the numbers 0 through 9, and each following letter or digit in like order).

PART NUMBER COLUMN. Indicates the primary number used by the manufacturer (individual, firm, corporation, or government activity), which controls the design and characteristics of the item by means of its engineering drawings, specifications, standards and inspection requirements to identify an item or range of items.

FIG. COLUMN. This column lists the number of the figure where the item is identified/located in the repair parts list and special tools list.

ITEM COLUMN. The item number is that number assigned to the item as it appears in the figure referenced in adjacent figure number column.

REFERENCE DESIGNATOR Column. Indicates the reference designator assigned to the item.

FIG. COLUMN. This column lists the number of the figure where the item is identified/located in the repair parts list and special tools list.

ITEM COLUMN. The item number is that number assigned to the item as it appears in the figure referenced in the adjacent figure number column.

SPECIAL INFORMATION.

USABLE ON CODE (UOC). The useable on code appears in the lower left corner of the Description Column heading. Useable on codes are shown as “UOC..” in the Description Column (justified left) on the first line under the applicable item description/nomenclature. Uncoded items are applicable to all models. Identification of the usable on codes used in this RPSTL are:

Code	Used On
NONE	

HOW TO LOCATE REPAIR PARTS.

When National Stock Numbers or Part Numbers are NOT known.

First, using the table of contents, determine the assembly or subassembly group to which the item belongs. This is necessary since figures are prepared for assembly groups and subassembly groups, and listings are divided into the same groups.

Second, find the figure covering the assembly group or subassembly group to which the item belongs.

Third, identify the item on the figure and note the number(s).

Fourth, look in the repair parts list for the figure and item numbers. The NSNs and part numbers are on the same line as the associated item numbers.

When National Stock Number or Part Number is known.

First, if you have the NSN, look in the STOCK NUMBER column of the NSN index. The NSN is arranged in NIIN sequence. Note the figure and item number next to the NSN.

Second, turn to the figure and locate the item number. Verify that the item is the one you are looking for.

When Part Number is known.

First, if you have the P/N and not the NSN, look in the PART NUMBER column of the P/N index. Identify the figure and item number.

Second. Look up the item on the figure in the applicable repair parts list.

END OF WORK PACKAGE

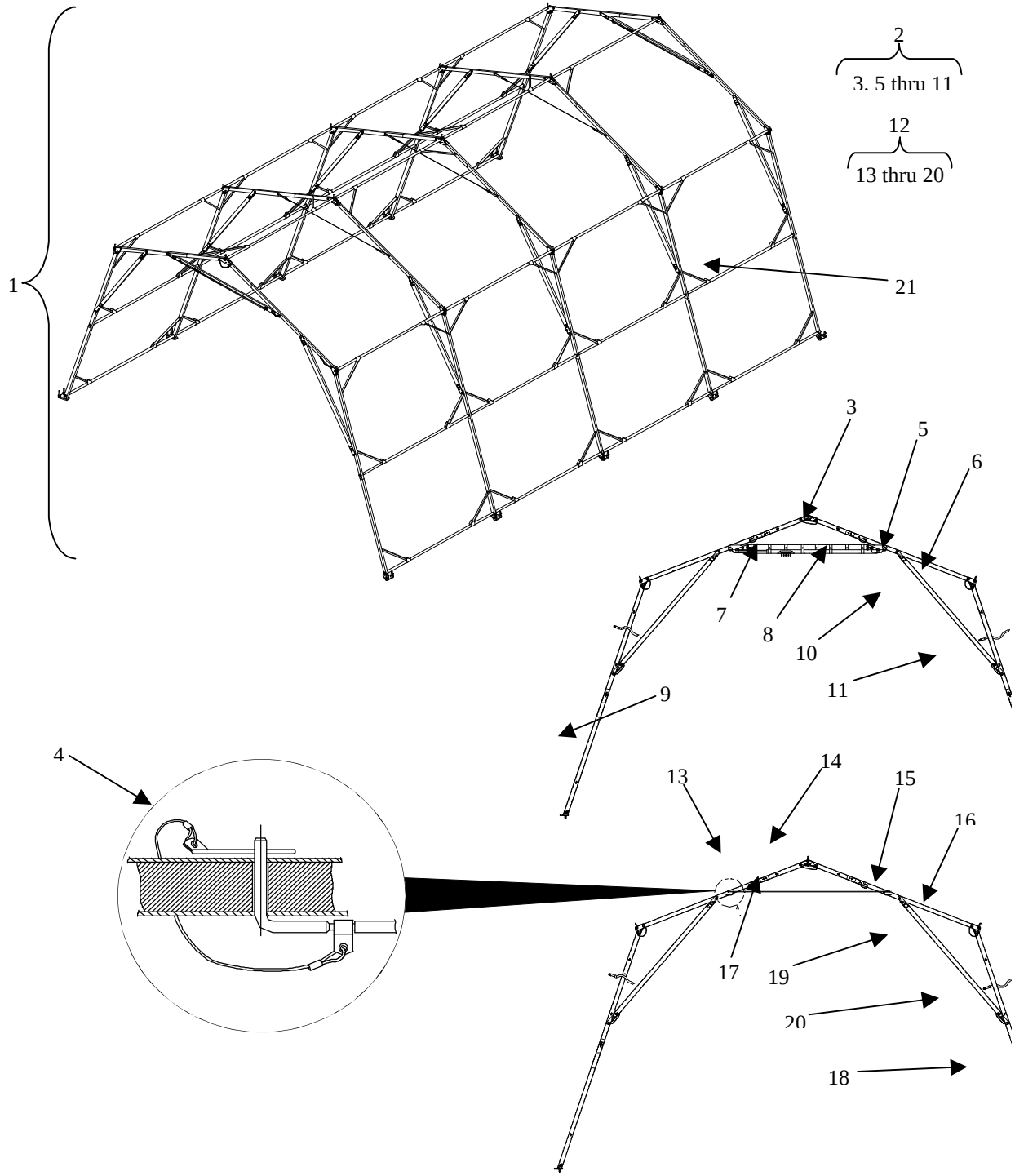

Figure 01 Frame Assembly (CMC-7862)

(1) ITEM NO.	(2) SMR CODE	(3) NSN	(4) CAGEC	(5) PART NUMBER	(6) DESCRIPTION AND USABLE ON CODE (UOC)	(7) QTY
					GROUP 01 FRAME ASSEMBLY FIG 01 CMC-7862 FRAME ASSEMBLY	
1	PAOOO		80515	CMC-7862	FRAME ASSEMBLY	1
2	PAOOO		80515	CMC-7863-1	.SUPPORT FRAME ASSEMBLY W/ DOOR HEADER	2
3	PAOOO		80515	CMC-7864	..UPPER ARCH ASSEMBLY	2
4	PAOZZ		80515	CMC-4154	...QUICK RELEASE PIN AND LANYARD ASSEMBLY	2
5	PAOOO		80515	CMC-7869	..LOWER ARCH ASSEMBLY	4
6	PAOZZ		80515	CMC-4154	...QUICK RELEASE PIN AND LANYARD ASSEMBLY	4
7	PAOOO		80515	CMC-7885	..DOOR HEADER ASSEMBLY	2
8	PAOZZ		80515	CMC-4154	...QUICK RELEASE PIN AND LANYARD ASSEMBLY	4
9	PAOOO		80515	CMC-7877	..LOWER LEG ASSEMBLY	4
10	PAOOO		80515	CMC-7879	..SIDER ASSEMBLY	4
11	PAOZZ		80515	CMC-4154	...QUICK RELEASE PIN AND LANYARD ASSEMBLY	2
12	PAOOO		80515	CMC-7863-2	.SUPPORT FRAME ASSEMBLY W/ CABLE HEADER	3
13	PAOOO		80515	CMC-7864	..UPPER ARCH ASSEMBLY	3
14	PAOZZ		80515	CMC-4154	...QUICK RELEASE PIN AND LANYARD ASSEMBLY	3
15	PAOOO		80515	CMC-7869	..LOWER ARCH ASSEMBLY	6
16	PAOZZ		80515	CMC-4154	...QUICK RELEASE PIN AND LANYARD ASSY	12
17	PAOZZ		80515	CMC-7889	..CABLE HEADER ASSEMBLY	3
18	PAOOO		80515	CMC-7877	..LOWER LEG ASSEMBLY	6
19	PAOOO		80515	CMC-7879	..SIDER ASSEMBLY	6
20	PAOZZ		80515	CMC-4154	...QUICK PELEASE PIN W/LANYARD ASSEMBLY	6
21	PAOZZ		80515	CMC-3336	.PURLIN	28
				END OF FIGURE		

END OF WORK PACKAGE

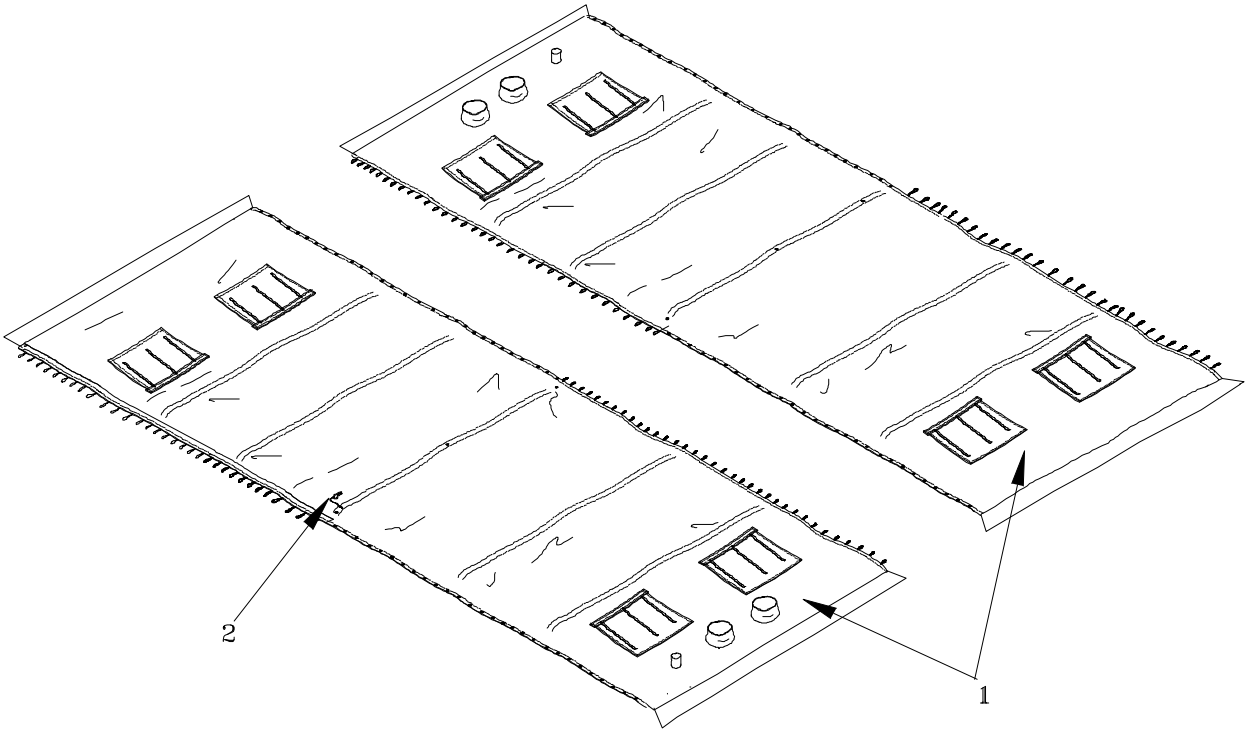

Figure 02 Fabric Assembly,Intermediate Section (CMC-7893)

(1) ITEM NO.	(2) SMR CODE	(3) NSN	(4) CAGEC	(5) PART NUMBER	(6) DESCRIPTION AND USABLE ON CODE (UOC)	(7) QTY
					GROUP 02 FABRIC ASSEMBLY, INTERMEDIATE SECTION FIGURE 02 CMC-7893 FABRIC ASSEMBLY, INTERMEDIATE SECTION	
1	PAOOO		80515	CMC-7893	FABRIC ASSEMBLY, INTERMEDIATE SECTION	1
2	PAOZZ		80515	CMC-3342	.ASSEMBLY, HITCH CLIP PIN	7
				END OF FIGURE		

END OF WORK PACKAGE

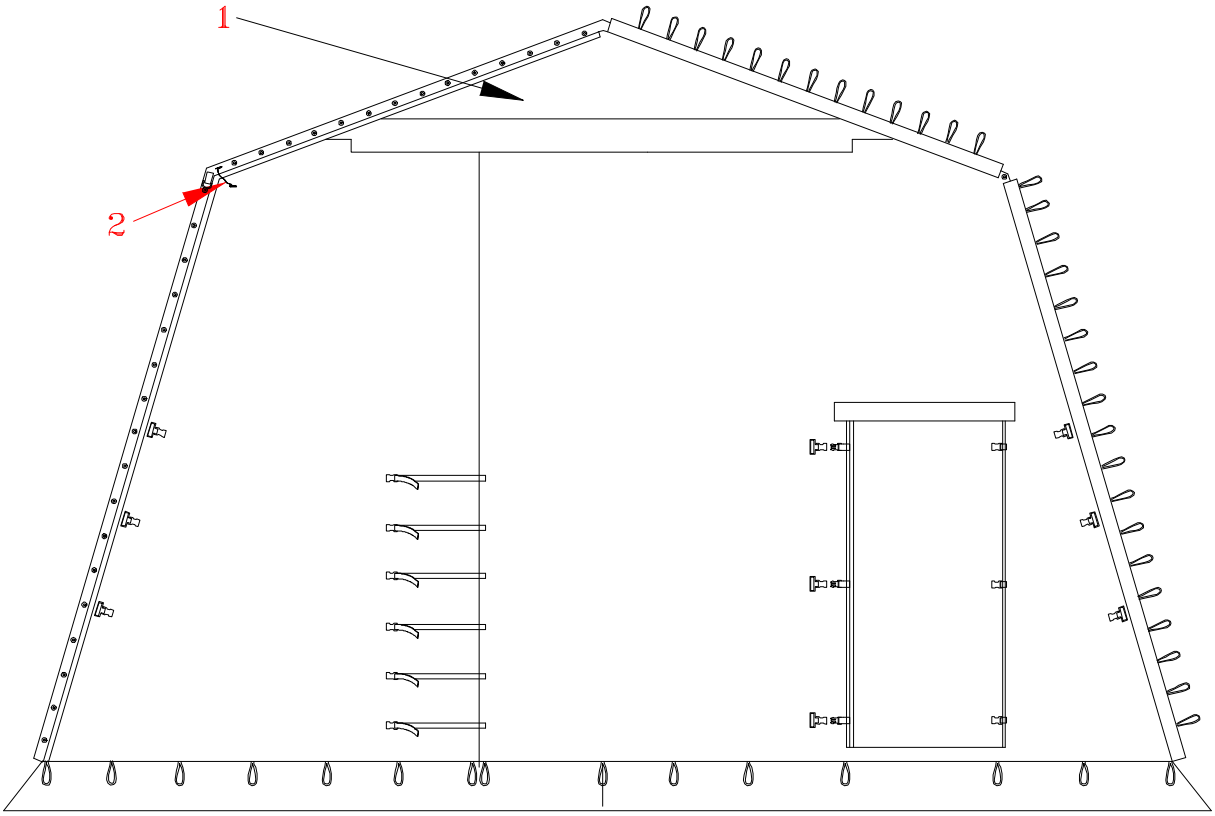

Figure 03 Fabric Assembly, End Panel (CMC-7895)

(1) ITEM NO.	(2) SMR CODE	(3) NSN	(4) CAGEC	(5) PART NUMBER	(6) DESCRIPTION AND USABLE ON CODE (UOC)	(7) QTY
					GROUP 03 FABRIC ASSEMBLY, ENFD PANEL FIGURE 03 CMC-7895 FABRIC ASSEMBLY, END PANEL	
1	PAOOO		80515	CMC-7895	FABRIC ASSEMBLY, END PANEL	2
2	PAOZZ		80515	CMC-3342	.ASSEMBLY, HITCH CLIP PIN	1
				END OF FIGURE		

END OF WORK PACKAGE

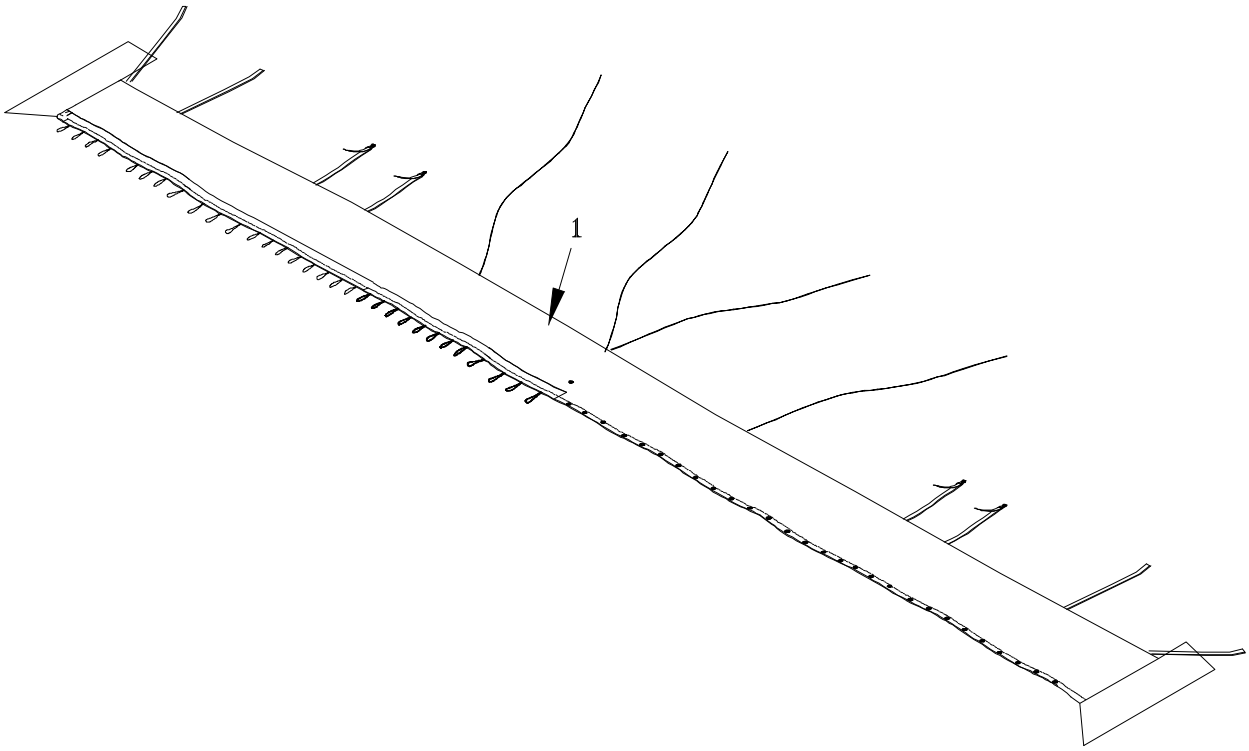

Figure 04 Extension of length (CMC-7950)

(1) ITEM NO.	(2) SMR CODE	(3) NSN	(4) CAGEC	(5) PART NUMBER	(6) DESCRIPTION AND USABLE ON CODE (UOC)	(7) QTY
					GROUP 04 EXTENSION OF LENGTH FIGURE 04 CMC-7950 EXTENSION OF LENGTH	
1	PAOZZ		80515	CMC-7950	EXTENSION OF LENGTH	1
				END OF FIGURE		

END OF WORK PACKAGE

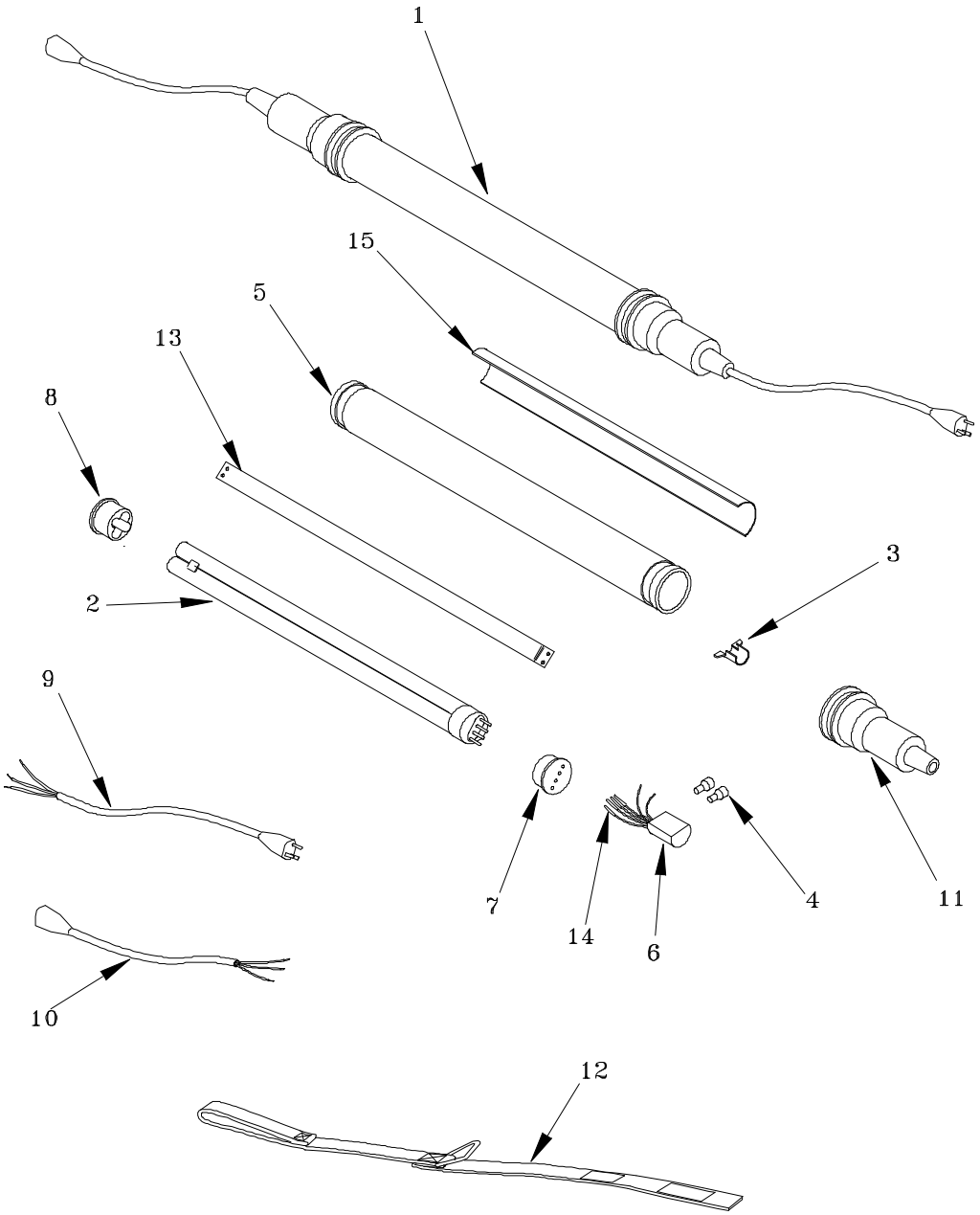

Figure 05 Assembly, Light Kit (CMC-8179)

(1) ITEM NO.	(2) SMR CODE	(3) NSN	(4) CAGEC	(5) PART NUMBER	(6) DESCRIPTION AND USABLE ON CODE (UOC)	(7) QTY
					GROUP 05 ASSEMBLY, 50 WATT MILITARY LIGHT FIGURE 05 CMC-6765 ASSEMBLY, 50 WATT MILITARY LIGHT	
1	PAOOO		80515	CMC-8194	ASSEMBLY, 50 WATT MILITARY LIGHT	4
2	PAFZZ		06967	CMC-8185	.BULB, 50 WATT, DOUBLE TUBE, 4 PIN	1
3	PAFZZ		06967	CMC-8181	.STRAIN RELIEF, METAL CRIMP TYPE	2
4	PAFZZ		06967	CMC-8184	.WIRE CONNECTOR, CLOSED END, NYLON INS, NO. 22-12	6
5	PAFZZ		06967	CMC-8193	TUBE, GROOVED	1
6	PAFZZ		06967	CMC-8186	.BALLAST, POTTER, RENB12L36-120	1
7	PAFZZ		06967	CMC-8187	.BULB, SOCKET, PL LARGE	1
8	PAFZZ		06967	CMC-8188	.SHOCK PL 24,36	1
9	PAFZZ		06967	CMC-8189	.POWER CORD, MALE, THREE PRONG, SHORT	1
10	PAFZZ		06967	CMC-8190	.POWER CORD, FEMALE, RECEPTACLE, SHORT	1
11	PAFZZ		06967	CMC-8183	.HANDLE, LARGE	2
12	PAFZZ		80515	CMC-7971	.LIGHT SUPPORT STRAP ASSEMBLY	8
13	PAFZZ		06967	CMC-8182	.BULB PULLER, PL LIGHTS	1
14	PAFZZ		06967	CMC-8180	.ELECTRICAL CONNECTOR .093 SOCKET	4
15	PAFZZ		06967	CMC-8192	.REFLECTOR/LABEL	1
				END OF FIGURE		

END OF WORK PACKAGE

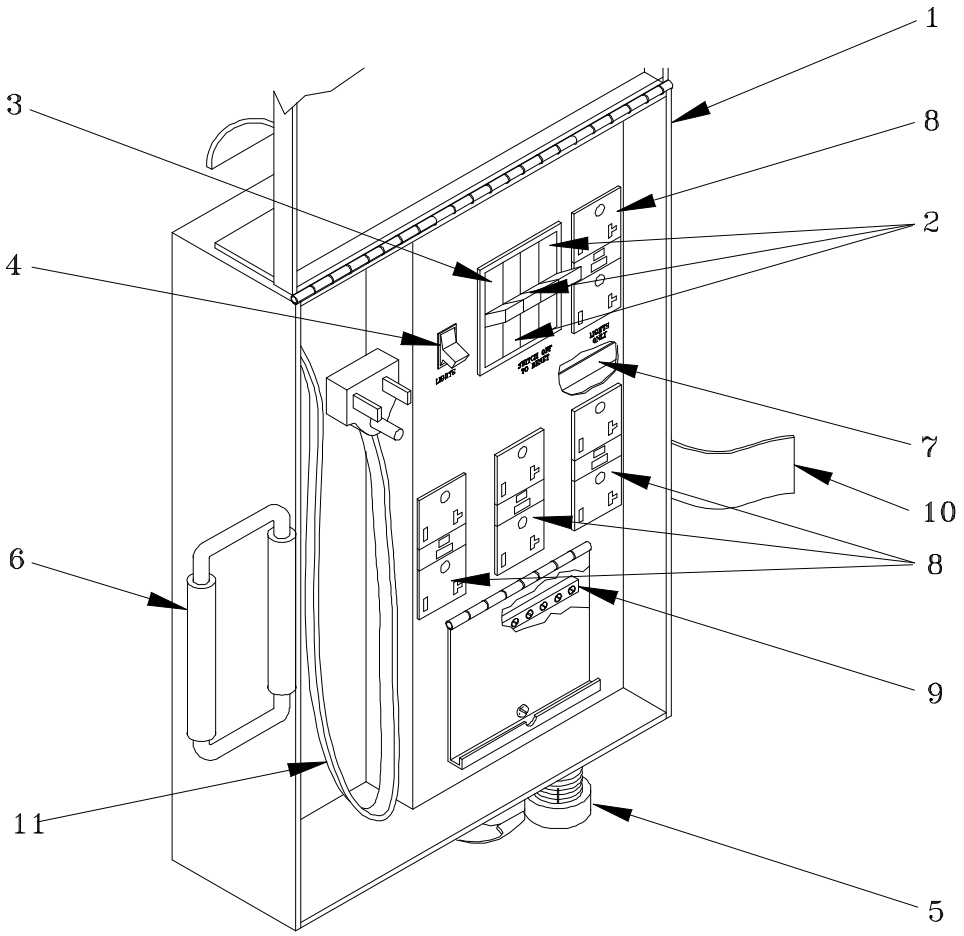

Figure 06 Power Distribution Box (CMC-7961)

(1) ITEM NO.	(2) SMR CODE	(3) NSN	(4) CAGEC	(5) PART NUMBER	(6) DESCRIPTION AND USABLE ON CODE (UOC)	(7) QTY
					GROUP 06 POWER DISTRIBUTION BOX FIGURE 06 CMC-3743 POWER DISTRIBUTION BOX	
1	PAFFF		80515	CMC-3743	POWER DISTRIBUTION BOX	1
2	PAFZZ		STATE ELEC	C-HQCF 1020	.PANEL MOUNT CIRCUIT BREAKER 20A	3
3	PAFZZ		STATE ELEC	C-HQCF 1010	.PANEL MOUNT CIRCUIT BREAKER 10A	1
4	PAFZZ		STATE ELEC	INX3384	.LIGHTED TOGGLE SWITCH 15A, 277V	1
5	PAFZZ		STATE ELEC	KILZS412	.CORD GRIP, RANGE 1- 1 1/8"	1
6	PAFZZ		NIELSON HDWR	A500-32-M21-SP	.COLLAPSIBLE HANDLE,TENT LIGHT PDB	1
7	PAFZZ		80515	CMC-3306	.POWER DISTRIBUTION NEUTRAL BLOCK	1
8	PBFZZ		STATE ELEC	2091LFOR	.GFCI RECEPTACLE, 20 AMP, 120 VAC	4
9	PAFZZ		80515	CMC-1973	.TERMINAL PLATE	1
10	PAFZZ		80515	CMC-7017	.SIDE STRAP ASSEMBLY	1
11	PAFZZ		80515	CMC-8151	.POWER CORD, 25FT	1
	PAFZZ		80515	CMC-8151-10	.POWER CORD, 10 FT	1
				END OF FIGURE		

END OF WORK PACKAGE

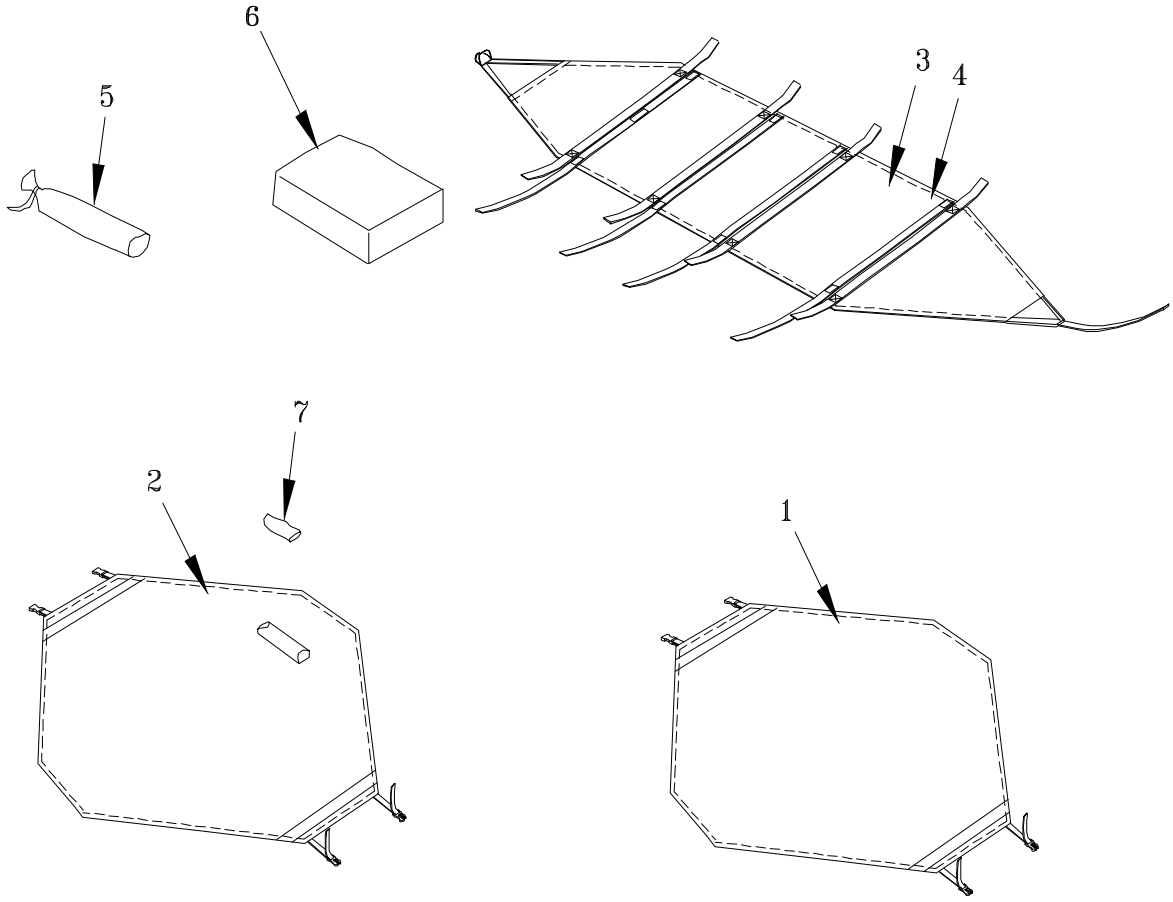

Figure 07 Fabric Transport Covers and Bags

(1) ITEM NO.	(2) SMR CODE	(3) NSN	(4) CAGEC	(5) PART NUMBER	(6) DESCRIPTION AND USABLE ON CODE (UOC)	(7) QTY
					GROUP 07 FABRIC TRANSPORT COVERS AND BAGS FIGURE 07 FABRIC TRANSPORT COVERS AND BAGS	
1	PAFZZ		80515	CMC-7951	FABRIC TRANSPORT COVER	1
2	PAFZZ		80515	CMC-7952	FABRIC TRANSPORT COVER W/ REPAIR KIT	1
3	PAFZZ		80515	CMC-7953	FRAME TRANSPORT COVER	4
4	PAFZZ		80515	CMC-7954	FRAME TRANSPORT COVER	1
5	PAFZZ		80515	CMC-7955	PIN TRANSPORT BAG	1
6	PAFZZ		80515	CMC-8158	POWER DISTRIBUTION BOX BAG	1
7	PAOZZ		80515	CMC-8159	.LME REPAIR KIT	1
				END OF FIGURE		

END OF WORK PACKAGE

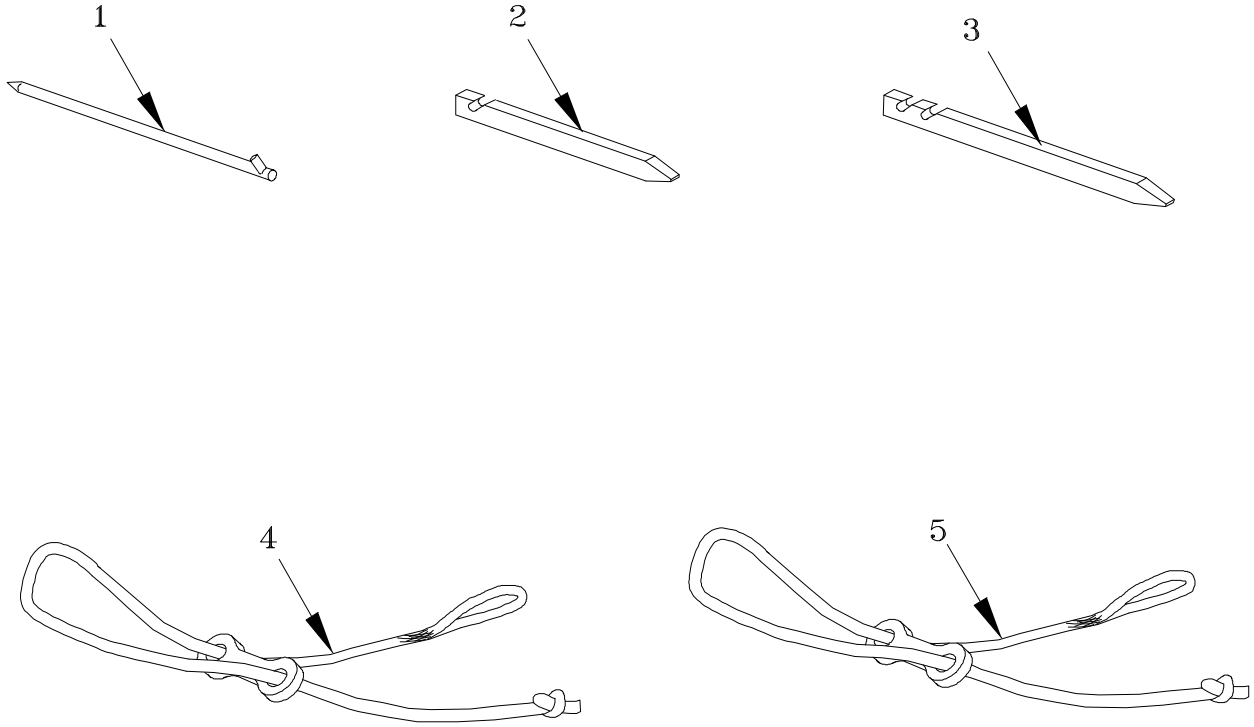

Figure 08 Tent Pins and Guy Lines w/Slips

(1) ITEM NO.	(2) SMR CODE	(3) NSN	(4) CAGEC	(5) PART NUMBER	(6) DESCRIPTION AND USABLE ON CODE (UOC)	(7) QTY
					GROUP 08 TENT PINS AND GUY LINES W/SLIPS FIGURE 08 TENT PINS AND GUY LINES W/SLIPS	
1	PAOZZ		80515	CMC-8176	PIN, TENT, STEEL, 18"	20
2	PAOZZ		80515	CMC-8175	TENT STAKE, WOOD 16"	50
3	PAOZZ		80515	CMC-8177	TENT STAKE, WOOD, 24"	26
4	PAOZZ		80515	CMC-7967	GUY LINE W/SLIP ASSEMBLY 14' 1"	24
5	PAOZZ		80515	CMC-7966	GUY LINE W/SLIP ASSEMBLY 23'1"	20
				END OF FIGURE		

END OF WORK PACKAGE

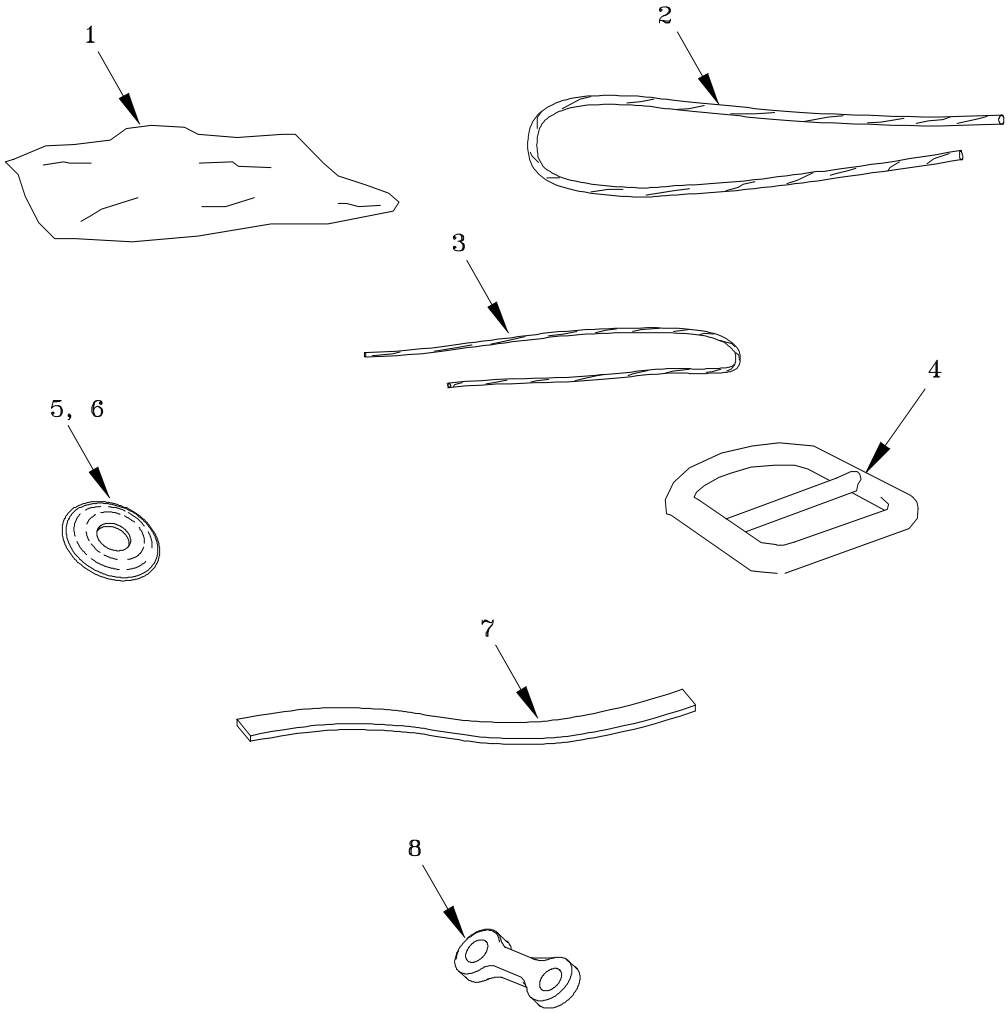

Figure 09 Bulk Material Repair Parts

(1) ITEM NO.	(2) SMR CODE	(3) NSN	(4) CAGEC	(5) PART NUMBER	(6) DESCRIPTION AND USABLE ON CODE (UOC)	(7) QTY
					GROUP 09 BULK MATERIALS FIGURE 09 BULK MATERIAL REPAIR PARTS	
1	PAOZZ		OM544	H16450779L6 10A	CLOTH, POLYESTER, DUCK GRN-483/WHITE BACK	AR
2	PAFZZ		65104	CSB050-0002-016	CORD, FIBROUS, POLY, SOLID BRAID, 5/32" DIA, CG-483	AR
3	PAFZZ			MIL-W-83420C	WIRE ROPE, TYPE VI, 1/16" VINYL COATED	AR
4	PAFZZ		16007	01047-20-21883	RING, DEE, CL2, CONF K, SZ 1 3/4"	AR
5	PAFZZ		57771	NO.2 RRG	GROMMET, BRASS, T3, CL3, SZ 2	AR
6	PAFZZ		57771	NO. 4 RRG	GROMMET, BRASS, T3, CL3, SZ4	AR
7	PAFZZ		85398	7166	WEBBING, POLYPROPYLENE, T2B, CL2, 1" W, CG-483	AR
8	PAFZZ		81349	NSN 8340-00-205-2759	SLIP, TENT LINE, TYPE II	44

END OF WORK PACKAGE

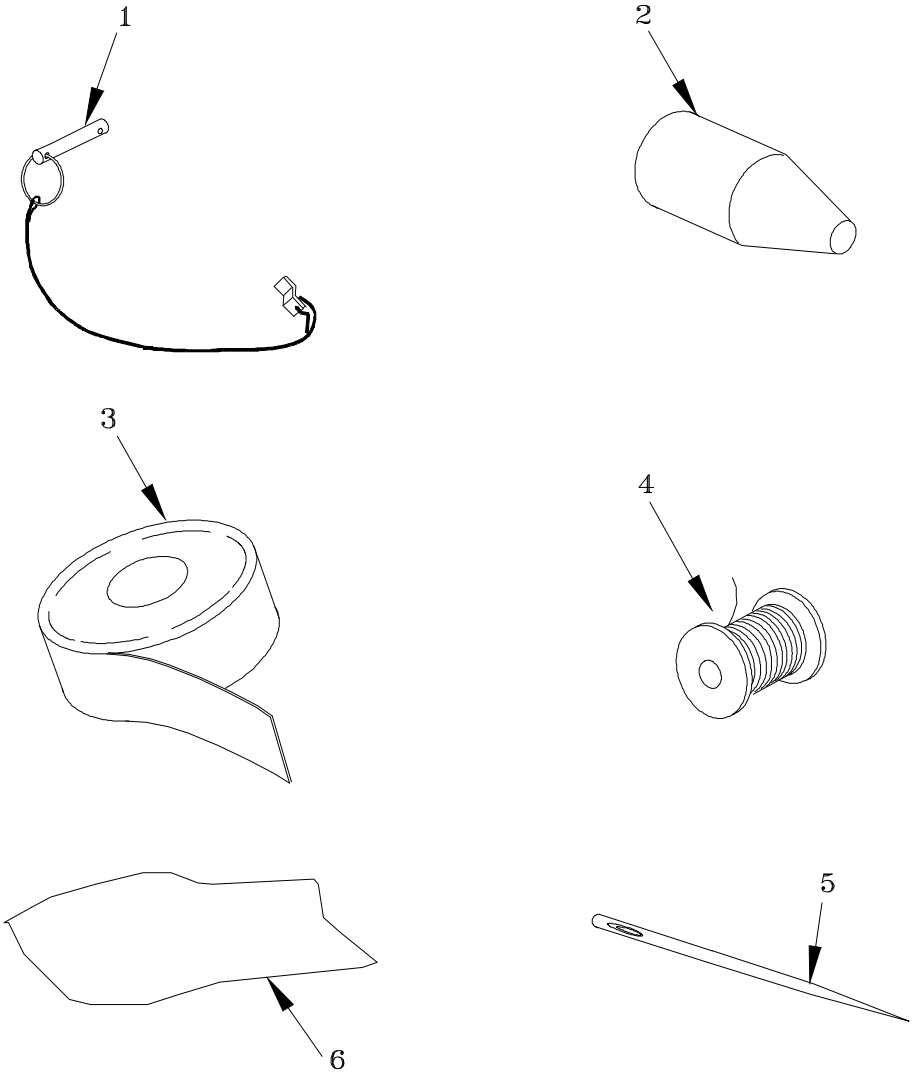

Figure 10 Repair Kit Parts List

LIGHTWEIGHT MAINTENANCE ENCLOSURE(LME) REPAIR KIT PARTS LIST

(1) ITEM NO.	(2) SMR CODE	(3) NSN	(4) CAGEC	(5) PART NUMBER	(6) DESCRIPTION AND USABLE ON CODE (UOC)	(7) QTY
					FIGURE 10 REPAIR KIT CMC-8159 PARTS LIST	
1	PAOZZ		80515	CMC-4154	PIN, QUICK RELEASE W/LANYARD	2
2	PAOZZ		70470	256501	NEEDLE PUSHER	1
3	PAOZZ		1JPE2	P668LT	ADHESIVE TAPE, GRN-483, 3" WIDE	1YD
4	PAOZZ		56450	44	THREAD, SPOOL, 2 OZ. OD-7	1 EA
5	PAOZZ		70470	251916	NEEDLE, SAIL, NO. 16	3 EA
6	PAOZZ		OM544	H183097770 510A	CLOTH, DUCK, POLY, WATERPROOF, TYPE 2, GR A, COLOR CG-483	1 LY

END OF WORK PACKAGE

STOCK NUMBER	FIG.	ITEM
	01	1
	01	2
	01	3
	01	4
	01	5
	01	6
	01	7
	01	8
	01	9
	02	1
	02	2
	03	2
	03	1
	04	1
	05	1
	05	2
	05	3
	05	4
	05	5
	05	6
	06	1
	06	2
	06	3
	07	4
	06	6
	07	1
	07	2
	07	3
	07	4
	07	5
	07	6
	07	7
8340-00-261-9750	07	8
8340-00-965-7461	07	9
8340-00-261-9751	07	10
	07	11
	07	12

END OF WORK PACKAGE

PART NUMBER	FIG.	ITEM
CMC-7862	01	1
CMC-7864	01	2
CMC-7869	01	3
CMC-7877	01	4
CMC-7885	01	5
CMC-7889	01	6
CMC-7879	01	7
CMC 3336	01	8
CMC-7969	01	9
CMC-7895	02	1
CMC-3342	02	2
CMC-7893	03	1
CMC-7850	04	1
CMC-7965	05	1
CMC-7963	05	4
CMC7962	05	5
CMC-7964	05	6
CMC-7961	06	1
C-HQCF 1020	06	2
C-HQCF 1010	06	3
2091LFOR	07	4
20AC1CPL	06	6
CMC-7951	07	1
CMC-7952	07	2
CMC-7953	07	3
CMC-7954	07	4
CMC-7955	07	5
CMC-7966	07	6
CMC-7970	07	7
CMC-7956	07	8
CMC-7957	07	9
CMC-7958	07	10
CMC-7959	07	11
CMC-7960	07	12

END OF WORK PACKAGE

INTRODUCTION.

Scope

This section lists COEI and BII for the LME to help you inventory items for safe and efficient operation of the equipment.

General

The COEI and BII information is divided into the following lists:

Components of End Item (COEI). This list is for information purposes only and is not authority to requisition replacements. These items are part of the LME. As part of the end item, these must be with the end item whenever it is issued or transferred between property accounts. Items of COEI are removed and separately packaged for transportation or shipment only when necessary. Illustrations are furnished to help you find and identify the items.

Basic Issue Items (BII). These essential items are required to place the LME in operation, operate it, and to do emergency repairs. Although shipped separately packaged, BII must be with the LME during operation and when it is transferred between property accounts. Listing these items is your authority to request/requisition them for replacement based on authorization of the end item by the TOE/MTOE. Illustrations are furnished to help you find and identify the items.

Explanation of Columns in the COEI List and BII List

Column (1), Illu Number, gives you the number of the item illustrated.

Column (2), National Stock Number, identifies the stock number of the item to be used for requisitioning purposes.

Column (3), Description, CAGEC, and Part Number, identifies the Federal item name (in all capital letters) followed by a minimum description when needed. The stowage location of COEI and BII is also included in this column. The last line below the description is the CAGEC (commercial and Government entity code) (in parenthesis) and the part number.

Column (4), Usable on code, gives you a code if the item you need is not the same for different models of equipment. These codes are identified below:

Code	Used On	
PAA	Model XIX	(All LME Models are identical)
PAB	Model XXXX	
PAC	Model XXXXX	

Column (5), UM (unit of measure), indicates how the item is issued for the National Stock Number shown in column (2).

Column (6), Qty Rqr, indicates the quantity required.

COMPONENTS OF END ITEM (COEI) LIST

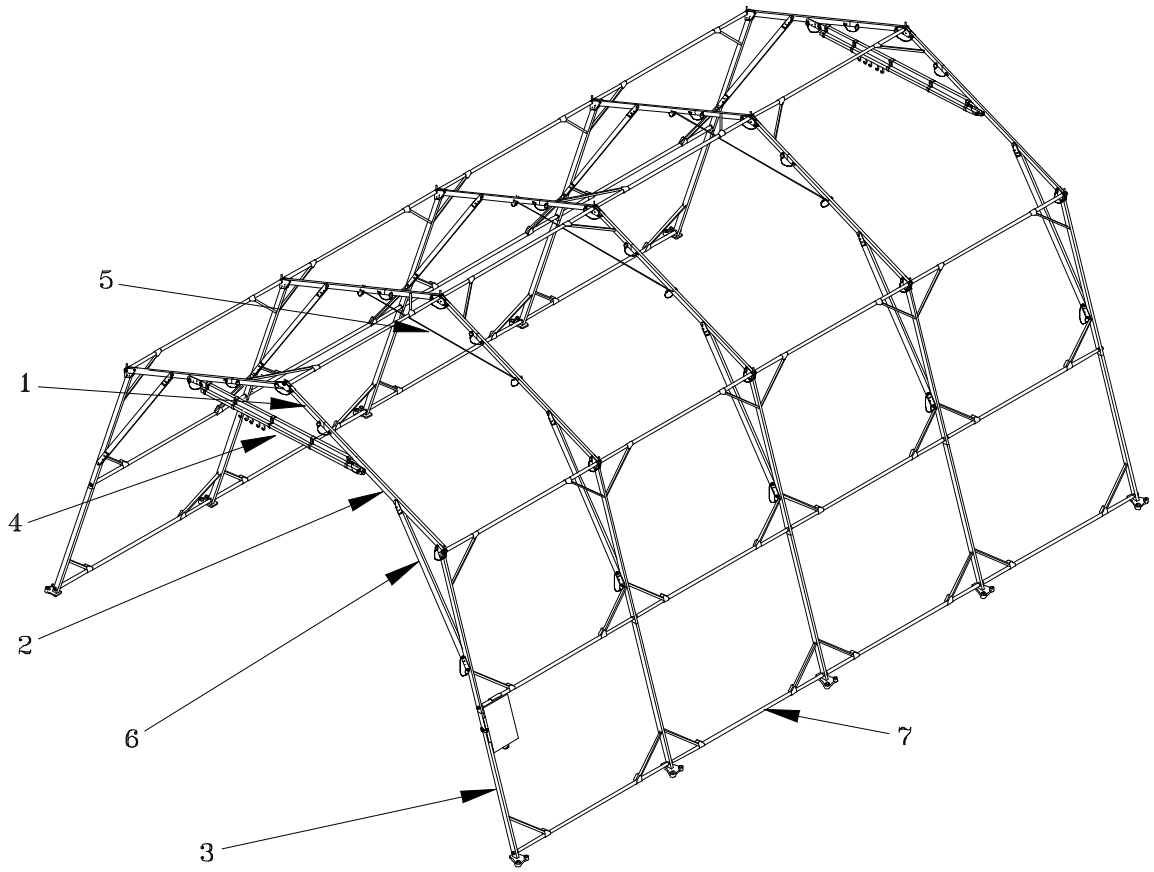

Table 0043 00-1. Components of end item List.

(1) ILLUS NUMBER	(2) NATIONAL STOCK NUMBER	(3) DESCRIPTION, LOCATION, PART NUMBER, AND CAGEC	(4) USABLE ON CODE	(5) U/M	(6) QTY RQR
1		UPPER ARCH ASSEMBLY, CMC-7864 (80515)		EA	5
2		LOWER ARCH ASSEMBLY, CMC-7869 (80515)		EA	10
3		LOWER LEG ASSEMBLY, CMC-7877 (80515)		EA	10
4		DOOR HEADER ASSEMBLY, CMC-7885 (80515)		EA	2
5		CABLE HEADER ASSEMBLY, CMC-7889 (80515)		EA	3
6		SIDER ASSEMBLY, CMC-7879 (80515)		EA	10
7		PURLIN ASSEMBLY, CMC-3336 (80515)		EA	28

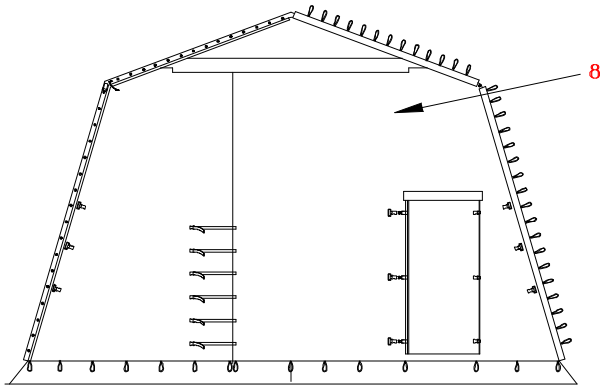

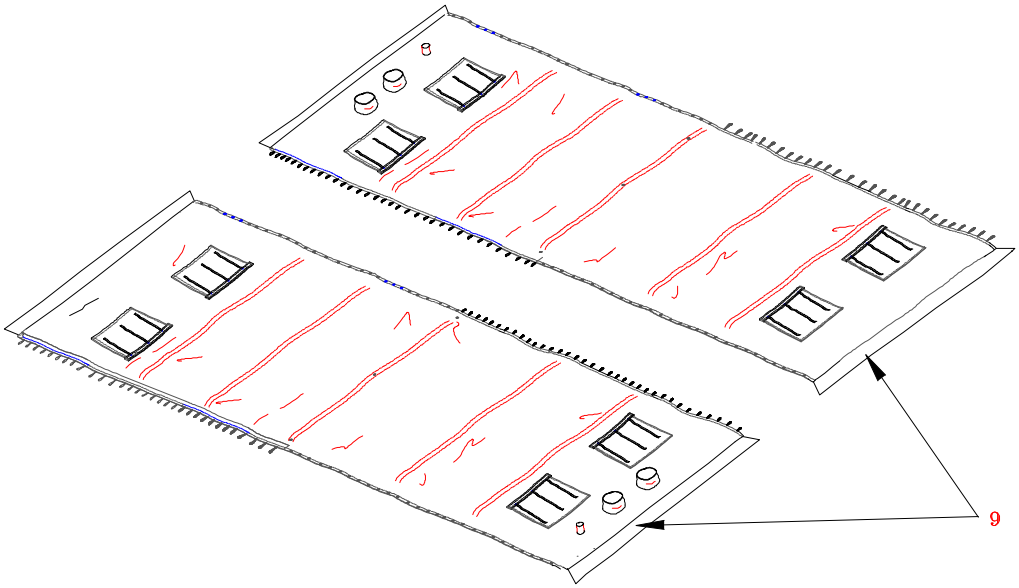

Table 0043 00-1. Components of end item List - Continued.

(1) ILLUS NUMBER	(2) NATIONAL STOCK NUMBER	(3) DESCRIPTION, LOCATION, PART NUMBER AND CAGEC	(4) USABLE ON CODE	(5) U/M	(6) QTY RQR
8		FABRIC ASSEMBLY, END PANEL, CMC-7895 (80515)		EA	2
9		FABRIC ASSY,INTERMEDIATE SECTION CMC-7893 (80515)		EA	2

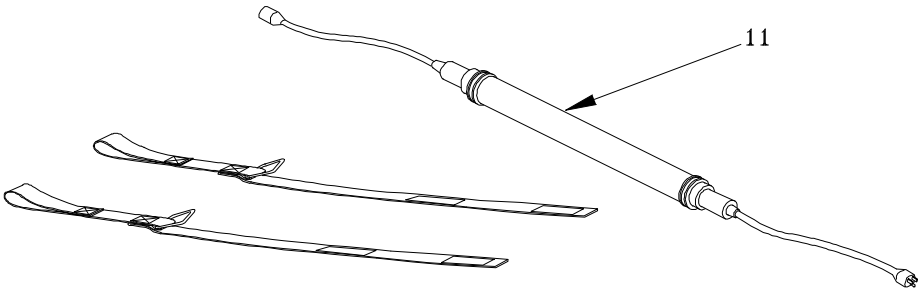

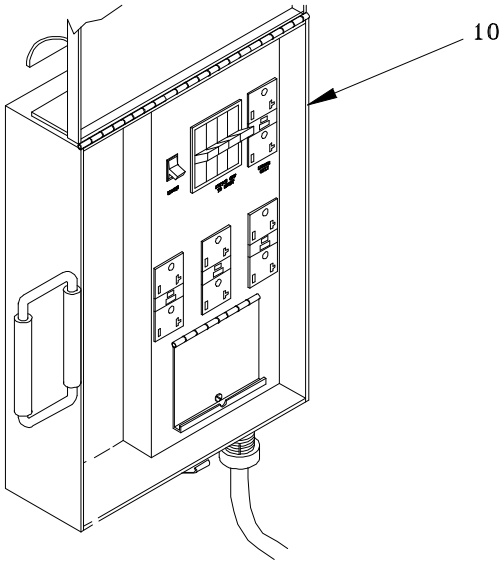

Table 0043 00-1. Components of end item List - Continued

(1) ILLUS NUMBER	(2) NATIONAL STOCK NUMBER	(3) DESCRIPTION, LOCATION, PART NUMBER AND CAGEC	(4) USABLE ON CODE	(5) U/M	(6) QTY RQR
10		POWER DISTRIBUTION BOX, CMC-3743 (80515)		EA	1
11		LIGHT SET, COMPLETE CMC-6765 (80515)		EA	1

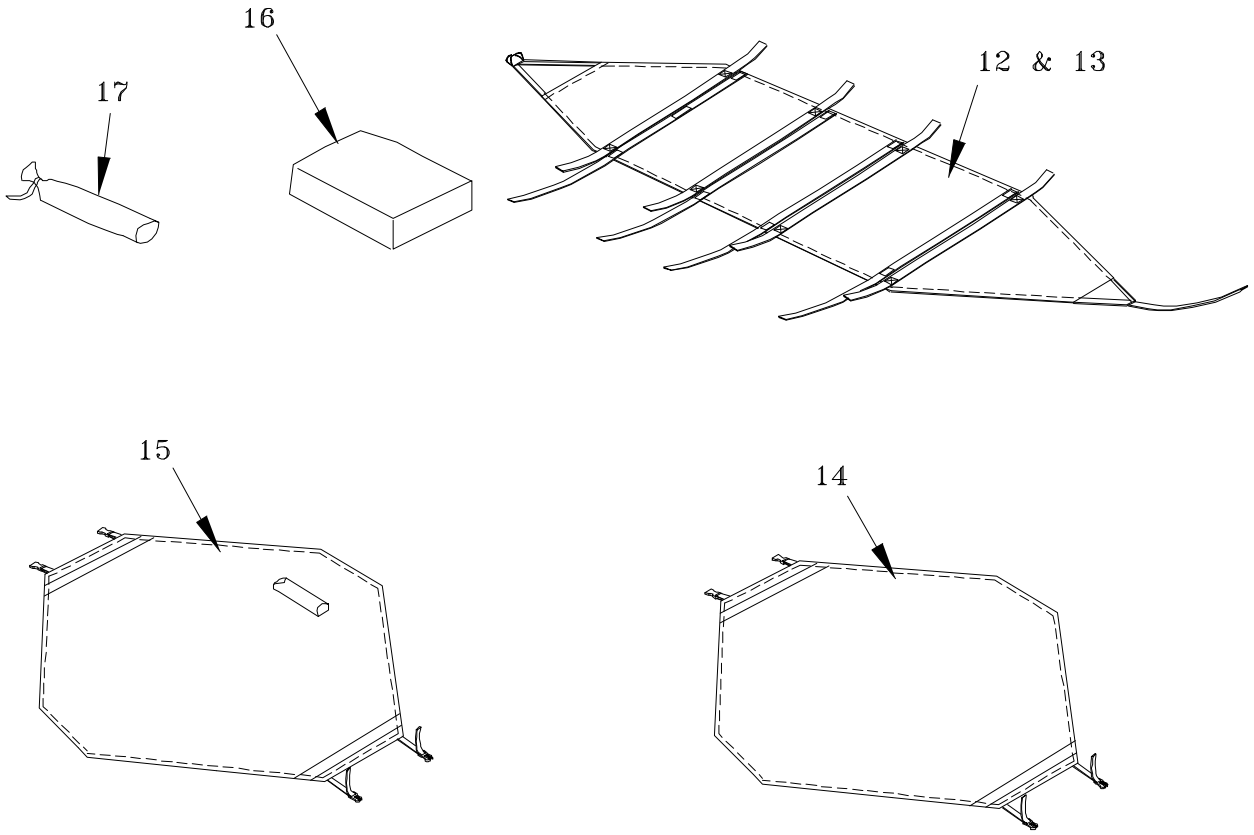

Table 0043 00-1. Components of end item List - Continued

(1) ILLUS NUMBER	(2) NATIONAL STOCK NUMBER	(3) DESCRIPTION, PART NUMBER AND CAGEC	(4) USABLE ON CODE	(5) U/M	(6) QTY RQR
12		FRAME TRANSPORT COVER CMC-7953 (80515)		EA	4
13		FRAME TRANSPORT COVER CMC-7954 (80515)		EA	1
14		FABRIC TRANSPORT COVER CMC-7951 (80515)		EA	1
15		FABRIC TRANSPORT COVER W/REPAIR KIT CMC-7952 (80515)		EA	1
16		POWER DISTRIBUTION BOX BAG CMC-8158 (80515)		EA	1
17		TENT PIN BAG CMC-7955 (80515)		EA	1

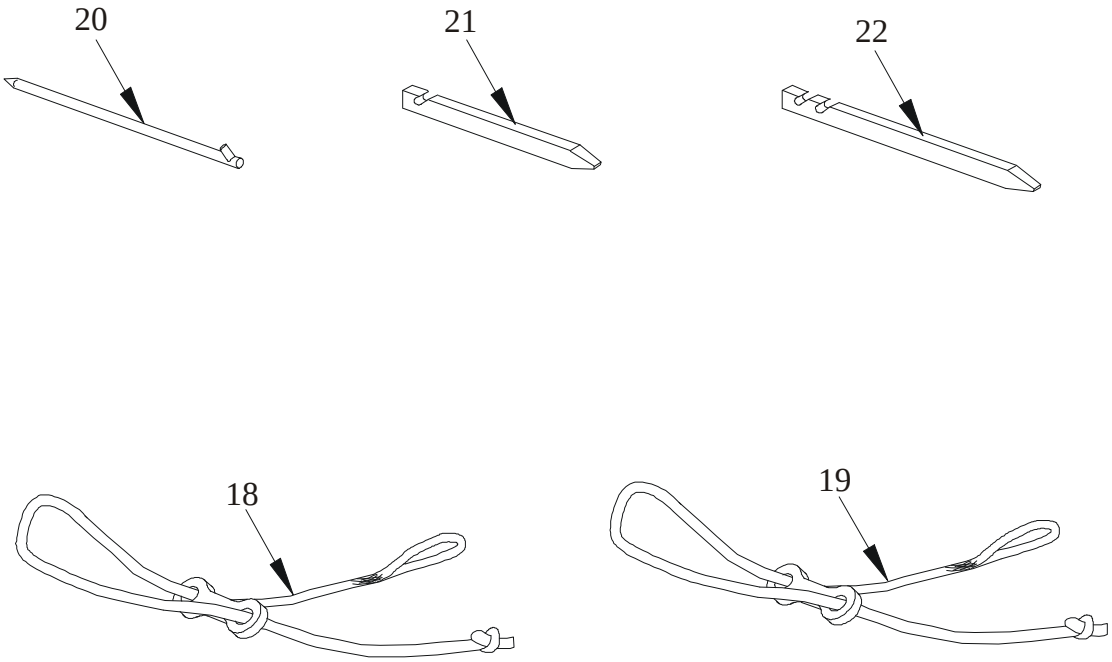

Table 0043 00-1. Components of end item List - Continued

(1) ILLUS NUMBER	(2) NATIONAL STOCK NUMBER	(3) DESCRIPTION, PART NUMBER AND CAGEC	(4) USABLE ON CODE	(5) U/M	(6) QTY RQR
18		GUY LINE W/SLIP 14' 1" CMC-7967 (80515)		EA	24
19		GUY LINE W/SLIP 23 '1" CMC-7966 (80515)		EA	20
20	8340-00-985-7461	TENT PIN STEEL 18" CMC-8176 (80515)		EA	10
21	8340-00-261-9750	TENT PIN WOOD 16" CMC-8175 (80515)		EA	25
22	8340-00-261-9751	TENT PIN WOOD 24" CMC-8177 (80515)		EA	13

BASIC ISSUE ITEMS (BII) LIST

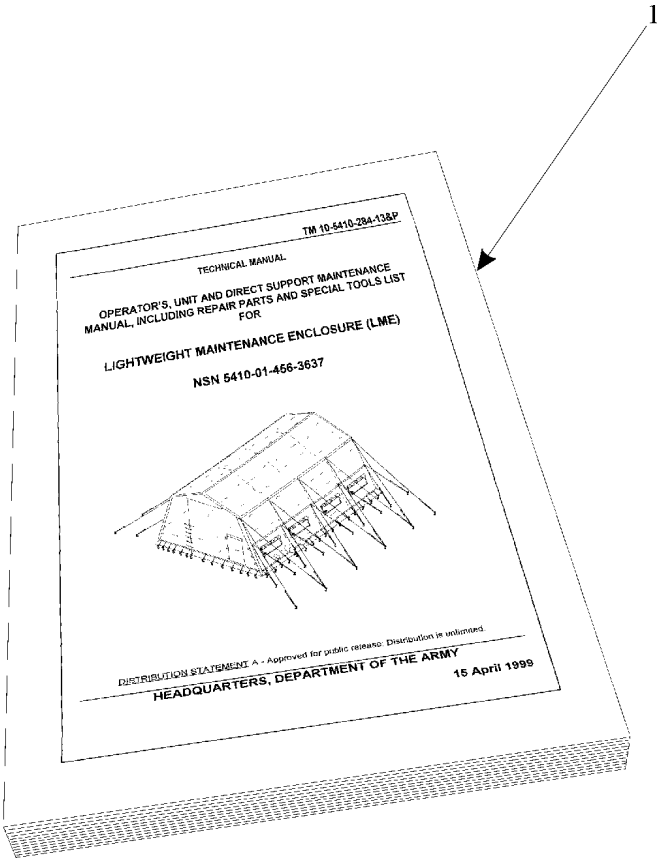

Table 0043 00-2. Basic Issue Items List.

(1) ILLUS NUMBER	(2) NATIONAL STOCK NUMBER	(3) DESCRIPTION, PART NUMBER AND CAGEC	(4) USABLE ON CODE	(5) U/M	(6) QTY RQR
1	N/A	TM 10-5410-284-13&P	N/A	EA	1

INTRODUCTION

Scope

This section lists additional items you are authorized for the support of the LME.

General

This list identifies items that do not have to accompany the LME and that do not have to be turned in with it. These items are all authorized to you by CTA, MTOE, TDA, or JTA.

Explanation of Columns in the AAL

Column (1) National Stock Number, identifies the stock number of the item to be used for requisitioning purposes.

Column (2) Description, CAGEC, and Part Number, identifies the Federal Item Name (in all capital letters) followed by a minimum description when needed. The last line below the description is the CAGE (Commercial and Government Entity Code) (in parenthesis) and the part number.

Column (3), Usable On Code, when applicable, gives you a code if the item you need is not the same for different models of equipment.

Column (4), UM (unit of measure) indicates how the item is issued for the National Stock Number shown in column (1).

Column (5), Qty Recm, indicates the quantity recommended.

ADDITIONAL AUTHORIZED LIST ITEMS

Table 0042 00-1 - Additional Authorization List.

(1) NATIONAL STOCK NUMBER	(2) DESCRIPTION, PART NUMBER and CAGEC	(3) USABLE ON CODE	(4) U/M	(5) QTY RECM
8340-00-262-5767	TENTAGE REPAIR KIT 8340-90-CL-POL (81337)		EA	1
	REPAIR KIT CMC-8159 (80515)		EA	1
4720-00-174-4671	EXHAUST HOSE, METAL		FT	AR
	EXTENSION OF LENGTH CMC-7950 (80515)		EA	AR
	PAINTER'S POLE CMC-8167 (80515)		EA	1
5120-00-900-6098	SLEDGE HAMMER, 12 LB, FIBERGLASS HANDLE		EA	1
5120-00-926-7116	MALLET, WOOD		EA	1

END OF WORK PACKAGE

INTRODUCTION

Scope

This section lists expendable and durable items that you will need to operate and maintain the LME. This list is for information only and is not authority to requisition the listed items. These items are authorized to you by CTA 50-970, Expendable/Durable Items (Except Medical, Class V Repair Parts, and Heraldic Items), or CTA 8-100, Army Medical Department Expendable/Durable Items.

General

Explanations of Columns in the Expendable / Durable Items List

Column (1) Item Number. This number is assigned to the entry in the list and is referenced in the narrative instructions to identify the item (e.g.,"Use lubricating oil (item 25, Expendable and Durable Items List.).

Column (2) Level. This column includes the lowest level of maintenance that requires the listed item (C=Operator/Crew).

Column 3 National Stock Number. This is the NSN assigned to the item which you can use to requisition it.

Column 4 Item Name, Description, CAGEC, and Part Number. This column provides the other information you need to identify the item.

Column (5), U/M (unit of measure) indicates how the item is issued for the National Stock Number shown in column (1).

EXPENDABLE AND DURABLE ITEMS LIST

Table 0043 00-1. Expendable and Durable Items List.

(1) ITEM NUMBER	(2) LEVEL	(3) NATIONAL STOCK NUMBER	(4) ITEM NAME, DESCRIPTION, CAGE, PART NUMBER	(5) U/M
1	O	7920-00-205-1711	WIPING RAGS	BL
2	O		SNOW RAKE (62840) 89-416	EA
3	O	5120-00-221-1882	TAPE MEASURE	EA
4	O	5120-00-242-0762	WRECKING BAR	EA
5	F	9950-00-537-8954	TAGS, MARKING	BD

END OF WORK PACKAGE

GLOSSARY

Term	Definition
Becket Lacing	A lacing procedure used to join the fabric panels together. The procedure requires aligning the sewn in grommets of one fabric panel with the sewn-in becket laces of another panel. Each lace is pulled through the corresponding grommet as well as the preceding lace loop. Becket lacing is a strong but flexible method of attachment that helps mitigate the effects of wind and load stress on the fabric panels.
Door Header	The door headers are used to suspend the vehicle access doors and incorporate a curtain mechanism.
Cable Header	These are used to provide lateral rigidity to the frame upper arch assembly.
Siders	The sider assemblies enhance structural stability of the frame arch assemblies.
Purlin	A horizontal member of the frame that connects the arch frame assemblies together and provides structural stability.

Alphabetical Index

A

Abbreviations and Acronyms 1-3
Appendix A A-1
    Repair Parts and Special Tools List (RPSTL) A-1
    Repair Parts List A-8
    Bulk Material Repair Parts List A-16
    Repair Kit Repair Parts List A-17
    Special Tools List A-18
    National Stock Number Index A-19
    Part Number Index A-20
Additional Authorization List 6-14
Assembly and Preparation for Use 2-3
Automatic Stitching 5-1

B

Basic Issue Items List 6-10

C

Cautions 1-3
Characteristics, Capabilities and Features 1-3
Cleaning 4-6
Common Tools and Equipment 1-8
Components of End Item 6-7
Controls and Indicators 2-1
Corrosion Prevention and Control 1-2

D

Decals and Instruction Plates 2-20
Description and Function of Operator Controls and Indicators 2-1
Destruction of Army Materiel to Prevent Enemy Use 1-2
Description, Major Components 1-4
Differences between Models 1-8
Direct Support Maintenance Procedures 5-2
    Introduction of 5-1
Distribution Notice I

E

Environmental Limits on Equipment
Equipment Improvements and Recommendations, Reporting (EIR)
Equipment Characteristics, Capabilities and Features 1-3
Equipment Configuration 1-8
Equipment Data 1-8
Equipment Description 1-4

Expendable and Durable Items List 6-15

External Electrical Power 1-9

F

Frame
- Description 1-6, 1-9
- Set-up 2-3
- Strike 2-25
- Maintenance 4-14

Fabric Panels
- Description 1-6, 1-9
- Set-up 2-7
- Strike 2-25
- Maintenance 4-21

G

General Information 1-1
Glossary Gloss-1

H

How to Locate Repair Parts A-6
How to Use this Manual iv

I

Inspection of Shipment 4-3
Inspection of Components 4-4

L

Labels, Equipment, Data Plate 2-20
Light Set
- Description 1-6, 1-9
- Set-up 2-13
- Strike 2-28
- Maintenance 4-28, 5-3

List of Illustrations iii
List of Tables iii
Location and Description of Major Components 1-4
ME Model Number 1-2
Lubrication Service Intervals 4-6

M

Machine Stitching 5-1
Maintenance Allocation Chart 6-5
Maintenance Forms, Records and Reports 1-2
Maintenance Functions 6-2
Maintenance Level 6-2

Maintenance Instructions, Unit
Frame 4-14
Fabric Panels 4-21
Light Set 4-28
Power Distribution Box 4-29
Transport Covers and Bags 4-30
Maintenance Procedures, Direct Support
Light Set 5-2
Power Distribution Box 5-3
Fabric Panels and Transport Covers and Bags 5-8
Malfunction Symptom Index 3-1
Mandatory Replacement Parts List 4-13

N

Nomenclature Cross Reference List 1-2

O

Operating Procedures 2-24
Operation Under Usual Conditions 2-2
Operation Under Unusual Conditions 2-32
High Wind 2-32
Rain/Wet Climate 2-32
Snow and Extreme Cold 2-32
Extreme Heat 2-33
Operating Procedures
Doors 2-24
Windows 2-24
Power Distribution Box 2-24
Light Set 2-24

P

Packing 2-2
PMCS Procedures 4-5
Power Distribution Box
Description 1,6, 1-9
Installation 2-16
Strike 2-26
Maintenance 4-29, 5-4
Preparation for Movement 2-25
Preventive Maintenance Checks and Services 4-7
Purlin 1-6, 1-9

Q

Quality Deficiency Report 4-1

R

References 6-1
Field Manuals 6-1

Forms 6-1
Technical Manuals 6-1
Pamphlets 6-1
Federal Standards 6-1

Repair Parts and Special Tools List A-1
Reporting Equipment Improvement Recommendations 1-2
Reporting Errors and Recommending Improvements i

S

Safety, Care and Handling, Warnings, Cautions, and Notes 1-3
Service Upon Receipt 4-1
Unpacking from Shipment 4-1
Inspection 4-1
Siting Requirements 2-2
Striking the ME 2-25

T

Table of Contents, Technical Manual I
Theory of Operation 1-9
The Army Maintenance System 6-2
Tools and Test Equipment Requirements 6-6
Troubleshooting Procedures 3-1
Transport Covers and Bags
Unpacking 4-1
Maintenance 5-5
Packing 2-25

U

Unit Maintenance Procedures 4-14
Unpacking from Shipment 4-1
Usable On Code A-6

W

Warnings . . . . . I, 1-3
Windows 1-6, 1-9

By Order of the Secretaries of the Army and Navy (Including the Marine Corps):

ERIC K. SHINSEKI
General, United States Army
Chief of Staff

Official:

JOEL B. HUDSON
Administrative Assistant to the
Secretary of the Army
9917503

D.C. LEWIS
Colonenl, USMC
Marine Corps Systems Command

DISTRIBUTION:
To be distributed in accordance with initial distribution (IND 256530), requirements for TM 10-5410–284-13&P.

These are the instructions for sending an electronic 2028

The following format must be used if submitting an electronic 2028. The subject line must be exactly the same and all fields must be included; however only the following fields are mandatory: 1, 3, 4, 5, 6, 7, 8, 9, 10, 13, 15, 16, 17, and 27.

From: "Whomever" <whomever@avma27.army.mil>
To: amssb–rim–e@natick–emh2.army.mil

Subject: DA Form 2028

1. ***From:*** Joe Smith
2. *Unit:* home
3. ***Address:*** 4300 Park
4. ***City:*** Hometown
5. ***St:*** MO
6. ***Zip:*** 77777
7. ***Date Sent:*** 19–OCT–93
8. ***Pub no:*** 55–2840–229–23
9. ***Pub Title:*** TM
10. ***Publication Date:*** 04–JUL–85
11. *Change Number:* 7
12. *Submitter Rank:* MSG
13. ***Submitter FName:*** Joe
14. *Submitter MName:* T
15. ***Submitter LName:*** Smith
16. ***Submitter Phone:*** 123–123–1234
17. ***Problem:*** **1**
18. *Page:* 2
19. *Paragraph:* 3
20. *Line:* 4
21. *NSN:* 5
22. *Reference:* 6
23. *Figure:* 7
24. *Table:* 8
25. *Item:* 9
26. *Total:* 123
27. ***Text:***

This is the text for the problem below line 27.

RECOMMENDED CHANGES TO EQUIPMENT TECHNICAL PUBLICATIONS

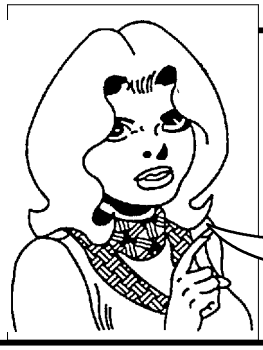

THEN . .JOT DOWN THE DOPE ABOUT IT ON THIS FORM, CAREFULLY TEAR IT OUT, FOLD IT AND DROP IT IN THE MAIL!

SOMETHING WRONG WITH THIS PUBLICATION?

FROM: (PRINT YOUR UNIT'S COMPLETE ADDRESS)
PFC John DOE
CO A 3rd Engineer Bn
Ft. Leonardwood, MO 63108

DATE SENT
22 August 1992

PUBLICATION NUMBER	PUBLICATION DATE	PUBLICATION TITLE
TM 1–1520–250–10	15 June 1992	Operator's manual MH60K Helicopter

BE EXACT PIN–POINT WHERE IT IS

PAGE NO	PARA-GRAPH	FIGURE NO	TABLE NO
6	2-1 a		
B1		4-3	

IN THIS SPACE, TELL WHAT IS WRONG AND WHAT SHOULD BE DONE ABOUT IT:

In line 6 of paragraph 2–1a the manual states the engine has 6 cylinders. The engine on my set only has 4 cylinders. Change the manual to show 4 cylinders.

Callout 16 on figure 4–3 is pointed at a bolt. In key to figure 4–3, item 16 is calle a shim – Please correct one or the other

EXAMPLE

PRINTED NAME, GRADE OR TITLE, AND TELEPHONE NUMBER

JOHN DOE, PFC (268) 317–7111

SIGN HERE

JOHN DOE John Doe

DA FORM 1 JUL 79 2028–2

PREVIOUS EDITIONS ARE OBSOLETE.

DRSTS-M verprint2, 1 Nov 80

P.S.- - IF YOUR OUTFIT WANTS TO KNOW ABOUT YOUR RECOMMENDATION, MAKE A CARBON COPY OF THIS AND GIVE TO YOUR HEADQUARTERS.

RECOMMENDED CHANGES TO EQUIPMENT TECHNICAL PUBLICATIONS

SOMETHING WRONG WITH PUBLICATION

FROM: (PRINT YOUR UNIT'S COMPLETE ADDRESS)

DATE SENT

PUBLICATION NUMBER	PUBLICATION DATE	PUBLICATION TITLE

BE EXACT PIN-POINT WHERE IT IS

PAGE NO.	PARA-GRAPH	FIGURE NO.	TABLE NO.

IN THIS SPACE, TELL WHAT IS WRONG AND WHAT SHOULD BE DONE ABOUT IT.

PRINTED NAME, GRADE OR TITLE AND TELEPHONE NUMBER	SIGN HERE

TEAR ALONG PERFORATED LINE

DA FORM 1 JUL 79 2028-2

PREVIOUS EDITIONS ARE OBSOLETE.

P.S.--IF YOUR OUTFIT WANTS TO KNOW ABOUT YOUR RECOMMENDATION MAKE A CARBON COPY OF THIS AND GIVE IT TO YOUR HEADQUARTERS.

REVERSE OF DA FORM 2028−2 Reverse of DRSTS-M Overprint 2,
1 Nov 80

TEAR ALONG PERFORATED LINE

FILL IN YOUR
UNITS ADDRESS

FOLD BACK

DEPARTMENT OF THE ARMY

OFFICIAL BUSINESS

COMMANDER
U.S. ARMY SOLDIER SYSTEMS COMMAND
ATTN: AMSSB−RIM−E (N)
KANSAS STREET
NATICK, MA 91760−5000

The Metric System and Equivalents

Linear Measure

1 centimeter = 10 millimeters = .39 inch
1 decimeter = 10 centimeters = 3.94 inches
1 meter = 10 decimeters = 39.37 inches
1 dekameter = 10 meters = 32.8 feet
1 hectometer = 10 dekameters = 328.08 feet
1 kilometer = 10 hectometers = 3,280.8 feet

Weights

1 centigram = 10 milligrams = .15 grain
1 decigram = 10 centigrams = 1.54 grains
1 gram = 10 decigrams = .035 ounce
1 dekagram = 10 grams = .35 ounce
1 hectogram = 10 dekagrams = 3.52 ounces
1 kilogram = 10 hectograms = 2.2 pounds
1 quintal = 100 kilograms = 220.46 pounds
1 metric ton = 10 quintals = 1.1 short tons

Liquid Measure

1 centiliter = 10 milliliters = .34 fl. ounce
1 deciliter = 10 centiliters = 3.38 fl. ounces
1 liter = 10 deciliters = 33.81 fl. ounces
1 dekaliter = 10 liters = 2.64 gallons
1 hectoliter = 10 dekaliters = 26.42 gallons
1 kiloliter = 10 hectoliters = 264.18 gallons

Square Measure

1 sq. centimeter = 100 sq. millimeters = .155 sq. inch
1 sq. decimeter = 100 sq. centimeters = 15.5 sq. inches
1 sq. meter (centare) = 100 sq. decimeters = 10.76 sq. feet
1 sq. dekameter (are) = 100 sq. meters = 1,076.4 sq. feet
1 sq. hectometer (hectare) = 100 sq. dekameters = 2.47 acres
1 sq. kilometer = 100 sq. hectometers = .386 sq. mile

Cubic Measure

1 cu. centimeter = 1000 cu. millimeters = .06 cu. inch
1 cu. decimeter = 1000 cu. centimeters = 61.02 cu. inches
1 cu. meter = 1000 cu. decimeters = 35.31 feet

Approximate Conversion Factors

To change	*To*	*Multiply by*	*To change*	*To*	*Multiply by*
inches	centimeters	2.540	ounce–inches	newton–meters	.007062
feet	meters	.305	centimeters	inches	.394
yards	meters	.914	meters	feet	3.280
miles	kilometers	1.609	meters	yards	1.094
square inches	square centimeters	6.451	kilometers	miles	.621
square feet	square meters	.093	square centimeters	square inches	.155
square yards	square meters	.836	square meters	square feet	10.764
square miles	square kilometers	2.590	square meters	square yards	1.196
acres	square hectometers	.405	square kilometers	square miles	.386
cubic feet	cubic meters	.028	square hectometers	acres	2.471
cubic yards	cubic meters	.765	cubic meters	cubic feet	35.315
fluid ounces	milliliters	29.573	cubic meters	cubic yards	1.308
pints	liters	.473	milliliters	fluid ounces	.034
quarts	liters	.946	liters	pints	2.113
gallons	liters	3.785	liters	quarts	1.057
ounces	grams	28.349	liters	gallons	.264
pounds	kilograms	.454	grams	ounces	.035
short tons	metric tons	.907	kilograms	pounds	2.205
pound–feet	newton–meters	1.356	metric tons	short tons	1.102
pound–inches	newton–meters	.11296			

Temperature (Exact)

_F	Fahrenheit temperature	5/9 (after subtracting 32)	Celsius temperature	_C

PIN: 077464-000