TM 9-2320-364-20-5

TECHNICAL MANUAL

UNIT MAINTENANCE VOLUME V

PALLETIZED LOAD SYSTEM

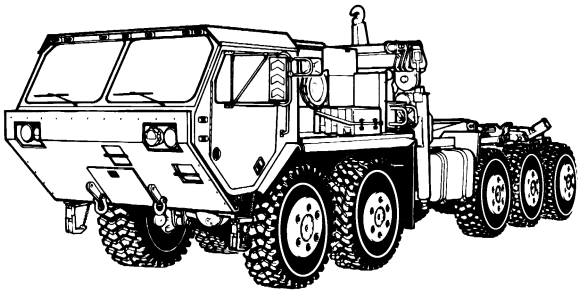

MODEL M1074/M1075

NSN 2320-01-304-2277
NSN 2320-01-304-2278

WHEEL AND TIRE MAINTENANCE	13-1
STEERING SYSTEM MAINTENANCE	14-1
FRAME MAINTENANCE	15-1
SPRINGS AND SHOCKS MAINTENANCE	16-1
CAB AND BODY MAINTENANCE	17-1
MATERIAL HANDLING CRANE, SELF-RECOVERY WINCH AND LOAD HANDLING SYSTEM MAINTENANCE	18-1
ACCESSORY ITEMS MAINTENANCE	19-1
HYDRAULIC SYSTEM MAINTENANCE	20-1
SPECIAL PURPOSE KITS MAINTENANCE	21-1
ARMAMENT MAINTENANCE	22-1
GAGES (NON-ELECTRICAL) MAINTENANCE	23-1
CHEMICAL, BIOLOGICAL, RADIOLOGICAL (CBR) MAINTENANCE	24-1
REFERENCES	A-1
MAINTENANCE ALLOCATION CHART	B-1
EXPENDABLE SUPPLIES AND MATERIALS	C-1
MANUFACTURED ITEMS	D-1
TORQUE LIMITS	E-1
MANDATORY REPLACEMENT PARTS	F-1
TOOL IDENTIFICATION LIST	G-1

DISTRIBUTION RESTRICTION
Approved for public release; distribution is unlimited.

HEADQUARTERS, DEPARTMENT OF THE ARMY

AUGUST 1999

WARNING

- Drycleaning Solvent (P-D-680) is TOXIC and flammable. Wear protective goggles, face shield, and gloves; use only in a well-ventilated area; avoid contact with skin, eyes, and clothes, and do not breathe vapors. Keep away from heat or flame. Never smoke when using solvent. The flashpoint for Type II Drycleaning Solvent is 140 degrees F (60 degrees C) and Type III Drycleaning Solvent is 200 degrees F (93 degrees C). Failure to do so may result in injury or death to personnel.
- If personnel become dizzy while using cleaning solvent, immediately get fresh air and medical help. If solvent contacts skin or clothes, flush with cold water. If solvent contacts eyes, immediately flush eyes with water and get immediate medical attention.

WARNING

Radiator, radiator cap, coolant, and hoses are very hot and pressurized during truck operation. Let radiator cool before checking hoses. Failure to do so may result in serious burns to personnel.

WARNING

Use extreme care when removing the radiator pressure cap. Sudden release of pressure can cause a steam flash which could seriously injure personnel. Slowly loosen cap to the first stop to relieve pressure before removing cap completely. After opening, securely tighten cap.

WARNING

Use a clean, thick waste cloth or like material to remove radiator pressure cap. Avoid using gloves. If hot water soaks through gloves, personnel could be burned.

WARNING

Apply truck brakes and chock wheels before any maintenance tasks are performed. Otherwise serious injury to personnel could result.

WARNING

Never use fuel to clean parts. Fuel is highly flammable. Serious personal injury could result if fuel ignites during cleaning.

WARNING

Compressed air used for cleaning purposes will not exceed 30 psi (207 kPa). Use only with effective chip guarding and personal protective equipment (goggles/shield, gloves, etc). Failure to comply may result in injury to personnel.

WARNING

Steam cleaning creates hazardous noise levels and severe burn potential. Eye, skin, and ear protection is required. Failure to comply may result in injury to personnel.

WARNING

Solvents used with a spray gun must be used in a spray booth with filter. Face shield must be used by personnel operating spray gun. Failure to comply may result in injury to personnel.

WARNING

On direct contact, uncured silicone sealant irritates eyes. In case of contact, flush eyes with water and seek medical attention. In case of skin contact, wipe off and flush with water.

WARNING

Do not drain engine oil while engine is hot. Severe injury to personnel may result.

WARNING

Ensure engine is cool before performing this task or injury to personnel may result.

WARNING

Use care when removing springs. Springs are under tension and can act as projectiles when released and could cause injury to personnel.

WARNING

Use care when installing springs. Springs are under tension and can act as projectiles when released and could cause injury to personnel.

WARNING

Adhesives, solvents, and sealing compounds can burn easily, can give off harmful vapors, and are harmful to skin and clothing. To avoid injury or death, keep away from open fire and use in well-ventilated area. If adhesive, solvent, or sealing compound gets on skin or clothing, wash immediately with soap and water.

WARNING

Fuel is very flammable and can explode easily. To avoid serious injury or death, keep fuel away from open fire and keep fire extinguisher within easy reach when working with fuel. Do not work on fuel system when engine is hot. Fuel can be ignited by hot engine.

WARNING

Do not remove the radiator cap when the engine is hot; steam and hot coolant can escape and burn personnel.

WARNING

After Nuclear, Biological, or Chemical (NBC) exposure of truck, all air filters shall be handled with extreme caution. Unprotected personnel may experience injury or death if residual toxic agents or radioactive material are present. If truck is exposed to chemical or biological agents, servicing personnel shall wear protective mask, hood, protective overgarments, and chemical protective gloves and boots in accordance with FM 3-4. All contaminated air filters shall be placed in double-lined plastic bags and moved swiftly to a segregation area away from the worksite. The same procedure applies for radioactive dust contamination. The Company NBC team should measure radiation prior to filter removal to determine extent of safety procedures required per the NBC Annex to the unit Standard Operating Procedures (SOP). The segregation area in which the contaminated air filters are temporarily stored shall be marked with appropriate NBC placards. Final disposal of contaminated air filters shall be in accordance with local SOP. Decontamination operation shall be in accordance with FM 3-5 and local SOP.

WARNING

Brake drum can get very hot during vehicle operation. Place hand near drum to check for excessive heat, but do not touch. Failure to comply may result in injury to personnel.

WARNING

Use extreme care when removing coolant system pressure tester. Sudden release of pressure can cause injury to personnel.

WARNING

Fuel is slippery and can cause falls. To avoid injury, wipe up spilled fuel with rags.

WARNING

Starting fluid is toxic and highly flammable. Container is pressurized. NEVER heat container and NEVER discharge starting fluid in confined areas or near open flame. Severe injury to personnel may result.

WARNING

Allow engine to cool before performing maintenance on the muffler, exhaust pipe, exhaust manifold or turbocharger. If necessary, use insulated pads and gloves.

WARNING

Muffler weighs 152 lbs (69 kg). Attach suitable lifting device prior to removal to prevent possible injury to personnel.

WARNING

Ensure this task is done only when muffler is cool. Performing this task on a warm or hot muffler may result in severe burning to personnel.

WARNING

Use extreme care when removing coolant system pressure tester. Sudden release of pressure can cause injury to personnel.

WARNING

Excess coolant may splash out upon removal of tube from hump hose. Ensure proper eye protection is worn to prevent possible injury to personnel.

WARNING

Cooling assembly weighs 925 lbs (420 kg). Attach suitable lifting device for removal and properly support cooling assembly to prevent possible injury to personnel.

WARNING

Ensure all personnel stay clear of radiator while engine is running. Air in radiator will be released which may cause hot coolant to spray out and cause injury or death to personnel.

WARNING

Engine cover assembly weighs 55 lbs (25 kg). Use an assistant to help remove engine cover assembly or injury to personnel may result.

WARNING

Radiator assembly weighs 575 lbs (261 kg). Do not stand directly under radiator assembly or injury to personnel may result.

WARNING

Ensure grille assembly is fully supported by lifting device prior to removal of screws. Failure to comply may result in severe injury to personnel.

WARNING

Adhesive causes immediate bonding on contact with eyes, skin, or clothing and also gives off harmful vapors. Wear protective goggles and use in well-ventilated area. If adhesive gets in eyes, try to keep eyes open; flush eyes with water for 15 minutes and get immediate medical attention.

WARNING

Remove all jewelry such as rings, dog tags, bracelets, etc. If jewelry or tools contact positive electrical circuits, a direct short may result. Damage to equipment, injury or death to personnel may occur.

WARNING

Starter weighs 73 lbs. (33 kg). Attach suitable lifting device prior to removal to prevent possible injury to personnel.

WARNING

Starter weighs 73 lbs. (33 kg). Attach suitable lifting device prior to installation to prevent possible injury to personnel.

WARNING

Use care when removing snap and retaining rings. Snap and retaining rings are under spring tension and can act as projectiles when released and could cause severe eye injury.

WARNING

Use care when installing snap and retaining rings. Snap and retaining rings are under spring tension and can act as projectiles when released and could cause severe eye injury.

WARNING

Diesel fuel is flammable. Do not perform this procedure near fire, flame, or sparks. Injury or death to personnel could result.

WARNING

Do not remove screws securing fan brace. Removing screws will cause fan brace to drop and may result in severe injury or death to personnel.

WARNING

Do not start engine or move truck when anyone is working on or under vehicle. Severe injury or death to personnel could result.

WARNING

Upon removal of all wires and cables, ensure no contact is made with battery terminals or other wires and cables. Strap wires and cables away from battery terminals and other wires and cables as required to prevent damage to parts, personal injury, or death.

WARNING

Ensure that exhaust pipe and turbo charger pipe connections are free from soot or debris. Failure to comply may result in exhaust leak and injury or death to personnel.

WARNING

Battery acid (electrolyte) is extremely harmful. Always wear safety goggles and rubber gloves, and do not smoke when performing maintenance on batteries. Injury will result if acid contacts skin or eyes. Wear rubber apron to prevent clothing being damaged.

WARNING

Be careful not to short out battery terminals. Do not smoke or use open flame near batteries. Batteries may explode from a spark. Battery acid is harmful to skin and eyes.

WARNING

Wear safety goggles and acid-proof gloves when battery cover must be removed or when adding electrolyte.

WARNING

Avoid electrolyte contact with skin, eyes, or clothing. If battery electrolyte spills, take immediate action to stop burning effects:

- External: Immediately flush with cold running water to remove all acid.
- Eyes: Flush with cold water for at least 15 minutes. Seek immediate medical attention.
- Internal: Drink large amounts of water or milk. Follow with milk of magnesia, beaten egg, or vegetable oil. Seek immediate medical attention.
- Clothing or Vehicle: Wash at once with cold water. Neutralize with baking soda or household ammonia solution.

WARNING

Injury will result if acid contacts skin or eyes. Wear rubber apron to prevent clothing being damaged.

WARNING

Corrosion inhibitor contains alkali. Do not get in eyes; wear goggles/safety glasses when using. Avoid contact with skin. In case of contact, immediately wash area with soap and water. If eyes are contacted, flush eyes with large amounts of water for at least 15 minutes and get immediate medical attention.

WARNING

Do not allow personnel to perform maintenance directly under boom or mast. Failure to follow proper procedures could cause serious injury or death.

WARNING

22 to 28 vdc are always present on wire 1431 at the ENGINE switch. Remove all jewelry such as rings, dog tags, bracelets, etc. If jewelry or tools contact positive electrical circuits, a direct short may result. Damage to equipment, injury or death to personnel may occur.

WARNING

22 to 28 vdc are always present on wire 1281 and DUVAC connectors. Remove all jewelry such as rings, dog tags, bracelets, etc. If jewelry or tools contact positive electrical circuits, a direct short may result. Damage to equipment, injury or death to personnel may occur.

WARNING

22 to 28 vdc are always present on wire 1139 at starter solenoid. Remove all jewelry such as rings, dog tags, bracelets, etc. If jewelry or tools contact positive electrical circuits, a direct short may result. Damage to equipment, injury or death to personnel may occur.

WARNING

Transmission oil will be extremely hot when drained. Do not come in contact with hot oil to avoid severe burns. If burned with hot oil, seek medical attention immediately.

WARNING

Ensure there are no personnel in front of truck when placing it into drive. Failure to do so may result in injury or death to personnel.

WARNING

Ensure transmission oil and filter are cool prior to removal. Failure to comply may result in injury to personnel.

WARNING

Wear safety goggles when performing tests on valves. Failure to do so may result in serious eye injury due to high pressure air.

WARNING

Fuel is very flammable and can explode easily. To avoid serious injury or death, keep fuel away from open fire and keep fire extinguisher within easy reach when working with fuel. Do not work on fuel system when engine is hot. Fuel can be ignited by hot engine.

WARNING

Do not remove the radiator cap when the engine is hot; steam and hot coolant can escape and burn personnel.

WARNING

Driveshafts can weigh up to 100 lbs (45 kg), obtain aid from an assistant to prevent possible injury to personnel.

WARNING

Fuel is very flammable and can explode easily. To avoid serious injury or death keep flame away from fuel and keep fire extinguisher within easy reach.

WARNING

Use jackstands to support axle weight. Failure to comply may result in injury to personnel.

WARNING

Brake shoes may be covered with dust. Breathing this dust may be harmful to your health. Do not use compressed air to clean brake shoes. Wear a filter mask approved for use against brake dust. Failure to comply may result in injury or death to personnel.

WARNING

Use care when removing brake spring. Spring is under tension and can act as a projectile when released and could cause injury to personnel.

WARNING

Use care when installing brake spring. Spring is under tension and can act as a projectile when released and could cause injury to personnel.

WARNING

22 to 28 vdc are always present at DUVAC connectors. Care must be exercised when removing the DUVAC cover. Remove all jewelry such as rings, dog tags, bracelets, etc. If jewelry or tools contact positive electrical circuitc, a direct short may result. Damage to equipment, injury or death to personnel may occur.

WARNING

Spring in air chamber is very powerful and is under tension. Failure to cage air chamber before removal will release tension of spring abruptly and could result in injury or death to personnel.

WARNING

Air reservoir will fall when screws are removed. Support air reservoir prior to removing screws to prevent injury to personnel.

WARNING

Do not touch hot exhaust system with bare hands; injury to personnel will result.

WARNING

Allow engine to cool before performing troubleshooting maintenance. If necessary use insulated pads and gloves. Hot engine components will burn and cause injury to personnel.

WARNING

Terminal 1 and terminal 2 at DUVAC controller are electrically hot all of the time. Ensure bracket does not contact either terminal. Damage to equipment, injury or death to personnel may occur.

WARNING

Terminal 1 and terminal 2 at DUVAC controller are electrically hot all of the time. Ensure DUVAC cover or bracket does not contact either terminal. Damage to equipment, injury or death to personnel may occur.

WARNING

Inner wheel weighs 105 lbs (48 kg). Attach suitable lifting device prior to moving rim to prevent possible injury to personnel.

WARNING

Ensure all personnel keep hands and fingers out from between tire and bead lock. Failure to comply may result in injury to personnel.

WARNING

Alternator is capable of producing over 40 vdc. Be careful when taking a voltage reading not to get shocked.

WARNING

High pressure hydraulics [oil under 3,700 psi (25,512 kPa) pressure] operate this equipment. Refer to vehicle operator and maintenance manuals for hydraulic oil pressure. Never disconnect any hydraulic line or fittings without first dropping pressure to zero. High pressure oil stream can pierce body and cause severe injury to personnel.

WARNING

Ensure all personnel wear proper eye protection. Do not stand directly in front of valve stem when draining air from tire. Tire is under extreme air pressure. Failure to comply may result in injury to personnel.

WARNING

Prolonged contact with lubricating oil (MIL-L-2104) may cause a skin rash. Skin and clothing that come in contact with lubricating oil should be thoroughly washed immediately. Saturated clothing should be removed immediately. Areas in which lubricating oil is used should be well-ventilated to keep fumes to a minimum.

WARNING

Tie-rod end may unexpectedly pop-up when pressure is applied with hydraulic jack. Keep hands and face clear of tie-rod end. Failure to comply may result in severe injury to personnel.

WARNING

Skid plate weighs 130 lbs (59 kg). Attach suitable lifting device prior to removal to prevent injury to personnel.

WARNING

Skid plate structure weighs 95 lbs (43 kg). Attach suitable lifting device prior to removal to prevent injury to personnel.

WARNING

Skid plate crossmember weighs 55 lbs (25 kg). Attach suitable lifting device prior to removal to prevent possible injury to personnel.

WARNING

Right hand and left hand extension assemblies weigh 110 lb (50 kg) each. Use the aid of an assistant when lifting to prevent injury to personnel.

WARNING

Crossover tube weighs 100 lbs (45 kg). Attach a suitable lifting device prior to removal to prevent possible injury to personnel.

WARNING

Each hard lift bracket weighs 67 lbs (30 kg). Attach a suitable lifting device prior to removal to prevent possible injury to personnel.

WARNING

Self-guided coupler weighs 100 lbs (45 kg). Attach suitable lifting device prior to removal to prevent possible injury to personnel.

WARNING

The exhaust pipe and muffler can become very hot during vehicle operation. Be careful not to touch these parts with bare hands, or allow body to come in contact with pipe or muffler. Exhaust system parts can become hot enough to cause serious burns.

WARNING

Support hoist extension before removing retaining pin or injury to personnel may occur.

WARNING

Tire carrier weighs 145 lbs (66 kg). Attach suitable lifting device prior to removal to prevent possible injury to personnel.

WARNING

Wire rope can become frayed or contain broken wires. Wear heavy leather-palmed work gloves when handling wire rope. Frayed or broken wires can cause injury to personnel.

WARNING

Never let moving wire rope slide through hands, even when wearing gloves. A broken wire could cut through glove and can cause injury to personnel.

WARNING

Cab door weighs 100 lbs (45 kg). Support with suitable lifting device to avoid injury to personnel.

WARNING

Do not let window fall. Broken glass may cause serious injury to personnel.

WARNING

Platform assembly weighs 62 lbs (28 kg). Attach suitable lifting device prior to removal to prevent possible injury to personnel.

WARNING

Always wear proper eye protection and protective clothing when handling glass. Failure to comply may result in injury to personnel.

WARNING

Seat assembly weighs 55 lbs (25 kg). Attach suitable lifting device to prevent possible injury to personnel.

WARNING

Box assembly weighs 92 lbs (42 kg). Ensure box assembly is properly supported to prevent possible injury to personnel.

WARNING

Wear heavy gloves when handling crane cable. Never let cable run through hands; frayed cables can cut.

WARNING

The crane hydraulic system operates at oil pressures up to 3,100 psi (21,375 kPa). Never disconnect any hydraulic line or fitting without first dropping the pressure to zero. Failure to comply may result in serious injury or death to personnel.

WARNING

Self-recovery winch weighs 645 lbs (292 kg). Attach suitable lifting device to prevent possible injury to personnel.

WARNING

Front tension guide weighs 60 lbs (27 kg). Use an assistant to prevent possible injury to personnel.

WARNING

Leave top front screw installed in frame to prevent spacer from falling. Failure to comply may result in injury to personnel.

WARNING

Front guide assembly weighs 75 lbs (34 kg). Use an assistant to prevent injury to personnel.

WARNING

Position top front screw in frame to hold spacer in place. Failure to comply may result in injury to personnel.

WARNING

Rear tension guide weighs 50 lbs (23 kg). Use an assistant to prevent injury to personnel.

WARNING

Rear guide assembly weighs 65 lbs (29 kg). Use an assistant to prevent possible injury to personnel.

WARNING

Rear roller assembly weighs 375 lbs (170 kg). Attach suitable lifting device prior to removal to prevent possible injury to personnel.

WARNING

Do not remove heater hoses when engine is hot; steam and hot coolant can escape and burn personnel.

WARNING

Use clean wiping rags or like material to remove heater hoses. Avoid using gloves. If hot water soaks through gloves, personnel could be burned.

WARNING

Coolant is slippery and can cause falls and injury. Clean up spilled coolant immediately.

WARNING

Allow engine to cool prior to removal of heater core to prevent burns and injury to personnel.

WARNING

Use caution when removing hoses to prevent getting antifreeze in eyes or mouth, if antifreeze does get in eyes or mouth, seek medical attention immediately.

WARNING

Extreme care should be taken when removing heater hoses if water temperature gage reads above 180 degrees F (82 degrees C). Contact by steam or hot coolant may result in injury or death to personnel.

WARNING

Allow engine to cool prior to removal of valve to prevent burns and possible injury to personnel.

WARNING

Ensure engine is cool before performing this task or severe burns from hot hydraulic fluid may result.

WARNING

The main hydraulic system operates at oil pressures up to 3,675 psi (25,339 kPa). Never disconnect any hydraulic line, fitting or component without first dropping pressure to zero. Failure to comply may result in serious injury or death to personnel.

WARNING

Use extreme care when loosening filler cap. Sudden release of pressure could seriously injure personnel. Slowly loosen cap to relieve pressure and ensure proper eye protection is worn.

WARNING

Hydraulic reservoir weighs 120 lbs (54 kg). The aid of an assistant is required to prevent possible injury to personnel.

WARNING

Battery weighs 75 lbs (34 kg). Remove battery only with the aid of an assistant to prevent possible injury to personnel.

WARNING

Battery weighs 75 lbs (34 kg). Install battery only with the aid of an assistant to prevent possible injury to personnel.

WARNING

Battery box weighs 75 lbs (34 kg). Use the aid of an assistant to prevent possible injury to personnel.

WARNING

Sharp edges of exhaust pipe could cause injury to personnel.

WARNING

Coolant may run out of water jacket when turned. Wear eye protection or injury to personnel may result.

WARNING

High pressure hydraulics [oil under 3,100 psi (21,374 kPa) pressure] operate this equipment. Refer to vehicle operator and maintenance manuals for hydraulic oil pressure. Never disconnect any hydraulic line or fittings without first dropping pressure to zero. A high pressure oil stream can pierce body and cause severe injury to personnel.

WARNING

Machine gun ring weighs 295 lbs (134 kg). Attach suitable lifting device to prevent injury to personnel.

WARNING

Machine gun ring front support weighs 55 lbs (25 kg). Attach suitable lifting device to prevent injury to personnel.

WARNING

Circuit breakers CB5, CB6, CB12, CB20, CB22, CB23 and relays R3, R13 - R19, R26, R28, R32, R33 are always electrically hot and can cause severe injury to personnel. Care must be exercised when working under the electrical circuit board cover.

WARNING

Ensure equipment will not move while repairing or inspecting it. For trailers, “red tag” the hitch, and block or chock wheels or tracks. For powered equipment, block or chock wheels or tracks, and “red tag” the starter. Prevent a “quick fix” from becoming a quick injury.

WARNING

When adjustment or service requires a running engine, two personnel will be used; one at controls and one at service point. This helps prevent accidental movement of controls.

WARNING

Wires 1866 and 1867 have 12 vdc at all times direct from batteries. Care must be exercised when working with these wires to avoid injury to personnel.

WARNING

Ensure all personnel are clear of rear of truck before shifting into R (reverse). Failure to do so might result in injury or death to personnel.

WARNING

Circuit breakers and relays are always electrically hot and can cause severe injury to personnel. Care must be exercised when working under the electrical circuit board cover.

WARNING

Ether is toxic and highly flammable. Container is pressurized. Never heat container and never discharge ether into confined areas or near open flame. Severe injury to personnel may result.

WARNING

Do not place any part of body in area of fan operation. Failure to do so will result in injury or death to personnel.

WARNING

10 to 14 vdc are always present at terminals E and F of connector MC7.

WARNING

Before inflating or deflating, stand out of the trajectory area or personal injury or death may result.

WARNING

Hot transmission oil can cause severe burns and injury to personnel. Transmission should be allowed to cool before oil is drained.

WARNING

Wear safety goggles when performing leakage tests on valves. Failure to do so may result in serious eye injury due to high pressure air.

WARNING

If air lines are under high pressure when they are disconnected, they can whip around and cause injury to personnel. Caution should be exercised when loosening or disconnecting air line fittings.

WARNING

Exercise extreme caution when working around wheels or under truck while engine is operating. Movement of truck may cause injury or death to personnel.

WARNING

Keep clear of equipment when equipment is being raised or lowered. Equipment may fall and cause serious injury or death to personnel.

WARNING

Never crawl under equipment when performing maintenance unless equipment is securely blocked. Equipment may fall and cause serious injury or death to personnel.

WARNING

Do not work on any item supported only by lift jacks or hoist. Always use blocks or proper stands to support the item prior to any work. Equipment may fall and cause injury or death to personnel.

WARNING

Ensure transmission is cool before proceeding. Failure to comply may result in injury to personnel.

WARNING

Keep hands and arms away from fan blade and drive while engine is running, or serious injury to personnel will result.

WARNING

Maintain adequate distance from moving steering parts or serious injury to personnel may result.

WARNING

Do not stand between wheels when engine is operating. Movement of vehicle can cause injury or death to personnel.

WARNING

Truck must be on level ground and wheels must be chocked before parking brake is released. Otherwise, truck may roll and cause injury to personnel.

WARNING

Do not use retread tires on vehicles equipped with a Central Tire Inflation System (CTIS). Use only the tires that are specified in the Repair Parts and Special Tools List (RPSTL). Failure to comply may result in tire failure and loss of vehicle control.

WARNING

Ensure transfer case is cool before proceeding. Failure to comply may result in injury to personnel.

WARNING

Failure to place wheel/tire assembly in safety cage prior to initial inflation could result in serious injury or death to personnel.

WARNING

When a wheel/tire is in a restraining device, do not lean any part of body or equipment on or against the restraining device, or injury or death could result.

WARNING

Stand clear of trajectory area during deflation or personal injury or death may result.

WARNING

Always completely deflate tire by removing valve core from valve stem before attempting demounting operation. After air has finished exhausting from valve stem, carefully run a piece of wire through valve stem to ensure it is not plugged and tire is completely deflated. Failure to comply may result in injury to personnel.

WARNING

Wheel/tire assembly must be deflated in a safety cage or personal injury or death may result.

WARNING

Keep hands clear of studs and outer face of wheel to prevent injury to personnel.

WARNING

Wheel/tire assembly weighs 523 lbs (237 kg). Attach suitable lifting device prior to moving to prevent possible injury to personnel.

WARNING

Stay out of the trajectory as indicated by the area shown. Under some circumstances, the trajectory may deviate from its expected path. Injury or death to personnel may result.

WARNING

Container lock could drop suddenly if not supported. Failure to comply may result in injury to personnel.

WARNING

Slider weighs 142 lbs (64 kg). Attach suitable lifting device to prevent possible injury to personnel.

WARNING

Right front support bracket weighs 98 lbs (44 kg). Attach suitable lifting device to prevent possible injury to personnel.

WARNING

Left front support bracket weighs 98 lbs (44 kg). Attach suitable lifting device to prevent possible injury to personnel.

WARNING

Front support assembly weighs 660 lbs (299 kg). Attach suitable lifting device to prevent possible injury to personnel.

WARNING

Front crossmember assembly weighs approximately 500 lbs (227 kg). Attach suitable lifting device to prevent possible injury to personnel.

WARNING

Stow cone weldment weighs approximately 225 lbs (102 kg). Attach suitable lifting device to prevent possible injury to personnel.

WARNING

Rear guide assembly weighs 70 lbs (32 kg). Attach suitable lifting device to prevent possible injury to personnel.

WARNING

Slide arm weighs 65 lbs (29 kg). Attach suitable lifting device to prevent possible injury to personnel.

WARNING

Lifting frame weighs 1600 lbs (726 kg). Attach suitable lifting device to prevent possible injury to personnel.

WARNING

Stow weldment weighs 410 lbs (186 kg). Attach suitable lifting device to prevent possible injury to personnel.

WARNING

Rear roller bracket weighs 150 lbs (68 kg). When removing one rear roller bracket, ensure remaining rear roller bracket is supported. Attach suitable lifting device to prevent possible injury to personnel.

WARNING

Arm assembly weighs 240 lbs (109 kg). Attach suitable lifting device to prevent possible injury to personnel.

WARNING

Right strut bracket assembly weighs 80 lbs (36 kg). Attach suitable lifting device to prevent possible injury to personnel.

WARNING

Alternator weighs 75 lbs (34 kg). Use the aid of an assistant to prevent possible injury to personnel.

WARNING

Starter weighs 73 lbs (33 kg). Attach suitable lifting device prior to installation to prevent possible injury to personnel.

WARNING

Ensure brake drum is not pulled back more than approximately two inches (5 cm). Failure to comply may result in injury or death to personnel.

WARNING

Most circuit breakers are always electrically hot and can cause severe injury to personnel. Care must be exercised when working under the ECB cover.

WARNING

Tip of removal tool is very sharp. Use caution when using tool. Failure to comply may result in injury to personnel.

WARNING

Stand clear of tires while turning them. Failure to do so may result in injury or death to personnel

WARNING

Never inflate the wheel/tire assembly unless all ten outer wheel nuts have been properly torqued or personal injury could result.

WARNING

Brake drum weighs 132 lbs (60 kg). Attach suitable lifting device to prevent possible injury to personnel.

WARNING

Axle's No. 1 and No. 2 brake drums may swing out during removal. Use the aid of an assistant to support lifting device. Failure to comply may result in injury to personnel.

WARNING

Keep hands clear of studs and outer face of axles to prevent injury to personnel.

WARNING

Stand clear of tires while turning. Failure to do so may result in injury or death to personnel.

WARNING

Sharp edges of exhaust pipe could cause injury to personnel.

WARNING

Do not remove hoses when cooling system is hot; steam and hot coolant can escape and burn personnel.

WARNING

The hydraulic system operates at high pressures. Never disconnect any hydraulic line or fitting without first dropping pressure to zero. Failure to comply may result in serious injury or death to personnel.

WARNING

CARC paint contains isocyanate (HDI) which is highly irritating to skin and respiratory system. High concentrations of HDI can produce symptoms of itching and reddening of skin, a burning sensation in throat and nose and watering of the eyes. In extreme concentrations, HDI can cause cough, shortness of breath, pain during respiration, increased sputum production, and chest tightness. The following precautions must be taken whenever using CARC paint:

- ALWAYS use air line respirators when using CARC paint unless air sampling shows exposure to be below standards. Use chemical cartridge respirator if air sampling is below standards.
- DO NOT let skin or eyes come in contact with CARC paint. Always wear protective equipment (gloves, ventilation mask, safety goggles, etc.).
- DO NOT use CARC paint without adequate ventilation.
- NEVER weld or cut CARC-coated materials.
- DO NOT grind or sand painted equipment without high-efficiency air purifying respirators in use.
- BE AWARE of CARC paint exposure symptoms; symptoms can occur a few days after initial exposure. Seek medical help immediately if symptoms are detected.

WARNING

Horizontal roller weighs 75 lbs (34 kg). Attach suitable lifting device prior to removal to prevent possible injury to personnel.

WARNING

Do not put fingers in between boom sections when removing wear pads. Use a screwdriver or similar tool to remove wear pads. Failure to comply may result in injury to personnel.

WARNING

Do not put fingers in between boom sections when installing wear pads. Use a screwdriver or similar tool. Failure to comply may result in injury to personnel.

WARNING

Do not inhale fumes; could cause severe injury or death.

WARNING

Do not over-tighten clamp during installation. Accumulator is filled with compressed gas, and a change in pressure could cause crane to malfunction. Failure to complay may result in injury or death to personnel.

WARNING

Wire cable assembly can become frayed or contain broken wires. Wear heavy leather-palmed work gloves when handling wire cable assembly. Frayed or broken wires can cause injury to personnel.

WARNING

Never let moving wire cable assembly slide through hands, even when wearing gloves. A broken wire could cut through glove and cause injury to personnel.

WARNING

Air cleaner assembly can weigh up to 100 lbs (45 kg). Ensure air cleaner assembly is properly supported during removal. Failure to comply may result in injury to personnel.

WARNING

Ensure air cleaner assembly is properly supported. Failure to comply may result in injury to personnel.

WARNING

Use care when removing retaining rings. Retaining rings are under spring tension and can act as projectiles when released and could cause severe eye injury.

WARNING

Use care when installing retaining rings. Retaining rings are under spring tension and can act as projectiles when released and could cause severe eye injury.

LIST OF EFFECTIVE PAGES Insert latest changed pages. Destroy superseded pages.

NOTE

The portion of the text effected by the changes is indicated by a vertical line in the outer margins of the page. Changes to illustrations are indicated by a shadowed or screened areas, or by miniature pointing hands.

Dates of issue for original and changed pages are:

Original ..... 0 ... 1 August 1999

TOTAL NUMBER OF PAGES IN THIS PUBLICATION IS 1124 CONSISTING OF THE FOLLOWING:

Page No.	*Change No.	Page No.	*Change No.	Page No.	*Change No.
Title	0	A-1 - A-2	0		
Blank	0	B-1 - B-39	0		
a - z	0	B-40 Blank	0		
A	0	C-1 - C-10	0		
B Blank	0	D-1 - D-16	0		
i - iii	0	E-1 - E-7	0		
iv Blank	0	E-8 Blank	0		
13-1 - 13-53	0	F-1 - F-13	0		
13-54 Blank	0	F-14 Blank	0		
14-1 - 14-63	0	G-1 - G-3	0		
14-64 Blank	0	G-4 Blank	0		
15-1 - 15-74	0	INDEX-1 - INDEX-15	0		
16-1 - 16-7	0	INDEX-16 Blank	0		
16-8 Blank	0				
17-1 - 17-152	0				
18-1 - 18-88	0				
19-1 - 19-79	0				
19-80 Blank	0				
20-1 - 20-63	0				
20-64 Blank	0				
21-1 - 21-231	0				
21-232 Blank	0				
22-1 - 22-12	0				
23-1 - 23-6	0				
24-1 - 24-6	0				

* Zero In This Column Indicates An Original Page.

TECHNICAL MANUAL

No. 9-2320-364-20

HEADQUARTERS
DEPARTMENT OF THE ARMY
Washington, D.C. 01 August 1999

Unit Maintenance Manual

PALLETIZED LOAD SYSTEM

MODEL M1074/M1075
NSN 2320-01-304-2277
NSN 2320-01-304-2278

Current as of 01 August 1999

REPORTING OF ERRORS AND RECOMMENDING IMPROVEMENTS

You can help improve this publication. If you find any mistakes or if you know of a way to improve the procedures, please let us know. Submit your DA Form 2028 (Recommended Changes to Publications and Blank Forms), through the Internet, on the Army Electronic Product Support (AEPS) website. The Internet address is http://aeps.ria.army.mil. If you need a password, scroll down and click on "ACCESS REQUEST FORM." The DA Form 2028 is located in the ONLINE FORMS PROCESSING section of the AEPS. Fill out the form and click on SUBMIT. Using this form on the AEPS will enable us to respond quicker to your comments and better manage the DA Form 2028 program. You may also mail, fax or email your letter, DA Form 2028, or DA Form 2028-2, located at the back of this manual direct to: Commander, U.S. Army Tank-automotive and Armaments Command, ATTN: AMSTA-AC-NML, Rock Island, IL 61299-7630. The email address is amsta-ac-nml@ria.army.mil. The fax number is DSN 793-0726 or Commercial (309) 782-0726. A reply will be furnished to you.

TABLE OF CONTENTS

		Page
CHAPTER 13	WHEEL AND TIRE MAINTENANCE	13-1
CHAPTER 14	STEERING SYSTEM MAINTENANCE	14-1
CHAPTER 15	FRAME MAINTENANCE	15-1
CHAPTER 16	SPRINGS AND SHOCKS MAINTENANCE	16-1
CHAPTER 17	CAB AND BODY MAINTENANCE	17-1
CHAPTER 18	MATERIAL HANDLING CRANE (MHC), SELF-RECOVERY WINCH (SRW) AND LOAD HANDLING SYSTEM (LHS) MAINTENANCE	18-1
CHAPTER 19	ACCESSORY ITEMS MAINTENANCE	19-1
CHAPTER 20	HYDRAULIC SYSTEM MAINTENANCE	20-1
CHAPTER 21	SPECIAL PURPOSE KITS MAINTENANCE	21-1
CHAPTER 22	ARMAMENT MAINTENANCE	22-1

		Page
CHAPTER 23	GAGES (NON–ELECTRICAL) MAINTENANCE	23-1
CHAPTER 24	CHEMICAL, BIOLOGICAL, AND RADIOLOGICAL (CBR) MAINTENANCE	24-1
APPENDIXES		
A	REFERENCES	A-1
B	MAINTENANCE ALLOCATION CHART	B-1
C	EXPENDABLE/DURABLE SUPPLIES AND MATERIALS LIST	C-1
D	ILLUSTRATED LIST OF MANUFACTURED ITEMS	D-1
E	TORQUE LIMITS	E-1
F	MANDATORY REPLACEMENT PARTS	F-1
G	TOOL IDENTIFICATION LIST	G-1
INDEX		INDEX-1
SCHEMATICS		SCHMTC-1
Section I	145 Amp Alternator and DDEC II Engine	
Section II	200 Amp Alternator and DDEC III Engine	

HOW TO USE THIS MANUAL

This manual is designed to help maintain the Model M1074/M1075 Palletized Load System (PLS) truck. Listed below are some special features included in this manual to help locate and use the needed information:

- A front cover table of contents is provided for quick reference to chapters and sections that will be used often.
- WARNING, CAUTION, and NOTE headings, subject headings, and other essential information are printed in bold type making them easier to see.
- The maintenance tasks describe what must be done to the truck before starting the task (Equipment Condition), and what must be done to return the vehicle to operating condition after the task is finished (Follow-On Maintenance).
- The Appendixes are located at the end of the manual. They contain a reference guide to other manuals, the Maintenance Allocation Chart (MAC), a list of expendable supplies and materials, and other material for maintaining the PLS truck.
- In addition to text, there are exploded-view illustrations showing how to take a component off and put it back on. Cleaning and inspection procedures are also included as required.
- Chapters 13 through 24 of this manual cover Unit Maintenance for each PLS truck system.

Follow these guidelines when using this manual:

- Read all WARNINGS and CAUTIONS before performing any procedure.
- The equipment conditions found in the maintenance procedures are of a general nature and the mechanic may be able to perform only certain steps within a procedure to accomplish the equipment condition.

CHAPTER 13

WHEEL AND TIRE MAINTENANCE

Para	Contents	Page
13-1	Introduction	13-1
13-2	Wheel/Tire Assembly Repair	13-2
13-3	Axle Brake Drum Replacement	13-14
13-4	Axles No. 1, 2 And 5 Central Tire Inflation System (CTIS) Spindle Fittings Replacement	13-17
13-5	Axles No. 3 And 4 Central Tire Inflation System (CTIS) Spindle Fittings Replacement	13-20
13-6	Central Tire Inflation System (CTIS) Air Lines Replacement	13-23
13-7	Central Tire Inflation System (CTIS) Controller Replacement	13-25
13-8	Central Tire Inflation System (CTIS) Front Manifold Replacement	13-28
13-9	Central Tire Inflation System (CTIS) Rear Manifold Replacement	13-34
13-10	Central Tire Inflation System (CTIS) Front And Rear Manifold Repair	13-39
13-11	Central Tire Inflation System (CTIS) Wheel Valve Repair	13-45
13-12	Tire Repair	13-50
13-13	Central Tire Inflation System (CTIS) Controller Protection Kit Installation/Replacement	13-51

13-1. INTRODUCTION.

This chapter contains maintenance instructions for removing, replacing, installing and adjusting wheel and tire components as authorized by the Maintenance Allocation Chart (MAC) at the Unit Maintenance level.

13-2. WHEEL/TIRE ASSEMBLY REPAIR.

This task covers:

a. Disassembly
b. Cleaning/Inspection
c. Assembly
d. Follow-On Maintenance

INITIAL SETUP

Tools and Special Tools
Tool Kit, General Mechanic's: Automotive (Item 74, Appendix G)
Multiplier, Torque (Item 45, Appendix G)
Repair Tool, Pneumatic Tire, Valve (Item 56, Appendix G)
Socket Set, 3/4 in. (Item 61, Appendix G)
Socket Set, 3/8 in. (Item 62, Appendix G)
Wrench, Torque (0 to 300 lb-ft [0 to 407 N·m]) (Item 96, Appendix G)
Wrench, Torque (0 to 60 N·m) (Item 98, Appendix G)
Lifting Device (Minimum Capacity 600 lbs [272 kg])
Wooden Block (Appendix D)

Materials/Parts
Lubricant, Tire and Rim (Item 53, Appendix C)
Sealing Compound (Item 74, Appendix C)
Grommet (2) (Item 72, Appendix F)
Locknut (4) (Item 122, Appendix F)
Packing, Preformed (Item 246, Appendix F)
Packing, Preformed (2) (Item 262, Appendix F)
Valve Core (Item 342, Appendix F)

References
TM 9-2610-200-14

Equipment Condition
Engine OFF, (TM 9-2320-364-10)
Wheel and tire removed from truck, (TM 9-2320-364-10)

a. Disassembly.

WARNING

- Wheel/tire assembly must be deflated in a safety cage or personal injury or death may result.
- Wheel/tire assembly weighs 523 lbs (237 kg). Attach suitable lifting device prior to moving to prevent possible injury to personnel.

NOTE

Refer to TM 9-2610-200-14 for construction of safety cage.

(1) Using lifting device, position wheel/tire assembly (1) in a safety cage.

(2) Remove valve cap (2) from valve stem (3).

WARNING

- Stand clear of trajectory area during deflation or personal injury or death may result.
- High air pressure will be released from valve stem when valve core is removed. Stay clear of valve stem after core is removed. Ensure all personnel wear suitable eye protection. Failure to comply may result in injury to personnel.
- Always completely deflate tire by removing valve core from valve stem before attempting demounting operation. After air has finished exhausting from valve stem, carefully run a piece of wire through valve stem to ensure it is not plugged and tire is completely deflated. Failure to comply may result in injury to personnel.

(3) Remove valve core (4) from valve stem (3). Discard valve core.

(4) Remove wheel/tire assembly (1) from safety cage and position on wooden block on flat surface with Central Tire Inflation System (CTIS) wheel valve assembly (5) facing up.

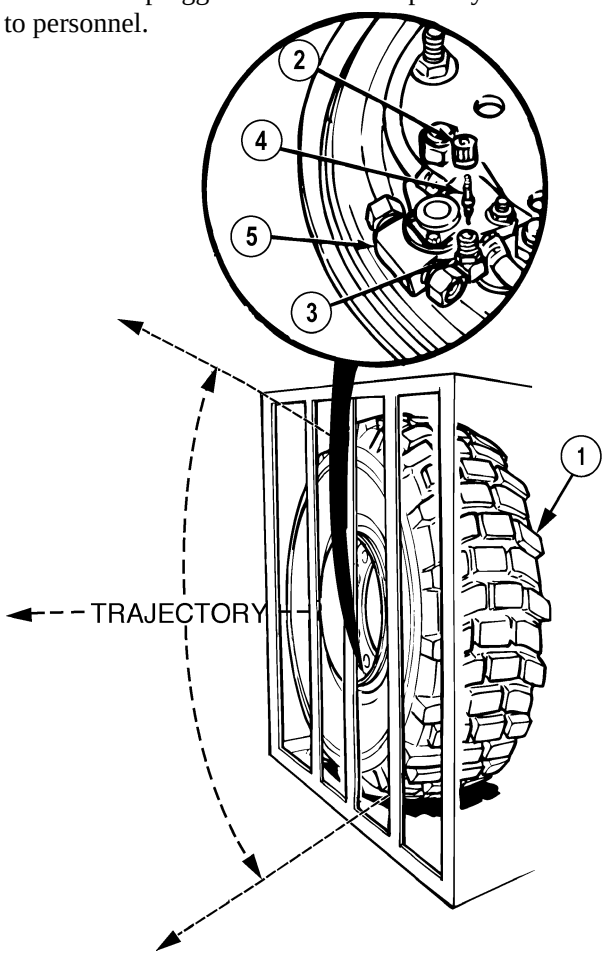

13-2. WHEEL/TIRE ASSEMBLY REPAIR (CONT).

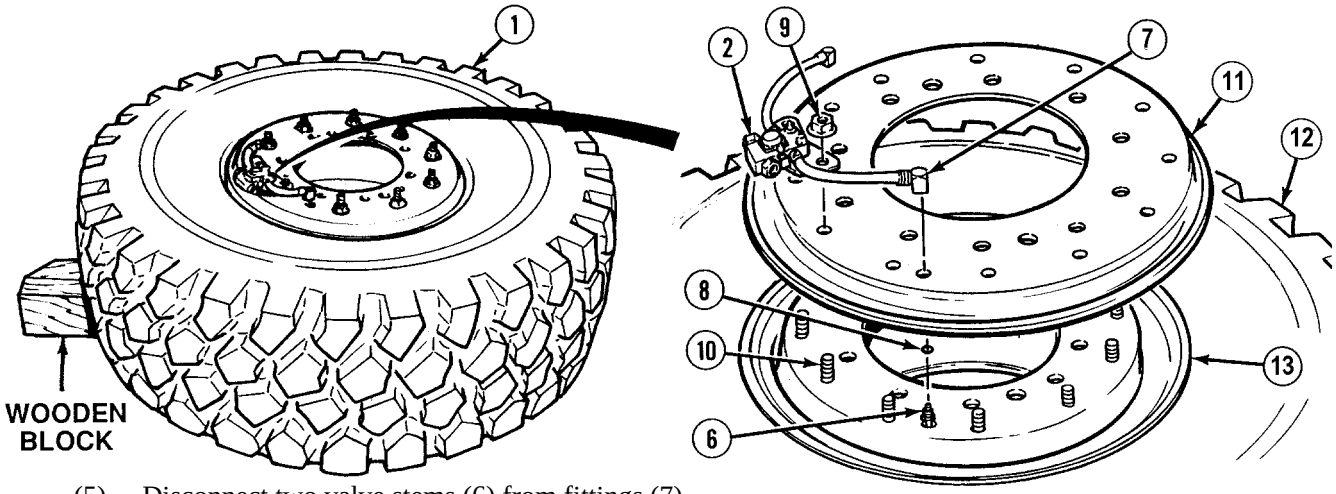

(5) Disconnect two valve stems (6) from fittings (7).

(6) Remove and discard two preformed packings (8) from valve stems (6).

(7) Remove twelve lug nuts (9) from studs (10).

(8) Remove CTIS wheel valve assembly (2) from outer wheel (11).

WARNING

Keep hands clear of studs and outer face of wheel to prevent injury to personnel.

NOTE

A tire iron can be used to lift the outer wheel.

(9) Pry outer wheel (11) and tire (12) apart.

(10) Remove outer wheel (11) from inner wheel (13).

WARNING

Wheel/tire assembly weighs 523 lbs (237 kg). Attach suitable lifting device prior to moving to prevent possible injury to personnel.

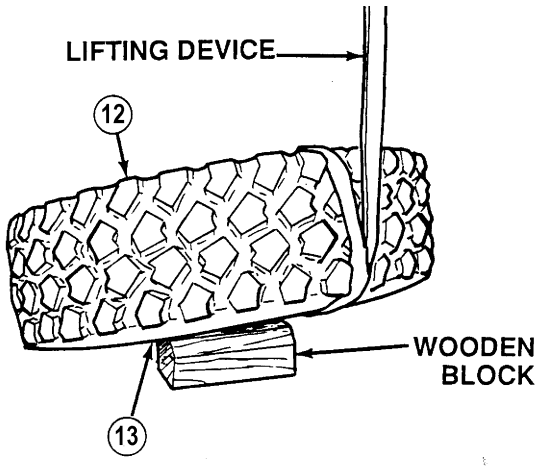

(11) Attach lifting device to wheel/tire assembly (1).

(12) Raise and turn wheel/tire assembly (1) over so inner wheel (13) center rests on wooden block. Lower tire (12).

(13) Remove lifting device from wheel/tire assembly (1).

(14) Pry inner wheel (13) and tire (12) apart.

WARNING

Inner wheel weighs 105 lbs (48 kg). Attach suitable lifting device prior to moving rim to prevent possible injury to personnel.

(15) Attach lifting device to inner wheel (13).

(16) Remove inner wheel (13) from tire (12).

(17) Remove and discard preformed packing (14) from inner wheel (13) and cut in two.

(18) Remove two nuts (15), valve stems (6) and grommets (16) from inner wheel (13). Discard grommets.

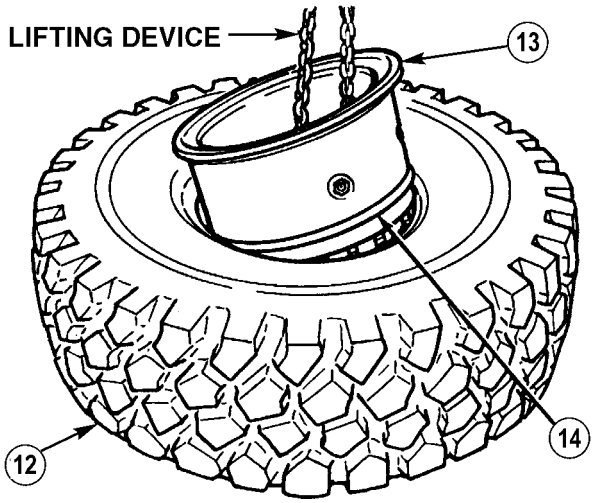

NOTE

If studs are damaged, perform Steps (19) through (25). If studs are not damaged, perform Steps (20) through (25).

(19) Remove damaged studs (17) from inner wheel (13). Discard damaged studs.

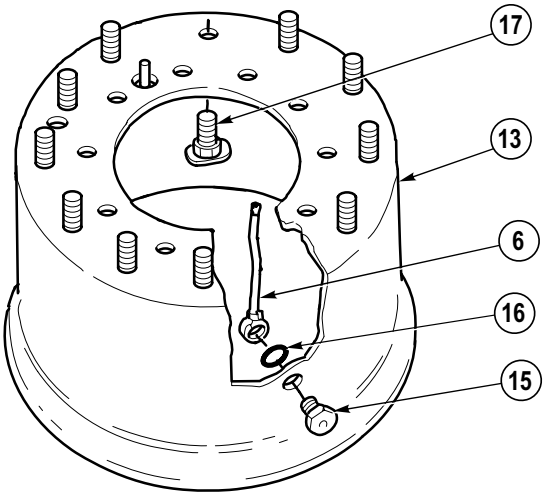

13-2. WHEEL/TIRE ASSEMBLY REPAIR (CONT).

NOTE

Mallet and tire lubricant may be used to ease movement of bead lock.

(20) Move bead lock (18) until locknuts (19) are visible.

NOTE

Positioning tire against a stationary object may ease in removal of bead lock.

(21) Attach lifting device to tire (12) and position tire upright at a slight angle.

(22) Remove lifting device from tire (12).

(23) Remove four locknuts (19), two plates (20) and screws (21) from bead lock (18). Discard locknuts.

(24) Remove one end of bead lock (18) from tire (12).

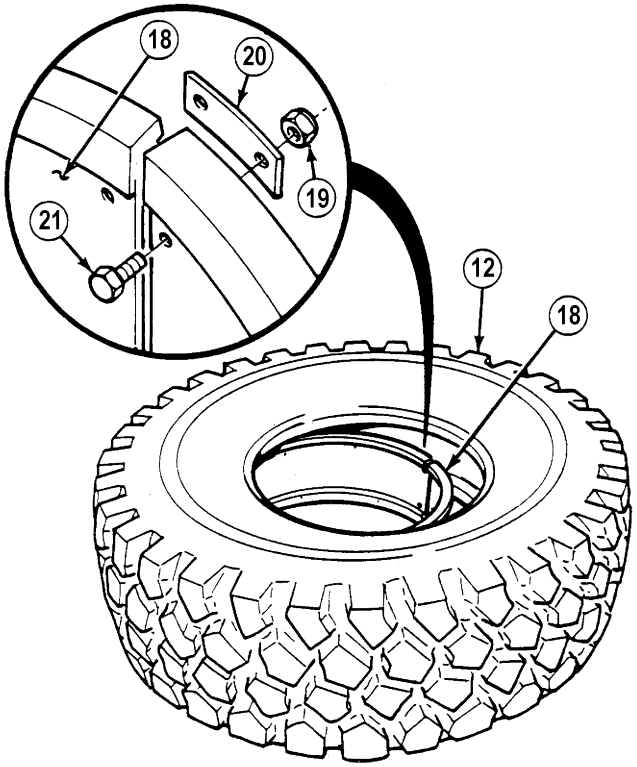

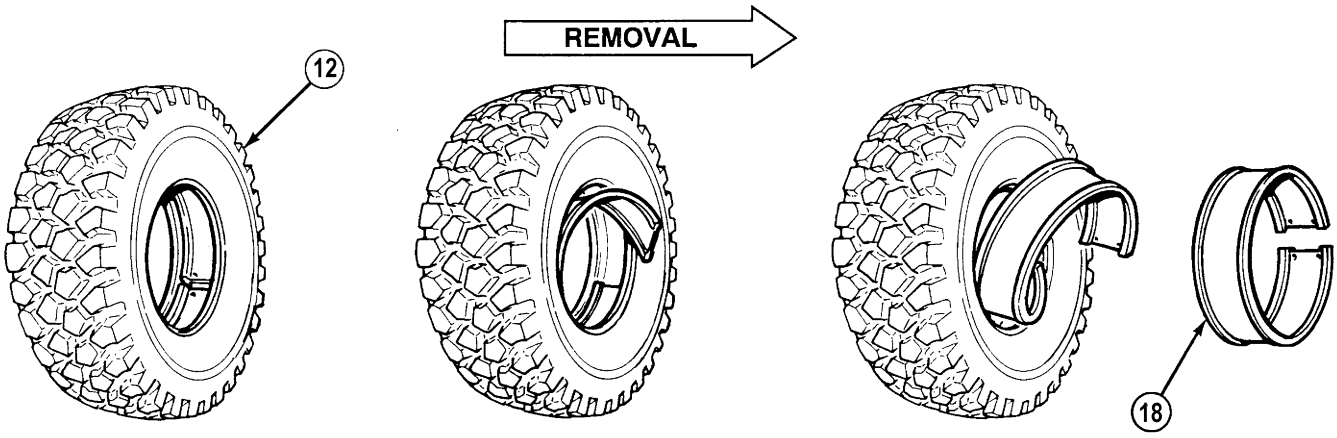

(25) Remove the remaining section of bead lock (18) from tire (12) by “cork screwing” bead lock from tire (12).

b. Cleaning/Inspection.

(1) Inspect tire tread for nails, glass and other injurious particles in tread.

(2) Inspect tire for irregular wear, cuts and blisters appearing on tire.

(3) Inspect bead of tire for damaged rim seal ridges.

(4) Inspect complete inside surface of inner liner for imperfections, discoloration or irregular surface that may indicate excessive heat, breaks or other fabric damage.

(5) Check rims for cracks, dents, dirt and rust.

(6) Remove rust, gummy rubber deposits, nicks and gouges in the rim bead seat surface to provide an airtight seal with the tire bead.

(7) Remove all dirt and foreign material from inside of tire and inspect the inside of tire for damage.

(8) Clean rust and dirt from rim using a steel brush.

(9) Paint wheel asembly parts as needed to protect against rust.

(10) Replace any bent, broken, stripped or damaged studs or bolts.

c. Assembly.

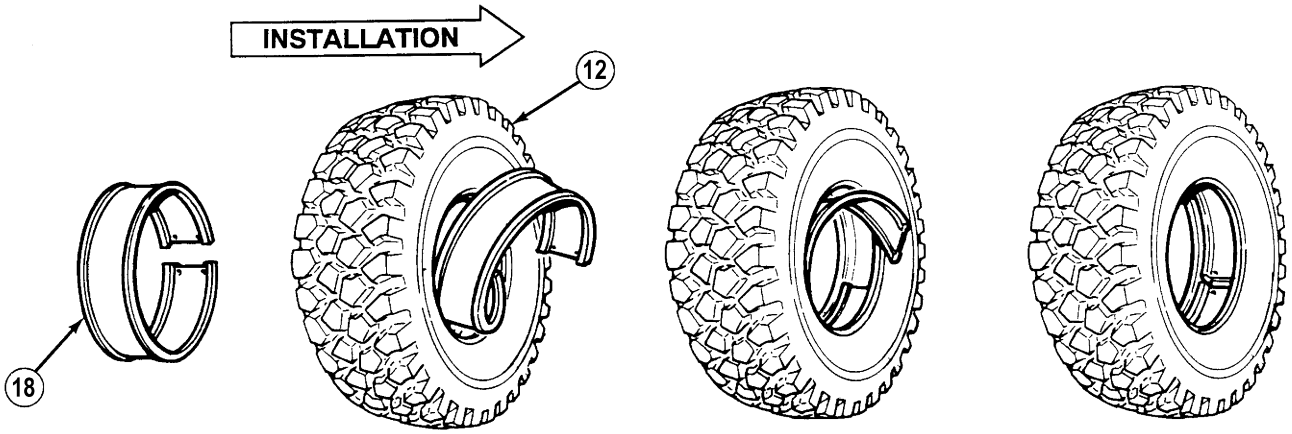

WARNING

- Ensure all personnel keep hands and fingers out from between tire and bead lock. Failure to comply may result in injury to personnel.
- Do not use retread tires on vehicles equipped with a Central Tire Inflation System (CTIS). Use only the tires that are specified in the Repair Parts and Special Tools List (RPSTL). Failure to comply may result in tire failure and loss of vehicle control.

NOTE

- Tire lubricant may be used to ease installation of bead lock in tire.
- Curved plate is installed in same direction as curve in bead lock.

(1) Insert one end of bead lock (18) into tire (12).

(2) Insert remaining section of bead lock (18) by “cork screwing” into tire (12).

13-2. WHEEL/TIRE ASSEMBLY REPAIR (CONT).

(3) Align both ends of bead lock (18) and install two plates (20) on bead lock (18) with four screws (21) and locknuts (19).

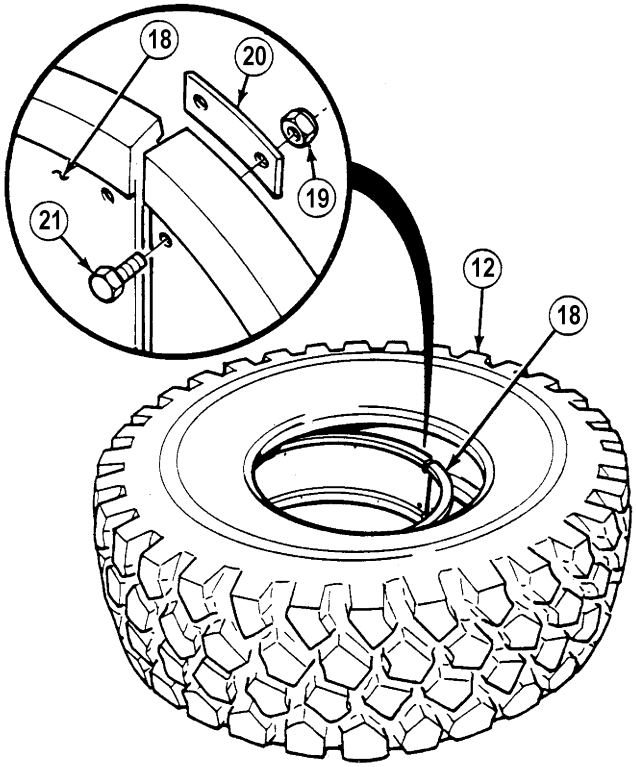

(4) With the aid of an assistant, position bead lock (18) in tire (12) by rolling tire until bead lock has centered properly.

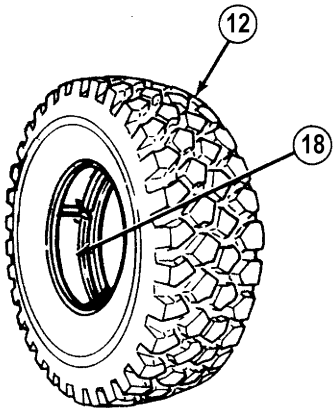

(5) Attach lifting device to tire (12) and lay tire on wooden block.

(6) Remove lifting device from tire (12).

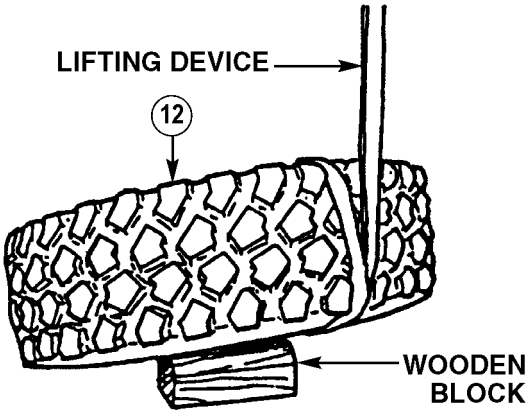

CAUTION

If wheel studs were replaced, they must be torqued after 50 to 75 miles (80 to 120 km) of use. Failure to comply may result in failure of wheel studs.

NOTE

- If damaged studs were removed, perform Step (7).
- Ensure flat edge of stud head is positioned parallel to edge of inner wheel.

(7) Install new stud (17) in inner wheel (13) until base of stud is solid against back side of rim.

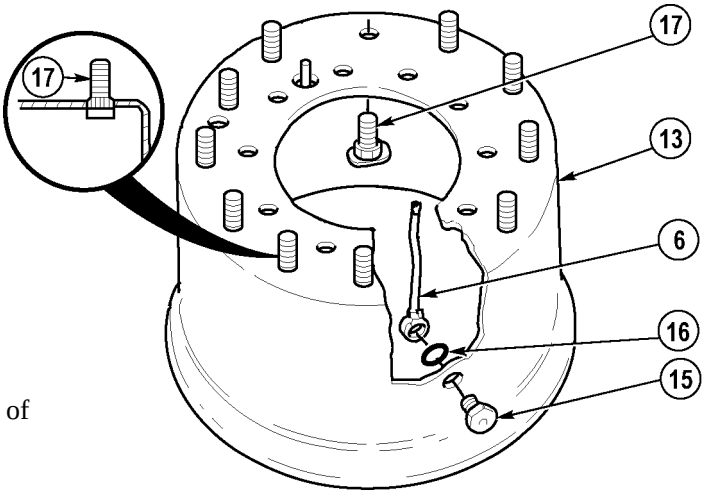

WARNING

Adhesives, solvents, and sealing compounds can burn easily, can give off harmful vapors, and are harmful to skin and clothing. To avoid injury or death, keep away from open fire and use in well-ventilated area. If adhesive, solvent, or sealing compound gets on skin or clothing, wash immediately with soap and water.

(8) Coat threads of two nuts (15) with sealing compound.

(9) Install two grommets (16) and valve stems (6) in inner wheel (13) with two nuts (15).

13-2. WHEEL/TIRE ASSEMBLY REPAIR (CONT).

(10) Apply tire lubricant to preformed packing (14) and install on inner wheel (13).

WARNING

Inner wheel weighs 105 lbs (48 kg). Attach suitable lifting device prior to moving rim to prevent possible injury to personnel.

(11) Attach lifting device to inner wheel (13).

(12) Install inner wheel (13) in tire (12).

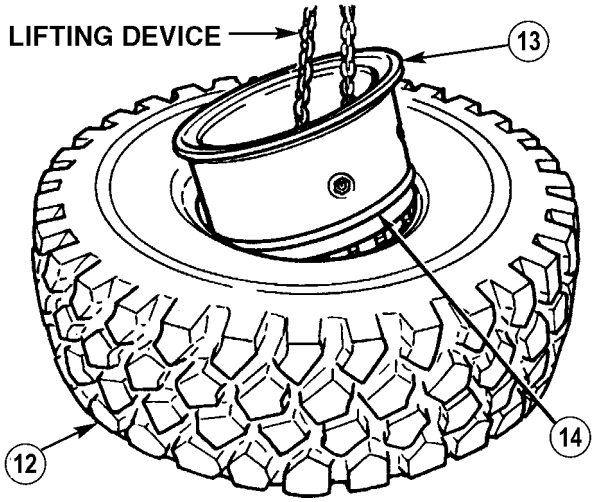

WARNING

Wheel/tire assembly weighs 523 lbs (227 kg). Attach suitable lifting device prior to removal to prevent possible injury to personnel.

(13) Attach lifting device to wheel/tire assembly (1).

(14) Raise and turn wheel/tire assembly (1) over and position inner wheel (13) on wooden block.

(15) Remove lifting device from wheel/tire assembly (1).

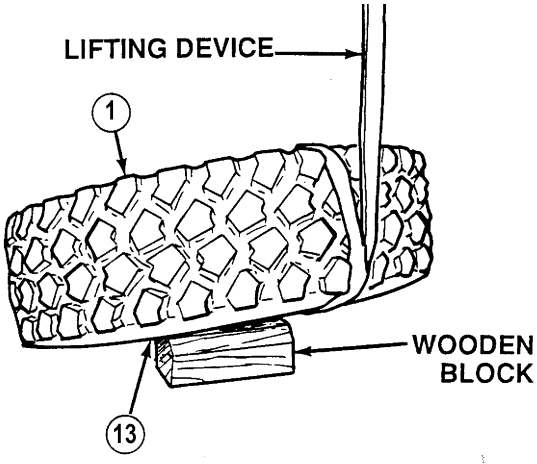

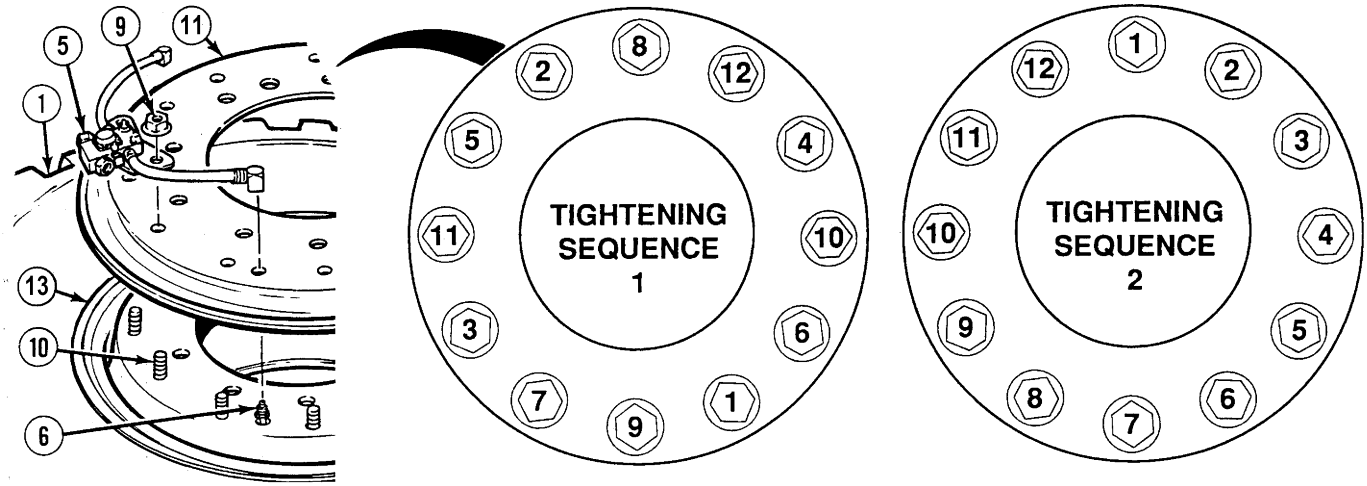

WARNING

Keep hands clear of studs and outer face of wheel to prevent injury to personnel.

CAUTION

Holes in outer wheel must align with holes in inner wheel. Failure to comply may result in damage to valve stems.

(16) Position outer wheel (11) on inner wheel (13) so that valve stems (6) are positioned through outer wheel.

NOTE

Tighten lug nuts 1/4 in. (6.4 mm) maximum at a time in sequence shown until inner wheel and outer wheel meet.

(17) Install outer wheel (11) and CTIS wheel valve assembly (5) on studs (10) with twelve lug nuts (9). Use tightening sequence 1 and tighten to 75 to 100 lb-ft (102 to 136 N·m).

NOTE

Tightening sequence is performed three times.

(18) Tighten 12 lug nuts (9) in sequence 1 to 450 to 500 lb-ft (610 to 678 N·m).

(19) Tighten 12 lug nuts (9) in sequence 2 to 450 to 500 lb-ft (610 to 678 N·m).

(20) Tighten 12 lug nuts (9) in sequence 2 to 450 to 500 lb-ft (610 to 678 N·m).

13-2. WHEEL/TIRE ASSEMBLY REPAIR (CONT).

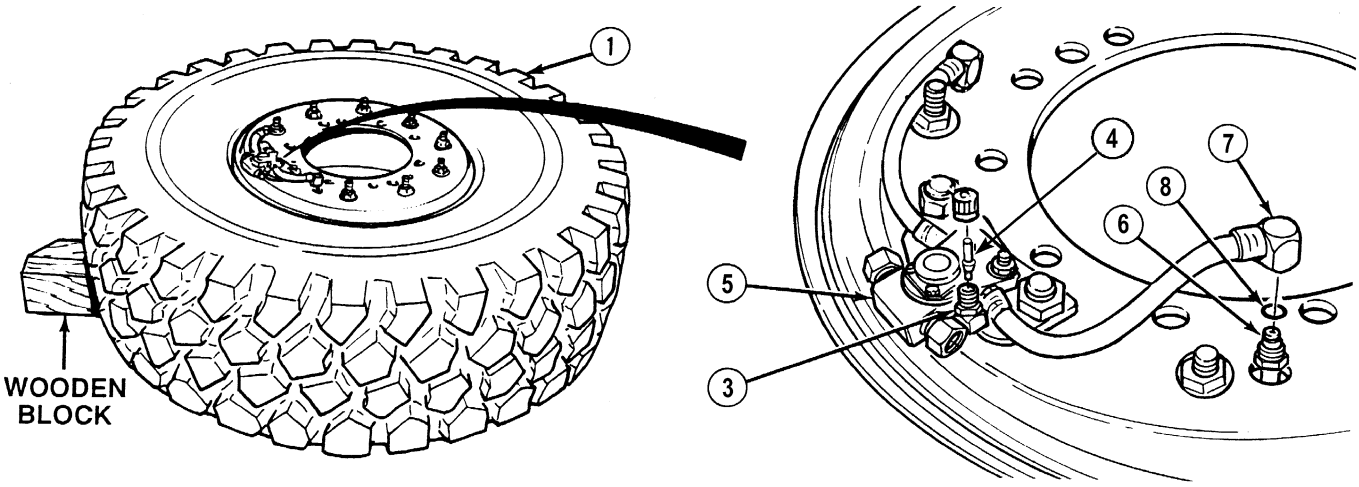

(21) Install two preformed packings (8) and fittings (7) on valve stems (6).

(22) Install valve core (4) in valve stem (3).

WARNING

- Failure to place wheel/tire assembly in safety cage prior to initial inflation could result in serious injury or death to personnel.
- When a wheel/tire is in a restraining device, do not lean any part of body or equipment on or against the restraining device, or injury or death could result.

(23) Using lifting device position wheel/tire assembly (1) in safety cage.

WARNING

- Stay out of the trajectory as indicated by the area shown. Under some circumstances, the trajectory may deviate from its expected path. Injury or death to personnel may result.
- Never inflate the wheel/tire assembly unless all ten outer wheel nuts have been properly torqued or personal injury could result.

NOTE

Refer to TM 9-2610-200-14 for construction of safety cage.

(24) Inflate tire (1) to 75 psi (517 kPa) and check for leaks (TM 9-2320-364-10).

(25) Install valve cap (2) on valve stem (3).

(26) Remove wheel/tire assembly (1) from safety cage.

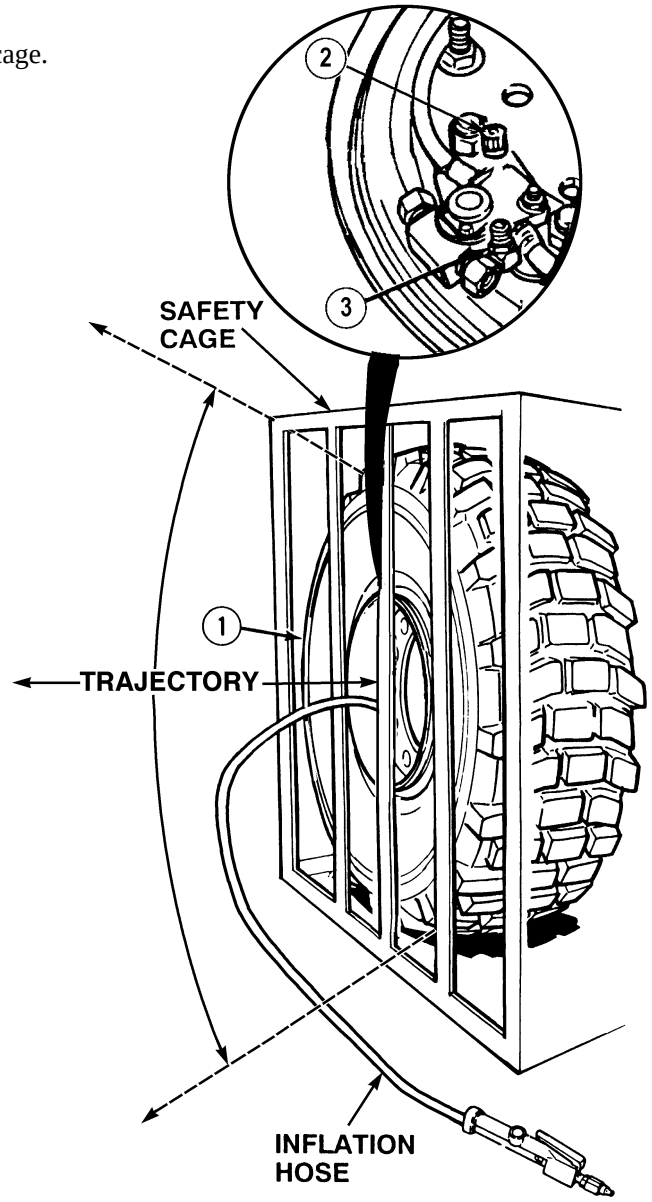

d. Follow-On Maintenance:

- Install tire on truck, (TM 9-2320-364-10).

END OF TASK

13-3. AXLE BRAKE DRUM REPLACEMENT.

This task covers:

a. Removal b. Installation c. Follow-On Maintenance

INITIAL SETUP

Tools and Special Tools
Tool Kit, General Mechanic's: Automotive (Item 74, Appendix G)
Lifting Device, Minimum Capacity 132 lbs (60 kg)

Materials/Parts
Sealing Compound (Item 73, Appendix C)
Tags, Identification (Item 88, Appendix C)

Personnel Required
Two

Equipment Condition
Engine OFF, (TM 9-2320-364-10)
Wheels chocked, (TM 9-2320-364-10)
Wheel/tire assembly removed, (TM 9-2320-364-10)
Brakes caged (Axles No. 3, 4 and 5 only), (TM 9-2320-364-10)

a. Removal.

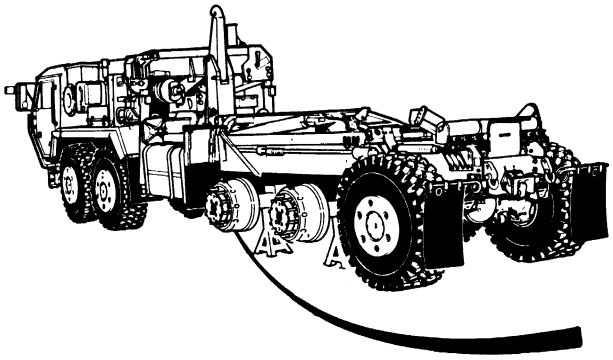

AXLES NO. 3 & 4 WHEELS SHOWN REMOVED. REMOVE WHEELS AS REQUIRED

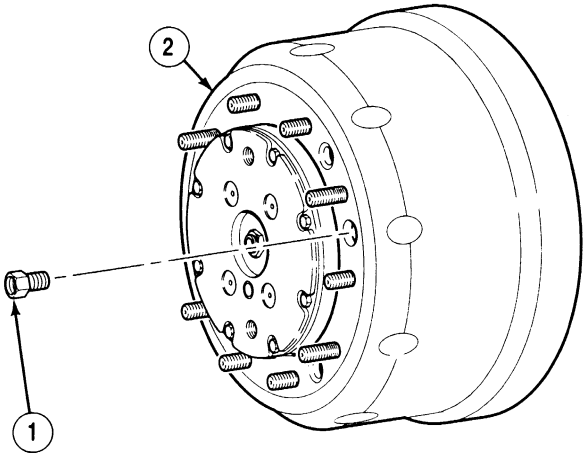

NOTE

Axle No. 3 brake drum is shown. All brake drums are replaced the same.

(1) Remove two fittings (1) from brake drum (2).

WARNING

- Brake drum weighs 132 lbs (60 kg). Attach suitable lifting device to prevent possible injury to personnel.
- Axle's No. 1 and No. 2 brake drums may swing out during removal. Use the aid of an assistant to support lifting device. Failure to comply may result in injury to personnel.
- Keep hands clear of studs and outer face of axles to prevent injury to personnel.

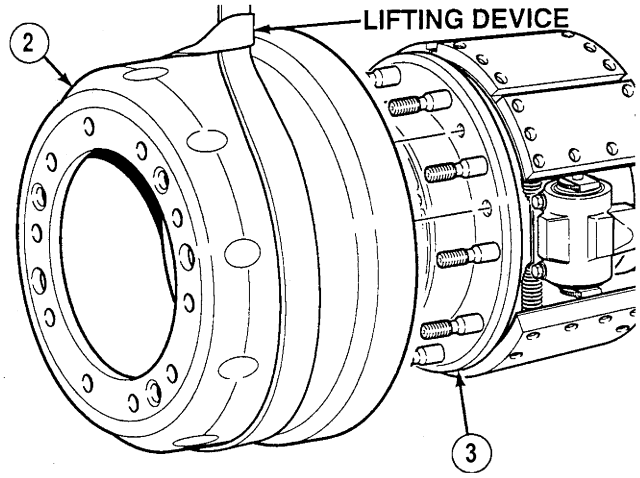

(2) Using lifting device and with the aid of an assistant, remove brake drum (2) from wheel hub assembly (3).

b. Installation.

WARNING

Brake drum weighs 132 lbs (60 kg). Attach suitable lifting device to prevent possible injury to personnel.

NOTE

Ensure that fitting holes line up before installing brake drum.

(1) Using lifting device and the aid of assistant, align and install brake drum (2) on wheel hub assembly (3).

13-3. AXLE BRAKE DRUM REPLACEMENT (CONT).

WARNING

Adhesives, solvents, and sealing compounds can burn easily, can give off harmful vapors, and are harmful to skin and clothing. To avoid injury or death, keep away from open fire and use in well-ventilated area. If adhesive, solvent, or sealing compound gets on skin or clothing, wash immediately with soap and water.

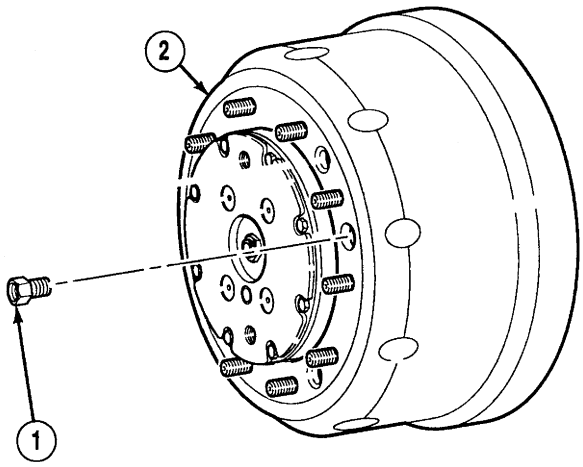

(2) Coat threads of two fittings (1) with sealing compound.

(3) Install two fittings (1) in brake drum (2).

c. Follow-On Maintenance:

- Uncage brakes, (TM 9-2320-364-10).
- If installing new brake drum, adjust brakes, (Para 12-3).
- Install wheel/tire assembly, (TM 9-2320-364-10).
- Remove wheel chocks, (TM 9-2320-364-10).

END OF TASK

13-4. AXLES NO. 1, 2 AND 5 CENTRAL TIRE INFLATION SYSTEM (CTIS) SPINDLE FITTINGS REPLACEMENT.

This task covers:

a. Removal b. Installation c. Follow-On Maintenance

INITIAL SETUP

Tools and Special Tools
Tool Kit, General Mechanic's: Automotive (Item 74, Appendix G)
Cap and Plug Set (Item 8, Appendix G)
Wrench, Combination 1-1/8 in. (Item 79, Appendix G)

Materials/Parts
Cable Ties (Item 26, Appendix C)
Sealing Compound (Item 72, Appendix C)

Materials/Parts - Continued
Tags, Identification (Item 88, Appendix C)
Lockwasher (Item 176, Appendix F)

Equipment Condition
Engine OFF, (TM 9-2320-364-10)
Wheels chocked, (TM 9-2320-364-10)
Air system drained, (TM 9-2320-364-10)
Wheel removed, (TM 9-2320-364-10)

a. Removal.

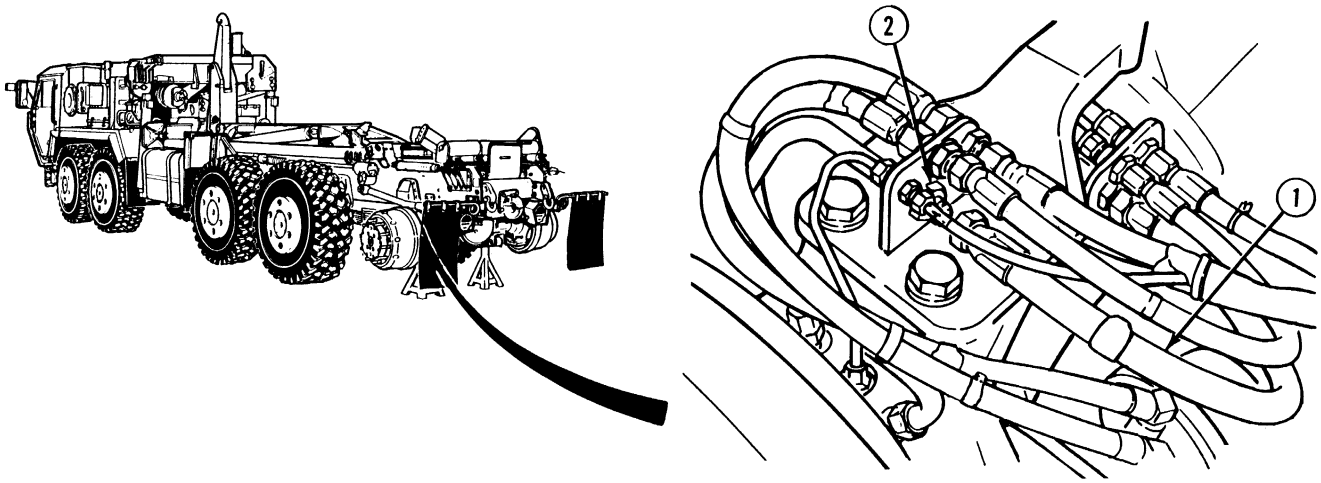

NOTE

- Refer to Table 13-1 for proper air line numbers.
- Procedures for all spindles on Axles No. 1, 2 and 5 are the same. Spindle for Axle No. 5, driver side is shown.
- Cap or plug all hoses, tubes, fittings and adapters as each item is removed.
- Remove cable ties as required.
- Tag and mark air lines prior to removal.

(1) Remove air line 2873 (1) from bulkhead fitting (2).

13-4. AXLES NO. 1, 2 AND 5 CENTRAL TIRE INFLATION SYSTEM (CTIS) SPINDLE FITTINGS REPLACEMENT (CONT).

Table 13-1. CTIS Hoses and Tubes

Axle No.	Left Side Hose No.	Right Side Hose No.
1	2097	2097
2	2103	2099
5	2873	2109

(2) Remove tube (3) from bulkhead fitting (2) and tee (4).

(3) Remove tube (5) from tee (4) and adapters (6).

(4) Remove tee (4) from adapter (7).

(5) Remove adapters (6) and (7) from spindle (8).

(6) Remove bulkhead fitting (2), nut (9) and lockwasher (10) from bracket (11). Discard lockwasher.

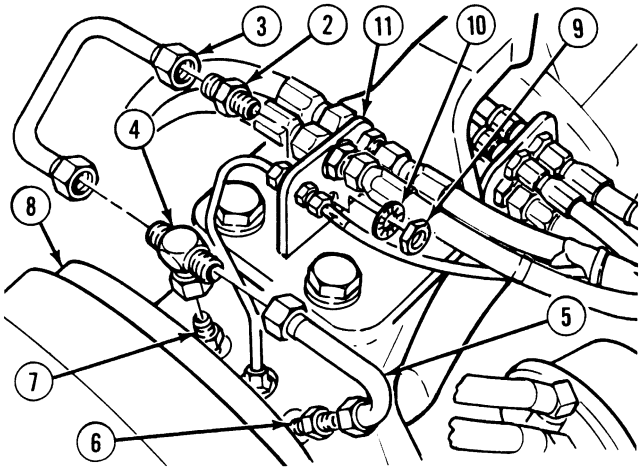

b. Installation.

NOTE

Install cable ties as required.

(1) Install bulkhead fitting (2) in bracket (11) with lockwasher (10) and nut (9). Do not tighten nut.

WARNING

Adhesives, solvents, and sealing compounds can burn easily, can give off harmful vapors, and are harmful to skin and clothing. To avoid injury or death, keep away from open fire and use in a well-ventilated area. If adhesive, solvent, or sealing compound gets on skin or clothing, wash immediately with soap and water.

(2) Coat threads of adapters (6) and (7) with sealing compound.

(3) Install adapters (6) and (7) in spindle (8).

(4) Position tee (4) on adapters (7). Do not tighten.

(5) Position tube (5) on tee (4) and adapter (7). Do not tighten.

(6) Position tube (3) on tee (4) and bulkhead fitting (2). Do not tighten.

(7) Tighten tee (4), tube (5) and tube (3) on adapter (7), adapter (6) and bulkhead fitting (2).

(8) Tighten nut (9) on bulkhead fitting (2).

(9) Install air line 2873 (1) on bulkhead fitting (2).

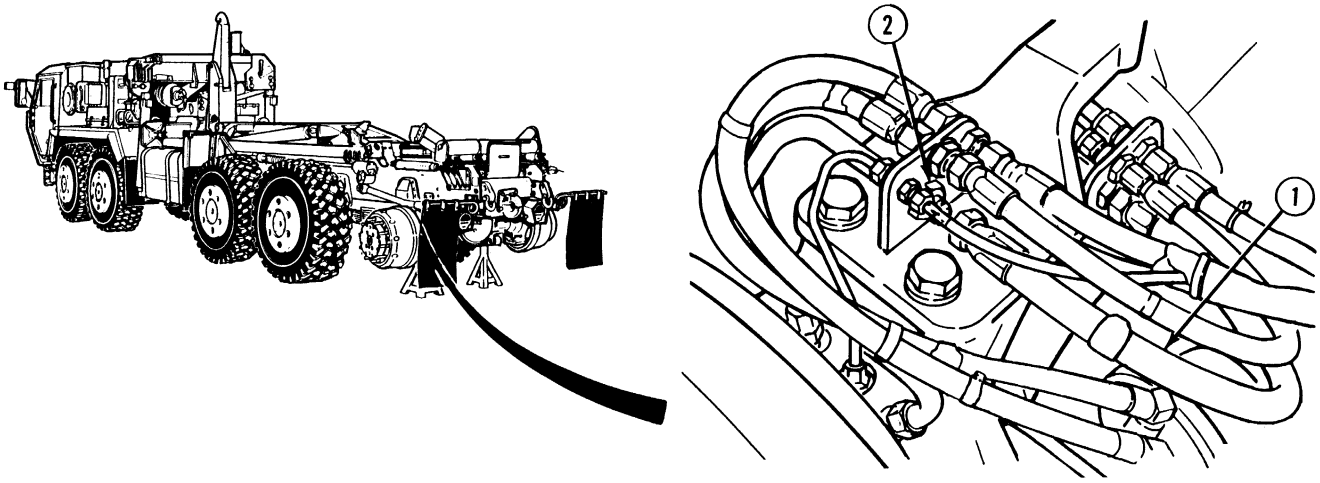

c. Follow-On Maintenance:

- Install wheel, (TM 9-2320-364-10).
- Set CTIS controller to HIGHWAY position, (TM 9-2320-364-10).
- Start engine, (TM 9-2320-364-10).
- Build up air pressure to 125 psi (861 kPa).
- Shut OFF engine, (TM 9-2320-364-10).
- Check for air leaks, (TM 9-2320-364-10).
- Remove wheel chocks, (TM 9-2320-364-10).

END OF TASK

13-5. AXLES NO. 3 AND 4 CENTRAL TIRE INFLATION SYSTEM (CTIS) SPINDLE FITTINGS REPLACEMENT.

This task covers:

a. Removal b. Installation c. Follow-On Maintenance

INITIAL SETUP

Tools and Special Tools
Tool Kit, General Mechanic's: Automotive (Item 74, Appendix G)
Cap and Plug Set (Item 8, Appendix G)

Materials/Parts
Sealing Compound (Item 72, Appendix C)

Equipment Condition
Engine OFF, (TM 9-2320-364-10)
Wheels chocked, (TM 9-2320-364-10)
Air system drained, (TM 9-2320-364-10)

a. Removal.

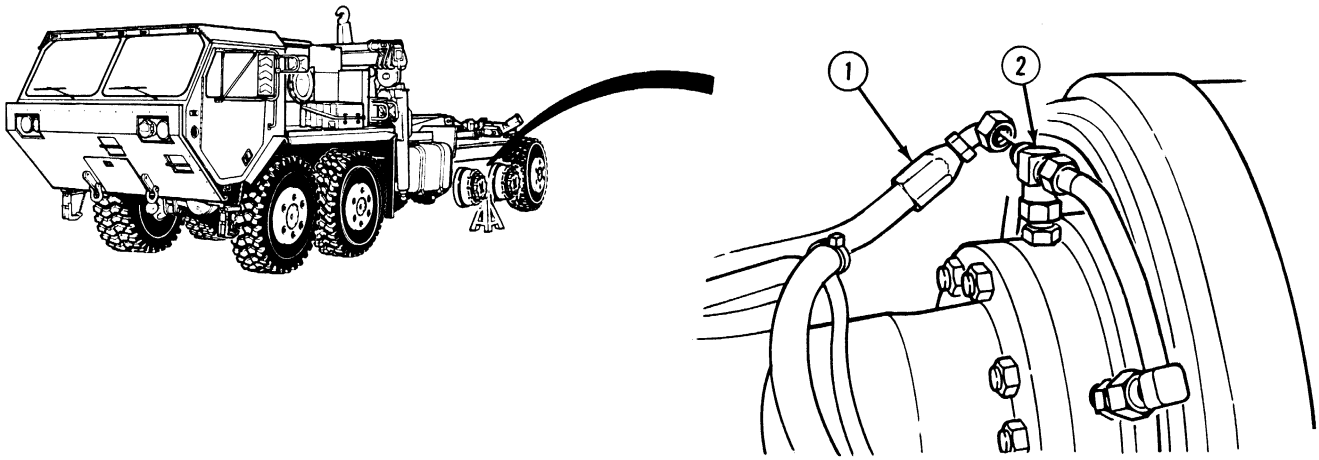

NOTE

- Procedures for all spindles on Axles No. 3 and 4 are the same. Spindle for Axle No. 4, driver side is shown.
- Cap or plug all hoses, tubes, tees and adapters as each item is removed.
- Refer to Table 13-2 for air line number.

(1) Remove air line 2876 (1) from tee (2).

Table 13-2. CTIS Hoses and Tubes

Axle No.	Left Side Hose No.	Right Side Hose No.
3	2869	2105
4	2876	2107

(2) Disconnect and remove tube (3) from tee (2) and adapter (4).

(3) Remove tee (2) from adapter (5).

(4) Remove adapters (4) and (5) from spindle (6).

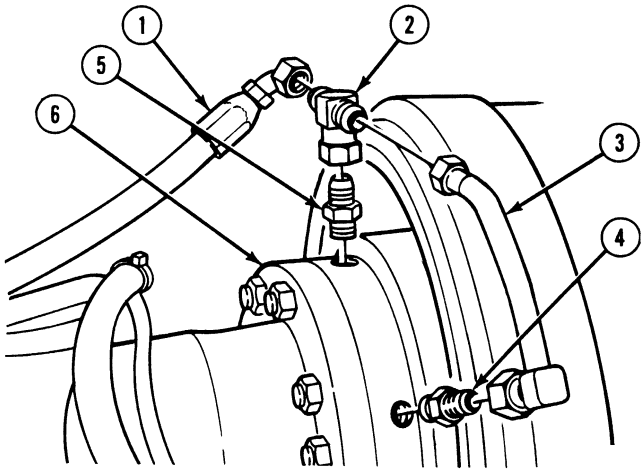

b. Installation.

WARNING

Adhesives, solvents, and sealing compounds can burn easily, can give off harmful vapors, and are harmful to skin and clothing. To avoid injury or death, keep away from open fire and use in a well-ventilated area. If adhesive, solvent, or sealing compound gets on skin or clothing, wash immediately with soap and water.

(1) Coat threads of adapter (4) and (5) with sealing compound.

(2) Install adapters (4) and (5) in spindle (6).

(3) Position tee (2) on adapter (5).

(4) Position tube (3) on tee (2) and adapter (4).

(5) Tighten tee (2) on adapter (5).

(6) Tighten tube (3) on tee (2) and adapter (4).

NOTE

Refer to Table 13-2 for air line number.

(7) Install air line 2876 (1) on tee (2).

13-5. AXLES NO. 3 AND 4 CENTRAL TIRE INFLATION SYSTEM (CTIS) SPINDLE FITTINGS REPLACEMENT (CONT).

c. Follow-On Maintenance:

- Set CTIS controller to HIGHWAY position, (TM 9-2320-364-10).
- Start engine, (TM 9-2320-364-10).
- Build up air pressure to 125 psi (861 kPa).
- Shut OFF engine, (TM 9-2320-364-10).
- Check for leaks, (TM 9-2320-364-10).
- Remove wheel chocks, (TM 9-2320-364-10).

END OF TASK

13-6. CENTRAL TIRE INFLATION SYSTEM (CTIS) AIR LINES REPLACEMENT.

This task covers:

a. Air Line Locations b. Follow-On Maintenance

INITIAL SETUP

Tools and Special Tools
Tool Kit, General Mechanic's: Automotive (Item 74, Appendix G)
Cap and Plug Set (Item 8, Appendix G)

Equipment Condition
Engine OFF, (TM 9-2320-364-10)
Wheels chocked, (TM 9-2320-364-10)
Air system drained, (TM 9-2320-364-10)

Materials/Parts
Cable Ties (Item 25, Appendix C)
Tags, Identification (Item 88, Appendix C)

a. Air Line Locations.

NOTE

- Tag and mark each end of air line before removal.
- Remove and repair air lines as described in Para 12-36.
- Remove and install cushion clamps and cable ties as required.
- Cap and plug air lines, fittings and adapters as each item is removed.

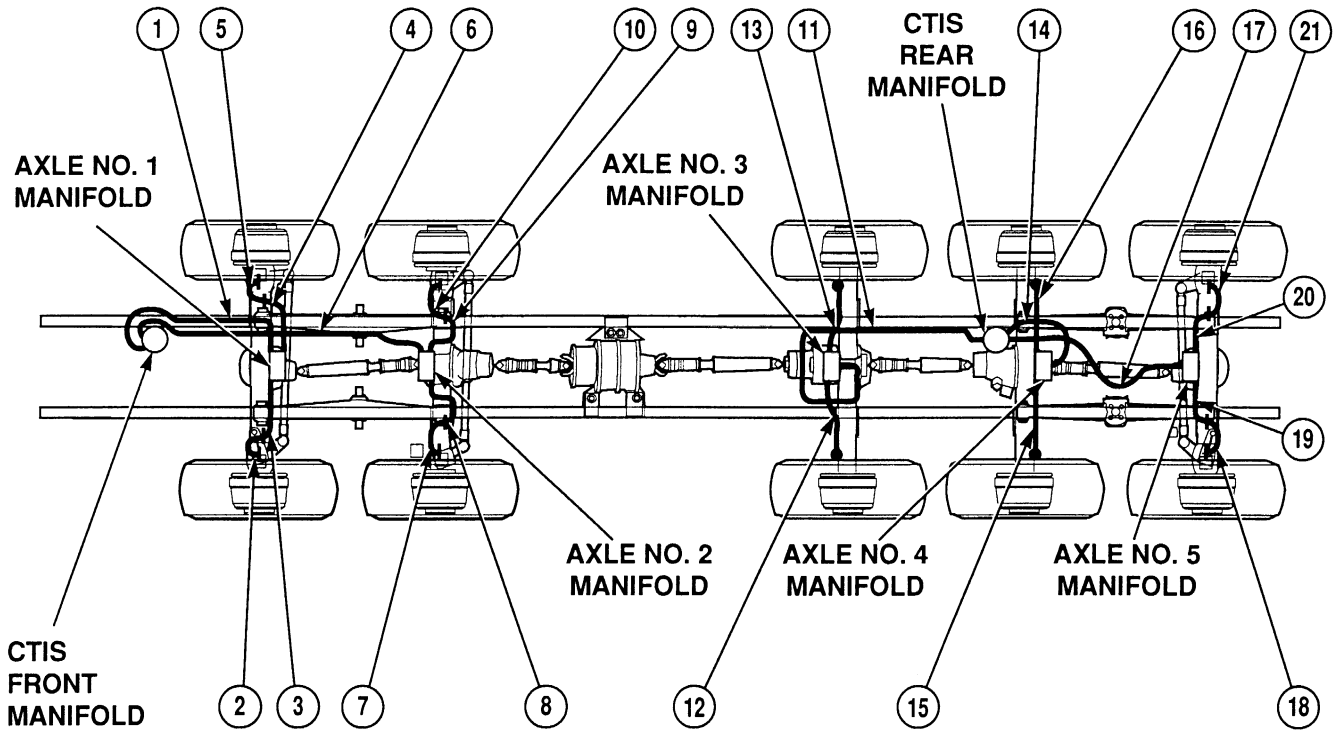

13-6. CENTRAL TIRE INFLATION SYSTEM (CTIS) AIR LINES REPLACEMENT (CONT).

Table 13-3. Central Tire Inflation System - Air Line Locations

Item No.	Air Line No.	From	To
1	2096	CTIS front manifold	Axle No. 1 manifold
2	2893	Axle No. 1, driver side, steering arm bracket	Axle No. 1, driver side, axle housing bracket
3	2101	Axle No. 1, driver side, axle housing bracket	Axle No. 1 manifold
4	2097	Axle No. 1, passenger side, axle housing bracket	Axle No. 1 manifold
5	2893	Axle No. 1, passenger side, steering arm bracket	Axle No. 1, passenger side, axle housing bracket
6	2098	CTIS front manifold	Axle No. 2 manifold
7	2893	Axle No. 2, driver side, steering arm bracket	Axle No. 2, driver side, axle housing bracket
8	2103	Axle No. 2, driver side, axle housing bracket	Axle No. 2 manifold
9	2099	Axle No. 2, passenger side, axle housing bracket	Axle No. 2 manifold
10	2893	Axle No. 2, passenger side, steering arm bracket	Axle No. 2, passenger side, axle housing bracket
11	2104	CTIS rear manifold	Axle No. 3 manifold
12	2869	Axle No. 3, driver side	Axle No. 3 manifold
13	2105	Axle No. 3, passenger side	Axle No. 3 manifold
14	2106	CTIS rear manifold	Axle No. 4 manifold
15	2871	Axle No. 4, driver side	Axle No. 4 manifold
16	2107	Axle No. 4, passenger side	Axle No. 4 manifold
17	2872	CTIS rear manifold	Axle No. 5 manifold
18	2893	Axle No. 5, driver side, steering arm bracket	Axle No. 5, driver side, axle housing bracket
19	2873	Axle No. 5, driver side, axle housing bracket	Axle No. 5 manifold
20	2109	Axle No. 5, passenger side, axle housing bracket	Axle No. 5 manifold
21	2893	Axle No. 5, passenger side, steering arm bracket	Axle No. 5, passenger side, axle housing bracket

b. Follow-On Maintenance:

- Remove wheel chocks, (TM 9-2320-364-10).

END OF TASK

13-7. CENTRAL TIRE INFLATION SYSTEM (CTIS) CONTROLLER REPLACEMENT.

This task covers:

a. Removal b. Installation c. Follow-On Maintenance

INITIAL SETUP

Tools and Special Tools
Tool Kit, General Mechanic's: Automotive (Item 74, Appendix G)

Materials/Parts
Tags, Identification (Item 88, Appendix C)
Locknut (Item 106, Appendix F)
Washer, Star (2) (Item 354, Appendix F)

Equipment Condition
Engine OFF, (TM 9-2320-364-10)
Wheels chocked, (TM 9-2320-364-10)
Batteries disconnected, (Para 7-87)

a. Removal.

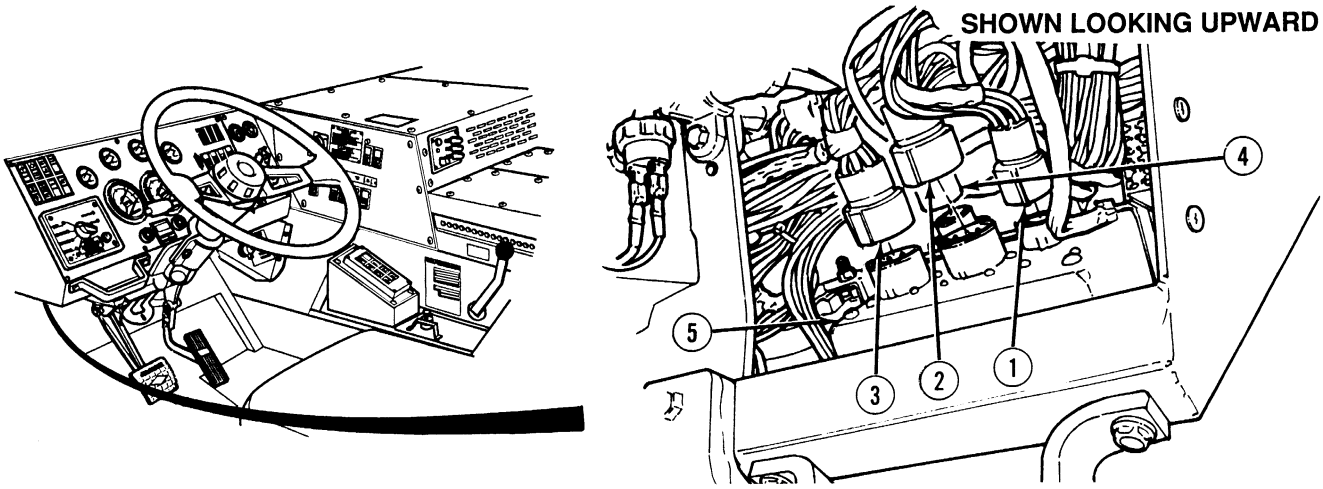

NOTE

- Tag and mark all wire connectors prior to removal.
- If replacing knob only, go to Step (5).

(1) Remove connectors MC35 (1), MC111 (2), MC110 (3), MC105 (4) from rear of CTIS controller (5).

13-7. CENTRAL TIRE INFLATION SYSTEM (CTIS) CONTROLLER REPLACEMENT (CONT).

(2) Remove locknut (6) and three ground straps (8) from CTIS mounting stud (9). Discard locknut.

(3) Remove two nuts (10) and star washers (11) from CTIS controller mounting studs (9). Discard star washers.

(4) Remove CTIS controller (5) from dash panel (12) and CTIS controller mounting bracket (13).

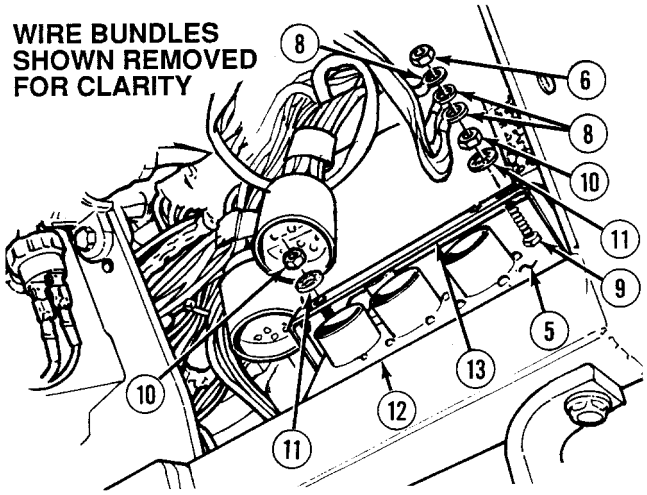

(5) Remove two screws (14) and knob (15) from CTIS controller (5).

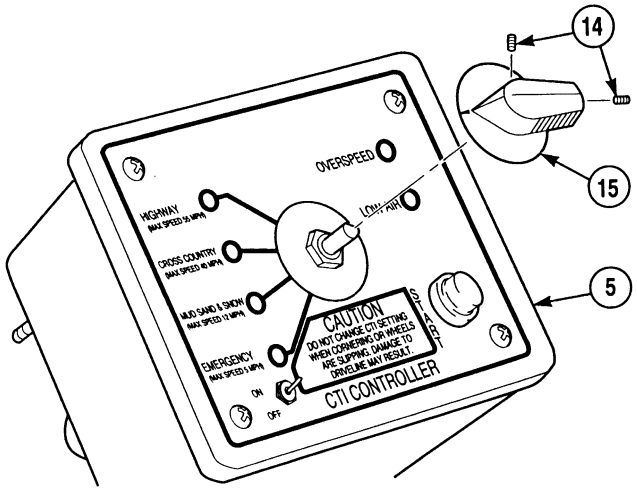

b. Installation.

NOTE

Perform Step (1) if knob was removed.

(1) Install knob (15) on CTIS controller (5) with two screws (14).

(2) Install CTIS controller (5) in dash panel (12) and CTIS controller mounting bracket (13).

(3) Install two star washers (11) and nuts (10) on CTIS controller mounting studs (9).

(4) Install three ground wires (8) and locknut (6) on CTIS mounting stud (9).

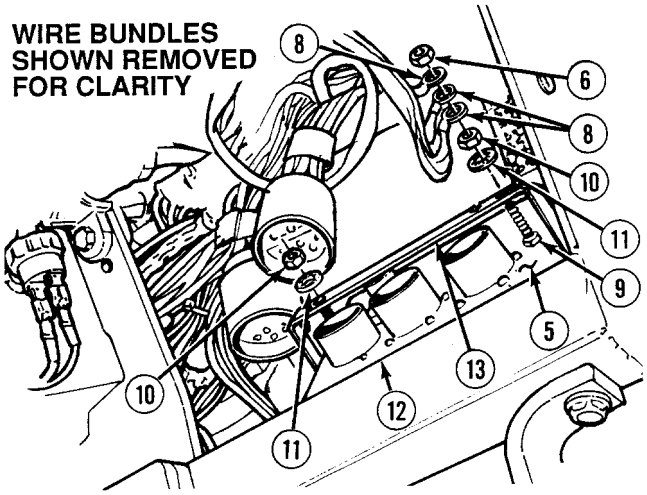

(5) Install connectors MC105 (4), MC35 (1), MC111 (2) and MC110 (3) on rear of CTIS controller (5).

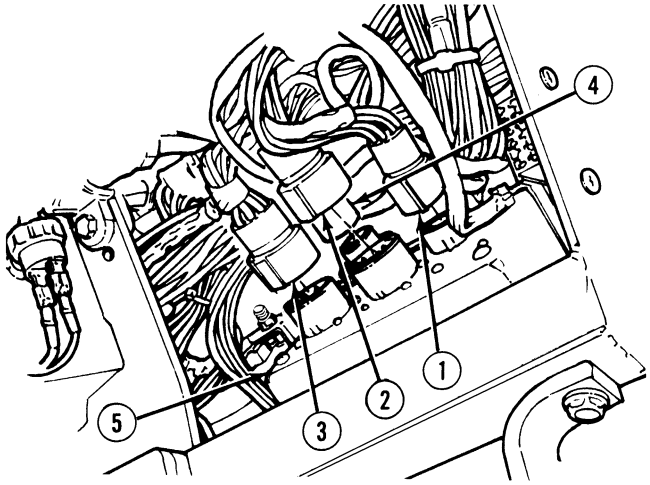

c. Follow-On Maintenance:

- Connect batteries, (Para 7-87).
- Check CTIS controller operation, (TM 9-2320-364-10).
- Remove wheel chocks, (TM 9-2320-364-10).

END OF TASK

13-8. CENTRAL TIRE INFLATION SYSTEM (CTIS) FRONT MANIFOLD REPLACEMENT.

This task covers:

a. Removal b. Installation c. Follow-On Maintenance

INITIAL SETUP

Tools and Special Tools
Tool Kit, General Mechanic's: Automotive (Item 74, Appendix G)
Cap and Plug Set (Item 8, Appendix G)
Socket Set, 3/8 in. (Item 62, Appendix G)
Wrench, Combination, 2 in. (Item 88, Appendix G)
Wrench, Torque (0 to 60 N·m) (Item 98, Appendix G)

Materials/Parts
Cable Ties (Item 26, Appendix C)
Sealing Compound (Item 72, Appendix C)
Tags, Identification (Item 88, Appendix C)

Materials/Parts - Continued
Lockwasher (4) (Item 195, Appendix F)
Lockwasher (Item 189, Appendix F)
Locknut (4) (Item 106, Appendix F)
Locknut (4) (Item 140, Appendix F)

Equipment Condition
Engine OFF, (TM 9-2320-364-10)
Wheels chocked, (TM 9-2320-364-10)
Batteries disconnected, (Para 7-87)
Air system drained, (TM 9-2320-364-10)
Front access cover open, (TM 9-2320-364-10)
Electronic Control Box (ECB) right side panel removed, (Para 17-21)

a. Removal.

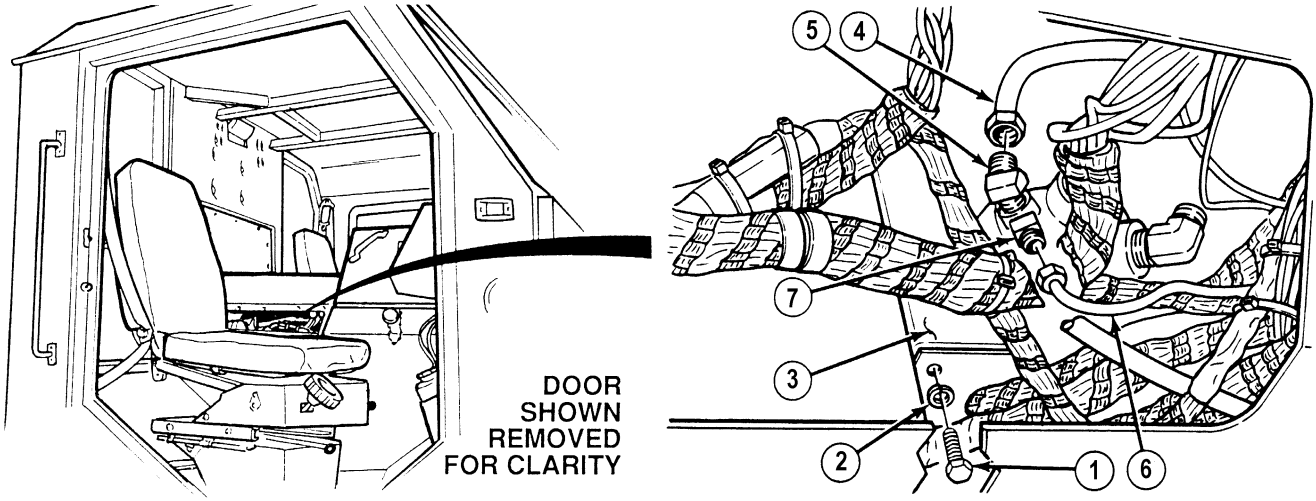

NOTE

- Remove cable ties as required.
- Cap and plug all hoses, fittings and adapters as each item is removed.
- Note location and position of fittings, elbows and tube prior to removal.
- Tag and mark all hoses, connectors and wires prior to removal.

(1) Remove screw (1) and lockwasher (2) from CTIS front manifold (3). Discard lockwasher.

(2) Remove air line 2074 (4) from fitting (5).

(3) Remove air line 2993 (6) from fitting (7).

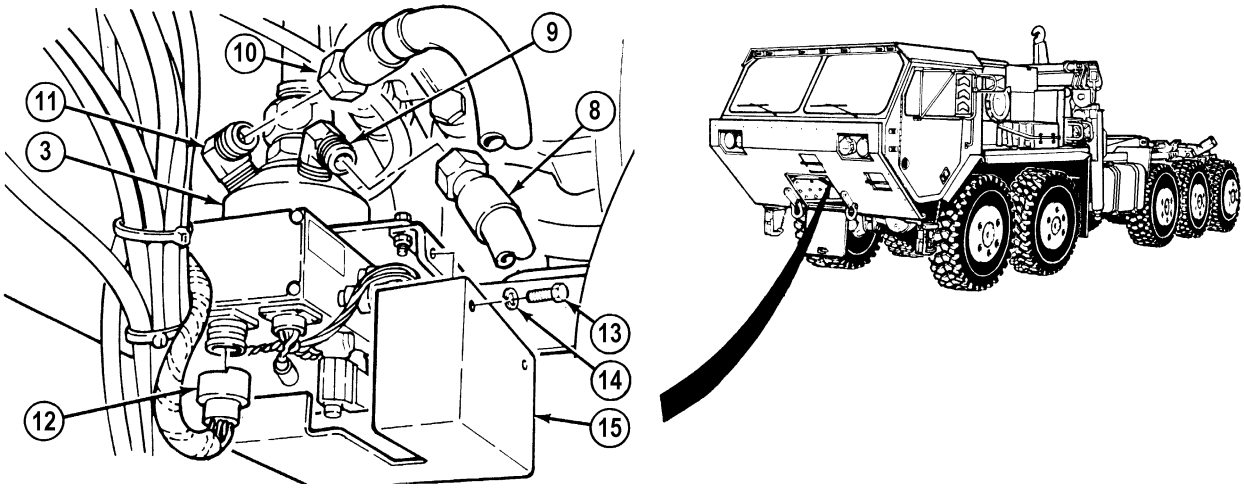

(4) Remove hose 2096 (8) from elbow (9).

(5) Remove hose 2098 (10) from elbow (11).

(6) Remove MC109 connector (12) from front CTIS manifold (3).

(7) Remove three screws (13), lockwashers (14) and CTIS front manifold valve cover (15) from CTIS front manifold (3). Discard lockwashers.

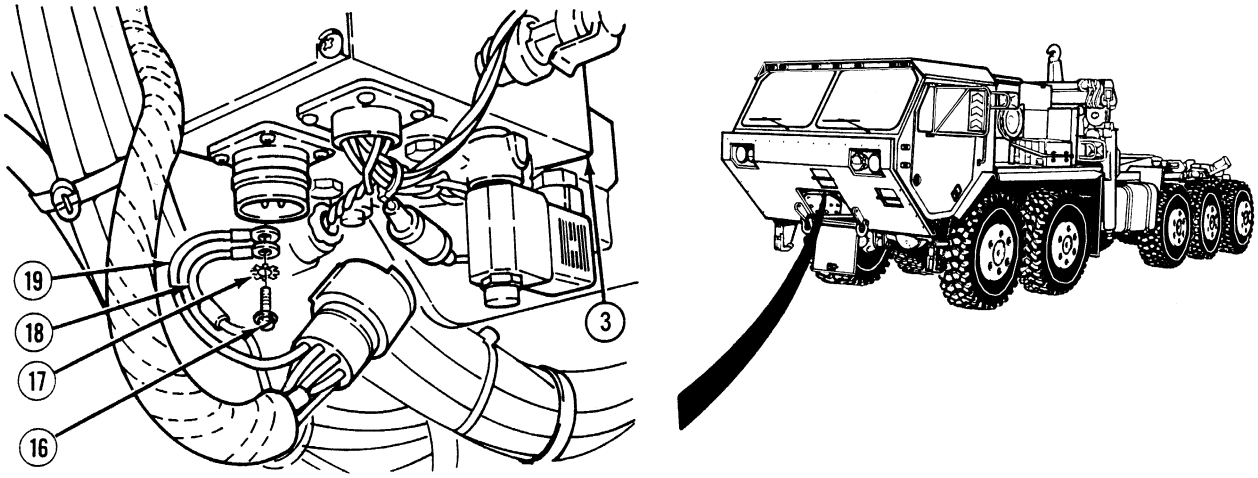

(8) Remove screw (16), lockwasher (17), wire 1063 (18) and wire 1063 (19) from CTIS front manifold (3). Discard lockwasher.

13-8. CENTRAL TIRE INFLATION SYSTEM (CTIS) FRONT MANIFOLD REPLACEMENT (CONT).

(9) Cut two cable ties (20) and remove vent hose (21) from exhaust tube (22).

CAUTION

Support CTIS front manifold during removal. Failure to comply may result in damage to equipment.

(10) Remove four locknuts (23), screws (24) and CTIS front manifold bracket (25) from crossmember (26). Discard locknuts.

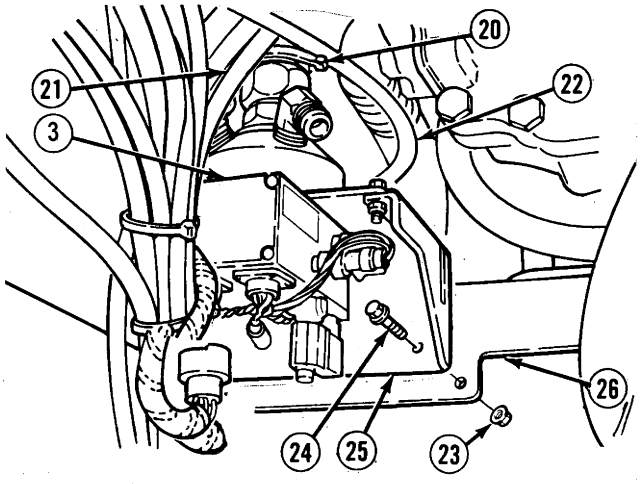

(11) Remove four locknuts (27), screws (28) and CTIS manifold mount bracket (25) from CTIS manifold (3). Discard locknuts.

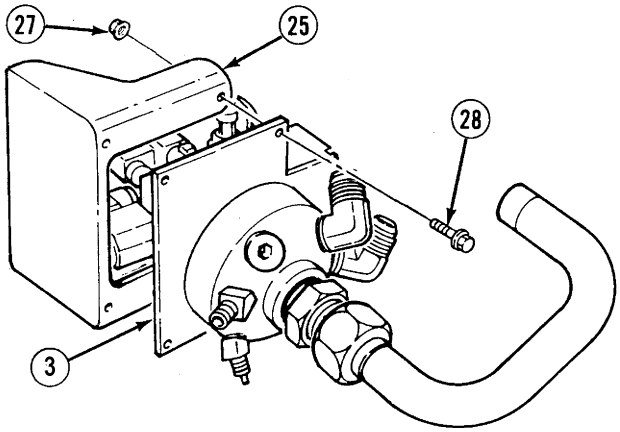

(12) Remove exhaust tube (29) from fitting (30).

(13) Remove fitting (30) from CTIS front manifold (3).

(14) Remove elbow (31), elbow (32), elbows (33) and (34) and plugs (35) and (36) from CTIS front manifold (3).

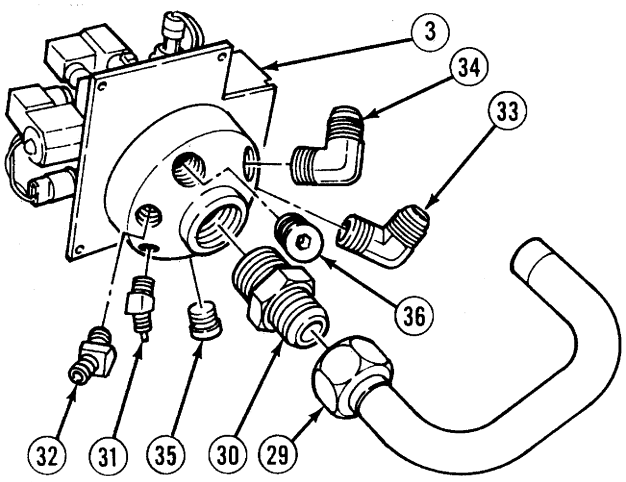

b. Installation.

WARNING

Adhesives, solvents, and sealing compounds can burn easily, can give off harmful vapors, and are harmful to skin and clothing. To avoid injury or death, keep away from open fire and use in well-ventilated area. If adhesive, solvent, or sealing compound gets on skin or clothing, wash immediately with soap and water.

NOTE

- Ensure fittings and elbows are installed as noted prior to removal.
- Install cable ties as required.

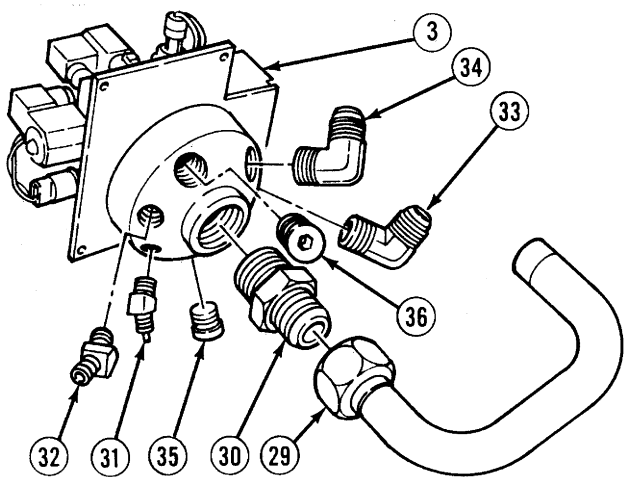

(1) Apply sealing compound on threads of plugs (35) and (36).

(2) Install plugs (35) and (36) on CTIS front manifold (3).

(3) Apply sealing compound on threads of elbows (33) and (34).

(4) Install elbows (33) and (34) on CTIS front manifold (3).

(5) Apply sealing compound on threads of elbow (32).

(6) Install elbow (32) on CTIS manifold (3).

(7) Apply sealing compound on threads of elbow (31).

(8) Install elbow (31) on CTIS manifold (3).

(9) Apply sealing compound on threads of fitting (30).

(10) Install fitting (30) on CTIS front manifold (3).

(11) Install exhaust tube (29) on fitting (30).

13-8. CENTRAL TIRE INFLATION SYSTEM (CTIS) FRONT MANIFOLD REPLACEMENT (CONT).

(12) Install CTIS manifold (3) on CTIS manifold bracket (25) with four screws (28) and locknuts (27).

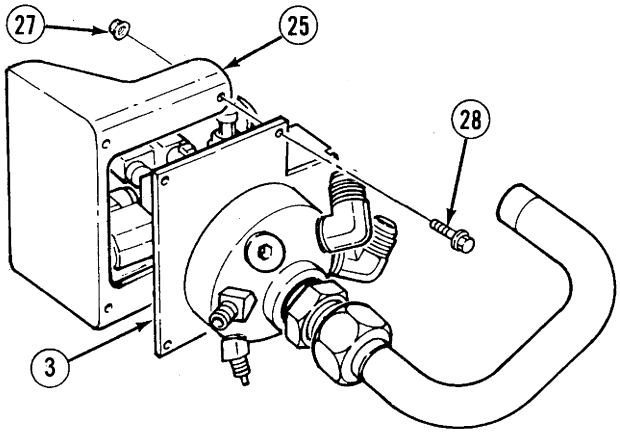

(13) Install CTIS front manifold bracket (25) and locknuts (23) on crossmember (26) with four screws (24).

(14) Install vent hose (21) on exhaust tube (22) with two cable ties (20).

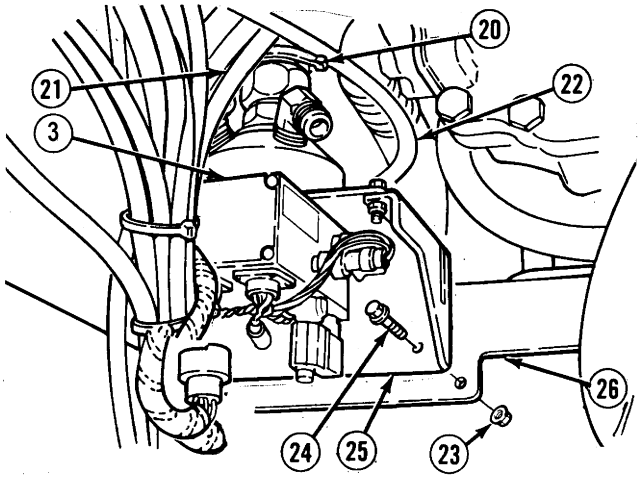

(15) Install wire 1063 (18) and wire 1063 (19) on CTIS front manifold (3) with lockwasher (17) and screw (16).

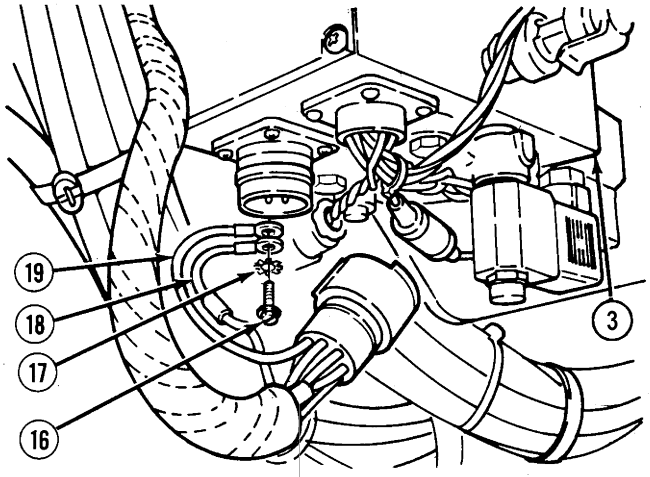

(16) Connect connector (12) to CTIS front manifold (3).

(17) Install CTIS front manifold valve cover (15) on CTIS front manifold (3) with three lockwashers (14) and screws (13). Tighten screws to 75 lb-in (8 N·m).

(18) Install hose 2098 (10) on elbow (11).

(19) Install hose 2096 (8) on elbow (9).

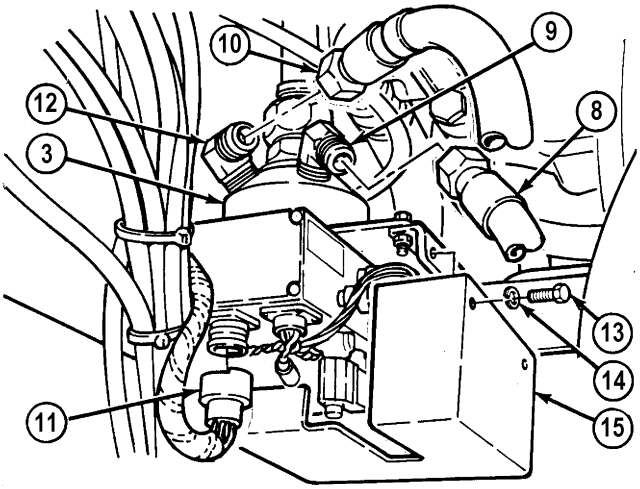

(20) Install air line 2993 (6) on fitting (7).

(21) Install air line 2074 (4) on fitting (5).

(22) Install screw (1) and lockwasher (2) in CTIS front manifold (3). Tighten screw to 75 lb-in (8 N·m).

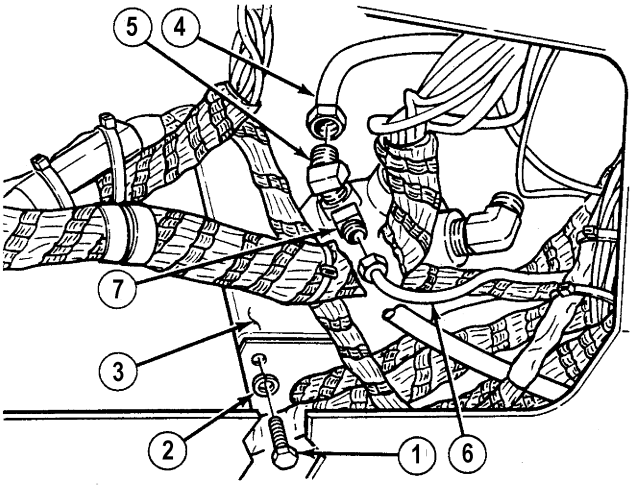

c. Follow-On Maintenance:

- Connect batteries, (Para 7-87).
- Start engine, (TM 9-2320-364-10).
- Build up air pressure to 125 psi (861 kPa).
- Shut OFF engine, (TM 9-2320-364-10).
- Operate CTIS and check for air leaks, (TM 9-2320-364-10).
- Close front access cover, (TM 9-2320-364-10).
- Install Electronic Control Box (ECB) right side panel, (Para 17-21).
- Remove wheel chocks, (TM 9-2320-364-10).

END OF TASK

13-9. CENTRAL TIRE INFLATION SYSTEM (CTIS) REAR MANIFOLD REPLACEMENT.

This task covers:

a. Removal b. Installation c. Follow-On Maintenance

INITIAL SETUP

Tools and Special Tools
Tool Kit, General Mechanic's: Automotive (Item 74, Appendix G)
Cap and Plug Set (Item 8, Appendix G)
Wrench, Combination, 2 in. (Item 88, Appendix G)
Wrench, Torque (0 to 175 lb-ft [0 to 237 N·m]) (Item 95, Appendix G)

Materials/Parts
Cable Ties (Item 26, Appendix C)
Sealing Compound (Item 72, Appendix C)
Tags, Identification (Item 88, Appendix C)

Materials/Parts - Continued
Locknut (4) (Item 106, Appendix F)
Locknut (4) (Item 140, Appendix F)
Lockwasher (Item 189, Appendix F)
Lockwasher (4) (Item 195, Appendix F)

Equipment Condition
Engine OFF, (TM 9-2320-364-10)
Wheels chocked, (TM 9-2320-364-10)
LHS fully extended, (TM 9-2320-364-10)
Air system drained, (TM 9-2320-364-10)
Batteries disconnected, (Para 7-87)

a. Removal.

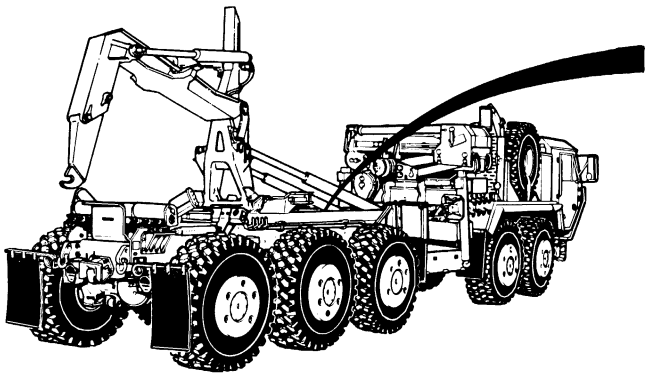

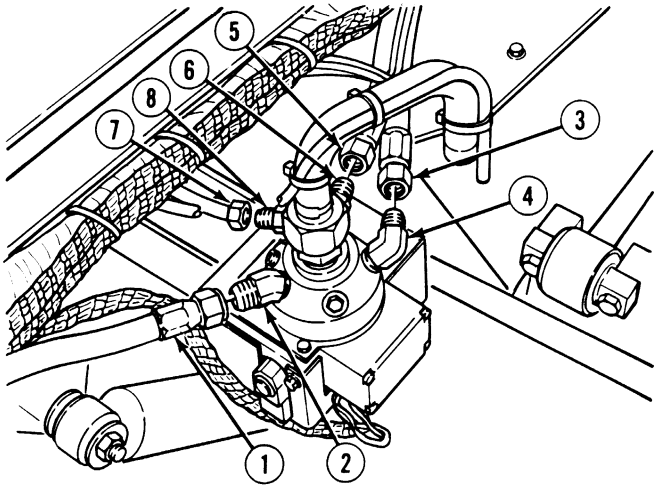

NOTE

- Cap and plug all air lines, elbows and adapters prior to removal.
- Note location and position of elbows, fittings and tubes prior to removal.
- Tag and mark all hoses, connectors and wires prior to removal.

(1) Remove air line 2104 (1) from elbow (2).

(2) Remove air line 2872 (3) from elbow (4).

(3) Remove air line 2106 (5) from elbow (6).

(4) Remove air line 2994 (7) from elbow (8).

(5) Cut three cable ties (9) and remove air line 2074 (10) from exhaust tube (11).

(6) Remove three screws (12) and lockwashers (13) from rear CTIS manifold cover (14). Discard lockwashers.

(7) Remove screw (15), lockwasher (16), washer (17), cushion clip (18) and rear CTIS manifold cover (14) from CTIS rear manifold (19). Discard lockwasher.

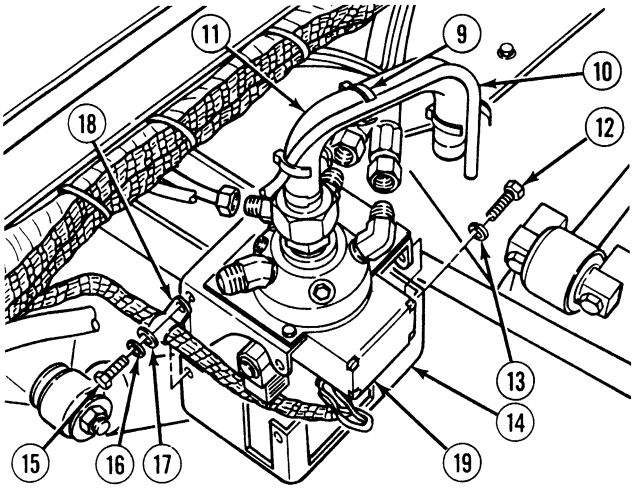

(8) Disconnect MC64 connector (20) from CTIS rear manifold (19).

(9) Remove screw (21), lockwasher (22) and two wires 1067 (23) from CTIS rear manifold (19). Discard lockwasher.

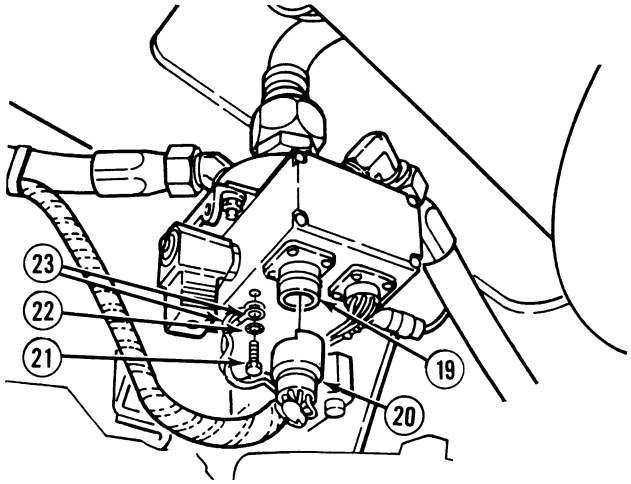

CAUTION

Support CTIS rear manifold during removal. Failure to comply may result in damage to equipment.

(10) Remove four locknuts (24), screws (25) and CTIS rear manifold (19) from mounting bracket (26). Discard locknuts.

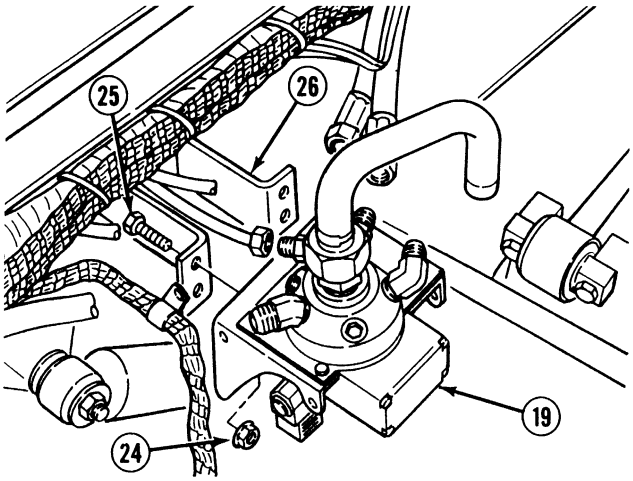

13-9. CENTRAL TIRE INFLATION SYSTEM (CTIS) REAR MANIFOLD REPLACEMENT (CONT).

(11) Remove four locknuts (27), screws (28) and CTIS manifold bracket (29) from CTIS rear manifold (19). Discard locknuts.

(12) Remove exhaust tube (30) and fitting (31) from CTIS rear manifold (19).

(13) Remove elbow (33), elbow (34), elbows (32) and (35) and plugs (36) and (37) from CTIS rear manifold (19).

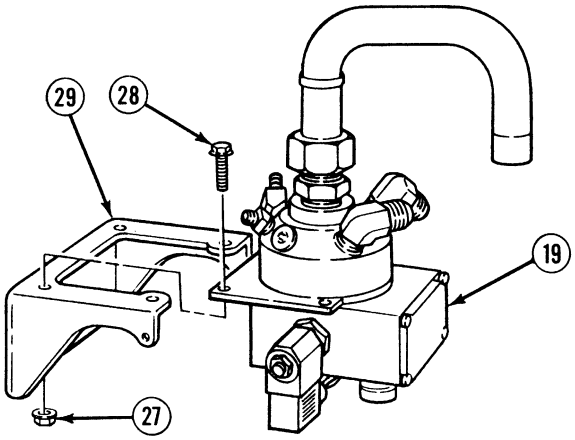

b. Installation.

WARNING

Adhesives, solvents, and sealing compounds can burn easily, can give off harmful vapors, and are harmful to skin and clothing. To avoid injury or death, keep away from open fire and use in well-ventilated area. If adhesive, solvent, or sealing compound gets on skin or clothing, wash immediately with soap and water.

NOTE

Ensure elbows, fittings and tubes are installed as noted prior to removal.

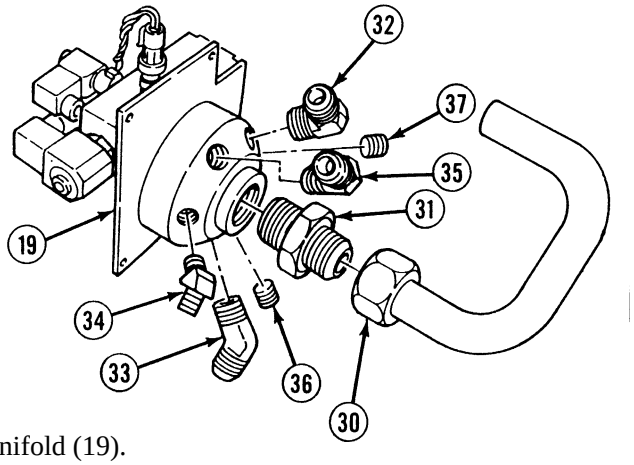

(1) Apply sealing compound on threads of plugs (36) and (37).

(2) Install plugs (36) and (37) in CTIS rear manifold (19).

(3) Apply sealing compound on threads of elbows (32) and (35).

(4) Install elbows (32) and (35) in rear CTIS manifold (19).

(5) Apply sealing compound on threads of elbow (34).

(6) Install elbow (34) in CTIS rear manifold (19).

(7) Apply sealing compound on threads of elbow (33).

(8) Install elbow (33) in CTIS rear manifold (19).

(9) Apply sealing compound on threads of fitting (31).

(10) Install fitting (31) in CTIS rear manifold (19).

(11) Install exhaust tube (30) on fitting (31).

(12) Install rear CTIS manifold (19) on CTIS manifold bracket (29) with four screws (28) and locknuts (27).

(13) Install CTIS rear manifold (19) on mounting bracket (26) with four screws (25) and locknuts (24). Tighten locknuts to 35 lb-ft (47 N·m).

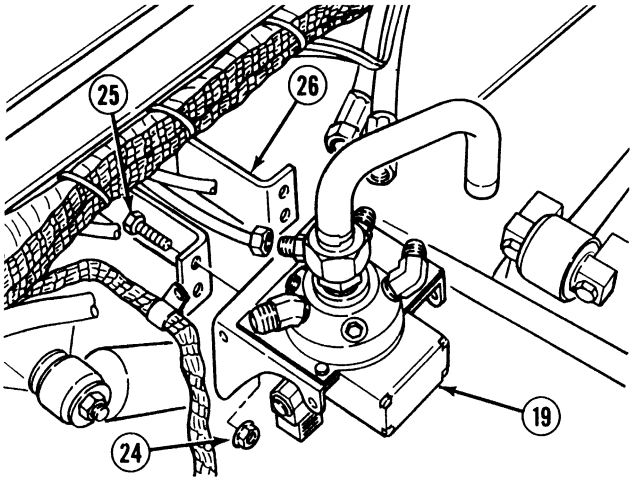

(14) Install two wires 1067 (23) on CTIS rear manifold (19) with lockwasher (22) and screw (21).

(15) Connect connector (20) on CTIS rear manifold (19).

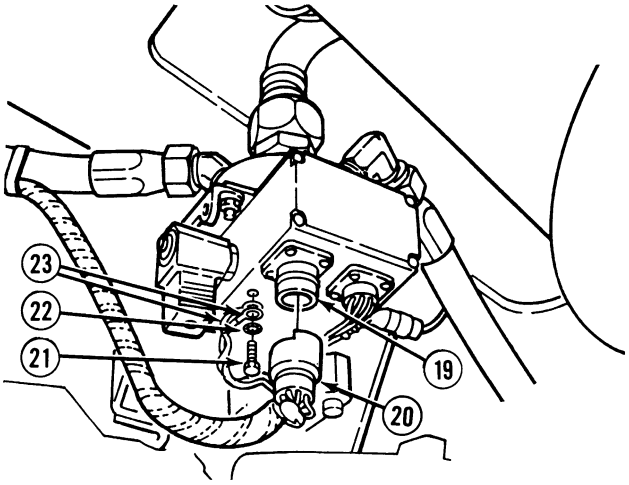

(16) Install rear valve cover (14) on CTIS rear manifold (19) with three lockwashers (13) and screws (12).

(17) Install cushion clip (18), washer (17), lockwasher (16) and screw (15) in CTIS rear manifold (19).

(18) Install air line 2074 (10) with three cable ties (9) on exhaust tube (11).

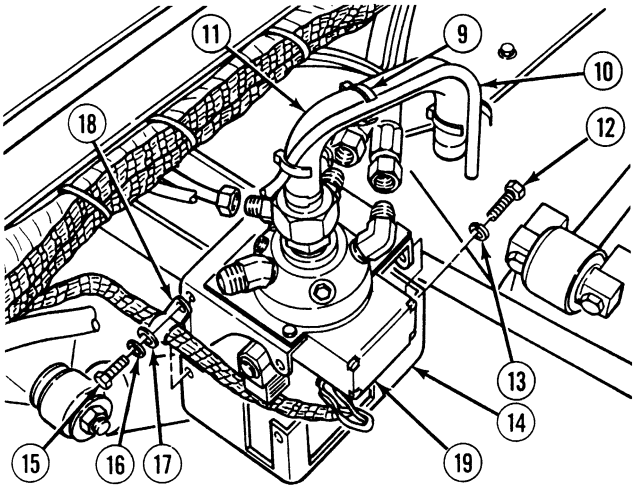

13-9. CENTRAL TIRE INFLATION SYSTEM (CTIS) REAR MANIFOLD REPLACEMENT (CONT).

(19) Install air line 2994 (7) on elbow (8).

(20) Install air line 2106 (5) on elbow (6).

(21) Install air line 2872 (3) on elbow (4).

(22) Install air line 2104 (1) on elbow (2).

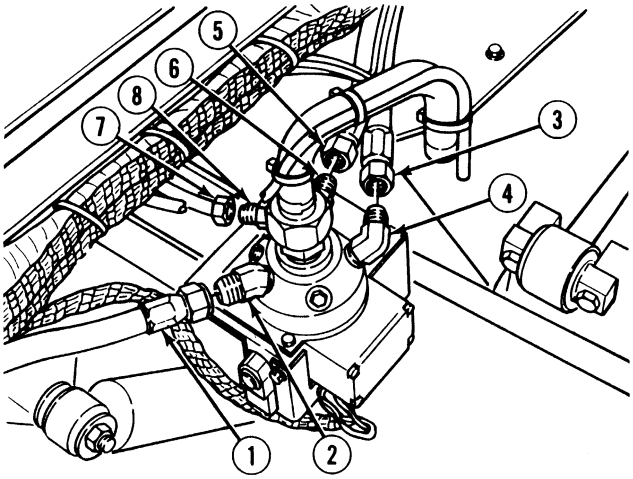

c. Follow-On Maintenance:

- Connect batteries, (Para 7-87).
- Start engine, (TM 9-2320-364-10).
- Build up air pressure to 125 psi (861 kPa).
- Shut OFF engine, (TM 9-2320-364-10).
- Operate CTIS and check for air leaks, (TM 9-2320-364-10).
- LHS in transit position, (TM 9-2320-364-10).
- Remove wheel chocks, (TM 9-2320-364-10).

END OF TASK

13-10. CENTRAL TIRE INFLATION SYSTEM (CTIS) FRONT AND REAR MANIFOLD REPAIR.

This task covers:

a. Disassembly
b. Cleaning/Inspection
c. Assembly
d. Follow-On Maintenance

INITIAL SETUP

Tools and Special Tools
Tool Kit, General Mechanic's: Automotive (Item 74, Appendix G)

Materials/Parts
Sealing Compound (Item 72, Appendix C)
Tags, Identification (Item 88, Appendix C)

Materials/Parts - Continued
Kit, Fasteners and Seal (Item 36, Appendix F), (Front manifold only)
Kit, Fasteners and Seal (Item 37, Appendix F), (Rear manifold only)
Lockwasher (Item 187, Appendix F)

Equipment Condition
Front or rear manifold removed, (Para 13-8 or 13-9)

a. Disassembly.

NOTE

Tag and mark all wires and connectors prior to removal.

(1) Loosen two screws (1) and remove connectors (2) and gaskets (3) from inflation valve (4) and deflation valve (5). Discard gasket.

(2) Loosen screw (6) and remove connector (7) and gasket (8) from quick release valve (9). Discard gasket.

(3) Disconnect connector (10) from transducer (11).

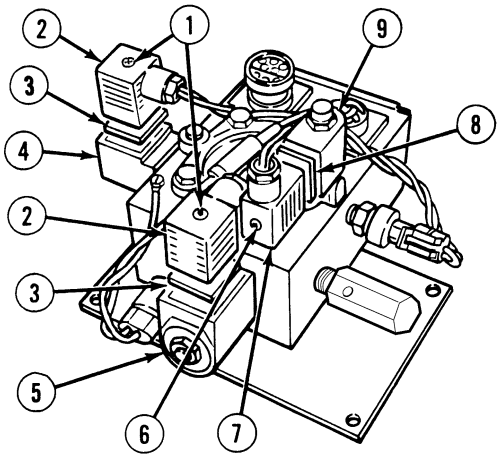

NOTE

Perform Step (4) for front power manifold.

(4) Disconnect connector (12).

NOTE

Rear power manifold will have only one wire in Step (5).

(5) Remove screw (13), lockwasher (14), wire (15), and wire (16) from power manifold (17). Discard screw and lockwasher.

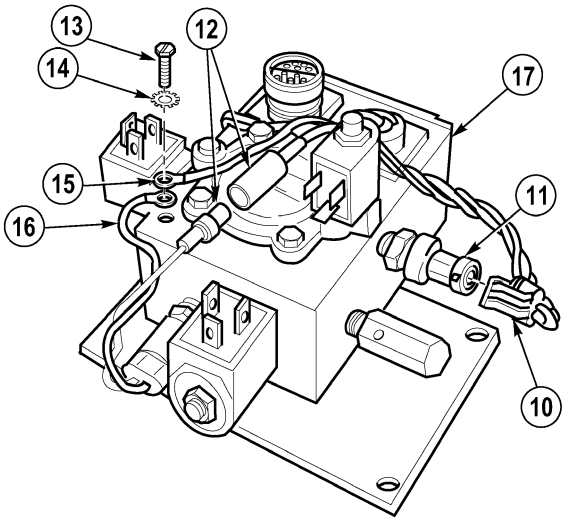

13-10. CENTRAL TIRE INFLATION SYSTEM (CTIS) FRONT AND REAR MANIFOLD REPAIR (CONT).

(6) Remove transducer (11) and relief valve (18) from power manifold (17).

NOTE

Perform Step (7) for front power manifold.

(7) Remove pressure switch (19) from power manifold (17).

(8) Remove two nuts (20), spring washers (21), washers (22), inflation valve solenoid (23) and deflation valve solenoid (24) from power manifold (17).

(9) Remove nut (25) and quick release valve solenoid (26) from power manifold (17).

(10) Remove spool (27) and diaphram (28) from power manifold (17).

(11) Remove preformed packing (29) and plunger (30) from spool (27). Discard preformed packing.

(12) Remove and discard orifice (31) from power manifold (17).

(13) Remove spool (32), seal ring (33) and diaphram (34) from power manifold (17).

(14) Remove preformed packing (35) and plunger (36) from spool (32). Discard preformed packing.

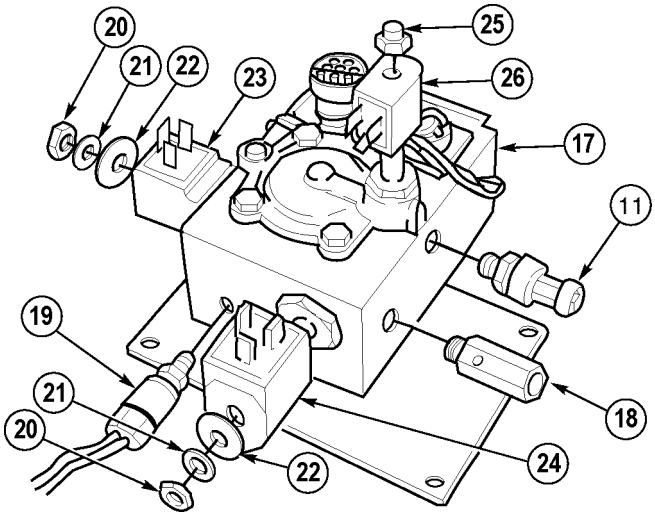

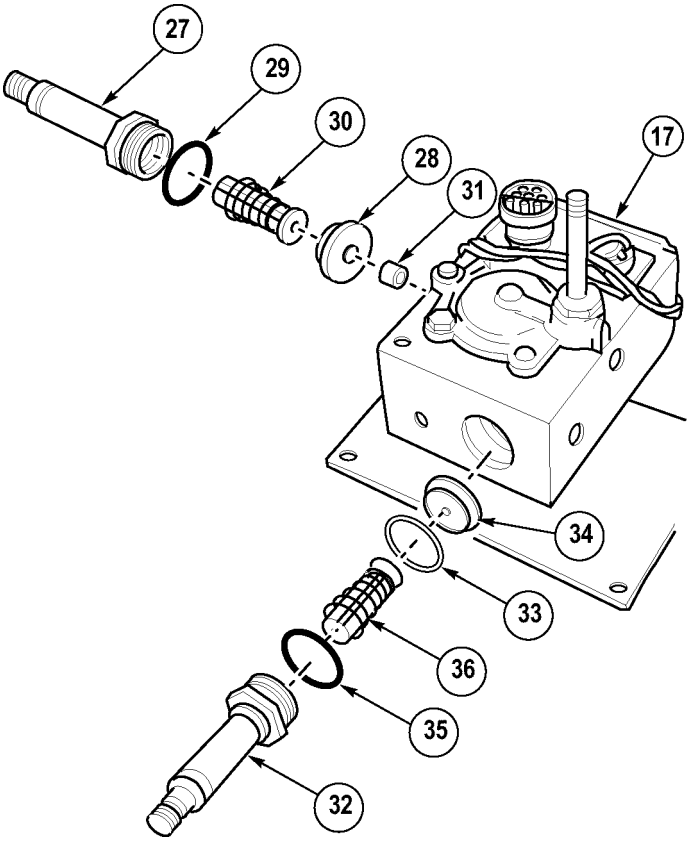

(15) Remove four screws (37), quick release valve (9) and power manifold (17) from porting block (38). Discard screws.

(16) Remove spring (39) and diaphram (40) from power manifold (17).

(17) Remove preformed packings (41), (42), (43) and (44), retainer (45), spring (46) and ball (47) from porting block (38). Discard preformed packings.

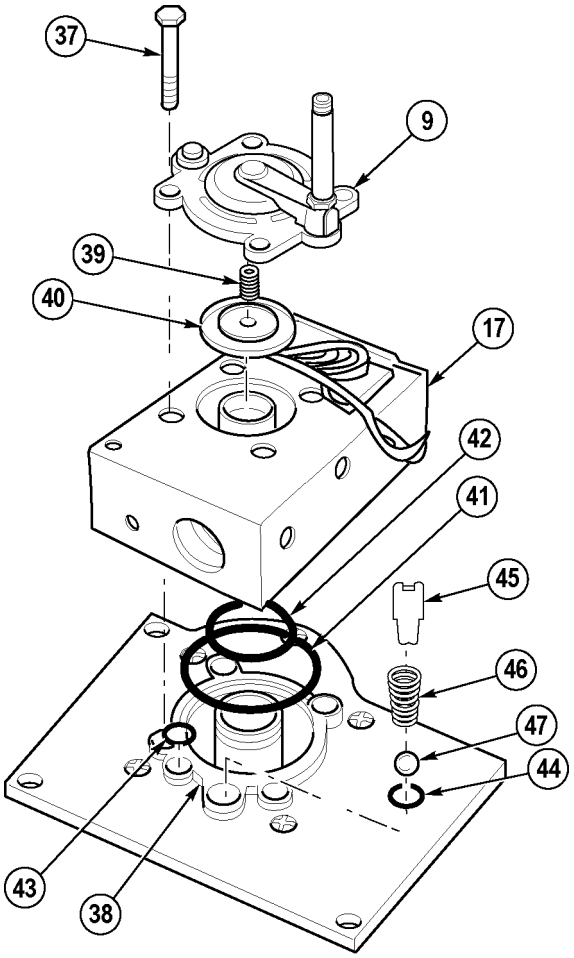

(18) Remove five screws (48) and mounting plate (49) from porting block (38). Discard screws.

NOTE

Perform Step (19) for rear manifold only.

(19) Remove plug (50) from porting block (38).

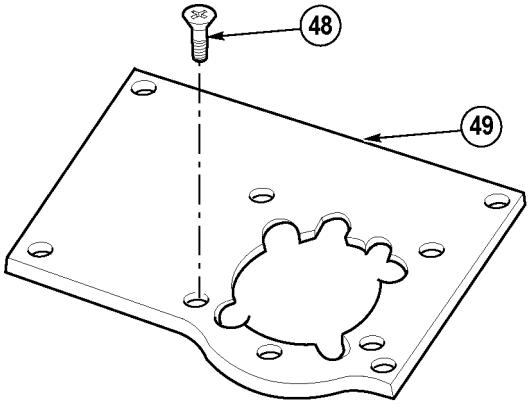

b. Cleaning and Inspection.

(1) Clean all parts.

(2) Inspect parts and valve seats for wear, nicks, silt buildup, cracks and stripped threads.

(3) Replace all damaged parts.

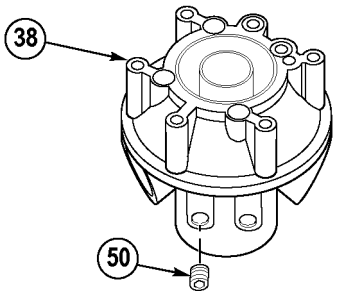

13-10. CENTRAL TIRE INFLATION SYSTEM (CTIS) FRONT AND REAR MANIFOLD REPAIR (CONT).

c. Assembly.

WARNING

Adhesives, solvents, and sealing compounds can burn easily, can give off harmful vapors, and are harmful to skin and clothing. To avoid injury or death, keep away from open fire and use in a well-ventilated area. If adhesive, solvent, or sealing compound gets on skin or clothing, washer immediately with soap and water.

NOTE

Perform Steps (1) and (2) for rear manifold only.

(1) Apply sealing compound to threads of plug (50).

(2) Install plug (50) in porting block (38).

(3) Install mounting plate (49) and five screws (48) on porting block (38).

(4) Install ball (47), spring (46), retainer (45) and preformed packings (44), (43), (42) and (41) in porting block (38).

(5) Position diaphram (40) spring (39), quick release valve (9) and four screws (37), in power manifold (17).

CAUTION

Lowering the manifold directly onto the porting block without any side movement, will ensure the preformed packings will remain in grooves until screws are installed. Failure to comply could result in a faulty manifold.

(6) While holding down quick release valve (9), position manifold (17) above porting block (38), and install four screws (37).

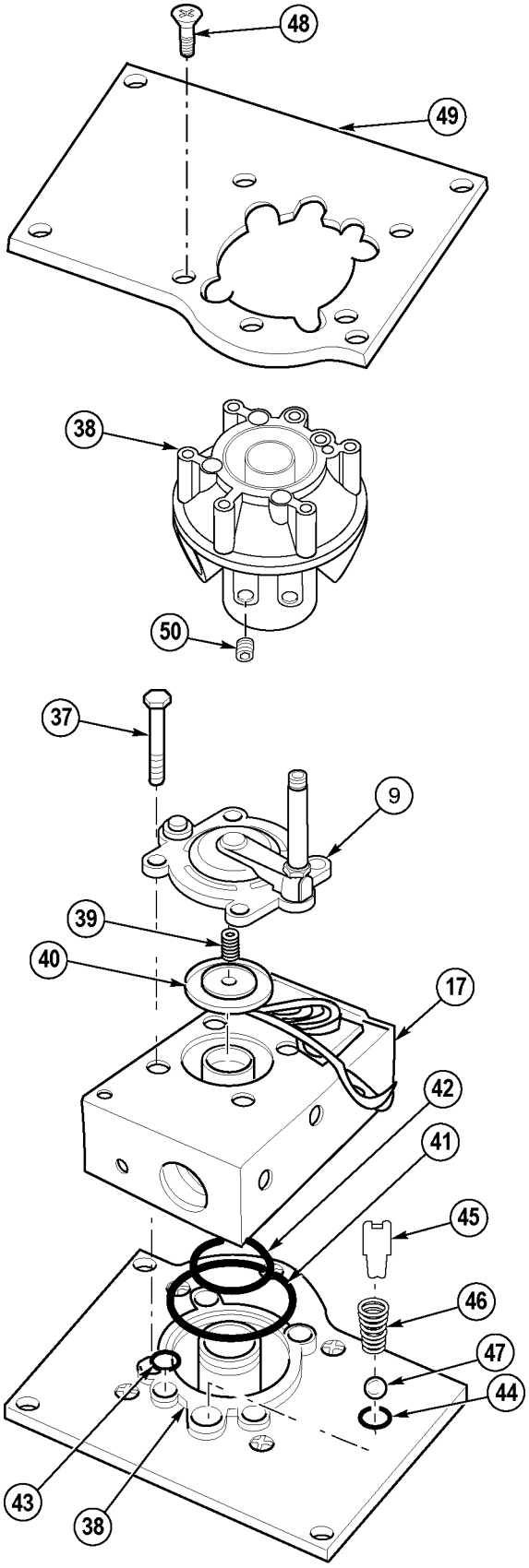

(7) Install plunger (36) and preformed packing (35) in spool (32).

(8) Install diaphram (34), seal ring (33) and spool (32) in power manifold (17).

(9) Install orifice (31) in power manifold (17).

(10) Install valve (30) and preformed packing (29) in spool (27).

(11) Install diaphram (28) and spool (27) in power manifold (17).

(12) Install quick release solenoid (26) on power manifold (17) with nut (25).

(13) Install inflation valve solenoid (23) and deflation valve solenoid (24) on power manifold (17) with washers (22), washers (21) and nuts (20).

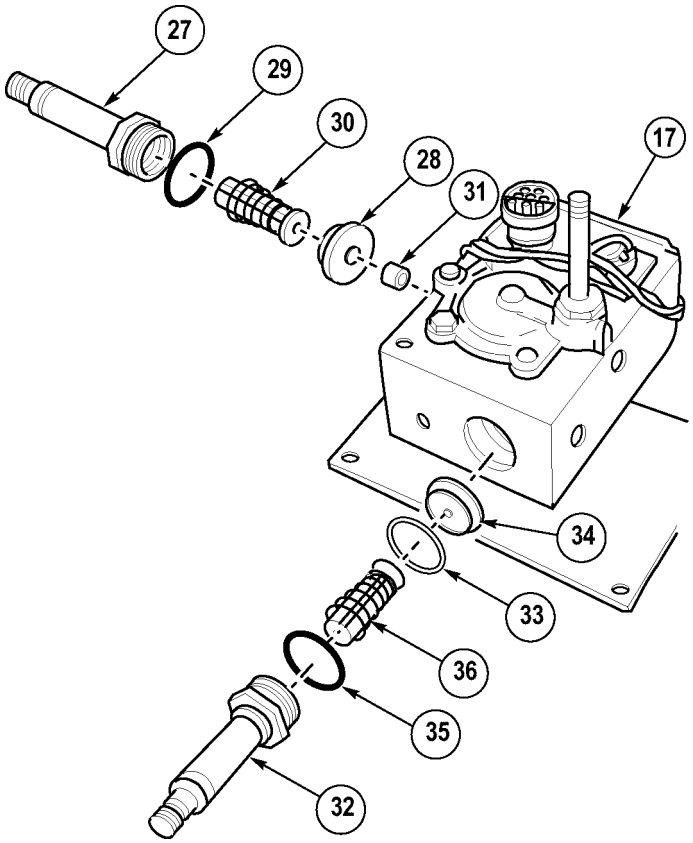

WARNING

Adhesives, solvents, and sealing compounds can burn easily, can give off harmful vapors, and are harmful to skin and clothing. To avoid injury or death, keep away from open fire and use in a well-ventilated area. If adhesive, solvent, or sealing compound gets on skin or clothing, wash immediately with soap and water.

NOTE

Perform Steps (14) and (15) for front power manifold.

(14) Apply sealing compound on threads of pressure switch (19).

(15) Install pressure switch (19) in power manifold (17).

(16) Apply sealing compound on threads of relief valve (18).

(17) Install relief valve (18) in power manifold (17).

(18) Apply sealing compound on threads of transducer (11).

(19) Install transducer (11) in power manifold (17).

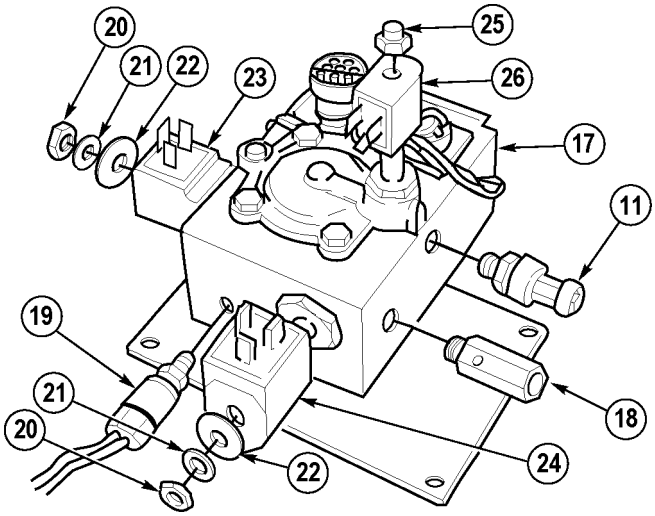

13-10. CENTRAL TIRE INFLATION SYSTEM (CTIS) FRONT AND REAR MANIFOLD REPAIR (CONT).

NOTE

Rear power manifold will have only one wire in Step (20).

(20) Install wire (16) and wire (15) on power manifold (17) with lockwasher (14) and screw (13).

NOTE

Perform Step (21) for front power manifold.

(21) Connect connector (12).

(22) Connect connector (10) to transducer (11).

(23) Install gasket (8) and connector (7) on quick release valve (9) and tighten screw (6).

(24) Install two gaskets (3) and connectors (2) on deflation valve (5) and inflation valve (4) and tighten screws (1).

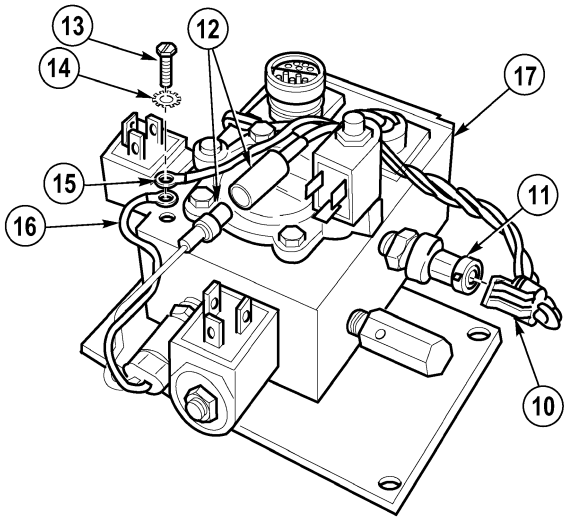

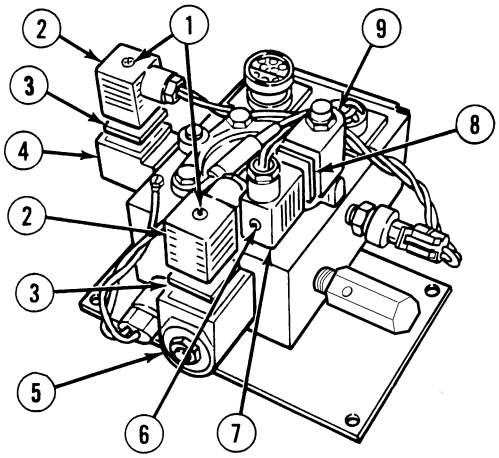

d. Follow-On Maintenance:

- Install front or rear manifold, (Para 13-8 or 13-9).

END OF TASK

13-11. CENTRAL TIRE INFLATION SYSTEM (CTIS) WHEEL VALVE REPAIR.

This task covers:

a. Removal
b. Disassembly
b. Cleaning/Inspection
d. Assembly
e. Installation
f. Follow-On Maintenance

INITIAL SETUP

Tools and Special Tools
Tool Kit, General Mechanic's: Automotive (Item 74, Appendix G)
Cap and Plug Set (Item 8, Appendix G)
Caps, Vise Jaw (Item 9, Appendix G)
Compressor Unit, Air (Item 11, Appendix G)
Gage, Air Inflation (Item 25, Appendix G)
Gloves, Chemical Oil Protective (Item 28, Appendix G)
Goggles, Industrial (Item 30, Appendix G)
Gun, Air Blow (Item 31, Appendix G)
Jack, Hydraulic Hand (Item 40, Appendix G)
Repair Tool, Pneumatic Tire, Valve (Item 56, Appendix G)
Vise, Machinist's (Item 75, Appendix G)
Wrench, Torque (0 to 175 lb-ft [0 to 237 N·m]) (Item 95, Appendix G)

Materials/Parts
Oil, Lubricating (Item 57, Appendix C)
Sealing Compound (Item 73, Appendix C)
Fastener and Seal Kit (Item 35, Appendix F)
Locknut (2) (Item 90, Appendix F)
Valve Core (Item 342, Appendix F)

Equipment Condition
Engine OFF, (TM 9-2320-364-10)
Wheels chocked, (TM 9-2320-364-10)
Wheel cover removed, (TM 9-2320-364-10)

a. Removal.

NOTE

- All wheel valves are replaced the same way.
- Axle No. 1, right side shown.

(1) Position jack under axle (1) and raise axle (1) until tire (2) is approximately 1 in. off of ground.

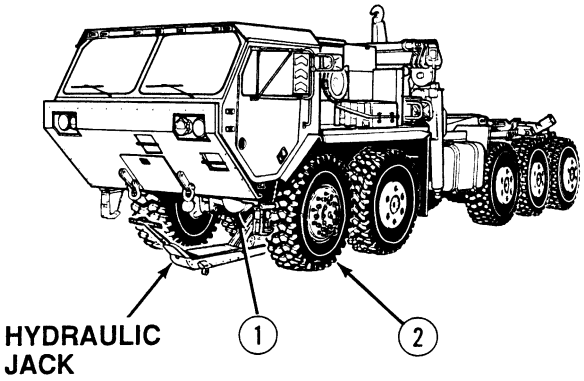

13-11. CENTRAL TIRE INFLATION SYSTEM (CTIS) WHEEL VALVE REPAIR (CONT).

(2) Remove valve stem dust cap (3) from valve stem (4).

WARNING

Ensure all personnel wear proper eye protection. Do not stand directly in front of valve stem when draining air from tire. Tire is under extreme air pressure. Failure to comply may result in injury to personnel.

(3) Remove valve core (5) from valve stem (4) and allow air to drain from tire (2). Discard valve core.

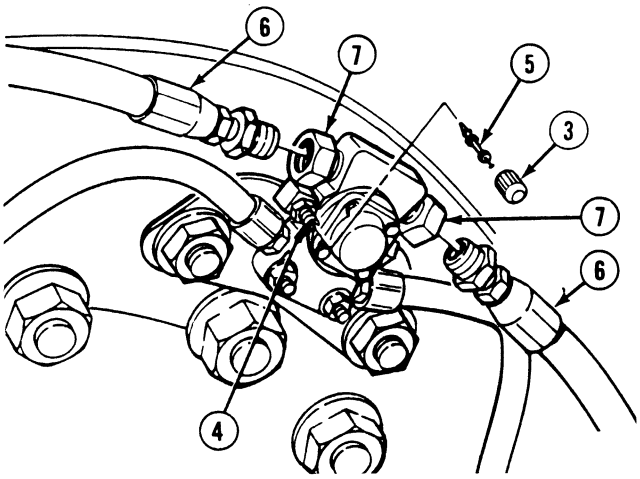

NOTE

Cap and plug hoses and fittings after removal.

(4) Remove two hoses (6) from fittings (7).

(5) Remove two tubes (8) from wheel valve (9).

(6) Remove and discard two preformed packings (10) from tubes (8).

(7) Remove two lug nuts (11) and mounting bracket (12) from studs (13).

(8) Remove two locknuts (14), screws (15) and wheel valve (9) from mounting bracket (12). Discard locknuts.

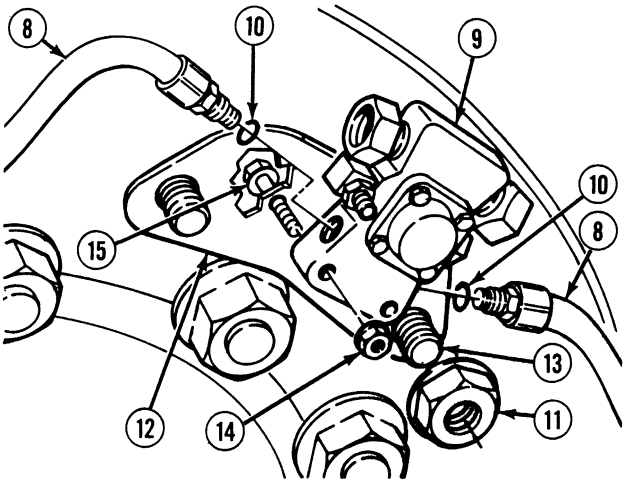

(9) Position wheel valve (9) in soft jawed vise.

(10) Remove valve stem (4) from elbow (16).

(11) Remove two fittings (7) and elbow (16) from wheel valve (9).

(12) Remove wheel valve (9) from soft jawed vise.

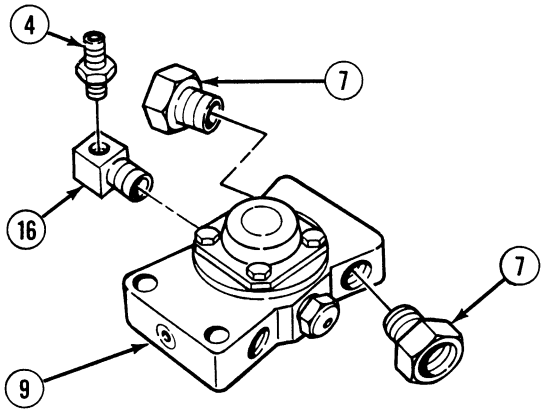

b. Disassembly.

NOTE

All wheel valves are disassembled the same way.

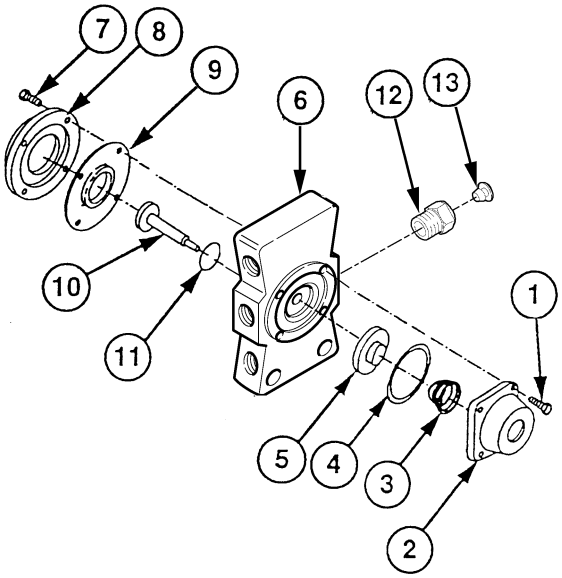

(1) Remove four screws (1), poppet end cover (2), spring (3), preformed packing (4), and poppet (5) from wheel valve (6). Discard four screws, spring, preformed packing, and poppet.

(2) Remove four screws (7), pilot end cover (8), and diaphragm (9) from wheel valve (6). Discard four screws and diaphragm.

(3) Remove piston (10) from wheel valve (6) and preformed packing (11) from piston (10). Discard preformed packing.

(4) Remove and discard check valve (12) and breather (13) from wheel valve (6).

c. Cleaning/Inspection.

WARNING

- Drycleaning Solvent (P-D-680) is TOXIC and flammable. Wear protective goggles, face shield, and gloves; use only in a well-ventilated area; avoid contact with skin, eyes, and clothes, and do not breathe vapors. Keep away from heat or flame. Never smoke when using solvent. The flashpoint for Type II Drycleaning Solvent is 140 degrees F (60 degrees C) and Type III Drycleaning Solvent is 200 degrees F (93 degrees C). Failure to do so may result in injury or death to personnel.
- If personnel become dizzy while using cleaning solvent, immediately get fresh air and medical help. If solvent contacts skin or clothes, flush with cold water. If solvent contacts eyes, immediately flush eyes with water and get immediate medical attention.
- Compressed air used for cleaning purposes will not exceed 30 psi (207 kPa). Use only with effective chip guarding and personal protective equipment (goggles/shield, gloves, etc). Failure to comply may result in injury or death to personnel.

(1) Clean all metal parts with drycleaning solvent.

(2) Dry all metal parts with compressed air.

(3) Clean rubber parts with clean, dry cloth.

(4) Inspect all metal parts and valve seats for cracks, wear, nicks, silt buildup, stripped threads and other signs of wear.

(5) Replace all damaged parts.

13-11. CENTRAL TIRE INFLATION SYSTEM (CTIS) WHEEL VALVE REPAIR (CONT).

d. Assembly.

(1) Install check valve (12) and breather (13) in wheel valve (6).

(2) Install preformed packing (11) on piston (10).

(3) Install piston (10) in wheel valve (6).

(4) Install new diaphragm (4) and pilot end cover (5) on wheel valve (6) with four screws (7).

(5) Install poppet (6), preformed packing (4), spring (3) and poppet end cover (2) on wheel valve (6) with four screws (1).

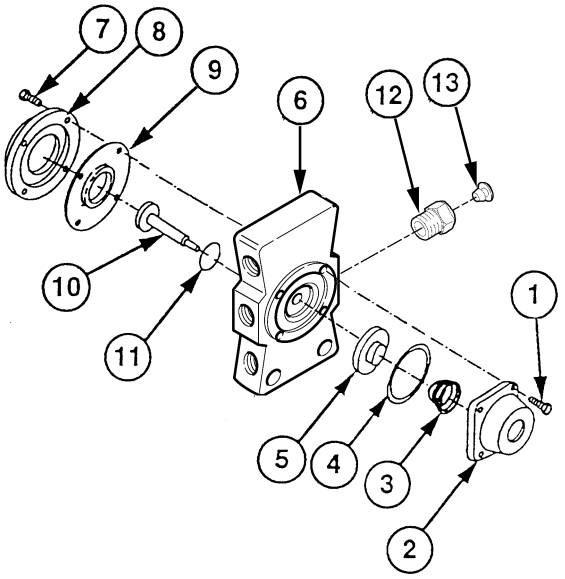

e. Installation.

WARNING

Adhesives, solvents, and sealing compounds can burn easily, can give off harmful vapors, and are harmful to skin and clothing. To avoid injury or death, keep away from open fire and use in well-ventilated area. If adhesive, solvent, or sealing compound gets on skin or clothing, wash immediately with soap and water.

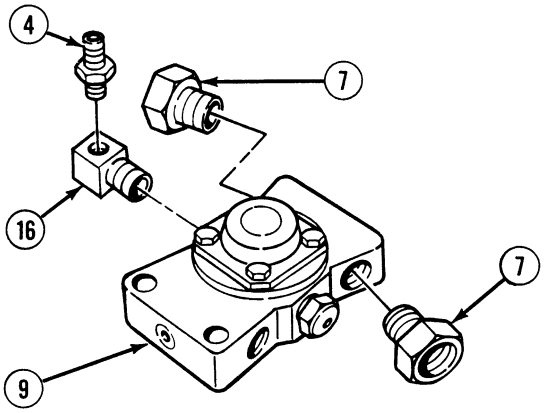

(1) Position wheel valve (9) in soft jawed vise.

(2) Apply sealing compound on threads of elbow (16).

(3) Install elbow (16) in wheel valve (9).

(4) Apply sealing compound on threads of valve stem (4).

(5) Install valve stem (4) in elbow (16).

(6) Apply sealing compound on threads of two fittings (7).

(7) Install two fittings (7) in wheel valve (9).

(8) Remove wheel valve (9) from soft jawed vise.

(9) Install wheel valve (9) on mounting bracket (12) with two screws (15) and locknuts (14). Tighten screws to 18 lb-ft (24 N·m).

(10) Install mounting bracket (12) on studs (13) with two lug nuts (11).

(11) Apply lubricating oil to two preformed packings (10).

(12) Install two preformed packings (10) on tubes (8).

(13) Install two tubes (8) in wheel valve (9).

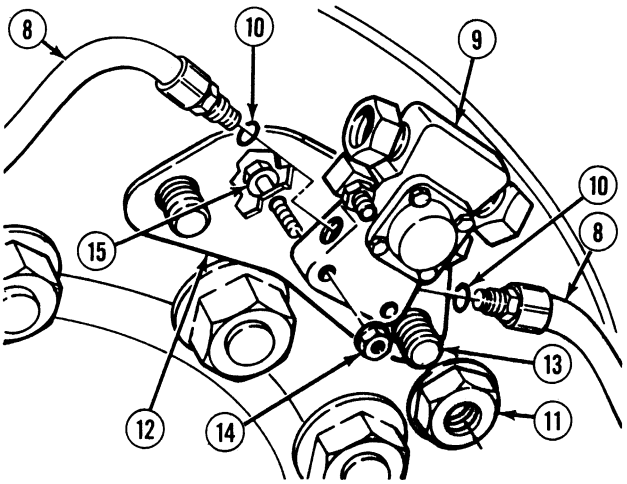

(14) Install two hoses (6) on fittings (7).

(15) Install valve core (5) in valve stem (4).

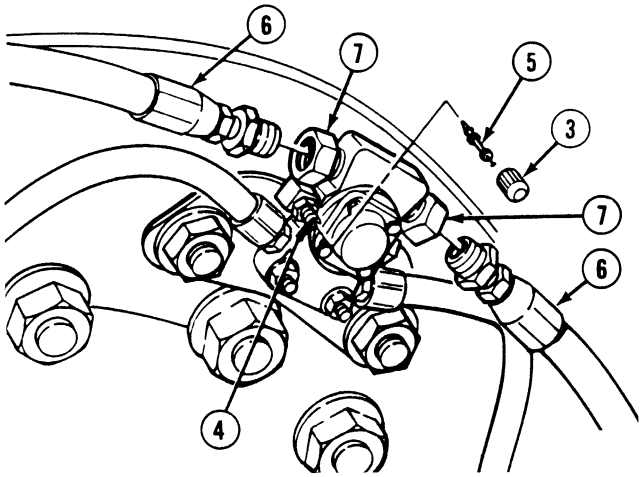

(16) Refer to data plate (17) on left side door (18) and inflate tire to HIGHWAY setting.

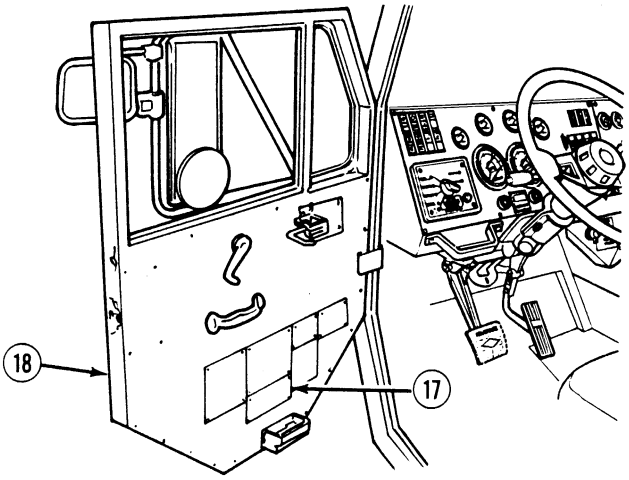

13-11. CENTRAL TIRE INFLATION SYSTEM (CTIS) WHEEL VALVE REPAIR (CONT).

(17) Lower jack until tire (2) is on ground and remove jack from under axle (1).

(18) Install valve stem dust cap (3) on valve stem (4).

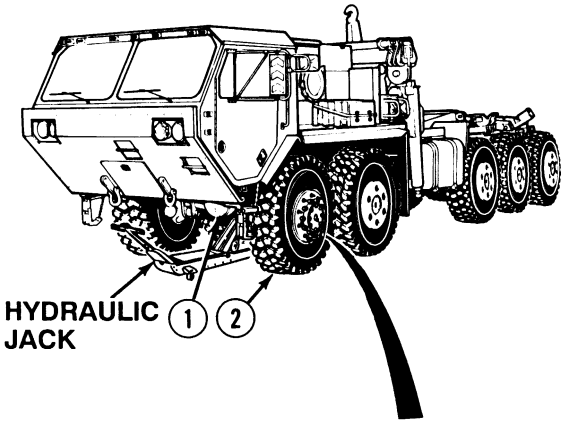

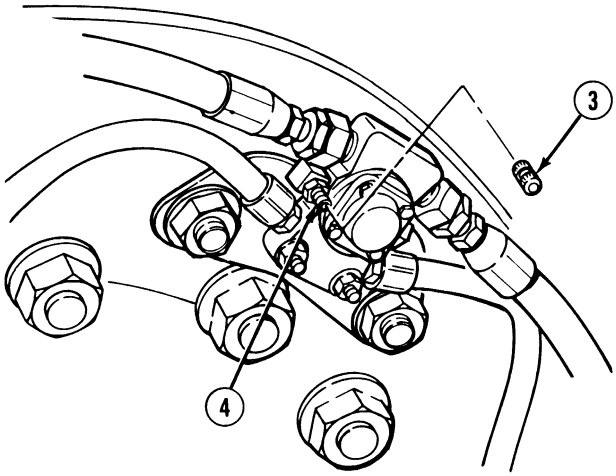

f. Follow-On Maintenance:

- Start engine, (TM 9-2320-364-10).
- Build up air pressure to 125 psi (861 kPa).
- Check CTIS operation, (TM 9-2320-364-10).
- Shut OFF engine, (TM 9-2320-364-10).
- Check for air leaks, (TM 9-2320-364-10).
- Install wheel cover, (TM 9-2320-364-10).
- Remove wheel chocks, (TM 9-2320-364-10).

END OF TASK

13-12. TIRE REPAIR.

Refer to TM 9-2610-200-14, Operator/Unit/Direct Support/General Support Maintenance Manual for care, maintenance, repair and inspection of pneumatic tires and inner tubes.

13-13. CENTRAL TIRE INFLATION SYSTEM (CTIS) CONTROLLER PROTECTION KIT INSTALLATION/REPLACEMENT.

This task covers:

a. Installation

b. Follow-On Maintenance

INITIAL SETUP

Tools and Special Tools

Tool Kit, General Mechanic's: Automotive (Item 74, Appendix G)
Drill, Electric, Portable, 1/4 in. (Item 18, Appendix G)
Drill Set, Twist (Item 20, Appendix G)

Materials/Parts

Tags, Identification (Item 89, Appendix C)
Locknuts (Item 130, Appendix F)

Equipment Condition

Engine OFF, (TM 9-2320-364-10)
Wheels chocked, (TM 9-2320-364-10)
Batteries disconnected, (Para 7-87)

a. Installation.

NOTE

- If vehicle is equipped with Central Tire Inflation System (CTIS) Controller (10214033), protection kit can be installed.
- If vehicle is equipped with Central Tire Inflation System (CTIS) Controller (10214033.Rev.A), protection kit is not required.

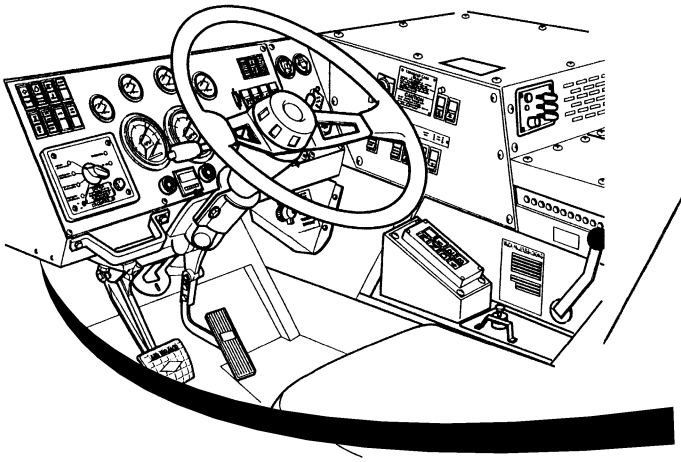

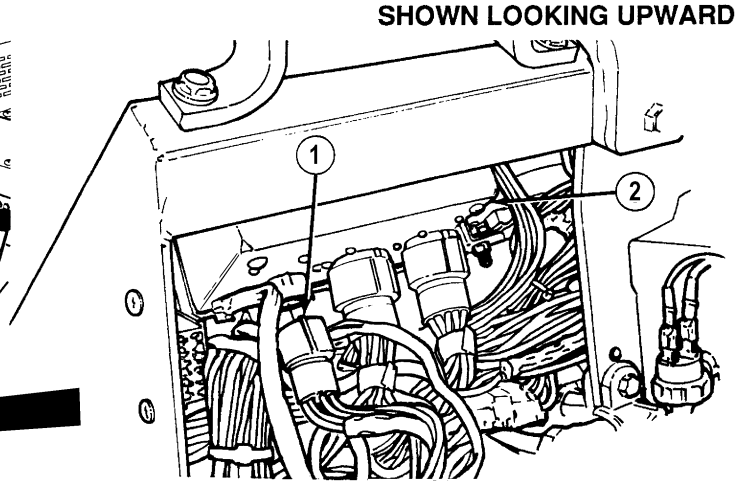

NOTE

Tag and mark all wire connectors prior to removal.

(1) Remove connector MC35 (1) from rear of CTIS controller (2).

13-13. CENTRAL TIRE INFLATION SYSTEM (CTIS) CONTROLLER PROTECTION KIT INSTALLATION/REPLACEMENT (CONT).

NOTE

Use CTIS controller protection device as template.

(2) Drill two 3/16 in. (5 mm) holes in bracket (3).

(3) Install CTIS controller protection device (4) onto bracket (3) using two screws (5) and locknuts (6).

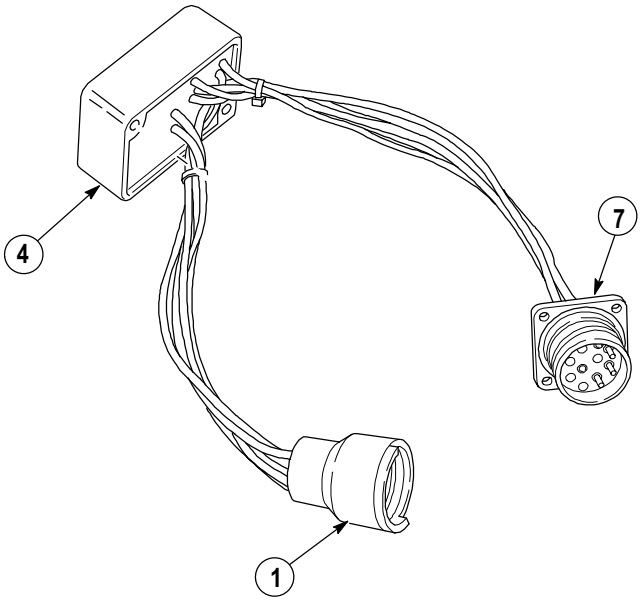

(4) Connect CTIS controller protection device connector (7) and MC35 connector (1).

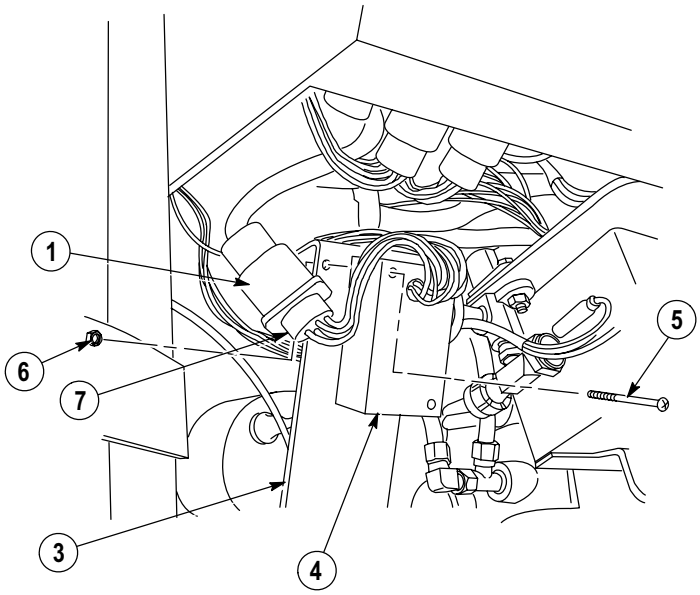

(5) Connect CTIS controller protection device connector (8) on rear of CTIS controller (2).

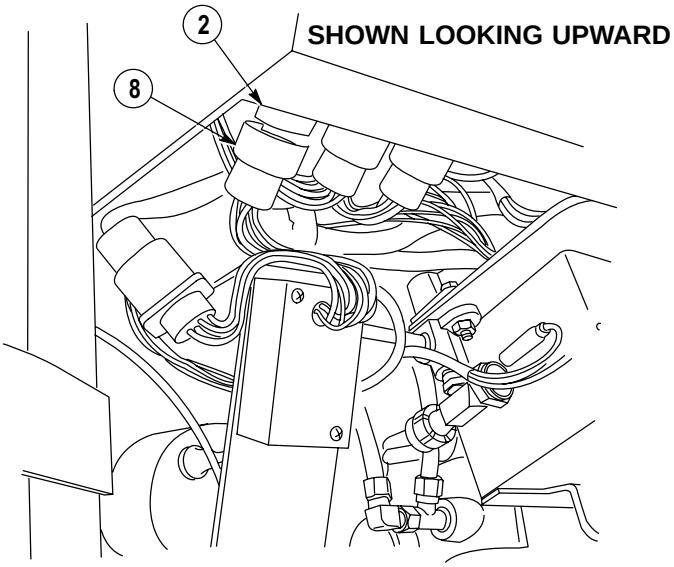

b. Follow-On Maintenance:

- Connect batteries, (Para 7-87).
- Check CTIS controller operation, (TM 9-2320-364-10).
- Remove wheel chocks, (TM 9-2320-364-10).

END OF TASK

CHAPTER 14

STEERING SYSTEM MAINTENANCE

Para	Contents	Page
14-1	Introduction	14-1
14-2	Steering System Service	14-2
14-3	Steering Toe-In Adjustment	14-4
14-4	Horn Button Replacement	14-9
14-5	Steering Wheel Replacement	14-10
14-6	Steering Column And Bracket Replacement	14-12
14-7	Steering Lock Replacement	14-17
14-8	Steering Column Shaft Replacement	14-19
14-9	Gear Box Steering Shaft Repair	14-22
14-10	Axle No. 5 Steering Shaft Repair	14-29
14-11	Axle No. 1, 2 And 5 Tie-Rod Repair	14-36
14-12	Tie-Rod And Drag Link Inspection	14-41
14-13	90 Degree Gear Box Replacement	14-43
14-14	Steering Hydraulic Hoses And Fittings Replacement	14-45
14-15	Steering Hydraulic Reservoir Repair	14-47
14-16	Steering Filter Replacement	14-56
14-17	Steering Filter Adapter Head Replacement	14-58
14-18	Front Steering Gear Torquing Procedure	14-61

14-1. INTRODUCTION.

This chapter contains instructions for removing, replacing, installing and adjusting components of the steering system as authorized by the Maintenance Allocation Chart (MAC) at the Unit Maintenance level.

14-2. STEERING SYSTEM SERVICE.

This task covers:

a. Drain b. Fill c. Follow-On Maintenance

INITIAL SETUP

Tools and Special Tools
Tool Kit, General Mechanic's: Automotive (Item 74, Appendix G)
Pan, Drain (Item 47, Appendix G)

Materials/Parts
Cloth, Cleaning (Item 31, Appendix C)
Oil, Lubricating (Item 47, Appendix C)

Materials/Parts - Continued
Packing, Preformed (2) (Item 237, Appendix F)

Equipment Condition
Engine OFF, (TM 9-2320-364-10)
Wheels chocked, (TM 9-2320-364-10)
Rear noise panel removed, (Para 17-29)

a. Drain.

NOTE

Perform Step (1) if truck is equipped with crane. If not, go to Step (2).

(1) Position crane boom nose toward right side rear tire.

WARNING

Prolonged contact with lubricating oil (MIL-L-2104) may cause a skin rash. Skin and clothing that come in contact with lubricating oil should be thoroughly washed immediately. Saturated clothing should be removed immediately. Areas in which lubricating oil is used should be well ventilated to keep fumes to a minimum.

NOTE

Steering system capacity is 34 qt (32 l).

(2) Position drain pan under two drain plugs (1).

(3) Remove two plugs (1) from reservoir (2).

(4) Remove and discard two preformed packings (3) from plugs (1).

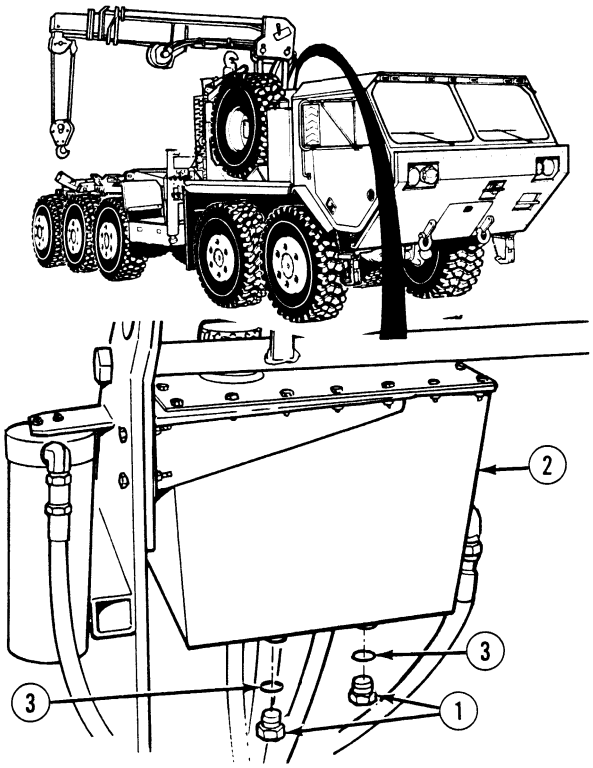

b. Fill.

(1) Coat two preformed packings (3) with lubricating oil and install on two plugs (1).

(2) Install two plugs (1) on reservoir (2).

(3) Remove drain pan from under reservoir (2).

(4) Remove cap (4) from reservoir (2).

(5) Fill reservoir (2) with lubricating oil (TM 9-2320-364-10).

(6) Install cap (4) on reservoir (2).

(7) Start engine.

(8) Turn steering wheel (5) left and right 12 to 15 times.

(9) Shut OFF engine.

(10) Check reservoir (2) oil level (TM 9-2320-364-10).

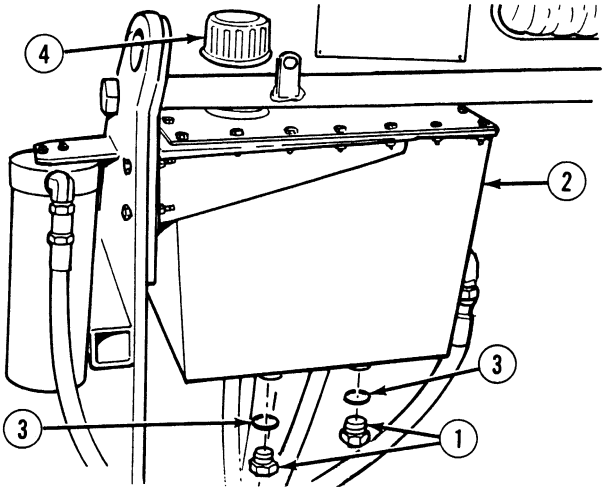

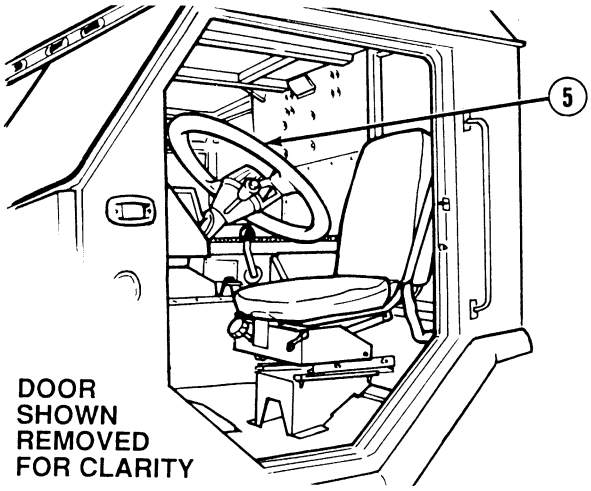

c. Follow-On Maintenance:

- Install rear noise panel, (Para 17-29).
- Stow crane (if equipped), (TM 9-2320-364-10).
- Remove wheel chocks, (TM 9-2320-364-10).

END OF TASK

14-3. STEERING TOE-IN ADJUSTMENT.

This task covers:

a. Adjustment

b. Follow-On Maintenance

INITIAL SETUP

Tools and Special Tools
Tool Kit, General Mechanic's: Automotive (Item 74, Appendix G)
Clamp, Machinist's (Item 10, Appendix G)
Jack, Hydraulic, 12 Ton (Item 15, Appendix G)
Jackstand (4) (Item 42, Appendix G)
Tape, Measurer (Item 66, Appendix G)

Materials/Parts
Locknut (2) (Item 145, Appendix F)
Pin, Cotter (Item 277, Appendix F)

Personnel Required
Two

Equipment Condition
Engine OFF, (TM 9-2320-364-10)
Wheels chocked, (TM 9-2320-364-10)
Tires on Axle No. 1 and No. 2 inflated to 61 psi (420 kPa), (TM 9-2320-364-10)
Tires on Axle No 5. inflated to 70 psi (482 kPa), (TM 9-2320-364-10)
Air pressure built to 125 psi (861 kPa), (TM 9-2320-364-10)

a. Adjustment.

NOTE

- Toe in adjustment procedures must be preformed with the truck in an unloaded condition or adjustment procedures will not be accurate.
- Before truck comes to a stop, ensure that the wheels are straight. Do not turn wheels after truck has come to a stop. Turning steering wheel after truck stops will affect accuracy of measurements.
- Axle No. 5 is shown. Axles No. 1 and No. 2 are adjusted in the same way.

(1) Using hydraulic jack, raise Axle No. 5 (1) off of ground so tires (2) have one in. (25.4 mm) of clearance from floor. Place jackstands under walking beam.

NOTE

Perform Step (2) if adjusting toe-in on Axle No. 5. If not, go to Step (3).

(2) Hook mud flaps (3) in the upward position.

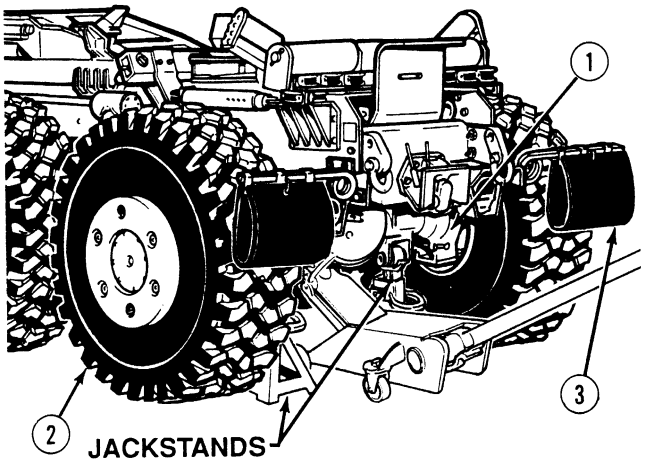

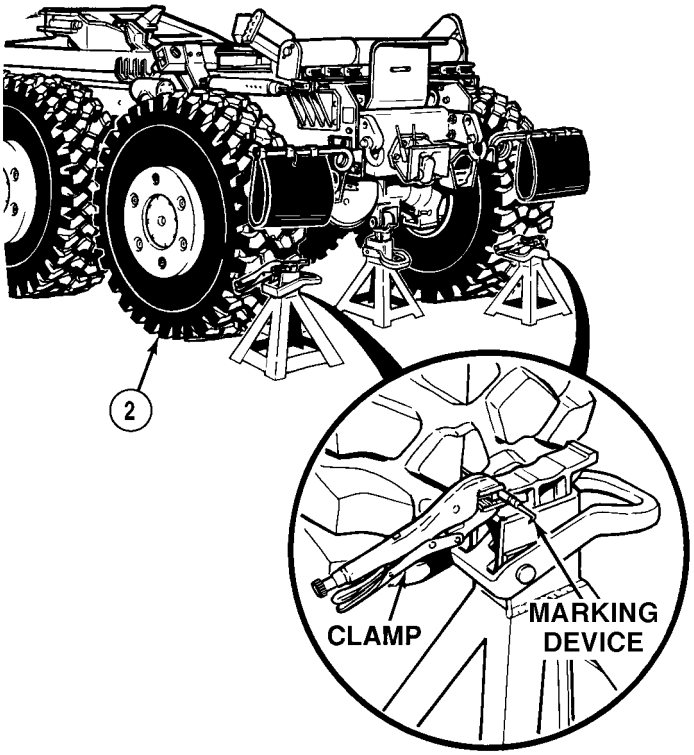

NOTE

A metal scribe, punch, screwdriver, etc. would be a suitable marking device. Marking device must be able to put visible mark on tire. Jack stand works well as stationary object.

(3) Attach marking device to jackstands with clamp so that marking device is at least 16 in. (406 mm) above floor level.

NOTE

Visible mark should be made as close to centerline of tire as possible to attain better reading.

(4) With the aid of an assistant, spin tire (2) and hold jack stand in place. Continue until visible mark is on entire diameter of tire. Repeat for other tire.

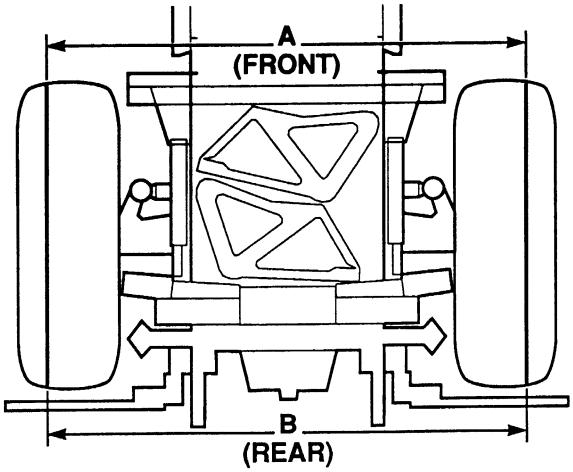

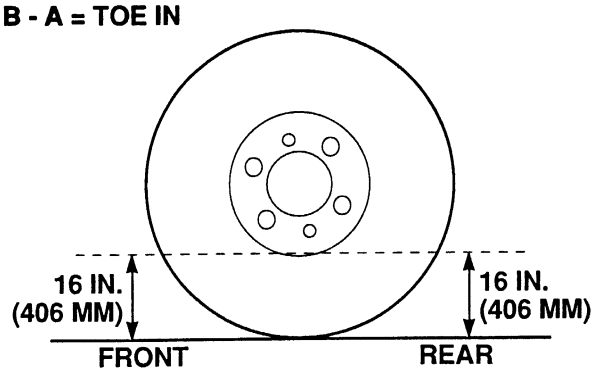

NOTE

Ensure measurement is level and taken at an equal height on each side of tire as shown above.

(5) Measure and record distance A (front) and B (rear) on Axle No. 5 (1).

14-3. STEERING TOE-IN ADJUSTMENT (CONT).

NOTE

- Toe-in is determined by subtracting distance A from distance B. Proper toe-in should be 1/8 in. (1.6 mm) to ±1/16 in. (1.6 mm) toe-in (B ÷ A = toe in).
- If your toe-in reading is more than 1/8 in. (1.6 mm) to ±1/16 in. (1.6 mm), check the tie-rod measurement.
- Tie-rods on Axle No. 1, 2 and 5 when measured from grease fitting to grease fitting should be within the limits shown in Table 14-1.

Table 14-1. Tie-Rod Acceptable Starting Measurements

Tie-Rod	Measurement
Axle No. 1	56-5/8 in. (± 1/8 in.)
Axle No. 2	54-9/16 in. (± 1/8 in.)
Axle No. 5	51-9/16 in. (± 1/8 in.)

(6) Determine toe-in (B ÷ A = toe-in).

NOTE

If distance is correct, toe-in adjustment is complete: go to Step (18). If distance is not correct, continue with Step (7).

(7) Remove cotter pin (4) and loosen castle nut (5) even with bottom of stud on tie-rod end (6). Discard cotter pin.

WARNING

Tie-rod end may unexpectedly pop-up when pressure is applied with hydraulic jack. Keep hands and face clear of tie-rod end. Failure to comply may result in severe injury to personnel.

(8) Using hydraulic jack, press tie-rod end (6) loose from steering arm (7).

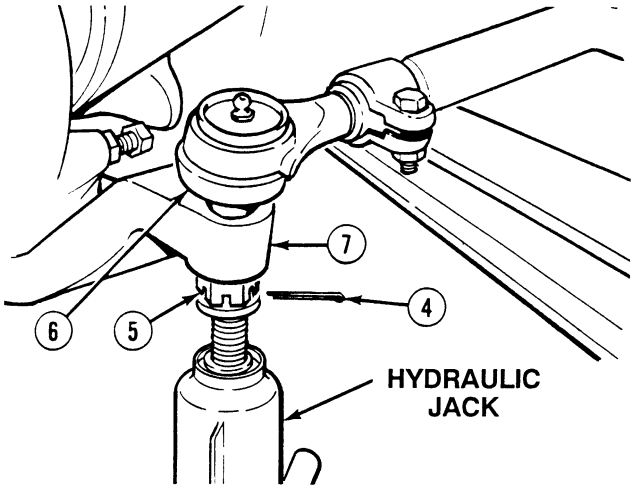

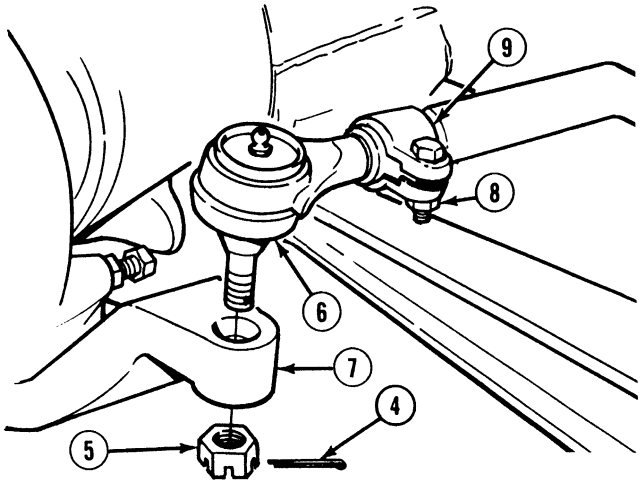

(9) Remove castle nut (5) from tie-rod end (6).

(10) Remove tie-rod (6) from steering arm (7).

(11) Remove locknut (8) from clamp (9) on tie-rod end (6). Discard locknut (8).

NOTE

- Lengthening Axle No. 1 and Axle No. 2 tie-rod will decrease front-side measurement. Shortening Axle No. 1 and Axle No. 2 tie-rod will increase front-side measurement.
- Lengthening Axle No. 5 tie-rod will increase front-side measurement. Shortening Axle No. 5 tie-rod will decrease front-side measurement.
- Adjustments should be made by turning both tie-rods end in or out an even distance.
- One tie-rod end is fine, left hand, threaded (left side) and one tie-rod end is coarse, right hand, threaded (right side). One complete clockwise turn on the left side tie-rod end will lengthen the tie-rod 1/16 in. while one complete clockwise turn on the right side tie-rod end will shorten total tie-rod 3/32 in.

(12) Turn tie-rod end (6) to lengthen or shorten tie-rod.

(13) Install tie-rod end (6) on steering arm (7).

(14) Tighten castle nut (5) enough to prevent tie-rod (6) from moving.

(15) Measure and determine toe-in. Repeat Steps (5) through (6).

(16) If toe-in needs adjustment, repeat Steps (7) through (15) until correct measurement is obtained.

14-3. STEERING TOE-IN ADJUSTMENT (CONT).

NOTE

- For Axle No. 1 and 5 perform Step (17).
- For Axle No. 2 perform Step (18).

(17) Install locknut (8) on clamp (9) and tie-rod end (6). Tighten locknut (8) on clamp (9) to 80 to 90 lb-ft (108 to 122 N·m).

(18) Install locknut (8) and clamp (9) on tie-rod end (6). Tighten locknut (8) on clamp (9) to 50 to 60 lb-ft (68 to 81 N·m).

(19) Install castle nut (5) on tie-rod end (6). Tighten castle nut (5) to 150 to 200 lb-ft (203 to 207 N·m).

NOTE

It may be necessary to further tighten nut to line up slots for cotter pin installation.

(20) Install cotter pin (4) in castle nut (5) and tie-rod end (6).

(21) Using hydraulic jack, raise Axle No. 5 (1), remove jackstands and lower axle.

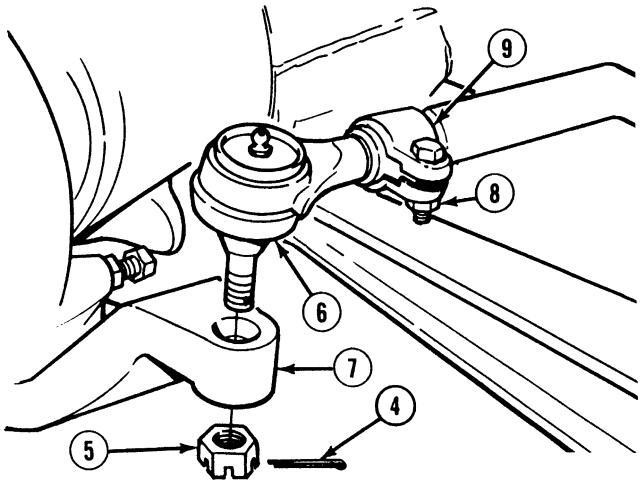

b. Follow-On Maintenance:

- Remove wheel chocks, (TM 9-2320-364-10).

END OF TASK

14-4. HORN BUTTON REPLACEMENT.

This task covers:

a. Removal b. Installation c. Follow-On Maintenance

INITIAL SETUP

Tools and Special Tools
Tool Kit, General Mechanic's: Automotive (Item 74, Appendix G)

Equipment Condition
Engine OFF, (TM 9-2320-364-10)
Wheels chocked, (TM 9-2320-364-10)
Batteries disconnected (Para 7-87)

a. Removal.

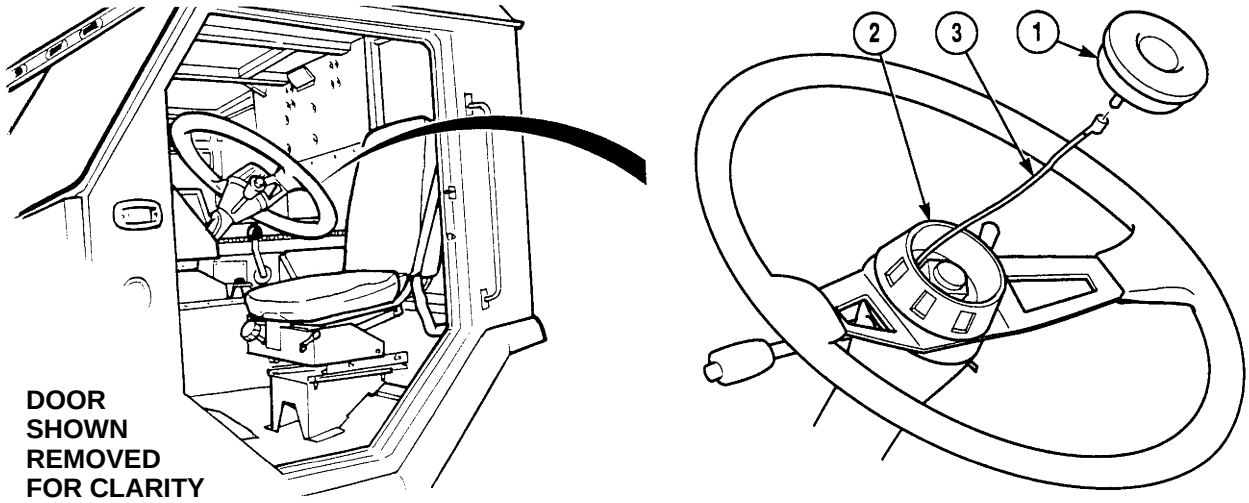

NOTE

Horn button will come out as an assembly.

(1) Remove horn button (1) from steering wheel (2).

(2) Disconnect wire 1016 (3) from horn button (1).

b. Installation.

(1) Connect wire 1016 (3) on horn button (1).

(2) Install horn button (1) on steering wheel (2).

c. Follow-On Maintenance:

- Connect batteries, (Para 7-87).
- Check horn operation, (TM 9-2320-364-10).
- Remove wheel chocks, (TM 9-2320-364-10).

END OF TASK

14-5. STEERING WHEEL REPLACEMENT.

This task covers:

a. Removal b. Installation c. Follow-on Maintenance

INITIAL SETUP

Tools and Special Tools
Tool Kit, General Mechanic's: Automotive (Item 74, Appendix G)
Puller Kit, Universal (Item 51, Appendix G)
Wrench, Torque (0 to 175 lb-ft [0 to 237 N·m]) (Item 95, Appendix G)

Equipment Condition
Engine OFF, (TM 9-2320-364-10)
Wheels chocked, (TM 9-2320-364-10)
Horn button removed, (Para 14-4)

a. Removal.

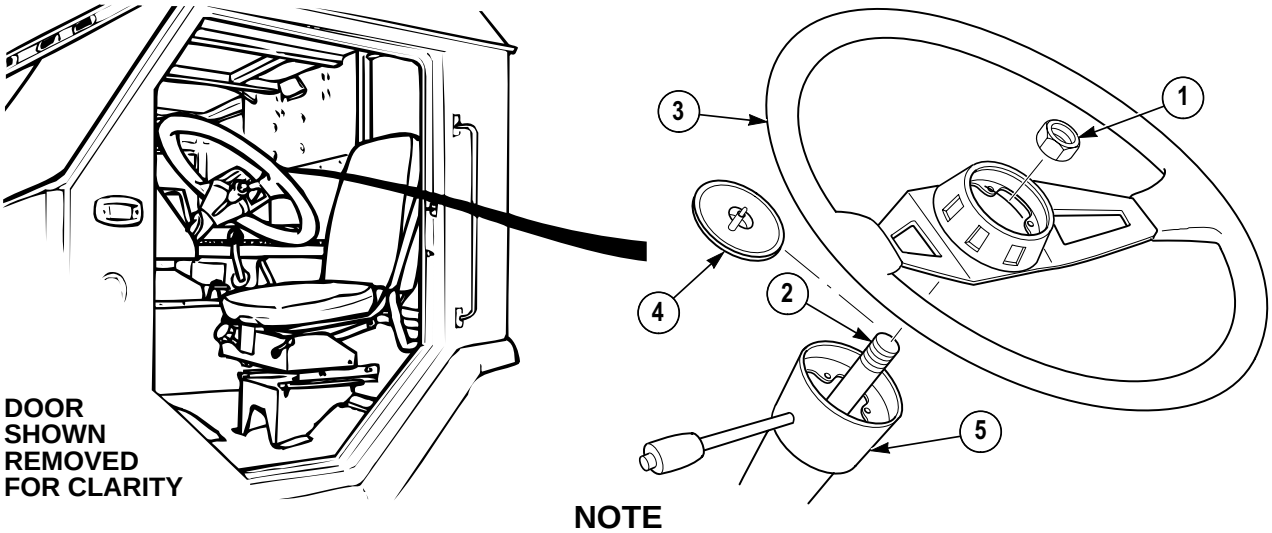

NOTE

- If steering column is to be removed, position steering wheel so steering column universal joint screws can be reached.
- Note location of steering wheel on shaft prior to removal.

(1) Remove nut (1) from shaft (2).

(2) Attach puller to steering wheel (3).

(3) Using puller remove steering wheel (3) from shaft (2).

(4) Remove puller from steering wheel (3).

(5) Remove horn cancel ring (4) from column (5) or steering wheel (3).

NOTE

Perform Step (6) if removing steering column.

(6) Install nut (1) on shaft (2).

b. Installation.

(1) Install horn cancel ring (4) on steering wheel (3).

NOTE

Hold steering shaft up when installing steering wheel.

(2) If installed, remove nut (1) from shaft (2).

(3) Install steering wheel (3) on steering shaft (2).

(4) Install nut (1) on shaft (2). Tighten nut to 65 lb-ft (81 N·m).

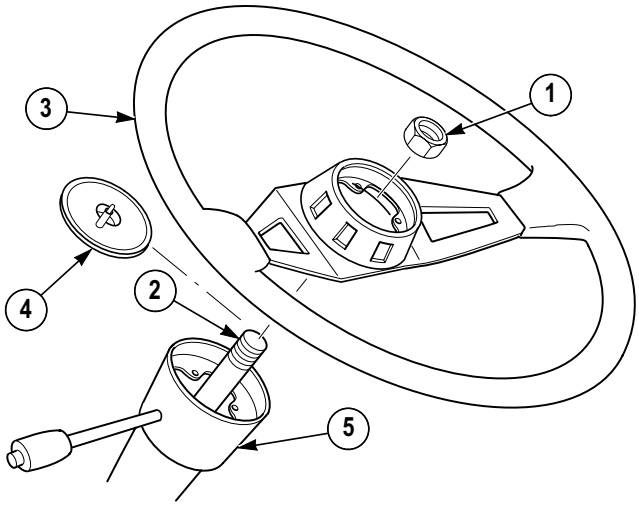

c. Follow-On Maintenance:

- Install horn button, (Para 14-4).
- Remove wheel chocks, (TM 9-2320-364-10).

END OF TASK

14-6. STEERING COLUMN AND BRACKET REPLACEMENT.

This task covers:

a. Removal b. Installation c. Follow-On Maintenance

INITIAL SETUP

Tools and Special Tools
Tool Kit, General Mechanic's: Automotive (Item 74, Appendix G)
Wrench, Torque (0 to 175 lb-ft [0 to 237 N·m]) (Item 95, Appendix G)

Materials/Parts
Cable Ties (Item 25, Appendix C)
Corrosion Preventive Compound (Item 35, Appendix C)
Locknut (2) (Item 96, Appendix F)
Locknut (2) (Item 140, Appendix F)
Locknut (2) (Item 143, Appendix F)
Screw (Item 314, Appendix F)

Equipment Condition
Engine OFF, (TM 9-2320-364-10)
Wheels chocked, (TM 9-2320-364-10)
Steering wheel removed, (Para 14-5)
Instrument panel removed, (Para 7-13)

a. Removal.

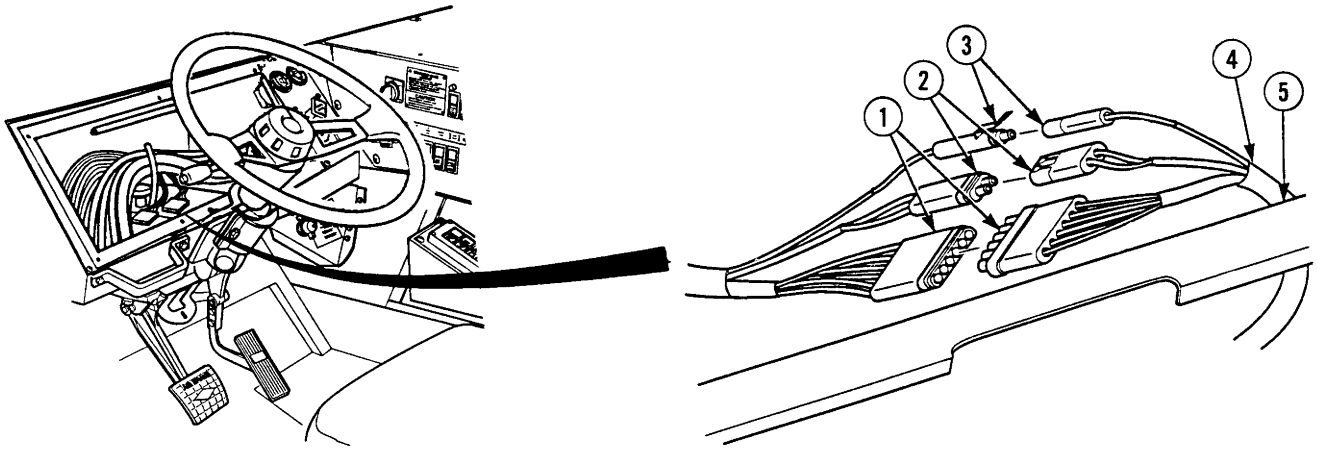

NOTE

- Note location of wiring harness before disconnecting wire connectors.
- Remove cable ties as required.

(1) Disconnect connectors MC7 (1), MC91 (2) and MC92 (3).

(2) Remove turn signal wiring harness (4) from under dash (5).

(3) Remove screw (6) and wire 1435 (7) from bottom of dash (5). Discard screw.

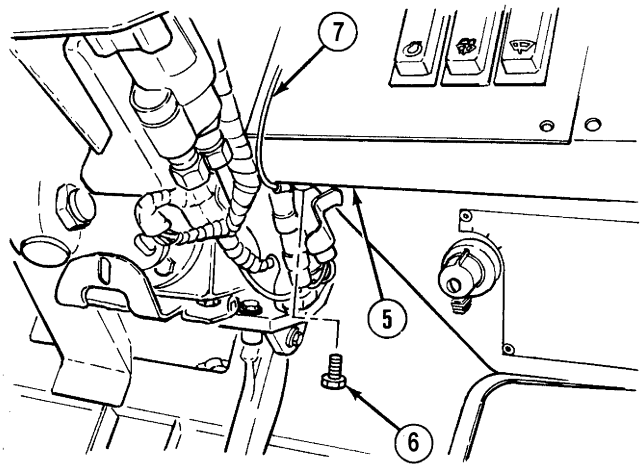

(4) Remove two locknuts (8), screws (9), brackets (10) and steering column (11) from brackets (12) and (13). Discard locknuts.

(5) Remove two pads (14) from two brackets (10).

(6) Remove locknut (15), screw (16) and steering column (11) from U-joint (17). Discard locknut.

(7) Remove locknut (18), screw (19), U-joint (17) and key (20) from shaft (21). Discard locknut.

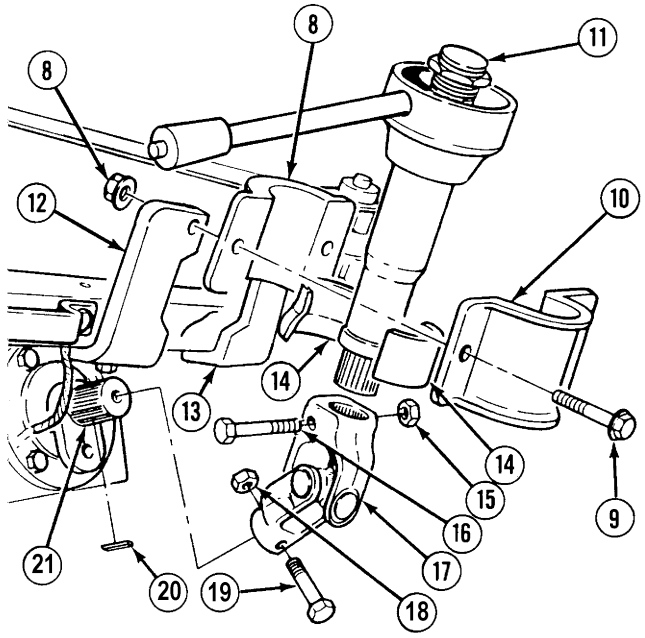

14-6. STEERING COLUMN AND BRACKET REPLACEMENT (CONT).

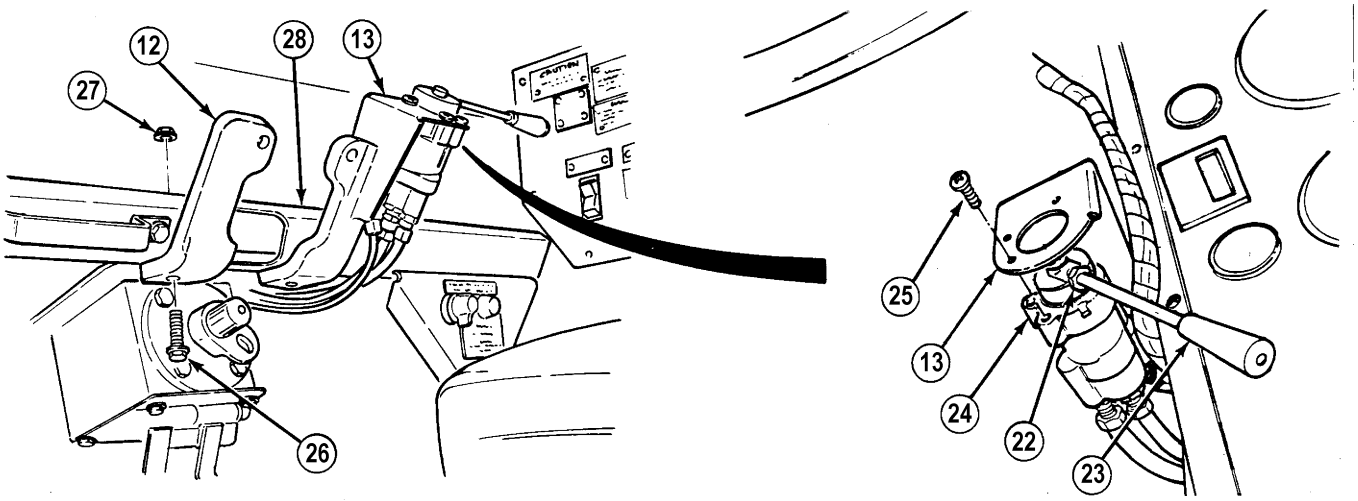

NOTE

Perform Steps (8) through (11) if removing brackets.

(8) Loosen jam nut (22) on hand brake handle (23).

(9) Remove hand brake handle (23) from hand brake valve (24).

(10) Remove three screws (25) and hand brake valve (24) from bracket (13).

(11) Remove two screws (26), locknuts (27), and two brackets (12) and (13) from bracket support (28). Discard locknuts.

b. Installation.

NOTE

- Perform Steps (1) through (4) if brackets were removed.
- Install cable ties as required.

(1) Install two screws (26), locknuts (27), brackets (12) and (13) on bracket support (28).

(2) Install hand brake valve (24) with three screws (25) on bracket (13).

(3) Install hand brake handle (23) in hand brake valve (24) until threads of hand brake handle bottom out in hand brake valve.

(4) Tighten jam nut (22) on trailer hand brake handle (23) to 13 lb-ft (17 N·m).

(5) Install U-joint (17) on shaft (21) with screw (19), locknut (18) and key (20).

(6) Install steering column (11) on U-joint (17) with screw (16) and locknut (15).

(7) Position two pads (14) on brackets (10) and install steering column (11) on brackets (12) and (13) with two screws (9) and locknuts (8). Tighten locknuts to 85 to 105 lb-ft (115 to 142 N·m).

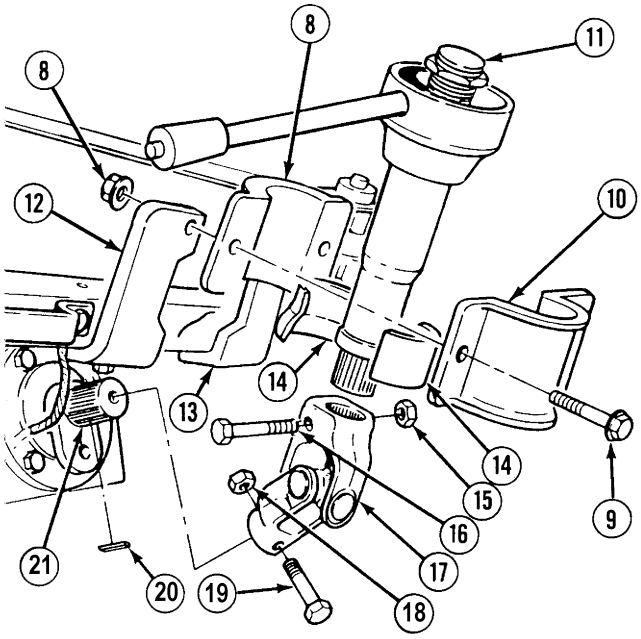

(8) Install wire 1435 (7) on bottom of dash (5) with screw (6).

WARNING

Adhesives, solvents, and sealing compounds can burn easily, can give off harmful vapors, and are harmful to skin and clothing. To avoid injury or death, keep away from open fire and use in well-ventilated area. If adhesive, solvent, or sealing compound gets on skin or clothing, wash immediately with soap and water.

(9) Apply corrosion preventive compound to screw (6).

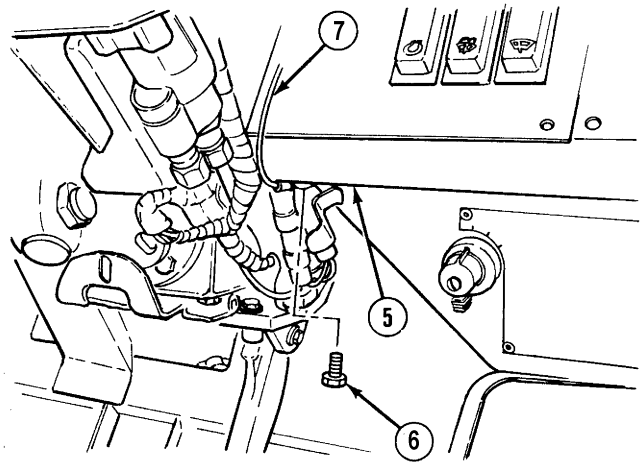

14-6. STEERING COLUMN AND BRACKET REPLACEMENT (CONT).

(10) Position turn signal wire harness (4) under and behind dash (5).

(11) Connect connectors MC7 (1), MC91 (2) and MC92 (3).

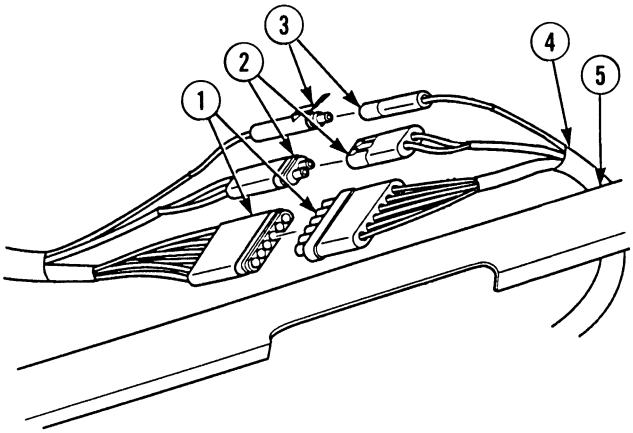

c. Follow-On Maintenance:

- Install instrument panel, (Para 7-13).
- Install steering wheel, (Para 14-5).
- Remove wheel chocks, (TM 9-2320-364-10).

END OF TASK

14-7. STEERING LOCK REPLACEMENT.

This task covers:

a. Removal b. Installation c. Follow-On Maintenance

INITIAL SETUP

Tools and Special Tools
Tool Kit, General Mechanic's: Automotive (Item 74, Appendix G)

Materials/Parts
Lockwasher (4) (Item 168, Appendix F)

Equipment Condition
Engine OFF, (TM 9-2320-364-10)
Wheels chocked, (TM 9-2320-364-10)
Steering column removed, (Para 14-6)

a. Removal.

NOTE

Washer may or may not be present in Step (1).

(1) Remove washer (1), if present, and lock bracket (2) from gear box (3).

(2) Remove two screws (4), lockwashers (5) and bracket (6) from gear box (3). Discard lockwashers.

(3) Remove two screws (7), lockwashers (8) and bracket (9) from gear box (3). Discard lockwashers.

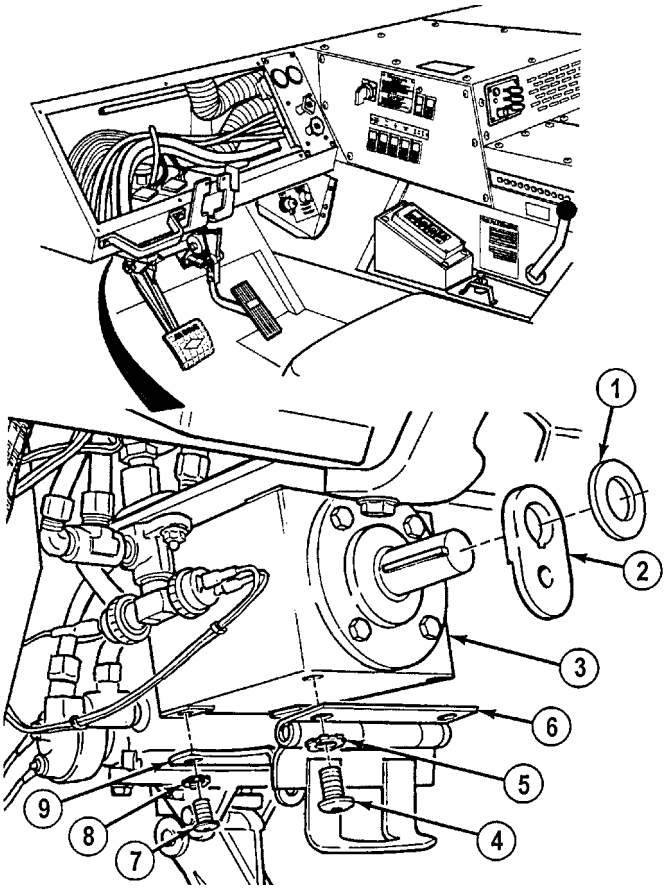

b. Installation.

(1) Install bracket (9) on gearbox (3) with two lockwashers (8) and screws (7).

(2) Install bracket (6) on gearbox (3) with two lockwashers (5) and screws (4).

NOTE

- Lock bracket should be pointing straight down.
- If lock bracket is making contact with steering gear bracket install washer.
- Washer may or may not be present in Step (3).

(3) Install lock bracket (2) and washer (1), if necessary, on gear box (3).

14-7. STEERING LOCK REPLACEMENT (CONT).

c. Follow-On Maintenance:

- Install steering column, (Para 14-6).
- Remove wheel chocks, (TM 9-2320-364-10).

END OF TASK

14-8. STEERING COLUMN SHAFT REPLACEMENT.

This task covers:

a. Removal b. Installation c. Follow-On Maintenance

INITIAL SETUP

Tools and Special Tools
Tool Kit, General Mechanic's: Automotive (Item 74, Appendix G)

Materials/Parts
Locknut (Item 133, Appendix F)
Locknut (Item 143, Appendix F)
Lockwasher (3) (Item 168, Appendix F)

Personnel Required
Two

Equipment Condition
Engine OFF, (TM 9-2320-364-10)
Wheels chocked, (TM 9-2320-364-10)
Front access cover open, (TM 9-2320-364-10)
90 degree gear box removed, (Para 14-13)

a. Removal.

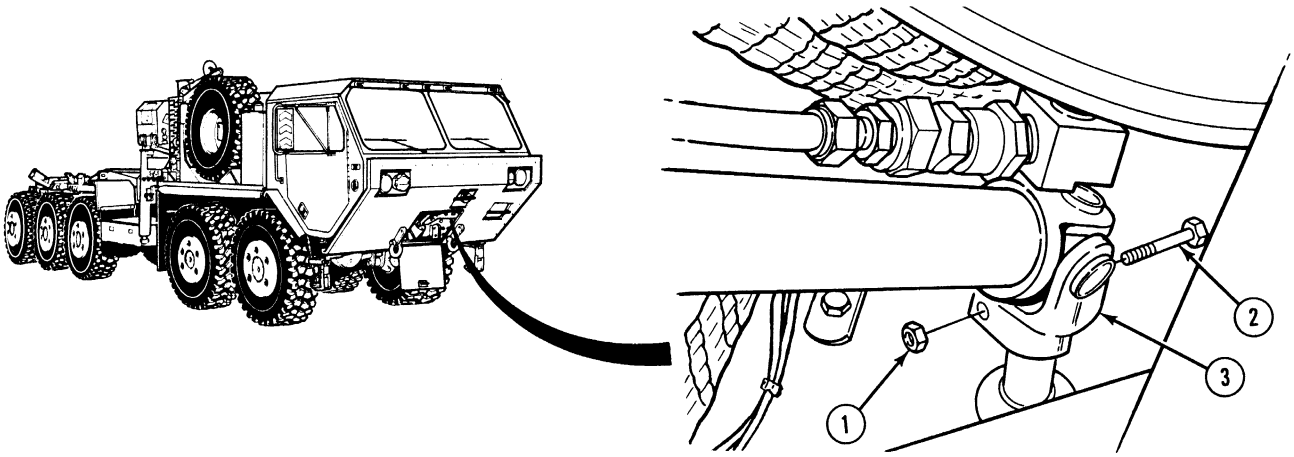

(1) Remove locknut (1) and screw (2) from U-joint (3). Discard locknut.

14-8. STEERING COLUMN SHAFT REPLACEMENT (CONT).

(2) Remove steering shaft assembly (4) from bearing (5).

(3) With the aid of an assistant, remove three nuts (6), screws (7), retaining plate (8), bearing (5) and retaining plate (9) from cab (10). Discard lockwashers.

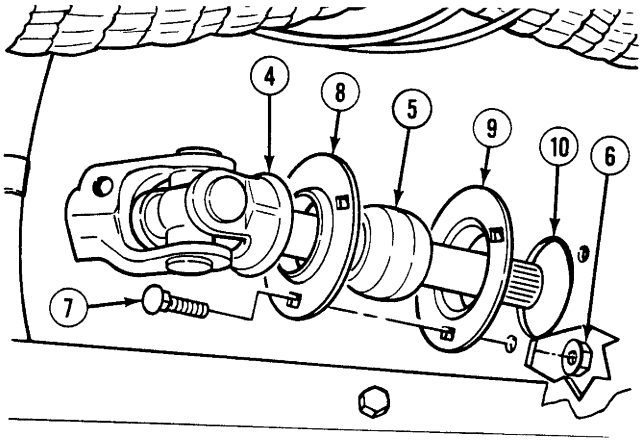

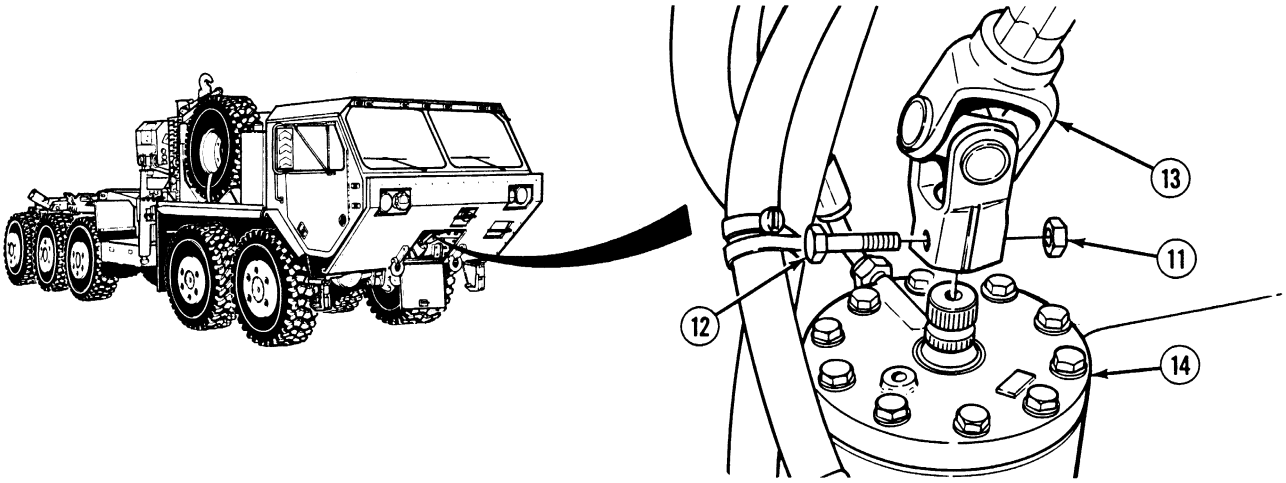

NOTE

Note location and position of yoke on steering gear prior to removal.

(4) Remove locknut (11), screw (12) and steering shaft (13) from steering gear (14). Discard locknut.

b. Installation.

NOTE

Ensure yoke on steering gear is installed as noted prior to removal.

(1) Install steering shaft (13) on steering gear (14) with screw (12) and locknut (11).

(2) With the aid of an assistant, install retaining plate (9), bearing (5) and retaining plate (8) in cab (10) with three screws (7) and nuts (6).

(3) Install steering shaft assembly (4) in bearing (5).

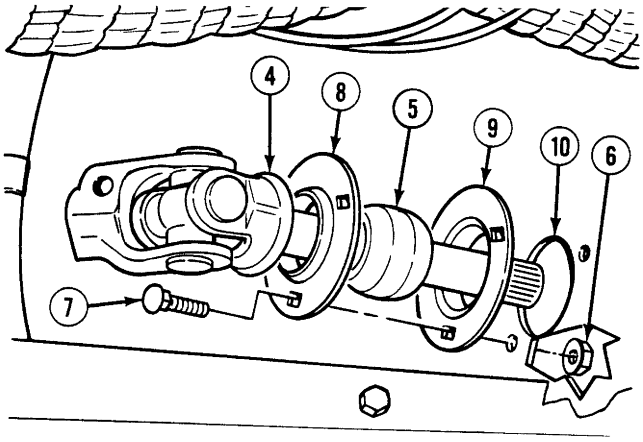

(4) Install screw (2) and locknut (1) on U-joint (3).

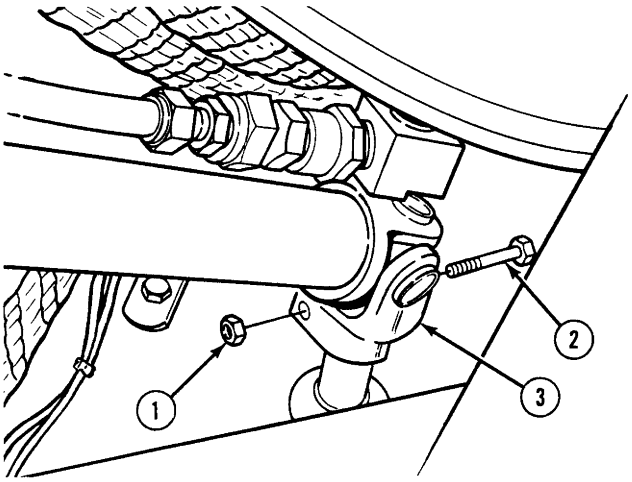

c. Follow-On Maintenance:

- Install 90 degree gearbox, (Para 14-13).
- Close front access cover, (TM 9-2320-364-10).
- Remove wheel chocks, (TM 9-2320-364-10).

END OF TASK

14-9. GEAR BOX STEERING SHAFT REPAIR.

This task covers:

a. Removal
b. Disassembly
c. Cleaning/Inspection
d. Assembly
e. Installation
f. Follow-On Maintenance

INITIAL SETUP

Tools and Special Tools
Tool Kit, General Mechanic's: Automotive (Item 74, Appendix G)
Bar, Crow (Item 4, Appendix G)
Compressor Unit, Air (Item 11, Appendix G)
Gloves, Chemical Oil Protective (Item 28, Appendix G)
Goggles, Industrial (Item 30, Appendix G)
Gun, Airblow (Item 31, Appendix G)
Wrench, Torque (0 to 175 lb-ft [0 to 24 N·m]) (Item 95, Appendix G)

Materials/Parts
Cable Ties (2) (Item 25, Appendix C)
Cross and Bearing (Item 28, Appendix F)
Fitting, Lubrication (Item 42, Appendix F)
Key (Item 85, Appendix F)
Locknut (Item 133, Appendix F)
Locknut (Item 143, Appendix F)

Equipment Condition
Engine OFF, (TM 9-2320-364-10)
Wheels chocked, (TM 9-2320-364-10)

a. Removal.

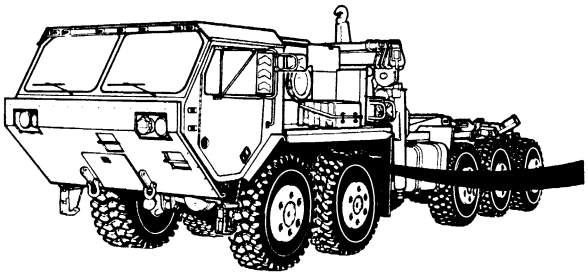

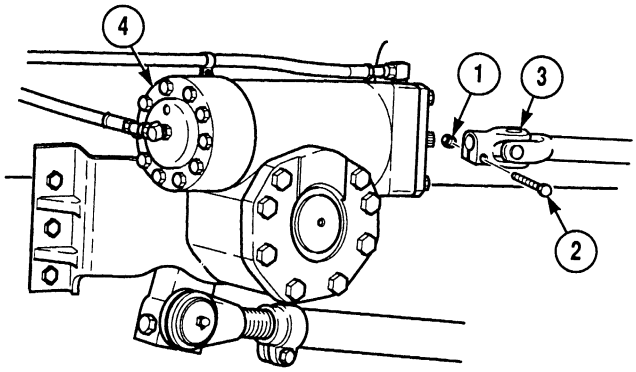

NOTE

- Note location and position of steering shaft yokes on intermediate steering box and gear reduction box prior to removal.
- Do not move truck during replacement of steering shaft. If wheels are moved, notify Direct Support to perform steering timing procedure.

(1) Remove locknut (1), screw (2) and steering shaft (3) from intermediate steering gear assembly (4). Discard locknut.

(2) Remove locknut (5), screw (6), steering shaft (3) and key (7) from reduction gear box (8). Discard locknut and key.

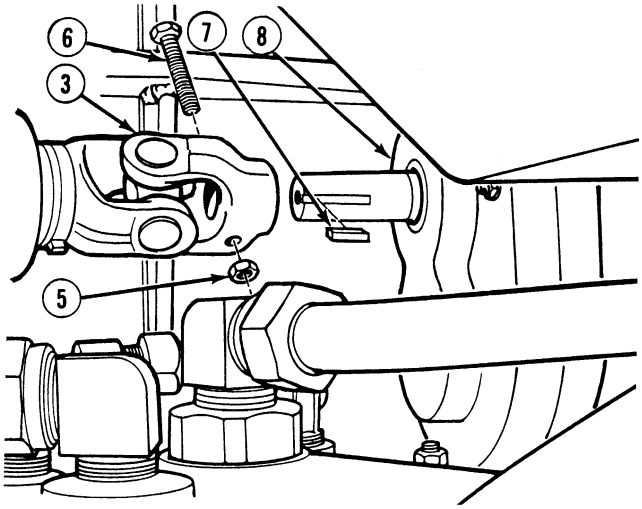

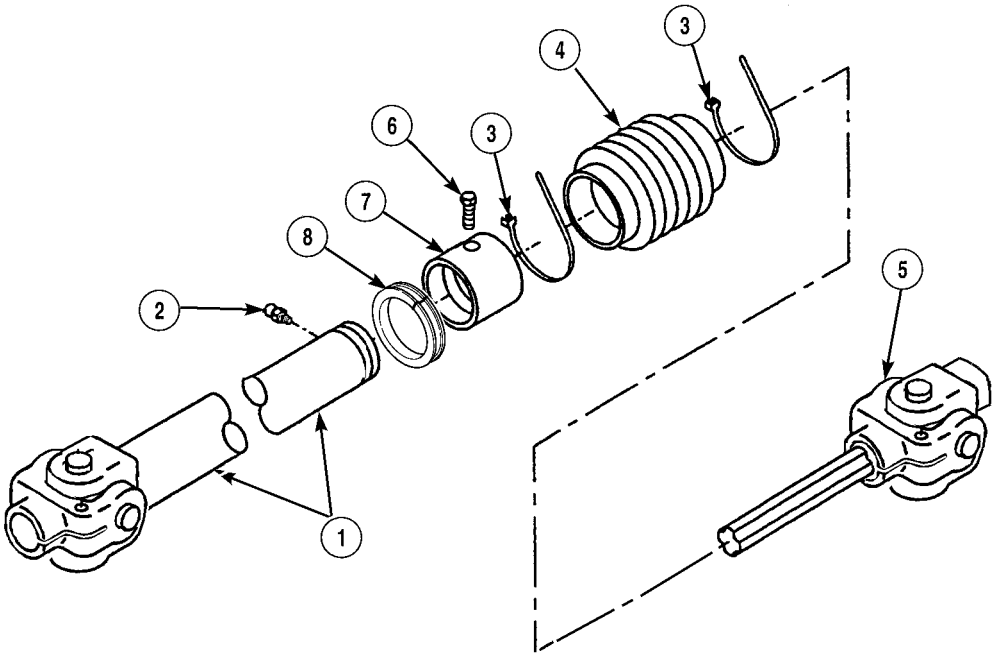

b. Disassembly.

(1) Position steering shaft (1) on clean work surface.

(2) Remove lube fitting (2) from steering shaft (1).

(3) Remove two tie straps (3) from dust boot (4) and position dust boot (4) on yoke end (5).

(4) Remove screw (6) from dust cap (7).

(5) Remove yoke end (5), dust boot (4), dust cap (7) and ring clamp (8) from steering shaft (1).

14-9. GEAR BOX STEERING SHAFT REPAIR (CONT).

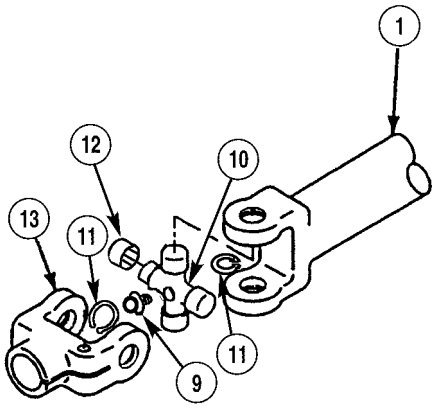

NOTE

- Rod end clevis and yoke end cross and bearing assemblies are removed the same way.
- Rod end clevis shown.

(6) Remove lube fitting (9) from cross and bearing assembly (10).

WARNING

Use care when removing retaining rings. Retaining rings are under spring tension and can act as projectiles when released and could cause severe eye injury.

(7) Remove four retaining rings (11) from cross and bearing assembly (10).

CAUTION

Use caution when removing bearing assemblies. Needles in bearing assemblies may become lost or damaged.

(8) Remove four bearing assemblies (12) from steering shaft (1) and rod end clevis (13).

(9) Remove rod end clevis (13) and cross and bearing assembly (8) from steering shaft (1).

(10) Repeat Steps (6) through (9) for yoke end cross and bearing assembly removal.

c. Cleaning/Inspection.

WARNING

- Drycleaning Solvent (P-D-680) is TOXIC and flammable. Wear protective goggles, face shield, and gloves; use only in a well-ventilated area; avoid contact with skin, eyes, and clothes, and do not breathe vapors. Keep away from heat or flame. Never smoke when using solvent. The flashpoint for Type II Drycleaning Solvent is 140 degrees F (60 degrees C) and Type III Drycleaning Solvent is 200 degrees F (93 degrees C). Failure to do so may result in injury or death to personnel.
- If personnel become dizzy while using cleaning solvent, immediately get fresh air and medical help. If solvent contacts skin or clothes, flush with cold water. If solvent contacts eyes, immediately flush eyes with water and get immediate medical attention.

(1) Clean all metal parts with drycleaning solvent.

WARNING

Compressed air used for cleaning purposes will not exceed 30 psi (207 kPa). Use only with effective chip guarding and personal protective equipment (goggles/shield, gloves, etc.). Failure to comply may result in injury or death to personnel.

(2) Dry all parts with compressed air.

(3) Inspect steering shaft for cracks or dents.

(4) Inspect universal joint for pitting and gouges.

(5) Inspect bearing caps for cracks or missing needle bearings.

(6) Inspect splines and dust cap for cracks.

(7) Replace all damaged parts.

14-9. GEAR BOX STEERING SHAFT REPAIR (CONT).

d. Assembly.

NOTE

- Rod end clevis and yoke end cross and bearing assemblies are installed the same way.
- Rod end clevis shown.

(1) Position cross and bearing assembly (10) and rod end clevis (13) in steering shaft (1).

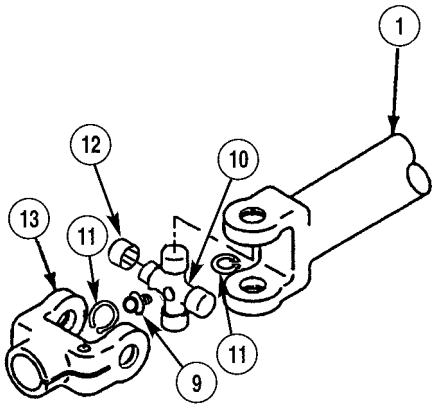

CAUTION

Use caution when installing bearing assemblies. Needles in bearing assemblies may become lost or damaged.

(2) Install four bearing assemblies (12) in steering shaft (1) and rod end clevis (13).

WARNING

Use care when installing retaining rings. Retaining rings are under spring tension and can act as projectiles when released and could cause severe eye injury.

(3) Install four retaining rings (11) on cross and bearing assembly (10).

(4) Install lube fitting (9) on cross and bearing assembly (10).

(5) Repeat Steps (1) through (4) for yoke end cross and bearing assembly installation.

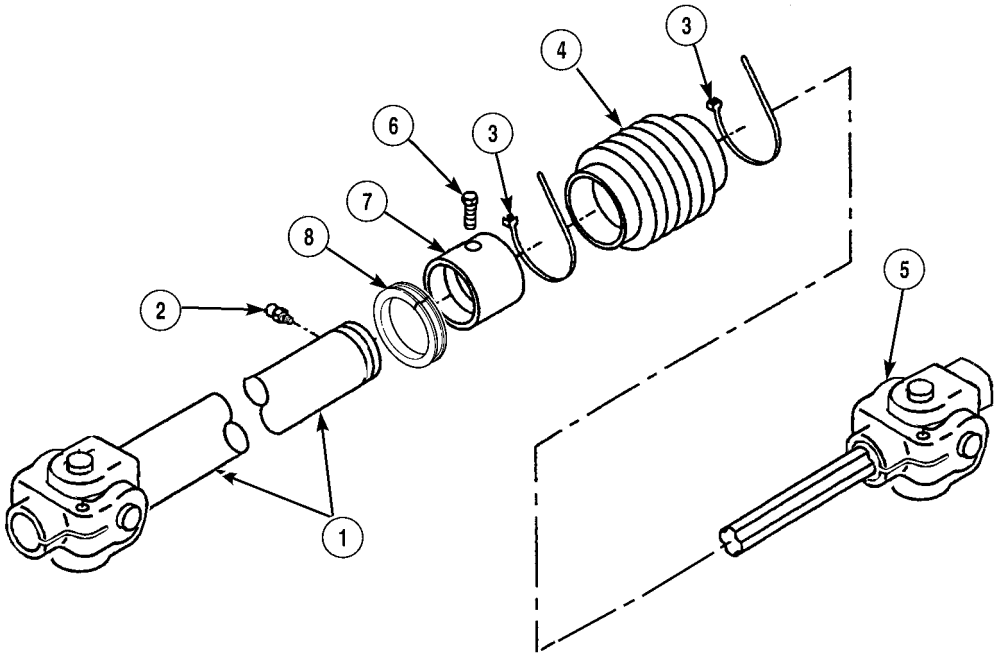

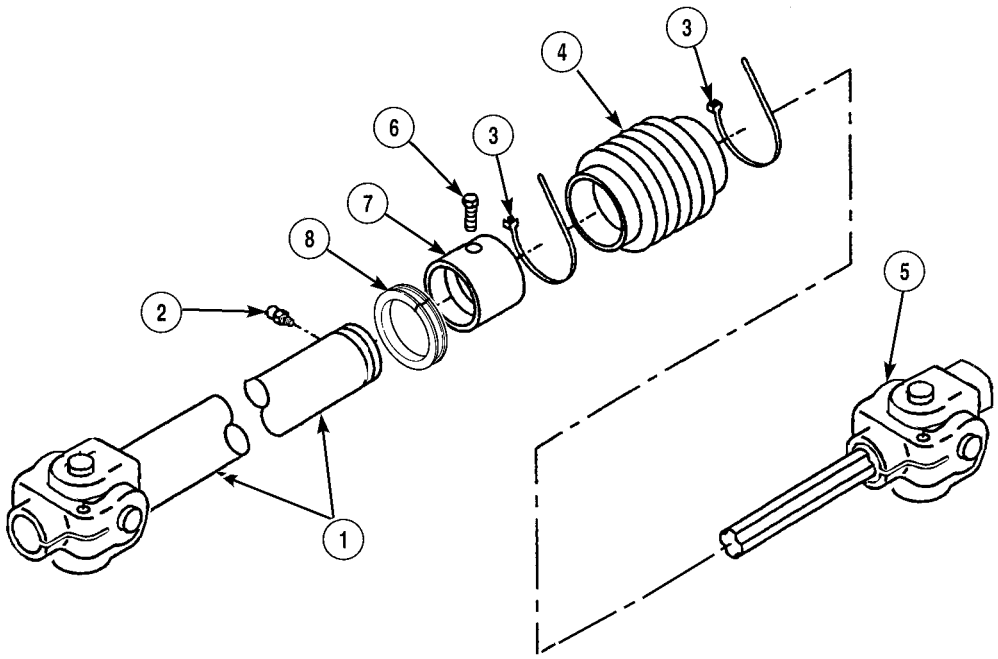

(6) Position ring clamp (8), dust cap (7), dust boot (4) and yoke end (5) on steering shaft (1).

(7) Install screw (6) in dust cap (7).

(8) Install dust boot (4) on yoke end (5) and steering shaft (1), using two tie straps (3).

(9) Install lube fitting (2) on steering shaft (1).

e. Installation.

(1) Install key (7) on reduction gear box (8).

NOTE

- Align key on gear reduction box with slot in yoke.
- Ensure steering shaft yokes are installed as noted prior to removal.

(2) Install steering shaft (3) on reduction gear box (8).

(3) Install screw (6) and locknut (5) on steering shaft (3).

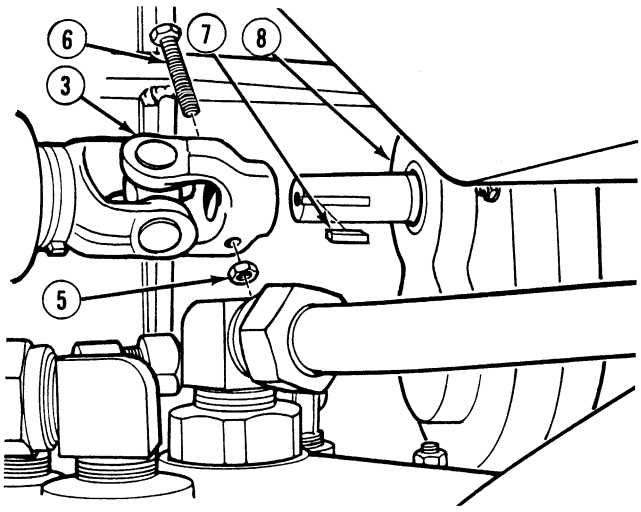

14-9. GEAR BOX STEERING SHAFT REPAIR (CONT).

(4) Install steering shaft (3) on intermediate steering gear assembly (4).

(5) Install screw (2) and locknut (1) on steering shaft (3).

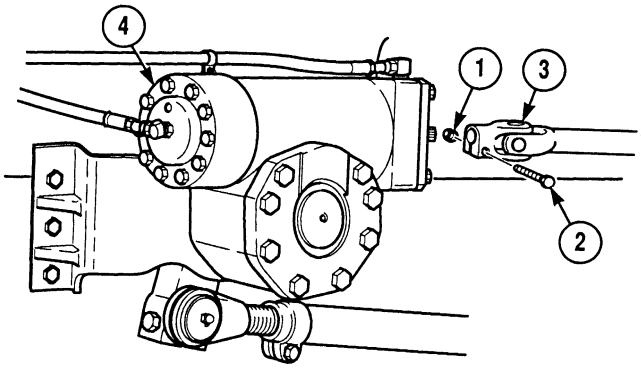

f. Follow-On Maintenance:

- Lubricate steering shaft, (Para 2-9).
- Remove wheel chocks, (TM 9-2320-364-10).

END OF TASK

14-10. AXLE NO. 5 STEERING SHAFT REPAIR.

This task covers:

a. Removal b. Installation c. Follow-On Maintenance

INITIAL SETUP

Tools and Special Tools
Tool Kit, General Mechanic's: Automotive (Item 74, Appendix G)
Bar, Crow (Item 4, Appendix G)
Compressor Unit, Air (Item 11, Appendix G)
Gloves, Chemical Oil Protective (Item 28, Appendix G)
Goggles, Industrial (Item 30, Appendix G)
Gun, Airblow (Item 31, Appendix G)
Wrench, Torque (0 to 175 lb-ft [0 to 237 N·m]) (Item 95, Appendix G)

Materials/Parts
Cable Ties (2) (Item 25, Appendix C)
Cross and Bearing (Item 28, Appendix F)
Fitting, Lubrication (Item 42, Appendix F)
Locknut (Item 133, Appendix F)
Locknut (Item 143, Appendix F)

Equipment Condition
Engine OFF, (TM 9-2320-364-10)
Wheels chocked, (TM 9-2320-364-10)

a. Removal.

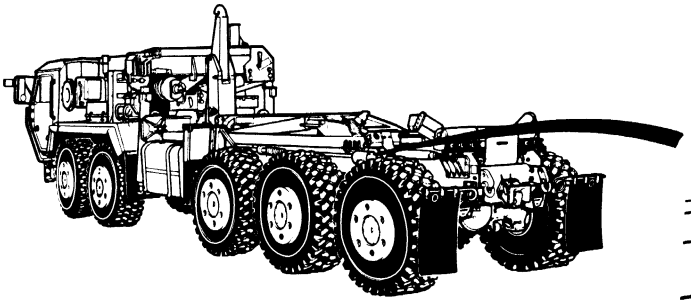

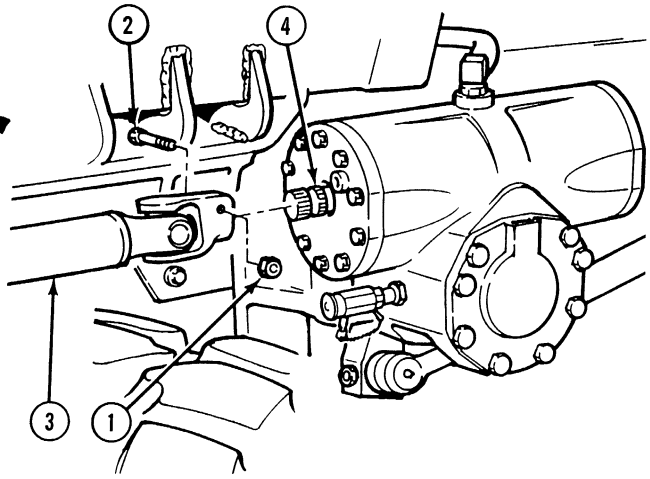

NOTE

- Note location and position of steering shaft yoke on steering gear prior to removal.
- Do not move truck during replacement. If wheels are moved, notify Direct Support to perform steering timing procedure.

(1) Remove locknut (1), screw (2) and steering shaft (3) from splined end of steering gear (4). Discard locknut.

14-10. AXLE NO. 5 STEERING SHAFT REPAIR (CONT).

(2) Remove locknut (5), screw (6), steering shaft (3) from steering shaft (7). Discard locknut.

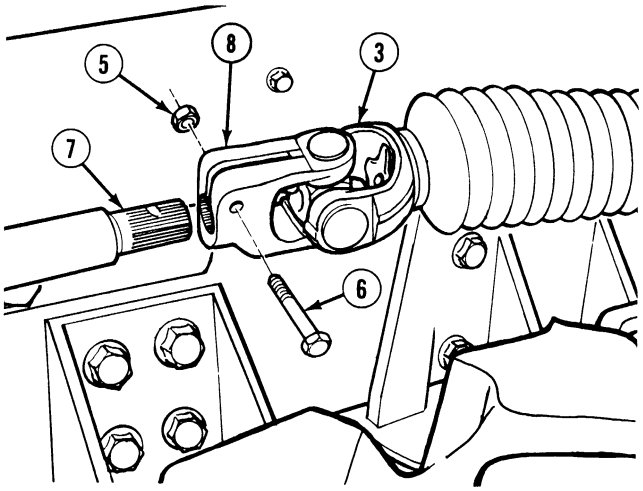

b. Disassembly.

(1) Position steering shaft (1) on clean work surface.

(2) Remove lube fitting (2) from steering shaft (1).

(3) Remove two tie straps (3) from dust boot (4) and position dust boot (4) on yoke end (5).

(4) Remove screw (6) from dust cap (7).

(5) Remove yoke end (5), dust boot (4), dust cap (7) and ring clamp (8) from steering shaft (1).

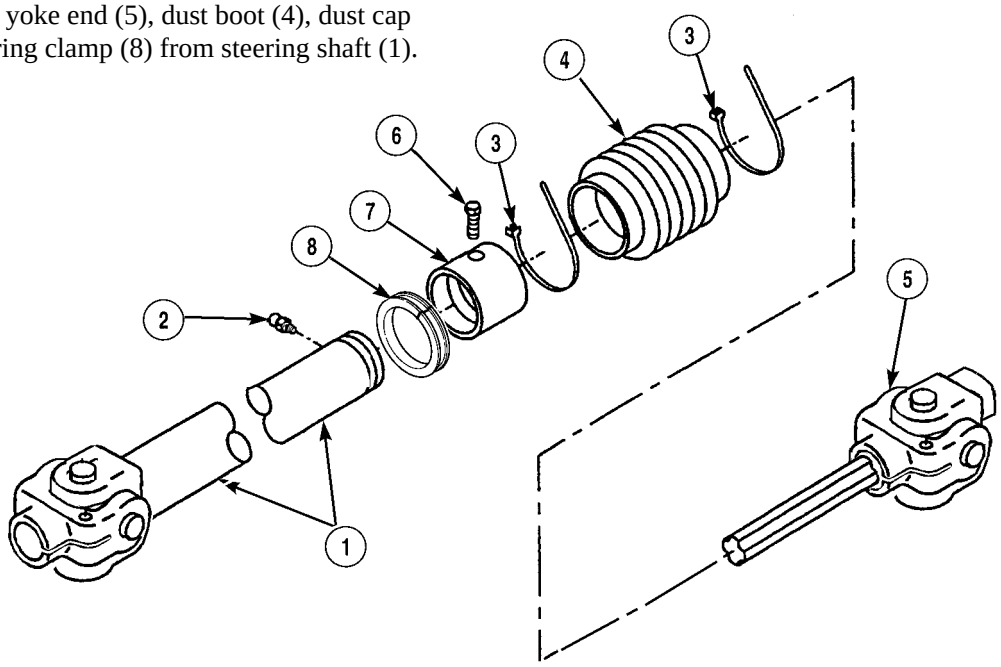

NOTE

- Rod end clevis and yoke end cross and bearing assemblies are removed the same way.
- Rod end clevis shown.

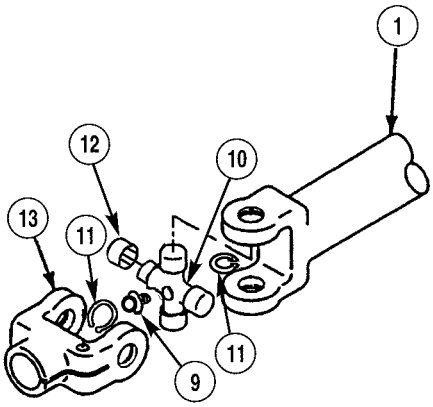

(6) Remove lube fitting (9) from cross and bearing assembly (10).

WARNING

Use care when removing retaining rings. Retaining rings are under spring tension and can act as projectiles when released and could cause severe eye injury.

(7) Remove four retaining rings (11) from cross and bearing assembly (10).

CAUTION

Use caution when removing bearing assemblies. Needles in bearing assemblies may become lost or damaged.

(8) Remove four bearing assemblies (12) from steering shaft (1) and rod end clevis (13).

(9) Remove rod end clevis (13) and cross and bearing assembly (10) from steering shaft (1).

(10) Repeat Steps (6) through (9) for yoke end cross and bearing assembly removal.

14-10. AXLE NO. 5 STEERING SHAFT REPAIR (CONT).

c. Cleaning/Inspection.

WARNING

- Drycleaning Solvent (P-D-680) is TOXIC and flammable. Wear protective goggles, face shield, and gloves; use only in a well-ventilated area; avoid contact with skin, eyes, and clothes, and do not breathe vapors. Keep away from heat or flame. Never smoke when using solvent. The flashpoint for Type II Drycleaning Solvent is 140 degrees F (60 degrees C) and Type III Drycleaning Solvent is 200 degrees F (93 degrees C). Failure to do so may result in injury or death to personnel.
- If personnel become dizzy while using cleaning solvent, immediately get fresh air and medical help. If solvent contacts skin or clothes, flush with cold water. If solvent contacts eyes, immediately flush eyes with water and get immediate medical attention.

(1) Clean all metal parts with drycleaning solvent.

WARNING

Compressed air used for cleaning purposes will not exceed 30 psi (207 kPa). Use only with effective chip guarding and personal protective equipment (goggles/shield, gloves, etc.). Failure to comply may result in injury or death to personnel.

(2) Dry all parts with compressed air.

(3) Inspect steering shaft for cracks or dents.

(4) Inspect universal joint for pitting and gouges.

(5) Inspect bearing caps for cracks or missing needle bearings.

(6) Inspect splines and dust cap for cracks.

(7) Replace all damaged parts.

d. Assembly

NOTE

- Rod end clevis and yoke end cross and bearing assemblies are installed the same way.
- Rod end clevis shown.

(1) Position cross and bearing assembly (10) and rod end clevis (13) in steering shaft (1).

CAUTION

Use caution when installing bearing assemblies. Needles in bearing assemblies may become lost or damaged.

(2) Install four bearing assemblies (12) in steering shaft (1) and rod end clevis (13).

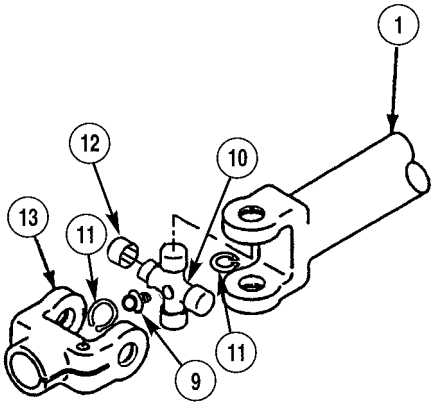

WARNING

Use care when installing retaining rings. Retaining rings are under spring tension and can act as projectiles when released and could cause severe eye injury.

(3) Install four retaining rings (11) on cross and bearing assembly (10).

(4) Install lube fitting (9) on cross and bearing assembly (10).

(5) Repeat Steps (1) through (4) for yoke end cross and bearing assembly installation.

14-10. AXLE NO. 5 STEERING SHAFT REPAIR (CONT).

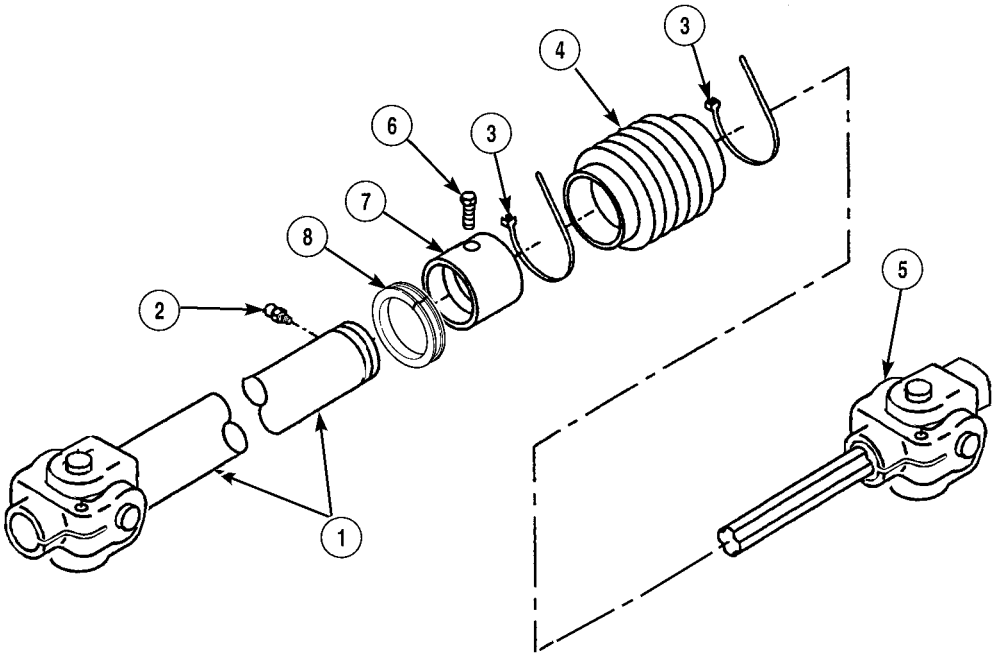

(6) Position ring clamp (8), dust cap (7), dust boot (4) and yoke end (5) on steering shaft (1).

(7) Install screw (6) in dust cap (7).

(8) Install dust boot (4) on yoke end (5) and steering shaft (1), using two tie straps (3).

(9) Install lube fitting (2) on steering shaft (1).

e. Installation.

(1) Collapse steering shaft (3) slightly and install yoke (8) on steering shaft (7).

(2) Install screw (6) and nut (5) in yoke (8). Tighten to 35 lb-ft (47 N·m).

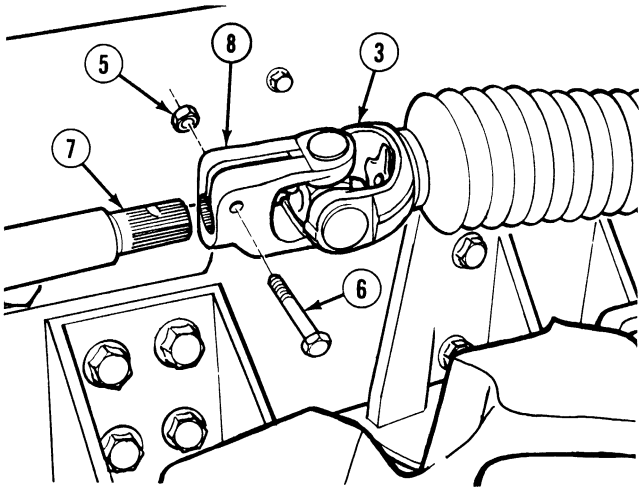

NOTE

Ensure steering shaft yokes are installed as noted prior to removal.

(3) Install yoke (9) on steering gear shaft (4).

(4) Install screw (2) and locknut (1) in yoke (9) and steering gear (4). Tighten to 35 lb-ft (47 N·m).

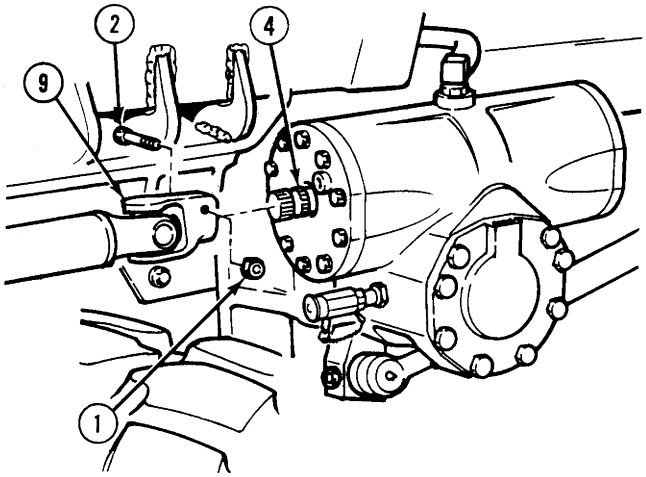

f. Follow-On Maintenance:

- Lubricate steering shaft, (Para 2-9).
- Remove wheel chocks, (TM 9-2320-364-10).

END OF TASK

14-11. AXLE NO. 1, 2 AND 5 TIE-ROD REPAIR.

This task covers:

a. Removal
b. Disassembly
c. Cleaning/Inspection
d. Assembly
e. Installation
f. Follow-On Maintenance

INITIAL SETUP

Tools and Special Tools
Tool Kit, General Mechanic's: Automotive (Item 74, Appendix G)
Compressor Unit, Air (Item 11, Appendix G)
Gloves, Chemical Oil Protective (Item 28, Appendix G)
Goggles, Industrial (Item 30, Appendix G)
Gun, Air Blow (Item 31, Appendix G)
Jack Kit, Hydraulic, Hand (Item 41, Appendix G)
Tape Measure (Item 66, Appendix G)
Wrench, Combination 1-5/16 in. (Item 81, Appendix G)
Wrench, Torque (0 to 175 [0 to 237 N·m]) (Item 95, Appendix G)

Materials/Parts
Solvent, Drycleaning (Item 87, Appendix C)
Locknut (Item 127, Appendix F)
Pin, Cotter (2) (Item 277, Appendix F)

Personnel Required
Two

Equipment Condition
Engine OFF, (TM 9-2320-364-10)
Wheels chocked, (TM 9-2320-364-10)
Wheel/tire removed, (TM 9-2320-364-10)

a. Removal.

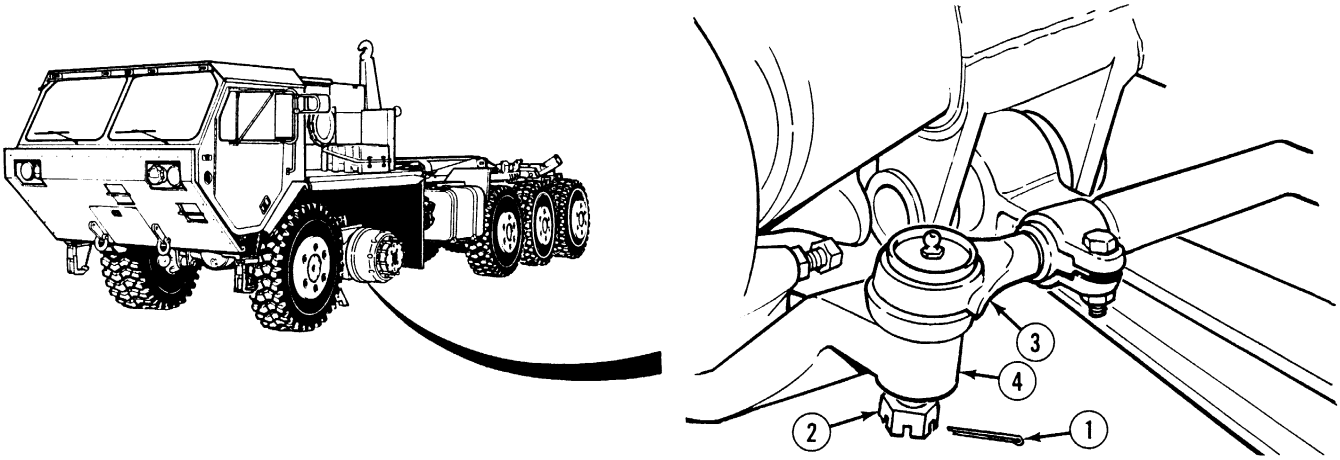

NOTE

- Note location of tie-rod ends prior to removal.
- All tie rods are removed the same. Axle No. 2 shown.

(1) Remove cotter pin (1) and loosen castle nut (2) until it is flush with bottom of stud on tie-rod end (3). Discard cotter pins.

WARNING

Tie-rod end may unexpectedly pop-up when pressure is applied with hydraulic jack. Keep hands and face clear of tie-rod end. Failure to comply may result in severe injury to personnel.

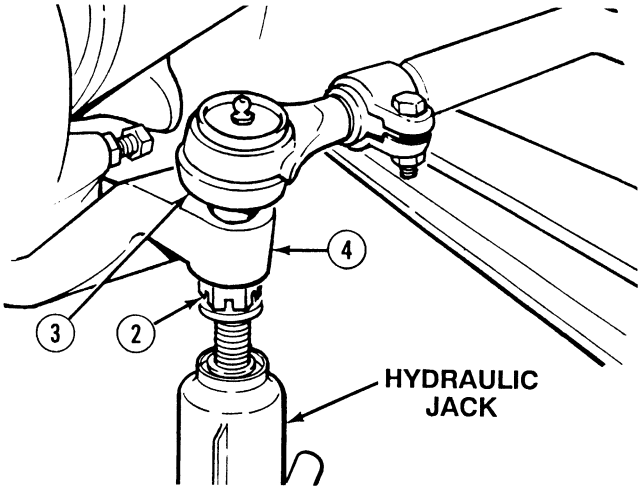

(2) Position hydraulic hand jack under tie-rod end (3).

(3) Using hydraulic hand jack, press tie-rod end (3) from steering arm (4).

(4) Remove hydraulic jack from under tie-rod end (3).

(5) Remove castle nut (2) from tie-rod end (3).

(6) Repeat Steps (1) through (5) to remove remaining tie-rod end.

b. Disassembly.

NOTE

- Note location and position of tie-rod ends prior to removal.
- Both tie-rod ends are removed the same way.

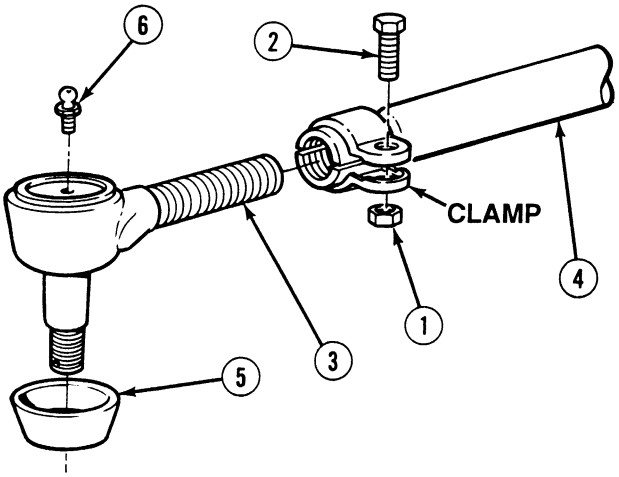

(1) Remove locknut (1) and screw (2) from clamp. Discard locknut.

(2) Remove tie-rod end (3) from tie-rod (4).

NOTE

Do not perform Steps (3) and (4) if tie-rod end is lube for life. These are permanently lubricated, have no lube fitting, and dust cover is part of tie-rod end.

(3) Remove dust cover (5) from tie-rod end (3).

NOTE

Perform Step (4) if grease fitting is damaged.

(4) Remove grease fitting (6) from tie-rod end (3).

(5) Repeat Steps (1) through (4) for remaining tie-rod end (3).

14-11. AXLE NO. 1, 2 AND 5 TIE-ROD REPAIR (CONT).

c. Cleaning/Inspection.

WARNING

- Drycleaning Solvent (P-D-680) is TOXIC and flammable. Wear protective goggles, face shield, and gloves; use only in a well-ventilated area; avoid contact with skin, eyes, and clothes, and do not breathe vapors. Keep away from heat or flame. Never smoke when using solvent. The flashpoint for Type II Drycleaning Solvent is 140 degrees F (60 degrees C) and Type III Drycleaning Solvent is 200 degrees F (93 degrees C). Failure to do so may result in injury or death to personnel.
- If personnel become dizzy while using cleaning solvent, immediately get fresh air and medical help. If solvent contacts skin or clothes, flush with cold water. If solvent contacts eyes, immediately flush eyes with water and get immediate medical attention.
- Compressed air used for cleaning purposes will not exceed 30 psi (207 kPa). Use only with effective chip guarding and personal protective equipment (goggles/shield, gloves, etc). Failure to comply may result in injury or death to personnel.

(1) Clean all metal parts with drycleaning solvent.

(2) Dry all metal parts with compressed air.

(3) Clean rubber parts with clean, dry cloth.

(4) Inspect all metal parts for cracks, stripped threads and other signs of wear.

(5) Replace all damaged parts.

d. Assembly.

NOTE

- Both tie-rod ends are installed the same way.
- Ensure tie-rod ends are installed as noted prior to removal.
- Perform Step (1) if grease fitting was removed.
- Do not perform Steps (1) and (2) if tie-rod end is lube for life.

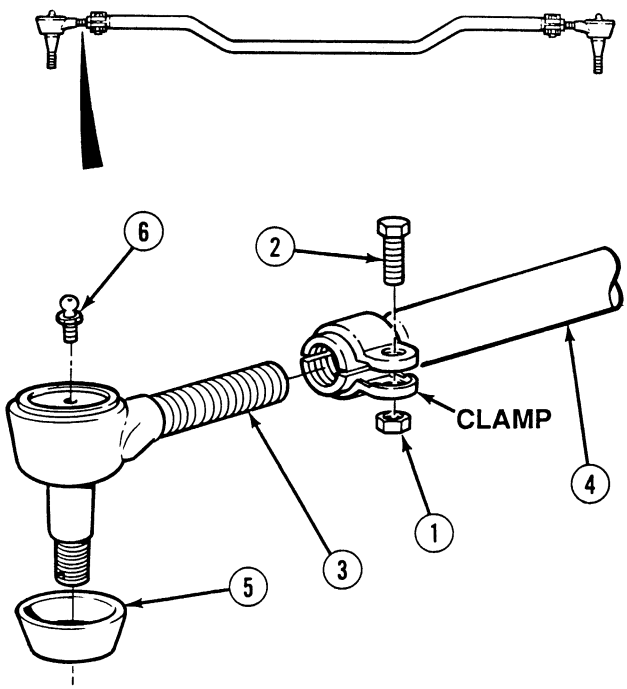

(1) Install grease fitting (6) on tie-rod end (3).

(2) Install dust cover (5) on tie-rod end (3).

NOTE

Ensure that tie-rod and tie-rod ends are pointed in same direction.

(3) Install tie-rod end (3) on tie-rod (4).

(4) Position screw (2) and locknut (1) in clamp.

(5) Repeat Steps (1) through (4) for remaining tie-rod end (3).

NOTE

If tie-rod rod ends are lube for life, measure at center of tie-rod ends.

(6) Measure distance between two grease fittings (6) on tie-rod ends (3).

(7) Turn tie-rod ends (3) in or out evenly until measurement between grease fittings (6) are in compliance with Table 14-2.

Table 14-2. Tie-Rod Measurements

Tie-Rod	Measurement
Axle No. 1	56-5/8 in.
Axle No. 2	54-9/16 in.
Axle No. 5	51-9/16 in.

14-11. AXLE NO. 1, 2 AND 5 TIE-ROD REPAIR (CONT).

e. Installation.

CAUTION

- Tie-rod ends must be threaded into tie-rod so threads are beyond opening under clamp or damage to equipment will result.
- Do not turn tire to get drag link to fit. This will cause improper toe-in and damage to equipment may result.

NOTE

- One complete revolution of tie-rod end lengthens or shortens tie-rod 0.3125 in. (8 mm).
- Ensure tie-rod ends are installed as noted prior to removal.
- For Axle No. 1 and 5 Perform Step (1).
- For Axle No. 2 Perform Step (2).

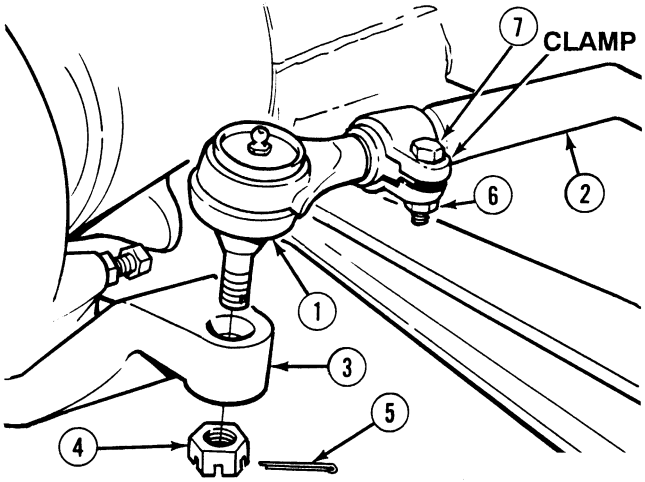

(1) Tighten locknut (6) on screw (7) to 80 to 90 lb-ft (108 to 122 N·m).

(2) Tighten locknut (6) on screw (7) to 50 to 60 lb-ft (68 to 81 N·m).

(3) Install tie-rod (2) on two steering arms (3).

(4) Install castle nut (4) on each tie-rod end (1). Tighten castle nuts to 150 to 200 lb-ft (203 to 271 N·m).

NOTE

Castle nut may need to be rotated slightly to install cotter pin.

(5) Install cotter pins (5) in castle nuts (4).

f. Follow-On Maintenance:

- Install wheel/tires, (TM 9-2320-364-10).
- Adjust toe-in, (Para 14-3).
- Remove wheel chocks, (TM 9-2320-364-10).

END OF TASK

14-12. TIE-ROD AND DRAG LINK INSPECTION.

This task covers:

a. Inspection

b. Follow-On Maintenance

INITIAL SETUP

Tools and Special Tools
Tool Kit, General Mechanic's: Automotive
(Item 74, Appendix G)
Gloves, Heavy Duty
(Item 29, Appendix G)

Equipment Condition
Engine OFF, (TM 9-2320-364-10)
Wheels chocked, (TM 9-2320-364-10)

a. Inspection.

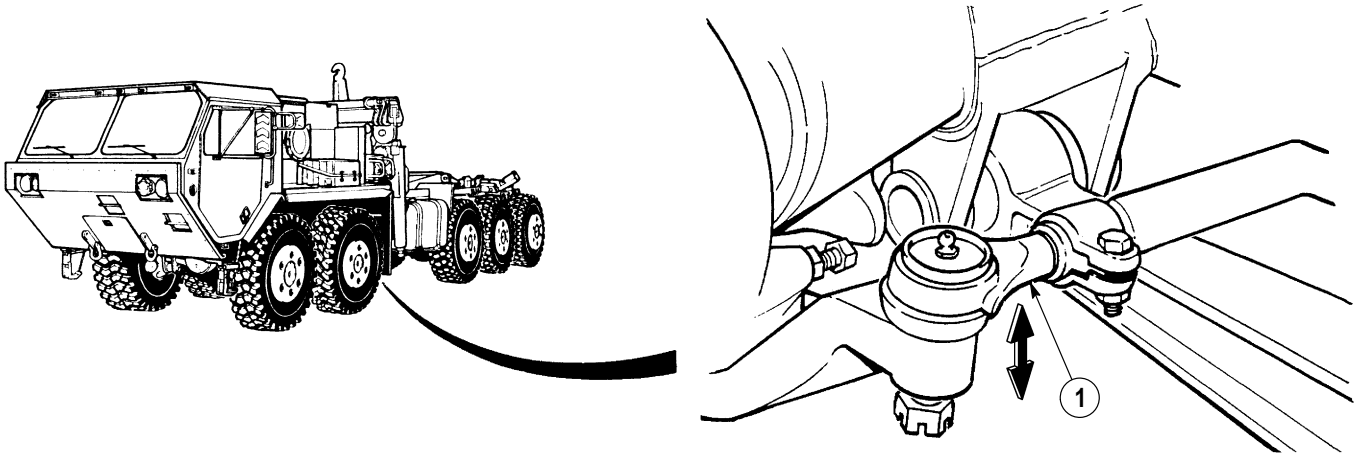

NOTE

Tie-rod and drag link end wear is determined by the amount of axial movement in the end. The arrow in the illustration shows the direction of axial movement in the end. Side to side, twisting or lateral movement is NOT an indication of end wear.

(1) Ensure wheels are straight ahead with no tension or binding on steering linkage and components.

CAUTION

Use hand force only in performing this inspection. Using mechanical and other leverage such as pry bars may damage the equipment.

(2) Using hand force only, check for wear of tie-rod ends or drag link ends (1) by pulling and pushing in a straight in and out motion only.

14-12. TIE-ROD AND DRAG LINK INSPECTION (CONT).

(3) Measure results. If:

(a) If movement is 1/8 inch (3.2 mm) or less no further action is required.

(b) If movement is between 1/16th inch (1.6 mm) and 1/8th inch (3.2 mm) plan to replace the end at the next scheduled service interval.

(c) If tie-rod end movement is 1/8th inch (3.2 mm) or more replace end immediately (Para 14-11). If drag link movement is greater than 1/8th inch (3.2 mm) notify Direct Support.

b. Follow-On Maintenance

- Remove wheel chocks, (TM 9-2320-364-10).

END OF TASK

14-13. 90 DEGREE GEAR BOX REPLACEMENT.

This task covers:

a. Removal b. Installation c. Follow-On Maintenance

INITIAL SETUP

Tools and Special Tools
Tool Kit, General Mechanic's: Automotive (Item 74, Appendix G)
Wrench, Torque (0 to 175 lb-ft [0 to 237 N·m]) (Item 95, Appendix G)

Materials/Parts
Locknut (Item 140, Appendix F)

Equipment Condition
Engine OFF, (TM 9-2320-364-10)
Wheels chocked, (TM 9-2320-364-10)
Steering lock removed, (Para 14-7)

a. Removal.

(1) Remove locknut (1) and screw (2) from yoke (3). Discard locknut.

CAUTION

Support gear box to keep gear box from falling or damage to equipment may result.

(2) Remove four screws (4) and gear box (5) from bracket (6).

(3) Remove gear box (5) from yoke (3).

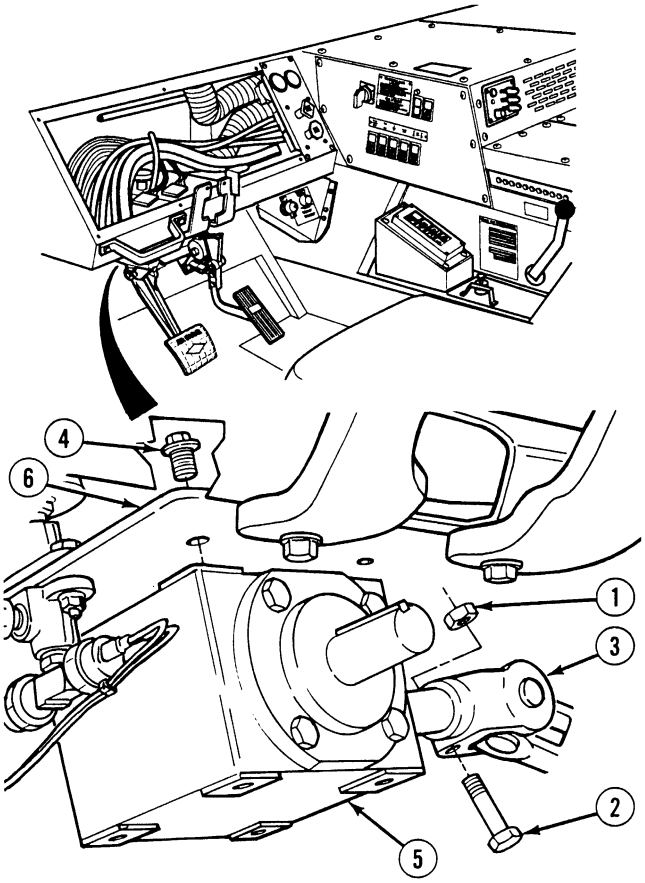

14-13. 90 DEGREE GEAR BOX REPLACEMENT (CONT).

b. Installation.

CAUTION

Place support under gear box to keep gear box from falling or damage to equipment may result.

(1) Position gear box (5) on yoke (3).

(2) Install gear box (5) on bracket (6) with four screws (4).

(3) Install screw (2) and locknut (1) on yoke (3). Tighten screw 19 to 30 lb-ft (25 to 41 N·m).

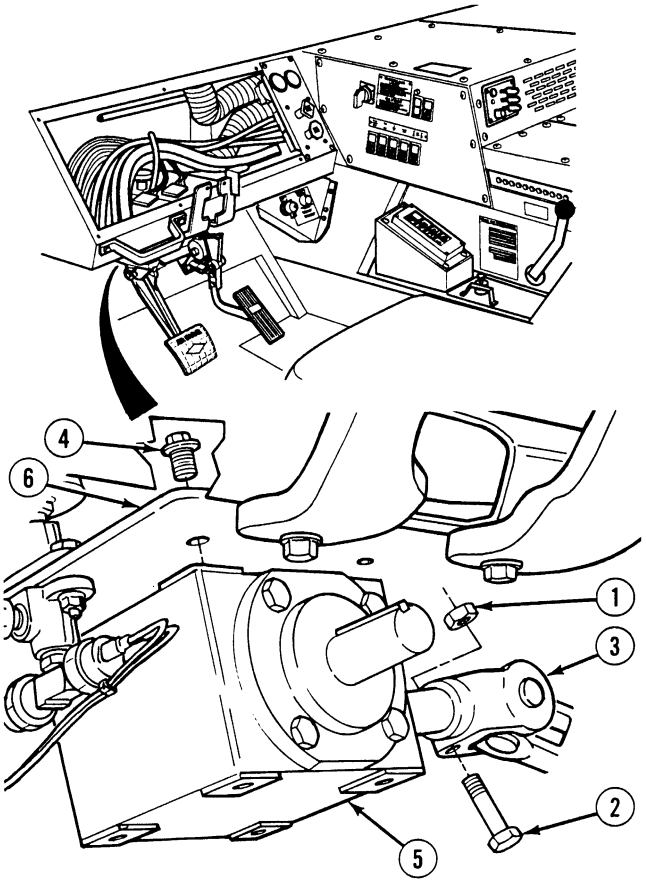

c. Follow-On Maintenance:

- Install steering lock, (Para 14-7).
- Remove wheel chocks, (TM 9-2320-364-10).

END OF TASK

14-14. STEERING HYDRAULIC HOSES AND FITTINGS REPLACEMENT.

This task covers:

a. Hose Locations

b. Follow-On Maintenance

INITIAL SETUP

Tools and Special Tools
Tool Kit, General Mechanic's: Automotive (Item 74, Appendix G)
Cap and Plug Set (Item 8, Appendix G)

Materials/Parts
Cable Ties (Item 26, Appendix C)
Tags, Identification (Item 88, Appendix C)

Equipment Condition
Engine OFF, (TM 9-2320-364-10)
Wheels chocked, (TM 9-2320-364-10)
Steering reservoir drained, (Para 14-2)

a. Hose Locations.

CAUTION

Equipment may be damaged by foreign matter if hoses, tubes and connectors are not plugged and capped when removed.

NOTE

- This procedure is for reference only to show location of hoses used on the truck. It will never be necessary to remove all hoses at one time. Individual tasks will indicate the area where hoses are removed and installed.
- As items are removed, cap and plug all hoses, tubes and connectors.
- Tag and mark all hoses, pipes and tubes before removal.
- Remove and replace cable ties as required.
- Remove clamps and support brackets as required.

14-14. STEERING HYDRAULIC HOSES AND FITTINGS REPLACEMENT (CONT).

Table 14-3. Steering Hydraulic Hose Locations

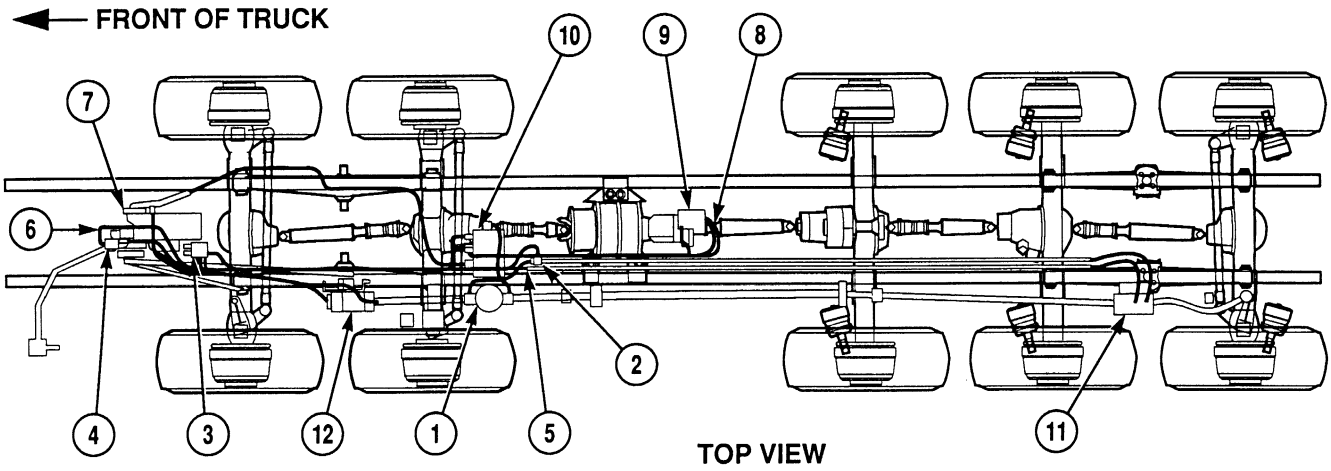

Hose No.	From	To
2883	Steering Filter, Front (1)	3/4-in. Hydraulic Tube (2)
2726	Steering Valve, Rear, Lower (3)	3/4-in. Hydraulic Tube (2)
2301	Steering Valve, Left Upper, Rear (3)	Front Steering Gear, Front (4)
2274	Steering Valve, Left, Lower, Rear (3)	1/2-in. Hydraulic Tube, Front (4)
2503	Main Hydraulic Pump Manifold, Front (6)	Main Steering Pump, Left Side Center (7)
2907	Main Hydraulic Pump Manifold, Rear, (6)	Aux Steering Manifold, Rear, Lower, Left (8)
2393	Steering Valve, Left, Upper (3)	Main Steering Pump Manifold, Left, Center (6)
2496	Steering Valve, Left, Lower Left (3)	Aux Steering Manifold, Lower, Right (8)
2506	Aux Steering Pump, Bottom, Left (9)	Aux Steering Pump, Upper (8)
2701	Steering Reservoir, Front, Center, Lower Tee (10)	Main Steering Pump, Right Rear (7)
2278	Steering Reservoir, Front, Left (10)	Main Steering Pump, Right Rear (7)
2302	Steering Reservoir, Front, Right (10)	Aux Steering Pump, Right, Front (7)
2553	Steering Reservoir, Right (10)	Steering Filter, Rear (1)
2276	3/4-in. Hydraulic Tube, Rear (2)	Rear Steering Gear, Rear (11)
2275	1/2-in. Hydraulic Tube, Rear (5)	Rear Steering Gear, Top (11)
2877	Front Steering Gear, Bottom (4)	Slave Steering Gear, Front (12)
2878	Front Steering Gear, Top, Front (4)	Slave Steering Gear, Top (12)
2928	Front Steering Gear, Top, Rear (4)	Steering Valve, Rear, Top (3)
2286	Aux Steering Pump, Upper Rear, Center (8)	Reservoir, Front, Center, Tee (10)

b. Follow-On Maintenance:

- Fill steering reservoir, (LO 9-2320-364-12).
- Remove wheel chocks, (TM 9-2320-364-10).

END OF TASK

14-15. STEERING HYDRAULIC RESERVOIR REPAIR.

This task covers:

a. Removal
b. Disassembly
c. Cleaning/Inspection
d. Assembly
e. Installation
f. Follow-On Maintenance

INITIAL SETUP

Tools and Special Tools

Tool Kit, General Mechanic's: Automotive (Item 74, Appendix G)
Cap and Plug Set (Item 8, Appendix G)
Compressor Unit, Air (Item 11, Appendix G)
Gloves, Chemical and Oil Protective (Item 28, Appendix G)
Goggles, Industrial (Item 30, Appendix G)
Gun, Air Blow (Item 31, Appendix G)
Pan, Drain (Item 46, Appendix G)
Socket Set, 3/8 in. (Item 62, Appendix G)
Wrench, Combination, 1-1/8 in. (Item 79, Appendix G)
Wrench, Combination, 1-3/8 in. (Item 82, Appendix G)
Wrench, Combination, 1-7/8 in. (Item 87, Appendix G)
Wrench, Torque (0 to 175 lb-ft [0 to 237 N·m]) (Item 95, Appendix G)
Wrench, Torque, (0 to 60 N·m) (Item 98, Appendix G)

Materials/Parts

Oil, Lubricating (Item 47, Appendix C)
Solvent, Drycleaning (Item 87, Appendix C)
Gasket (Item 50, Appendix F)
Gasket (Item 70, Appendix F)
Locknut (4) (Item 96, Appendix F)
Locknut (21) (Item 106, Appendix F)
Packing, Preformed (3) (Item 226, Appendix F)
Packing, Preformed (Item 231, Appendix F)
Packing, Preformed (Item 232, Appendix F)
Packing, Preformed (Item 234, Appendix F)
Packing, Preformed (2) (Item 251, Appendix F)
Packing, Preformed (Item 255, Appendix F)
Packing, Preformed (Item 259, Appendix F)

Equipment Condition

Engine OFF, (TM 9-2320-364-10)
Wheels chocked, (TM 9-2320-364-10)
Left side noise panel removed, (Para 17-28)
Steering reservoir drained, (Para 14-2)

14-15. STEERING HYDRAULIC RESERVOIR REPAIR (CONT).

a. Removal.

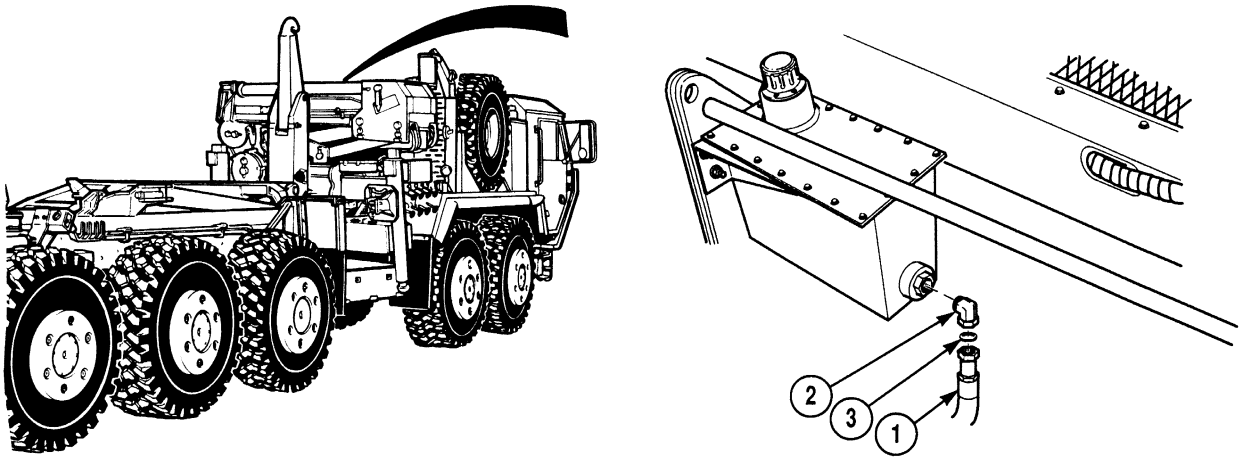

NOTE

- Tag and mark all hoses prior to removal.
- Cap and plug hoses and fittings as removed.

(1) Remove hose 2553 (1) from elbow (2). Remove and discard preformed packing (3).

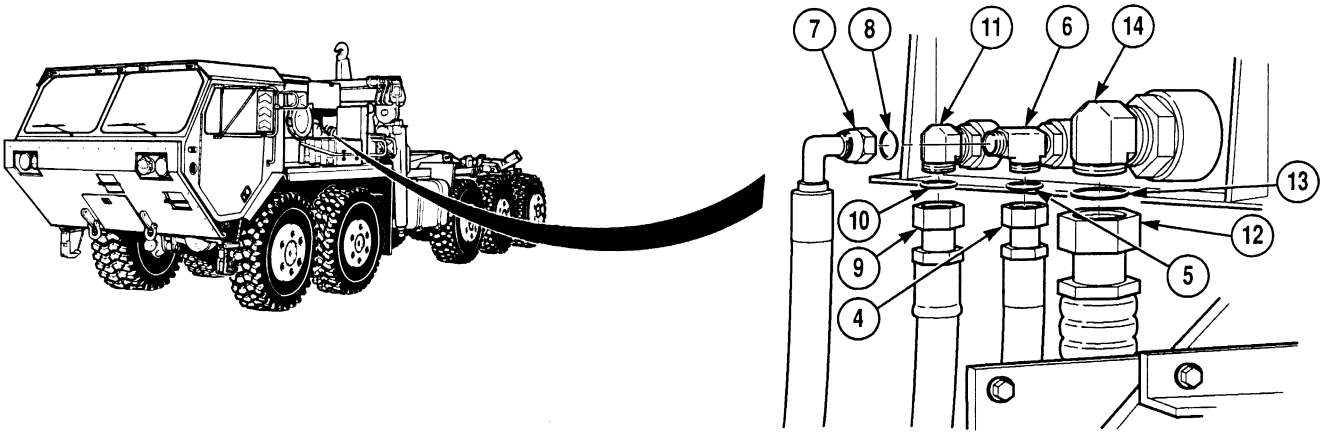

(2) Remove hose 2701 (4) and preformed packing (5) from tee (6). Discard preformed packing.

(3) Remove hose 2286 (7) and preformed packing (8) from tee (6). Discard preformed packing.

(4) Remove hose 2302 (9) and preformed packing (10) from elbow (11). Discard preformed packing.

(5) Remove hose 2278 (12) and preformed packing (13) from elbow (14). Discard preformed packing.

(6) Remove two locknuts (15) and screws (16) from bracket (17). Discard locknuts.

(7) Remove two locknuts (18), screws (19) and reservoir (20) from bracket (17). Discard locknuts.

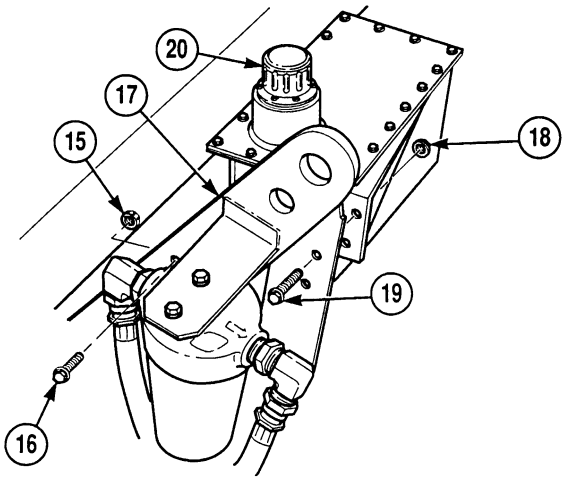

(8) Remove three locknuts (21), screws (22) and bracket (23) from reservoir (20). Discard locknuts.

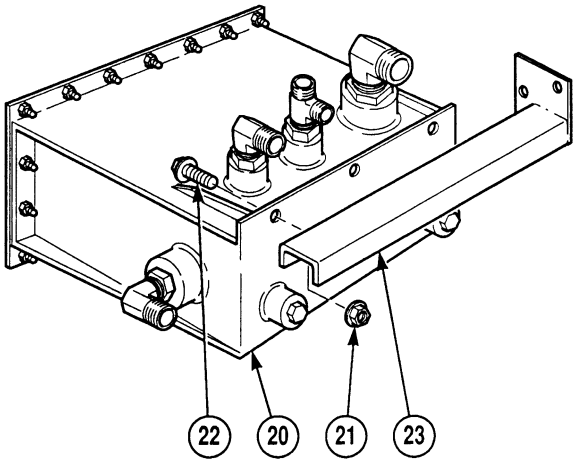

14-15. STEERING HYDRAULIC RESERVOIR REPAIR (CONT).

b. Disassembly.

NOTE

Note position of elbows and tee prior to removal.

(1) Remove elbow (1) and preformed packing (2) from reservoir (3). Discard preformed packing.

(2) Remove elbow (4) and preformed packing (5) from reservoir (3). Discard preformed packing.

(3) Remove elbow (6) and preformed packing (7) from reservoir (3). Discard preformed packing.

(4) Remove tee (8) and preformed packing (9) from reservoir (3). Discard preformed packing.

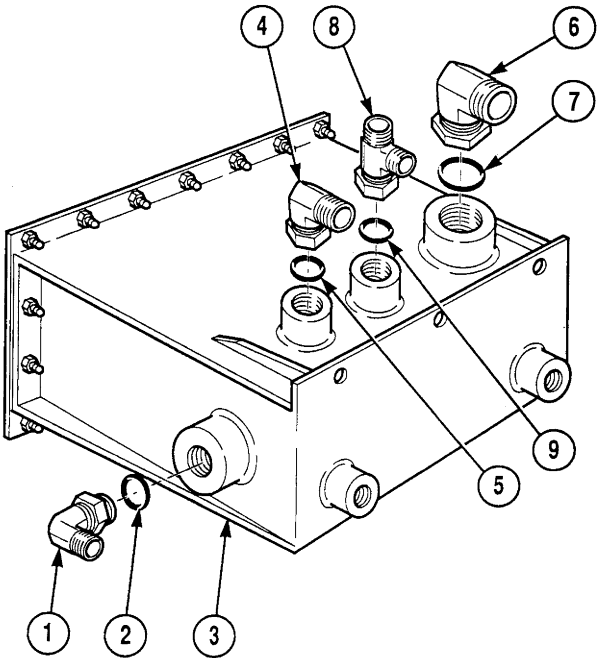

(5) Remove cap (10) from strainer (11).

(6) Remove chain (12) from cap (10).

(7) Remove and discard preformed packing (13) from cap (10).

(8) Remove six screws (14), lockwashers (15) and steel basket (11) from reservoir (3). Discard lockwashers.

(9) Remove and discard gasket (16) from steel basket (11).

(10) Remove 18 locknuts (17), screws (18), bracket (19), cover (20) and gasket (21) from reservoir (3). Discard locknuts and gasket.

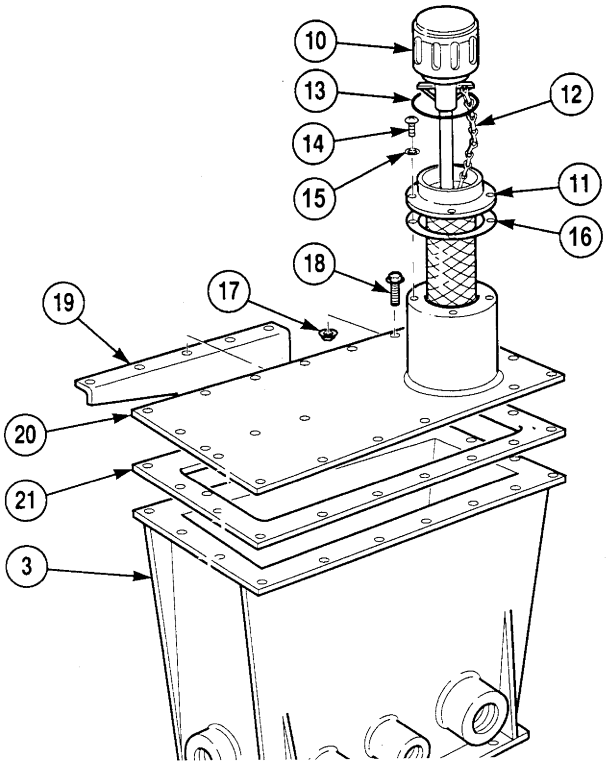

c. Cleaning/Inspection.

WARNING

- Drycleaning Solvent (P-D-680) is TOXIC and flammable. Wear protective goggles, face shield, and gloves; use only in a well-ventilated area; avoid contact with skin, eyes, and clothes, and do not breathe vapors. Keep away from heat or flame. Never smoke when using solvent. The flashpoint for Type II Drycleaning Solvent is 140 degrees F (60 degrees C) and Type III Drycleaning Solvent is 200 degrees F (93 degrees C). Failure to do so may result in injury or death to personnel.
- If personnel become dizzy while using cleaning solvent, immediately get fresh air and medical help. If solvent contacts skin or clothes, flush with cold water. If solvent contacts eyes, immediately flush eyes with water and get immediate medical attention.
- Compressed air used for cleaning purposes will not exceed 30 psi (207 kPa). Use only with effective chip guarding and personal protective equipment (goggles/shield, gloves, etc). Failure to comply may result in injury or death to personnel.

(1) Clean all metal parts with drycleaning solvent and dry with compressed air.

(2) Inspect metal parts for breaks, cracks, and sharp edges.

(3) Replace all damaged parts.

14-15. STEERING HYDRAULIC RESERVOIR REPAIR (CONT).

d. Assembly.

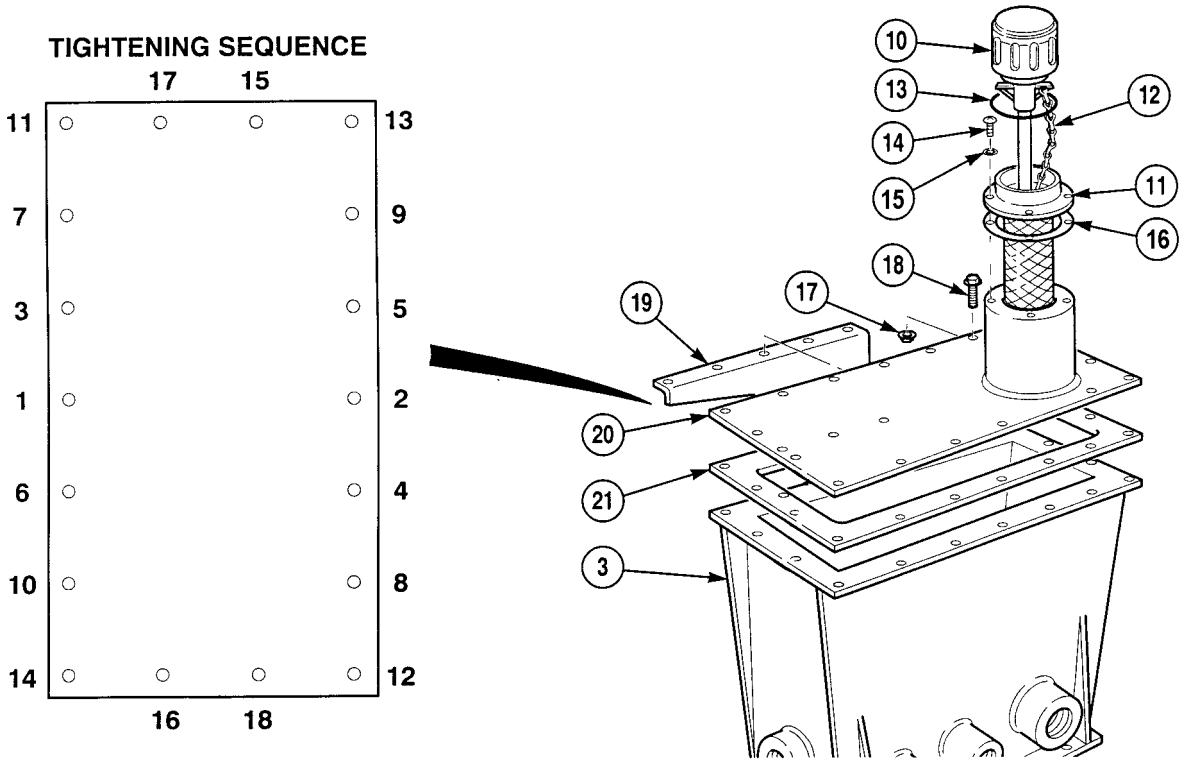

(1) Position gasket (21), cover (20) and bracket (19) on reservoir (3) with 18 screws (18) and locknuts (17).

(2) Tighten screws (18) in sequence shown and in following Steps:

(a) Step 1: 40 lb-in (5 N·m).

(b) Step 2: 50 to 55 lb-in (6 N·m).

(3) Position gasket (16) and strainer (11) on reservoir (3) with six lockwashers (15) and screws (14).

(4) Run all screws (14) down evenly until screw heads contact strainer (11).

(5) Tighten each screw (14) one full turn.

(6) Install preformed packing (13) on cap (10).

(7) Install chain (12) on cap (10).

(8) Install cap (10) on steel basket (11).

NOTE

Install fittings as noted prior to removal.

(9) Apply lubricating oil on preformed packing (9).

(10) Install preformed packing (9) on tee (8).

(11) Install tee (8) in reservoir (3).

(12) Apply lubricating oil to preformed packing (7).

(13) Install preformed packing (7) on elbow (6).

(14) Install elbow (6) in reservoir (3).

(15) Apply lubricating oil to preformed packing (5).

(16) Install preformed packing (5) on elbow (4).

(17) Install elbow (4) in reservoir (3).

(18) Apply lubricating oil to preformed packing (2).

(19) Install preformed packing (2) on elbow (1).

(20) Install elbow (1) in reservoir (3).

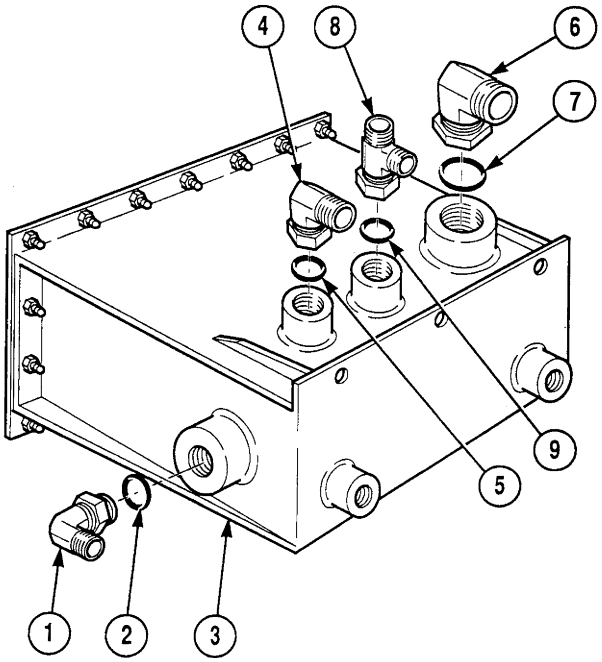

e. Installation.

(1) Install bracket (23) on reservoir (20) with three screws (22) and locknuts (21). Tighten to 75 lb-in (8 N·m).

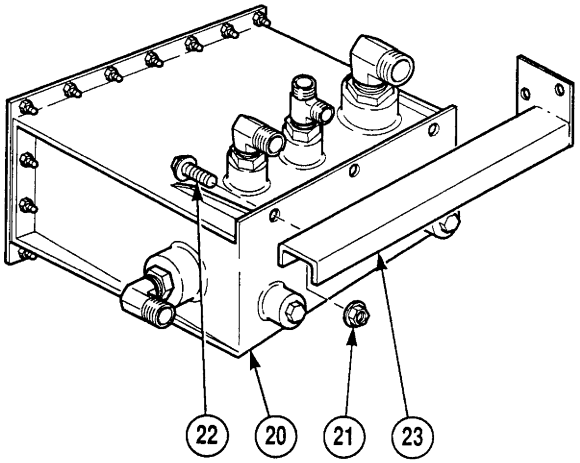

14-15. STEERING HYDRAULIC RESERVOIR REPAIR (CONT).

(2) Install reservoir (20) on bracket (17) with two screws (16), screws (19), nuts (15) and nuts (18). Tighten screws to 45 lb-ft (61 N·m).

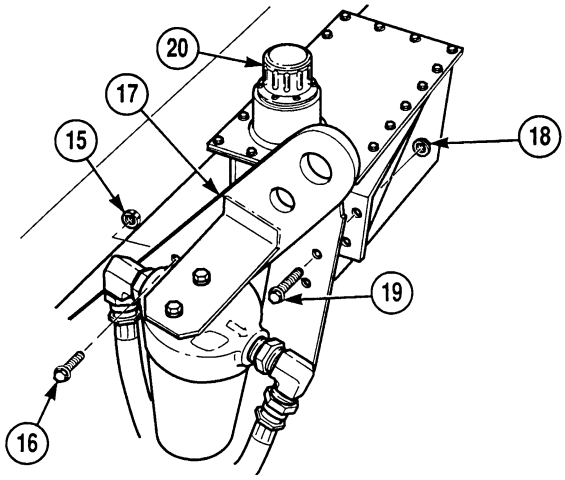

(3) Install preformed packing (5) on hose 2701 (4).

(4) Install hose 2701 (4) on tee (6).

(5) Install preformed packing (8) on hose 2286 (7).

(6) Install hose 2286 (7) on tee (6).

(7) Install preformed packing (10) on hose 2302 (9).

(8) Install hose 2302 (9) on elbow (11).

(9) Install preformed packing (13) on hose 2278 (12).

(10) Install hose 2278 (12) on elbow (14).

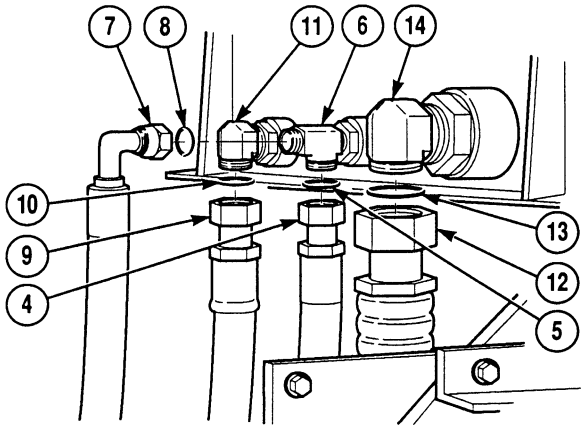

(11) Install preformed packing (3) and hose 2553 (1) on elbow (2).

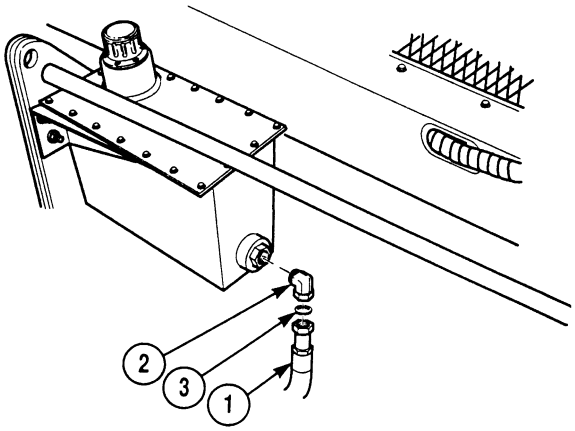

f. Follow-On Maintenance:

- Install left side noise panel, (Para 17-28).
- Fill steering reservoir, (Para 14-2).
- Remove wheel chocks, (TM 9-2320-364-10).

END OF TASK

14-16. STEERING FILTER REPLACEMENT.

This task covers:

a. Removal b. Installation c. Follow-On Maintenance

INITIAL SETUP

Tools and Special Tools
Tool Kit, General Mechanic's: Automotive (Item 74, Appendix G)
Pan, Drain (Item 47, Appendix G)
Removal Tool, Oil Filter (Item 54, Appendix G)

Materials/Parts
Oil, Hydraulic (Item 50, Appendix C)

Equipment Condition
Engine OFF, (TM 9-2320-364-10)
Wheels chocked, (TM 9-2320-364-10)

a. Removal.

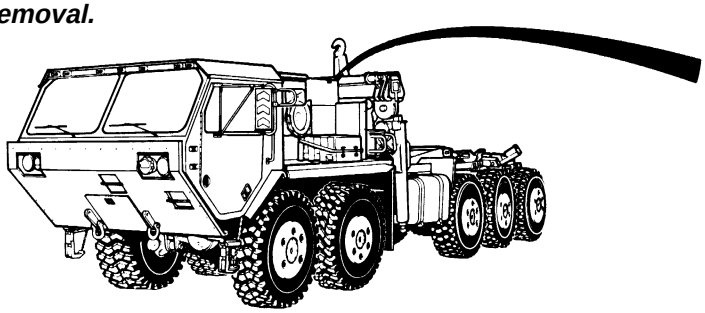

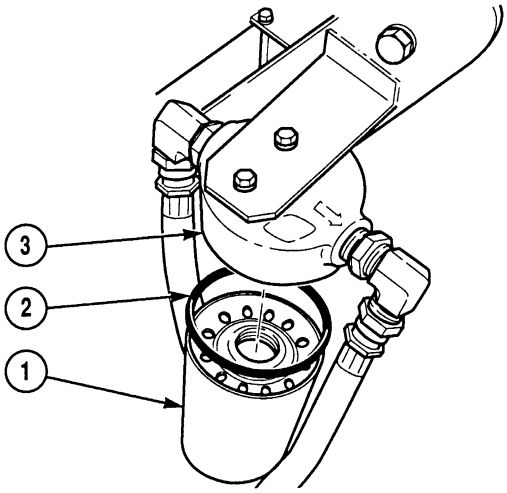

WARNING

Prolonged contact with lubricating oil (MIL-L-2104) may cause a skin rash. Skin and clothing that come in contact with lubricating oil should be thoroughly washed immediately. Saturated clothing should be removed immediately. Areas in which lubricating oil is used should be well ventilated to keep fumes to a minimum.

(1) Position drain pan under filter (1).

NOTE

- Preformed packing may stay on filter or housing.
- Filter is removed by turning counter-clockwise.

(2) Remove filter (1) and preformed packing (2) from housing (3). Discard preformed packing and filter.

b. Installation.

(1) Coat preformed packing (2) with hydraulic oil and install preformed packing in housing (3).

(2) Fill filter (1) with hydraulic oil.

CAUTION

Tighten filter only 3/4 to 1 full turn after filter contacts housing. Failure to comply may result in damage to equipment.

(3) Install filter (1) on housing (3). Tighten filter 3/4 to 1 full turn.

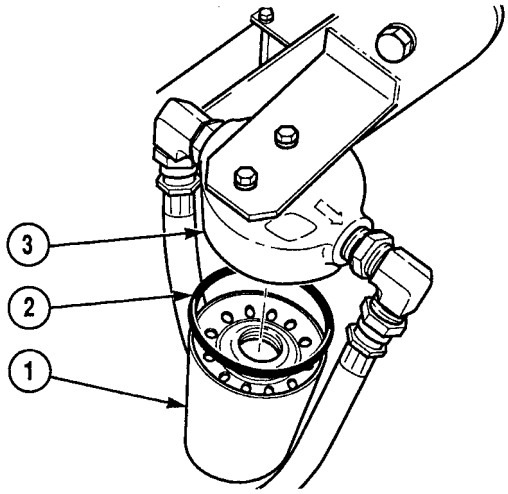

c. Follow-On Maintenance:

- Fill steering reservoir, (Para 2-9, Lubrication Table 2-3).
- Remove wheel chocks, (TM 9-2320-364-10).

END OF TASK

14-17. STEERING FILTER ADAPTER HEAD REPLACEMENT.

This task covers:

a. Removal b. Installation c. Follow-On Maintenance

INITIAL SETUP

Tools and Special Tools
Tool Kit, General Mechanic's: Automotive (Item 74, Appendix G)
Cap and Plug Set (Item 8, Appendix G)
Wrench, Combination 1-5/8 in. (Item 84, Appendix G)

Materials/Parts
Lockwasher (2) (Item 173, Appendix F)
Packing, Preformed (2) (Item 234, Appendix F)
Packing, Preformed (2) (Item 252, Appendix F)

Equipment Condition
Engine OFF, (TM 9-2320-364-10)
Wheels chocked, (TM 9-2320-364-10)
Steering filter removed, (Para 14-16)

a. Removal.

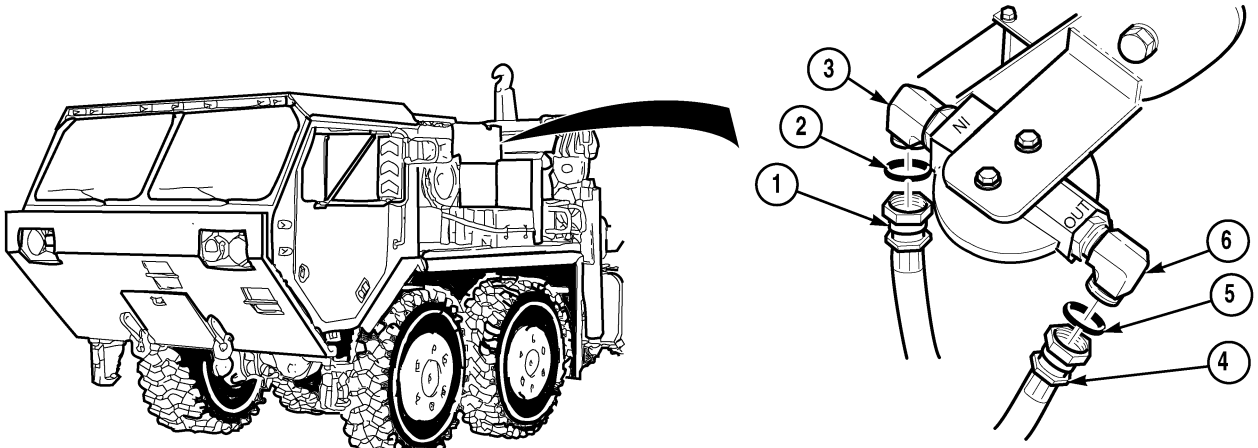

NOTE

- Tag and mark all hydraulic hoses prior to removal.
- Cap and plug all hydraulic hoses to prevent contamination.

(1) Remove hose 2883 (1) and preformed packing (2) from elbow (3). Discard preformed packing.

(2) Remove hose 2553 (4) and preformed packing (5) from elbow (6). Discard preformed packing.

NOTE

Note position of words “IN” and “OUT” on top of steering filter head.

(3) Loosen jam nuts (7) and (8) on elbows (3) and (6).

(4) Remove two screws (9), lockwashers (10) and steering filter head (11) from bracket (12). Discard lockwashers.

NOTE

Note position of elbows prior to removal.

(5) Remove elbow (3) and preformed packing (13) from steering filter head (11). Discard preformed packing.

(6) Remove elbow (6) and preformed packing (14) from steering filter head (11). Discard preformed packing.

b. Installation.

(1) Install preformed packing (14) on elbow (6).

(2) Install preformed packing (13) on elbow (3).

NOTE

Position elbows as noted prior to removal.

(3) Position elbows (3) and (6) on steering filter head (11).

NOTE

The word “OUT” on top of filter head should face to rear of truck.

(4) Install steering filter head (11) on bracket (12) with two lockwashers (10) and screws (9).

(5) Tighten jam nuts (7) and (8) on elbows (3) and (6).

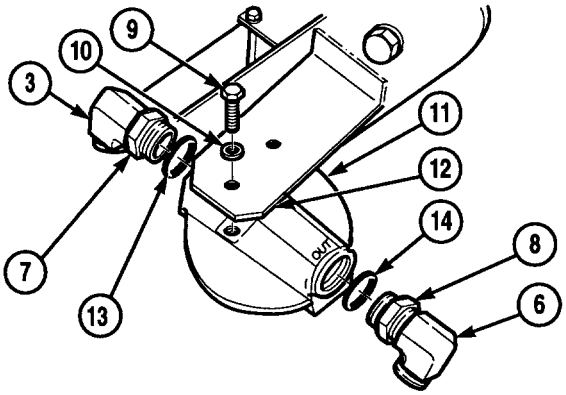

14-17. STEERING FILTER ADAPTER HEAD REPLACEMENT (CONT).

(6) Install preformed packing (5) and hose 2553 (4) on elbow (6).

(7) Install preformed packing (2) and hose 2883 (1) on elbow (3).

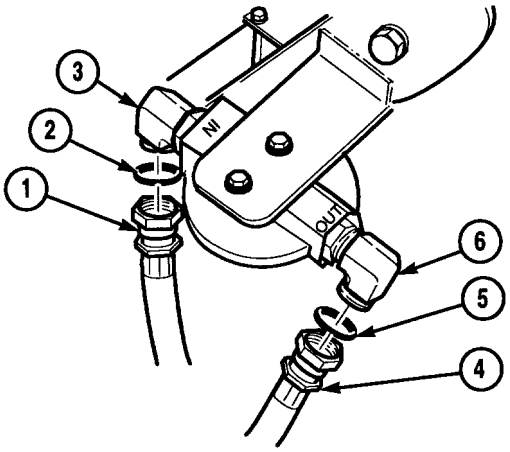

c. Follow-On Maintenance:

- Install steering filter, (Para 14-16).
- Start engine, (TM 9-2320-364-10).
- Check filter head for oil leaks, (TM 9-2320-364-10).
- Shut OFF engine, (TM 9-2320-364-10).
- Remove wheel chocks, (TM 9-2320-364-10).

END OF TASK

14-18. FRONT STEERING GEAR TORQUING PROCEDURE.

This task covers:

a. Torquing Procedure b. Follow-On Maintenance

INITIAL SETUP

Tools and Special Tools
Tool Kit, General Mechanic's: Automotive (Item 74, Appendix G)
Wrench, Torque (0 to 175 lb-ft [0 to 237 N·m]) (Item 95, Appendix G)

Personnel Required
Two

Equipment Condition
Engine OFF, (TM 9-2320-364-10)
Wheels chocked, (TM 9-2320-364-10)

a. Torquing Procedure.

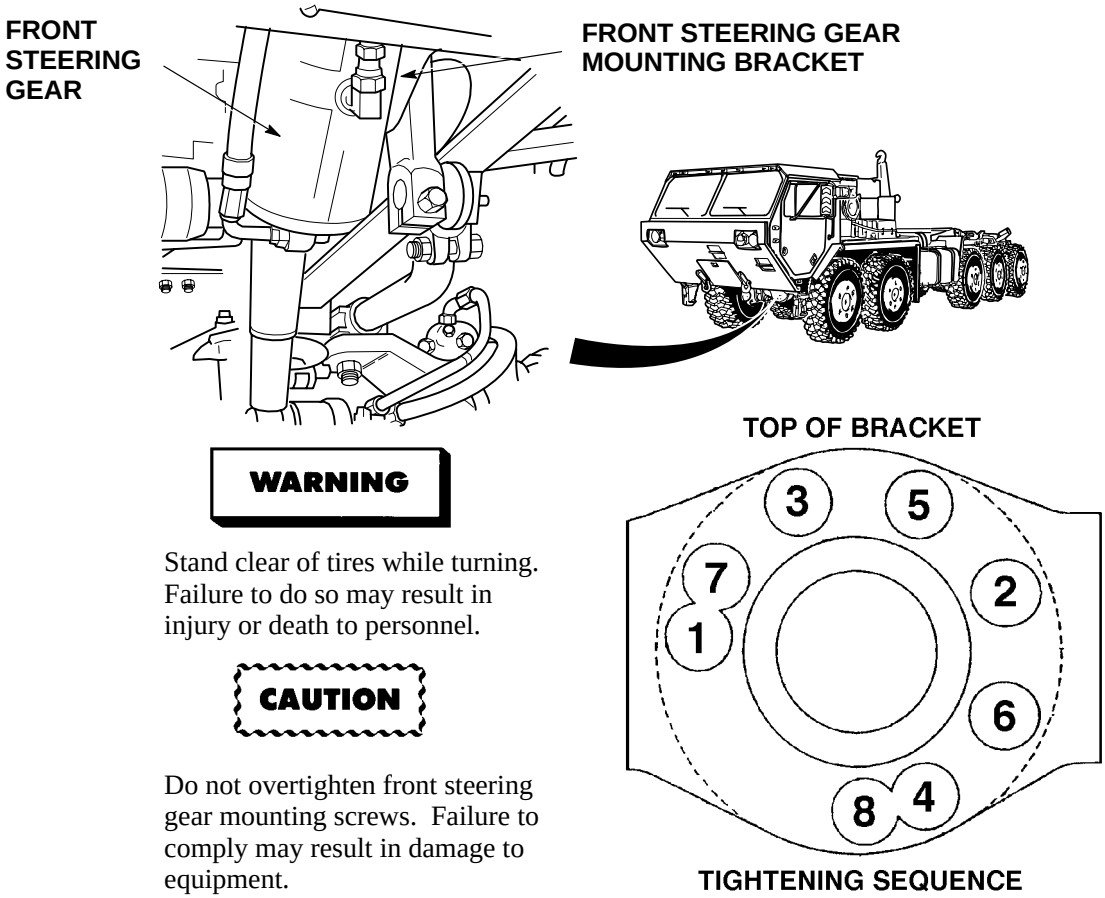

WARNING

Stand clear of tires while turning. Failure to do so may result in injury or death to personnel.

CAUTION

Do not overtighten front steering gear mounting screws. Failure to comply may result in damage to equipment.

NOTE

- Screws are referred to by the number that is listed in tightening sequence.
- Tightening sequence shown is facing mounting bracket side of front steering gear.

(1) With the aid of an assistant, Start engine (TM 9-2320-364-10) and turn the steering wheel until tires are in a straight forward position.

(2) Shut OFF engine.

14-18. FRONT STEERING GEAR TORQUING PROCEDURE (CONT).

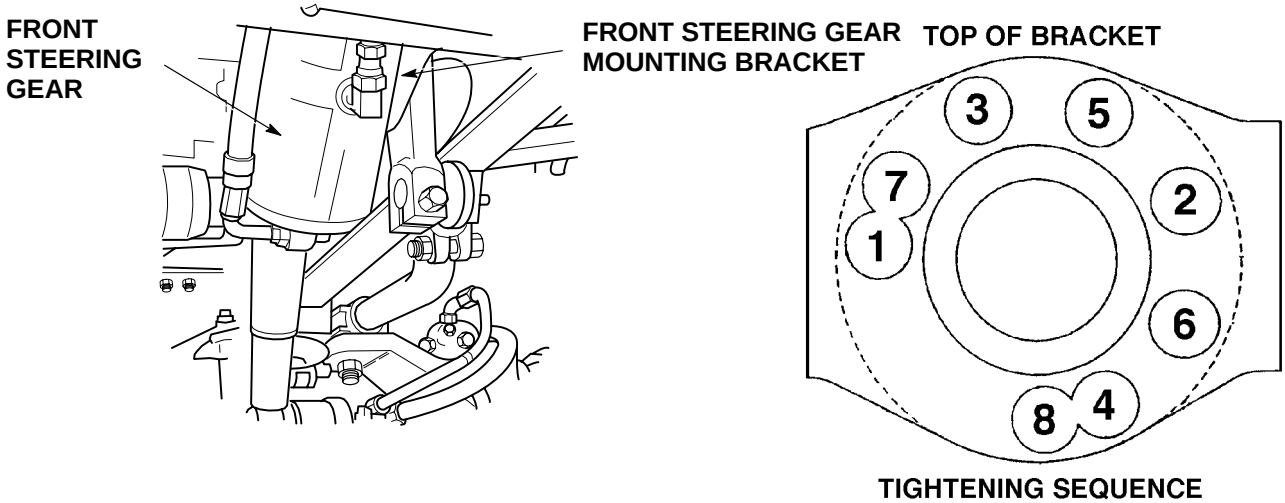

(3) Tighten screw (1) then screw (2) on front steering gear and front steering gear bracket to 160 lb-ft to 170 lb-ft (217 N·m to 231 N·m).

WARNING

Stand clear of tires while turning. Failure to do so may result in injury or death to personnel.

CAUTION

- Do not overtighten front steering gear mounting screws. Failure to comply may result in damage to equipment.
- Do not hold front steering gear in relief for more than 30 seconds at a time. Failure to comply may result in damage to equipment.

NOTE

- Screws are referred to by the number that is listed in tightening sequence.
- Tightening sequence shown is facing mounting bracket side of front steering gear.
- Front steering gear is in relief when steering wheel can no longer be turned and a hissing sound is heard.

(4) With the aid of an assistant, Start engine and turn steering wheel completely to the left until front steering gear goes into relief.

(5) Tighten screw (3) then screw (4) on front steering gear and front steering gear bracket to 160 lb-ft to 170 lb-ft (217 N·m to 231 N·m).

(6) With the aid of an assistant, turn the steering wheel completely to the right until the front steering gear goes into relief.

(7) Tighten screw (5) then screw (6) on front steering gear and front steering gear bracket to 160 lb-ft to 170 lb-ft (217 N·m to 231 N·m).

(8) With the aid of an assistant, turn the steering wheel completely to the left until the front steering gear goes into relief.

(9) Tighten screw (7) then screw (8) on front steering gear and front steering gear bracket to 160 lb-ft to 170 lb-ft (217 N·m to 231 N·m).

(10) If any of the eight front steering gear screws were loose, Perform Steps (1) through (9) two additional times.

(11) Shut OFF engine.

b. Follow-On Maintenance:

- Remove wheel chocks, (TM 9-2320-364-10).

END OF TASK

CHAPTER 15

FRAME MAINTENANCE

Para	Contents	Page
15-1	Introduction	15-1
15-2	Skid Plate Replacement	15-2
15-3	Skid Plate Structure Replacement	15-5
15-4	Skid Plate Crossmember Replacement	15-8
15-5	Cab Step Replacement	15-11
15-6	Front Tandem Crossmember Torquing Procedure	15-15
15-7	Air Dryer Bracket Replacement	15-17
15-8	Rear Hard Lift Assembly Replacement	15-19
15-9	Tread Platform Assembly Replacement	15-25
15-10	Platform Assembly Replacement (Model 1075 Only)	15-26
15-11	Rear Hard Lift Bracket Replacement	15-28
15-12	Axle Stop Replacement	15-32
15-13	Tie Down Ring Replacement	15-36
15-14	Service Gladhand Bracket Replacement	15-37
15-15	Horizontal Roller Replacement	15-40
15-16	Angled Roller Replacement	15-44
15-17	Rear Roller Assembly Replacement	15-47
15-18	Bumper Stop Bracket	15-50
15-19	Truck-To-Trailer LHS Electrical Connector Bracket Replacement	15-52
15-20	Self-Guided Coupler Repair	15-53
15-21	Spare Tire Carrier And Davit Replacement	15-60
15-22	Spare Tire Carrier Winch Replacement	15-69
15-23	Spare Tire Carrier Wire Rope Replacement	15-71
15-24	Auxiliary Fuel Tank Tread Platform Assembly Replacement	15-74

15-1. INTRODUCTION.

This chapter contains maintenance instructions for removing, replacing, installing and adjusting components of the frame as authorized by the Maintenance Allocation Chart (MAC) at the Unit Maintenance level.

15-2. SKID PLATE REPLACEMENT.

This task covers:

a. Removal b. Installation c. Follow-On Maintenance

INITIAL SETUP

Tools and Special Tools
Tool Kit, General Mechanic's: Automotive (Item 74, Appendix G)
Lifting Device Minimum Capacity 200 lbs (91 kg)

Materials/Parts
Locknut (9) (Item 96, Appendix F)
Lockwasher (4) (Item 195, Appendix F)
Screw, Self-Tapping (17) (Item 293, Appendix F)

Personnel Required
Two

Equipment Condition
Engine OFF, (TM 9-2320-364-10)
Wheels chocked, (TM 9-2320-364-10)
Machine gun ring removed (if equipped), (Para 22-2)
Machine gun ring front support removed (if equipped), (Para 22-4)
Cab steps removed, (Para 15-5)

a. Removal.

(1) Remove two screws (1), lockwashers (2) and skid plate window guard (3) from skid plate (4). Discard lockwashers.

(2) Remove two screws (5), lockwashers (6) and skid plate blackout lamp guard (7) from skid plate (4). Discard lockwashers.

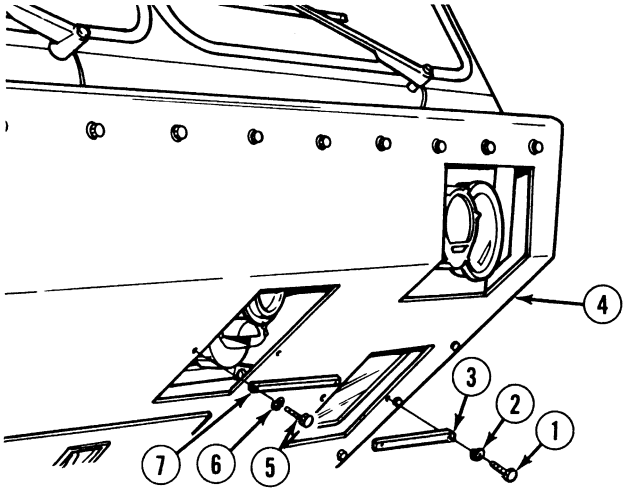

WARNING

Skid plate weighs 130 lbs (59 kg). Attach suitable lifting device prior to removal to prevent injury to personnel.

CAUTION

Ensure lifting device is not attached to skidplate frame. Failure to comply may result in damage to equipment.

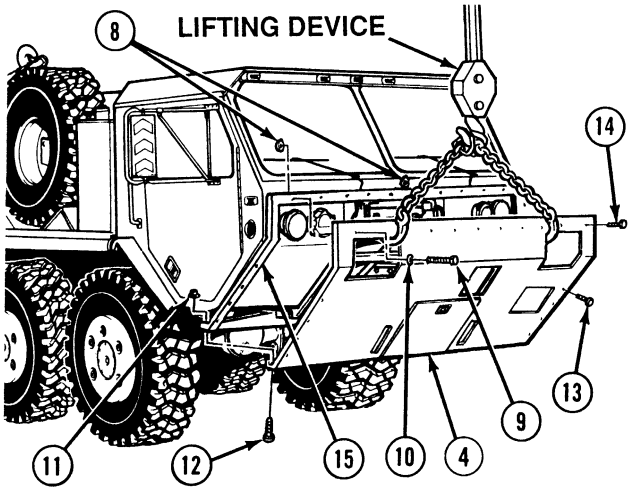

(3) Attach lifting device to skid plate (4).

NOTE

Perform Step (4) if truck is not equipped with machine gun ring. Otherwise, go to Step (5).

(4) Remove four locknuts (8), screws (9) and washers (10) from skid plate (4). Discard locknuts.

(5) Remove five locknuts (11) and screws (12) from bottom of skid plate (4). Discard locknuts.

(6) Remove eight self-tapping screws (13) from sides of skid plate (4). Discard self-tapping screws.

(7) With the aid of an assistant, remove nine self-tapping screws (14) from top of skid plate (4). Discard self-tapping screws.

(8) With the aid of an assistant, remove skid plate (4) from skid plate structure (15).

(9) Remove lifting device from skid plate (4).

b. Installation.

WARNING

Skid plate weighs 130 lbs (59 kg). Attach suitable lifting device prior to installation to prevent injury to personnel.

(1) Attach lifting device to skid plate (4).

(2) With the aid of an assistant, position skid plate (4) on skid plate structure (15).

(3) With the aid of an assistant, position nine self-tapping screws (14) in top of skid plate (4).

(4) With the aid of an assistant, position eight self-tapping screws (13) in sides of skid plate (4).

(5) With the aid of an assistant, install five screws (12) and locknuts (11) in bottom of skid plate (4).

15-2. SKID PLATE REPLACEMENT (CONT).

(6) Tighten nine self-tapping screws (14) and eight self-tapping screws (13).

(7) Remove lifting device from skid plate (4).

NOTE

Perform Step (8) if truck is not equipped with machine gun ring.

(8) Install four washers (10), screws (9) and locknuts (8) in skid plate (4).

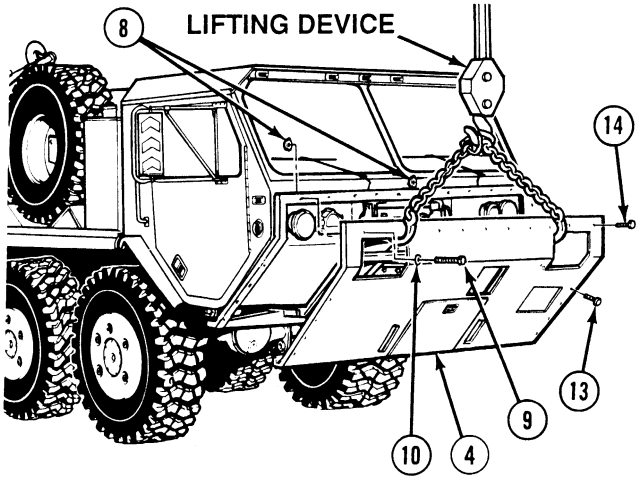

(9) Install skid plate blackout lamp guard (7), with two lockwashers (6) and screws (5) on skid plate (4).

(10) Install skid plate window guard (3) with two lockwashers (2) and screws (1) on skid plate (4).

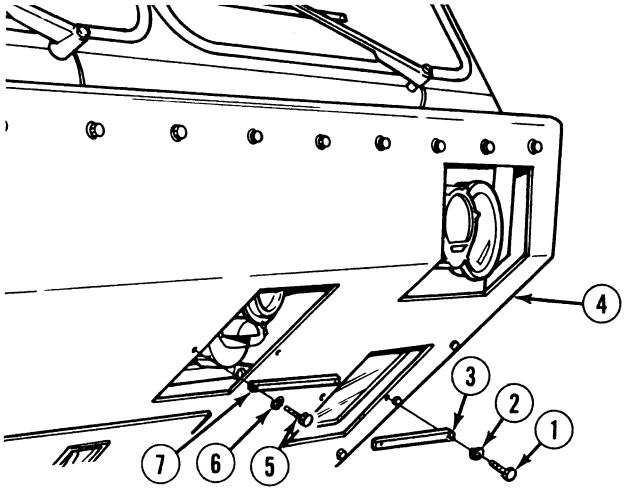

c. Follow-On Maintenance:

- Install machine gun front support (if equipped), (Para 22-4).
- Install machine gun ring (if equipped), (Para 22-2).
- Install cab steps, (Para 15-5).
- Remove wheel chocks, (TM 9-2320-364-10).

END OF TASK

15-3. SKID PLATE STRUCTURE REPLACEMENT.

This task covers:

a. Removal b. Installation c. Follow-On Maintenance

INITIAL SETUP

Tools and Special Tools
Tool Kit, General Mechanic's: Automotive (Item 74, Appendix G)
Lifting Device, Minimum Capacity 200 lbs (90 kg)

Materials/Parts
Locknut (2) (Item 92, Appendix F)
Locknut (4) (Item 96, Appendix F)
Locknut (2) (Item 140, Appendix F)

Personnel Required
Two

Equipment Condition
Engine OFF, (TM 9-2320-364-10)
Wheels chocked, (TM 9-2320-364-10)
Weight classification sign removed, (Para 19-21)
Skid plate removed, (Para 15-2)

a. Removal.

WARNING

Skid plate structure weighs 95 lbs (43 kg). Attach suitable lifting device prior to removal to prevent injury to personnel.

(1) Attach lifting device to skid plate structure (1).

(2) Remove two locknuts (2) and screws (3) from bottom of skid plate structure (1). Discard locknuts.

(3) Remove four locknuts (4) and screws (5) from top of skid plate structure (1). Discard locknuts.

(4) With the aid of an assistant, remove skid plate structure (1) from truck (6).

(5) Remove lifting device from skid plate structure (1).

(6) Remove four self-tapping screws (7) and two brackets (8) from skid plate structure (1).

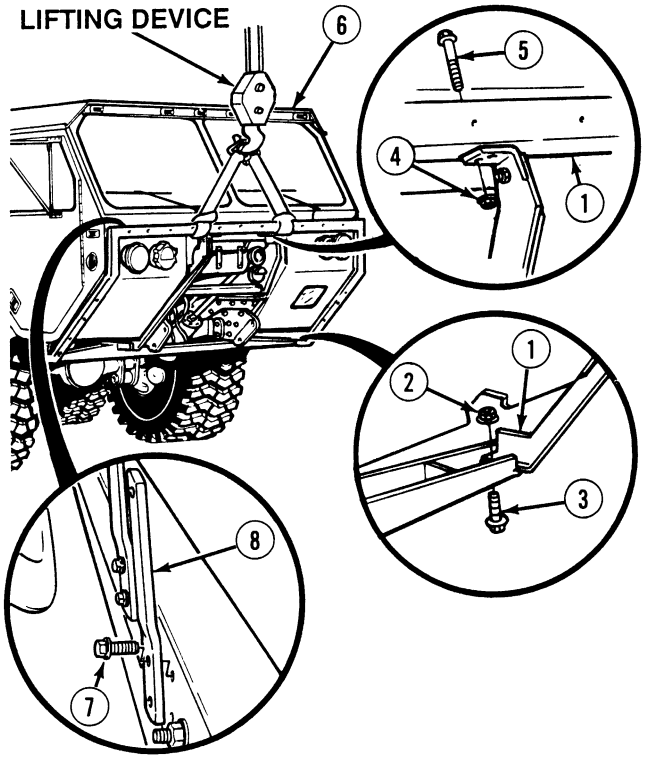

15-3. SKID PLATE STRUCTURE REPLACEMENT (CONT).

b. Installation.

WARNING

Skid plate structure weighs 95 lbs (43 kg). Attach suitable lifting device prior to installation to prevent injury to personnel.

NOTE

Make sure bottom of skid plate structure is installed on top of cross member.

(1) Install two brackets (8) and four self-tapping screws (7) on skid plate structure (1).

(2) Attach lifting device to skid plate structure (1).

(3) With the aid of an assistant, position skid plate structure (1) on truck (6).

(4) Position four screws (5) and locknuts (4) in top of skid plate structure (1).

NOTE

- To ensure maximum clearance between skid plate structure and cab, pull structure as far forward as possible before tightening locknuts.
- Ensure there is a minimum of 3/8 inch (9.53 mm) clearance between skid plate and headlights.

(5) Position two screws (3) and locknuts (2) in bottom of skid plate structure (1). With the aid of an assistant, pull skid plate structure (1) forward and tighten locknuts.

(6) Tighten screws (5) and locknuts (4).

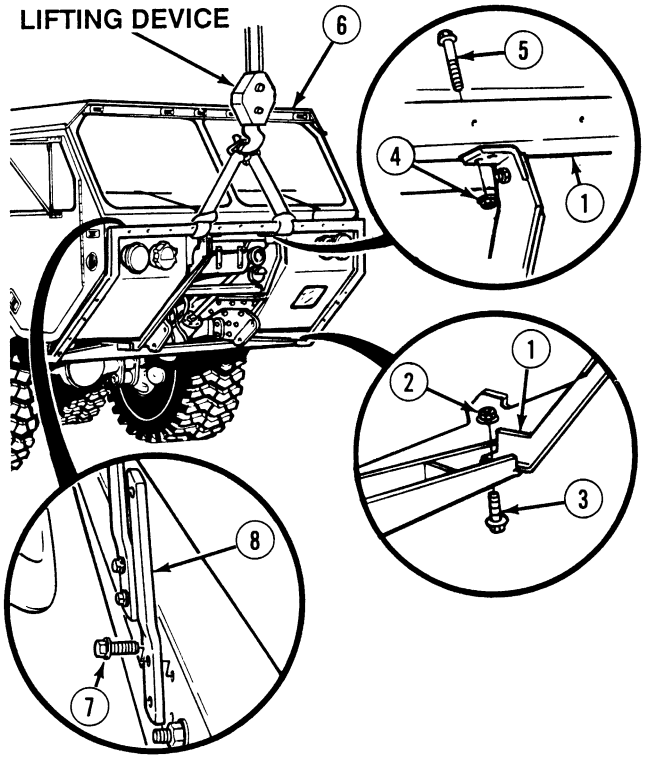

c. Follow-On Maintenance:

- Install skid plate, (Para 15-2).
- Install weight classification sign, (Para 19-21).
- Remove wheel chocks, (TM 9-2320-364-10).

END OF TASK

15-4. SKID PLATE CROSSMEMBER REPLACEMENT.

This task covers:

a. Removal b. Installation c. Follow-On Maintenance

INITIAL SETUP

Tools and Special Tools
Tool Kit, General Mechanic's: Automotive (Item 74, Appendix G)

Materials/Parts
Locknut (11) (Item 92, Appendix F)
Locknut (4) (Item 93, Appendix F)

Personnel Required
Two

Equipment Condition
Engine OFF, (TM 9-2320-364-10)
Wheels chocked, (TM 9-2320-364-10)
Skid plate structure removed, (Para 15-3)

a. Removal.

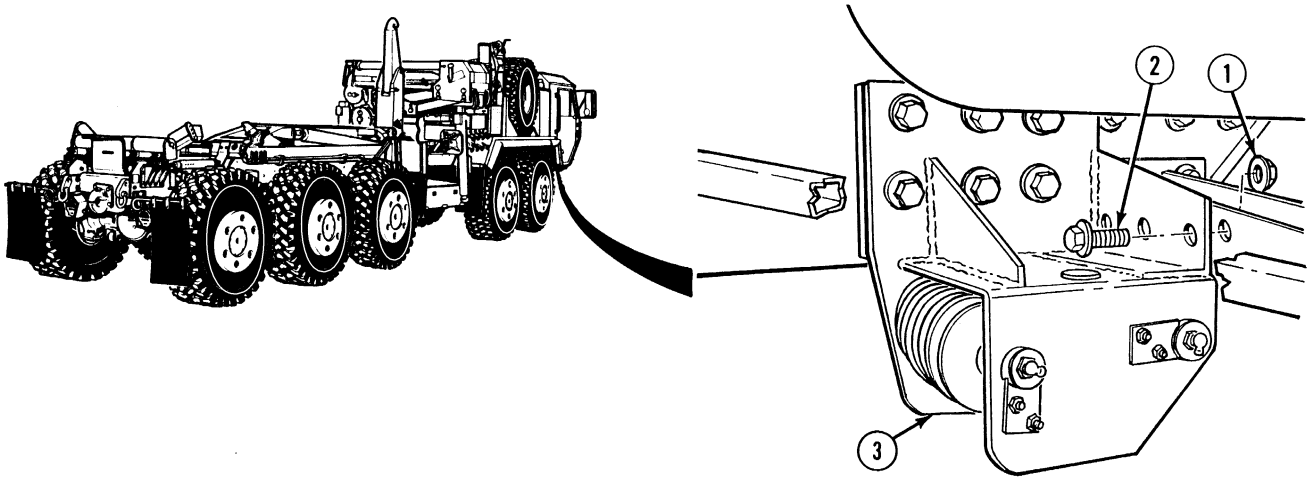

WARNING

Skid plate crossmember weighs 55 lbs (25 kg). Attach suitable lifting device prior to removal to prevent possible injury to personnel.

NOTE

Perform Step (1) if truck is equipped with self-recovery winch. Otherwise, go to Step (2).

(1) Remove three locknuts (1) and screws (2) from front self-recovery winch guide (3). Discard locknuts.

(2) Remove four locknuts (4), screws (5) and left and right brace assembly (6) from crossmember assembly (7). Discard locknuts.

(3) With the aid of an assistant, remove four locknuts (8), three screws (9), washers (10), screw (11), two spacers (12) and crossmember assembly (7) from frame (13). Discard locknuts.

(4) Remove four locknuts (14), screws (15) and left and right brace assembly (6) from left and right frame (13). Discard locknuts.

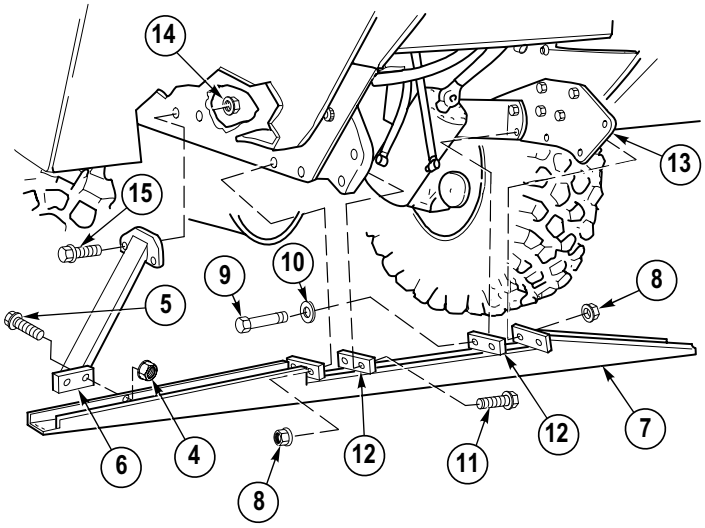

b. Installation.

WARNING

Skid plate crossmember weighs 55 lbs (25 kg). Attach suitable lifting device prior to installation to prevent possible injury to personnel.

(1) Position four screws (15), left and right brace assembly (6) and locknuts (14) on left and right frame (13).

(2) With the aid of an assistant, install crossmember assembly (7) and two spacers (12) with three screws (9), washers (10), screw (11) and four locknuts (8).

(3) Position left and right brace assembly (6), four screws (5) and locknuts (4) on crossmember assembly (7).

(4) Tighten locknuts (14) and (4).

15-4. SKID PLATE CROSSMEMBER REPLACEMENT (CONT).

NOTE

Perform Step (5) if truck is equipped with self-recovery winch.

(5) Install three screws (2) and locknuts (1) in front self-recovery winch guide (3).

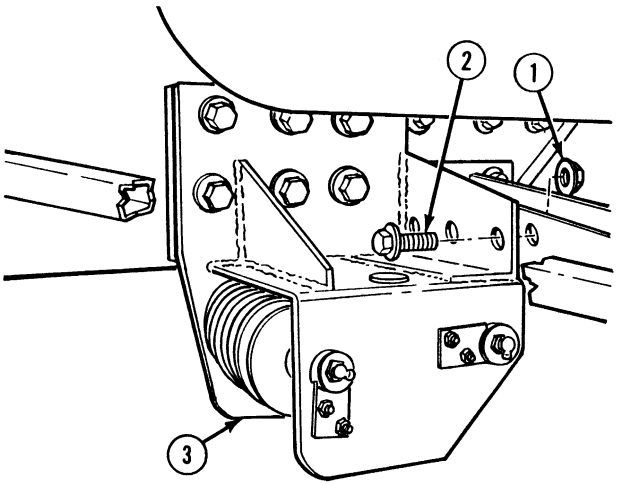

c. Follow-On Maintenance:

- Install skid plate structure, (Para 15-3).
- Remove wheel chocks, (TM 9-2320-364-10).

END OF TASK

15-5. CAB STEP REPLACEMENT.

This task covers:

a. Removal b. Installation c. Follow-On Maintenance

INITIAL SETUP

Tools and Special Tools
Tool Kit, General Mechanic's: Automotive (Item 74, Appendix G)

Materials/Parts
Sealing Compound (Item 77, Appendix C)
Locknut (2) (Item 92, Appendix F)
Locknut (2) (Item 140, Appendix F)

Equipment Condition
Engine OFF, (TM 9-2320-364-10)
Wheels chocked, (TM 9-2320-364-10)

a. Removal.

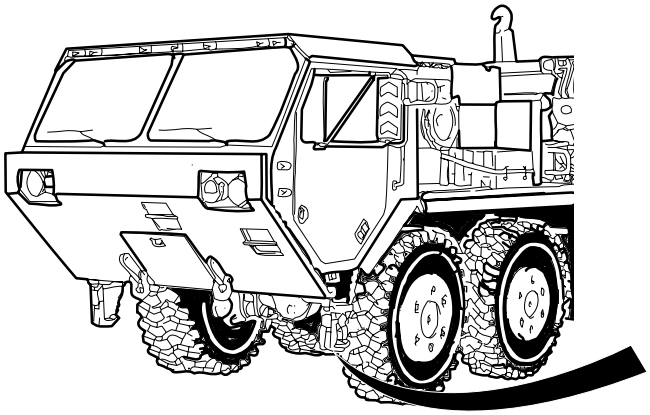

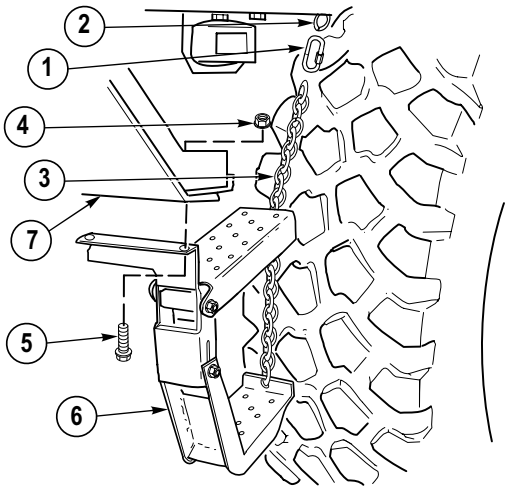

NOTE

- Both cab steps are removed and disassembled the same way. Left side is shown.
- Rapid links are opened and closed by turning nut on rapid link.

(1) Open rapid link (1) on chain mount bracket (2) and chain (3).

(2) Remove rapid link (1) and chain (3) from chain mount bracket (2).

(3) Remove two locknuts (4), screws (5) and cab step assembly (6) from front cross member (7). Discard locknuts.

15-5. CAB STEP REPLACEMENT (CONT).

(4) Remove locknut (8), screw (9), chain (10), and chain (3) from upper step (11). Discard locknut.

(5) Remove locknut (12), screw (13), two washers (14), spacer (15), upper step (11) and step support (16) from step link assembly (17). Discard locknut.

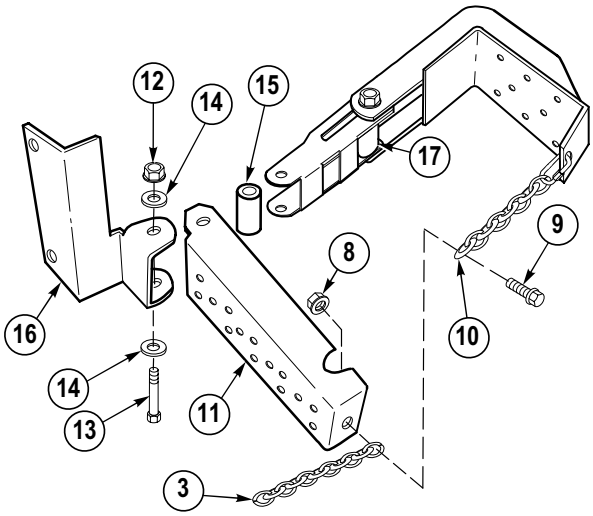

(6) Open rapid link (18) on lower step assembly (19).

(7) Remove rapid link (18) and chain (10) from lower step assembly (19).

(8) Remove locknut (20), screw (21), two washers (22), spacer (23) and step link assembly (17) from lower step assembly (19). Discard locknut.

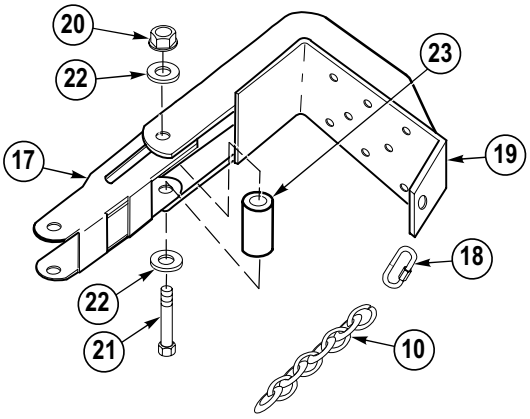

b. Installation.

NOTE

- Both cab steps are assembled and installed the same way. Left side shown.
- When properly installed, step will slide freely on step link.

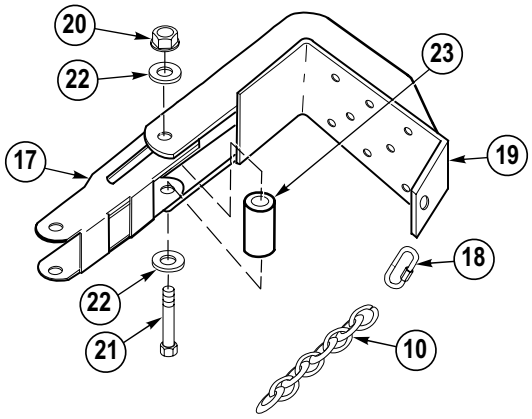

(1) Install step link assembly (17), spacer (23), two washers (22), screw (21) and locknut (20) on lower step assembly (19). Tighten locknut snug against washer until step moves freely.

WARNING

Adhesives, solvents, and sealing compounds can burn easily, can give off harmful vapors, and are harmful to skin and clothing. To avoid injury or death, keep away from open fire and use in well-ventilated area. If adhesive, solvent, or sealing compound gets on skin or clothing, wash immediately with soap and water.

NOTE

Chain installed on chain mount bracket has 11 links. Chain installed on lower step has 8 links.

(2) Apply sealing compound on threads of rapid link (18) and install rapid link on chain (10) and lower step assembly (19).

15-5. CAB STEP REPLACEMENT (CONT).

(3) Install step support (16), upper step (11), spacer (15), two washers (14), screw (13) and locknut (12) on step link assembly (17). Tighten locknut snug against washer until upper step moves freely.

(4) Install chain (10), and chain (3) on upper step (11) with screw (9) and locknut (8).

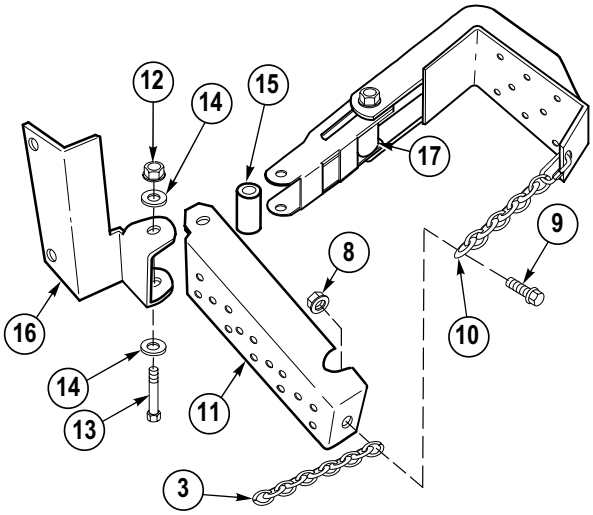

(5) Install cab step assembly (6), two screws (5) and locknuts (4) on front cross member (7).

WARNING

Adhesives, solvents, and sealing compounds can burn easily, can give off harmful vapors, and are harmful to skin and clothing. To avoid injury or death, keep away from open fire and use in well-ventilated area. If adhesive, solvent, or sealing compound gets on skin or clothing, wash immediately with soap and water.

(6) Apply sealing compound to threads of rapid link (1) and install rapid link on chain (3) and chain mount bracket (2).

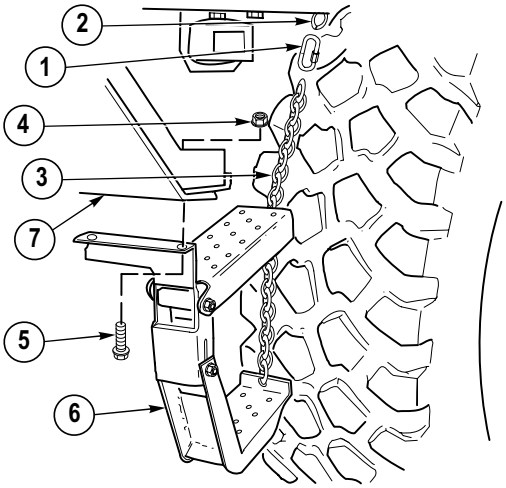

c. Follow-On Maintenance:

- Remove wheel chocks, (TM 9-2320-364-10).

END OF TASK

15-6. FRONT TANDEM CROSSMEMBER TORQUING PROCEDURE.

This task covers:

a. Torquing Procedure b. Follow-on Maintenance

INITIAL SETUP

Tools and Special Tools
Tool Kit, General Mechanic's: Automotive (Item 74, Appendix G)
Socket Set, 3/4 in. (Item 61, Appendix G)
Wrench, Combination 1-1/8 in. (Item 79, Appendix G)
Adapter, Torque (Appendix D)

Personnel Required
Three

Equipment Condition
Engine OFF, (TM 9-2320-364-10)
Wheels chocked, (TM 9-2320-364-10)

a. Torquing Procedure.

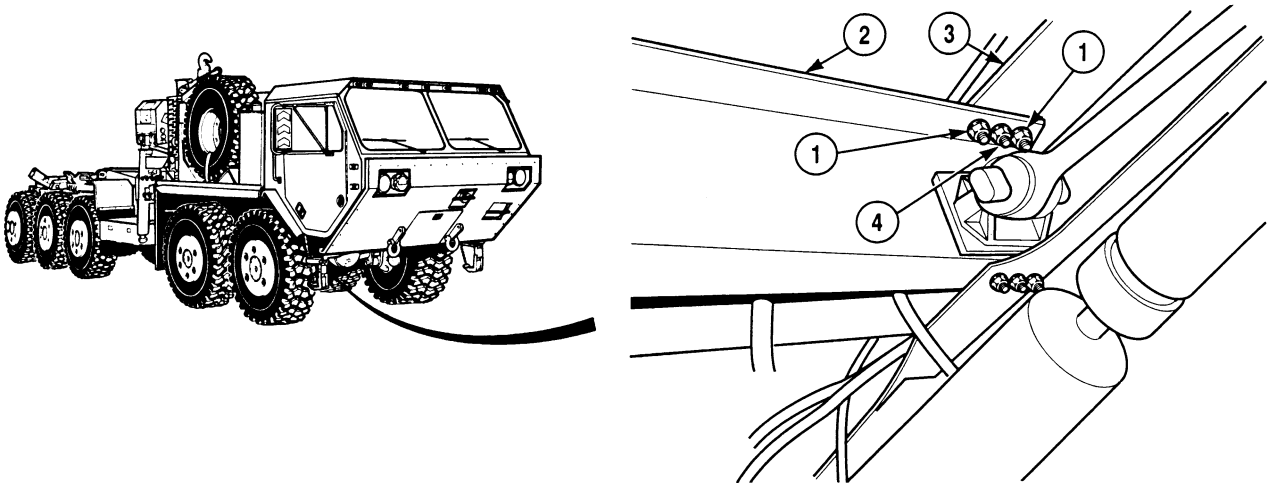

CAUTION

Torque wrench must be installed in straight line with torque adapter or improper torque may be applied. Failure to comply may result in damage to equipment.

NOTE

- Both sides of front tandem crossmember are tightened the same way. Right side shown.
- Front tires may be turned as necessary to accommodate torque wrench.

(1) With the aid of assistants and using torque adapter, tighten two nuts (1) on crossmember (2) and gusset (3) to 305 lb-ft (414 N·m).

(2) With the aid of assistants and using torque adapter, tighten nut (4) on crossmember (2) and gusset (3) to 165 lb-ft (224 N·m).

15-6. FRONT TANDEM CROSSMEMBER TORQUING PROCEDURE (CONT).

(3) With the aid of an assistant, tighten four nuts (1) on crossmember (2), crossmember (5) and gusset (6).

(4) With the aid of an assistant, tighten two nuts (4) on crossmember (2), crossmember (5) and gusset (6).

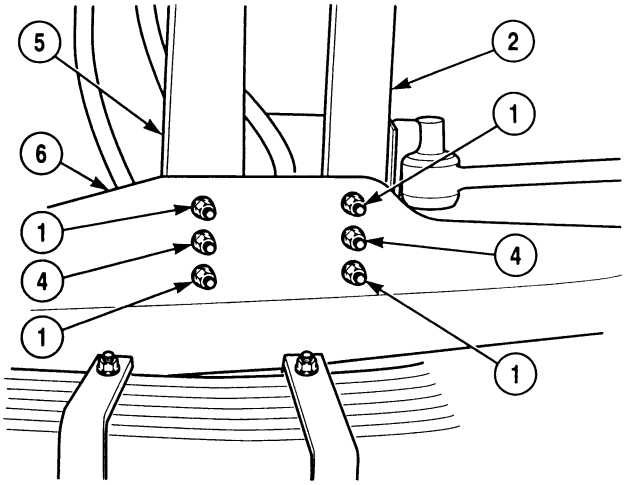

(5) With the aid of assistants and using torque adapter, tighten two nuts (1) on crossmember (5) and gusset (3) to 305 lb-ft (414 N·m).

(6) With the aid of assistants and using torque adapter, tighten nut (4) on crossmember (5) and gusset (3) to 165 lb-ft (224 N·m).

(7) Repeat Steps (1) through (6) for left side of front tandem crossmember.

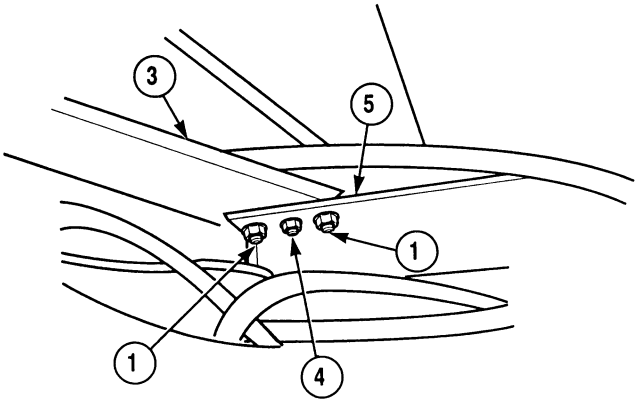

b. Follow-on Maintenance:

- Remove wheel chocks, (TM 9-2320-364-10).

END OF TASK

15-7. AIR DRYER BRACKET REPLACEMENT.

This task covers:

a. Removal b. Installation c. Follow-On Maintenance

INITIAL SETUP

Tools and Special Tools
Tool Kit, General Mechanic's: Automotive (Item 74, Appendix G)

Materials/Parts
Locknuts (Item 93, Appendix F)
Locknuts (Item 133, Appendix F)

Personnel Required
Two

Equipment Condition
Engine OFF, (TM 9-2320-364-10)
Wheels chocked, (TM 9-2320-364-10)
Air dryer guard removed (if equipped), (Para 12-19)
Air dryers and aftercooler removed, (Para 12-20)
Fuel/water separator and bracket removed, (Para 4-16)
Air dryer reservoir removed, (Para 12-35)
Coalescing filter assembly removed, (Para 12-23)

a. Removal.

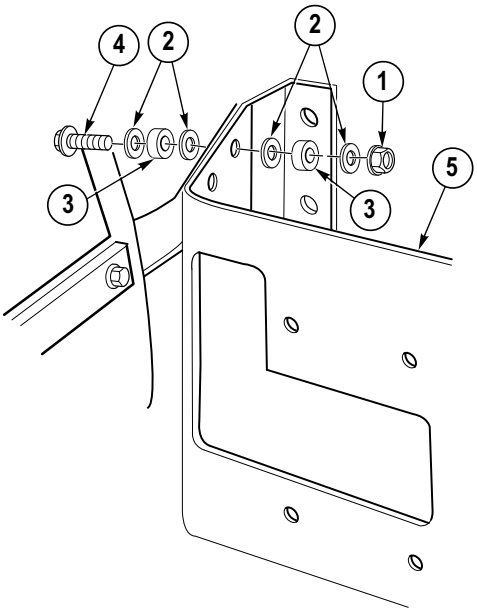

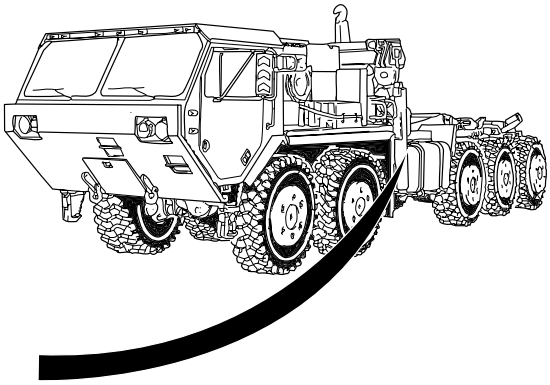

(1) Remove two locknuts (1), eight washers (2), four biscuits (3), and two screws (4) from air dryer mounting bracket (5). Discard locknuts.

15-7. AIR DRYER BRACKET REPLACEMENT (CONT).

NOTE

Trucks not equipped with crane will have spacers behind bracket.

(2) With the aid of an assistant, remove four locknuts (6), screws (7), spacer (8), spacer (9) and air dryer mounting bracket (5) from frame (10). Discard locknuts.

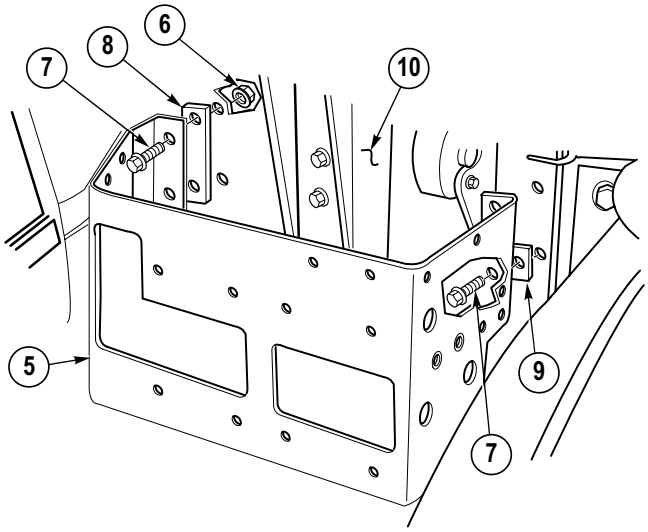

b. Installation.

(1) With the aid of an assistant, install air dryer mounting bracket (5) on frame (10) with four screws (7), spacer (8), spacer (9) and locknuts (6).

(2) Install two screws (4), four biscuits (3), eight washers (2), and two locknuts (1) on air dryer mounting bracket (5). Tighten locknuts until washer to washer measurement is 1-5/16 inches (33mm).

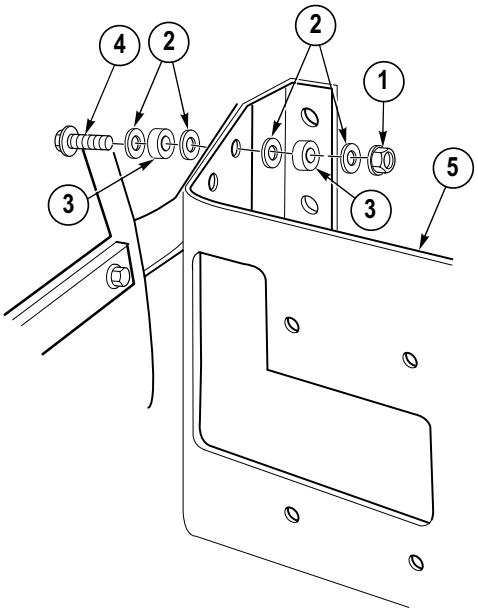

c. Follow-On Maintenance:

- Install air dryer reservoir, (Para 12-35).
- Install fuel/water separator and bracket, (Para 4-16).
- Install air dryers and aftercooler, (Para 12-20).
- Install coalescing filter assembly, (Para 12-23).
- Install air dryer guard (if equipped), (Para 12-19).
- Remove wheel chocks, (TM 9-2320-364-10).

END OF TASK

15-8. REAR HARD LIFT ASSEMBLY REPLACEMENT.

This task covers:

a. Removal b. Installation c. Follow-On Maintenance

INITIAL SETUP

Tools and Special Tools
Tool Kit, General Mechanic's: Automotive (Item 74, Appendix G)
Socket Set, 3/4 in. (Item 61, Appendix G)

Materials/Parts
Locknut (6) (Item 92, Appendix F)
Locknut (2) (Item 92, Appendix F) (if equipped with CHU)

Materials/Parts
Locknut (6) (Item 140, Appendix F) (if not equipped with CHU)
Lockwasher (4) (Item 168, Appendix F)

Personnel Required
Two

Equipment Condition
Engine OFF, (TM 9-2320-364-10)
Wheels chocked, (TM 9-2320-364-10)
CHU long strut bracket assembly removed (if equipped), (Para 21-33)

a. Removal.

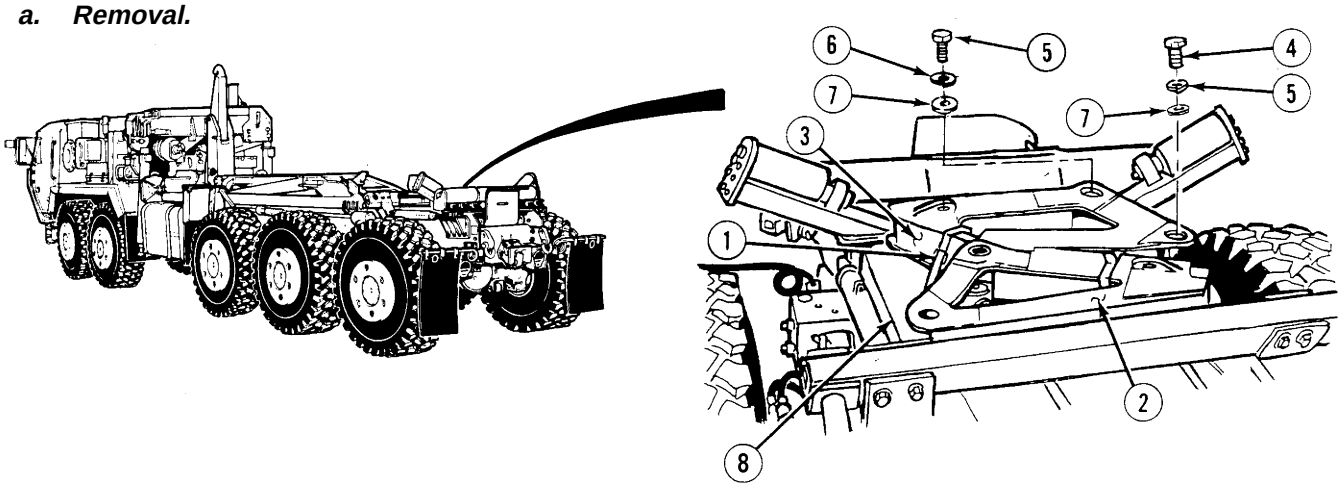

(1) Remove two tie down straps (1) from left hand extension assembly (2) and right hand extension assembly (3).

(2) Remove two screws (4), screws (5), four lockwashers (6) and washers (7) from extension assemblies (2) and (3). Discard lockwashers.

WARNING

Right hand and left hand extension assemblies weigh 110 lb (50 kg) each. Use the aid of an assistant when lifting to prevent injury to personnel.

(3) With the aid of an assistant, remove left hand extension assembly (2) and right hand extension assembly (3) from deck assembly (8).

15-8. REAR HARD LIFT ASSEMBLY REPLACEMENT (CONT).

NOTE

- Perform Steps (4) and (5) for trucks not equipped with CHU.
- Perform Steps (6) through (11) for trucks equipped with CHU.

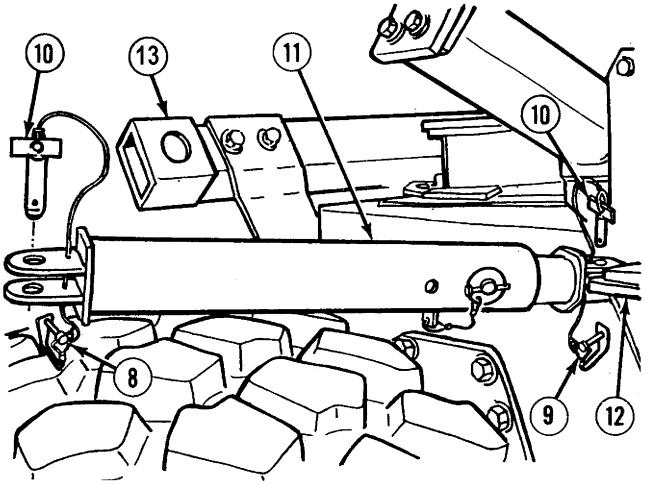

(4) Remove two quick disconnect pins (9), pins (10) and left strut assembly (11) from left collar bracket assembly (12) and hard lift support bracket (13).

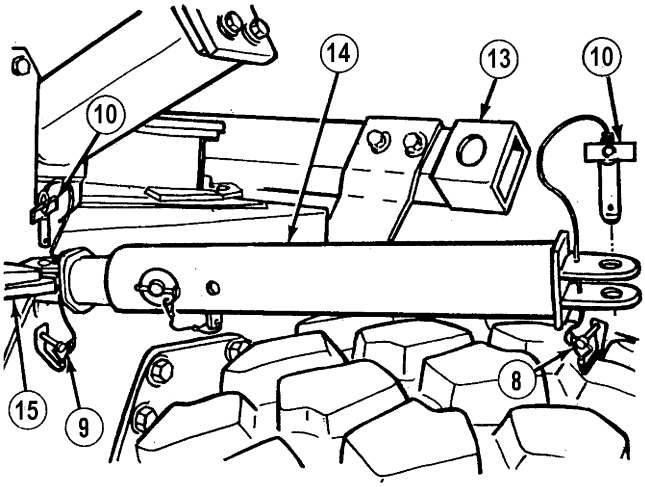

(5) Remove two quick disconnect pins (9), pins (10) and right strut assembly (14) from right collar bracket assembly (15) and hard lift support bracket (13).

(6) Remove quick disconnect pin (16), pin (17) and left strut assembly (11) from left collar bracket assembly (12).

(7) Remove quick disconnect pin (18), pin (19) and hard lift slider bracket (20) from hard lift support bracket (13).

NOTE

Perform Step (8) only if snapper pin and/or wire is damaged.

(8) Remove snapper pin (21), wire (22) and swaging sleeve (23) from hard lift slider bracket (20) and pin (19).

(9) Remove quick disconnect pin (24) and pin (25) from left strut assembly (11).

(10) Separate rear hard lift strut (26) and front hard lift strut (27).

(11) Repeat Steps (6) through (10) for right strut assembly.

NOTE

Left and right brackets are different on trucks equipped with CHU, however, removal procedures are identical.

(12) With the aid of an assistant, remove six locknuts (28), screws (29) and deck assembly (8) from left bracket (30) and right bracket (31). Discard locknuts.

NOTE

- Perform Steps (13) and (14) for trucks not equipped with CHU.
- Perform Steps (15) and (16) for trucks equipped with CHU.

(13) With the aid of an assistant, remove three locknuts (32), screws (33) and left bracket (30) from frame (34). Discard locknuts.

(14) With the aid of an assistant, remove three locknuts (32), screws (33) and right bracket (31) from frame (34).

(15) With the aid of an assistant, remove locknut (32), screw (33) and left bracket (30) from frame (34). Discard locknut.

(16) With the aid of an assistant, remove locknut (32), screw (33) and right bracket (31) from frame (34). Discard locknut.

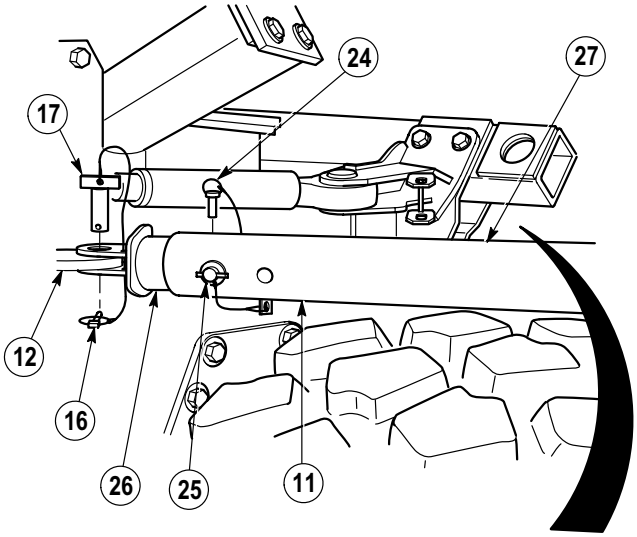

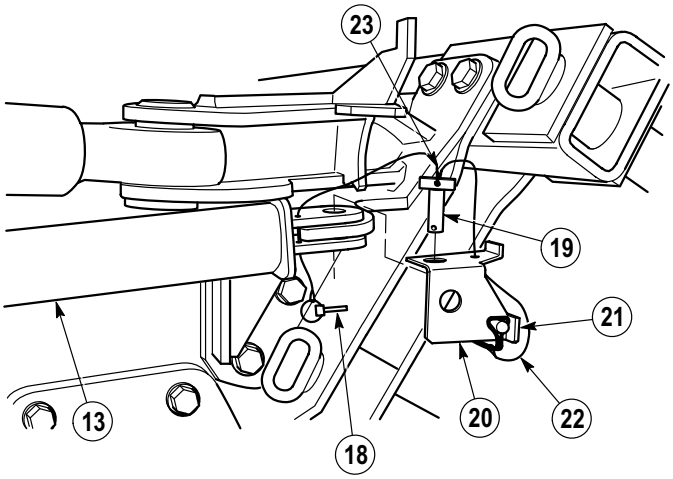

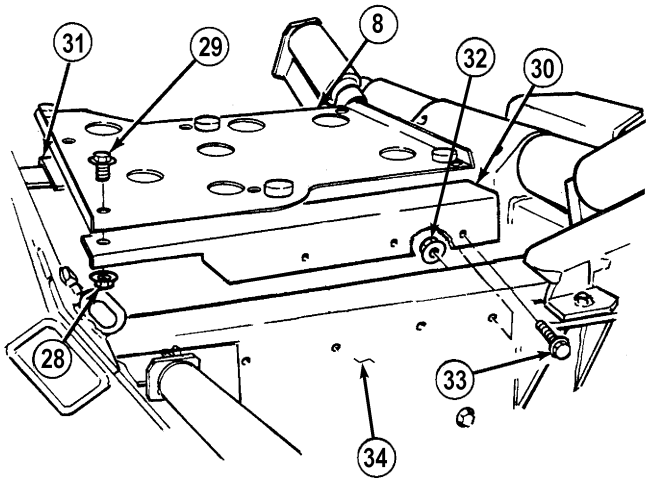

15-8. REAR HARD LIFT ASSEMBLY REPLACEMENT (CONT).

b. Installation.

NOTE

- Left and right brackets are different on trucks equipped with CHU, however, installation procedures are identical.
- Perform Steps (1) and (2) for trucks not equipped with CHU.
- Perform Steps (3) and (6) for trucks equipped with CHU.

(1) Install right bracket (31) on frame (34) with three screws (33) and locknuts (32).

(2) Install left bracket (30) on frame (34) with three screws (33) and locknuts (32).

(3) Install right bracket (31) on frame (34) with screw (33) and locknut (32) in rear position. Do not tighten.

(4) Install left bracket (30) on frame (34) with screw (33) and locknut (32) in rear position. Do not tighten.

(5) Install long strut bracket assembly, (Para 21-33).

(6) Tighten two locknuts (32).

(7) Install deck assembly (8) on left bracket (30) and right bracket (31) with six screws (29) and locknuts (28).

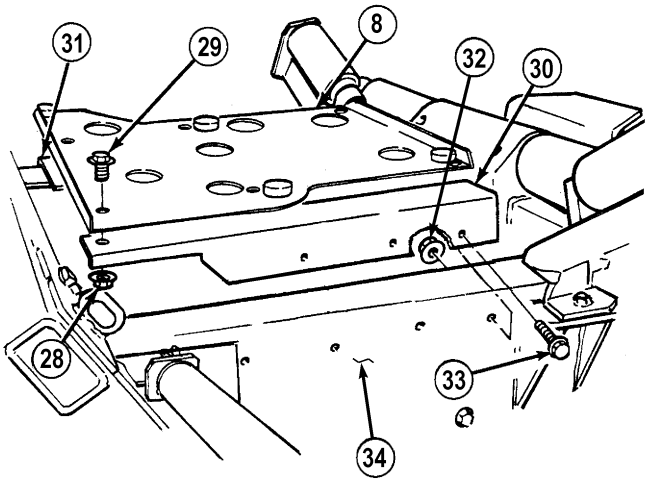

NOTE

- Perform Steps (8) and (9) for trucks not equipped with CHU.
- Perform Steps (10) through (15) for trucks equipped with CHU.

(8) Install left strut assembly (11), two pins (10) and quick disconnect pins (9) on left collar bracket assembly (12) and hard lift support bracket (13).

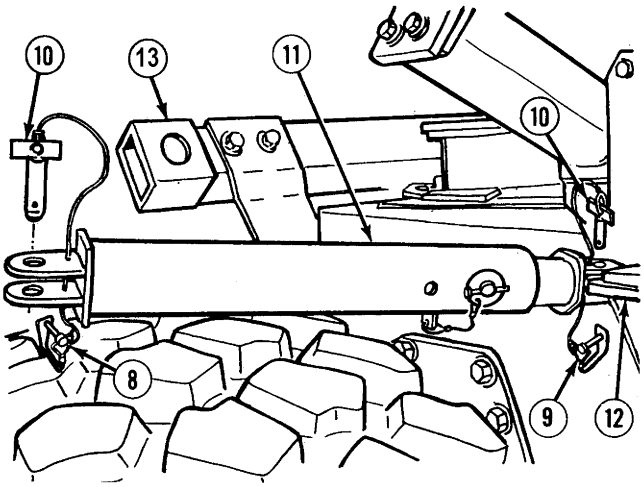

(9) Install right strut assembly (14), two pins (10) and quick disconnect pins (9) on collar bracket assembly (15) and hard lift support bracket (13).

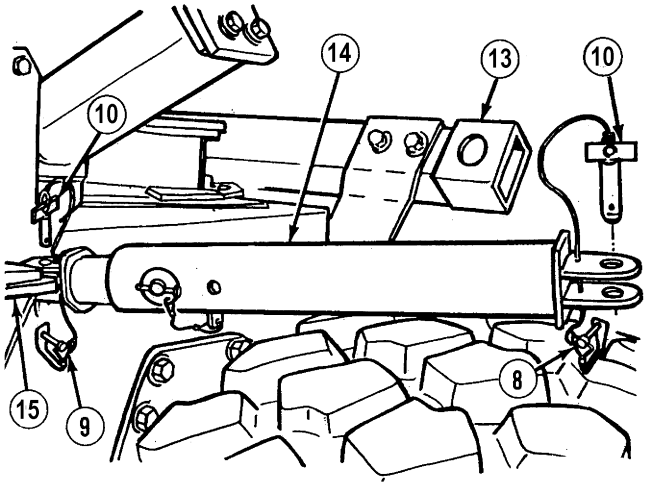

(10) Assemble front hard lift strut (27) and rear hard lift strut (26) with pin (25) and quick disconnect pin (24).

(11) Install pin (17), quick disconnect pin (16) and left strut assembly (11) on left collar bracket assembly (12).

(12) Install pin (19), quick disconnect pin (18) and hard lift slider bracket (20) on hard lift support bracket (13).

(13) Attach snapper pin (21) to pin (19) by positioning wire (22) through hole in hard lift slider bracket (20).

(14) Position wire (22) through swaging sleeve (23), pin (19) and loop back to swaging sleeve and crimp.

(15) Repeat steps (10) through (14) for right strut assembly.

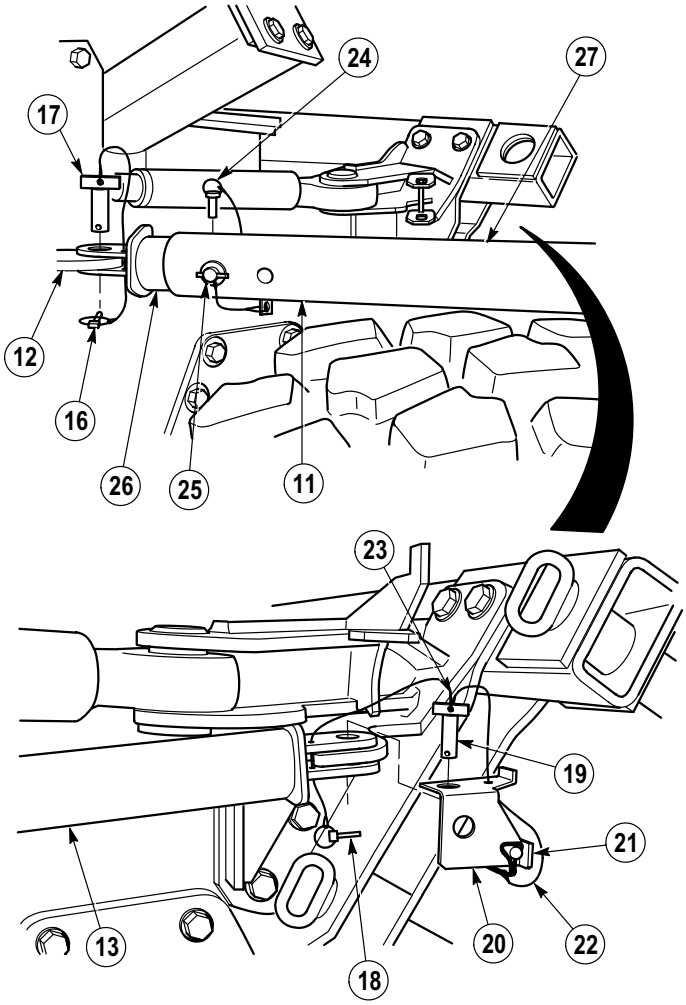

15-8. REAR HARD LIFT ASSEMBLY REPLACEMENT (CONT).

(16) With the aid of an assistant, position left hand extension assembly (2) and right hand extension assembly (3) on deck assembly (8).

(17) Install two screws (5), screws (4), four lockwashers (6) and washers (7) in extension assemblies (2) and (3). Tighten screws (4) and (5) to 23 lb-ft (31 N·m).

(18) Install and tighten two tie down straps (1) securing left hand extension assembly (2) and right hand extension assembly (3).

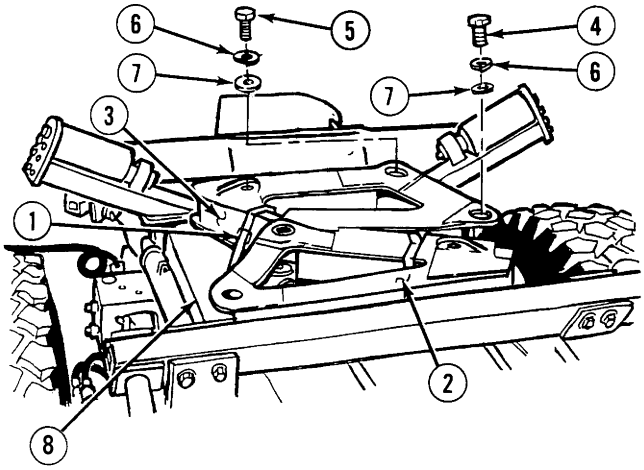

c. Follow-On Maintenance:

- Remove wheel chocks, (TM 9-2320-364-10).

END OF TASK

15-9. TREAD PLATFORM ASSEMBLY REPLACEMENT.

This task covers:

a. Removal b. Installation c. Follow-On Maintenance

INITIAL SETUP

Tools and Special Tools
Tool Kit, General Mechanic's: Automotive (Item 74, Appendix G)

Materials/Parts
Locknut (4) (Item 93, Appendix F)

Equipment Condition
Engine OFF, (TM 9-2320-364-10)
Wheels chocked, (TM 9-2320-364-10)

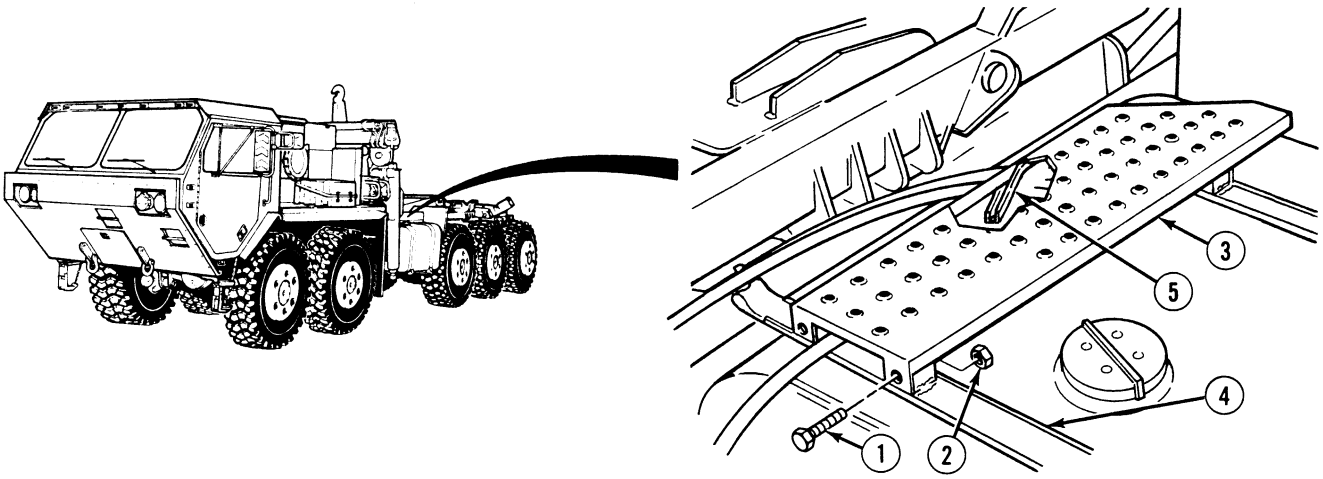

a. Removal.

(1) Remove four screws (1), locknuts (2) and tread platform assembly (3) from mounting straps (4). Discard locknuts.

(2) Remove quickedge molding (5) from tread platform assembly (3).

b. Installation.

(1) Install quickedge molding (5) on tread platform assembly (3).

(2) Install tread platform assembly (3), four screws (1) and locknuts (2) on mounting strips (4).

c. Follow-On Maintenance:

- Remove wheel chocks, (TM 9-2320-364-10).

END OF TASK

15-10. PLATFORM ASSEMBLY REPLACEMENT (MODEL 1075 ONLY).

This task covers:

a. Removal b. Installation c. Follow-On Maintenance

INITIAL SETUP

Tools and Special Tools
Tool Kit, General Mechanic's: Automotive (Item 74, Appendix G)
Lifting Device, Minimum capacity 100 lbs (45 kg)

Materials/Parts
Locknut (4) (Item 93, Appendix F)

Personnel Required
Two

Equipment Condition
Engine OFF, (TM 9-2320-364-10)
Wheels chocked, (TM 9-2320-364-10)

a. Removal.

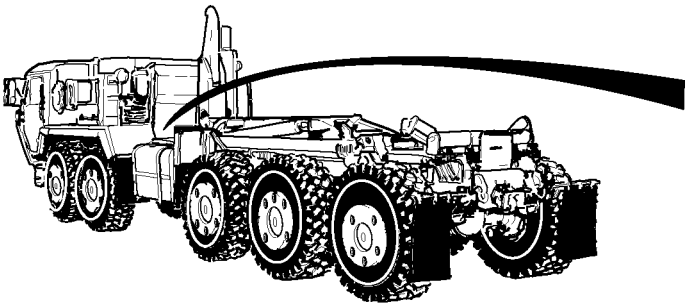

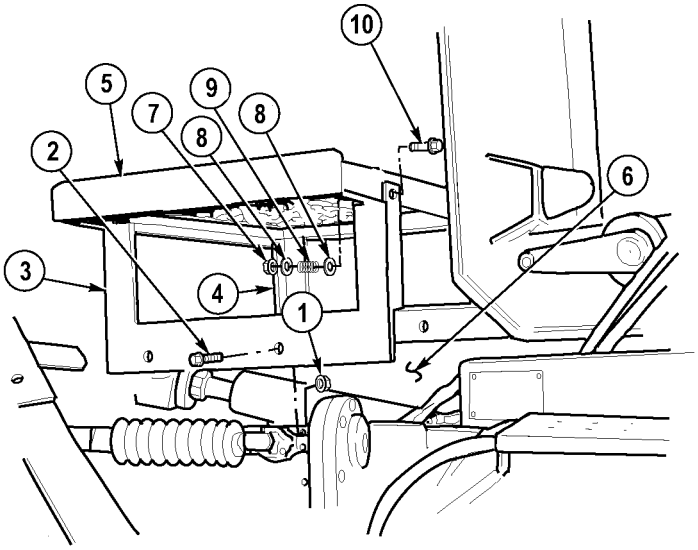

(1) Remove four locknuts (1) and screws (2) from legs (3) and (4). Discard locknuts.

WARNING

Platform assembly weighs 62 lbs (28 kg). Attach suitable lifting device prior to removal to prevent possible injury to personnel.

(2) With the aid of an assistant, remove platform assembly (5) from mounting frame (6).

(3) Remove four locknuts (7), washer (8), springs (9), washer (8), screws (10) and legs (3) and (4) from platform assembly (5). Discard locknuts.

b. Installation.

(1) Position legs (3) and (4) on platform assembly (5) with four screws (10), washers (8), springs (9), washers (8) and locknuts (7).

NOTE

Locknut should be tightened until there is 2.5 in. (6.4 cm) between inner edge of platform assembly and outer edge of locknut.

(2) Tighten four locknuts (7) on screws (10).

WARNING

Platform assembly weighs 62 lbs (28 kg). Attach suitable lifting device prior to installation to prevent possible injury to personnel.

(3) With the aid of an assistant, position platform assembly (5) on mounting frame (6).

(4) Install four screws (2) and locknuts (1) on legs (3) and (4).

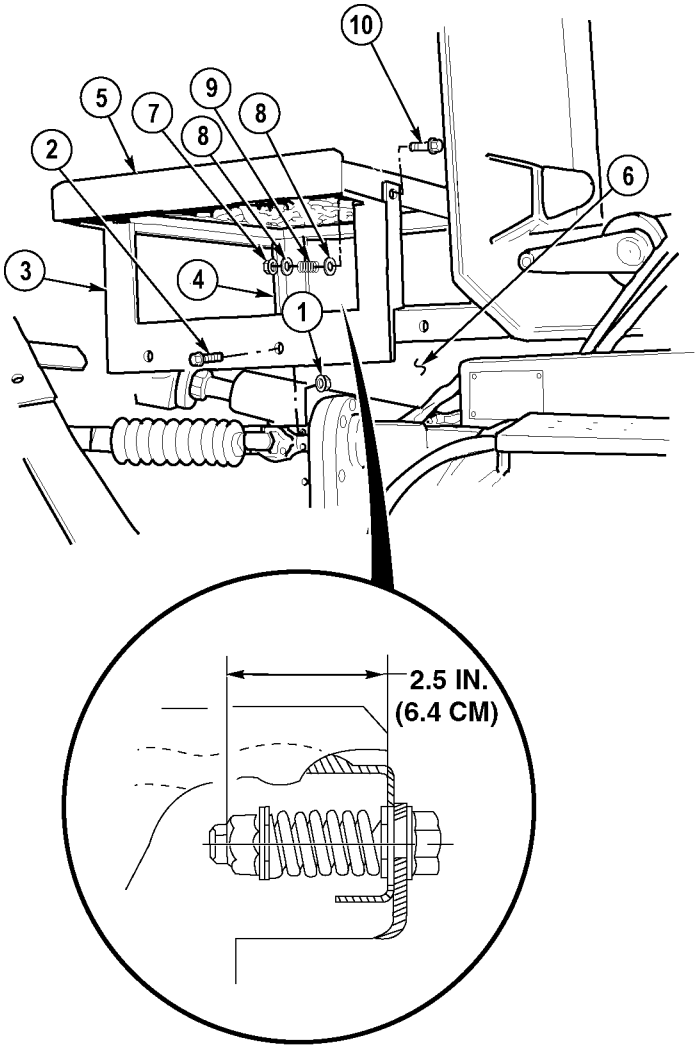

c. Follow-On Maintenance:

- Remove wheel chocks, (TM 9-2320-364-10).

END OF TASK

15-11. REAR HARD LIFT BRACKET REPLACEMENT.

This task covers:

a. Removal b. Installation c. Follow-On Maintenance

INITIAL SETUP

Tools and Special Tools
Tool Kit, General Mechanic's: Automotive (Item 74, Appendix G)
Multiplier, Torque (Item 45, Appendix G)
Wrench, Torque (0 to 175 lb-ft [0 to 237 N·m]) (Item 95, Appendix G)
Lifting Device, Minimum Capacity 110 lb (50 kg)

Materials/Parts
Locknut (36) (Item 92, Appendix F)
Locknut (4) (Item 144, Appendix F)
Lockwasher (Item 168, Appendix F)

Equipment Condition
Engine OFF, (TM 9-2320-364-10)
Wheels chocked, (TM 9-2320-364-10)
Rear hard lift assembly removed, (Para 15-8)
Load sensing valves removed, (Para 12-33)

a. Removal.

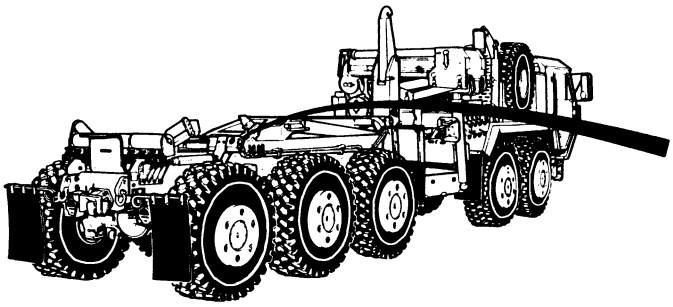

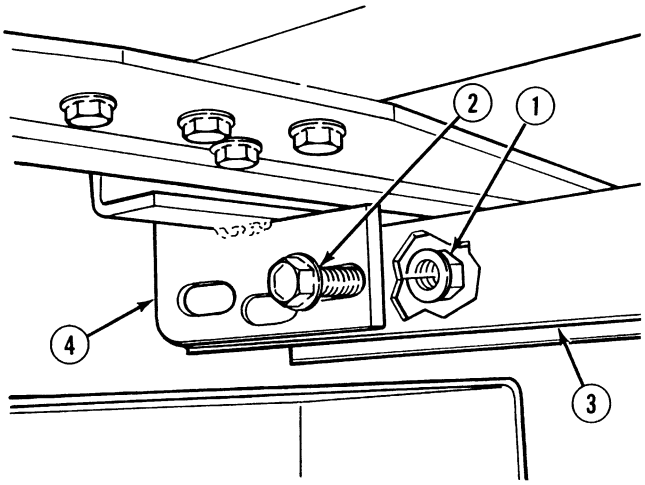

(1) Remove twelve locknuts (1), screws (2) and crossmember (3) from right and left hard lift brackets (4). Discard locknuts.

(2) Remove two quick release pins (5) and two pins (6) from crossover tube (7).

WARNING

Crossover tube weighs 100 lbs (45 kg). Attach a suitable lifting device prior to removal to prevent possible injury to personnel.

(3) Attach lifting device to crossover tube (7).

(4) Remove eight locknuts (8), screws (9) and crossover tube (7) from right and left hard lift brackets (4). Discard locknuts.

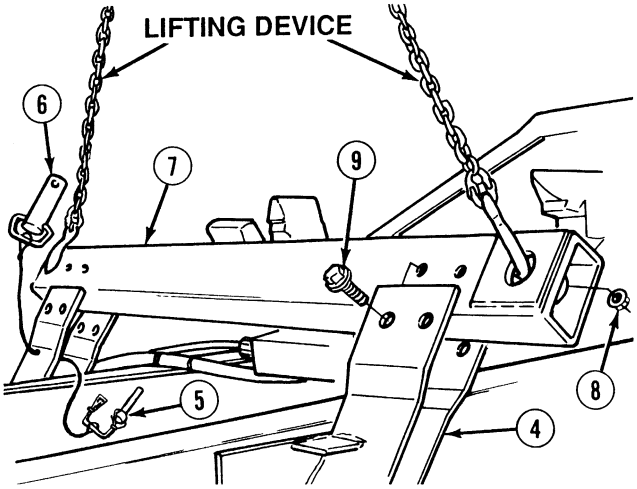

(5) Remove nut (10), lockwasher (11) and screw (12) from steering arm (13). Discard lockwasher.

(6) Pry drag link (14) from steering arm (13).

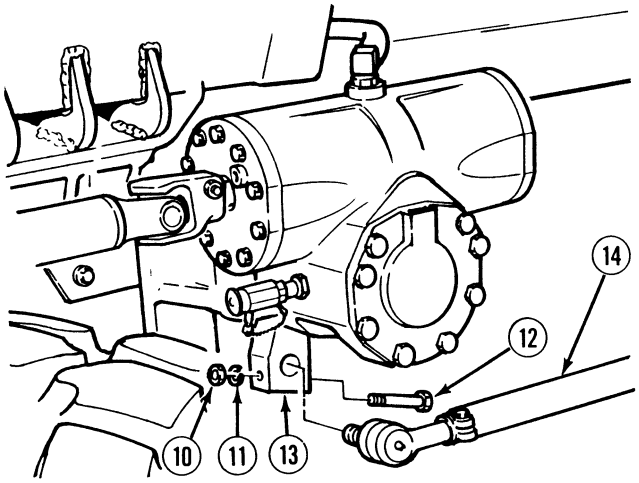

15-11. REAR HARD LIFT BRACKET REPLACEMENT (CONT).

(7) Remove two quick release pins (15) and two pins (16) from right and left hard lift brackets (4).

(8) Remove four locknuts (17) and screws (18) from right and left hard lift brackets (4). Discard locknuts.

(9) Remove six locknuts (19) and screws (20) from right and left hard lift brackets (4). Discard locknuts.

WARNING

Each hard lift bracket weighs 67 lbs (30 kg). Attach a suitable lifting device prior to removal to prevent possible injury to personnel.

(10) Attach lifting device to each hard lift bracket (4), one at a time.

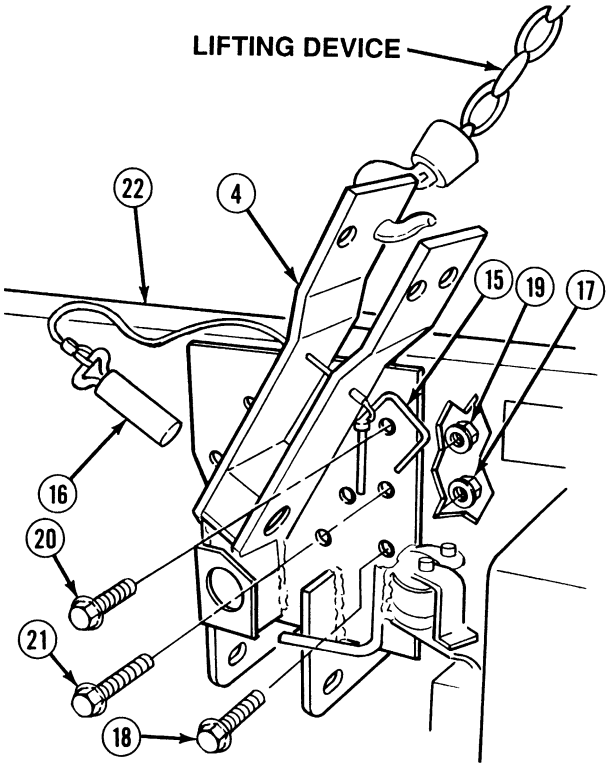

(11) Remove ten locknuts (19), screws (21) and right and left hard lift brackets (4) from frame (22). Discard locknuts.

b. Installation.

WARNING

Each hard lift bracket weighs 67 lbs (30 kg). Attach a suitable lifting device prior to installation to prevent possible injury to personnel.

(1) Attach lifting device to each hard lift bracket (4), one at a time.

(2) Install each hard lift bracket (4) on frame (22) with ten screws (21) and locknuts (19). Tighten locknuts hand tight.

(3) Install six screws (20) in right and left hard lift brackets (4) and frame (22) with six locknuts (19). Tighten locknuts hand tight.

(4) Install four screws (18) in right and left hard lift brackets (4) and frame (22) with four locknuts (17). Tighten locknuts to 210 lb-ft (285 N·m).

(5) Tighten sixteen locknuts (19) to 375 lb-ft (508 N·m).

(6) Install two pins (16) in right and left hard lift bracket (4) with two quick release pins (15).

(7) Install drag link (14) on steering arm (13) with screw (12), lockwasher (11) and nut (10).

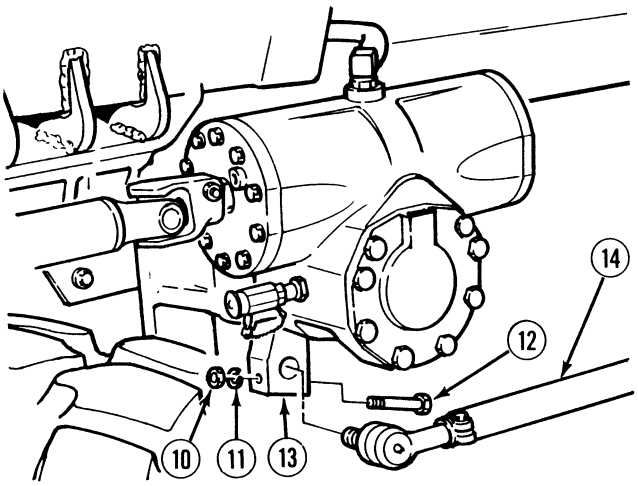

WARNING

Crossover tube weighs 100 lbs (45 kg). Attach a suitable lifting device prior to installation to prevent possible injury to personnel.

(8) Attach lifting device to crossover tube (7).

(9) Install crossover tube (7) in right and left hard lift brackets (4) with eight screws (9) and locknuts (8). Tighten locknuts to 375 lb-ft (508 N·m).

(10) Install two pins (6) in crossover tube (7) with two quick release pins (5).

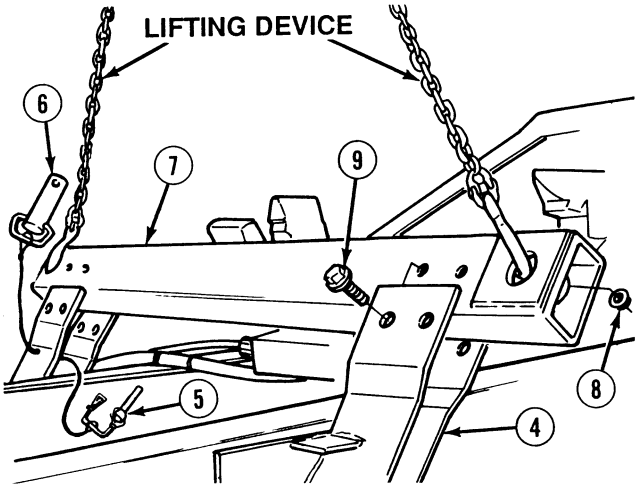

CAUTION

Ensure larger radius cut-out on crossmember is positioned towards rear of truck or damage to equipment may result.

(11) Install crossmember (3) between right and left hard lift brackets (4) with twelve screws (2) and locknuts (1). Tighten locknuts to 375 lb-ft (508 N·m).

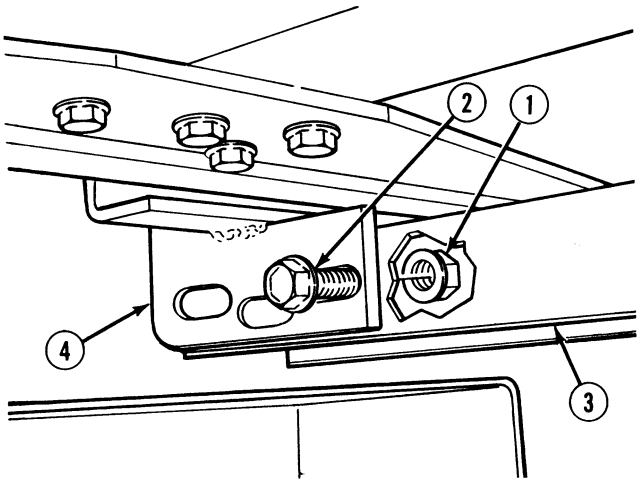

c. Follow-On Maintenance:

- Install load sensing valves, (Para 12-33).
- Install rear hard lift assembly, (Para 15-8).
- Remove wheel chocks, (TM 9-2320-364-10).

END OF TASK

15-12. AXLE STOP REPLACEMENT.

This task covers:

a. Axle No. 1, 2 and 4 Right Hand Side
b. Axle No. 1, 2 and 4 Left Hand Side
c. Axle No. 3 Right and Left Hand Side
d. Axle No. 5 Right and Left Hand Side
e. Follow-On Maintenance

INITIAL SETUP

Tools and Special Tools
Tool Kit, General Mechanic's: Automotive (Item 74, Appendix G)

Materials/Parts
Locknut (2) (Item 112, Appendix F)

Equipment Condition
Engine OFF, (TM 9-2320-364-10)
Wheels chocked, (TM 9-2320-364-10)

a. Axle No. 1, 2 and 4 Right Hand Side.

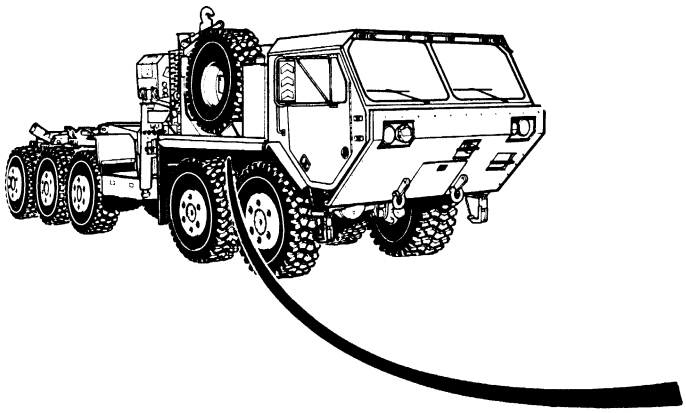

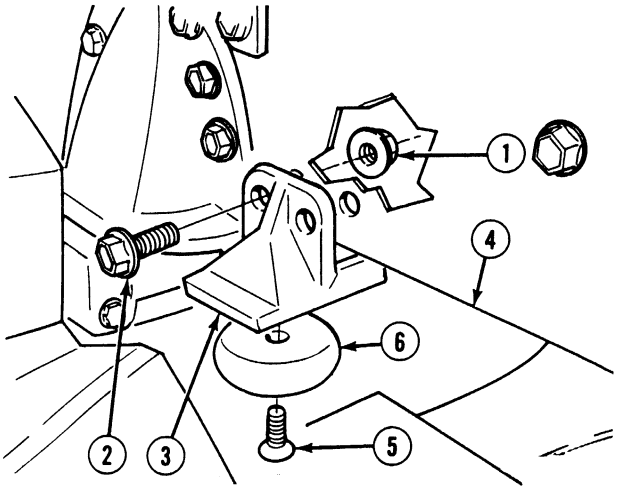

(1) Removal.

(a) Remove two locknuts (1), screws (2) and axle stop bracket (3) from truck (4). Discard locknuts.

(b) Remove screw (5) and axle stop (6) from axle stop bracket (3).

(2) Installation.

(a) Install axle stop (6) and screw (5) on axle stop bracket (3).

NOTE

Position axle stop bracket tight on frame of truck.

(b) Install axle stop bracket (3), two screws (2) and locknuts (1) on truck (4).

b. Axle No. 1, 2 and 4 Left Hand Side.

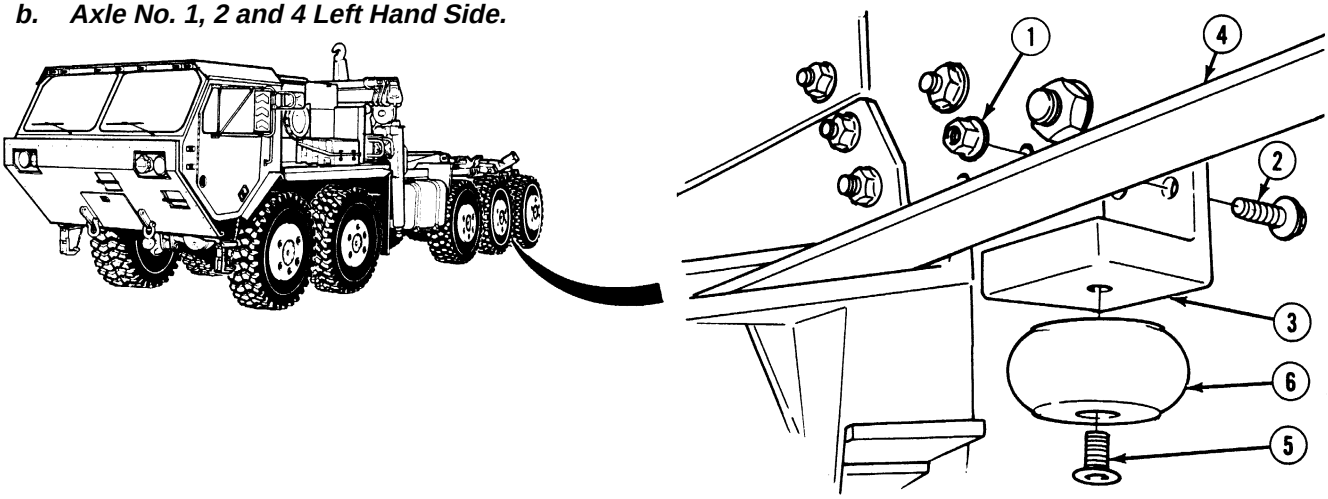

(1) Removal.

(a) Remove two locknuts (1), screws (2) and axle stop bracket (3) from truck (4). Discard locknuts.

(b) Remove screw (5) and axle stop (6) from axle stop bracket (3).

(2) Installation.

(a) Install axle stop (6) and screw (5) on axle stop bracket (3).

NOTE

Position axle stop bracket tight to frame of truck.

(b) Install axle stop bracket (3), two screws (2) and locknuts (1) on truck (4).

15-12. AXLE STOP REPLACEMENT (CONT).

c. Axle No. 3 Right and Left Hand Side.

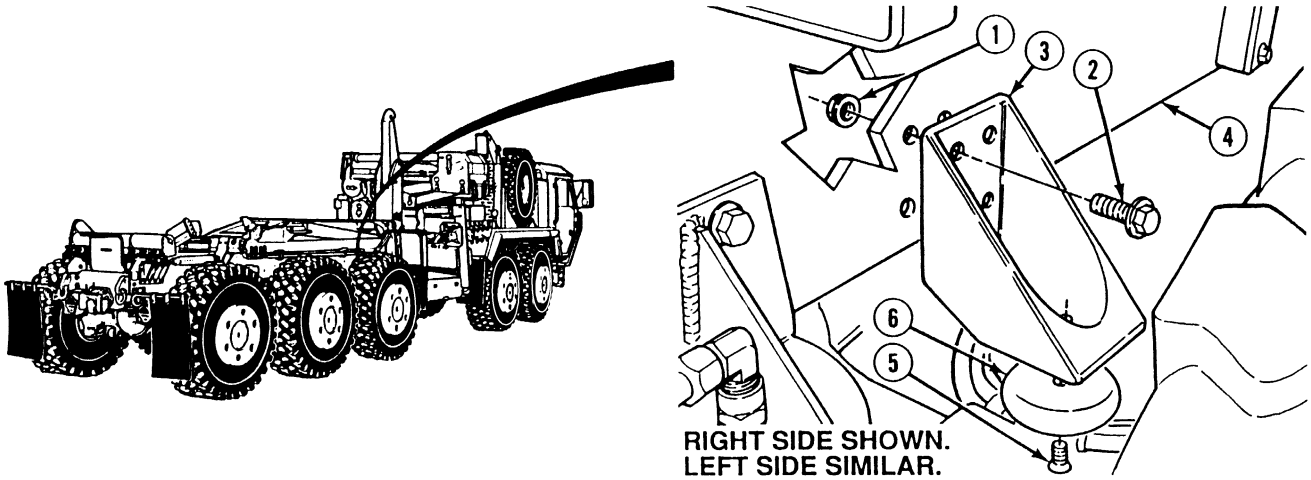

(1) Removal.

(a) Remove four locknuts (1), screws (2) and axle stop bracket (3) from truck (4). Discard locknuts.

(b) Remove screw (5) and axle stop (6) from axle stop bracket (3).

(2) Installation.

(a) Install axle stop (6) and screw (5) on stop bracket (3).

(b) Install axle stop bracket (3), four screws (2) and locknuts (1) on truck (4).

d. Axle No. 5 Right and Left Sides.

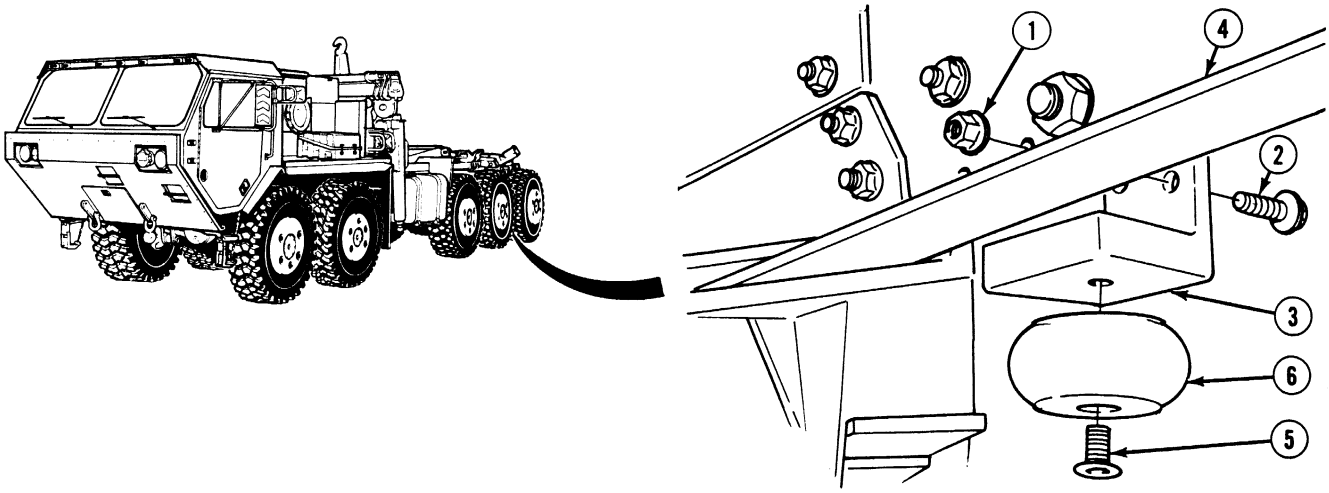

(1) Removal.

(a) Remove two locknuts (1), screws (2) and axle stop bracket (3) from truck (4). Discard locknuts.

(b) Remove screw (5) and axle stop (6) from axle stop bracket (3).

(2) Installation.

(a) Install axle stop (6) and screw (5) on axle stop bracket (3).

NOTE

Position stop bracket tight to frame of truck.

(b) Install axle stop bracket (3), two screws (2) and locknuts (1) on truck (4).

e. Follow-on Maintenance:

- Remove wheel chocks, (TM 9-2320-364-10).

END OF TASK

15-13. TIE DOWN RING REPLACEMENT.

This task covers:

a. Removal b. Installation c. Follow-On Maintenance

INITIAL SETUP

Tools and Special Tools
Tool Kit, General Mechanic's: Automotive (Item 74, Appendix G)

Materials/Parts
Locknut (4) (Item 92, Appendix F)

Equipment Condition
Engine Off, (TM 9-2320-364-10)
Wheels Chocked, (TM 9-2320-364-10)

a. Removal.

NOTE

There are six tie down rings. The front right and left are removed at direct support. The remaining four are all removed the same way with the exception of one which also has a valve bracket. The one with the valve bracket is shown.

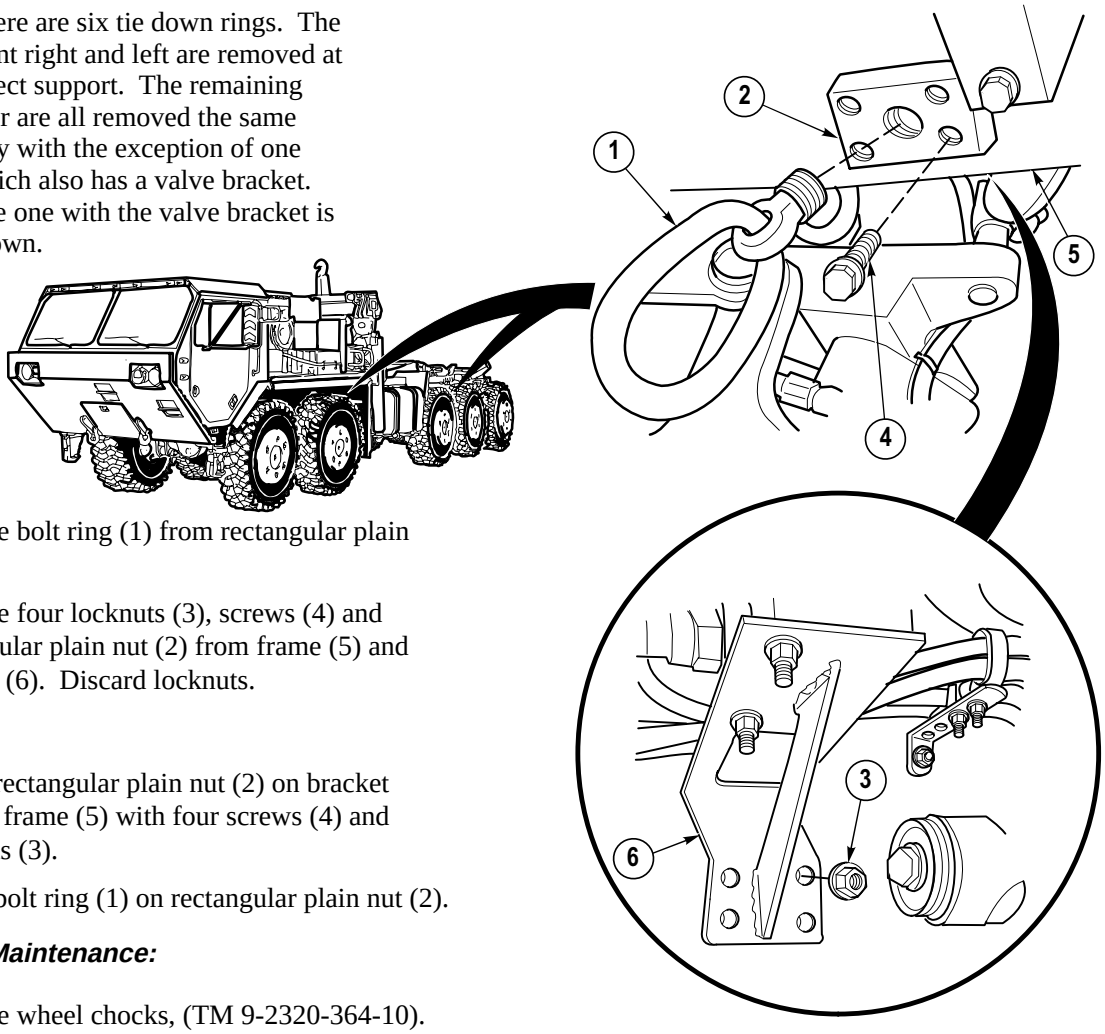

(1) Remove bolt ring (1) from rectangular plain nut (2).

(2) Remove four locknuts (3), screws (4) and rectangular plain nut (2) from frame (5) and bracket (6). Discard locknuts.

b. Installation.

(1) Install rectangular plain nut (2) on bracket (6) and frame (5) with four screws (4) and locknuts (3).

(2) Install bolt ring (1) on rectangular plain nut (2).

c. Follow-On Maintenance:

- Remove wheel chocks, (TM 9-2320-364-10).

END OF TASK

15-14. SERVICE GLADHAND BRACKET REPLACEMENT.

This task covers:

a. Removal b. Installation c. Follow-On Maintenance

INITIAL SETUP

Tools and Special Tools
Tool Kit, General Mechanic's: Automotive (Item 74, Appendix G)

Materials/Parts
Adhesive (Item 8, Appendix C), (Model A connector only)
Cable Ties (Item 25, Appendix C)
Locknut (5) (Item 91, Appendix F)
Locknut (2) (Item 107, Appendix F)

Materials/Parts - Continued
Locknut (2) (Item 140, Appendix F)

Personnel Required
Two

Equipment Condition
Engine OFF, (TM 9-2320-364-10)
Wheels chocked, (TM 9-2320-364-10)
Gladhand removed, (Para 12-43)

a. Removal.

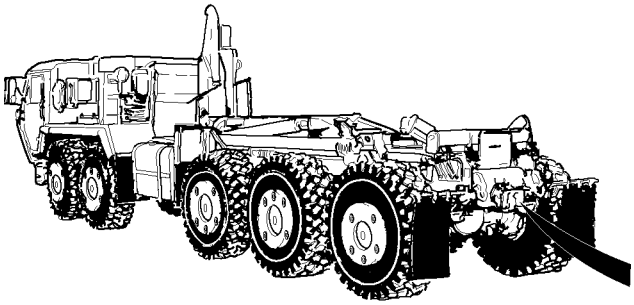

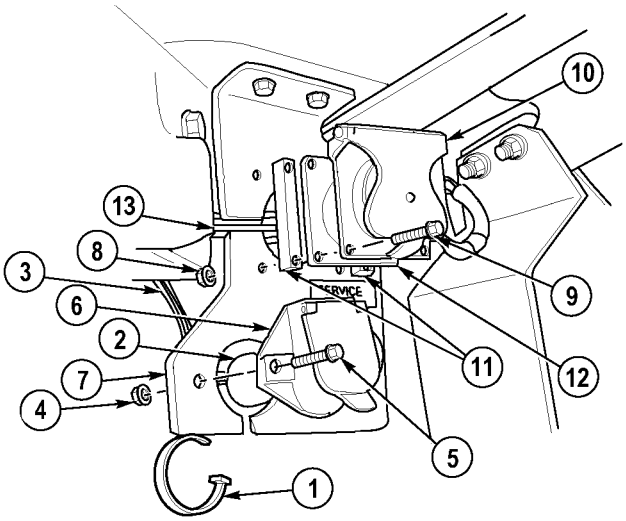

NOTE

- There are two types of 7-pin electrical connectors. Model B replaced Model A.
- Model A has a rubber boot covering the back.
- Model B uses rubber push on connectors on the back.
- Perform Step (1) for Model A connector.

(1) Remove cable tie (1) and slide boot (2) back on chassis wire harness (3).

(2) Remove two locknuts (4) and screws (5) from MC16 connector (6) and bracket (7). Discard locknuts.

(3) Pull MC16 connector (6) toward rear of truck and guide chassis wire harness (3) down through slot on bracket (7).

(4) Remove four locknuts (8), screws (9), connector cover (10) and two spacers (11) from MC15 connector (12) and bracket (7). Discard locknuts.

(5) Pull MC15 connector (12) toward rear of truck and guide wires (13) through slot on side of bracket (7).

15-14. SERVICE GLADHAND BRACKET REPLACEMENT (CONT).

(6) Remove locknut (14), cushion clip (15) and screw (16) from bracket (7). Discard locknut.

NOTE

Perform Step (7) if name plate is damaged.

(7) Remove two drive screws (17) and nameplate (18) from bracket (7).

(8) With the aid of an assistant, remove two locknuts (19), screws (20) and bracket (7) from rear crossmember (21). Discard locknuts.

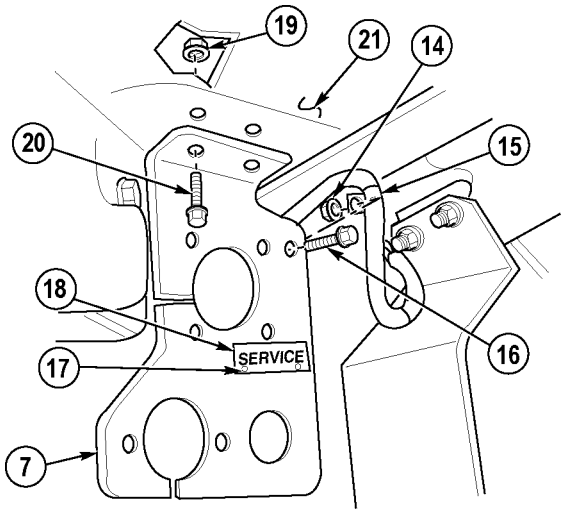

b. Installation.

(1) With the aid of an assistant, install bracket (7) on rear crossmember (21) with two screws (20) and locknuts (19).

NOTE

Perform Step (2) if name plate was removed.

(2) Install nameplate (18) on bracket (7) with two drive screws (17).

(3) Install cushion clip (15) on rear of bracket (7) with screw (16) and locknut (14).

(4) Guide wires (13) on MC15 connector (12) through slot on side of bracket (7).

(5) Install two spacers (11), MC15 connector (12) and connector cover (10) on bracket (7) with four screws (9) and locknuts (8).

(6) Guide wires (3) on MC16 connector (6) through slot on bottom of bracket (7).

(7) Install MC16 connector (6) on bracket (7) with two screws (5) and locknuts (4).

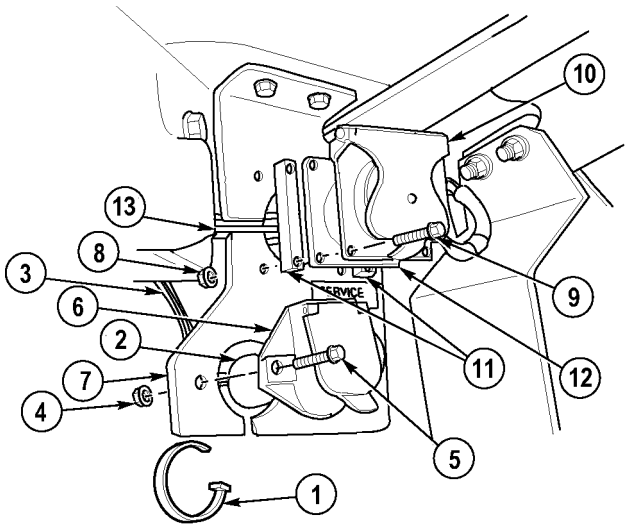

WARNING

Adhesives, solvents and sealing compounds can burn easily, can give off harmful vapors, and are harmful to skin and clothing. To avoid injury or death, keep away from open fire and use in well-ventilated area. If adhesive, solvent or sealing compound gets on skin or clothing, wash immediately with soap and water.

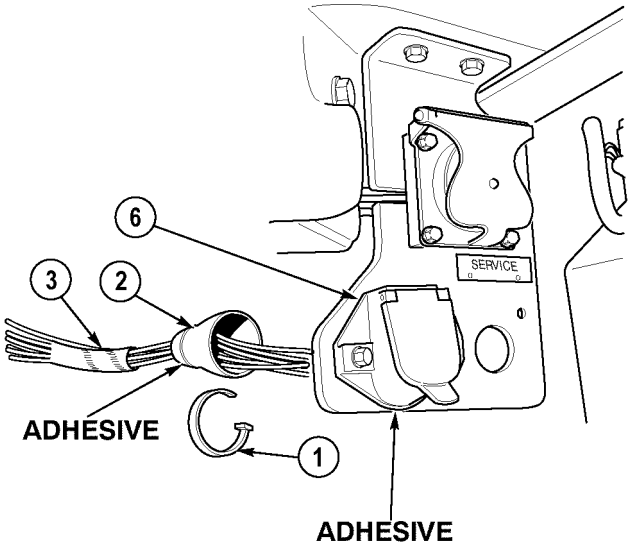

NOTE

Perform Steps (8) through (10) for Model A connector.

(8) Apply a thin strip of adhesive completely around rear of MC16 connector (6).

(9) Install boot (2) on MC16 connector (6) with cable tie (1).

(10) Apply a thin strip of adhesive to rear of boot (2) where wires (3) enter boot (2).

c. Follow-On Maintenance:

- Install gladhand, (Para 12-43).
- Remove wheel chocks, (TM 9-2320-364-10).

END OF TASK

15-15. HORIZONTAL ROLLER REPLACEMENT.

This task covers:

a. Removal b. Installation c. Follow-On Maintenance

INITIAL SETUP

Tools and Special Tools
Tool Kit, General Mechanic's: Automotive (Item 74, Appendix G)
Lifting Device, Minimum Capacity 375 lbs (170 kg)

Materials/Parts
Lockwasher (2) (Item 180, Appendix F)
Lockwasher (Item 211, Appendix F)

Equipment Condition
Engine OFF, (TM 9-2320-364-10)
Wheels chocked, (TM 9-2320-364-10)
Angled rollers removed, (Para 15-16)
Rear roller assembly removed, (Para 15-17)

a. Removal.

WARNING

Rear roller assembly weighs 375 lbs (170 kg). Attach suitable lifting device prior to removal to prevent possible injury to personnel.

NOTE

Both right and left hand horizontal rollers are removed the same way. Right horizontal roller is shown.

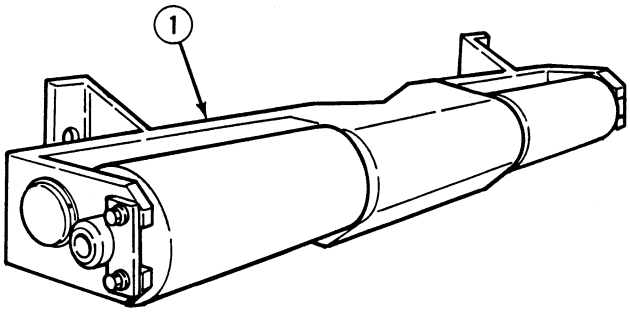

(1) Using lifting device, place rear roller assembly (1) on clean work surface.

(2) Remove lube fitting (2), bend lockwasher tab out of nut slot and remove nut (3), lockwasher (4) and thrust washer (5) from roller (6) at underside of roller assembly (1). Discard lockwasher.

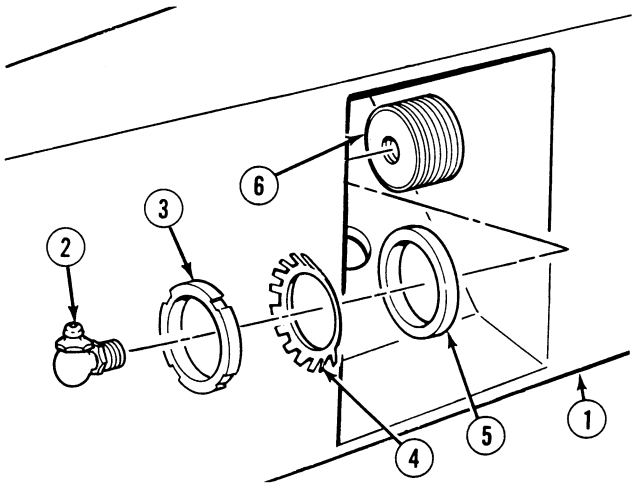

NOTE

Lockplate looks different on trucks equipped with CHU, however, procedures are identical.

(3) Remove two screws (7), lockwashers (8), lockplate (9) and lube fitting (10) from roller assembly (1). Discard lockwashers.

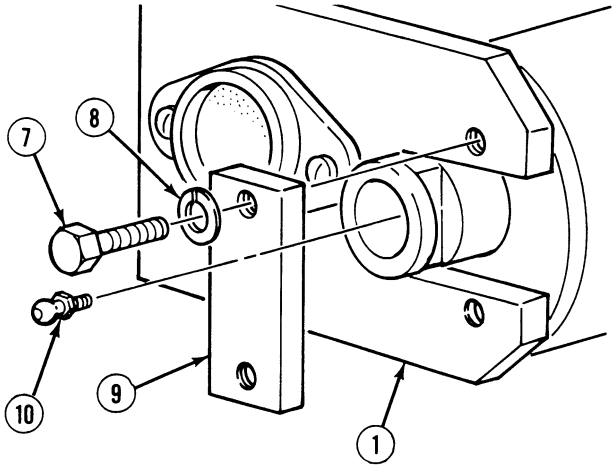

(4) Attach lifting device to rear roller (6).

WARNING

Horizontal roller weighs 75 lbs (34 kg). Attach suitable lifting device prior to removal to prevent possible injury to personnel.

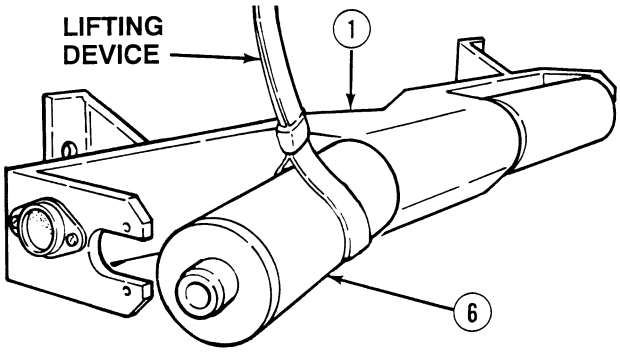

(5) Using lifting device, remove roller (6) from roller assembly (1).

(6) Remove lifting device.

15-15. HORIZONTAL ROLLER REPLACEMENT (CONT).

b. Installation.

(1) Attach lifting device to roller (6).

WARNING

Horizontal roller weighs 75 lbs (34 kg). Attach suitable lifting device prior to installation to prevent possible injury to personnel.

(2) Using lifting device, position roller (6) in roller assembly (1).

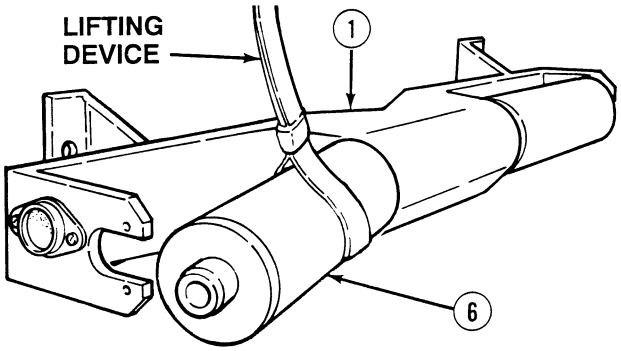

NOTE

Lockplate looks different on trucks equipped with CHU, however, procedures are identical.

(3) Install lockplate (9), lockwasher (8), screw (7) and lube fitting (10) in roller assembly (1).

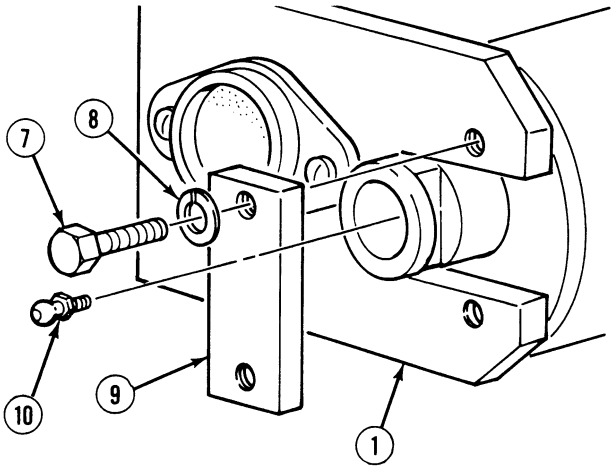

NOTE

Nut is installed properly when nut is tightened and roller does not bind.

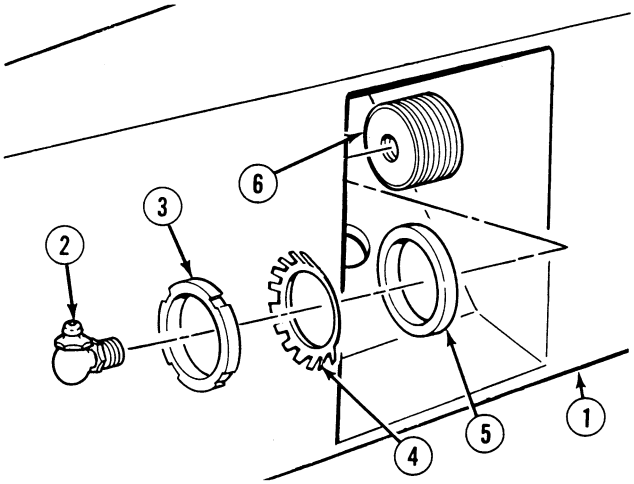

(4) Install thrust washer (5), lockwasher (4), nut (3) and lube fitting (2) on roller (6). Tighten nut. Bend lockwasher tab into nut slot.

(5) Bend tab of lockwasher (4) into slot of nut (3).

(6) Remove lifting device from roller (6).

c. Follow-On Maintenance:

- Install rear roller assembly, (Para 15-17).
- Install angled rollers, (Para 15-16).
- Lubricate roller assembly, (TM 9-2320-364-10).
- Remove wheel chocks, (TM 9-2320-364-10).

END OF TASK

15-16. ANGLED ROLLER REPLACEMENT.

This task covers:

a. Removal b. Installation c. Follow-On Maintenance

INITIAL SETUP

Tools and Special Tools
Tool Kit, General Mechanic's: Automotive (Item 74, Appendix G)
Hammer, Soft Faced (Item 33, Appendix G)

Materials/Parts
Lockwasher (4) (Item 173, Appendix F)

Materials/Parts - Continued
Lockwasher (2) (Item 180, Appendix F)
Lockwasher (Item 211, Appendix F)

Equipment Condition
Engine OFF, (TM 9-2320-364-10)
Wheels chocked, (TM 9-2320-364-10)

a. Removal.

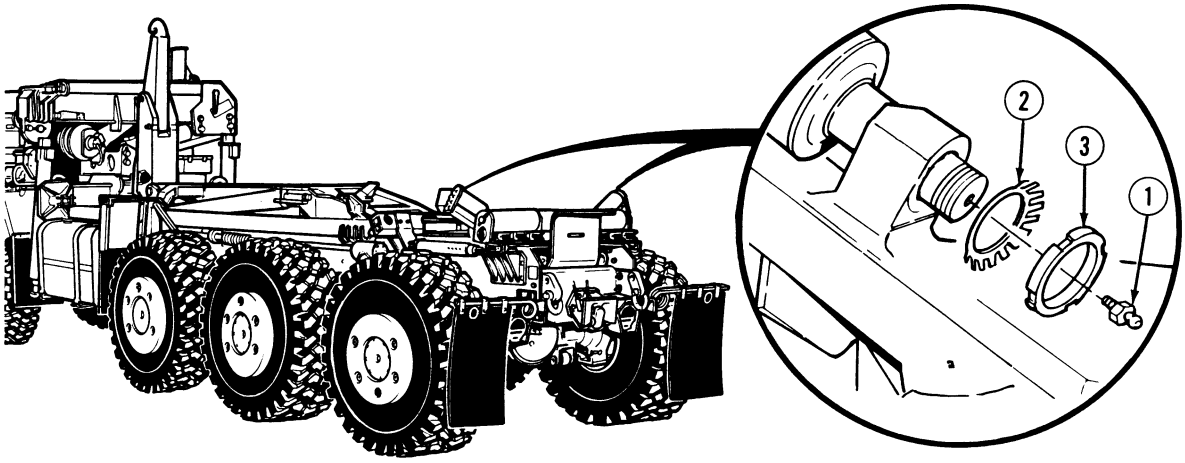

(1) Remove lube fitting (1).

NOTE

Both left and right hand angled rollers are removed the same way. Left hand roller is shown.

(2) Bend tab of lockwasher (2) out of nut (3) slot.

(3) Remove nut (3) and lockwasher (2). Discard lockwasher.

NOTE

Bracket looks different on trucks equipped with CHU, however, procedures are identical.

(4) Remove lube fitting (4), two screws (5), lockwashers (6), bracket (7), lockplate (8), four screws (9), lockwashers (10) and endplate (11). Discard lockwashers.

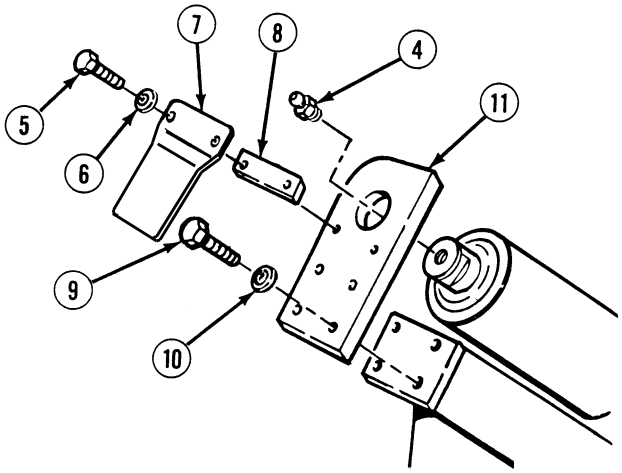

(5) Using a soft faced hammer, remove roller (12) from roller assembly (13).

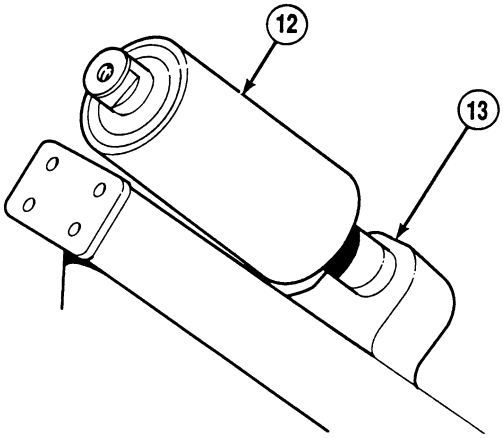

b. Installation.

(1) Position roller (12) in roller assembly (13).

(2) Install endplate (11), four lockwashers (10) and screws (9).

NOTE

Bracket looks different on trucks equipped with CHU, however, procedures are identical.

(3) Install lockplate (8), bracket (7), two lockwashers (6) and screws (5).

(4) Install lube fitting (4) in roller assembly (13).

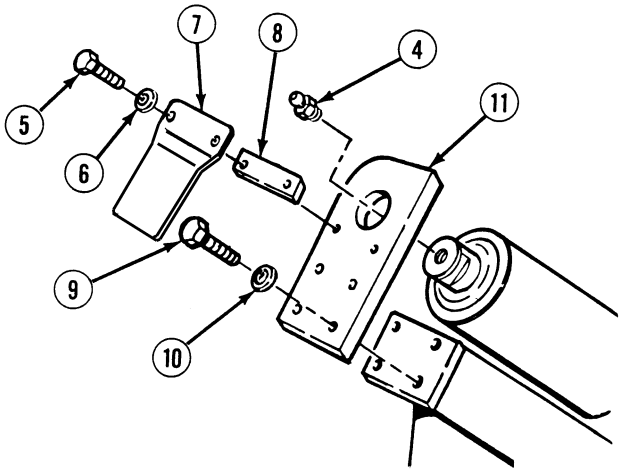

15-16. ANGLED ROLLER REPLACEMENT (CONT).

(5) Install lockwasher (2), nut (3) and grease fitting (1). Tighten nut.

(6) Bend tab of lockwasher (2) into slot of nut (3).

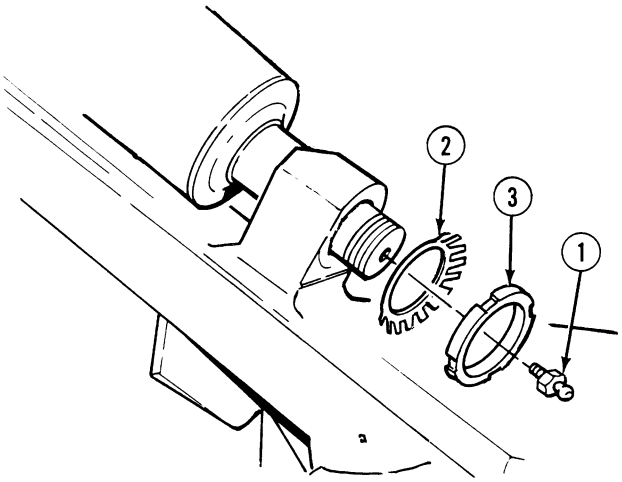

c. Follow-On Maintenance:

- Lubricate rear rollers, (TM 9-2320-364-10).
- Remove wheel chocks, (TM 9-2320-364-10).

END OF TASK

15-17. REAR ROLLER ASSEMBLY REPLACEMENT.

This task covers:

a. Removal b. Installation c. Follow-On Maintenance

INITIAL SETUP

Tools and Special Tools
Tool Kit, General Mechanic's: Automotive (Item 74, Appendix G)
Multiplier, Torque (Item 45, Appendix G)
Socket Set, 3/4 in. (Item 61, Appendix G)
Wrench, Combination 1-1/8 (Item 79, Appendix G)
Lifting Device, Minimum Capacity 375 lbs (170 kg)

Materials/Parts
Sealing Compound (Item 77, Appendix C)
Locknut (6) (Item 93, Appendix F)

Personnel Required
Two

Equipment Condition
Engine OFF, (TM 9-2320-364-10)
Wheels chocked, (TM 9-2320-364-10)

a. Removal.

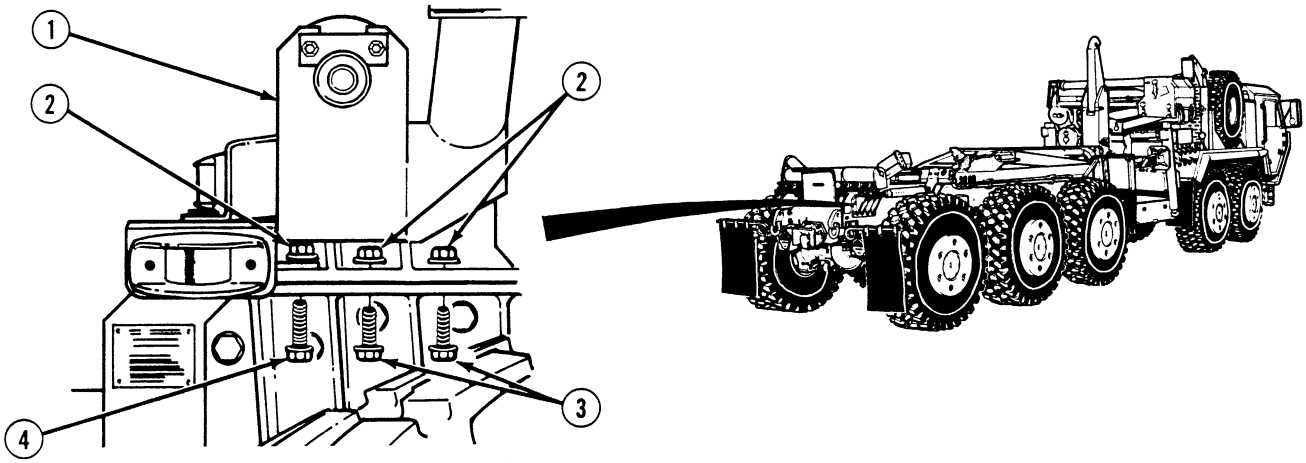

WARNING

Rear roller assembly weighs 375 lbs (170 kg). Attach suitable lifting device prior to removal or installation to prevent possible injury to personnel.

(1) Attach lifting device to rear roller assembly (1).

(2) Remove six locknuts (2), four screws (3) and two screws (4) from rear roller assembly (1). Discard locknuts.

15-17. REAR ROLLER ASSEMBLY REPLACEMENT (CONT).

CAUTION

To remove or install rear roller assembly, it is necessary to slide the assembly under rear marker light bracket. Be careful not to damage marker light wiring.

(3) With the aid of an assistant, guide rear roller assembly (1) up and off of truck.

(4) Remove lifting device from rear roller assembly (1).

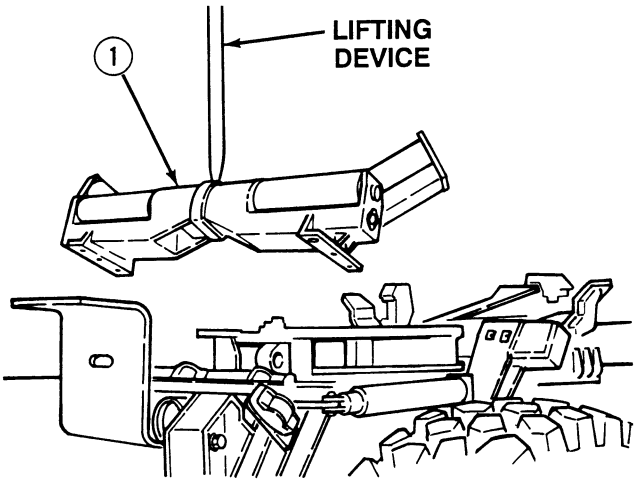

b. Installation.

WARNING

Rear roller assembly weighs 375 lbs (170 kg). Attach suitable lifting device prior to removal or installation to prevent possible injury to personnel.

(1) Attach lifting device to rear roller assembly (1).

CAUTION

To remove or install rear roller assembly, it is necessary to slide the assembly under rear marker light bracket. Be careful not to damage marker light wiring.

(2) With the aid of an assistant, lower rear roller assembly (1) onto truck.

WARNING

Adhesives, solvents, and sealing compounds can burn easily, can give off harmful vapors, and are harmful to skin and clothing. To avoid injury or death, keep away from open fire and use in a well-ventilated area. If adhesive, solvent, or sealing compound gets on skin or clothing, wash immediately with soap and water.

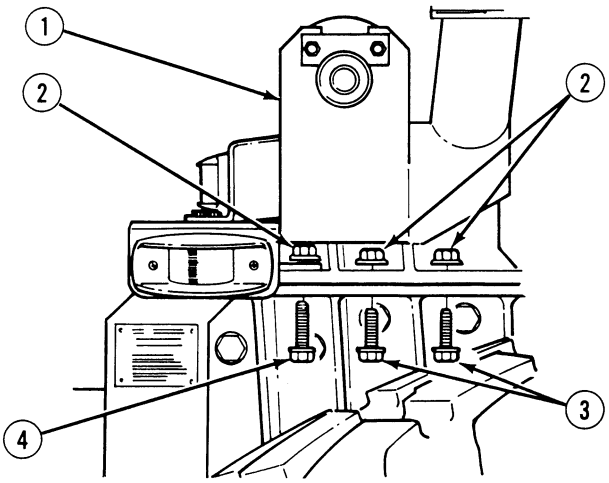

(3) Coat threads of four screws (3) and two screws (4) with sealing compound.

(4) Install four screws (3), two screws (4) and six locknuts (2) in rear roller assembly (1).

(5) Remove lifting device from rear roller assembly (1).

c. Follow-On Maintenance:

- Lubricate rollers, (Para 2-9).
- Remove wheel chocks, (TM 9-2320-364-10).

END OF TASK

15-18. BUMPER STOP BRACKET REPLACEMENT.

This task covers:

a. Removal b. Installation c. Follow-On Maintenance

INITIAL SETUP

Tools and Special Tools
Tool Kit, General Mechanic's: Automotive (Item 74, Appendix G)

Materials/Parts
Locknut (6) (Item 91, Appendix F)

Personnel Required
Two

Equipment Condition
Engine OFF, (TM 9-2320-364-10)
Wheels chocked, (TM 9-2320-364-10)
Reverse light removed, (Para 7-50)
Rear hard lift extension assemblies removed, (Para 15-8)

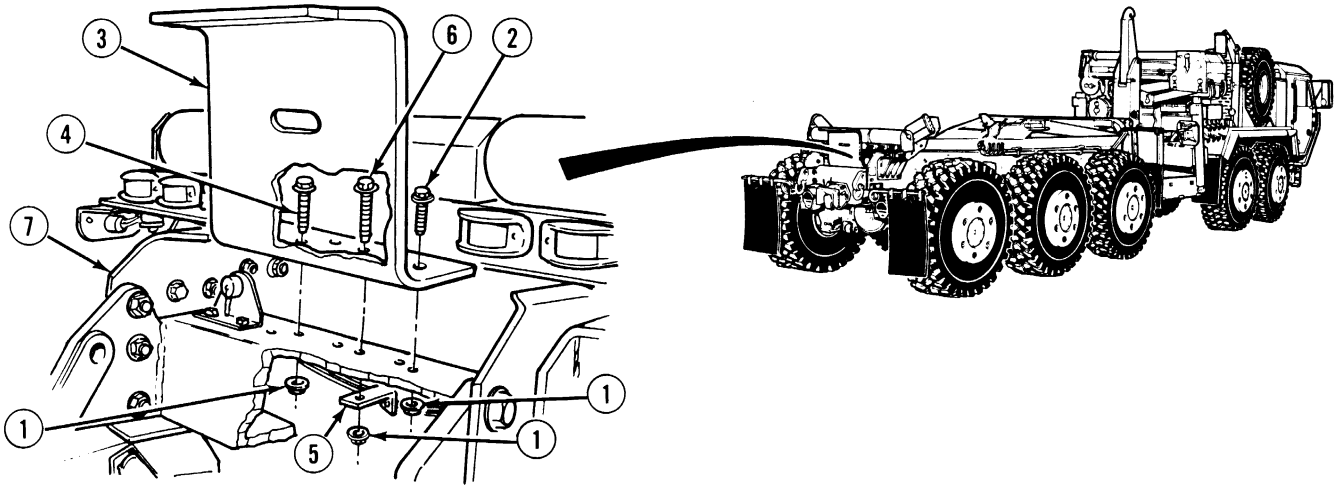

a. Removal.

(1) With the aid of an assistant, remove two locknuts (1) and screws (2) from outside corners of bumper stop bracket (3). Discard locknuts.

(2) Remove three locknuts (1) and screws (4) from bumper stop bracket (3). Discard locknuts.

(3) With the aid of an assistant, remove locknut (1), bracket (5), screw (6) and bumper stop bracket (3) from rear crossmember (7). Discard locknut.

b. Installation.

(1) With the aid of an assistant, position bumper stop bracket (3) on top of rear crossmember (7).

(2) Position screw (6) in bumper stop bracket (3) and bracket (5) with locknut (1).

(3) Position three screws (4) in bumper stop bracket (3) and rear crossmember (7) with locknuts (1).

(4) Install two screws (2) and locknuts (1) in bumper stop bracket (3).

(5) Tighten locknut (1) on screw (6).

(6) Tighten three locknuts (1) on screws (4).

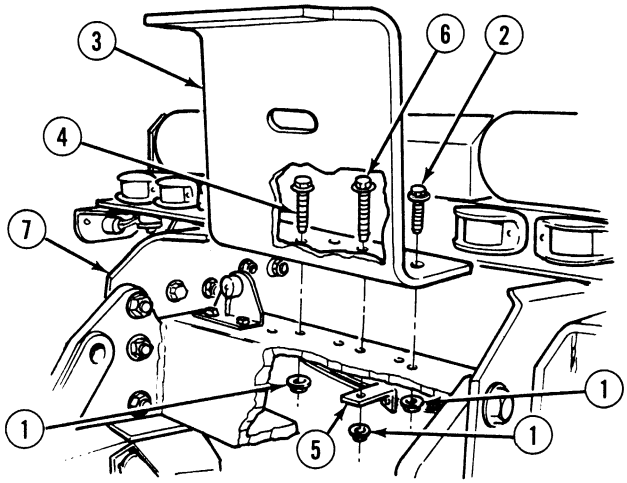

c. Follow-On Maintenance:

- Install rear hard lift extension assemblies, (Para 15-8).
- Install reverse light, (Para 7-50).
- Remove wheel chocks, (TM 9-2320-364-10).

END OF TASK

15-19. TRUCK-TO-TRAILER LHS ELECTRICAL CONNECTOR BRACKET REPLACEMENT.

This task covers:

a. Removal b. Installation c. Follow-On Maintenance

INITIAL SETUP

Tools and Special Tools
Tool Kit, General Mechanic's: Automotive (Item 74, Appendix G)

Materials/Parts
Locknut (2) (Item 91, Appendix F)
Locknut (Item 104, Appendix F)

Equipment Condition
Engine OFF, (TM 9-2320-364-10)
Wheels chocked, (TM 9-2320-364-10)

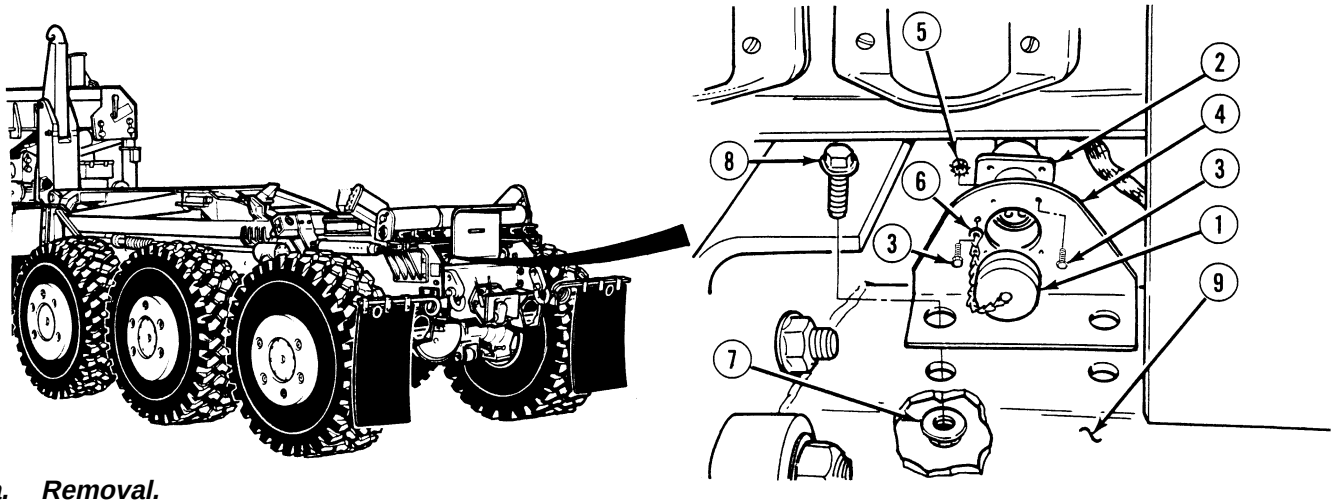

a. Removal.

(1) Remove connector cover (1) from MC30 connector (2).

(2) Remove four screws (3) and MC30 connector (2) from bracket (4).

(3) Remove locknut (5), screw (3) and cover chain (6) from bracket (4). Discard locknut.

(4) Remove two locknuts (7), screws (8) and bracket (4) from rear crossmember (9). Discard locknuts.

b. Installation.

(1) Install bracket (4) on rear crossmember (9) with two screws (8) and locknuts (7).

(2) Install cover chain (6) on bracket (4) with screw (3) and locknut (5).

(3) Install MC30 connector (2) in bracket (4) with four screws (3).

(4) Install connector cover (1) on MC30 connector (2).

c. Follow-On Maintenance:

- Remove wheel chocks, (TM 9-2320-364-10).

END OF TASK

15-20. SELF-GUIDED COUPLER REPAIR.

This task covers:

a. Removal
b. Disassembly
c. Cleaning/Inspection
d. Assembly
e. Installation
f. Follow-On Maintenance

INITIAL SETUP

Tools and Special Tools
Tool Kit, General Mechanic's: Automotive (Item 74, Appendix G)
Compressor Unit, Air (Item 11, Appendix G)
Gloves, Chemical Oil Protective (Item 28, Appendix G)
Goggles, Industrial (Item 30, Appendix G)
Gun, Airblow (Item 31, Appendix G)
Socket Set, 3/4 in. (Item 61, Appendix G)
Socket, Wheel Bearing Adjustment Nut 3-1/4 in. (Item 63, Appendix G)
Wrench, Combination (Item 87, Appendix G)
Torque Wrench (0 to 600 lb-ft [0 to 814 N·m]) (Item 97, Appendix G)
Lifting Device, Minimum Capacity 100 lb (45 kg)

Materials/Parts
Locknut (5) (Item 146, Appendix F)
Pin, Cotter (Item 269, Appendix F)
Pin, Cotter (Item 278, Appendix F)
Pin, Roll (Item 280, Appendix F)
Pin, Roll (Item 281, Appendix F)
Pin, Roll (Item 282, Appendix F)
Pin, Roll (Item 283, Appendix F)
Pin, Roll (Item 284, Appendix F)

Personnel Required
Two

Equipment Condition
Engine OFF, (TM 9-2320-364-10)
Wheels chocked, (TM 9-2320-364-10)

a. Removal.

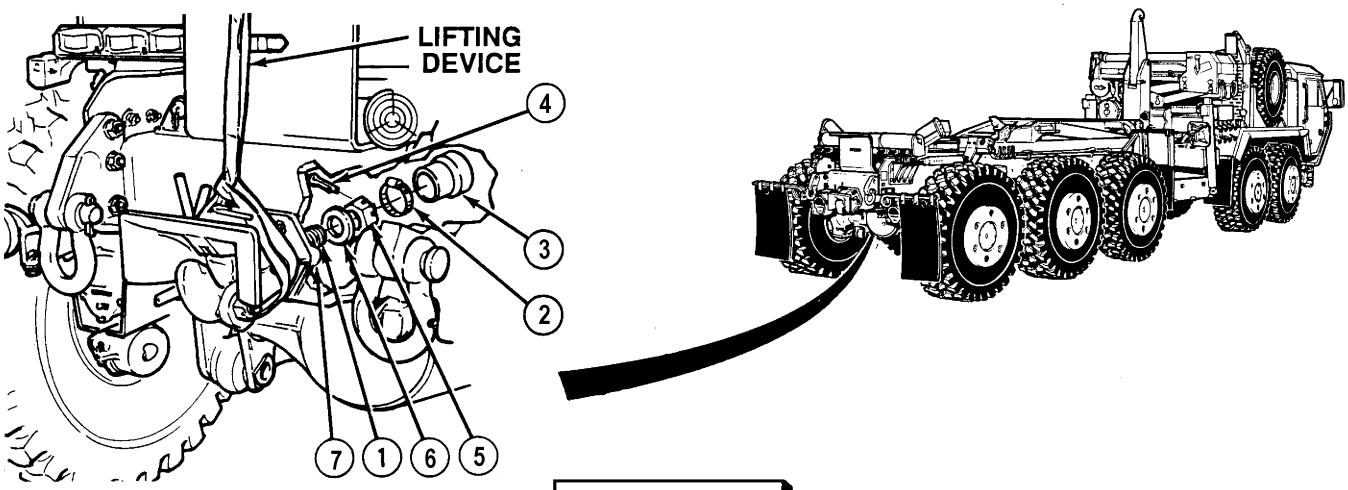

WARNING

Self-guided coupler weighs 100 lbs (45 kg). Attach suitable lifting device prior to removal to prevent possible injury to personnel.

(1) Attach lifting device to self-guided coupler (1).

(2) Remove hose clamp (2) and boot (3) from self-guided coupler (1).

(3) Remove cotter pin (4), nut (5) and washer (6) from self-guided coupler (1). Discard cotter pin.

(4) Remove self-guided coupler (1) from sleeve (7).

15-20. SELF-GUIDED COUPLER REPAIR (CONT).

CAUTION

Ensure sleeve is fully supported upon removal of four nuts, washers and screws or sleeve may fall and damage to parts may occur.

(5) With the aid of an assistant, remove four nuts (8), washers (9), screws (10) and sleeve (7) from truck (11).

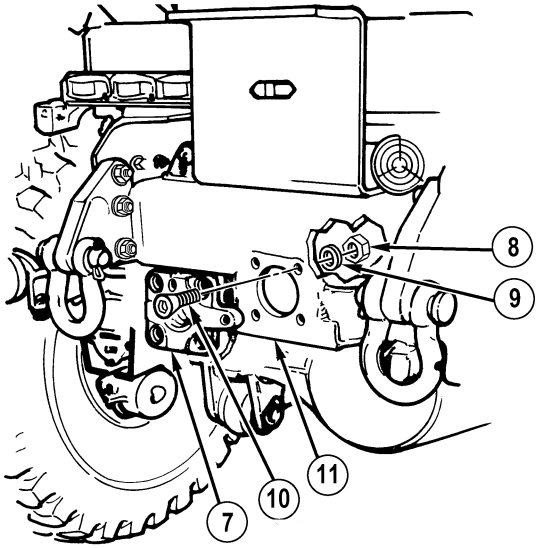

b. Disassembly.

(1) Lift up locking gate (1) on coupler (2).

(2) Pull locking lever (3) out and pull lever (4) back at same time to open coupler jaw (5).

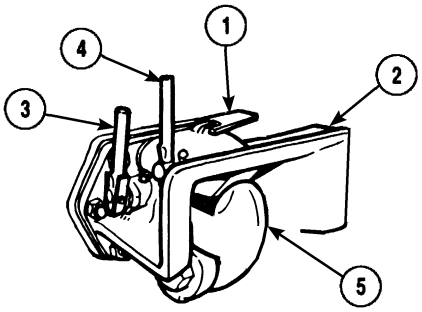

(3) Remove cotter pin (6), nut (7), screw (8) and coupler jaw (5) from coupler (2). Discard cotter pin.

(4) Remove lube fitting cover (9) and lube fitting (10) from screw (8).

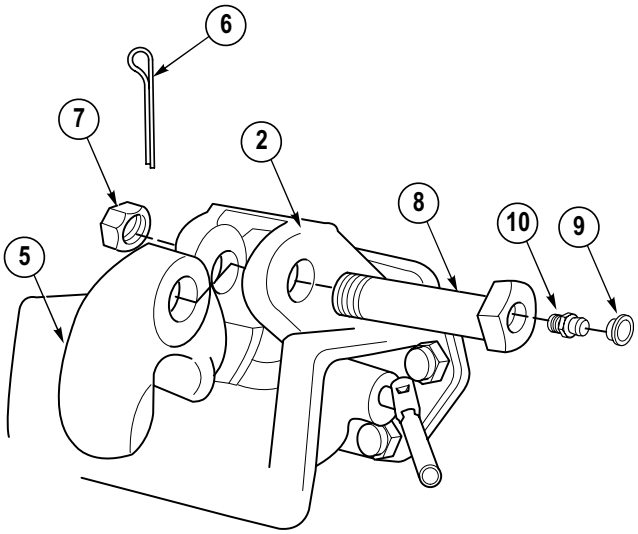

(5) Remove five locknuts (11), four screws (12), screw (13) and shank (14) from coupler (2). Discard locknuts.

(6) Remove roll pin (15), and locking gate (1) from coupler (2). Discard roll pin.

(7) Remove nut (16), pull lever (4) and roll pin (17) from latch pin (18). Discard roll pin.

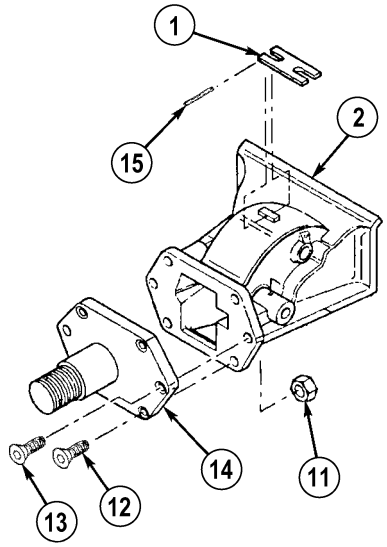

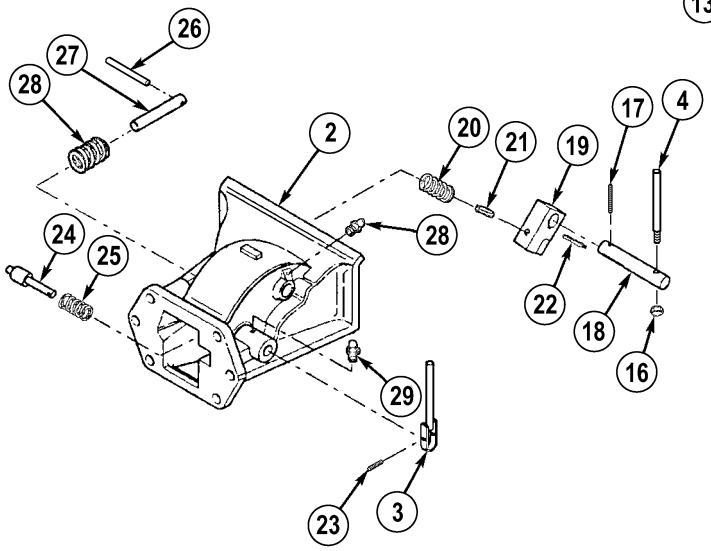

WARNING

Use care when removing springs. Springs are under tension and can act as projectiles when released and could cause injury to personnel.

(8) Remove latch pin (18), latch (19) and spring (20) from coupler (2).

(9) Remove roll pin (21) and key (22) from latch (19). Discard roll pin.

(10) Remove roll pin (23) from locking lever (3). Discard roll pin.

(11) Remove locking lever (3), pivot pin (24) and spring (25) from coupler (2).

(12) Remove roll pin (26), pin (27) and spring (28) from coupler (2). Discard roll pin.

(13) Remove two lube fittings (29) from coupler (2).

15-20. SELF-GUIDED COUPLER REPAIR (CONT).

c. Cleaning/Inspection.

WARNING

- Drycleaning Solvent (P-D-680) is TOXIC and flammable. Wear protective goggles, face shield, and gloves; use only in a well-ventilated area; avoid contact with skin, eyes, and clothes, and do not breathe vapors. Keep away from heat or flame. Never smoke when using solvent. The flashpoint for Type II Drycleaning Solvent is 140 degrees F (60 degrees C) and Type III Drycleaning Solvent is 200 degrees F (93 degrees C). Failure to do so may result in injury or death to personnel.
- If personnel become dizzy while using cleaning solvent, immediately get fresh air and medical help. If solvent contacts skin or clothes, flush with cold water. If solvent contacts eyes, immediately flush eyes with water and get immediate medical attention.
- Compressed air used for cleaning purposes will not exceed 30 psi (207 kPa). Use only with effective chip guarding and personal protective equipment (goggles/shield, gloves, etc). Failure to comply may result in injury or death to personnel.

(1) Clean excess grease from coupler using drycleaning solvent and a cleaning cloth.

(2) Clean all parts in drycleaning solvent.

(3) Dry components with compressed air.

(4) Inspect all components with machined surfaces for scratches, cracks, gouges and stripped threads.

(5) Replace damaged components.

d. Assembly.

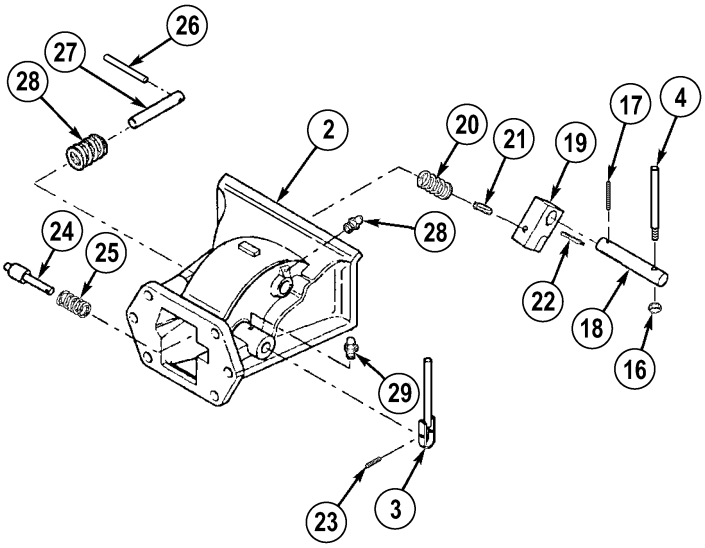

(1) Install two lube fittings (29) on coupler (2).

WARNING

Use extreme care when compressing, releasing, removing or installing springs. Springs are under tension and can act as projectiles when released. Ensure proper eye protection is worn to prevent injury to personnel.

(2) Position spring (28) and pin (27) on coupler (2).

(3) Install roll pin (26) in pin (27).

(4) Position spring (25) and pivot pin (24) on coupler (2).

(5) Position locking lever (3) on pivot pin (24) and install roll pin (23).

(6) Install roll pin (21) and key (22) on latch (19).

(7) Position spring (20) latch (19) and latch pin (18) on coupler (2).

(8) Position pull lever (4) on latch pin (18) and install nut (16).

(9) Install roll pin (17) on latch pin (18).

(10) Position locking gate (1) on coupler (2) and install roll pin (15).

(11) Position shank (14), on coupler (2) and install four screws (12), screw (13) and five locknuts (11). Tighten locknuts (11) to 210 lb-ft (285 N·m).

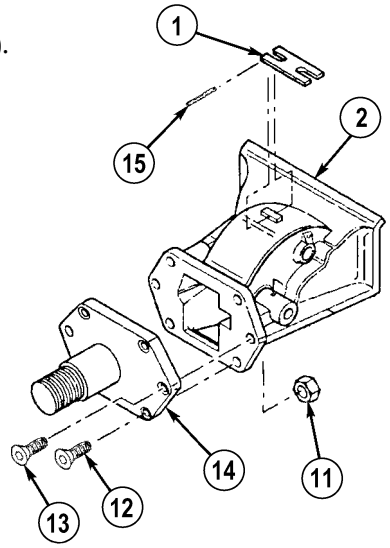

15-20. SELF-GUIDED COUPLER REPAIR (CONT).

(12) Install lube fitting (10) in screw (8).

(13) Install lube fitting cover (9) on lube fitting (10).

(14) Install coupler jaw (5) on coupler (2) using screw (8) and nut (7).

NOTE

Nut in Step (15) is properly installed when coupler jaw can rotate freely.

(15) Tighten nut (7) on screw (8) until nut (7) contacts coupler (2).

(16) Back off nut (7) to nearest slot and install cotter pin (6).

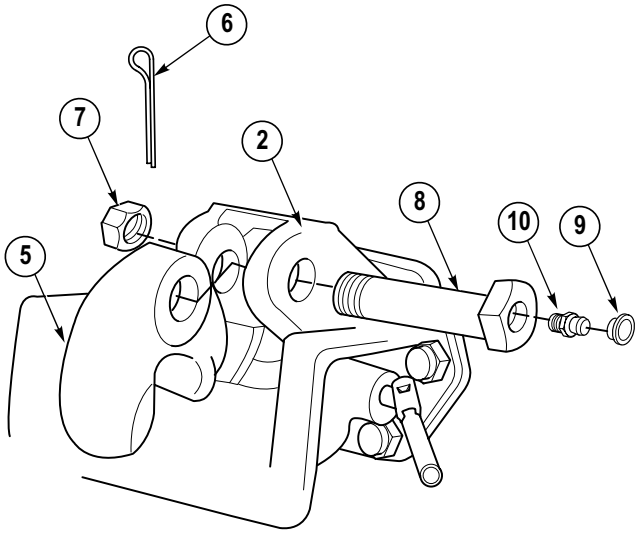

e. Installation.

CAUTION

Ensure sleeve is fully supported until after Step (2) is completed or sleeve may fall. Failure to comply may result in damage to parts.

(1) With the aid of an assistant, position sleeve (7) on truck (11).

(2) With the aid of an assistant, install four screws (10), washers (9) and nuts (8) in sleeve (7). Tighten nut to 500 lb-ft (678 N·m).

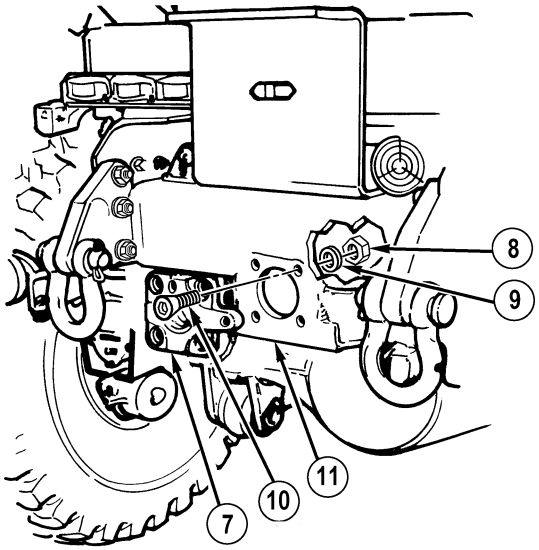

WARNING

Self-guided coupler weighs 100 lbs (45 kg). Attach suitable lifting device prior to installation to prevent possible injury to personnel.

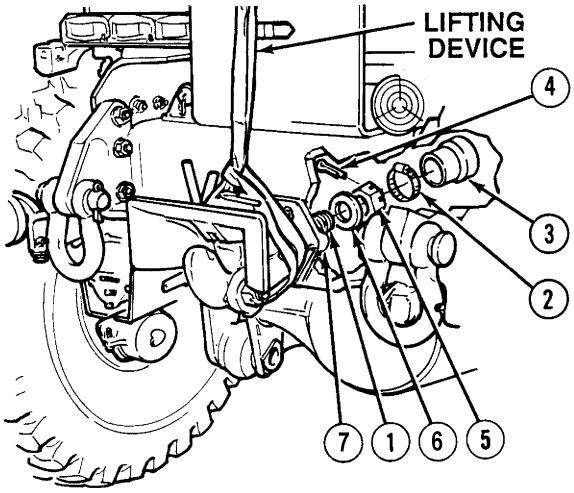

(3) Attach lifting device to self-guided coupler (1).

(4) Position self-guided coupler (1) on sleeve (7).

(5) Install washer (6) and nut (5) in self-guided coupler (1).

(6) Tighten nut (5) to 100 lb-ft (136 N·m).

(7) Back off nut (5) to nearest slot and install cotter pin (4).

(8) Remove lifting device from self-guided coupler (1).

NOTE

If thickness of washer behind nut is less than 0.19 inch when Steps (6) and (7) are repeated, replace washer.

(9) Check that axial clearance does not exceed 1/32 inch. If clearance exceeds 1/32 inch, remove cotter pin (4) and repeat Steps (6) and (7).

(10) Install boot (3) and hose clamp (2) on self-guided coupler (1).

f. Follow-On Maintenance:

- Lubricate self-guided coupler, (Para 2-9).
- Remove wheel chocks, (TM 9-2320-364-10).

END OF TASK

15-21. SPARE TIRE CARRIER AND DAVIT REPLACEMENT.

This task covers:

a. Removal b. Installation c. Follow-On Maintenance

INITIAL SETUP

Tools and Special Tools
Tool Kit, General Mechanic's: Automotive (Item 74, Appendix G)
Lifting Device, Minimum Capacity 150 lbs (68 kgs)

Materials/Parts
Grease (Item 42, Appendix C)
Locknut (9) (Item 91, Appendix F)
Locknut (4) (Item 122, Appendix F)
Pin, Cotter (4) (Item 273, Appendix F)

Personnel Required
Two

Equipment Condition
Engine OFF, (TM 9-2320-364-10)
Wheels chocked, (TM 9-2320-364-10)
Spare tire removed, (TM 9-2320-364-10)
Spare tire carrier wire rope removed, (Para 15-23)
Right-side work lamp removed, (Para 7-55)
Right-side noise panel removed, (Para 17-26)

a. Removal.

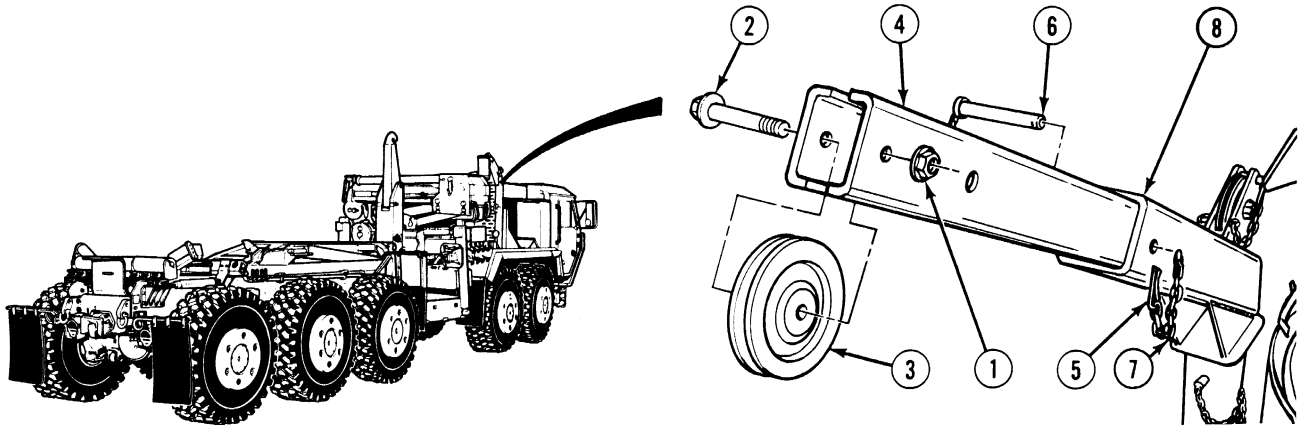

WARNING

The exhaust pipe and muffler can become very hot during vehicle operation. Be careful not to touch these parts with bare hands, or allow body to come in contact with pipe or muffler. Exhaust system parts can become hot enough to cause serious burns.

(1) Remove nut (1), screw (2) and pulley (3) from hoist arm extension (4).

(2) Remove lock pin (5) from retaining pin (6).

(3) Remove lock pin (5) from chain (7).

WARNING

Support hoist extension before removing retaining pin or injury to personnel may occur.

(4) Remove retaining pin (6) and hoist arm extension (4) from hoist arm (8).

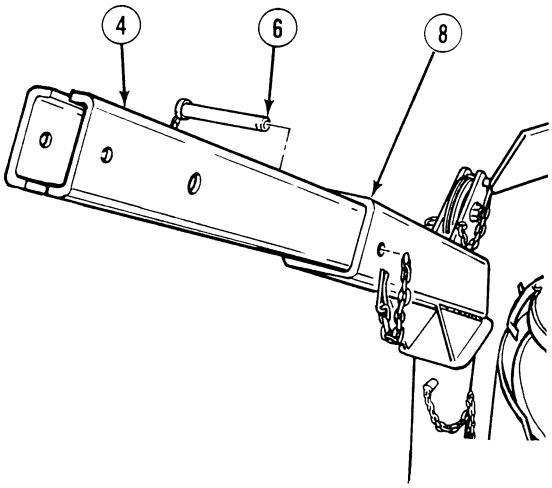

(5) Remove lock pin (9) and retaining pin (10) from hoist arm (8).

(6) Remove lock pin (9) from chain (11).

(7) Remove locknut (12), washer (13), screw (14), washer (15) and pulley (16) from hoist arm extension (8). Discard locknut.

(8) Remove lock pin (17), retaining pin (18) and hoist arm extension (8) from tire carrier assembly (19).

(9) Remove lock pin (17) from chain (20).

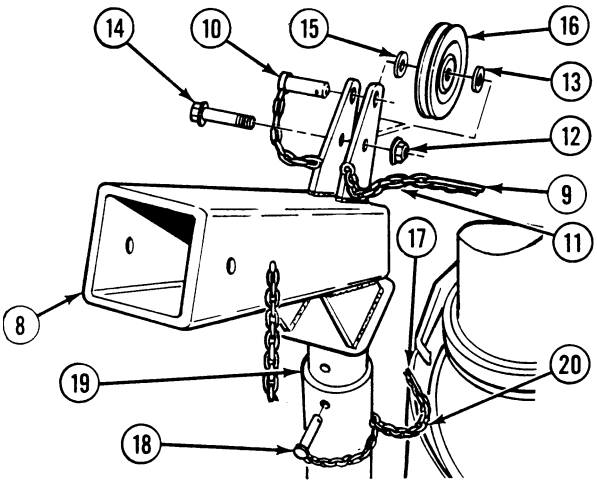

(10) Remove nut (21), washer (22), screw (23), washer (24) and pulley (25) from tire carrier assembly (19).

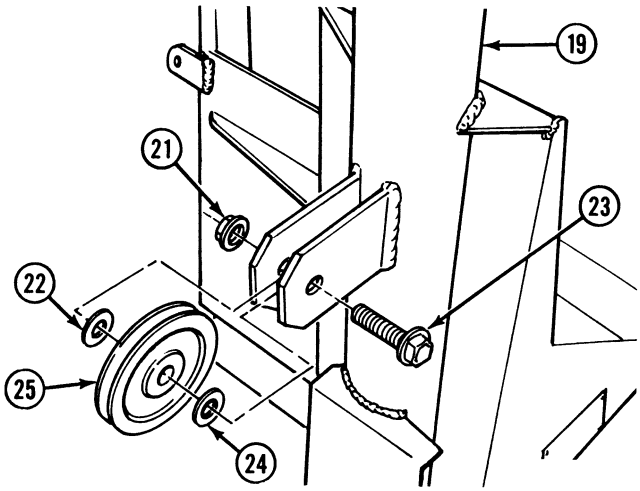

15-21. SPARE TIRE CARRIER AND DAVIT REPLACEMENT (CONT).

(11) Remove two nuts (26), screws (27) and work lamp holder (28) from tire carrier assembly (19).

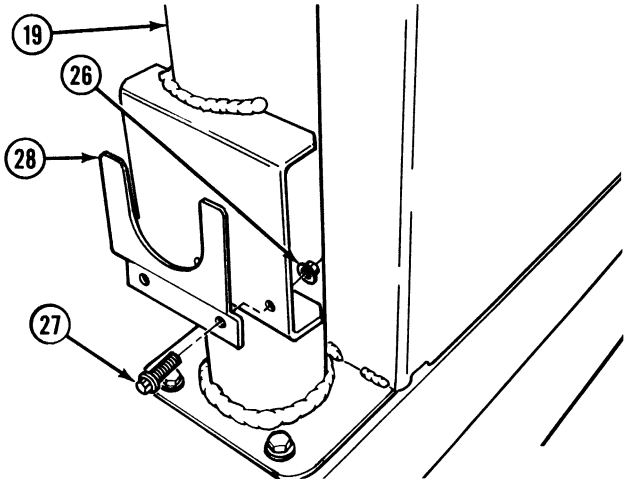

(12) Remove two cotter pins (29), retaining pins (30) and yokes (31) from frame (32) and tire carrier (19). Discard cotter pins.

(13) Remove two yokes (31) and nuts (33) from rod (34).

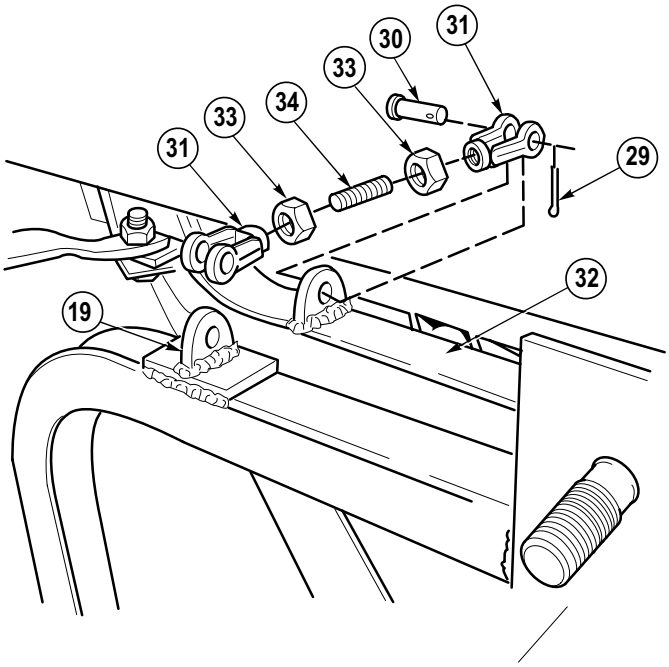

(14) Remove two cotter pins (35), retaining pins (36) and yokes (37) from frame (32) and tire carrier (19). Discard cotter pins.

(15) Remove two yokes (37) and nuts (38) from rod (39).

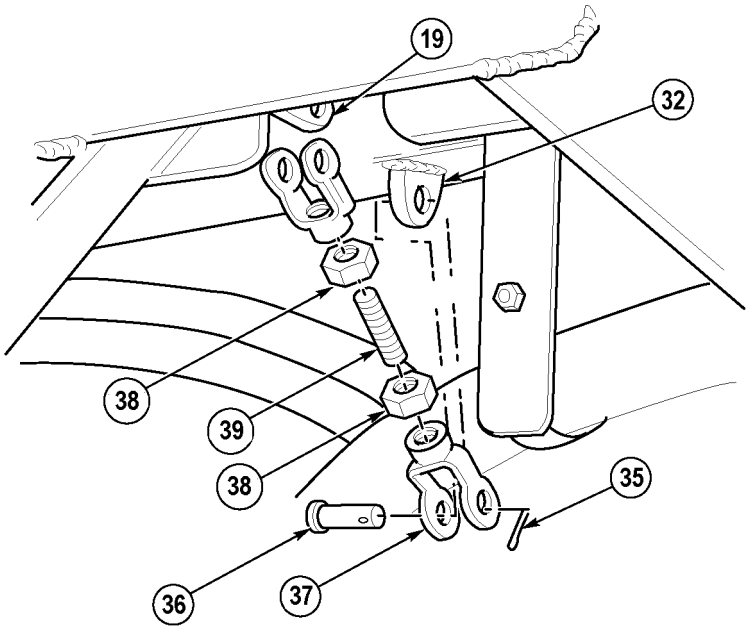

(16) Remove locknut (40), hook eye (41) and washer (42) from fender assembly (43). Discard locknut.

(17) Remove screw (44), washer (45) and anchor strap (46) from tire carrier assembly (19).

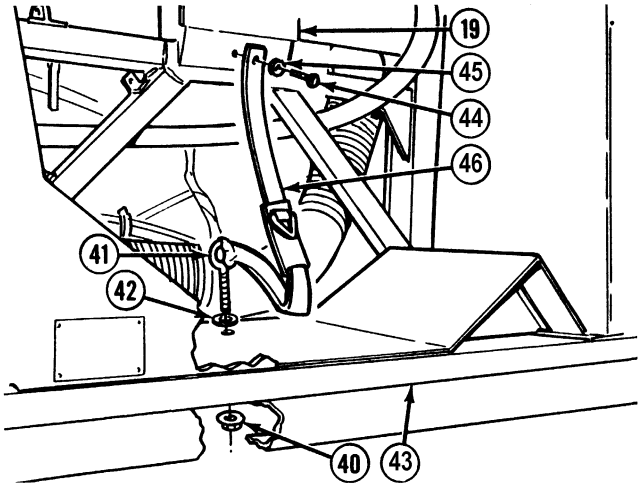

(18) Remove two locknuts (47), one plate (48), two screws (49) and tie down bracket (50) from fender assembly (43). Discard locknuts.

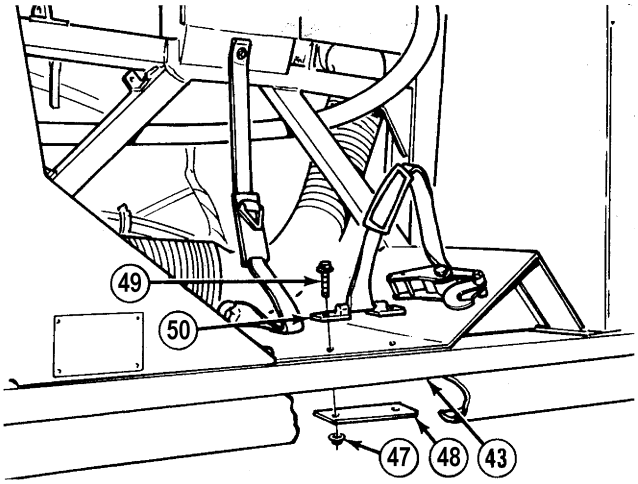

15-21. SPARE TIRE CARRIER AND DAVIT REPLACEMENT (CONT).

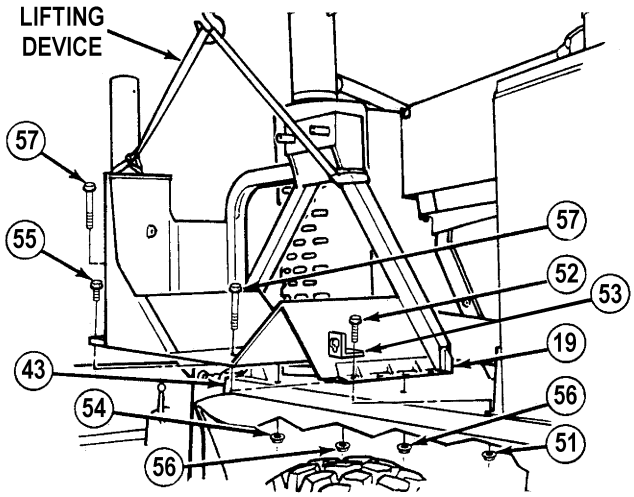

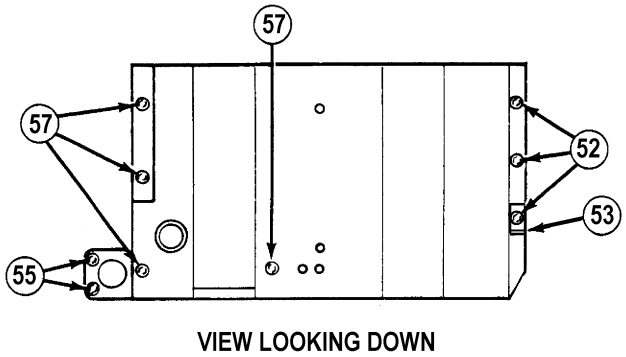

WARNING

- Do not touch hot exhaust system with bare hands; injury to personnel will result. If necessary, use insulated pads and gloves.
- Tire carrier weighs 145 lbs (66 kg). Attach suitable lifting device prior to removal to prevent possible injury to personnel.

(19) Attach lifting device to tire carrier assembly (19).

NOTE

- Note size and position of screws during removal.
- Hydraulic drain hose bracket may or may not be present in Step (20).

(20) With the aid of an assistant, remove three locknuts (51), screws (52) and hydraulic drain hose bracket (53) from tire carrier (19) and fender assembly (43). Discard locknuts.

(21) With the aid of an assistant, remove two locknuts (54) and screw (55) from tire carrier (19) and fender assembly (43). Discard locknuts.

(22) With the aid of an assistant, remove four locknuts (56) and screws (57) from tire carrier (19) and fender assembly (43). Discard locknuts.

(23) With the aid of an assistant, guide tire carrier (19) away from fender assembly (43).

b. Installation.

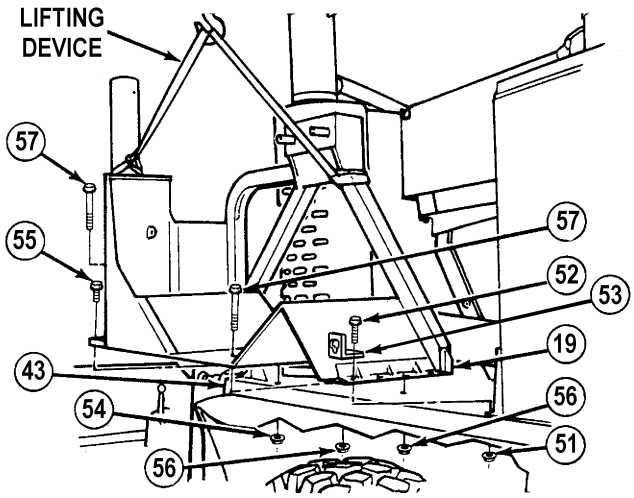

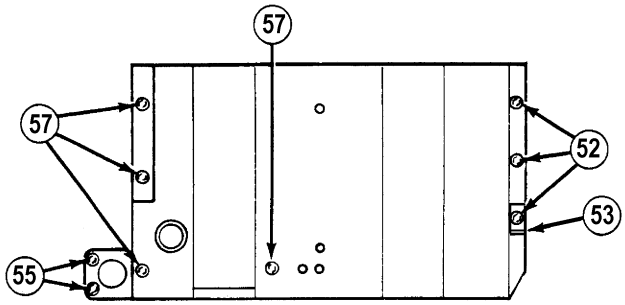

WARNING

Tire carrier weighs 145 lbs (66 kg). Attach suitable lifting device prior to installation to prevent possible injury to personnel.

(1) Attach lifting device to tire carrier assembly (19).

(2) With the aid of an assistant, install tire carrier assembly (19) onto fender assembly (43).

(3) With the aid of an assistant, install four screws (57) and locknuts (56) in tire carrier (19) and fender assembly (43).

(4) With the aid of an assistant, install two screws (55) and locknuts (54) from tire carrier (19) and fender assembly (43).

NOTE

Hydraulic drain hose bracket may or may not be present in Step (5).

(5) Install tire carrier (19) on fender assembly (43) with three screws (52), hydraulic drain hose bracket (53) and locknuts (51).

(6) Install tie down bracket (50) on fender assembly (43) with two screws (49), plate (48) and two locknuts (47).

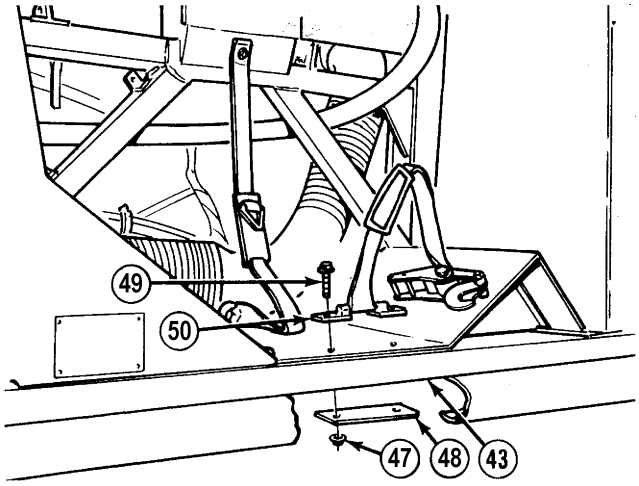

15-21. SPARE TIRE CARRIER AND DAVIT REPLACEMENT (CONT).

(7) Install anchor strap (46) on tire carrier assembly (19) with washer (45) and screw (44).

(8) Install washer (42), hook eye (41) and locknut (40) on fender assembly (43).

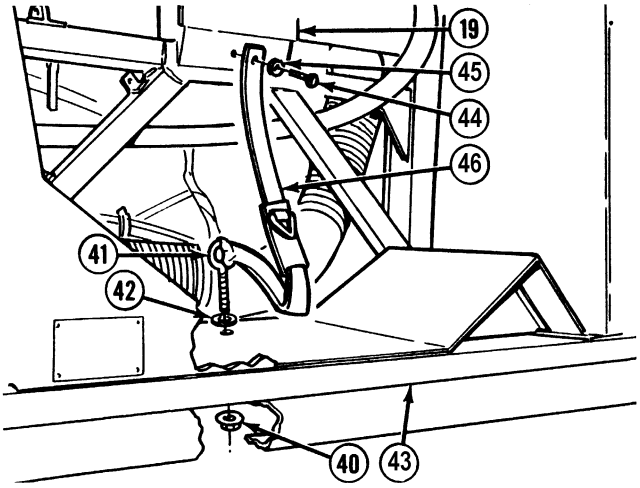

NOTE

Yoke assembly is adjusted properly when there is equal amount of threads in each yoke and yokes line up with mounting holes in frame and tire carrier.

(9) Position two nuts (38) and yokes (37) on rod (39).

(10) Install yokes (37) on frame (32) and tire carrier (19) with retaining pins (36) and cotter pins (35).

(11) Tighten nuts (38) against yokes (37).

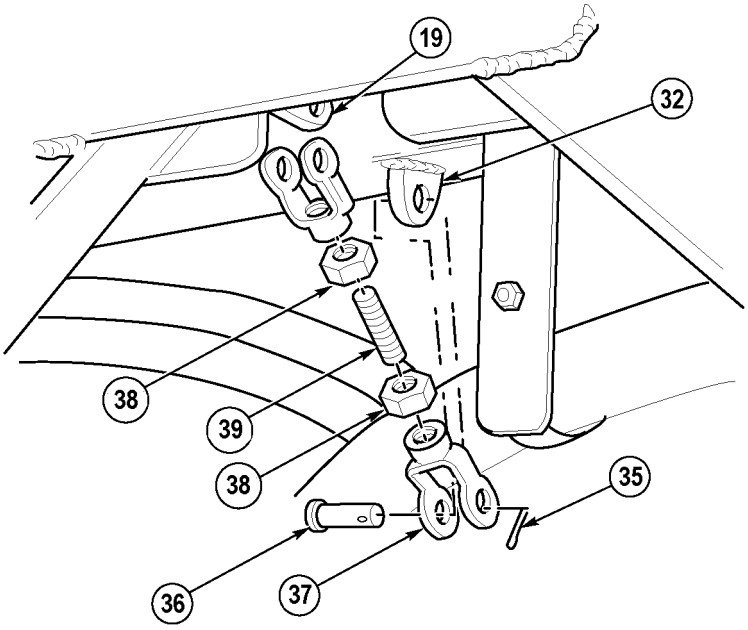

(12) Position two nuts (33) and yokes (31) on rod (34).

NOTE

Yoke assembly is adjusted properly when there is equal amount of threads in each yoke and yokes line up with mounting holes in frame and tire carrier.

(13) Install yokes (31) on frame (32) and tire carrier (19) with retaining pins (30) and cotter pins (29).

(14) Tighten nuts (33) against yokes (31).

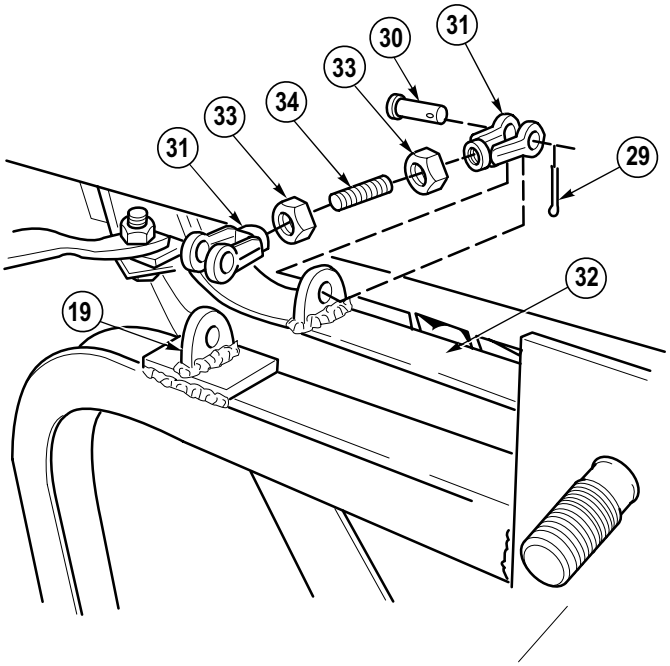

(15) Install work lamp holder (28) on tire carrier assembly (19) with two screws (27) and locknuts (26).

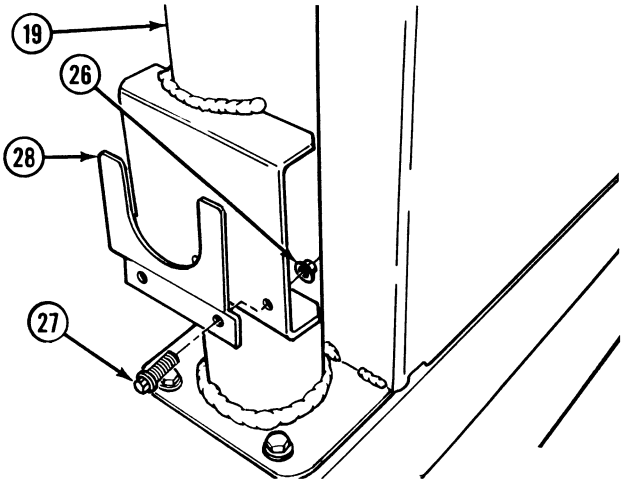

(16) Install pulley (25) on tire carrier assembly (19) with washer (24), screw (23), washer (22) and locknut (21). Tighten locknut until five screw threads are showing.

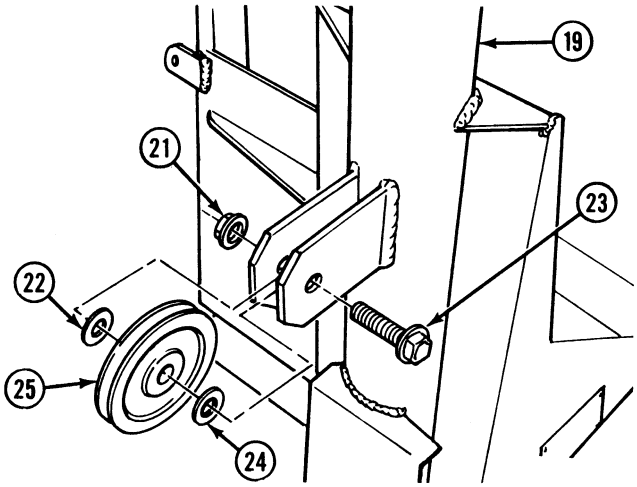

15-21. SPARE TIRE CARRIER AND DAVIT REPLACEMENT (CONT).

(17) Install cotter pin (17) on chain (20).

(18) Install hoist arm (8) on tire carrier assembly (19) with retaining pin (18) and cotter pin (17).

(19) Apply grease to two washers (13) and (15) and install one washer on each side of pulley (16).

(20) Install pulley (16) on hoist arm (8) with washer (15), screw (14), washer (13) and locknut (12). Tighten locknut until three screw threads are showing.

(21) Install cotter pin (9) on chain (11).

(22) Install retaining pin (10) on hoist arm (8) with cotter pin (9).

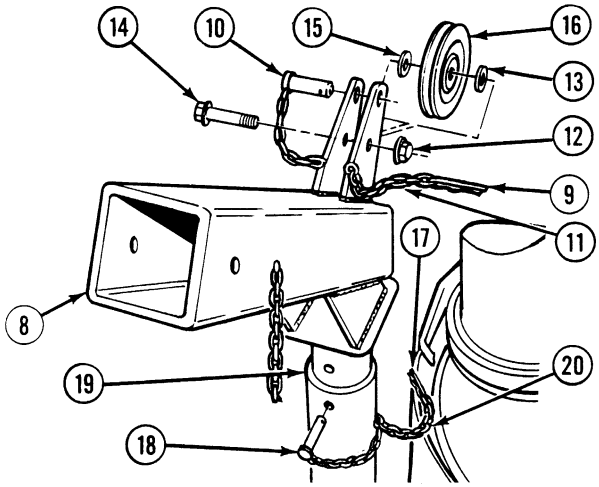

(23) Install cotter pin (5) on chain (7).

(24) Install hoist arm extension (4) on hoist arm (9) with retaining pin (6) and cotter pin (5).

(25) Install pulley (3) on hoist arm extension (4) with screw (2) and locknut (1).

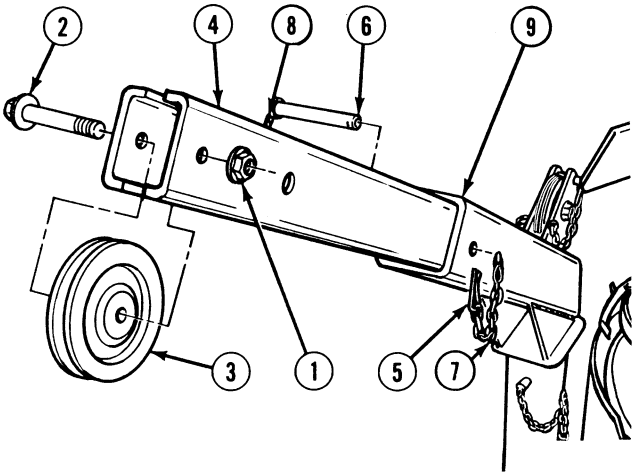

c. *Follow-On Maintenance:*

- Install spare tire carrier wire rope, (Para 15-23).
- Install right-side noise panel, (Para 17-26).
- Install right-side work lamp, (Para 7-55).
- Install spare tire, (TM 9-2320-364-10).
- Remove wheel chocks, (TM 9-2320-364-10).

END OF TASK

15-22. SPARE TIRE CARRIER WINCH REPLACEMENT.

This task covers:

a. Removal b. Installation c. Follow-On Maintenance

INITIAL SETUP

Tools and Special Tools
Tool Kit, General Mechanic's: Automotive (Item 74, Appendix G)

Materials/Parts
Locknut (3) (Item 133, Appendix F)
Locknut (3) (Item 140, Appendix F)

Equipment Condition
Engine OFF, (TM 9-2320-364-10)
Wheels chocked, (TM 9-2320-364-10)
Spare tire carrier wire rope removed, (Para 15-23)

a. Removal.

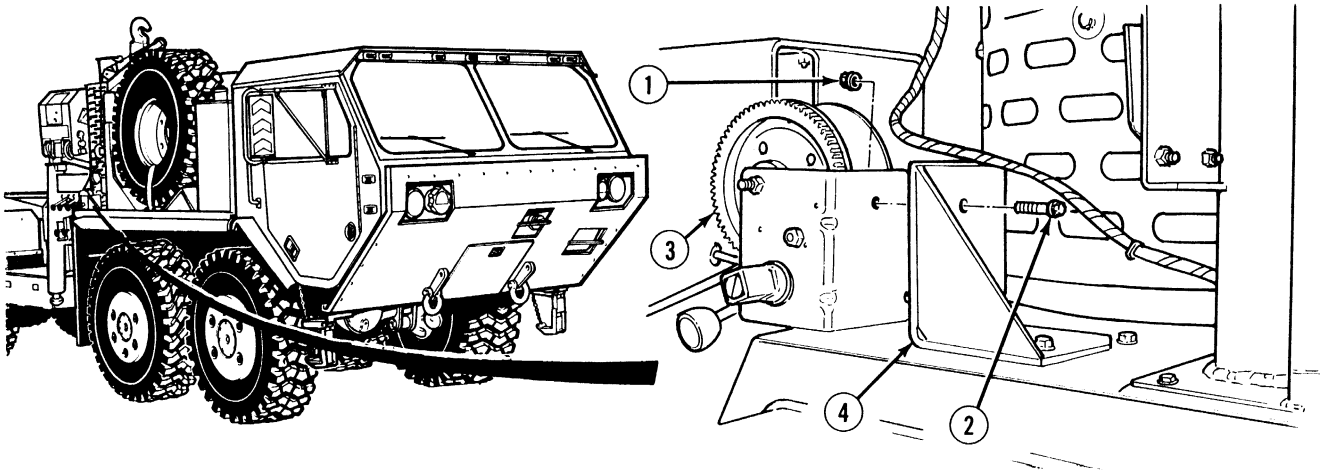

(1) Remove three locknuts (1), screws (2) and winch (3) from winch mounting bracket (4). Discard locknuts.

15-22. SPARE TIRE CARRIER WINCH REPLACEMENT (CONT).

(2) Remove two locknuts (5), screws (6), locknut (7), screw (8) and winch mounting bracket (4) from fender assembly (9). Discard locknuts.

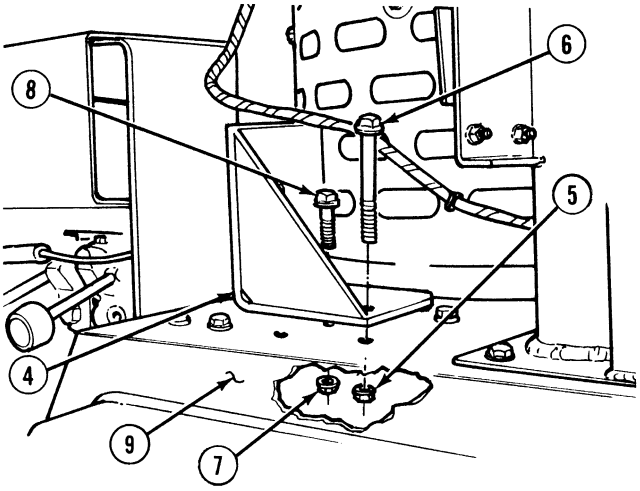

b. Installation.

(1) Install winch mounting bracket (4) on fender assembly (9) with two screws (6), locknuts (5), locknut (7) and screw (8).

(2) Install winch (3) on winch mounting bracket (4) with three screws (2) and locknuts (1).

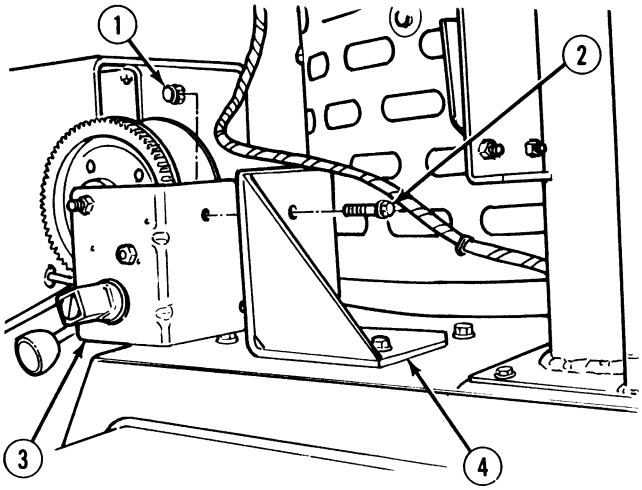

c. Follow-On Maintenance:

- Install spare tire carrier wire rope, (Para 15-23).
- Remove wheel chocks, (TM 9-2320-364-10).

END OF TASK

15-23. SPARE TIRE CARRIER WIRE ROPE REPLACEMENT.

This task covers:

a. Removal b. Installation c. Follow-On Maintenance

INITIAL SETUP

Tools and Special Tools
Tool Kit, General Mechanic's: Automotive (Item 74, Appendix G)

Materials/Parts
Gloves, Heavy Duty (Item 33, Appendix C)
Grease (Item 42, Appendix C)

Personnel Required
Two

Equipment Condition
Engine OFF, (TM 9-2320-364-10)
Wheels chocked, (TM 9-2320-364-10)

a. Removal.

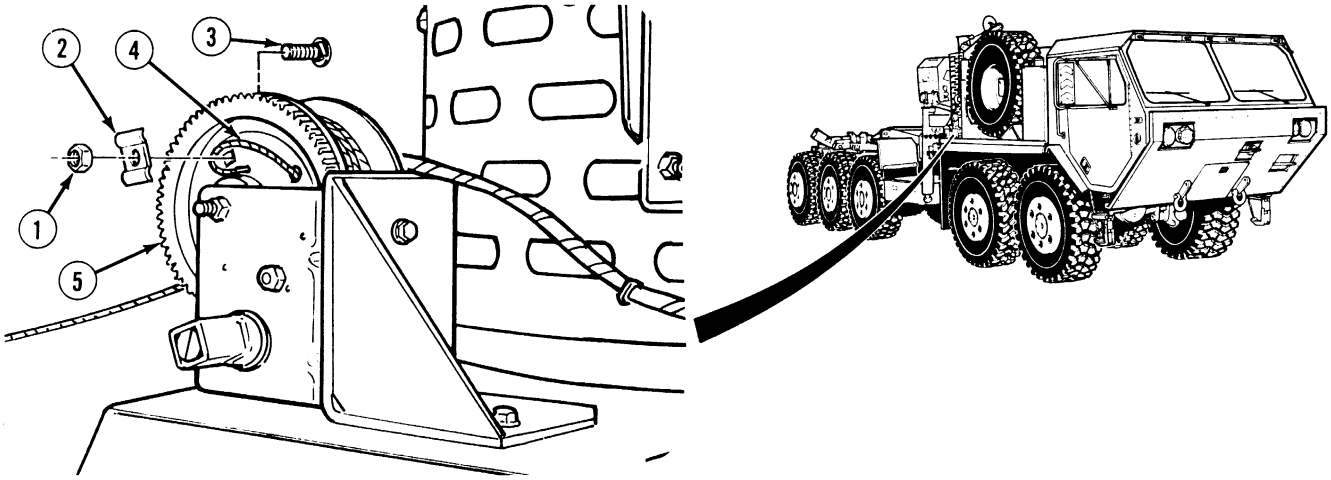

WARNING

- Wire rope can become frayed or contain broken wires. Wear heavy leather-palmed work gloves when handling wire rope. Frayed or broken wires can cause injury to personnel.
- Never let moving wire rope slide through hands, even when wearing gloves. A broken wire could cut through glove and can cause injury to personnel.

(1) Remove nut (1), bracket (2), screw (3) and wire rope (4) from winch (5).

15-23. SPARE TIRE CARRIER WIRE ROPE REPLACEMENT (CONT).

NOTE

Discard wire rope, if removing for repair.

(2) Remove wire rope (4) from hoist assembly (6).

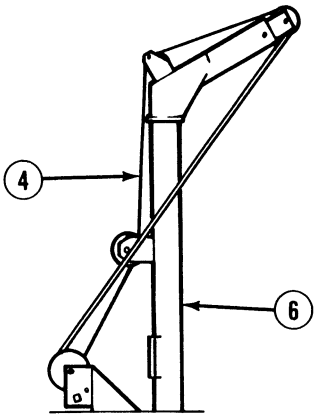

(3) Remove hose (7) from wire rope (4).

b. Installation.

(1) Apply grease to end of wire rope (4).

(2) Install hose (7) on wire rope (4).

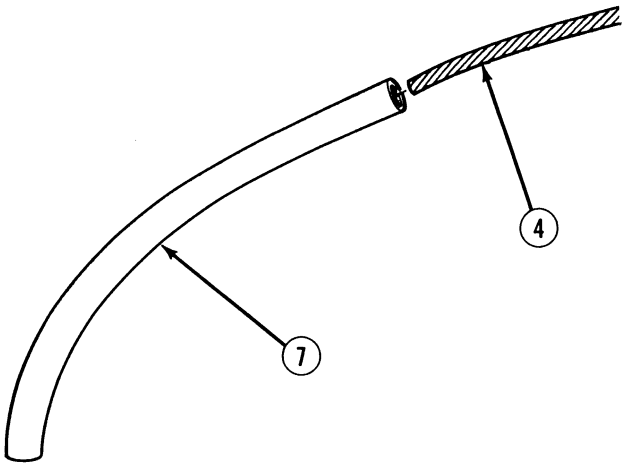

WARNING

- Wire rope can become frayed or contain broken wires. Wear heavy leather-palmed work gloves when handling wire rope. Frayed or broken wires can cause injury to personnel.
- Never let moving wire rope slide through hands, even when wearing gloves. A broken wire could cut through glove and can cause injury to personnel.

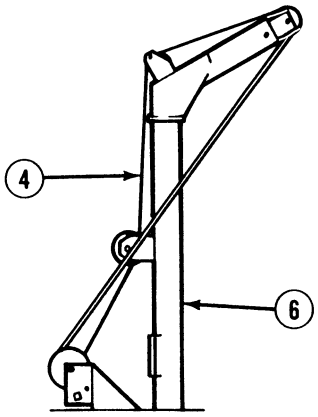

(3) Install wire rope (4) on hoist assembly (6).

(4) Install wire rope (4) on winch (5) with screw (3), bracket (2) and nut (1).

(5) With the aid of an assistant, wind rope (4) on winch (5).

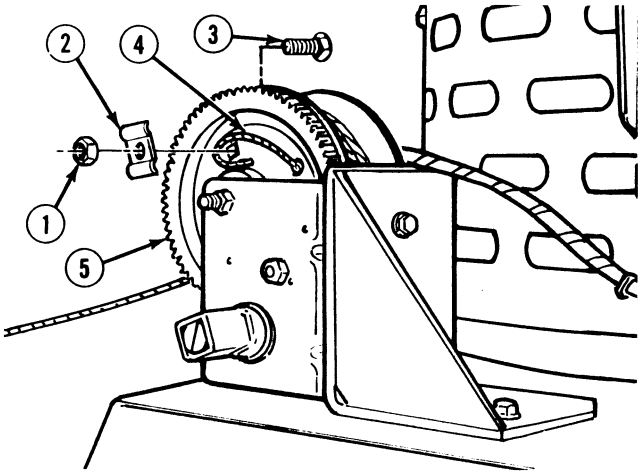

c. Follow-On Maintenance:

- Remove wheel chocks, (TM 9-2320-364-10).

END OF TASK

15-24. AUXILIARY FUEL TANK TREAD PLATFORM ASSEMBLY REPLACEMENT.

This task covers:

a. Removal b. Installation c. Follow-On Maintenance

INITIAL SETUP

Tools and Special Tools
Tool Kit, General Mechanic's: Automotive (Item 74, Appendix G)

Materials/Parts
Locknut (4) (Item 117, Appendix F)

Equipment Condition
Engine OFF, (TM 9-2320-364-10)
Wheels chocked, (TM 9-2320-364-10)

a. Removal.

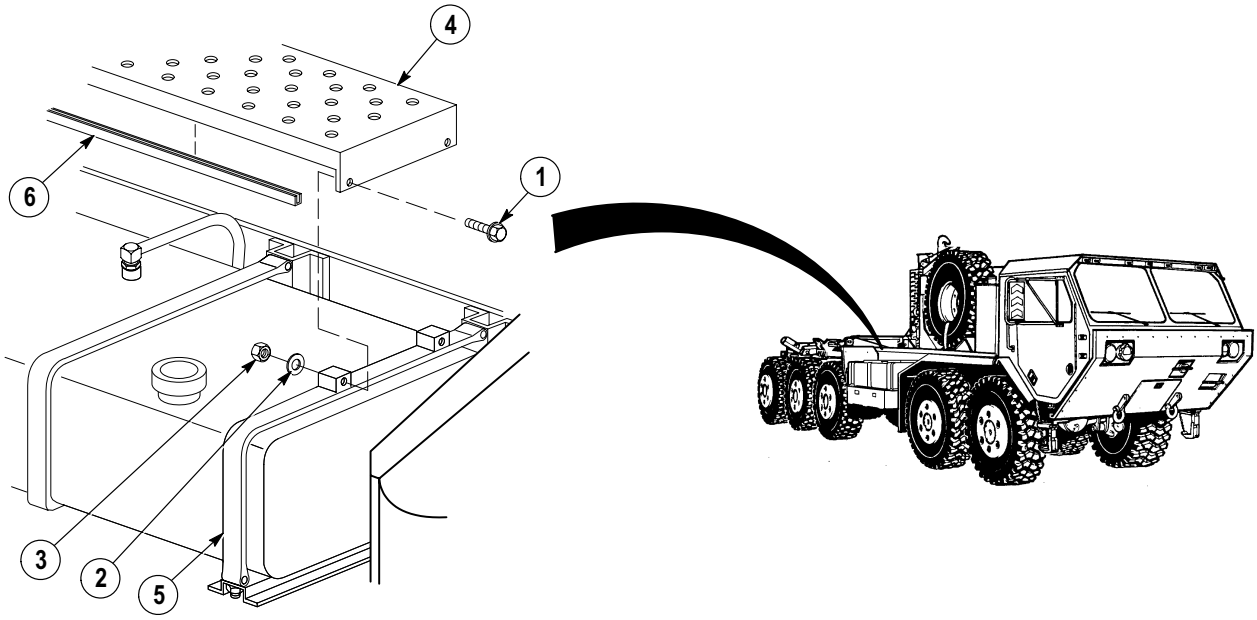

(1) Remove four screws (1), washers (2), locknuts (3) and tread platform assembly (4) from fuel tank straps (5). Discard locknuts.

(2) Remove quick edge molding (6) from tread platform assembly (4).

b. Installation.

(1) Install quick edge molding (6) on tread platform assembly (4).

(2) Install tread platform assembly (4), four screws (1), washers (2) and locknuts (3) on fuel tank strips (5).

c. Follow-On Maintenance:

- Remove wheel chocks, (TM 9-2320-364-10).

END OF TASK

CHAPTER 16

SPRINGS AND SHOCKS MAINTENANCE

Para	Contents	Page
16-1	Introduction	16-1
16-2	Shock Absorber and Bushing Replacement	16-2
16-3	Shock Absorber Mounts Replacement	16-4

16-1. INTRODUCTION.

This chapter contains maintenance instructions for removing, replacing and installing suspension components as authorized by the Maintenance Allocation Chart (MAC) at the Unit Maintenance level.

16-2. SHOCK ABSORBER AND BUSHING REPLACEMENT.

This task covers:

a. Removal b. Installation c. Follow-On Maintenance

INITIAL SETUP

Tools and Special Tools
Tool Kit, General Mechanic's: Automotive
(Item 74, Appendix G)
Wrench, Torque (0 to 175 lb-ft [0 to 237 N·m])
(Item 95, Appendix G)

Equipment Condition
Engine OFF, (TM 9-2320-364-10)
Wheels chocked, (TM 9-2320-364-10)

Materials/Parts
Bushing (4) (Item 4, Appendix F)
Locknut (2) (Item 142, Appendix F)

a. Removal.

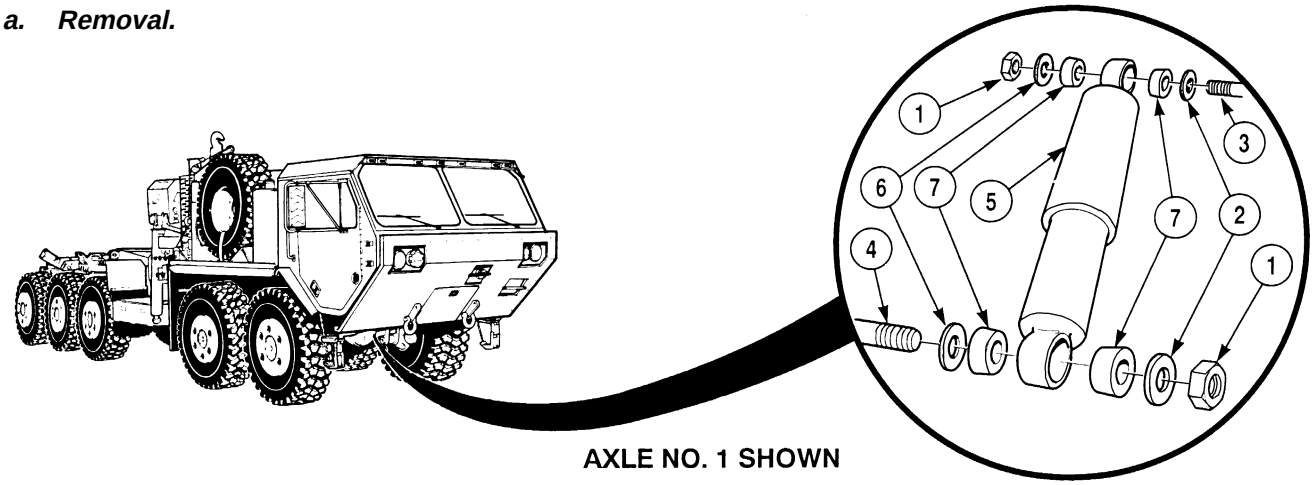

AXLE NO. 1 SHOWN

NOTE

All shock absorbers and bushings are removed the same way.

(1) Remove two locknuts (1) and washers (2) from studs (3) and (4). Discard locknuts.

(2) Remove shock absorber (5) and two washers (6) from studs (3) and (4).

(3) Remove four rubber bushings (7) from shock absorber (5). Discard bushings.

b. Installation.

(1) Install washer (6) and rubber bushing (7) on studs (3) and (4).

(2) Install shock absorber (5) and rubber bushing (7) on studs (3) and (4).

(3) Install washer (2) and locknut (1) on studs (3) and (4). Tighten nuts to 170 lb-ft (230 N·m).

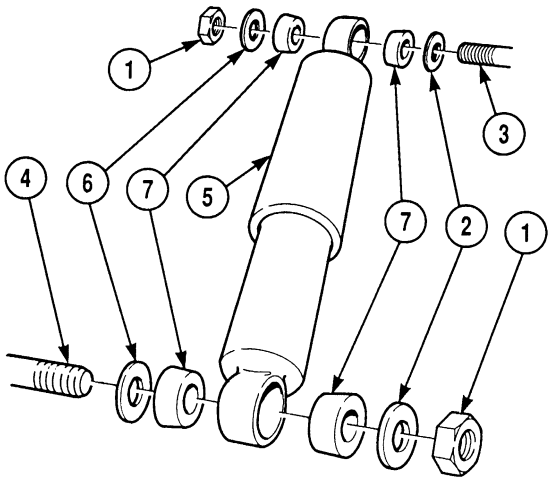

c. Follow-On Maintenance:

- Remove wheel chocks, (TM 9-2320-364-10).

END OF TASK

16-3. SHOCK ABSORBER MOUNTS REPLACEMENT.

This task covers:

a. Axle No. 1 Shock Absorber Mount Replacement
b. Axle No. 2 Shock Absorber Mount Replacement
c. Axle No. 3 Shock Absorber Mount Replacement
e. Axle No. 4 Shock Absorber Mount Replacement
f. Follow-On Maintenance

INITIAL SETUP

Tools and Special Tools
Tool Kit, General Mechanic's: Automotive (Item 74, Appendix G)
Socket, Wrench Set 3/4 in. (Item 61, Appendix G)
Wrench, Combination 1-1/8 in. (Item 79, Appendix G)
Wrench, Torque (0 to 300 lb-ft [0 to 407 N·m]) (Item 96, Appendix G)

Materials/Parts
Locknut (2) (Item 92, Appendix F)
Locknut (2) (Item 93 Appendix F)

Personnel Required
Two

Equipment Condition
Engine OFF, (TM 9-2320-364-10)
Wheels chocked, (TM 9-2320-364-10)
Shock absorber removed, (Para 16-2)
Front access cover opened (Axle No. 1 only), (TM 9-2320-364-10)

NOTE

Right and left side mounts are removed the same way.

a. Axle No. 1 Shock Absorber Mount Replacement.

(1) *Removal.*

(a) Remove two locknuts (1), screws (2) and wire harness (3) from crossmember (4). Discard locknuts.

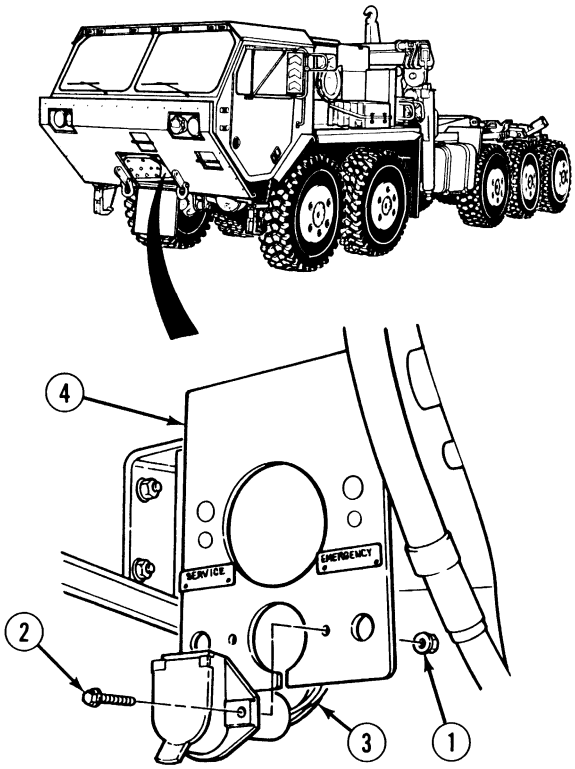

(b) Remove locknut (5) and stud (6) from shock absorber bracket (7). Discard locknut.

(c) With the aid of an assistant, remove two locknuts (8) and screws (9) from bracket (7). Discard locknuts.

NOTE

- Assistant must hold screws through cab front access panel.
- Position socket on locknut, then position extension through bottom frame hole into socket.

(d) With the aid of an assistant, remove locknut (10) and screw (11) from bracket (7). Discard locknut.

(e) Repeat Step (d) for remaining locknut (10) and screw (11). Discard locknut.

(f) Remove shock absorber bracket (7) from frame (12).

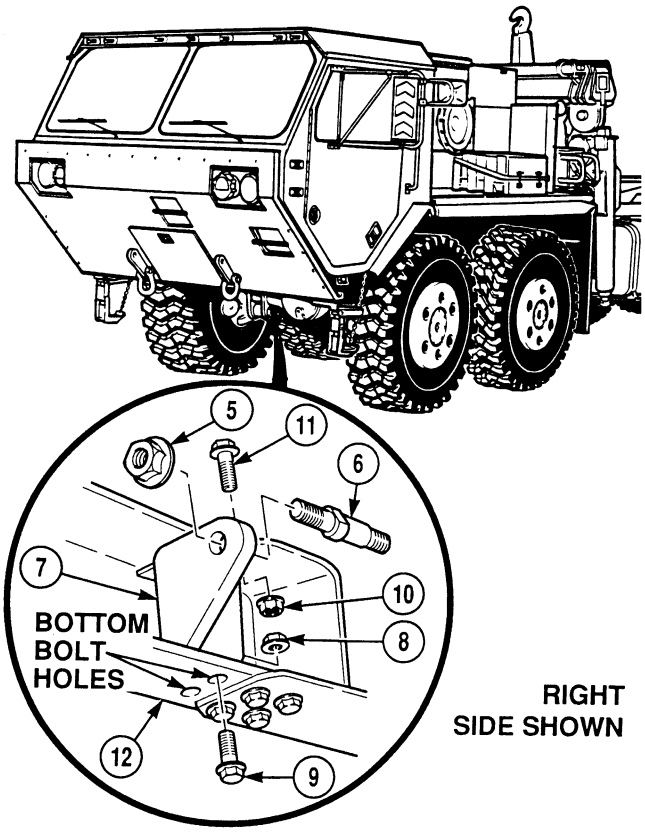

(2) *Installation.*

(a) Position shock absorber bracket (7) on frame (12).

NOTE

Assistant must hold screws through cab front access panel.

(b) With the aid of an assistant, position two screws (11) and locknuts (10) in bracket (7).

NOTE

Position socket on locknut, then position extension through bottom frame hole into socket.

(c) Tighten screw (11) and locknut (10) on bracket (7).

(d) Repeat Step (c) for remaining locknut (10) and screw (11).

(e) With the aid of an assistant, install two locknuts (8) and screws (9) in bracket (7).

(f) With the aid of an assistant, install stud (6) on shock absorber bracket (7) with locknut (5). Tighten locknut (5) to 200 lb-ft (271 N·m).

16-3. SHOCK ABSORBER MOUNTS REPLACEMENT (CONT).

(g) Install wire harness (3) on crossmember (4) with two screws (2) and locknuts (1).

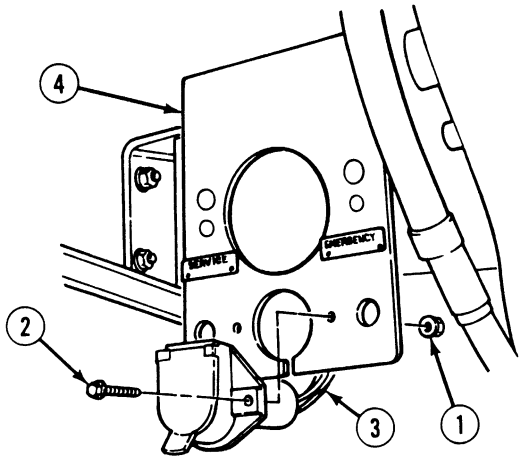

b. Axle No. 2 Shock Absorber Mount Replacement.

(1) *Removal*.

(a) Remove stud (1) from shock absorber bracket (2).

(b) Remove locknut (3) and screw (4) from bracket (2). Discard locknut.

(c) Remove locknut (3), screw (6) and shock absorber bracket (2) from frame (7). Discard locknut.

(2) *Installation.*

(a) With the aid of an assistant, install shock absorber bracket (2) on frame (7) screw (4) and screw (6) and two locknuts (3).

(b) Install stud (1) on shock absorber bracket (2).

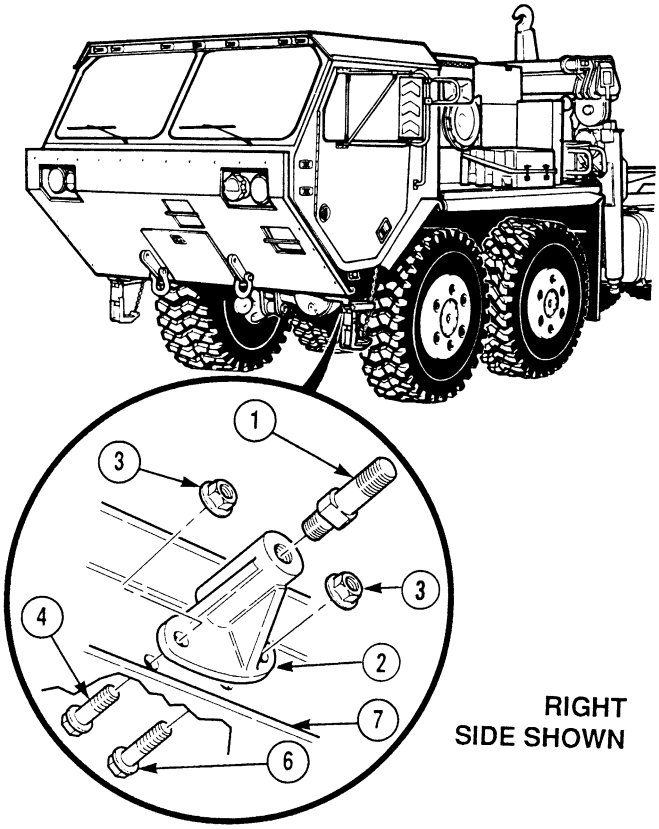

c. Axle No. 3 Shock Absorber Mount Replacement.

(1) *Removal*.

(a) Remove two locknuts (1) and screws (2) from bracket (5). Discard locknuts.

(b) With the aid of an assistant, remove locknut (3), screw (4) and shock absorber bracket (5) from frame (6). Discard locknut.

(2) *Installation.*

(a) With the aid of an assistant, install shock absorber bracket (5) on frame (6) with two screws (2), screw (4), two locknuts (1) and locknut (3).

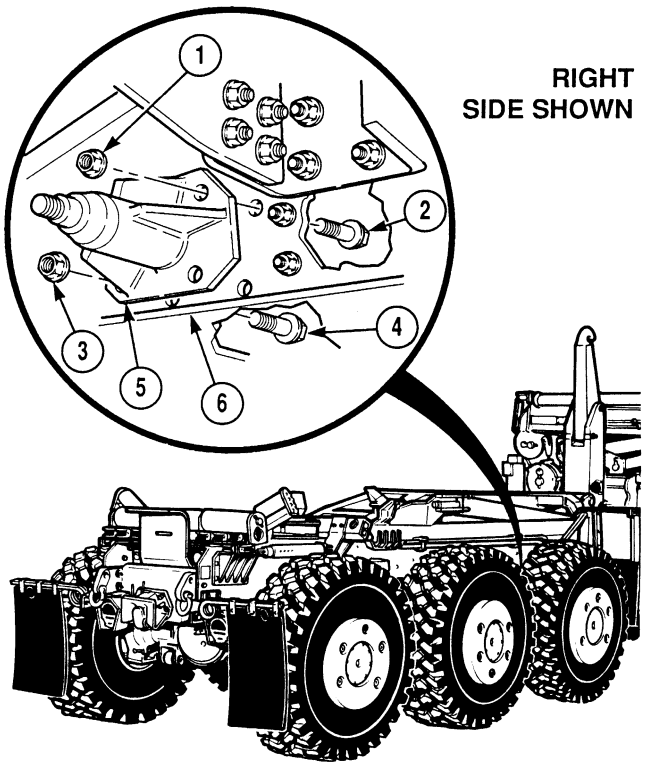

d. Axle No. 4 Shock Absorber Mount Replacement.

(1) *Removal.*

(a) With the aid of an assistant, remove two locknuts (1), screws (2) and shock absorber bracket (3) from frame (4). Discard locknuts.

(2) *Installation.*

(a) With the aid of an assistant, install shock absorber bracket (3) on frame (4) with two screws (2) and locknuts (1).

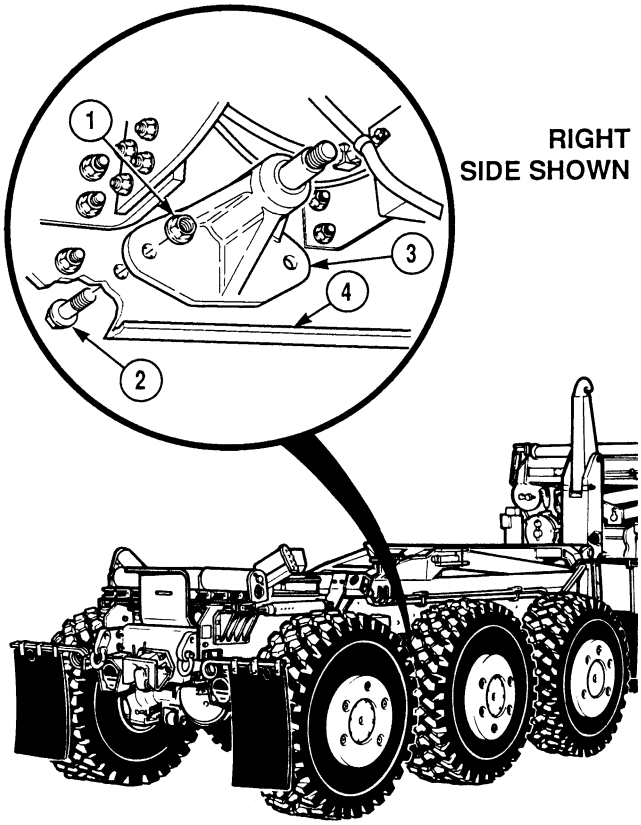

e. Follow-On Maintenance:

- Install shock absorber, (Para 16-2).
- Remove wheel chocks, (TM 9-2320-364-10).
- Close front access cover (Axle No. 1 only), (TM 9-2320-364-10).

END OF TASK

CHAPTER 17

CAB AND BODY MAINTENANCE

Para	Contents	Page
17-1	Introduction	17-2
17-2	Cab Fender Edging Replacement	17-3
17-3	Defroster Plenum Replacement	17-4
17-4	Heater Compartment Access Panel Replacement	17-8
17-5	Heater Compartment Front Cover Replacement	17-9
17-6	Fire Extinguisher Mount Replacement	17-10
17-7	Cab Door Adjustment	17-11
17-8	Cab Door And Hinge Replacement	17-13
17-9	Cab Door Repair	17-19
17-10	Engine Panel And Cover Assembly Replacement	17-32
17-11	Engine Cover Rubber Replacement	17-34
17-12	Engine Cover Latch Replacement	17-35
17-13	Engine Cover Grab Handle Replacement	17-36
17-14	Radiator Grille Assembly Replacement	17-37
17-15	Right, Left And Rear Grille Skins Replacement	17-38
17-16	Air Cleaner Skirt Replacement	17-42
17-17	Cooling Skirt Replacement	17-43
17-18	Right Hand Baffle Replacement	17-45
17-19	Cab Insulation Replacement	17-46
17-20	Electronic Control Box (ECB) Side Panel Replacement	17-57
17-21	Electronic Control Box (ECB) Right Side Panel Replacement	17-64
17-22	Electronic Control Box (ECB) Cover Replacement	17-66
17-23	Electronic Control Box (ECB) Replacement	17-67
17-24	Cab Engine Access Panel Replacement	17-75
17-25	Roof Cover Plate Replacement	17-76
17-26	Right Side Noise Panel Replacement	17-77
17-27	Left Front Noise Panel Replacement	17-79
17-28	Left Side Noise Panel Replacement	17-80
17-29	Rear Noise Panel Replacement	17-85
17-30	Rear Noise Panel Rubber Replacement	17-86
17-31	Peep Window Replacement	17-88
17-32	Rubber Fender Edging Replacement	17-90
17-33	Right Fender Front And Rear Skirt Replacement	17-91
17-34	Left Fender Front And Rear Skirt Replacement	17-93
17-35	Rear Fender And Fender Support Arm Replacement	17-95
17-36	Left Front Mud Flap Replacement	17-98
17-37	Right Front Mud Flap Replacement	17-99
17-38	Center Mud Flap Replacement	17-100
17-39	Rear Splash Guard (Mud Flap)/Reflector/Spring Bar Replacement	17-101
17-40	Cab Seat Repair	17-106
17-41	Cab Seat Lock Alignment Procedure	17-112
17-42	Cab Seat Support Replacement	17-114
17-43	Cargo Net Replacement	17-115

Para	Contents	Page
17-44	Seat Belt Replacement	17-116
17-45	Sunvisor Replacement	17-120
17-46	Window Guard Replacement	17-121
17-47	Foot Rest Repair	17-122
17-48	Cab Floor Drain Plug Replacement	17-125
17-49	Heater Control Side Panel Grab Handle Replacement	17-126
17-50	Glove Box Grab Handle Replacement	17-127
17-51	Instrument Panel Grab Handle Replacement	17-128
17-52	Side Cab Grab Handle Replacement	17-129
17-53	Glove Box Replacement	17-130
17-54	Stowage Box And Bracket Replacement	17-133
17-55	Crane Stowage Box Repair	17-138
17-56	First Aid Kit Bracket Replacement	17-141
17-57	Rifle Stowage Brackets Replacement	17-142
17-58	Ladder Support Repair	17-148
17-59	Threaded Screw Insert Replacement	17-150
17-60	Stowage Box/Engine Cover Latch Adjustment	17-152

17-1. INTRODUCTION.

This chapter contains maintenance instructions for removing, replacing, installing and adjusting components of the cab and body as authorized by the Maintenance Allocation Chart (MAC) at the Unit Maintenance level.

17-2. CAB FENDER EDGING REPLACEMENT.

This task covers:

a. Removal b. Installation c. Follow-On Maintenance

INITIAL SETUP

Tools and Special Tools
Tool Kit, General Mechanic's: Automotive (Item 74, Appendix G)

Materials/Parts
Lockwasher (9) (Item 195, Appendix F)

Equipment Condition
Engine OFF, (TM 9-2320-364-10)
Wheels chocked, (TM 9-2320-364-10)

a. Removal.

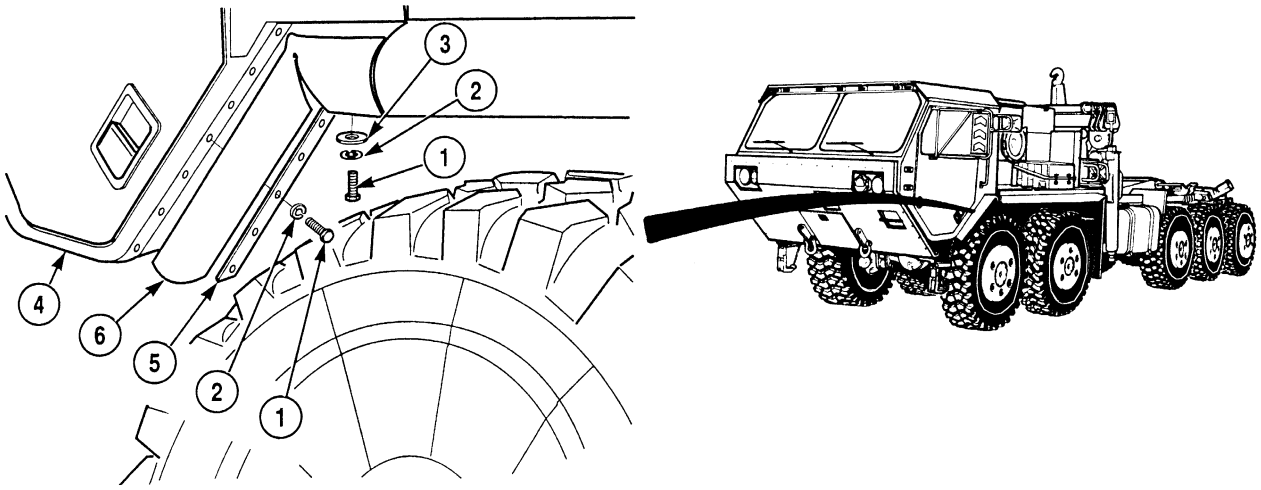

NOTE

Both cab fender edgings are removed the same way. Left side shown.

(1) Remove three screws (1), lockwashers (2) and flatwashers (3) from cab (4). Discard lockwashers.

(2) Remove six screws (1), lockwashers (2), plate (5) and cab fender edging (6) from cab (4). Discard lockwashers.

b. Installation.

(1) Install cab fender edging (6) on cab (4) with plate (5), six lockwashers (2) and screws (1).

(2) Secure cab fender edging (6) on cab (4) with three screws (1), lockwashers (2) and flatwashers (3).

c. Follow-on Maintenance:

- Remove wheel chocks, (TM 9-2320-364-10).

END OF TASK

17-3. DEFROSTER PLENUM REPLACEMENT.

This task covers:

a. Removal
b. Cleaning/Inspection
c. Installation
d. Follow-on Maintenance

INITIAL SETUP

Tools and Special Tools
Tool Kit, General Mechanic's: Automotive (Item 74, Appendix G)

Materials/Parts
Adhesive (Item 7, Appendix C)
Lockwasher (Item 195, Appendix F)
Screw, Self-Tapping (6) (Item 315, Appendix F)

Equipment Condition
Engine OFF, (TM 9-2320-364-10)
Wheels chocked, (TM 9-2320-364-10)
Instrument panel removed, (Para 7-13) (left defroster plenum only)
Glove box door opened, (TM 9-2320-364-10) (right defroster plenum only)

a. Removal.

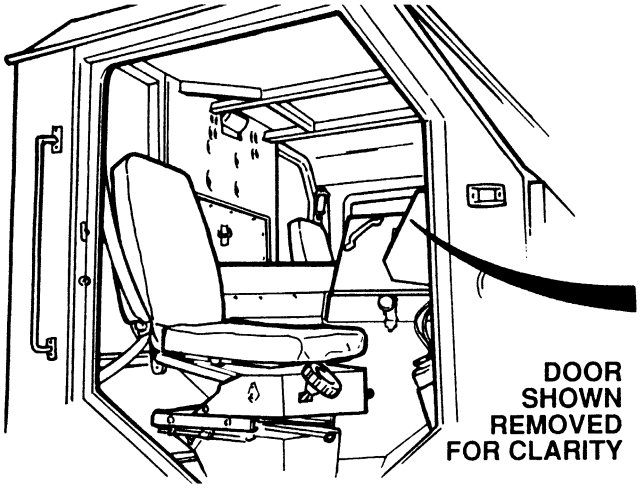

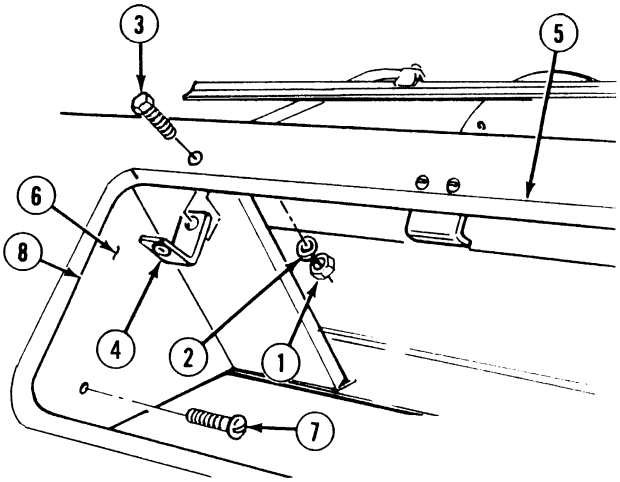

NOTE

- Perform Steps (1) through (3) for right defroster plenum only.
- Do not remove divider panel.

(1) Remove nut (1), lockwasher (2), screw (3) and bracket (4) from dash (5) and divider panel (6). Discard lockwasher.

(2) Remove screw (7) from dash (5) and divider panel (6).

(3) Lay divider panel (6) down inside glove box (8).

(4) Remove eight screws (9) and heater compartment access panel (10) from heater compartment (11).

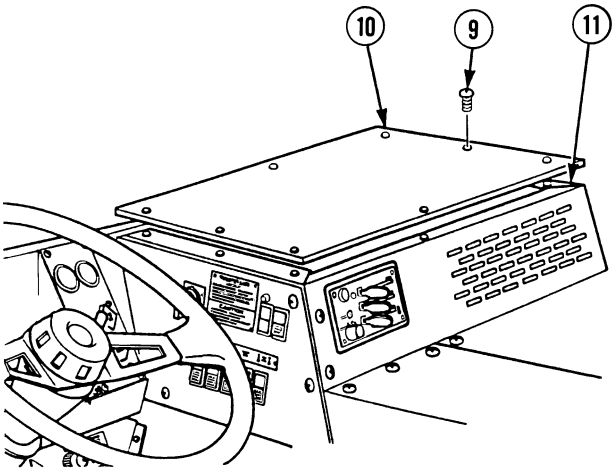

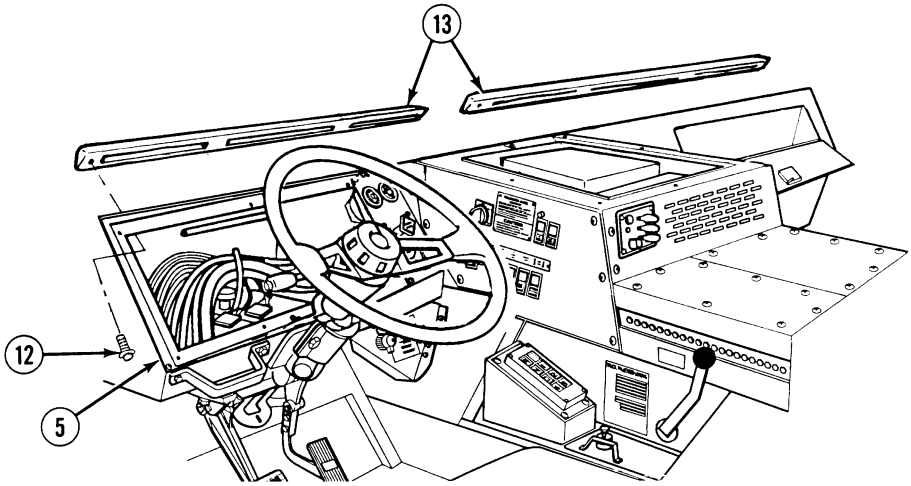

(5) Remove six self-tapping screws (12) from dash (5) and two defroster plenums (13). Discard self-tapping screws.

NOTE

It may be necessary to pry defroster plenums away from dash.

(6) Remove two defroster plenums (13) from dash (5).

b. Cleaning/Inspection.

(1) Clean sealant from mating surfaces of dash and defroster plenums.

(2) Inspect defroster plenums for cracks, dents or plugged vents.

(3) Replace all damaged parts.

17-3. DEFROSTER PLENUM REPLACEMENT (CONT).

c. Installation.

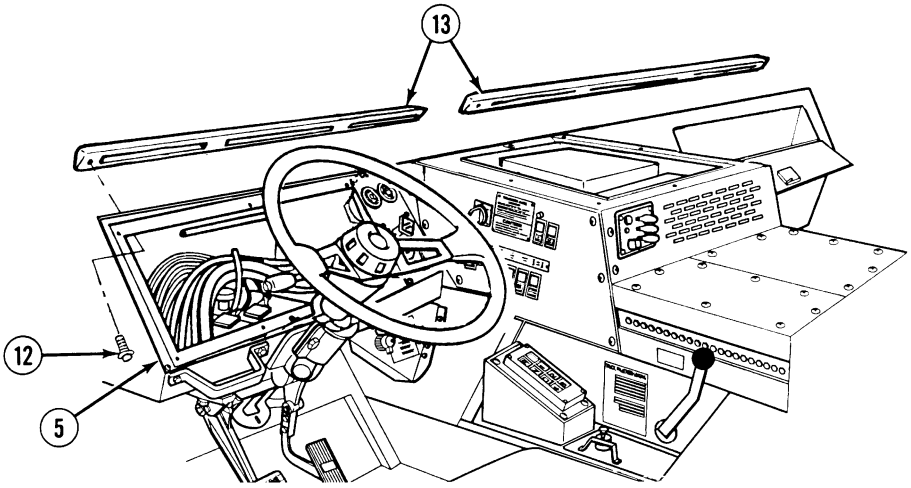

NOTE

Install one defroster plenum at a time.

(1) Apply a bead of sealant to mating surface of defroster plenum (13).

(2) Position defroster plenum (13) on dash (5).

(3) Install six self-tapping screws (12) in dash (5) and defroster plenum (13).

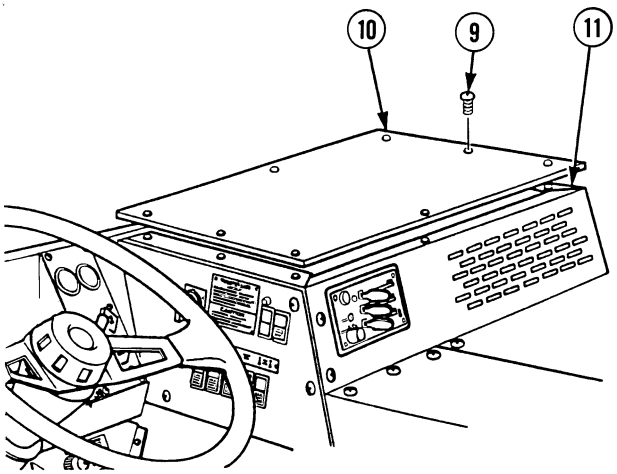

(4) Install heater compartment access panel (10) on heater compartment (11) using eight screws (9).

NOTE

Steps (5) through (7) apply to right defroster plenum only.

(5) Position divider panel (6) in glove box (8) using screw (7).

(6) Install bracket (4) and divider panel (6) on dash (5) using screw (3), lockwasher (2) and nut (1).

(7) Tighten screw (7) on dash (5) and divider panel (6).

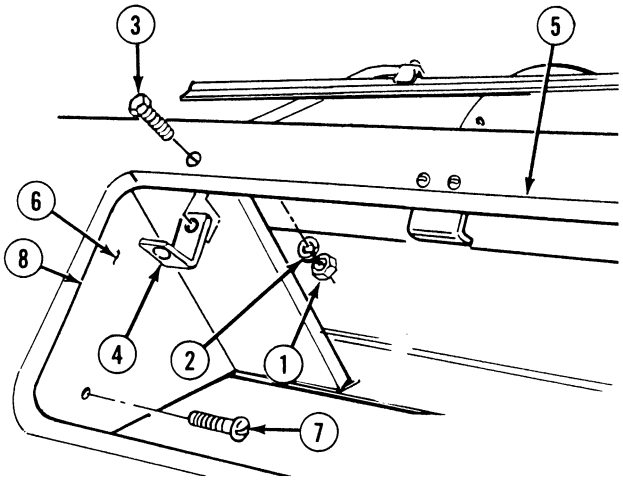

d. Follow-on Maintenance.

- Install instrument panel, (Para 7-13) (left defroster plenum only).
- Close glove box door, (TM 9-2320-364-10) (right defroster plenum only).
- Remove wheel chocks, (TM 9-2320-364-10).

END OF TASK

17-4. HEATER COMPARTMENT ACCESS PANEL REPLACEMENT.

This task covers:

a. Removal b. Installation c. Follow-On Maintenance

INITIAL SETUP

Tools and Special Tools
Tool Kit, General Mechanic's: Automotive
(Item 74, Appendix G)

Equipment Condition
Engine OFF, (TM 9-2320-364-10)
Wheels chocked, (TM 9-2320-364-10)

a. Removal.

(1) Remove eight screws (1) and heater compartment access panel (2) from heater compartment (3).

(2) Remove four screws (4), spring clips (5) and louvers (6) from heater compartment access panel (2).

b. Installation.

(1) Install four louvers (6) on heater compartment access panel (2) with spring clips (5) and screws (4).

(2) Install heater compartment access panel (2) on heater compartment (3) with eight screws (1).

c. Follow-On Maintenance:

- Remove wheel chocks, (TM 9-2320-364-10).

END OF TASK

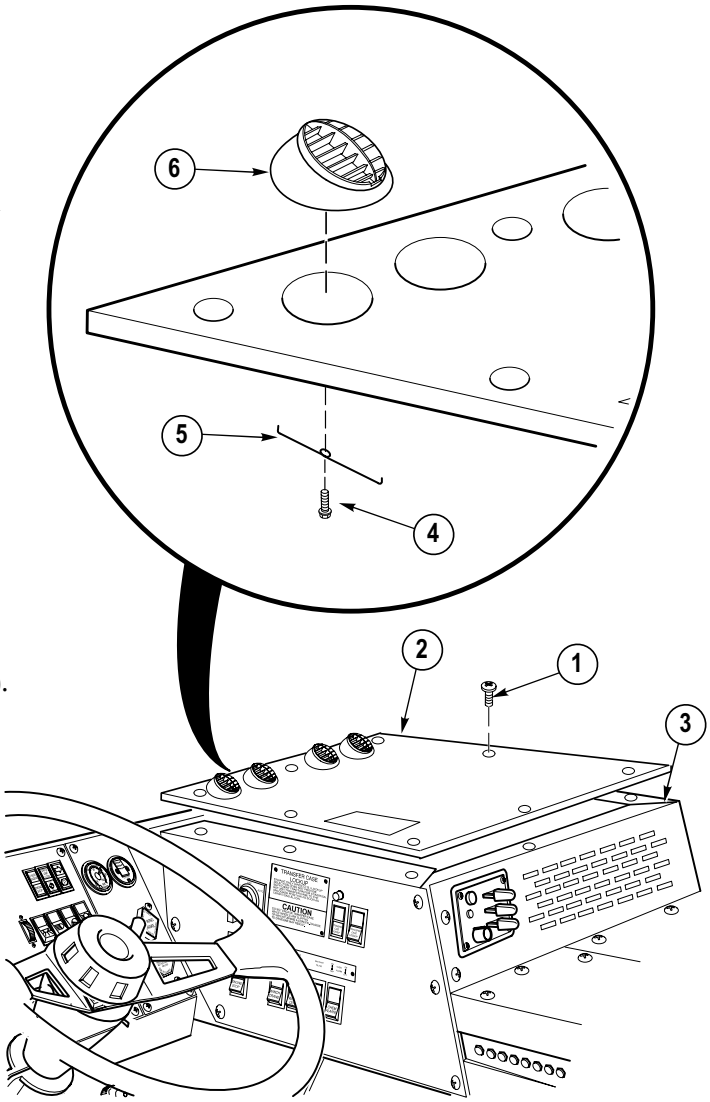

17-5. HEATER COMPARTMENT FRONT COVER REPLACEMENT.

This task covers:

a. Removal b. Installation c. Follow-On Maintenance

INITIAL SETUP

Tools and Special Tools
Tool Kit, General Mechanic's: Automotive (Item 74, Appendix G)

Equipment Condition
Engine OFF, (TM 9-2320-364-10)
Wheels chocked, (TM 9-2320-364-10)
Heater compartment access panel removed, (Para 17-4)
Heater control panel removed, (Para 19-17)
Electronic Control Box (ECB) cover removed, (Para 17-22)
Rectifier removed, (Para 7-19)

a. Removal. Remove four screws (1) and cover (2) from heater compartment (3).

b. Installation. Install cover (2) and four screws (1) on heater compartment (3).

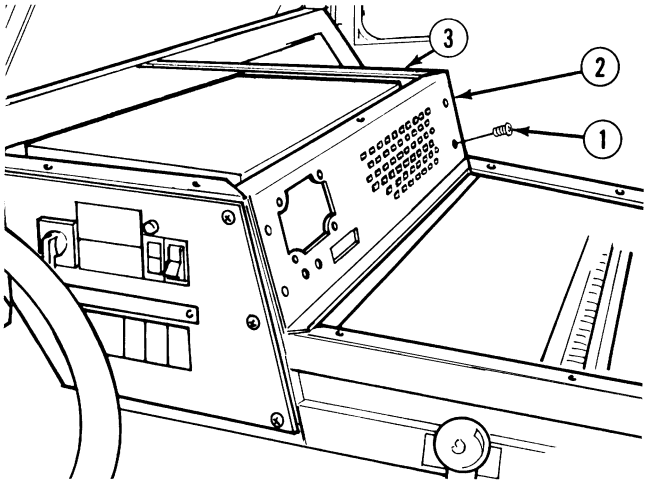

c. Follow-On Maintenance:

- Install rectifier, (Para 7-19).
- Install Electronic Control Box (ECB) cover, (Para 17-22).
- Install heater control panel, (Para 19-17).
- Install heater compartment access panel, (Para 17-4).
- Remove wheel chocks, (TM 9-2320-364-10).

END OF TASK

17-6. FIRE EXTINGUISHER MOUNT REPLACEMENT.

This task covers:

a. Removal b. Installation c. Follow-On Maintenance

INITIAL SETUP

Tools and Special Tools
Tool Kit, General Mechanic's: Automotive (Item 74, Appendix G)

Materials/Parts
Screw (4) (Item 299, Appendix F)

Equipment Condition
Engine OFF, (TM 9-2320-364-10)
Wheels chocked, (TM 9-2320-364-10)
Fire extinguisher removed, (TM 9-2320-364-10)

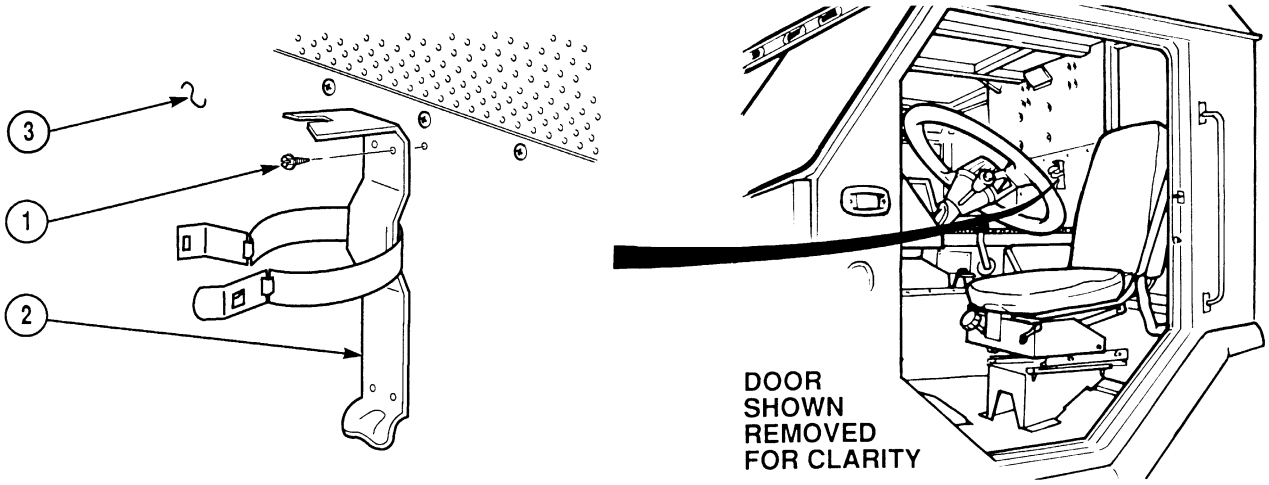

a. Removal. Remove four screws (1) and fire extinguisher mount (2) from cab engine access panel (3). Discard screws.

b. Installation. Install fire extinguisher mount (2) on cab engine access panel (3) with four screws (1).

c. Follow-On Maintenance:

- Install fire extinguisher, (TM 9-2320-364-10).
- Remove wheel chocks, (TM 9-2320-364-10).

END OF TASK

17-7. CAB DOOR ADJUSTMENT.

This task covers:

a. Adjustment

b. Follow-On Maintenance

INITIAL SETUP

Tools and Special Tools
Tool Kit, General Mechanic's: Automotive (Item 74, Appendix G)

Materials/Parts
Pin, Cotter (2) (Item 271, Appendix F)

Equipment Condition
Engine OFF, (TM 9-2320-364-10)
Wheels chocked, (TM 9-2320-364-10)

a. Adjustment.

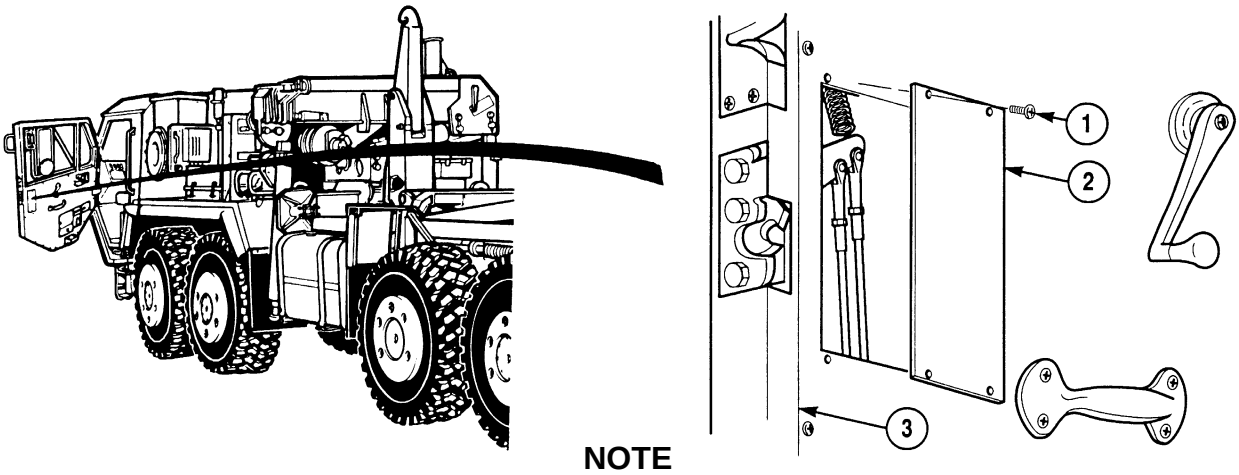

NOTE

Ensure window is in the upward position.

(1) Remove four screws (1) and inspection cover (2) from inner skin assembly (3).

NOTE

Use care when removing the spring. Spring may fall between inner skin and door.

(2) Remove spring (4) from rotary lock arm (5) and door frame (6).

(3) Remove two cotters pins (7) and pins (8) from clevis (9) and clevis (10). Discard cotter pins.

(4) Remove outer link rod (11) and cable assembly (12) from rotary lock arm (5).

(5) Position rotary lock (13) in closed position.

(6) Loosen jam nut (14) on outer link rod (11).

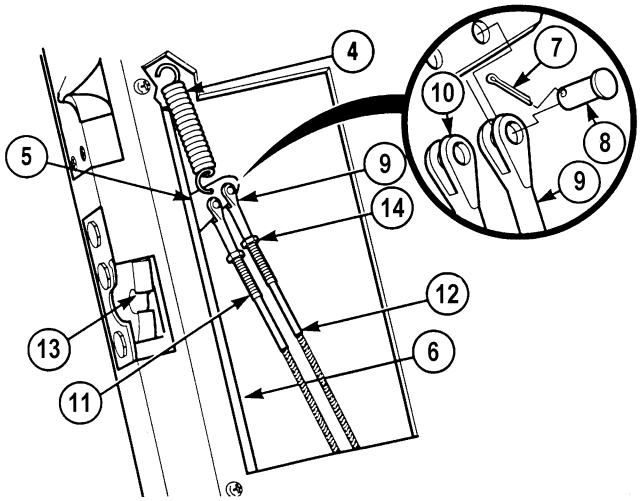

17-7. CAB DOOR ADJUSTMENT (CONT).

NOTE

Light upward pressure must be maintained on both outer link rod and cable assembly fitting for proper alignment.

(7) While pulling up on outer link rod (11), adjust clevis (10) by turning clockwise or counterclockwise until clevis aligns with hole in rotary lock arm (5).

(8) Install outer link rod (11) in rotary lock arm (5) with pin (8) and cotter pin (7), and tighten jam nut (14).

(9) Loosen jam nut (14) on cable assembly (12).

(10) While pulling up on cable assembly (12), adjust clevis (9) by turning clockwise or counterclockwise until clevis aligns with hole in rotary lock arm (5).

(11) Install clevis (9) with pin (8) and cotter pin (7) on rotary lock arm (5).

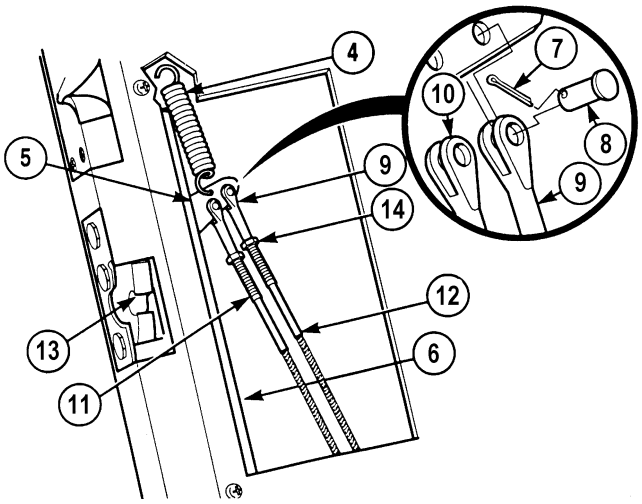

NOTE

Use care when installing spring. Spring may fall between inner skin and door.

(12) Install spring (4) on door frame (6) and rotary lock arm (5).

(13) Tighten jam nut (14) on cable assembly (12).

(14) Unlatch door rotary lock (13).

(15) Shut door and check rotary lock (13) operations.

(16) Install inspection cover (2) with four screws (1) on inner skin assembly (3).

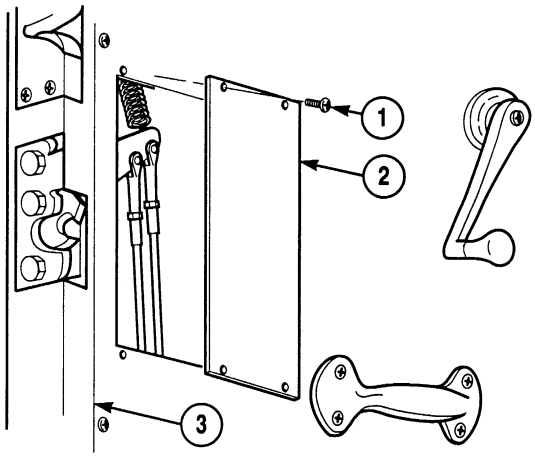

b. Follow-On Maintenance:

- Lubricate dovetail and door rotary lock, (TM 9-2320-364-10).
- Remove wheel chocks, (TM 9-2320-364-10).

END OF TASK

17-8. CAB DOOR AND HINGE REPLACEMENT.

This task covers:

a. Removal b. Installation c. Follow-On Maintenance

INITIAL SETUP

Tools and Special Tools
Tool Kit, General Mechanic's: Automotive (Item 74, Appendix G)
Lifting Device, Minimum Capacity 100 lbs (45 kg)
Bit Set, Screwdriver (Item 6, Appendix G)

Materials/Parts
Sealant, Metal (Item 69, Appendix C)
Sealing Compound (Item 73, Appendix C)
Locknut (Item 99, Appendix F)
Lockwasher (2) (Item 195, Appendix F)
Screw, Self-tapping (3) (Item 299, Appendix F)
Screw, Self-tapping (2) (Item 305, Appendix F)

Materials/Parts - Continued
Nut Strip (Item 336, Appendix F)

Personnel Required
Two

Equipment Condition
Engine OFF, (TM 9-2320-364-10)
Wheels chocked, (TM 9-2320-364-10)
Mirror bracket removed, (Para 19-3)
Amber reflector removed, (Para 19-2)

a. Removal.

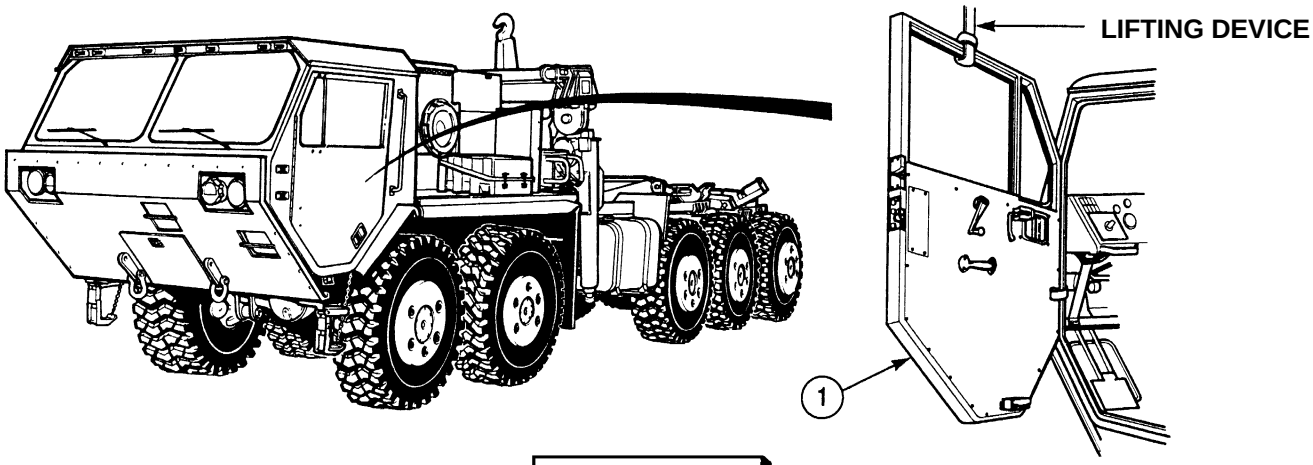

WARNING

Cab door weighs 100 lbs (45 kg). Support with suitable lifting device to avoid injury to personnel.

NOTE

Procedure is identical for both doors. Left door is shown.

(1) Open door assembly (1) and roll window down.

(2) Attach lifting device to door assembly (1).

17-8. CAB DOOR AND HINGE REPLACEMENT (CONT).

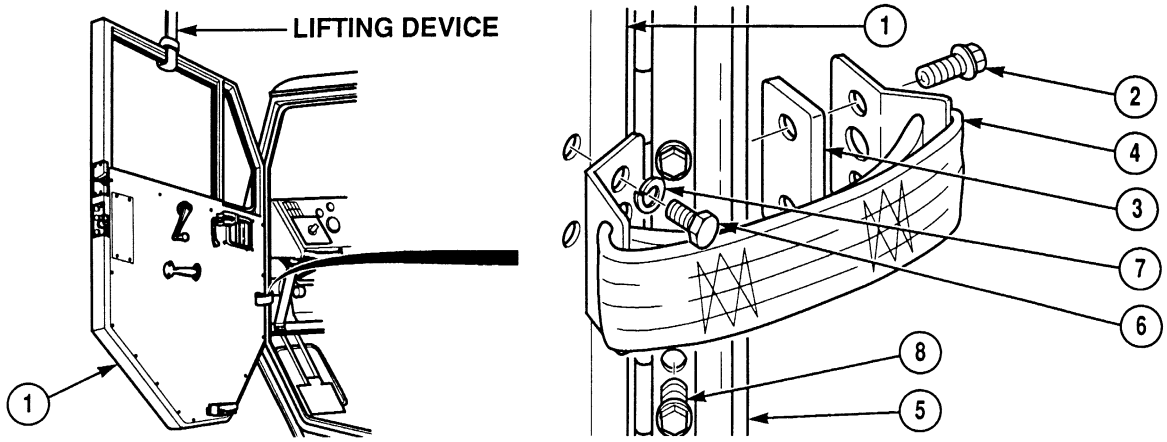

(3) Remove two self tapping screws (2), spacer (3) and door strap (4) from cab assembly (5).

(4) Remove two screws (6), lockwashers (7) and door strap (4) from door assembly (1). Discard lockwashers.

CAUTION

Doors must be removed with care to prevent damage to cab assembly.

(5) With the aid of an assistant, remove nine screws (8) and door assembly (1) from cab assembly (5).

(6) Remove lifting device from door assembly (1).

(7) Remove nine screws (8) and hinge (9) from door assembly (1).

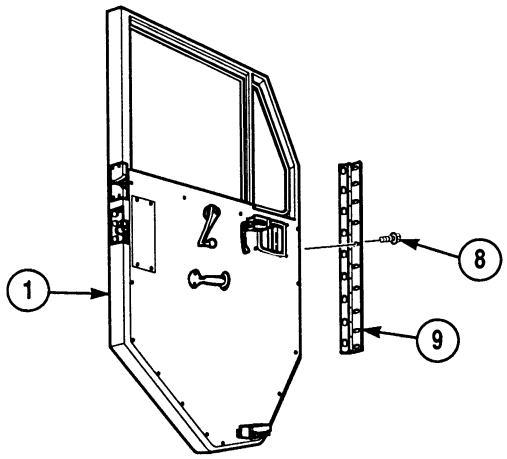

(8) Remove three self-tapping screws (10) and door seal bracket (11) from cab assembly (5). Discard screws.

(9) Remove door seal (12) from cab assembly (5).

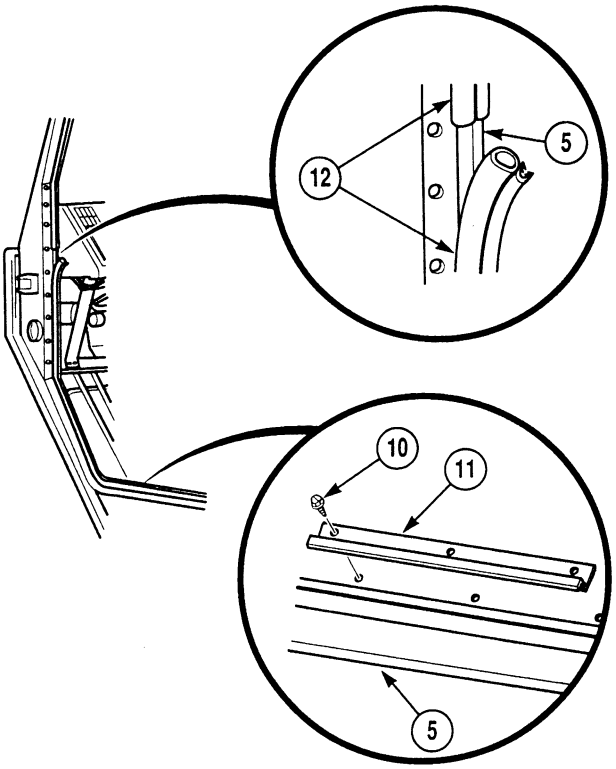

NOTE

- Nut strip and locknut are removed through cut out on back side of door frame in cab.
- Note position of nut strip prior to removal.
- Nut strip can fall into door jam during removal.

(10) Remove two screws (13), nut strip (14) and dovetail guide (15) from cab assembly (5). Discard nut strip.

(11) Remove locknut (16), washer (17) and striker pin (18) from cab assembly (5). Discard locknut.

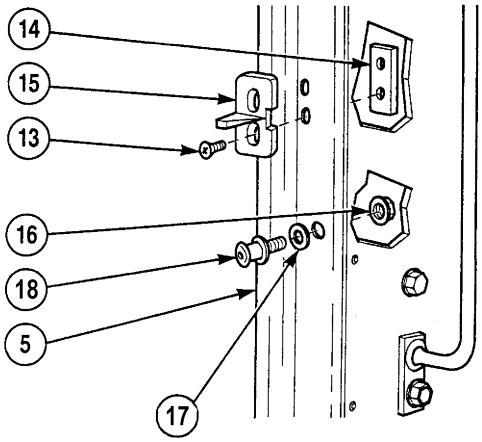

17-8. CAB DOOR AND HINGE REPLACEMENT (CONT).

b. Installation.

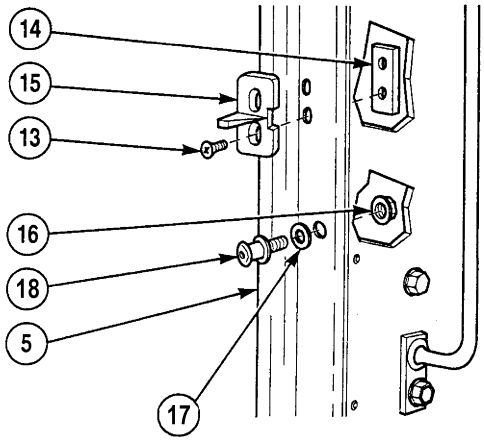

NOTE

- Procedure is identical for both doors. Left door is shown.
- Nut strip can fall into door jam during installation.
- Locknut and nut strip are installed through cut out on backs side of door frame in cab.

(1) Install dovetail guide (15) and nut strip (14) on cab assembly (5) with two screws (13).

(2) Install striker pin (18) and washer (17) on cab assembly (5) with locknut (16).

WARNING

Adhesives, solvents, and sealing compounds can burn easily, can give off harmful vapors, and are harmful to skin and clothing. To avoid injury or death, keep away from open fire and use in well-ventilated area. If adhesive, solvent, or sealing compound gets on skin or clothing, wash immediately with soap and water.

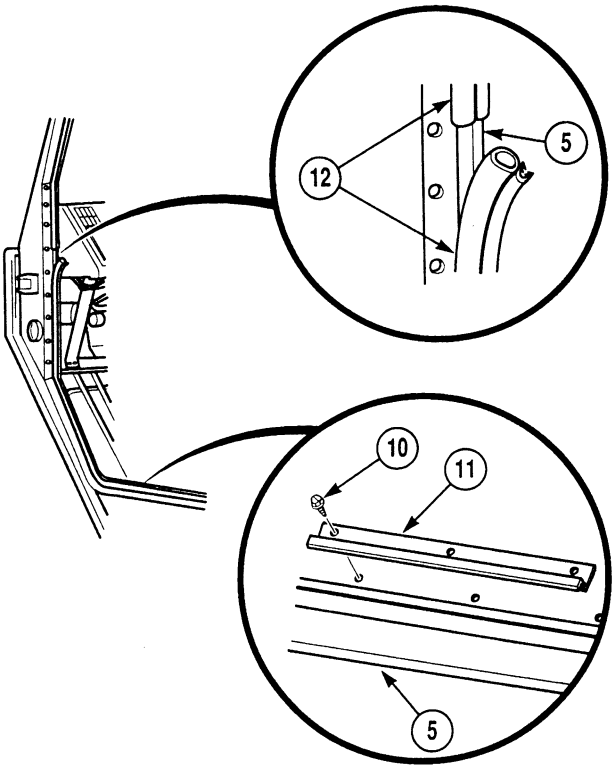

(3) Apply sealing compound in corners of cab door opening.

(4) Install door seal (12) on cab assembly (5).

(5) Install door seal bracket (11) on cab assembly (5) with three self-tapping screws (10).

(6) Position hinge (9) on door assembly (1) with nine screws (8).

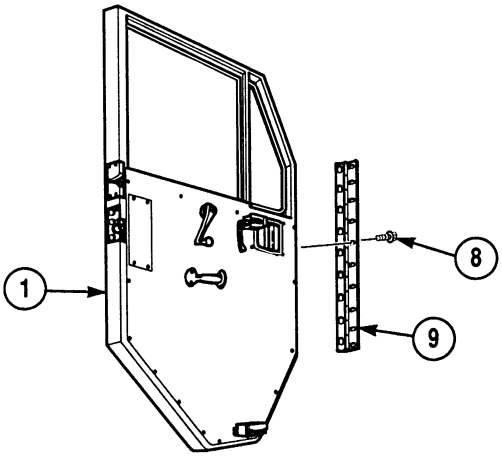

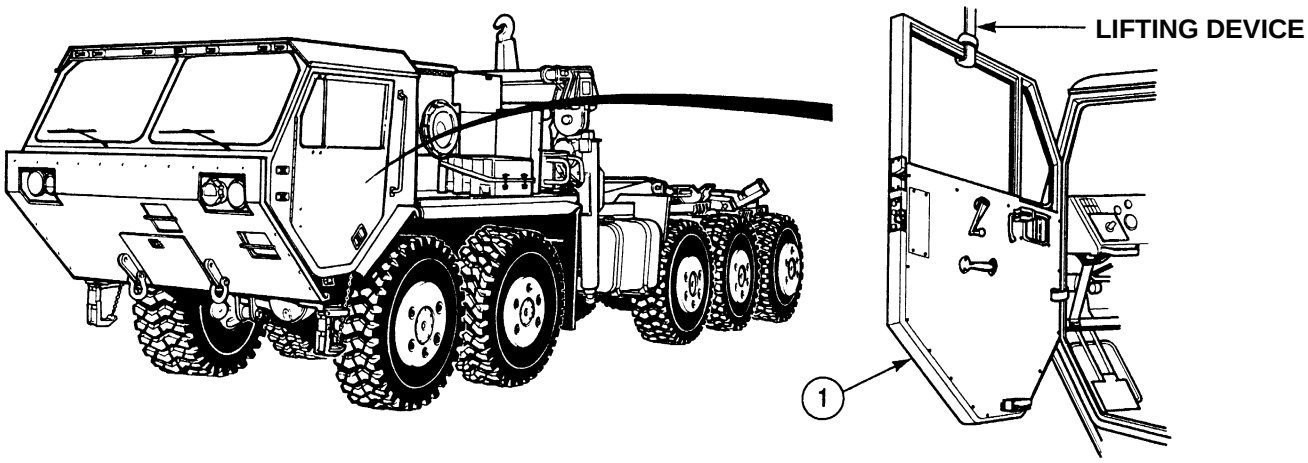

WARNING

Cab door weighs 100 lbs (45 kg). Support with suitable lifting device to avoid injury to personnel.

CAUTION

Doors must be installed with care to prevent damage to cab assembly.

(7) Attach lifting device to door assembly (1).

17-8. CAB DOOR AND HINGE REPLACEMENT (CONT).

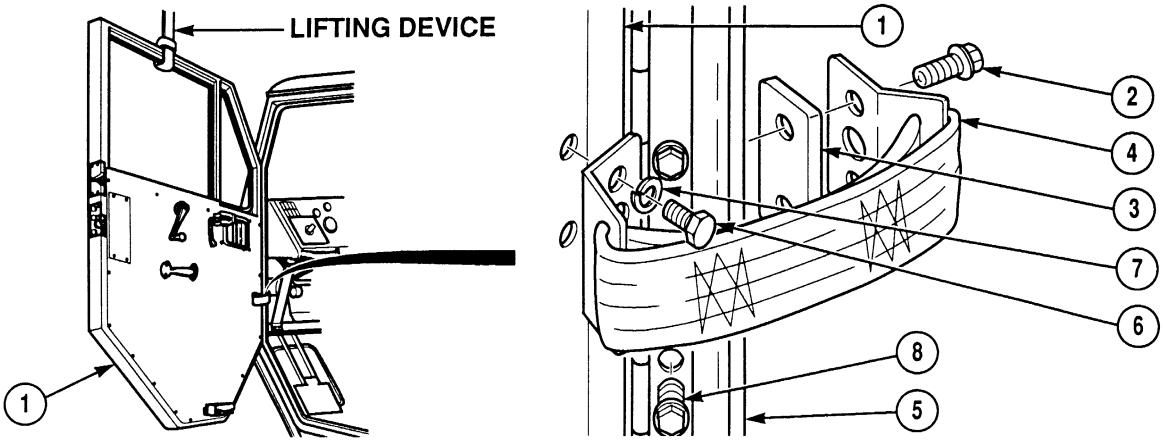

WARNING

Adhesives, solvents, and sealing compounds can burn easily, can give off harmful vapors, and are harmful to skin and clothing. To avoid injury or death, keep away from open fire and use in well-ventilated area. If adhesive, solvent, or sealing compound gets on skin or clothing, wash immediately with soap and water.

(8) Apply sealing compound to hinge holes on cab assembly (5).

(9) With the aid of an assistant, line up door assembly (1) with cab assembly (5) and install nine screws (8) in cab assembly (5).

(10) Remove lifting device and lifting strap from door assembly (1).

(11) Shut door assembly (1) and check operation. If door does not shut properly, repeats Steps (7) and (9), realign door assembly (1) and tighten 18 screws (8).

(12) Install door strap (4) and lockwashers (7) on door assembly (1) with two screws (6).

(13) Install spacer (3) and door strap (4) on cab assembly (5) with two screws (2).

(14) Apply metal sealant to all seams and joints of door assembly (1).

(15) Roll up window on door assembly (1).

c. Follow-On Maintenance:

- Adjust door, (Para 17-7).
- Install mirror bracket, (Para 19-3).
- Install amber reflector, (Para 19-2).
- Remove wheel chocks, (TM 9-2320-364-10).

END OF TASK

17-9. CAB DOOR REPAIR.

This task covers:

a. Disassembly
b. Cleaning/Inspection
c. Assembly
d. Follow-On Maintenance

INITIAL SETUP

Tools and Special Tools
Tool Kit, General Mechanic's: Automotive (Item 74, Appendix G)
Socket Set, 3/8 in. (Item 62, Appendix G)
Wrench, Torque (0 to 60 N·m) (Item 98, Appendix G)

Materials/Parts
Adhesive, HM (Item 11, Appendix C)
Adhesive (Item 15, Appendix C)
Primer (Item 64, Appendix C)
Sealing Compound (Item 77, Appendix C)
Solution, Soap (Item 86, Appendix C)
Channel (Item 9, Appendix F)
Channel, Rubber (Item 11, Appendix F)

Materials/Parts - Continued
Locknut (9) (Item 139, Appendix F)
Lockwasher (2) (Right Side) (Item 171, Appendix F)
Pin, Cotter (4) (Item 271, Appendix F)
Screw, Machine (6) (Item 295, Appendix F)
Screw, Self-Locking (Item 298, Appendix F)
Seal, Preformed (Item 331, Appendix F)

Equipment Condition
Engine OFF, (TM 9-2320-364-10)
Wheels chocked, (TM 9-2320-364-10)
Rifle stowage bracket removed (right side cab door), (Para 17-57)
Door removed, (Para 17-8)

a. Disassembly.

NOTE

Left cab door and right cab door are identical unless noted. Left cab door is shown for disassembly.

(1) Remove four screws (1) and cover (2) from door assembly (3).

(2) Remove four screws (4) and handle (5) from door assembly (3).

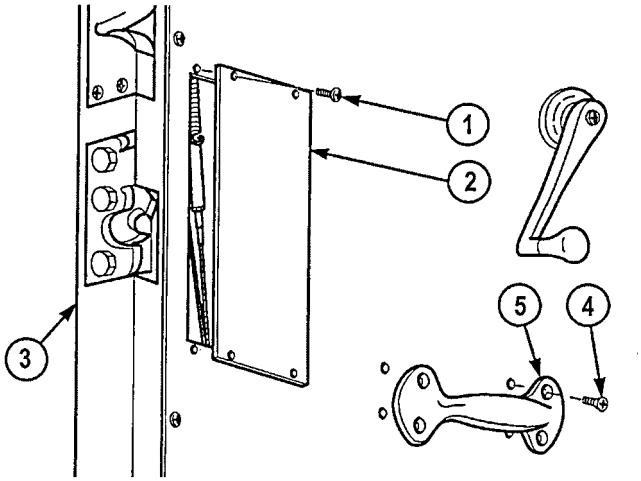

17-9. CAB DOOR REPAIR (CONT).

(3) Remove screw (6), window crank (7), cover (8) and spring (9) from door assembly (3).

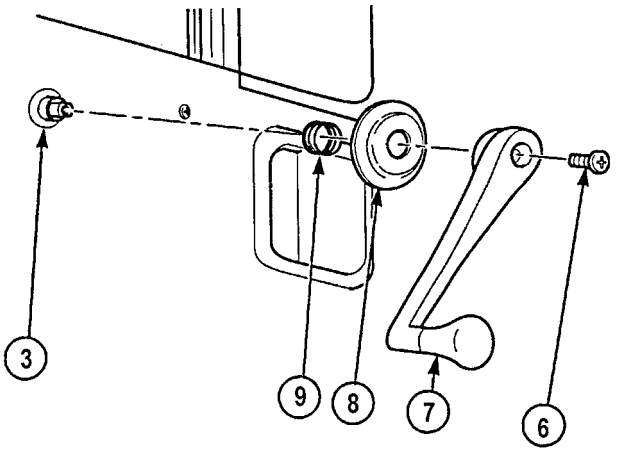

NOTE

Use care when removing spring. Spring may fall out between inner skin and door.

(4) Remove spring (10) from rotary lock arm (11) and door assembly (3).

(5) Loosen jam nut (12) on outer link rod (13) and cable assembly (14).

(6) Remove two cotter pins (15) and pins (16) from clevis (17). Discard cotter pins.

(7) Remove cable assembly (14) from rotary lock arm (11).

(8) Remove outer link rod (13) from rotary lock arm (11).

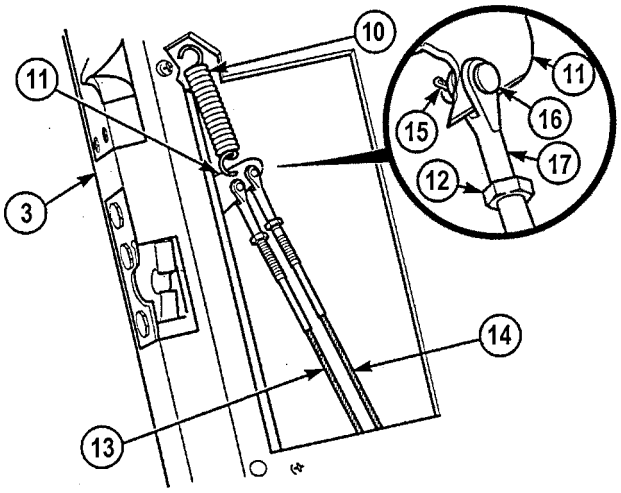

(9) Remove four screws (18) and dovetail assembly (19) from door assembly (3).

NOTE

Rotary lock must be in closed position to permit removal.

(10) Remove three screws (20), rotary lock (21) and two spacer plates (22) from door assembly (3).

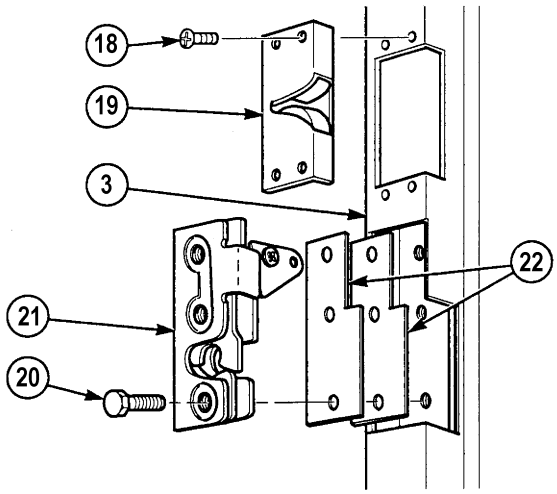

(11) Remove 14 screws (23) from door assembly (3).

(12) Remove six screws (24) and inner skin assembly (25) from door assembly (3).

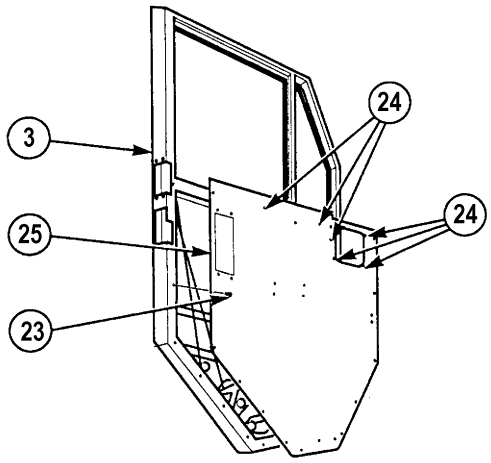

NOTE

Perform Step (13) if rifle mount plate is present on right side cab door and damaged.

(13) Remove two screws (26), lockwashers (27), washers (28) and rifle mount plate (29) from inner skin assembly (25). Discard lockwashers.

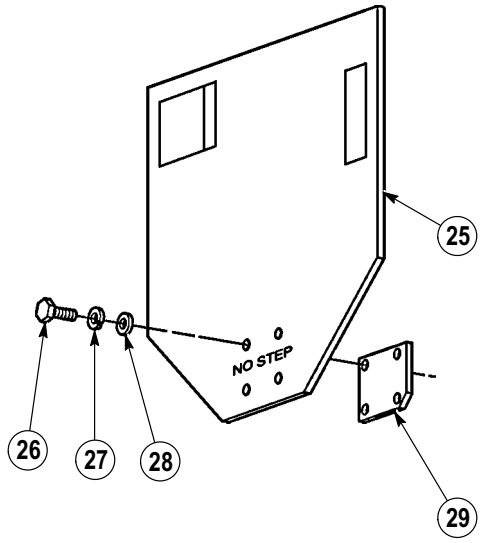

17-9. CAB DOOR REPAIR (CONT).

(14) Remove six machine screws (30) and window regulator (31) from door assembly (3).

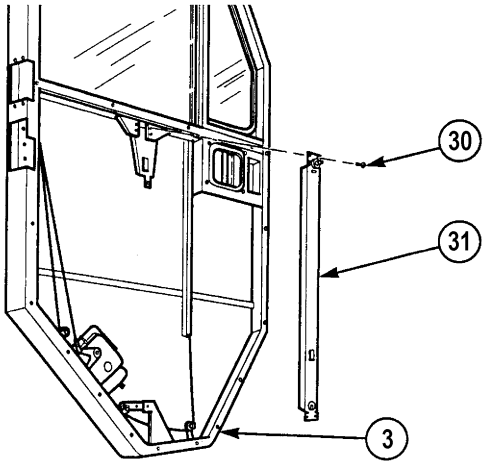

(15) Remove channel (32) from door assembly (3). Discard channel.

(16) Remove two screws (33), locknuts (34) and window guide (35) from door assembly (3). Discard locknuts.

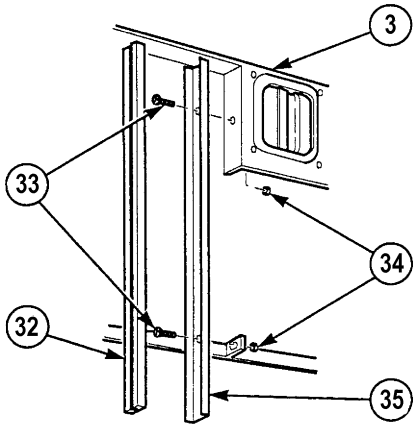

(17) Remove cotter pin (36), retainer pin (37) and threaded rod (38) from lever (39). Discard cotter pin.

(18) Remove locknut (40), handle retaining bracket (41) and outside handle (42) from door assembly (3). Discard locknut.

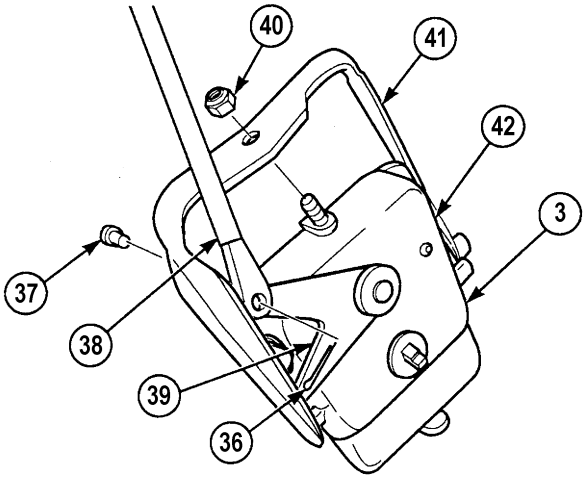

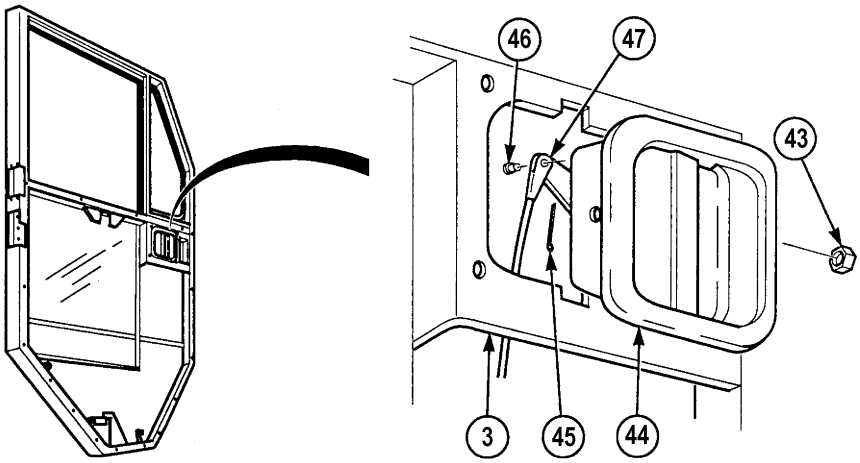

(19) Remove locknut (43) and inside handle (44) from door assembly (3). Discard locknut.

(20) Remove cotter pin (45), retaining pin (46) and cable (47) from door assembly (3). Discard cotter pin.

(21) Loosen nut (48) and remove clevis (17) and jam nut (48) from cable (49).

(22) Remove cable (49) from pulley assemblies (50).

NOTE

Pulley assemblies are removed by turning counterclockwise from brackets.

(23) Remove three nuts (51) and pulley assemblies (50) from bracket (52).

WARNING

Do not let window fall. Broken glass may cause serious injury to personnel.

(24) Remove window (53) from door assembly (3).

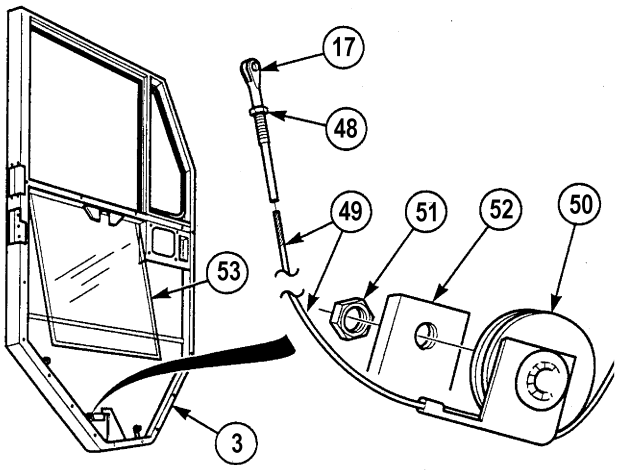

17-9. CAB DOOR REPAIR (CONT).

(25) Remove three channels (54) from door assembly (3).

(26) Remove weather stripping (55) from door assembly (3).

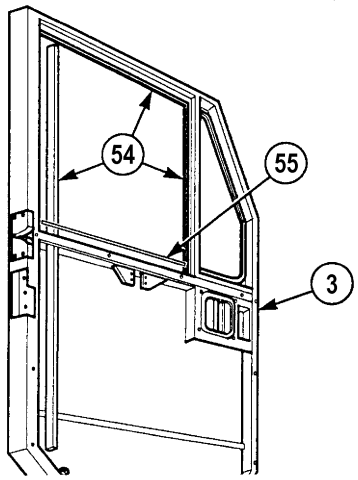

(27) Remove lock strip (56), window (57) and rubber channel (58) from door assembly (3). Discard lock strip and rubber channel.

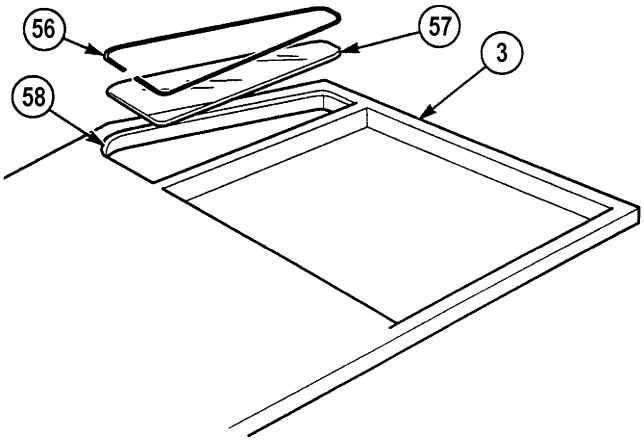

b. Cleaning/Inspection.

(1) Clean excess grease from cable and rollers.

(2) Replace any worn, defective, or cracked parts.

(3) Clean excess adhesive from door and window guide using primer.

c. Assembly.

WARNING

Adhesives, solvents, and sealing compounds can burn easily, can give off harmful vapors, and are harmful to skin and clothing. To avoid injury or death, keep away from open fire and use in a well-ventilated area. If adhesive, solvent, or sealing compound gets on skin or clothing, wash immediately with soap and water.

NOTE

Procedure is identical for both cab doors unless noted. Left side cab door is shown for assembly.

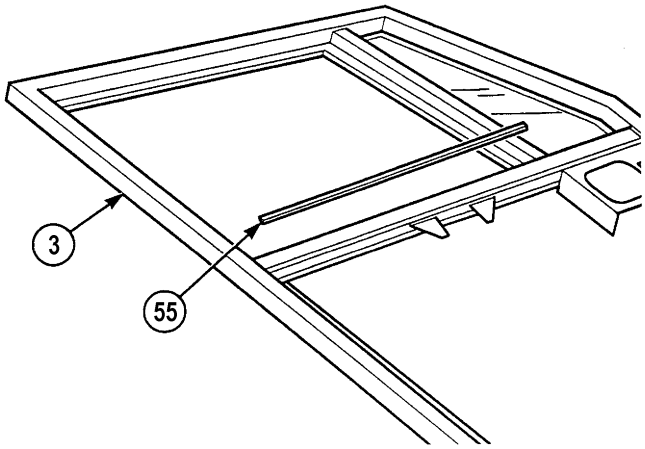

(1) Apply adhesive to weather stripping (55).

(2) Install weather stripping (55) on door assembly (3).

(3) Apply soap solution to rubber channel (58) and on door assembly (3).

(4) Install rubber channel (58) in door assembly (3).

(5) Apply primer to ends of rubber channel (58).

(6) Apply adhesive to ends of rubber channel (58).

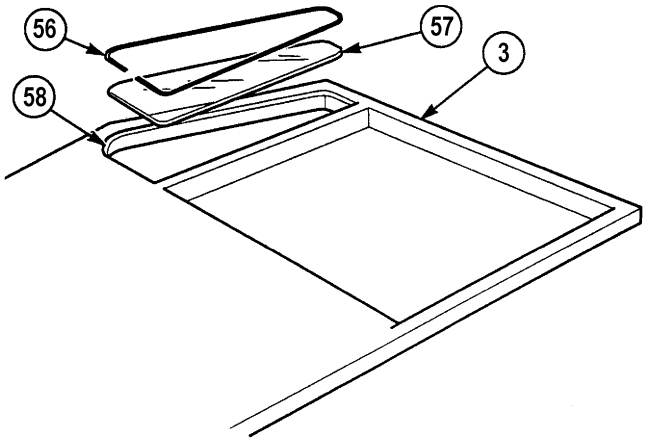

WARNING

Do not let window fall. Broken glass may cause serious injury.

(7) Install window (57) in rubber channel (58).

(8) Apply soap solution to rubber channel (58) and lock strip (56).

(9) Install lock strip (56) in rubber channel (58).

(10) Apply primer to ends of lock strip (56).

(11) Apply adhesive to ends of lock strip (56).

17-9. CAB DOOR REPAIR (CONT).

NOTE

Inside channel needs to be cut 1.25 inches (3.18 cm) longer than window channel.

(12) Cut three channels (54) to fit window channels in door assembly (3).

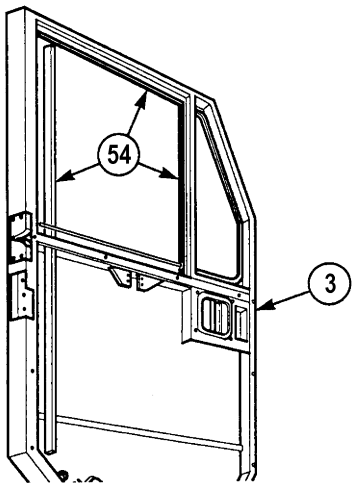

WARNING

Adhesives, solvents, and sealing compounds can burn easily, can give off harmful vapors, and are harmful to skin and clothing. To avoid injury or death, keep away from open fire and use in a well-ventilated area. If adhesive, solvent, or sealing compound gets on skin or clothing, wash immediately with soap and water.

(13) Apply adhesive to window channels in door assembly (3).

NOTE

Inside channel will over hang 1.25 inches below window channel.

(14) Install channels (54) in window channels on door assembly (3).

(15) Install window (53) in door assembly (3).

(16) Install three pulley assemblies (50) and three nuts (51) on bracket (52).

(17) Install cable (49) on pulley assemblies (50).

(18) Position jam nut (48) and clevis (17) on cable (49).

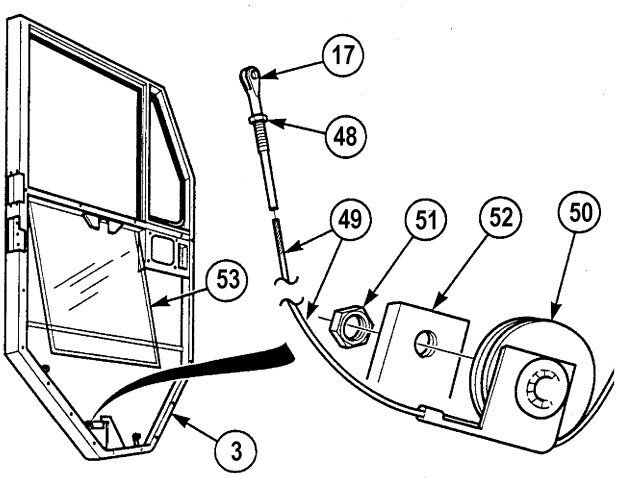

(19) Install outside handle (42), handle retaining bracket (41) and locknut (40) in door assembly (3).

(20) Install threaded rod (38), retaining pin (37) and cotter pin (36) on lever (39).

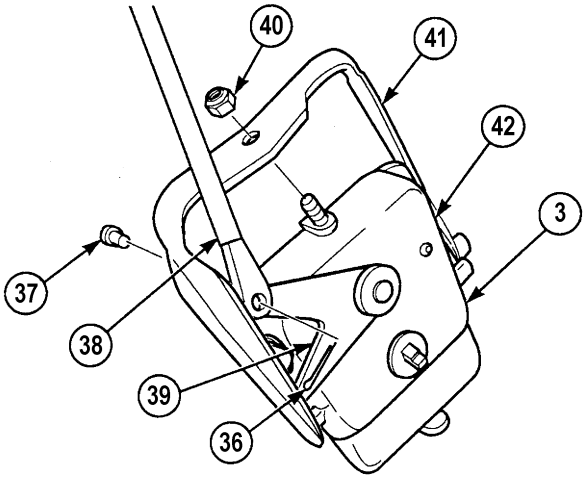

(21) Install cable (47), retaining pin (46) and cotter pin (45) on inside handle (44).

(22) Install inside handle (44) in door assembly (3) with locknut (43).

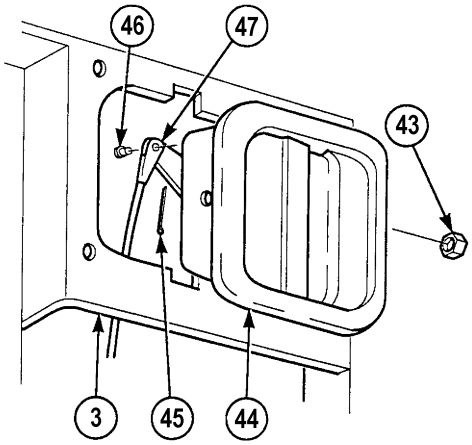

17-9. CAB DOOR REPAIR (CONT).

(23) Install window guide (35) on door assembly (3) with two screws (33) and locknuts (34).

(24) Cut channel (32) to fit window guide (35).

WARNING

Adhesives, solvents, and sealing compounds can burn easily, can give off harmful vapors, and are harmful to skin and clothing. To avoid injury or death, keep away from open fire and use in a well-ventilated area. If adhesive, solvent, or sealing compound gets on skin or clothing, wash immediately with soap and water.

(25) Apply adhesive to window guide (35).

(26) Install channel (32) in window guide (35).

(27) Install window regulator (31) on door assembly (3) with two screws (30).

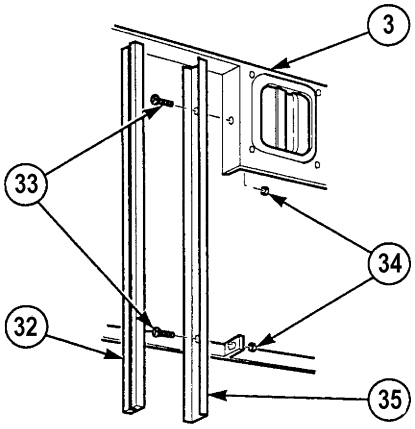

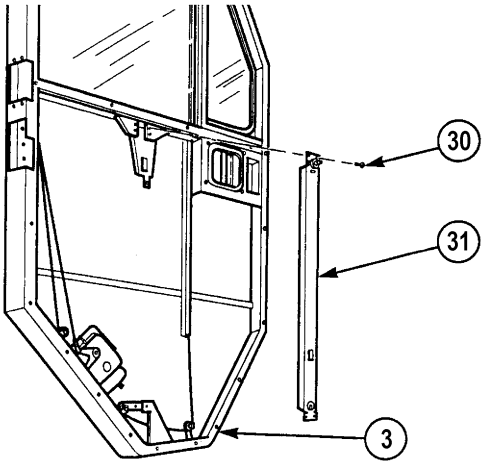

WARNING

Adhesives, solvents, and sealing compounds can burn easily, can give off harmful vapors, and are harmful to skin and clothing. To avoid injury or death, keep away from open fire and use in a well-ventilated area. If adhesive, solvent, or sealing compound gets on skin or clothing, wash immediately with soap and water.

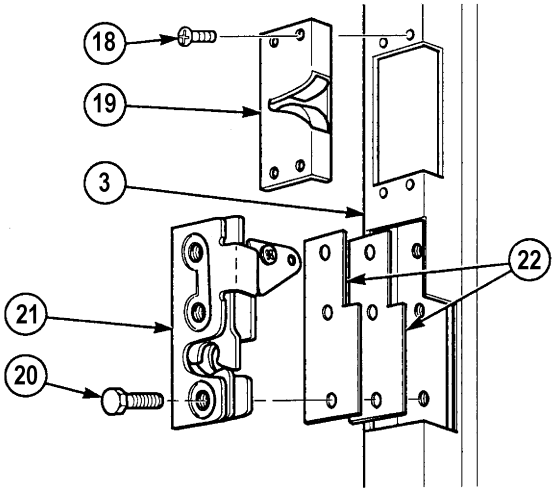

(28) Apply sealing compound on threads of three screws (20).

(29) Position two spacer plates (22) and rotary lock (21) in door assembly (3) with three screws (20).

(30) Tighten three screws (20) to 130 lb-in (15 N·m).

(31) Install dovetail assembly (19) on door assembly (3) with four screws (18).

(32) Tighten four screws (18) to 36 lb-in (4 N·m).

(33) Install outer link rod (13) on rotary lock arm (11) with pin (16) and cotter pin (15).

(34) Install cable assembly (14) on rotary lock arm (11) with pin (16) and cotter pin (15).

(35) Install spring (10) on rotary lock arm (11) and door assembly (3).

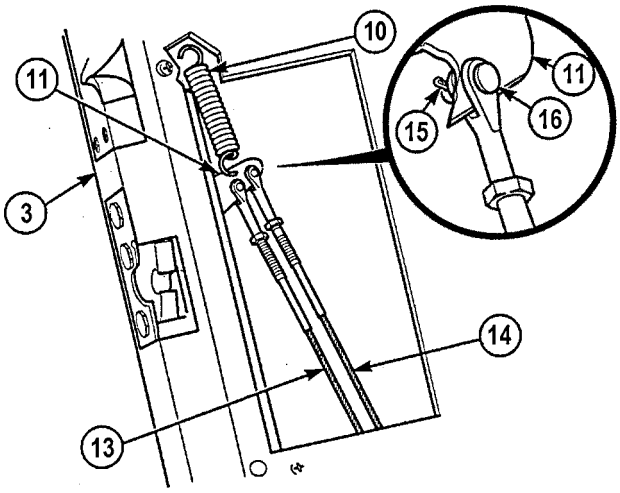

17-9. CAB DOOR REPAIR (CONT).

NOTE

Perform Step (36) if rifle mount plate was removed.

(36) Install rifle mount plate (29) on inner skin assembly (25) with two washers (28), lockwashers (27) and screws (26). Tighten screws to 100 lb-in (11 N·m).

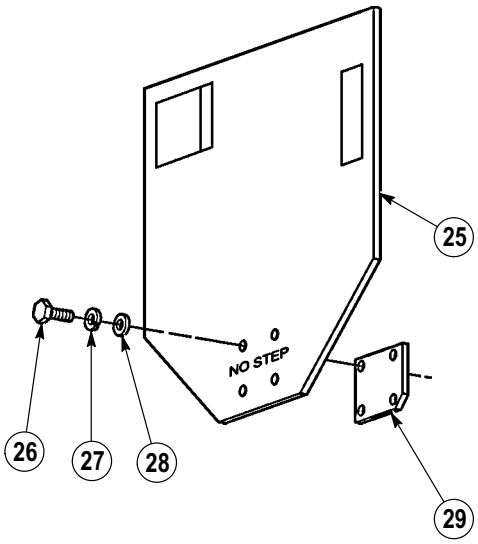

(37) Install inner skin assembly (25) on door assembly (3) with six screws (24) and 14 screws (23).

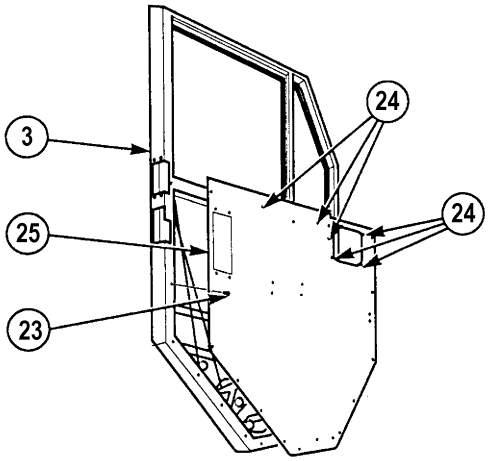

NOTE

Window crank should point down when window is down.

(38) Install spring (9), cover (8) and window crank (7) on door assembly (3) with screw (6).

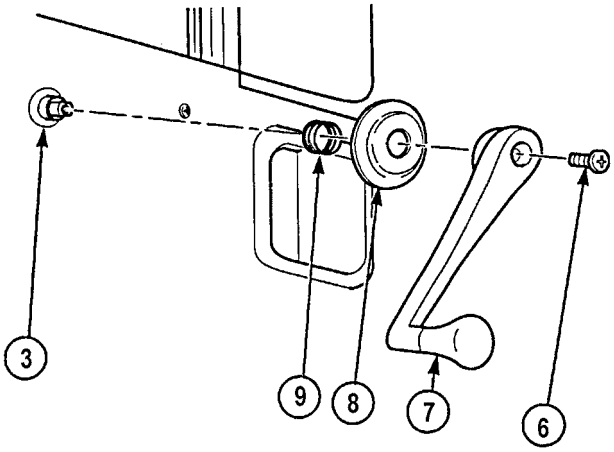

(39) Install cover (2) on door assembly (3) with four screws (1).

(40) Install handle (5) on door assembly (3) with four screws (4).

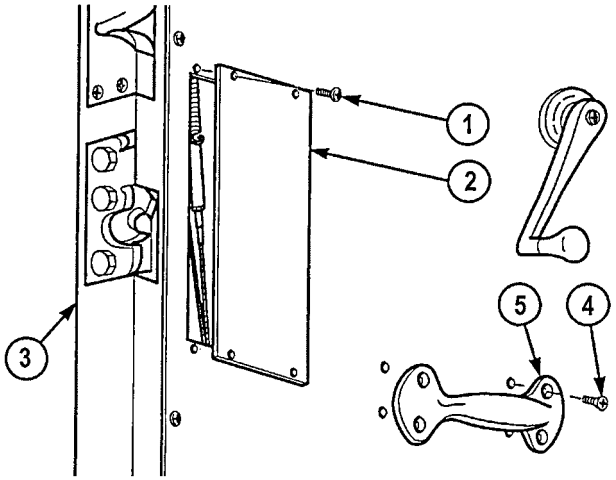

d. Follow-On Maintenance:

- Install cab door, (Para 17-8).
- Install rifle stowage bracket (right side cab door) (Para 17-57).
- Adjust cab door, (Para 17-7).
- Remove wheel chocks, (TM 9-2320-364-20).

END OF TASK

17-10. ENGINE PANEL AND COVER ASSEMBLY REPLACEMENT.

This task covers:

a. Removal b. Installation c. Follow-On Maintenance

INITIAL SETUP

Tools and Special Tools
Tool Kit, General Mechanic's: Automotive (Item 74, Appendix G)

Materials/Parts
Locknut (10) (Item 106, Appendix F)
Locknut (4) (Item 110, Appendix F)
Locknut (2) (Item 140, Appendix F)

Equipment Condition
Engine OFF, (TM 9-2320-364-10)
Wheels chocked, (TM 9-2320-364-10)
Engine cover rubber removed, (Para 17-11)

a. Removal.

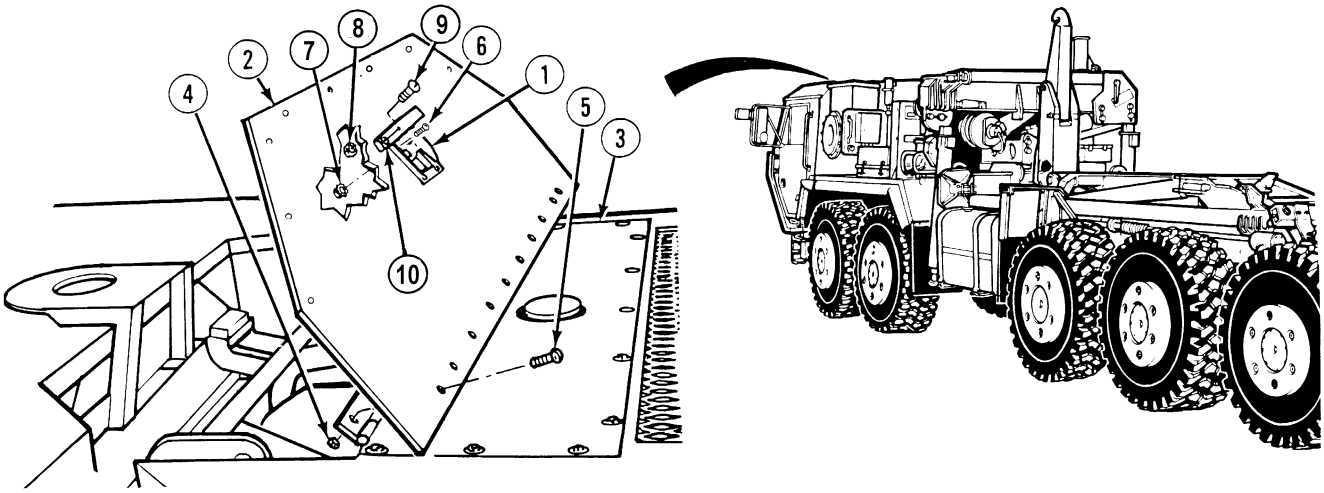

(1) Turn engine cover latch handle (1) and unlock engine cover (2).

(2) Open engine cover (2) on engine panel (3).

(3) Remove ten locknuts (4) and screws (5) from engine cover (2). Discard locknuts.

(4) Remove engine cover (2) from engine panel (3).

(5) Remove four screws (6), locknuts (7) and engine cover latch (1) from engine cover (2). Discard locknuts.

(6) Remove two locknuts (8), screws (9) and grab handle (10) from engine panel (2). Discard locknuts.

(7) Remove 11 screws (11), washers (12) and engine panel (3) from frame (13).

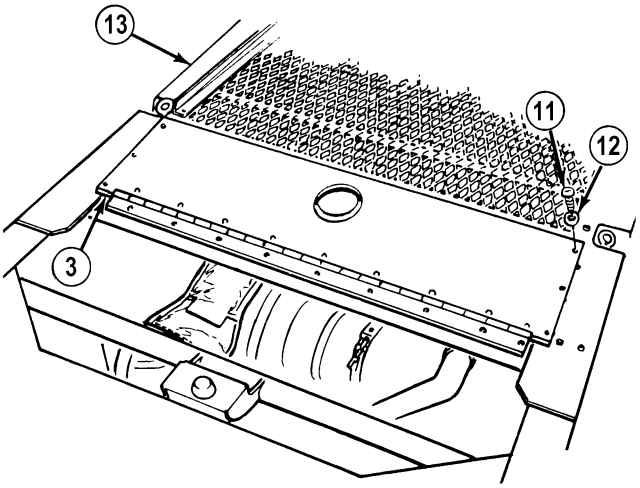

b. Installation.

(1) Install engine panel (3) with 11 screws (11) and washers (12) on frame (13).

(2) Install grab handle (10), two screws (9) and locknuts (8) on engine panel (3).

(3) Install engine cover latch (1), four screws (6) and locknuts (7) on engine cover (2).

(4) Install engine cover (2) on engine panel (3) with ten screws (5) and locknuts (4).

(5) Close engine cover (2) on radiator shroud (3).

(6) Turn engine cover latch handle (1) and lock engine cover (2).

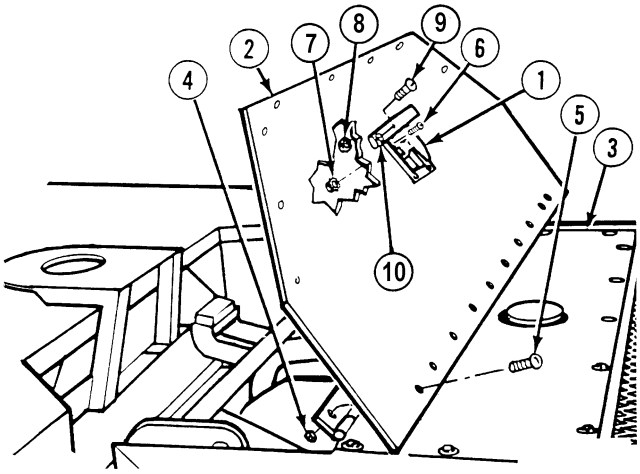

c. Follow-On Maintenance:

- Install engine cover rubber, (Para 17-11).
- Remove wheel chocks, (TM 9-2320-364-10).

END OF TASK

17-11. ENGINE COVER RUBBER REPLACEMENT.

This task covers:

a. Removal b. Installation c. Follow-on Maintenance

INITIAL SETUP

Tools and Special Tools
Tool Kit, General Mechanic's: Automotive (Item 74, Appendix G)

Materials/Parts
Locknut (9) (Item 106, Appendix F)

Equipment Condition
Engine OFF, (TM 9-2320-364-10)
Wheels chocked, (TM 9-2320-364-10)

a. Removal.

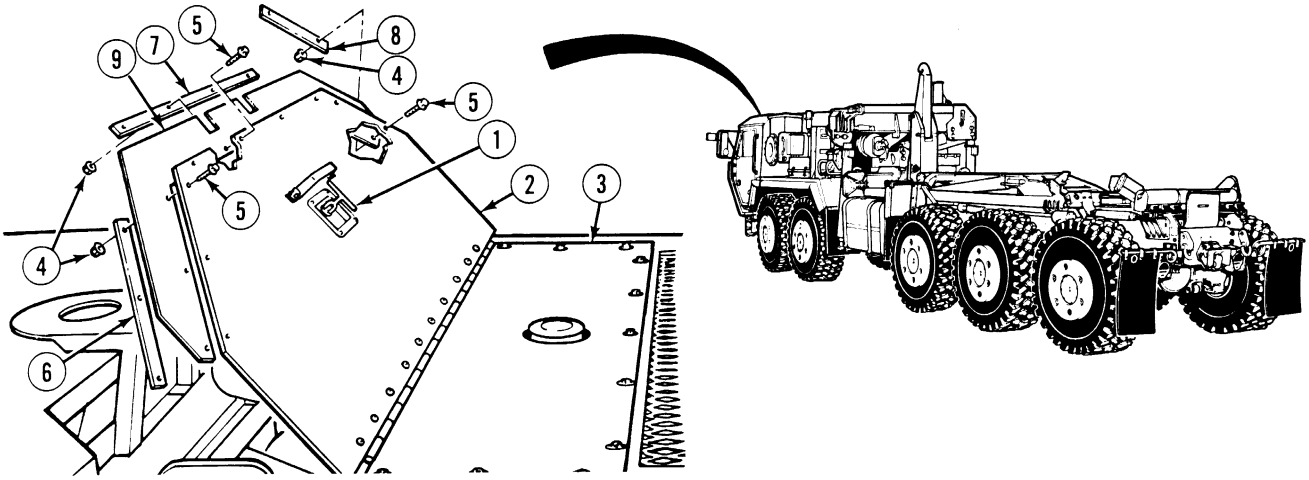

(1) Turn handle (1) and unlock engine cover (2).

(2) Open engine cover (2) on engine panel (3).

(3) Remove nine locknuts (4), screws (5), three retaining strips (6), (7) and (8) and rubber (9) from engine cover (2). Discard locknuts.

b. Installation.

(1) Install rubber (9), three retaining strips (6), (7) and (8), nine screws (5) and locknuts (4) on engine cover (2).

(2) Close engine cover (2).

c. Follow-on Maintenance.

- Remove wheel chocks, (TM 9-2320-364-10).

END OF TASK

17-12. ENGINE COVER LATCH REPLACEMENT.

This task covers:

a. Removal b. Installation c. Follow-On Maintenance

INITIAL SETUP

Tools and Special Tools
Tool Kit, General Mechanic's: Automotive (Item 74, Appendix G)

Materials/Parts
Locknut (4) (Item 110, Appendix F)

Equipment Condition
Engine OFF, (TM 9-2320-364-10)
Wheels chocked, (TM 9-2320-364-10)
Engine Cover Opened, (TM 9-2320-364-10)

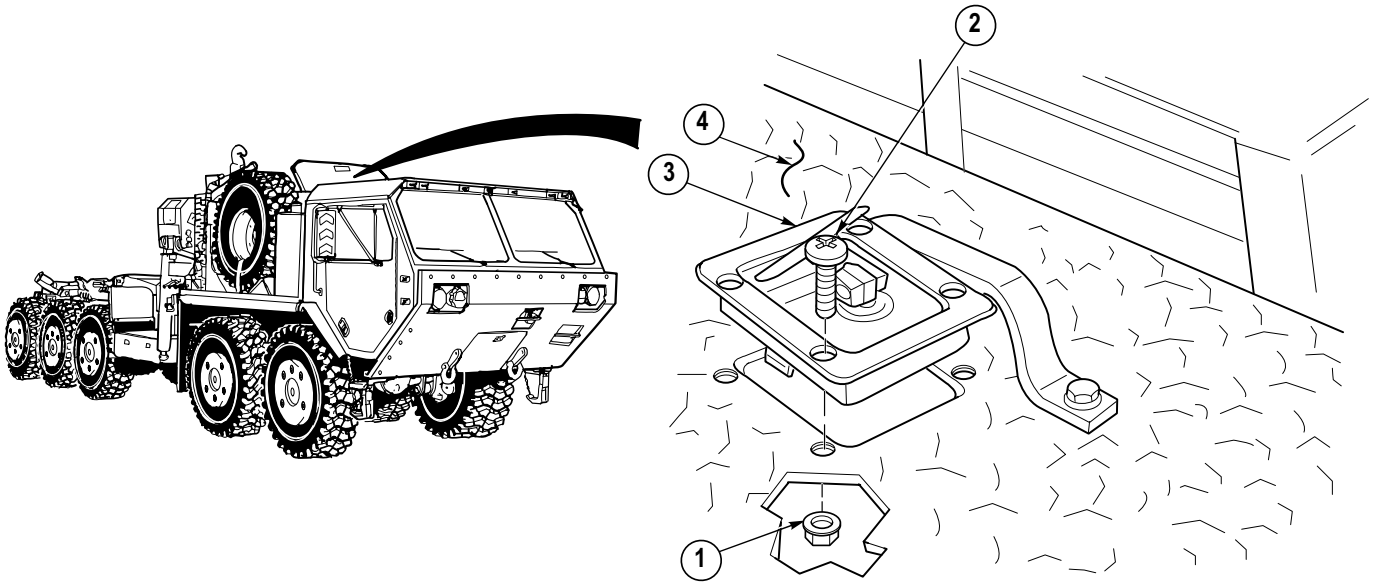

a. Removal. Remove four locknuts (1), screws (2) and engine cover latch (3) from engine cover (4). Discard locknuts.

b. Installation. Install engine cover latch (3) on engine cover (4) with four screws (2) and locknuts (1).

c. Follow-On Maintenance.

- Adjust engine cover latch, (Para 17-60).
- Close engine cover, (TM 9-2320-364-10).
- Remove wheel chocks, (TM 9-2320-364-10).

END OF TASK

17-13. ENGINE COVER GRAB HANDLE REPLACEMENT.

This task covers:

a. Removal b. Installation c. Follow-On Maintenance

INITIAL SETUP

Tools and Special Tools
Tool Kit, General Mechanic's: Automotive
(Item 74, Appendix G)

Materials/Parts
Locknut (2) (Item 140, Appendix F)

Equipment Condition
Engine OFF, (TM 9-2320-364-10)
Wheels chocked, (TM 9-2320-364-10)

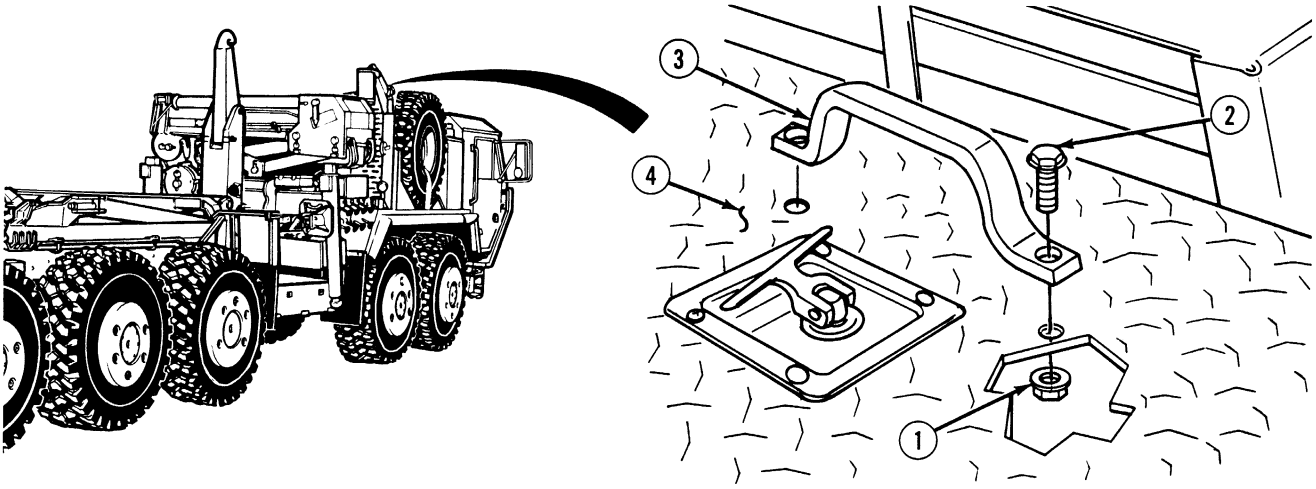

a. Removal. Remove two locknuts (1), screws (2) and grab handle (3) from engine cover (4). Discard locknuts.

b. Installation. Install grab handle (3) on engine cover (4) with two screws (2) and locknuts (1).

c. Follow-On Maintenance:

- Remove wheel chocks, (TM 9-2320-364-10).

END OF TASK

17-14. RADIATOR GRILLE ASSEMBLY REPLACEMENT.

This task covers:

a. Removal b. Installation c. Follow-On Maintenance

INITIAL SETUP

Tools and Special Tools
Tool Kit, General Mechanic's: Automotive (Item 74, Appendix G)
Wrench, Torque (0 to 175 lb-ft [0 to 237 N·m]) (Item 95, Appendix G)

Materials/Parts
Locknut (4) (Item 91, Appendix F)

Personnel Required
Two

Equipment Condition
Engine OFF, (TM 9-2320-364-10)
Wheels chocked, (TM 9-2320-364-10)
Radiator grille skins removed, (Para 17-15)

a. Removal.

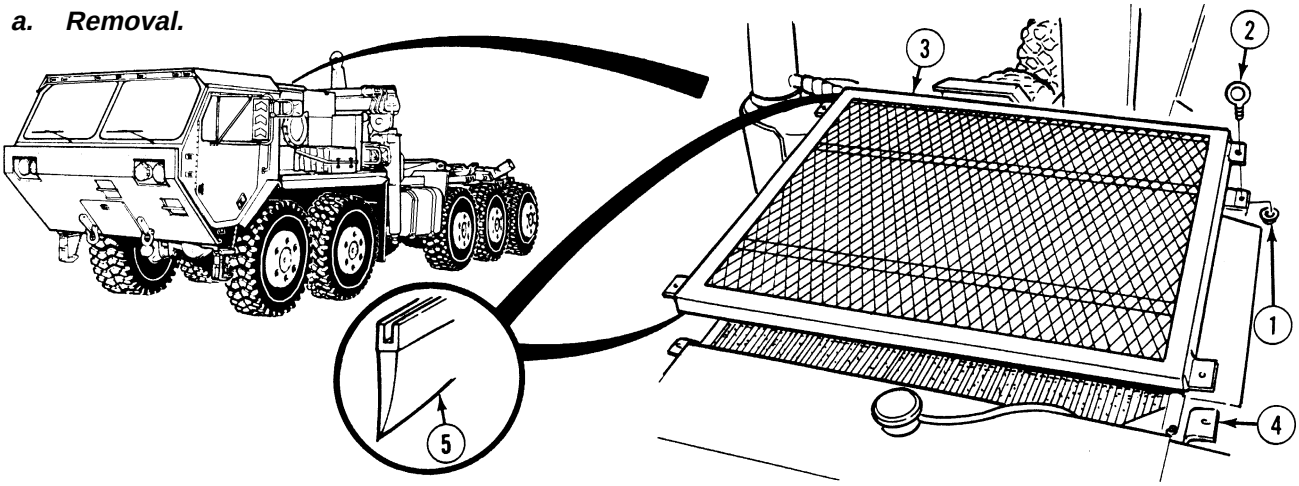

(1) With the aid of an assistant, remove four locknuts (1), eye hooks (2) and grille assembly (3) from frame (4). Discard locknuts.

(2) Remove seal edging (5) from both front and rear edge of grille assembly (3).

b. Installation.

(1) Install seal edging (5) on both front and rear edge of grille assembly (3).

(2) With the aid of an assistant, install grille assembly (3) on frame (4) with four eye hooks (2) and locknuts (1). Tighten locknuts to 55 lb-ft (74 N·m).

c. Follow-On Maintenance:

- Install radiator grille skins, (Para 17-15).
- Remove wheel chocks, (TM 9-2320-264-10).

END OF TASK

17-15. RIGHT, LEFT AND REAR GRILLE SKINS REPLACEMENT.

This task covers:

a. Removal b. Installation c. Follow-On Maintenance

INITIAL SETUP

Tools and Special Tools
Tool Kit, General Mechanic's: Automotive (Item 74, Appendix G)

Materials/Parts
Locknut (Item 98, Appendix F)
Locknut (9) (Item 106, Appendix F)

Equipment Condition
Engine OFF, (TM 9-2320-364-10)
Wheels chocked, (TM 9-2320-364-10)
Spare tire removed, (TM 9-2320-364-10)
Right side noise panel removed, (Para 17-26)
Ether start disconnected, (Para 4-18)
Engine panel and cover assembly removed, (Para 17-10)

a. Removal.

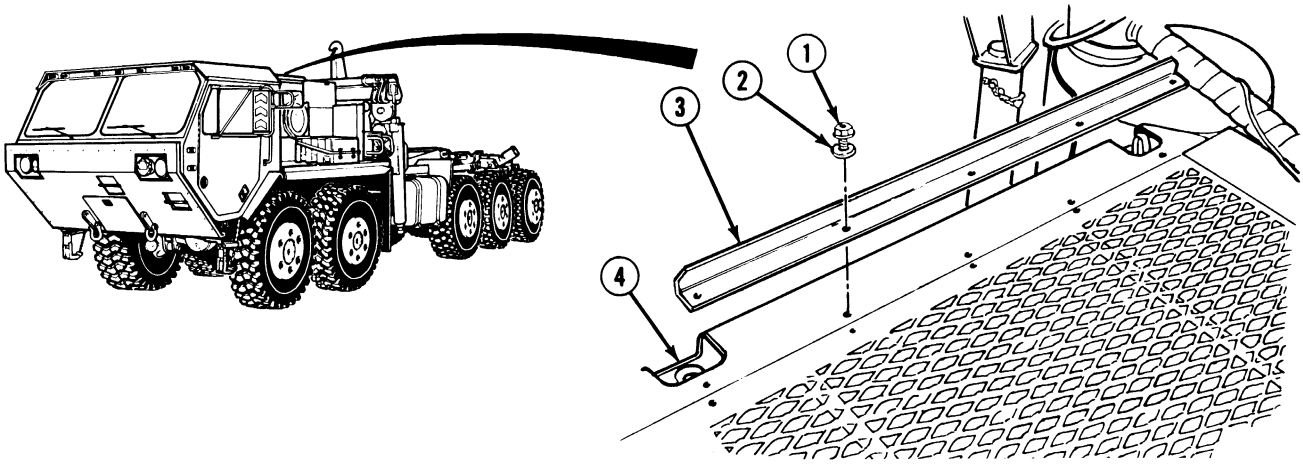

(1) Remove five screws (1), washers (2) and angle (3) from right grille skin panel (4).

(2) Remove locknut (5) and screw (6) from right grille skin panel (4) and bracket (7).

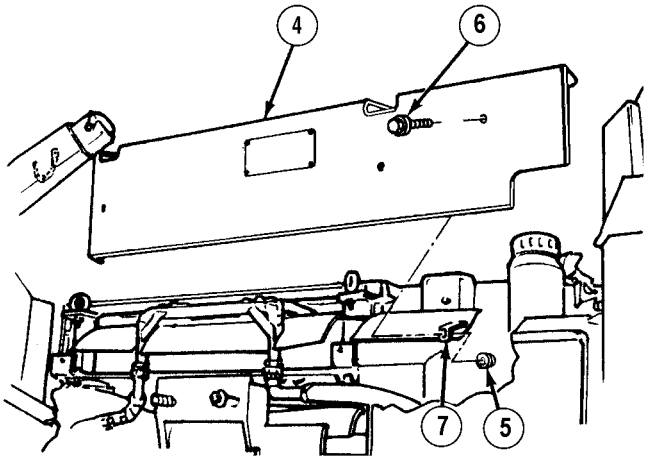

(3) Remove two screws (8), washers (9), right grille skin panel (4) and muffler shield (10) from frame (11).

(4) Remove three locknuts (12), rubber (13), retaining strip (14) and screw (15) from muffler shield (10). Discard locknuts.

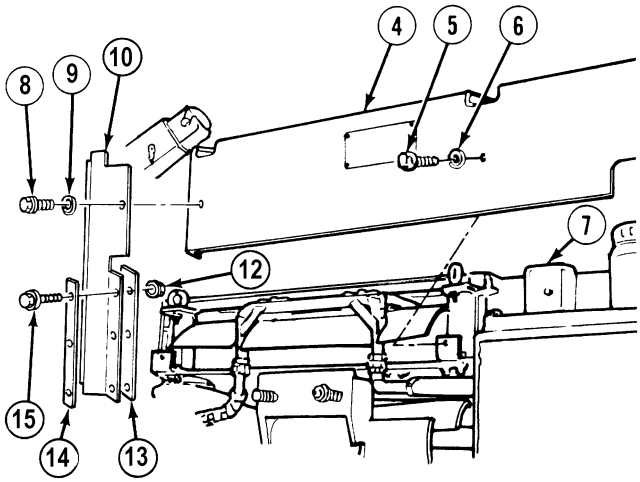

(5) Remove clamp (16) and aspirator hose (17) from exhaust pipe (18).

(6) Remove two screws (19) and washers (20) from rear grille skin (21).

(7) Remove five screws (22), washers (23) and rear grille skin (21) from frame (11).

(8) Remove two locknuts (24), four washers (25), two screws (26) and cooling skirt (27) from rear grille skin (21). Discard locknuts.

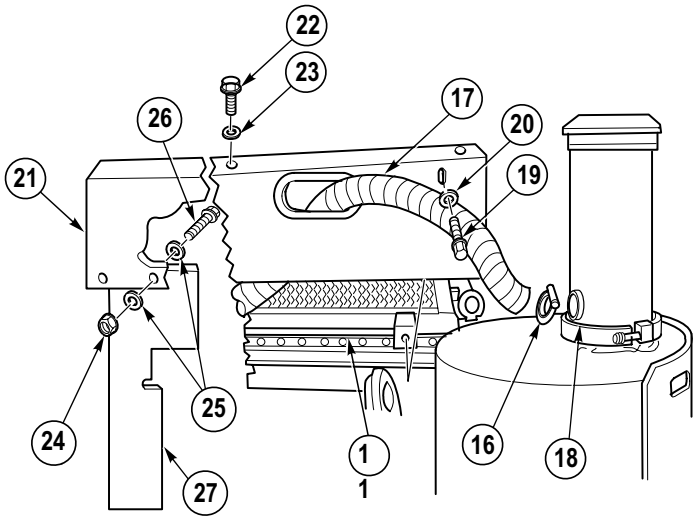

(9) Remove two locknuts (28), four washers (29) and two screws (30) from left side grille skin panel (31) and cooling skirt (32). Discard locknuts.

(10) Remove two screws (33) and washers (34) from left grille skin panel (31).

(11) Remove five screws (35), washers (36) and left side grille skin panel (31) from frame (11).

(12) Remove two locknuts (37), screws (38) and deflector (39) from left grille skin panel (31). Discard locknuts.

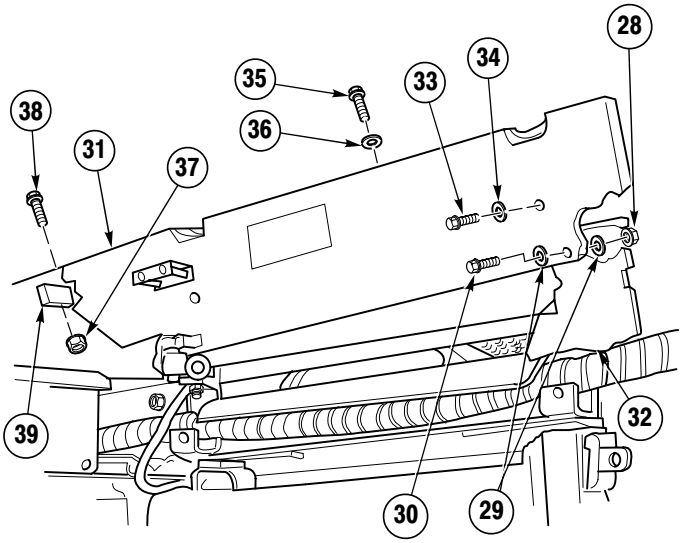

17-15. RIGHT, LEFT AND REAR GRILLE SKINS REPLACEMENT (CONT).

b. Installation.

(1) Install deflector (39) on left grille skin panel (31) with two screws (38) and locknuts (37).

(2) Install left grille skin panel (31) on frame (11) with five washers (36) and screws (35).

(3) Install two washers (34) and screws (33) on left skin panel (31).

(4) Install two screws (30), four washers (29) and two locknuts (28) on left side grille skin panel (31) and cooling skirt (32).

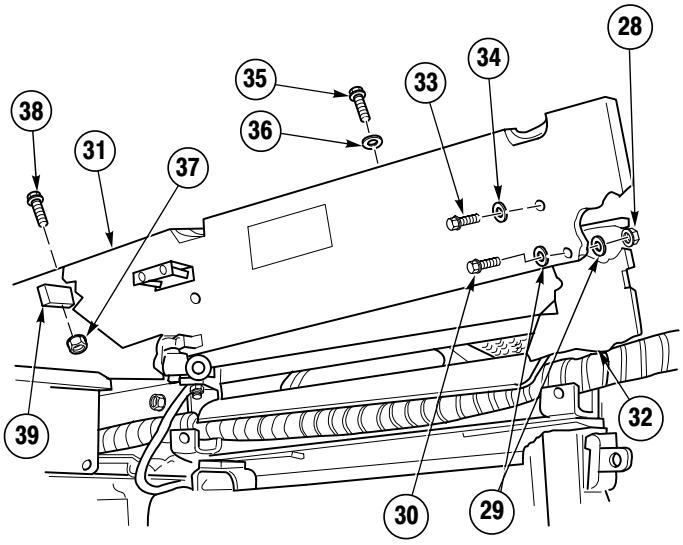

(5) Install cooling skirt (27) with two screws (26), four washers (25) and two locknuts (24) on rear grille skin (21).

(6) Position rear grille skin (21) on frame (11) with five washers (23) and screws (22).

(7) Position two washers (20) and screws (19) on rear grille skin (21).

(8) Install hose clamp (16) and hose (17) on exhaust pipe (18).

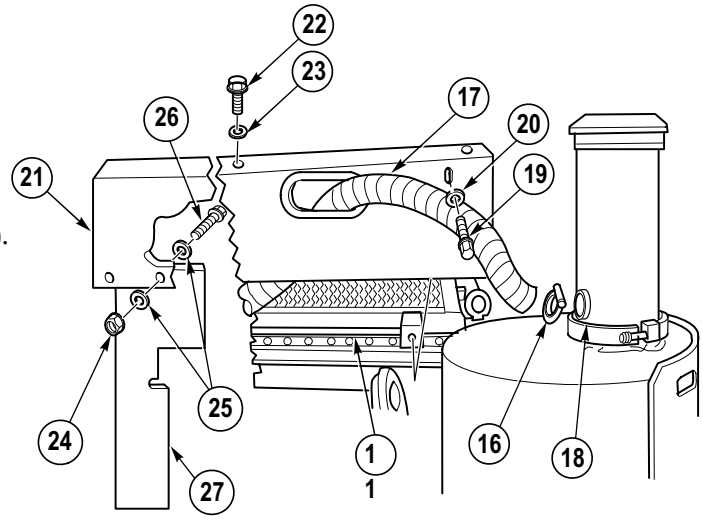

(9) Install rubber (13) and retaining strip (14) with three screws (15) and locknuts (12) on muffler shield (10).

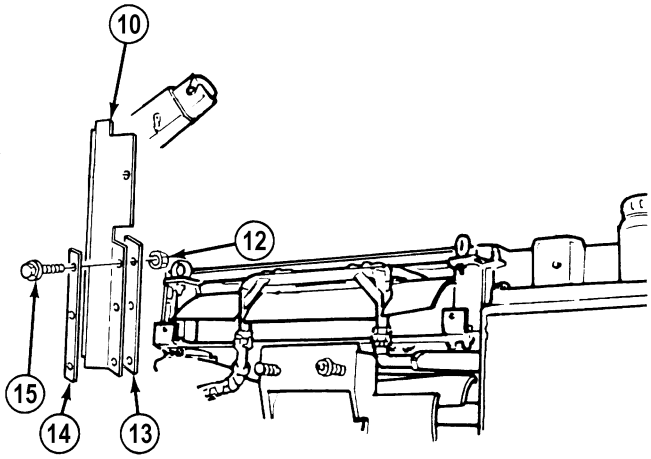

(10) Install right grille skin (4) on frame (11) with two washers (9) and screws (8).

(11) Tighten five screws (22) and two screws (19) on rear grille skin (21).

(12) Install screw (6) and locknut (5) on right grille skin (4) and bracket (7).

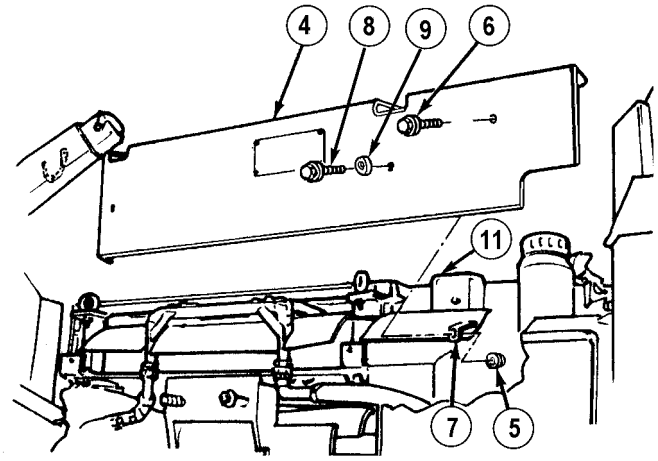

(13) Install angle (3) on right grille skin (4) with five washers (2) and screws (1).

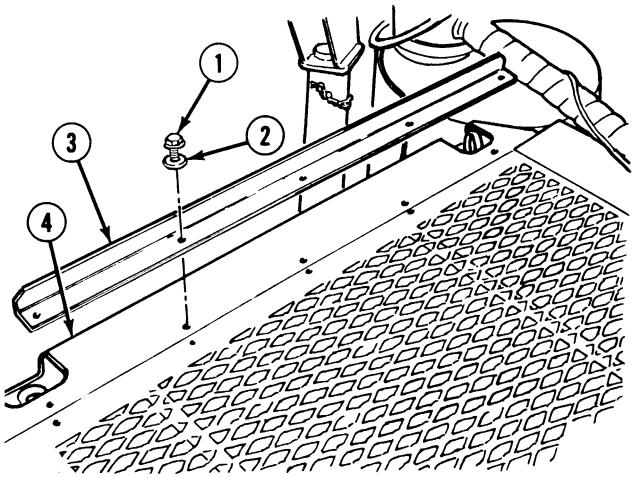

c. Follow-On Maintenance:

- Install engine panel and cover, (Para 17-10).
- Connect ether start, (Para 4-18).
- Install right side noise panel, (Para 17-26).
- Install spare tire, (TM 9-2320-264-10).
- Remove wheel chocks, (TM 9-2320-264-10).

END OF TASK

17-16. AIR CLEANER SKIRT REPLACEMENT.

This task covers:

a. Removal b. Installation c. Follow-On Maintenance

INITIAL SETUP

Tools and Special Tools
Tool Kit, General Mechanic's: Automotive (Item 74, Appendix G)

Materials/Parts
Locknut (6) (Item 133, Appendix F)

Equipment Condition
Engine OFF, (TM 9-2320-364-10)
Wheels chocked, (TM 9-2320-364-10)
Air cleaner assembly removed, (Para 4-4)

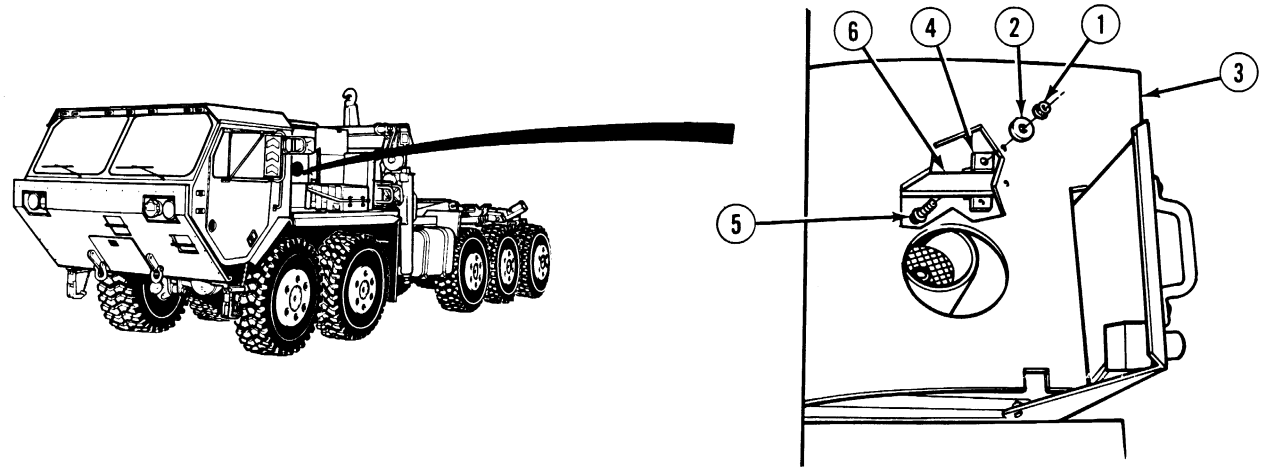

a. Removal. Remove six locknuts (1), washers (2), skirt (3), three brackets (4) and six screws (5) from left side power module frame (6). Discard locknuts.

b. Installation. Install six screws (5), three brackets (4), skirt (3), six washers (2) and locknuts (1) on left side power module frame (6).

c. Follow-On Maintenance:

- Install air cleaner assembly, (Para 4-4).
- Wheel chocks removed, (TM 9-2320-364-10).

END OF TASK

17-17. COOLING SKIRT REPLACEMENT.

This task covers:

a. Removal b. Installation c. Follow-On Maintenance

INITIAL SETUP

Tools and Special Tools
Tool Kit, General Mechanic's: Automotive (Item 74, Appendix G)

Materials/Parts
Locknut (4) (Item 106, Appendix F)
Lockwasher (4) (Item 180, Appendix F)

Equipment Condition
Engine OFF, (TM 9-2320-364-10)
Wheels chocked, (TM 9-2320-364-10)
Left side noise panel removed, (Para 17-28)

a. Removal.

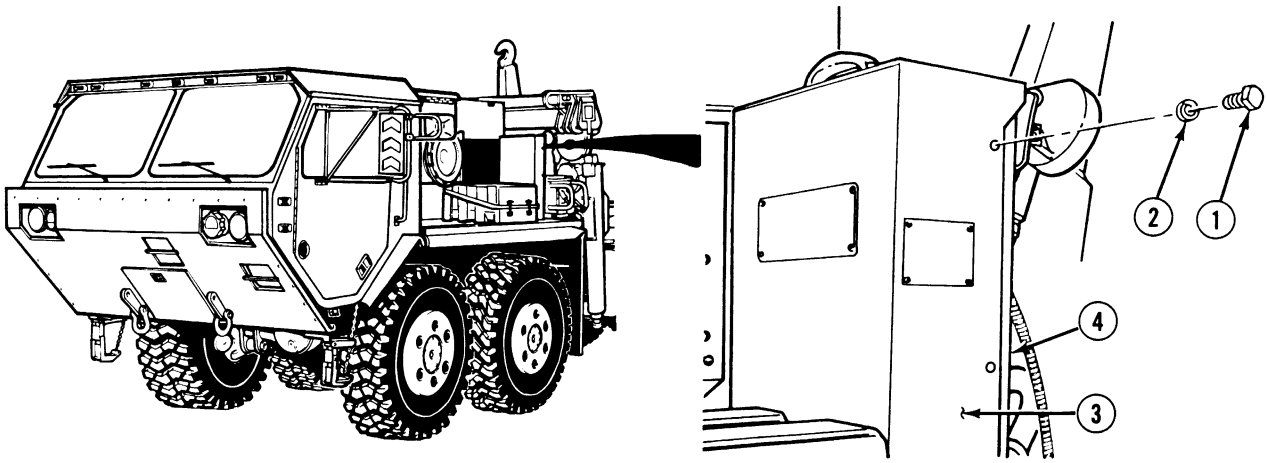

NOTE

Only remove center screw on engine side of LHS control box cover.

(1) Remove four screws (1), lockwashers (2) and cover (3) from mount (4). Discard lockwashers.

17-17. COOLING SKIRT REPLACEMENT (CONT).

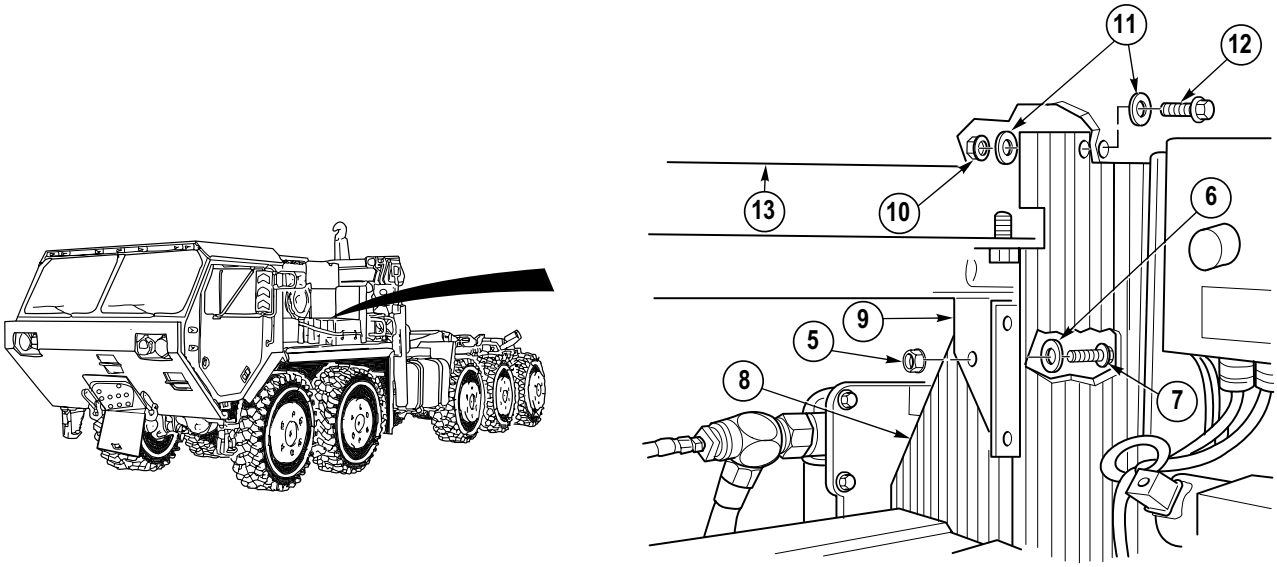

(2) Remove two locknuts (5), washers (6) and screws (7) from cooling skirt (8) and bracket (9). Discard locknuts.

(3) Remove two locknuts (10), four washers (11), cooling skirt (8) and two screws (12) from left side grille skin panel (13). Discard locknuts.

b. Installation.

(1) Install cooling skirt (8) with two screws (12), four washers (11) and two locknuts (10) on left side grille skin panel (13).

(2) Install cooling skirt (8) with two screws (7), washers (6) and locknuts (5) on bracket (9).

(3) Install cover (3) on mount (4) with four lockwashers (2) and screws (1).

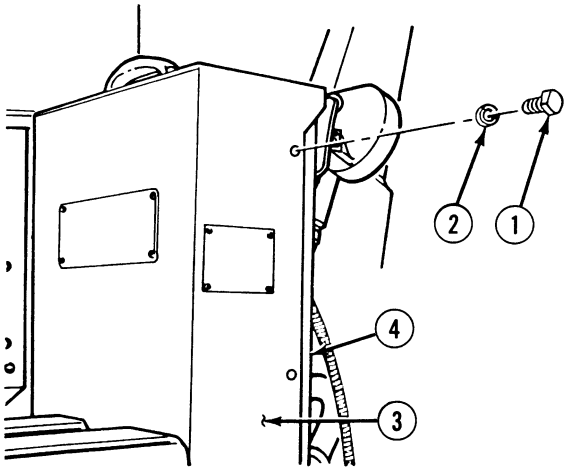

c. Follow-On Maintenance:

- Install left side noise panel, (Para 17-28).
- Wheel chocks removed, (TM 9-2320-364-10).

END OF TASK

17-18. RIGHT HAND BAFFLE REPLACEMENT.

This task covers:

a. Removal b. Installation c. Follow-On Maintenance

INITIAL SETUP

Tools and Special Tools
Tool Kit, General Mechanic's: Automotive (Item 74, Appendix G)

Materials/Parts
Locknut (7) (Item 93, Appendix F)

Equipment Condition
Engine OFF, (TM 9-2320-364-10)
Wheels chocked, (TM 9-2320-364-10)
Main hydraulic reservoir removed, (Para 20-12)

a. Removal.

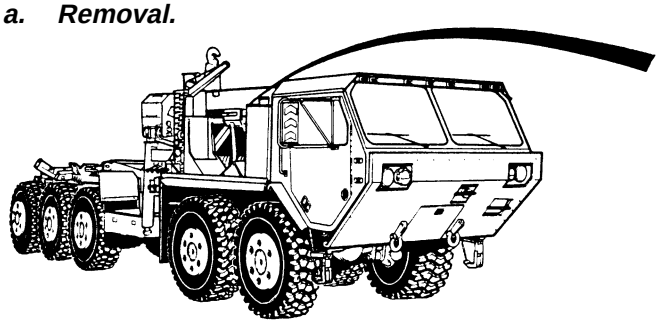

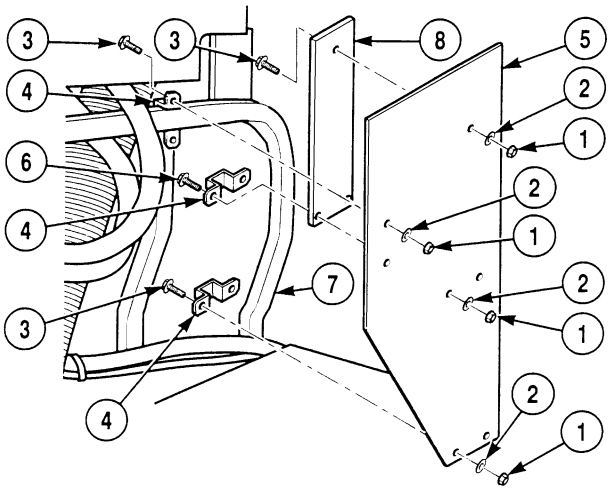

(1) Remove four locknuts (1) washers (2), screws (3) and two brackets (4) from right hand baffle (5).

(2) Remove two locknuts (1), screws (6), bracket (4) and right hand baffle (5) from right side power module frame (7).

(3) Remove locknut (1), washer (2), plate (8) and screw (3) from right hand baffle (5).

b. Installation.

(1) Position plate (8) on right hand baffle (5) with screw (3), washer (2) and locknut (1).

(2) Position right hand baffle (5) on right side power module frame (7) with bracket (4), two screws (6), washers (2) and locknuts (1).

(3) Position two brackets (4) on right side power module frame (7) and right hand baffle (5) with four screws (3), washers (2) and locknuts (1).

(4) Tighten seven locknuts (1).

c. Follow-on Maintenance:

- Install main hydraulic reservoir, (Para 20-12).
- Remove wheel chocks, (TM 9-2320-364-10).

END OF TASK

17-19. CAB INSULATION REPLACEMENT.

This task covers:

a. Removal
b. Installation
c. Locations of Insulation Panels
d. Specifications of Insulation Panels
e. Follow-On Maintenance

INITIAL SETUP

Tools and Special Tools
Tool Kit, General Mechanic's: Automotive (Item 74, Appendix G)

Materials/Parts
Adhesive (Item 3, Appendix C)
Adhesive, Insulation (Item 12, Appendix C)
Insulation, Cab (Item 52, Appendix C)
Tape, Adhesive (Item 90, Appendix C)

Equipment Condition
Engine OFF, (TM 9-2320-364-10)
Wheels chocked, (TM 9-2320-364-10)

Equipment Condition - Continued
Beacon bracket removed, (Para 19-9)
Cab dome light removed, (Para 7-49)
Seats removed, (Para 17-40)
Cargo net removed, (Para 17-43)
Seat belts removed, (Para 17-44)
Gas particulate filter unit (If equipped), (Para 24-2)
Decontamination bracket removed (If equipped), (Para 24-3)

a. Removal.

NOTE

Perform Step (1) if insulation is held in place with retaining strips. If not, start with Step (2).

(1) Remove eight screws (1) and four retaining strips (2) from insulation (3) and cab shell (4).

NOTE

Insulation for floor is under cab shell.

(2) Remove insulation (3) from cab shell (4).

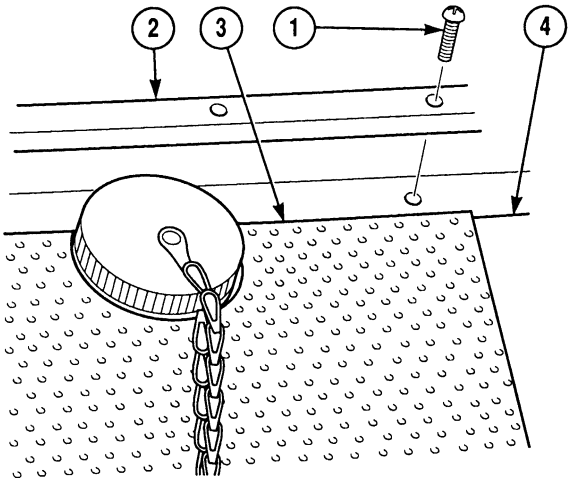

b. Installation.

NOTE

- Ensure that insulation panels meet specifications of drawings in Step ***d.***
- Ensure that insulation panel fits section of cab shell to be covered.
- If insulation panel has finished and rolled edges, perform Step (1). If not, start with Step (2).

(1) Apply double-sided adhesive tape on back of insulation panel along finished, rolled edge.

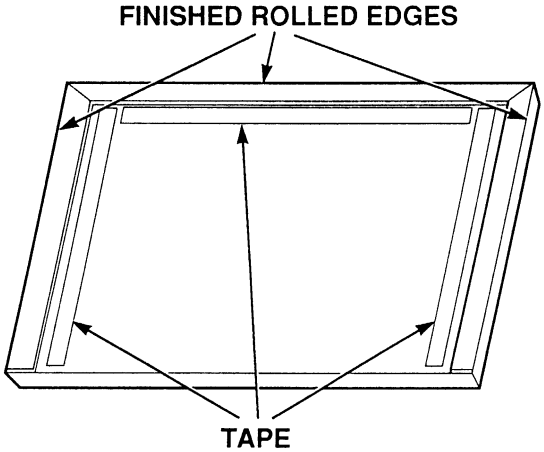

WARNING

Adhesives, solvents, and sealing compounds can burn easily, can give off harmful vapors, and are harmful to skin and clothing. To avoid injury or death, keep away from open fire and use in well-ventilated area. If adhesive, solvent, or sealing compound gets on skin or clothing, wash immediately with soap and water.

CAUTION

- Use insulation adhesive on all panels that are installed inside cab. Use adhesive on panels that are installed under floor. Using wrong adhesive will cause premature failure.
- Ensure that cab shell is free of old adhesive, insulation, dirt, and grease. Dirty surface will cause premature failure.

NOTE

- Ensure that adhesive is applied to side of insulation panel that contacts cab shell.
- Ensure that floor insulation is installed under cab shell.

(2) Coat insulation panel (3) with adhesive.

(3) Position insulation panel (3) on cab shell (4).

(4) Press insulation panel (3) uniformly over entire surface.

NOTE

If original insulation panel had retaining strip, perform Step (5). If not, go to ***e. Follow-On Maintenance***.

(5) Install four retaining strips (2) on insulation panel (3) and secure with eight screws (1) into cab shell (4).

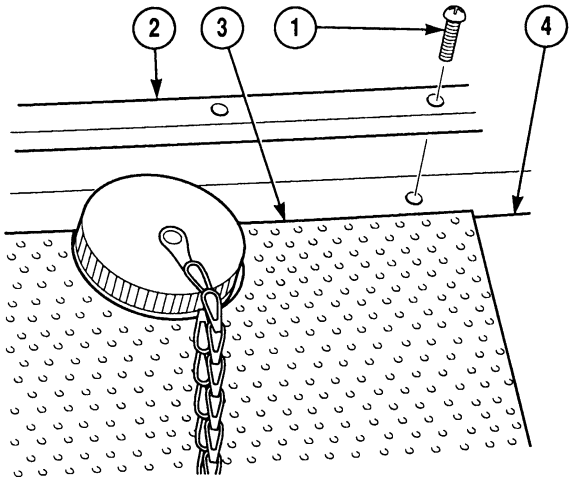

17-19. CAB INSULATION REPLACEMENT (CONT).

c. Location of Insulation Panels.

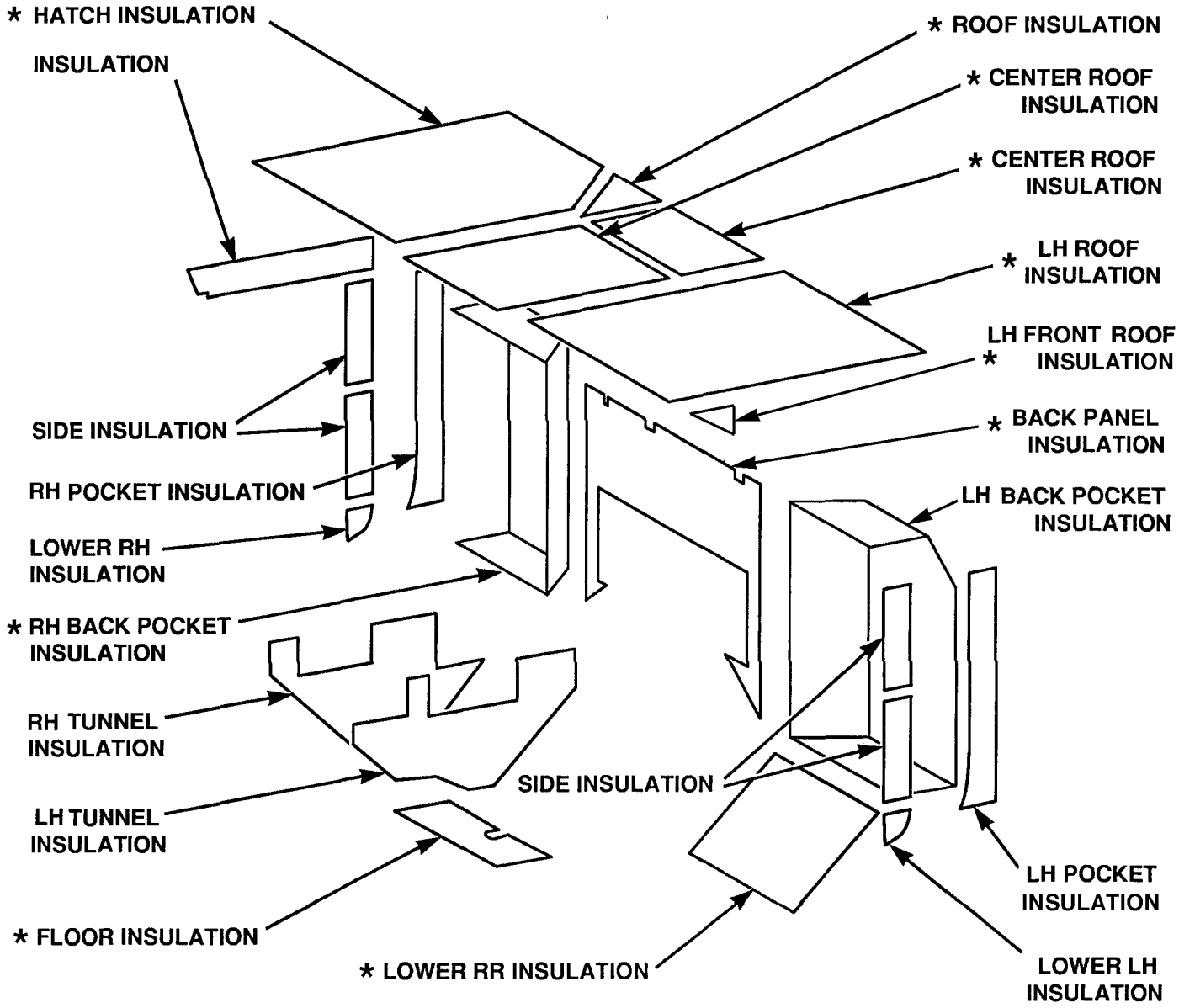

* = MAKE FROM BULK .

d. Specifications of Insulation Panels.

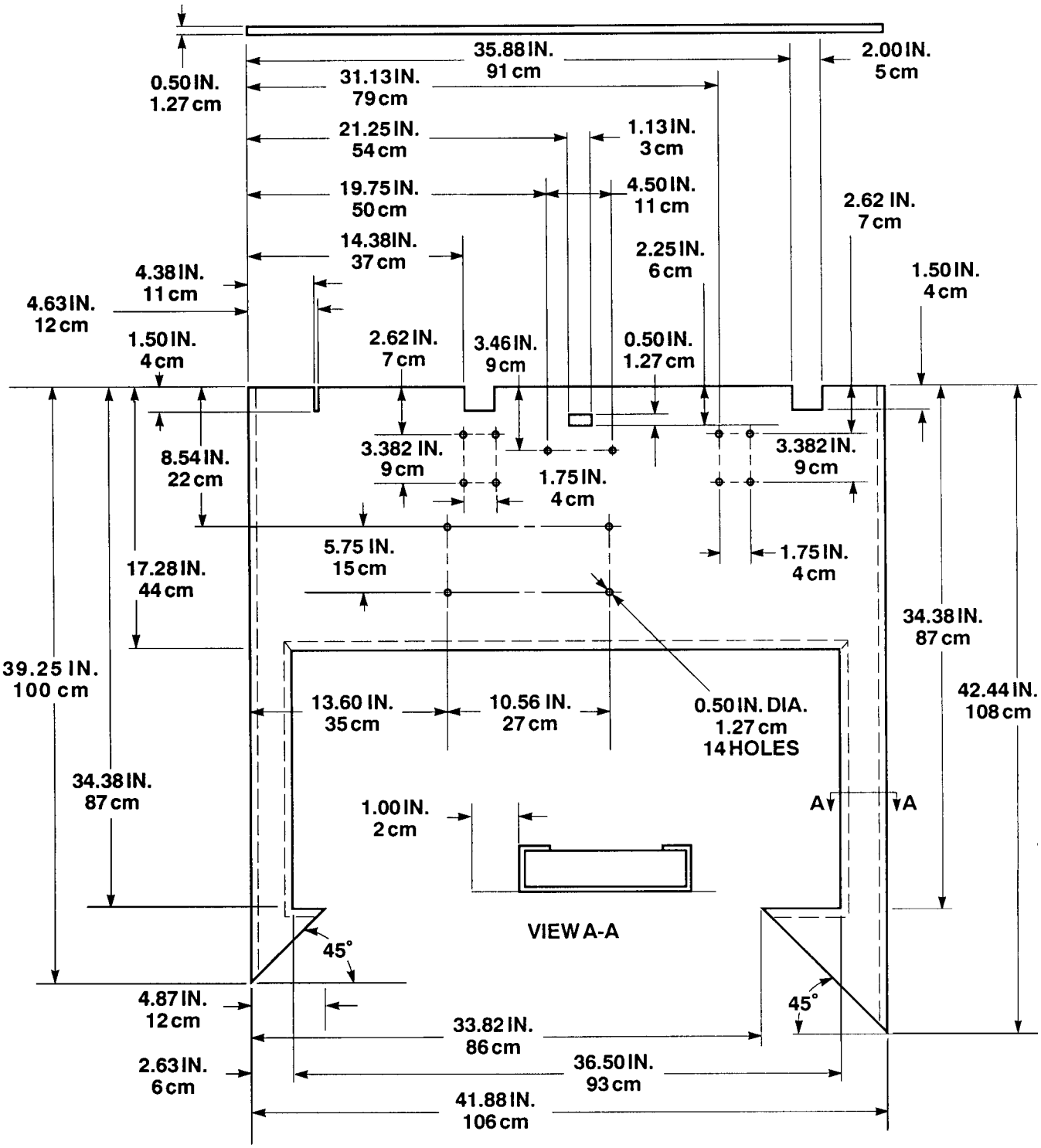

BACK PANEL INSULATION

17-19. CAB INSULATION REPLACEMENT (CONT).

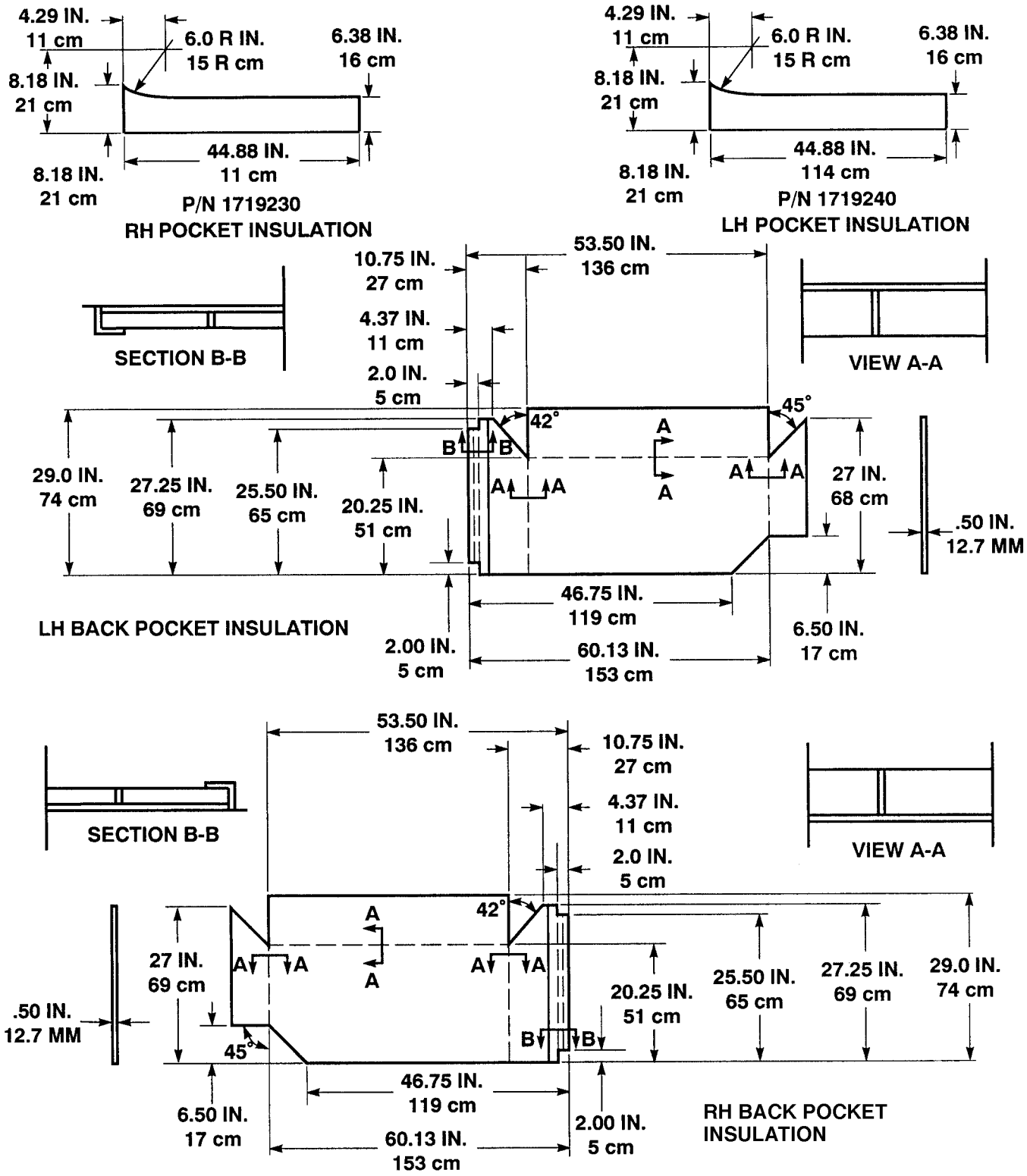

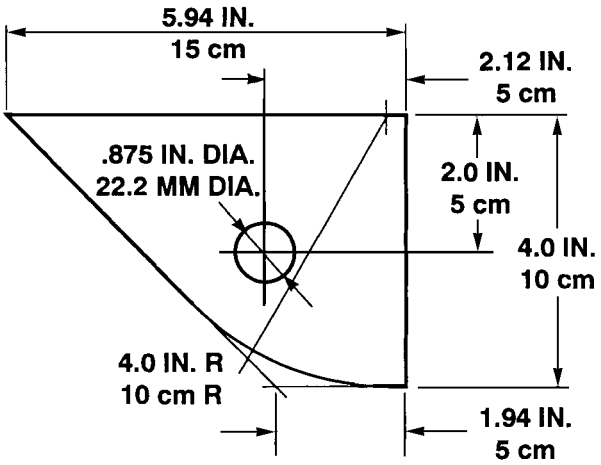

LOWER RH INSULATION

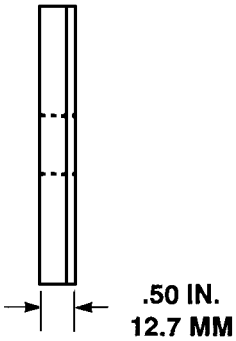

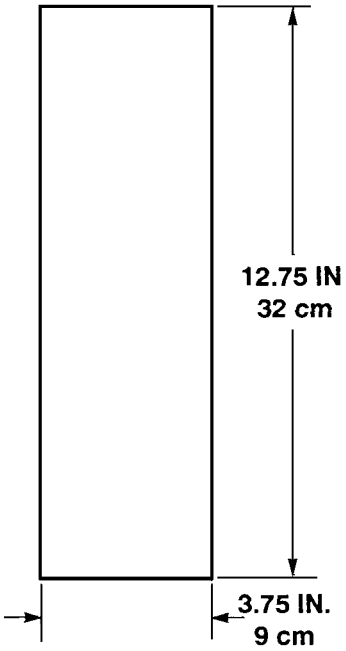

SIDE INSULATION

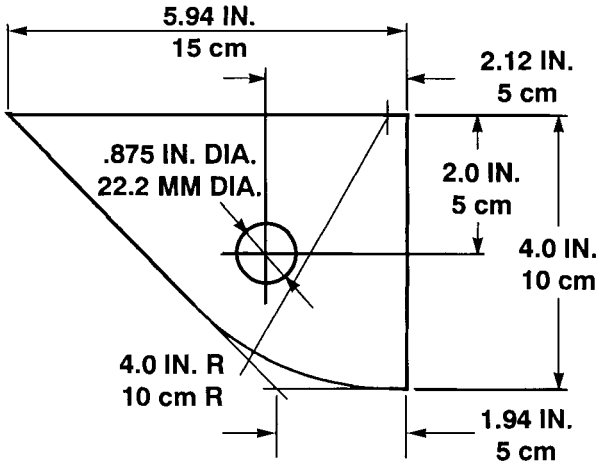

LOWER LH INSULATION

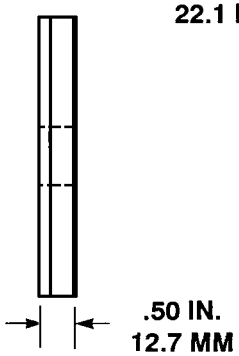

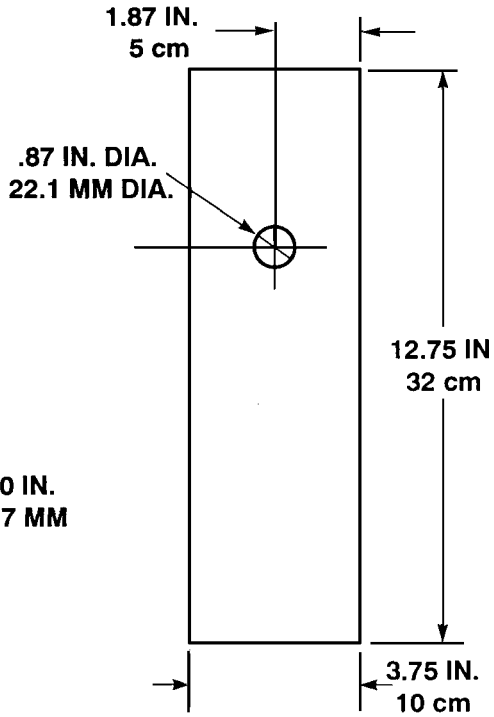

SIDE INSULATION

17-19. CAB INSULATION REPLACEMENT (CONT).

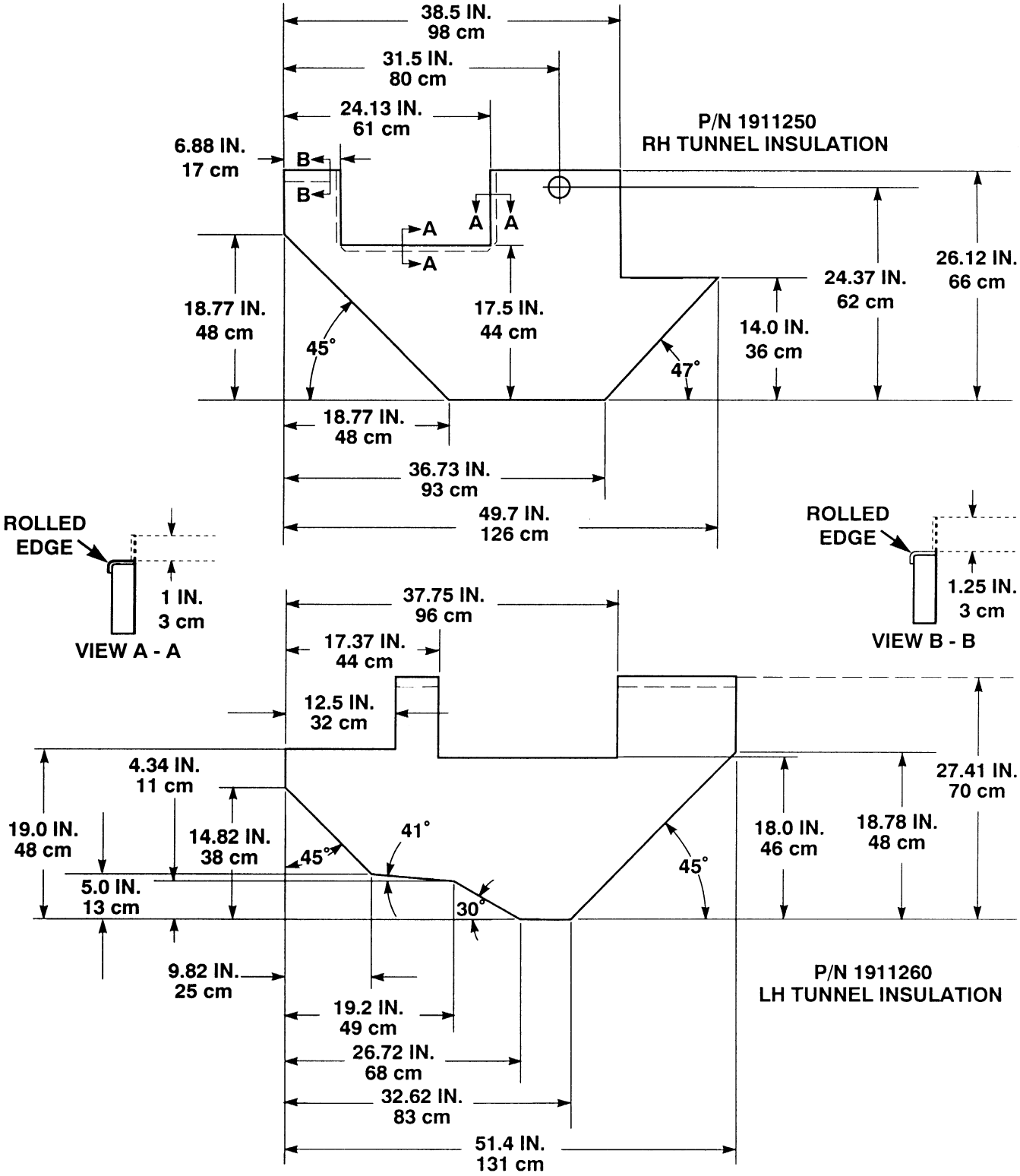

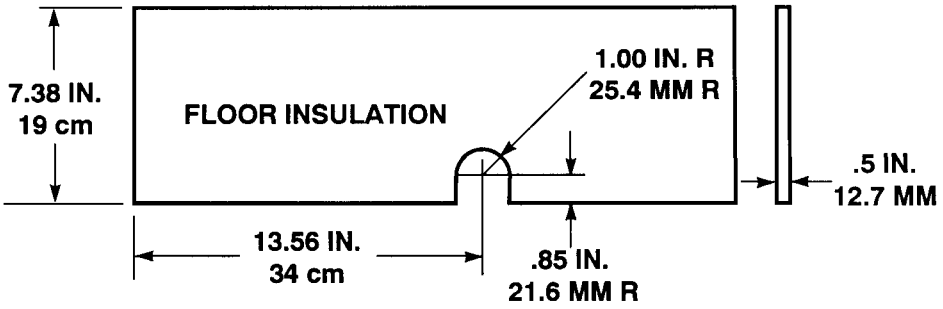
7.38 IN.
19 cm
FLOOR INSULATION
1.00 IN. R
25.4 MM R
.5 IN.
12.7 MM
13.56 IN.
34 cm
.85 IN.
21.6 MM R

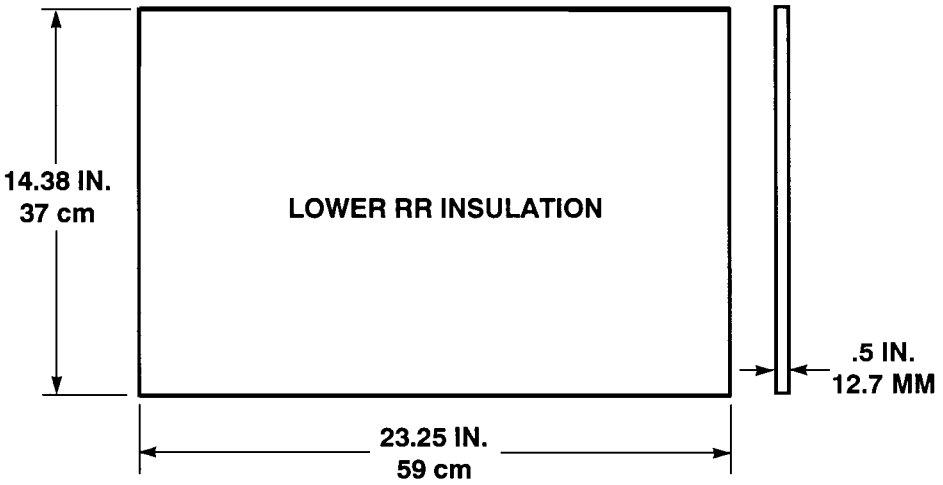
14.38 IN.
37 cm
LOWER RR INSULATION
.5 IN.
12.7 MM
23.25 IN.
59 cm

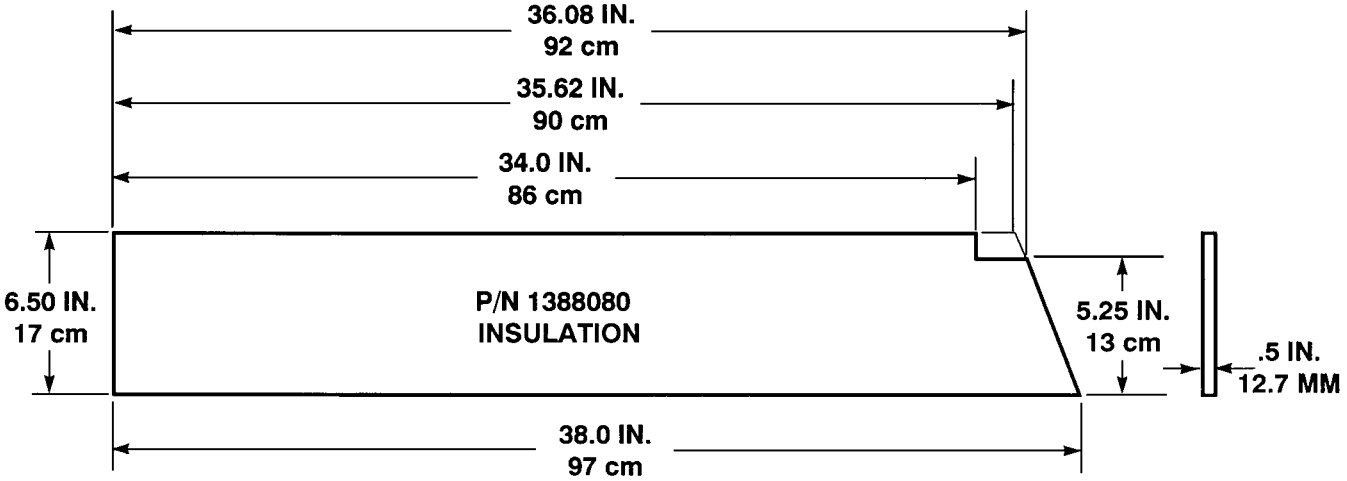
36.08 IN.
92 cm
35.62 IN.
90 cm
34.0 IN.
86 cm
6.50 IN.
17 cm
P/N 1388080
INSULATION
5.25 IN.
13 cm
.5 IN.
12.7 MM
38.0 IN.
97 cm

17-19. CAB INSULATION REPLACEMENT (CONT).

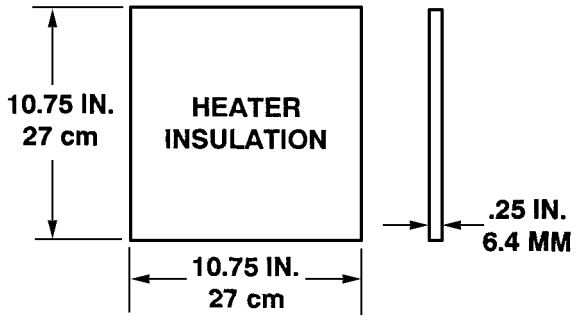

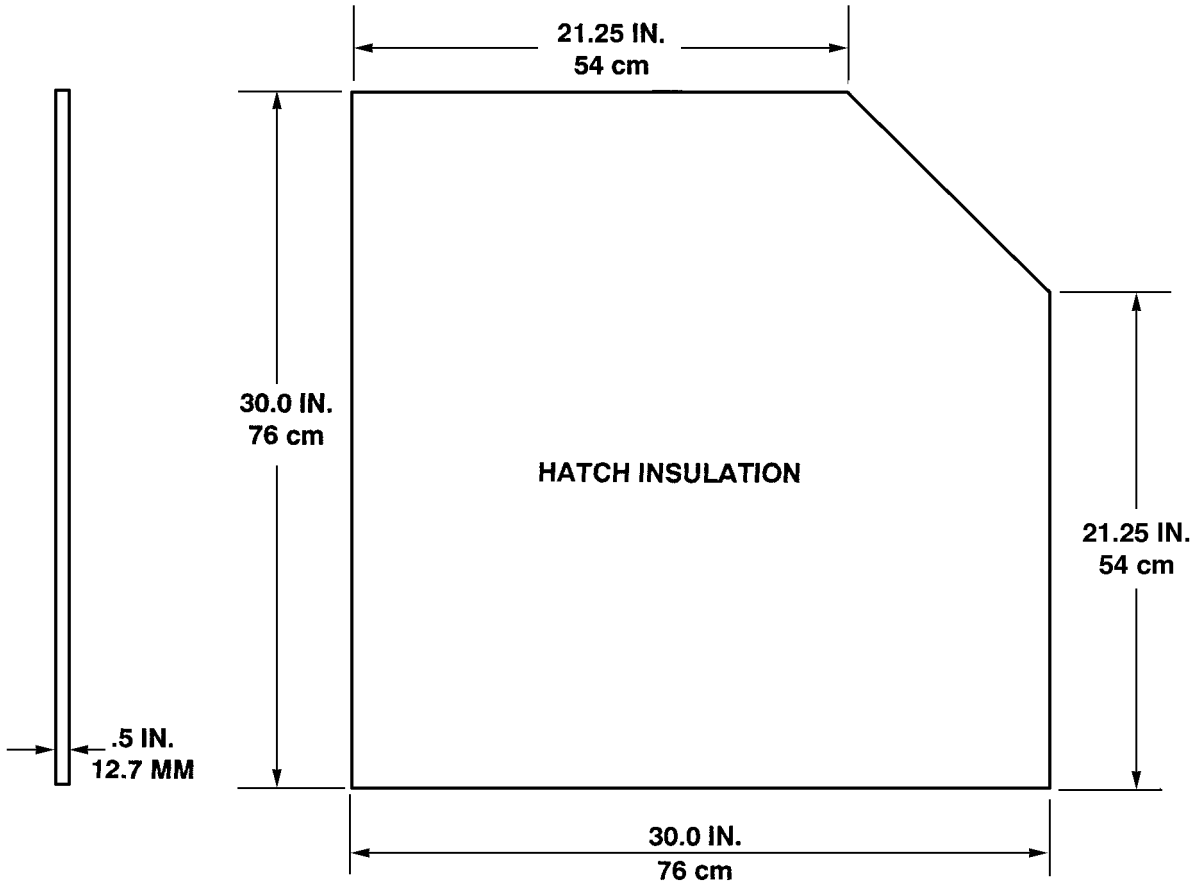

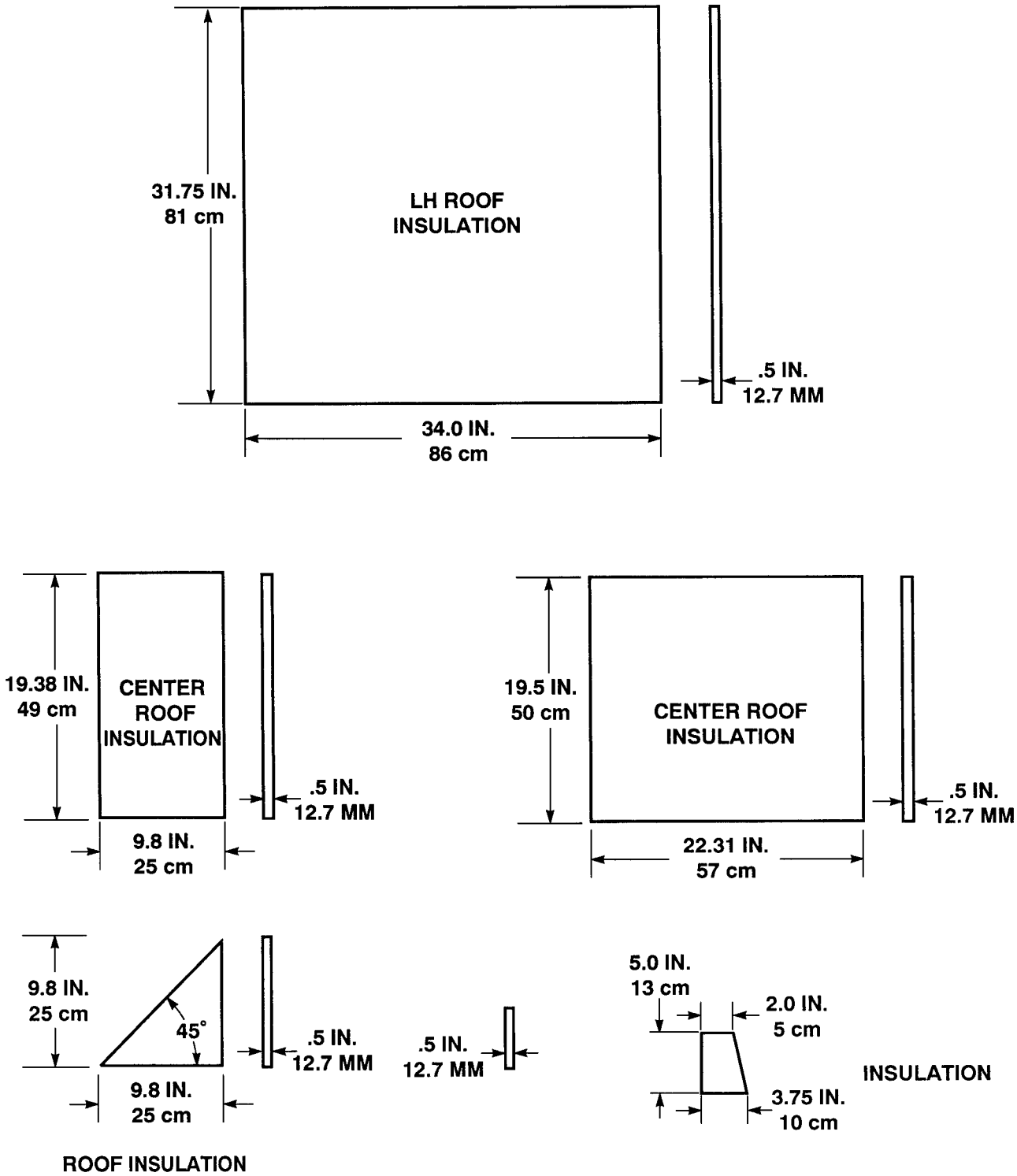
31.75 IN.
81 cm
LH ROOF
INSULATION
.5 IN.
12.7 MM
34.0 IN.
86 cm
19.38 IN.
49 cm
CENTER
ROOF
INSULATION
.5 IN.
12.7 MM
9.8 IN.
25 cm
19.5 IN.
50 cm
CENTER ROOF
INSULATION
.5 IN.
12.7 MM
22.31 IN.
57 cm
9.8 IN.
25 cm
45°
.5 IN.
12.7 MM
9.8 IN.
25 cm
ROOF INSULATION
.5 IN.
12.7 MM
5.0 IN.
13 cm
2.0 IN.
5 cm
3.75 IN.
10 cm
INSULATION

17-19. CAB INSULATION REPLACEMENT (CONT).

e. Follow-On Maintenance:

- Install decontamination bracket, (Para 24-3).
- Install gas particulate filter unit, (Para 24-2).
- Install seat belts, (Para 17-44).
- Install cargo net, (Para 17-43).
- Install seats, (Para 17-40).
- Install cab dome light, (Para 7-49).
- Install beacon bracket, (Para 19-9).
- Remove wheel chocks, (TM 9-2320-364-10).

END OF TASK

17-20. ELECTRONIC CONTROL BOX (ECB) SIDE PANEL REPLACEMENT.

This task covers:

a. Removal b. Installation c. Follow-On Maintenance

INITIAL SETUP

Tools and Special Tools
Tool Kit, General Mechanic's: Automotive (Item 74, Appendix G)
Drill (Item 17, Appendix G)
Drill Set, Twist (Item 19, Appendix G)
Tool Kit, Blind Rivet (Item 72, Appendix G)

Materials/Parts
Locknut (Item 94, Appendix F)
Lockwasher (Item 195, Appendix F)
Screw (10) (Item 294, Appendix F)

Equipment Condition
Engine OFF, (TM 9-2320-364-10)
Wheels chocked, (TM 9-2320-364-10)
Batteries disconnected, (Para 7-87)

a. Removal.

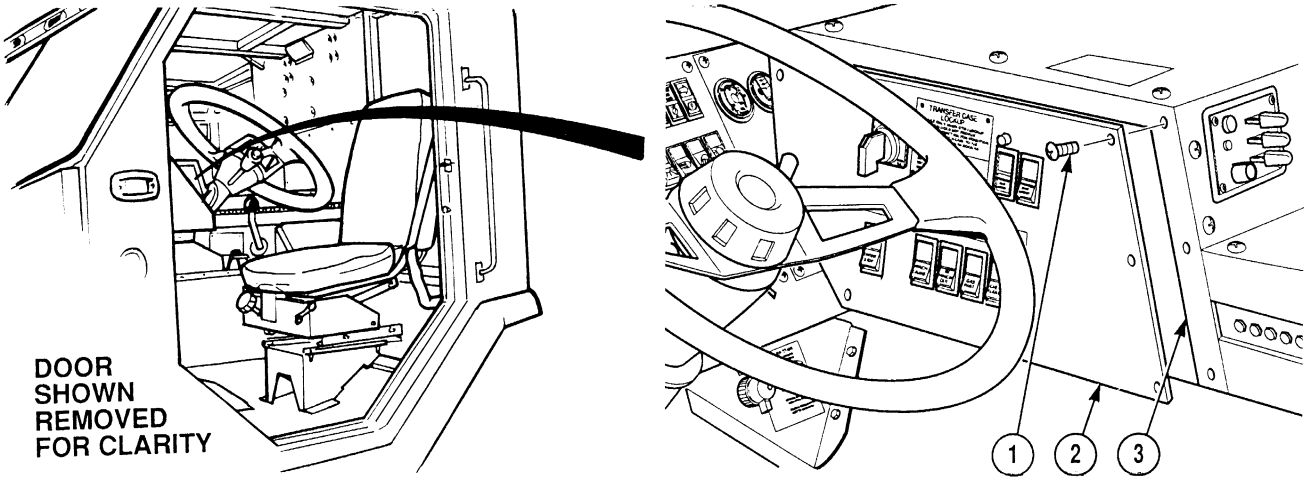

(1) Remove six screws (1) from side panel (2) and pull side panel away from control panel (3).

17-20. ELECTRONIC CONTROL BOX (ECB) SIDE PANEL REPLACEMENT (CONT).

NOTE

Perform Steps (2) and (3) if equipped with LHS Controller Protection Kit.

(2) Disconnect wires 1755 (4) and 1755A (5) from fuse holder (6).

(3) Disconnect relay connector (7) from relay (8).

NOTE

Connectors are removed by gently prying up on tab and pulling connectors apart.

(4) Disconnect MC93 connector (9).

(5) Disconnect MC94 connector (10).

(6) Remove screw (11), lockwasher (12) and wire 1052 (13) from panel light (14). Discard lockwasher.

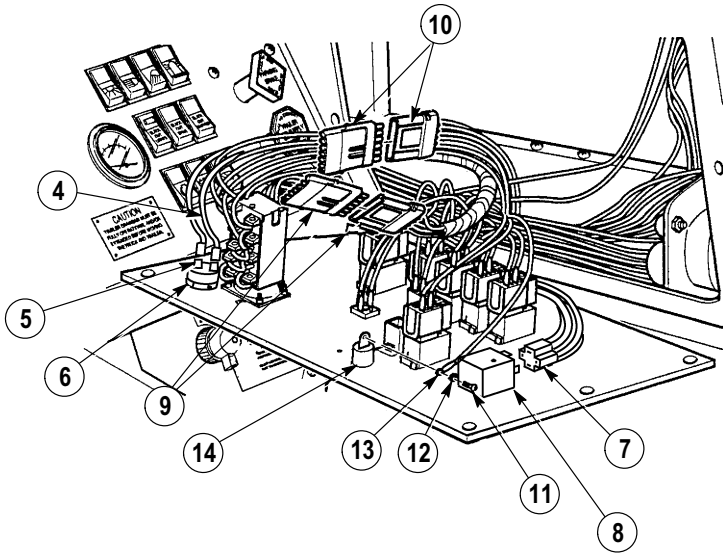

(7) Disconnect S22 connector (15) from transfer case lockout rocker switch (16).

(8) Disconnect L35 connector (17) from pilot light housing (18).

(9) Remove screw (19), nut (20) and rectifier (21) from side panel (2).

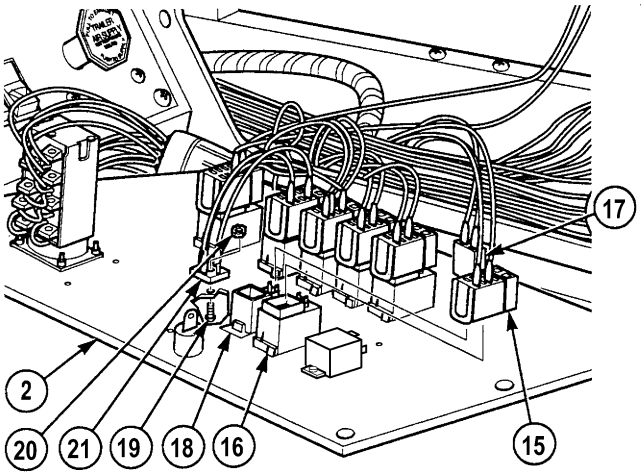

NOTE

Perform Step (10) only if truck is equipped with chemical alarm kit. If truck is not equipped with chemical alarm kit, go to Step (11).

(10) Disconnect C4 connector (22) and S20 connector (23) from chemical alarm rocker switch (24).

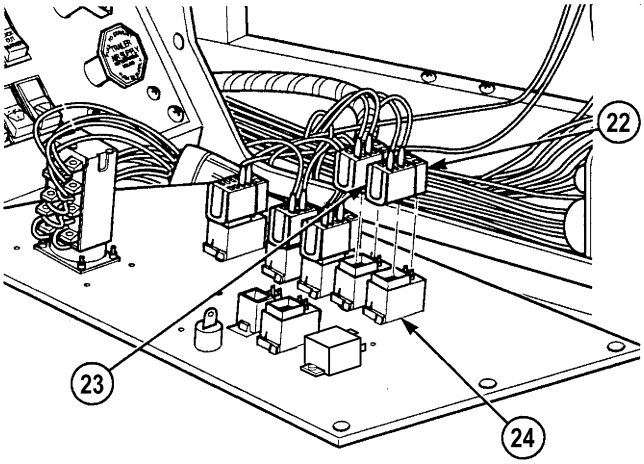

NOTE

Perform Step (11) only if truck is equipped with gas particulate kit. If truck is not equipped with gas particulate kit, go to Step (12).

(11) Disconnect C3 connector (25) and S19 connector (26) from gas particulate filter rocker switch (27).

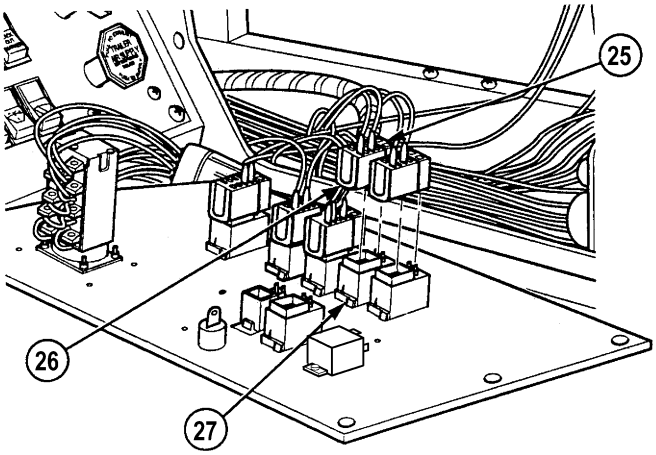

(12) Disconnect C2 connector (28) and S10 connector (29) from winch in/out rocker switch (30).

(13) Disconnect C1 connector (31) and S4 connector (32) from winch/crane rocker switch (33).

(14) Disconnect 439 wire (34) and wire 1052 (35) from engine stop rocker switch (36).

(15) Remove side panel (2) from truck and position on clean work surface.

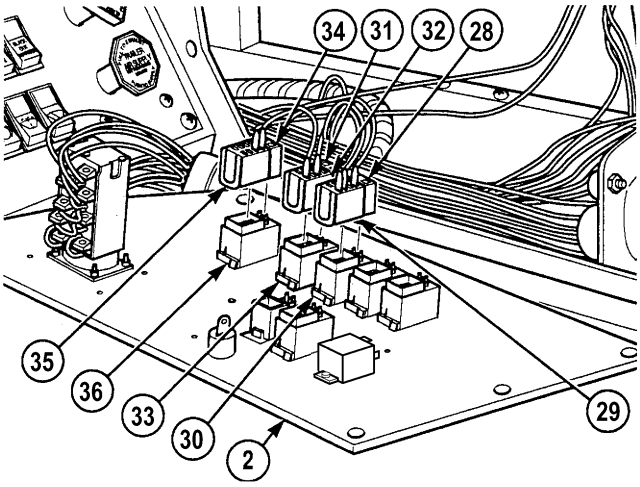

(16) Loosen screw (37) and remove hydraulic selector switch handle (38) from hydraulic selector switch (39).

(17) Remove hydraulic selector switch face plate (40) from hydraulic selector switch (39).

(18) Remove four screws (41) and hydraulic selector switch mounting plate (42) from side panel (2).

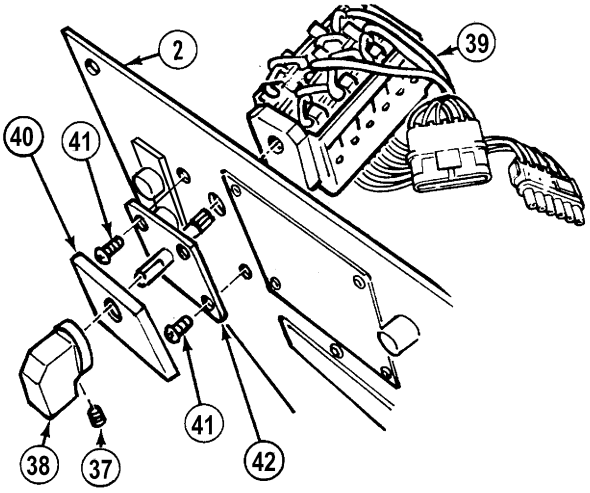

17-20. ELECTRONIC CONTROL BOX (ECB) SIDE PANEL REPLACEMENT (CONT).

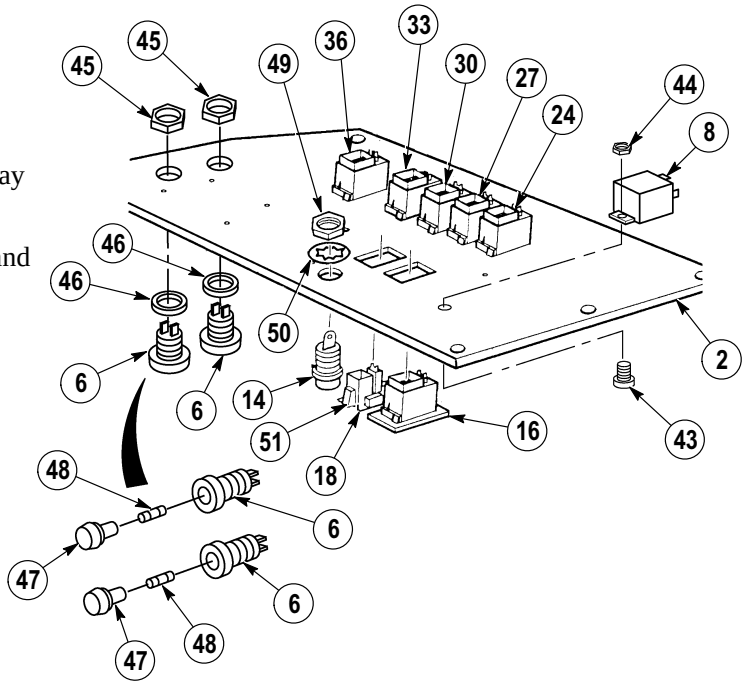

NOTE

Perform Steps (19) through (21) if equipped with LHS Controller Protection Kit.

(19) Remove screw (43), locknut (44) and relay (8) from side panel (2). Discard locknut.

(20) Remove two nuts (45), fuse holders (6) and seals (46) from front of side panel (2).

(21) Remove two covers (47) and fuses (48) from fuse holders (6).

(22) Remove nut (49) and washer (50) from panel light (14).

(23) Remove panel light (14) from side panel (2).

NOTE

There are seven rocker switches and one pilot light housing. All are removed the same way.

(24) Push tab (51) on back of rocker switches (36), (33), (30), (27), (24), (18) and (16) and remove each switch from side panel (2).

(25) Drill out rivets (52) from four data plates (53), (54), (55) and (56) and remove each data plate from side panel (2). Discard rivets.

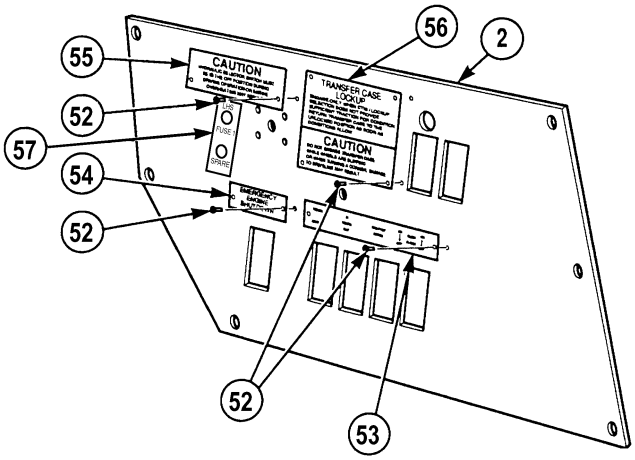

NOTE

- Perform Step (26) if equipped with LHS Controller Protection Kit.
- Perform Step (26) if data plate is damaged.

(26) Remove fuse data plate (57) from side panel (2).

b. Installation.

NOTE

- Perform Step (1) if equipped with LHS Controller Protection Kit.
- Perform Step (1) if data plate was removed.

(1) Position fuse data plate (57) on side panel (2).

NOTE

There are four data plates secured with rivets. All four data plates are installed the same way.

(2) Position and install four data plates (53), (54), (55) and (56) on side panel (2) with rivets (52).

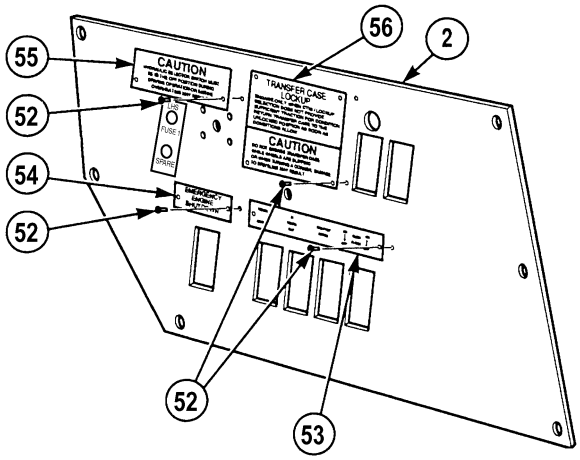

NOTE

There are seven rocker switches and one pilot light housing. All are installed the same way.

(3) Install rocker switches (16), (18), (36), (33), (30), (27) and (24) on side panel (2) until tabs (51) on rocker switches are secure.

(4) Install panel light (14) on side panel (2).

(5) Install washer (50) and nut (49) on panel light (14).

NOTE

Perform Steps (6) through (8) if equipped with LHS Controller Protection Kit.

(6) Position two fuses (48) in fuse holders (6) and install covers (47).

(7) Install two seals (46) and fuse holders (6) on side panel (2) with two nuts (45).

(8) Install relay (8) on side panel (2) with screw (43) and locknut (44).

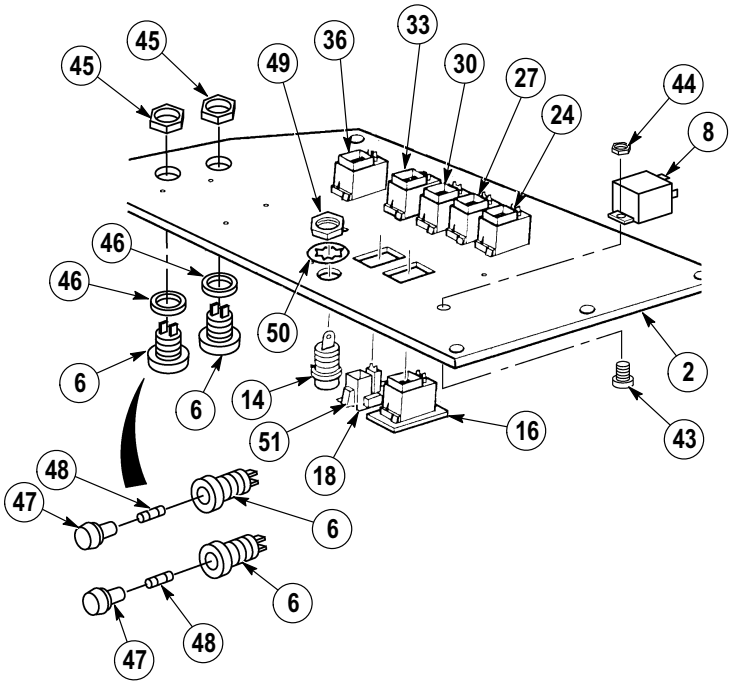

(9) Install hydraulic selector switch (39), hydraulic selector switch mounting plate (42) and four screws (41) on side panel (2).

(10) Install hydraulic selector switch face plate (40) on hydraulic selector switch (39).

(11) Install hydraulic selector switch handle (38) on hydraulic selector switch (39) and tighten screw (37).

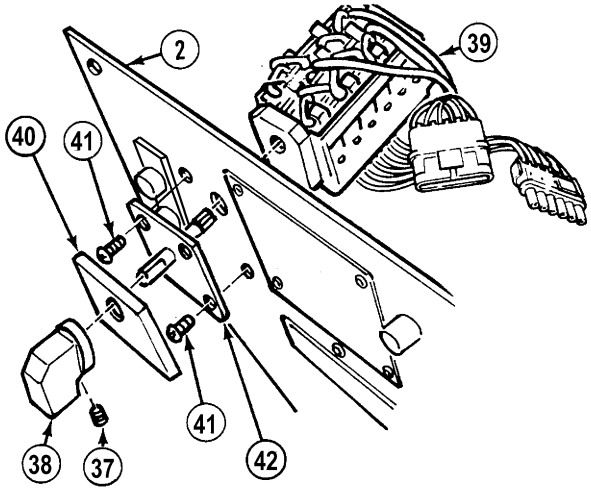

17-20. ELECTRONIC CONTROL BOX (ECB) SIDE PANEL REPLACEMENT (CONT).

(12) Position side panel (2) in truck.

(13) Connect wire 439 (34) and wire 1052 (35) on engine stop rocker switch (36).

(14) Connect C1 connector (31) and S4 connector (32) on winch/crane rocker switch (33).

(15) Connect C2 connector (28) and S10 connector (29) on winch in/out rocker switch (30).

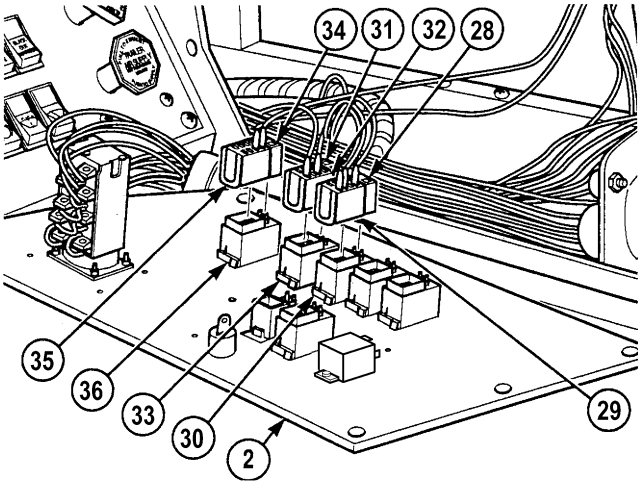

NOTE

Perform Step (16) only if truck is equipped with gas particulate kit. If truck is not equipped with gas particulate kit, go to Step (17).

(16) Connect C3 connector (25) and S19 connector (26) to gas particulate rocker switch (27).

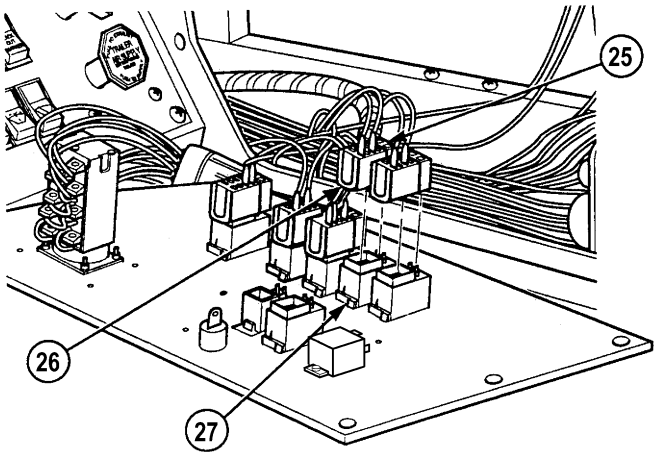

NOTE

Perform Step (17) only if truck is equipped with chemical alarm kit. If truck is not equipped with chemical alarm kit, go to Step (18).

(17) Connect C4 connector (22) and S20 connector (23) to chemical alarm rocker switch (24).

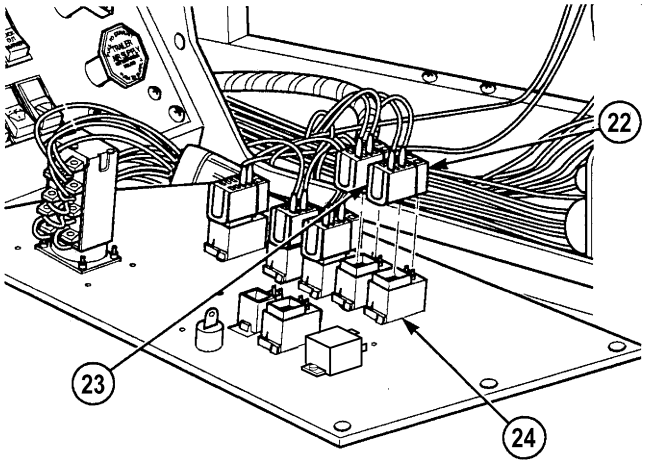

(18) Install rectifier (21), screw (19) and nut (20) on side panel (2).

(19) Connect L35 connector (17) on pilot light housing (18).

(20) Connect S22 connector (15) on transfer case lockout rocker switch (16).

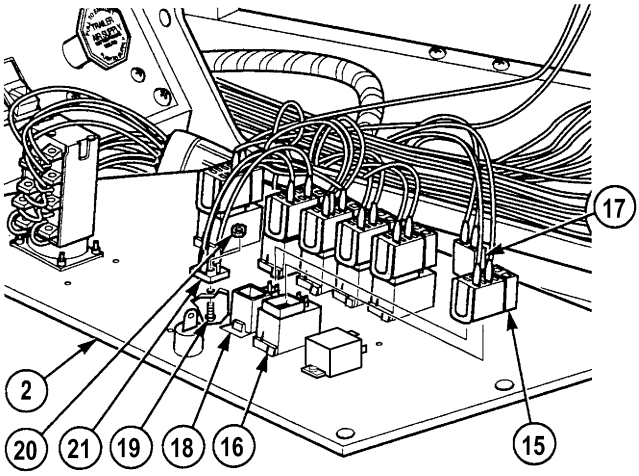

(21) Install wire 1052 (13), lockwasher (12) and screw (11) on panel light (14).

(22) Connect MC94 connector (10).

(23) Connect MC93 connector (9).

NOTE

Perform Steps (24) and (25) if equipped with LHS Controller Protection Kit.

(24) Connect relay connector (7) to relay (8).

(25) Connect wires 1755A (5) and 1755 (4) to fuse holder (6).

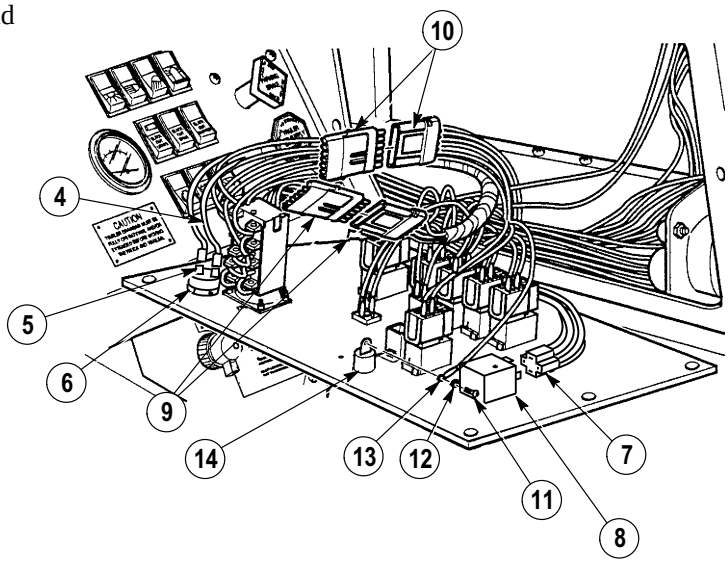

(26) Position side panel (2) against control panel (3) and install six screws (1) in side panel (2).

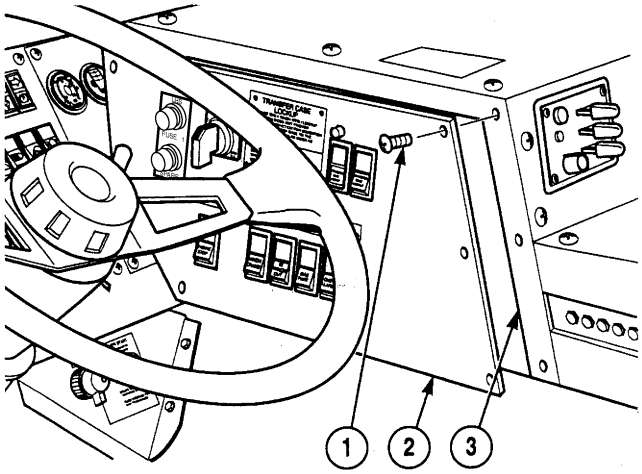

c. Follow-On Maintenance:

- Connect batteries, (Para 7-87).
- Remove wheel chocks, (TM 9-2320-364-10).

END OF TASK

17-21. ELECTRONIC CONTROL BOX (ECB) RIGHT SIDE PANEL REPLACEMENT.

This task covers:

a. Removal b. Installation c. Follow-On Maintenance

INITIAL SETUP

Tools and Special Tools
Tool Kit, General Mechanic's: Automotive (Item 74, Appendix G)

Materials/Parts
Adhesive, Insulation (Item 12, Appendix C)
Insulation (Item 80, Appendix F)
Seal (Item 328, Appendix F)

Equipment Condition
Engine OFF, (TM 9-2320-364-10)
Wheels chocked, (TM 9-2320-364-10)

a. Removal.

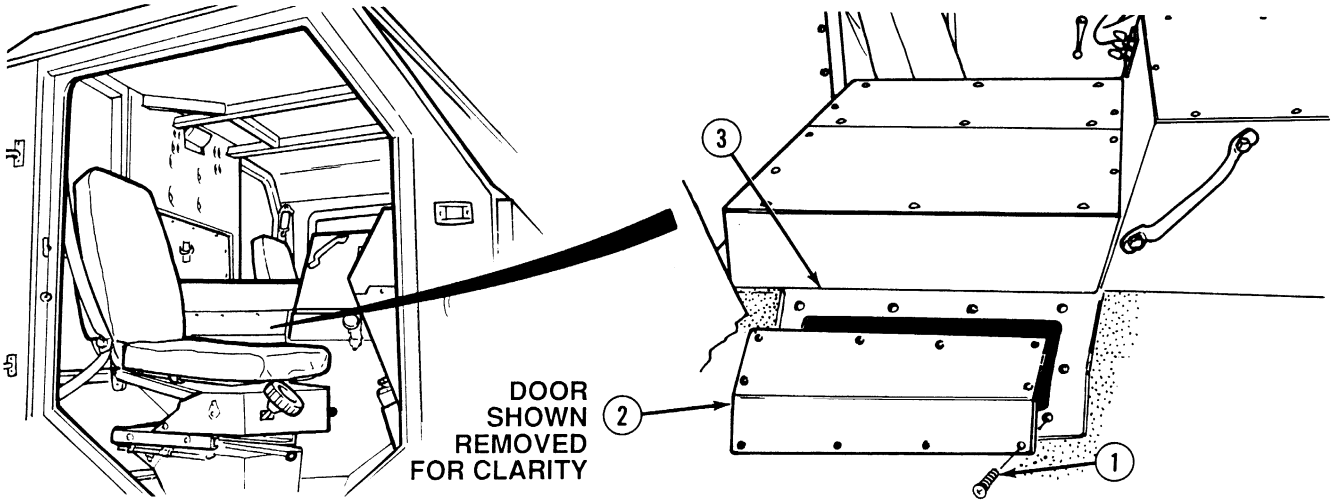

(1) Remove 10 screws (1) and electronic control box panel (2) from cab (3).

(2) Remove and discard insulation (4) and seal (5) from electronic control box panel (2).

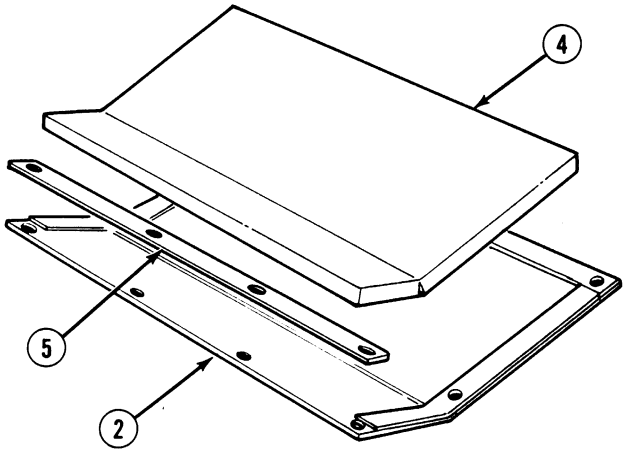

b. Installation.

WARNING

Adhesives, solvents, and sealing compounds can burn easily, can give off harmful vapors, and are harmful to skin and clothing. To avoid injury or death, keep away from open fire and use in well-ventilated area. If adhesive, solvent, or sealing compound gets on skin or clothing, wash immediately with soap and water.

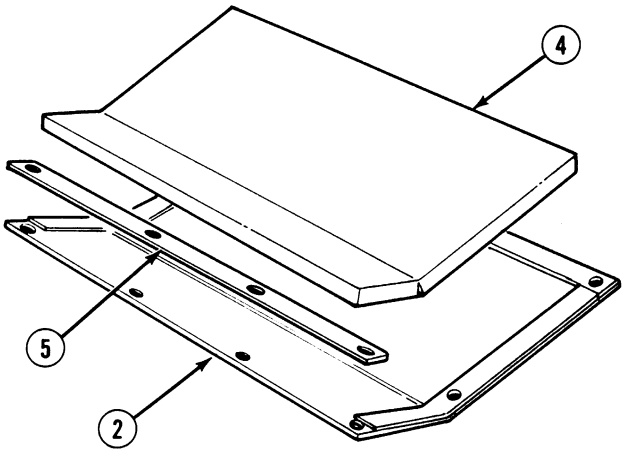

(1) Apply insulation adhesive to insulation (4).

(2) Install insulation (4) on electronic control box panel (2).

(3) Apply insulation adhesive to edges of insulation (4).

(4) Apply insulation adhesive to seal (5).

(5) Install seal (5) on electronic control box panel (2).

(6) Install electronic control box panel (2) with 10 screws (1) on cab (3).

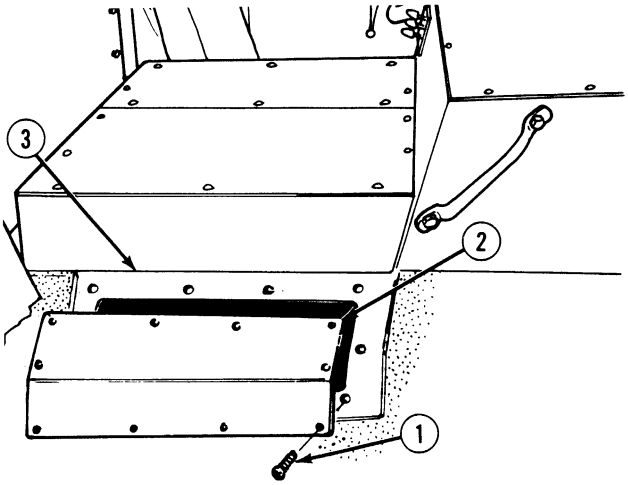

c. Follow-On Maintenance:

- Remove wheel chocks, (TM 9-2320-364-10).

END OF TASK

17-22. ELECTRONIC CONTROL BOX (ECB) COVER REPLACEMENT.

This task covers:

a. Removal b. Installation c. Follow-On Maintenance

INITIAL SETUP

Tools and Special Tools
Tool Kit, General Mechanic's: Automotive
(Item 74, Appendix G)

Equipment Condition
Engine OFF, (TM 9-2320-364-10)
Wheels chocked, (TM 9-2320-364-10)

a. Removal.

(1) Remove 15 screws (1) from left and right covers (2).

(2) Remove left and right covers (2) from electronic control box (3).

NOTE

Do not tighten screws until all 15 are installed.

b. Installation. Install left and right covers (2) with 15 screws (1) on electronic control box (3).

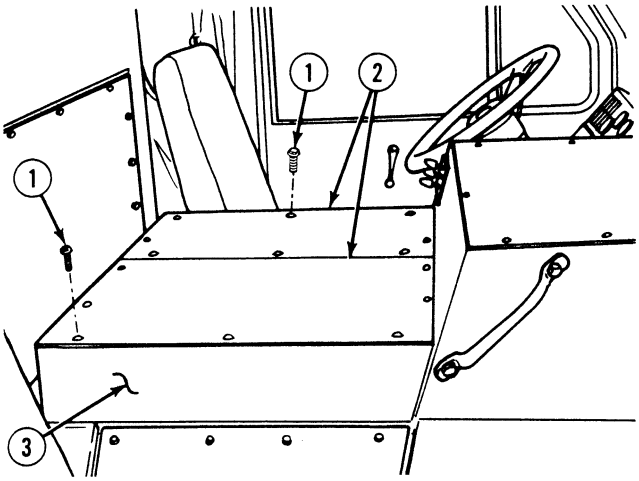

c. Follow-On Maintenance:

- Remove wheel chocks, (TM 9-2320-364-10).

END OF TASK

17-23. ELECTRONIC CONTROL BOX (ECB) REPLACEMENT.

This task covers:

a. Removal b. Installation c. Follow-On Maintenance

INITIAL SETUP

Tools and Special Tools
Tool Kit, General Mechanic's: Automotive (Item 74, Appendix G)
Socket Set, 3/8 Drive (Item 62, Appendix G)
Wrench, Torque, 3/8 in. Drive (0 to 60 N·m) (Item 98, Appendix G)

Materials/Parts
Cable Ties (Item 26, Appendix C)
Tags, Identification (Item 88, Appendix C)
Locknut (Item 140, Appendix F)
Lockwasher (2) (Item 194, Appendix F)
Lockwasher (17) (Item 204, Appendix F)

Equipment Condition
Engine OFF, (TM 9-2320-364-10)
Wheels chocked, (TM 9-2320-364-10)
Batteries disconnected, (Para 7-87)
Electronic Control Box (ECB) cover removed, (Para 17-22)
Electronic Control Box (ECB) side panel removed, (Para 17-20)
Machine gun platform removed, (Para 22-5)

a. Removal.

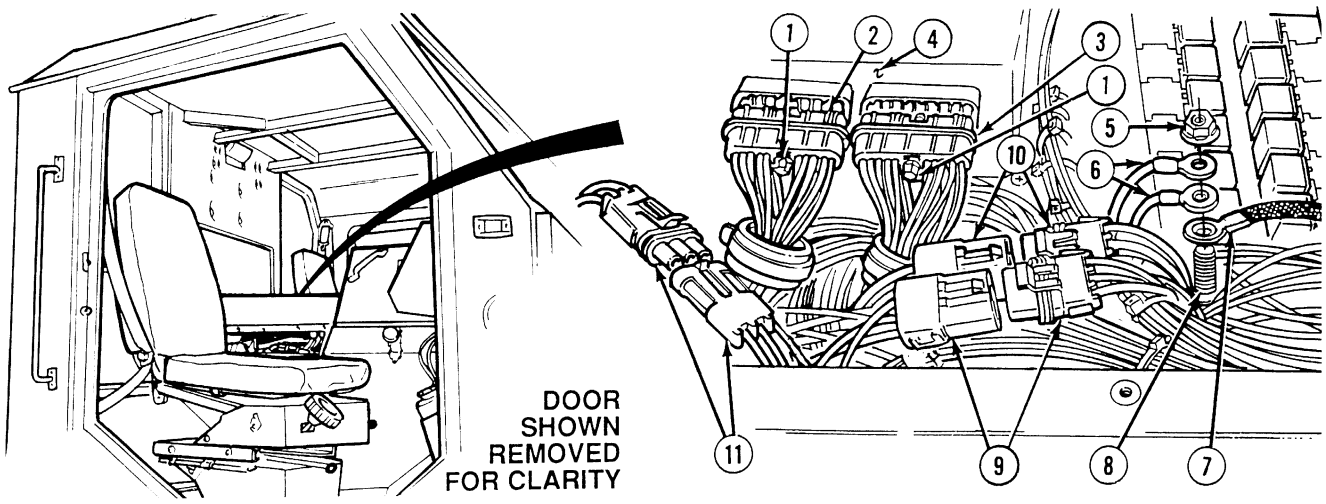

NOTE

- Tag and mark all wires and connections prior to removal.
- Remove cable ties as required.

(1) Loosen screws (1) and disconnect MC9 connector (2) and MC10 connector (3) from ATEC (4).

(2) Remove locknut (5), wire 222, wire 234 (6) and cable (7) from stud (8). Discard locknut.

(3) Disconnect connectors MC50 (9), MC51 (10) and MC36 (11).

17-23. ELECTRONIC CONTROL BOX (ECB) REPLACEMENT (CONT).

(4) Remove two screws (12), locknuts (13) and ferrites (14) from wire harness (15) and (16).

(5) Remove four screws (17), two plates (18) and rubber grommets (19) from electronic control box (20).

(6) Push connectors (2), (3), (9), (10) and (11) through electronic control box (20).

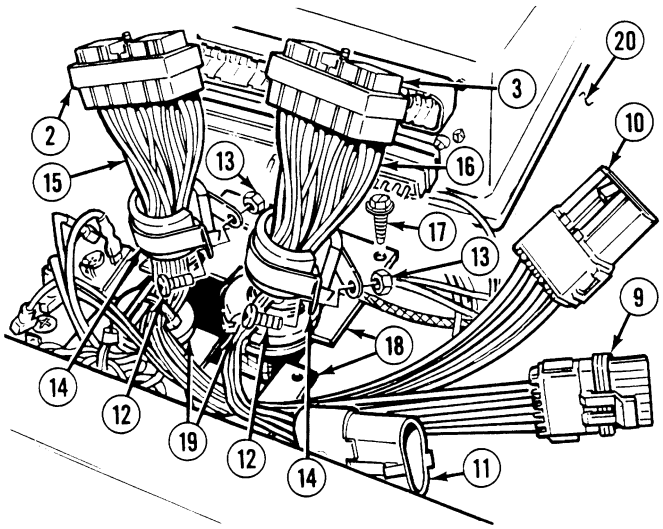

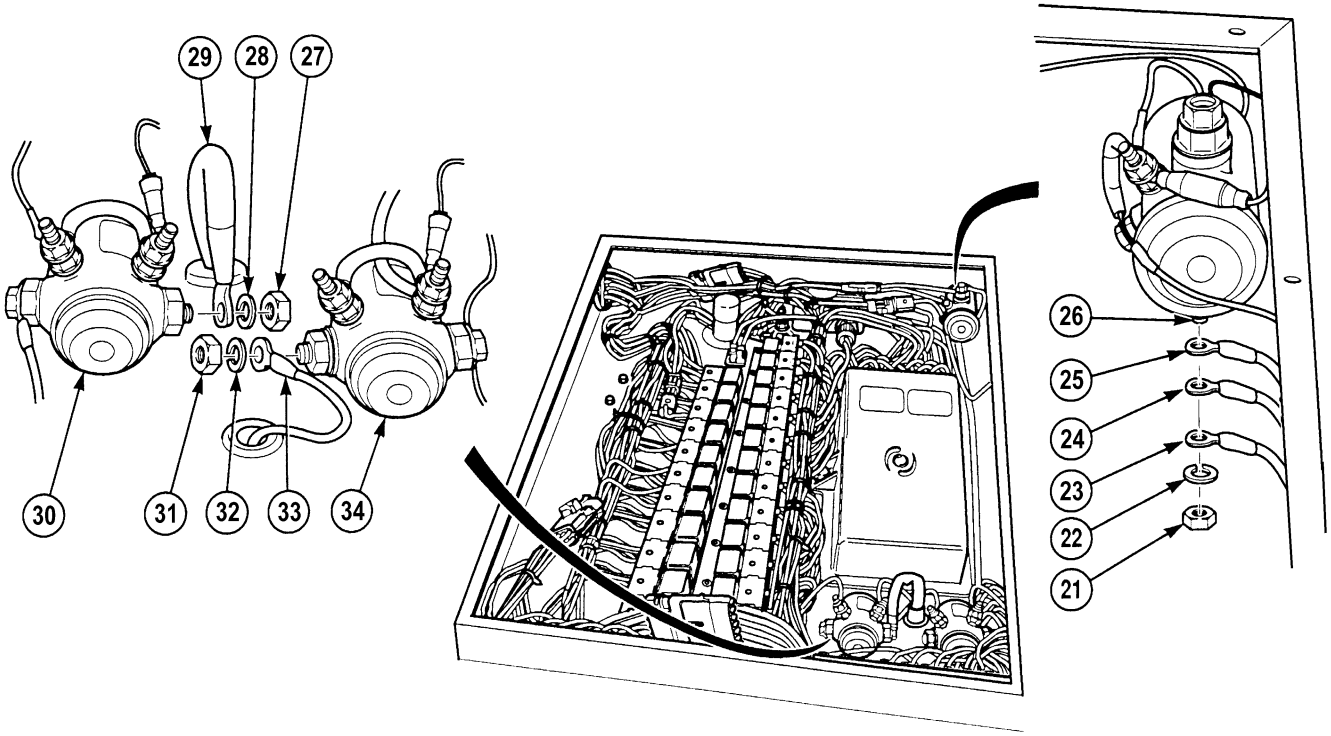

NOTE

Wire 1075B will remain on relay.

(7) Remove nut (21), lockwasher (22) and wires 1075 (23), 1958 (24) and 1075B (25) from relay R25 (26). Discard lockwasher.

(8) Remove nut (27), lockwasher (28) and wire 1430 (29) from relay R28 (30). Discard lockwasher.

(9) Remove nut (31), lockwasher (32) and wire 1281 (33) from relay R26 (34). Discard lockwasher.

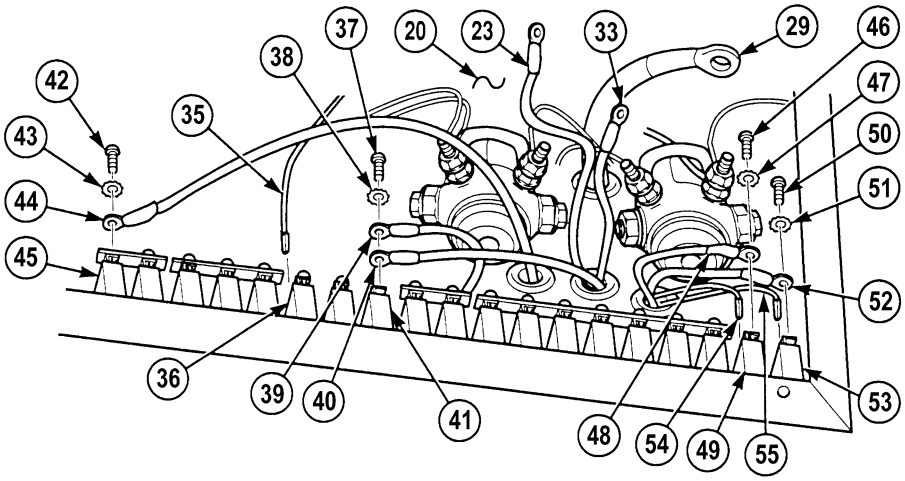

(10) Disconnect wire 225 (35) from circuit breaker CB11 (36).

NOTE

Wire 1867 will remain with circuit breaker.

(11) Remove screw (37), lockwasher (38) and wires 1867 (39) and 1866 (40) from circuit breaker CB12 (41). Discard lockwasher.

(12) Remove screw (42), lockwasher (43) and wire 1079 (44) from circuit breaker CB5 (45). Discard lockwasher.

(13) Remove screw (46), lockwasher (47) and wire 241 (48) from circuit breaker CB22 (49). Discard lockwasher.

(14) Remove screw (50), lockwasher (51) and wire 240 (52) from circuit breaker CB23 (53). Discard lockwasher.

(15) Disconnect wires 241 (54) and 240 (55) from circuit breakers CB22 (49) and CB23 (53).

(16) Push wires 1075 (23), 1430 (29), 1079 (44), 1281 (33), 1866 (40), 241 (54), 240 (55), 240 (52) and 241 (48) through electronic control box (20).

(17) Loosen screws (56) and disconnect connectors MC1 (57) and MC2 (58).

(18) Disconnect connectors MC106 (59) and MC116 (60).

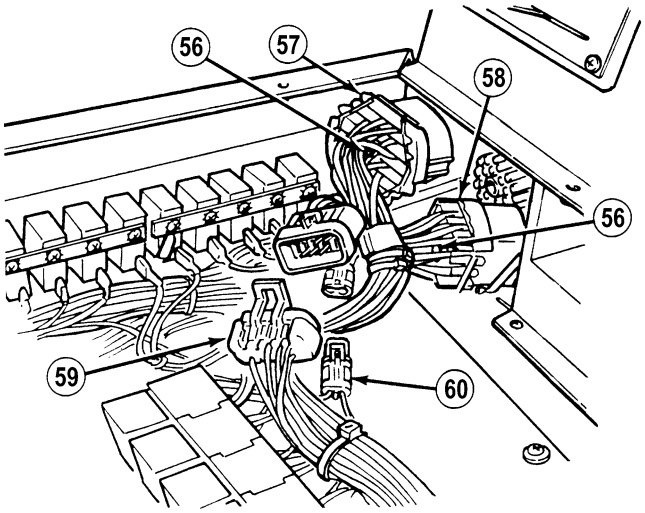

17-23. ELECTRONIC CONTROL BOX (ECB) REPLACEMENT (CONT).

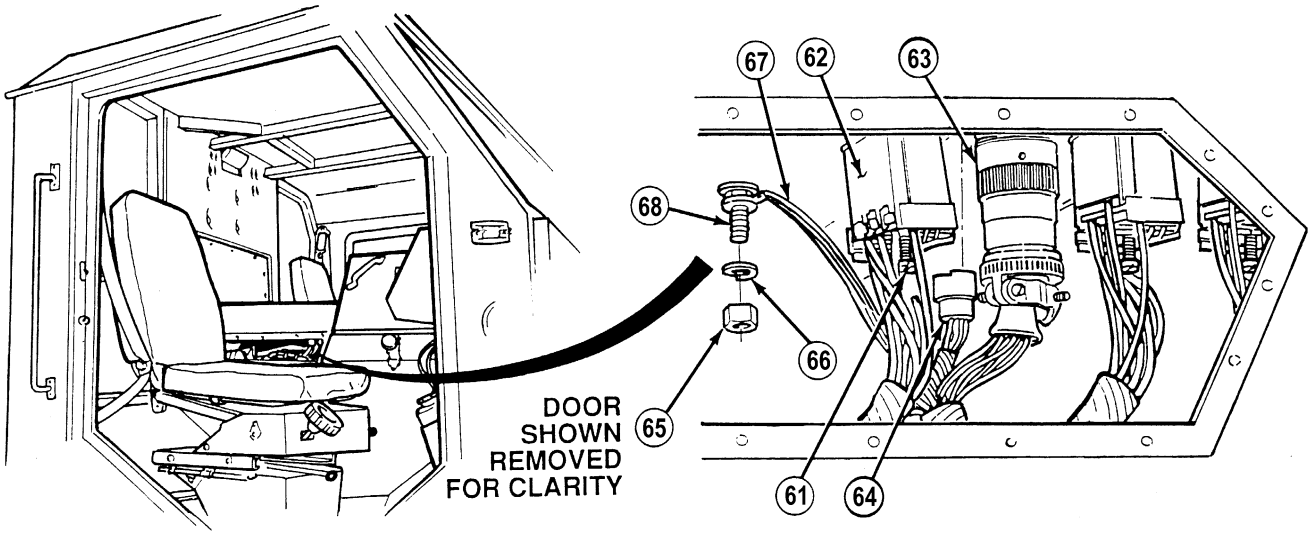

(19) Loosen screw (61) and disconnect MC25 (62).

(20) Disconnect connectors MC11 (63) and MC40 (64).

(21) Remove locknut (65), lockwasher (66) and wire 1435 (67) from stud (68).

(22) Loosen screw (69) and disconnect connector MC44 (70).

(23) Remove nut (71), lockwasher (72), flatwasher (73) and wire 1435 (74) from stud (75).

(24) Remove 14 screws (76) from electronic control box (20).

(25) Remove electronic control box (20) from truck.

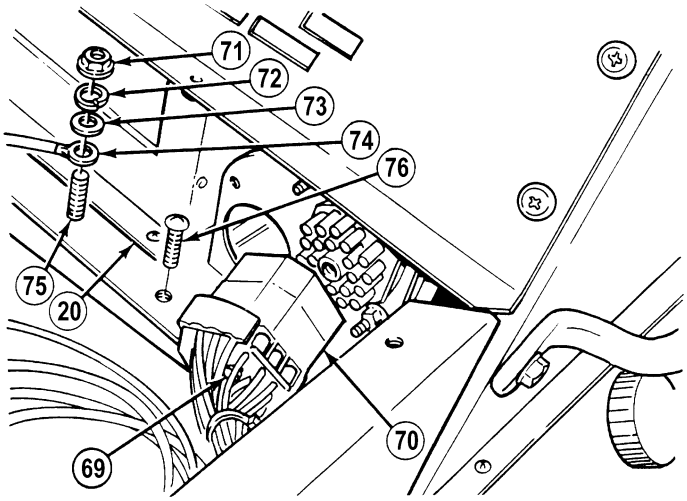

b. Installation.

(1) Install electronic control box (20) with 14 screws (76).

(2) Install wire 1435 (73) to stud (75) with flatwasher (73), lockwasher (72) and nut (71).

(3) Connect MC44 connector (70) and tighten screw (69).

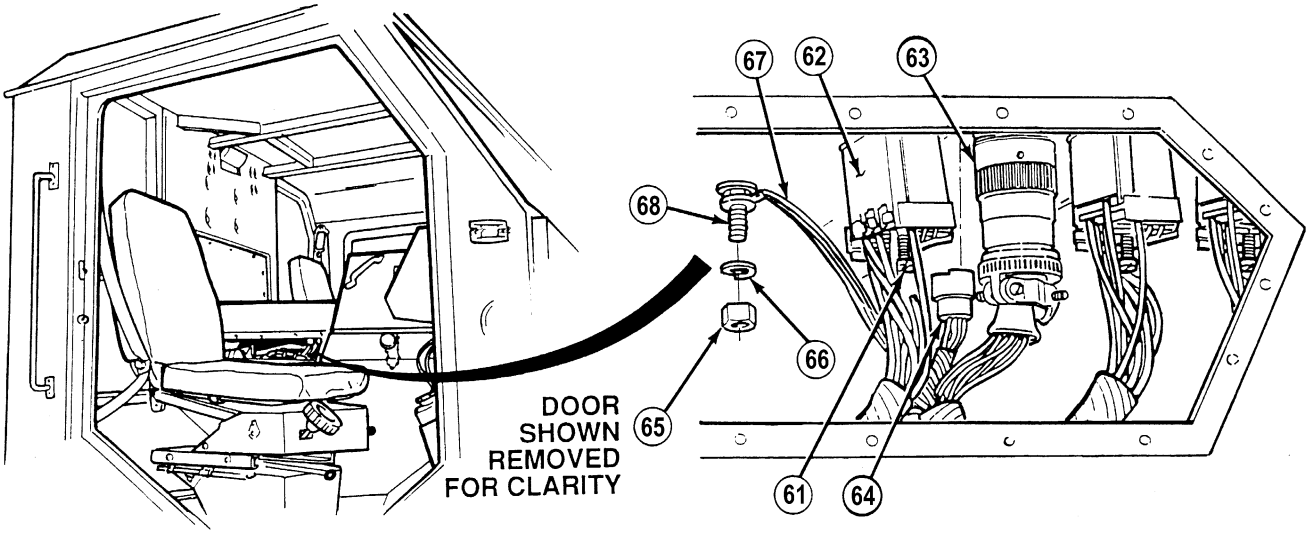

(4) Install wire 1435 (67) to stud (68) with lockwasher (66) and locknut (65).

(5) Connect MC11 connector (63) and MC40 connector (64).

(6) Connect MC25 connector (62) and tighten screw (61).

(7) Connect MC106 connector (59).

(8) Connect MC116 connector (60).

(9) Connect MC2 connector (58) and tighten screw (56).

(10) Connect MC1 connector (57) and tighten screw (56).

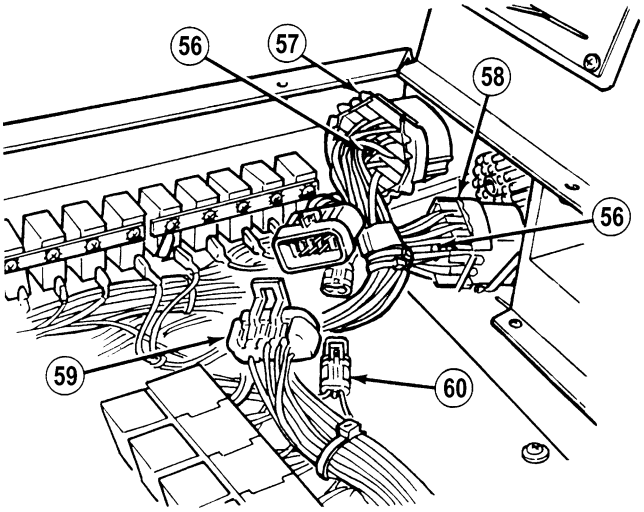

17-23. ELECTRONIC CONTROL BOX (ECB) REPLACEMENT (CONT).

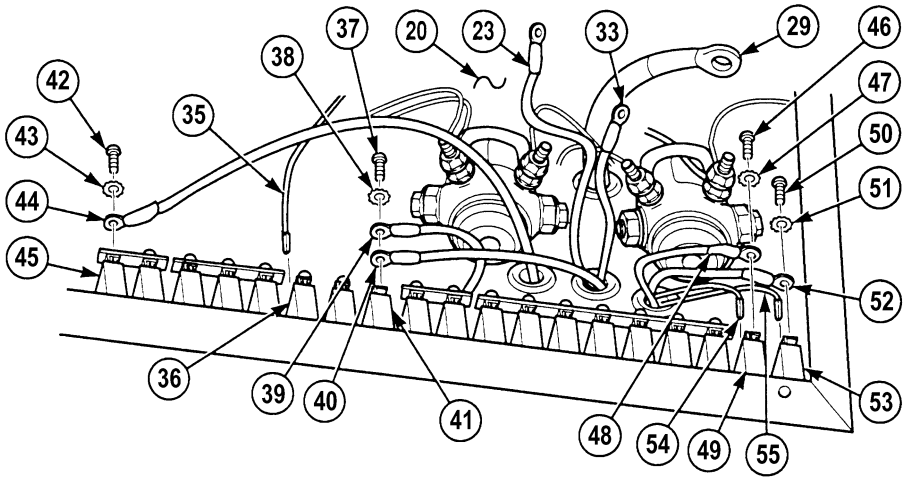

(11) Push wires 1075 (23), 1430 (29), 1079 (44), 1281 (33), 1866 (40), 241 (54), 240 (55), 240 (52) and 241 (48) through electronic control box (20).

(12) Connect wire 241 (55) and wire 240 (54) to circuit breakers CB23 (53) and CB22 (49).

(13) Install wire 240 (52) to circuit breaker CB23 (53) with screw (50) and lockwasher (51).

(14) Install wire 241 (48) to circuit breaker CB22 (49) with screw (46) and lockwasher (47).

(15) Install wire 1079 (44) to circuit breaker CB5 (45) with screw (42) and lockwasher (43).

(16) Install wires 1867 (39) and 1866 (40) to circuit breaker CB12 (41) with screw (37) and lockwasher (38).

(17) Connect wire 225 (35) to circuit breaker CB11 (36).

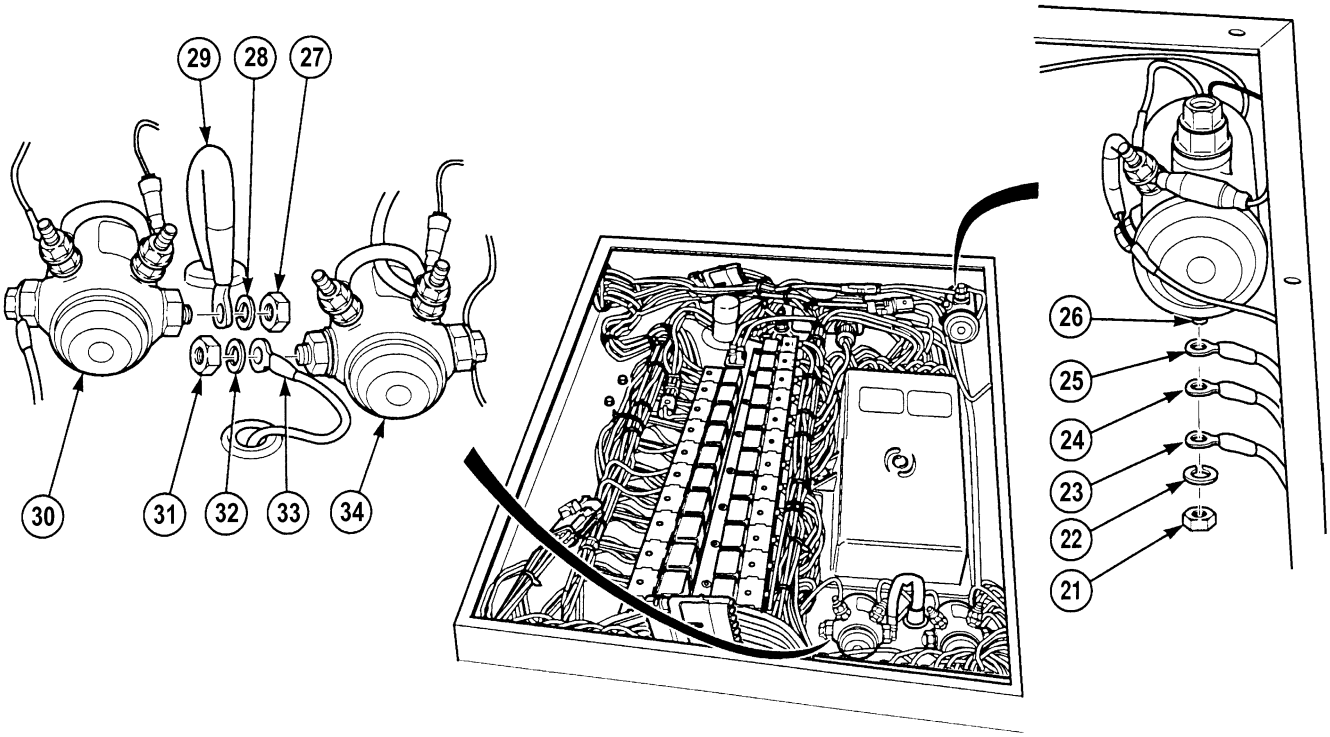

(18) Position wire 1281 (33) on relay R26 (34) with lockwasher (32) and nut (31). Tighten nut to 30 to 35 lb-in (3 to 4 N·m).

(19) Position wire 1430 (29) on relay R28 (30) with lockwasher (28) and nut (27). Tighten nut to 30 to 35 lb-in (3 to 4 N·m).

(20) Position wires 1075 (23), wire 1958 (24) and 1075B (25) on relay R25 (26) with lockwasher (23) and nut (22). Tighten nut to 30 to 35 lb-in (3 to 4 N·m).

(21) Push connectors MC9 (2), MC10 (3), MC50 (9), MC51 (10), and MC36 (11) through electronic control box (20).

(22) Install two plates (18) to electronic control box (20) with four screws (17) and two rubber grommets (19).

(23) Install wire harnesses (15) and (16) with ferrites (14), screws (12) and locknuts (13).

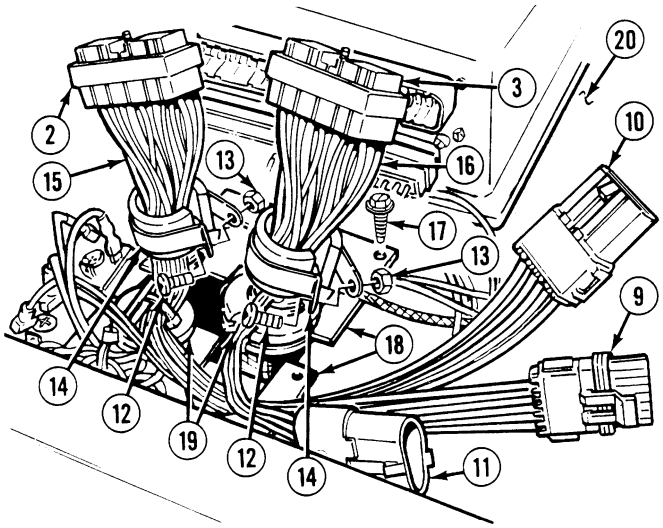

17-23. ELECTRONIC CONTROL BOX (ECB) REPLACEMENT (CONT).

(24) Connect MC36 connector (11).

(25) Connect MC51 connector (10).

(26) Connect MC50 connector (9).

(27) Install cable (7), wire 222 and wire 234 (6) to stud (8) with locknut (5).

(28) Connect connectors MC9 (2) and MC10 (3) on ATEC (4) with screws (1).

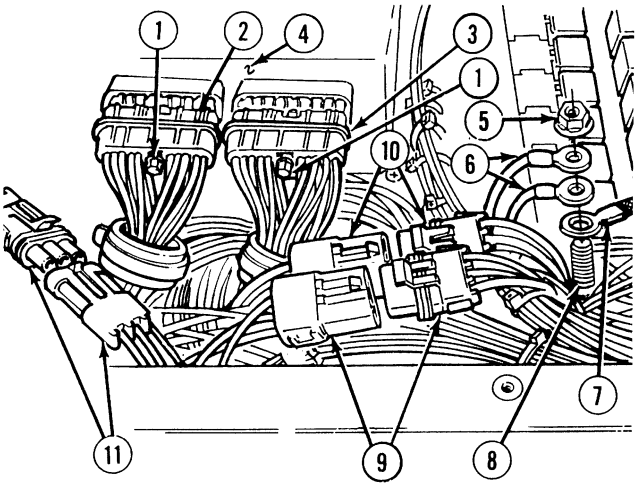

c. *Follow-On Maintenance:*

- Install machine gun platform, (Para 22-5).
- Install Electronic Control Box (ECB) side panel, (Para 17-20).
- Install Electronic Control Box (ECB) cover, (Para 17-22).
- Connect batteries, (Para 7-87).
- Remove wheel chocks, (TM 9-2320-364-10).

END OF TASK

17-24. CAB ENGINE ACCESS PANEL REPLACEMENT.

This task covers:

a. Removal b. Installation c. Follow-On Maintenance

INITIAL SETUP

Tools and Special Tools
Tool Kit, General Mechanic's: Automotive (Item 74, Appendix G)

Materials/Parts
Lockwasher (22) (Item 195, Appendix F)

Equipment Condition
Engine OFF, (TM 9-2320-364-10)
Wheels chocked, (TM 9-2320-364-10)
Fire extinguisher removed, (TM 9-2320-364-10)

a. Removal.

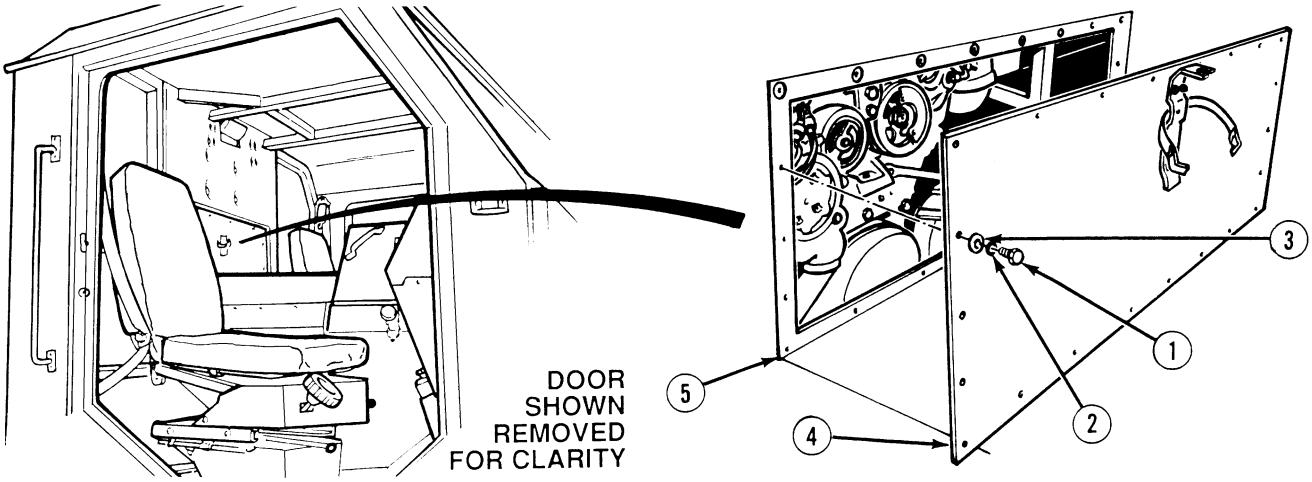

(1) Remove 22 screws (1), lockwashers (2) and washers (3) from cab engine access panel (4). Discard lockwashers.

(2) Remove cab engine access panel (4) from cab (5).

b. Installation.

(1) Position cab engine access panel (4) in cab (5).

(2) Install 22 washers (3), lockwashers (2) and screws (1) in cab engine access panel (4).

c. Follow-On Maintenance:

- Install fire extinguisher, (TM 9-2320-364-10).
- Remove wheel chocks, (TM 9-2320-364-10).

END OF TASK

17-25. ROOF COVER PLATE REPLACEMENT.

This task covers:

a. Removal b. Installation c. Follow-On Maintenance

INITIAL SETUP

Tools and Special Tools
Tool Kit, General Mechanic's: Automotive (Item 74, Appendix G)
Socket Set, 3/8 in. (Item 62, Appendix G)
Wrench, Torque, 3/8 in. Drive (Item 98, Appendix G)

Materials/Parts
Gasket (Item 68, Appendix F)
Washer, Sealing (34) (Item 353, Appendix F)

Equipment Condition
Engine OFF, (TM 9-2320-364-10)
Wheels chocked, (TM 9-2320-364-10)

a. Removal.

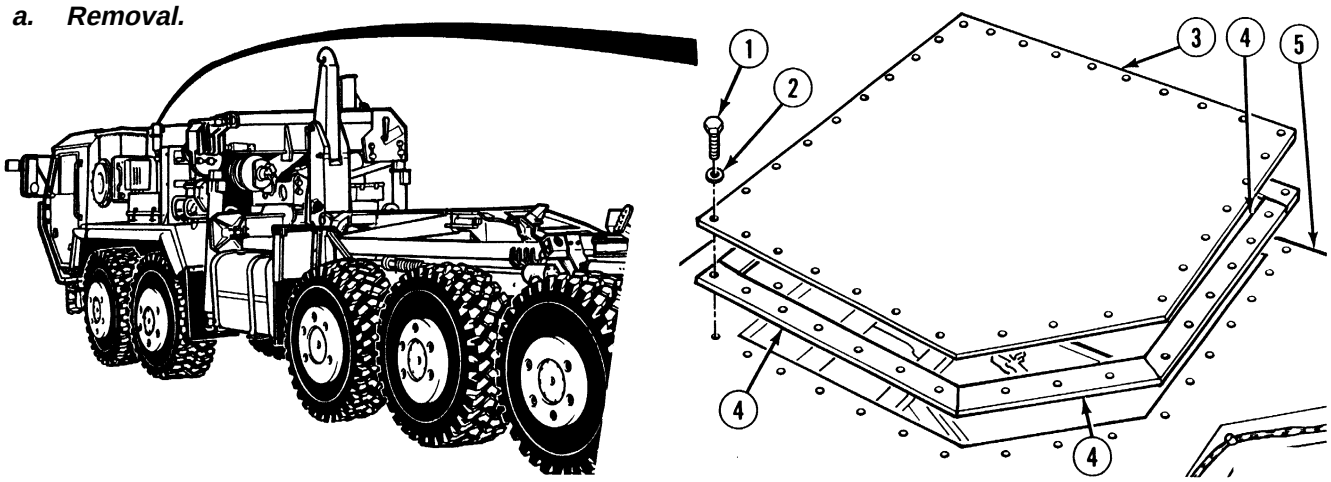

(1) Remove 34 screws (1) and sealing washers (2) from roof cover plate (3). Discard sealing washers.

(2) Remove cover plate (3) and gasket strips (4) from roof (5). Discard gasket strips.

b. Installation.

(1) Cut gasket strips (4) to lengths of two pieces each at 34 in. (86 cm) and 24 in. (61 cm) and one piece at 14 in. (35 cm).

(2) Position gasket (4) on roof cover plate (3).

(3) Position cover plate (3) on roof (5).

(4) Punch 34 holes in gasket strips (4) using cover plate (3) as a template.

(5) Install 34 sealing washers (2) and screws (1) in cover plate (3). Tighten screws 204 lb-in (23 N·m).

c. Follow-On Maintenance:

- Remove wheels chocks, (TM 9-2320-364-10).

END OF TASK

17-26. RIGHT SIDE NOISE PANEL REPLACEMENT.

This task covers:

a. Removal b. Installation c. Follow-On Maintenance

INITIAL SETUP

Tools and Special Tools
Tool Kit, General Mechanic's: Automotive (Item 74, Appendix G)

Materials/Parts
Lockwasher (6) (Item 171, Appendix F)
Pin, Cotter (3) (Item 273, Appendix F)

Equipment Condition
Engine OFF, (TM 9-2320-364-10)
Wheels chocked, (TM 9-2320-364-10)
Spare tire removed, (TM 9-2320-364-10)

a. Removal.

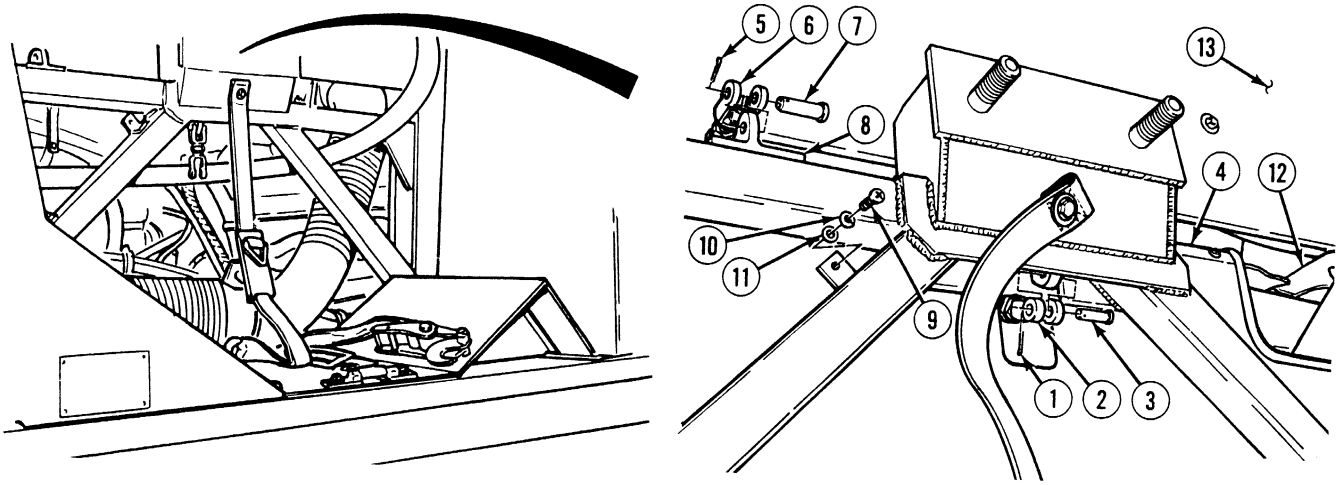

(1) Remove and discard cotter pin (1) from clevis yoke (2).

(2) Remove clevis pin (3) from clevis yoke (2).

(3) Slide clevis yoke (2) downward through right side noise panel (4).

(4) Remove and discard two cotter pins (5) from clevis yoke (6).

(5) Remove two clevis pins (7) from clevis yoke (6).

(6) Remove clevis yoke (6) from two clevis studs (8).

(7) Remove six screws (9), lockwashers (10) and washers (11) from right side noise panel (4). Discard lockwashers.

(8) Pull rubber flap (12) out from under fan shroud (13).

17-26. RIGHT SIDE NOISE PANEL REPLACEMENT (CONT).

NOTE

Push in on radiator skin and remove noise panel.

(9) Remove right side noise panel (4) from truck.

b. Installation.

NOTE

Push in on radiator skin to install noise panel.

(1) Position right side noise panel (4) on truck.

(2) Push rubber flap (12) under fan shroud (13).

(3) Install six washers (11), lockwashers (10) and screws (9) in right side noise panel (4).

(4) Position clevis yoke (6) on two clevis studs (8).

(5) Install two clevis pins (7) in clevis yoke (6).

(6) Install two cotter pins (5) in clevis yoke (6).

(7) Pull clevis yoke (2) through right side noise panel (4).

(8) Install clevis pin (3) in clevis yoke (2).

(9) Install cotter pin (1) in clevis pin (2).

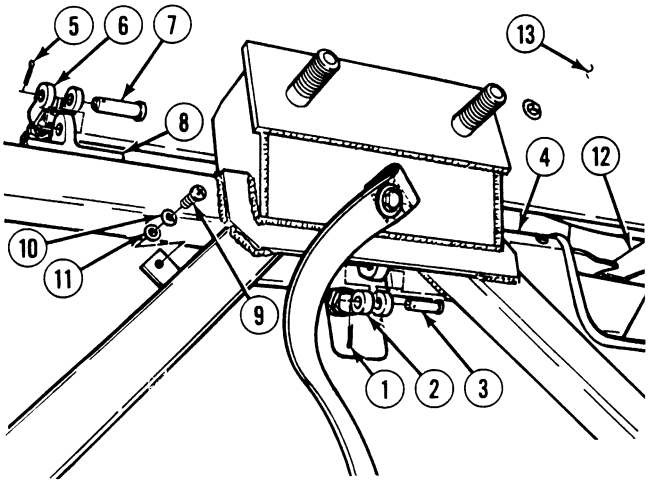

c. Follow-On Maintenance:

- Install spare tire, (TM 9-2320-364-10).
- Remove wheel chocks, (TM 9-2320-364-10).

END OF TASK

17-27. LEFT FRONT NOISE PANEL REPLACEMENT.

This task covers:

a. Removal b. Installation c. Follow-On Maintenance

INITIAL SETUP

Tools and Special Tools
Tool Kit, General Mechanic's: Automotive (Item 74, Appendix G)

Materials/Parts
Lockwasher (4) (Item 171, Appendix F)

Equipment Condition
Engine OFF, (TM 9-2320-364-10)
Wheels chocked, (TM 9-2320-364-10)
Arctic battery box removed (if equipped), (Para 22-6)

a. Removal.

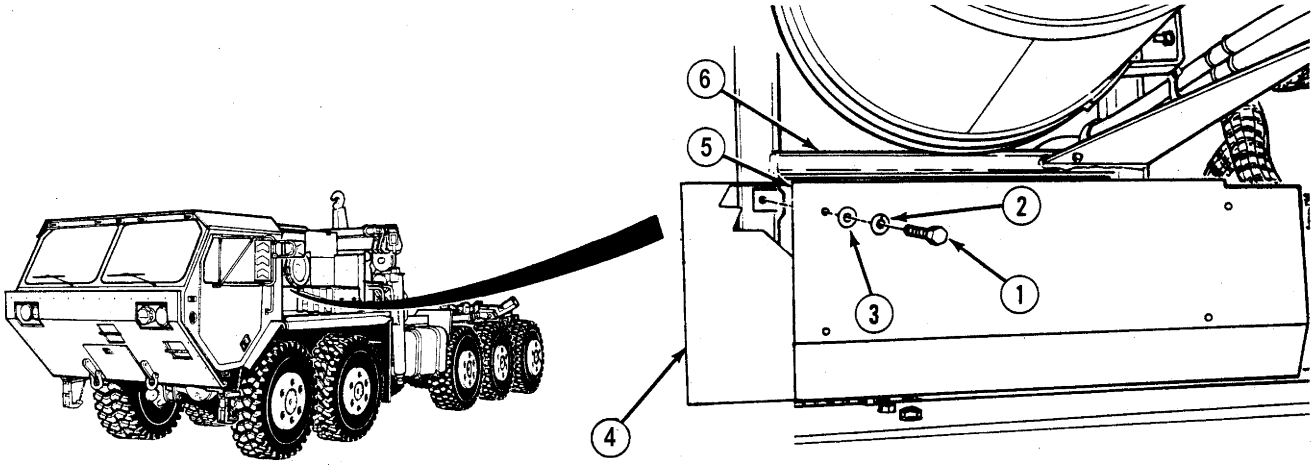

(1) Remove four screws (1), lockwashers (2), washers (3) and rubber (4) from left front noise panel (5). Discard lockwashers.

(2) Remove rubber (4) and left front noise panel (5) from truck (6).

b. Installation.

(1) Position rubber (4) and left front noise panel (5) on truck (6).

(2) Install four washers (3), lockwashers (2) and screws (1) in left front noise panel (5) and rubber (4).

c. Follow-On Maintenance:

- Install arctic battery box (if equipped), (Para 22-6).
- Remove wheel chocks, (TM 9-2320-364-10).

END OF TASK

17-28. LEFT SIDE NOISE PANEL REPLACEMENT.

This task covers:

a. Removal b. Installation c. Follow-On Maintenance

INITIAL SETUP

Tools and Special Tools
Tool Kit, General Mechanic's: Automotive (Item 74, Appendix G)

Materials/Parts
Adhesive, Insulation (Item 10, Appendix C)
Sealant, Rubber (Item 70, Appendix C)
Insulation (Item 78, Appendix F)
Insulation (Item 79, Appendix F)
Locknut (6) (Item 91, Appendix F)

Materials/Parts - Continued
Locknut (Item 106, Appendix F)
Locknut (Item 109, Appendix F)
Locknut (9) (Item 133, Appendix F)
Lockwasher (8) (Item 171, Appendix F)
Seal (Item 321, Appendix F)

Equipment Condition
Engine OFF, (TM 9-2320-364-10)
Wheels chocked, (TM 9-2320-364-10)

a. Removal.

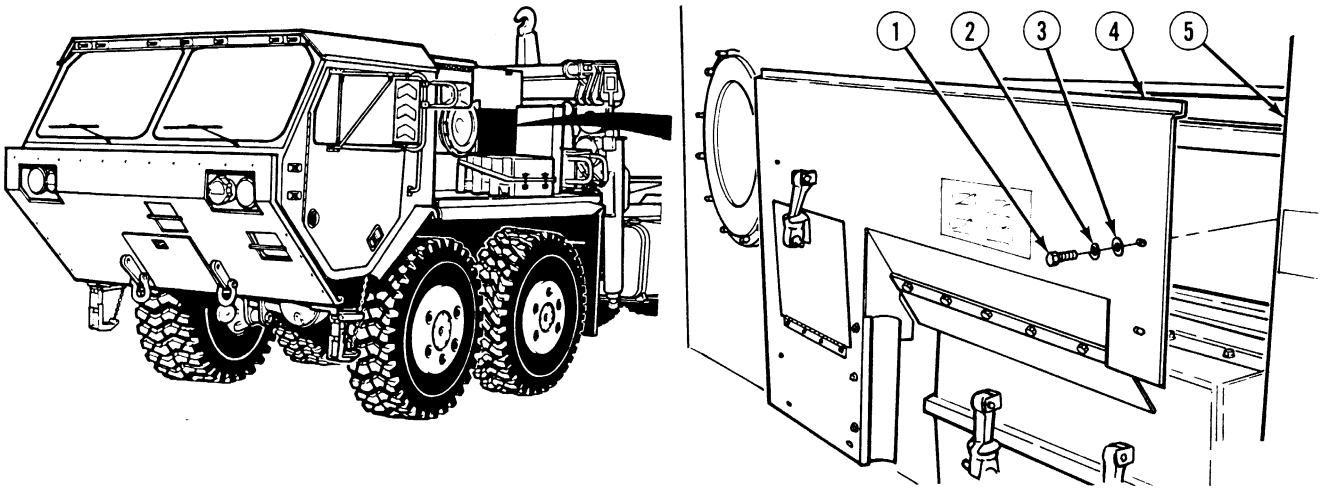

(1) Remove eight screws (1), lockwashers (2) and washers (3) from left side noise panel (4). Discard lockwashers.

CAUTION

Ensure left side noise panel does not contact either the start aid assembly or electrical cables upon removal or damage to equipment may result.

(2) Remove left side noise panel (4) from truck (5).

(3) Remove nine locknuts (6), three washers (7), nine screws (8), strip (9) and seal (10) from left side noise panel (4). Discard locknuts.

(4) Remove and discard insulation (11) from left side noise panel (4).

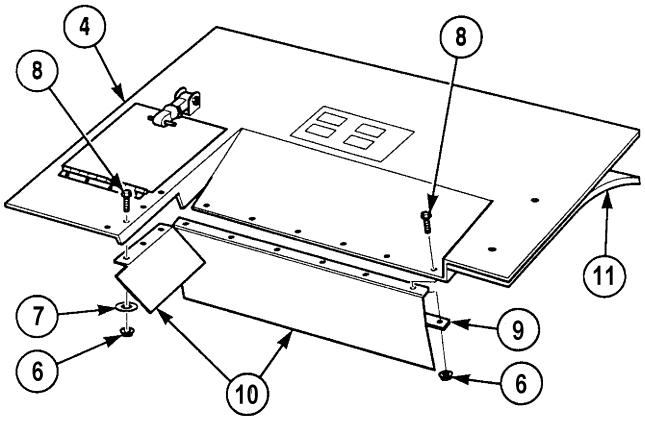

(5) Remove locknut (12), screw (13) and retaining strip (14) from left side noise panel (4). Discard locknut.

(6) Remove locknut (15), screw (16) and latch (17) from left side noise panel (4). Discard locknut.

(7) Remove two locknuts (18), screws (19) and hook seat (20) from door (21). Discard locknuts.

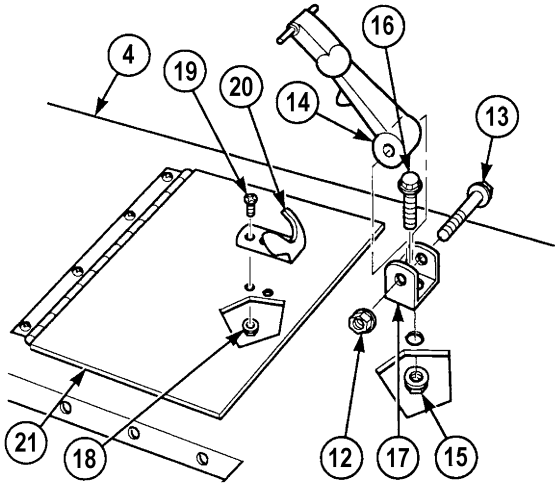

(8) Remove four locknuts (22), screws (23), spacer (24) and door (21) from left side noise panel (4).

(9) Remove quickedge (25) from left side noise panel (4).

(10) Remove and discard insulation (26) from door (21).

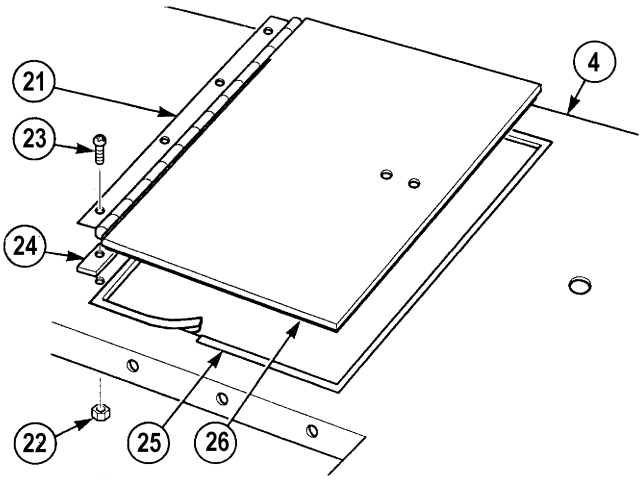

17-28. LEFT SIDE NOISE PANEL REPLACEMENT (CONT).

b. Installation.

WARNING

Adhesives, solvents, and sealing compounds can burn easily, can give off harmful vapors, and are harmful to skin and clothing. To avoid injury or death, keep away from open fire and use in well-ventilated area. If adhesive, solvent, or sealing compound gets on skin or clothing, wash immediately with soap and water.

(1) Apply insulation adhesive on insulation (26).

(2) Install insulation (26) on door panel (21).

(3) Apply insulation sealant to edges of insulation (26).

(4) Install quickedge (25) on left side noise panel (4).

(5) Install door (21) and spacer (24) on left side noise panel (4) with four screws (23) and locknuts (22).

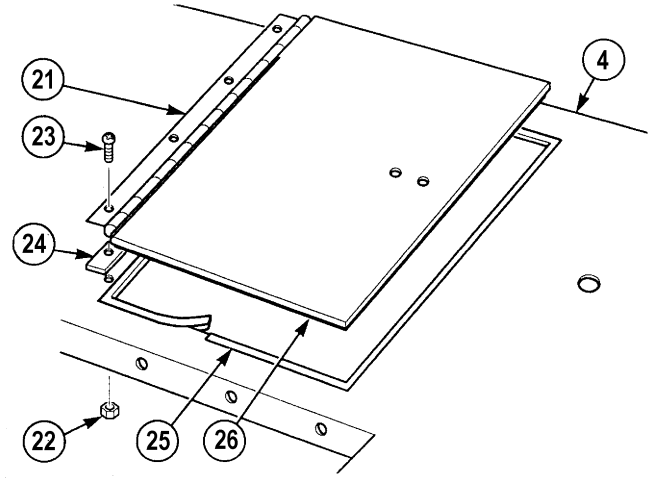

(6) Install hook seat (20), two screws (19) and locknuts (18) in door (21).

(7) Install latch (17) in left side noise panel (4) with screw (16) and locknut (15).

(8) Install retaining strap (14) in latch (17) with screw (13) and locknut (12).

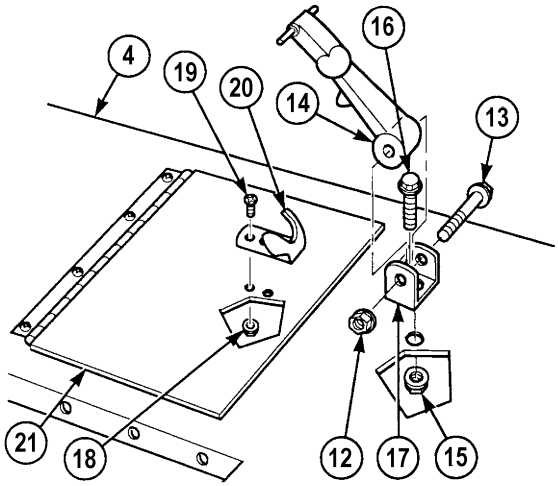

WARNING

Adhesives, solvents, and sealing compounds can burn easily, can give off harmful vapors, and are harmful to skin and clothing. To avoid injury or death, keep away from open fire and use in well-ventilated area. If adhesive, solvent, or sealing compound gets on skin or clothing, wash immediately with soap and water.

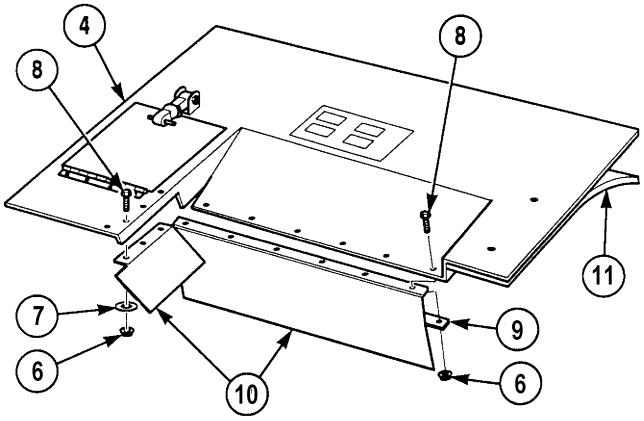

(9) Apply insulation adhesive on insulation (11).

(10) Install insulation (11) on left side noise panel (4).

(11) Apply insulation sealant to edges of insulation (11).

(12) Install seal (10), three washers (7), nine screws (8), strip (9) and nine locknuts (6) in left side noise panel (4).

17-28. LEFT SIDE NOISE PANEL REPLACEMENT (CONT).

CAUTION

Ensure left side noise panel remains free from contacting either start aid assembly or electrical cables upon removal or damage to equipment may result.

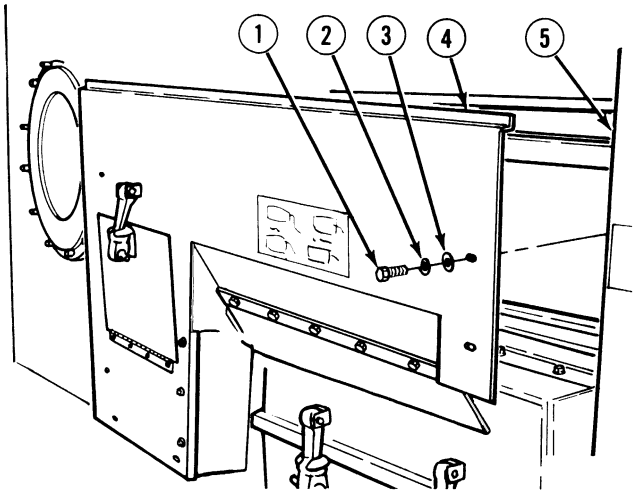

(13) Position left side noise panel (4) on truck (5).

(14) Install eight washers (3), lockwashers (2) and screws (1) in left side noise panel (4).

c. Follow-On Maintenance:

- Remove wheel chocks, (TM 9-2320-364-10).

END OF TASK

17-29. REAR NOISE PANEL REPLACEMENT.

This task covers:

a. Removal b. Installation c. Follow-On Maintenance

INITIAL SETUP

Tools and Special Tools
Tool Kit, General Mechanic's: Automotive (Item 74, Appendix G)

Equipment Condition
Engine OFF, (TM 9-2320-364-10)
Wheels chocked, (TM 9-2320-364-10)

a. Removal.

(1) Remove two pins (1) from rear noise panel (2).

NOTE

Observe position of rear noise panel and how it hooks into place for installation.

(2) Remove rear noise panel (2) from truck (3).

b. Installation.

(1) Install rear noise panel (2) on truck (3).

(2) Install two pins (1) in rear noise panel (2).

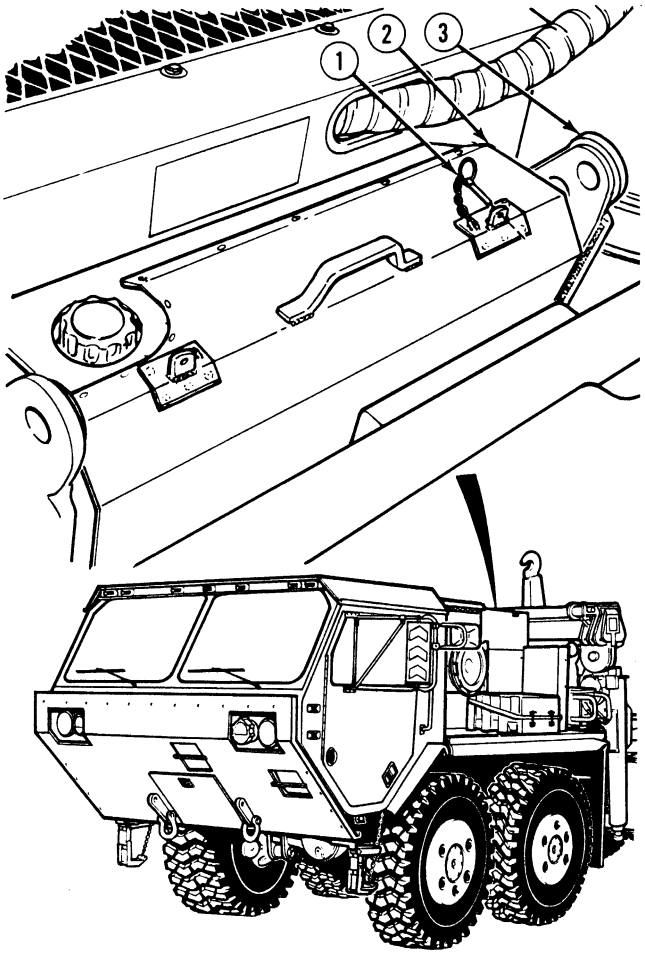

c. Follow-On Maintenance:

- Remove wheel chocks, (TM 9-2320-364-10).

END OF TASK

17-30. REAR NOISE PANEL RUBBER REPLACEMENT.

This task covers:

a. Removal b. Installation c. Follow-On Maintenance

INITIAL SETUP

Tools and Special Tools
Tool Kit, General Mechanic's: Automotive (Item 74, Appendix G)

Materials/Parts
Adhesive (Item 3, Appendix C)
Adhesive, Insulation (Item 12, Appendix C)
Insulation (Item 77, Appendix F)

Materials/Parts - Continued
Locknut (8) (Item 106, Appendix F)
Pad, Rubber (Item 264, Appendix F)

Equipment Condition
Engine OFF, (TM 9-2320-364-10)
Wheels chocked, (TM 9-2320-364-10)
Rear noise panel removed, (Para 17-29)

a. Removal.

(1) Remove eight locknuts (1), three retaining strips (2) and (3), rear panel rubber (4) and eight screws (5) from rear noise panel (6). Discard locknuts.

NOTE

Perform Step (2) if insulation or pads are damaged.

(2) Remove insulation (7) and rubber pads (8) from rear noise panel (6).

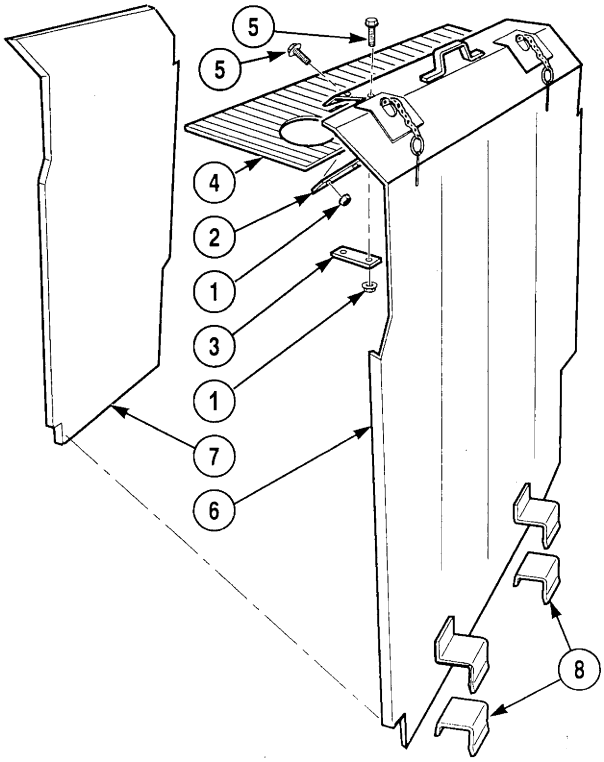

b. Installation.

WARNING

Adhesives, solvents, and sealing compounds can burn easily, can give off harmful vapors, and are harmful to skin and clothing. To avoid injury or death, keep away from open fire and use in well-ventilated area. If adhesive, solvent, or sealing compound gets on skin or clothing, wash immediately with soap and water.

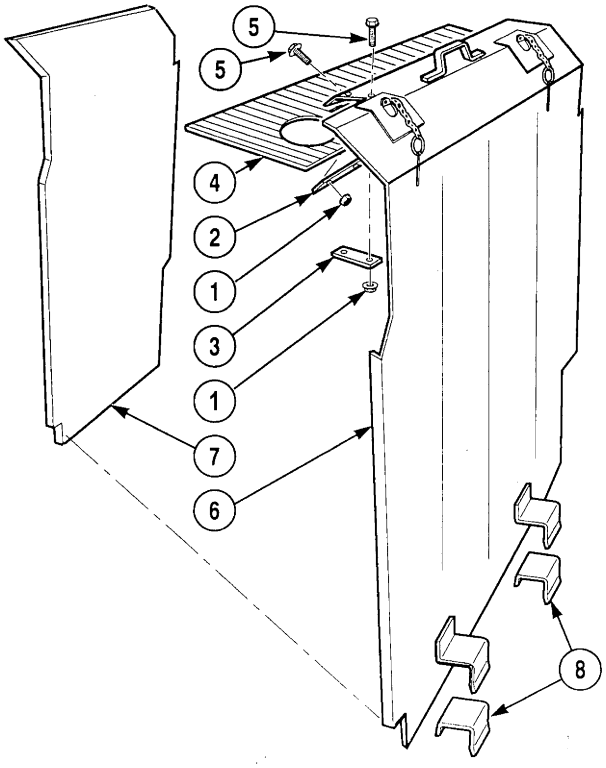

NOTE

- Perform Steps (1) through (4) if insulation or rubber pads were removed.
- Ensure that adhesive is applied to side of insulation that contacts rear panel.

(1) Coat insulation (7) with adhesive.

(2) Position insulation (7) on rear noise panel (6).

(3) Press insulation (7) evenly over entire surface.

(4) Coat one side of rubber pads (8) with adhesive.

(5) Install rubber pads (8) on rear noise panel (6).

(6) Install eight screws (5), rear panel rubber (4), three retaining strips (2) and (3) and eight locknuts (1) on rear noise panel (6).

c. Follow-On Maintenance:

- Install rear noise panel, (Para 17-29).
- Remove wheel chocks, (TM 9-2320-364-10).

END OF TASK

17-31. PEEP WINDOW REPLACEMENT.

This task covers:

a. Removal b. Installation c. Follow-On Maintenance

INITIAL SETUP

Tools and Special Tools
Tool Kit, General Mechanic's: Automotive (Item 74, Appendix G)

Materials/Parts
Adhesive (Item 15, Appendix C)
Primer (Item 64, Appendix C)
Solution, Soap (Item 86, Appendix C)

Materials/Parts - Continued
Channel, Rubber (40 in.) (Item 10, Appendix F)
Lockwasher (2) (Item 171, Appendix F)

Equipment Condition
Engine OFF, (TM 9-2320-364-10)
Wheels chocked, (TM 9-2320-364-10)

a. Removal.

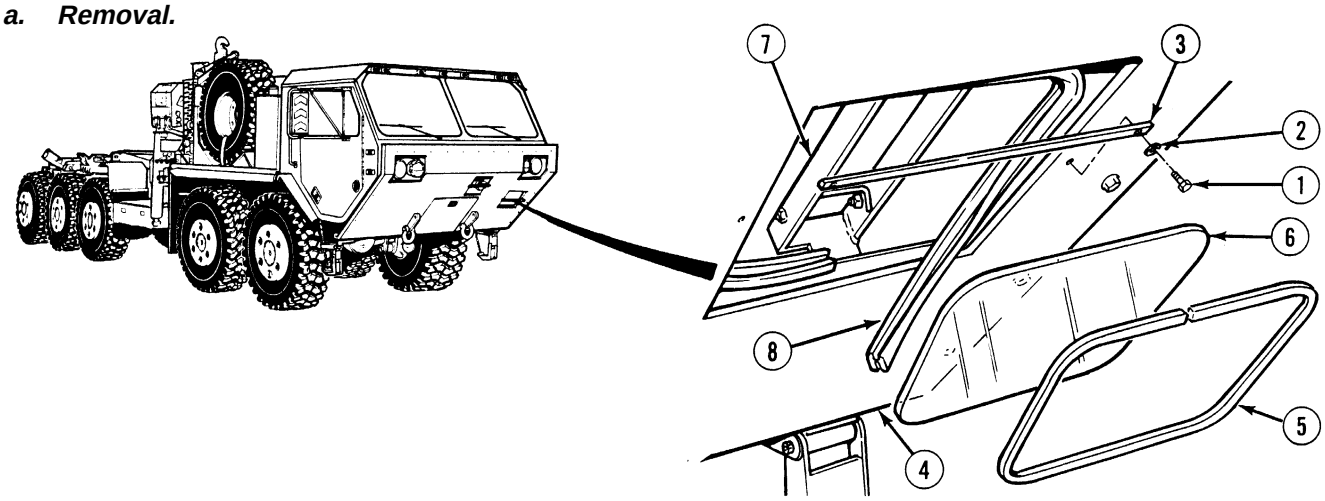

WARNING

Always wear proper eye protection and protective clothing when handling glass. Failure to comply may result in injury to personnel.

(1) Remove two screws (1), lockwashers (2) and bar (3) from skid plate (4). Discard lockwashers.

(2) Remove windshield seal locking strip (5) from peep window (6).

NOTE

Ensure to reach around cab to support peep window when pushing peep window out through cab. Failure to comply may result in damage to parts.

(3) Push peep window (6) out from inside of cab (7).

NOTE

Perform Step (4) if rubber channel is damaged.

(4) Remove and discard rubber channel (8) from cab (7).

b. Installation.

WARNING

Adhesives, solvents, and sealing compounds can burn easily, can give off harmful vapors, and are harmful to skin and clothing. To avoid injury or death, keep away from open fire and use in well-ventilated area. If adhesive, solvent, or sealing compound gets on skin or clothing, wash immediately with soap and water.

NOTE

Perform Steps (1) and (2) if rubber channel was removed.

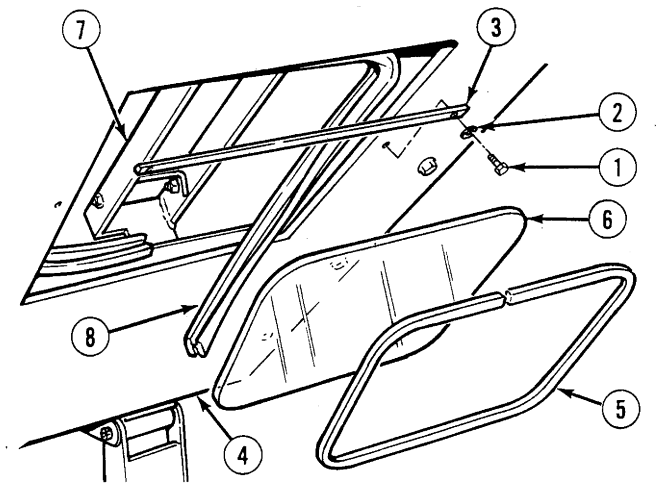

(1) Apply primer to rubber channel ends (8).

(2) Apply adhesive to rubber channel ends (8) and install rubber channel in cab (7).

(3) Apply soap solution to rubber channel (8).

(4) Install peep window (6) in rubber channel (8).

NOTE

Ensure ends of rubber channel are not in same position as ends of windshield seal locking strip or leakage may occur.

(5) Apply soap solution to rubber channel (8) and install windshield seal locking strip (5) over peep window (6) on rubber channel.

(6) Apply primer to ends of windshield seal locking strip (5).

(7) Apply adhesive to ends of windshield seal locking strip (5) and secure in place.

(8) Install bar (3) on skid plate (4) with two lockwashers (2) and screws (1).

c. Follow-On Maintenance:

- Remove wheel chocks, (TM 9-2320-364-10).

END OF TASK

17-32. RUBBER FENDER EDGING REPLACEMENT.

This task covers:

a. Removal b. Installation c. Follow-On Maintenance

INITIAL SETUP

Tools and Special Tools
Tool Kit, General Mechanic's: Automotive (Item 74, Appendix G)

Materials/Parts
Locknut (26) (Item 106, Appendix F)

Personnel Required
Two

Equipment Condition
Engine OFF, (TM 9-2320-364-10)
Wheels chocked, (TM 9-2320-364-10)

a. Removal.

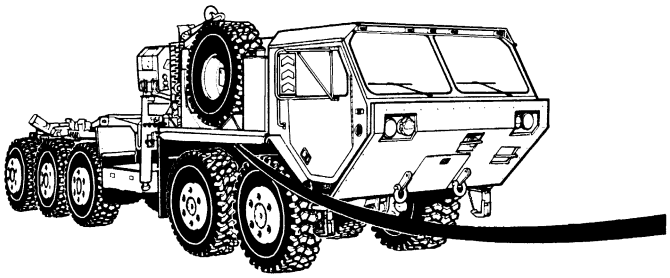

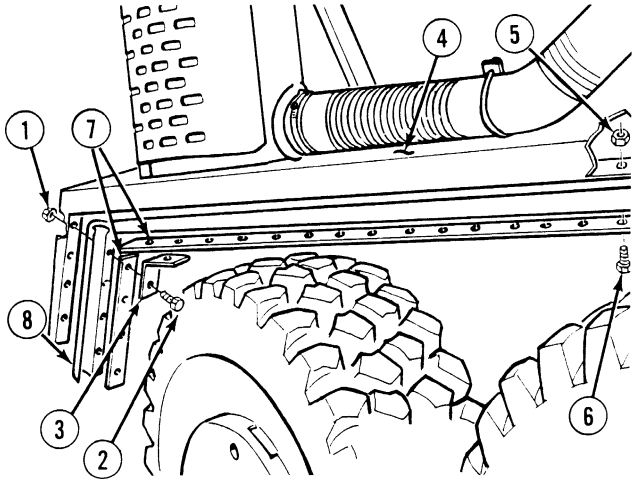

NOTE

Both rubber fender edgings are removed the same way, right side shown.

(1) Remove two locknuts (1), screws (2) and bracket (3) from right fender (4). Discard locknuts.

(2) With the aid of an assistant remove 24 locknuts (5), screws (6), two strips (7), and rubber fender edging (8) from right fender (4). Discard locknuts.

b. Installation.

(1) With the aid of an assistant, position rubber fender edging (8) on right fender (4) with two strips (7) and 24 screws (6) and locknuts (5).

(2) Install bracket (3) on right fender (4) with two screws (2) and locknuts (1).

(3) Tighten 24 locknuts (5) on screws (6).

c. Follow-On Maintenance:

- Remove wheel chocks, (TM 9-2320-364-10).

END OF TASK

17-33. RIGHT FENDER FRONT AND REAR SKIRT REPLACEMENT.

This task covers:

a. Removal b. Installation c. Follow-On Maintenance

INITIAL SETUP

Tools and Special Tools
Tool Kit, General Mechanic's: Automotive (Item 74, Appendix G)

Materials/Parts
Locknut (13) (Item 134, Appendix F)

Equipment Condition
Engine OFF, (TM 9-2320-364-10)
Wheels chocked, (TM 9-2320-364-10)

a. Removal.

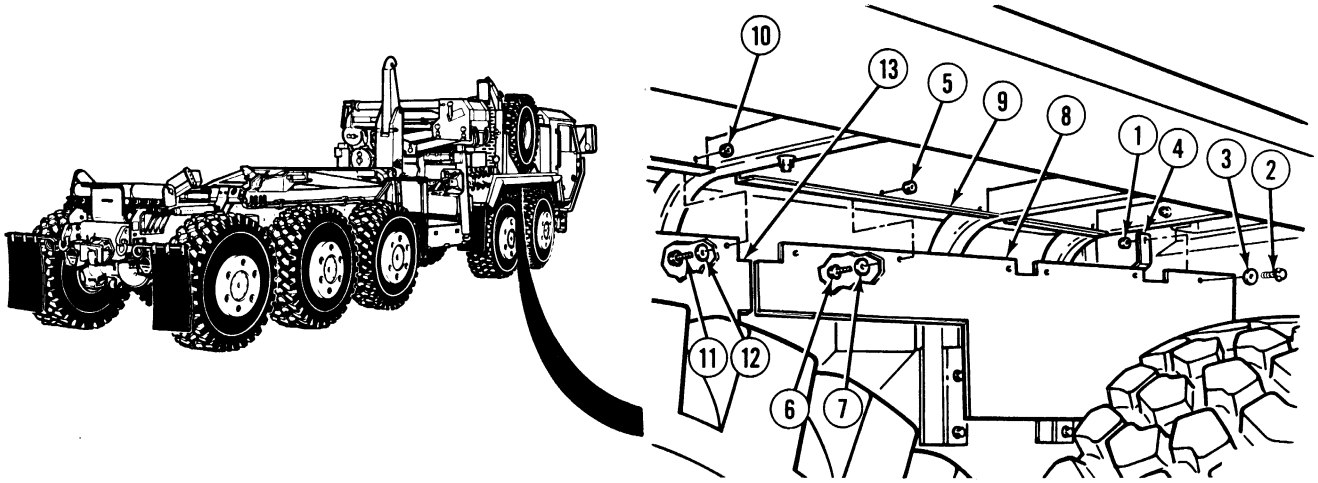

(1) Remove locknut (1), screw (2) and washer (3) from bracket (4). Discard locknut.

(2) Remove five locknuts (5), screws (6), washers (7) and right front fender skirt (8) from right fender (9). Discard lockwashers.

(3) Remove seven locknuts (10), screws (11), washers (12) and right rear fender skirt (13) from right fender (9). Discard locknuts.

17-33. RIGHT FENDER FRONT AND REAR SKIRT REPLACEMENT (CONT).

b. Installation.

(1) Install seven screws (11), washers (12) and right rear fender skirt (13) on right fender (9) with seven locknuts (10). Tighten screws until rubber compresses.

(2) Install five screws (6), washers (7) and right front fender skirt (8) on right fender (9) with five locknuts (5). Tighten screws until rubber compresses.

(3) Install screw (2) and washer (3) on bracket (4) with locknut (1). Tighten screw until rubber compresses.

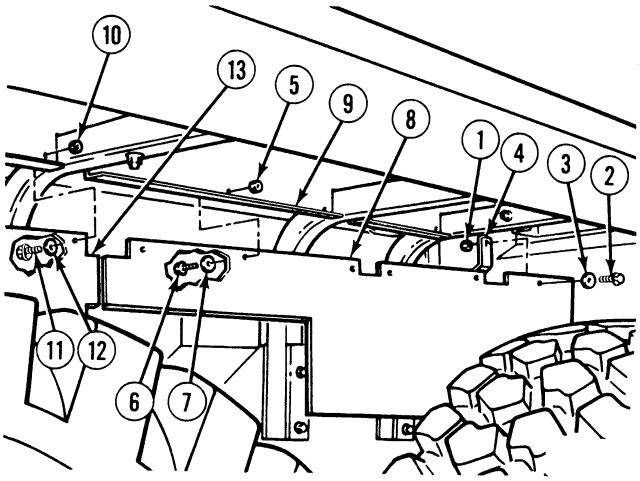

c. Follow-On Maintenance:

- Remove wheel chocks, (TM 9-2320-364-10).

END OF TASK

17-34. LEFT FENDER FRONT AND REAR SKIRT REPLACEMENT.

This task covers:

a. Removal b. Installation c. Follow-On Maintenance

INITIAL SETUP

Tools and Special Tools
Tool Kit, General Mechanic's: Automotive (Item 74, Appendix G)

Materials/Parts
Locknut (5) (Item 95, Appendix F)
Locknut (3) (Item 106, Appendix F)
Locknut (6) (Item 134, Appendix F)

Equipment Condition
Engine OFF, (TM 9-2320-364-10)
Wheels chocked, (TM 9-2320-364-10)

a. Removal.

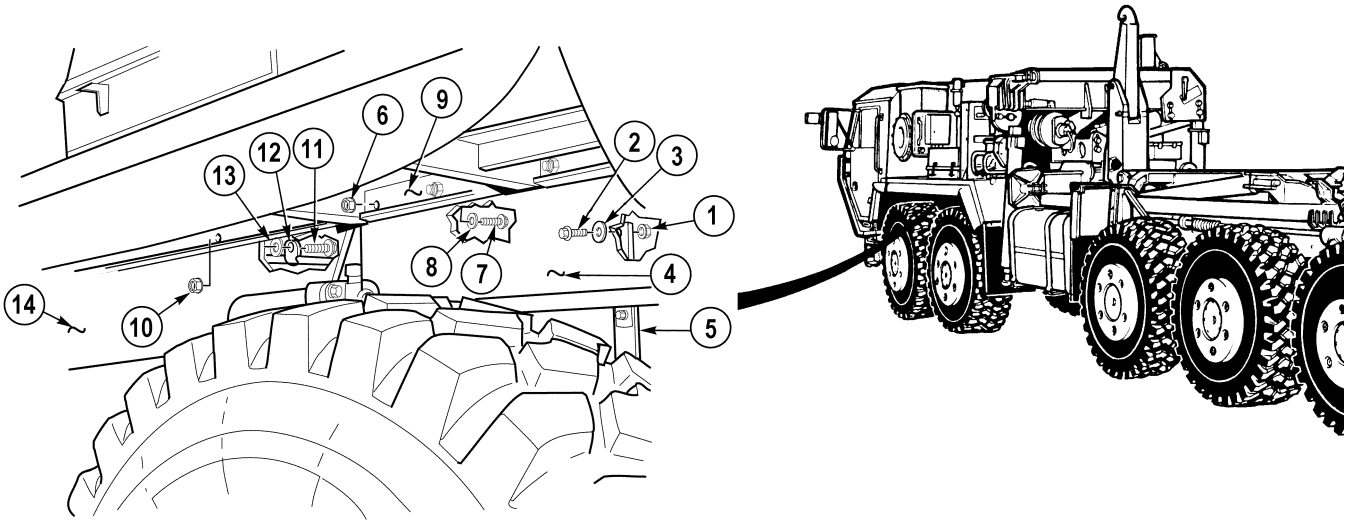

(1) Remove three locknuts (1), screws (2), washers (3) and left rear fender skirt (4) from skirt brackets (5). Discard locknuts.

(2) Remove six locknuts (6), screws (7), and washers (8) from left rear fender skirt (4) and left fender (9). Discard locknuts.

(3) Remove five locknuts (10), screws (11), cushion clips (12) and washers (13) from left front fender skirt (14) and left fender (9). Discard locknuts.

17-34. LEFT FENDER FRONT AND REAR SKIRT REPLACEMENT (CONT).

b. Installation.

(1) Install five screws (11), cushion clips (12), washers (13) and left front fender skirt (14) on left fender (9) with locknuts (10). Tighten screws until rubber compresses.

(2) Install left rear fender skirt (4) on left fender (9) with six screws (7), washers (8) and locknuts (6).

(3) Install left rear fender skirt (4) on three skirt brackets (5) with screws (2), washers (3) and locknuts (1).

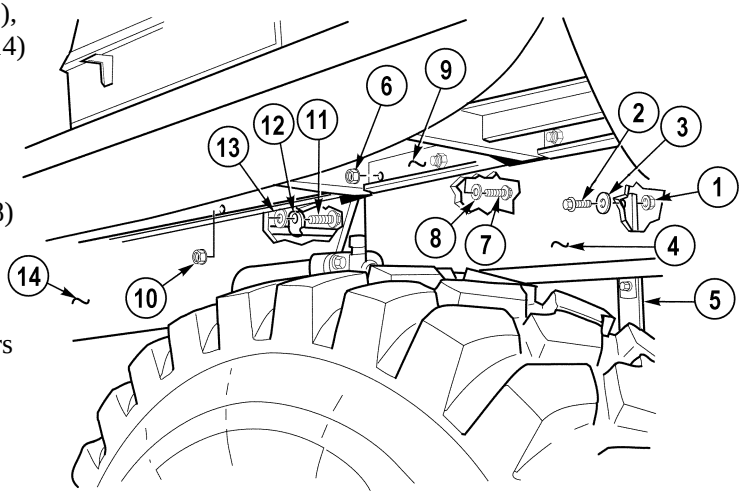

c. Follow-On Maintenance:

- Remove wheel chocks, (TM 9-2320-364-10).

END OF TASK

17-35. REAR FENDER AND FENDER SUPPORT ARM REPLACEMENT.

This task covers:

a. Removal
b. Cleaning/Inspection
c. Installation
d. Follow-On Maintenance

INITIAL SETUP

Tools and Special Tools
Tool Kit, General Mechanic's: Automotive (Item 74, Appendix G)

Materials/Parts
Clip, Push (6) (Item 24, Appendix F)
Locknut (2) (Item 91, Appendix F)
Locknut (4) (Item 106, Appendix F)
Locknut (3) (Item 140, Appendix F)
Screw, Self-Tapping (Item 313, Appendix F)

Personnel Required
Two

Equipment Condition
Engine OFF, (TM 9-2320-364-10)
Wheels chocked, (TM 9-2320-364-10)
Center mud flap removed, (Para 17-38)
Rear fender side marker lamp removed, (Para 7-48)
Rear fender reflector removed, (Para 19-2)

a. Removal.

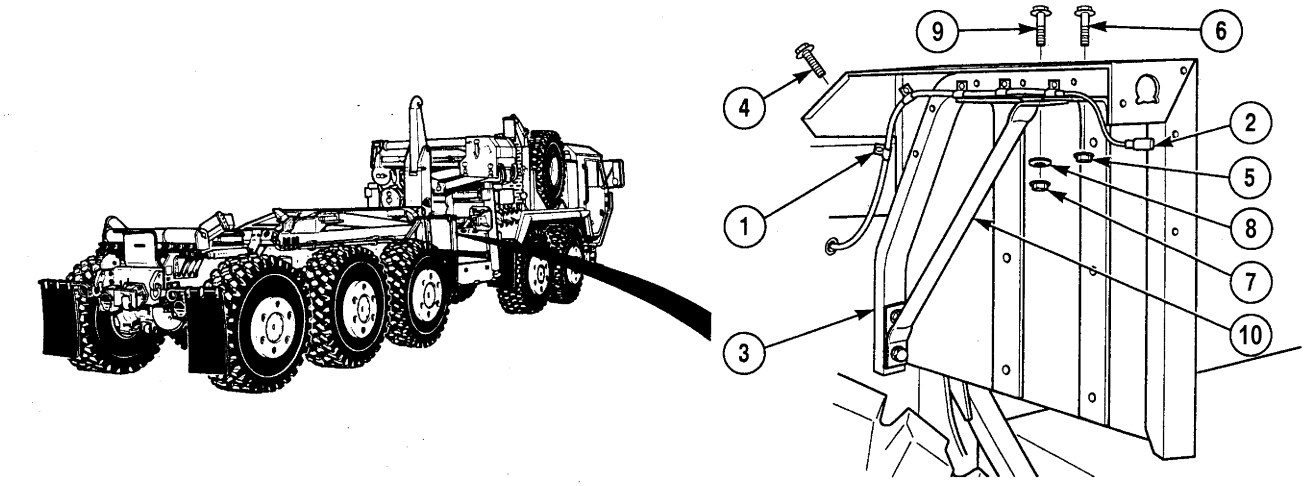

NOTE

Push clips are removed by first pulling out lock button, then removing clip.

(1) Remove six push clips (1) and marker lamp wiring harness (2) from fender support arm (3). Discard push clips.

(2) Remove self-tapping screw (4) from fender support arm (3). Discard self-tapping screw.

(3) Remove two locknuts (5) and screws (6) from fender support arm (3). Discard locknuts.

(4) Remove locknut (7), washer (8) and screw (9) from fender support arm (3) and fender brace (10). Discard locknut.

17-35. REAR FENDER AND FENDER SUPPORT REPLACEMENT (CONT).

(5) Remove rear fender (11) from fender support arm (3).

(6) Remove four locknuts (12), screws (13) and two braces (14) from rear fender (11). Discard locknuts.

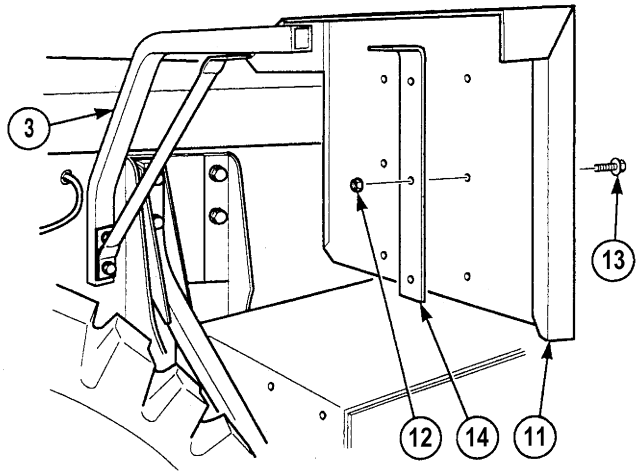

(7) With the aid of an assistant, remove locknut (15), screw (16) and brace (17) from truck frame (18). Discard locknuts.

(8) With the aid of an assistant, remove locknut (19), screw (20), spacer (21) and fender support arm (3) from truck frame (18). Discard locknut.

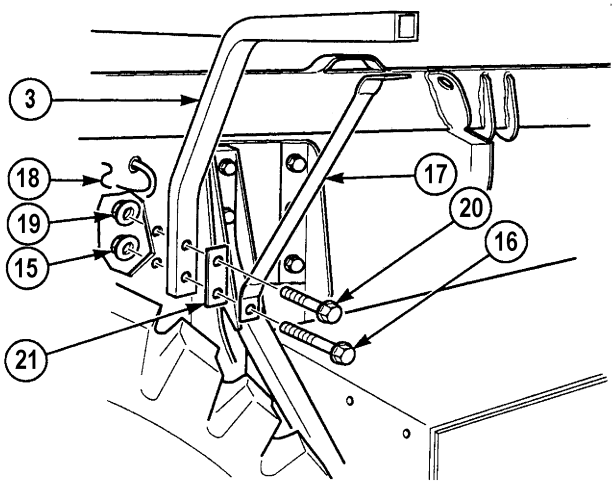

b. Cleaning/Inspection.

(1) Inspect rear fender, fender support arm and fender brace for cracks and broken welds.

(2) Replace all damaged parts.

c. Installation.

(1) With the aid of an assistant, position fender support arm (3), spacer (21), screw (20) and locknut (19) on truck frame (18).

(2) With the aid of an assistant, install brace (17), screw (16) and locknut (15) in truck frame (18).

(3) With the aid of an assistant, tighten locknut (19) on screw (20).

(4) Install two braces (14) on rear fender (11) using four screws (13) and locknuts (12).

(5) Position rear fender (11) on fender support arm (3).

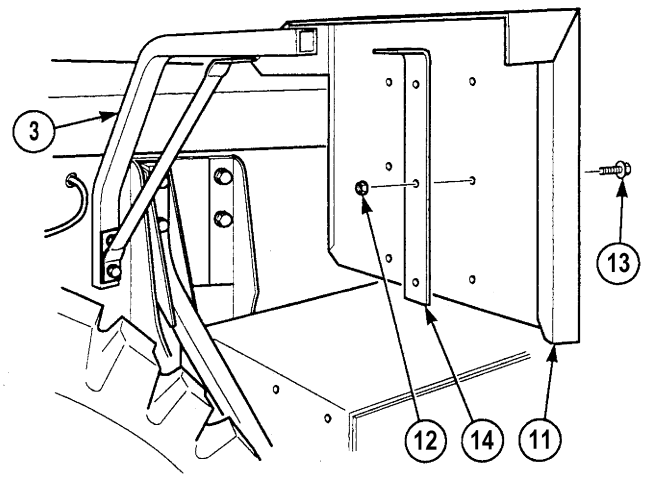

(6) Position screw (9), washer (8) and locknut (7) in fender support arm (3) and fender brace (10).

(7) Install two screws (6) and locknuts (5) in fender support arm (3).

(8) Tighten locknut (7) on screw (9).

(9) Install self-tapping screw (4) in fender support arm (3).

NOTE

Push clips are properly installed when lock button is pushed in after installation.

(10) Install marker lamp wiring harness (2) and six push clips (1) on fender support arm (3).

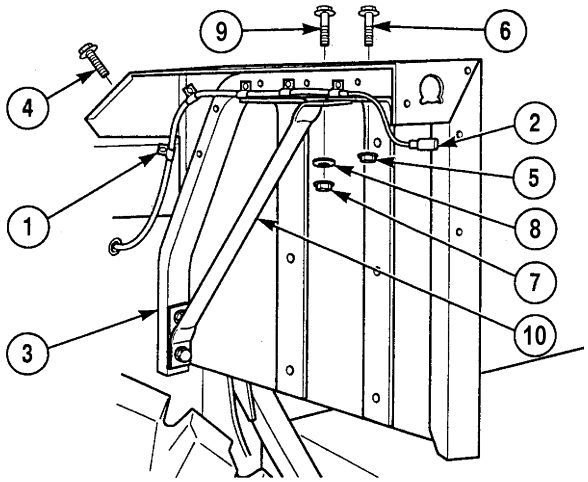

d. Follow-On Maintenance:

- Install rear fender reflector, (Para 19-2).
- Install rear fender side marker lamp, (Para 7-48).
- Install center mud flap, (Para 17-38).
- Remove wheel chocks, (TM 9-2320-364-10).

END OF TASK

17-36. LEFT FRONT MUD FLAP REPLACEMENT.

This task covers:

a. Removal b. Installation c. Follow-On Maintenance

INITIAL SETUP

Tools and Special Tools
Tool Kit, General Mechanic's: Automotive (Item 74, Appendix G)

Materials/Parts
Locknut (9) (Item 133, Appendix F)

Equipment Condition
Engine OFF, (TM 9-2320-364-10)
Wheels chocked, (TM 9-2320-364-10)

a. Removal.

(1) Remove locknut (1), screw (2) and two washers (3), from mud flap (4), rubber flap (5) and mud flap (6). Discard locknut.

(2) Remove two locknuts (7), screws (8) washers (9) and mud flap (4) from mud flap (6). Discard locknuts.

(3) Remove three locknuts (10), washers (11), screws (12) and rubber flap (5) from fender assembly (13). Discard locknuts.

(4) Remove three locknuts (14), screws (15), clamping plate (16) and mud flap (6) from fender assembly (13). Discard locknuts.

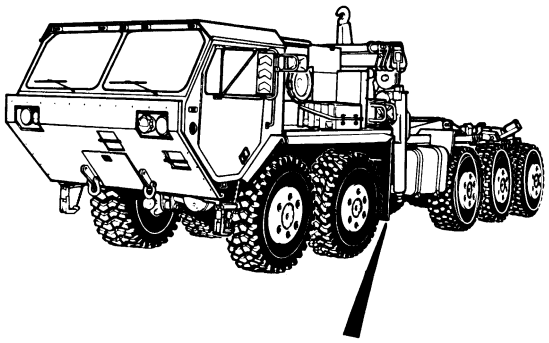

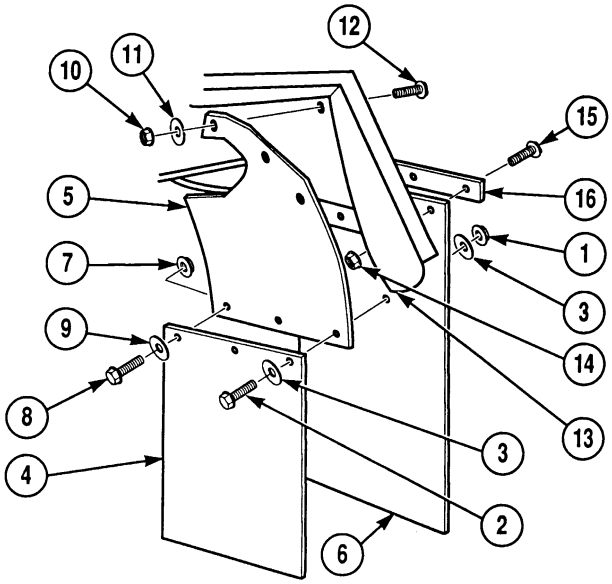

b. Installation.

(1) Install mud flap (6) and clamp plate (16) on fender assembly (13) with three screws (15) and locknuts (14).

(2) Install rubber mud flap (5) with three screws (12), washers (11) and locknuts (10) on fender assembly (13).

(3) Install mud flap (4) with two washers (9), screws (8) and locknuts (7) on rubber flap (5).

(4) Install two washers (3), screw (2) and locknut (1) on mud flap (4), rubber flap (5) and mud flap (6).

c. Follow-On Maintenance:

- Remove wheel chocks, (TM 9-2320-364-10).

END OF TASK

17-37. RIGHT FRONT MUD FLAP REPLACEMENT.

This task covers:

a. Removal b. Installation c. Follow-On Maintenance

INITIAL SETUP

Tools and Special Tools
Tool Kit, General Mechanic's: Automotive (Item 74, Appendix G)

Materials/Parts
Locknut (3) (Item 133, Appendix F)

Equipment Condition
Engine OFF, (TM 9-2320-364-10)
Wheels chocked, (TM 9-2320-364-10)

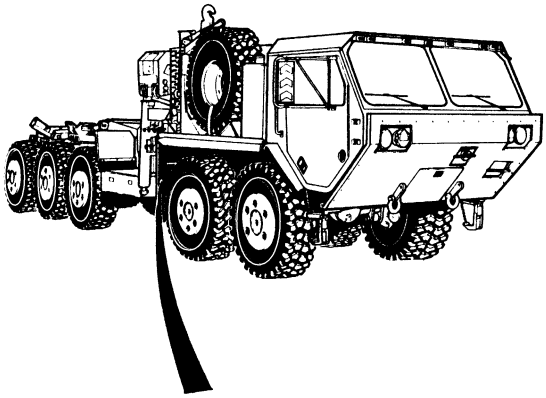

a. Removal. Remove three locknuts (1), screws (2), retaining plate (3) and mud flap (4) from fender (5). Discard locknuts.

b. Installation. Install mud flap (4) on fender (5) with retaining plate (3), screws (2) and locknuts (1).

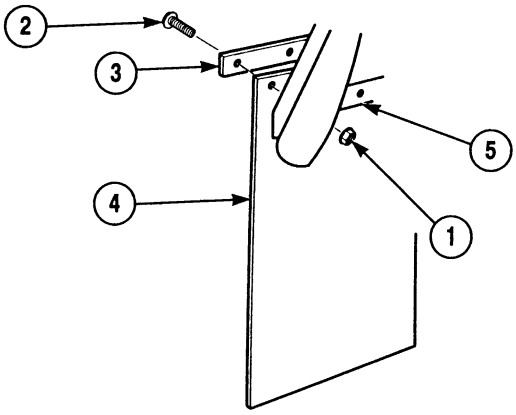

c. Follow-On Maintenance:

- Remove wheel chocks, (TM 9-2320-364-10).

END OF TASK

17-38. CENTER MUD FLAP REPLACEMENT.

This task covers:

a. Removal b. Installation c. Follow-On Maintenance

INITIAL SETUP

Tools and Special Tools
Tool Kit, General Mechanic's: Automotive (Item 74, Appendix G)

Materials/Parts
Locknut (3) (Item 133, Appendix F)

Equipment Condition
Engine OFF, (TM 9-2320-364-10)
Wheels chocked, (TM 9-2320-364-10)

NOTE

Procedures are identical for both sides of truck. Left side shown.

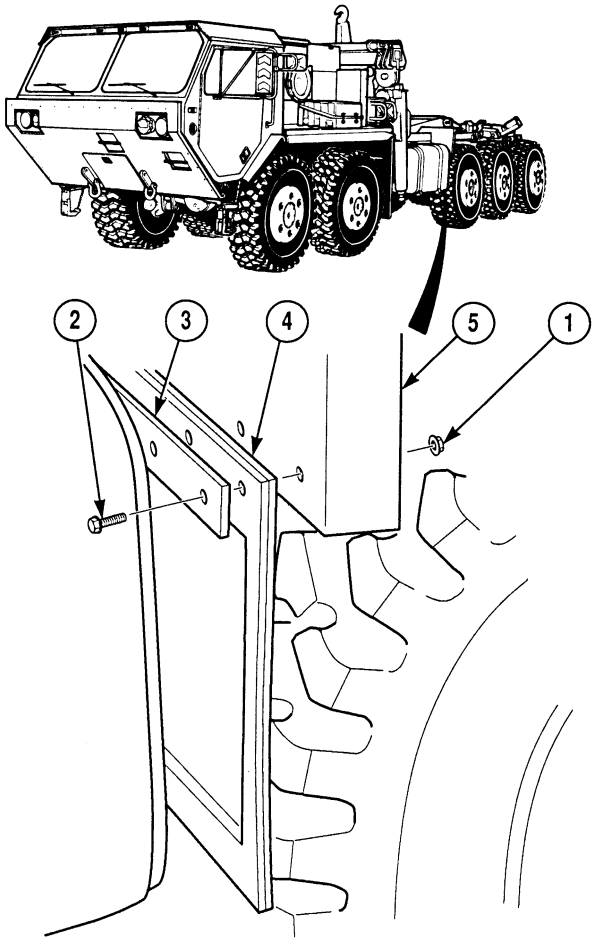

a. Removal. Remove three locknuts (1), screws (2), clamping plate (3) and mud flap (4) from fender assembly (5). Discard locknuts.

b. Installation. Install mud flap (4) on fender assembly (5) with clamping plate (3), three screws (2) and locknuts (1).

c. Follow-On Maintenance:

- Remove wheel chocks, (TM 9-2320-364-10).

END OF TASK

17-39. REAR SPLASH GUARD (MUD FLAP)/REFLECTOR/ SPRING BAR REPLACEMENT.

This task covers:

a. Removal b. Installation c. Follow-On Maintenance

INITIAL SETUP

Tools and Special Tools
Tool Kit, General Mechanic's: Automotive (Item 74, Appendix G)
Socket Set 3/4 in. (Item 61, Appendix G)

Materials/Parts
Locknut (4) (Item 91, Appendix F)
Locknut (2) (Item 93, Appendix F)
Locknut (6) (Item 106, Appendix F)

Materials/Parts - Continued
Locknut (Item 133, Appendix F)
Pin, Cotter (Item 276, Appendix F)

Equipment Condition
Engine OFF, (TM 9-2320-364-10)
Wheels chocked, (TM 9-2320-364-10)

a. Removal.

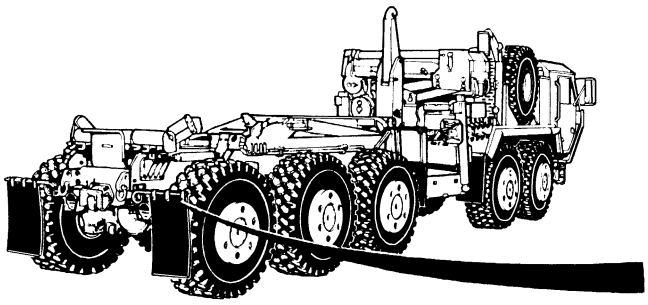

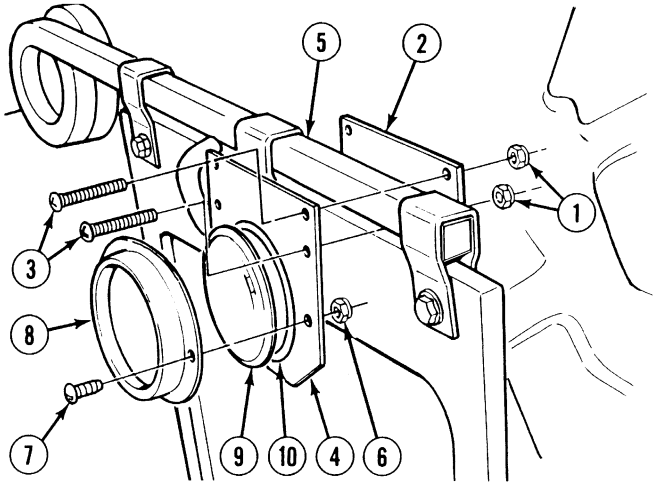

NOTE

- Both right and left splash guard/reflector are removed the same way.
- Right side shown.

(1) Remove four locknuts (1), plate (2), four screws (3) and bracket (4) from spring bar (5). Discard locknuts.

(2) Remove two locknuts (6), screws (7), reflector housing (8), reflector (9) and gasket (10) from bracket (4). Discard locknuts.

17-39. REAR SPLASH GUARD (MUD FLAP)/REFLECTOR/SPRING BAR REPLACEMENT (CONT).

(3) Remove locknut (11) and splash guard hook (12) from clip (13). Discard locknut.

(4) Remove two locknuts (14), two screws (15), three clips (13) and splash guard (16) from spring bar (5). Discard locknuts.

(5) Remove two locknuts (17), screw (18) and two splash guard strips (19) from splash guard (16). Discard locknuts.

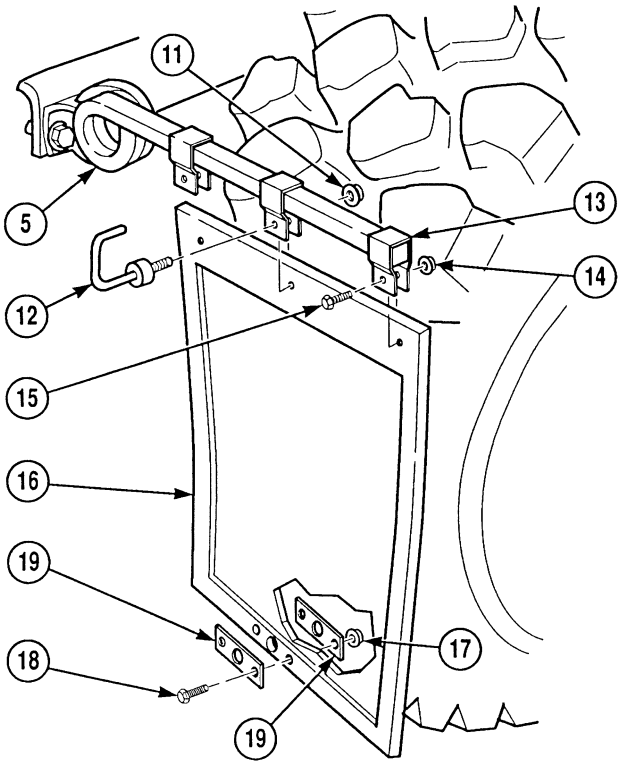

(6) Remove cotter pin (20) and spring bar (5) from mounting bracket (21). Discard cotter pin.

(7) Remove two locknuts (22), screws (23) and mounting bracket (21) from splash guard mounting bracket (24). Discard locknuts.

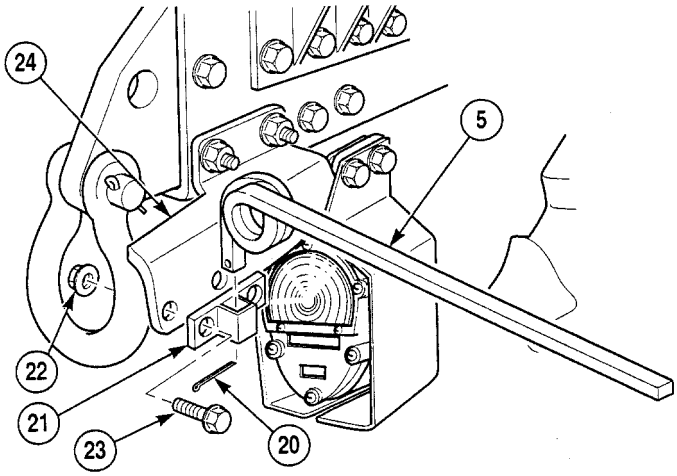

(8) Remove two locknuts (25), screws (26) and lower composite light mounting bracket (27) from splash guard mounting bracket (24). Discard locknuts.

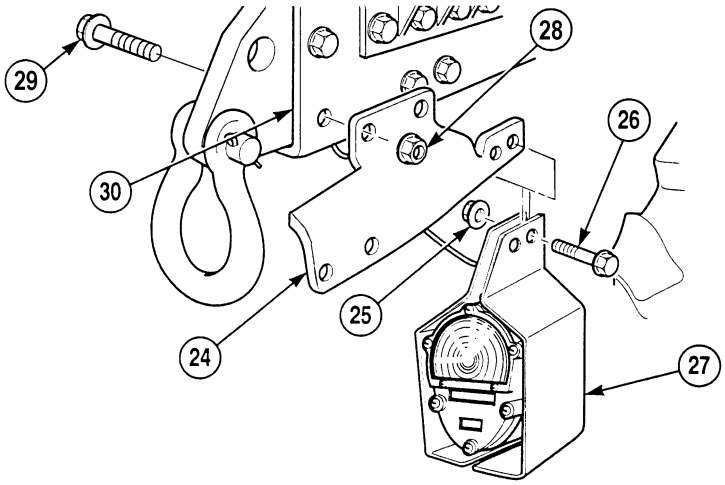

NOTE

- Perform Step (9) if truck is not equipped with CHU.
- Perform Step (10) if truck is equipped with CHU.

(9) Remove two locknuts (28), screws (29) and splash guard mounting bracket (24) from rear crossmember (30). Discard locknuts.

(10) Remove two locknuts (31), screws (32), spacer (33) and splash guard mounting bracket (24) from rear crossmember (30). Discard locknuts.

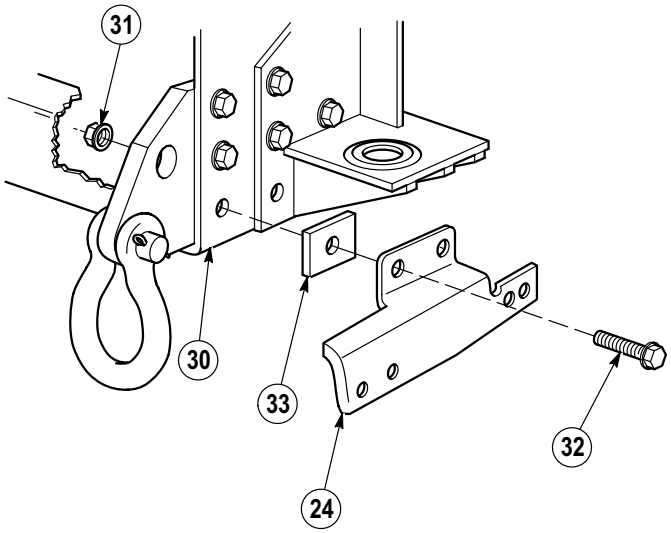

b. Installation.

NOTE

- Perform Step (1) if truck is equipped with CHU.
- Perform Step (2) if truck is not equipped with CHU.

(1) Install splash guard mounting bracket (24) and spacer (33) with two locknuts (31) and screws (32) to rear crossmember (30).

(2) Install splash guard mounting bracket (24) with two locknuts (28) and screws (29) to rear crossmember (30).

(3) Install composite light mounting bracket (27) with two screws (26) and locknuts (25) to splash guard mounting bracket (24).

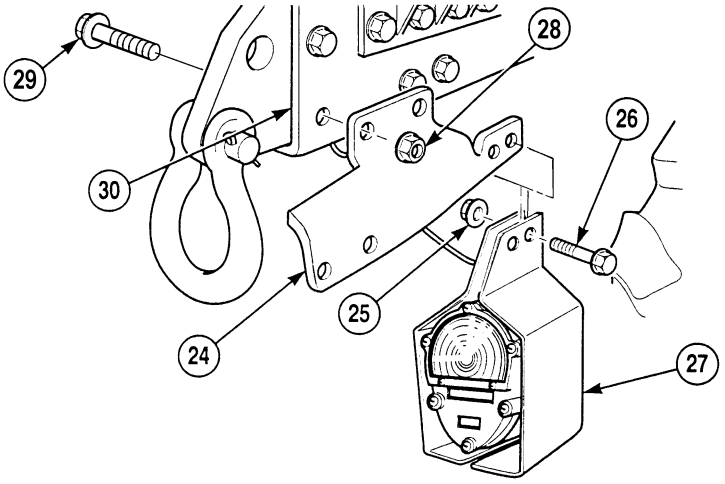

17-39. REAR SPLASH GUARD (MUD FLAP)/REFLECTOR/SPRING BAR REPLACEMENT (CONT).

(4) Install mounting bracket (21) with two screws (23) and locknuts (22) on splash guard mounting bracket (24).

(5) Install spring bar (5) with cotter pin (20) to mounting bracket (21).

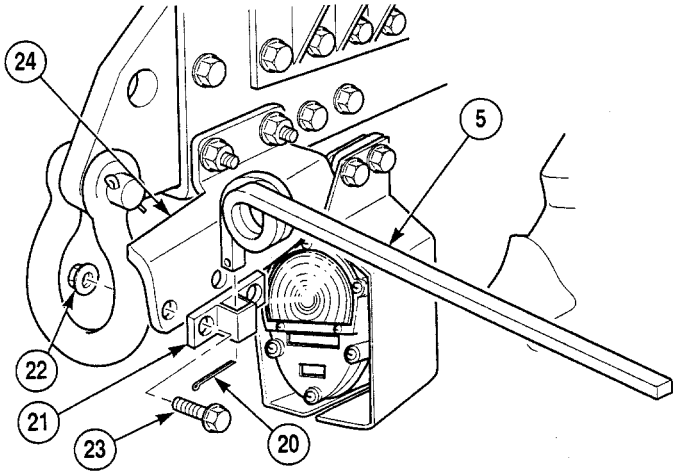

(6) Install two splash guard strips (19) with two screws (18) and locknuts (17) to splash guard (16).

(7) Install splash guard (16), three clips (13), two screws (15) and locknuts (14) to spring bar (5).

(8) Install splash guard hook (12) with locknut (11) to clip (13).

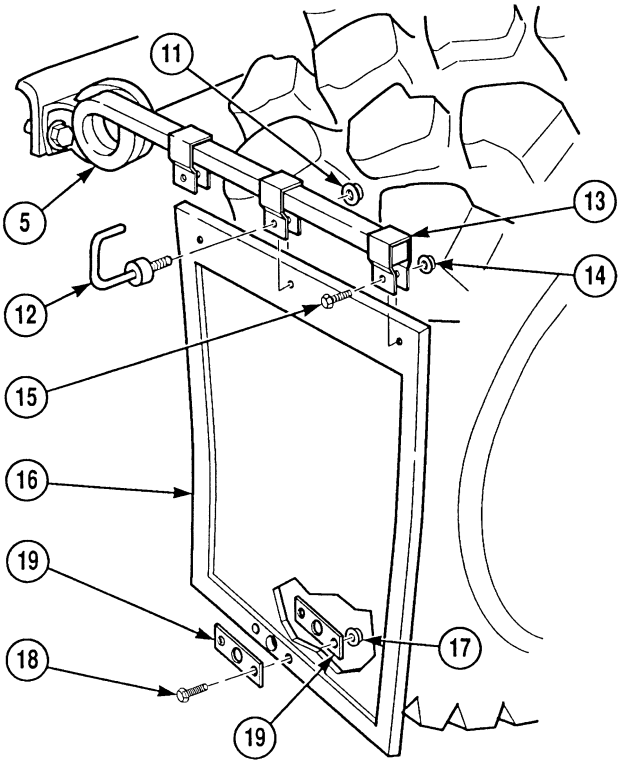

(9) Install gasket (10), reflector (9), reflector housing (8), two screws (7) and locknuts (6) to bracket (4).

(10) Install bracket (4), four screws (3), plate (2) and locknuts (1) to spring bar (5).

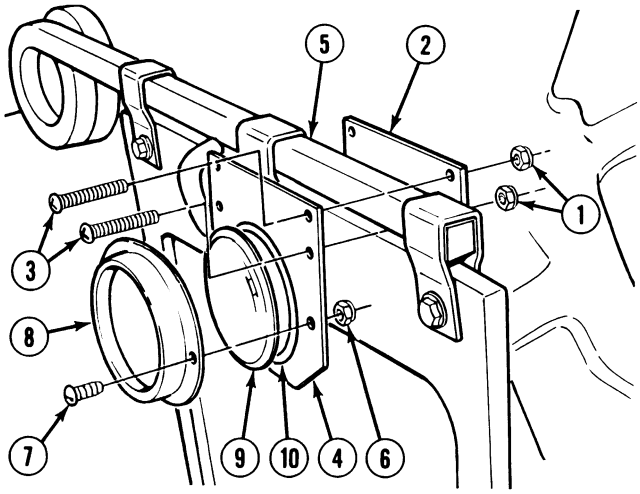

c. Follow-On Maintenance:

- Remove wheel chocks, (TM 9-2320-364-10).

END OF TASK

17-40. CAB SEAT REPAIR.

This task covers:

a. Removal
b. Disassembly
c. Cleaning/Inspection
d. Assembly
e. Installation
f. Follow-On Maintenance

INITIAL SETUP

Tools and Special Tools
Tool Kit, General Mechanic's: Automotive (Item 74, Appendix G)
Socket Set, 3/8 in. (Item 62, Appendix G)

Materials/Parts
Cloth, Cleaning (Item 31, Appendix C)
Solution, Soap (Item 86, Appendix C)
Locknut (4) (Item 128, Appendix F)
Locknut (2) (Item 132, Appendix F)

Materials/Parts - Continued
Lockwasher (3) (Item 170, Appendix F)

Personnel Required
Two

Equipment Condition
Engine OFF, (TM 9-2320-364-10)
Wheels chocked, (TM 9-2320-364-10)

a. Removal

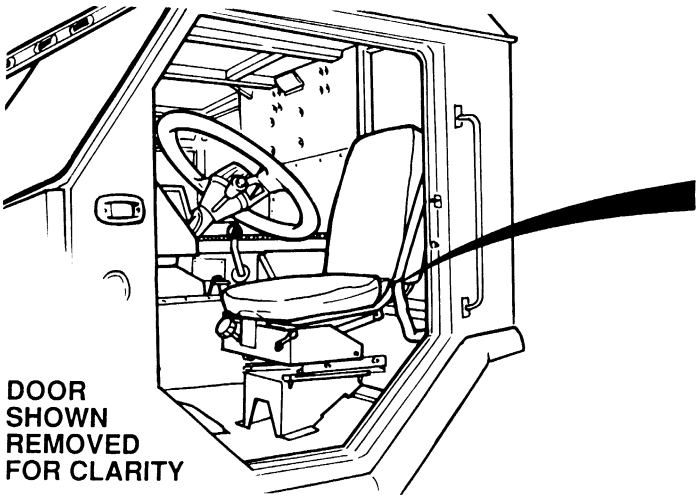

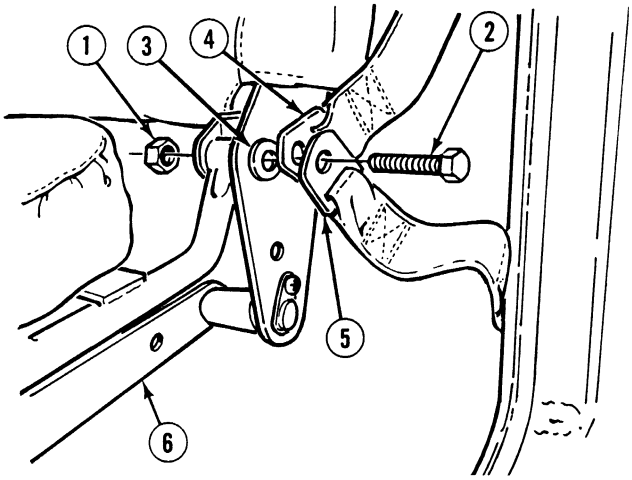

NOTE

Procedure is identical for both seats. Left seat is shown.

(1) Remove locknut (1), screw (2), washer (3), seat belt bracket (4) and tether bracket (5) from seat assembly (6). Discard locknut.

NOTE

Bushing may fall from seat assembly during removal.

(2) Remove locknut (7), screw (8), washers (9), seat belt (10) and tether bracket (11) from seat assembly (6). Discard locknut.

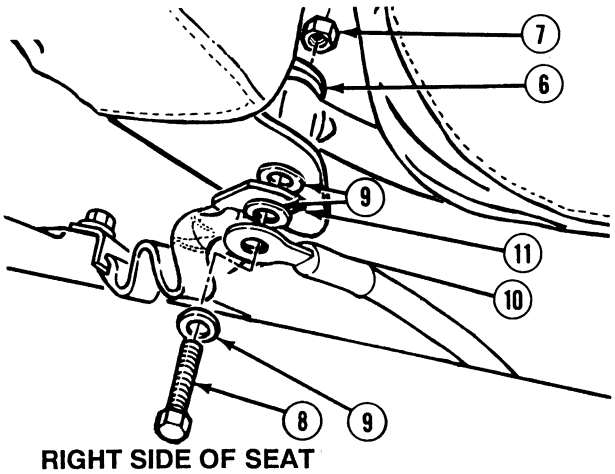

WARNING

Seat assembly weighs 55 lbs (25 kg). Attach suitable lifting device to prevent possible injury to personnel.

(3) Remove four nuts (12) from studs (13) and with the aid of an assistant, guide seat assembly (6) away from seat support (14) and cab assembly (15).

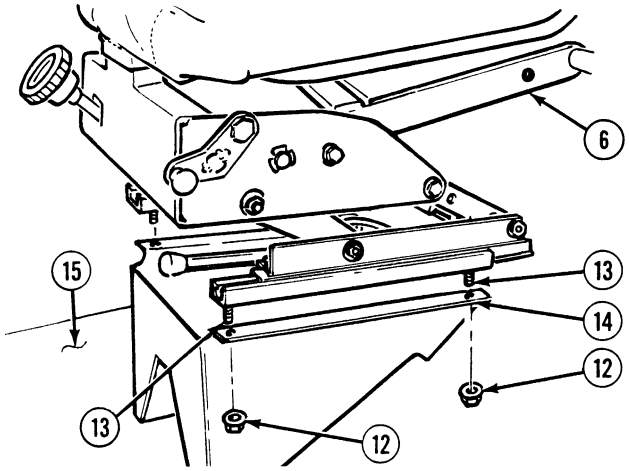

17-40. CAB SEAT REPAIR (CONT).

b. Disassembly.

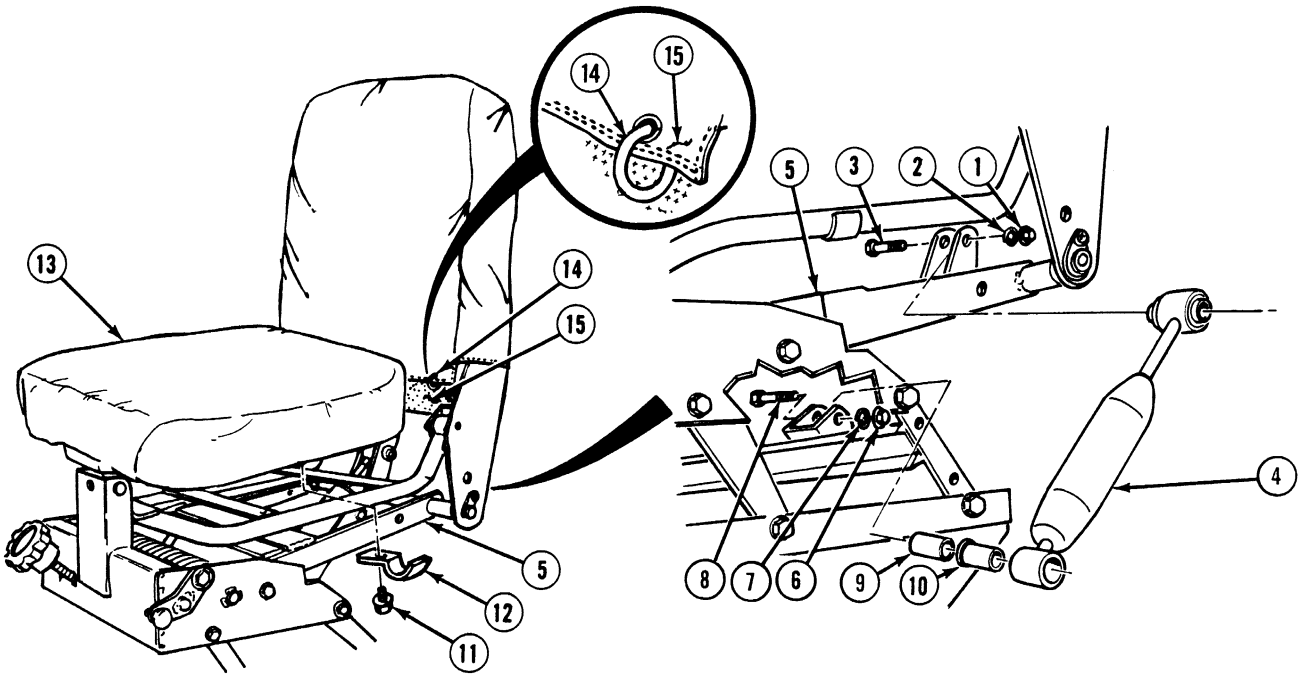

(1) Remove nut (1), lockwasher (2) and screw (3) from shock absorber (4) and seat assembly (5). Discard lockwasher.

(2) Remove nut (6), lockwasher (7), screw (8) and shock absorber (4) from seat assembly (5). Discard lockwasher.

(3) Remove bushing (9) and spacer (10) from shock absorber (4).

(4) Remove two screws (11), clips (12) and seat cushion (13) from seat assembly (5).

(5) Remove five hooks (14) and seat cover (15) from seat assembly (5).

(6) Remove spring (16) from seat assembly (5).

NOTE

Record position of torsion springs prior to disassembly.

(7) Remove four locknuts (17), screws (18), right torsion spring (19), left torsion spring (20) and slide assembly (21) from seat assembly (5). Discard locknuts.

(8) Loosen jam nut (22) on rod (23).

(9) Remove knob (24) from rod (23).

c. Cleaning/Inspection.

(1) Clean seat cover using soap solution.

(2) Wipe all parts with clean cloth.

(3) Allow all parts to air dry.

(4) Inspect parts for damage, wear and cracks.

(5) Replace all defective parts.

d. Assembly.

CAUTION

Improper installation of springs will damage seat assembly. Care must be taken to ensure proper installation.

(1) Install knob (24) on rod (23).

(2) Tighten jam nut (22) on rod (23).

(3) With the aid of an assistant, install slide assembly (21), left torsion spring (19) and right torsion spring (20) on seat assembly (5) with four screws (18) and locknuts (17).

(4) Install spring (16) on seat assembly (5).

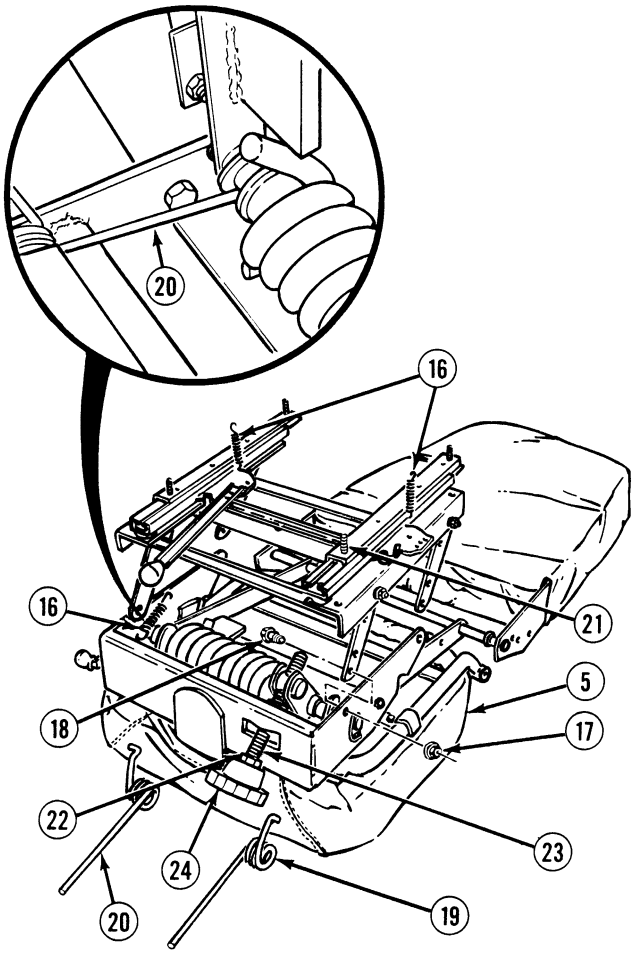

17-40. CAB SEAT REPAIR (CONT).

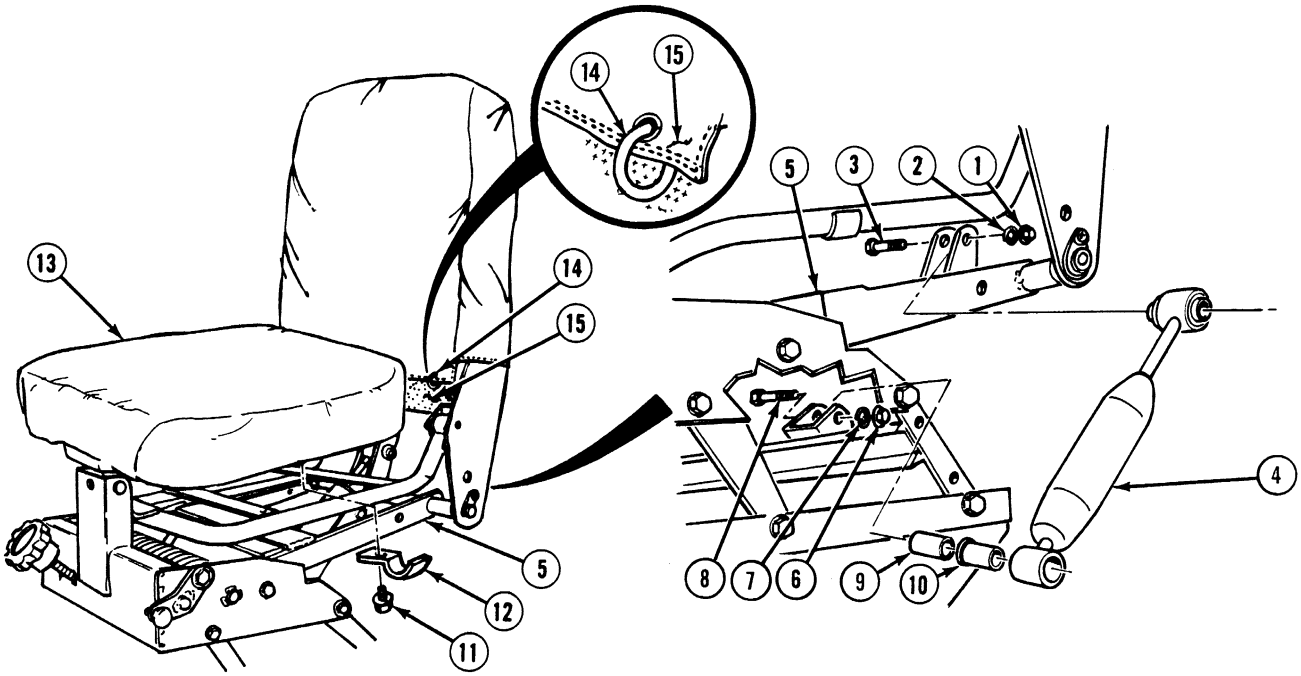

(5) Install seat cover (15) on seat assembly (5) with six hooks (14).

(6) Install seat cushion (13) on seat assembly (5) with two clips (12) and screws (11).

(7) Intall spacer (10) and bushing (9) into shock absorber (4).

(8) Install shock absorber (4) on seat assembly (5) with screw (8), lockwasher (7), nut (6), screw (3), lockwasher (2) and nut (1).

e. Installation.

WARNING

Seat assembly weighs 55 lbs (25 kg). Attach suitable lifting device to prevent possible injury to personnel.

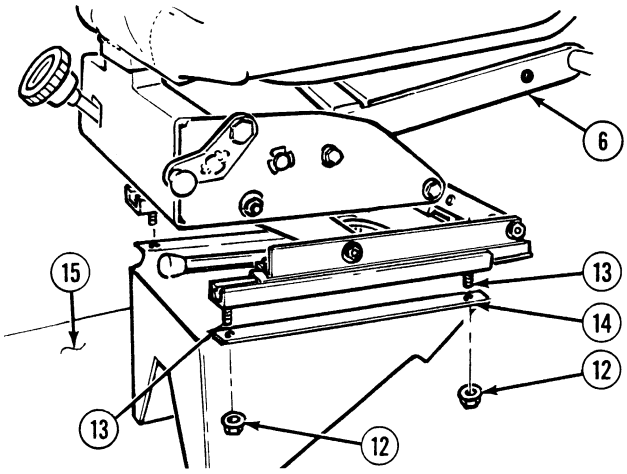

(1) With the aid of an assistant, guide seat assembly (6) onto seat support (14) in cab assembly (15).

(2) Install guide seat assembly (6) on studs (13) with nuts (12).

NOTE

- Only tighten locknut until seat belt bracket can slowly rotate.
- Ensure bushing is positioned in seat assembly before installation.

(3) Install seat belt (10) and tether bracket (11) on seat assembly (6) with washer (9), screw (8) and locknut (7).

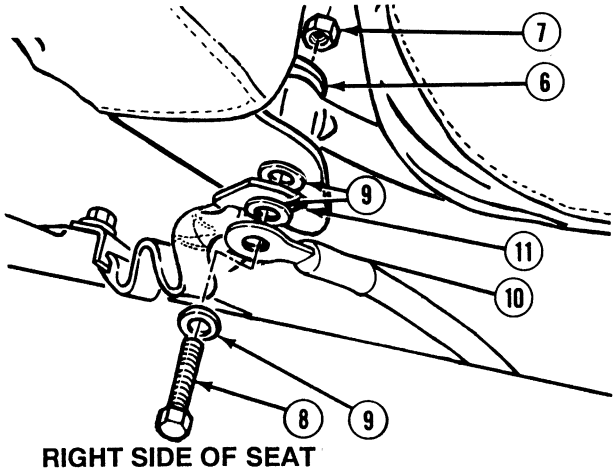

NOTE

Tighten locknut until seat belt bracket can slowly rotate.

(4) Install tether bracket (5) and seat belt bracket (4) on seat assembly (6) with washer (3), screw (2) and locknut (1).

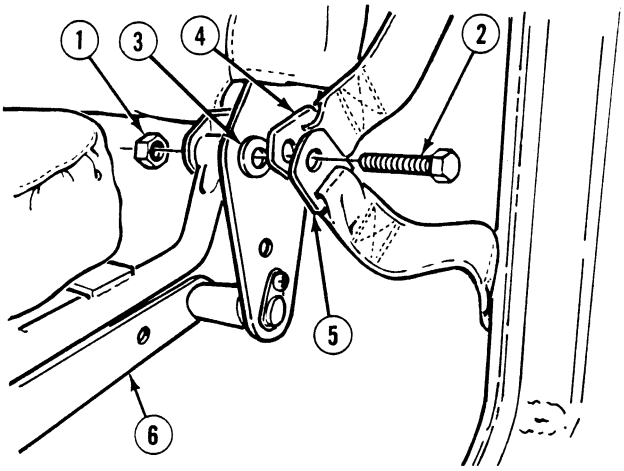

f. Follow-On Maintenance:

- Check cab seat lock alignment, (Para 17-41).
- Remove wheel chocks, (TM 9-2320-363-10).

END OF TASK

17-41. CAB SEAT LOCK ALIGNMENT PROCEDURE.

This task covers:

a. Alignment

b. Follow-On Maintenance

INITIAL SETUP

Tools and Special Tools
Tool Kit, General Mechanics: Automotive (Item 74, Appendix G)
Hammer, Hand, Soft Plastic (Item 33, Appendix G)
Socket Set 3/8 in. (Item 62, Appendix G)

Materials/Parts
Locknut (4) (Item 133, Appendix F)
Washer (AR) (Item 347, Appendix F)

Equipment Condition
Engine Off (TM 9-2320-364-10)
Wheels Chocked (TM 9-2320-364-10)

a. Alignment.

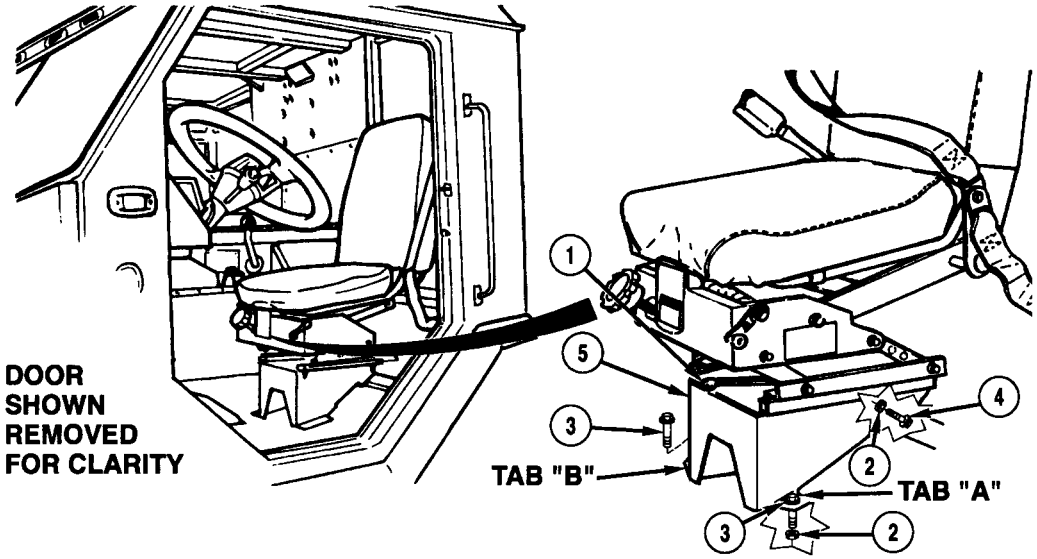

(1) Push seat lock lever (1) towards drivers cab door to release seat lock. Move seat forward or backward.

NOTE

- If seat locks upon release of seat lock lever (1) alignment is not needed.
- If seat does not lock upon release of seat lock lever (1). Perform Steps (3) through (9).

(2) Release seat lock lever (1).

(3) Remove four locknuts (2), from two screws (3) and screws (4). Discard locknuts.

(4) Using a soft faced hammer, tap the front of seat support (5).

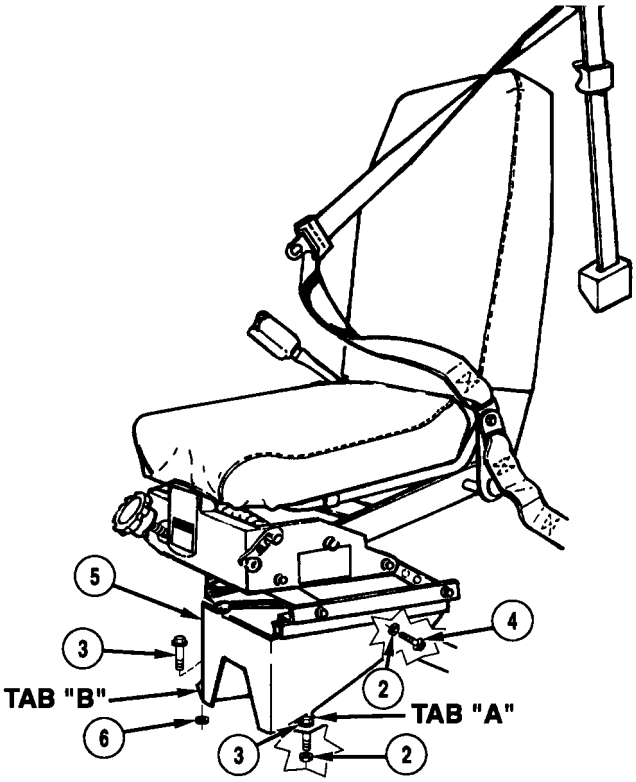

(5) Install three locknuts (2) on two screws (4) and screw (3) on tab A.

(6) Measure distance between tab B and cab floor.

NOTE

- If distance measured in Step (6) is less than 1/16 in (1.6 mm) proceed to Step (9).
- Number of washers used in Step (8) may vary depending on size of gap between tab B and cab floor.

(7) Remove screw (3) from tab B side of seat support (5).

(8) Position washer(s) (6) between tab B and cab floor.

(9) Position screw (3) in tab B of seat support (5), and install locknut (2).

b. Follow-On Maintenance.

- Remove wheel chocks (TM9-2320-364-10).

END OF TASK

17-42. CAB SEAT SUPPORT REPLACEMENT.

This task covers:

a. Removal b. Installation c. Follow-On Maintenance

INITIAL SETUP

Tools and Special Tools
Tool Kit, General Mechanic's: Automotive (Item 74, Appendix G)
Socket Set, 3/8 in. (Item 62, Appendix G)

Materials/Parts
Locknut (4) (Item 133, Appendix F)

Equipment Condition
Engine OFF, (TM 9-2320-364-10)
Wheels chocked, (TM 9-2320-364-10)
Cab seat removed, (Para 17-40)

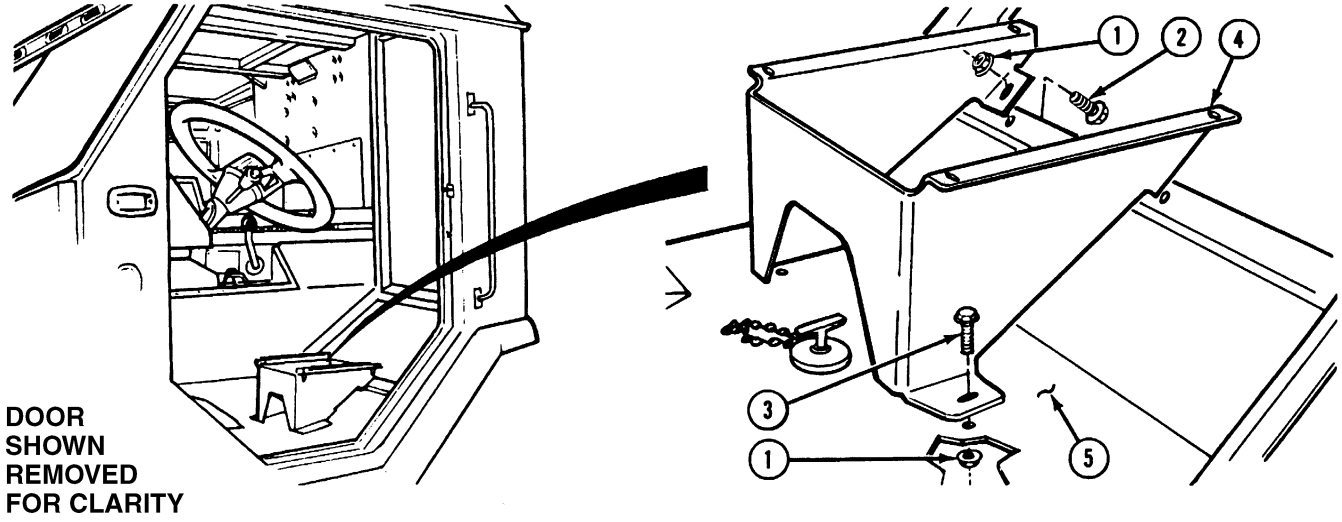

a. Removal. Remove four locknuts (1), two screws (2), screws (3) and seat support (4) from cab assembly (5). Discard locknuts.

b. Installation. Install seat support (4) in cab assembly (5) with two screws (3), screws (2) and four locknuts (1).

c. Follow-On Maintenance:

- Install cab seat, (Para 17-40).
- Remove wheel chocks, (TM 9-2320-364-10).

END OF TASK

17-43. CARGO NET REPLACEMENT.

This task covers:

a. Removal b. Installation c. Follow-On Maintenance

INITIAL SETUP

Tools and Special Tools
Tool Kit, General Mechanic's: Automotive (Item 74, Appendix G)

Equipment Condition
Engine OFF, (TM 9-2320-364-10)
Wheels chocked, (TM 9-2320-364-10)
Seat moved to forward position, (TM 9-2320-364-10)

NOTE

Right and left side cargo nets are removed and installed the same way. Right side shown.

a. Removal. Remove 15 screws (1) and cargo net (2) from cab shell (3).

b. Installation. Install cargo net (2) on cab shell (3) with 15 screws (1).

c. Follow-On Maintenance:

- Remove wheel chocks, (TM 9-2320-364-10).

END OF TASK

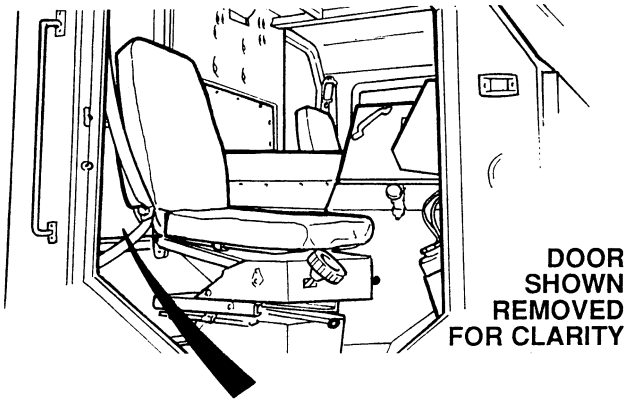

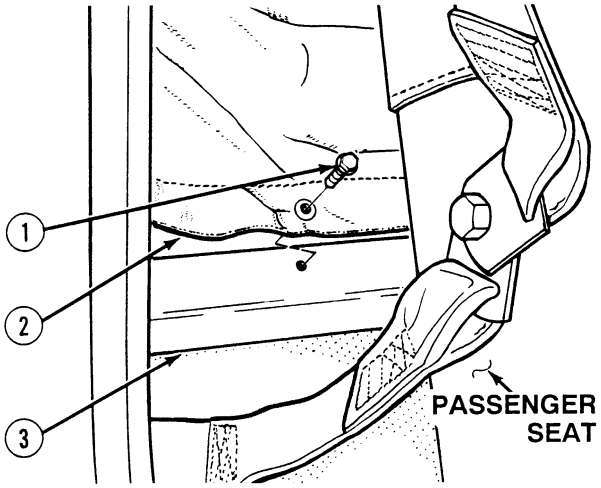

17-44. SEAT BELT REPLACEMENT.

This task covers:

a Removal b. Installation c. Follow-On Maintenance

INITIAL SETUP

Tools and Special Tools
Tool Kit, General Mechanic's: Automotive (Item 74, Appendix G)
Socket Set, 3/8 in. (Item 62, Appendix G)
Wrench, Torque (0 to 175 lb-ft [0-237 N·m]) (Item 95, Appendix G)

Materials/Parts
Locknut (4) (Item 128, Appendix F)
Lockwasher (3) (Item 170, Appendix F)

Equipment Condition
Engine OFF, (TM 9-2320-364-10)
Wheels chocked, (TM 9-2320-364-10)

a. Removal.

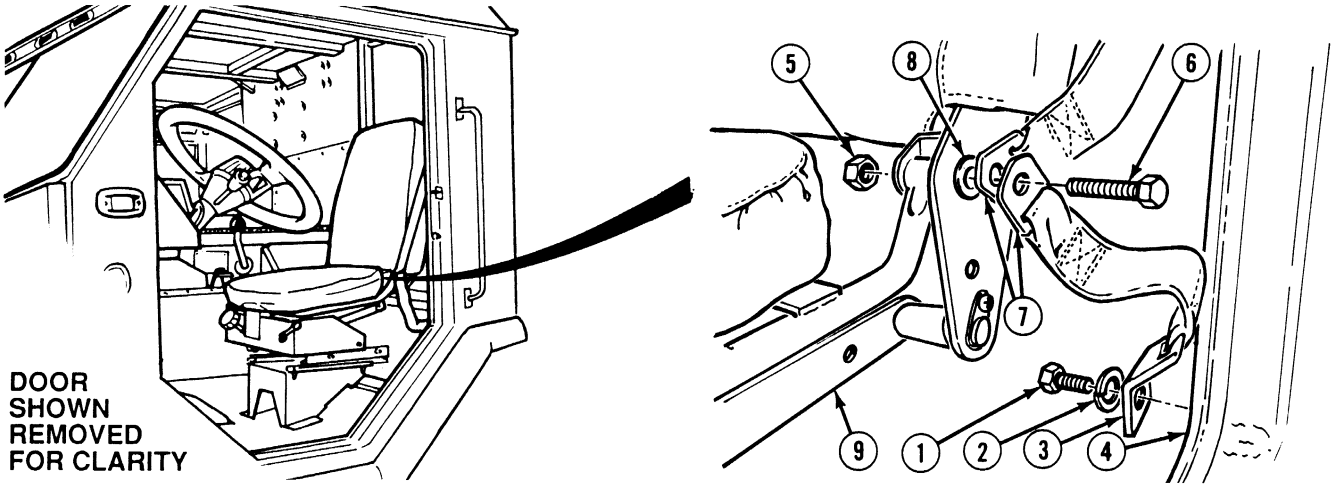

NOTE

Both seat belts are removed the same way. Left seat is shown.

(1) Remove screw (1), lockwasher (2) and angled bracket (3) from cab assembly (4). Discard lockwasher.

(2) Remove locknut (5), screw (6), two straps (7) and washer (8) from seat assembly (9). Discard locknut.

(3) Remove screw (10), lockwasher (11) and angled bracket (12) from cab assembly (4). Discard lockwasher.

(4) Remove locknut (13), screw (14), hardened washer (15), seat belt bracket (16), hardened washer (17), tether bracket (18) and washer (19) from seat assembly (9). Discard locknut.

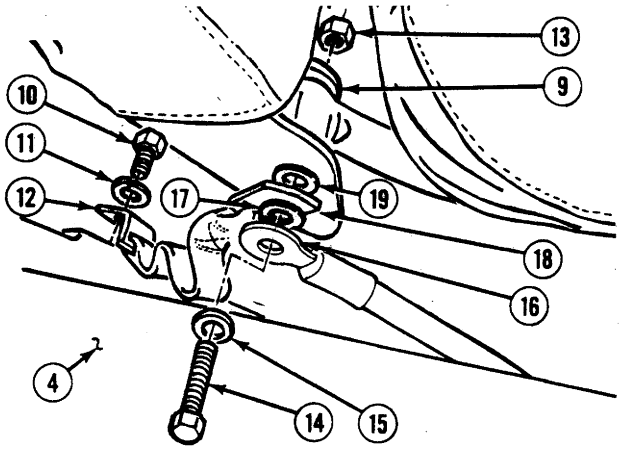

RIGHT SIDE OF SEAT

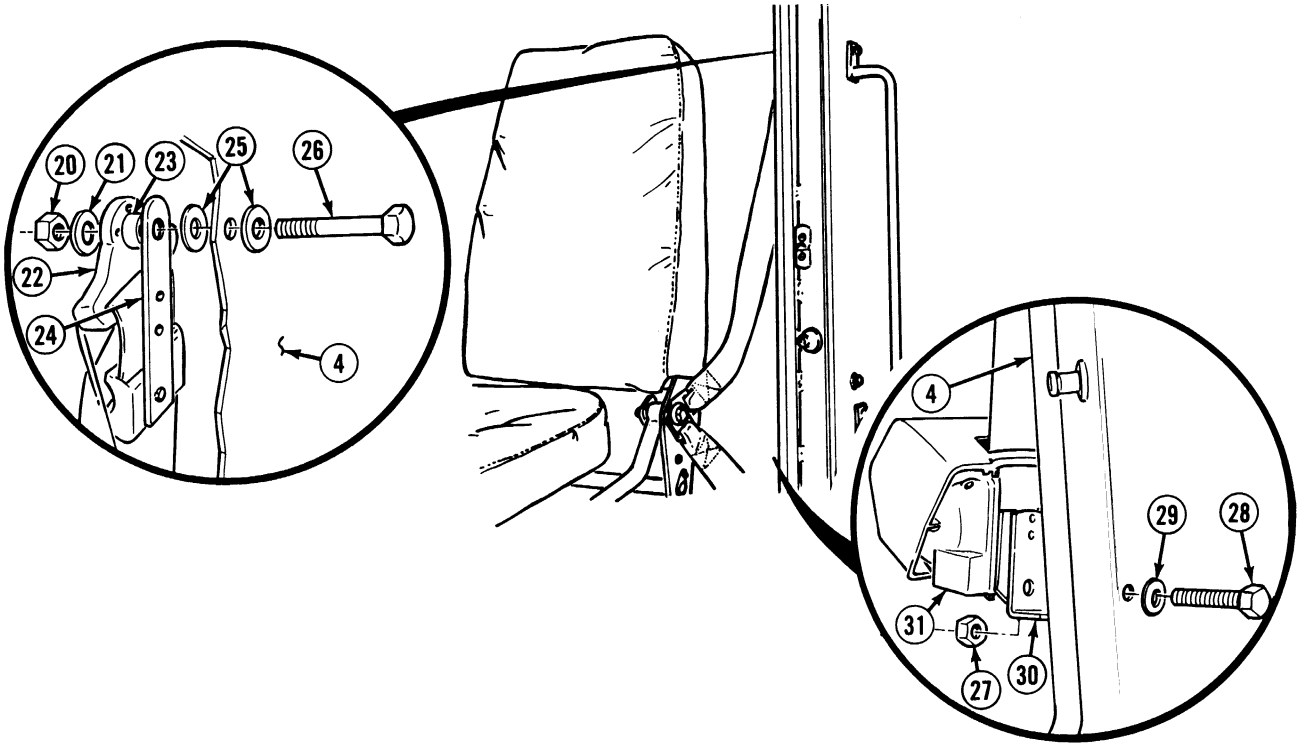

(5) Remove locknut (20), washer (21), D-ring (22), spacer (23), comfort latch (24), two hardened washers (25) and screw (26) from cab assembly (4). Discard locknut.

(6) Remove locknut (27), screw (28), washer (29), L-bracket (30) and retractor unit (31) from cab assembly (4). Discard locknut.

17-44. SEAT BELT REPLACEMENT (CONT).

b. Installation.

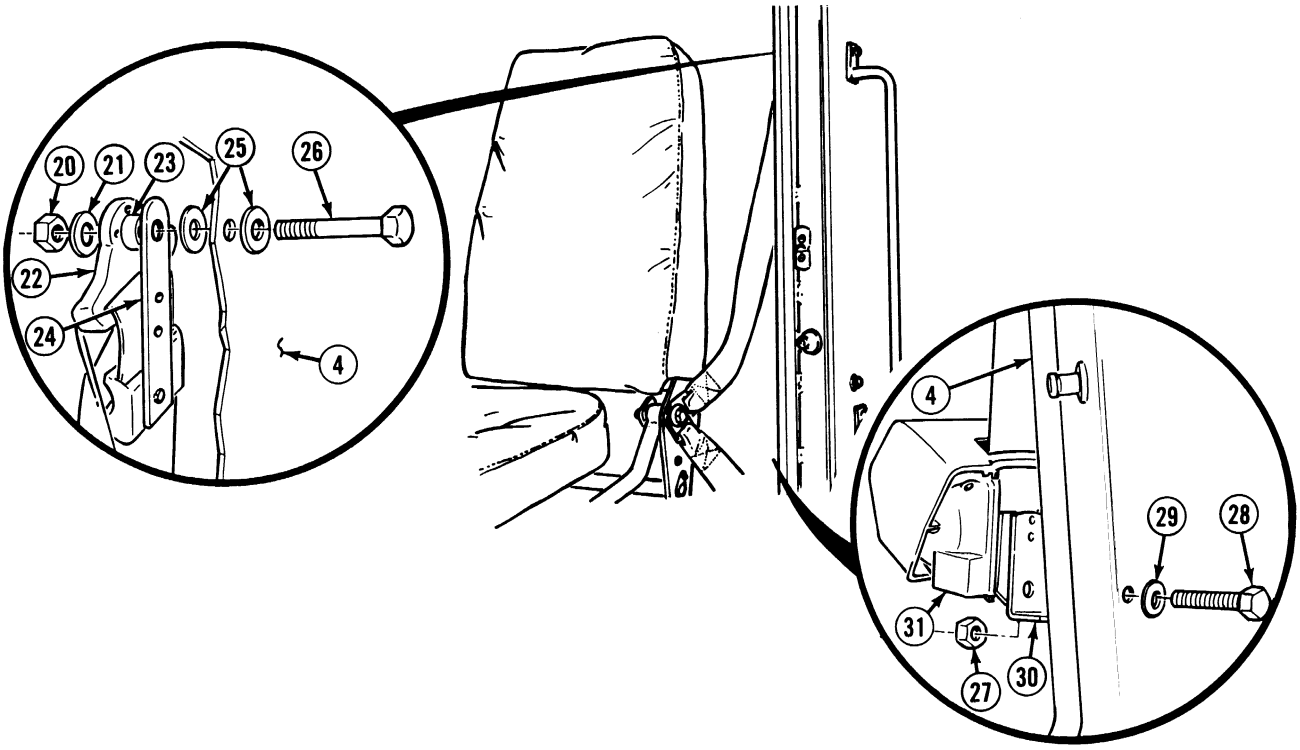

NOTE

Procedure is identical for both seats. Left seat is shown.

(1) Position D-ring (22) in cab assembly (4) with two hardened washer (25), comfort latch (24), spacer (23), washer (21), locknut (20) and screw (26).

(2) Tighten locknut (20) to 70 to 75 lb-in (8 N·m).

(3) Install retractor unit (31) to cab assembly (4) with washer (29), screw (28), L-bracket (30) and locknut (27).

(4) Tighten locknut (27) to 70 to 75 lb-in (8 N·m).

(5) Install tether bracket (18), hardened washer (17), seat belt bracket (16) and hardened washer (19) on seat assembly (9) with hardened washer (15) screw (14) and locknut (13). Tighten locknut until seat belt bracket can slowly rotate.

(6) Install angled bracket (12) on cab assembly (4) with lockwasher (11) and screw (10).

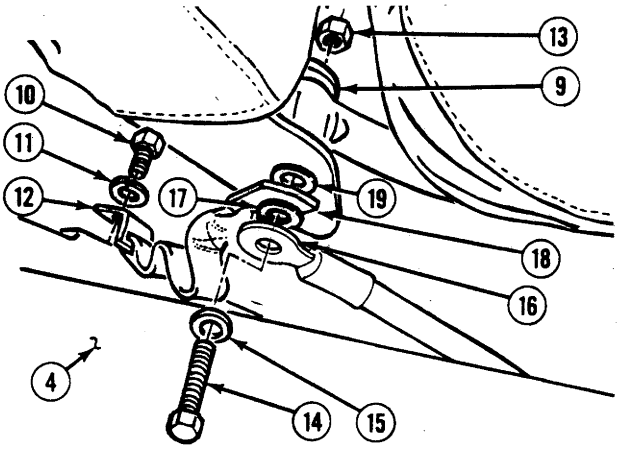

RIGHT SIDE OF SEAT

(7) Install hardened washer (8), two straps (7), on seat assembly (9) with hardened washer (8), screw (6) and locknut (5). Tighten locknut until buckle can slowly rotate.

(8) Install angled bracket (3) on cab assembly (4) with lockwasher (2) and screw (1).

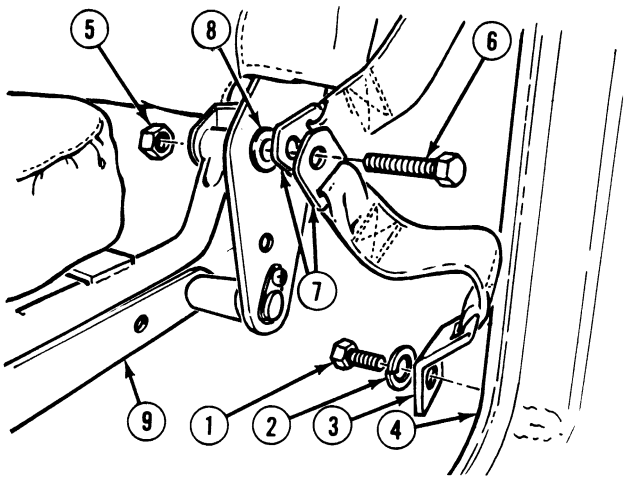

c. Follow-On Maintenance:

- Remove wheel chocks, (TM 9-2320-364-10).

END OF TASK

17-45. SUNVISOR REPLACEMENT.

This task covers:

a. Removal b. Installation c. Follow-On Maintenance

INITIAL SETUP

Tools and Special Tools
Tool Kit, General Mechanic's: Automotive
(Item 74, Appendix G)

Equipment Condition
Engine OFF, (TM 9-2320-364-10)
Wheels chocked, (TM 9-2320-364-10)

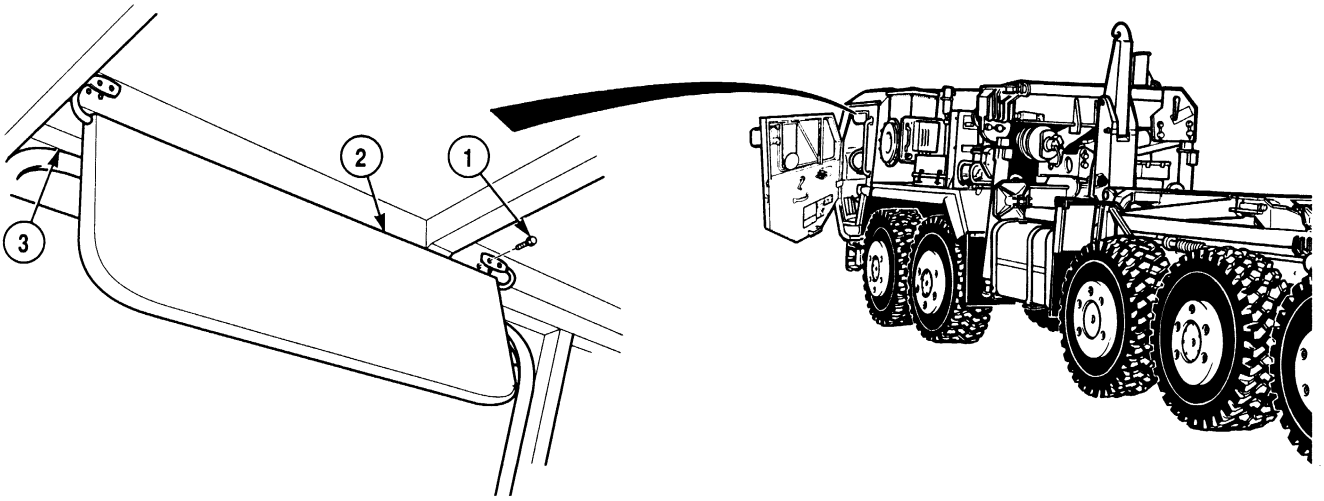

a. Removal. Remove four screws (1) and sunvisor (2) from cab frame (3).

b. Installation. Install sunvisor (2) on cab frame (3) with four screws (1).

c. Follow-On Maintenance:

- Remove wheel chocks, (TM 9-2320-364-10).

END OF TASK

17-46. WINDOW GUARD REPLACEMENT.

This task covers:

a. Removal b. Installation c. Follow-On Maintenance

INITIAL SETUP

Tools and Special Tools
Tool Kit, General Mechanic's: Automotive (Item 74, Appendix G)
Socket Set, 3/4 in. (Item 62, Appendix G)
Wrench, Torque (0 to 60 N·m) (Item 98, Appendix G)

Materials/Parts
Locknut (2) (Item 106, Appendix F)

Equipment Condition
Engine OFF, (TM 9-2320-364-10)
Wheels chocked, (TM 9-2320-364-10)
Foot rest removed, (Para 17-47)

a. Removal.

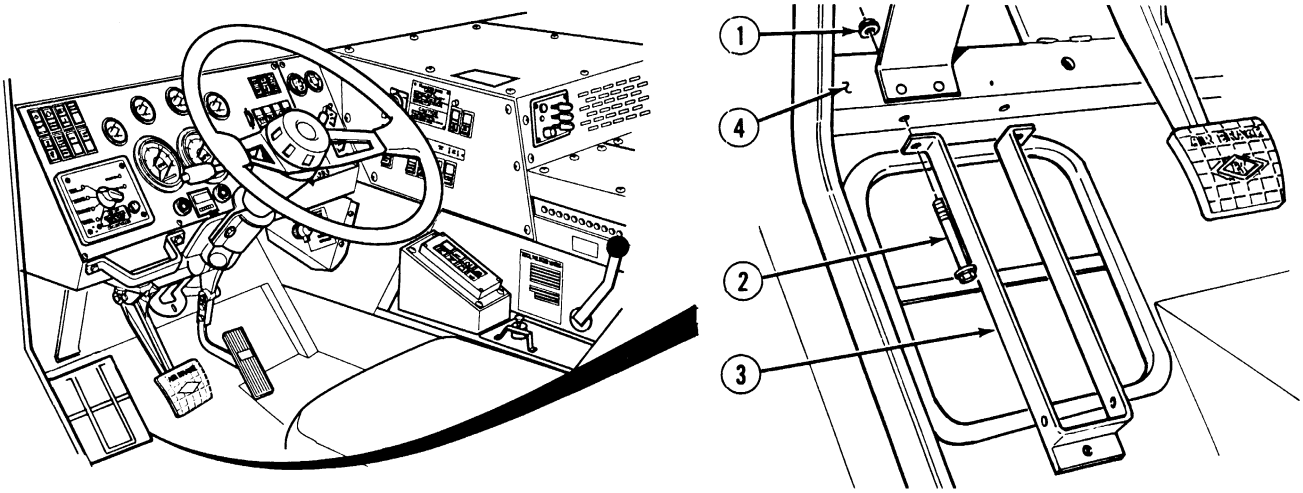

(1) Remove two locknuts (1) and screws (2) from window guard (3) and frame (4). Discard locknuts.

(2) Remove window guard (3) from frame (4).

b. Installation.

(1) Position window guard (3) on frame (4).

(2) Install two screws (2) and locknuts (1) in window guard (3) and frame (4). Tighten screws to 50 lb-in (7 N·m).

c. Follow-On Maintenance:

- Install foot rest, (Para 17-47).
- Remove wheel chocks, (TM 9-2320-364-10).

END OF TASK

17-47. FOOT REST REPAIR.

This task covers:

a. Removal
b. Disassembly
c. Cleaning/Inspection
d. Assembly
e. Installation
f. Follow-On Maintenance

INITIAL SETUP

Tools and Special Tools
Tool Kit, General Mechanic's: Automotive (Item 74, Appendix G)
Compressor Unit, Air (Item 11, Appendix G)
Gloves, Chemical and Oil Protective (Item 28, Appendix G)
Goggles, Industrial (Item 30, Appendix G)
Gun, Air Blow (Item 31, Appendix G)

Materials/Parts
Solvent, Drycleaning (Item 87, Appendix C)
Locknut (4) (Item 106, Appendix F)

Equipment Condition
Engine OFF, (TM 9-2320-364-10)
Wheels chocked, (TM 9-2320-364-10)

a. Removal.

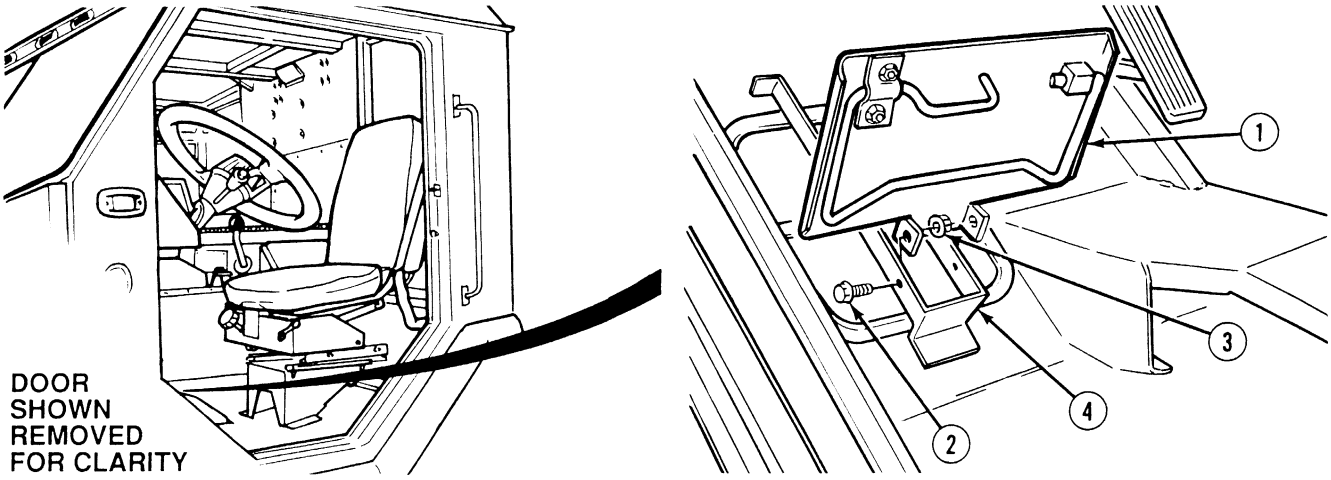

(1) Push foot rest (1) upward to access two screws (2).

(2) Remove two locknuts (3) and screws (2) from window guard (4). Discard locknuts.

(3) Remove foot rest (1) from window guard (4).

b. Disassembly.

(1) Remove two locknuts (1), screws (2) and retainer (3) from footrest (4). Discard locknuts.

(2) Remove footrest bracket (5) from foot rest (4).

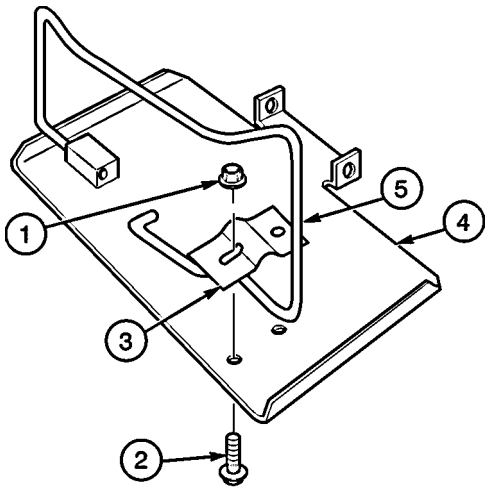

c. Cleaning/Inspection.

WARNING

- Drycleaning Solvent (P-D-680) is TOXIC and flammable. Wear protective goggles, face shield, and gloves; use only in a well-ventilated area; avoid contact with skin, eyes, and clothes, and do not breathe vapors. Keep away from heat or flame. Never smoke when using solvent. The flashpoint for Type II Drycleaning Solvent is 140 degrees F (60 degrees C) and Type III Drycleaning Solvent is 200 degrees F (93 degrees C). Failure to do so may result in injury or death to personnel.
- If personnel become dizzy while using cleaning solvent, immediately get fresh air and medical help. If solvent contacts skin or clothes, flush with cold water. If solvent contacts eyes, immediately flush eyes with water and get immediate medical attention.
- Compressed air used for cleaning purposes will not exceed 30 psi (207 kPa). Use only with effective chip guarding and personal protective equipment (goggles/shield, gloves, etc). Failure to comply may result in injury or death to personnel.

(1) Clean all metal parts with drycleaning solvent.

(2) Dry metal parts with compressed air.

(3) Inspect metal parts for breaks, cracks and sharp edges.

(4) Replace all damaged parts.

17-47. FOOT REST REPAIR (CONT).

d. Assembly.

(1) Position footrest bracket (5) on footrest (4).

(2) Install retainer (3), two screws (2) and nuts (1) on footrest bracket (5) and footrest (4).

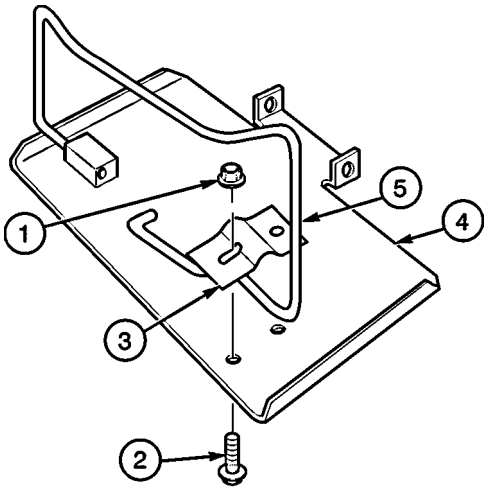

e. Installation.

(1) Position footrest (1) on window guard (4).

NOTE

Ensure footrest mounting screws are not over-tightened. Footrest mounting screws are tightened only enough to ensure footrest still moves freely.

(2) Install two screws (2) and locknuts (3) in window guard (4).

(3) Push footrest (1) down on window guard (4).

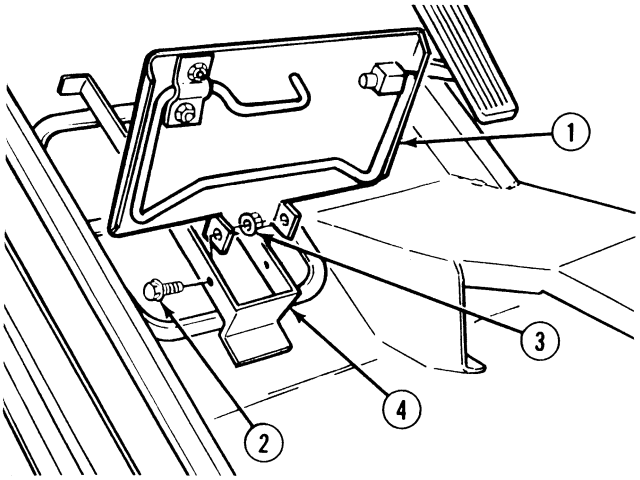

f. Follow-On Maintenance:

- Remove wheel chocks, (TM 9-2320-364-10).

END OF TASK

17-48. CAB FLOOR DRAIN PLUG REPLACEMENT.

This task covers:

a. Removal b. Installation c. Follow-On Maintenance

INITIAL SETUP

Tools and Special Tools
Tool Kit, General Mechanic's: Automotive (Item 74, Appendix G)

Materials/Parts
Screw, Tapping (Item 318, Appendix F)

Equipment Condition
Engine OFF, (TM 9-2320-364-10)
Wheels chocked, (TM 9-2320-364-10)

a. Removal.

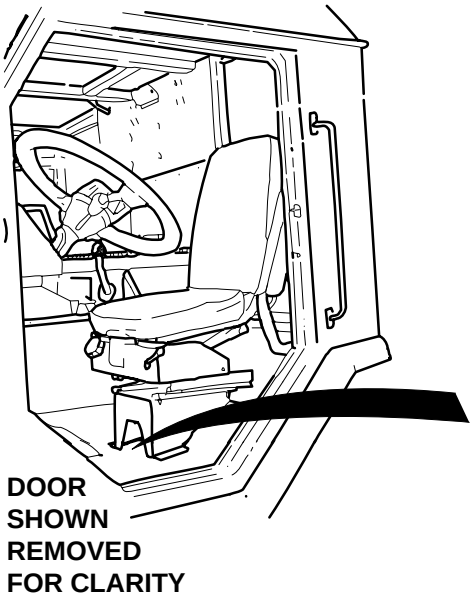

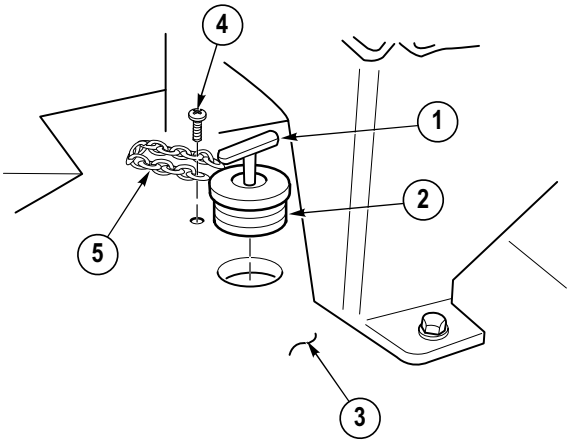

NOTE

There are two cab floor drain plugs, one under each seat. Left side is shown.

(1) Turn handle (1) counter clockwise and remove cab floor drain plug (2) from cab floor (3).

(2) Remove screw (4) and chain (5) from cab floor (3). Discard screw.

b. Installation.

(1) Install chain (5) with screw (4) to cab floor (3).

(2) Install cab floor drain plug (2) in cab floor (3) and turn handle (1) clockwise.

c. Follow-On Maintenance.

- Remove wheel chocks, (TM 9-2320-364-10).

END OF TASK

17-49. HEATER CONTROL SIDE PANEL GRAB HANDLE REPLACEMENT.

This task covers:

a. Removal b. Installation c. Follow-On Maintenance

INITIAL SETUP

Tools and Special Tools
Tool Kit, General Mechanic's: Automotive (Item 74, Appendix G)

Materials/Parts
Locknut (2) (Item 133, Appendix F)

Equipment Condition
Engine OFF, (TM 9-2320-364-10)
Wheels chocked, (TM 9-2320-364-10)
Heater compartment access panel removed, (Para 17-4)

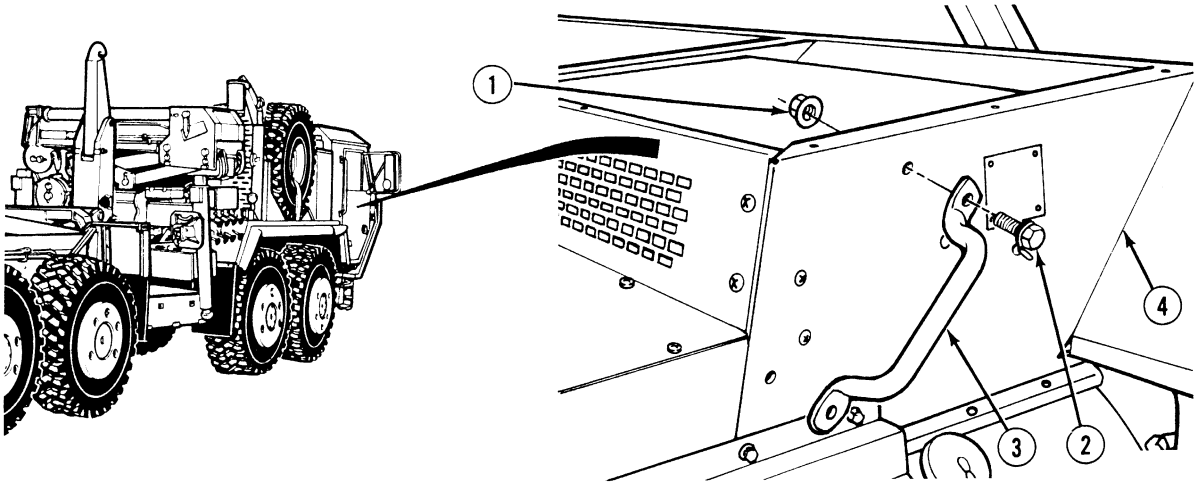

a. Removal. Remove two locknuts (1), screws (2) and grab handle (3) from heater control side panel (4). Discard locknuts.

b. Installation. Install grab handle (3) with two screws (2) and locknuts (1) on heater control side panel (4).

c. Follow-On Maintenance:

- Install heater compartment access panel, (Para 17-4).
- Remove wheel chocks, (TM 9-2320-364-10).

END OF TASK

17-50. GLOVE BOX GRAB HANDLE REPLACEMENT.

This task covers:

a. Removal b. Installation c. Follow-On Maintenance

INITIAL SETUP

Tools and Special Tools
Tool Kit, General Mechanic's: Automotive
(Item 74, Appendix G)

Equipment Condition
Engine OFF, (TM 9-2320-364-10)
Wheels chocked, (TM 9-2320-364-10)

Materials/Parts
Locknut (2) (Item 133, Appendix F)

a. Removal.

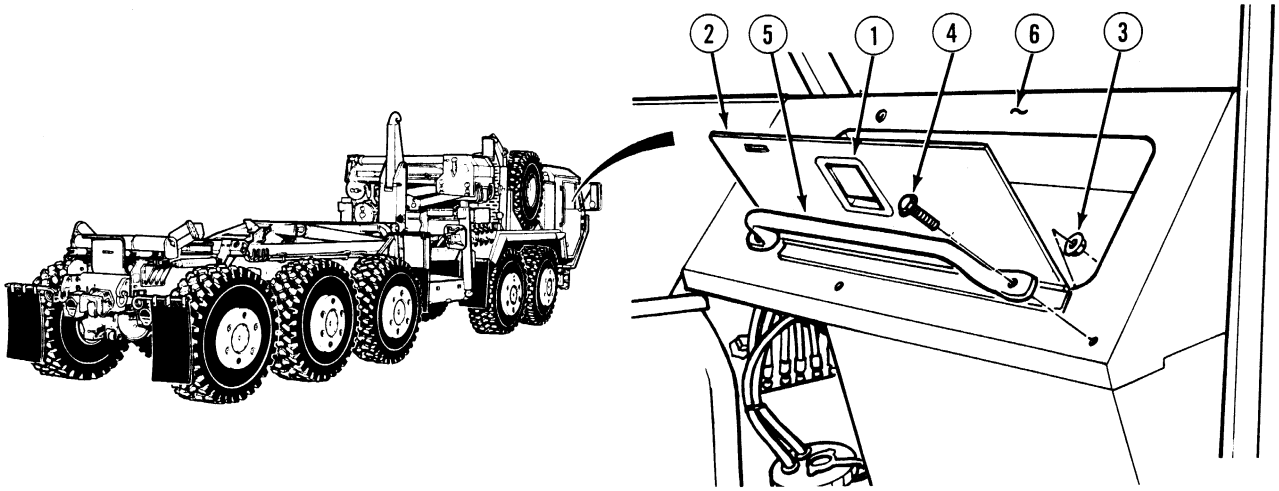

(1) Open latch (1) and open glove box door (2).

(2) Remove two locknuts (3), screws (4) and grab handle (5) from glove box (6). Discard locknuts.

b. Installation.

(1) Install grab handle (5) with two screws (4) and locknuts (3) on glove box (6).

(2) Close glove box (2) and secure latch (1).

c. Follow-On Maintenance:

- Remove wheel chocks, (TM 9-2320-364-10).

END OF TASK

17-51. INSTRUMENT PANEL GRAB HANDLE REPLACEMENT.

This task covers:

a. Removal b. Installation c. Follow-On Maintenance

INITIAL SETUP

Tools and Special Tools
Tool Kit, General Mechanic's: Automatic (Item 74, Appendix G)

Materials/Parts
Locknut (2) (Item 140, Appendix F)

Equipment Condition
Engine OFF, (TM 9-2320-364-10)
Wheels chocked, (TM 9-2320-364-10)

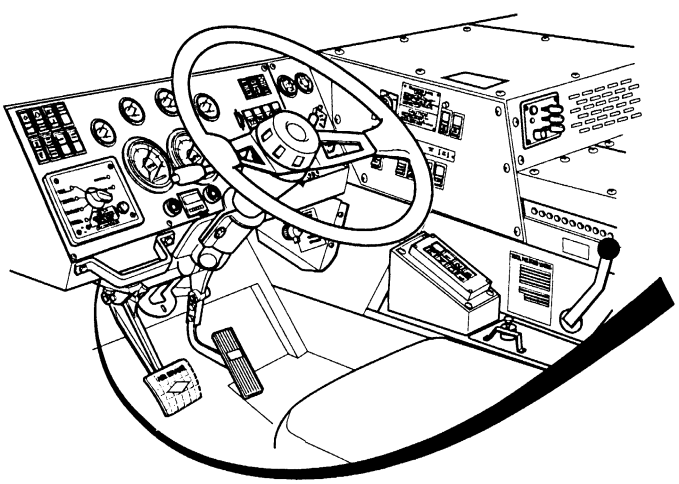

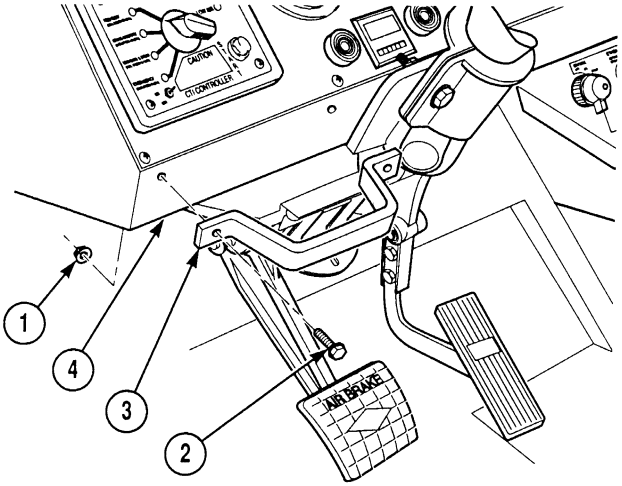

a. Removal. Remove two locknuts (1), screws (2) and grab handle (3) from dash (4). Discard locknuts.

b. Installation. Install grab handle (3) with two screws (2) and locknuts (1) on dash (4).

c. Follow-On Maintenance:

- Remove wheel chocks, (TM 9-2320-364-10).

END OF TASK

17-52. SIDE CAB GRAB HANDLE REPLACEMENT.

This task covers:

a. Removal b. Installation c. Follow-On Maintenance

INITIAL SETUP

Tools and Special Tools
Tool Kit, General Mechanic's: Automotive (Item 74, Appendix G)

Materials/Parts
Locknut (2) (Item 140, Appendix F)

Equipment Condition
Engine OFF, (TM 9-2320-364-10)
Wheels chocked, (TM 9-2320-364-10)

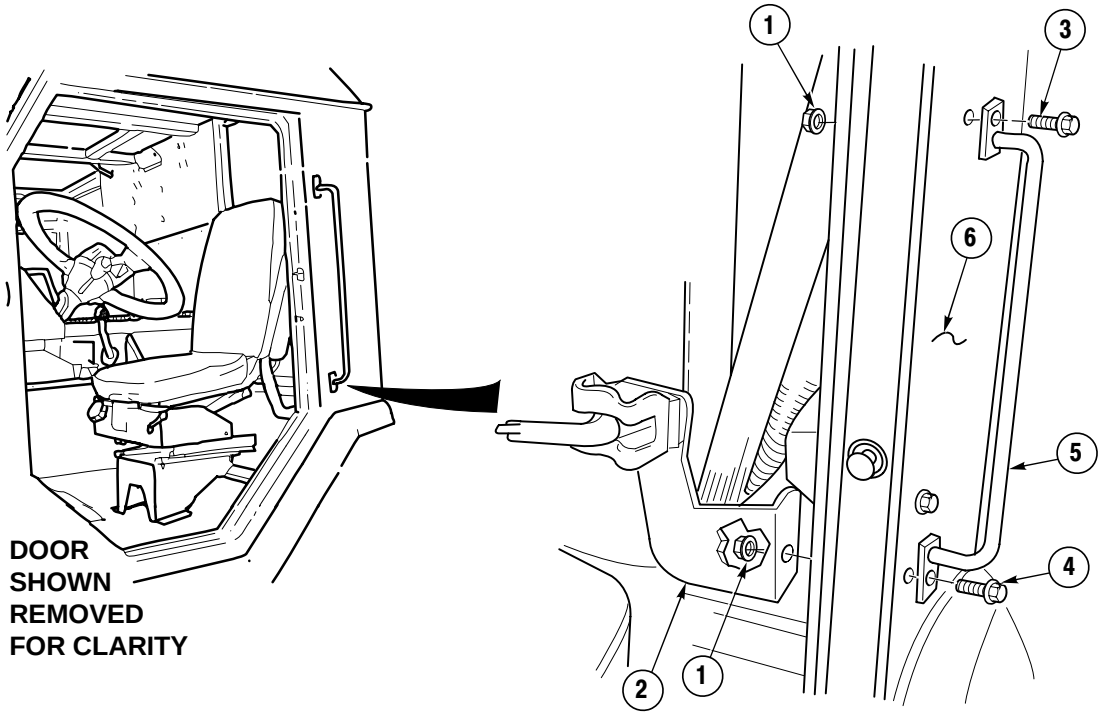

NOTE

- Left side grab handle will have a longer screw and rifle mount bracket on bottom screw.
- Both handles are removed the same. Left side shown.

a. Removal. Remove two locknuts (1), rifle mount (2), screw (3), screw (4) and grab handle (5) from cab (6). Discard locknuts.

b. Installation. Install grab handle (5) and rifle mount (2) with screw (4), screw (3) and two locknuts (1) on cab (6).

c. Follow-On Maintenance:

- Remove wheel chocks, (TM 9-2320-364-10).

END OF TASK

17-53. GLOVE BOX REPLACEMENT.

This task covers:

a. Removal b. Installation c. Follow-On Maintenance

INITIAL SETUP

Tools and Special Tools
Tool Kit, General Mechanic's: Automotive (Item 74, Appendix G)

Materials/Parts
Adhesive (Item 5, Appendix C)
Gasket, Strip (Item 40, Appendix C)
Locknut (11) (Item 110, Appendix F)
Lockwasher (Item 151, Appendix F)
Tenz Nut (2) (Item 219, Appendix F)

Equipment Condition
Engine OFF, (TM 9-2320-364-10)
Wheels chocked, (TM 9-2320-364-10)

a. Removal.

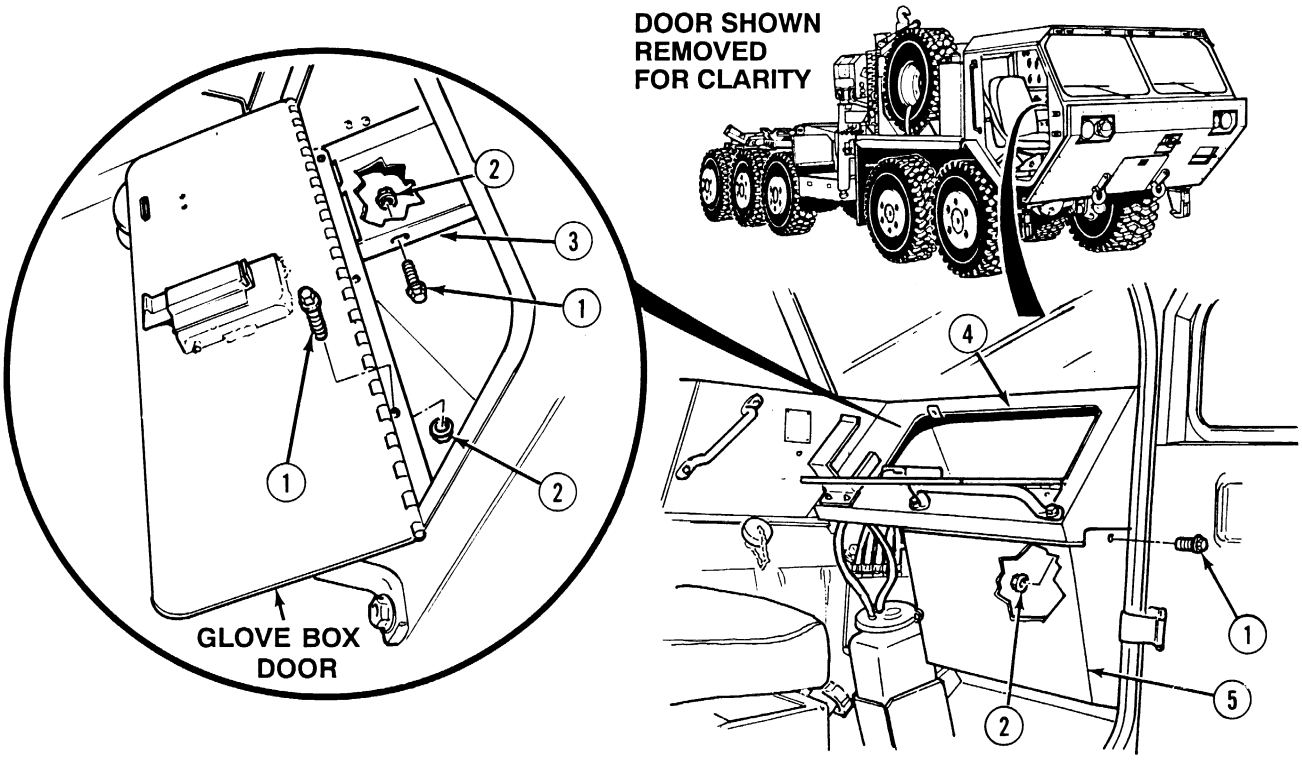

(1) Open glove box door and remove three screws (1), locknuts (2) and plate (3) from dash (4). Discard locknuts.

(2) Remove four screws (1), locknuts (2) and glove box (5) from dash (4). Discard locknuts.

(3) Remove four screws (6), locknuts (7) and glove box door (8) from dash (4). Discard locknuts.

(4) Remove two screws (9), tenz nuts (10) and bracket (11) from glove box door (8). Discard tenz nuts.

(5) Remove two screws (6), locknuts (7) and striker (12) from dash (4). Discard locknuts.

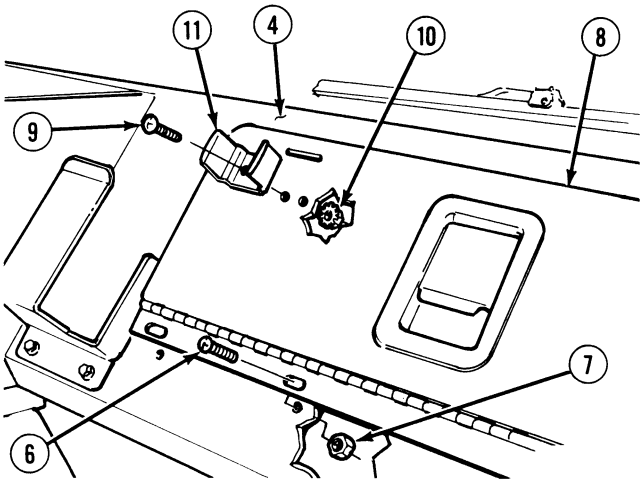

(6) Remove screw (13), nut (14), lockwasher (15) and bracket (16) from dash (4). Discard lockwasher.

(7) Remove gasket strip (17) from dash (4). Discard gasket strip.

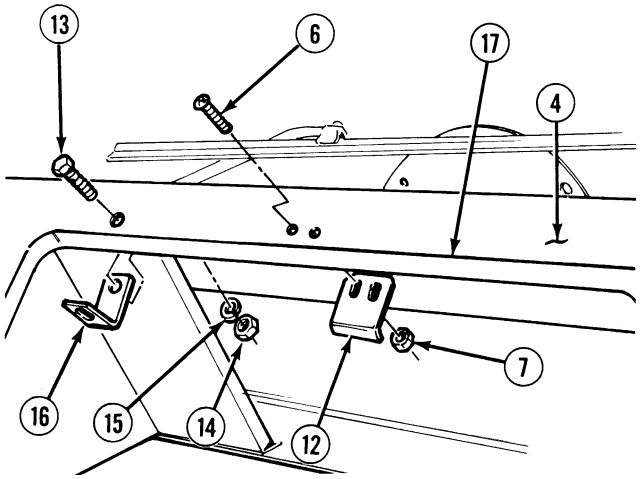

b. Installation.

WARNING

Adhesives, sovents, and sealing compounds can burn easily, can give off harmful vapors, and are harmful to skin and clothing. To avoid injury or death, keep away from open fire and use in a well-ventilated area. If adhesive, solvent, or sealing compound gets on skin or clothing, wash immediately with soap and water.

(1) Apply adhesive to back of gasket strip (17).

NOTE

Use glove box door as a template to install and trim corners of gasket strip.

(2) Install gasket strip (17) on dash (4).

(3) Install bracket (16), screws (13), lockwasher (15) and nut (14) in dash (4).

(4) Install striker (12), two screws (6) and locknuts (7) in dash (4).

17-53. GLOVE BOX REPLACEMENT (CONT).

(5) Install bracket (11), two screws (9) and tenz nuts (10) in glove box door (8).

NOTE

Ensure glove box door is positioned to full right and will not hit first aid kit when opening or closing glove box door.

(6) Install glove box door (8), four screws (6) and locknuts (7) in dash (4).

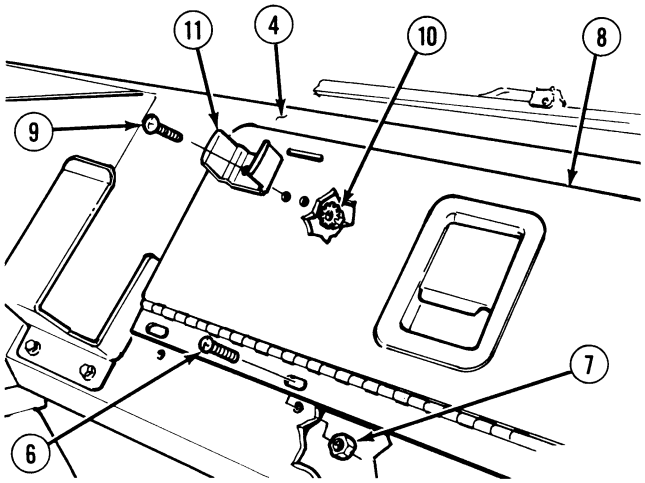

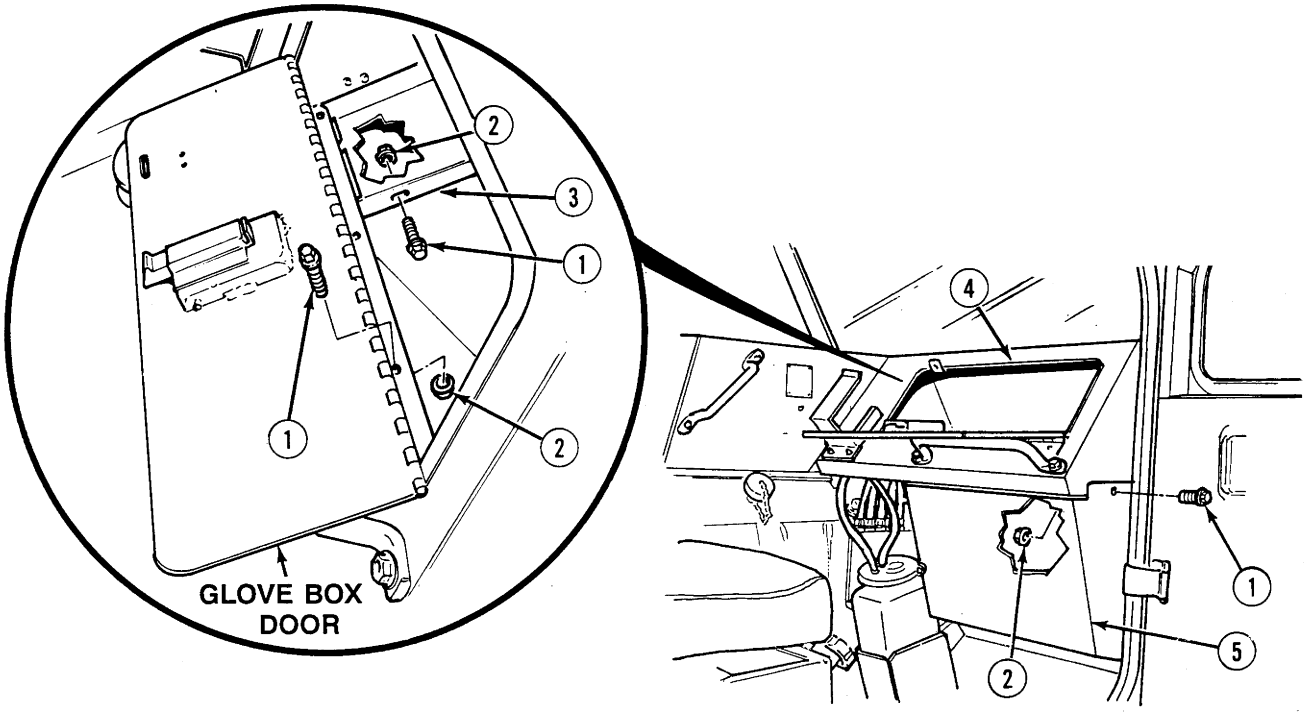

(7) Install glove box (5), four screws (1) and locknuts (2) in dash (4).

(8) Install plate (3), three screws (1) and locknuts (2) in dash (4).

(9) Close glove box door.

c. *Follow-On Maintenance:*

- Remove wheel chocks, (TM 9-2320-364-10).

END OF TASK

17-54. STOWAGE BOX AND BRACKET REPLACEMENT.

This task covers:

a. Removal b. Installation c. Follow-On Maintenance

INITIAL SETUP

Tools and Special Tools
Tool Kit, General Mechanic's: Automotive (Item 74, Appendix G)
Wrench, Combination 1-1/8 in. (Item 79, Appendix G)

Materials/Parts
Adhesive Sealant (Item 14, Appendix C)
Sealing Compound (Item 80, Appendix C)
Locknut (Item 91, Appendix F)
Locknut (6) (Item 92, Appendix F)
Locknut (2) (Item 93, Appendix F)
Locknut (2) (Item 106, Appendix F)
Locknut (6) (Item 133, Appendix F)

Materials/Parts - Continued
Seal, Door (Item 329, Appendix F)

Personnel Required
Two

Equipment Condition
Engine OFF, (TM 9-2320-364-10)
Wheels chocked, (TM 9-2320-364-10)
LHS fully extended, (TM 9-2320-364-10)
Decontamination bracket removed (if equipped), (Para 24-3)
Auxiliary fuel tank removed (if equipped), (Para 15-24)

a. Removal.

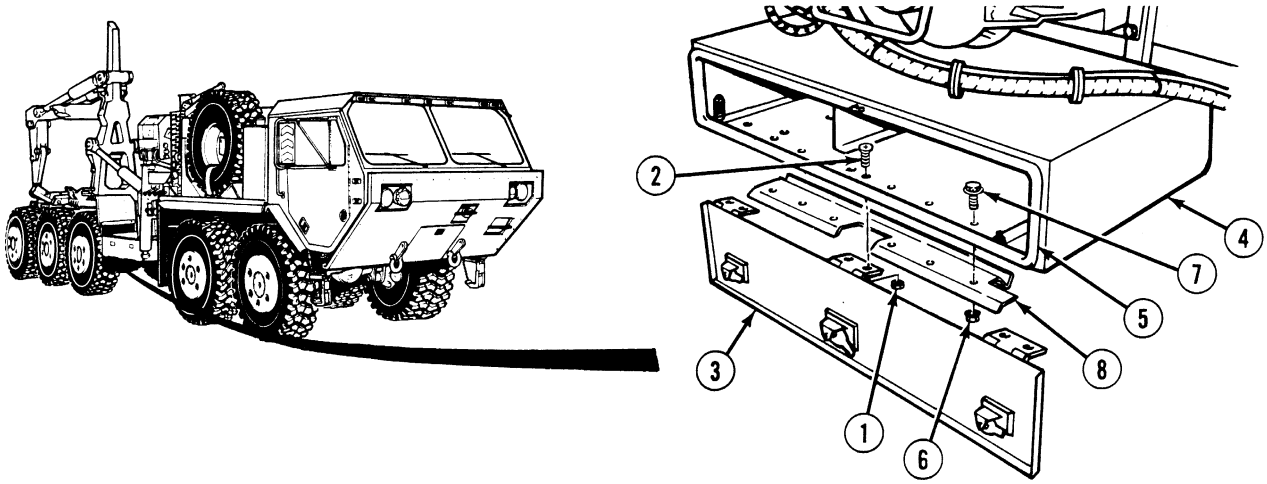

NOTE

- If removing door panel assembly only, perform Steps (1) through (3).
- If removing box assembly only, perform Steps (4) through (10).

(1) Remove six locknuts (1), screws (2) and door panel assembly (3) from box assembly (4). Discard lockwashers.

(2) Remove door seal (5) from box assembly (4). Discard door seal.

(3) Remove six locknuts (6), screws (7) and water guard (8).

17-54. STOWAGE BOX AND BRACKET REPLACEMENT (CONT).

NOTE

Step (4) is for self recovery winch equipped trucks only.

(4) Remove two locknuts (9), screws (10) and separate two cushion clamps (11) from box assembly (4). Discard locknuts.

(5) If necessary for replacement, remove two bleeder valves (12) from box assembly (4).

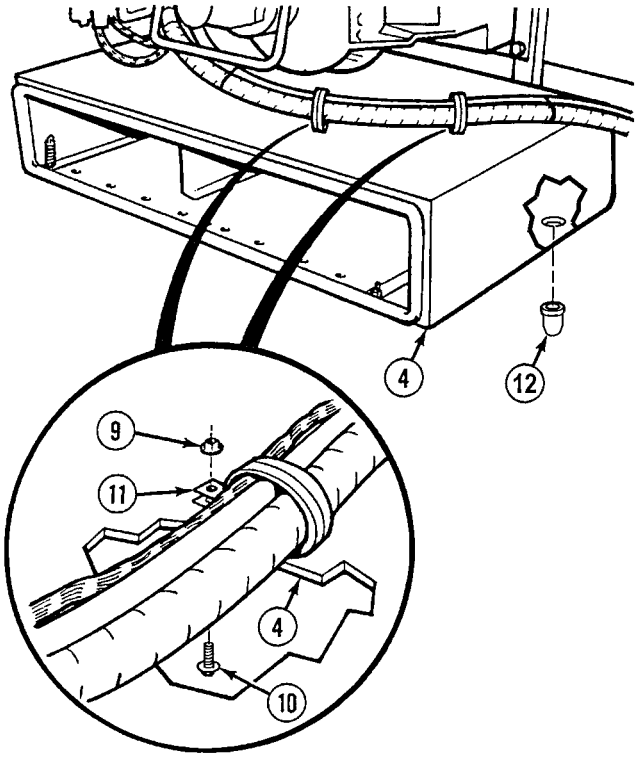

(6) Remove two locknuts (13), washers (14), springs (15) and screws (16). Discard locknuts.

(7) Remove two locknuts (17) and screws (18). Discard locknuts.

WARNING

Box assembly weighs 92 lbs (42 kg). Ensure box assembly is properly supported to prevent possible injury to personnel.

(8) With the aid of an assistant, remove box assembly (4) from left hand brackets (19) and right hand bracket (20).

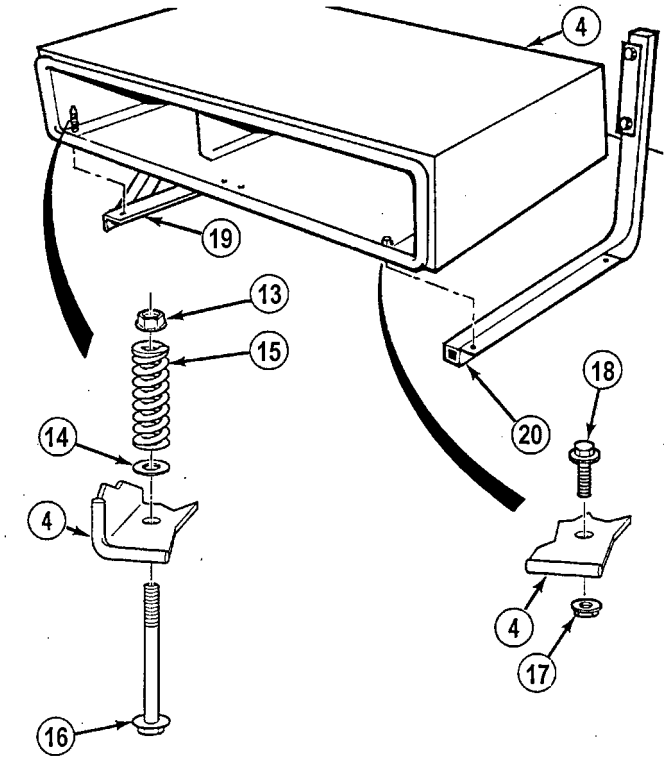

(9) With the aid of an assistant, remove two locknuts (21), screws (22) and (23) and LH bracket (19). Discard locknuts.

(10) With the aid of an assistant, remove two locknuts (24), screws (25) and RH bracket (20). Discard locknuts.

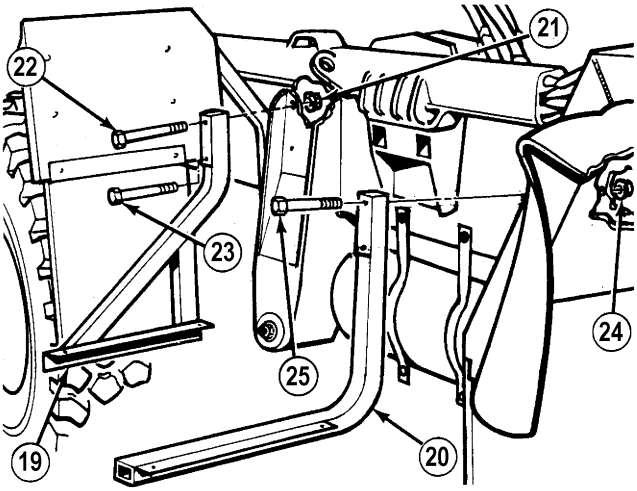

b. Installation.

NOTE

- If installing box assembly only, perform Steps (1) through (9).
- If installing door panel assembly only, perform Steps (10) through (12).

(1) With the aid of an assistant, install RH bracket (20) with two screws (25) and locknuts (24).

(2) With the aid of an assistant, install LH bracket (19) with two screws (22) and (23) and locknuts (21).

WARNING

Box assembly weighs 92 lbs (42 kg). Ensure box assembly is properly supported prior to installation to prevent possible injury to personnel.

(3) With the aid of an assistant, install box assembly (4) on two brackets (19) and (20).

(4) Install two screws (18) and locknuts (17).

(5) Install two screws (16), springs (15), washers (14) and locknuts (13). Tighten locknuts until spring height is 2-3/4 in. (69.85 mm).

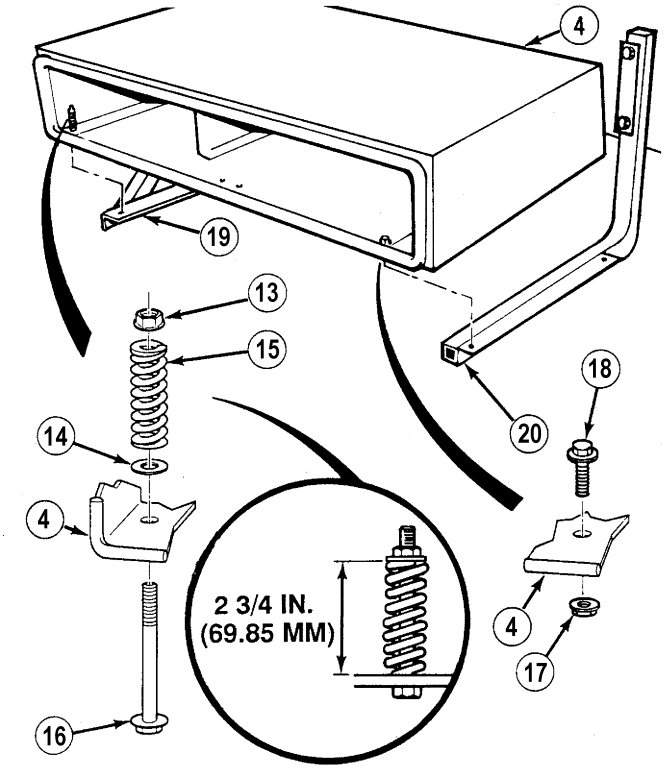

17-54. STOWAGE BOX AND BRACKET REPLACEMENT (CONT).

(6) If removed, install two bleeder valves (12) on box assembly (4).

NOTE

Step (7) is for self recovery winch equipped trucks only.

(7) Install two cushion clamps (11) on box assembly (4) with two screws (10) and locknuts (9).

NOTE

Step (8) is for trucks equipped with auxiliary fuel tanks only.

(8) Grind off end of water guard (8), if necessary, for water guard to clear fuel tank brackets.

(9) Install water guard (8), six screws (7) and locknuts (6).

WARNING

Adhesives, solvents, and sealing compounds can burn easily, can give off harmful vapors, and are harmful to skin and clothing. To avoid injury or death, keep away from open fire and use in well-ventilated area. If adhesive, solvent, or sealing compound gets on skin or clothing, wash immediately with soap and water.

(10) Coat new door seal seam (5) with adhesive.

NOTE

Install door seal so that seam of door seal is on bottom side of box assembly.

(11) Install door seal (5) on box assembly (4).

(12) Install door panel assembly (3) on box assembly (4) with six screws (2) and locknuts (1).

(13) Apply sealing compound to hinge edges of door panel assembly (3).

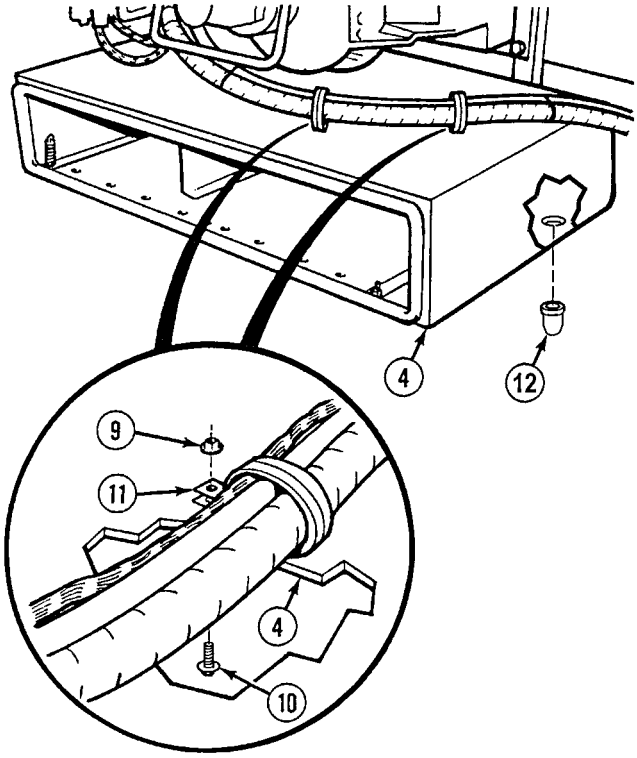

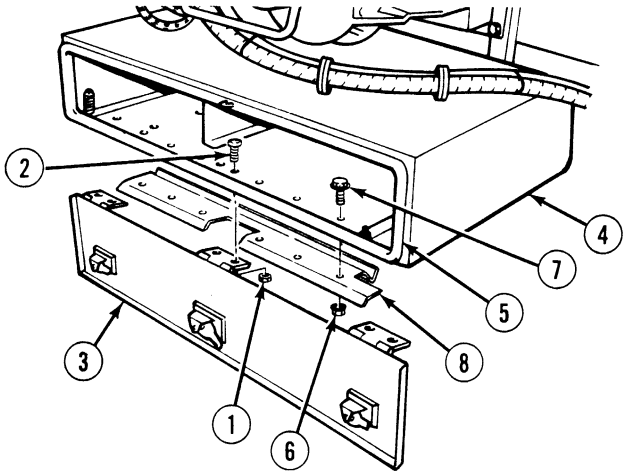

c. Follow-On Maintenance:

- Install auxiliary fuel tank (if equipped), (Para 15-24).
- Install decontamination bracket (if equipped), (Para 24-3).
- Remove wheel chocks, (TM 9-2320-364-10).

END OF TASK

17-55. CRANE STOWAGE BOX REPAIR.

This task covers:

a. Removal
b. Disassembly
c. Cleaning/Inspection
d. Assembly
e. Installation
f. Follow-On Maintenance

INITIAL SETUP

Tools and Special Tools
Tool Kit, General Mechanic's: Automotive (Item 74, Appendix G)
Compressor Unit, Air (Item 11, Appendix G)
Gloves, Chemical Oil Protective (Item 28, Appendix G)
Goggles, Industrial (Item 30, Appendix G)
Gun, Air Blow (Item 31, Appendix G)

Materials/Parts
Adhesive (Item 6, Appendix C)
Solvent, Drycleaning (Item 87, Appendix C)

Materials/Parts - Continued
Locknut (4) (Item 96, Appendix F)
Locknut (2) (Item 134, Appendix F)
Seal (Item 327, Appendix F)

Equipment Condition
Engine OFF, (TM 9-2320-364-10)
Wheels chocked, (TM 9-2320-364-10)

a. Removal.

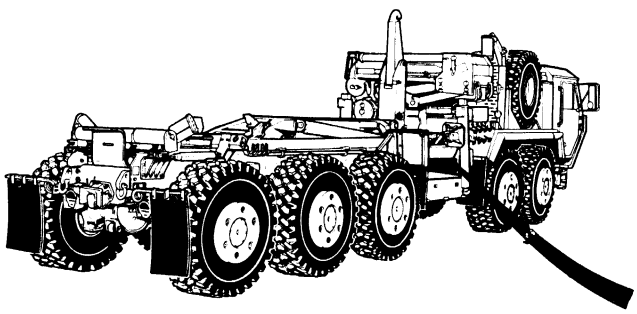

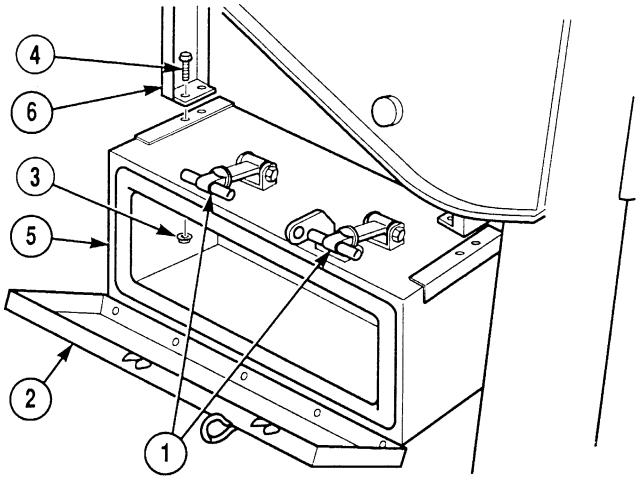

(1) Lift two rubber latches (1) and open stowage box door (2).

(2) Remove four locknuts (3), screws (4) and stowage box (5) from crane frame (6). Discard locknuts.

b. Disassembly.

(1) Remove two locknuts (1), screws (2) and rubber latches (3) from stowage box (4). Discard locknuts.

(2) Remove seal (5) from stowage box (4). Discard seal.

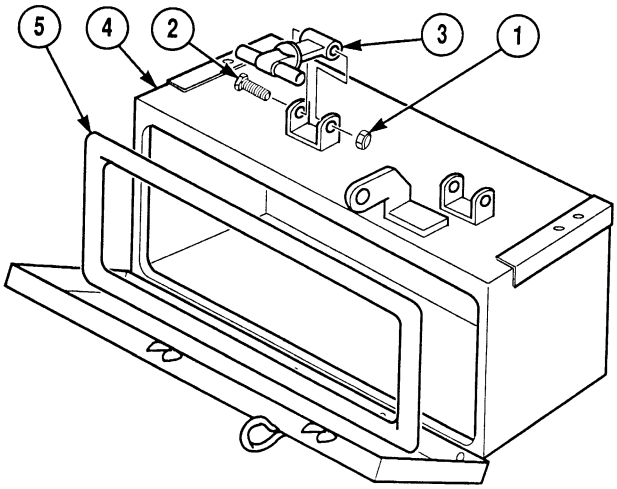

c. Cleaning/Inspection.

WARNING

- Drycleaning Solvent (P-D-680) is TOXIC and flammable. Wear protective goggles, face shield, and gloves; use only in a well-ventilated area; avoid contact with skin, eyes, and clothes, and do not breathe vapors. Keep away from heat or flame. Never smoke when using solvent. The flashpoint for Type II Drycleaning Solvent is 140 degrees F (60 degrees C) and Type III Drycleaning Solvent is 200 degrees F (93 degrees C). Failure to do so may result in injury or death to personnel.
- If personnel become dizzy while using cleaning solvent, immediately get fresh air and medical help. If solvent contacts skin or clothes, flush with cold water. If solvent contacts eyes, immediately flush eyes with water and get immediate medical attention.
- Compressed air used for cleaning purposes will not exceed 30 psi (207 kPa). Use only with effective chip guarding and personal protective equipment (goggles/shield, gloves, etc). Failure to comply may result in injury or death to personnel.

(1) Wash all metal parts in drycleaning solvent.

(2) Dry all metal parts with compressed air.

(3) Inspect metal parts for breaks, cracks and sharp edges.

(4) Replace all damaged parts.

17-55. CRANE STOWAGE BOX REPLACEMENT (CONT).

d. Assembly.

WARNING

Adhesives, solvents, and sealing compounds can burn easily, can give off harmful vapors, and are harmful to skin and clothing. To avoid injury or death, keep away from open fire and use in well-ventilated area. If adhesive, solvent, or sealing compound gets on skin or clothing, wash immediately with soap and water.

NOTE

Seal should be cut to 47 in. (119 cm) length.

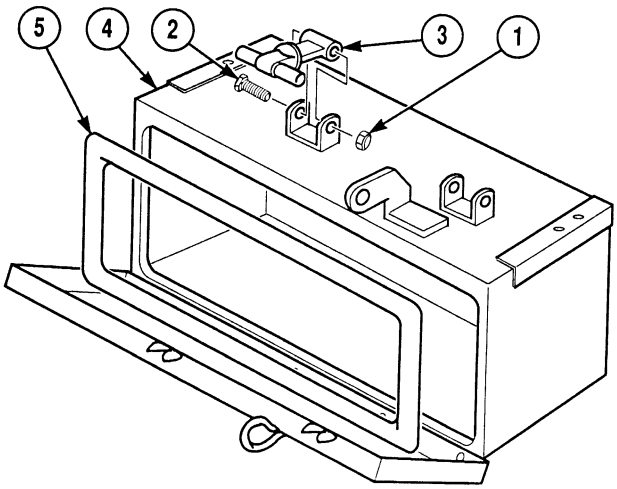

(1) Coat lip of seal (5) with adhesive and install seal on stowage box (4).

(2) Install two rubber latches (3) with screws (2) and locknuts (1).

e. Installation.

(1) Position stowage box (5) on crane frame (6).

(2) Install four screws (4) and locknuts (3).

(3) Close stowage box door (2) and fasten two rubber latches (1).

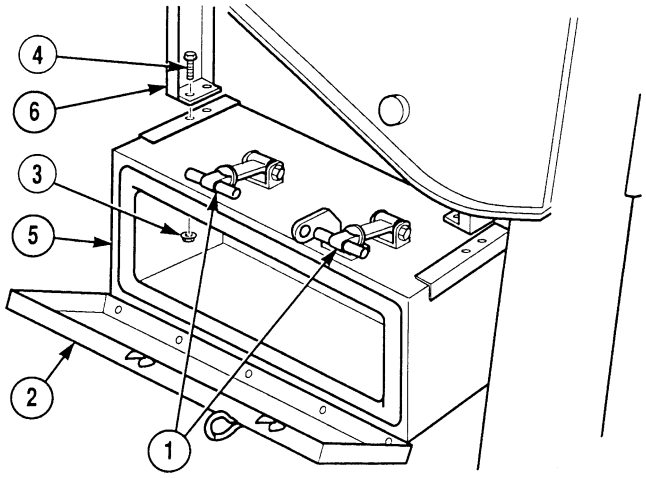

f. Follow-On Maintenance:

- Remove wheel chocks, (TM 9 2320-364-10).

END OF TASK

17-56. FIRST AID KIT BRACKET REPLACEMENT.

This task covers:

a. Removal b. Installation c. Follow-On Maintenance

INITIAL SETUP

Tools and Special Tools
Tool Kit, General Mechanic's: Automotive (Item 74, Appendix G)

Equipment Condition
Engine OFF, (TM 9-2320-364-10)
Wheels chocked, (TM 9-2320-364-10)

Materials/Parts
Locknut (2) (Item 106, Appendix F)

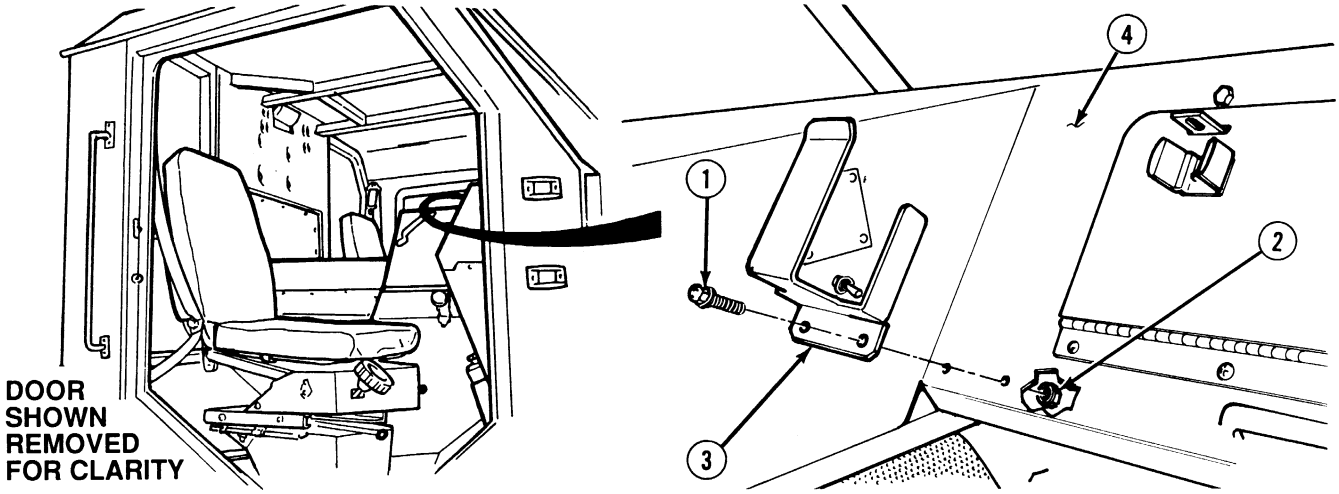

a. Removal. Remove two screws (1), locknuts (2) and first aid bracket kit (3) from dash (4).

b. Installation. Install first aid kit bracket (3) with two screws (1) and locknuts (2) in dash (4).

c. Follow-On Maintenance:

- Remove wheel chocks, (TM 9-2320-364-10).

END OF TASK

17-57. RIFLE STOWAGE BRACKETS REPLACEMENT.

This task covers:

a. Removal b. Installation c. Follow-On Maintenance

INITIAL SETUP

Tools and Special Tools
Tool Kit, General Mechanic's: Automotive
(Item 74, Appendix G)
Socket Set, 3/8 in. (Item 62, Appendix G)
Wrench, Torque (0 to 60 N·m)
(Item 98, Appendix G)

Materials/Parts
Locknut (2) (Left Side) (Item 106, Appendix F)
Locknut (2) (Left Side) (Item 120, Appendix F)
Lockwasher (4) (Left Side)
(Item 171, Appendix F)

Materials/Parts - Continued
Lockwasher (8) (Right Side)
(Item 171, Appendix F)
Quickedge (Item 289, Appendix F)
Screw, Self-Locking (Left Side)
(Item 315, Appendix F)

Equipment Condition
Engine OFF, (TM 9-2320-364-10)
Wheels chocked, (TM 9-2320-364-10)

a. Removal.

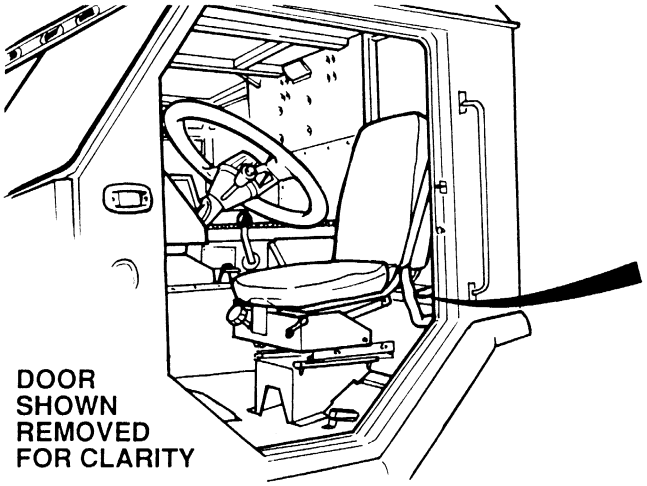

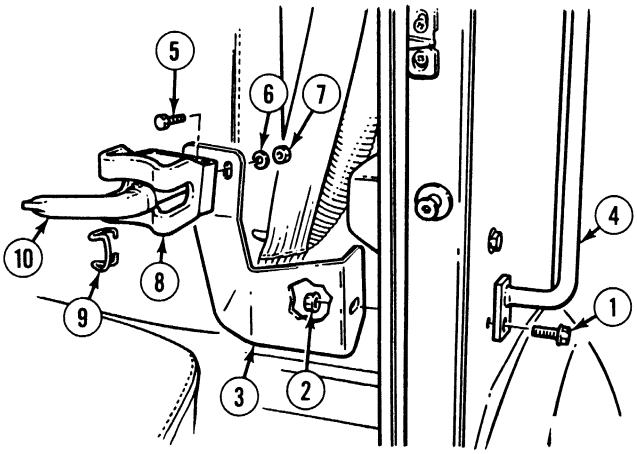

NOTE

Steps (1) through (7) are for left side cab.

(1) Remove screw (1), locknut (2) and support (3) from grab handle (4). Discard locknut.

(2) Remove two screws (5), lockwashers (6), nuts (7) and bracket (8) from support (3). Discard lockwashers.

(3) Remove clip (9) from catch (10) and bracket (8).

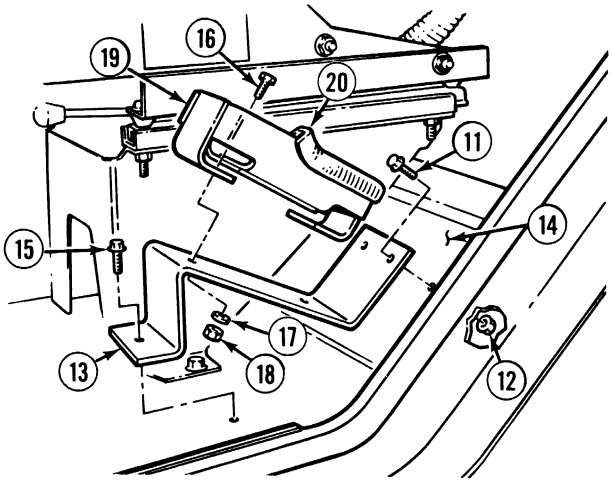

(4) Remove two screws (11) and locknuts (12) from rifle stock support (13) and cab frame (14). Discard locknuts.

(5) Remove screw (15) and rifle stock support (13) from cab frame (14). Discard screw.

(6) Remove two screws (16), lockwashers (17), nuts (18) and rifle support (19) from rifle stock support (13). Discard lockwashers.

NOTE

If quickedge is damaged, perform Step (7).

(7) Remove quickedge (20) from rifle support (19).

17-57. RIFLE STOWAGE BRACKETS REPLACEMENT (CONT).

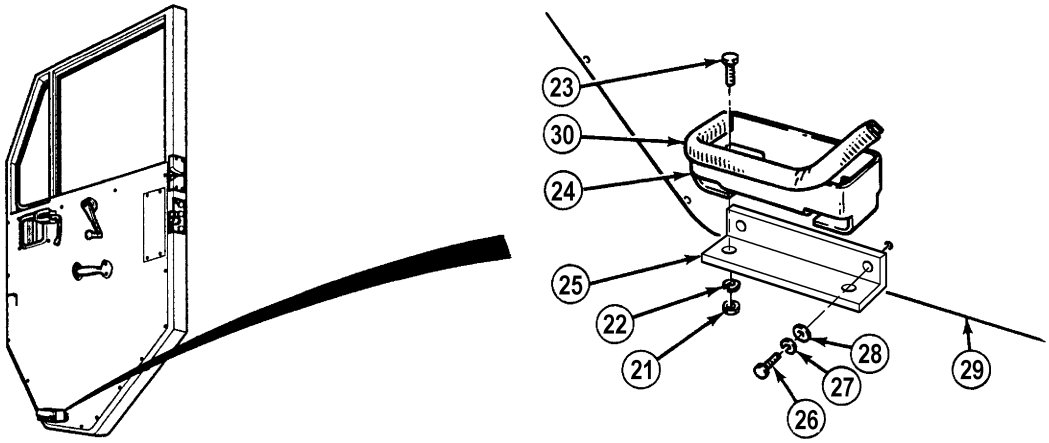

NOTE

Steps (8) through (12) are for right side door.

(8) Remove two nuts (21), lockwashers (22), screws (23) and rifle support (24) from bracket (25). Discard lockwashers.

(9) Remove two screws (26), lockwashers (27), washers (28) and bracket (25) from door assembly (29). Discard lockwashers.

NOTE

If quickedge is damaged, perform Step (10).

(10) Remove quickedge (30) from rifle support (24).

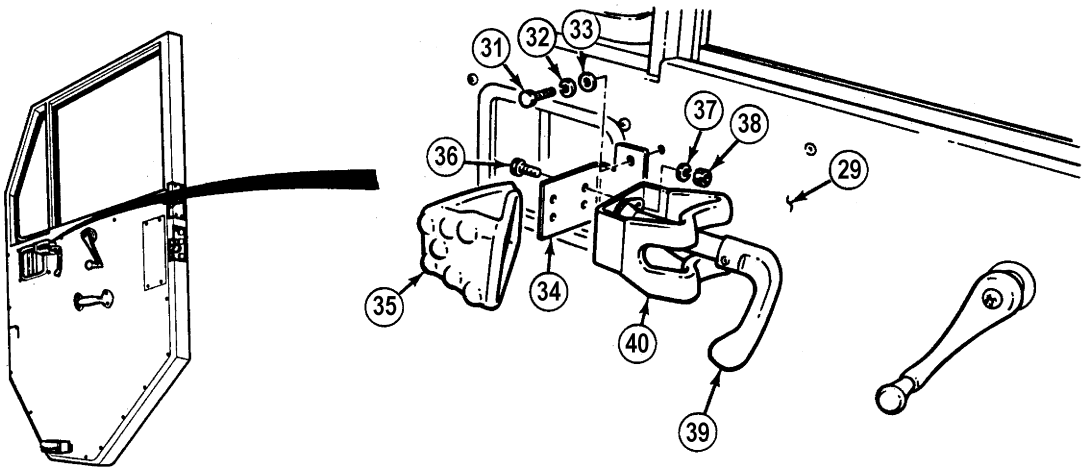

(11) Remove two screws (31), lockwashers (32), washers (33), angle bracket (34) and boot (35) from door assembly (29). Discard lockwashers.

(12) Remove two screws (36), lockwashers (37), nuts (38), rifle catch (39) and catch bracket (40) from angle bracket (34). Discard lockwasher.

b. Installation.

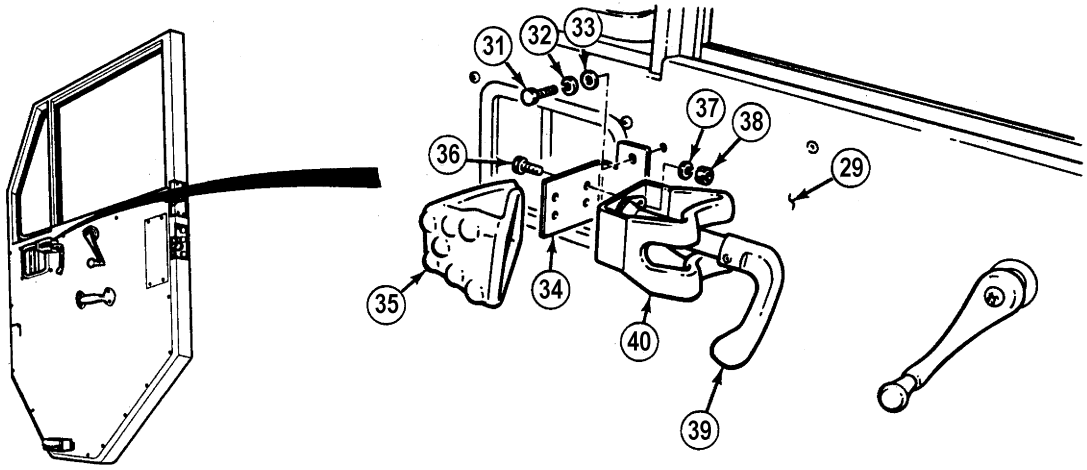

NOTE

Steps (1) through (5) are for right side cab.

(1) Install catch bracket (40) and rifle catch (39) on angle bracket (34) with two screws (36), lockwashers (37) and nuts (38).

(2) Install boot (35) and angle bracket (34) with two washers (33), lockwashers (32) and screws (31) on door assembly (29).

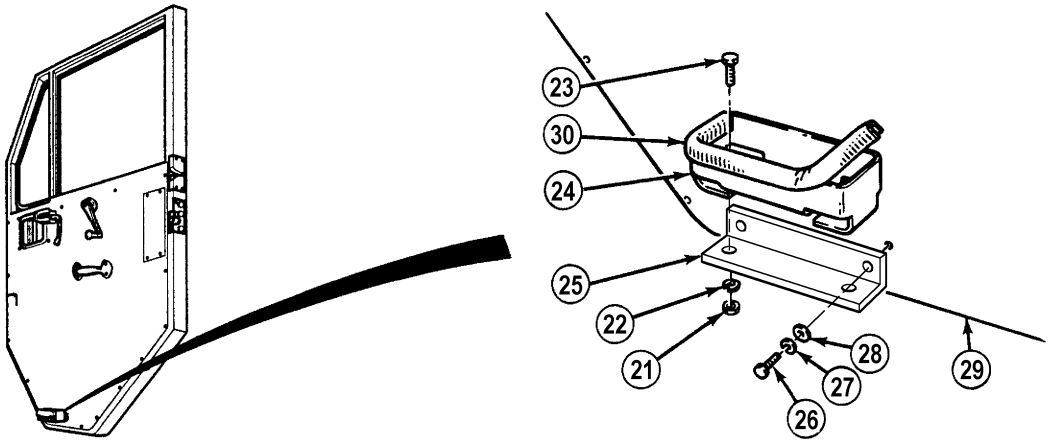

NOTE

If quickedge was removed, perform Step (3).

(3) Install quickedge (30) on rifle support (24).

(4) Install bracket (25) with two washers (28), lockwashers (27) and screws (26) on door assembly (29). Tighten screws to 100 lb-in (11 N·m).

(5) Install rifle support (24) with two screws (23), lockwashers (22) and nuts (21) on bracket (25). Tighten nuts to 100 lb-in (11 N·m).

17-57. RIFLE STOWAGE BRACKETS REPLACEMENT (CONT).

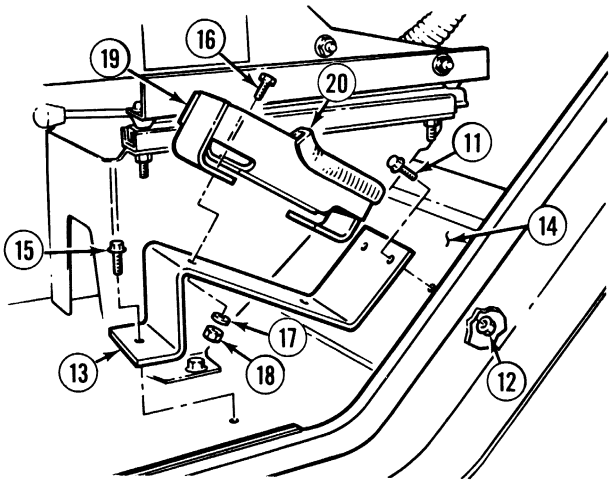

NOTE

- Steps (6) through (12) are for left side cab.
- If quickedge was removed, perform Step (6).

(6) Install quickedge (20) on rifle support (19).

(7) Install rifle support (19) with two screws (16), lockwashers (17) and nuts (18) on rifle stock support (13). Tighten nuts to 100 lb-in (11 N·m).

(8) Install screw (15) on rifle stock support (13).

(9) Install rifle stock support (13) with two screws (11) and locknuts (12) on cab frame (14). Tighten nuts to 100 lb-in (11 N·m).

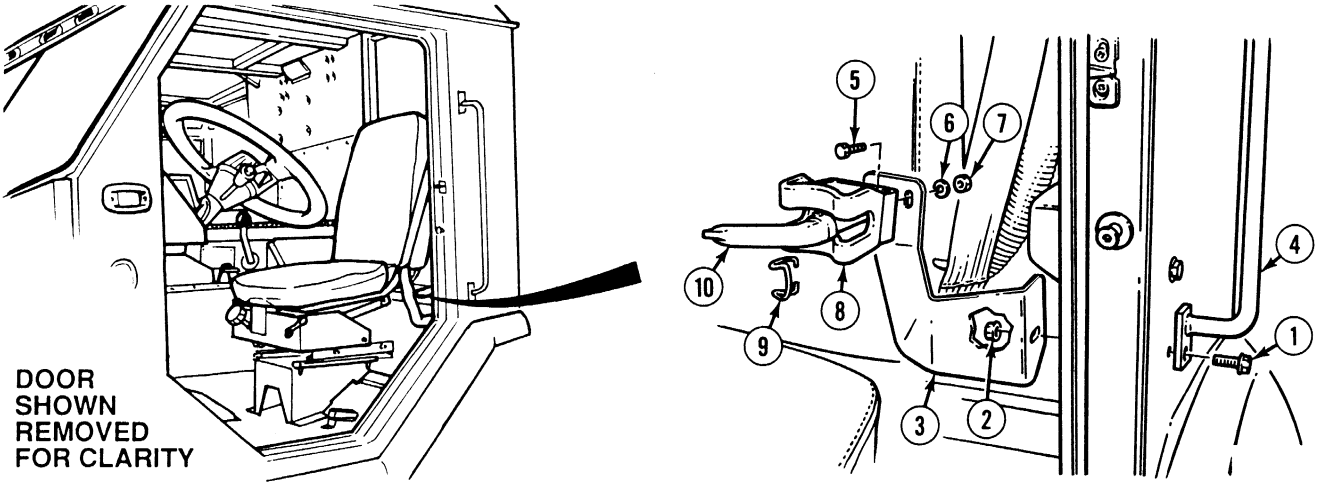

(10) Install clip (9) on catch (10) and bracket (8).

(11) Install bracket (8) on support (3) with two screws (5), lockwashers (6) and nuts (7).

(12) Install support (3) on grab handle (4) with screw (1) and locknut (2).

c. Follow-On Maintenance:

- Remove wheel chocks, (TM 9-2320-364-10).

END OF TASK

17-58. LADDER SUPPORT REPAIR.

This task covers:

a. Removal
b. Disassembly
c. Cleaning/Inspection
d. Assembly
e. Installation
f. Follow-On Maintenance

INITIAL SETUP

Tools and Special Tools
Tool Kit, General Mechanic's: Automotive (Item 74, Appendix G)
Vise, Machinist's (Item 75, Appendix G)
Wrench, Torque (0 to 175 lb-ft [0 to 237 N·m]) (Item 95, Appendix G)

Materials/Parts
Locknut (Item 110, Appendix F)
Locknut (2) (Item 133, Appendix F)
Locknut (Item 134, Appendix F)
Locknut (Item 140, Appendix F)

Equipment Condition
Engine OFF, (TM 9-2320-364-10)
Wheels chocked, (TM 9-2320-364-10)
Ladder removed, (TM 9-2320-364-10)

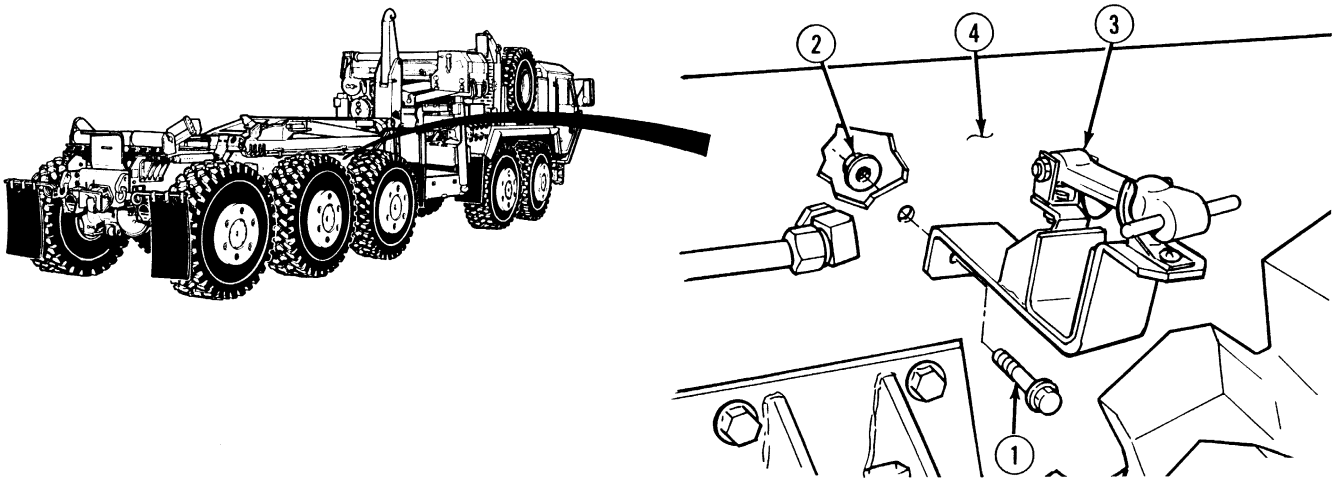

NOTE

There are two ladder supports. Both ladder supports are removed the same way.

a. Removal. Remove screw (1), locknut (2) and ladder support (3) from truck (4). Discard locknut.

b. Disassembly.

(1) Remove two locknuts (5), screws (6) and hook support (7) from ladder support (3). Discard locknuts.

(2) Remove locknut (8), screw (9) and latch hood (10) from retaining strap (11). Discard locknut.

(3) Remove locknut (12), screw (13) and retaining strap (11) from ladder support (3). Discard locknut.

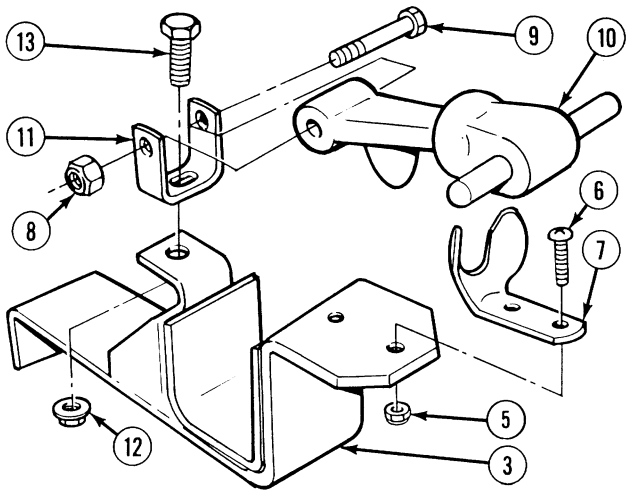

c. Cleaning/Inspection.

(1) Inspect latch hood for cracks.

(2) Inspect all weldments for cracks or dents.

(3) Inspect ladder support for cracks or damage.

(4) Replace all damaged parts.

d. Assembly.

(1) Install retaining strap (11), screw (13) and locknut (12) on ladder support (3). Tighten screw to 23 lb-ft (31 N·m).

(2) Install latch hood (10), screw (9) and locknut (8) on retaining strap (11). Tighten until three threads are showing.

(3) Install support hook (7), two screws (6) and locknuts (5) on ladder support (3).

e. Installation. Install support (3), screw (1) and locknut (2) on truck (4). Tighten to 30 lb-ft (41 N·m).

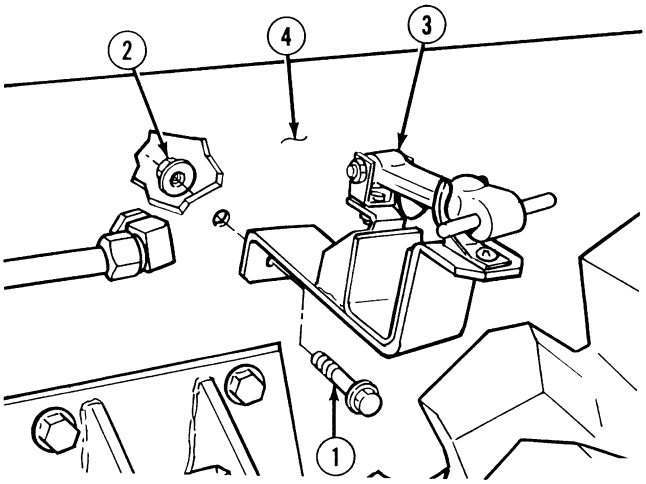

f. Follow-On Maintenance:

- Install ladder, (TM 9-2320-364-10).
- Remove wheel chocks, (TM 9-2320-364-10).

END OF TASK

17-59. THREADED SCREW INSERT REPLACEMENT.

This task covers:

a. Removal b. Installation c. Follow-On Maintenance

INITIAL SETUP

Tools and Special Tools
Tool Kit, General Mechanic's: Automotive (Item 74, Appendix G)
Drill, Electric, Portable (Item 11, Appendix G)
Drill Set, Twist (Item 28, Appendix G)
Tool Kit, Blind Rivet (Item 72, Appendix G)

Equipment Condition
Engine OFF, (TM 9-2320-364-10)
Wheels chocked, (TM 9-2320-364-10)

NOTE

- All threaded screw inserts are replaced the same way. Door threaded screw insert is shown.
- When replacing threaded screw inserts, refer to Table 17-1 to determine which twist drill to use.

Table 17-1. **Threaded Screw Insert Replacement Parts.**

Part Number	Twist Drill Size (In.)	Thread Size
2025970	25/64	.25 - 20
2025980	25/64	.25 - 20
2025990	19/64	.10 - 24
2026010	17/32	.31 - 18
2026020	17/32	.31 - 18

CAUTION

When drilling out threaded screw insert do not enlarge existing hole. The new threaded screw insert will not seat properly if hole is enlarged.

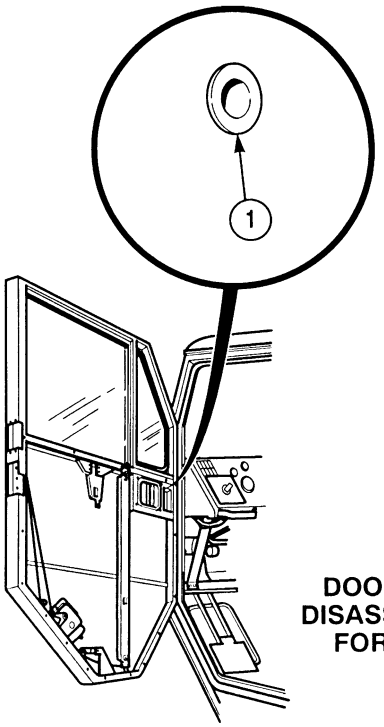

DOOR SHOWN DISASSEMBLED FOR CLARITY

a. Removal. Drill out threaded screw insert (1).

b. Installation. Install threaded screw insert (1) in hole.

c. Follow-On Maintenance:

- Remove wheel chocks, (TM 9-2320-364-10).

END OF TASK

17-60. STOWAGE BOX/ENGINE COVER LATCH ADJUSTMENT.

This task covers:

a. Adjustment

b. Follow-On Maintenance

INITIAL SETUP

Tools and Special Tools
Tool Kit, General Mechanic's: Automotive
(Item 74, Appendix G)

Equipment Condition
Engine OFF, (TM 9-2320-364-10)
Wheels chocked, (TM 9-2320-364-10)

a. Adjustment.

NOTE

To tighten latch, do Steps (1) through (3). To loosen latch, do Steps (4) through (6).

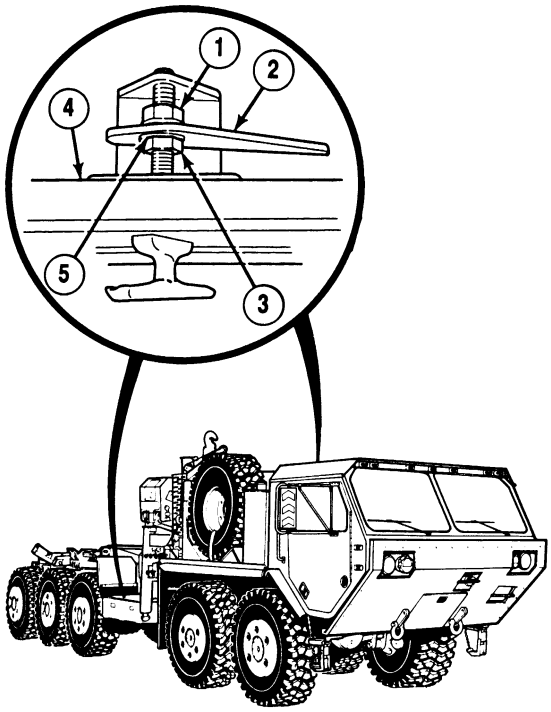

(1) Loosen nut (1) away from latching device (2).

(2) Tighten nut (3).

(3) Repeat Steps (1) and (2) until stowage box door (4) latches properly.

(4) Loosen nut (3) and lockwasher (5) away from latching device (2).

(5) Tighten nut (1).

(6) Repeat Steps (4) and (5) until stowage box door latches properly.

(7) Proper engine cover adjustment is achieved when .12 in. (3.17 mm) of play is felt between engine cover and striker.

b. Follow-On Maintenance:

- Remove wheel chocks, (TM 9-2320-364-10).

END OF TASK

CHAPTER 18

MATERIAL HANDLING CRANE (MHC), SELF-RECOVERY WINCH (SRW) AND LOAD HANDLING SYSTEM (LHS) MAINTENANCE

Para	Contents	Page
18-1	Introduction	18-1
18-2	Boom Sheave Replacement	18-2
18-3	Boom Wear Pads Inspection/Replacement	18-5
18-4	Crane Remote Control Box Repair	18-12
18-5	Crane Hoist Cable Replacement	18-20
18-6	Retainer Bar/Roller Replacement	18-22
18-7	Crane Angle Indicator Replacement	18-28
18-8	Crane Hook Block, Hook and Clevis Repair	18-30
18-9	Auxiliary Hand Pump Repair	18-37
18-10	Crane Accumulator Replacement	18-41
18-11	Crane Hydraulic Hoses, Tubes and Fittings Replacement	18-44
18-12	Self-Recovery Winch (SRW) Replacement	18-63
18-13	Self-Recovery Winch (SRW) Front Tension Guide Repair	18-68
18-14	Self-Recovery Winch (SRW) Front Guide Replacement	18-73
18-15	Self-Recovery Winch (SRW) Rear Tension Guide Repair	18-75
18-16	Self-Recovery Winch (SRW) Rear Guide Replacement	18-81
18-17	Self-Recovery Winch (SRW) Cable Replacement	18-83
18-18	Outrigger Pads Repair	18-86

18-1. INTRODUCTION.

This chapter contains maintenance instructions for removing, replacing, installing and adjusting components of the Self-Recovery Winch (SRW), Material Handling Crane (MHC) and Load Handling System (LHS) as authorized by the Maintenance Allocation Chart (MAC) at the Unit Maintenance level.

18-2. BOOM SHEAVE REPLACEMENT.

This task covers:

a. Removal
b. Cleaning/Inspection
c. Installation
d. Follow-On Maintenance

INITIAL SETUP

Tools and Special Tools
Tool Kit, General Mechanic's: Automotive (Item 74, Appendix G)
Compressor Unit, Air (Item 11, Appendix G)
Gloves, Chemical Oil Protective (Item 28, Appendix G)
Goggles, Industrial (Item 30, Appendix G)
Gun, Air Blow (Item 31, Appendix G)
Pliers, Retaining Ring (Item 49, Appendix G)
Socket Set, 3/4 in. (Item 62, Appendix G)
Wrench, Combination 1-1/8 in. (Item 79, Appendix G)
Wrench, Torque (0 to 600 lb-ft [0 to 814 N·m]) (Item 97, Appendix G)

Materials/Parts
Oil, Lubricating (Item 54, Appendix C)
Lockwasher (Item 200, Appendix F)
Washer, Key (Item 350, Appendix F)

Equipment Condition
Engine OFF, (TM 9-2320-364-10)
Wheels chocked, (TM 9-2320-364-10)
Hoist cable removed, (Para 18-4)

a. Removal.

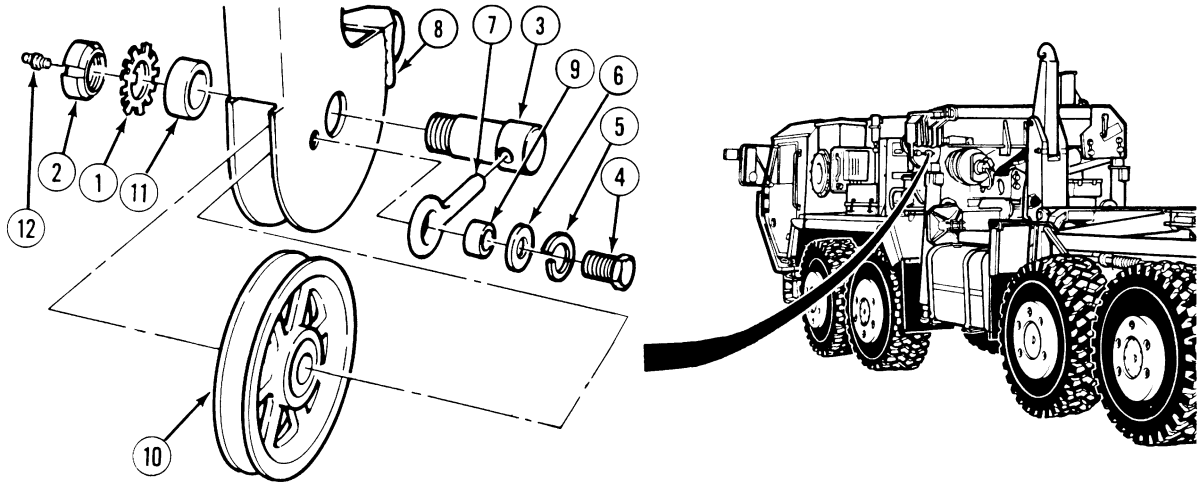

(1) Straighten tines of lock ring (1) and remove nut (2) and key washer from shaft (3). Discard key washer.

(2) Remove screw (4), lockwasher (5), washer (6) and lock pin (7) from fly section (8). Discard lockwasher.

(3) Remove bushing (9) from lock pin (7).

(4) Remove shaft (3), sheave (10) and spacer (11) from fly section (8).

(5) Remove lube fitting (12) from shaft (3).

WARNING

Use care when removing retaining rings. Retaining rings are under spring tension and can act as projectiles when released and could cause severe eye injury.

CAUTION

Bearings may fall from races upon removal if care is not taken, and damage to equipment may result.

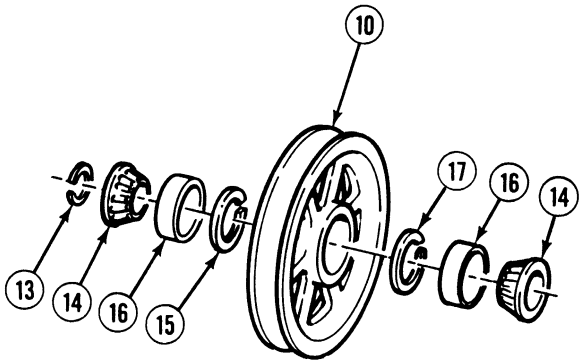

(6) Remove retaining ring (13), two bearings (14) and spacer (15) from sheave (10).

NOTE

Perform Step (7) if bushings are damaged.

(7) Remove two bushings (16) and retaining ring (17) from sheave (10).

b. Cleaning/Inspection.

WARNING

- Drycleaning Solvent (P-D-680) is TOXIC and flammable. Wear protective goggles, face shield, and gloves; use only in a well-ventilated area; avoid contact with skin, eyes, and clothes, and do not breathe vapors. Keep away from heat or flame. Never smoke when using solvent. The flashpoint for Type II Drycleaning Solvent is 140 degrees F (60 degrees C) and Type III Drycleaning Solvent is 200 degrees F (93 degrees C). Failure to do so may result in injury or death to personnel.
- If personnel become dizzy while using cleaning solvent, immediately get fresh air and medical help. If solvent contacts skin or clothes, flush with cold water. If solvent contacts eyes, immediately flush eyes with water and get immediate medical attention.
- Compressed air used for cleaning purposes will not exceed 30 psi (207 kPa). Use only with effective chip guarding and personal protective equipment (goggles/shield, gloves, etc). Failure to comply may result in injury or death to personnel.

(1) Clean all metal parts with drycleaning solvent.

(2) Allow bearing to air dry, then coat with lubricating oil.

(3) Dry metal parts with compressed air.

(4) Inspect metal parts for breaks, cracks and sharp edges.

(5) Inspect bearing for loose rollers or cracked and broken races.

(6) Replace all damaged parts.

18-2. BOOM SHEAVE REPLACEMENT (CONT).

c. Installation.

NOTE

Perform Step (1) if bushings were removed.

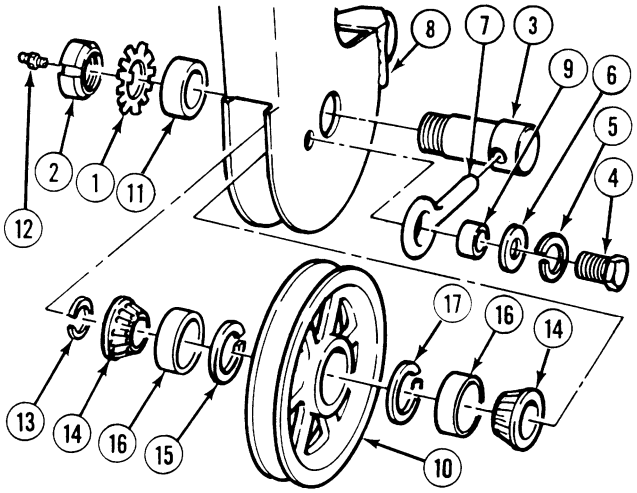

(1) Install retaining ring (17) and two bushings (16) in sheave (10).

WARNING

Use care when installing retaining rings. Retaining rings are under spring tension and can act as projectiles when released and could cause severe eye injury.

(2) Install spacer (15), bearings (14) and retaining ring (13) in sheave (10).

(3) Install lube fitting (12) in shaft (3).

(4) Install sheave (10) and spacer (11) in fly section (8) with shaft (3).

(5) Install bushing (9) in lock pin (7).

(6) Install sheave (10) with lock pin (7), washer (6), lockwasher (5) and screw (4) in fly section (8). Tighten screw to 225 lb-ft (305 N·m).

(7) Install key washer (1) and nut (2) in pin (3) and bend tines of key washer into slots in nut.

d. Follow-On Maintenance:

- Install cable, (Para 18-4).
- Lubricate fittings, (Para 2-9).
- Remove wheel chocks, (TM 9-2320-364-10).

END OF TASK

18-3. BOOM WEAR PADS INSPECTION/REPLACEMENT.

This task covers:

a. Inspection
b. Removal
c. Installation
d. Follow-On Maintenance

INITIAL SETUP

Tools and Special Tools
Tool Kit, General Mechanic's: Automotive (Item 74, Appendix G)
Drill Set, Twist (Item 19, Appendix G)
Jackstand (Item 42, Appendix G)
Wrench, Torque (0 to 175 lb-ft [0 to 237 N·m]) (Item 95, Appendix G)

Materials/Parts
Grease (Item 42, Appendix C)
Sealing Compound (Item 74, Appendix C)
Sealing Compound (Item 77, Appendix C)
Tags, Identification (Item 88, Appendix C)

Equipment Condition
Engine OFF, (TM 9-2320-364-10)
Wheel chocked, (TM 9-2320-364-10)

a. Inspection.

CAUTION

Ensure boom does not contact LHS hook arm or damage to equipment may result.

NOTE

- Ensure boom is not supported or binding.
- There are three sets of wear pads.
- Do all inspections of boom wear pads in ***a. Inspection*** before proceeding to ***b. Removal.***

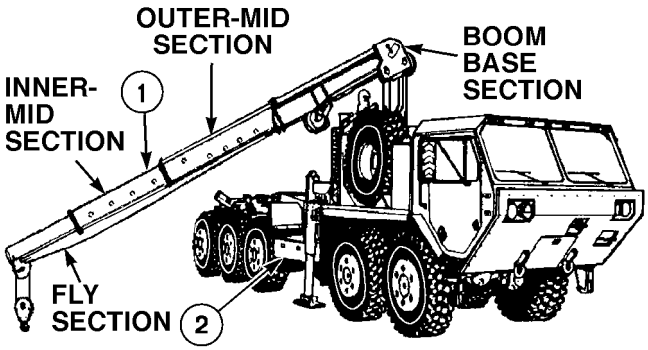

(1) Fully extend boom (1) over stowage box (2).

18-3. BOOM WEAR PADS INSPECTION/REPLACEMENT (CONT).

NOTE

- If measurement in Step (2) is less than 1/32 in. (.8 mm), replace wear pads.
- Wear pads must be replaced in pairs.

(2) Measure and record distance between two inner-mid section wear pad retainers (3) and bottom of fly section (4). (Measurement A).

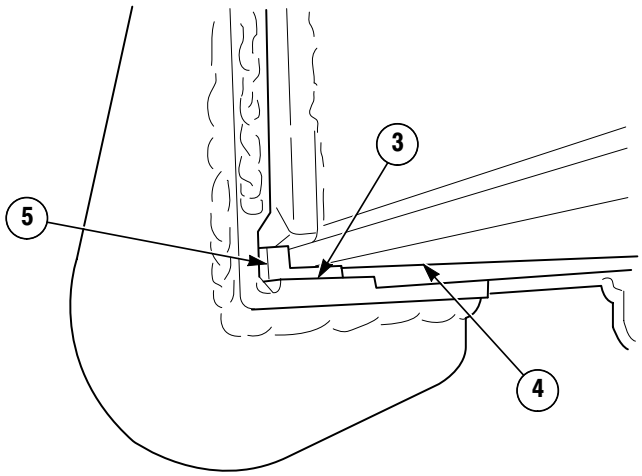

NOTE

- If measurement in Step (3) is more than 1/8 in. (3.2 mm), replace wear pads.
- Wear pads must be replaced in pairs.

(3) Measure and record distance lower edge of fly section (4) has worn into sides of two wear pads (5). (Measurement B).

(4) Repeat Steps (2) and (3) for outer-mid section and boom base section.

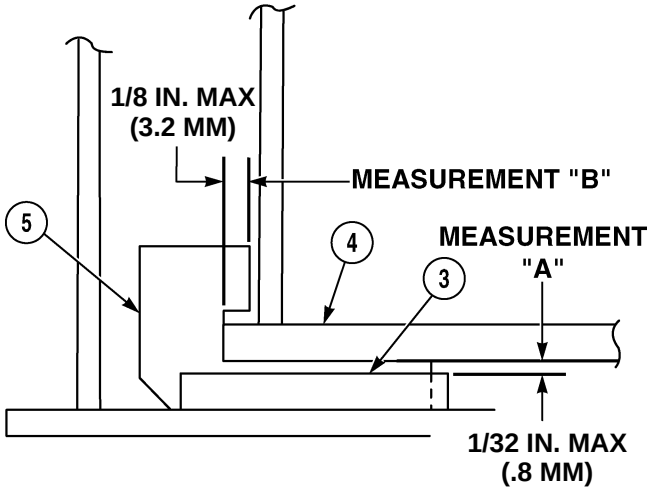

NOTE

- If measurement in Step (5) is more than 1/8 in. (3.2 mm) or less than 1/16 in. (1.6 mm), shims must be added or subtracted or wear pads replaced. Wear pad clearance should be reinspected.
- Proper shim size for each wear pad is determined by dividing measurement “C” by two.
- Boom must be positioned tight up against opposite wear pad being measured.

(5) Measure and record distance between lower edge of fly section (4) and wear pad (5). (Measurement C).

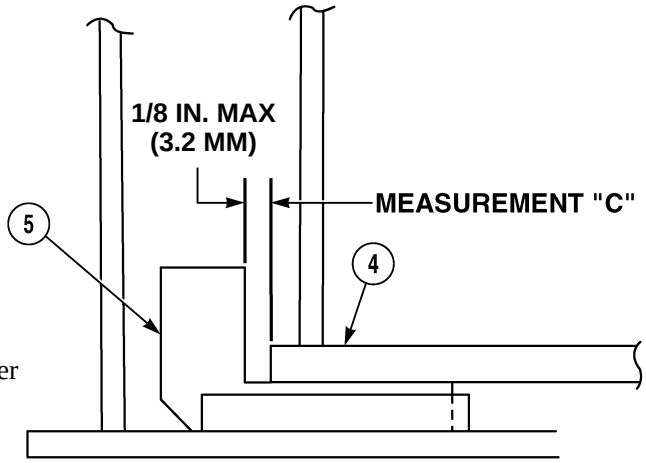

(6) Repeat Step (5) for outer-mid section and boom base section.

NOTE

- If measurement in Step (7) is not between 1/16 in. (1.6 mm) and 1/8 in. (3.2 mm), shims must be added or wear pad replaced.
- If wear pad thickness is less than 1/4 in. (6.35 mm), replace wear pad.

(7) Measure and record distance between wear pad (6) and top of fly section (4). (Measurement D).

(8) Measure and record thickness of wear pad (6). (Measurement E).

(9) Repeat Steps (7) and (8) for outer-mid section and boom base section.

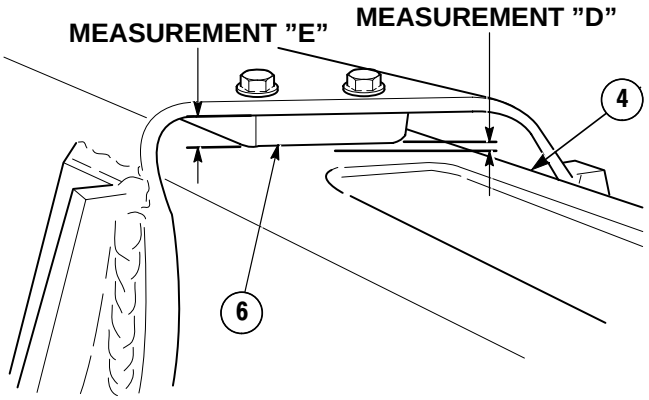

b. Removal.

CAUTION

Ensure boom does not contact LHS hook arm or damage to equipment may result.

NOTE

- There are three sets of wear pads. They are removed the same way. Inner-mid and fly section are shown.
- Ensure boom is not supported or binding.

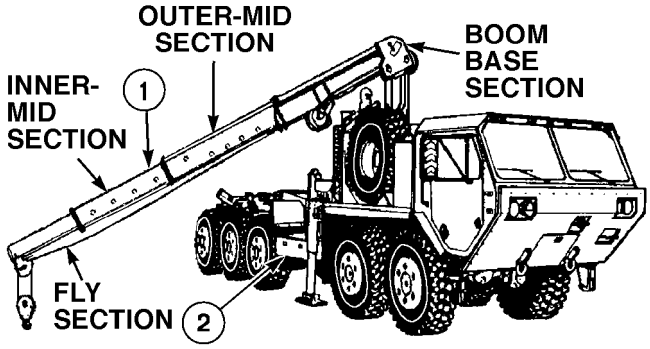

(1) Fully extend boom (1) and position over stowage box (2).

NOTE

- Wear pad may have shims.
- Note location and number of shims during removal.
- Wear pad in Step (2) must be removed to allow removal of wear pads in Step (5).
- Tag and mark screws after removal.

(2) Remove two screws (3), washers (4), shim (5) and wear pad (6) from inner-mid section (7).

(3) Repeat Step (2) for outer-mid section and boom base section.

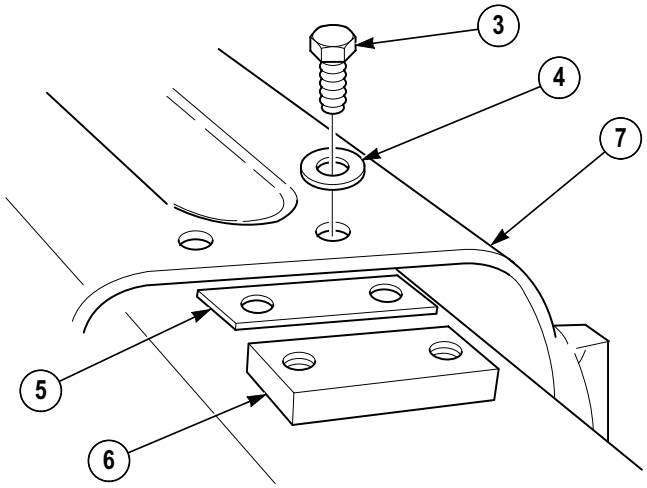

18-3. BOOM WEAR PADS INSPECTION/REPLACEMENT (CONT).

CAUTION

Do not apply excessive force on jackstand with boom. Only allow weight of boom to lift boom off of bottom of wear pads. Failure to comply may result in damage to equipment.

NOTE

- Hook block may need to be lowered to clear jackstand.
- Lower boom until top of fly section contacts inside top of inner mid section.

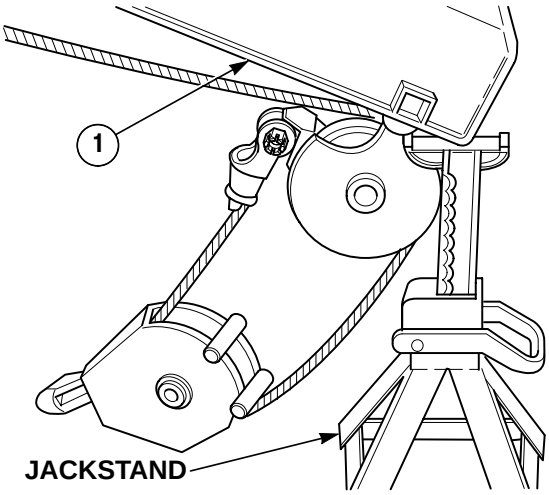

(4) Position end of boom (1) on jackstand.

WARNING

Do not put fingers in between boom sections when removing wear pads. Use a screwdriver or similar tool to remove wear pads. Failure to comply may result in injury to personnel.

NOTE

- Wear pads are removed by sliding towards center of inner-mid section.
- Note location and position of wear pads after removal.
- There are three sets of wear pads. They are removed the same way. Inner-mid and fly section are shown.

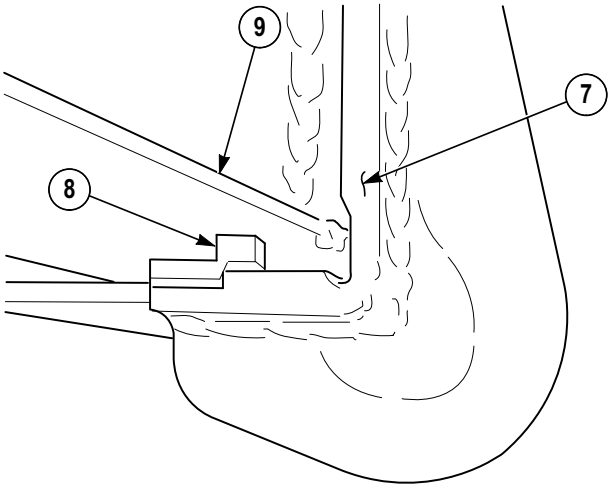

(5) Remove two wear pads (8) from inner-mid section (7) and fly section (9).

NOTE

- Wear pads may have shims.
- Perform Step (6) if wear pads have shims.
- Note location and number of shims after removal.

(6) Remove screw (10) and shim(s) (11) from two wear pads (8).

(7) Repeat Steps (5) and (6) for outer-mid section and boom base section.

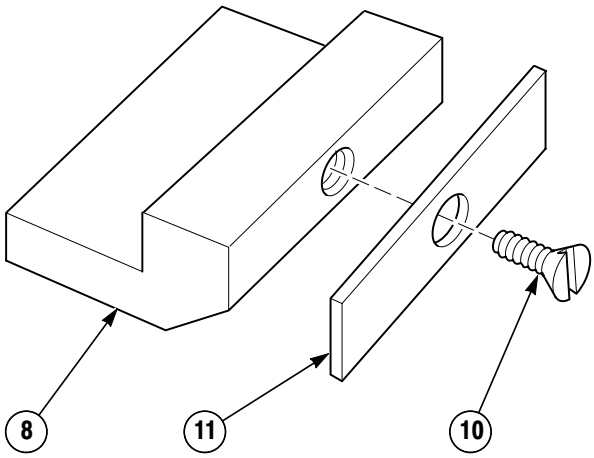

c. Installation.

WARNING

Adhesives, solvents and sealing compounds can burn easily, can give off harmful vapors and are harmful to skin and clothing. To avoid injury or death, keep away from open fire and use in well-ventilated area. If adhesive, solvent or sealing compound gets on skin or clothing, wash immediately with soap and water.

CAUTION

If installing new wear pad or changing shim amount or size, screw must not protrude through back of wear pad or damage to equipment may result.

NOTE

- Install shims as noted during removal.
- Beveled side of shim faces away from wear pad.
- Wear pad may or may not require shims.
- Perform Steps (1) and (2) if wear pads have shims.
- There are three sets of wear pads. They are installed the same way. Inner-mid and fly section are shown.

(1) Apply sealing compound to threads of two screws (10).

(2) Install shim(s) (11) and two screws (10) on wear pads (8).

(3) Apply grease to contact surface of two wear pads (8).

18-3. BOOM WEAR PADS INSPECTION/REPLACEMENT (CONT).

WARNING

Do not put fingers in between boom sections when installing wear pads. Use a screwdriver or similar tool. Failure to comply may result in injury to personnel.

NOTE

Wear pads are positioned between two wear pad retainers.

(4) Install two wear pads (8) in inner-mid section (7) and fly section (9).

(5) Repeat Steps (1) through (4) for outer-mid section and boom base section.

NOTE

- Wear pads must be fully seated against outer edge of inner-mid section.
- Ensure fly section seats in wear pads.

(6) Raise boom (1) up off of jackstand.

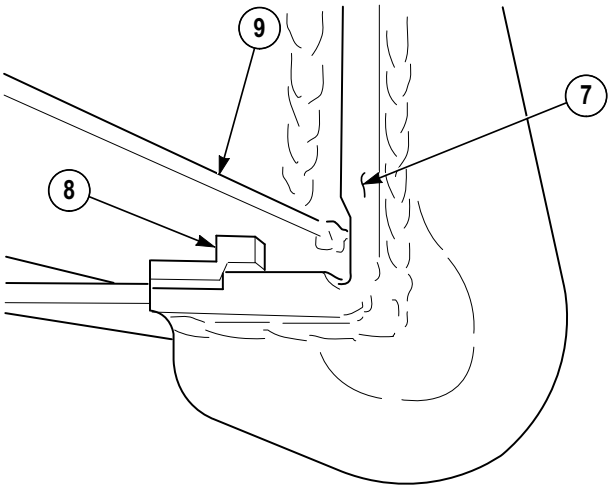

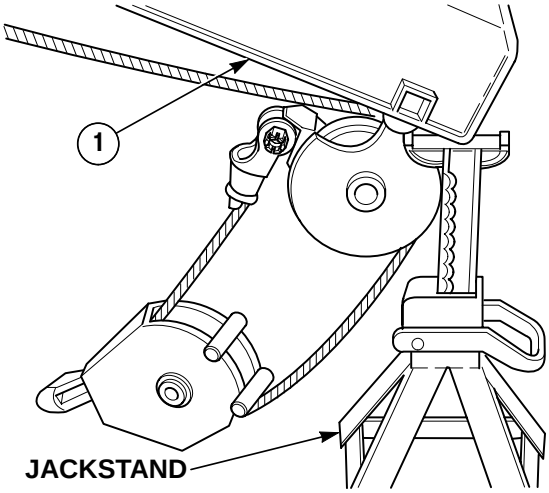

WARNING

Adhesives, solvents and sealing compounds can burn easily, can give off harmful vapors and are harmful to skin and clothing. To avoid injury or death, keep away from open fire and use in well-ventilated area. If adhesive, solvent or sealing compound gets on skin or clothing, wash immediately with soap and water.

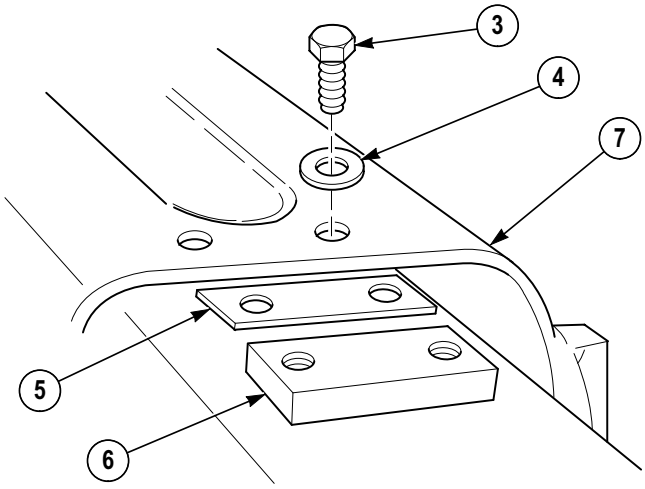

CAUTION

If installing new wear pad or changing shim amount or size, ensure correct screw is installed. Screw must not protrude through wear pad and wear pad must fit tight or damage to equipment may result.

NOTE

Wear pad may or may not require shims.

(7) Apply sealing compound to threads of two screws (3).

(8) Install wear pad (6), shim(s) (5), two washers (4) and screws (3) to inner-mid section (7). Tighten screws (3) to 31 lb-ft (42 N·m).

(9) Apply grease to wear pad (6).

(10) Repeat Steps (7) through (9) for outer-mid section and boom base section.

d. Follow-On Maintenance:

- Load test crane, (TM 9-2320-364-34-2).
- Stow crane, (TM 9-2320-364-10).
- Remove wheel chocks, (TM 9-2320-364-10).

END OF TASK

18-4. CRANE REMOTE CONTROL BOX REPAIR.

This task covers:

a. Disassembly
b. Cleaning/Inspection
c. Assembly
d. Follow-On Maintenance

INITIAL SETUP

Tools and Special Tools
Tool Kit, Electric (Item 73, Appendix G)
Tool Kit, General Mechanic's: Automotive (Item 74, Appendix G)
Compressor Unit, Air (Item 11, Appendix G)
Drill, Electric, Portable (Item 17, Appendix G)
Drill Set, Twist (Item 19, Appendix G)
Gloves, Chemical Oil Protective (Item 28, Appendix G)
Goggles, Industrial (Item 30, Appendix G)
Gun, Air Blow (Item 31, Appendix G)
Tool Kit, Blind Rivet (Item 72, Appendix G)
Wrench, Combination, 1-11/16 in. (Item 85, Appendix G)

Materials/Parts
Adhesive (Item 6, Appendix C)
Adhesive (Item 10, Appendix C)
Silicone Compound (Item 84, Appendix C)
Solvent, Drycleaning (Item 87, Appendix C)
Tags, Identification (Item 88, Appendix C)
Gasket (Item 64, Appendix F)
Locknut (16) (Item 119, Appendix F)
Lockwasher (3) (Item 150, Appendix F)
Lockwasher (Item 155, Appendix F)
Packing, Preformed (Item 247, Appendix F)
Washer, Plastic (2) (Item 351, Appendix F)
Washer, Rubber (Item 352, Appendix F)

Equipment Condition
Control box removed from storage box, (TM 9-2320-364-10)

a. Disassembly.

NOTE

- Tag and mark all connectors, switches and wires prior to removal.
- All controllers are removed the same way.

(1) Remove shoulder strap (1) from remote control box (2).

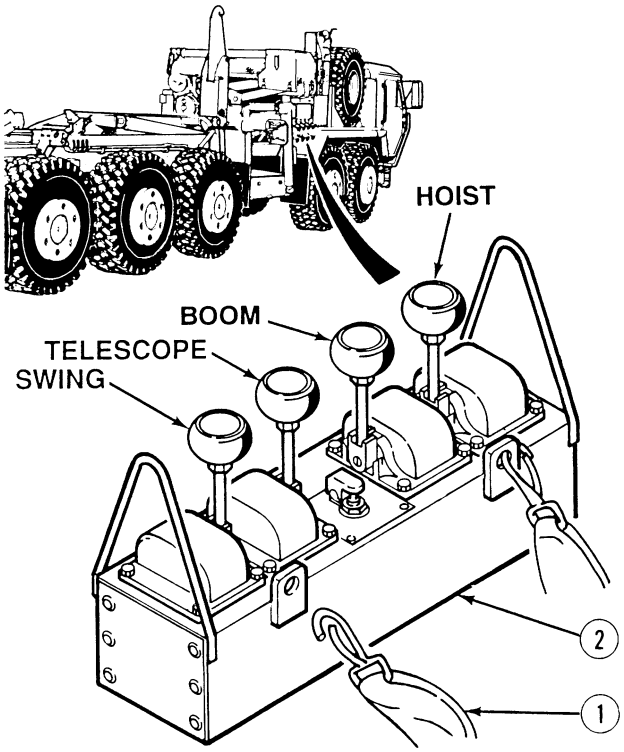

(2) Remove four locknuts (3) from studs (4). Discard locknuts.

(3) Lift swing controller (5) away from box (2).

(4) Disconnect swing controller connector (6) from connector (7).

(5) Remove gasket (8) and swing controller (5) from box (2). Discard gasket.

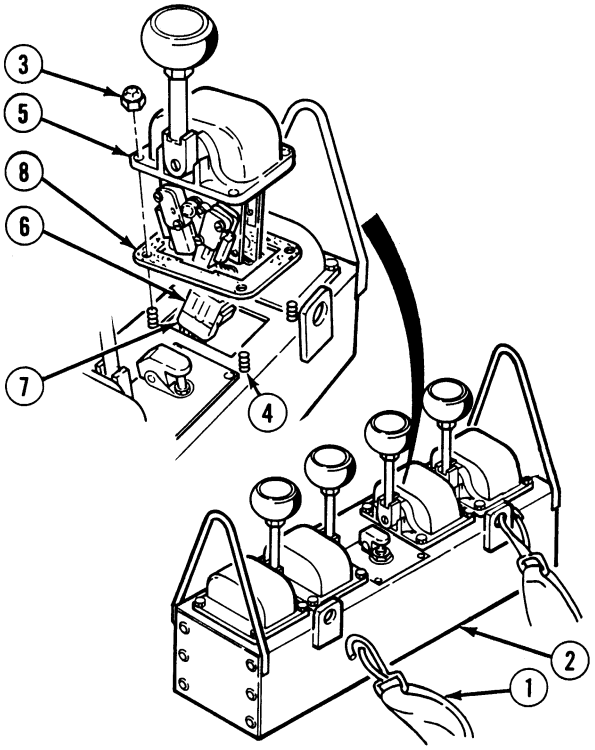

NOTE

Note position of screw and lever assembly prior to removal.

(6) Note position and remove screw (9), lever assembly (10) and preformed packing (11) from swing controller (5). Discard preformed packing.

(7) Loosen nut (12) and remove knob (13) and nut (12) from lever assembly (10).

(8) Repeat Steps (2) through (7) for telescope controller, hoist controller and boom controller.

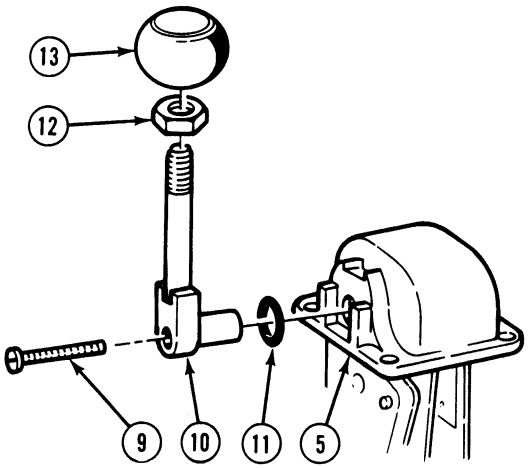

18-4. CRANE REMOTE CONTROL BOX REPAIR (CONT).

(9) Disconnect switch (14) from connector (15).

(10) Remove two screws (16), switch (14) and insulator (17) from controller (18).

(11) Disconnect switch (19) from connector (20).

(12) Remove two screws (21), switch (19), insulator (22) and spacer (23).

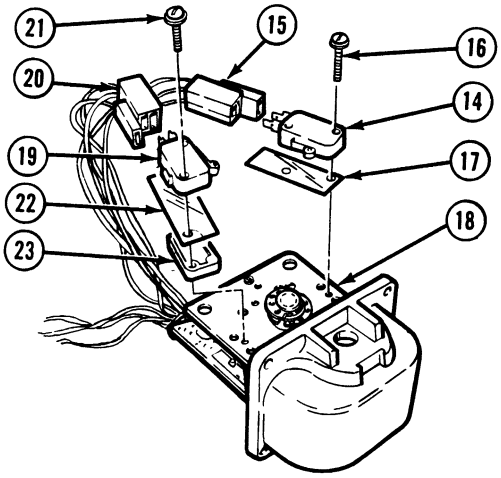

NOTE

Do not remove spacer from circuit board if circuit board is not being replaced.

(13) Remove screws (24) and (25), lockwashers (26), heat sink (27) and spacer (28) from circuit board (29). Discard lockwashers.

(14) Remove circuit board (29) from controller (18).

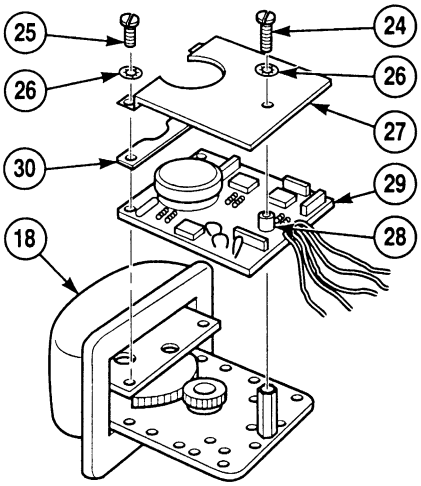

NOTE

If circuit board is not being replaced, go to Step (16).

(15) Remove heat sink (30) from circuit board (29).

(16) Repeat Steps (9) through (15) for telescope controller, hoist controller and boom controller.

(17) Remove locknut (31), washer (32), chain (33) and washer (34) from stud (35). Discard locknut and plastic washers.

(18) Remove cap (36) then note position and remove nut (37) and lockwasher (38) from receptacle (39). Discard lockwasher.

(19) Push receptacle (39) into box (2) and remove rubber washer (40). Discard rubber washer.

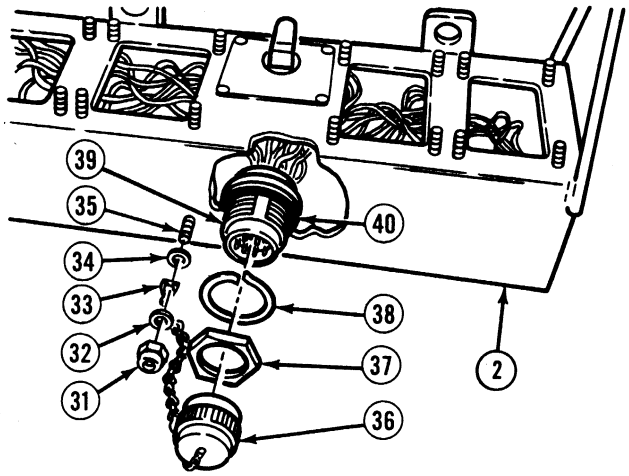

(20) Lift switch guard (41) and mark position.

(21) Remove nut (42), switch guard (41), nylon washer (43), rubber washer (44) and washer (45) from ON/OFF switch (46).

(22) Pull ON/OFF switch (46) out of box (2) through controller hole.

(23) Remove four connectors (47) from ON/OFF switch (46).

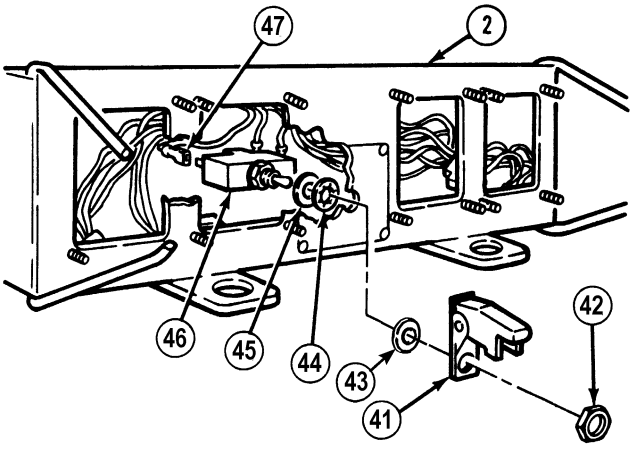

(24) Remove ground wire (48) from ground terminal (49).

(25) Remove wire harness (50) from box (2).

NOTE

Perform Step (26) only if data plate is damaged, or if replacing box.

(26) Drill out and remove four rivets (51), data plate (52) and ground terminal (49) from box (2).

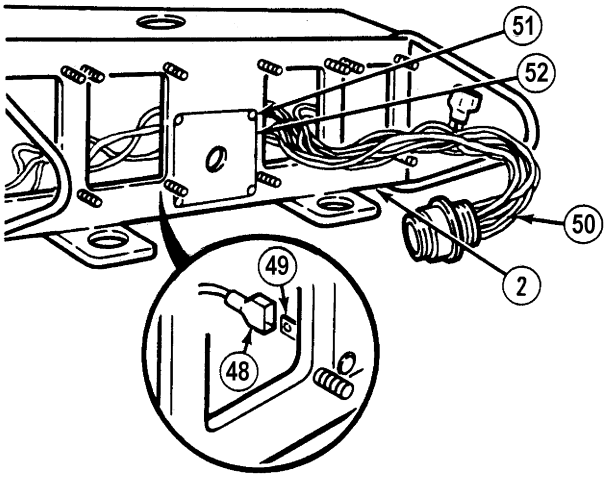

18-4. CRANE REMOTE CONTROL BOX REPAIR (CONT).

b. Cleaning/Inspection.

WARNING

- Drycleaning Solvent (P-D-680) is TOXIC and flammable. Wear protective goggles, face shield, and gloves; use only in a well-ventilated area; avoid contact with skin, eyes, and clothes, and do not breathe vapors. Keep away from heat or flame. Never smoke when using solvent. The flashpoint for Type II Drycleaning Solvent is 140 degrees F (60 degrees C) and Type III Drycleaning Solvent is 200 degrees F (93 degrees C). Failure to do so may result in injury or death to personnel.
- If personnel become dizzy while using cleaning solvent, immediately get fresh air and medical help. If solvent contacts skin or clothes, flush with cold water. If solvent contacts eyes, immediately flush eyes with water and get immediate medical attention.
- Compressed air used for cleaning purposes will not exceed 30 psi (207 kPa). Use only with effective chip guarding and personal protective equipment (goggles/shield, gloves, etc). Failure to comply may result in injury or death to personnel.

(1) Clean all metal parts with drycleaning solvent.

(2) Dry metal parts with compressed air.

(3) Inspect for broken wires and connectors, cracks, and broken welds.

(4) Replace all damaged parts.

c. Assembly.

NOTE

Perform Step (1) only if data plate was removed.

(1) Install data plate (52) and ground terminal (48) on box (2) with four rivets (51).

(2) Position wiring harness (50) in box (2).

(3) Install with ground wire (48) on ground terminal (49).

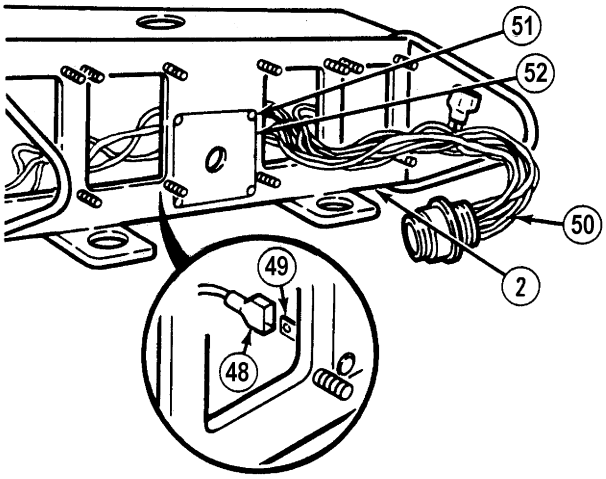

(4) Install four connectors (47) on ON/OFF switch (46).

NOTE

OFF position of switch points to rubber key of washer.

(5) Install ON/OFF switch (46) in box (2) with washer (45), rubber washer (44), nylon washer (43), switch guard (41), lockwasher (44) and nut (42).

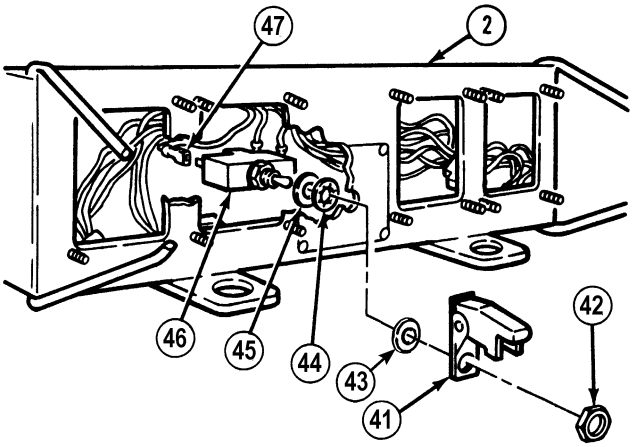

(6) Install rubber washer (40) and receptacle (39) in box (2) with lockwasher (38) and nut (37).

(7) Install cap (36) on receptacle (39).

(8) Install plastic washer (34), chain (33) and plastic washer (32) on stud (35) with locknut (31).

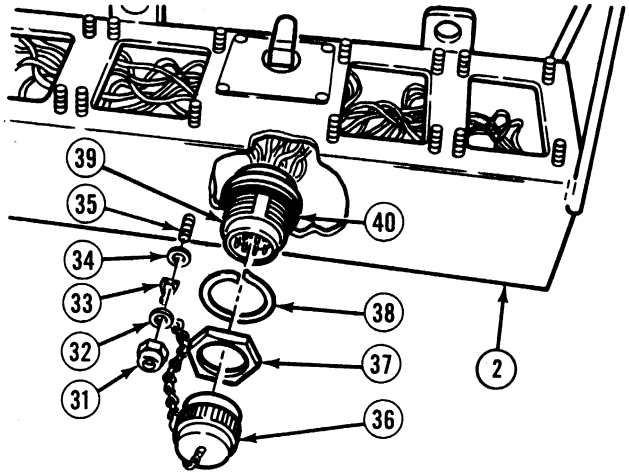

NOTE

If circuit board was not replaced, go to Step (10).

(9) Position heat sink (30) on circuit board (29).

(10) Install circuit board (29) on controller (18).

NOTE

Spacer is installed only if circuit board was replaced.

(11) Install spacer (28) and heat sink (27) on circuit board (29) with three lockwashers (26) and screws (24) and (25).

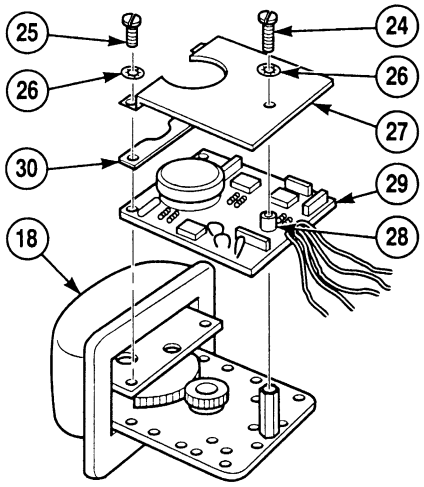

18-4. CRANE REMOTE CONTROL BOX REPAIR (CONT).

(12) Install spacer (23), insulator (22) and switch (19) on controller (18) with two screws (21).

(13) Connect connector (20) on switch (19).

(14) Install insulator (17) and switch (14) on controller (18) with two screws (16).

(15) Connect connector (15) on switch (14).

(16) Repeat Steps (12) through (15) for telescope controller, hoist controller and boom controller.

(17) Install nut (12) and knob (13) on swing control lever assembly (10).

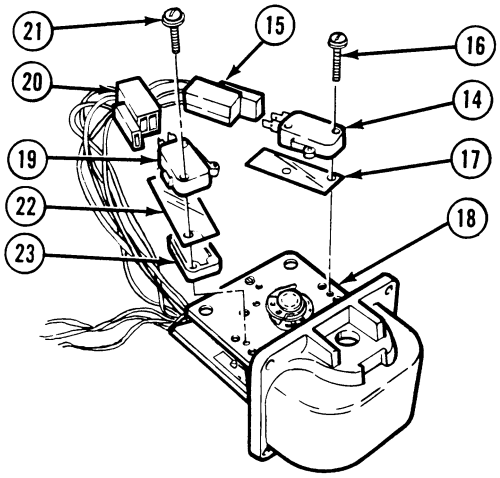

WARNING

Adhesives, solvents, and sealing compounds can burn easily, can give off harmful vapors, and are harmful to skin and clothing. To avoid injury or death, keep away from open fire and use in well-ventilated area. If adhesive, solvent, or sealing compound gets on skin or clothing, wash immediately with soap and water.

(18) Apply silicone compound to shaft (53) on swing control lever assembly (10).

(19) Install preformed packing (11) on swing control lever assembly (10).

(20) Apply adhesive to underside of head on screw (9).

(21) Install swing control lever assembly (10) on swing controller (5) with screw (9).

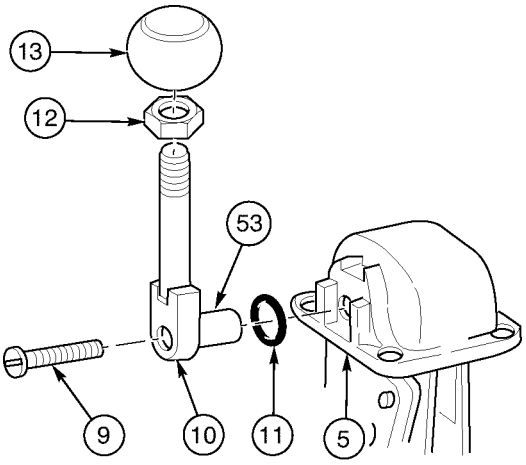

WARNING

Adhesives, solvents, and sealing compounds can burn easily, can give off harmful vapors, and are harmful to skin and clothing. To avoid injury or death, keep away from open fire and use in well-ventilated area. If adhesive, solvent, or sealing compound gets on skin or clothing, wash immediately with soap and water.

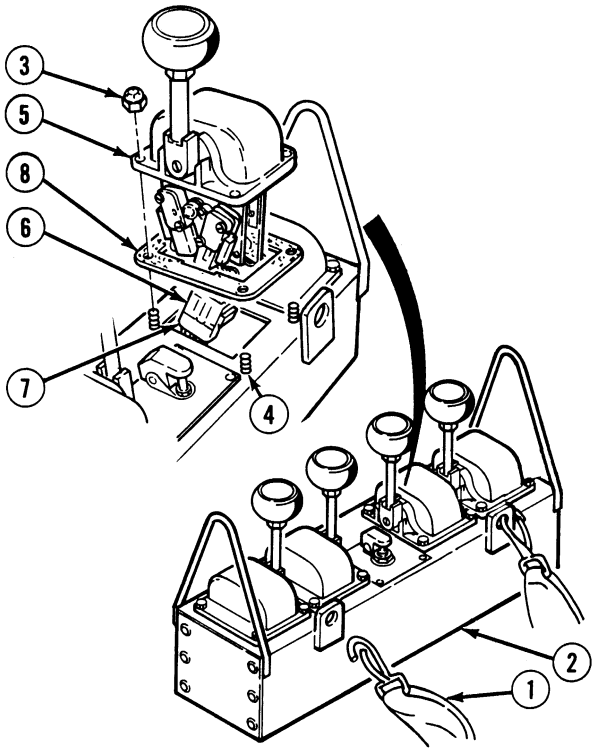

(22) Coat both sides of gasket (8) with adhesive and install gasket on swing controller (5).

(23) Connect swing controller connector (6) to connector (7).

(24) Install swing controller (5) on studs (4) and box (2) with four locknuts (3).

NOTE

The inner two valve assemblies must be installed before the outer two valve assemblies.

(25) Repeat steps (17) through (24) for telescope controller, hoist controller and boom controller in that order.

(26) Install shoulder strap (1) on box (2).

d. Follow-On Maintenance:

- Operate crane to test remote control operation, (TM 9-2320-364-10).
- Stow remote control box, (TM 9-2320-364-10).

END OF TASK

18-5. CRANE HOIST CABLE REPLACEMENT.

This task covers:

a. Removal b. Installation c. Follow-On Maintenance

INITIAL SETUP

Tools and Special Tools
Tool Kit, General Mechanic's: Automotive (Item 74, Appendix G)
Gloves, Heavy Duty (Item 29, Appendix G)

Personnel Required
Two

Equipment Condition
Engine ON (running), (TM 9-2320-364-10)
Wheels chocked, (TM 9-2320-364-10)
End of boom at working level, (TM 9-2320-364-10)
Hoist cable payed out, (TM 9-2320-364-10)
Crane hook block and clevis removed, (Para 18-8)

a. Removal.

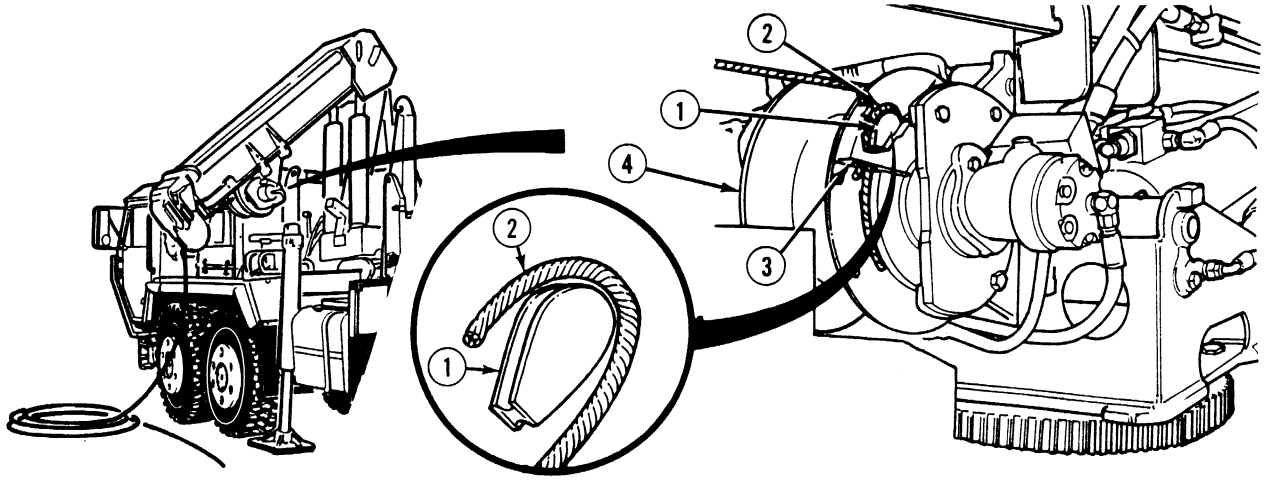

WARNING

Wear heavy gloves when handling crane cable. Never let cable run through hands; frayed cables can cut.

NOTE

Use punch on wedge inside retainer.

(1) Knock out and remove wedge (1).

(2) Straighten cable (2) and remove from retainer (3) of hoist drum (4).

b. Installation.

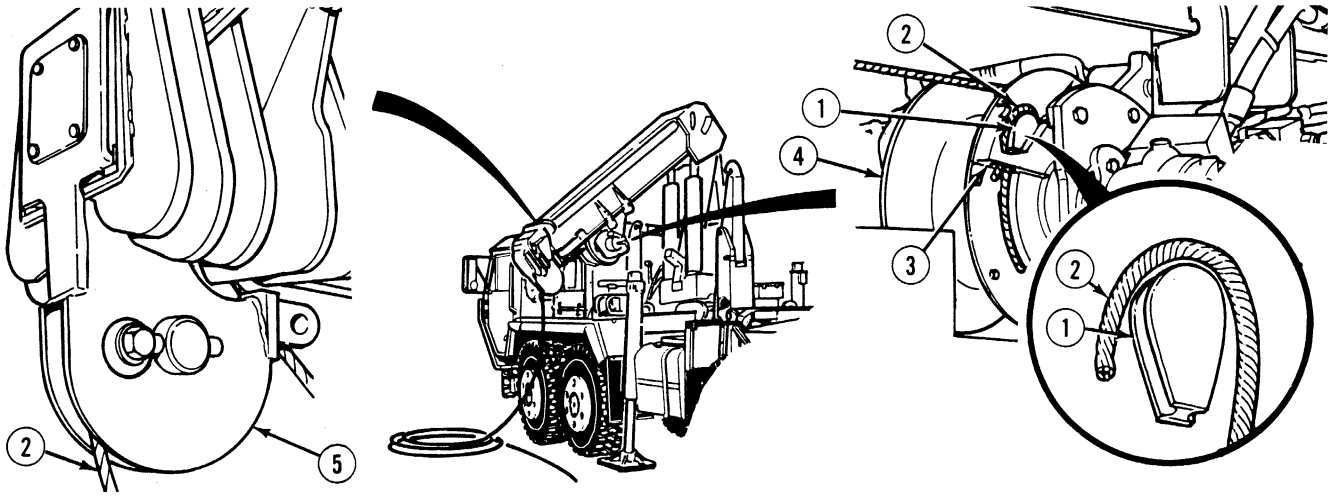

WARNING

Wear heavy gloves when handling crane cable. Never let cable run through hands; frayed cable can cut.

(1) Lay cable (2) out on level surface and remove loops.

(2) With the aid of an assistant, feed cable (2) over sheave pulley (5) and thread through hoist drum (4) from inside to outside of reel.

(3) Feed cable (2) up through retainer (3) and loop back around.

(4) Position wedge (1) inside looped cable (2). Tighten cable around wedge until 1 in. (25.4 mm) of cable extends out of retainer (3).

c. Follow-On Maintenance:

- Install hook block and clevis, (Para 18-8).
- Reel in hoist cable, (TM 9-2320-364-10).
- Load test crane, (TM 9-2320-364-34).
- Remove wheel chocks, (TM 9-2320-364-10).

END OF TASK

18-6. RETAINER BAR/ROLLER REPLACEMENT.

This task covers:

a. Removal b. Installation c. Follow-On Maintenance

INITIAL SETUP

Tools and Special Tools
Tool Kit, General Mechanic's: Automotive (Item 74, Appendix G)
Cap and Plug Set (Item 8, Appendix G)
Gloves, Chemical Oil Protective (Item 28, Appendix G)
Goggles, Industrial (Item 30, Appendix G)
Pan, Drain 4 gal (Item 47, Appendix G)
Soldering Kit, Torch (Item 64, Appendix G)
Vise, Machinist's (Item 75, Appendix G)
Wrench, Torque (0 to 175 lb-ft [0 to 237 N·m]) (Item 95, Appendix G)

Material/Parts
Cloth, Cleaning (Item 34, Appendix C)
Oil, Hydraulic (Item 50, Appendix C)

Material/Parts - Continued
Sealing Compound (Item 72, Appendix C)
Lockwasher (4) (Item 154, Appendix F)
Lockwasher (4) (Item 168, Appendix F)
Lockwasher (8) (Item 171, Appendix F)
Lockwasher (2) (Item 173, Appendix F)
Packing, Preformed (2) (Item 229, Appendix F)
Packing, Preformed (Item 248, Appendix F)

Equipment Condition
Engine OFF, (TM 9-2320-364-10)
Wheels chocked, (TM 9-2320-364-10)
Crane hoist cable payed out approximately 1 ft (0.3 m), (TM 9-2320-364-10)

a. Removal.

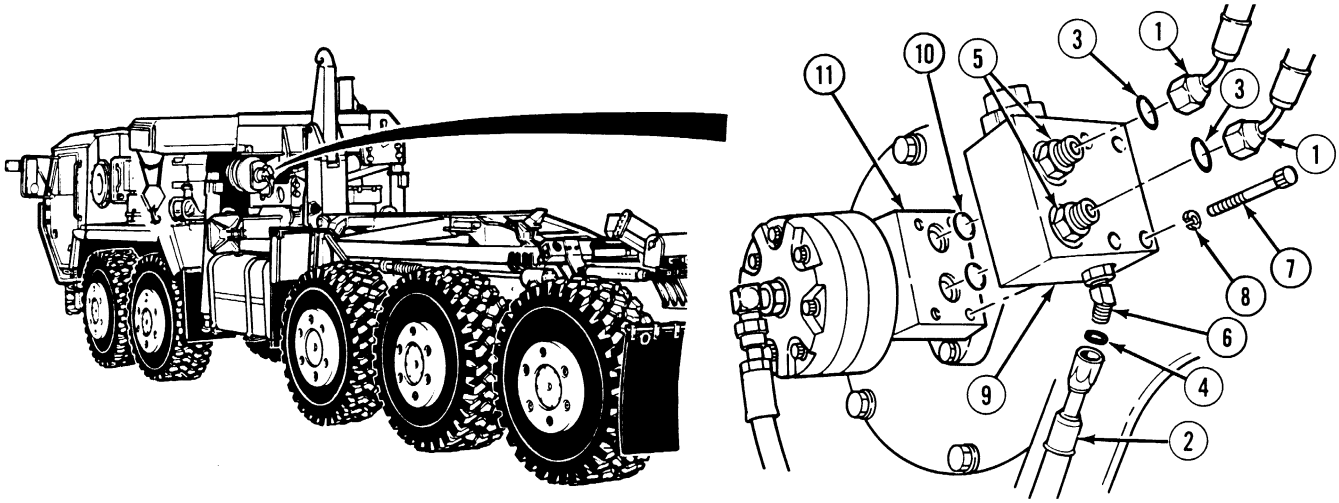

WARNING

The crane hydraulic system operates at oil pressures up to 3,100 psi (21,375 kPa). Never disconnect any hydraulic line or fitting without first dropping the pressure to zero. Failure to comply may result in serious injury or death to personnel.

NOTE

- Tag and mark hoses prior to removal.
- Cap and plug hoses and fittings after removal.

(1) Position drain pan under two hoses (1) and hose (2).

(2) Disconnect two hoses (1) and hose (2) and remove two preformed packings (3) and preformed packing (4) from two fittings (5) and elbow (6). Discard preformed packings.

(3) Remove four screws (7), lockwashers (8), hoist motor valve (9) and two preformed packings (10) from motor (11). Discard lockwashers and preformed packings.

18-6. RETAINER BAR/ROLLER REPLACEMENT (CONT).

(4) Remove four nuts (12), lockwashers (13), screws (14) and bracket assembly (15) from plates (16) and (17). Discard lockwashers.

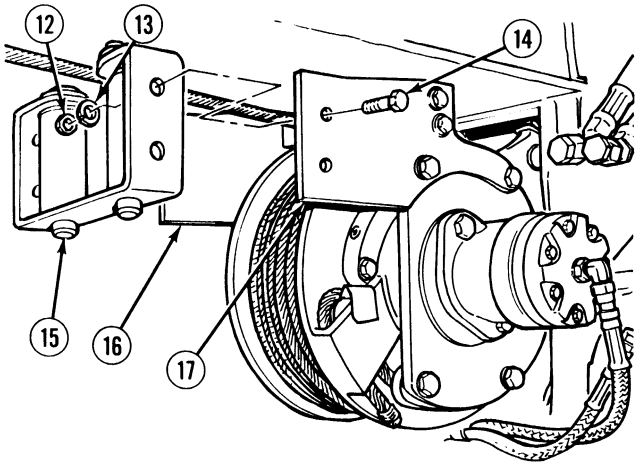

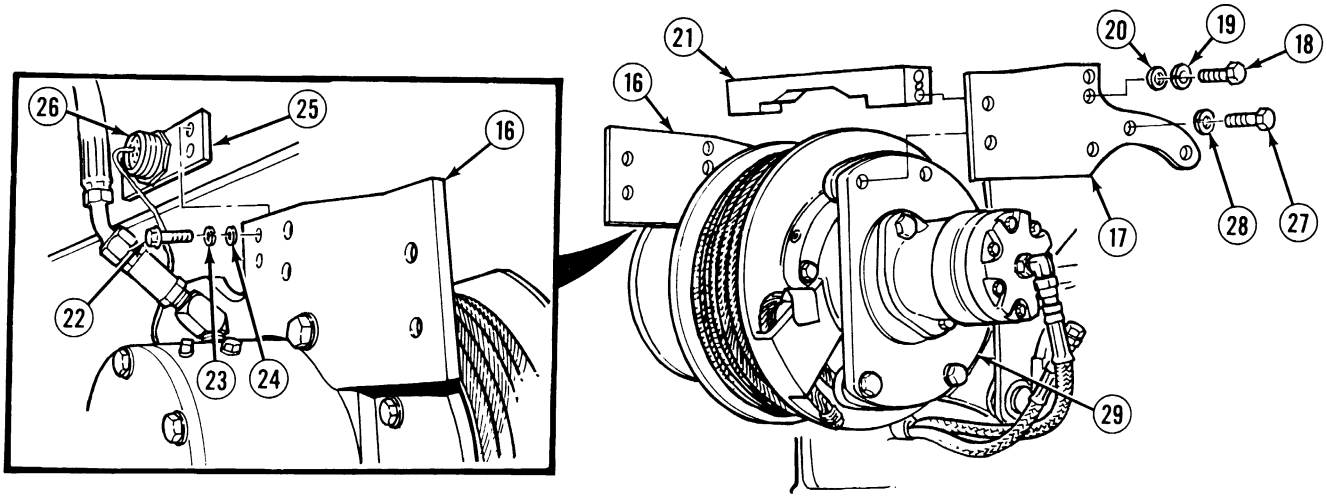

(5) Remove four screws (18), lockwashers (19) and washers (20) from bar assembly (21) and plates (16) and (17). Discard lockwashers.

(6) Remove two screws (22), lockwashers (23), washer (24), sensor bracket (25) and sensor (26) from plate (16). Discard lockwashers.

(7) Remove four screws (27), lockwashers (28), bar assembly (21) and plates (16) and (17) from hoist assembly (29). Discard lockwashers.

(8) Remove two screws (30) and wear pad (31) from bracket assembly (15).

(9) Remove two screws (32), lockwashers (33), weld pin (34), four thrust washers (35) and two roller assemblies (36) from bracket assembly (15). Discard lockwashers.

WARNING

Do not inhale fumes; could cause severe injury or death.

NOTE

It will be necessary to heat the screw with a propane torch to remove the screw.

(10) Remove hex socket screw (37) from bar assembly (21).

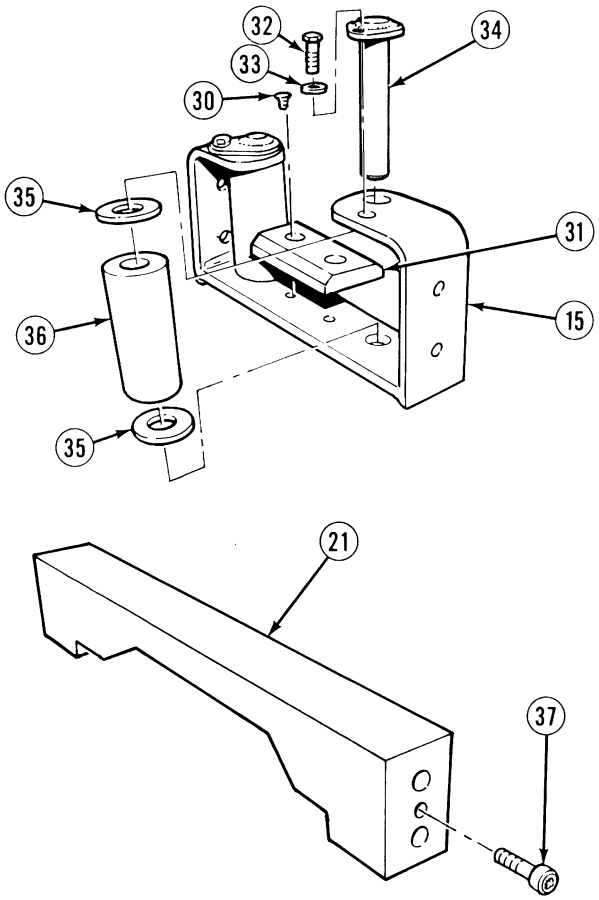

b. Installation.

WARNING

Adhesives, solvents, and sealing compounds can burn easily, can give off harmful vapors, and are harmful to skin and clothing. To avoid injury or death, keep away from open fire and use in well-ventilated area. If adhesive, solvent, or sealing compound gets on skin or clothing, wash immediately with soap and water.

(1) Coat hex socket screw (37) with sealing compound.

(2) Install hex socket screw (37) in bar assembly (21). Torque screw to 15 lb-ft (20 N·m).

(3) Install two roller assemblies (36), four thrust washers (35) and weld pin (34) in bracket assembly (15).

(4) Coat two screws (32) with sealing compound.

(5) Install two lockwashers (33) and screws (32) in bracket assembly (15). Torque screw to 12 lb-ft (20 N·m).

(6) Coat two screws (30) with sealing compound.

(7) Install wear pad (31) on bracket assembly (15) with two screws (30).

18-6. RETAINER BAR/ROLLER REPLACEMENT (CONT).

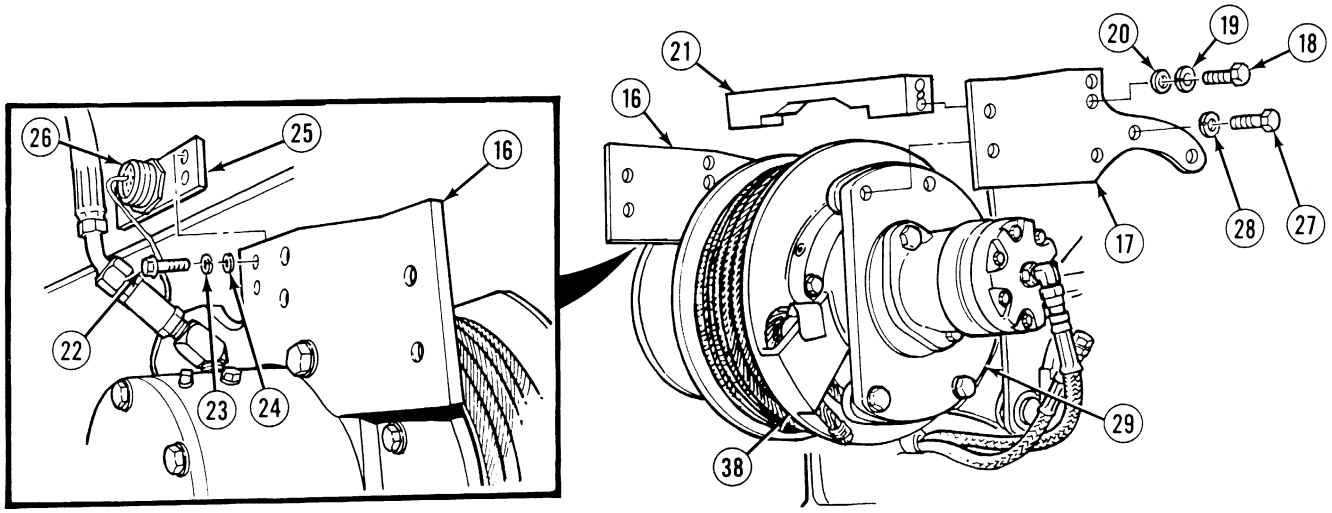

WARNING

Adhesives, solvents, and sealing compounds can burn easily, can give off harmful vapors, and are harmful to skin and clothing. To avoid injury or death, keep away from open fire and use in well-ventilated area. If adhesive, solvent, or sealing compound gets on skin or clothing, wash immediately with soap and water.

(8) Coat four screws (27) with sealing compound.

(9) Position plates (16) and (17) with four lockwashers (28) and screws (27) on hoist assembly (29).

(10) Install sensor (26) and sensor bracket (25) to plate (16) with two lockwashers (23), washers (24) and screws (22). Tighten screws to 16 lb-ft (22 N·m).

(11) Coat four screws (18) with sealing compound.

(12) Position bar assembly (21) on plates (16) and (17) with four lockwashers (19), washers (20) and screws (18).

(13) Tighten four screws (27) on plates (16) and (17) to 68 lb-ft (91 N·m).

(14) Adjust gap between bar assembly (21) and drum flange (38) to .06 in. (1.52 mm). Tighten four screws (18) to 30 lb-ft (41 N·m).

WARNING

Adhesives, solvents, and sealing compounds can burn easily, can give off harmful vapors, and are harmful to skin and clothing. To avoid injury or death, keep away from open fire and use in well-ventilated area. If adhesive, solvent, or sealing compound gets on skin or clothing, wash immediately with soap and water.

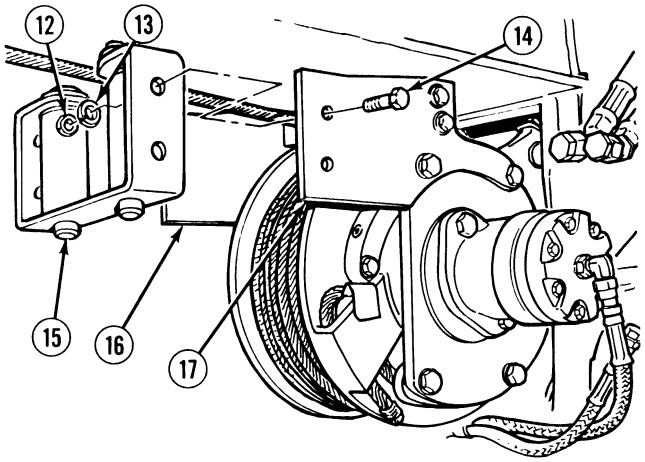

(15) Coat four screws (14) with sealing compound.

(16) Install bracket assembly (15) on plates (16) and (17) with four lockwashers (13), screws (14) and nuts (12).

(17) Apply hydraulic oil to two preformed packings (10).

(18) Install two preformed packings (10) and position hoist motor valve (9) on motor (11).

(19) Apply sealing compound on threads of four screws (7).

(20) Install four lockwashers (8) and screws (7) on hoist motor valve (9). Tighten screws to 15 to 17 lb-ft (20 to 23 N·m).

(21) Apply hydraulic oil to two preformed packings (3) and preformed packing (4).

(22) Install two preformed packings (3) and preformed packing (4) on two fittings (5) and elbow (6).

NOTE

Install hoses as noted prior to removal.

(23) Install two hoses (1) and hose (2) on two fittings (5) and elbow (6).

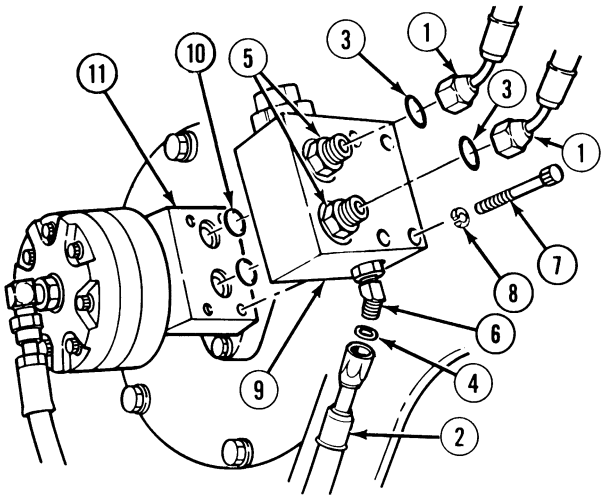

c. Follow-On Maintenance:

- Fill hydraulic reservoir, (Para 2-9, Lubrication Table 2-3).
- Check operation, (TM 9-2320-364-10).
- Check for oil leaks, (TM 9-2320-364-10).
- Load test crane, (TM 9-2320-364-34).
- Remove wheel chocks, (TM 9-2320-364-10).

END OF TASK

18-7. CRANE ANGLE INDICATOR REPLACEMENT.

This task covers:

a. Removal b. Installation c. Follow-On Maintenance

INITIAL SETUP

Tools and Special Tools
Tool Kit, General Mechanic's: Automotive (Item 74, Appendix G)
Socket Set, 3/8 in. (Item 62, Appendix G)
Wrench, Torque (0-60 N·m) (Item 98, Appendix G)

Materials/Parts
Adhesive, Retaining (Item 13, Appendix C)
Sealing Compound (Item 77, Appendix C)

Equipment Condition
Engine OFF, (TM 9-2320-364-10)
Wheels chocked, (TM 9-2320-364-10)

a. Removal.

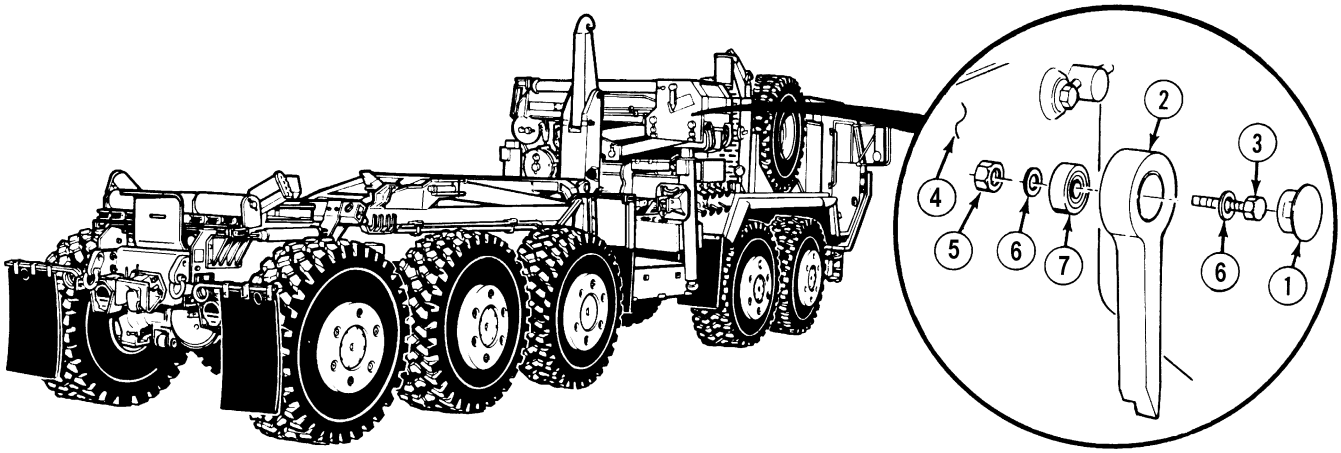

NOTE

Both angle indicators are removed the same way.

(1) Remove cap plug (1) from pointer (2).

(2) Remove screw (3) and pointer (2) from crane frame (4).

(3) Remove nut (5), two washers (6) and screw (3) from bearing (7).

NOTE

Perform Step (4) if bearing is damaged.

(4) Remove bearing (7) from pointer (2).

b. Installation.

WARNING

Adhesives, solvents, and sealing compounds can burn easily, can give off harmful vapors, and are harmful to skin and clothing. To avoid injury or death, keep away from open fire and use in a well-ventilated area. If adhesive, solvent, or sealing compound gets on skin or clothing, wash immediately with soap and water.

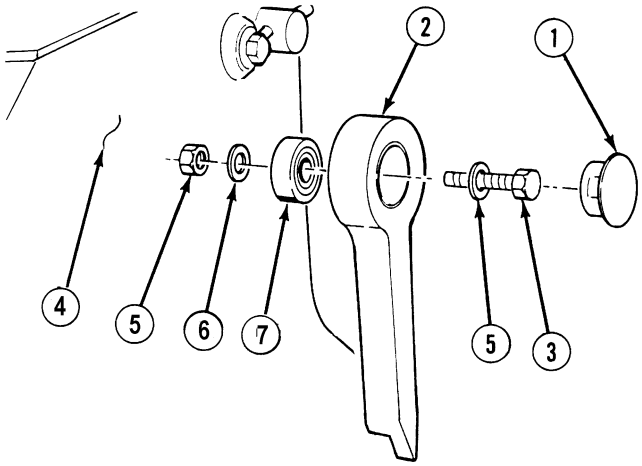

NOTE

- Perform Step (1) and (2) if bearing was removed.
- Remove any excess adhesive from outer surfaces of bearing.

(1) Apply adhesive between surfaces of bearing (7) and pointer (2).

(2) Install bearing (7) in pointer (2).

NOTE

Ensure pointer rotates freely after installed.

(3) Install screw (3), two washers (6) and nut (5) in bearing (7).

(4) Apply sealing compound to exposed threads on end of screw (3).

(5) Install pointer (2) with screw (3) on crane (4). Tighten screw to 108 lb-in (12 N·m).

(6) Install cap plug (1) on pointer (2).

c. Follow-On Maintenance:

- Remove wheel chocks, (TM 9-2320-364-10).

END OF TASK

18-8. CRANE HOOK BLOCK, HOOK AND CLEVIS REPAIR.

This task covers:

a. Removal
b. Dissassembly
c. Cleaning/Inspection
d. Assembly
e. Installation
f. Follow-on Maintenance

INITIAL SETUP

Tools and Special Tools
Tool Kit, General Mechanic's: Automotive (Item 74, Appendix G)
Compressor Unit, Air (Item 11, Appendix G)
Gloves, Chemical Oil Protective (Item 28, Appendix G)
Gloves, Heavy Duty (Item 29, Appendix G)
Goggles, Industrial (Item 30, Appendix G)
Gun, Air Blow (Item 31, Appendix G)
Pliers, Retaining Ring (Item 49, Appendix G)
Wrench, Combination 1-1/8 in. (Item 79, Appendix G)
Wrench, Combination 1-1/2 in. (Item 83, Appendix G)
Wrench, Torque (0-175 lb-ft [0-237 N·m]) (Item 95, Appendix G)

Materials/Parts
Grease (Item 42, Appendix C)
Oil, Lubricating (Item 54, Appendix C)
Solvent, Drycleaning (Item 87, Appendix C)
Nut, Lock (Item 129, Appendix F)
Lockwasher (Item 200, Appendix F)
Pins, Cotter (12) (Item 275, Appendix F)
Washer, Key (Item 350, Appendix F)

Equipment Condition
Engine OFF, (TM 9-2320-364-10)
Wheels chocked, (TM 9-2320-364-10)
Hook block lowered to ground, (TM 9-2320-364-10)

a. Removal.

WARNING

Wire rope can become frayed or contain broken wires. Wear heavy leather-palmed work gloves when handling wire rope. Never let moving wire rope slide through hands, frayed or broken wires can cause injury to personnel.

(1) Remove cotter pin (1), castle nut (2), two washers (3) and screw (4) from open wedge socket clevis (5). Discard cotter pin.

(2) Remove open wedge socket clevis (5) from fly section (6).

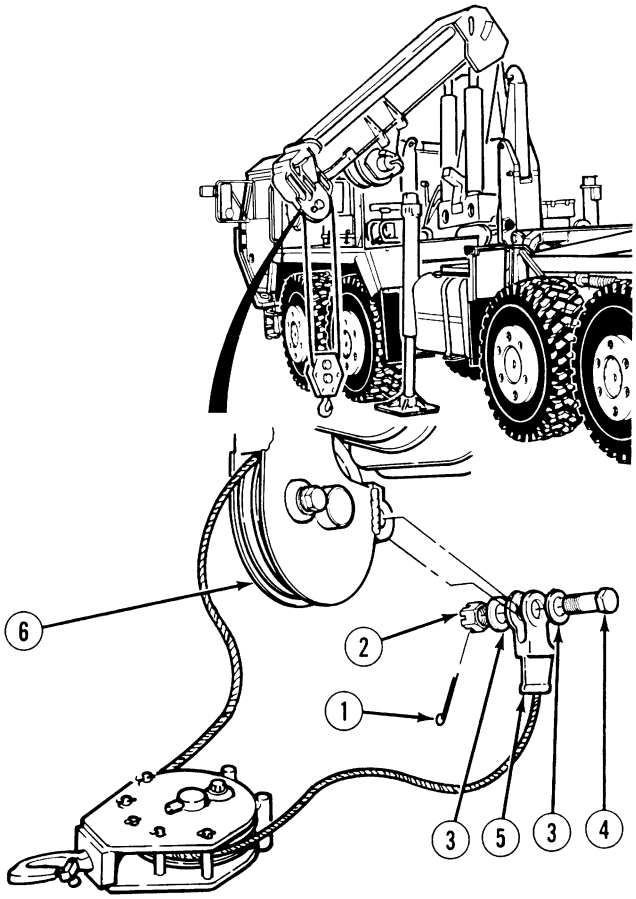

NOTE

Use punch on wedge inside clevis.

(3) Knock out and remove wedge (7) from open wedge socket clevis (5).

(4) Straighten and remove cable (8) from hook block (9).

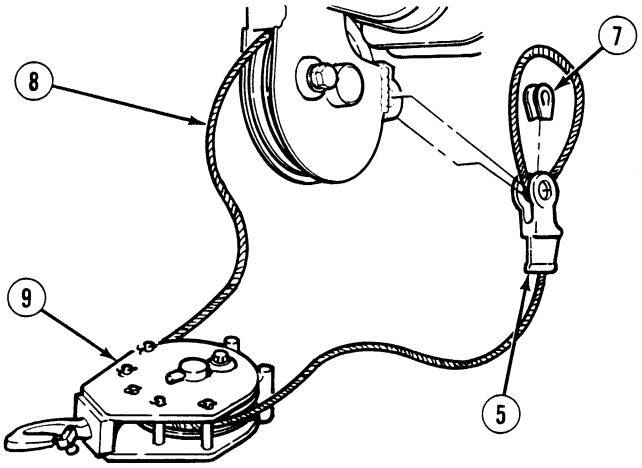

b. Disassembly.

(1) Remove screw (1), lockwasher (2), washer (3) and lock pin (4) from hook block (5). Discard lockwasher.

(2) Remove bushing (6) from lock pin (4).

(3) Remove 10 cotter pins (7) and five pins (8) from hook block (5). Discard cotter pins.

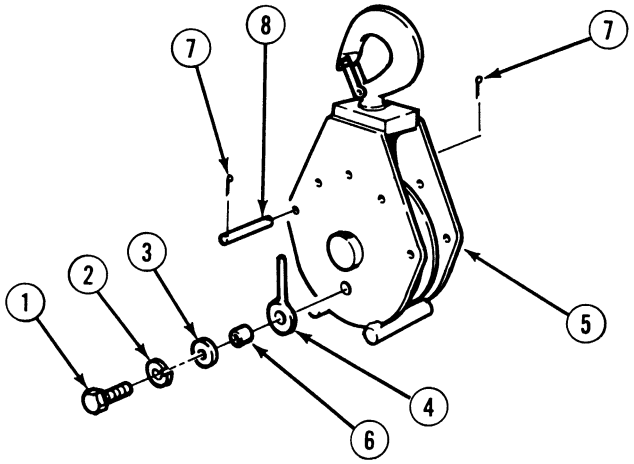

18-8. CRANE HOOK BLOCK, HOOK AND CLEVIS REPAIR (CONT).

(4) Bend down tines of key washer (9).

(5) Hold pin (10) and remove nut (11), key washer (9), sheave (12), pin (10) and spacer (13) from hook block (5). Discard key washer.

(6) Remove grease fitting (14) from pin (10).

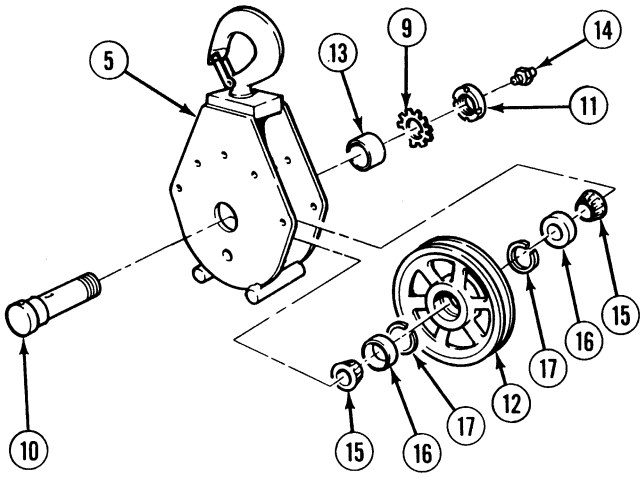

CAUTION

Use care when removing bearings from races. Bearings may fall and damage to equipment may result.

(7) Remove two tapered roller bearings (15) from sheave (12).

WARNING

Use care when removing retaining rings. Retaining rings are under spring tension and can act as projectiles when released and could cause severe eye injury.

NOTE

Perform Step (8) if bearing races are damaged.

(8) Remove two bearing races (16) and retaining rings (17) from sheave (12).

(9) Remove cotter pin (18) and castle nut (19) from hook (20). Discard cotter pin.

(10) Remove washer (21) and shield (22) from hook (20).

(11) Remove bearing (23) from shield (22).

(12) Remove hook (20) from hook block (5).

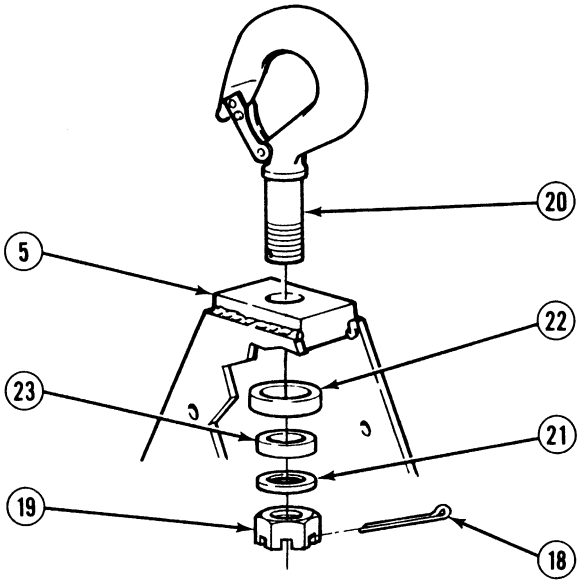

WARNING

Use care when removing springs. Springs are under tension and can act as projectiles when released and could cause injury to personnel.

(13) Remove pin (24), locknut (25), screw (26), spring (27) and latch (28) from hook (20). Discard locknut.

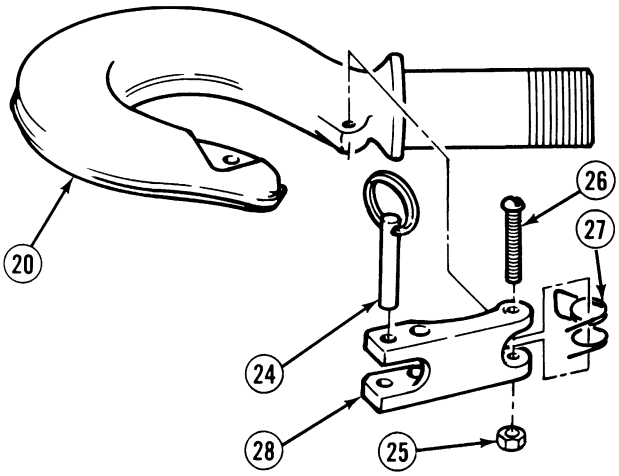

c. Cleaning/Inspection.

WARNING

- Drycleaning Solvent (P-D-680) is TOXIC and flammable. Wear protective goggles, face shield, and gloves; use only in a well-ventilated area; avoid contact with skin, eyes, and clothes, and do not breathe vapors. Keep away from heat or flame. Never smoke when using solvent. The flashpoint for Type II Drycleaning Solvent is 140 degrees F (60 degrees C) and Type III Drycleaning Solvent is 200 degrees F (93 degrees C). Failure to do so may result in injury or death to personnel.
- If personnel become dizzy while using cleaning solvent, immediately get fresh air and medical help. If solvent contacts skin or clothes, flush with cold water. If solvent contacts eyes, immediately flush eyes with water and get immediate medical attention.
- Compressed air used for cleaning purposes will not exceed 30 psi (207 kPa). Use only with effective chip guarding and personal protective equipment (goggles/shield, gloves, etc). Failure to comply may result in injury or death to personnel.

(1) Clean all metal parts with drycleaning solvent.

(2) Allow bearing to air dry, then coat with lubricating oil.

(3) Dry metal parts with compressed air.

(4) Inspect metal parts for breaks, cracks and sharp edges.

(5) Inspect bushing for cuts or nicks.

(6) Inspect bearing for loose rollers or cracked and broken races.

(7) Replace all damaged parts.

18-8. CRANE HOOK BLOCK, HOOK AND CLEVIS REPAIR (CONT).

d. Assembly.

WARNING

Use care when installing springs. Springs are under tension and can act as projectiles when released and could cause injury to personnel.

NOTE

Legs of spring must be positioned behind latch.

(1) Position spring (27) in latch (28).

(2) Install latch (28) on hook (20) with screw (26), and locknut (25).

(3) Install pin (24) in hook (20).

(4) Apply grease to bearing (23) and install bearing in shield (22).

NOTE

Ensure that bearing is installed with cup facing up.

(5) Install hook (20) in hook block (5) with shield (22), washer (21) and castle nut (19).

(6) Install cotter pin (18) in slot of castle nut (19) and hook block (5).

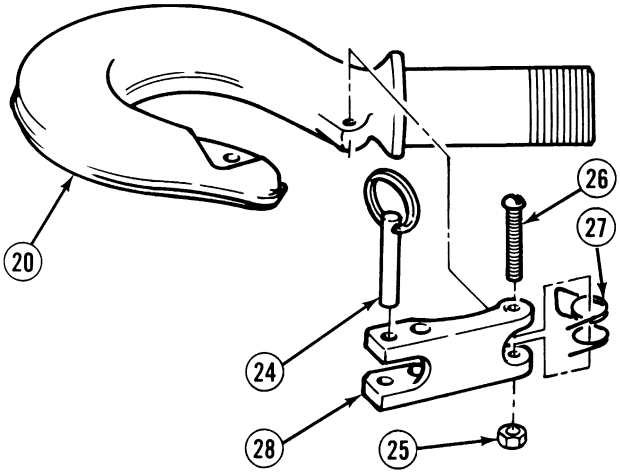

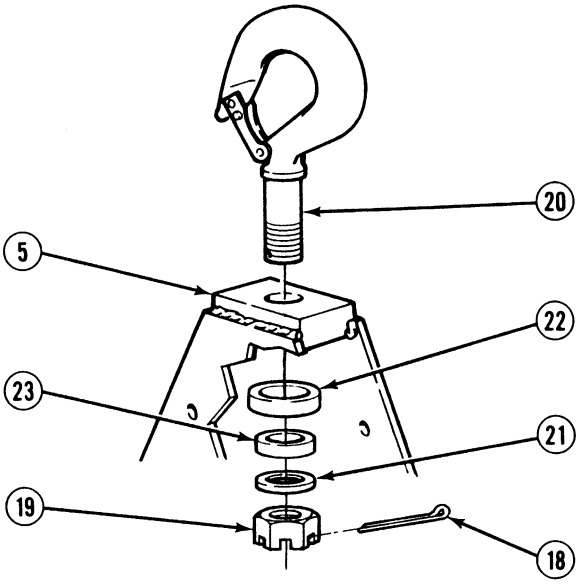

(7) Install grease fitting (14) in pin (10).

WARNING

Use care when installing retaining rings. Retaining rings are under spring tension and can act as projectiles when released and could cause severe eye injury.

NOTE

Perform Step (8) if bearing races were removed.

(8) If removed, install retaining ring (17) and two bearing races (16) in sheave (12).

(9) Pack two roller bearings (15) with grease and install bearings in sheave (12).

(10) Apply grease on spacer (13) and install sheave (12) and bushing in hook block (5) with pin (10), key washer (9) and nut (11).

(11) Install five pins (8) in hook block (5) with 10 cotter pins (7).

(12) Install bushing (6) in lock pin (4).

(13) Install lock pin (4) in hook block (5) with washer (3), lockwasher (2) and screw (1). Tighten screw to 135 lb-ft (183 N·m).

(14) Tighten nut (11) on pin (10).

(15) Bend tabs of key washer (9) into slots on nut (11).

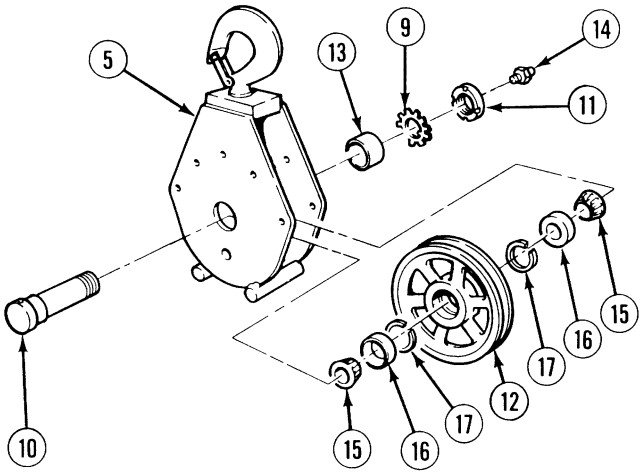

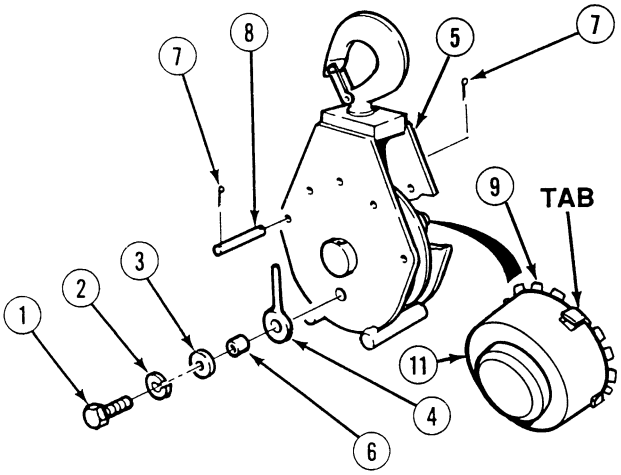

18-8. CRANE HOOK BLOCK, HOOK AND CLEVIS REPAIR (CONT).

e. Installation.

WARNING

Wire rope can become frayed or contain broken wires. Wear heavy leather-palmed work gloves when handling wire rope. Never let moving wire rope slide through hands, frayed or broken wires can cause injury to personnel.

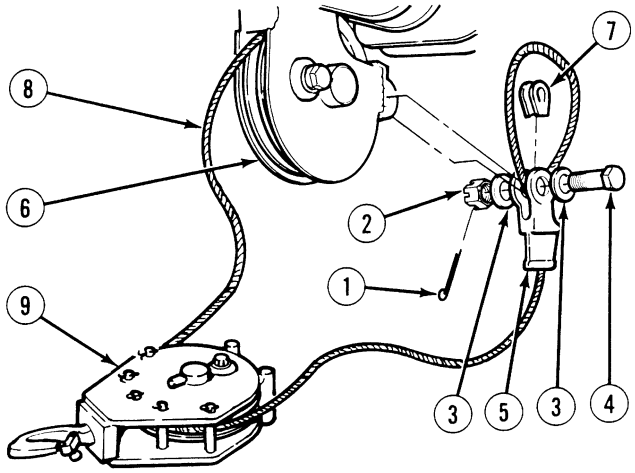

(1) Position cable (8) through hook block (9).

(2) Position cable (8) through hole in open wedge socket clevis (5).

(3) Make loop in cable (8) and position free end of cable through second hole in open wedge socket clevis (5).

(4) Install wedge (7) in cable loop. Drive wedge and cable loop into open wedge socket clevis (5).

NOTE

When installed properly, open wedge socket clevis should rotate freely on fly section.

(5) Install open wedge socket clevis (5) on fly section (6) with screw (4), washer (3), castle nut (2) and cotter pin (1).

f. Follow-On Maintenance:

- Lubricate hook block, (Para 2-9).
- Operate crane, (TM 9-2320-364-10).
- Load test crane, (TM 9-2320-364-34).
- Stow crane, (TM 9-2320-364-10).
- Remove wheel chocks, (TM 9-2320-364-10).

END OF TASK

18-9. AUXILIARY HAND PUMP REPAIR.

This task covers:

a. Removal
b. Disassembly
c. Cleaning/Inspection
d. Assembly
e. Installation
f. Follow-On Maintenance

INITIAL SETUP

Tools and Special Tools
Tool Kit, General Mechanic's: Automotive (Item 74, Appendix G)
Cap and Plug Set (Item 8, Appendix G)
Compressor Unit, Air (Item 11, Appendix G)
Gloves, Chemical Oil Protective (Item 28, Appendix G)
Goggles, Industrial (Item 30, Appendix G)
Gun, Air Blow (Item 31, Appendix G)
Pan, Drain (Item 47, Appendix G)
Socket Set, 3/8 in. (Item 62, Appendix G)
Wrench, Torque (0-60 N·m) (Item 98, Appendix G)

Materials/Parts
Oil, Lubricating (Item 54, Appendix C)
Sealing Compound (Item 72, Appendix C)
Solvent, Drycleaning (Item 87, Appendix C)
Lockwasher (4) (Item 178, Appendix F)
Packing, Preformed (Item 225, Appendix F)
Packing, Preformed (Item 228, Appendix F)
Packing, Preformed (Item 256, Appendix F)
Packing, Preformed (Item 263, Appendix F)

Equipment Condition
Engine OFF, (TM 9-2320-364-10)
Wheels chocked, (TM 9-2320-364-10)

a. Removal.

NOTE

- Tag and mark hydraulic hoses prior to removal.
- Position drain pan under hoses.
- Cap and plug hoses and fittings after removal.

(1) Remove hose (1) and preformed packing (3) from elbow (2). Discard preformed packing (3).

(2) Remove hose (4) and preformed packing (6) from elbow (5). Discard preformed packing (6).

(3) Remove four screws (7), lockwashers (8) and pump (9) from mount (10). Discard lockwashers.

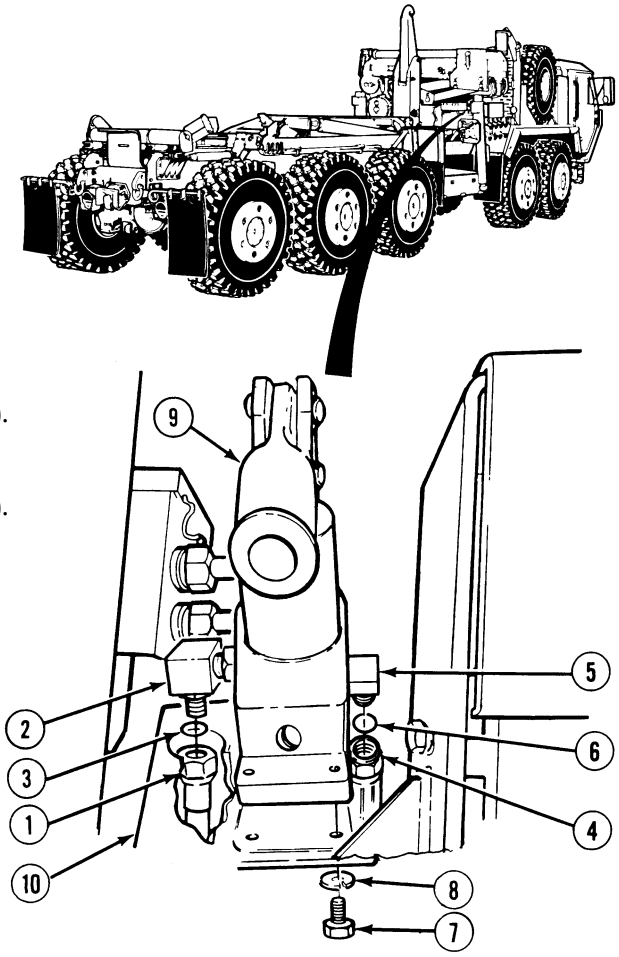

18-9. AUXILIARY HAND PUMP REPAIR (CONT).

b. Disassembly.

(1) Remove elbows (1) and (2) and preformed packings (3) and (4). Discard preformed packings.

(2) Remove two clips (5) and pin (6).

(3) Remove two clips (7), pin (8) and handle socket (9).

(4) Remove two clips (10), pin (11) and link (12) from pump (13).

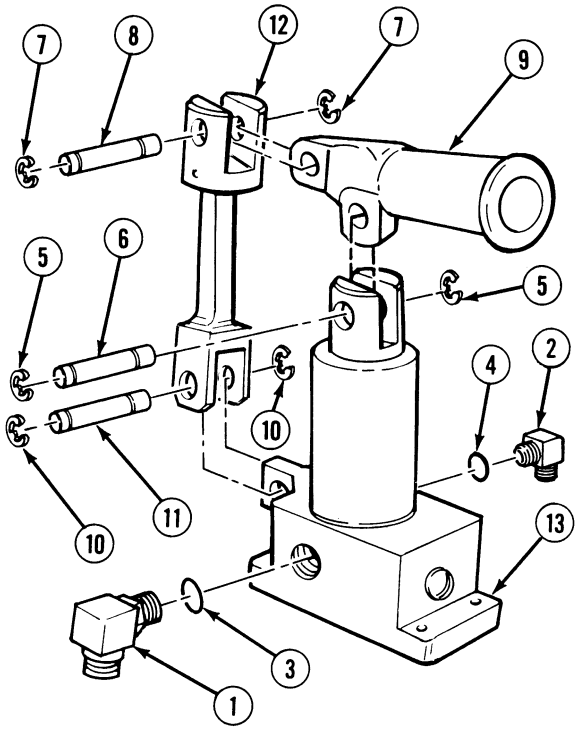

(5) Remove piston (14) from pump (13).

(6) Remove seal (15) and two wipers (16) from pump (13).

(7) Remove cap (17), spring (18), check ball (19), spring (20) and check ball (21) from pump (13).

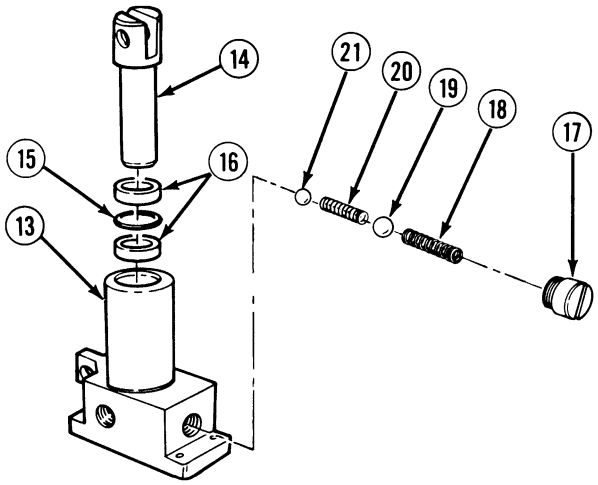

c. Cleaning/Inspection.

WARNING

- Drycleaning Solvent (P-D-680) is TOXIC and flammable. Wear protective goggles, face shield, and gloves; use only in a well-ventilated area; avoid contact with skin, eyes, and clothes, and do not breathe vapors. Keep away from heat or flame. Never smoke when using solvent. The flashpoint for Type II Drycleaning Solvent is 140 degrees F (60 degrees C) and Type III Drycleaning Solvent is 200 degrees F (93 degrees C). Failure to do so may result in injury or death to personnel.
- If personnel become dizzy while using cleaning solvent, immediately get fresh air and medical help. If solvent contacts skin or clothes, flush with cold water. If solvent contacts eyes, immediately flush eyes with water and get immediate medical attention.
- Compressed air used for cleaning purposes will not exceed 30 psi (207 kPa). Use only with effective chip guarding and personal protective equipment (goggles/shield, gloves, etc). Failure to comply may result in injury or death to personnel.

(1) Clean all metal parts with drycleaning solvent.

(2) Dry metal parts with compressed air.

(3) Inspect metal parts for breaks, cracks and sharp edges.

(4) Replace all damaged parts.

d. Assembly.

(1) Install check ball (21), spring (20), check ball (19), spring (18) and cap (17) in pump (13).

(2) Install two wipers (16) and seal (15) in pump (13).

(3) Install piston (14) in pump (13).

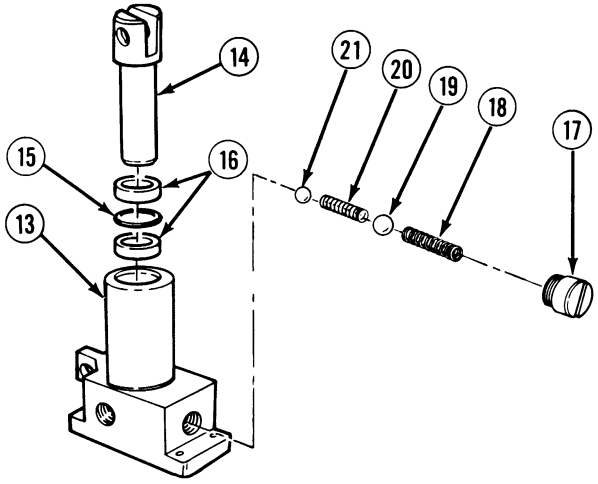

18-9. AUXILIARY HAND PUMP REPAIR (CONT).

(4) Install link (12) on pump (13) with pin (11) and two clips (10).

(5) Install handle socket (9) in pump (13) with pin (8) and two clips (7).

(6) Install pin (6) and two clips (5) in pump (13).

(7) Coat preformed packings (3) and (4) with oil.

(8) Install preformed packings (3) and (4) on elbows (1) and (2).

(9) Install elbows (1) and (2) in pump (13).

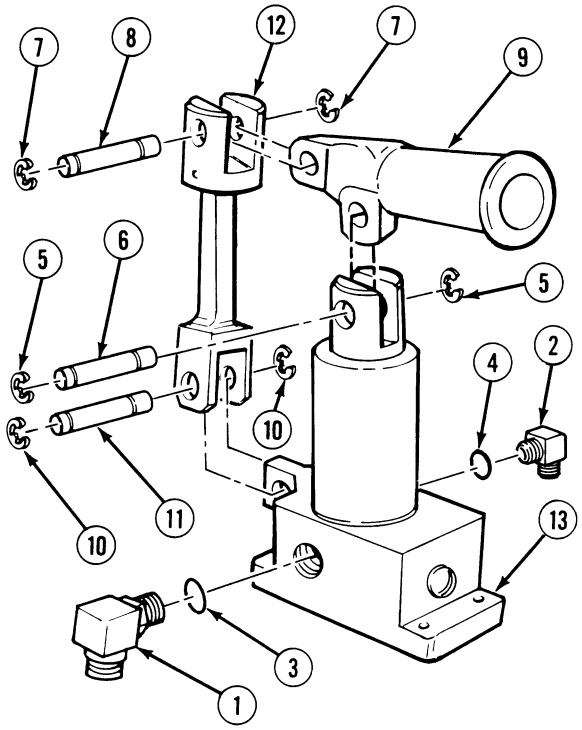

e. Installation.

(1) Install pump (9) on mount (10) with four lockwashers (8) and screws (7). Tighten screws to 17 lb-ft (23 N·m).

(2) Install preformed packing (6) and hose (4) to elbow (5).

(3) Install preformed packing (3) and hose (1) to elbow (2).

f. Follow-On Maintenance:

- Check hydraulic fluid level, (Para 2-9, Lubrication Table 2-3).
- Operate pump and check for leaks, (TM 9-2320-364-10).
- Remove wheel chocks, (TM 9-2320-364-10).

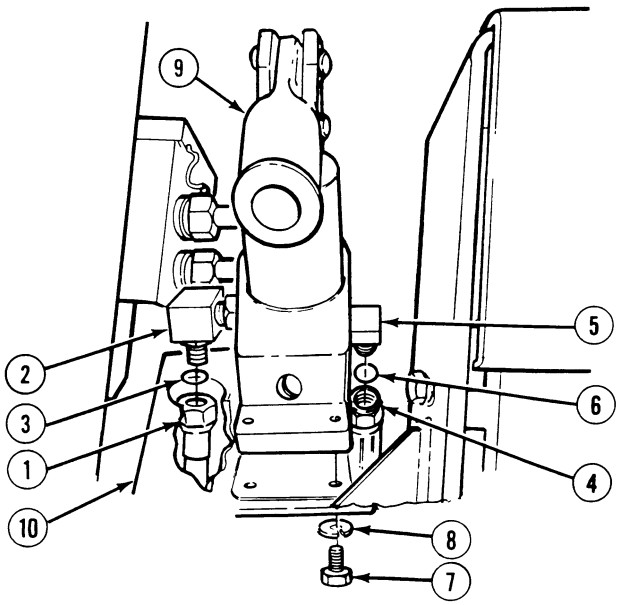

END OF TASK

18-10. CRANE ACCUMULATOR REPLACEMENT.

This task covers:

a. Removal b. Installation c. Follow-On Maintenance

INITIAL SETUP

Tools and Special Tools
Tool Kit, General Mechanic's: Automotive (Item 74, Appendix G)
Cap and Plug Set (Item 8, Appendix G)
Pan, Drain (Item 47, Appendix G)

Material/Parts
Oil, Lubricating (Item 54, Appendix C)
Sealing Compound (Item 73, Appendix C)

Material/Parts - Continued
Tags, Identification (Item 88, Appendix C)
Locknut (2) (Item 133, Appendix F)
Packing, Preformed (Item 228, Appendix F)

Equipment Condition
Engine OFF, (TM 9-2320-364-10)
Wheels chocked, (TM 9-2320-364-10)

a. Removal.

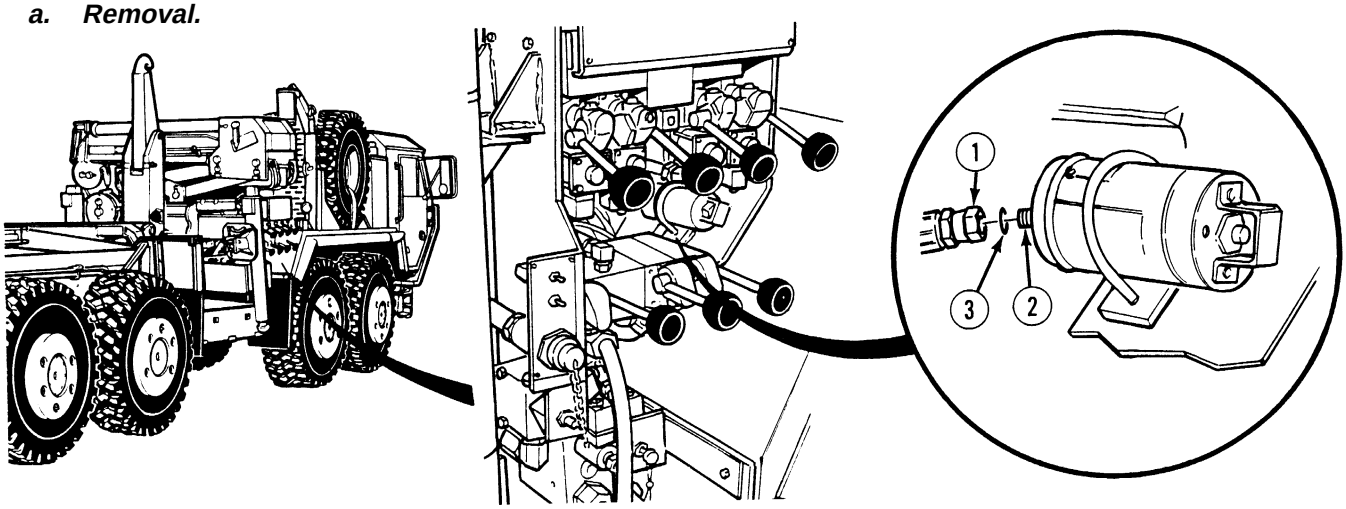

WARNING

The crane hydraulic system operates at oil pressures up to 3100 psi (21,365 kPa). Never disconnect any hydraulic line or fitting without first dropping the pressure to zero. Failure to comply may result in serious injury or death to personnel.

NOTE

- Tag and mark all hoses and tubes, and mark position of elbow before removal.
- Position drain pan under accumulator.
- Cap and plug hoses and fittings after removal.

(1) Remove hose (1) from elbow (2).

(2) Remove and discard preformed packing (3) from elbow (2).

18-10. CRANE ACCUMULATOR REPLACEMENT (CONT).

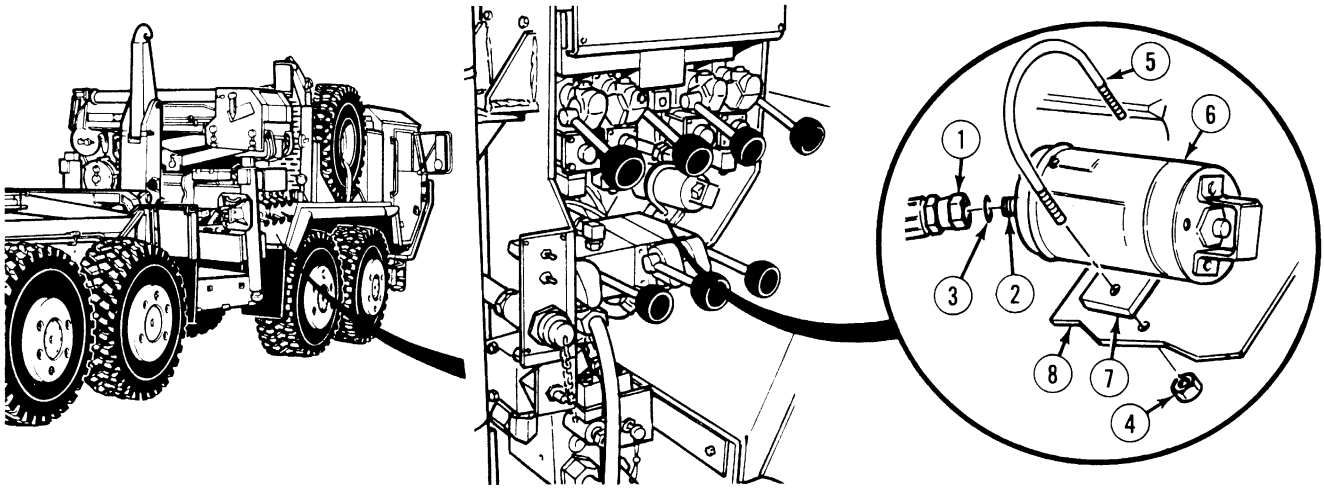

(3) Remove two locknuts (4), clamp (5), accumulator (6) and spacer (7) from right bracket (8). Discard locknuts.

(4) Remove elbow (2) from accumulator (6).

b. Installation.

WARNING

Adhesives, solvents, and sealing compounds can burn easily, can give off harmful vapors, and are harmful to skin and clothing. To avoid injury or death, keep away from open fire and use in a well-ventilated area. If adhesive, solvent, or sealing compound gets on skin or clothing, wash immediately with soap and water.

(1) Apply sealing compound to threads of elbow (2) and install on accumulator (7).

WARNING

Do not over-tighten clamp during installation. Accumulator is filled with compressed gas, and a change in pressure could cause crane to malfunction. Failure to complay may result in injury or death to personnel.

(2) Install accumulator (6) and spacer (7) on right bracket (8) with clamp (5) and two locknuts (4).

(3) Apply oil to preformed packing (3).

(4) Install preformed packing (3) on elbow (2).

(5) Install hose (1) on elbow (2).

c. Follow-On Maintenance:

- Start engine, (TM 9-2320-364-10).
- Place selector switch in Crane mode and check for leaks, (TM 9-2320-364-10).
- Load test crane, (TM 9-2320–364-34).
- Shut OFF engine, (TM 9-2320-364-10).
- Remove wheel chocks, (TM 9-2320-364-10).

END OF TASK

18-11. CRANE HYDRAULIC HOSES, TUBES AND FITTINGS REPLACEMENT.

This task covers:

a. Hydraulic Hoses and Tubes Replacement
b. Type 1 Clamp Replacement
c. Type 2 Clamp Replacement
d. Type 3 Clamp Replacement
e. Follow-On Maintenance

INITIAL SETUP

Tools and Special Tools
Tool Kit, General Mechanic's: Automotive (Item 74, Appendix G)
Cap and Plug Set (Item 8, Appendix G)

Materials/Parts
Hydraulic Oil (Item 50, Appendix C)

Materials/Parts - Continued
Tags, Identification (Item 88, Appendix C)
Packing, Preformed (Item 226, Appendix F)

Equipment Condition
Crane in operating position and supported by suitable lifting device, (TM 9-2320-364-10)
Engine OFF, (TM 9-2320-364-10)
Wheels chocked, (TM 9-2320-364-10)

WARNING

The crane hydraulic system operates at oil pressures up to 3100 psi (21,375 kPa). Never disconnect any hydraulic line or fitting without first dropping the pressure to zero. Failure to comply may result in serious injury or death to personnel.

NOTE

- Subparagraphs (a) through (d) show all typical connections and clamps used on the crane.
- This procedure is used to show the location of hoses, tubes and fittings used on the crane. It is for reference only. It will never be necessary to remove all hydraulic hoses at one time.
- Tag and mark all hoses and tubes prior to removal.
- Cap and plug hoses, tubes and fittings after removal.

a. Hydraulic Hoses and Tubes Replacement.

NOTE

Some hoses and tubes will not have preformed packings.

(1) *Removal.* Loosen fitting (1). Remove preformed packing (2) and hose (3) from elbow (4). Discard preformed packing.

(2) *Installation.*

(a) Apply hydraulic oil to preformed packing (2).

(b) Install preformed packing (2) in fitting (1). Connect fitting and hose (3) to elbow (4).

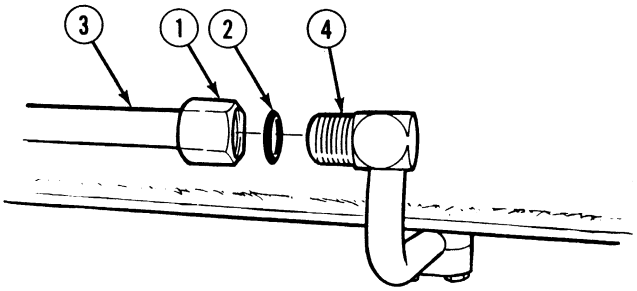

b. Type 1 Clamp Replacement.

(1) *Removal.* Remove screw (1), spacer (2) and clamps (3).

(2) *Installation.* Install clamps (3) and spacer (2) with screw (1).

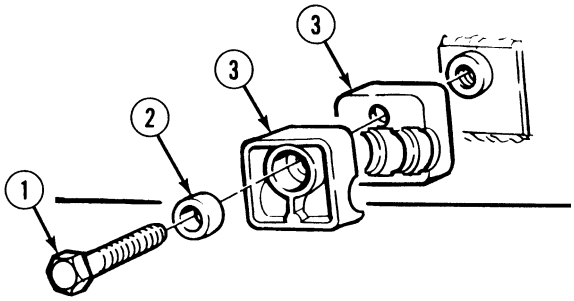

c. Type 2 Clamp Replacement.

(1) *Removal.* Remove two screws (1), spacers (2) and clamps (3).

(2) *Installation.* Install clamps (3) and spacers (2) with two screws (1).

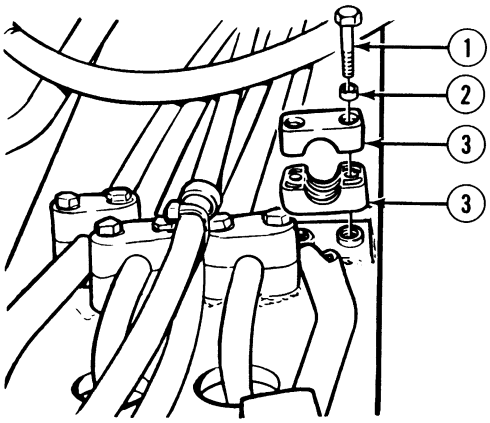

d. Type 3 Clamp Replacement.

NOTE

Do not remove screw. Screw holding clamp also holds hoist pivot pin in place.

(1) *Removal.* Remove nut (1) and clamp (2) from screw (3).

(2) *Installation.* Install clamp (2) on screw (3) with nut (1).

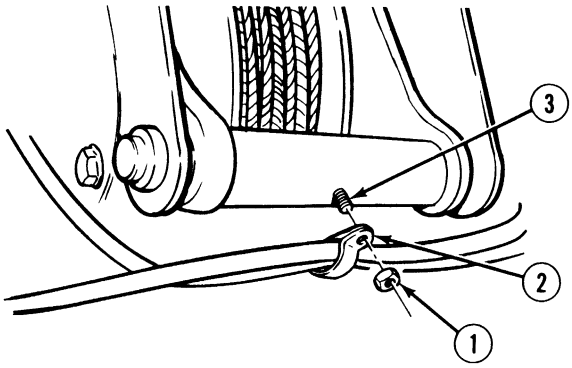

18-11. CRANE HYDRAULIC HOSES, TUBES AND FITTINGS REPLACEMENT (CONT).

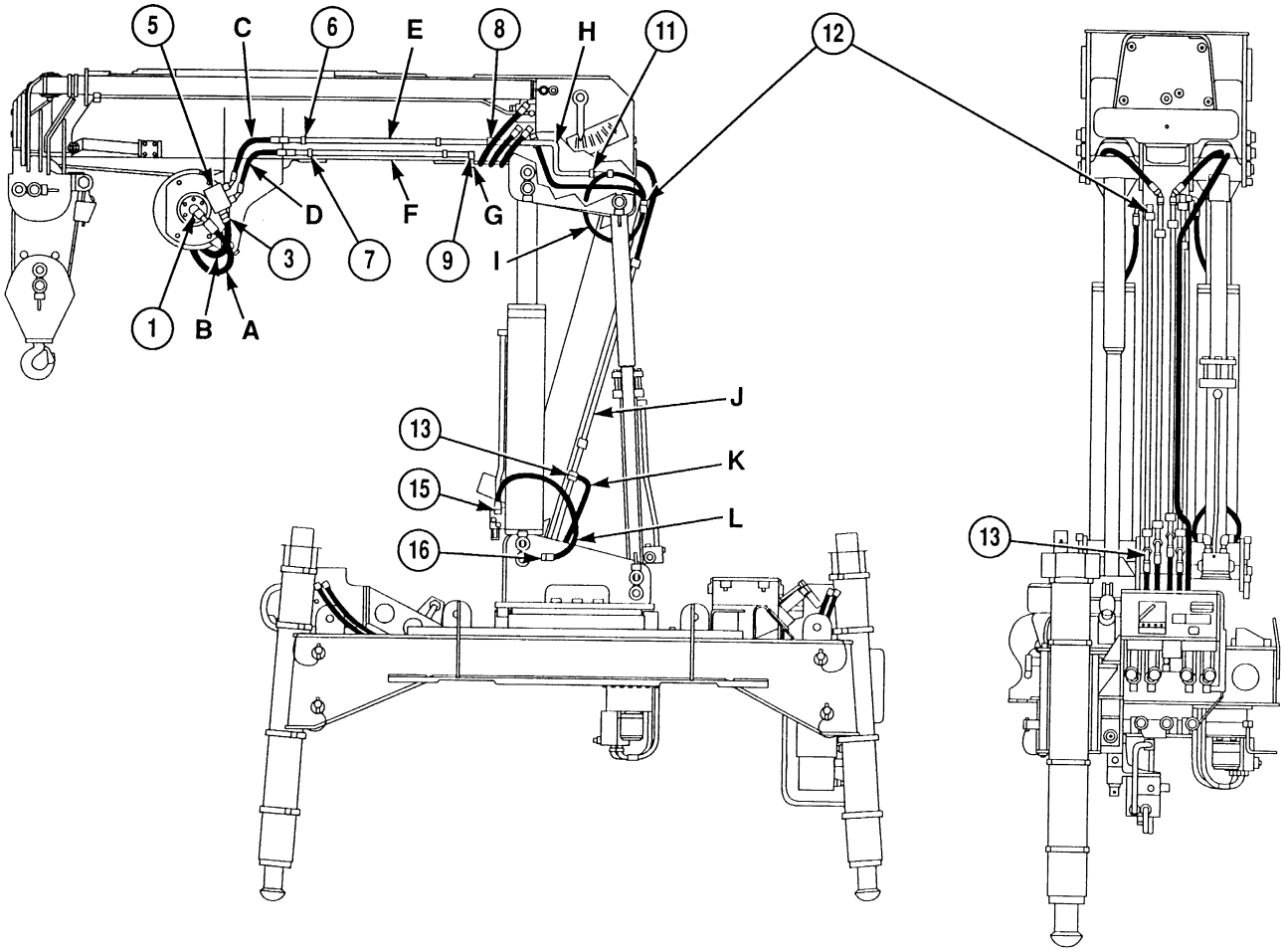

Hose or Tube	From		To	
	Component	Figure	Component	Figure
A	Elbow (1)	18-1	45 Degree Elbow (2)	18-2
B	45 Degree Elbow (3)	18-1	45 Degree Elbow (4)	18-2
C	Valve (5)	18-1	Tube End (6)	18-1
D	Valve (5)	18-1	Tube End (7)	18-1
E	Tube End (6)	18-1	Tube End (8)	18-1
F	Tube End (6)	18-1	Elbow (9)	18-1
G	Elbow (7)	18-1	Tube End (10)	18-2
H	Tube End (8)	18-1	Tube End (11)	18-1
I	Tube End (11)	18-1	Tube End (12)	18-1
J	Tube End (12)	18-1	Tube End (13)	18-1
K	Tube End (13)	18-1	Elbow (14)	18-8
L	Valve (15)	18-1	Fitting (16)	18-1

Figure 18-1. Hoist Hoses and Tubes (Left Side)

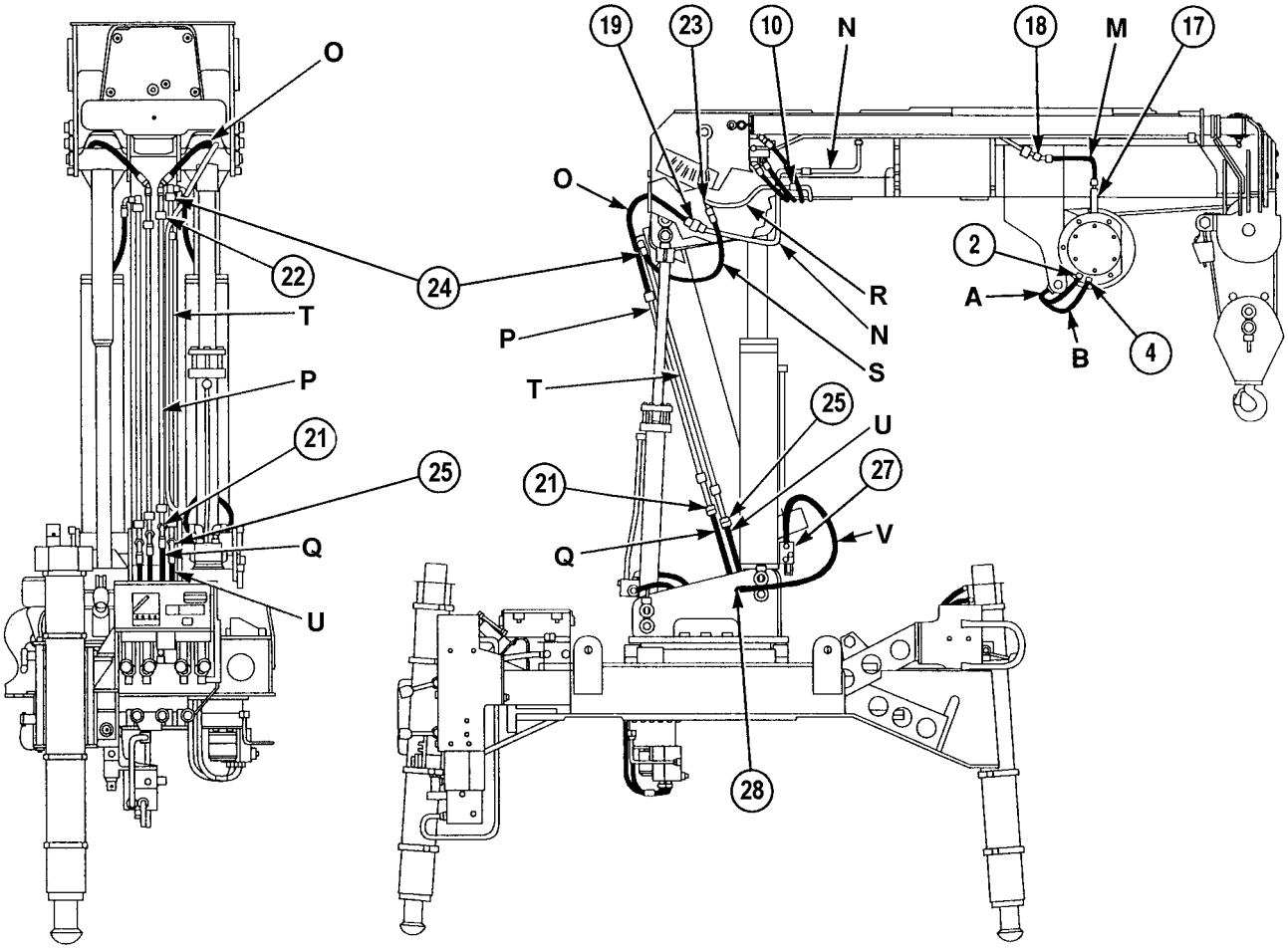

Hose or Tube	From		To	
	Component	Figure	Component	Figure
M	Check valve (17)	18-2	Tube End (18)	18-2
N	Tube End (18)	18-2	Tube End (19)	18-2
O	Tube End (19)	18-2	Tube End (20)	18-2
P	Tube End (20)	18-2	Tube End (21)	18-2
Q	Tube End (21)	18-2	Tube Weldment (22)	18-16
R	Tube End (10)	18-2	Tube End (23)	18-2
S	Tube End (23)	18-2	Tube End (24)	18-2
T	Tube End (24)	18-2	Tube End (25)	18-2
U	Tube End (25)	18-2	Hoist Elbow (26)	18-8
V	Valve (27)	18-2	Fitting (28)	18-2

Figure 18-2. Hoist Hoses and Tubes (Right Side)

18-11. CRANE HYDRAULIC HOSES, TUBES AND FITTINGS REPLACEMENT (CONT).

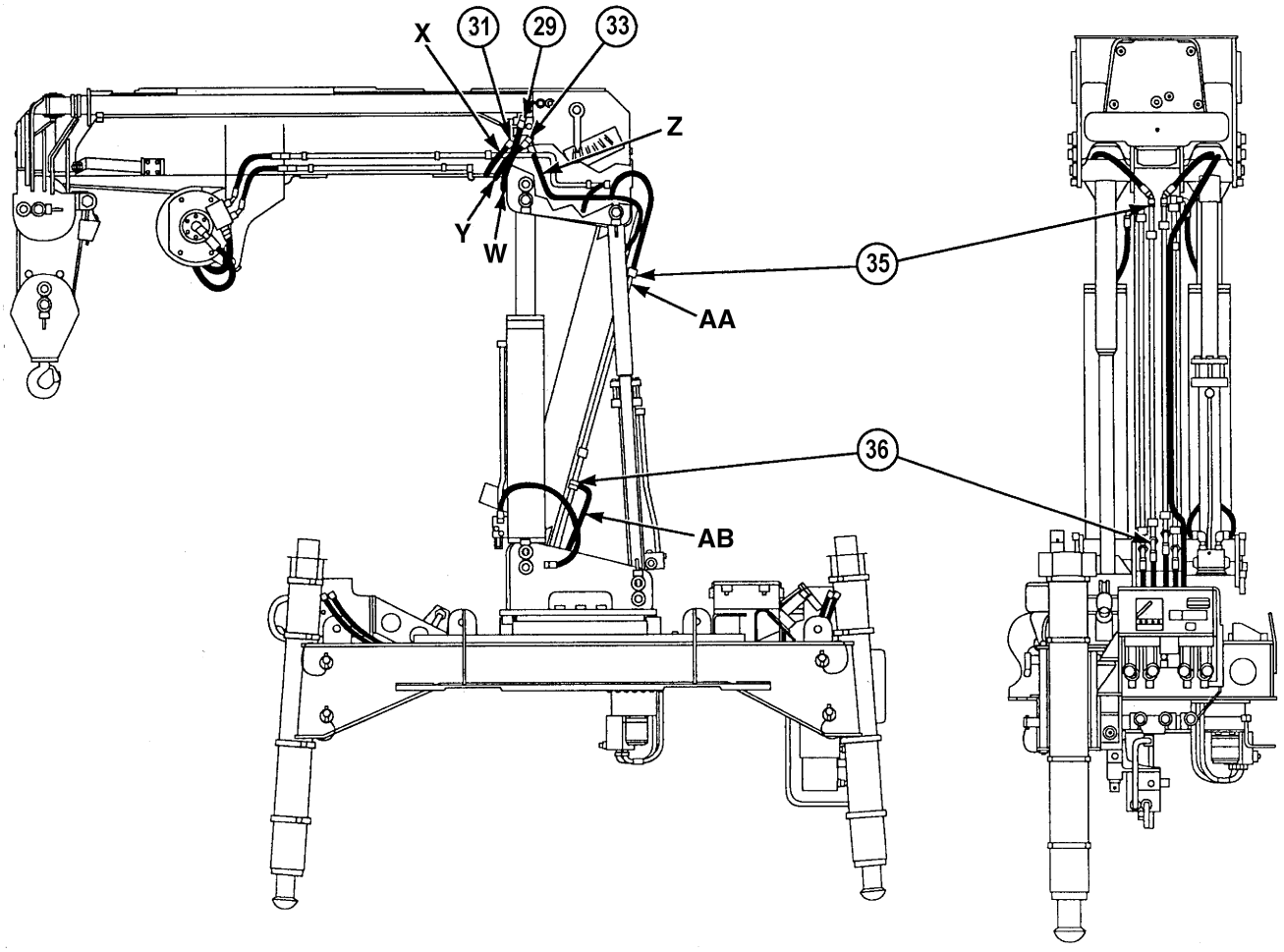

Hose or Tube	From		To	
	Component	Figure	Component	Figure
W	Fitting (29)	18-3	Elbow (30)	18-4
X	Elbow (31)	18-3	Tee (32)	18-4
Y	Tee (33)	18-3	45 Degree Elbow (34)	18-4
Z	Tee (33)	18-3	Tube End (35)	18-3
AA	Tube End (35)	18-3	Tube End (36)	18-3
AB	Tube End (36)	18-3	Telescope Elbow (37)	18-8

Figure 18-3. Telescope Cylinders Hoses and Tubes

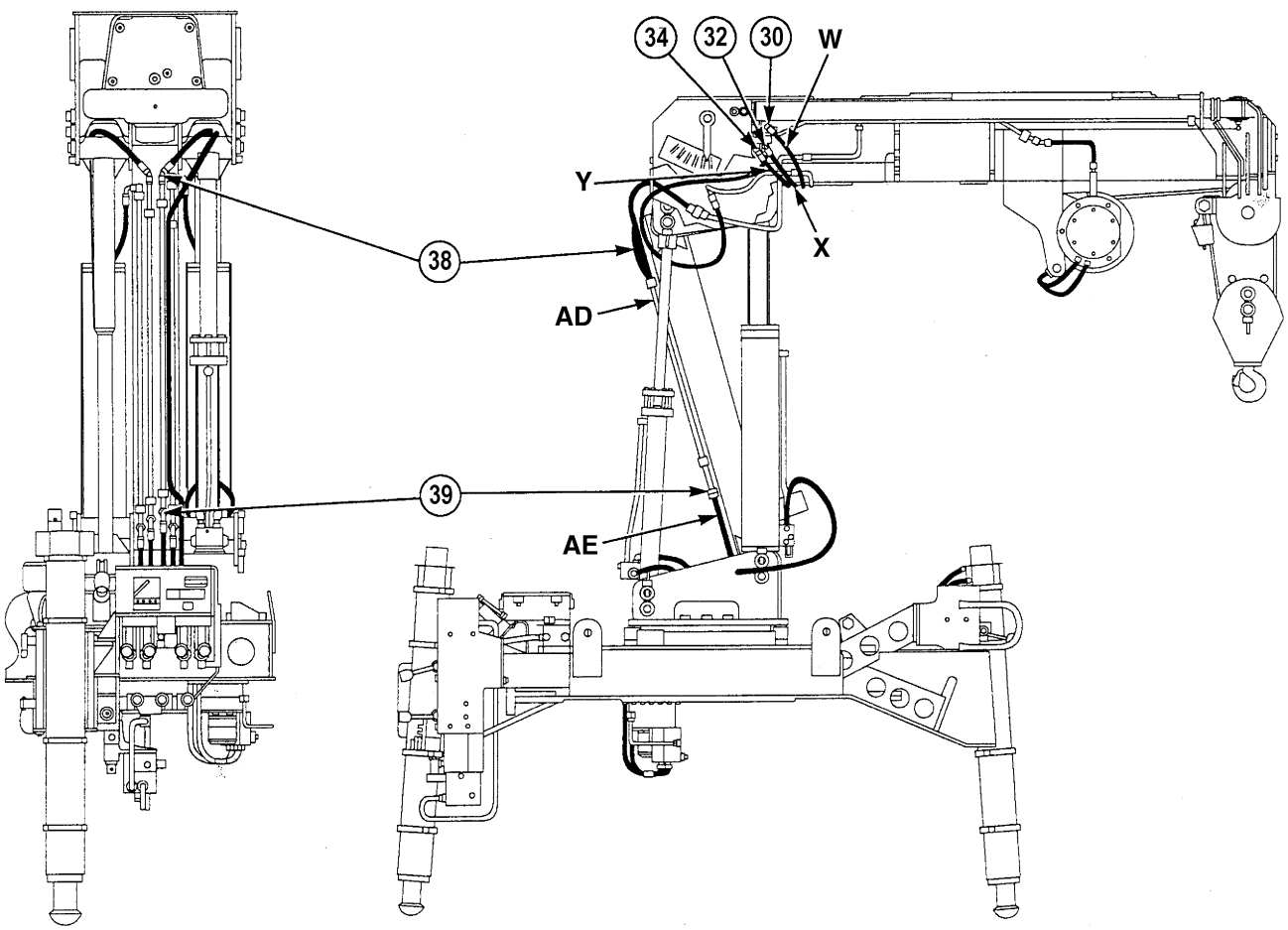

Hose or Tube	From		To	
	Component	Figure	Component	Figure
AC	Tee (32)	18-4	Tube End (38)	18-4
AD	Tube End (38)	18-4	Tube End (38)	18-4
AE	Tube End (38)	18-4	Telescoping Elbow (40)	18-8

Figure 18-4. Telescope Cylinders Hoses and Tubes

18-11. CRANE HYDRAULIC HOSES, TUBES AND FITTINGS REPLACEMENT (CONT).

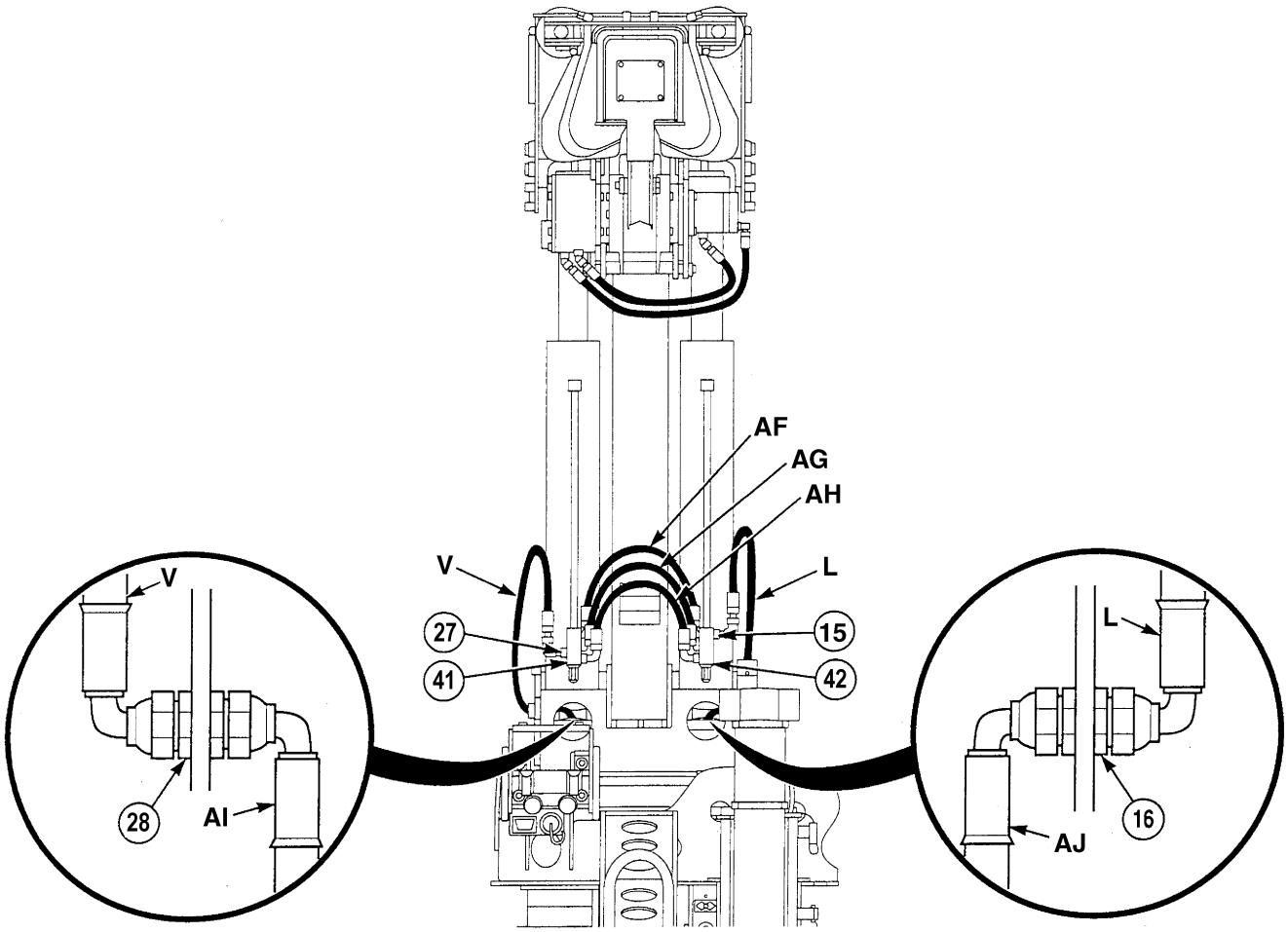

Hose or Tube	From		To	
	Component	Figure	Component	Figure
AF	Valve (41)	18-5	Valve (42)	18-5
AG	Valve (41)	18-5	Valve (42)	18-5
AH	Valve (41)	18-5	Valve (42)	18-5
AI	Fitting (28)	18-5	Boom Elbow (43)	18-8
AJ	Fitting (16)	18-5	Boom Elbow (44)	18-8

Figure 18-5. Lift Cylinders Hoses and Tubes

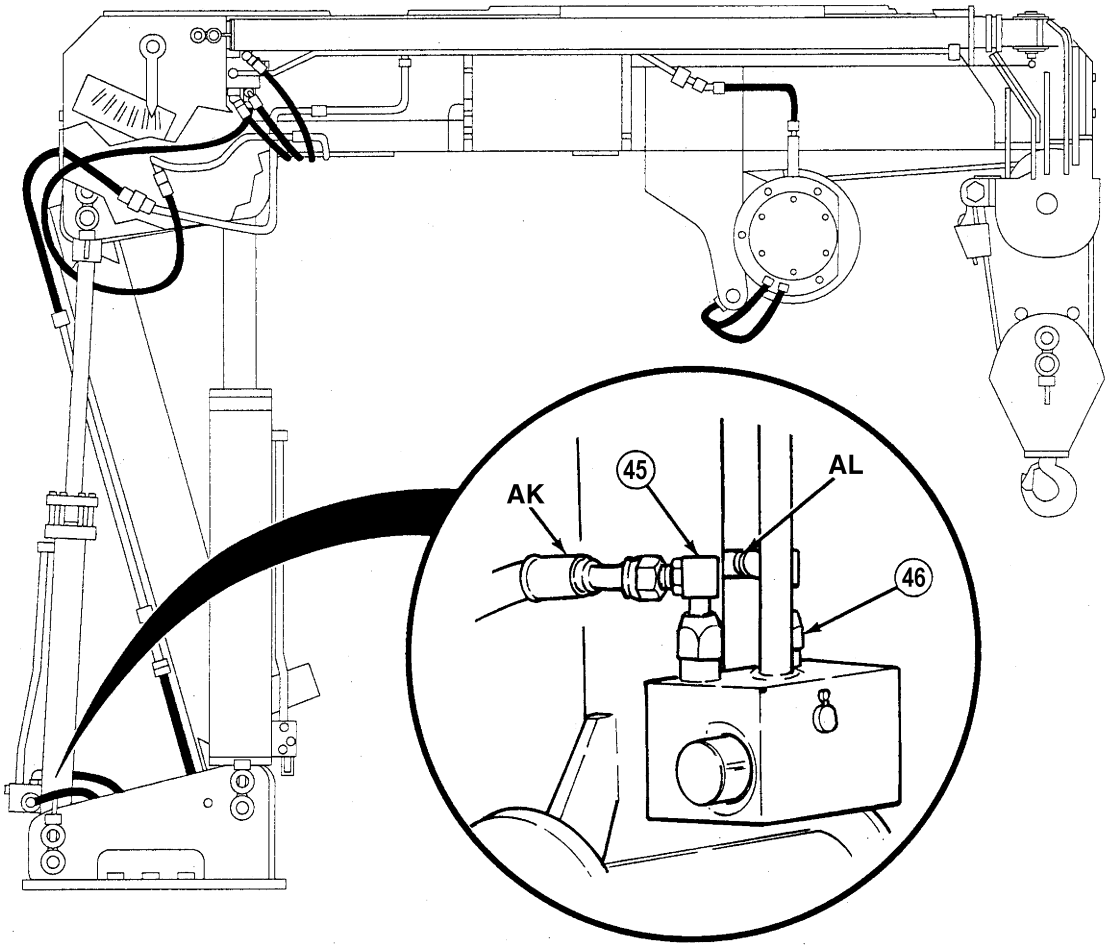

Hose or Tube	From		To	
	Component	Figure	Component	Figure
AK	Elbow (45)	18-6	Mast Elbow (46)	18-10
AL	Elbow (47)	18-6	Mast Elbow (48)	18-10

Figure 18-6. Mast Erection Cylinders Hoses and Tubes

18-11. CRANE HYDRAULIC HOSES, TUBES AND FITTINGS REPLACEMENT (CONT).

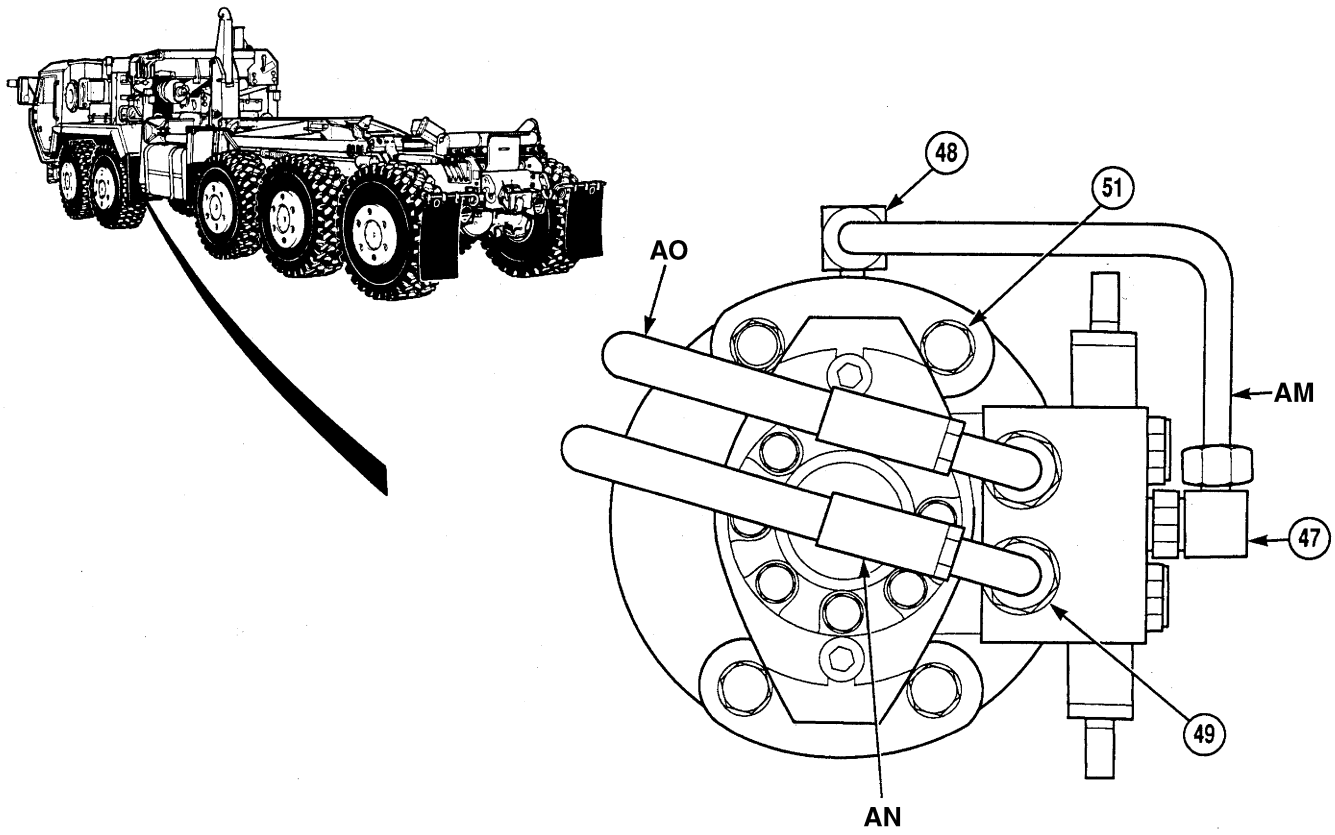

Hose or Tube	From		To	
	Component	Figure	Component	Figure
AM	Elbow (49)	18-7	Elbow (50)	18-7
AN	Fitting (51)	18-7	Swing Elbow (52)	18-8
AO	Fitting (53)	18-7	Swing Elbow (54)	18-8

Figure 18-7. Swing Drive Hoses and Tubes

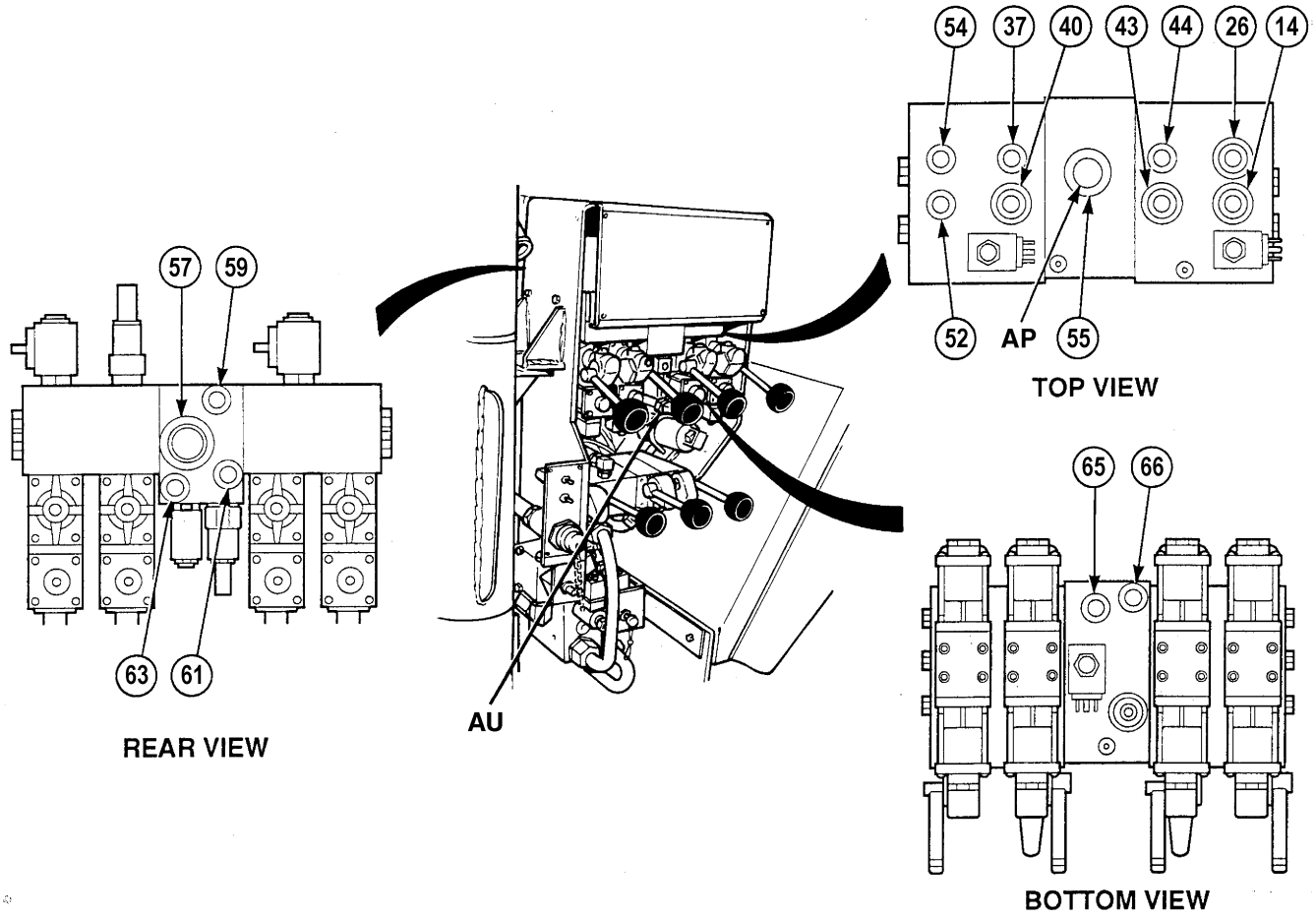

Hose or Tube	From		To	
	Component	Figure	Component	Figure
AP	Elbow (55)	18-8	Fitting (56)	18-12
AQ	Fitting (57)	18-8	Tee Weldment (58)	18-16
AR	Fitting (59)	18-8	Elbow (60)	18-14
AS	Fitting (61)	18-8	45 Degree Elbow (62)	18-9
AT	Fitting (63)	18-8	Elbow (64)	18-10
AU	Fitting (65)	18-8	Capped	18-8
AV	Fitting (58)	18-16	Fitting (70)	18-16

Figure 18-8. Four Function Control Valve

18-11. CRANE HYDRAULIC HOSES, TUBES AND FITTINGS REPLACEMENT (CONT).

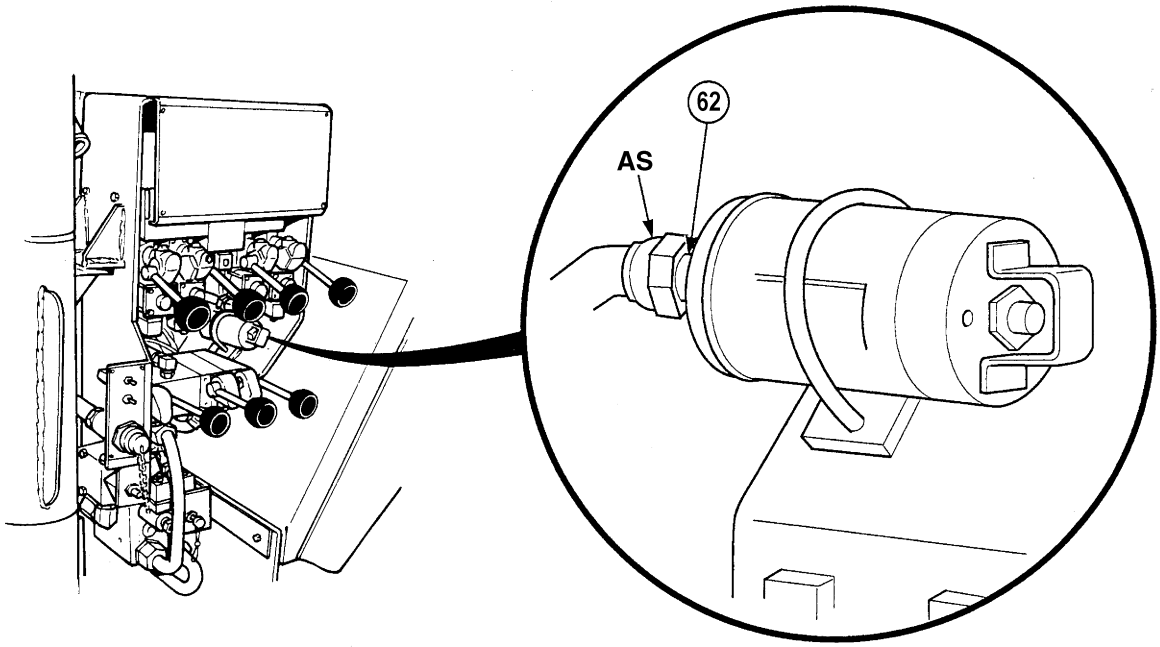

Hose or Tube	From		To	
	Component	Figure	Component	Figure
AS	Fitting (61)	18-8	45 Degree Elbow (62)	18-9

Figure 18-9. Accumulator

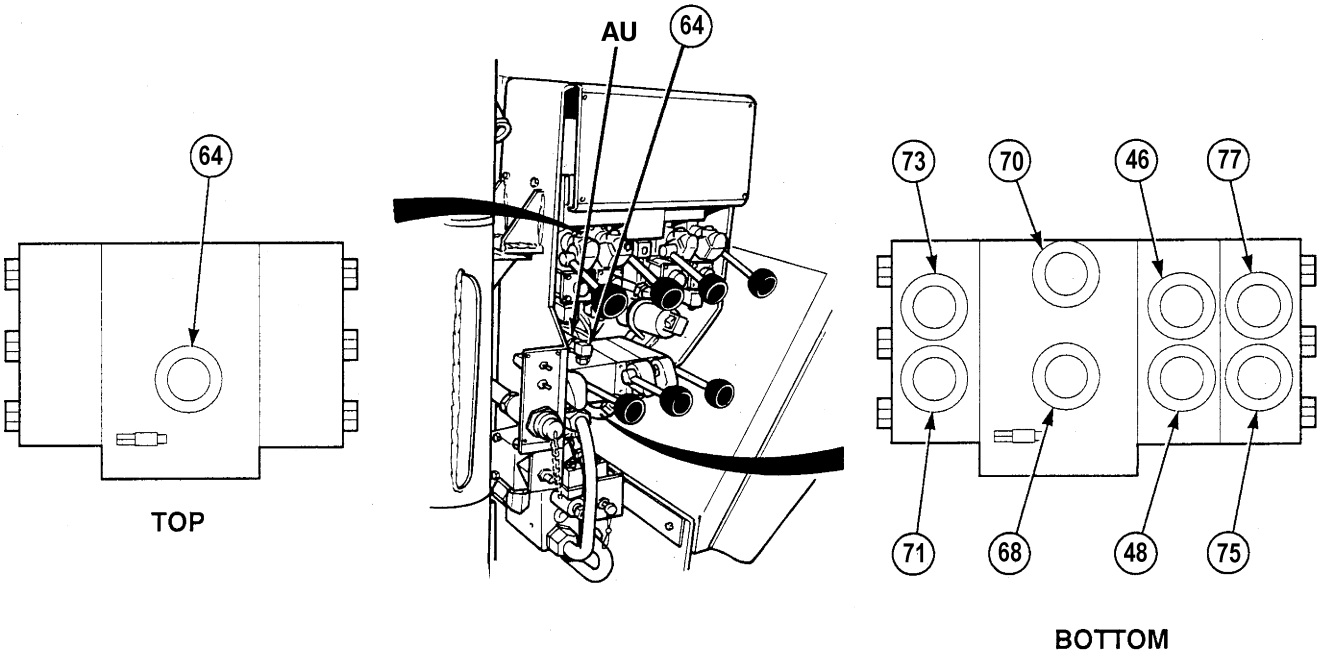

Hose or Tube	From		To	
	Component	Figure	Component	Figure
AW	Elbow (68)	18-10	Fitting (69)	18-12
AX	Elbow (70)	18-10	Tee Weldment (58)	18-8, 18-16
AY	Elbow (71)	18-10	Tee (72)	18-17
AZ	Elbow (73)	18-10	Tee (74)	18-17
BA	Elbow (75)	18-10	Tee (76)	18-17
BB	Elbow (77)	18-10	Tee (78)	18-17

Figure 18-10. Three Function Control Valve

18-11. CRANE HYDRAULIC HOSES, TUBES AND FITTINGS REPLACEMENT (CONT).

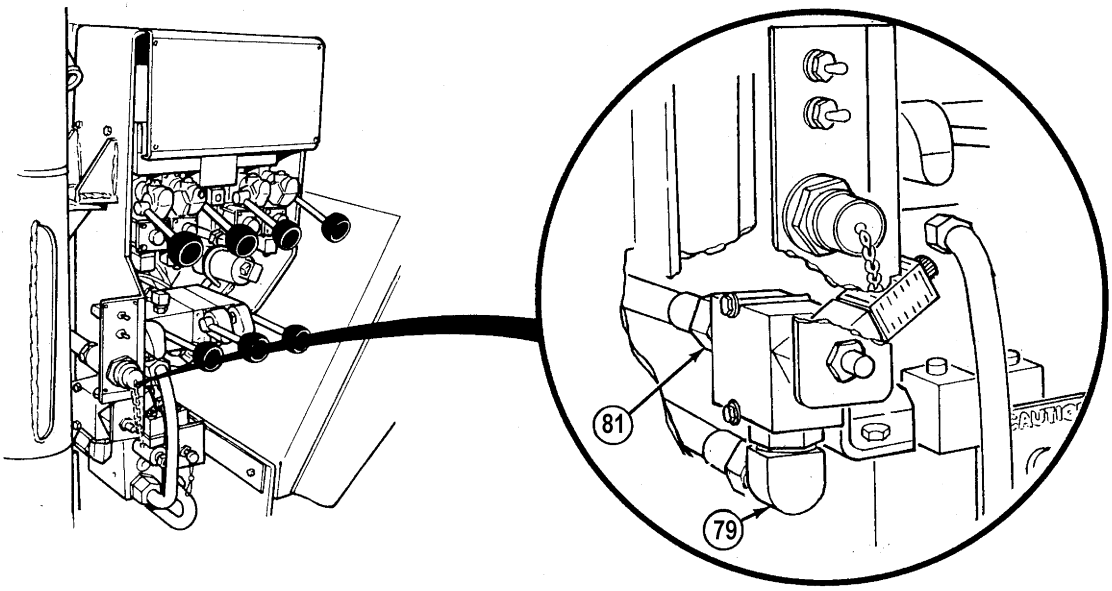

Hose or Tube	From		To	
	Component	Figure	Component	Figure
BC	Elbow (79)	18-10	Elbow (80)	18-16
BD	Fitting (81)	18-10	Fitting (82)	18-12

Figure 18-11. Manual Override Valve

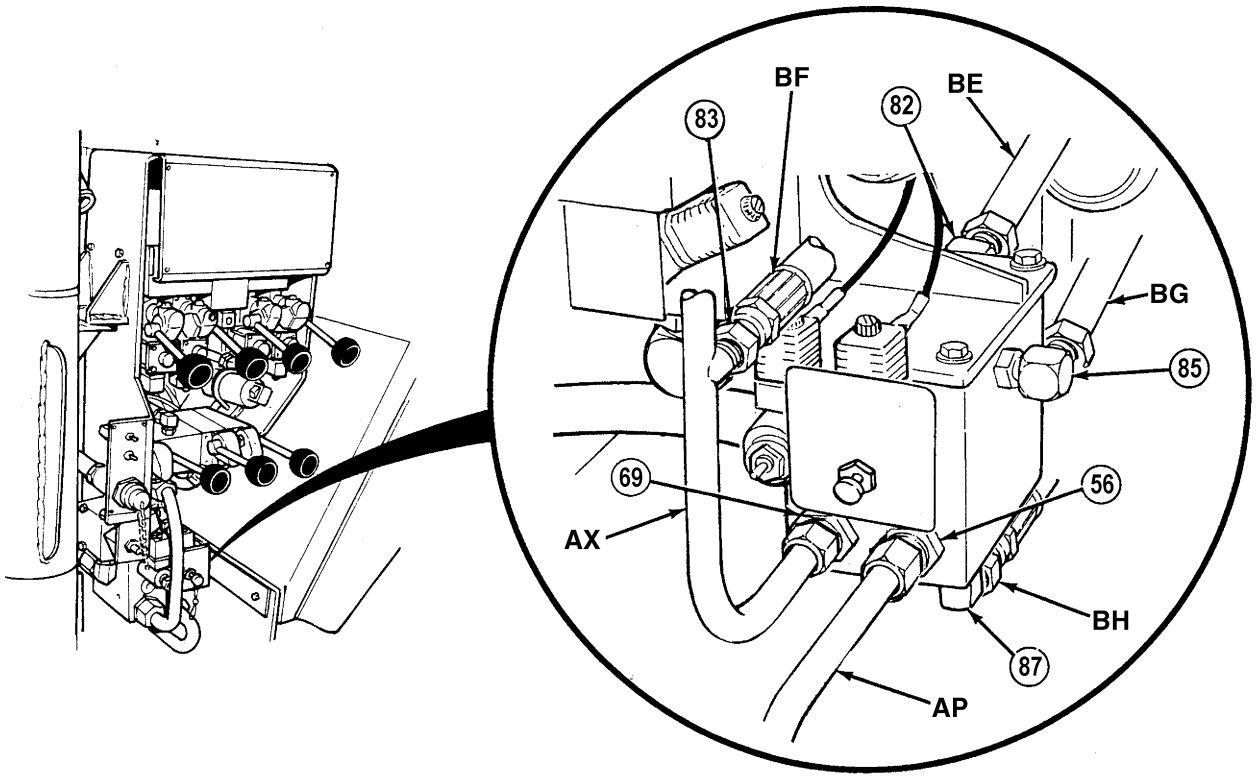

Hose or Tube	From		To	
	Component	Figure	Component	Figure
BE	Tube Weldment (83)	18-13	Fitting (84)	18-14
BF	Elbow (85)	18-13	Tube Weldment (86)	18-16
BG	Elbow (87)	18-13	Elbow (88)	18-13

Figure 18-12. Manual Override Solenoid

18-11. CRANE HYDRAULIC HOSES, TUBES AND FITTINGS REPLACEMENT (CONT).

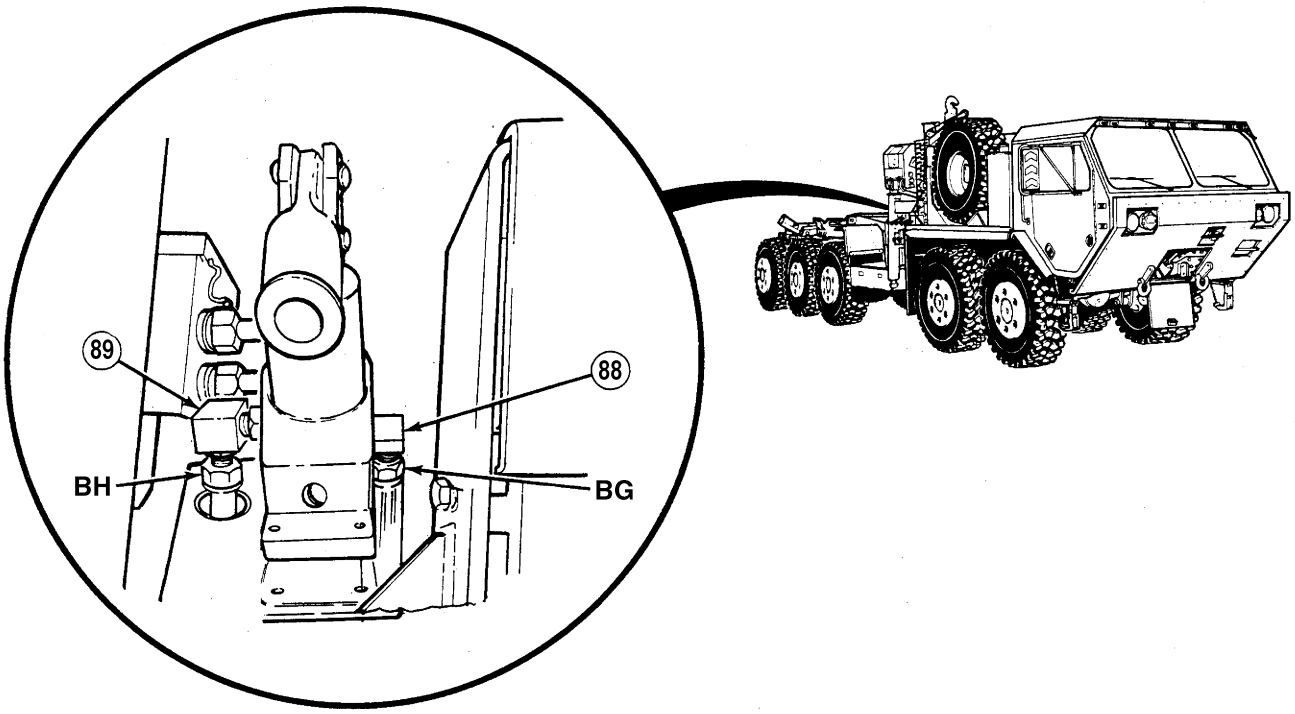

Hose or Tube	From		To	
	Component	Figure	Component	Figure
BH	Elbow (89)	18-13	Fitting (90)	18-16

Figure 18-13. Hydraulic Hand Pump Hoses and Tubes

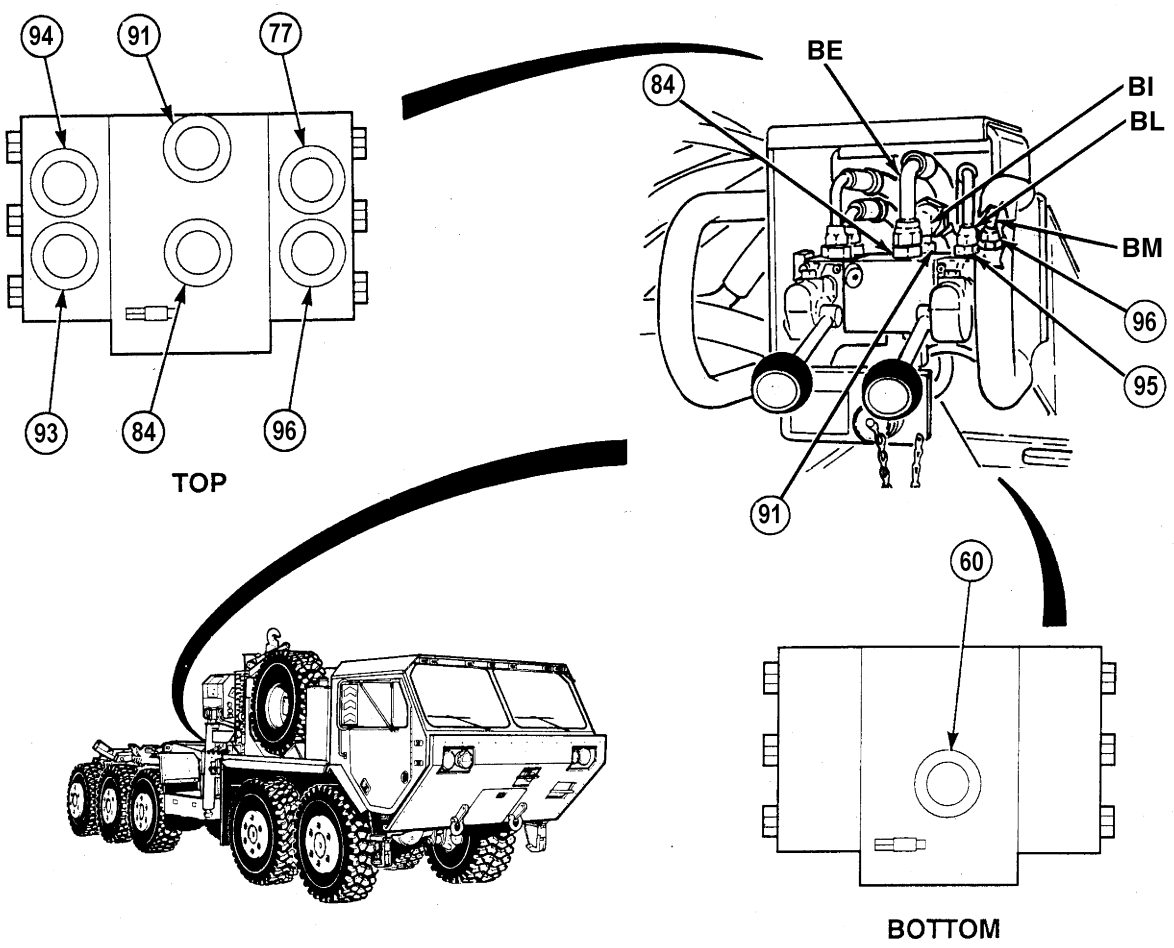

Hose or Tube	From		To	
	Component	Figure	Component	Figure
BI	Fitting (91)	18-14	Tee Weldment (92)	18-16
BJ	Fitting (93)	18-14	Tee (72)	18-17
BK	Fitting (94)	18-14	Tee (74)	18-17
BL	Fitting (95)	18-14	Tee (78)	18-17
BM	Fitting (96)	18-14	Tee (76)	18-17

Figure 18-14. Two Function Control Valve

18-11. CRANE HYDRAULIC HOSES, TUBES AND FITTINGS REPLACEMENT (CONT).

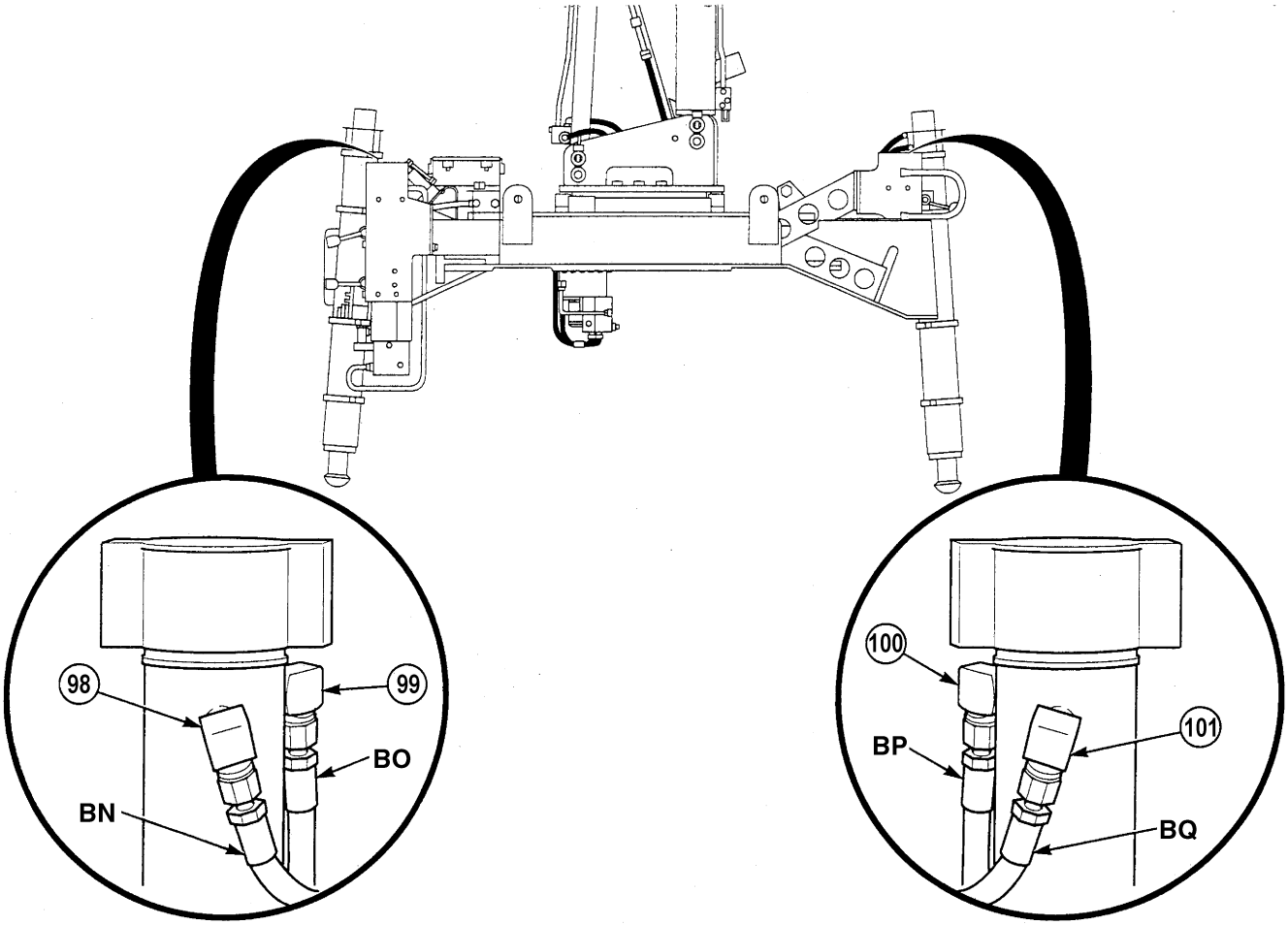

Hose or Tube	From		To	
	Component	Figure	Component	Figure
BN	Elbow (98)	18-15	Tee (72)	18-17
BO	Elbow (99)	18-15	Tee (74)	18-17
BP	Elbow (100)	18-15	Tee (78)	18-17
BQ	Elbow (101)	18-15	Tee (76)	18-17

Figure 18-15. Outrigger Cylinders

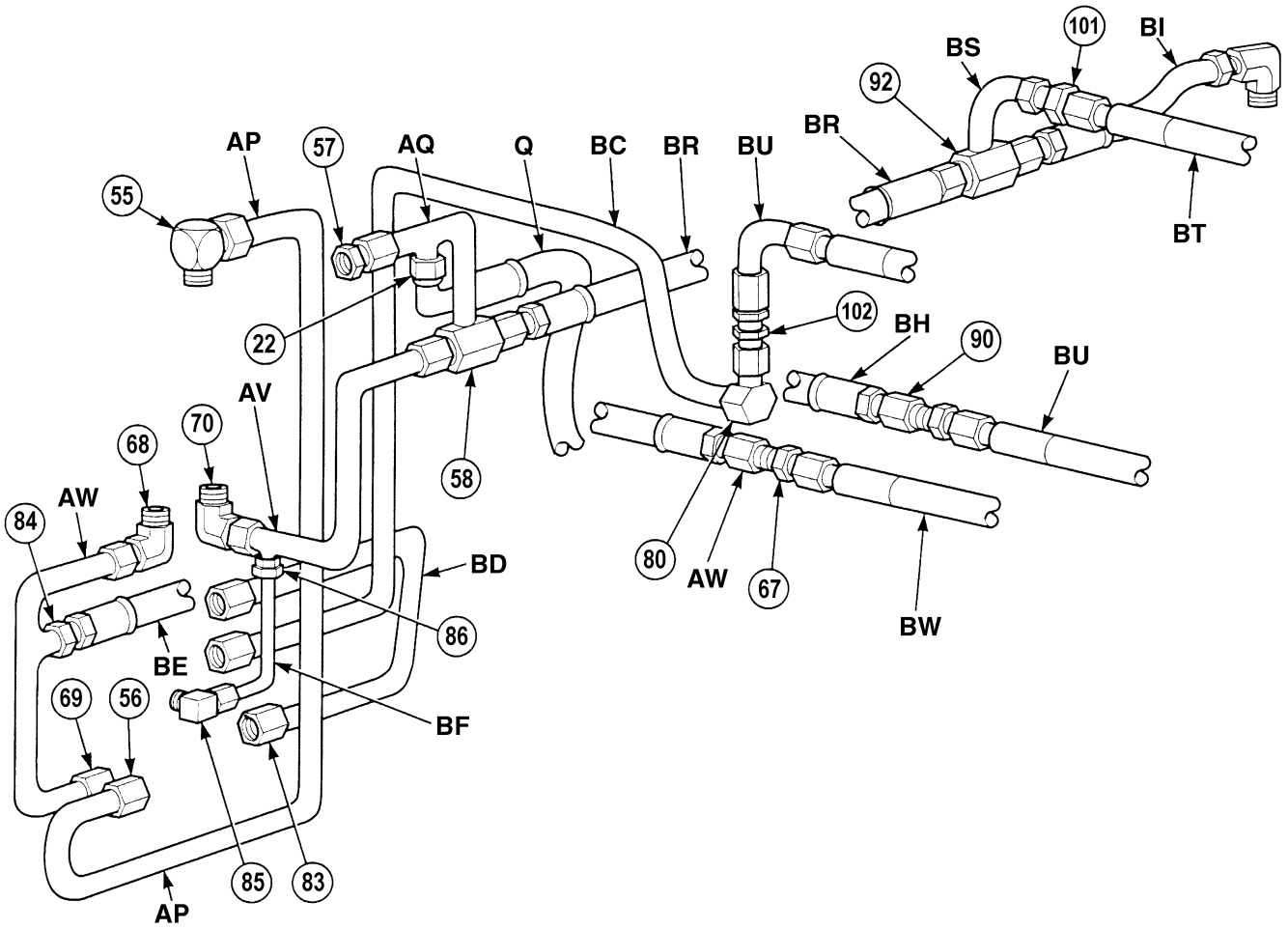

Hose or Tube	From		To	
	Component	Figure	Component	Figure
BR	Tee Weldment (58)	18-16	Tee Weldment (92)	18-16
BS	Tee Weldment (92)	18-16	Fitting (101)	18-16
BT	Fitting (101)	18-16	Hydraulic Filter	
BU	Fitting (102)	18-16	Hydraulic Distribution Manifold	
BV	Fitting (90)	18-16	Hydraulic Reservoir	
BW	Fitting (67)	18-16	Hydraulic Distribution Manifold	

Figure 18-16. Main Hydraulic Hoses and Tubes

18-11. CRANE HYDRAULIC HOSES, TUBES AND FITTINGS REPLACEMENT (CONT).

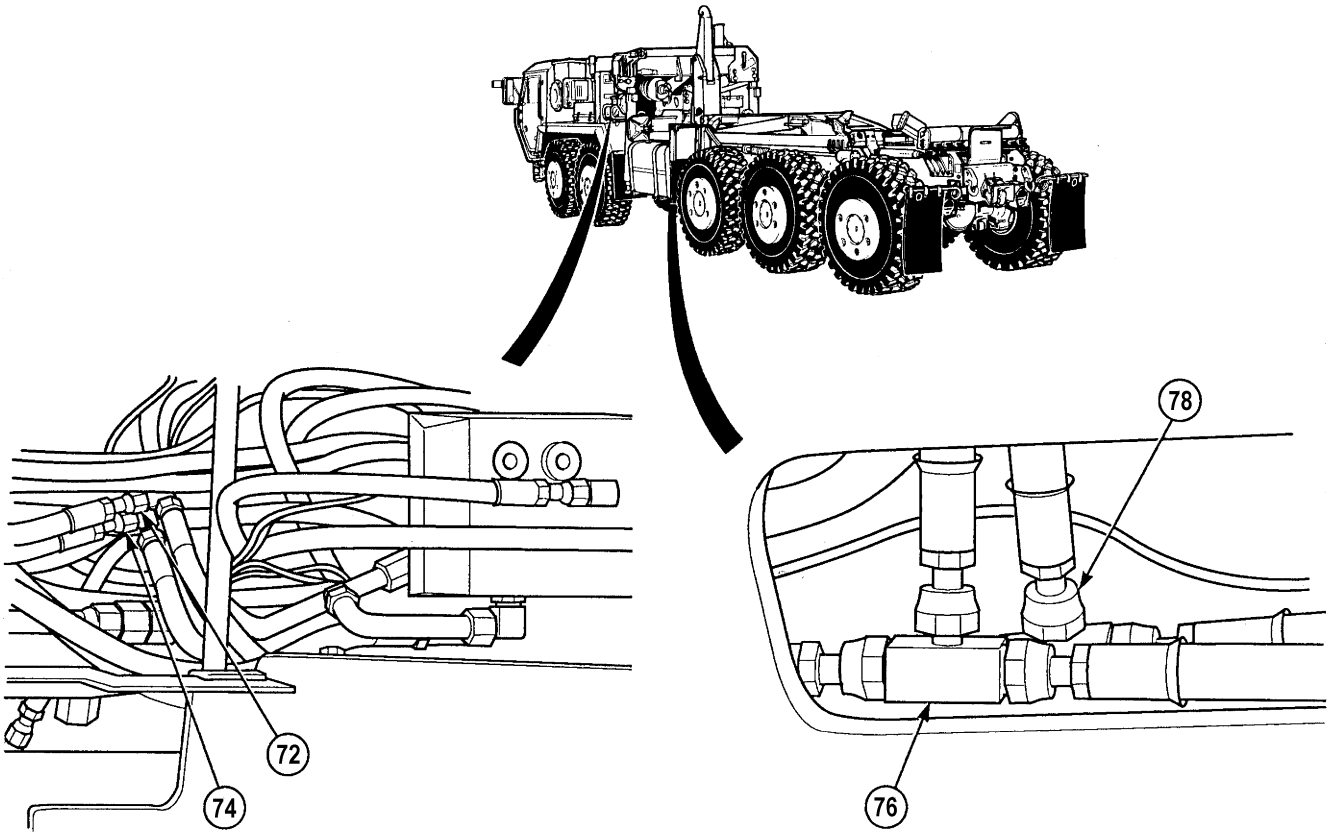

From Hose or Tube	Figure	Component	Figure	To Hose or Tube	Figure
AY	18-10	Tee (72)	18-17	BL	18-15
AZ	18-10	Tee (74)	18-17	BM	18-15
BA	18-10	Tee (78)	18-17	BN	18-15
BB	18-10	Tee (76)	18-17	BO	18-15

Figure 18-17. Under Base Connections

e. Follow-On Maintenance:

- Check oil level, (TM 9-2320-364-10).
- Remove lifting device, (TM 9-2320-364-10).
- Return crane to transport position, (TM 9-2320-364-10).
- Load test crane, (TM 9-2320-364-34-2).
- Remove wheel chocks, (TM 9-2320-364-10).

END OF TASK

18-12. SELF-RECOVERY WINCH (SRW) REPLACEMENT.

This task covers:

a. Removal b. Installation c. Follow-On Maintenance

INITIAL SETUP

Tools and Special Tools
Tool Kit, General Mechanic's: Automotive (Item 74, Appendix G)
Cap and Plug Set (Item 8, Appendix G)
Pan, Drain (Item 47, Appendix G)
Socket Set, 3/4 in. (Item 62, Appendix G)
Wrench, Combination 1-1/8 in. (Item 79, Appendix G)
Wrench, Combination 1-1/4 in. (Item 80, Appendix G)
Wrench, Combination 1-3/8 in. (Item 82, Appendix G)
Wrench, Combination 1-5/8 in. (Item 84, Appendix G)
Wrench, Torque (0 to 300 lb-ft [0-407 N·m]) (Item 96, Appendix G)
Lifting Device, Minimum Capacity 645 lb (293 kg)

Materials/Parts
Tags, Identification (Item 88, Appendix C)
Locknut (12) (Item 92, Appendix F)
Lockwasher (2) (Item 165, Appendix F)
Packing, Preformed (3) (Item 251, Appendix F)

Personnel Required
Two

Equipment Condition
LHS fully extended, (TM 9-2320-364-10)
Engine OFF, (TM 9-2320-364-10)
Wheels chocked, (TM 9-2320-364-10)
Batteries disconnected, (Para 7-87)
Winch cable removed, (Para 18-17)
Crane storage box removed (trucks equipped with crane only), (Para 17-55)

a. Removal.

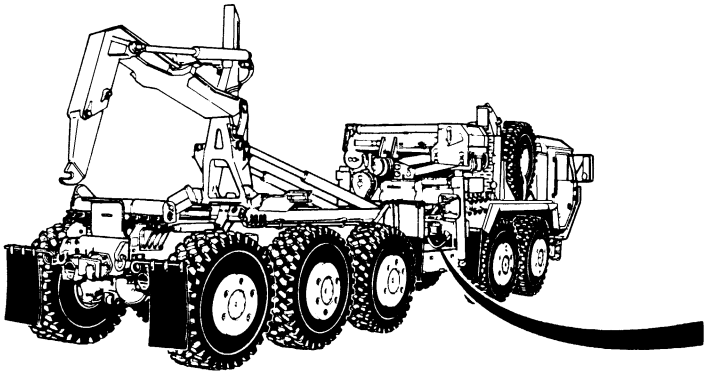

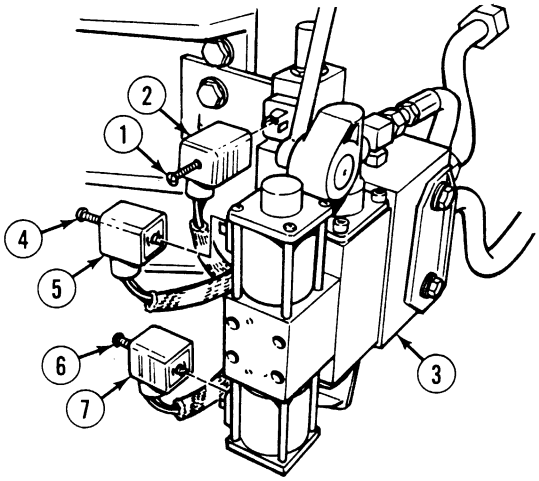

NOTE

- Tag and mark connectors, hoses and tubes upon removal.
- Cap and plugs hoses and tubes upon removal.

(1) Loosen screw (1) and disconnect MC121 connector (2) from control valve (3).

(2) Loosen screw (4) and disconnect MC122 connector (5) from control valve (3).

(3) Loosen screw (6) and disconnect MC123 connector (7) from control valve (3).

18-12. SELF-RECOVERY WINCH (SRW) REPLACEMENT (CONT).

(4) Position drain pan under hydraulic tubes (8) and (9).

(5) Loosen nuts (10) and (11) and remove hydraulic tube (8) from fittings (12) and (13).

(6) Loosen nuts (14) and (15) and remove hydraulic tube (9) from fittings (16) and (17).

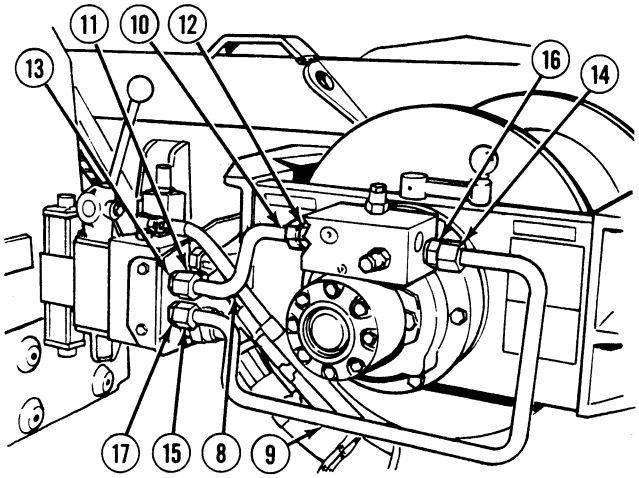

(7) Remove hose (18) and preformed packing (19) from elbow (20) on control valve (3). Discard preformed packing.

(8) Remove hose (21) and preformed packing (22) from elbow (23) on control valve (3). Discard preformed packing.

(9) Remove hose (24) and preformed packing (25) from fitting (26) on control valve (3). Discard preformed packing.

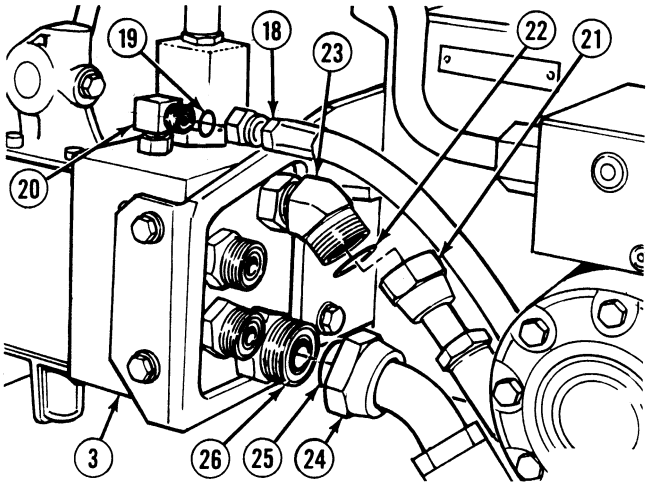

(10) Remove two screws (27) lockwashers (28), washers (29) and bracket (30) from winch (31). Discard lockwashers.

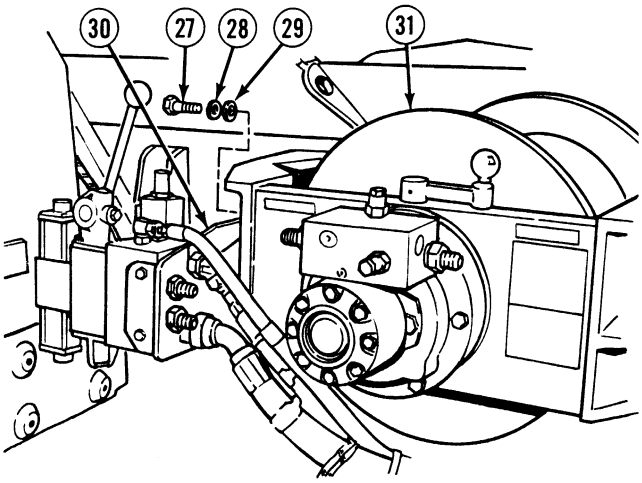

WARNING

Self-recovery winch weighs 645 lbs (292 kg). Attach suitable lifting device to prevent possible injury to personnel.

(11) Attach lifting device to self-recovery winch (31).

(12) With the aid of an assistant, remove eight locknuts (32) and screws (33) from self-recovery winch mounting bracket (34). Discard locknuts.

(13) With the aid of an assistant, remove four locknuts (35) and screws (36) from self-recovery winch mounting bracket (34). Discard locknuts.

(14) With the aid of an assistant, remove self-recovery winch (31) from frame (37).

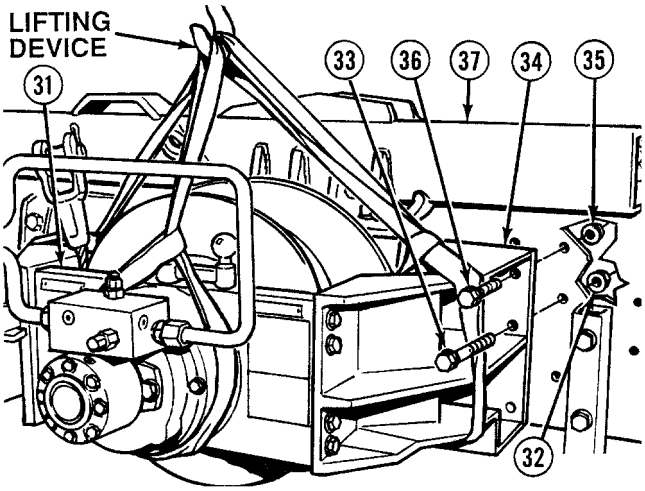

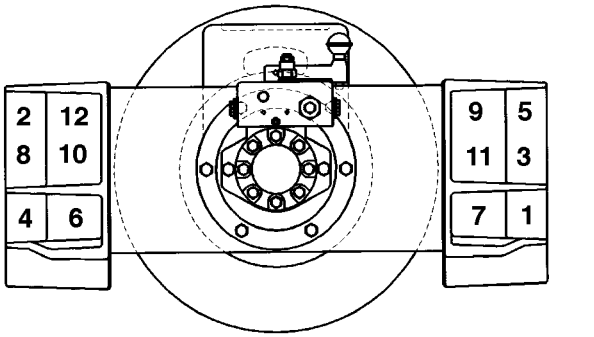

TIGHTENING SEQUENCE

b. Installation.

WARNING

Self-recovery winch weighs 645 lbs (292 kg). Attach suitable lifting device to prevent possible injury to personnel.

NOTE

Remove caps and plugs from hoses and tubes prior to installation.

(1) Attach lifting device to self-recovery winch (31).

(2) With the aid of an assistant, position self-recovery winch (31) on frame (37) with eight screws (33) and locknuts (32) in self-recovery winch mounting bracket (34).

(3) With the aid of an assistant, position four screws (36) and locknuts (35) in self-recovery winch mounting bracket (34).

(4) With the aid of an assistant, tighten eight screws (33), locknuts (32), four screws (36) and locknuts (35) to 210 lb-ft (285 N·m)

(5) Remove lifting device from self-recovery winch (31).

18-12. SELF-RECOVERY WINCH (SRW) REPLACEMENT (CONT).

(6) Install bracket (30) on winch (31) with two washers (29), lockwashers (28) and screws (27).

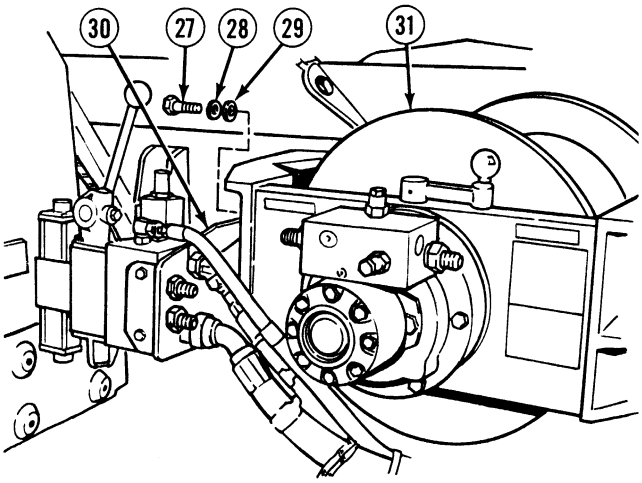

(7) Install preformed packing (25) and hose (24) on fitting (26).

(8) Install preformed packing (22) and hose (21) on elbow (23).

(9) Install preformed packing (19) and hose (18) on elbow (20).

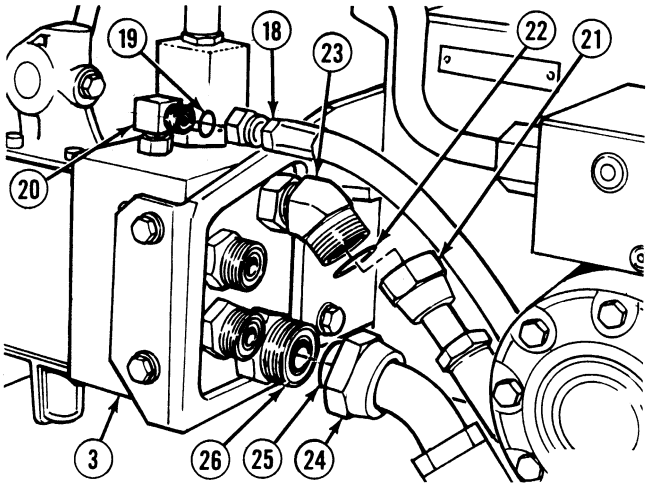

(10) Install hydraulic tube (9) on fittings (16) and (17) and tighten nuts (14) and (15).

(11) Install hydraulic tube (8) on fittings (12) and (13) and tighten nuts (10) and (11).

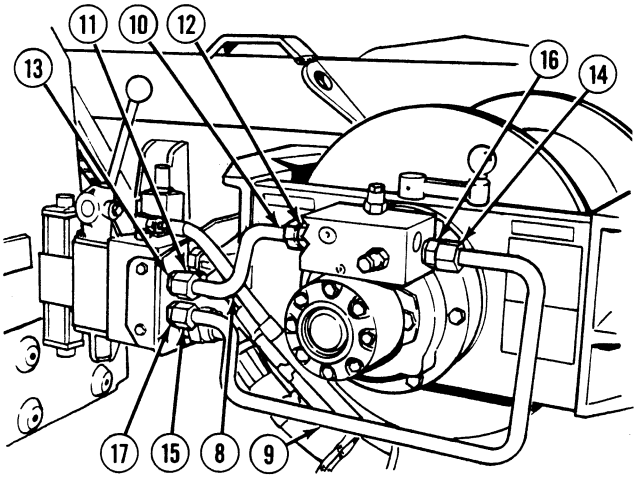

(12) Connect MC123 (7), MC122 (5) and MC121 (2) connectors on control valve (3).

(13) Tighten screws (1), (4), and (6).

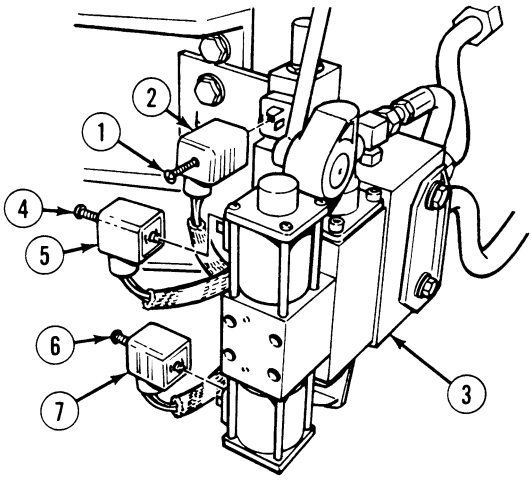

c. Follow-On Maintenance:

- Connect batteries, (Para 7-87).
- Start engine, (TM 9-2320-364-10).
- Check for oil leaks, (TM 9-2320-364-10).
- Check hydraulic oil level, (Para 2-9, Lubrication Table 2-3).
- Install crane stowage box (trucks equipped with crane only), (Para 17-55).
- Install winch cable, (Para 18-17).
- LHS in transit position, (TM 9-2320-364-10).
- Shut OFF engine, (TM 9-2320-364-10).
- Remove wheel chocks, (TM 9-2320-364-10).

END OF TASK

18-13. SELF-RECOVERY WINCH (SRW) FRONT TENSION GUIDE REPAIR.

This task covers:

a. Removal.
b. Disassembly
c. Cleaning/Inspection
d. Assembly
e. Installation
f. Follow-On Maintenance

INITIAL SETUP

Tools and Special Tools
Tool Kit, General Mechanic's: Automotive (Item 74, Appendix G)
Compressor Unit, Air (Item 11, Appendix G)
Gloves, Chemical Oil Protective (Item 28, Appendix G)
Goggles, Industrial (Item 30, Appendix G)
Gun, Air Blow (Item 31, Appendix G)
Wrench, Torque (0 to 175 lb-ft [0-237 N·m]) (Item 95, Appendix G)
Wrench, Torque (0 to 60 N·m) (Item 98, Appendix G)

Material/Parts
Solvent, Drycleaning (Item 87, Appendix C)
Locknut (4) (Item 123, Appendix F)
Pin, Cotter (2) (Item 272, Appendix F)

Personnel Required
Two

Equipment Condition
Engine OFF, (TM 9-2320-364-10)
Wheels chocked, (TM 9-2320-364-10)

a. Removal.

WARNING

Front tension guide weighs 60 lbs (27 kg). Use an assistant to prevent possible injury to personnel.

(1) With the aid of an assistant, remove four locknuts (1) from screws (2) and (3). Discard locknuts.

(2) With the aid of an assistant, support front tension guide (4).

(3) With the aid of an assistant, remove screws (2) and (3) and front tension guide assembly (4) from frame (5).

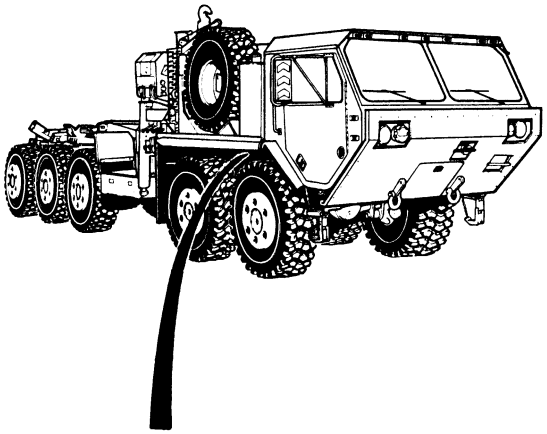

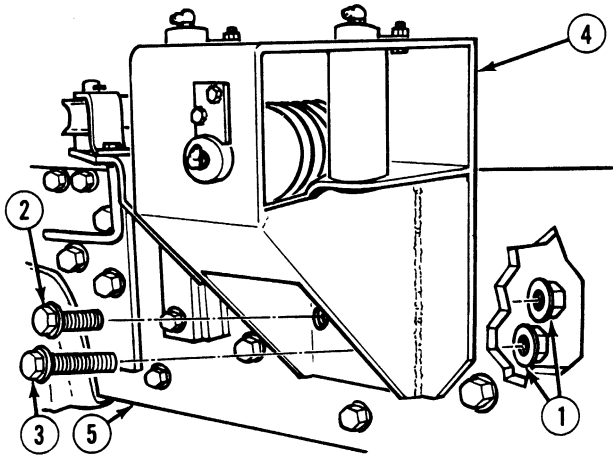

b. Disassembly.

(1) Remove three grease fittings (1) from front tension guide assembly (2).

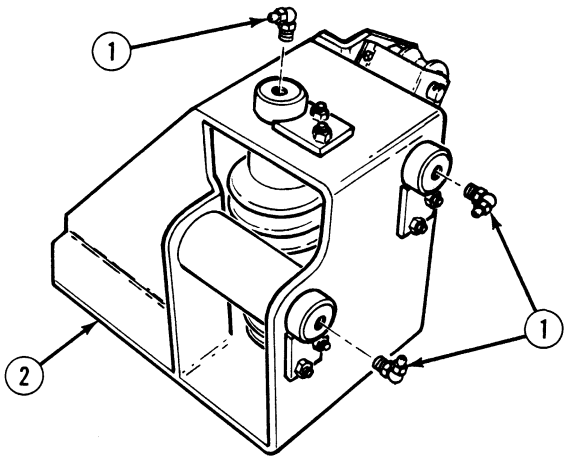

(2) Remove two locknuts (3) and U-bolt (4) from tension pivot assembly (5). Discard locknuts.

(3) Remove two locknuts (6), U-bolt (7) and spring (8) from front tension guide assembly (2). Discard locknuts.

(4) Remove cotter pin (9) and washer (10) from tension pivot assembly (5). Discard cotter pin.

(5) Remove tension pivot assembly (5) from tension plate assembly (11).

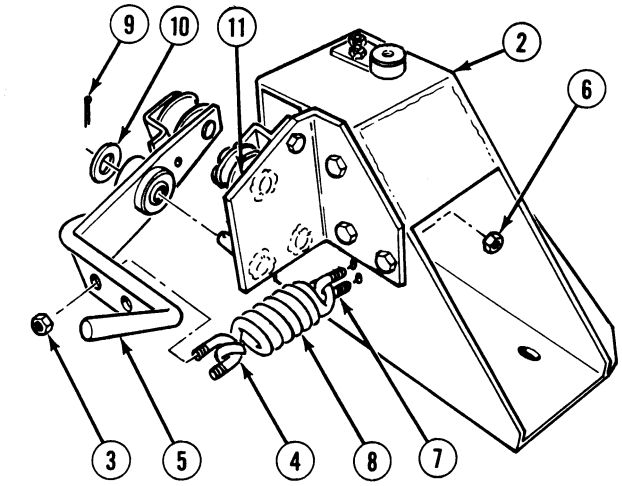

(6) Remove cotter pin (12), locknut (13) screw (14) and bracket (15) from tension pivot assembly (5). Discard locknut.

(7) Remove roller assembly (16) from tension pivot assembly (5).

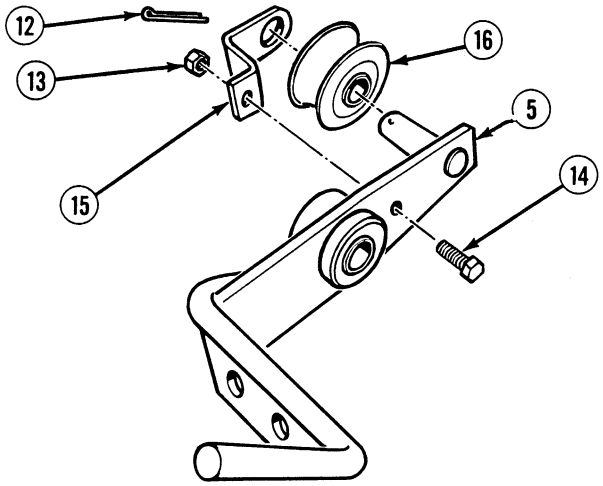

18-13. SELF-RECOVERY WINCH (SRW) FRONT TENSION GUIDE REPAIR (CONT).

(8) Remove cotter pin (17), locknut (18), screw (19), bracket (20), roller assembly (21) and spacer (22) from tension plate assembly (11). Discard locknut.

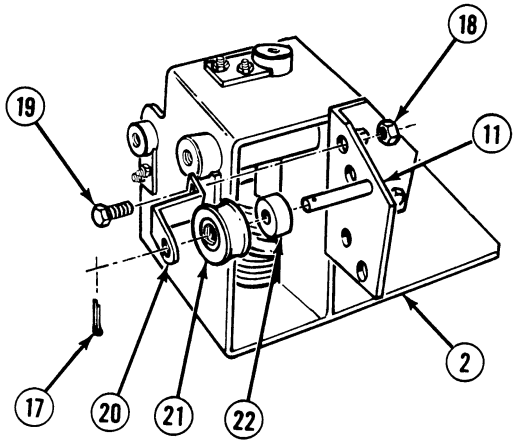

c. Cleaning/Inspection.

WARNING

- Drycleaning Solvent (P-D-680) is TOXIC and flammable. Wear protective goggles, face shield, and gloves; use only in a well-ventilated area; avoid contact with skin, eyes, and clothes, and do not breathe vapors. Keep away from heat or flame. Never smoke when using solvent. The flashpoint for Type II Drycleaning Solvent is 140 degrees F (60 degrees C) and Type III Drycleaning Solvent is 200 degrees F (93 degrees C). Failure to do so may result in injury or death to personnel.
- If personnel become dizzy while using cleaning solvent, immediately get fresh air and medical help. If solvent contacts skin or clothes, flush with cold water. If solvent contacts eyes, immediately flush eyes with water and get immediate medical attention.
- Compressed air used for cleaning purposes will not exceed 30 psi (207 kPa). Use only with effective chip guarding and personal protective equipment (goggles/shield, gloves, etc). Failure to comply may result in injury to personnel.

(1) Clean parts with drycleaning solvent.

(2) Wipe parts with clean cloth.

(3) Dry parts with compressed air.

(4) Inspect parts for cracks, gouges and broken welds.

(5) Replace all damaged parts.

d. Assembly.

(1) Install spacer (22), roller assembly (21), bracket (20), cotter pin (17), screw (19) and locknut (18) on tension plate assembly (11).

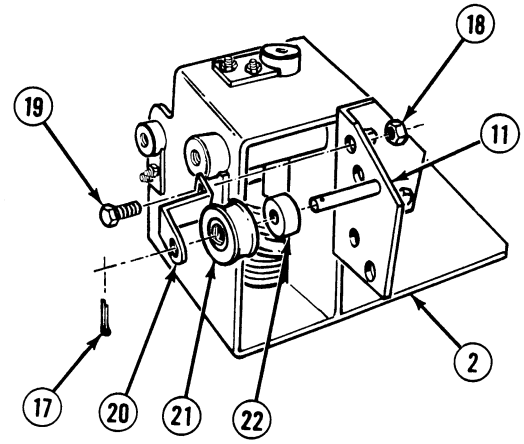

(2) Install roller assembly (16) and bracket (15) on tension pivot assembly (5) with cotter pin (12).

(3) Install bracket (15) on tension pivot assembly (5) with screw (14) and locknut (13).

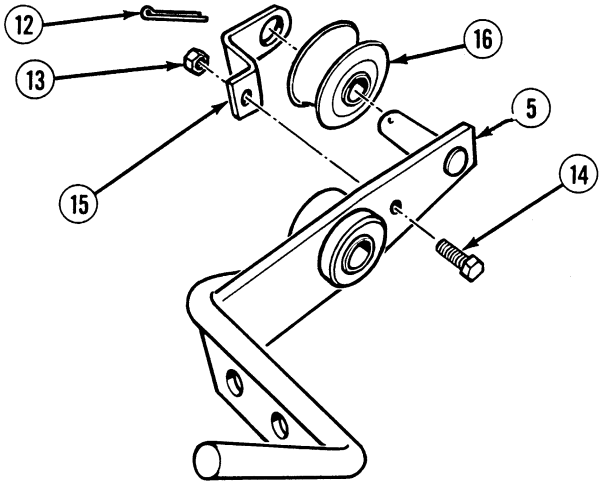

(4) Install tension pivot assembly (5) and washer (10) on tension plate assembly (11) with cotter pin (9).

(5) Install spring (8) and U-bolt (7) on front tension guide assembly (2) with two locknuts (6). Tighten locknuts until three threads show on U-bolt ends.

(6) Install spring (8) and U-bolt (4) on tension pivot assembly (5) with two locknuts (3). Tighten locknuts until three threads show on U-bolt ends.

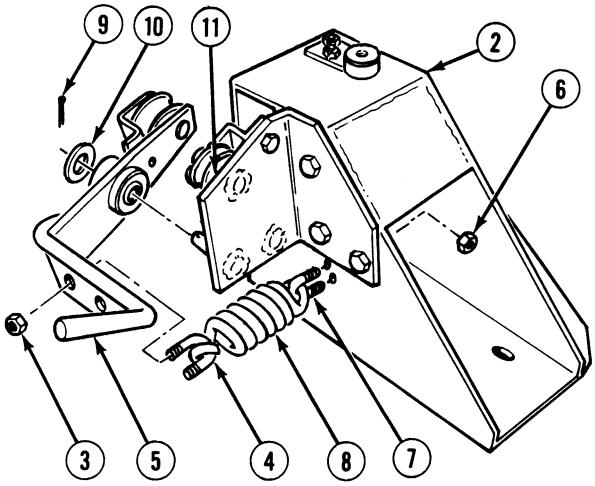

18-13. SELF-RECOVERY WINCH (SRW) FRONT TENSION GUIDE REPAIR (CONT).

(7) Install three grease fittings (1) in front tension guide assembly (2).

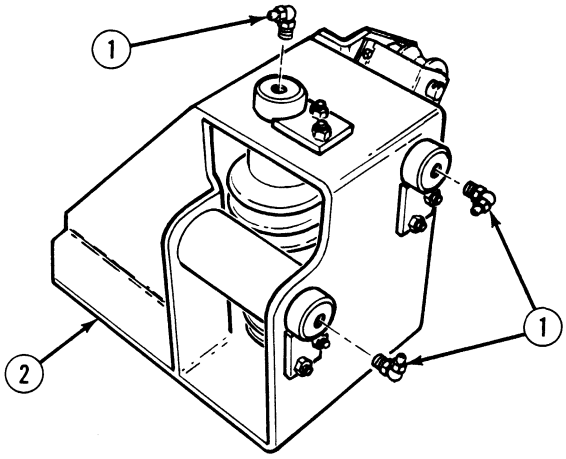

e. Installation.

WARNING

Front tension guide weighs 60 lbs (27 kg). Use an assistant to prevent possible injury to personnel.

(1) With the aid of an assistant, position front tension guide assembly (4) on frame (5) with four screws (2) and (3).

(2) With the aid of an assistant, install four locknuts (1) on screws (3) and (2).

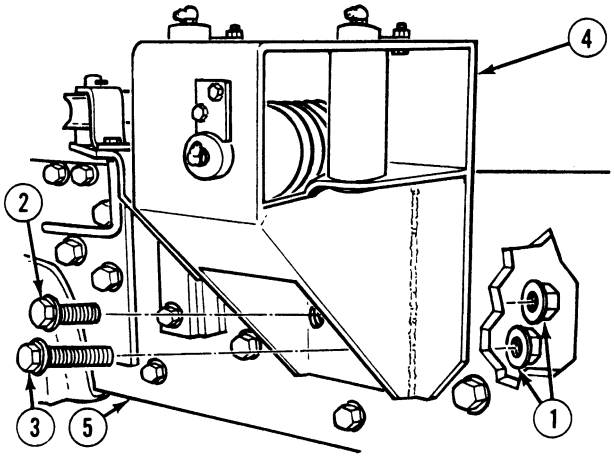

f. Follow-On Maintenance:

- Lubricate self-recovery winch front tension guide, (Para 2-9).
- Remove wheel chocks, (TM 9-2320-364-10).

END OF TASK

18-14. SELF-RECOVERY WINCH (SRW) FRONT GUIDE REPLACEMENT.

This task covers:

a. Removal b. Installation c. Follow-On Maintenance

INITIAL SETUP

Tools and Special Tools
Tool Kit, General Mechanic's: Automotive (Item 74, Appendix G)
Socket Set 3/4 in. Drive (Item 61, Appendix G)

Material/Parts
Locknut (6) (Item 91, Appendix F)
Locknut (3) (Item 93, Appendix F)

Personnel Required
Two

Equipment Condition
Engine OFF, (TM 9-2320-364-10)
Wheels chocked, (TM 9-2320-364-10)

a. Removal.

WARNING

- Front guide assembly weighs 75 lbs (34 kg). Use an assistant to prevent injury to personnel.
- Leave top front screw installed in frame to prevent spacer from falling. Failure to comply may result in injury to personnel.

(1) With the aid of an assistant, remove three screws (1) and locknuts (2) from guide assembly (3). Discard locknuts.

(2) With the aid of an assistant, remove six locknuts (4), four screws (5), one screw (6) and guide assembly (3) from frame (7). Discard locknuts.

(3) Remove spacer (8) and remaining screw (6) from frame (7).

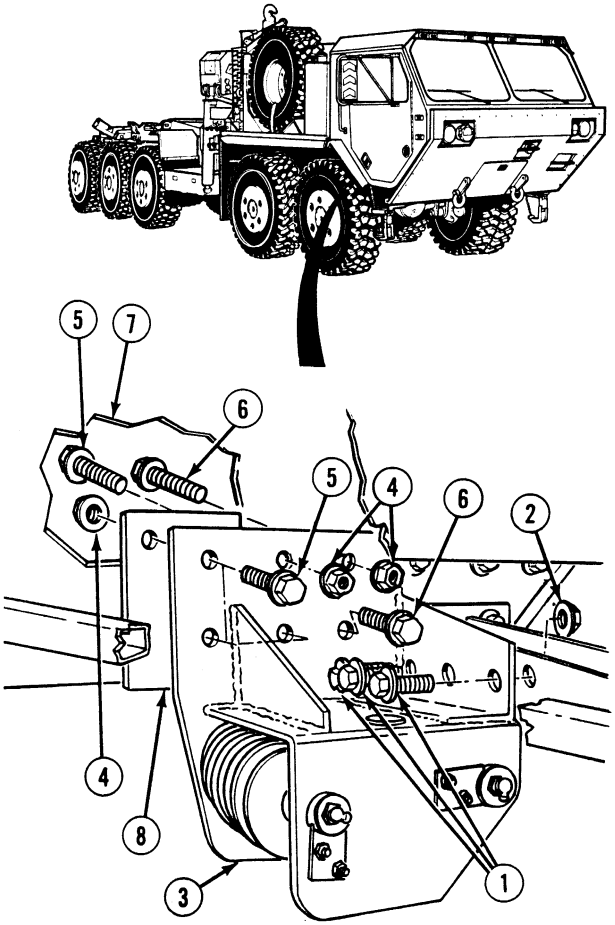

18-14. SELF-RECOVERY WINCH (SRW) FRONT GUIDE REPLACEMENT (CONT).

b. Installation.

WARNING

- Front guide assembly weighs 75 lbs (34 kg). Use an assistant to prevent injury to personnel.
- Position top front screw in frame to hold spacer in place. Failure to comply may result in injury to personnel.

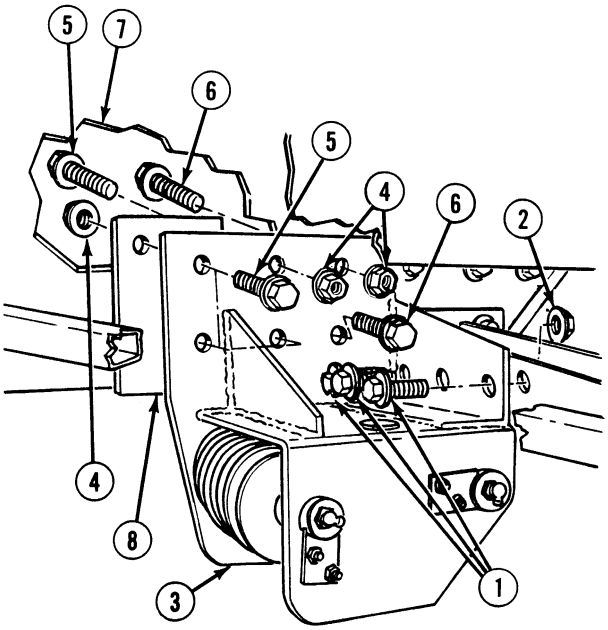

(1) With the aid of an assistant, position one screw (6) and spacer (8) on frame (7).

(2) With aid of assistant, install guide assembly (3), four screws (5), one screw (6) and six locknuts (4) on frame (7).

(3) Install three screws (1) and locknuts (2) on guide assembly (3).

c. Follow-On Maintenance:

- Remove wheel chocks, (TM 9-2320-364-10).

END OF TASK

18-15. SELF-RECOVERY WINCH (SRW) REAR TENSION GUIDE REPAIR.

This task covers:

a. Removal
b. Disassembly
c. Cleaning/Inspection
d. Assembly
e. Follow-On Maintenance

INITIAL SETUP

Tools and Special Tools
Tool Kit, General Mechanic's: Automotive (Item 74, Appendix G)
Compressor Unit, Air (Item 11, Appendix G)
Gloves, Chemical Oil Protective (Item 28, Appendix G)
Goggles, Industrial (Item 30, Appendix G)
Gun, Air Blow (Item 31, Appendix G)
Socket Set, 3/8 in. (Item 62, Appendix G)
Wrench, Torque (0 to 60 N·m) (Item 98, Appendix G)

Material/Parts
Cloth, Cleaning (Item 31, Appendix C)
Sealing Compound (Item 77, Appendix C)

Material/Parts - Continued
Solvent, Drycleaning (Item 87, Appendix C)
Locknut (4) (Item 92, Appendix F) (if equipped with CHU)
Locknut (2) (Item 123, Appendix F)
Locknut (4) (Item 132, Appendix F)
Pin, Cotter (3) (Item 272, Appendix F)

Personnel Required
Two

Equipment Condition
Engine OFF, (TM 9-2320-364-10)
Wheels chocked, (TM 9-2320-364-10)

a. Removal.

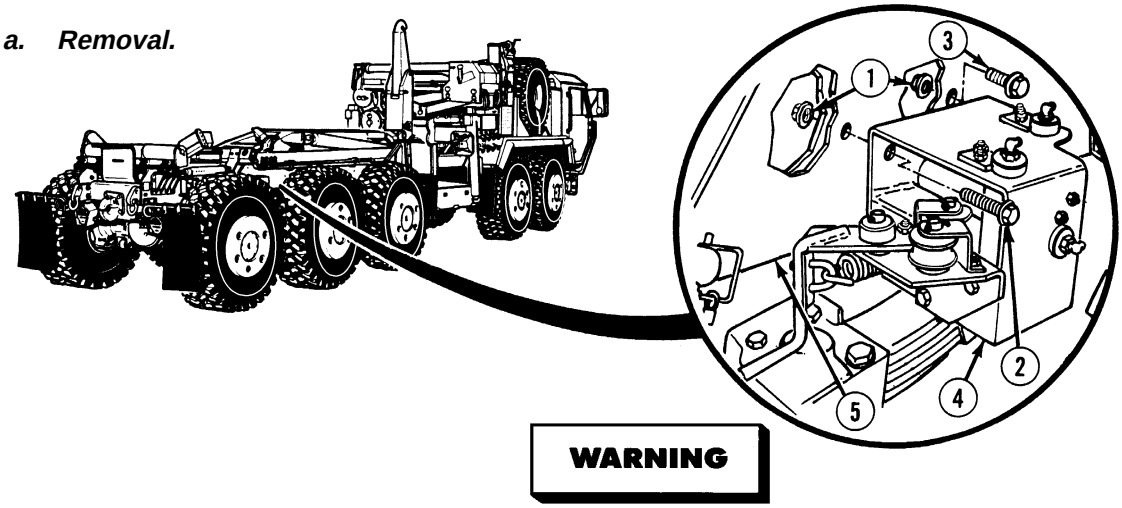

WARNING

Rear tension guide weighs 50 lbs (23 kg). Use an assistant to prevent injury to personnel.

NOTE

- Perform Steps (1) through (3) for trucks not equipped with CHU.
- Perform Steps (4) and (5) for trucks equipped with CHU.

(1) With the aid of an assistant, remove four locknuts (1) from screws (2) and (3). Discard locknuts.

(2) With the aid of an assistant, support rear tension guide assembly (4).

(3) With the aid of an assistant, remove screws (2) and (3) and rear tension guide assembly (4) from frame (5).

18-15. SELF-RECOVERY WINCH (SRW) REAR TENSION GUIDE REPAIR (CONT).

(4) With the aid of an assistant, remove four screws (6) and rear tension guide assembly (4) from adapter plate (7).

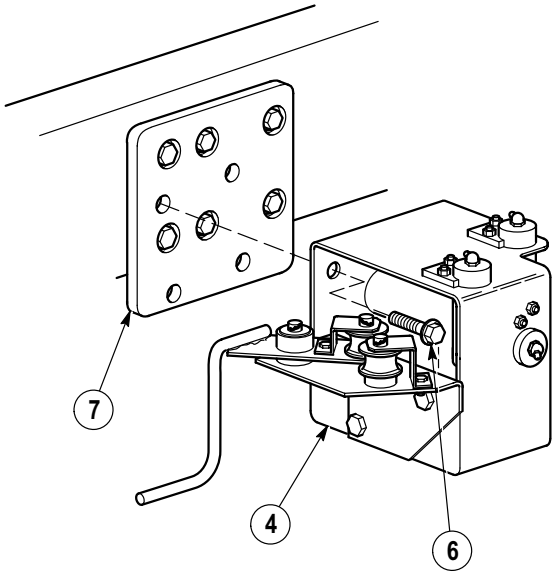

(5) Remove two screws (8), screws (9), four locknuts (10) and adapter plate (7) from frame (5). Discard locknuts.

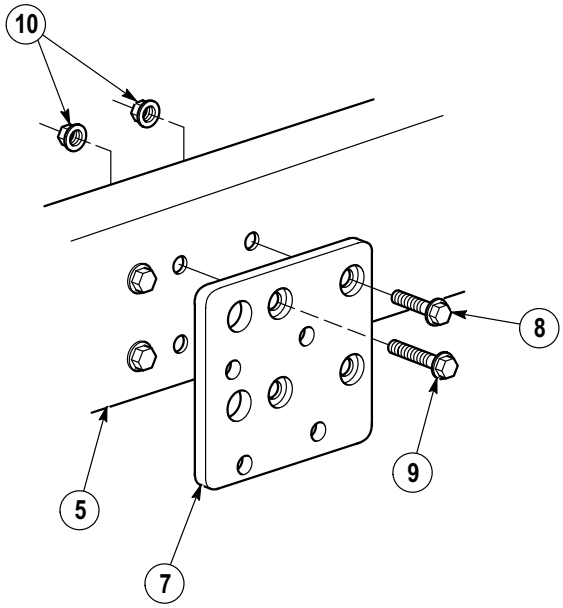

b. Disassembly.

NOTE

Note position of grease fittings before removal.

(1) Remove three grease fittings (1) from rear tension guide assembly (2).

(2) Remove cotter pin (3), locknut (4), screw (5), bracket (6), roller assembly (7) and spacer (8) from tension plate assembly (9). Discard cotter pin and locknut.

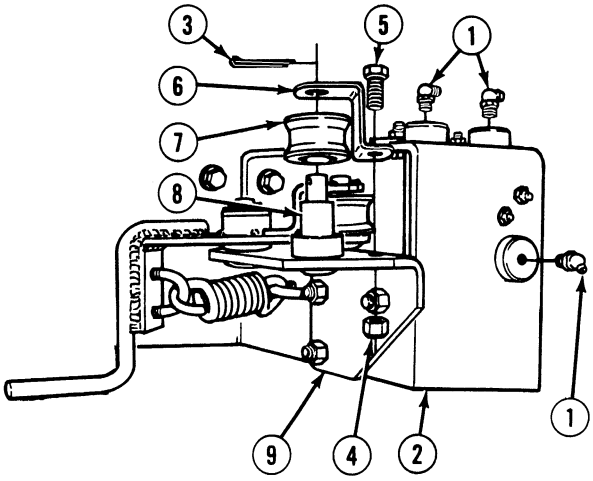

(3) Remove two locknuts (10), U-bolt (11) and spring (12) from rear tension guide assembly (2). Discard locknuts.

(4) Remove two locknuts (13), U-bolt (14) and spring (12) from tension pivot assembly (15). Discard locknuts.

(5) Remove locknut (16) from screw (17). Discard locknut.

(6) Remove cotter pin (18) and bracket (19) from tension pivot assembly (15). Discard cotter pin.

(7) Remove roller assembly (20) from tension pivot assembly (15).

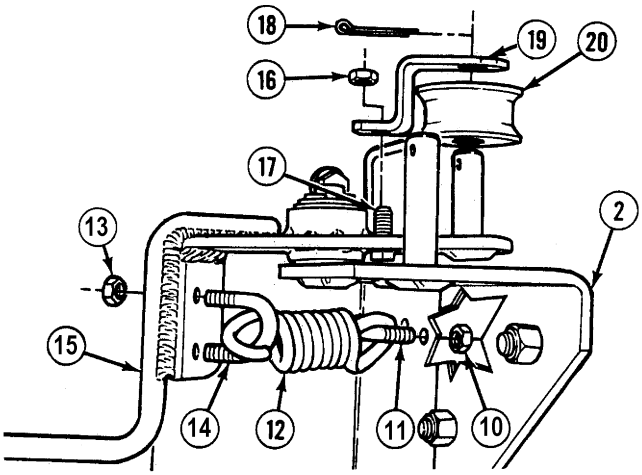

18-15. SELF-RECOVERY WINCH (SRW) REAR TENSION GUIDE REPAIR (CONT).

c. Cleaning/Inspection.

WARNING

- Drycleaning Solvent (P-D-680) is TOXIC and flammable. Wear protective goggles, face shield, and gloves; use only in a well-ventilated area; avoid contact with skin, eyes, and clothes, and do not breathe vapors. Keep away from heat or flame. Never smoke when using solvent. The flashpoint for Type II Drycleaning Solvent is 140 degrees F (60 degrees C) and Type III Drycleaning Solvent is 200 degrees F (93 degrees C). Failure to do so may result in injury or death to personnel.
- If personnel become dizzy while using cleaning solvent, immediately get fresh air and medical help. If solvent contacts skin or clothes, flush with cold water. If solvent contacts eyes, immediately flush eyes with water and get immediate medical attention.
- Compressed air used for cleaning purposes will not exceed 30 psi (207 kPa). Use only with effective chip guarding and personal protective equipment (goggles/shield, gloves, etc). Failure to comply may result in injury or death to personnel.

(1) Clean parts with drycleaning solvent.

(2) Wipe parts with clean cloth.

(3) Dry parts with compressed air.

(4) Inspect parts for cracks, gouges, and broken welds.

(5) Replace all damaged parts.

d. Assembly.

(1) Install roller assembly (20) and bracket (19) on tension pivot assembly (15).

(2) Install cotter pin (18) in tension pivot assembly (15).

(3) Install locknut (16) on screw (17).

(4) Install spring (12) and U-bolt (14) on tension pivot assembly (15) with two locknuts (13). Tighten locknuts until three threads show on U-bolt ends.

(5) Install spring (12) and U-bolt (11) on rear tension guide assembly (2) with two locknuts (10). Tighten locknuts until three threads show on U-bolt ends.

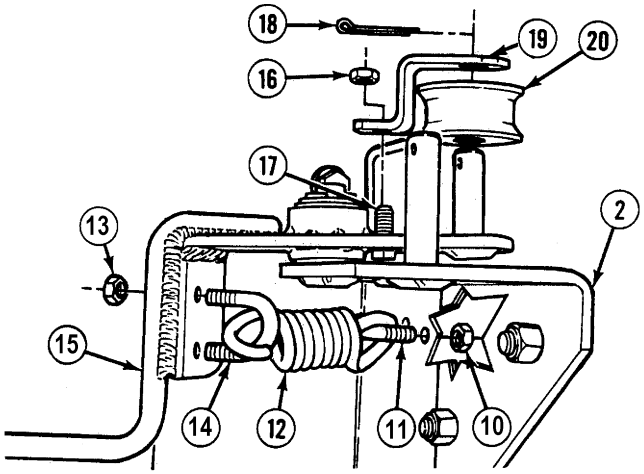

(6) Install spacer (8), roller assembly (7) and bracket (6) on tension plate assembly (9).

(7) Install cotter pin (3) in tension plate assembly (9).

(8) Install screw (5) in bracket (6) and tension plate assembly (9) with locknut (4).

(9) Install three grease fittings (1) in front tension guide assembly (2).

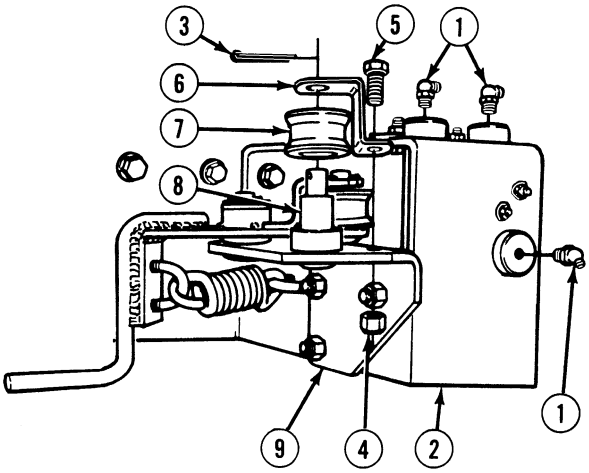

e. Installation.

WARNING

Rear tension guide weighs 50 lbs (23 kg). Use an assistant to prevent injury to personnel.

NOTE

- Perform Steps (1) and (2) for trucks not equipped with CHU.
- Perform Steps (3) through (5) for trucks equipped with CHU.

(1) With the aid of an assistant, install rear tension guide assembly (4), screws (3) and (2) on frame (5).

(2) With the aid of an assistant, install four locknuts (1) on screws (3) and (2).

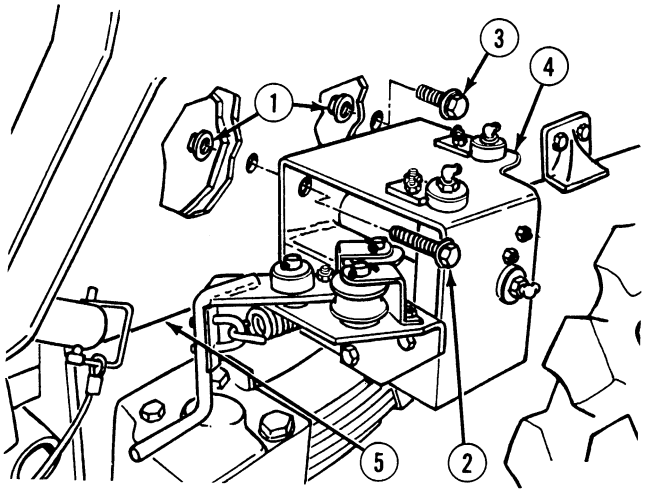

18-15. SELF-RECOVERY WINCH (SRW) REAR TENSION GUIDE REPAIR (CONT).

(3) With the aid of an assistant, install two screws (8), screws (9), four locknuts (10) and adapter plate (7) to frame (5).

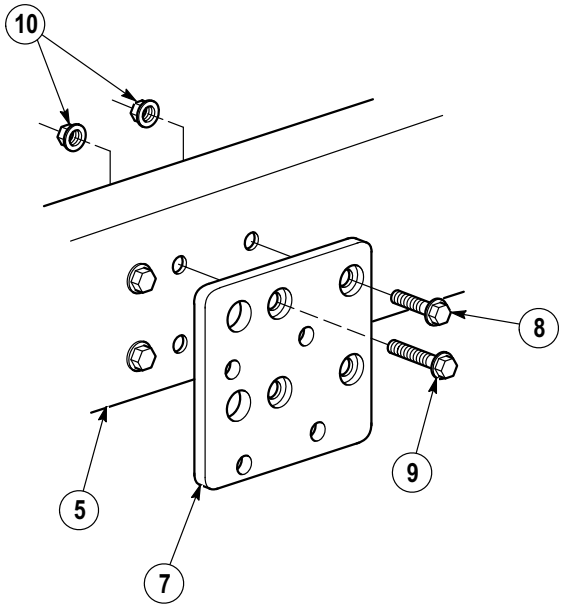

WARNING

Adhesives, solvents and sealing compounds can burn easily, can give off harmful vapors and are harmful to skin and clothing. To avoid injury or death, keep away from open fire and use in well-ventilated area. If adhesive, solvent or sealing compound gets on skin or clothing, wash immediately with soap and water.

(4) Apply sealing compound to four screws (6).

WARNING

Rear tension guide weighs 50 lbs (23 kg). Use an assistant to prevent injury to personnel.

(5) With the aid of an assistant, install rear tension guide assembly (4) and four screws (6) on adapter plate (7).

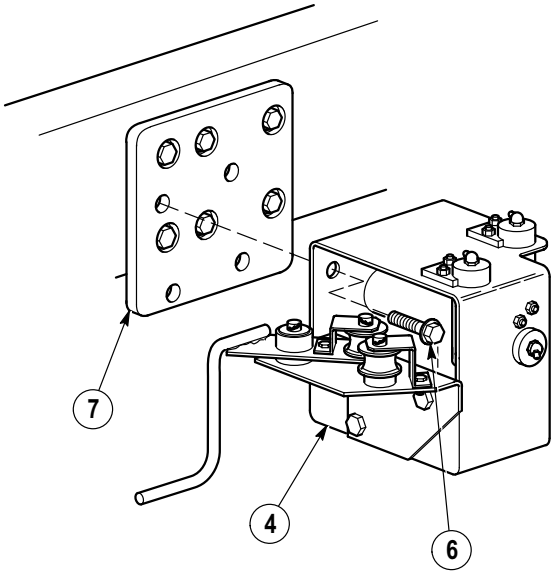

f. Follow-On Maintenance:

- Lubricate self-recovery winch rear tension guide, (Para 2-9).
- Remove wheel chocks, (TM 9-2320-364-10).

END OF TASK

18-16. SELF-RECOVERY WINCH (SRW) REAR GUIDE REPLACEMENT.

This task covers:

a. Removal b. Installation c. Follow-On Maintenance

INITIAL SETUP

Tools and Special Tools
Tool Kit, General Mechanic's: Automotive (Item 74, Appendix G)

Material/Parts
Locknut (2) (Item 92, Appendix F)
Locknut (Item 100, Appendix F)
Lockwasher (2) (Item 165, Appendix F)

Personnel Required
Two

Equipment Condition
Engine OFF, (TM 9-2320-364-10)
Wheels chocked, (TM 9-2320-364-10)

a. Removal.

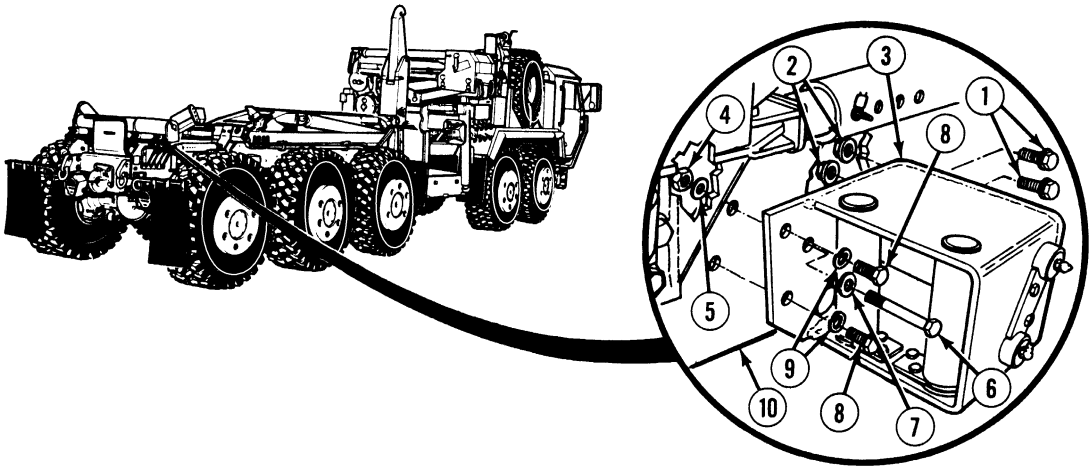

(1) With the aid of an assistant, remove two screws (1) and locknuts (2) from rear guide (3). Discard locknuts.

(2) With the aid of an assistant, remove locknut (4), washer (5), screw (6) and washer (7) from rear guide (3). Discard locknut.

WARNING

Rear guide assembly weighs 65 lbs (30 kg). Use an assistant to prevent possible injury to personnel.

(3) With the aid of an assistant, remove two screws (8), lockwashers (9) and rear guide (3) from frame (10). Discard lockwasher.

18-16. SELF-RECOVERY WINCH (SRW) REAR GUIDE REPLACEMENT (CONT).

b. Installation.

WARNING

Rear guide assembly weighs 65 lbs (30 kg). Use an assistant to prevent possible injury to personnel.

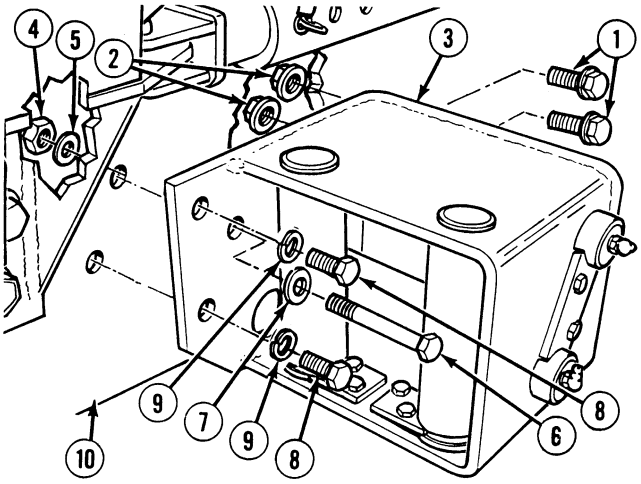

(1) With the aid of an assistant, position rear guide (3) on frame (10) with two lockwashers (9) and screws (8).

(2) With the aid of an assistant, position washer (7), screw (6), washer (5) and locknut (4) on rear guide (3).

(3) With the aid of an assistant, position two locknuts (2) and screws (1) on rear guide (3).

(4) With the aid of an assistant, tighten two screws (8) on rear guide (3).

(5) With the aid of an assistant, tighten two locknuts (2) and locknut (4) on rear guide (3).

c. Follow-On Maintenance:

- Remove wheel chocks, (TM 9-2320-364-10).

END OF TASK

18-17. SELF-RECOVERY WINCH (SRW) CABLE REPLACEMENT.

This task covers:

a. Removal b. Installation c. Follow-On Maintenance

INITIAL SETUP

Tools and Special Tools
Tool Kit, General Mechanic's: Automotive (Item 74, Appendix G)
Gloves, Heavy Duty (2) (Item 29, Appendix G)

Personnel Required
Two

Equipment Condition
Self-recovery winch cable payed out, (TM 9-2320-364-10)
Wheels chocked, (TM 9-2320-364-10)

a. Removal.

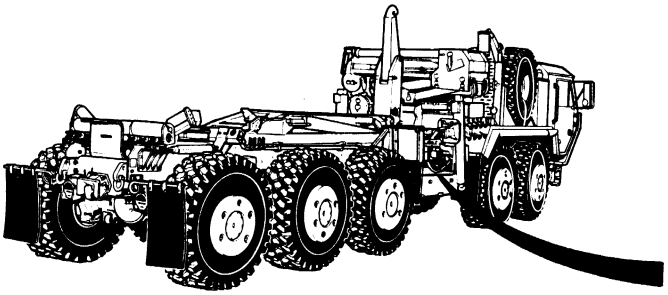

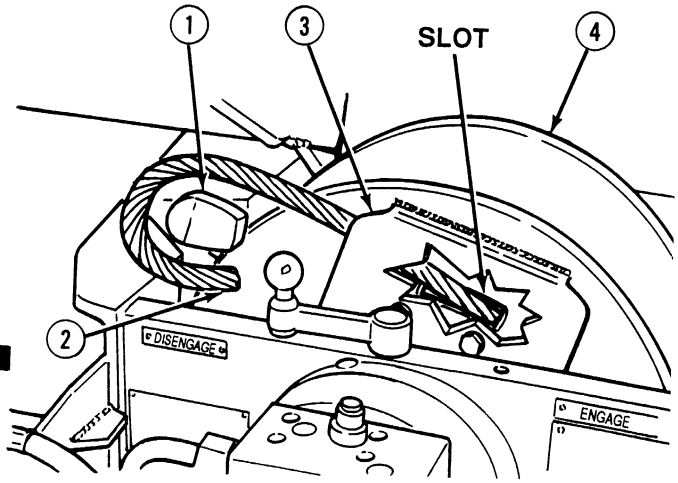

WARNING

- Wire cable assembly can become frayed or contain broken wires. Wear heavy leather-palmed work gloves when handling wire cable assembly. Frayed or broken wires can cause injury to personnel.
- Never let moving wire cable assembly slide through hands, even when wearing gloves. A broken wire could cut through glove and cause injury to personnel.

(1) Remove wedge (1) and cable end (2) from cable wedge pocket (3) in drum (4).

(2) With the aid of an assistant, route cable end (2) through slot in cable wedge pocket (3).

18-17. SELF-RECOVERY WINCH (SRW) CABLE REPLACEMENT (CONT).

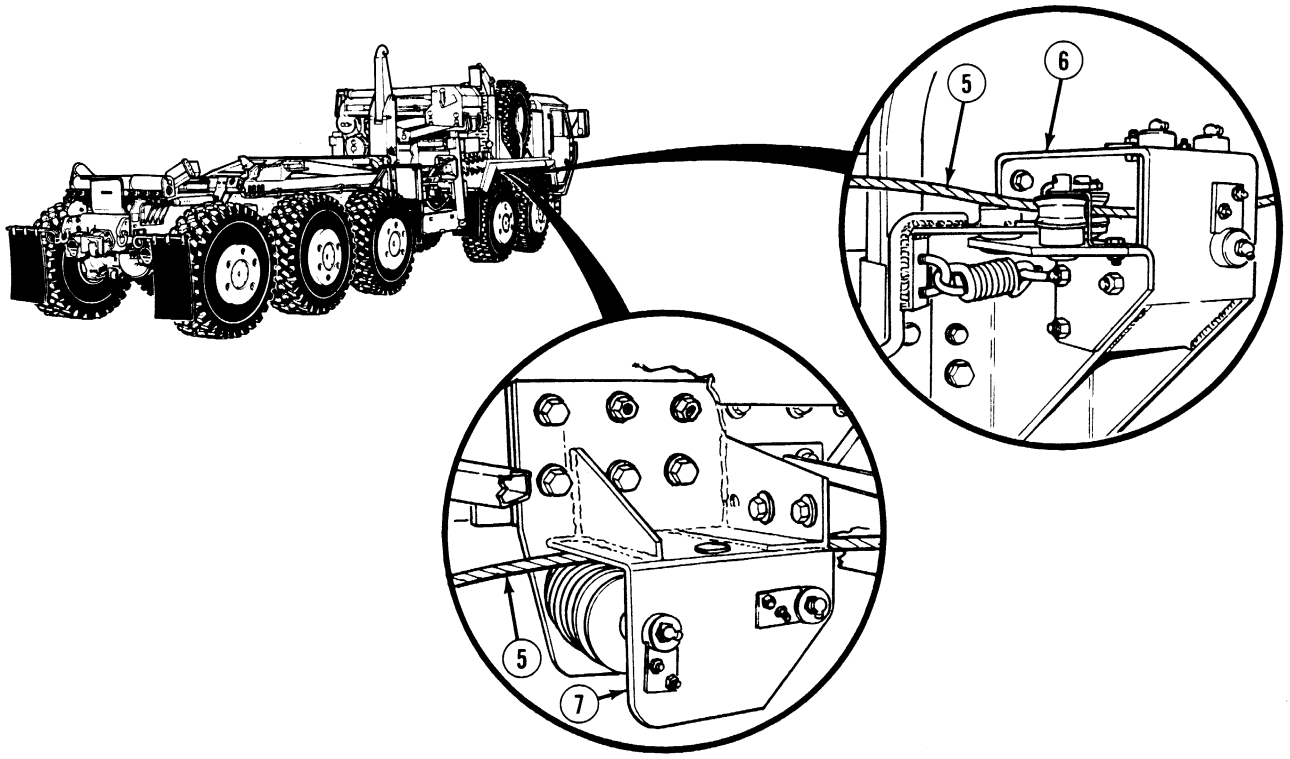

(3) Remove cable assembly (5) from front cable tensioner (6) and front cable guide (7).

b. Installation.

WARNING

- Wire cable assembly can become frayed or contain broken wires. Wear heavy leather-palmed work gloves when handling wire cable assembly. Frayed or broken cable can and cause injury to personnel.
- Never let moving wire cable assembly slide through hands, even when wearing gloves. A broken wire could cut through glove and cause injury to personnel.

(1) Route cable assembly (5) through front cable guide (7) and front cable tensioner (6).

(2) With the aid of an assistant, route cable end (2) through slot and pull cable end through cable wedge pocket (3) in drum (4).

(3) With the aid of an assistant, loop cable end (2) and position in cable wedge pocket (3).

(4) With the aid of an assistant, position wedge (1) in loop of cable end (2) and install securely in cable wedge pocket (3).

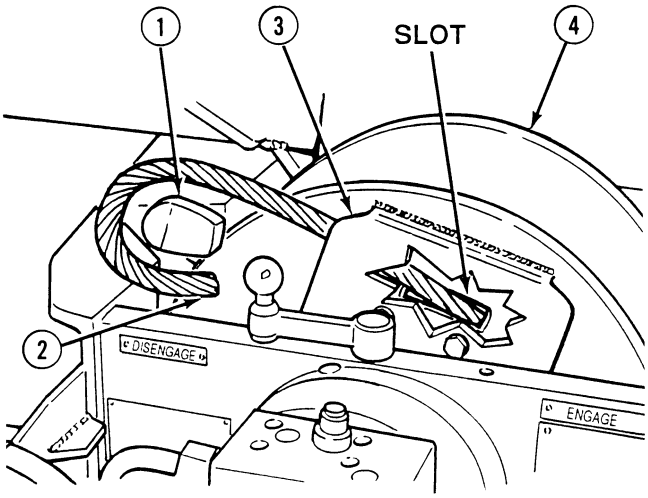

c. Follow-On Maintenance:

- Wind cable in self-recovery winch, (TM 9-2320-364-10).
- Remove wheel chocks, (TM 9-2320-364-10).

END OF TASK

18-18. OUTRIGGER PADS REPAIR.

This task covers:

a. Disassembly
b. Cleaning/Inspection
c. Assembly
d. Follow-On Maintenance

INITIAL SETUP

Tools and Special Tools
Tool Kit, General Mechanic's: Automotive (Item 74, Appendix G)
Compressor Unit, Air (Item 11, Appendix G)
Gloves, Chemical Oil Protective (Item 28, Appendix G)
Goggles, Industrial (Item 30, Appendix G)
Gun, Air Blow (Item 31, Appendix G)

Materials/Parts
Solvent, Drycleaning (Item 87, Appendix C)
Locknut (Item 131, Appendix F)
Pin, Cotter (2) (Item 274, Appendix F)

Equipment Condition
Outrigger pads removed, (TM 9-2320-364-10)

a. Disassembly.

NOTE

Both outrigger pads are disassembled the same way.

(1) Remove two cotter pins (1) and pins (2) from outrigger pad (3). Discard cotter pins.

(2) Remove two rings (4) and chains (5) from pins (2).

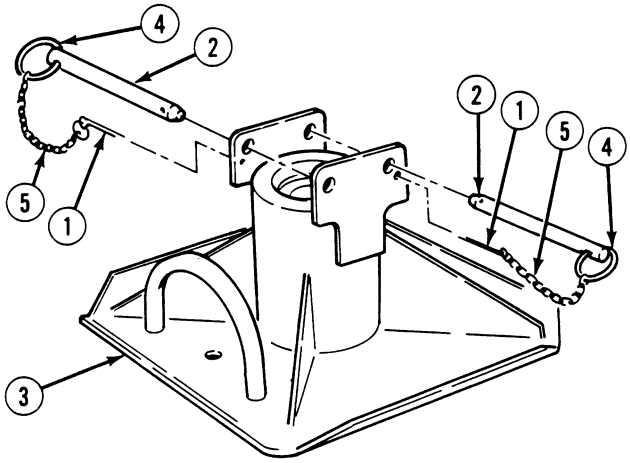

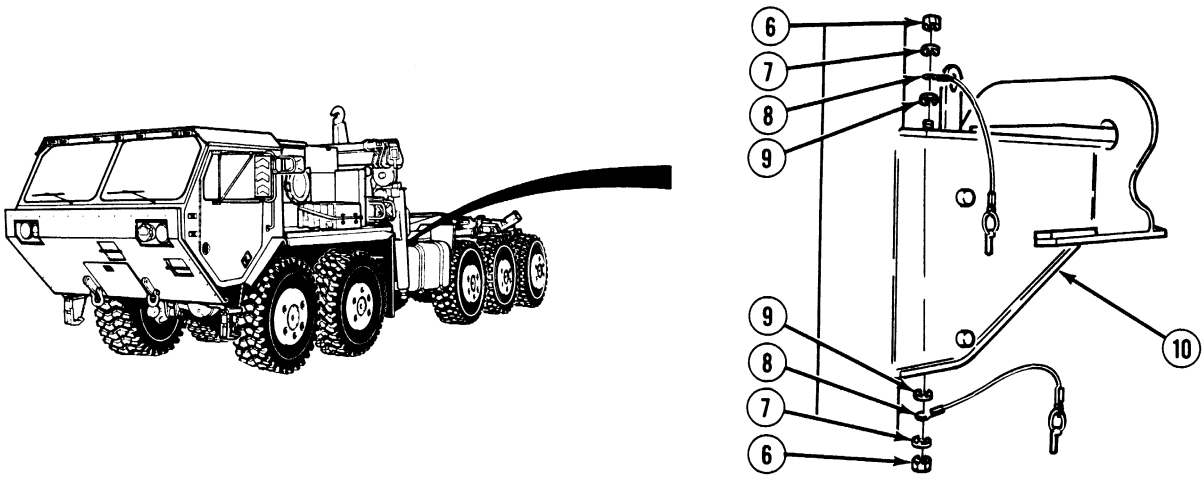

(3) Remove two nuts (6), washers (7), cables (8) and washers (9) from crane frame (10).

b. Cleaning/Inspection.

WARNING

- Drycleaning Solvent (P-D-680) is TOXIC and flammable. Wear protective goggles, face shield, and gloves; use only in a well-ventilated area; avoid contact with skin, eyes, and clothes, and do not breathe vapors. Keep away from heat or flame. Never smoke when using solvent. The flashpoint for Type II Drycleaning Solvent is 140 degrees F (60 degrees C) and Type III Drycleaning Solvent is 200 degrees F (93 degrees C). Failure to do so may result in injury or death to personnel.
- If personnel become dizzy while using cleaning solvent, immediately get fresh air and medical help. If solvent contacts skin or clothes, flush with cold water. If solvent contacts eyes, immediately flush eyes with water and get immediate medical attention.
- Compressed air used for cleaning purposes will not exceed 30 psi (207 kPa). Use only with effective chip guarding and personal protective equipment (goggles/shield, gloves, etc). Failure to comply may result in injury or death to personnel.

(1) Clean all metal parts with drycleaning solvent.

(2) Dry metal parts with cleaning cloth.

(3) Dry metal parts with compressed air.

(4) Inspect metal parts for breaks, cracks and sharp edges.

(5) Replace all damaged parts.

18-18. OUTRIGGER PADS REPAIR (CONT).

c. Assembly.

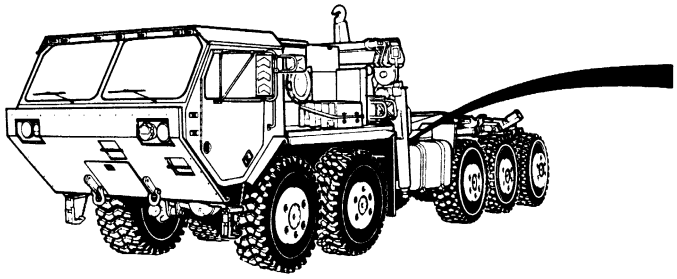

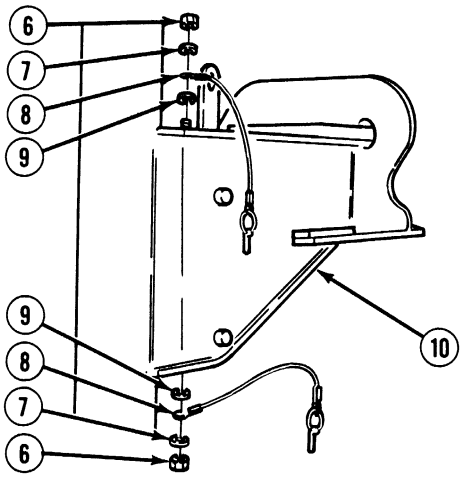

(1) Install two washers (9), cables (8), washers (7) and nuts (6) on crane frame (10).

(2) Install two chains (5) and rings (4) on pins (6).

(3) Install two pins (2) on outrigger (3) with cotter pins (1).

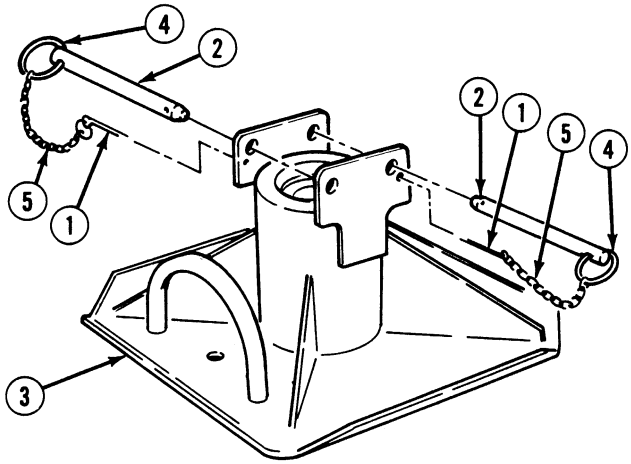

d. Follow-On Maintenance:

- Install outrigger pads, (TM 9-2320-364-10).

END OF TASK

CHAPTER 19

ACCESSORY ITEMS MAINTENANCE

Para	Contents	Page
19-1	Introduction	19-1
19-2	Reflector Replacement	19-2
19-3	Mirror Assembly Repair	19-4
19-4	Windshield Wiper Motor Replacement	19-7
19-5	Wiper Arm Replacement	19-12
19-6	Wiper Blade Replacement	19-14
19-7	Windshield Wiper Idler Shaft Replacement	19-15
19-8	Windshield Washer Reservoir and Bracket Repair	19-19
19-9	Beacon Bracket Replacement	19-24
19-10	Air Horn Replacement	19-26
19-11	Air Horn Valve Replacement	19-29
19-12	Heater Assembly Replacement	19-32
19-13	Heater Blower Motor Replacement	19-40
19-14	Heater Core Replacement	19-43
19-15	Heater Hoses and Fittings Replacement	19-48
19-16	Fresh Air Box Replacement	19-52
19-17	Heater Control Panel Repair	19-54
19-18	Heater Control Valve Replacement	19-63
19-19	Heater/Defroster Tubing Replacement	19-67
19-20	Data Plate Replacement	19-76
19-21	Weight Classification Sign Replacement	19-79

19-1. INTRODUCTION.

This chapter contains maintenance instructions for removing, replacing, installing and adjusting accessory item components as authorized by the Maintenance Allocation Chart (MAC) at the Unit Maintenance level.

19-2. REFLECTOR REPLACEMENT.

This task covers:

a. Removal (Type 1)
b. Removal (Type 2)
c. Installation (Type 2)
d. Installation (Type 1)
e. Follow-On Maintenance

INITIAL SETUP

Tools and Special Tools
Tool Kit, General Mechanic's: Automotive (Item 74, Appendix G)

Material/Parts
Locknut (2) (Item 106, Appendix F) (rear fender only)
Locknut (2) (Item 109, Appendix F) (mud flap only)
Locknut (4) (Item 110, Appendix F) (mud flap only)

Material/Parts - Continued
Screw, Self Tapping (2) (Item 314, Appendix F) (rear roller only)
Screw, Self Tapping (2) (Item 317, Appendix F) (cab door only)

Equipment Condition
Engine OFF, (TM 9-2320-364-10)
Wheels chocked, (TM 9-2320-364-10)

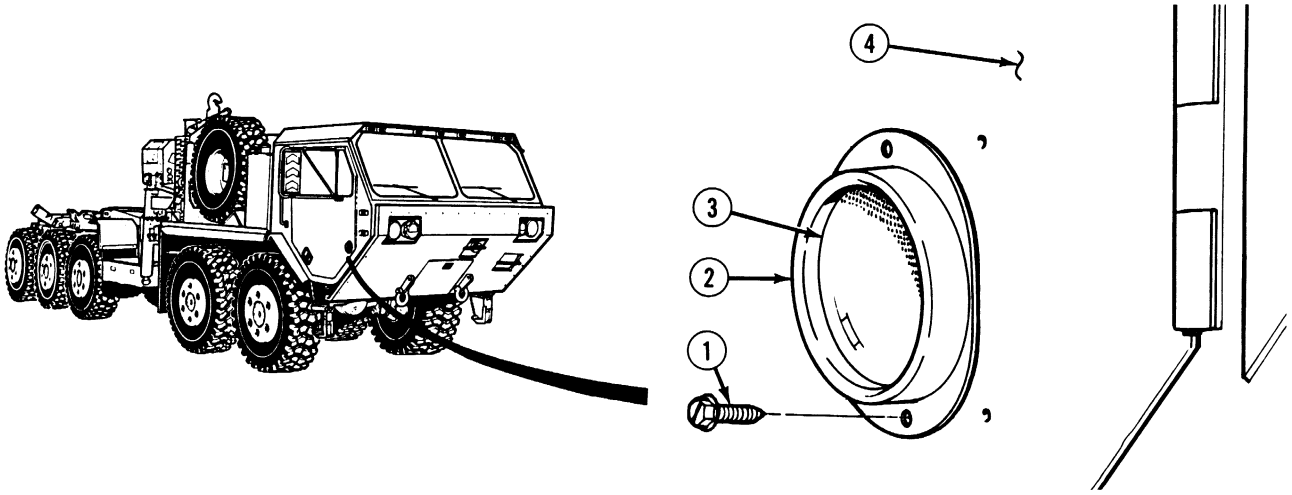

a. Removal (Type 1). Remove two screws (1), reflector housing (2) and reflector (3) from cab (4). Discard screws.

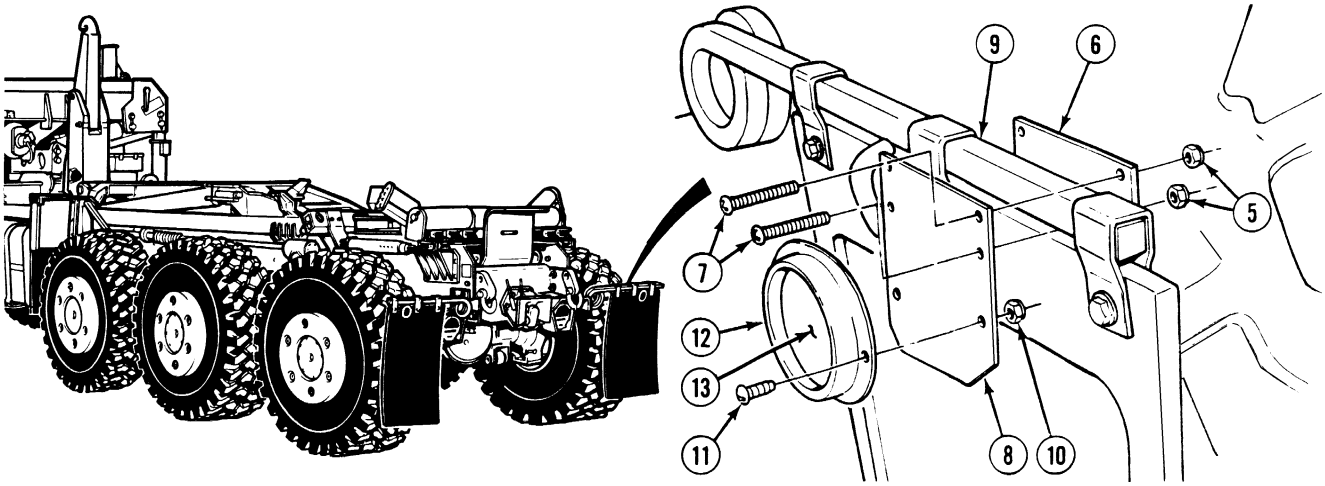

b. Removal (Type 2).

(1) Remove four locknuts (5), retaining plate (6), four screws (7) and mounting plate (8) from mounting bracket assembly (9). Discard locknuts.

(2) Remove two locknuts (10), screws (11), reflector housing (12) and reflector (13) from mounting plate (8).

c. Installation (Type 2).

(1) Install reflector housing (12) and reflector (13) on mounting plate (8) with two screws (11) and locknuts (10).

(2) Install mounting plate (8) and retaining plate (6) on mounting bracket assembly (9) with four screws (7) and locknuts (5).

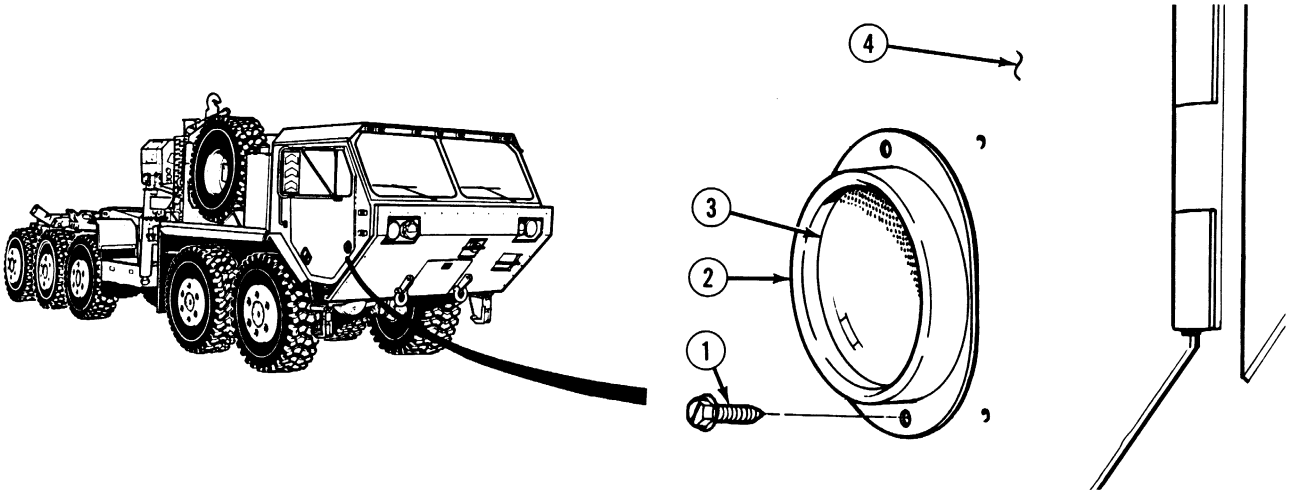

d. Installation (Type 1). Install reflector (3) and reflector housing (2) on cab (4) with two screws (1).

e. Follow-On Maintenance:

- Remove wheel chocks, (TM 9-2320-364-10).

END OF TASK

19-3. MIRROR ASSEMBLY REPAIR.

This task covers:

a. Removal
b. Disassembly
c. Assembly
d. Installation
e. Follow-On Maintenance

INITIAL SETUP

Tools and Special Tools
Tool Kit, General Mechanic's: Automotive (Item 74, Appendix G)

Material/Parts
Lockwasher (6) (Item 195, Appendix F)

Equipment Condition
Engine OFF, (TM 9-2320-364-10)
Wheels chocked, (TM 9-2320-364-10)

a. Removal.

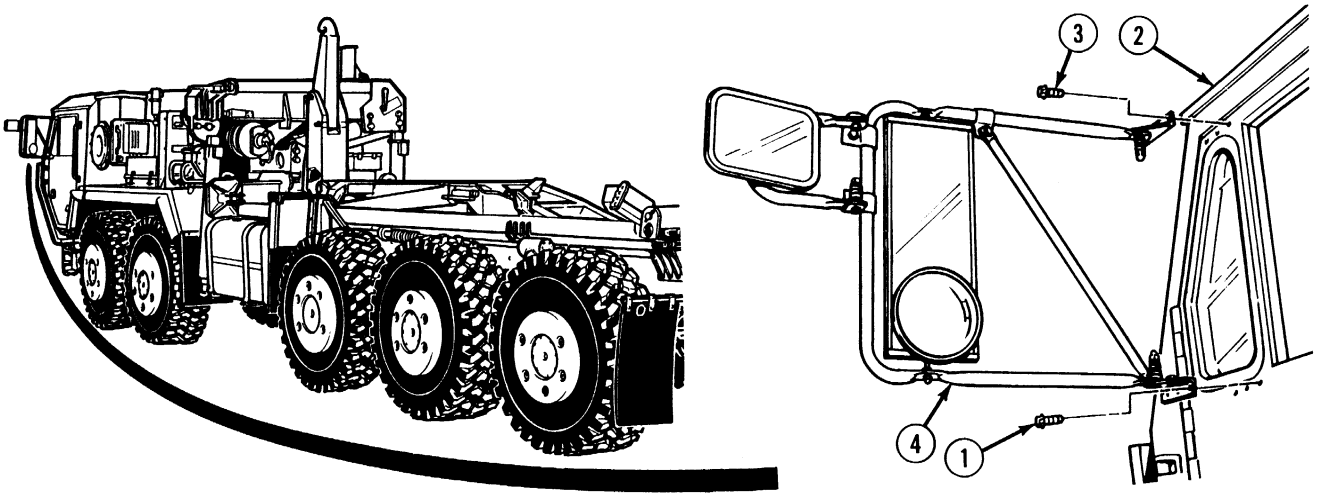

NOTE

Left and right mirror assemblies are removed the same way.

(1) Remove three screws (1) from cab door (2).

CAUTION

Ensure mirror assembly is fully supported prior to Step (2) or mirror assembly may fall and damage to parts may occur.

(2) Remove three screws (3) and mirror assembly (4) from cab door (2).

b. Disassembly.

(1) Remove two nuts (1), lockwashers (2) and screws (3) from clamps (4). Discard lockwashers.

(2) Remove loop (5) and clamps (4) from bracket assembly (6).

(3) Remove nut (7), lockwasher (8), screw (9), two washers (10), mirror head (11) and clamp (12) from loop (5). Discard lockwashers.

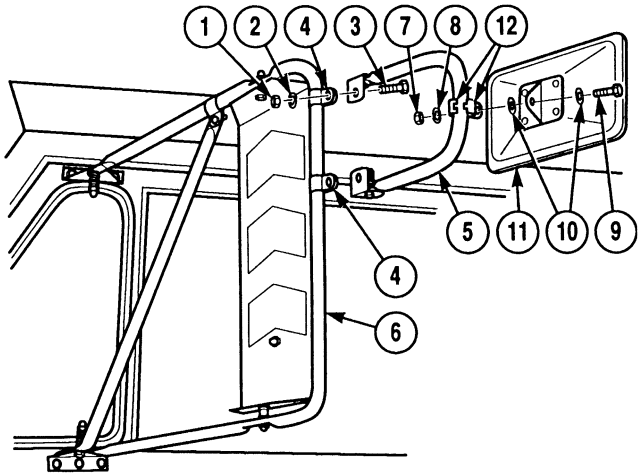

(4) Remove two nuts (13), lockwashers (14), screws (15), spacers (16) and mirrorhead (17) from bracket assembly (6). Discard lockwashers.

(5) Remove nut (18), washer (19), mirror head (20) and lockwasher (21) from mirror head (17). Discard lockwasher.

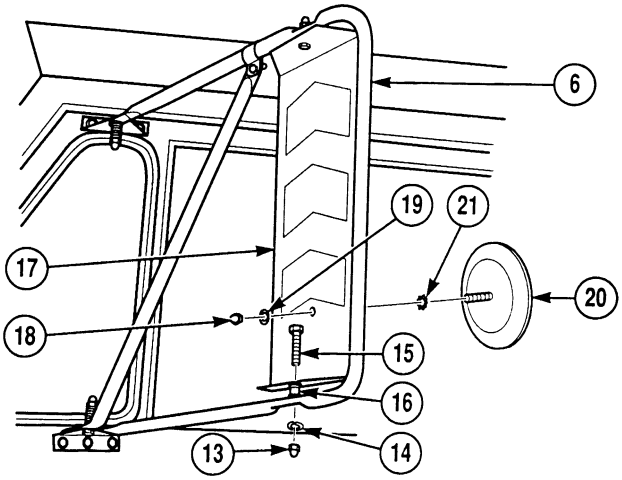

c. Assembly.

(1) Install mirror head (20) on mirror head (17) with lockwasher (21), washer (19) and nut (18).

(2) Install mirror head (17) on bracket assembly (6) with two spacers (16), screws (15), lockwashers (14) and nuts (13).

(3) Position clamp (12) on loop (5) and install mirror head (11) with two washers (10), screw (9), lockwasher (8) and nut (7).

(4) Position clamps (4) on bracket assembly (6) and install loop (5) on clamps with two screws (3), lockwashers (2) and nuts (1).

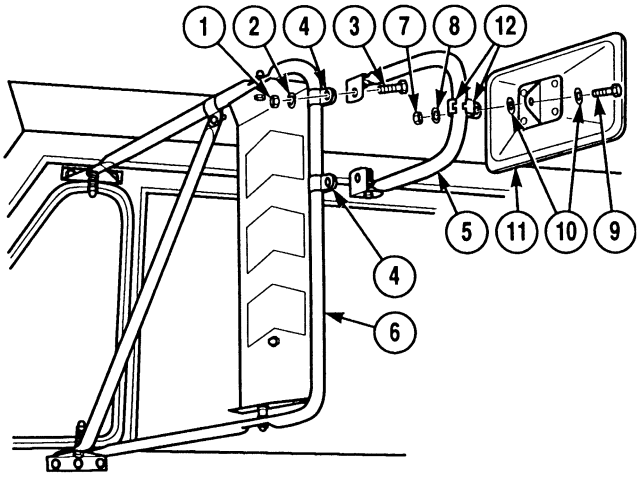

19-3. MIRROR ASSEMBLY REPAIR (CONT).

d. Installation.

NOTE

Left and right mirror assemblies are installed the same way.

(1) Position mirror assembly (4) and three screws (3) on cab door (2).

(2) Position three screws (1) in cab door (2).

(3) Tighten screws (1) and (3).

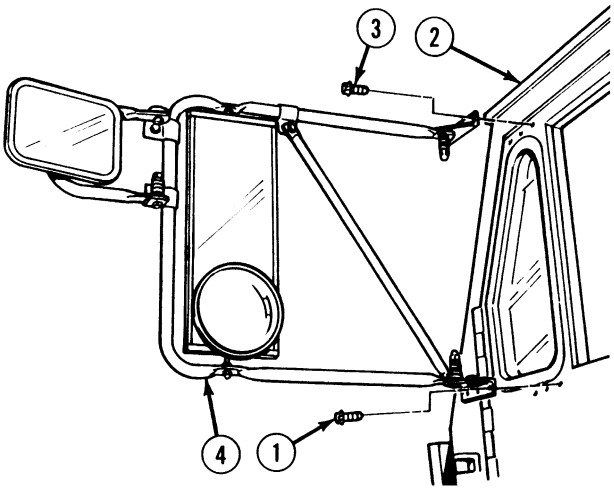

e. Follow-On Maintenance:

- Remove wheel chocks, (TM 9-2320-364-10).

END OF TASK

19-4. WINDSHIELD WIPER MOTOR REPLACEMENT.

This task covers:

a. Removal b. Installation c. Follow-On Maintenance

INITIAL SETUP

Tools and Special Tools
Tool Kit, General Mechanic's: Automotive (Item 74, Appendix G)
Socket Set, 3/8 in. (Item 62, Appendix G)
Wrench, Torque (0 to 60 N·m) (Item 98, Appendix G)

Materials/Parts
Cable Ties (Item 81, Appendix C)
Sealing Compound (Item 73, Appendix C)
Gasket, Strip (Item 73, Appendix F)
Lockwasher (1) (Item 159, Appendix F)
Screw Washer Assembly (3) (Item 308, Appendix F)
Screw, Self-Tapping (4) (Item 314, Appendix F)

Equipment Condition
Engine OFF, (TM 9-2320-364-10)
Wheels chocked, (TM 9-2320-364-10)
Instrument panel removed, (Para 7-13)
Heater access panel removed, (Para 17-4)

a. Removal.

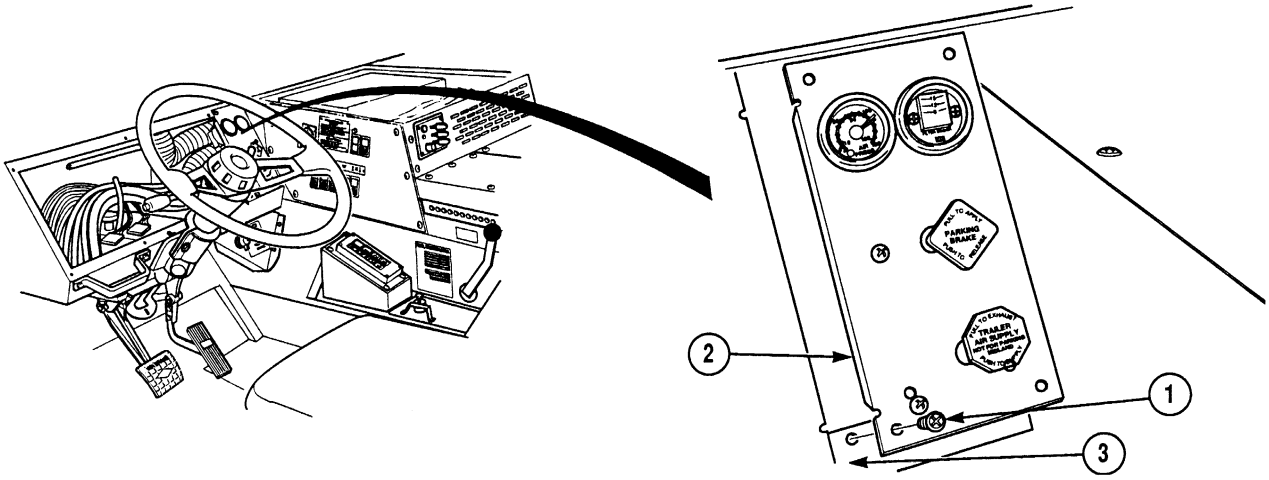

NOTE

Remove cable ties as required.

(1) Remove four screws (1) and dash panel (2) from dash (3).

(2) Position dash panel (2) out of way.

19-4. WINDSHIELD WIPER MOTOR REPLACEMENT (CONT).

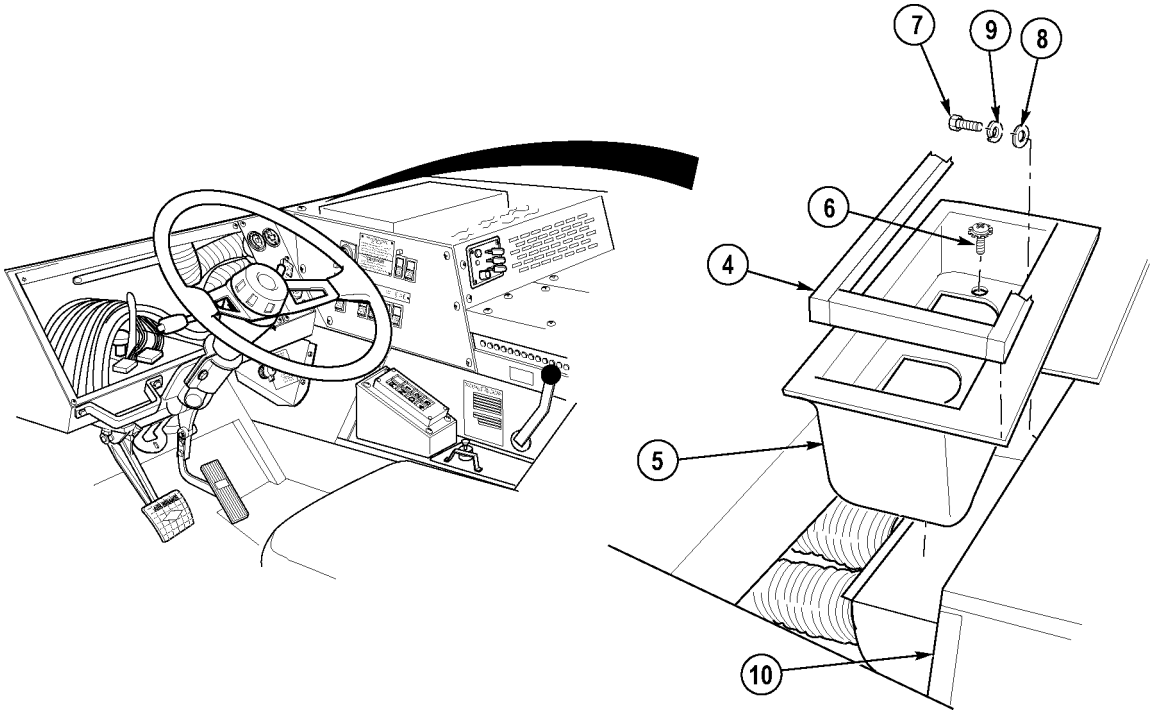

(3) Remove gasket (4) from upper plenums (5). Discard gasket.

(4) Remove three screw washer assemblies (6) from left upper plenum (5). Discard screw washer assemblies.

(5) Remove screw (7), washer (8), lockwasher (9) and left upper plenum (5) from heater (10). Discard lockwasher.

(6) Remove left defroster tubing (11) from plenum (12).

(7) Position defroster tubing (11) out of the way.

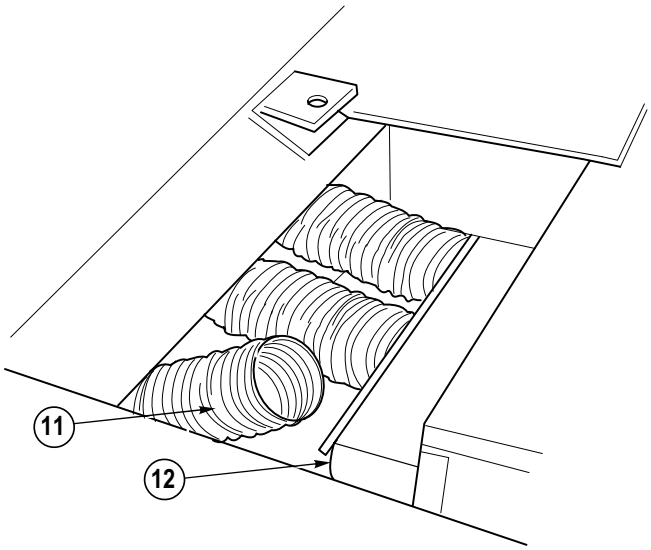

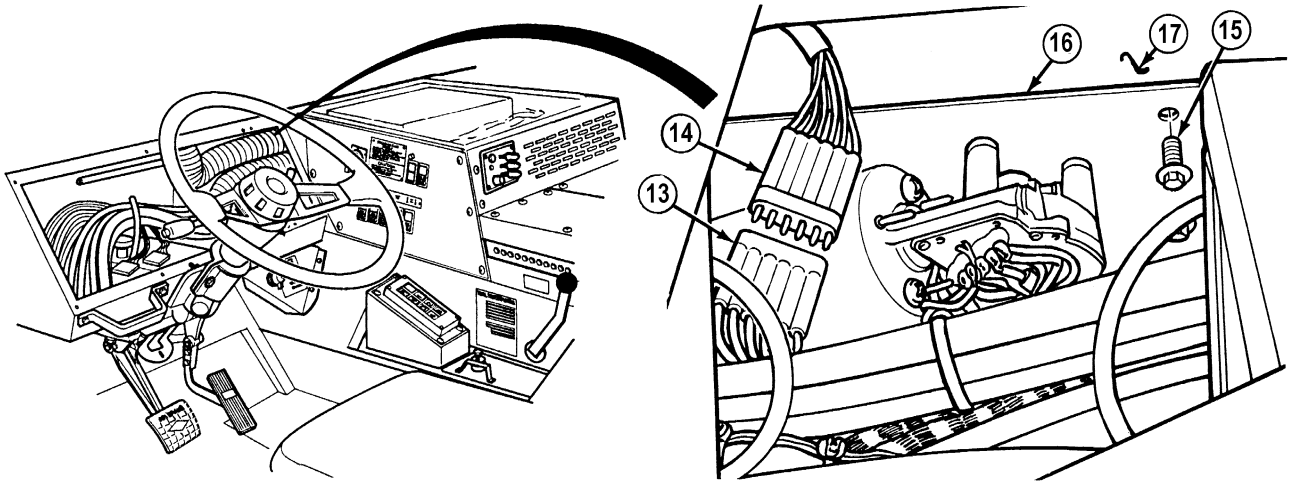

NOTE

Connector is removed by gently prying on lock tab and pulling connector apart.

(8) Disconnect MC5 connector (13) from windshield wiper motor connector (14).

(9) Remove four self-tapping screws (15) from windshield wiper motor mounting plate (16) and bracket (17). Discard self-tapping screws.

NOTE

Conlinks are removed by prying arms from crank assembly.

(10) Disconnect two conlinks (18) from windshield wiper crank assembly (19).

(11) Remove windshield wiper motor (20) from windshield wiper motor mounting bracket (17).

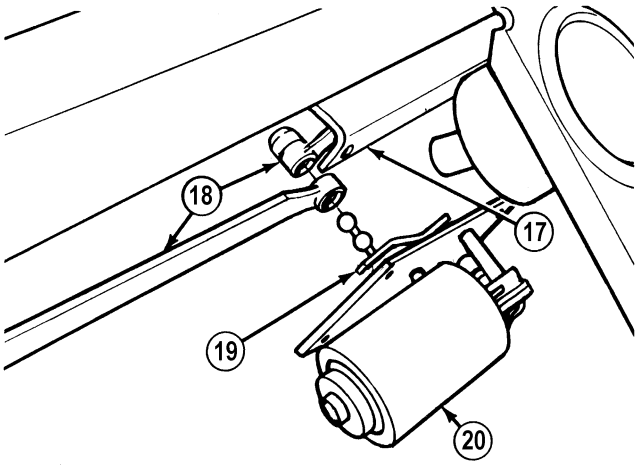

b. Installation.

(1) Position windshield wiper motor (20) on windshield wiper motor mounting bracket (17).

NOTE

Left wiper arm is installed first.

(2) Connect two conlinks (18) on windshield wiper crank assembly (19).

19-4. WINDSHIELD WIPER MOTOR REPLACEMENT (CONT).

WARNING

Adhesives, solvents, and sealing compounds can burn easily, can give off harmful vapors, and are harmful to skin and clothing. To avoid injury or death, keep away from open fire and use in well-ventilated area. If adhesive, solvent, or sealing compound gets on skin or clothing, wash immediately with soap and water.

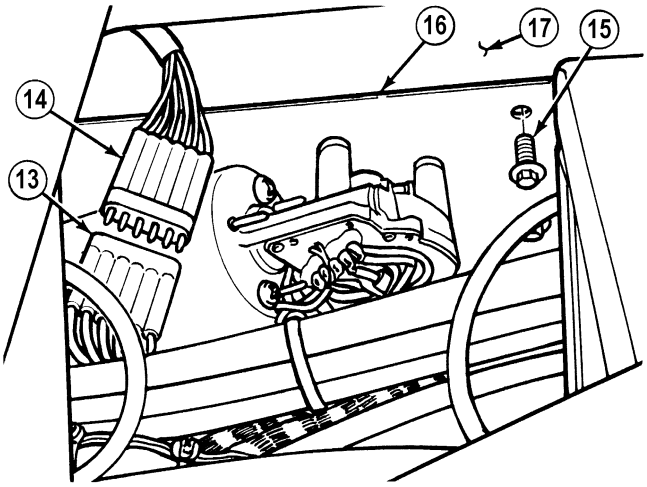

(3) Coat threads of four self-tapping screws (15) with sealing compound.

(4) Install four self-tapping screws (15) on windshield wiper motor mounting plate (16) and bracket (17). Tighten screws 90 to 110 lb-in (10 to 12 N·m).

NOTE

Install cable ties as required.

(5) Connect MC5 connector (13) on windshield wiper motor connector (14).

(6) Install defroster tubing (11) on plenum (12).

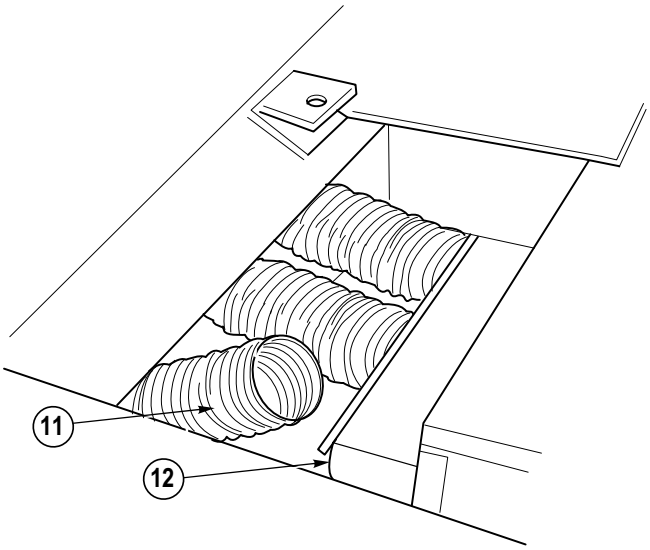

(7) Install left upper plenum (5) on heater (10) with screw (7), washer (8) and lockwasher (9).

(8) Install three screw washer assemblies (6) in left upper plenum (5).

(9) Install gasket (4) on upper plenum (5).

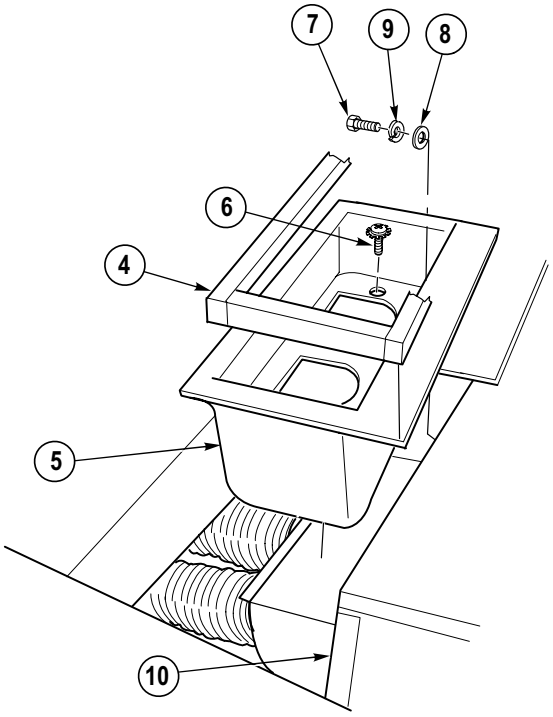

(10) Install dash panel (2) on dash (3) with four screws (1).

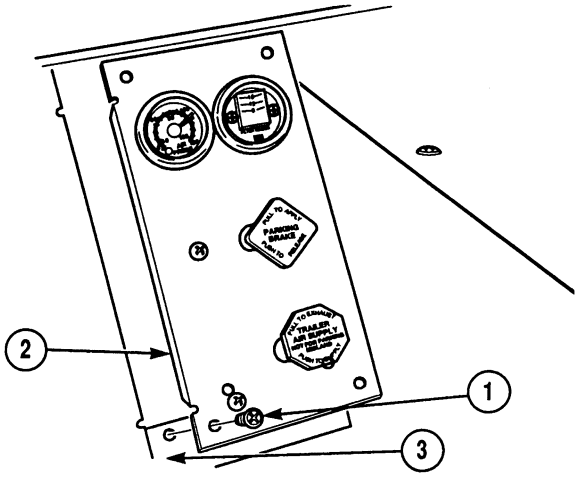

c. Follow-On Maintenance:

- Install heater access panel, (Para 17-4).
- Install instrument panel, (Para 7-13).
- Check wiper operation, (TM 9-2320-364-10).
- Remove wheel chocks, (TM 9-2320-364-10).

END OF TASK

19-5. WIPER ARM REPLACEMENT.

This task covers:

a. Removal b. Installation c. Follow-On Maintenance

INITIAL SETUP

Tools and Special Tools
Tool Kit, General Mechanic's: Automotive (Item 74, Appendix G)
Socket Set, 3/8 in. (Item 62, Appendix G)
Wrench, Torque (0 to 60 N·m) (Item 98, Appendix G)

Material/Parts
Hardware, Mounting (Item 75, Appendix F)

Equipment Condition
Engine OFF, (TM 9-2320-364-10)
Wheels chocked, (TM 9-2320-364-10)
Wiper arms in park position, (TM 9-2320-364-10)
Wiper blade removed, (Para 19-6)

a. Removal.

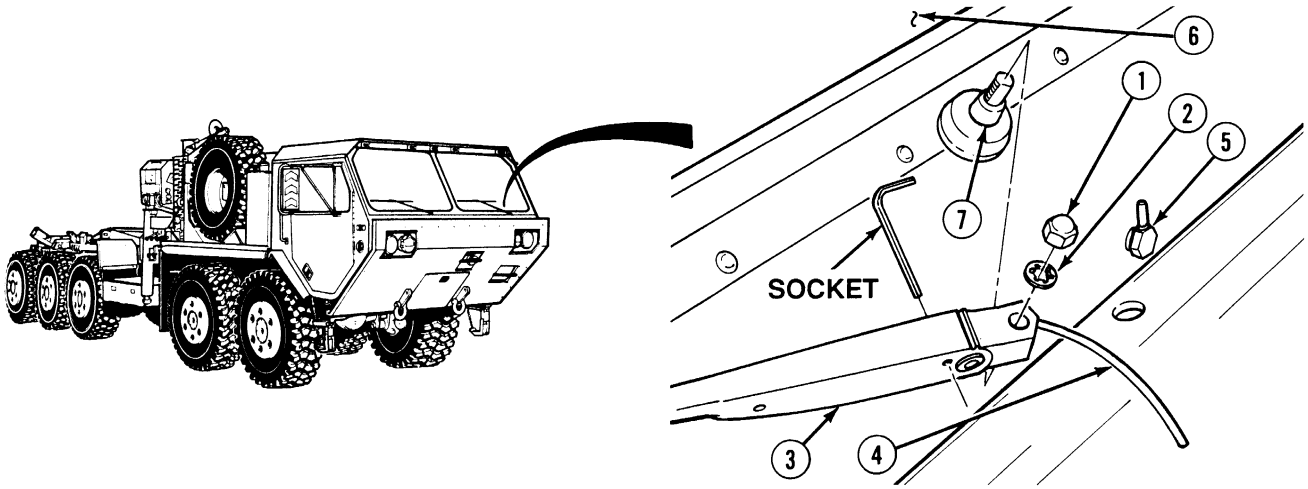

(1) Remove nut (1) and lockwasher (2) from wiper arm (3). Discard lockwasher.

(2) Remove washer tube (4) from nozzle (5).

(3) Pull wiper arm (3) away from windshield (6) slightly and install socket in wiper arm (3).

(4) Remove wiper arm (3) from mounting stud (7).

(5) Remove socket from wiper arm (3).

(6) Remove washer nozzle (8) from hose (9) and wiper arm (3).

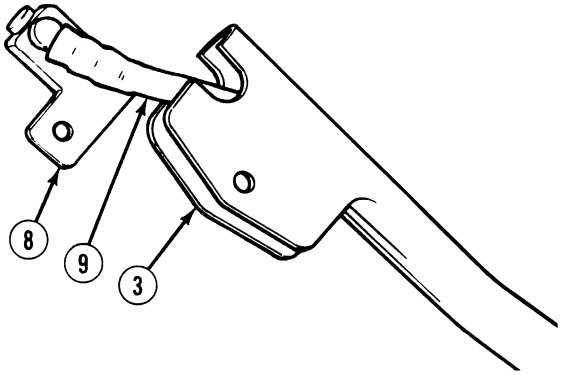

b. Installation.

(1) Install washer nozzle (8) on hose (9) and wiper arm (3).

(2) Push wiper arm (3) upward slightly and install socket in wiper arm.

NOTE

Wiper arm is installed parallel to molding on windshield.

(3) Install wiper arm (3) on mounting stud (7).

(4) Install lockwasher (2) and nut (1) on wiper arm (3). Tighten nut to 90 lb-in (10 N·m).

(5) Remove socket from wiper arm (3).

(6) Install washer tube (4) on nozzle (5).

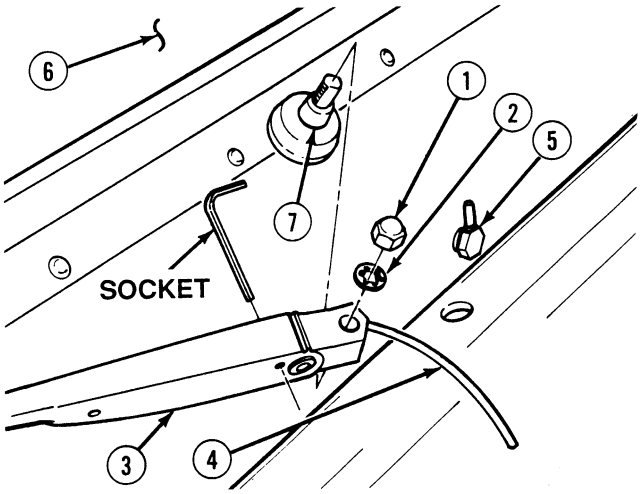

c. Follow-On Maintenance:

- Install wiper blade, (Para 19-6).
- Remove wheel chocks, (TM 9-2320-364-10).

END OF TASK

19-6. WIPER BLADE REPLACEMENT.

This task covers:

a. Removal b. Installation c. Follow-On Maintenance

INITIAL SETUP

Tools and Special Tools
Tool Kit, General Mechanic's: Automotive (Item 74, Appendix G)

Material/Parts
Locknut (Item 181, Appendix F)

Equipment Condition
Engine OFF, (TM 9-2320-364-10)
Wheels chocked, (TM 9-2320-364-10)

a. Removal.

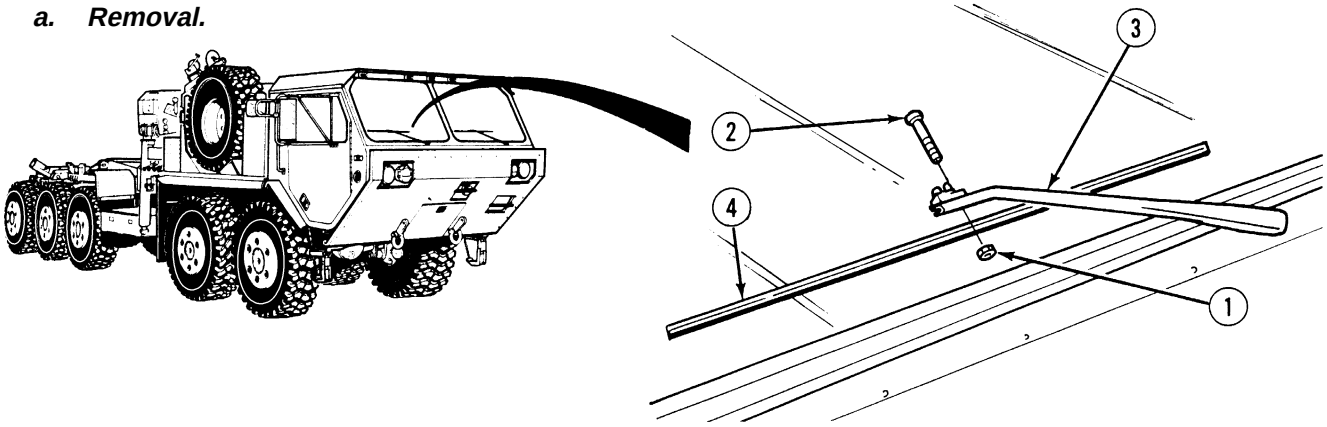

CAUTION

Do not run wiper arms when wiper blade is removed or damage to windshield and wiper arm may occur.

(1) Remove locknut (1) and screw (2) from wiper arm (3). Discard locknut.

(2) Remove wiper blade (4) from wiper arm (3).

b. Installation.

(1) Install wiper blade (4) on wiper arm (3).

CAUTION

Do not over-tighten nut. Wiper arm must be able to pivot or damage may occur to parts.

(2) Install screw (2) and nut (1) on wiper arm (3).

c. Follow-On Maintenance:

- Remove wheel chocks, (TM 9-2320-364-10).

END OF TASK

19-7. WINDSHIELD WIPER IDLER SHAFT REPLACEMENT.

This task covers:

a. Removal b. Installation c. Follow-On Maintenance

INITIAL SETUP

Tools and Special Tools
Tool Kit, General Mechanic's: Automotive (Item 74, Appendix G)
Wrench, Torque (0 to 175 lb-ft [0-237 N·m]) (Item 95, Appendix G)

Material/Parts
Locknut (Item 140, Appendix F)

Equipment Condition
Engine OFF, (TM 9-2320-364-10)
Wheels chocked, (TM 9-2320-364-10)
Wiper arm removed, (Para 19-5)
Instrument panel removed (left idler shaft only), (Para 7-13)

a. Removal.

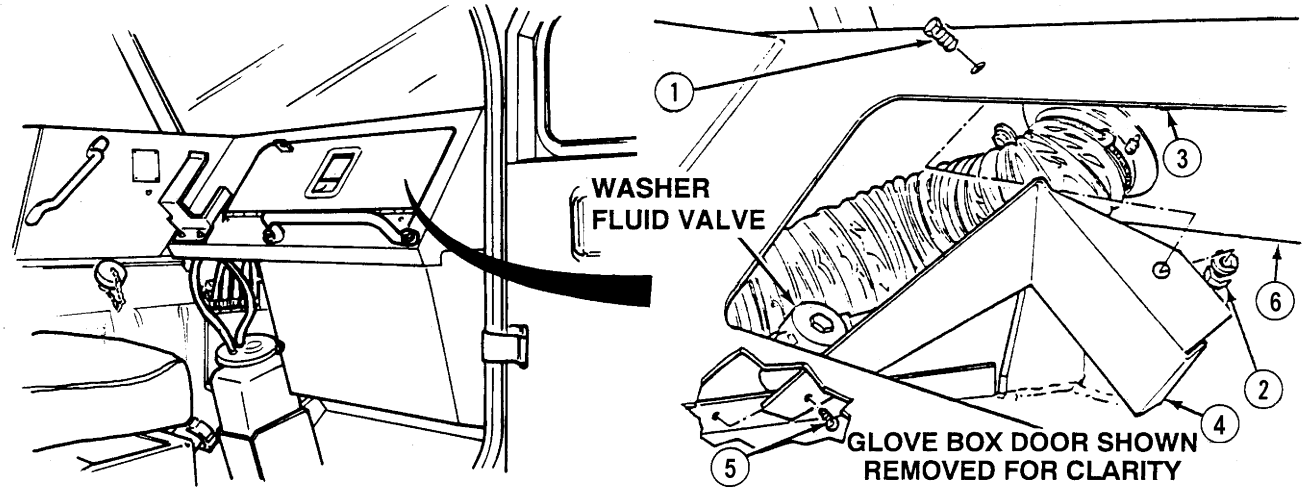

NOTE

- Perform Steps (1) through (3) for right side only.
- Do not remove divider panel.

(1) Remove screw (1) and locknut (2) from dash (3) and divider panel (4). Discard locknut.

(2) Remove screw (5) from divider panel (4) and dash (3).

NOTE

Do not remove washer fluid valve from divider panel.

(3) Lay divider panel (4) down inside glove box (6).

19-7. WINDSHIELD WIPER IDLER SHAFT REPLACEMENT (CONT).

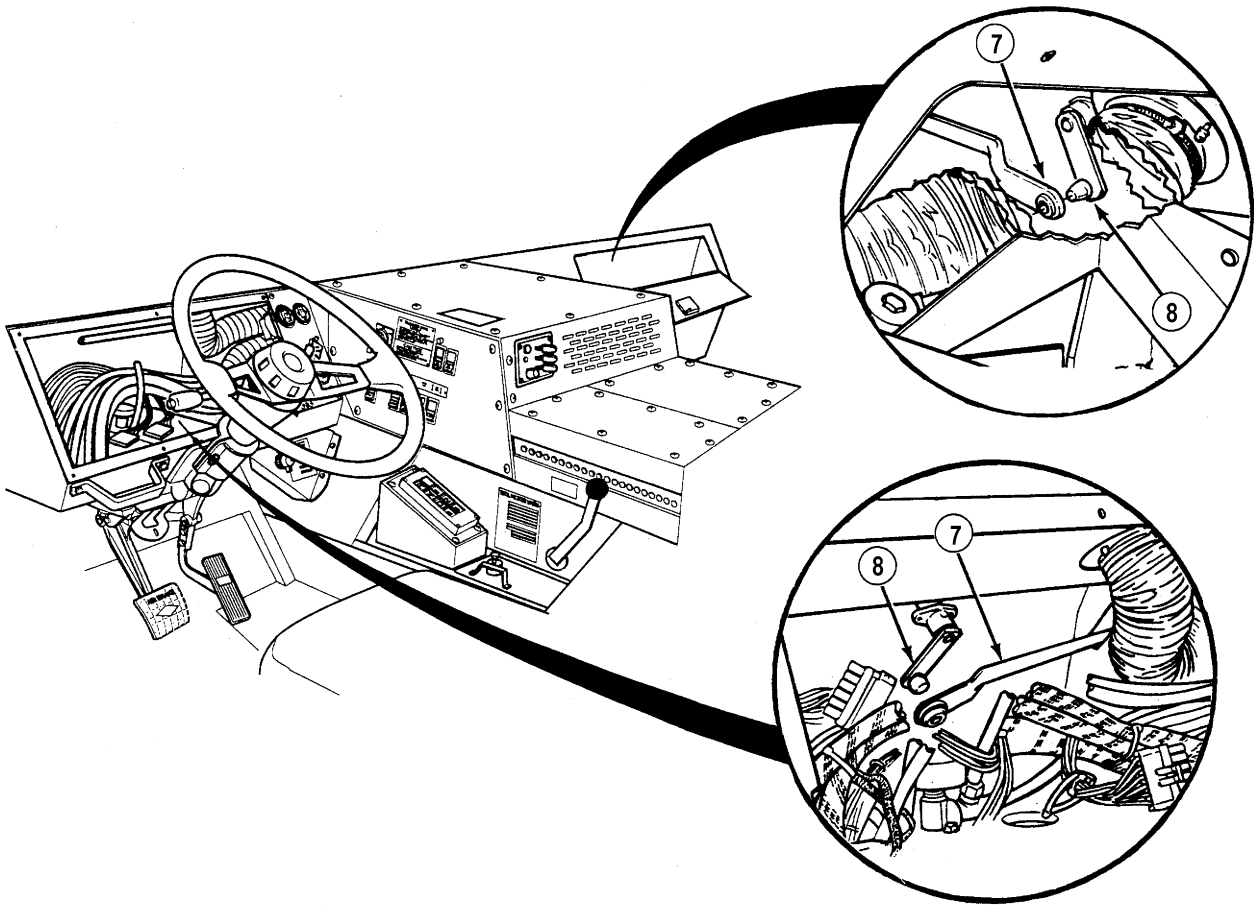

NOTE

Conlink is removed from idler shaft by prying off.

(4) Remove conlink (7) from idler shaft (8).

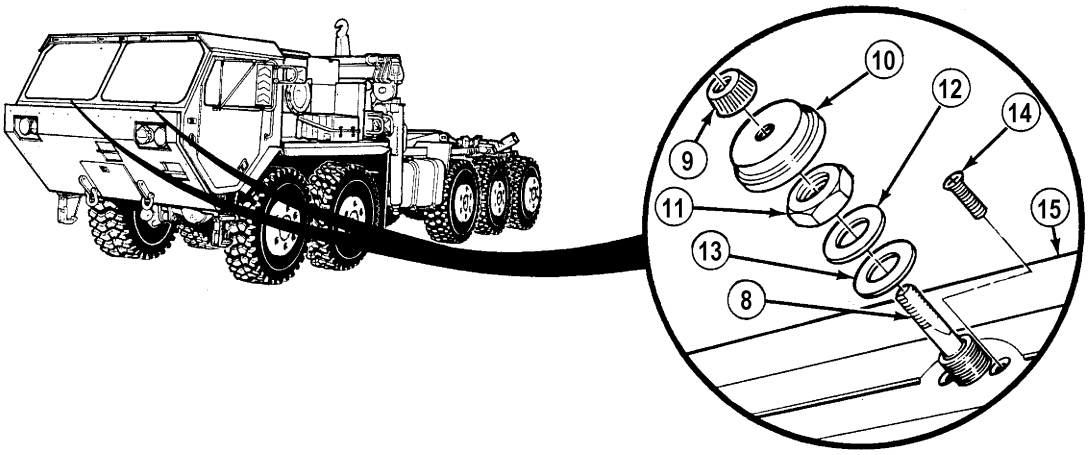

NOTE

Steps (5) through (8) are performed outside cab.

(5) Remove cone (9) and boot (10) from idler shaft (8).

(6) Remove nut (11) from idler shaft (8).

(7) Remove washer (12) and gasket (13) from idler shaft (8). Discard gasket.

NOTE

When screws are removed, idler shaft will drop to floor of cab.

(8) Remove two screws (14) and idler shaft (8) from cab shell (15).

b. Installation.

NOTE

- Steps (1) through (3) are performed outside cab.
- Position idler shaft to stay in cab shell without support.

(1) Install idler shaft (8) in cab shell (15) with two screws (14).

(2) Install gasket (13), washer (12) and nut (11) on idler shaft (8).

(3) Install boot (10) and cone (9) on idler shaft (8).

19-7. WINDSHIELD WIPER IDLER SHAFT REPLACEMENT (CONT).

NOTE

- Remaining steps are performed inside cab.
- Conlink is installed by snapping on idler shaft.

(4) Install conlink (7) on idler shaft (8).

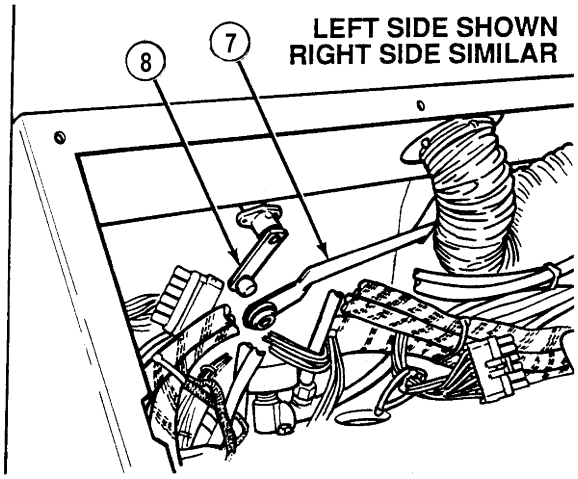

NOTE

Remaining steps are for right side only. For left side, continue with ***c. Follow-On Maintenance.***

(5) Position divider panel (4) inside glove box (6).

(6) Install divider panel (4) to dash (3) with screw (5).

(7) Install screw (1) and locknut (2) in divider panel (4) and dash (3). Tighten locknut to 23 lb-ft (31 N·m).

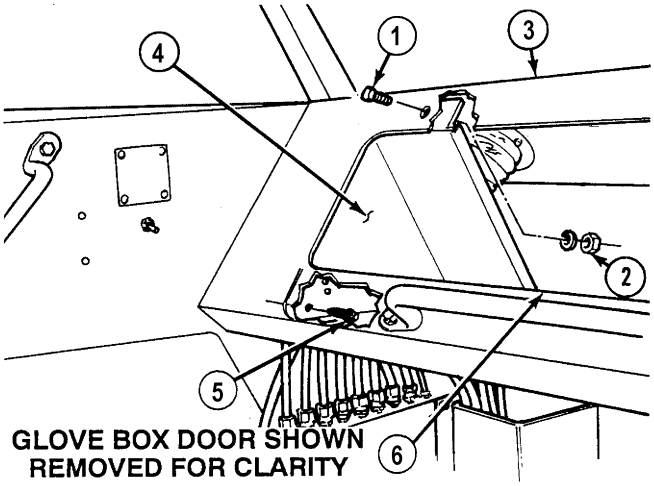

c. Follow-On Maintenance:

- Install wiper arm, (Para 19-5).
- Install instrument panel (left idler shaft only), (Para 7-13).
- Check operation of wipers, (TM 9-2320-364-10).
- Remove wheel chocks, (TM 9-2320-364-10).

END OF TASK

19-8. WINDSHIELD WASHER RESERVOIR AND BRACKET REPAIR.

This task covers:

a. Removal
b. Disassembly
c. Cleaning/Inspection
d. Assembly
e. Installation
f. Follow-On Maintenance

INITIAL SETUP

Tools and Special Tools
Tool Kit, General Mechanic's: Automotive (Item 74, Appendix G)

Material/Parts
Sealing Compound (Item 77, Appendix C)
Solution, Soap (Item 86, Appendix C)
Tags, Identification (Item 88, Appendix C)
Washer Fluid (Item 98, Appendix C)

Material/Parts
Gasket (Item 66, Appendix F)
Locknut (3) (Item 131, Appendix F)
Screw, Self-locking (2) (Item 319, Appendix F)

Equipment Condition
Engine OFF, (TM 9-2320-364-10)
Wheels chocked, (TM 9-2320-364-10)

a. Removal.

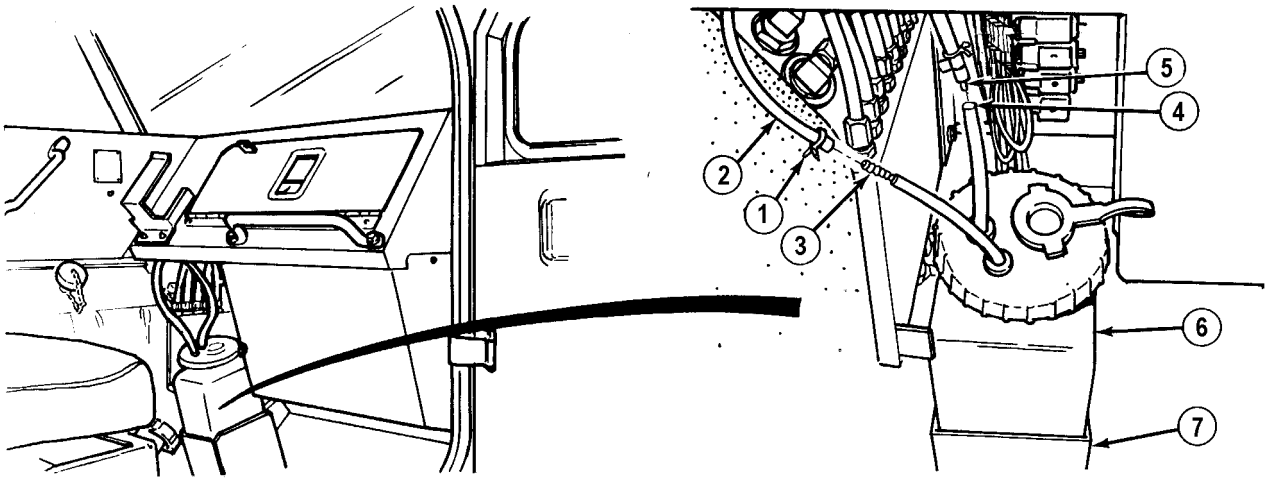

NOTE

Tag and mark hoses prior to removal.

(1) Slide clamp (1) up on hose (2) and remove hose from hose connector (3).

NOTE

Perform Step (2) if relief valve is present.

(2) Remove hose (4) from relief valve (5).

(3) Remove windshield washer reservoir (6) from windshield washer reservoir bracket (7).

19-8. WINDSHIELD WASHER RESERVOIR AND BRACKET REPAIR (CONT).

(4) Remove two lock screws (8) and bracket (9) from cab (10). Discard lock screws.

(5) Remove three locknuts (11), screws (12) and windshield washer reservoir bracket (7) from bracket (9). Discard locknuts.

NOTE

Perform Step (6) if foam gaskets are damaged.

(6) Remove two foam gaskets (13) from windshield washer reservoir bracket (7).

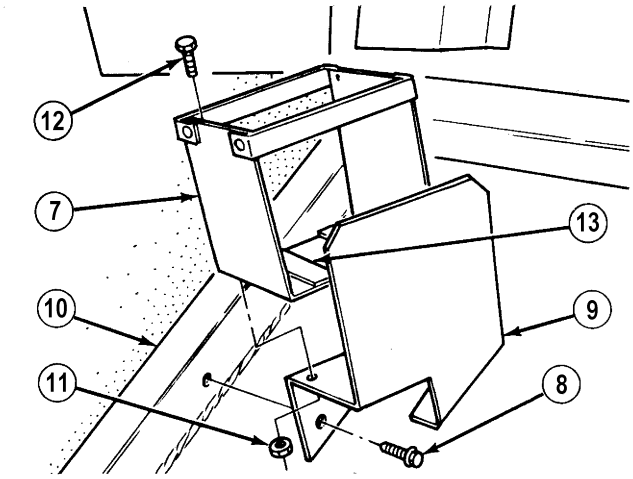

b. Disassembly.

(1) Remove cover assembly (1) from windshield washer reservoir (2).

(2) Remove umbrella valve (3) from cover assembly (1).

(3) Remove rubber tubes (4) and (5) and plastic tube (6) from washer pump (7).

(4) Remove screen (8) from washer pump (7).

(5) Remove rubber tubes (4) and (5) from cover assembly (1).

(6) Remove two connectors (9) from rubber tubes (4) and (5).

(7) Remove two grommets (10) from cover assembly (1).

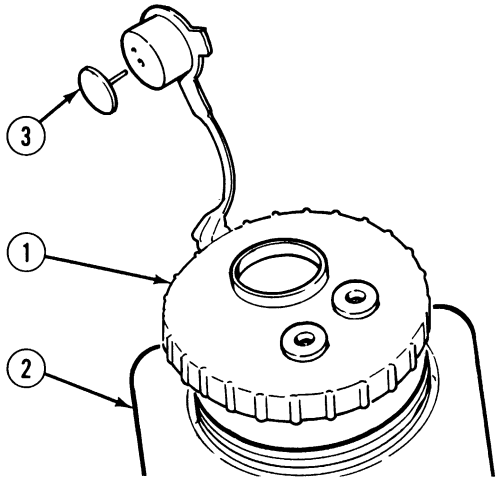

c. Cleaning/Inspection.

(1) Clean screen and inspect for damage.

(2) Inspect umbrella valve and rubber tubes for tears, cracking or damage.

(3) Inspect gasket on cover assembly for tears, cracking or damage.

(4) Inspect condition of two foam gaskets inside reservoir bracket. Replace if flattened or missing.

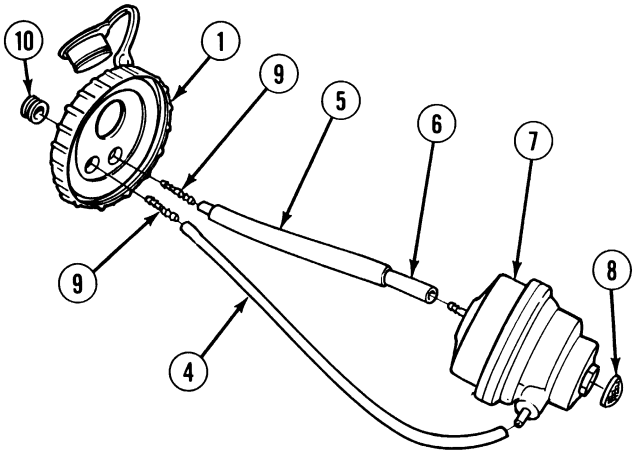

d. Assembly.

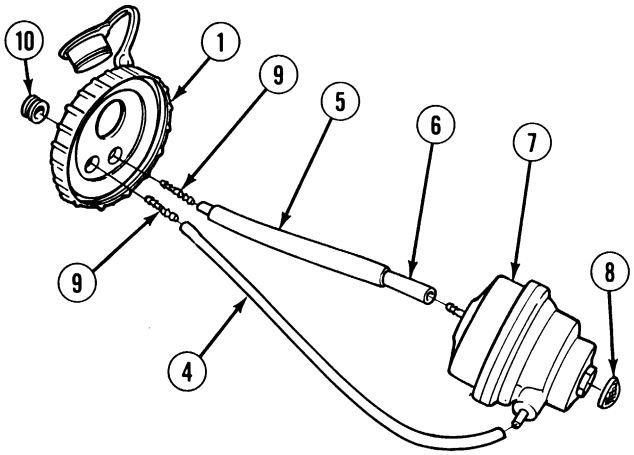

(1) Install two grommets (10) in cover assembly (1).

(2) Install two connectors (9) on rubber tubes (4) and (5).

(3) Lubricate rubber tubes (4) and (5) with soap solution.

NOTE

The shorter rubber tube is installed in the hole labeled VAL. The longer rubber tube is installed in the hole labeled NOZ. Both rubber tubes should be installed with approximately 3 inches (8 cm) sticking through top of cover assembly.

(4) Install rubber tubes (4) and (5) in cover assembly (1).

(5) Install screen (8) in washer pump (7).

(6) Position plastic tube (6) on rubber tube (5).

(7) Install rubber tubes (4) and (5) on washer pump (7).

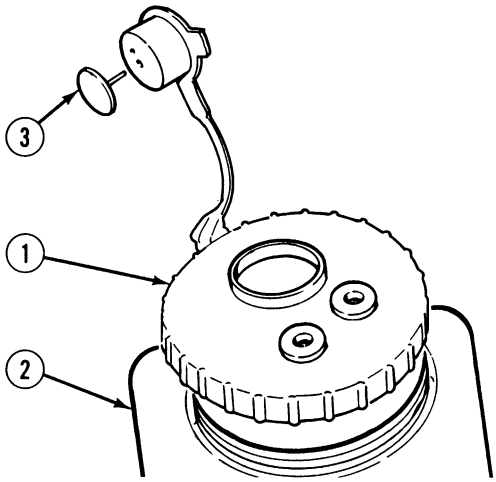

(8) Install umbrella valve (3) on cover assembly (1).

(9) Install cover assembly (1) on windshield washer reservoir (2).

19-8. WINDSHIELD WASHER RESERVOIR AND BRACKET REPAIR (CONT).

e. Installation.

NOTE

Perform Step (1) if foam gaskets were removed

(1) Install two four inch (10 cm) foam gaskets (13) on windshield washer reservoir bracket (7).

(2) Install windshield washer reservoir bracket (7) on bracket (9) with three screws (12) and locknuts (11).

WARNING

Adhesives, solvents, and sealing compounds can burn easily, can give off harmful vapors, and are harmful to skin and clothing. To avoid injury or death, keep away from open fire and use in well-ventilated area. If adhesive, solvent, or sealing compound gets on skin or clothing, wash immediately with soap and water.

(3) Apply sealing compound to threads of two lock screws (8).

(4) Install bracket (9) on cab (10) using two lock screws (8).

(5) Install windshield washer reservoir (6) in windshield washer reservoir bracket (7).

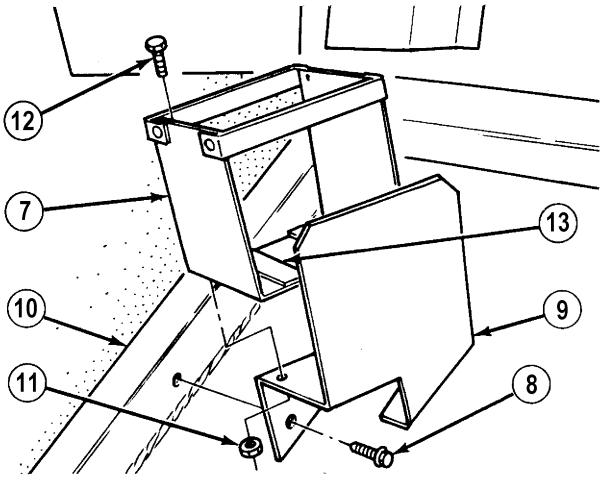

NOTE

Perform Step (6) if relief valve is present.

(6) Install hose (4) on relief valve (5).

(7) Install hose (2) on hose connector (3).

(8) Slide clamp (1) down to secure hose (2).

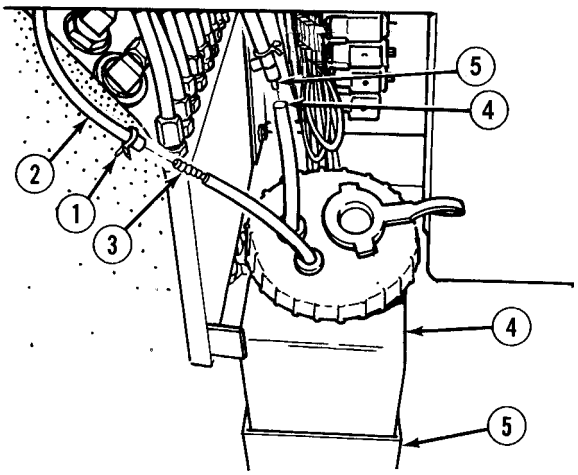

f. Follow-On Maintenance:

- Fill windshield washer reservoir with washer fluid, (TM 9-2320-364-10).
- Check operation of windshield washer, (TM 9-2320-364-10).
- Remove wheel chocks, (TM 9-2320-364-10).

END OF TASK

19-9. BEACON BRACKET REPLACEMENT.

This task covers:

a. Removal b. Installation c. Follow-On Maintenance

INITIAL SETUP

Tools and Special Tools
Tool Kit, General Mechanic's: Automotive (Item 74, Appendix G)
Socket Set, 3/8 in. (Item 62, Appendix G)
Wrench, Torque (0 to 60 N·m) (Item 98, Appendix G)

Materials/Parts
Locknut (4) (Item 106, Appendix F)
Screw, Self-Tapping (2) (Item 299, Appendix F)

Personnel Required
Two

Equipment Condition
Engine OFF, (TM 9-2320-364-10)
Wheels chocked, (TM 9-2320-364-10)
Beacon light removed, (TM 9-2320-364-10)
Engine cover opened, (TM 9-2320-364-10)

a. Removal.

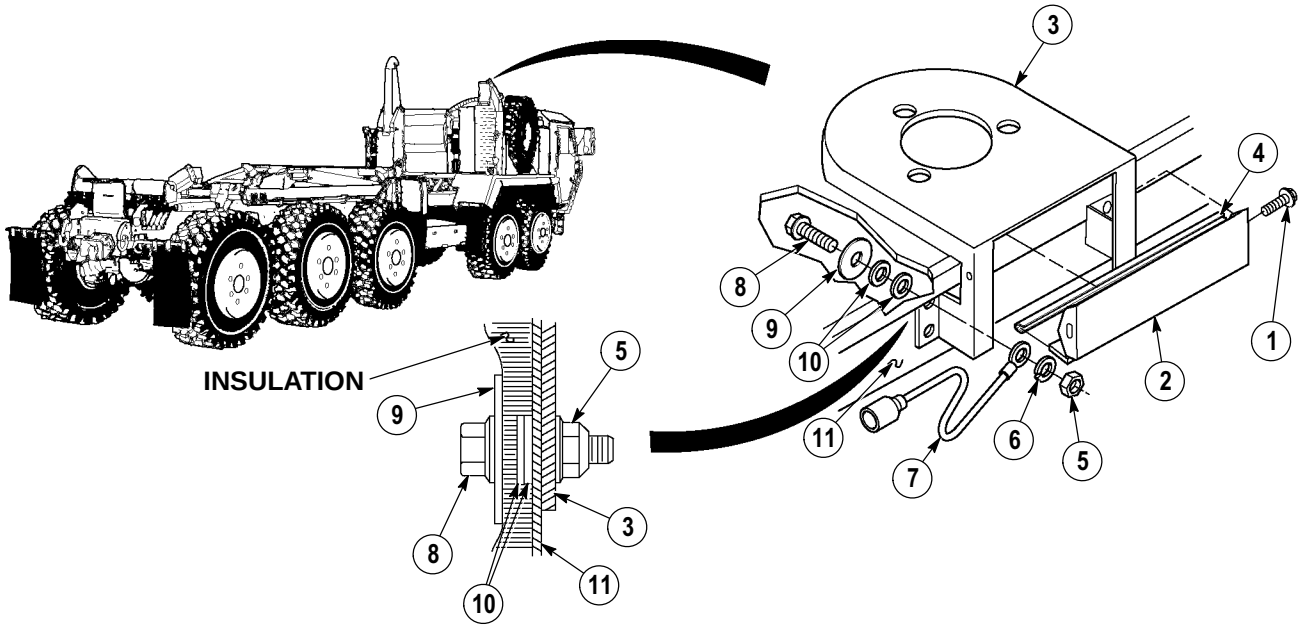

(1) Remove two screws (1) and beacon bracket (2) from beacon mounting bracket (3). Discard screws.

(2) Remove quickedge (4) from beacon bracket (2).

NOTE

Lockwasher, ground wire and two washers may or may not be preseent in Step (3).

(3) With the aid of an assistant, remove four locknuts (5), lockwasher (6) and ground wire (7), four screws (8), washers (9), two washers (10) and beacon mounting bracket (3) from cab (11). Discard lockwasher and locknuts.

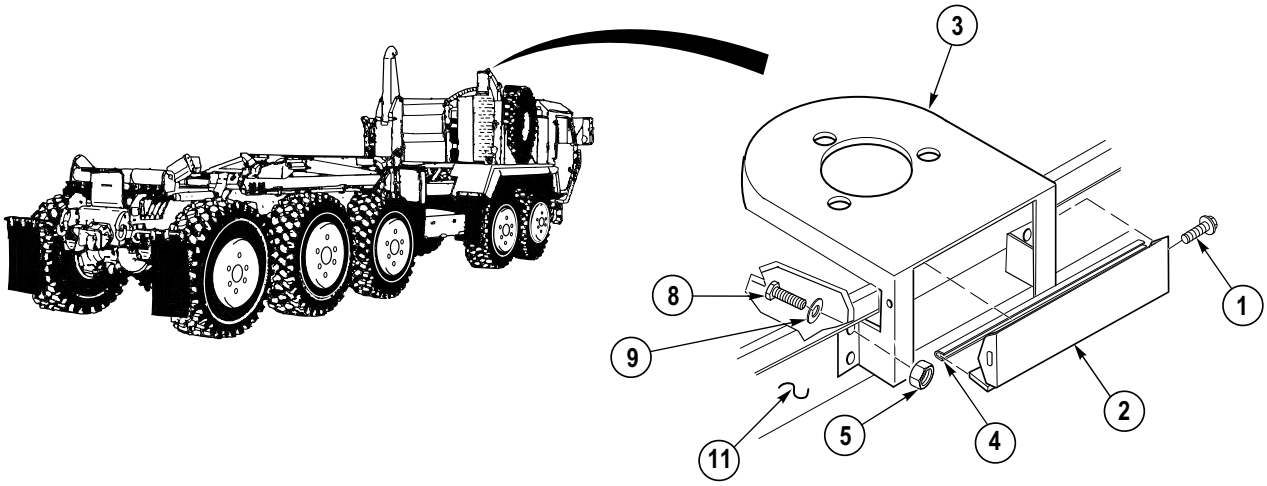

b. Installation.

NOTE

If ground wire was removed, refer to para 7-49 to install.

(1) With the aid of an assistant, install beacon mounting bracket (3) on cab (11) with four screws (8), washers (9) and locknuts (5).

(2) Install quickedge (4) on beacon bracket (2).

(3) Install beacon bracket (2) on beacon mounting bracket (3) with two screws (1).

c. Follow-On Maintenance:

- Close engine cover, (TM 9-2320-364-10).
- Install beacon light, (TM 9-2320-364-10).
- Remove wheel chocks, (TM 9-2320-364-10).

END OF TASK

19-10. AIR HORN REPLACEMENT.

This task covers:

a. Removal b. Installation c. Follow-On Maintenance

INITIAL SETUP

Tools and Special Tools
Tool Kit, General Mechanic's: Automotive (Item 74, Appendix G)

Materials/Parts
Sealing Compound (Item 71, Appendix C)
Tags, Identification (Item 87, Appendix C)
Locknut (2) (Item 140, Appendix F)
Lockwasher (Item 162, Appendix F)

Equipment Condition
Engine OFF, (TM 9-2320-364-10)
Wheels chocked, (TM 9-2320-364-10)
Air system drained, (TM 9-2320-364-10)

a. Removal.

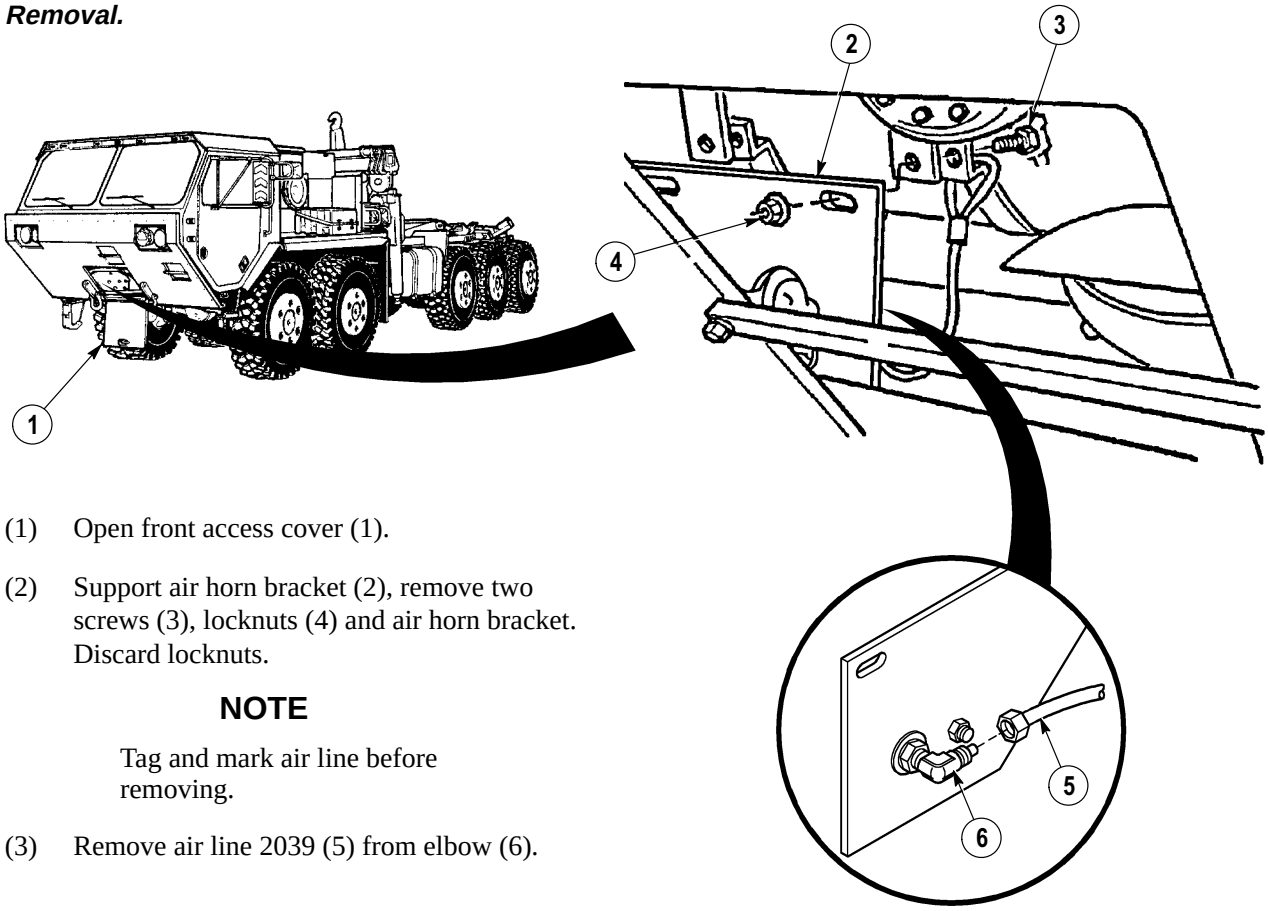

(1) Open front access cover (1).

(2) Support air horn bracket (2), remove two screws (3), locknuts (4) and air horn bracket. Discard locknuts.

NOTE

Tag and mark air line before removing.

(3) Remove air line 2039 (5) from elbow (6).

NOTE

Matchmark elbow to ensure correct installation and position.

(4) Remove elbow (7) from air horn (8).

(5) Remove nut (9), lockwasher (10) and washer (11) from air horn (8).

(6) Remove screw (12), lockwasher (13), nut (14), gasket (15) and air horn (8) from bracket (2). Discard lockwasher.

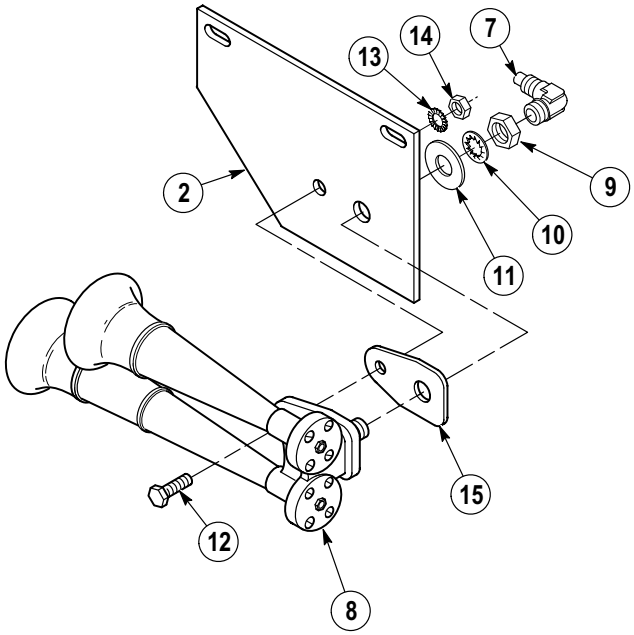

b. Installation.

(1) Install gasket (15), air horn (8) on bracket (2) with nut (14), lockwasher (13), and screw (12).

(2) Install washer (11), lockwasher (10), and nut (9) on air horn (8).

WARNING

Adhesives, solvents, and sealing compounds can burn easily, can give off harmful vapors, and are harmful to skin and clothing. To avoid injury or death, keep away from open fire and use in a well-ventilated area. If adhesive, solvent, or sealing compound gets on skin or clothing, wash immediately with soap and water.

(3) Coat threads of elbow (7) with pipe thread sealing compound.

NOTE

Install fittings as noted prior to removal.

(4) Install elbow (7) on air horn (8).

19-10. AIR HORN REPLACEMENT (CONT).

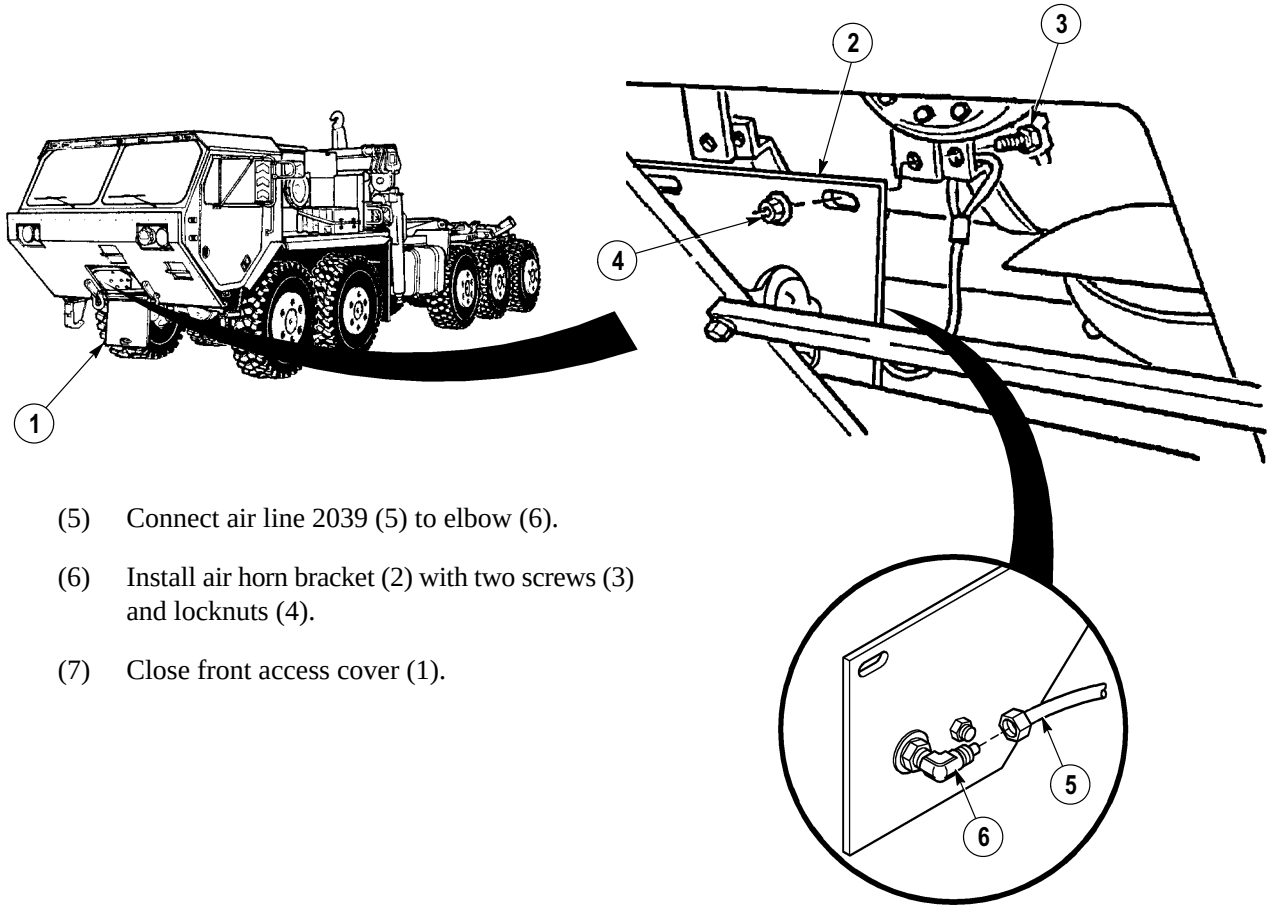

(5) Connect air line 2039 (5) to elbow (6).

(6) Install air horn bracket (2) with two screws (3) and locknuts (4).

(7) Close front access cover (1).

c. Follow-On Maintenance:

- Start engine, (TM 9-2320-364-10).
- Build up air pressure to 90 psi (621 kPa), (TM 9-2320-364-10).
- Check operation of air horn.
- Shut off engine, (TM 9-2320-364-10).
- Check connections for leaks.
- Remove wheel chocks, (TM 9-2320-364-10).

END OF TASK

19-11. AIR HORN VALVE REPLACEMENT.

This task covers:

a. Removal b. Installation c. Follow-On Maintenance

INITIAL SETUP

Tools and Special Tools
Tool Kit, General Mechanic's: Automotive (Item 74, Appendix G)

Materials/Parts
Sealing Compound (Item 71, Appendix C)
Tags, Identification (Item 87, Appendix C)
Lockwasher (2) (Item 161, Appendix F)

Equipment Condition
Engine OFF, (TM 9-2320-364-10)
Wheels chocked, (TM 9-2320-364-10)
Air system drained, (TM 9-2320-364-10)

a. Removal.

NOTE

Tag and mark air lines before removal.

(1) Disconnect air line 2037 (1) from elbow (2).

(2) Disconnect air line 2039 (3) from elbow (4).

NOTE

Perform Step (3) if chain is damaged.

(3) Spread S-hook (5) and disconnect chain (6) from air horn valve (7).

NOTE

There may or may not be a washer present in Step (4).

(4) Remove two screws (8), lockwashers (9), washer (10) and air horn valve (7) from cab wall (11). Discard lockwashers

NOTE

Matchmark all fittings and elbows to ensure correct installation and position.

(5) Remove elbow (2) from elbow (12).

(6) Remove elbow (12) from air horn valve (7).

(7) Remove elbow (4) from air horn valve (7).

(8) Remove screw (13) and chain (6) from cab wall (11).

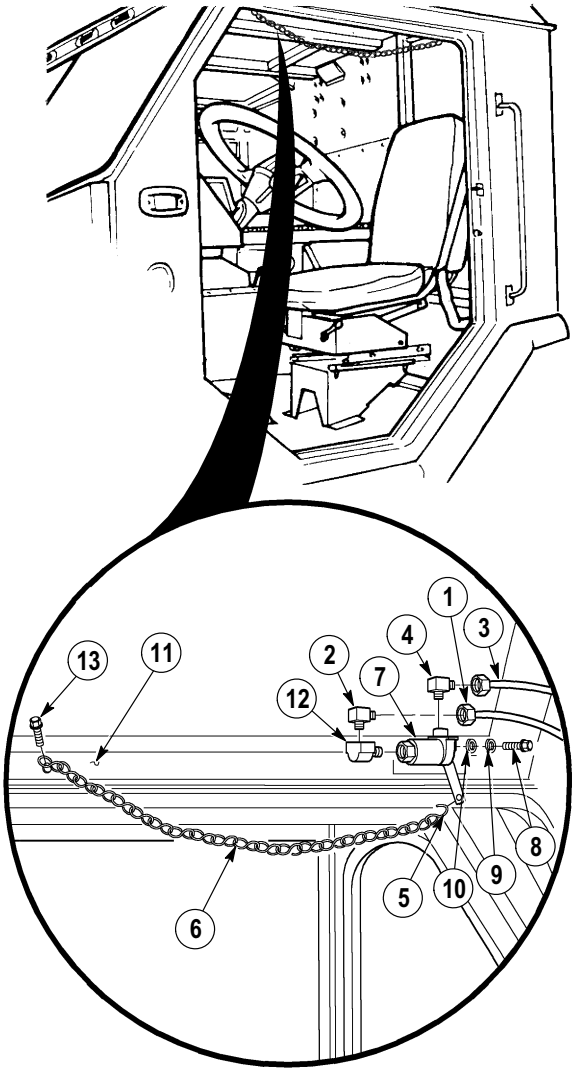

19-11. AIR HORN VALVE REPLACEMENT (CONT).

b. Installation.

WARNING

Adhesives, solvents, and sealing compounds can burn easily, can give off harmful vapors, and are harmful to skin and clothing. To avoid injury or death, keep away from open fire and use in a well-ventilated area. If adhesive, solvent, or sealing compound gets on skin or clothing, wash immediately with soap and water.

(1) Coat threads of elbow (12), elbow (2) and elbow (4) with pipe thread sealing compound.

NOTE

Install fittings as noted prior to removal.

(2) Install elbows (12) and (2) on air horn valve (7).

(3) Install elbow (4) on air horn valve (7).

NOTE

There may or may not be a washer present in Step (4).

(4) Install air horn valve (7) on cab wall (6) with two washers (10), lockwashers (9) and screws (8).

(5) Connect air line 2039 (3) to elbow (4).

(6) Connect air line 2037 (1) to elbow (2).

NOTE

Perform Step (7) if chain was removed.

(7) Attach chain (6) to air horn valve (7) and close S-hook (5).

(8) Install chain (6) on cab wall (11) with screw (13).

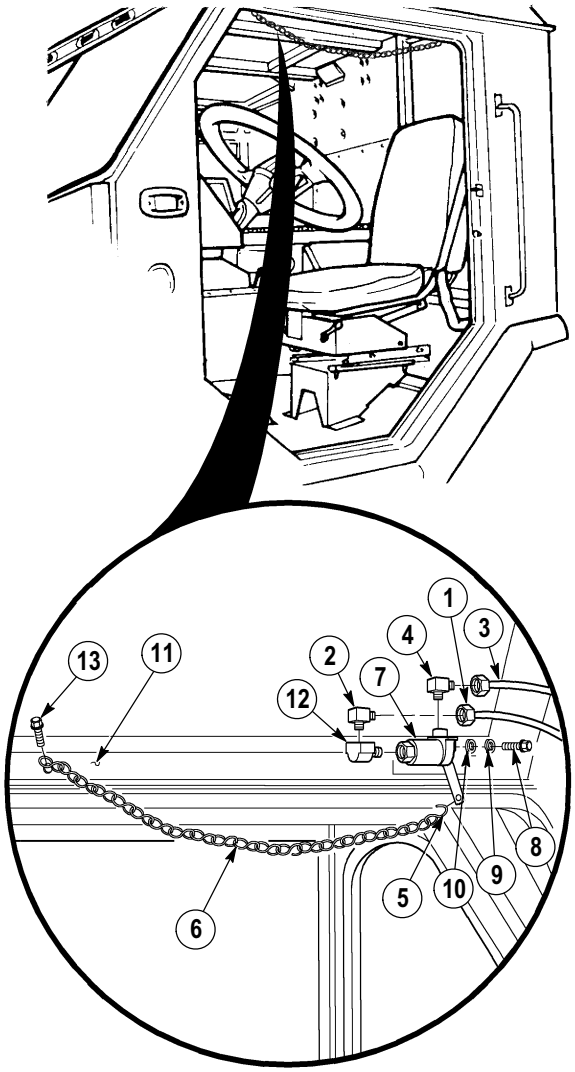

c. Follow-On Maintenance:

- Start engine, (TM 9-2320-364-10).
- Build up air pressure to 90 psi (621 kPa), (TM 9-2320-364-10).
- Check operation of air horn.
- Shut off engine, (TM 9-2320-364-10).
- Check connections for leaks.
- Remove wheel chocks, (TM 9-2320-364-10).

END OF TASK

19-12. HEATER ASSEMBLY REPLACEMENT.

This task covers:

a. Removal b. Installation c. Follow-On Maintenance

INITIAL SETUP

Tools and Special Tools
Tool Kit, General Mechanic's: Automotive (Item 74, Appendix G)
Cap and Plug Set (Item 11, Appendix G)
Pan, Drain (Item 47, Appendix G)

Materials/Parts
Adhesive (Item 4, Appendix C)
Cable Ties (4) (Item 25, Appendix C)
Solution, Soap (Item 86, Appendix C)
Tape, Adhesive (Item 90, Appendix C)
Tape, Antiseizing (Item 93, Appendix C)
Clip, Cable (Item 23, Appendix F)
Gasket Strip (Item 69, Appendix F)
Lockwasher (2) (Item 159, Appendix F)
Lockwasher (6) (Item 163, Appendix F)
Nut, Push (2) (Item 217, Appendix F)
Screw Washer Assembly (6) (Item 308, Appendix F)

Materials/Parts - Continued
Rubber Strip (Item 337, Appendix F)
Rubber Strip (Item 338, Appendix F)

Personnel Required
Two

Equipment Condition
Engine OFF, (TM 9-2320-364-10)
Wheels chocked, (TM 9-2320-364-10)
Batteries disconnected, (Para 7-87)
Cab engine access panel removed, (Para 17-24)
Electronic Control Box (ECB) cover removed, (Para 17-22)
Heater compartment access panel removed, (Para 17-4)
Heater compartment front cover removed, (Para 17-5)

a. Removal.

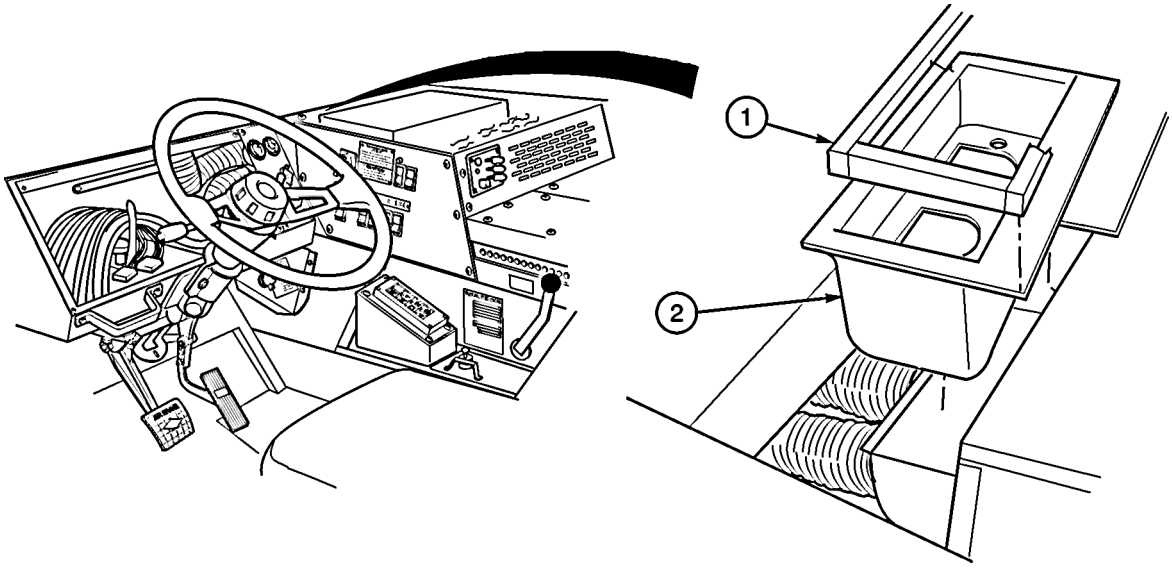

(1) Remove gasket strip (1) from upper plenums (2).

(2) Remove six screw washer assemblies (3) from upper plenums (2). Discard screw washer assemblies.

(3) Remove three screws (4), washers (5), lockwashers (6), clip (7) and upper plenums (2). Discard lockwashers.

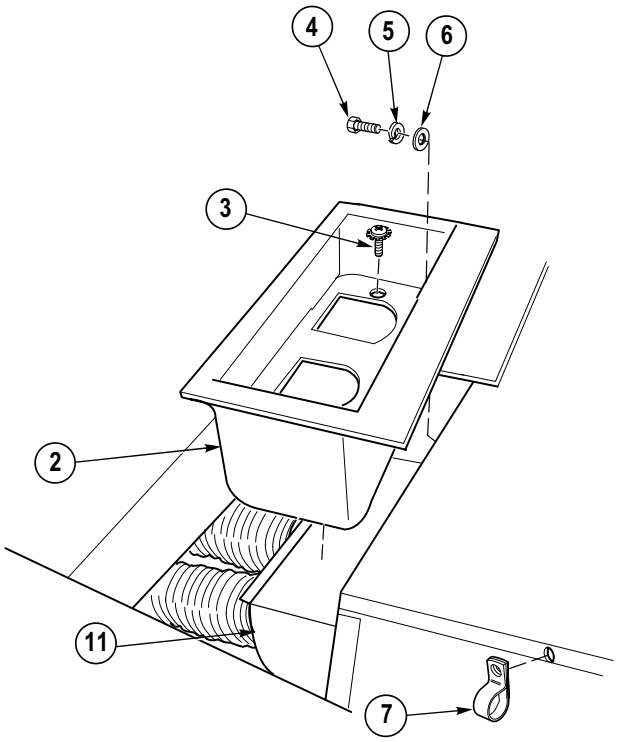

(4) Remove two push nuts (8) and cabin/ventilator cable (9) from damper (10).

(5) Remove damper (10) from lower plenum (11).

(6) Remove lower plenum (11) and rest it on heater (12).

NOTE

Note locations of defroster tubings before removal.

(7) Remove four cable ties (13) and remove defroster tubings (14) from lower plenum (11).

CAUTION

As tubes are removed plug or tape all openings to keep out contaminates. Failure to comply may cause equipment damage.

(8) Cover openings in heater assembly (12) with masking tape.

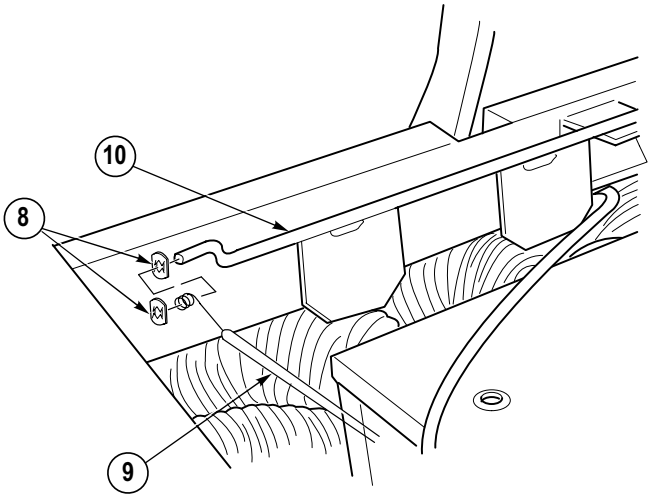

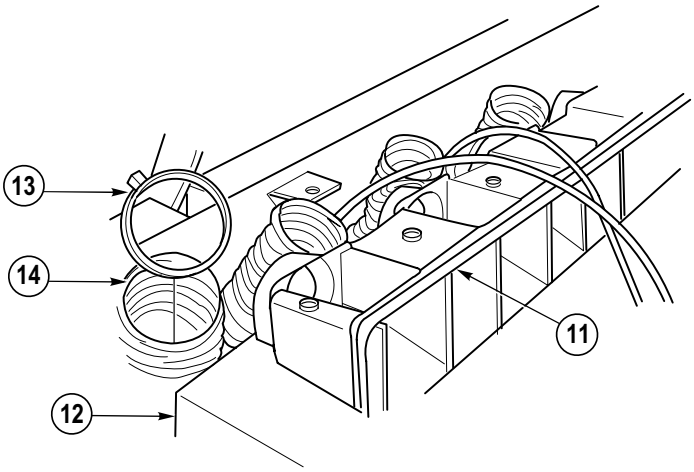

19-12. HEATER ASSEMBLY REPLACEMENT (CONT).

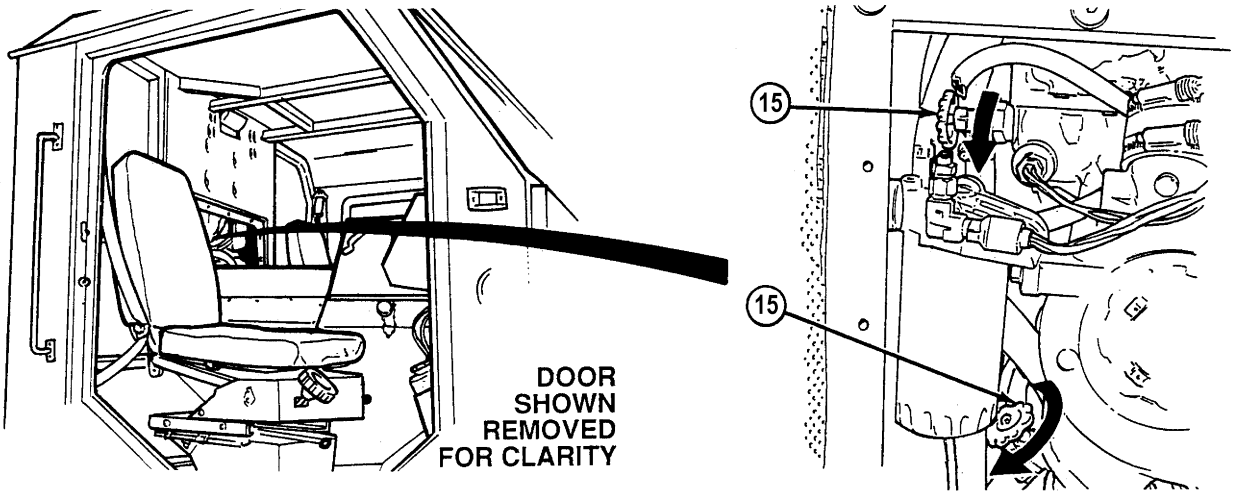

NOTE

Valves are closed by turning clockwise.

(9) Close two valves (15) at right front of engine.

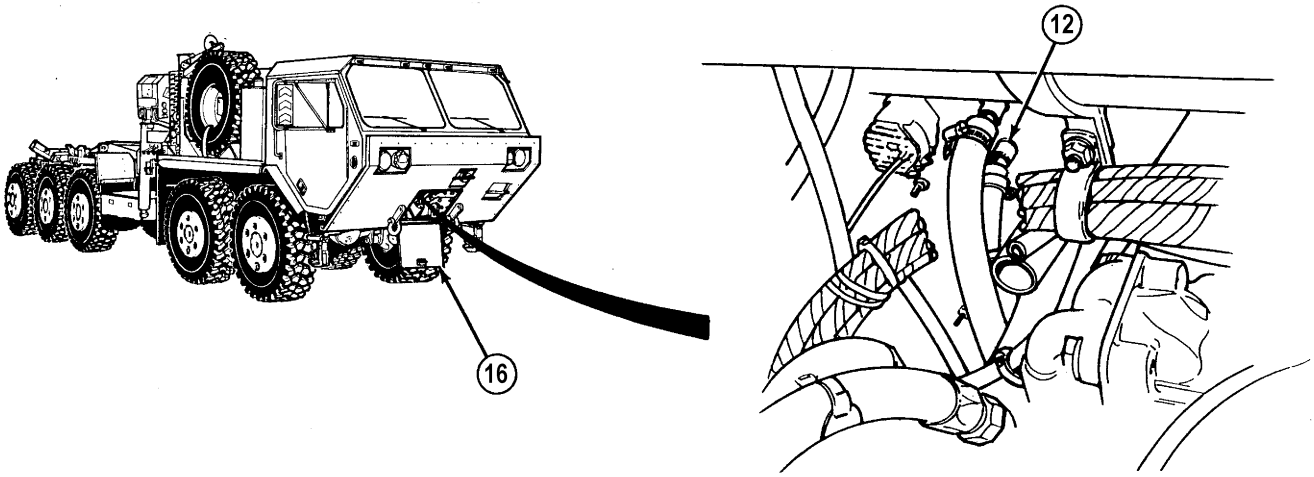

NOTE

Steps (10) through (13) are performed outside truck.

(10) Open front access cover (16) in front of truck.

NOTE

Approximately one pint (0.5 l) of coolant will drain from heater.

(11) Position drain pan under heater assembly (12).

WARNING

- Do not remove heater hoses when engine is hot; steam and hot coolant can escape and burn personnel.
- Use clean wiping rags or like material to remove heater hoses. Avoid using gloves. If hot water soaks through gloves, personnel could be burned.
- Coolant is slippery and can cause falls and injury. Clean up spilled coolant immediately.

(12) Loosen hose clamp (17) and disconnect heater hose (18) from heater assembly (12).

(13) Loosen two hose clamps (19) and (20) and disconnect hose (21) from heater assembly (12).

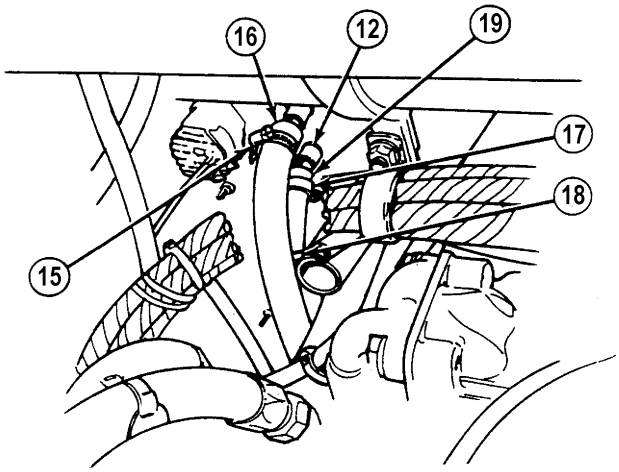

CAUTION

As hoses are removed plug or tape all hoses and tubes to keep out foreign matter. Failure to comply may cause equipment damage.

(14) Cover openings in two heater hoses (18) and heater assembly (12) with masking tape.

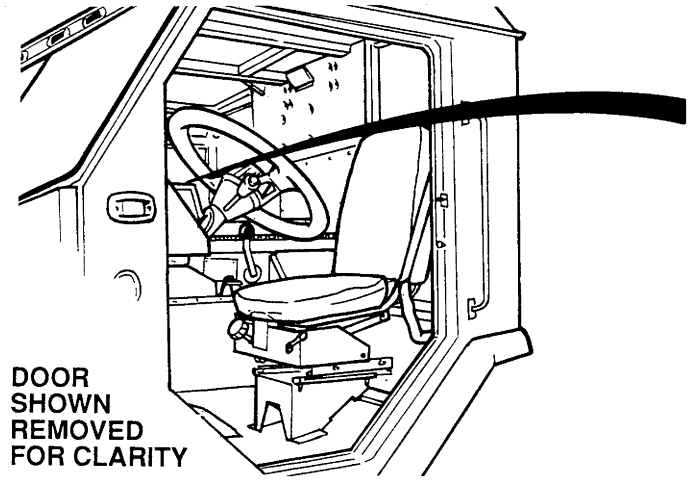

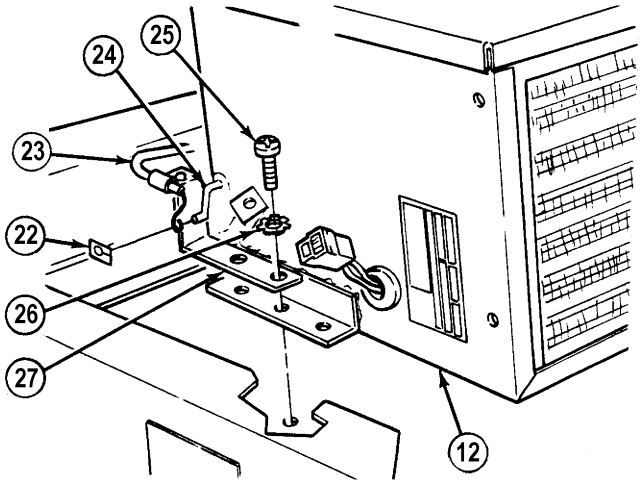

NOTE

Remaining steps are performed inside cab.

(15) Remove clip (22) and defroster cable (23) from defroster lever rod (24). Discard clip.

(16) Remove six screws (25) and lockwashers (26) from heater assembly (12) and heater bracket (27). Discard lockwashers.

19-12. HEATER ASSEMBLY REPLACEMENT (CONT).

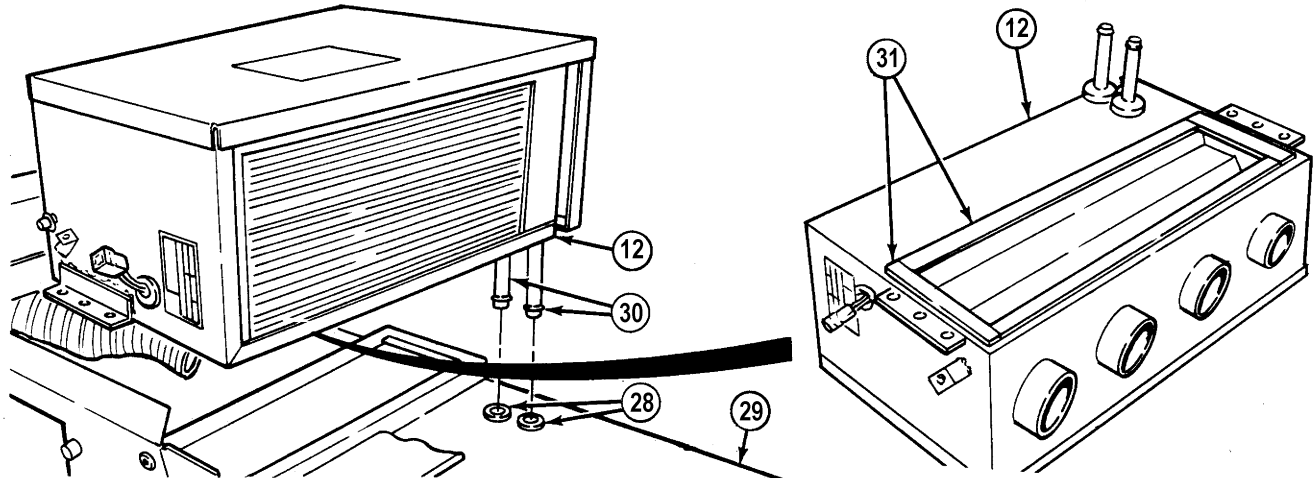

CAUTION

To prevent damage to coolant tubes on heater, pull heater assembly straight up.

NOTE

Grommets may come out with heater or stay with cab.

(17) With the aid of an assistant, remove heater assembly (12) and two grommets (28) from cab (29). Cap two coolant tubes (30).

NOTE

Perform Step (18) if PVC foam strips are damaged.

(18) Remove and discard four PVC foam strips (31) from heater assembly (12).

b. Installation.

NOTE

Perform Step (1) if PVC foam strips were removed.

(1) Install four PVC foam strips (31) on heater assembly (12).

(2) Position two grommets (28) in cab (29) and coat with soap solution.

(3) With the aid of an assistant, position heater assembly (12) in cab (29) and remove caps from coolant tubes (30).

CAUTION

- To prevent damage to coolant tubes on heater, install heater assembly straight down.
- Ensure that grommets are not dislodged during installation. If grommets are not positioned properly, coolant tubes could be damaged.

(4) With the aid of an assistant, position heater assembly (12) coolant tubes (30) through grommets (28).

(5) Install heater assembly (12) and heater bracket (27) in cab (29) with six screws (25) and lockwashers (26).

(6) Install defroster cable (23) on defroster lever rod (24) with clip (22).

(7) Remove covers from openings in heater assembly (12).

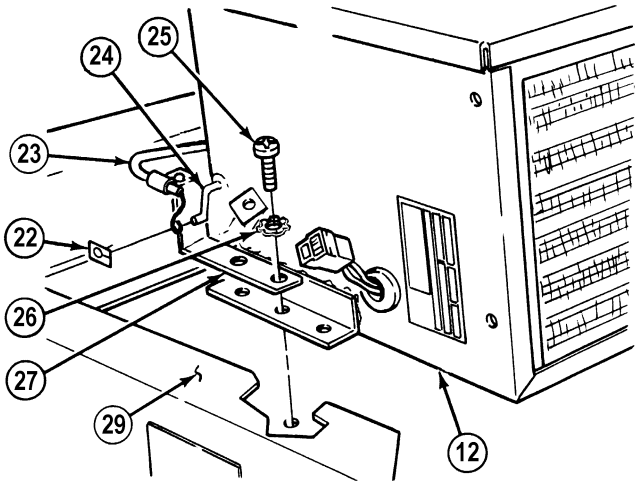

WARNING

Adhesives, solvents, and sealing compounds can burn easily, can give off harmful vapors, and are harmful to skin and clothing. To avoid injury or death, keep away from open fire and use in a well-ventilated area. If adhesive, solvent, or sealing compound gets on skin or clothing, wash immediately with soap and water.

(8) Coat inner edge of four defroster tubes (14) with adhesive.

(9) Install four defroster tubes (14) on lower plenum (11) with cable ties (13).

(10) Position lower plenum (11) on heater (12).

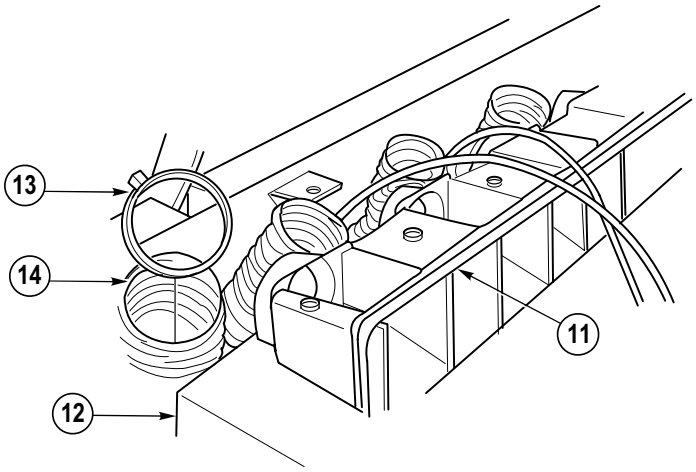

(11) Position damper (10) in lower plenum (11) and install cab/ventilator cable (9) on damper (10) with two push nuts (8).

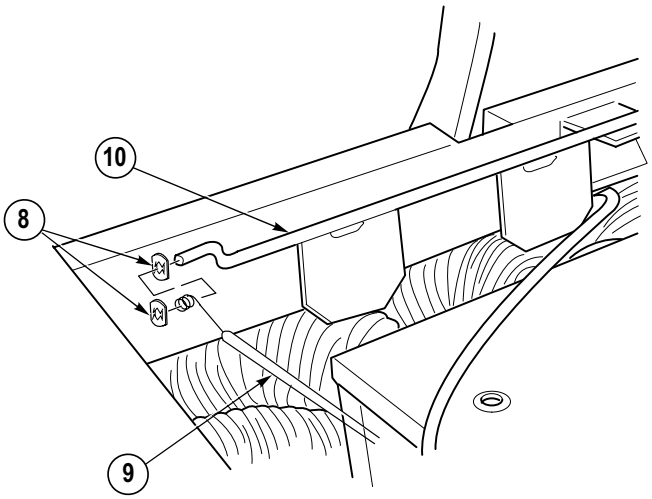

19-12. HEATER ASSEMBLY REPLACEMENT (CONT).

(12) Install upper plenums (2) on lower plenum (11) with six screw washer assemblies (3).

(13) Install three screws (4), washers (5), lockwashers (6), and clip (7) in upper plenums (2).

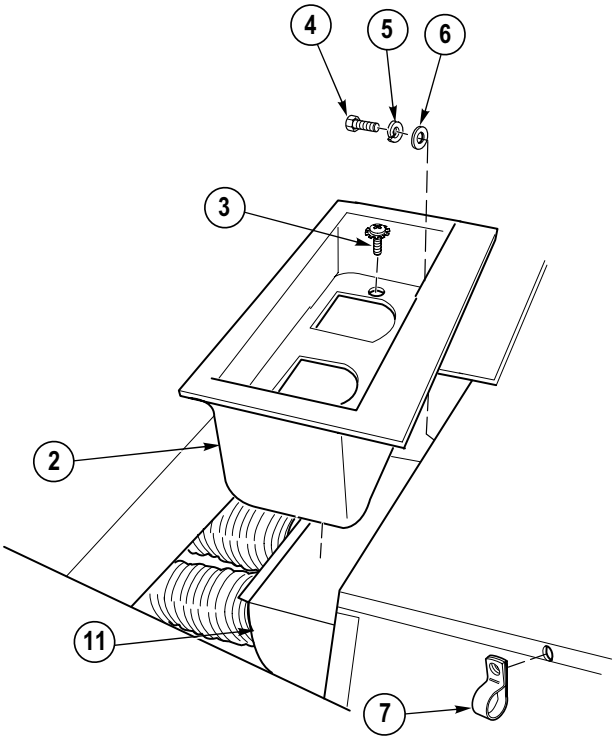

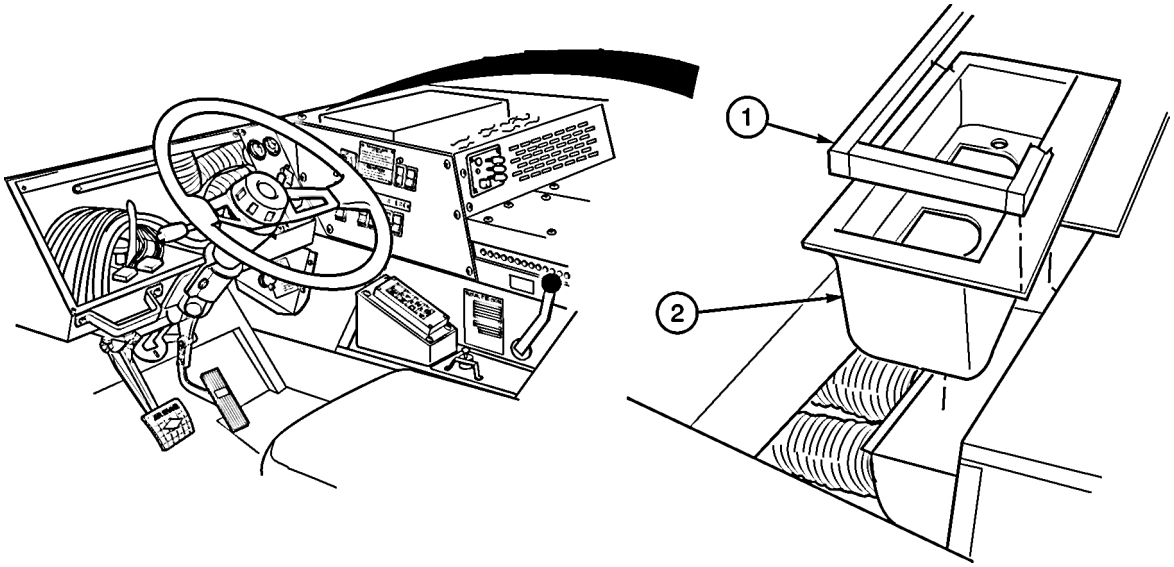

(14) Install gasket strip (1) on upper plenums (2).

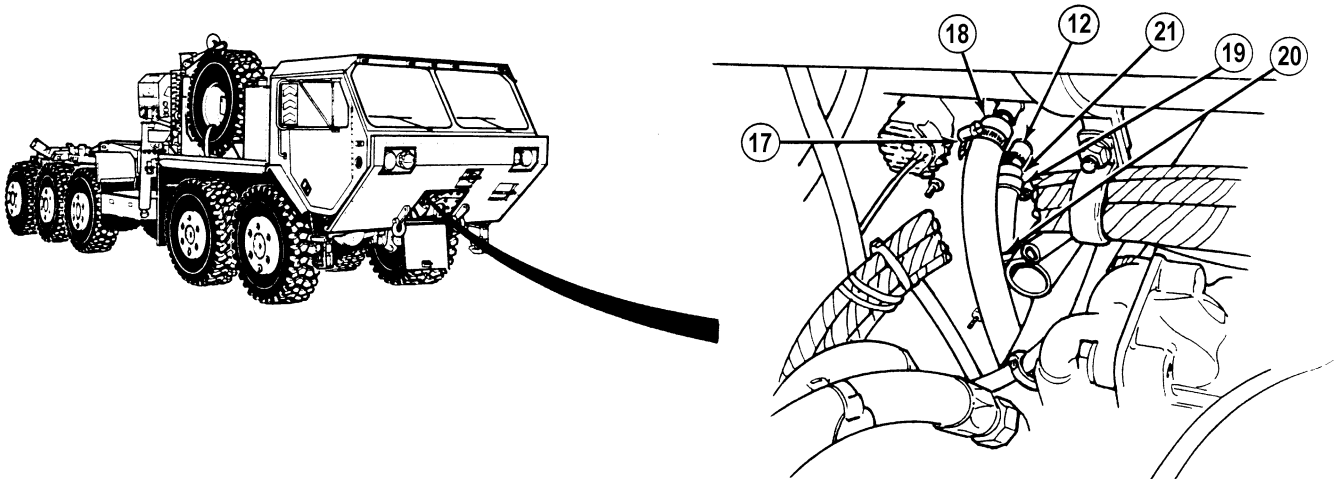

NOTE

Steps (15) through (18) are performed outside of the truck.

(15) Remove four plugs from two heater hoses (18) and (21) and heater assembly (12).

(16) Install heater hose (18) on heater assembly (12) and tighten hose clamp (17).

(17) Install heater hose (21) on heater assembly (12) and tighten two hose clamps (19) and (20).

(18) Close front access cover (16).

NOTE

- Remaining steps are performed inside cab.
- Valves are opened by turning counterclockwise.

(19) Open two valves (15) at right front engine.

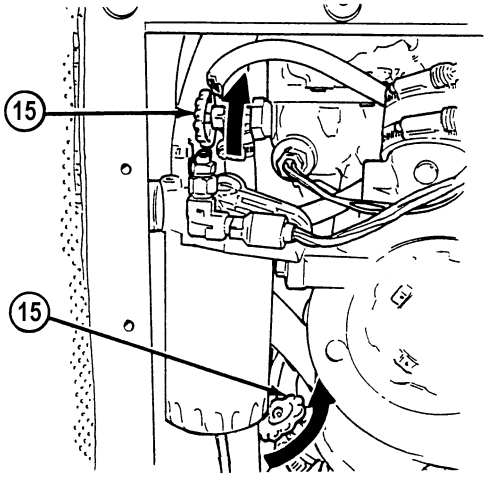

c. Follow-On Maintenance:

- Install heater front cover, (Para 17-5).
- Install heater compartment access panel, (Para 17-4).
- Install electronic control box cover, (Para 17-22).
- Install cab engine access panel, (Para 17-24).
- Fill radiator, (Para 2-9).
- Connect batteries, (Para 7-87).
- Remove wheel chocks, (TM 9-2320-364-10).

END OF TASK

19-13. HEATER BLOWER MOTOR REPLACEMENT.

This task covers:

a. Removal b. Installation c. Follow-On Maintenance

INITIAL SETUP

Tools and Special Tools
Tool Kit, General Mechanic's: Automotive (Item 74, Appendix G)

Materials/Parts
Lockwasher (10) (Item 182, Appendix F)

Equipment Condition
Engine OFF, (TM 9-2320-364-10)
Wheels chocked, (TM 9-2320-364-10)
Heater compartment access panel removed, (Para 17-4)
Batteries disconnected, (Para 7-87)

a. Removal.

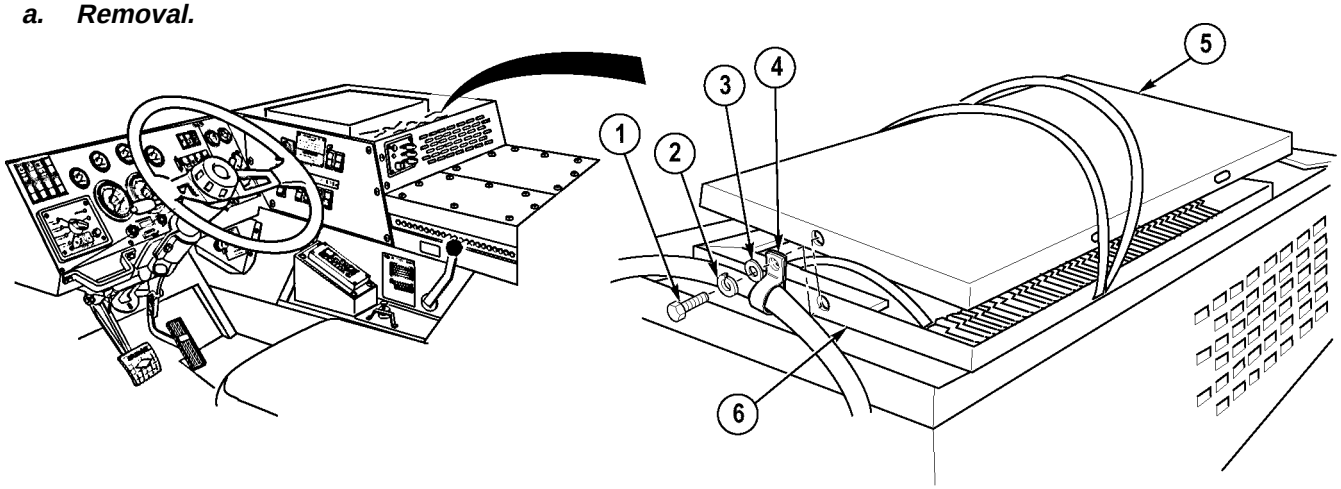

(1) Remove six screws (1), lockwashers (2), washers (3), clip (4) and heater cover (5) from heater assembly (6). Discard lockwasher.

(2) Remove two screws (7), lockwashers (8) and washers (9). Discard lockwashers.

(3) Remove screw (10), lockwasher (11), washer (12), wire (13) and lockwasher (14). Discard lockwasher.

(4) Disconnect connector (15) from resistor (16).

(5) Disconnect connector (17).

(6) Remove blower housing (18) from heater case (19).

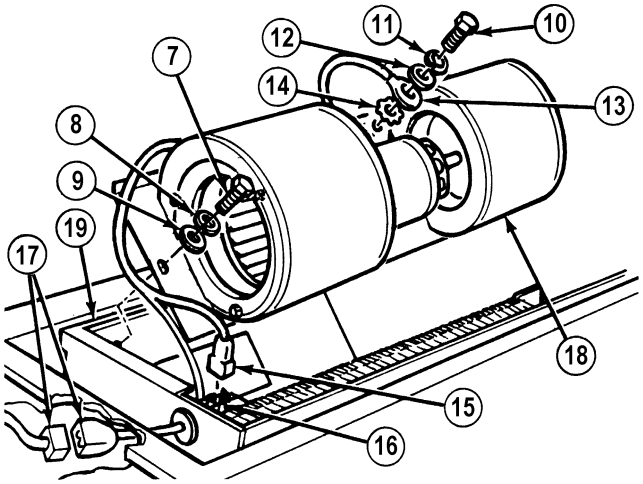

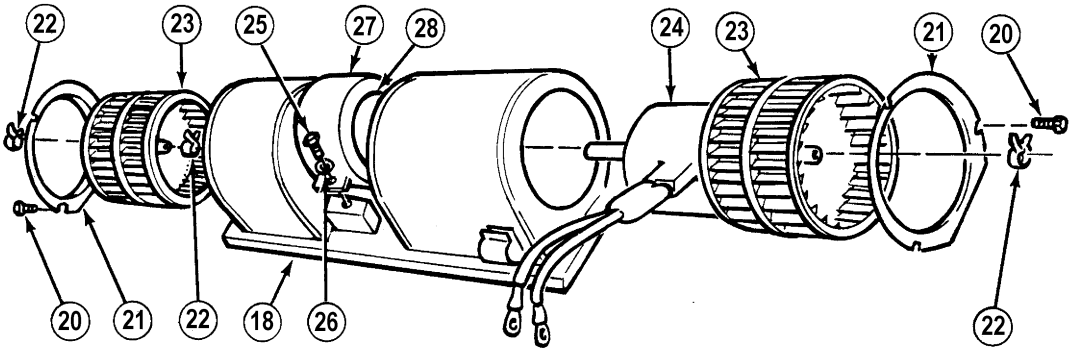

(7) Remove six screws (20) and two foils (21) from blower housing (18).

NOTE

- Blower wheels may be difficult to pull off motor shaft.
- Note direction of arrow on motor indicating direction of shaft rotation.
- Note position of blower wheels on shafts.

(8) Remove four clamps (22) from two blower wheels (23) and blower wheels from motor (24) shafts.

(9) Remove screw (25), washer (26), motor strap (27), motor insulator (28) and motor (24) from blower housing (18).

b. Installation.

(1) Position motor (24) in blower housing (18).

(2) Install motor insulator (28), motor strap (27), washer (26) and screw (25) on blower housing (18).

NOTE

- Ensure blower wheels are installed as noted prior to removal.
- Note direction of arrow on motor indicating direction of shaft rotation.

(3) Install two blower wheels (23) and four clamps (22) on motor (24) shaft so that edge of fins on outside diameter are the leading edge when blower wheels rotate in direction indicated on motor.

(4) Install two foils (21) on blower housing (18) with six screws (20).

19-13. HEATER BLOWER MOTOR REPLACEMENT (CONT).

(5) Position blower housing (18) in heater case (19).

(6) Connect connector (15) to resistor (16).

(7) Connect connector (17).

(8) Install lockwasher (14), ground wire (13), washer (12), lockwasher (1110) and screw (10) on center mounting hole.

(9) Install two washers (9), lockwashers (8) and screws (7) in outer mounting holes.

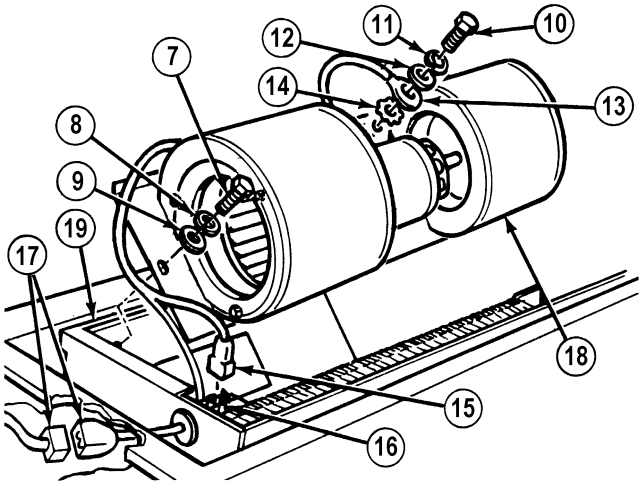

(10) Install heater cover (5) on heater assembly (6) with six washers (3), lockwashers (2) clip (4) and screws (1).

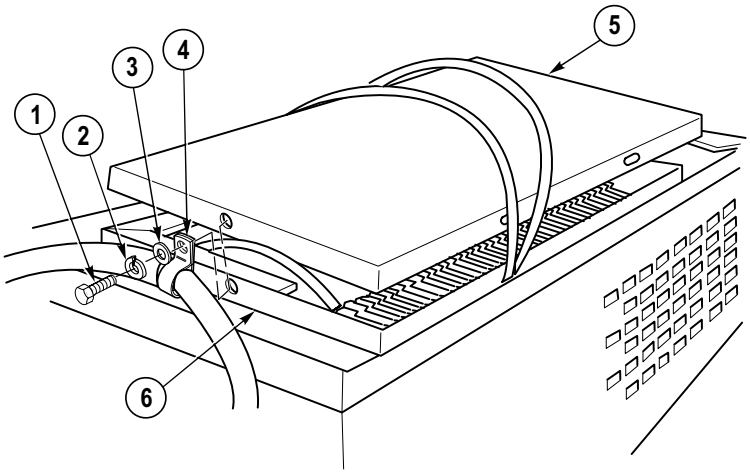

c. Follow-On Maintenance:

- Install heater compartment access panel, (Para 17-4).
- Connect batteries, (Para 7-87).
- Check operation of heater, (TM 9-2320-364-10).
- Remove wheel chocks, (TM 9-2320-364-10).

END OF TASK

19-14. HEATER CORE REPLACEMENT.

This task covers:

a. Removal b. Installation c. Follow-On Maintenance

INITIAL SETUP

Tools and Special Tools
Tool Kit, General Mechanic's: Automotive (Item 74, Appendix G)
Pan, Drain (Item 46, Appendix G)

Materials/Parts
Solution, Soap (Item 86, Appendix C)
Lockwasher (6) (Item 159, Appendix F)

Equipment Condition
Engine OFF, (TM 9-2320-364-10)
Wheels chocked, (TM 9-2320-364-10)
Batteries disconnected, (Para 7-87)
Cab engine access panel removed, (Para 17-24)
Heater compartment access panel removed, (Para 17-4)

a. Removal.

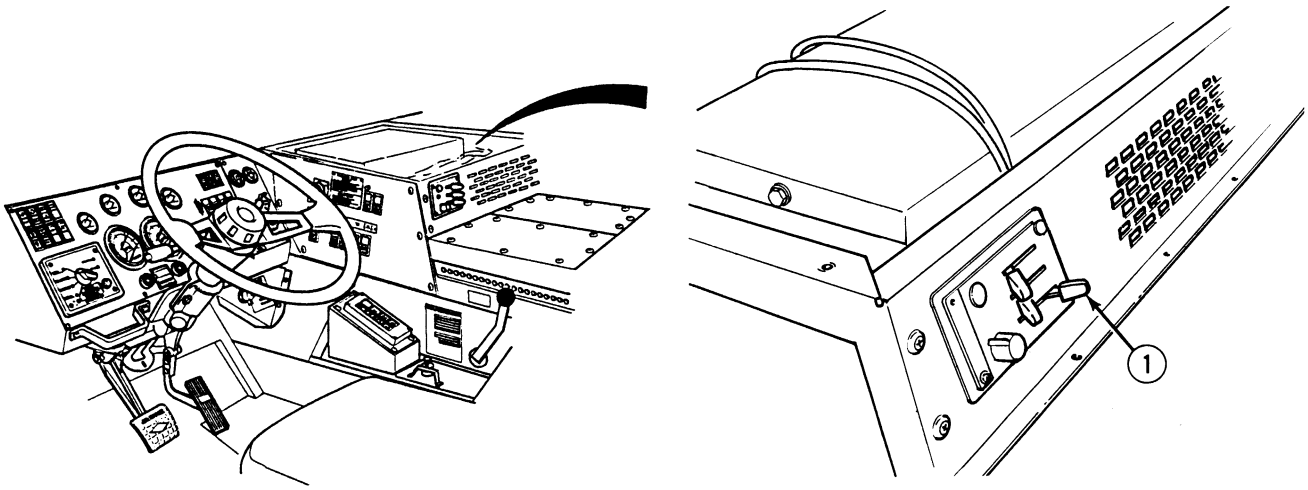

WARNING

Allow engine to cool prior to removal of heater core to prevent burns and injury to personnel.

(1) Set heater panel bottom control (1) to HEAT position.

19-14. HEATER CORE REPLACEMENT (CONT).

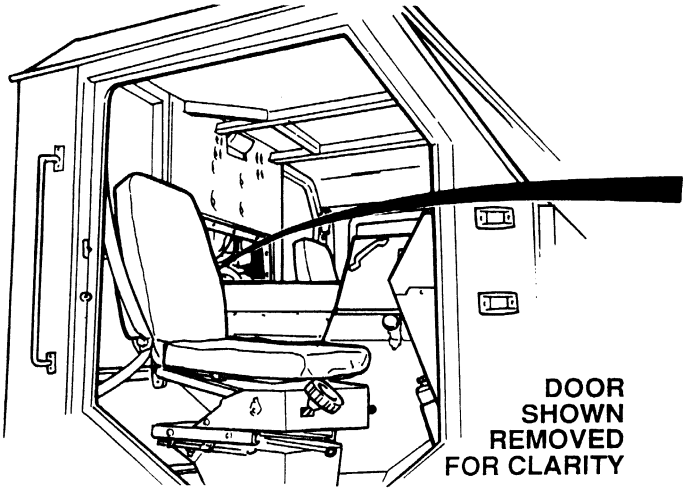

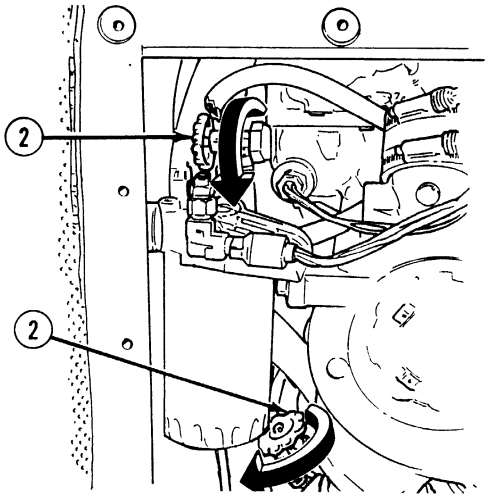

NOTE

- Remaining steps are performed inside cab.
- Valves are closed by turning clockwise.

(2) Close two valves (2) at right front of engine.

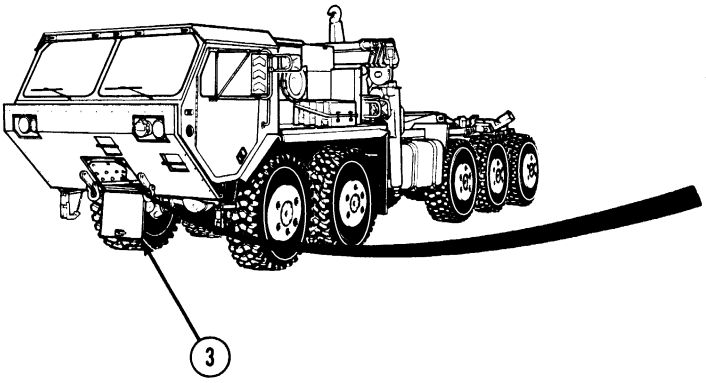

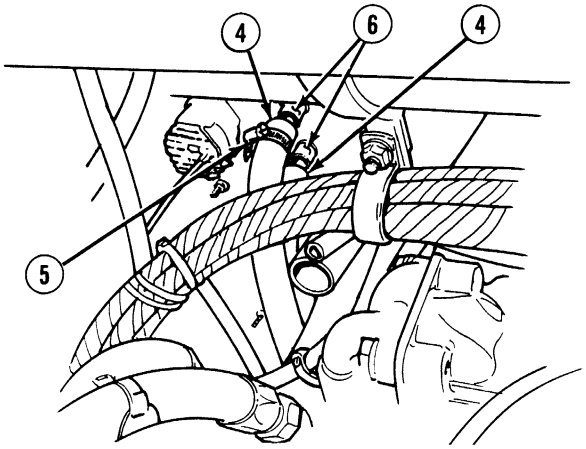

(3) Open front access cover (3).

WARNING

- Use caution when removing hoses to prevent getting antifreeze in eyes or mouth, if antifreeze does get in eyes or mouth, seek medical attention immediately.
- Do not remove heater hoses when engine is hot: steam and hot coolant can escape and may cause injury to personnel.

(4) Position drain pan under coolant hoses (4).

(5) Loosen two clamps (5). Remove and cap two hoses (4) from heater core inlet tubes (6).

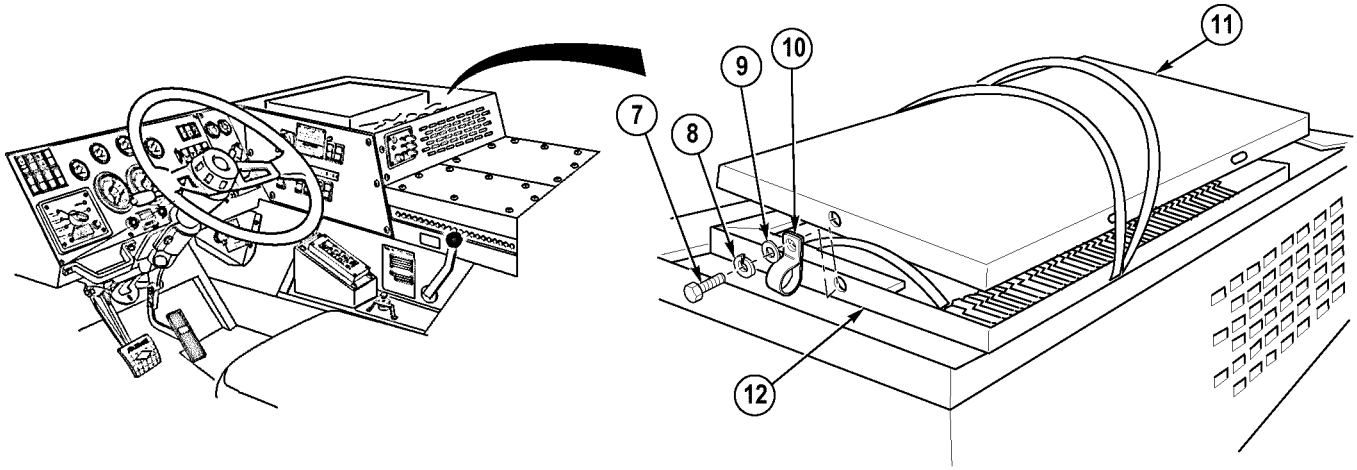

(6) Remove six screws (7), lockwashers (8), washers (9), clip (10) and heater cover (11) from heater assembly (12). Discard lockwashers.

(7) Remove four screws (13) from heater control panel (14).

(8) Rotate heater control panel (14) counterclockwise enough for heater core (15) to clear cables.

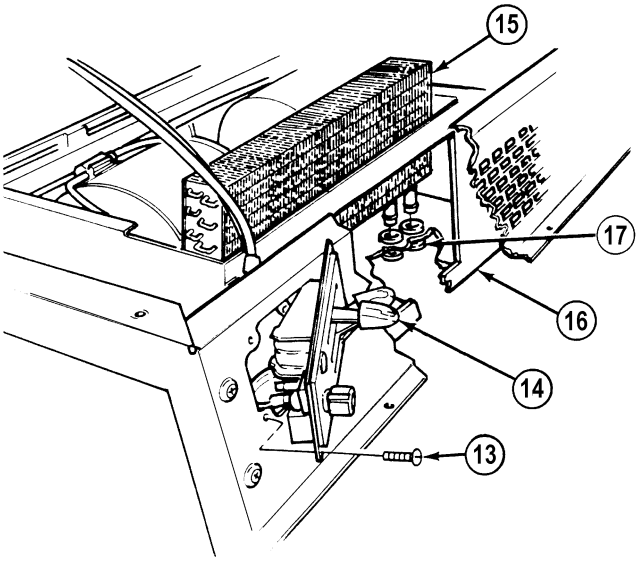

CAUTION

When heater core is removed, coolant will drain out. To prevent damage to electrical components, cover all components with a thick layer of cloths. Clean up spills immediately.

(9) Remove heater core (15) from heater assembly (16) and two grommets (17).

(10) Remove two grommets (17) from heater assembly (16).

b. Installation.

(1) Drain heater core (15).

(2) Coat two grommets (17) with soap solution and install in heater assembly (16).

(3) Coat heater core (15) inlet tubes with soap solution.

(4) Install heater core (15) in heater assembly (16).

(5) Install heater panel (14) and four screws (13).

19-14. HEATER CORE REPLACEMENT (CONT).

(6) Install heater cover (11) and clip (10) on heater assembly (12) with six washers (9), lockwashers (8) and screws (7).

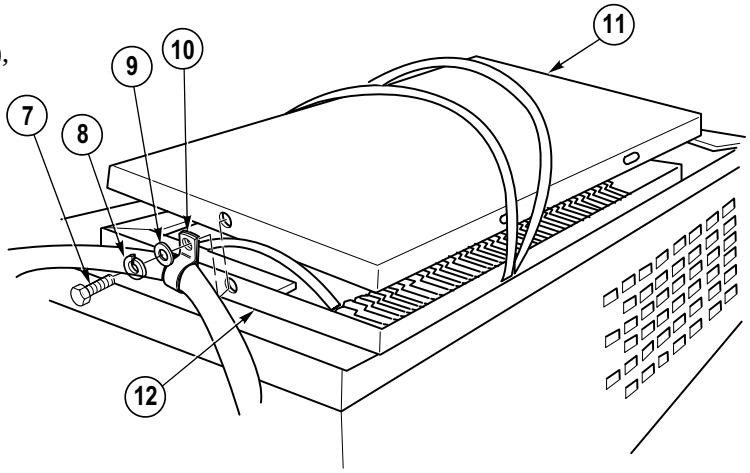

(7) Install two hoses (4) with clamps (5) on inlet tubes (6).

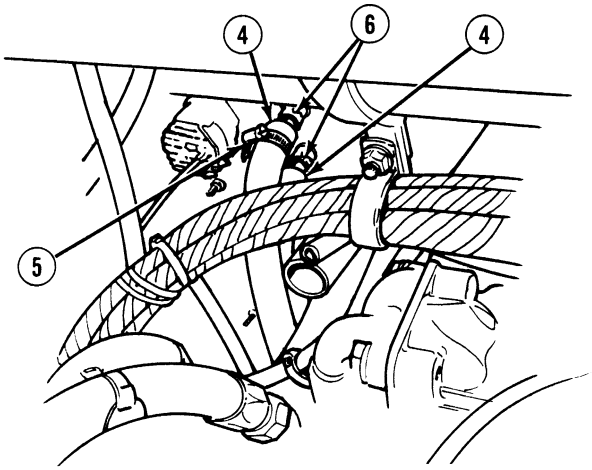

(8) Close front access cover (3).

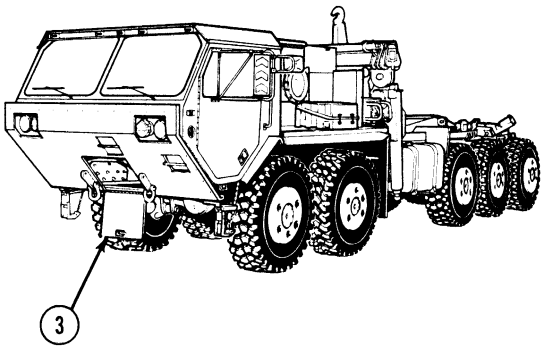

NOTE

- Remaining steps are performed inside cab.
- Valves are opened by turning counterclockwise.

(9) Open two valves (2) at right front of engine.

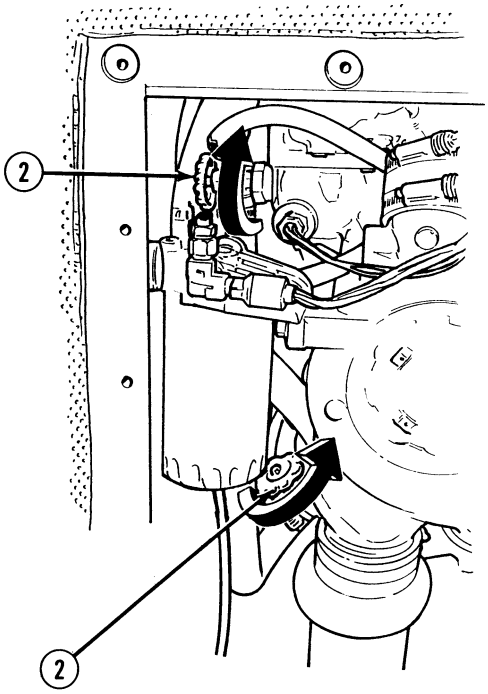

c. Follow-On Maintenance:

- Fill cooling system, (Para 2-9).
- Install heater compartment access panel, (Para 17-4).
- Connect batteries, (Para 7-87).
- Install cab engine access panel, (Para 17-24).
- Start engine and run until it reaches operating temperature, (TM 9-2320-364-10).
- Shut OFF engine, (TM 9-2320-364-10).
- Check for coolant leaks, (TM 9-2320-364-10).
- Remove wheel chocks, (TM 9-2320-364-10).

END OF TASK

19-15. HEATER HOSES AND FITTINGS REPLACEMENT.

This task covers:

a. Removal b. Installation c. Follow-On Maintenance

INITIAL SETUP

Tools and Special Tools
Tool Kit, General Mechanic's: Automotive (Item 74, Appendix G)
Pan, Drain (Item 46, Appendix G)

Material/Parts
Cable Ties (Item 25, Appendix C)
Sealing Compound (Item 72, Appendix C)
Locknut (2) (Item 106, Appendix F)

Equipment Condition
Engine OFF, (TM 9-2320-364-10)
Wheels chocked, (TM 9-2320-364-10)
Cab engine access panel removed, (Para 17-24)
Electric Control Box (ECB) right side panel removed, (Para 17-21)
Electronic Control Box (ECB) cover removed, (Para 17-22)

a. Removal.

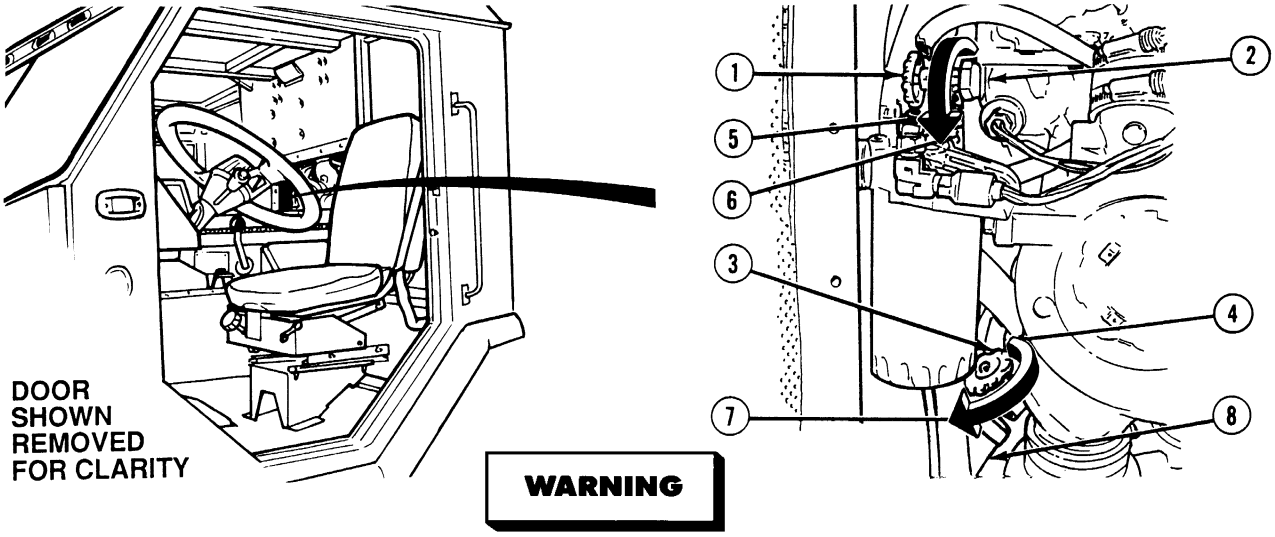

WARNING

Extreme care should be taken when removing heater hoses if water temperature gage reads above 180 degrees F (82 degrees C). Contact by steam or hot coolant may result in injury or death to personnel.

NOTE

- Remove cable ties as needed.
- Place drain pan under hose.
- Remaining steps are performed inside cab.
- Valves are closed by turning clockwise.

(1) Close heater coolant shut off valve (1) on thermostat housing (2).

(2) Close heater coolant shut off valve (3) on oil cooler (4).

(3) Remove hose clamp (5) and return hose (6) from heater coolant shut off valve (1).

(4) Remove hose clamp (7) and supply hose (8) from heater coolant shut off valve (3).

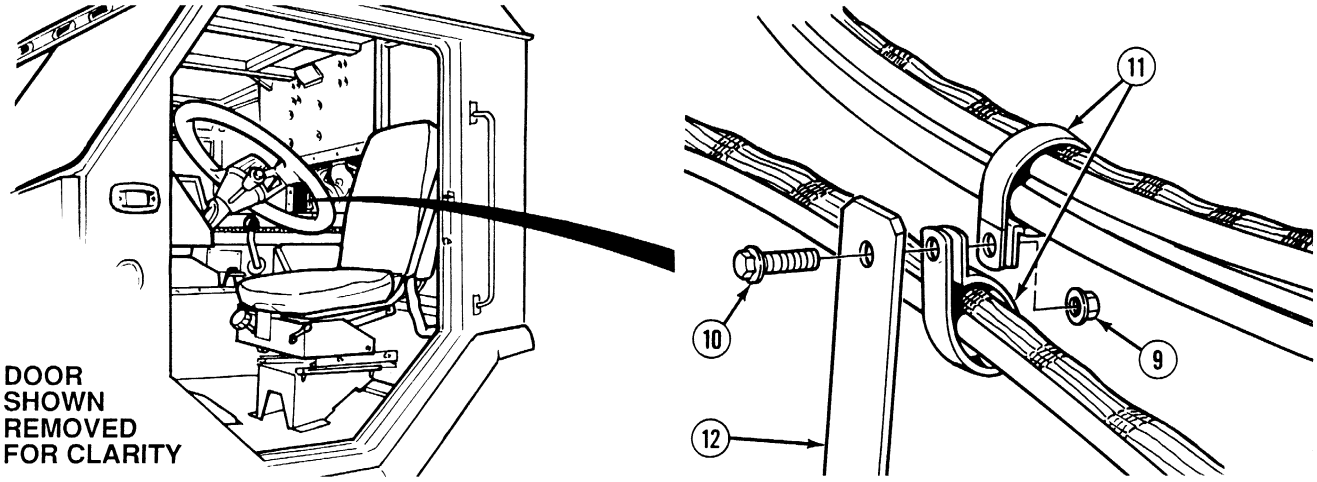

(5) Remove locknut (9), screw (10) and two cushion clips (11) from bracket (12). Discard locknut.

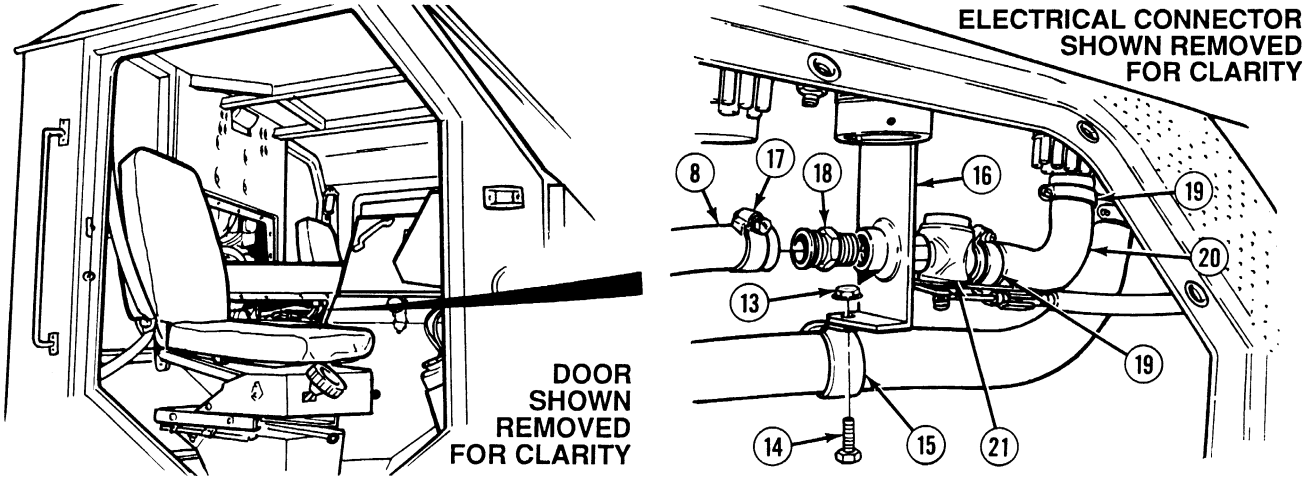

(6) Remove locknut (13), screw (14) and cushion clip (15) from heater control valve bracket (16). Discard locknut.

(7) Remove hose clamp (17) and supply hose (8) from fitting (18).

(8) Remove fitting (18) from heater control valve bracket (16).

(9) Loosen two hose clamps (19) and remove supply hose (20) from heater control valve (21).

(10) Remove supply hose (20) from truck.

19-15. HEATER HOSES AND FITTINGS REPLACEMENT (CONT).

(11) Remove hose clamp (22) and return hose (6) from heater core (23).

(12) Remove return hose (6) from truck.

(13) Remove hose clamp (24) and supply hose (25) from heater core (23).

(14) Remove supply hose (25) from truck.

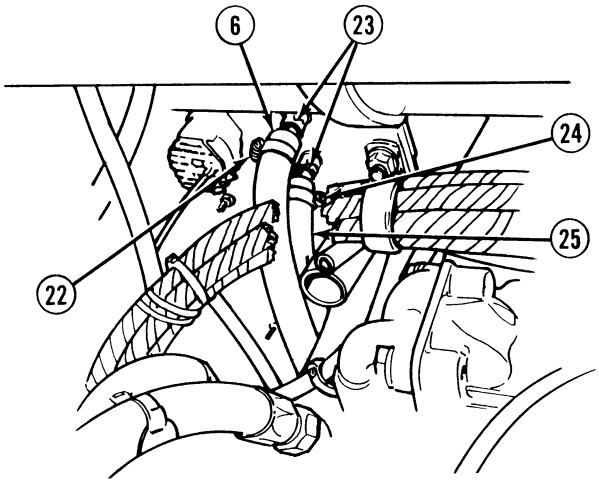

b. Installation.

(1) Install supply hose (25) on heater core (23) with hose clamp (24).

(2) Install return hose (6) on heater core (23) with hose clamp (22).

(3) Install supply hose (20) on heater control valve (21) with two hose clamps (19).

WARNING

Adhesives, solvents, and sealing compounds can burn easily, can give off harmful vapors, and are harmful to skin and clothing. To avoid injury or death, keep away from open fire and use in a well-ventilated area. If adhesive, solvent, or sealing compound gets on skin or clothing, wash immediately with soap and water.

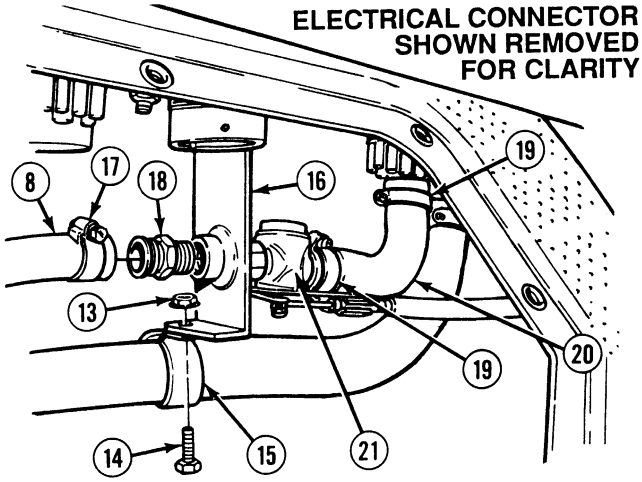

(4) Apply sealing compound on threads of fitting (18).

(5) Install fitting (18) in heater control valve bracket (16).

(6) Install supply hose (8) on fitting (18) with hose clamp (17).

(7) Install screw (14), cushion clip (15) and locknut (13) on heater control valve bracket (16).

(8) Install screw (10), two cushion clips (11) and locknut (9) on bracket (12).

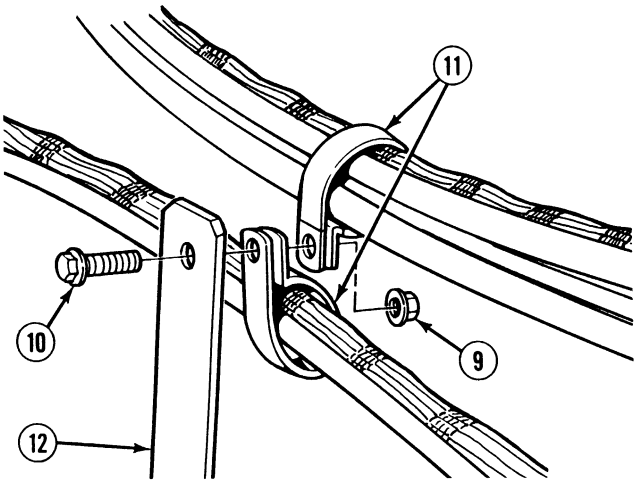

(9) Install supply hose (8) and hose clamp (7) on heater coolant shut off valve (3).

(10) Install return hose (6) and hose clamp (5) on heater coolant shut off valve (1).

(11) Open heater coolant shut off valve (3) on oil cooler (4).

(12) Open heater coolant shut off valve (1) on thermostat housing (2).

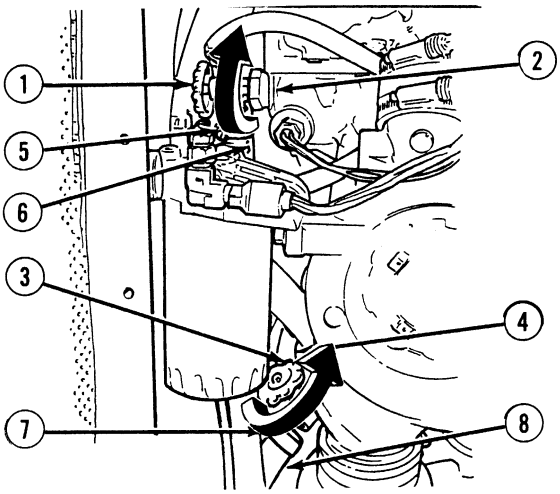

c. Follow-On Maintenance:

- Check radiator coolant level, (Para 6-2).
- Start engine, (TM 9-2320-364-10).
- Check hoses and fittings for coolant leaks, (TM 9-2320-364-10).
- Shut OFF engine, (TM 9-2320-364-10).
- Install Electronic Control Box (ECB) right side panel, (Para 17-21).
- Install Electronic Control Box (ECB) cover, (Para 17-22).
- Install cab engine access panel, (Para 17-24).
- Remove wheel chocks, (TM 9-2320-364-10).

END OF TASK

19-16. FRESH AIR BOX REPLACEMENT.

This task covers:

a. Removal b. Installation c. Follow-On Maintenance

INITIAL SETUP

Tools and Special Tools
Tool Kit, General Mechanic's: Automotive (Item 74, Appendix G)

Materials/Parts
Tape, Foam (Item 92, Appendix C)
Nut, Push On (Item 217, Appendix F)

Personnel Required
Two

Equipment Condition
Engine OFF, (TM 9-2320-364-10)
Wheels chocked, (TM 9-2320-364-10)
Heater assembly removed, (Para 19-12)

a. Removal.

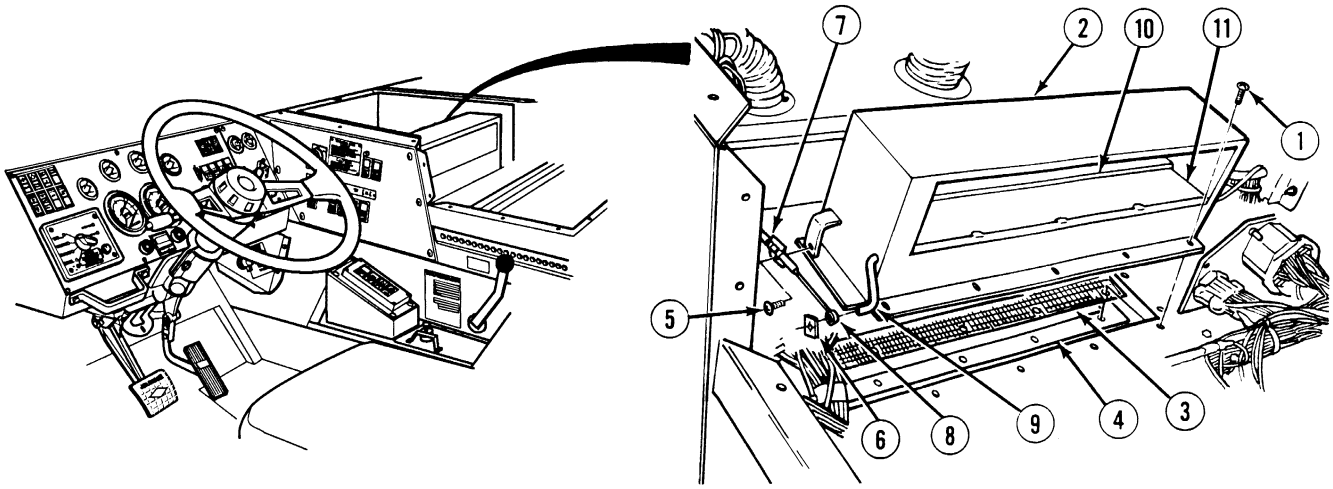

NOTE

Screen will fall when removed.

(1) Remove 14 screws (1) from fresh air box (2), screen (3) and deflector plate (4).

(2) Remove screw (5), clip (6), push on nut (7) and cable (8) from fresh air box (2) and actuator rod (9). Discard push on nut.

NOTE

Perform Step (3) if foam tape is damaged.

(3) Remove and discard foam tape (10) from fresh air plate (11).

b. Installation.

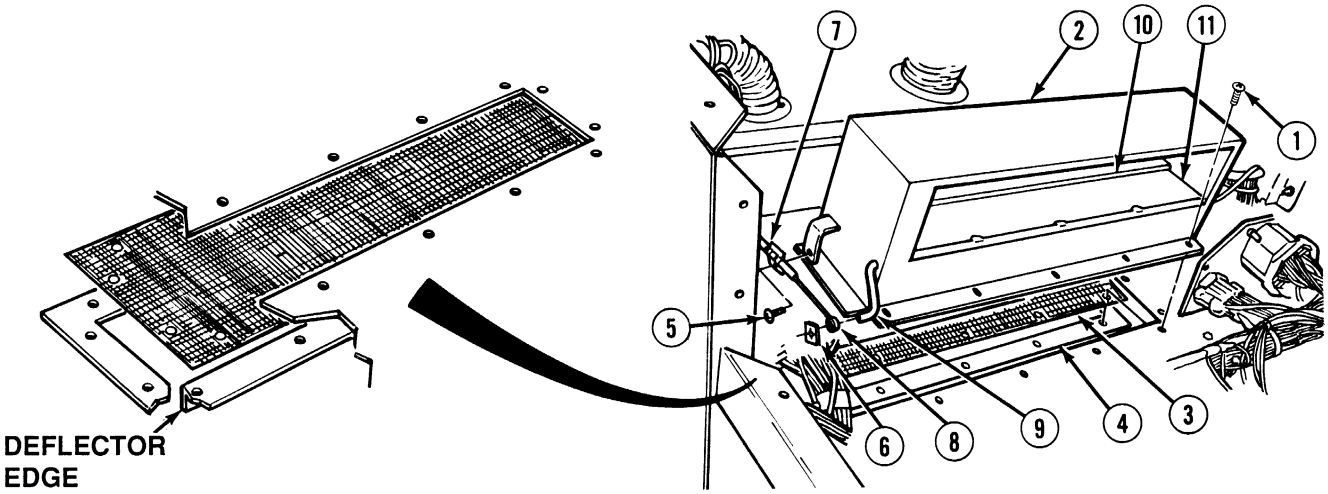

NOTE

Perform Step (1) if foam tape was removed.

(1) Install two 16 in. (41 cm) pieces foam tape (10) on fresh air plate (11).

NOTE

Ensure lever on heater panel is set to RECIRC.

(2) Install cable (8) on fresh air box (2) and actuator rod (9) with screw (5), clip (6) and heater clip (7).

NOTE

- Ensure that fresh air plate works properly. When heater panel is set to RECIRC, fresh air plate should be closed firmly against screen opening. When heater panel is set to F/A, fresh air plate should be fully open.
- Ensure that deflector edge is positioned as shown.

(3) With the aid of an assistant, hold screen (3) and deflector plate (4) and loosely install fresh air box (2) with 14 screws (1). Do not tighten screws.

NOTE

Fresh air box should be installed as far back as possible to allow for installation of heater assembly.

(4) While pulling fresh air box (2) toward rear as far as possible, tighten 14 screws (1) until snug.

c. Follow-On Maintenance:

- Install heater assembly, (Para 19-12).
- Remove wheel chocks, (TM 9-2320-364-10).

END OF TASK

19-17. HEATER CONTROL PANEL REPAIR.

This task covers:

a. Removal
b. Disassembly
c. Cleaning/Inspection
d. Assembly
e. Installation
f. Follow-On Maintenance

INITIAL SETUP

Tools and Special Tools
Tool Kit, General Mechanic's: Automotive (Item 74, Appendix G)

Materials/Parts
Solution, Soap (Item 86, Appendix C)
Tags, Identification (Item 88, Appendix C)
Locknut (2) (Item 106, Appendix F)
Nut, Push On (2) (Item 217, Appendix F)
Screw Washer Assembly (3) (Item 308, Appendix F)

Equipment Condition
Engine OFF, (TM 9-2320-364-10)
Wheels chocked, (TM 9-2320-364-10)
Batteries disconnected, (Para 7-87)
Heater compartment access panel removed, (Para 17-4)
Electrical Control Box (ECB) right side panel removed, (Para 17-21)

a. Removal.

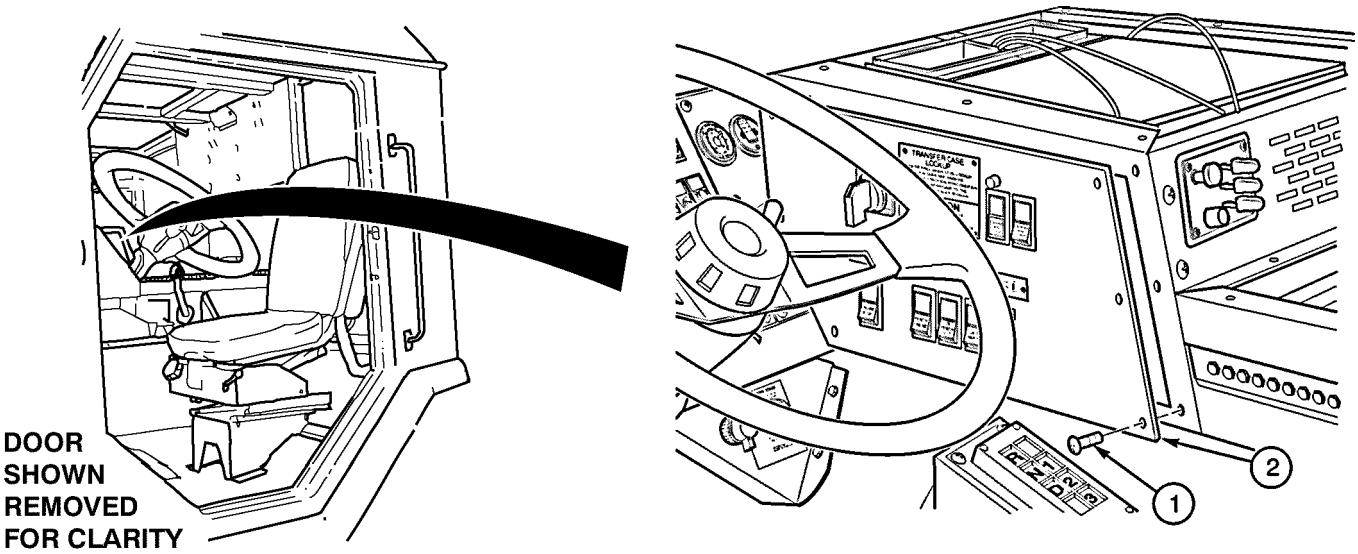

CAUTION

Use care not to pull wiring away from switches when removing switch panel. Damage to equipment may occur.

NOTE

Tag and mark wires prior to removal.

(1) Remove six screws (1) and lay switch panel (2) to side.

(2) Disconnect connector (3) from connector (4).

(3) Remove four screws (5) and pull heater control panel (6) out from heater compartment (7).

(4) Remove lamp socket (8) from heater panel (6).

(5) Remove lamp (9) from lamp socket (8).

(6) Remove wires 1082, red, brown and orange (10) from switch (11).

(7) Loosen screw (12) and remove knob (13) from switch (11).

(8) Remove nut (14) and switch (11) from heater control panel (6).

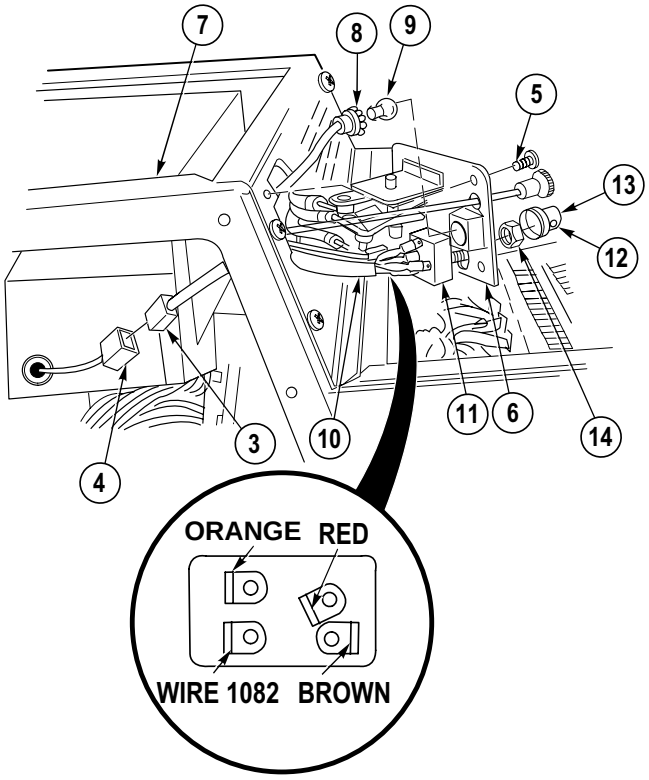

(9) Remove screw (15), nut (16) and DEF/CAB control cable (17) from lever (18).

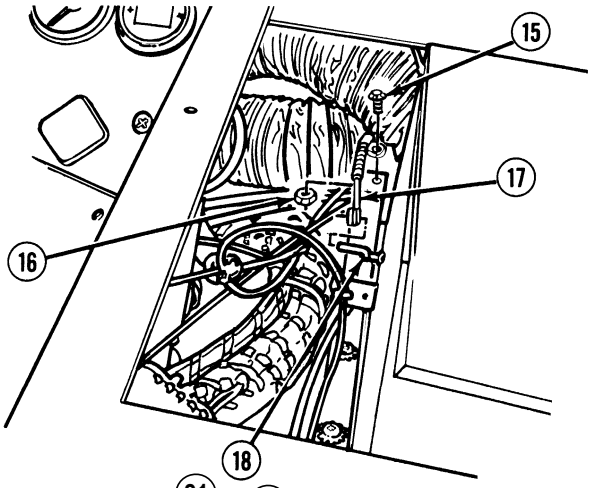

(10) Remove three screw and washer assemblies (19) from upper plenum (20). Discard screw and washer assemblies.

(11) Remove two screws (21), washer (22), lockwasher (23) and upper plenum (20) from heater (24). Discard lockwasher.

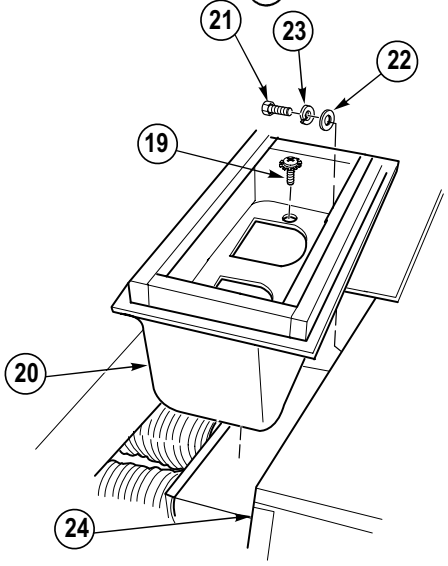

19-17. HEATER CONTROL PANEL REPAIR (CONT).

(12) Remove screw (25), lockwasher (26), washer (27), clip (28) and cabin/ventilator cable (29) from heater (24). Discard lockwasher.

(13) Remove two push on nuts (30) and cable (29) from damper (31). Discard push on nuts.

(14) Remove nut (32) and lockwasher (33) from cabin/ventilator cable (29). Discard lockwasher.

(15) Remove cable (29) from control bracket (6).

(16) Remove lockwasher (33) from cabin/ventilator cable (29). Discard lockwasher.

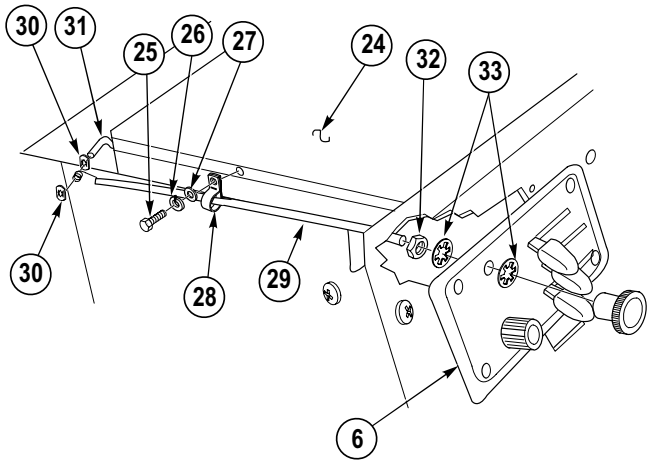

(17) Loosen screw (34) and remove MC1 connector (35) from connector (36).

(18) Loosen screw (37) and remove MC2 connector (38) from connector (39).

(19) Remove two locknuts (40) and lower connector (39) from bracket (41). Discard locknuts.

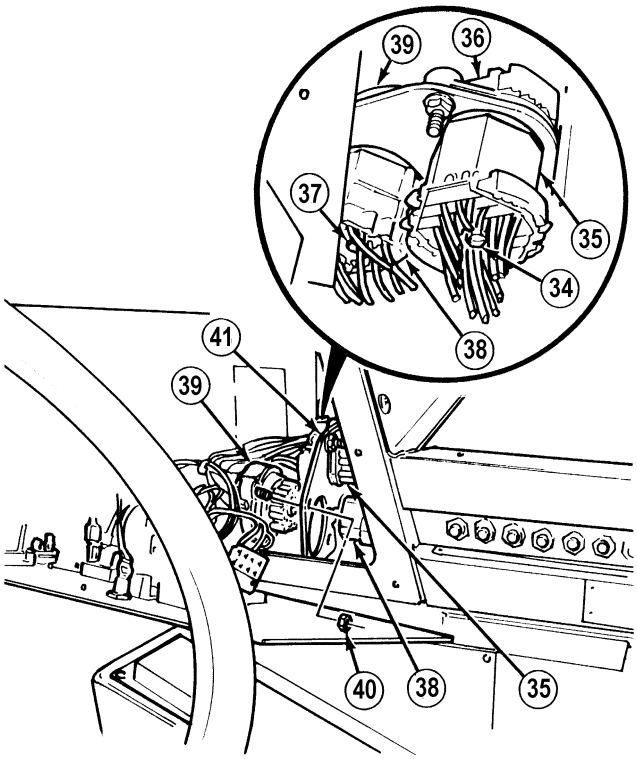

(20) Loosen clamp screw (42) and remove RECIRC/FA control cable (43) from clamp (44) and lever (45).

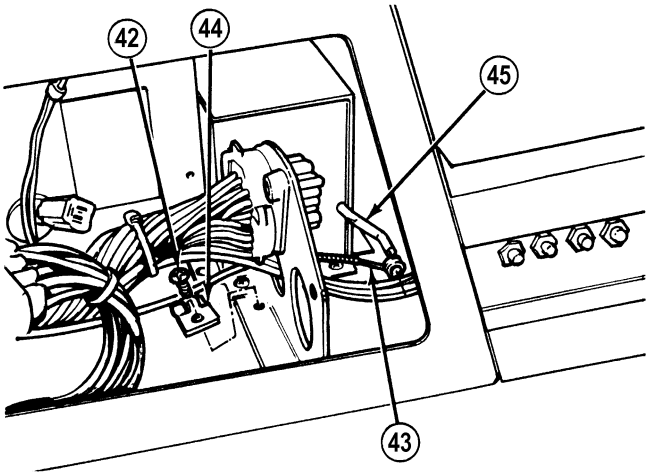

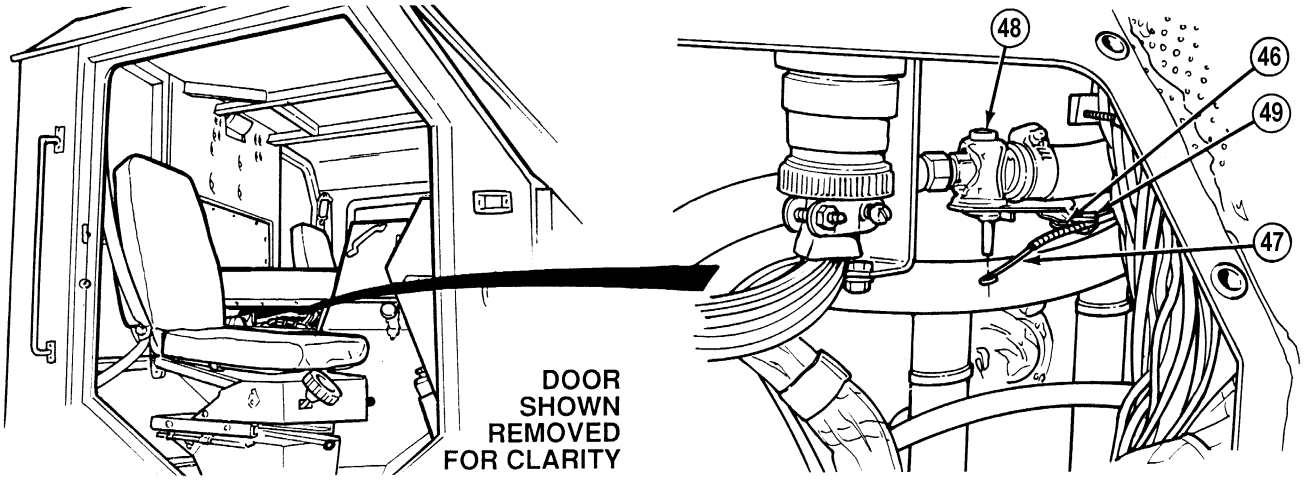

(21) Loosen clamp screw (46) and remove OFF/HEAT control cable (47) from heater control valve (48) and clamp (49).

(22) Carefully pull OFF/HEAT control cable (47) through grommet (50).

(23) Remove heater control panel (6) with cables from heater compartment (7).

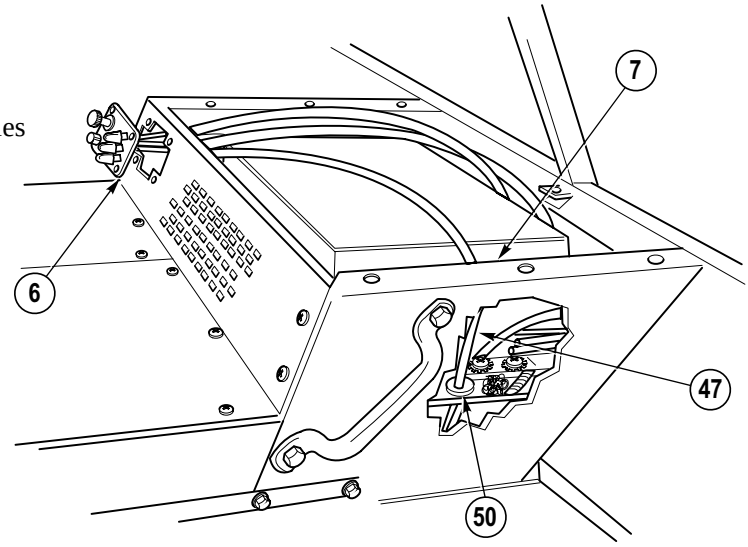

b. Disassembly.

NOTE

- All three knobs are removed the same way.
- Tag and mark cables before removal.

(1) Remove three screws (1) and knobs (2) from levers (3).

(2) Remove control plate (4) from control bracket (5).

(3) Remove three screws (6), clamps (7) and cables (8) from control bracket (5).

(4) Remove three clips (9) and cables (8) from levers (3). Discard clips.

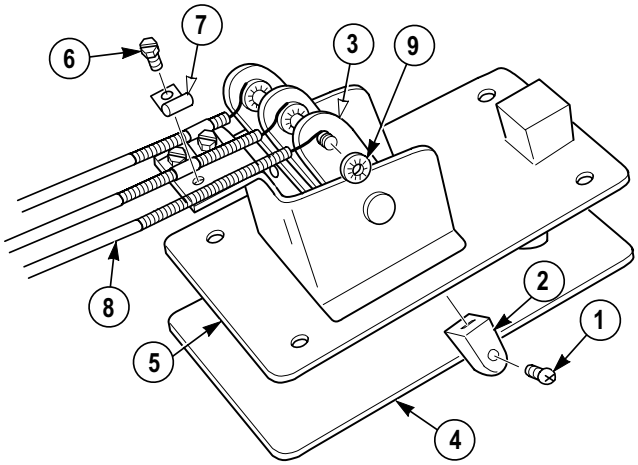

19-17. HEATER CONTROL PANEL REPAIR (CONT).

c. Cleaning/Inspection.

(1) Inspect all wires and cables for kinks.

(2) Inspect screws and nuts for stripped threads.

(3) Inspect rotary switch for loose or cracked terminals.

(4) Replace all damaged parts.

d. Assembly.

(1) Install three cables (8) and clips (9) on levers (3).

(2) Install three cables (8), clamps (7) and screws (6) on control bracket (5).

(3) Position control plate (4) on control bracket (5).

(4) Install three knobs (2) and screws (1) on levers (3).

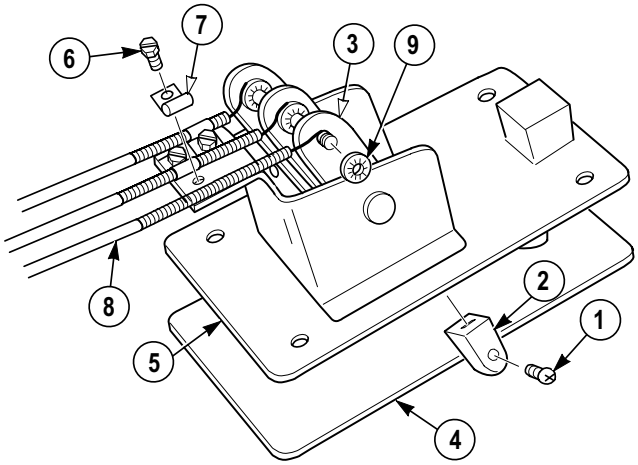

e. Installation.

(1) Position heater control panel (6) in heater compartment (7).

(2) Coat grommet (50) with soap solution.

(3) Install OFF/HEAT control cable (47) in grommet (50) on bottom right side of heater compartment (7).

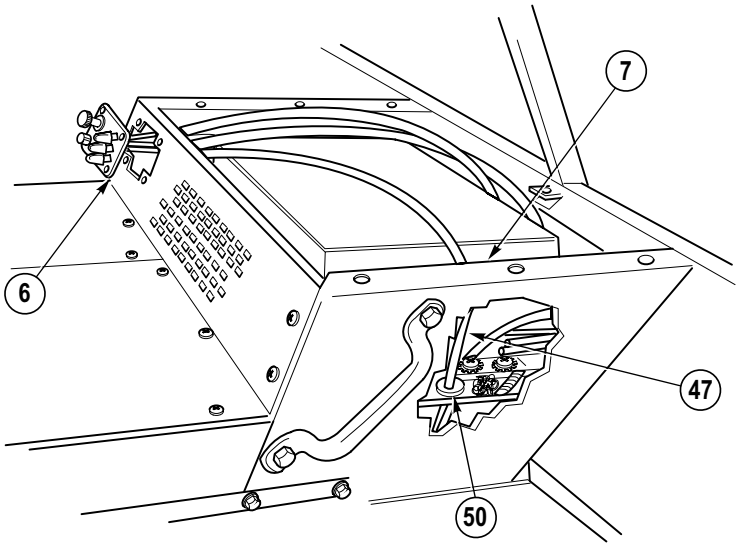

(4) Position OFF/HEAT cable (47) in clamp (49) and lever of heater control valve (48). Do not tighten clamp screw (46).

(5) Hold heater control valve (48) lever forward and set heater control panel OFF/HEAT slide control on HEAT. Back control off HEAT setting 1/4 in. (6 mm) and tighten clamp screw (46).

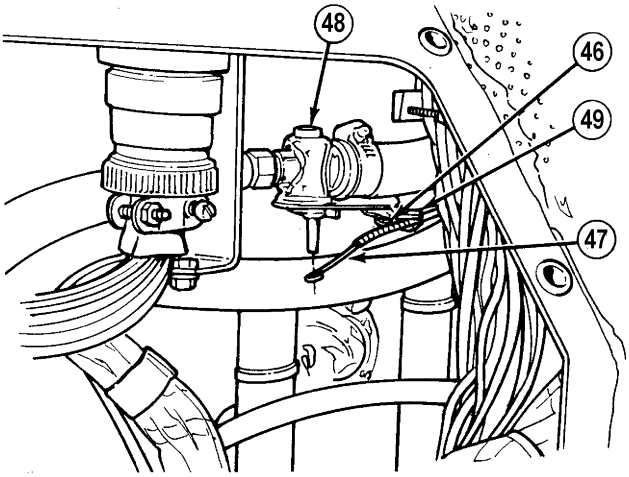

(6) Position RECIRC/FA control cable (43) on lever (45) and in clamp (44). Do not tighten clamp screw (42).

(7) Hold lever (45) forward and set heater control panel RECIRC/FA slide control on FA. Tighten clamp screw (42) on clamp (44) and cable (43).

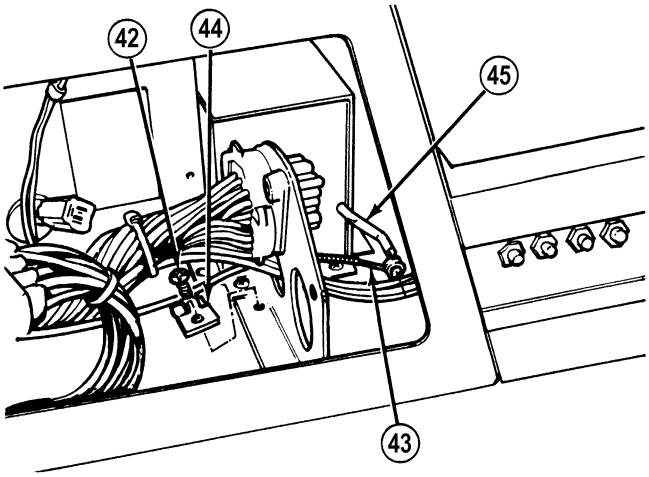

19-17. HEATER CONTROL PANEL REPAIR (CONT).

(8) Install connector (39) on bracket (41) with two locknuts (40).

(9) Install MC2 connector (38) on connector (39) with screw (37).

(10) Install MC1 connector (35) on connector (36) with screw (34).

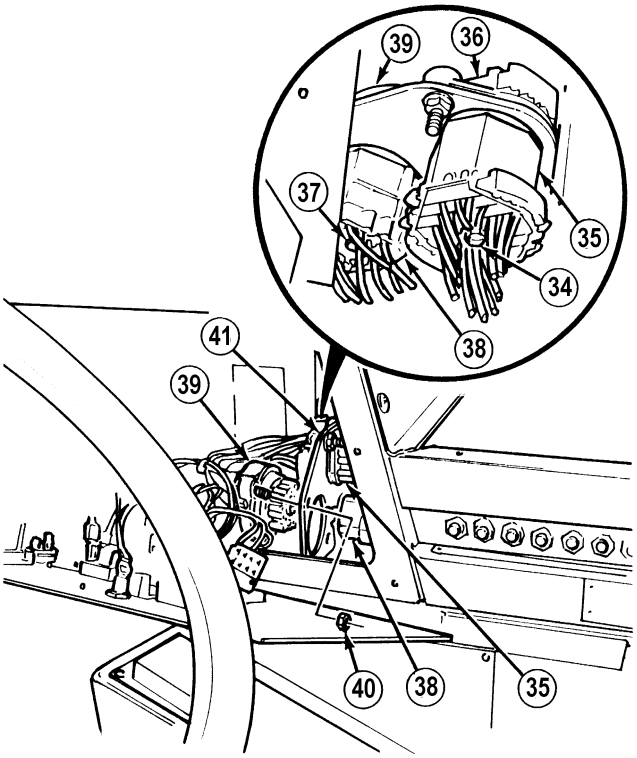

(11) Position DEF/CAB cable (17), nut (16) and screw (15) on lever (18). Do not tighten screw.

(12) Hold lever (18) forward and set heater control panel DEF/CAB slide control on CAB. Tighten screw (15) and nut (16) on DEF/CAB cable (17).

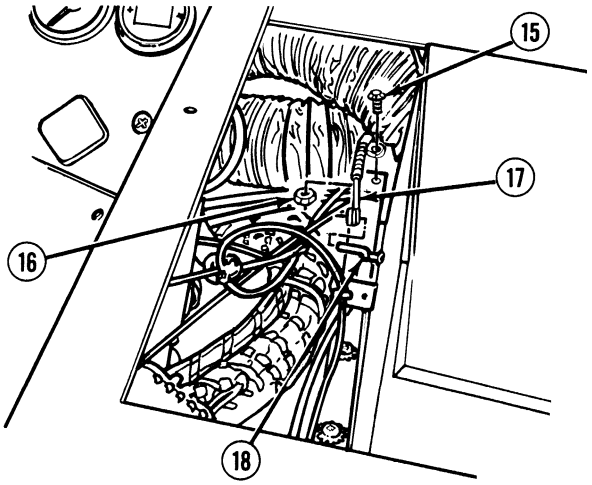

(13) Install nut (31) and lockwasher (32) on cabin/ventilator cable (29).

(14) Install cabin/ventilator cable (29) on control bracket (6) with lockwasher (32) and nut (31).

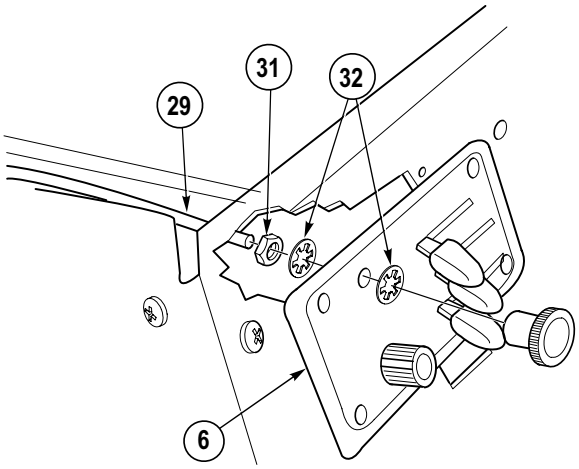

(15) Install switch (11) and nut (14) on heater control panel (6).

(16) Install wires 1082, red, brown and orange (10) on switch (11).

(17) Install knob (13) on switch (11) and tighten screw (12).

(18) Install lamp (9) in lamp socket (8).

(19) Install lamp socket (8) in heater control panel (6).

(20) Install heater control panel (6) on heater compartment (7) with four screws (5).

(21) Connect connector (4) to connector (3).

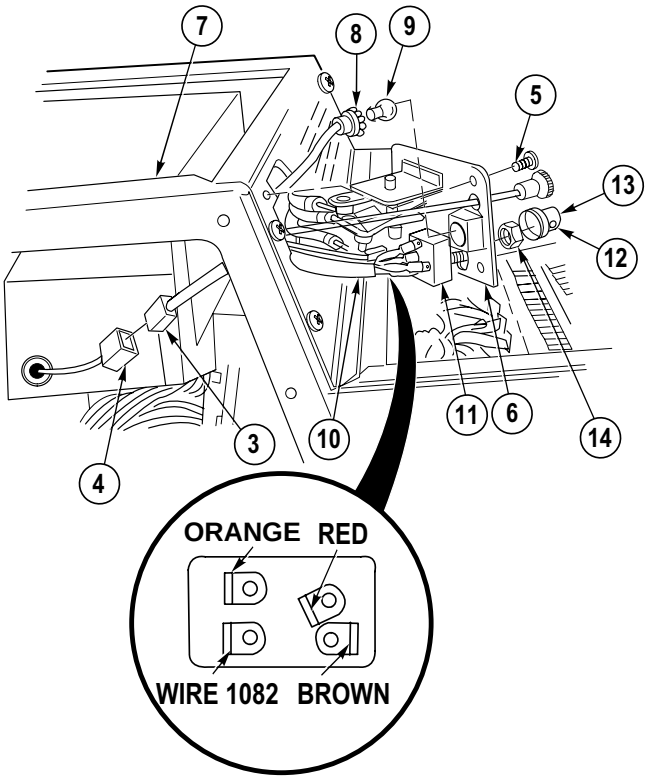

(22) Install cabin/ventilator cable (29) on damper (31) with two push on nuts (30).

(23) Install cabin/ventilator cable (29) on heater (24) with clip (28), screw (25), lockwasher (26) and washer (27).

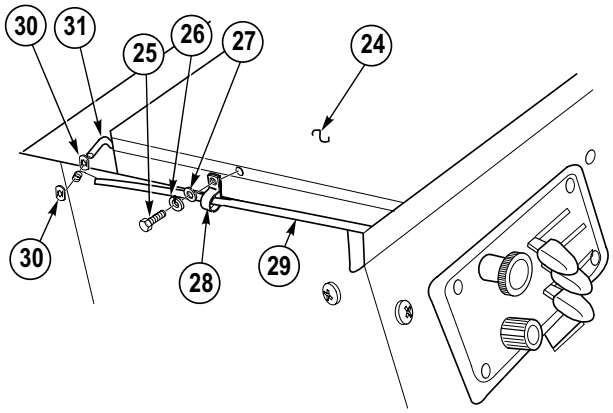

19-17. HEATER CONTROL PANEL REPAIR (CONT).

(24) Install upper plenum (20) in heater compartment (7) and heater (24) with three screw and washer assemblies (19), screw (21), lockwasher (23) and washer (22).

(25) Operate heater control panel controls for correct operation.

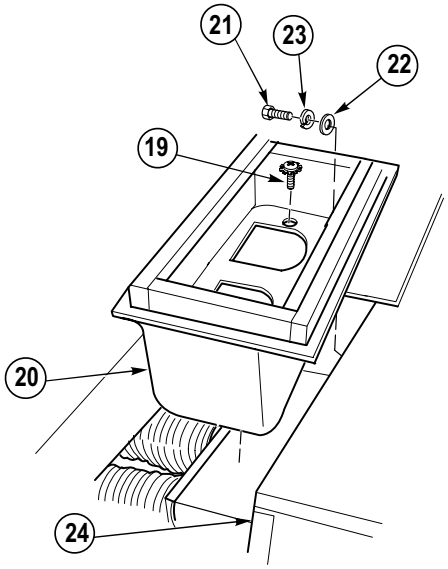

(26) Install switch panel (2) with six screws (1).

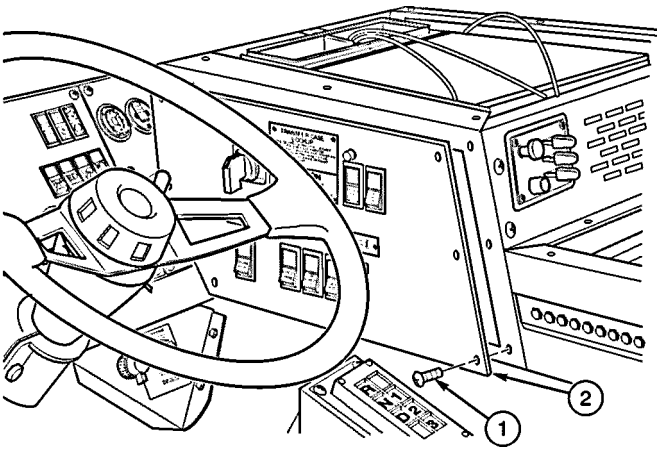

f. Follow-On Maintenance:

- Install heater compartment access panel, (Para 17-4).
- Install Electronic Control Box (ECB) right side panel, (Para 17-21).
- Connect batteries, (Para 7-87).
- Check heater operation, (TM 9-2320-364-10).
- Remove wheel chocks, (TM 9-2320-364-10).

END OF TASK

19-18. HEATER CONTROL VALVE REPLACEMENT.

This task covers:

a. Removal b. Installation c. Follow-On Maintenance

INITIAL SETUP

Tools and Special Tools
Tool Kit, General Mechanic's: Automotive (Item 74, Appendix G)
Drain Pan (Item 47, Appendix G)

Materials/Parts
Sealing Compound (Item 72, Appendix C)

Equipment Condition
Engine OFF, (TM 9-2320-364-10)
Wheels chocked, (TM 9-2320-364-10)
Cab engine access panel removed, (Para 17-24)
Electronic Control Box (ECB) right side panel removed, (Para 17-21)

a. Removal.

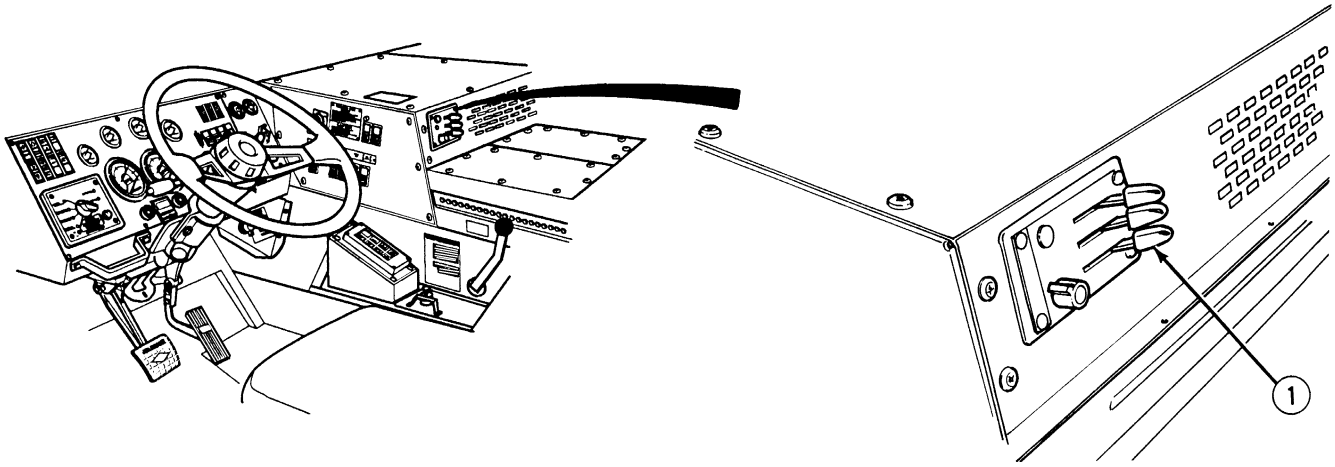

WARNING

Allow engine to cool prior to removal of valve to prevent burns and possible injury to personnel.

(1) Set heater control panel OFF/HEAT control (1) to HEAT position.

19-18. HEATER CONTROL VALVE REPLACEMENT (CONT).

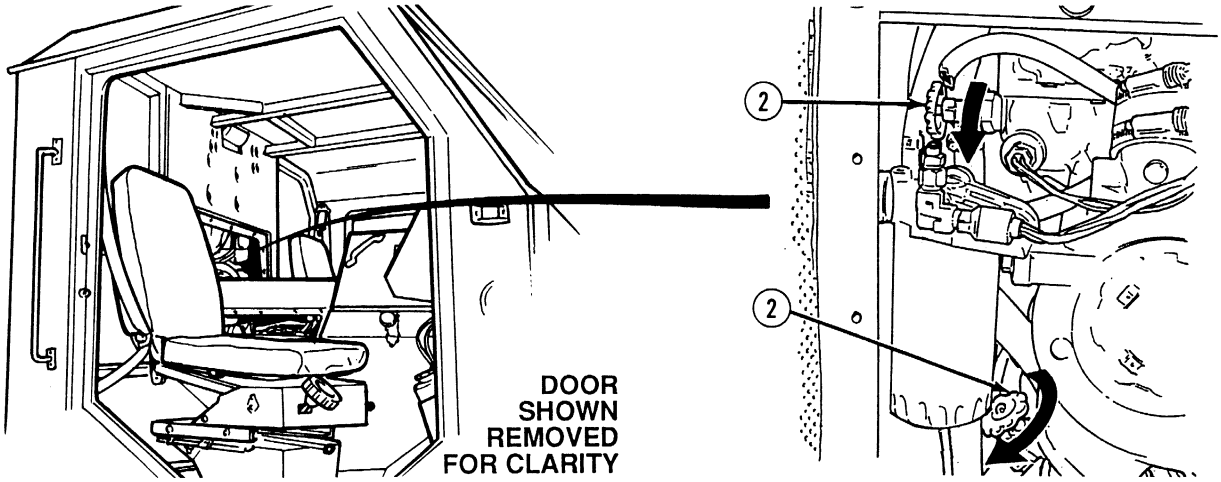

NOTE

- Remaining steps are performed inside cab.
- Valves are closed by turning clockwise.

(2) Close two valves (2) at right front of engine.

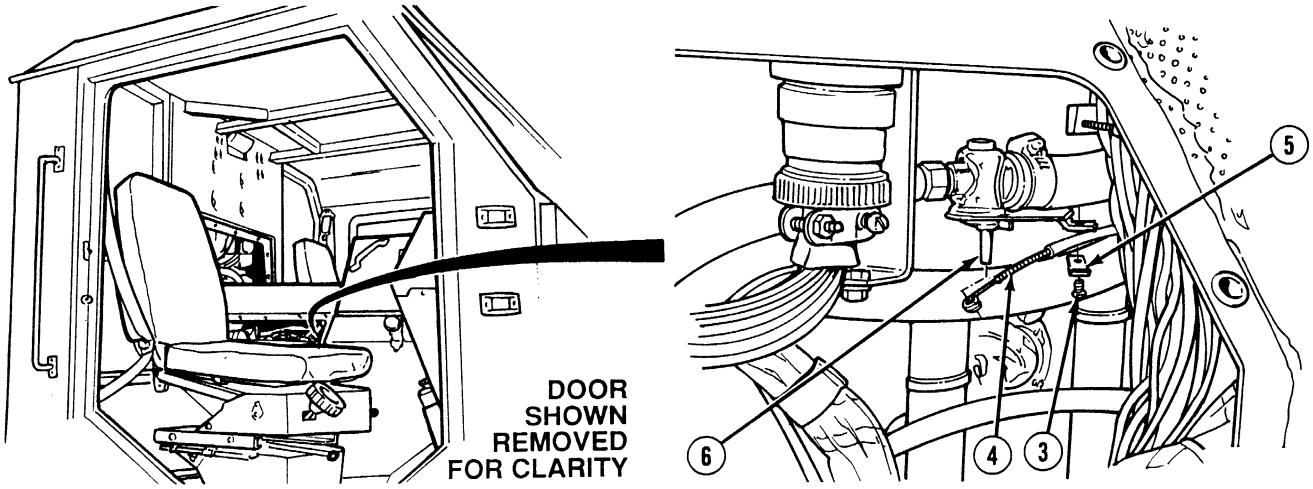

(3) Loosen clamp screw (3) and remove control cable (4) from clamp (5) and valve lever (6).

WARNING

Do not remove heater hoses when engine is hot; steam and hot coolant can escape and may cause injury to personnel.

(4) Position drain pan under valve (7).

(5) Loosen clamp (8) and remove hose (9) from valve (7).

(6) Remove heater control valve (7) from fitting (10).

b. Installation.

WARNING

Adhesives, solvents, and sealing compounds can burn easily, can give off harmful vapors, and are harmful to skin and clothing. To avoid injury or death, keep away from open fire and use in a well-ventilated area. If adhesive, solvent, or sealing compound gets on skin or clothing, wash immediately with soap and water.

(1) Apply sealing compound on heater control valve (7).

NOTE

Lever must be on bottom of valve when valve is installed.

(2) Install heater control valve (7) in fitting (10).

(3) Install heater hose (9) with clamp (8) on heater control valve (7). Tighten clamp securely.

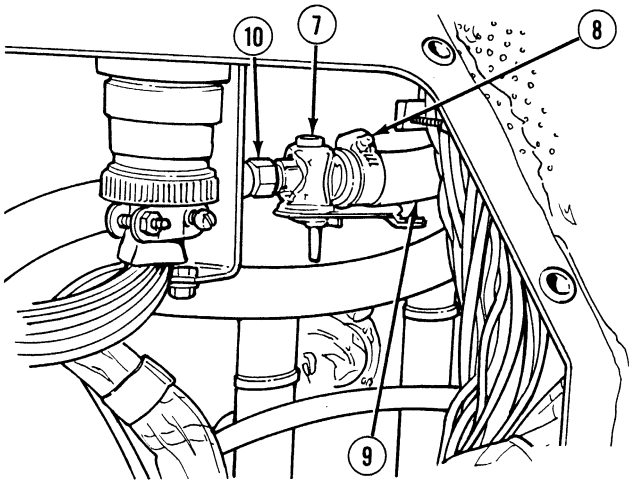

(4) Open two valves (2) at right front of engine.

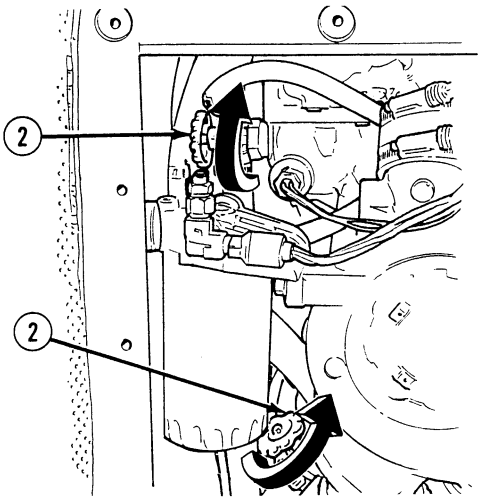

19-18. HEATER CONTROL VALVE REPLACEMENT (CONT).

(5) Set heater control panel OFF/HEAT control (1) to OFF position.

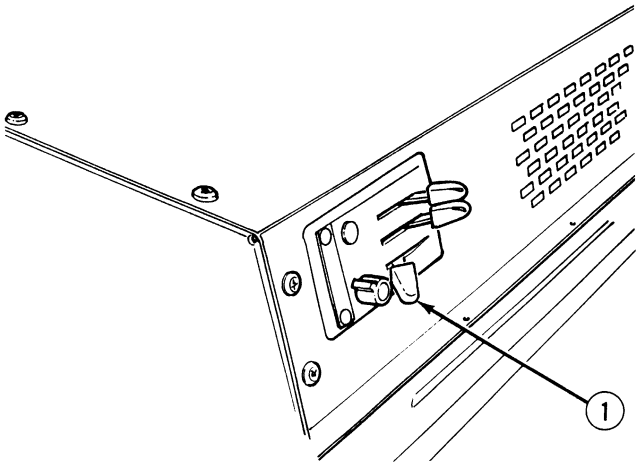

(6) Pull heater control valve lever (6) rearward against stop.

(7) Install cable (4) on valve lever (6) while keeping lever in rearward position.

(8) Install cable (4) in clamp (5) and tighten screw (3).

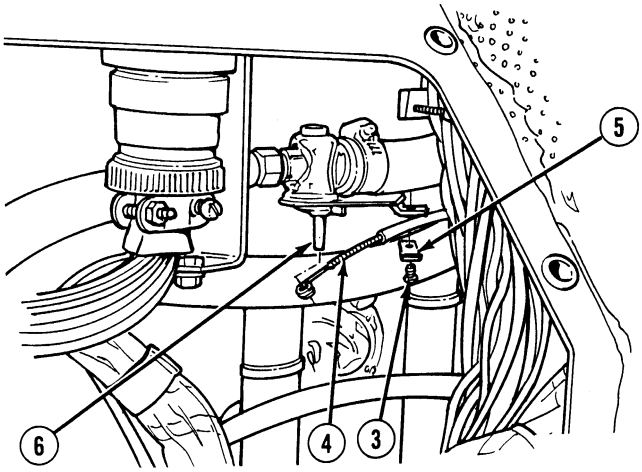

c. Follow-On Maintenance:

- Check coolant level, (TM 9-2320-364-10).
- Start engine, (TM 9-2320-364-10).
- Check for coolant leaks, (TM 9-2320-364-10).
- Shut OFF engine, (TM 9-2320-364-10).
- Install cab engine access panel, (Para 17-24).
- Install Electronic Control Box (ECB) right side panel, (Para 17-21).
- Remove wheel chocks, (TM 9-2320-364-10).

END OF TASK

19-19. HEATER/DEFROSTER TUBING REPLACEMENT.

This task covers:

a. Removal b. Installation c. Follow-On Maintenance

INITIAL SETUP

Tools and Special Tools
Tool Kit, General Mechanic's: Automotive (Item 74, Appendix G)

Materials/Parts
Adhesive Sealant (Item 3, Appendix C)
Cable Ties (Item 26, Appendix C)
Gasket Strip (Item 69, Appendix F)
Locknut (Item 140, Appendix F)
Lockwasher (2) (Item 159, Appendix F)
Nut, Push On (2) (Item 217, Appendix F)
Screw Washer Assemblies (6) (Item 308, Appendix F)

Equipment Condition
Engine OFF, (TM 9-2320-364-10)
Wheels chocked, (TM 9-2320-364-10)
Heater compartment access panel removed, (Para 17-4)
Instrument panel removed, (Para 7-13)

a. Removal.

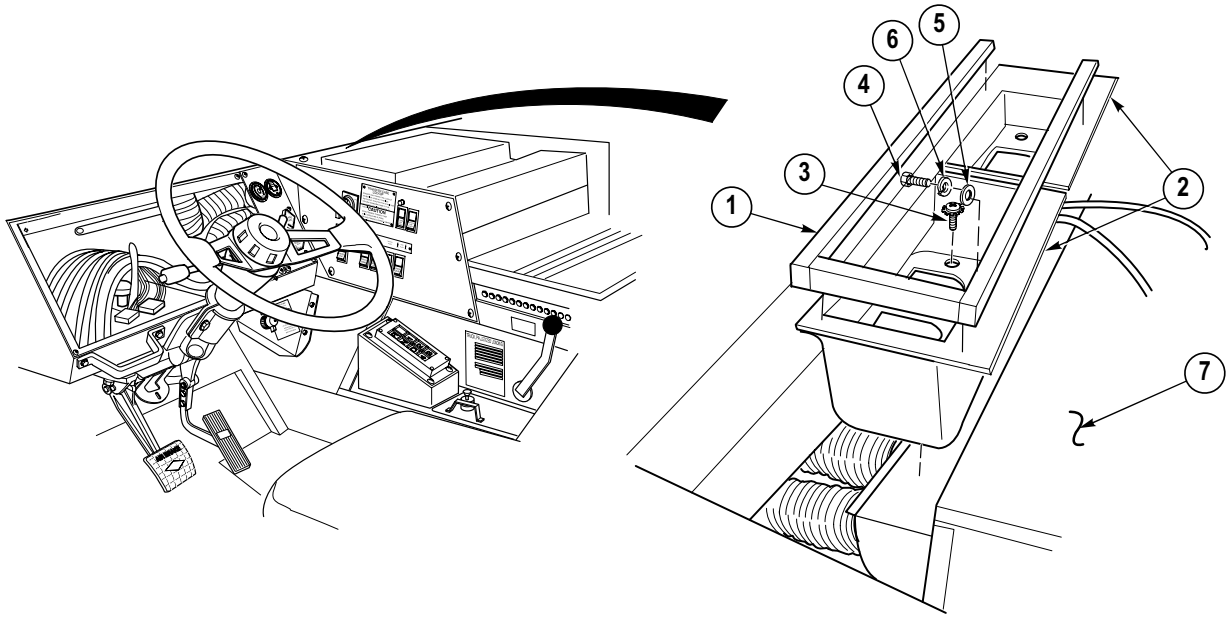

(1) Remove gasket strip (1) from upper plenums (2).

(2) Remove six screw washer assemblies (3) from upper plenums (2). Discard screw washer assemblies.

(3) Remove two screws (4), washers (5), lockwashers (6) and two upper plenums (2) from heater (7). Discard lockwashers.

19-19. HEATER/DEFROSTER TUBING REPAIR (CONT).

(4) Remove two push nuts (8) and cabin ventilator cable (9) from damper (10). Discard push nuts.

(5) Remove damper (10) from lower plenum (11).

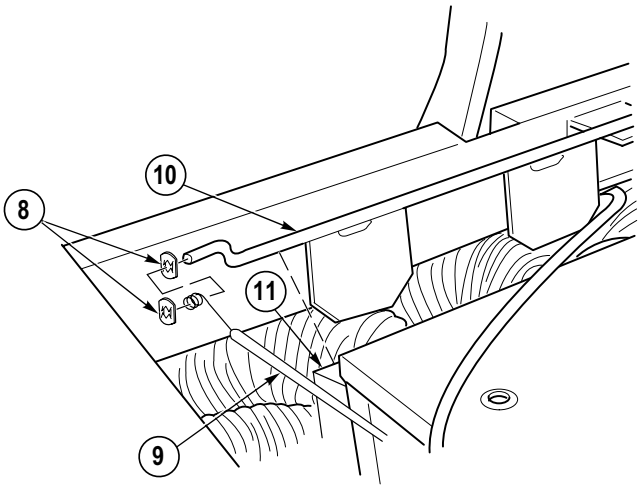

(6) Remove lower plenum (11) from front of heater (7) and rest lower plenum on top of heater.

(7) Remove four cable ties (12), defroster tubing (13), (14), (15) and (16) from lower plenum (11).

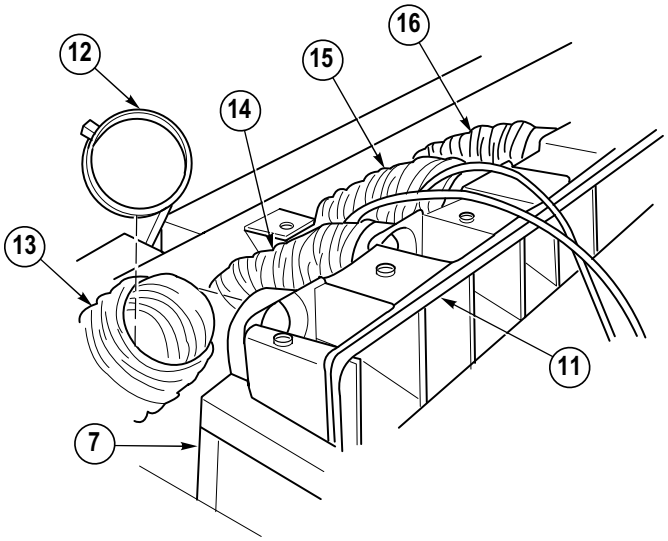

(8) Remove two cable ties (12), defroster tubing (14), (15) and remaining adhesive from defroster plenum (17).

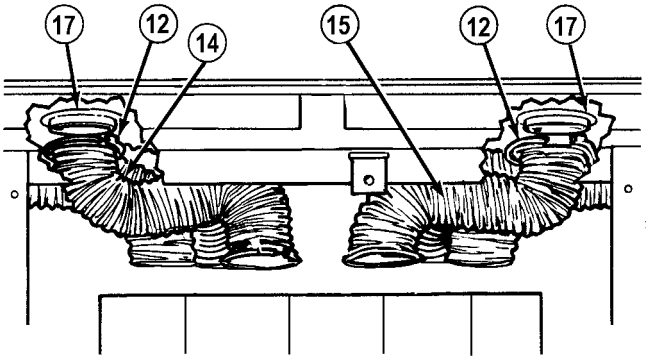

(9) Remove cable tie (12), left outer defroster tubing (13) and remaining adhesive from defroster plenum (17).

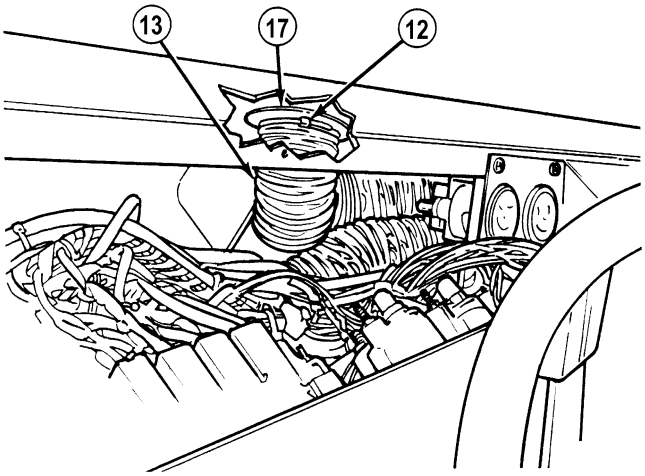

(10) Remove screws (18) and (19), bracket (20) and locknut (21) and pull plate (22) back. Discard locknut.

(11) Remove cable tie (12), right outer defrost tubing (16) and remaining adhesive from defroster plenum (17).

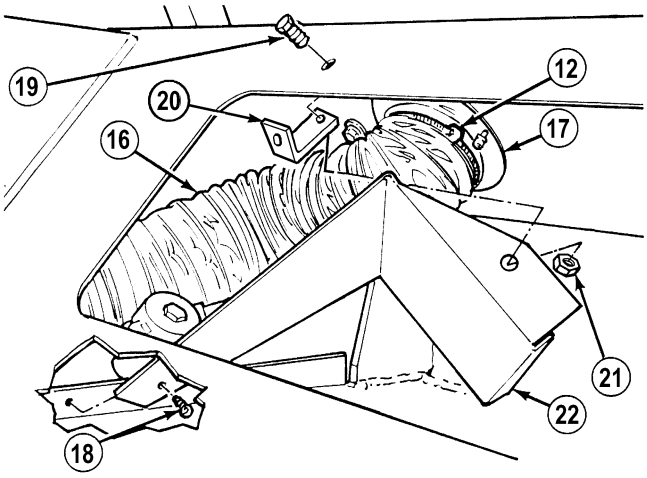

19-19. HEATER/DEFROSTER TUBING REPAIR (CONT).

(12) Remove cable tie (12), right cab heat tubing (23) and remaining adhesive from heater (7).

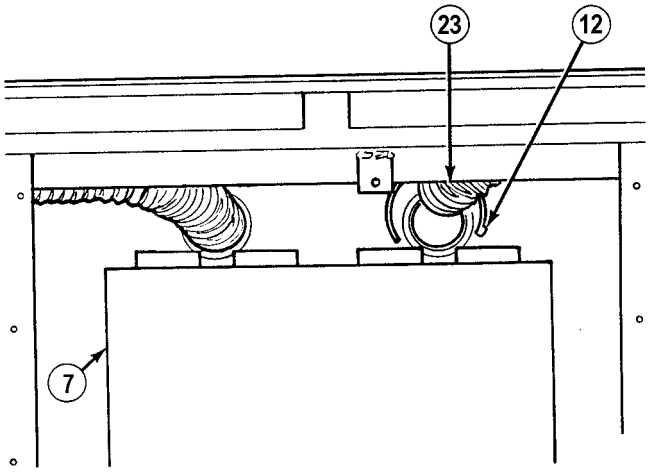

(13) Remove cable tie (12) and right cab heat tubing (23) from manifold tubing (24).

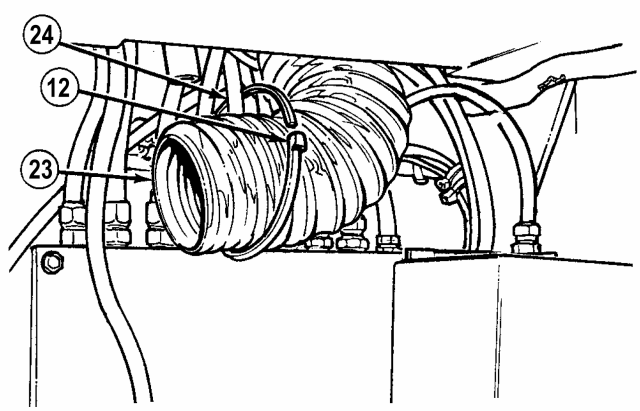

(14) Remove cable tie (12), tubing (25) and any remaining adhesive from heater (7).

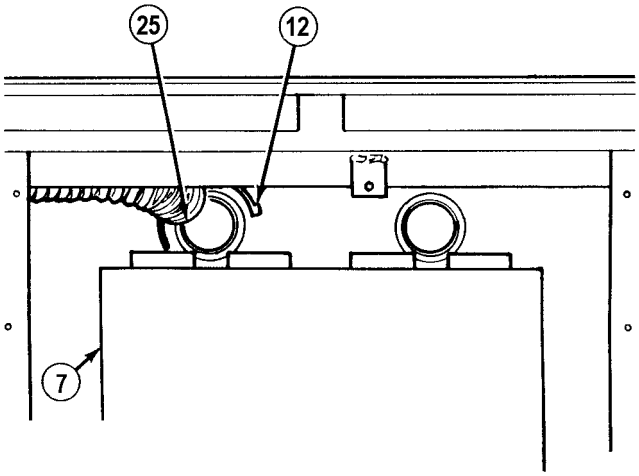

(15) Remove left cab heat tubing (25) from throttle bracket (26) and treadle valve (27).

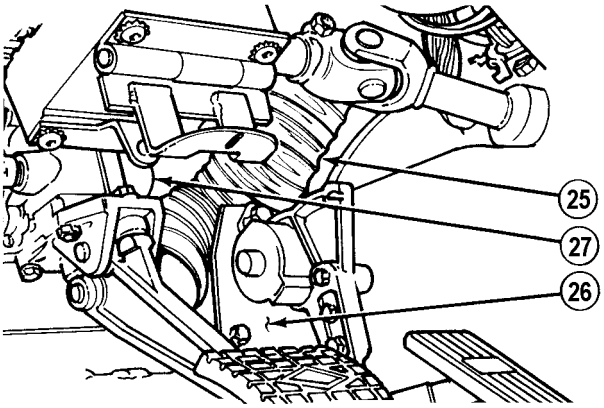

b. Installation.

WARNING

Adhesives, solvents, and sealing compounds can burn easily, can give off harmful vapors, and are harmful to skin and clothing. To avoid injury or death, keep away from open fire and use in a well-ventilated area. If adhesive, solvent, or sealing compound gets on skin or clothing, wash immediately with soap and water.

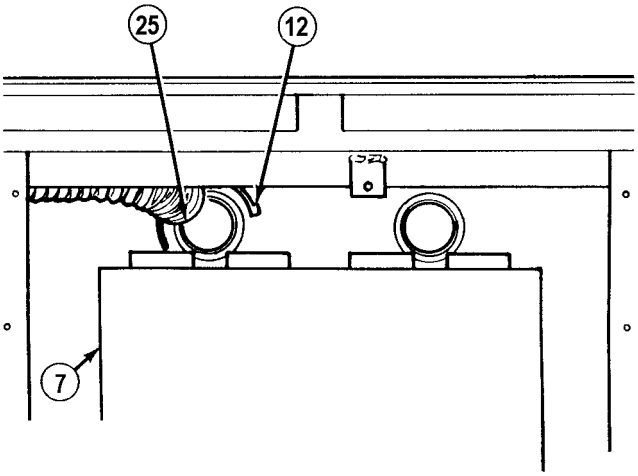

(1) Apply small, even bead of adhesive inside one end of left cab heat tubing (25) and install on heater (7) with cable tie (12).

(2) Route tubing (25) between throttle bracket (26) and treadle valve (27) pointing towards drivers area.

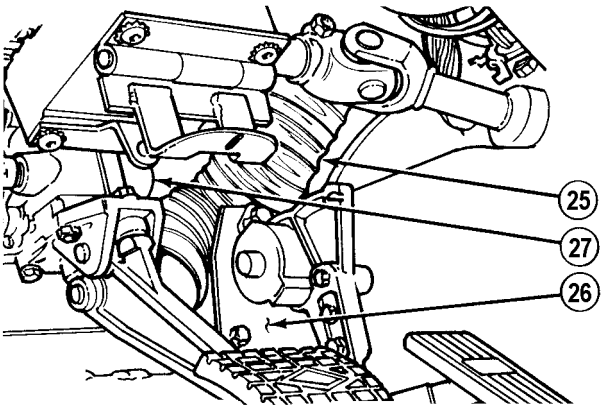

19-19. HEATER/DEFROSTER TUBING REPAIR (CONT).

(3) Install right cab heat tubing (23) to manifold tubing (24) with cable tie (12).

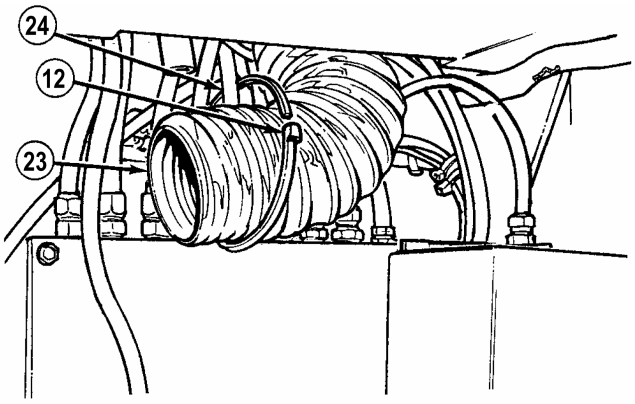

WARNING

Adhesives, solvents, and sealing compounds can burn easily, can give off harmful vapors, and are harmful to skin and clothing. To avoid injury or death, keep away from open fire and use in a well-ventilated area. If adhesive, solvent, or sealing compound gets on skin or clothing, wash immediately with soap and water.

(4) Apply small, even bead of adhesive inside right cab heat tubing (23) and install on heater (7) with cable tie (12).

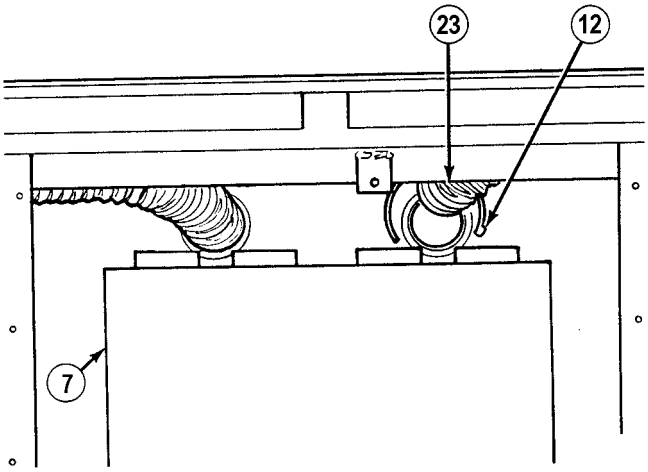

(5) Apply small, even bead of adhesive inside right outer defroster tubing (16) and install on plenum (17) with cable tie (12).

(6) Install plate (22) and bracket (20) using screw (19), locknut (21) and screw (18).

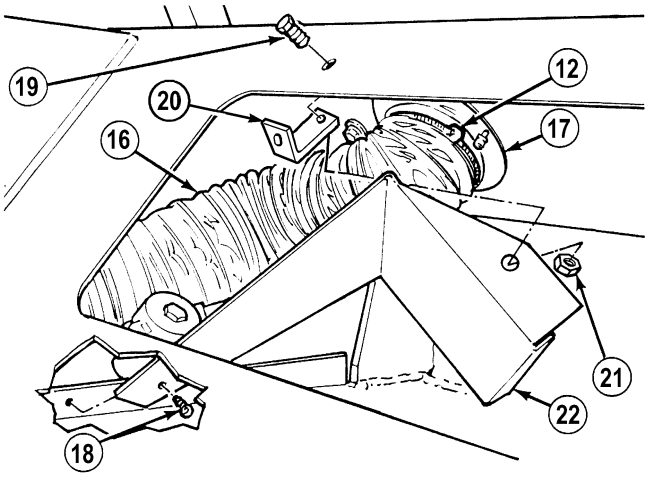

WARNING

Adhesives, solvents, and sealing compounds can burn easily, can give off harmful vapors, and are harmful to skin and clothing. To avoid injury or death, keep away from open fire and use in a well-ventilated area. If adhesive, solvent, or sealing compound gets on skin or clothing, wash immediately with soap and water.

(7) Apply small, even bead of adhesive inside left outer defroster tubing (13) and install on defroster plenum (17) with cable tie (12).

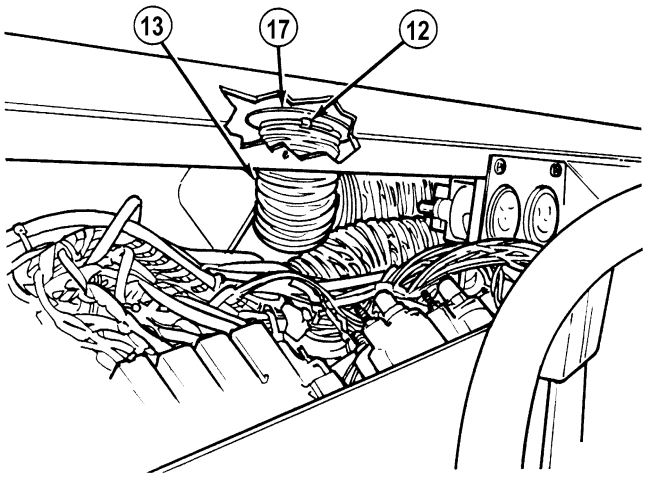

(8) Apply small, even bead of adhesive inside defroster tubing (14) and (15) and install on plenum (17) with cable ties (12).

NOTE

DEF/CAB and recipr/FA cables are positioned between inner defrost tubings and between upper plenums.

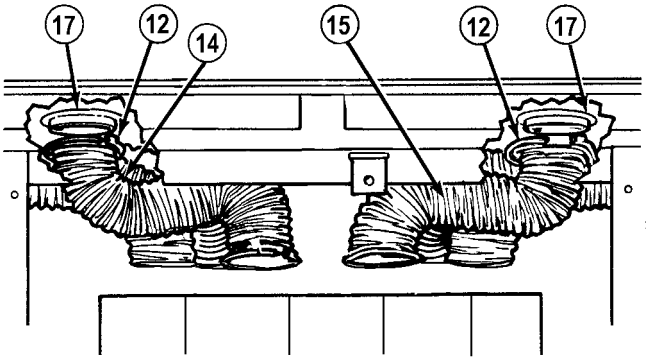

(9) Position lower plenum (11) on top of heater (7).

(10) Apply small, even bead of adhesive inside defroster tubing (13), (14), (15) and (16) and install on lower plenum (11) with cable ties (12).

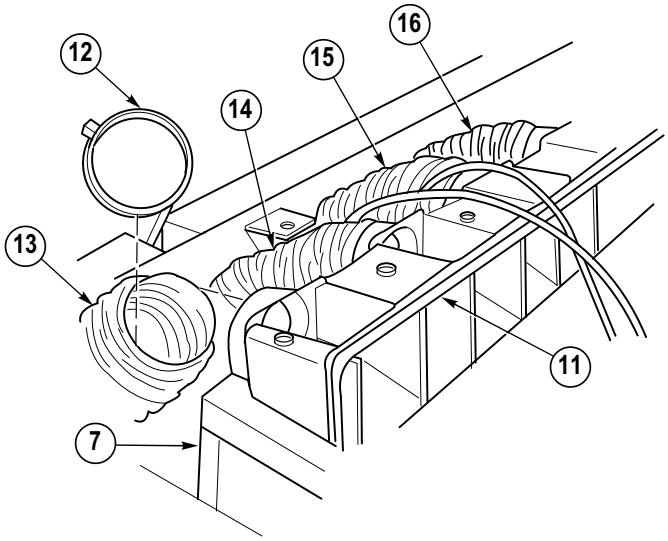

19-19. HEATER/DEFROSTER TUBING REPAIR (CONT).

(11) Position lower plenum (11) on heater (7).

(12) Install damper (10) in lower plenum (11).

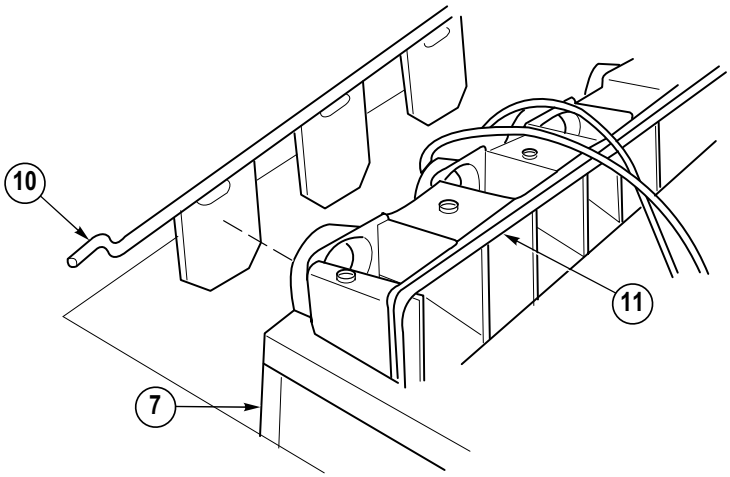

(13) Install cabin/ventilator cable (9) on damper (10) with two push nuts (8).

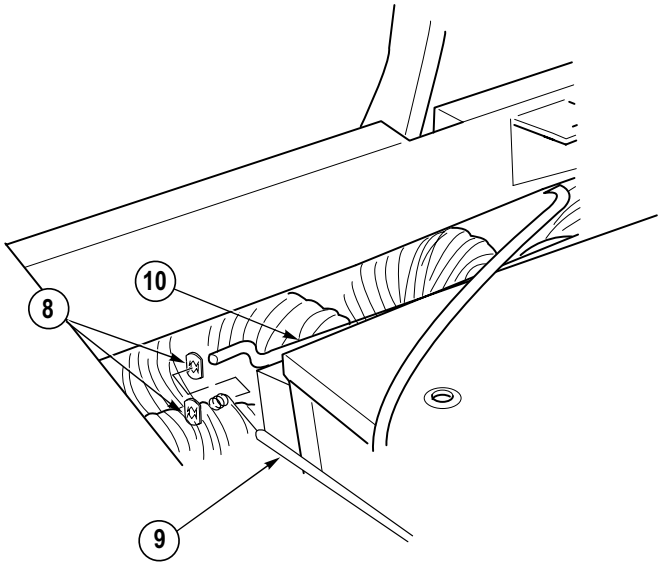

NOTE

DEF/CAB and RECIPR/FA cables are positioned between inner defrost tubings and between upper plenums.

(14) Install upper plenums (2) on lower plenum (11) and heater (7) with six screw washer assemblies (3) and two screws (4), washers (5) and lockwashers (6).

(15) Install gasket strip (1) on plenums (2).

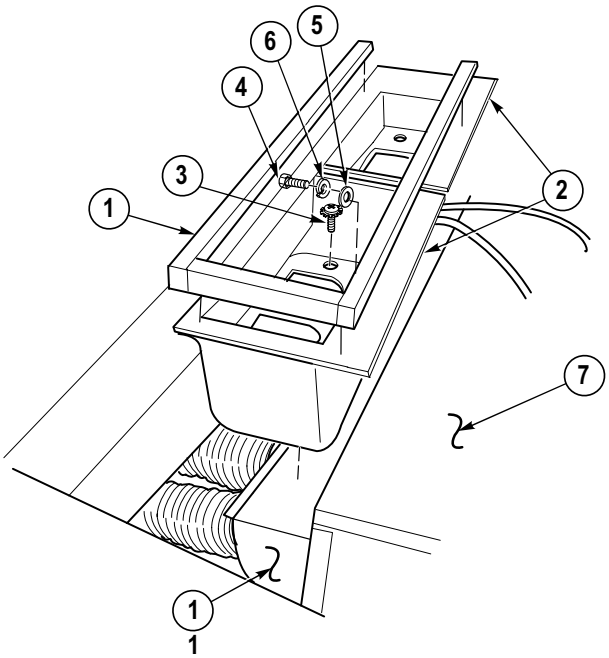

c. Follow-On Maintenance.

- Install instrument panel, (Para 7-13).
- Install heater compartment access panel, (Para 17-4).
- Check operation of heater and defroster, (TM 9-2320-364-10).
- Remove wheel chocks, (TM 9-2320-364-10).

END OF TASK

19-20. DATA PLATE REPLACEMENT.

This task covers:

a. Type 1 Data Plate Replacement
b. Type 2 Data Plate Replacement
c. Type 3 Data Plate Replacement
d. Follow-On Maintenance

INITIAL SETUP

Tools and Special Tools
Tool Kit, General Mechanic's: Automotive (Item 74, Appendix G)
Drill, Electric, Portable (Item 17, Appendix G)
Drill Set, Twist (Item 19, Appendix G)
Gloves, Chemical Oil Protective (Item 28, Appendix G)
Goggles, Industrial (Item 30, Appendix G)
Tool Kit, Blind Rivet (Item 72, Appendix G)

Material/Parts
Cloth, Cleaning (Item 31, Appendix C)
Solvent, Drycleaning (Item 87, Appendix C)

Equipment Condition
Engine OFF, (TM 9-2320-364-10)
Wheels chocked, (TM 9-2320-364-10)

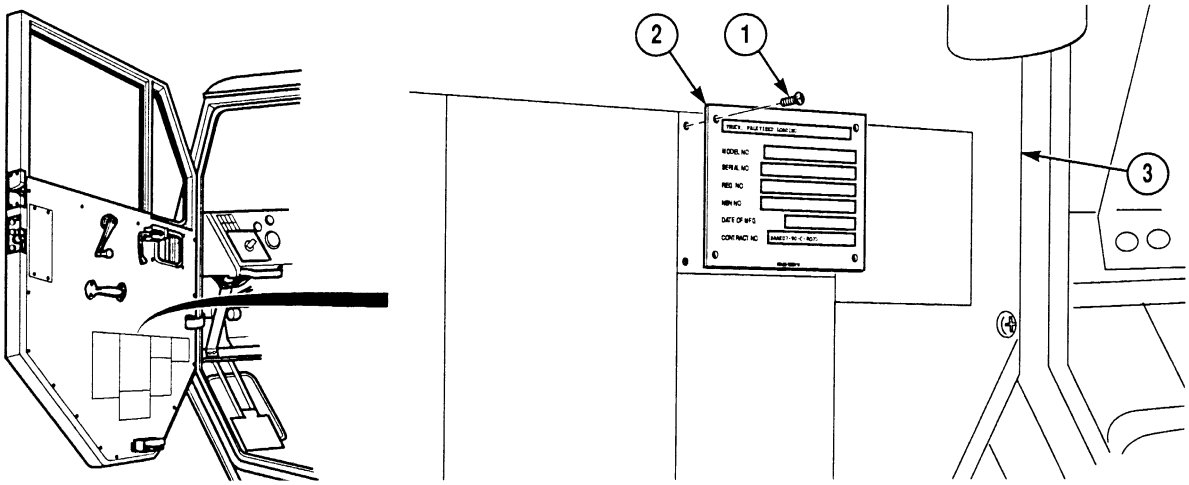

NOTE

- Subparagraphs **a.** through **c.** show all typical data plates used on the truck.
- Refer to TM 9-2320-364-10 for location of all data plates.

a. Type 1 Data Plate Replacement.

(1) *Removal.* Remove four screws (1) and data plate (2) from frame (3).

(2) *Installation.* Install data plate (2) on frame (3) with four screws (1).

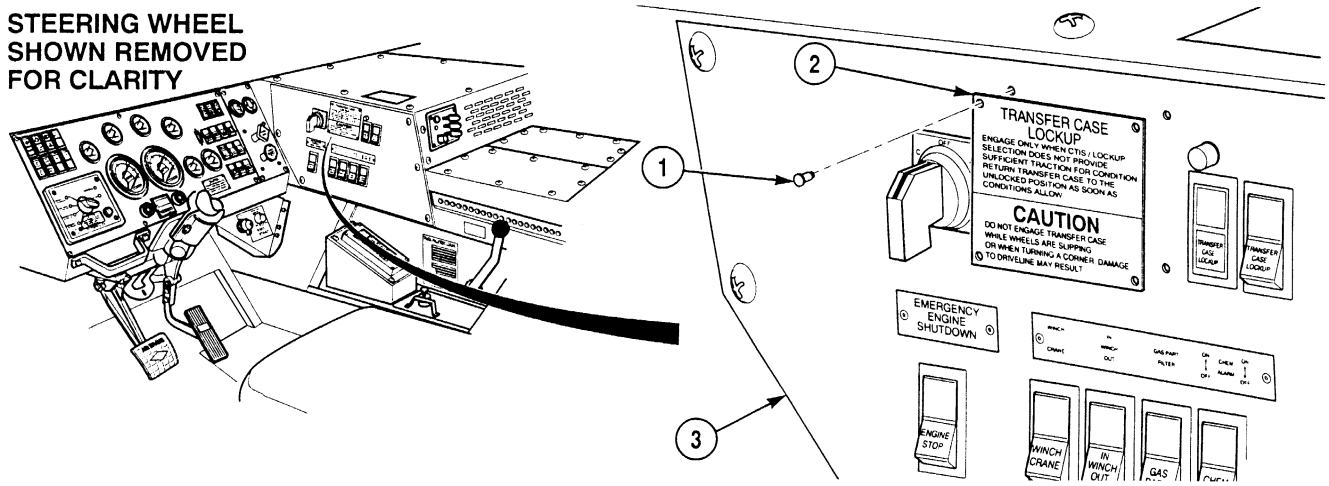

b. Type 2 Data Plate Replacement.

(1) *Removal.* Using a 1/8 in. drill bit, remove four rivets (1) and data plate (2) from frame (3). Discard rivets.

(2) *Installation.* Install data plate (2) on frame (3) with four rivets (1).

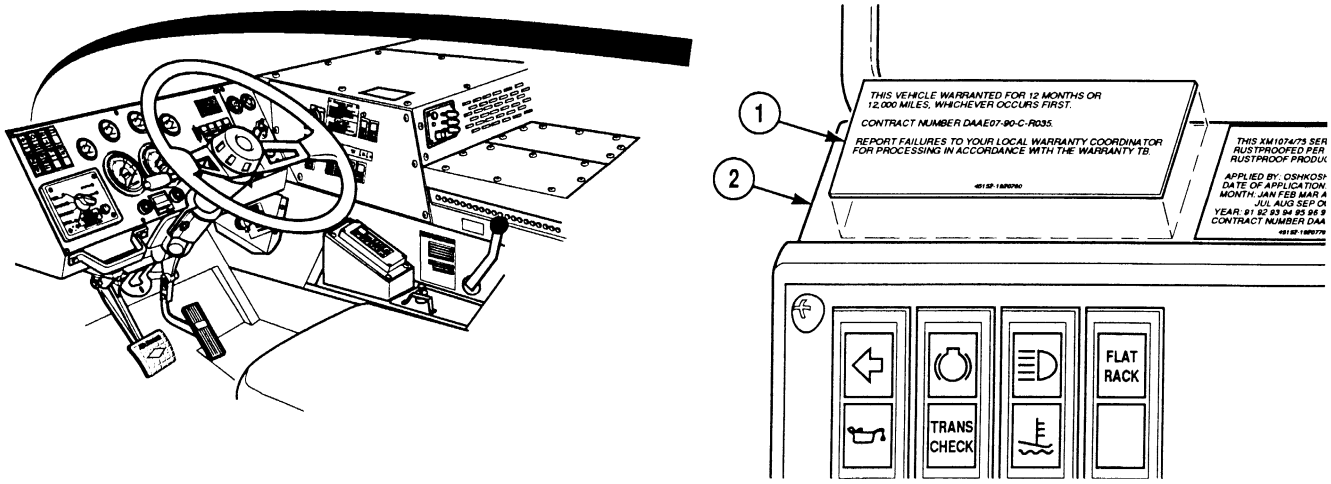

c. Type 3 Data Plate Replacement.

(1) *Removal.* Pry data plate (1) away from frame (2).

19-20. DATA PLATE REPLACEMENT (CONT).

(2) *Cleaning/Inspection.*

WARNING

- Drycleaning Solvent (P-D-680) is TOXIC and flammable. Wear protective goggles, face shield, and gloves; use only in a well-ventilated area; avoid contact with skin, eyes, and clothes, and do not breathe vapors. Keep away from heat or flame. Never smoke when using solvent. The flashpoint for Type II Drycleaning Solvent is 140 degrees F (60 degrees C) and Type III Drycleaning Solvent is 200 degrees F (93 degrees C). Failure to do so may result in injury or death to personnel.
- If personnel become dizzy while using cleaning solvent, immediately get fresh air and medical help. If solvent contacts skin or clothes, flush with cold water. If solvent contacts eyes, immediately flush eyes with water and get immediate medical attention.

(a) Make sure surface is clean of any dirt or debris.

(b) Clean with lint free cloth and drycleaning solvent.

(3) *Installation.* Peel paper off data plate (1) and place on frame (2).

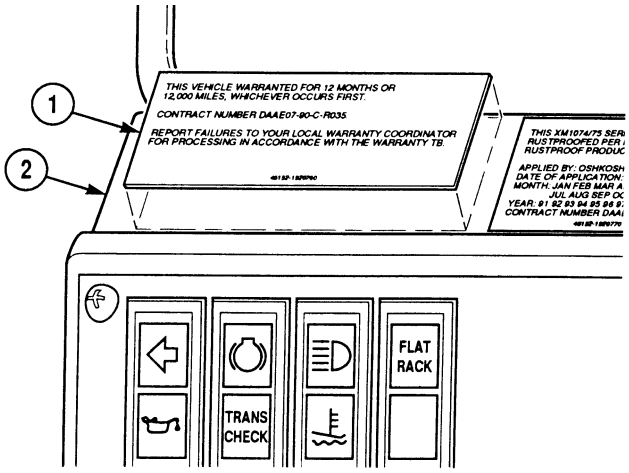

d. Follow-On Maintenance:

- Remove wheel chocks, (TM 9-2320-364-10).

END OF TASK

19-21. WEIGHT CLASSIFICATION SIGN REPLACEMENT.

This task covers:

a. Removal b. Installation c. Follow-On Maintenance

INITIAL SETUP

Tools and Special Tools
Tool Kit, General Mechanic's: Automotive (Item 74, Appendix G)

Materials/Parts
Lockwasher (2) (Item 180, Appendix F)

Equipment Condition
Engine OFF, (TM 9-2320-364-10)
Wheels chocked, (TM 9-2320-364-10)

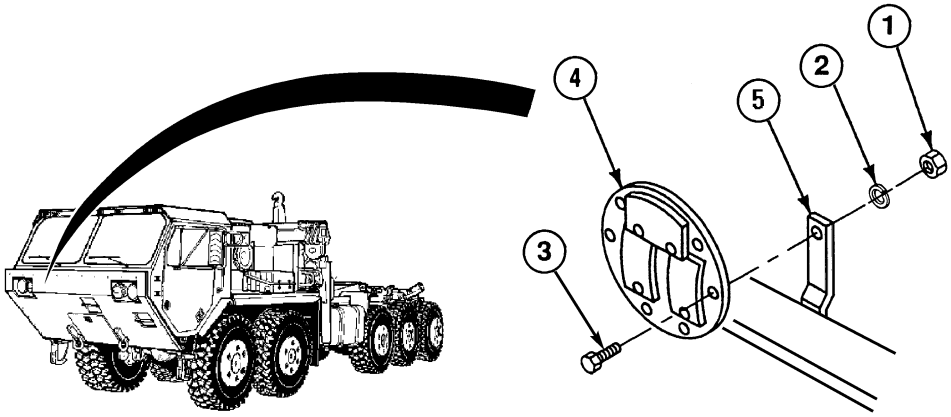

a. Removal. Remove two nuts (1), lockwashers (2), screws (3) and weight classification sign (4) from two brackets (5). Discard lockwashers.

b. Installation. Install weight classification sign (4) on two brackets (5) with screws (3), lockwashers (2), and nuts (1).

c. Follow-On Maintenance:

- Removal wheel chocks, (TM 9-2320-364-10).

END OF TASK

CHAPTER 20

HYDRAULIC SYSTEM MAINTENANCE

Para	Contents	Page
20-1	Introduction	20-1
20-2	Main Hydraulic Pump Driveshaft Repair	20-2
20-3	Main Hydraulic Hoses Replacement	20-9
20-4	Air-To-Oil Cooler Replacement	20-12
20-5	Fan Control Solenoid Valve Repair	20-15
20-6	High Pressure Hydraulic Filter Replacement	20-22
20-7	High Pressure Hydraulic Filter Head Assembly Replacement	20-24
20-8	High Pressure Hydraulic Filter Head Repair	20-26
20-9	Main Hydraulic Filter Replacement	20-28
20-10	Main Hydraulic Reservoir Filter Assembly Replacement	20-32
20-11	Main Hydraulic Reservoir Service	20-36
20-12	Main Hydraulic Reservoir Replacement	20-40
20-13	Hydraulic Reservoir Strainer Replacement	20-53
20-14	Hydraulic Reservoir Filler Breather Replacement	20-56
20-15	Hydraulic Fluid Level Gage Replacement	20-58
20-16	Hydraulic Drain Hose Kit Installation	20-60

20-1. INTRODUCTION.

This chapter contains maintenance instructions for removing, replacing, installing and adjusting components of the hydraulic system as authorized by the Maintenance Allocation Chart (MAC) at the Unit Maintenance level.

20-2. MAIN HYDRAULIC PUMP DRIVESHAFT REPAIR.

This task covers:

a. Removal
b. Disassembly
c. Cleaning/Inspection
d. Assembly
e. Installation
f. Follow-on Maintenance

INITIAL SETUP

Tools and Special Tools
Tool Kit, General Mechanic's: Automotive (Item 74, Appendix G)
Hammer, Hand Soft Plastic (Item 33, Appendix G)
Vise, Machinist's (Item 75, Appendix G)
Wrench, Torque (0 to 175 lb-ft [0-237 N·m]) (Item 95, Appendix G)

Materials/Parts
Cloth, Cleaning (Item 31, Appendix C)
Grease, General Purpose (Item 43, Appendix C)
Sealing Compound (Item 77, Appendix C)

Materials/Parts - Continued
Solvent, Drycleaning (Item 87, Appendix C)
Lockwasher (4) (Item 170, Appendix F)
U-Joint Kit (Item 341, Appendix F)

Equipment Condition
Engine OFF, (TM 9-2320-364-10)
Wheels chocked, (TM 9-2320-364-10)
Batteries disconnected, (Para 7-87)
Cab engine access panel removed, (Para 17-24)

a. Removal.

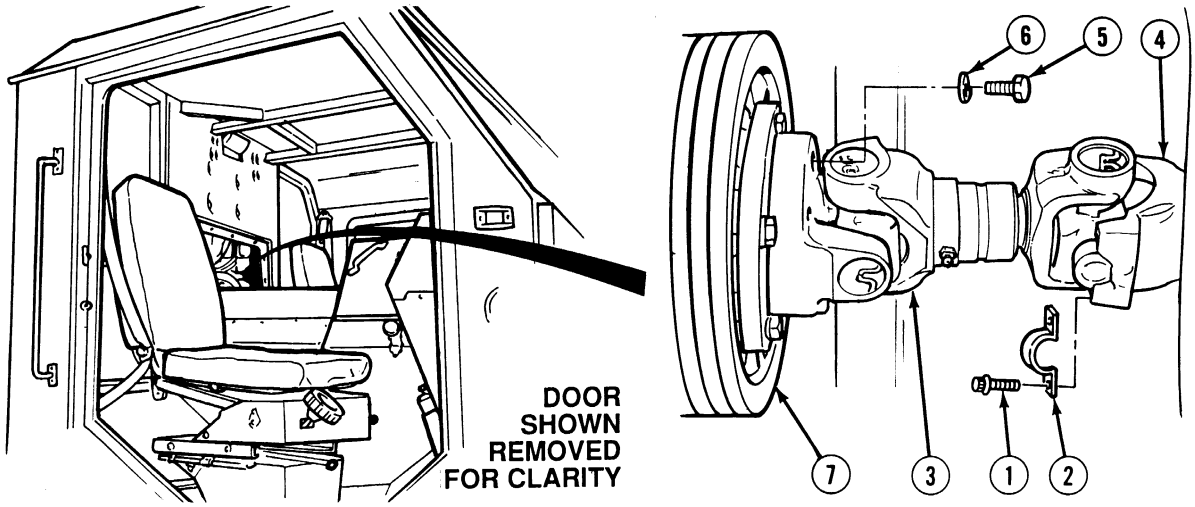

NOTE

Matchmark yoke ends prior to removal.

(1) Remove four screws (1) and two straps (2) from pump drive shaft (3) and end yoke (4).

(2) Remove four screws (5) and lockwashers (6) from pump drive shaft (3) and engine (7). Discard lockwashers.

(3) Remove pump drive shaft (3) from end yoke (4) and engine (7).

b. Disassembly.

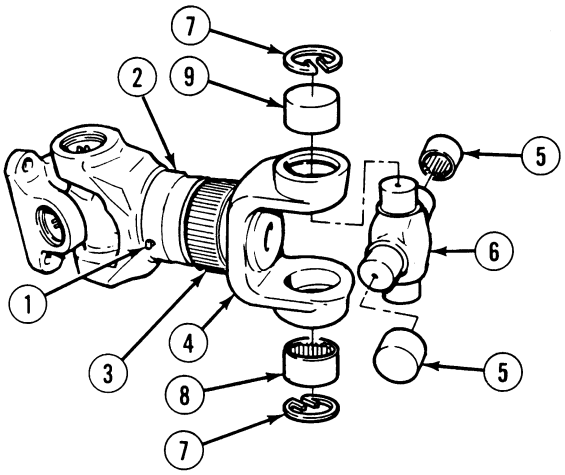

(1) Remove grease fitting (1) from slip yoke (2).

NOTE

Matchmark slip yoke and splined yoke to aid in installation.

(2) Loosen dust cap (3) and separate splined yoke (4) and slip yoke (2).

(3) Remove two bearing caps (5) from U-joint (6). Discard bearing caps.

(4) Place splined yoke (4) in vise.

WARNING

Use care when removing retaining rings. Retaining rings are under spring tension and can act as projectiles when released and could cause severe eye injury.

(5) Remove two spring clips (7) from splined yoke (4).

(6) Using a soft-faced hammer, drive U-joint (6) toward bearing cap (8) until it bottoms against splined yoke (4).

(7) Rotate splined yoke (4) 1/2 turn in vise.

(8) Using a soft-faced hammer, drive U-joint (6) toward bearing cap (9) until it bottoms against splined yoke (4).

(9) Remove U-joint (6) from splined yoke (4). Discard U-joint.

(10) Using a punch, remove bearing caps (8) and (9) from splined yoke (4) . Discard bearing caps.

20-2. MAIN HYDRAULIC PUMP DRIVESHAFT REPAIR (CONT).

WARNING

Use care when removing retaining rings. Retaining rings are under spring tension and can act as projectiles when released and could cause severe eye injury.

(11) Remove two spring clips (10) from slip yoke (2). Discard spring clips.

(12) Using a soft-faced hammer, drive U-joint (11) toward bearing cap (12) until it bottoms against slip yoke (2).

(13) Rotate slip yoke (2) 1/2 turn in vise.

(14) Using a soft-faced hammer, drive U-joint (11) toward bearing cap (13) until it bottoms against slip yoke (2).

(15) Separate slip yoke (2) from bracket (14) and U-joint (11).

(16) Using a punch, remove bearing caps (12) and (13) from slip yoke (2). Discard bearing caps.

(17) Remove slip yoke (2) from vise.

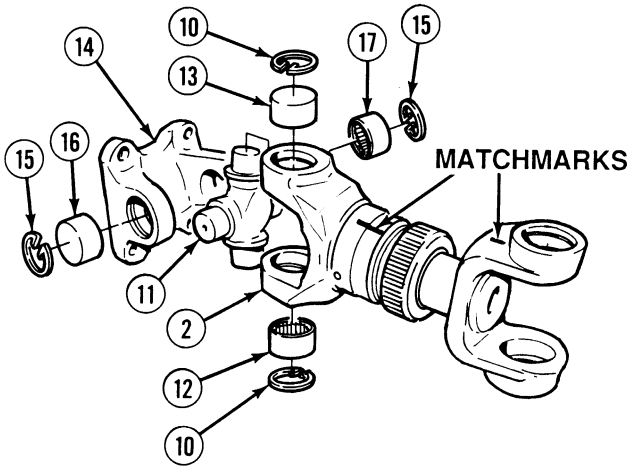

WARNING

Use care when removing retaining rings. Retaining rings are under spring tension and can act as projectiles when released and could cause severe eye injury.

(18) Remove two spring clips (15) from bracket (14) and U-joint (11).

(19) Place bracket (14) and U-joint (11) in vise.

(20) Using a soft-faced hammer, drive U-joint (11) toward bearing cap (16) until it bottoms against bracket (14).

(21) Rotate bracket (14) 1/2 turn in vise.

(22) Using a soft-faced hammer, drive U-joint (11) toward bearing cap (17) until it bottoms against bracket (14).

(23) Remove U-joint (11) from bracket (14).

(24) Remove bearing caps (16) and (17) from bracket (14).

(25) Remove bracket (14) from vise.

c. Cleaning/Inspection.

WARNING

- Drycleaning Solvent (P-D-680) is TOXIC and flammable. Wear protective goggles, face shield, and gloves; use only in a well-ventilated area; avoid contact with skin, eyes, and clothes, and do not breathe vapors. Keep away from heat or flame. Never smoke when using solvent. The flashpoint for Type II Drycleaning Solvent is 140 degrees F (60 degrees C) and Type III Drycleaning Solvent is 200 degrees F (93 degrees C). Failure to do so may result in injury or death to personnel.
- If personnel become dizzy while using cleaning solvent, immediately get fresh air and medical help. If solvent contacts skin or clothes, flush with cold water. If solvent contacts eyes, immediately flush eyes with water and get immediate medical attention.
- Compressed air used for cleaning purposes will not exceed 30 psi (207 kPa). Use only with effective chip guarding and personal protective equipment (goggles/shield, gloves, etc).

(1) Clean all parts with drycleaning solvent.

(2) Wipe parts with a clean, lint free cloth.

(3) Inspect all parts for cracks, gouges and pitting.

(4) Inspect shaft for free play caused by worn slip yoke or shaft splines.

(5) Replace any cracked or worn parts.

d. Assembly.

NOTE

Ensure yokes are aligned with match marks made during disassembly.

(1) Place bracket (14) in vise.

(2) Position U-joint (11) in bracket (14).

CAUTION

Needle bearings may fall out during assembly, use caution to avoid damage to equipment.

(3) Install bearing caps (16) and (17) on U-joint (11) in bracket (14).

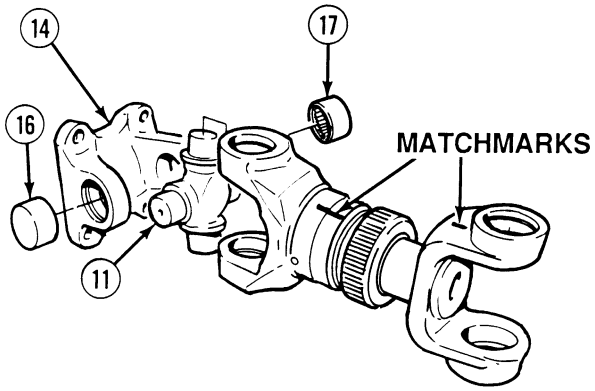

20-2. MAIN HYDRAULIC PUMP DRIVESHAFT REPAIR (CONT).

WARNING

Use care when installing retaining rings. Retaining rings are under spring tension and can act as projectiles when released and could cause severe eye injury.

NOTE

Clips are properly installed when seated in grooves in yoke.

(4) Install two clips (15) in bracket (14).

(5) Remove bracket (14) from vise.

(6) Position slip yoke (2) in vise.

(7) Position U-joint (11) in slip yoke (2).

CAUTION

Needle bearings may fall out during assembly, use caution to avoid damage to equipment.

(8) Install bearing caps (12) and (13) on U-joint (11), in slip yoke (2).

WARNING

Use care when installing retaining rings. Retaining rings are under spring tension and can act as projectiles when released and could cause severe eye injury.

NOTE

Clips are properly installed when seated in grooves in yoke.

(9) Install two clips (10) in slip yoke (2).

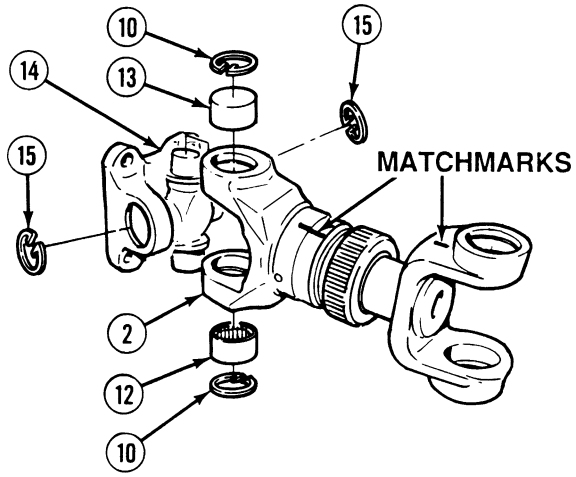

(10) Position U-joint (6) in splined yoke (4).

CAUTION

Needle bearings may fall out during assembly, use caution during assembly to avoid damage to equipment.

(11) Install bearing caps (8) and (9) on U-joint (6) in splined yoke (4).

WARNING

Use care when installing retaining rings. Retaining rings are under spring tension and can act as projectiles when released and could cause severe eye injury.

NOTE

Clips are properly installed when seated in grooves in yoke.

(12) Install two clips (7) in splined yoke (4).

(13) Remove splined yoke (4) from vise.

(14) Install bearing caps (5) on U-joint (6).

(15) Install dust cap (3) and splined yoke (4) on slip yoke (2).

(16) Install grease fitting (1) in slip yoke (2).

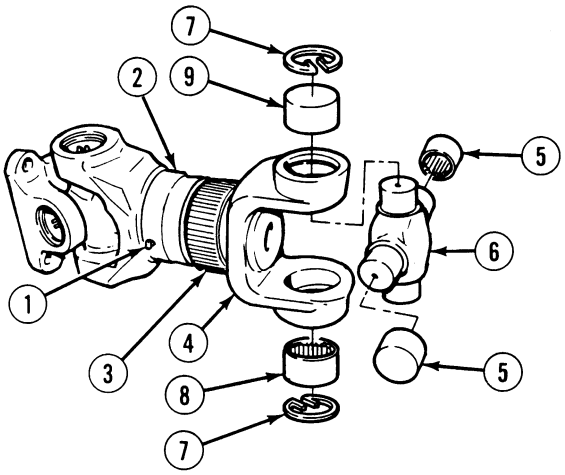

20-2. MAIN HYDRAULIC PUMP DRIVESHAFT REPAIR (CONT).

e. Installation.

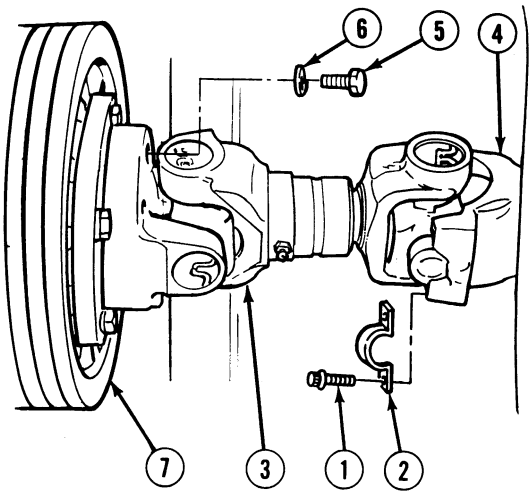

WARNING

Adhesives, solvents, and sealing compounds can burn easily, can give off harmful vapors, and are harmful to skin and clothing. To avoid injury or death, keep away from open fire and use in well-ventilated area. If adhesive, solvent, or sealing compound gets on skin or clothing, wash immediately with soap and water.

(1) Coat threads of four screws (5) with sealing compound.

(2) Install pump driveshaft assembly (3) on engine (7) with four lockwashers (6) and screws (5). Tighten screws to 60 lb-ft (81 N·m).

(3) Coat threads of four screws (1) with sealing compound.

(4) Install pump driveshaft assembly (3) on end yoke (4) with two straps (2) and four screws (1). Tighten screws to 25 to 30 lb-ft (34 to 41 N·m).

f. Follow-On Maintenance:

- Install cab engine access panel, (Para 17-24).
- Connect batteries, (Para 7-87).
- Start engine, (TM 9-2320-364-10).
- Check driveshaft operation (operate LHS), (TM 9-2320-364-10).
- Shut OFF engine, (TM 9-2320-364-10).
- Remove wheel chocks, (TM 9-2320-364-10).

END OF TASK

20-3. MAIN HYDRAULIC HOSES REPLACEMENT.

This task covers:

a. Hose Locations

b. Follow-On Maintenance

INITIAL SETUP

Tools and Special Tools
Tool Kit, General Mechanic's: Automotive (Item 74, Appendix G)
Cap and Plug Set (Item 8, Appendix G)

Materials/Parts
Cable Ties (Item 26, Appendix C)
Tags, Identification (Item 88, Appendix C)

Equipment Condition
Engine OFF, (TM 9-2320-364-10)
Wheels chocked, (TM 9-2320-364-10)
Hydraulic reservoir drained, (Para 20-11)

a. Hydraulic Hose Locations.

CAUTION

Equipment may be damaged by foreign matter if hoses, tubes and connectors are not plugged and capped when removed.

NOTE

- This procedure shows the location of hydraulic hoses on the truck. It will never be necessary to remove all hydraulic hoses at one time.
- As items are removed, cap and plug all hoses, tubes and connectors.
- Tag and mark all hoses, pipes and tubes before removal.
- Inspect all hoses, lines and fittings for cracks, bends, nicks, dents, stripping threads and cuts. Replace all damaged parts.
- Remove and replace cable ties as required.
- Remove clamps and support brackets as required.

20-3. MAIN HYDRAULIC HOSES REPLACEMENT (CONT).

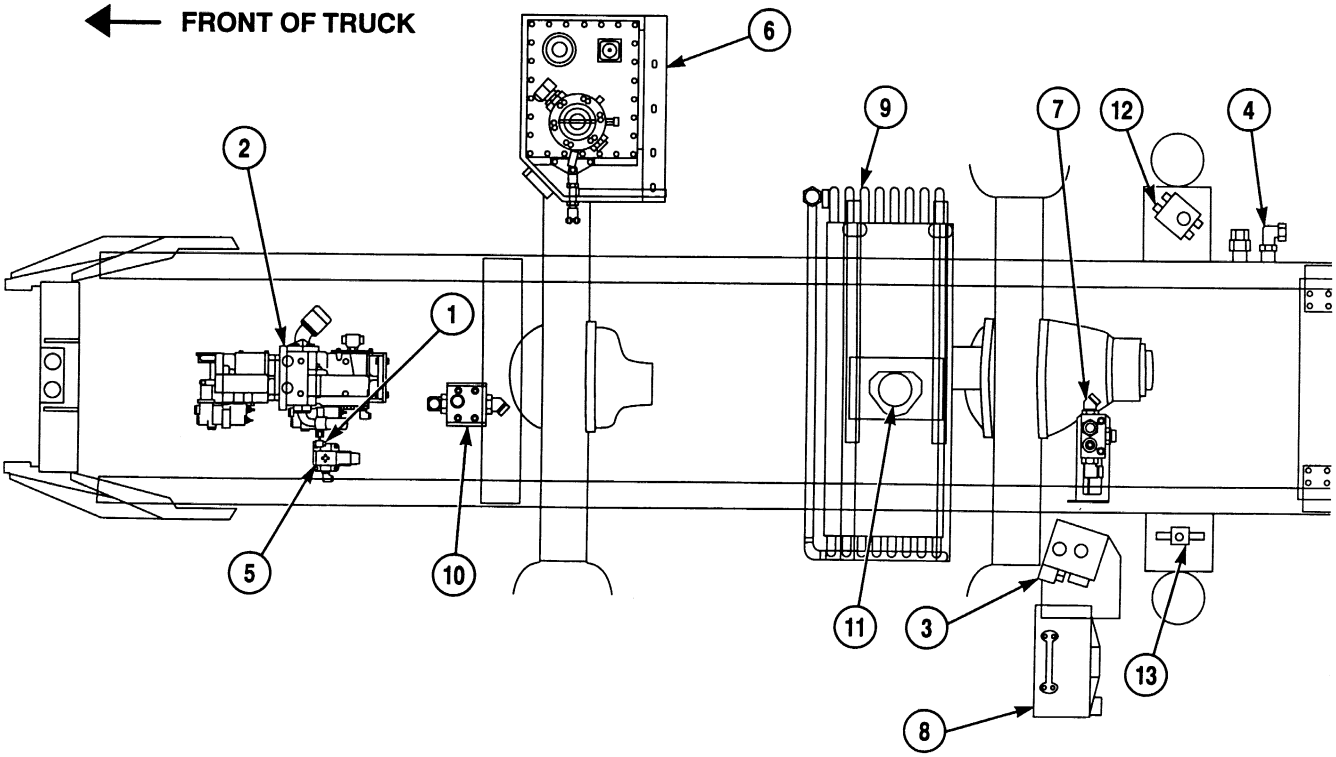

Table 20-1. Main Hydraulic Hoses Location.

Hose No.	From	To
2049	Pump Compensator Front (1)	Pump Right Side Forward T (2)
2899	Multifunction Manifold Right Bottom (3)	SRW Bulkhead Rear (4)
2290	Fan Control Valve Front (5)	Pump Left Rear (2)
2498	Hydraulic Reservoir Left Front Corner (6)	Pump Forward Right (2)
2917	Return Line Manifold Left (7)	LHS Disconnect Rear (8)
2773	Air to Oil Cooler Right Front (9)	Hydraulic Reservoir Top Left (6)
2772	Multifunction Manifold Right Rear (3)	Fan Motor (11)
2781	Hydraulic Reservoir Left Side (6)	Pump Right Side Rear (2)
2295	Multifunction Manifold Top Rear (3)	Pump Compensator Left (1)
2809	Multifunction Manifold Top Front (3)	SRW Bulkhead Front Bottom (4)
2777	Multifunction Manifold Rear (3)	LHS Disconnect Front (8)
2904	Multifunction Manifold Top Right (3)	Return Line Manifold Top Forward (7)
2886	Return Line Manifold Left (7)	SRW Bulkhead Front Top (4)
2918	Return Line Manifold Rear (7)	Hydraulic Reservoir Rear Left (6)
2935	Pump Top Center (2)	High Pressure Filter Rear (10)
2936	High Pressure Filter Front (10)	Multifunction Manifold Right Top Center (3)
2291	Multifunction Manifold Forward Right Center (3)	Fan Control Valve Rear (5)
2771	Fan Motor (11)	Air to Oil Cooler Right Rear (9)
*2902	Multifunction Manifold Center Right (3)	Crane (12)
*2776	Multifunction Manifold Bottom Right (3)	Crane (12)
*2694	Crane (12)	Hydraulic Reservoir Left Side (6)
*2724	Crane (13)	Return Line Manifold Top Center (7)

* If equipped with Crane.

TABLE 20-1. Main Hydraulic Hoses Location (Cont).

Hose No.	From	To
**2724	Interface 1	Return Line Manifold
**2724	Auxiliary Supply Valve	Return Line Manifold
**2810	Auxiliary Supply Valve	Interface
**2776	Interface	Multi Function Manifold
**2902	Auxiliary Supply Valve	Multi Function Manifold

**** If equipped with Interface Kit.

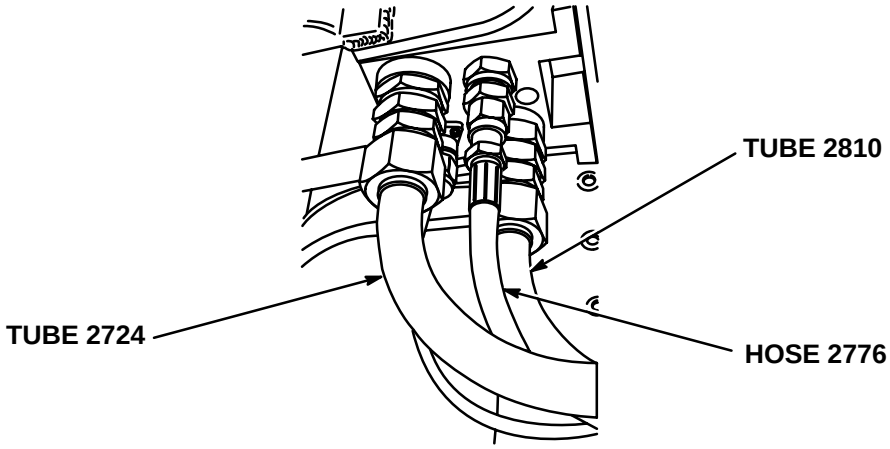

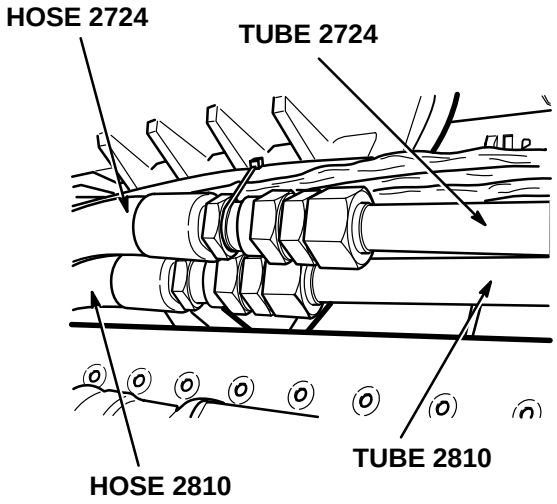

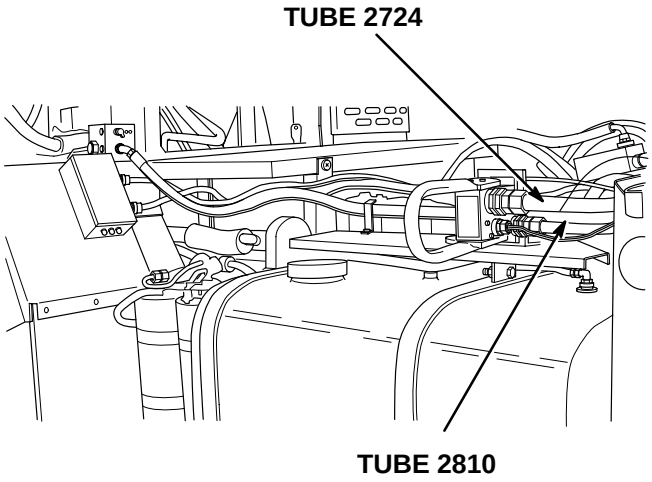

b. Follow-On Maintenance:

- Fill main hydraulic reservoir, (Para 20-11).
- Remove wheel chocks, (TM 9-2320–364-10).

END OF TASK

20-4. AIR-TO-OIL COOLER REPLACEMENT.

This task covers:

a. Removal b. Installation c. Follow-On Maintenance

INITIAL SETUP

Tools and Special Tools
Tool Kit, General Mechanic's: Automotive (Item 74, Appendix G)
Cap and Plug Set (Item 8, Appendix G)
Pan, Drain (Item 46, Appendix G)
Socket Set, 3/8 in. (Item 62, Appendix G)
Wrench, Combination 1-1/2 in. (Item 83, Appendix G)
Wrench, Combination 1-5/8 in. (Item 84, Appendix G)
Wrench, Torque (0-60 N·m) (Item 98, Appendix G)

Materials/Parts
Cable Ties (Item 26, Appendix C)
Oil, Lubricating (Item 54, Appendix C)
Tags, Identification (Item 88, Appendix C)
Lockwasher (4) (Item 168, Appendix F)
Packing, Preformed (2) (Item 252, Appendix F)

Equipment Condition
Engine OFF, (TM 9-2320-364-10)
Wheels chocked, (TM 9-2320-364-10)
Radiator grille assembly removed, (Para 17-14)

a. Removal.

WARNING

- Prolonged contact with lubricating oil (MIL-L-2104) may cause a skin rash. Skin and clothing that come in contact with lubricating oil should be thoroughly washed immediately. Saturated clothing should be removed immediately. Areas in which lubricating oil is used should be well-ventilated to keep fumes to a minimum.
- Ensure engine is cool before performing this task or severe burns from hot hydraulic fluid may result.
- The main hydraulic system operates at pressures up to 3,675 psi (25,339 kPa). Never disconnect any hydraulic line without first dropping pressure to zero. Failure to comply may result in serious injury or death to personnel.

CAUTION

- Equipment may be damaged by foreign matter if hoses and tubes are not plugged and capped when being removed.
- Prevent tubes on air-to-oil cooler from turning when disconnecting hoses. Failure to comply will cause damage to equipment.
- The fins and core of air-to-oil cooler and radiator are easily damaged. Use extreme caution when removing or damage to equipment may occur.

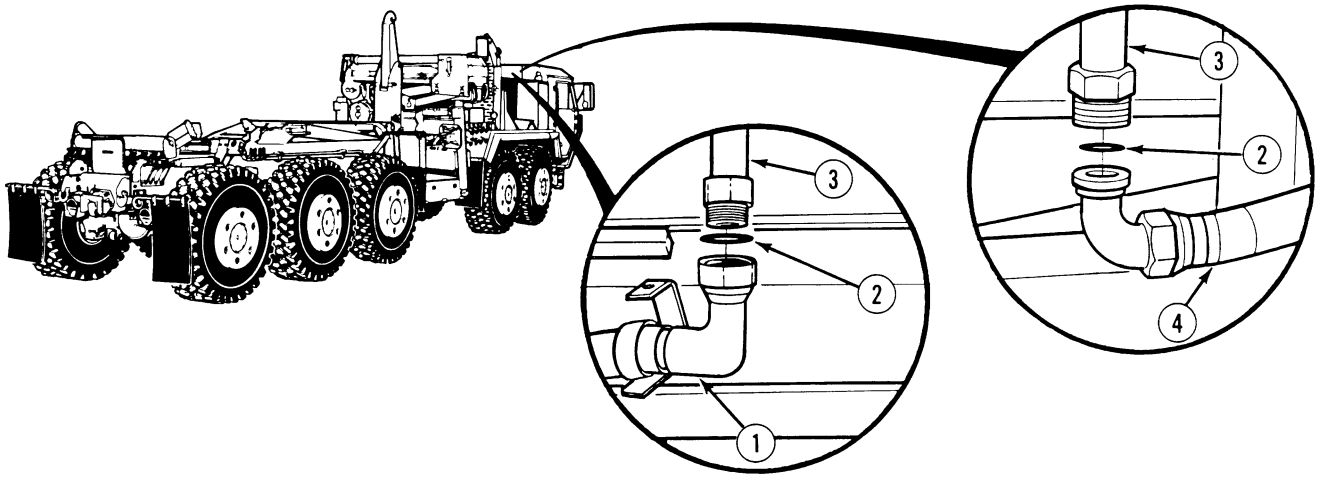

NOTE

- Cap and plug all hoses and tubes during removal.
- Tag and mark all hoses prior to removal.
- Remove cable ties, clamps and support braces as required.

(1) Remove hose 2771 (1) and preformed packing (2) from air-to-oil cooler (3). Discard preformed packing.

(2) Remove hose 2773 (4) and preformed packing (2) from air-to-oil cooler (3). Discard preformed packing.

(3) Remove four screws (5), washers (6), plates (7), eight tube supports (8) and air-to-oil cooler (3) from front support (9) and rear support (10).

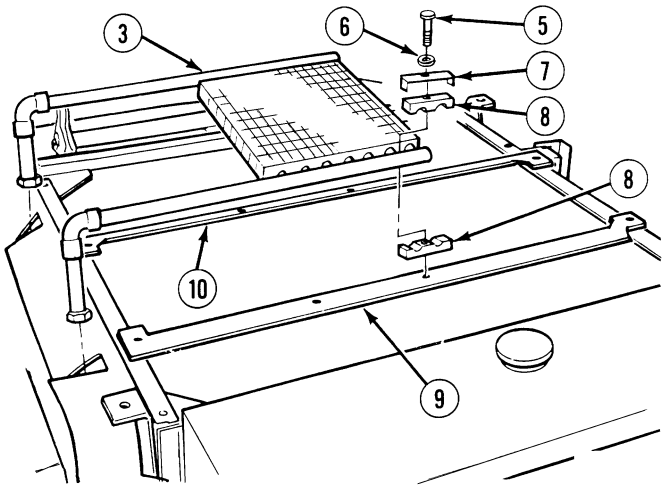

20-4. AIR-TO-OIL COOLER REPLACEMENT (CONT).

(4) Remove four screws (11), lockwashers (12), washers (13), front support (9) and rear support (10) from support brackets (14). Discard lockwashers.

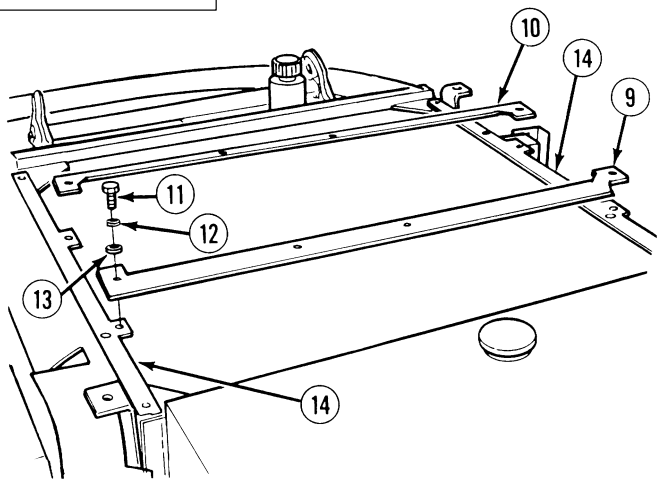

b. Installation.

CAUTION

- Prevent tubes on air-to-oil cooler from turning when connecting hoses. Failure to comply will cause damage to equipment.
- The fins and core of air-to-oil cooler and radiator are easily damaged. Use caution when installing or damage to equipment may occur.

(1) Install front support (9) and rear support (10) on support brackets (14) with four screws (11), lockwashers (12) and washers (13).

(2) Install air-to-oil cooler (3) on front support (9) and rear support (10) with four screws (5), washers (6), plates (7) and eight tube supports (8).

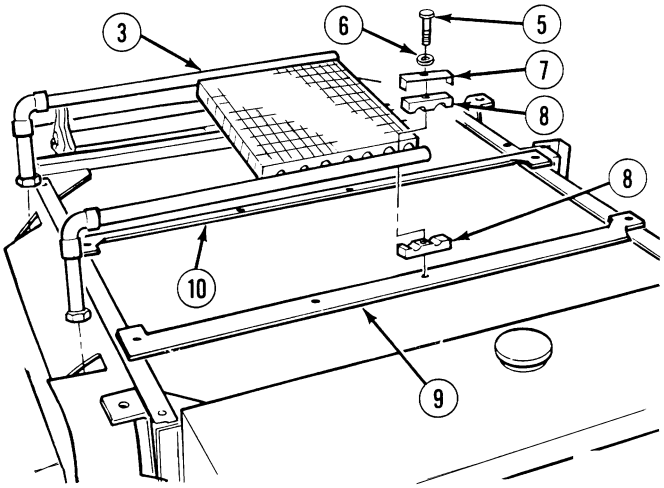

(3) Apply lubricating oil to preformed packings (2).

(4) Install preformed packing (2) and hose 2773 (4) to air-to-oil cooler (3).

(5) Install preformed packing (2) and hose 2771 (1) to air-to-oil cooler (3).

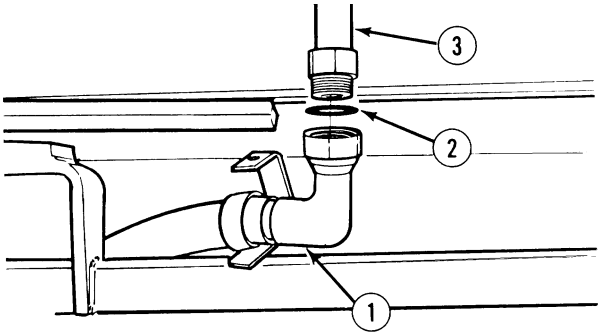

c. Follow-On Maintenance:

- Install radiator grille assembly, (Para 17-14).
- Check and fill main hydraulic reservoir, (Para 2-9, Lubrication Table 2-3).
- Remove wheel chocks, (TM 9-2320-364-10).

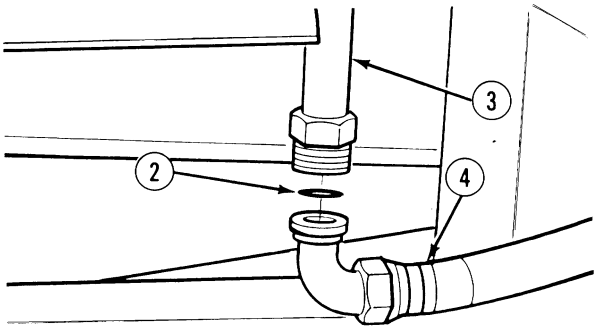

END OF TASK

20-5. FAN CONTROL SOLENOID VALVE REPAIR.

This task covers:

a. Removal
b. Disassembly
c. Cleaning/Inspection
d. Assembly
e. Installation
f. Follow-On Maintenance

INITIAL SETUP

Tools and Special Tools
Tool Kit, General Mechanic's: Automotive (Item 74, Appendix G)
Cap and Plug Set (Item 8, Appendix G)
Compressor Unit, Air (Item 11, Appendix G)
Crimping Tool (Item 13, Appendix G)
Gloves, Chemical Oil Protective (Item 28, Appendix G)
Goggles, Industrial (Item 30, Appendix G)
Gun, Airblow (Item 31, Appendix G)
Gun, Heat (Item 32, Appendix G)
Pan, Drain (Item 46, Appendix G)
Weatherpac Crimper (Item 76, Appendix G)
Wrench, Torque (0-60 N·m) (Item 98, Appendix G)

Materials/Parts
Heatshrink (Item 48, Appendix C)
Oil, Hydraulic (Item 50, Appendix C)
Tags, Identification (Item 88, Appendix C)

Materials/Parts - Continued
Wire, 16 Gage (Item 99, Appendix C)
Contact, Electrical (2) (Item 27, Appendix F)
Dust Boot (2) (Item 29, Appendix F)
Kit, Mounting (Item 86, Appendix F)
Locknut (4) (Item 103, Appendix F)
Packing, Preformed (4) (Item 236, Appendix F)
Packing, Preformed (4) (Item 243, Appendix F)
Packing, Preformed (2) (Item 256, Appendix F)
Splice, Conductor (Item 334, Appendix F)

Equipment Condition
Engine OFF, (TM 9-2320-364-10)
Wheels chocked, (TM 9-2320-364-10)
Electronic control box (ECB) removed, (Para 17-23)

a. Removal.

WARNING

The main hydraulic system operates at oil pressures up to 3,675 psi (25,339 kPa). Never disconnect any hydraulic line, fitting or component without first dropping pressure to zero. Failure to comply may result in serious injury or death to personnel.

NOTE

- Connectors are removed by gently prying up on tab and pulling connectors apart.
- Cap and plug all hydraulic lines.
- Tag and mark hoses and fittings prior to removal.

20-5. FAN CONTROL SOLENOID VALVE REPAIR (CONT).

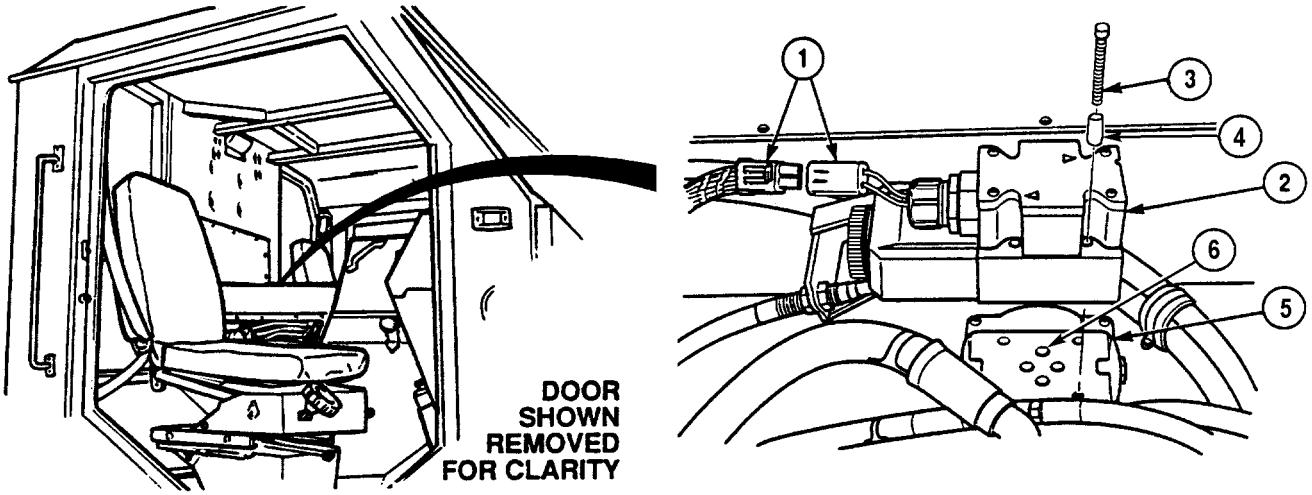

(1) Disconnect MC76 connector (1).

(2) Position drain pan under fan control solenoid valve (2).

NOTE

Fan control solenoid valve may or may not have spacers in Step (3).

(3) Remove four screws (3), spacers (4) and fan control solenoid valve (2) from subplate (5).

(4) Remove four preformed packings (6) from subplate (5). Discard preformed packings.

(5) Remove hoses (7) and (8) and two preformed packings (9) from adapter (10) and elbow (11). Discard preformed packings.

(6) Remove four locknuts (12), screws (13) and subplate (5) from bracket (14). Discard locknuts.

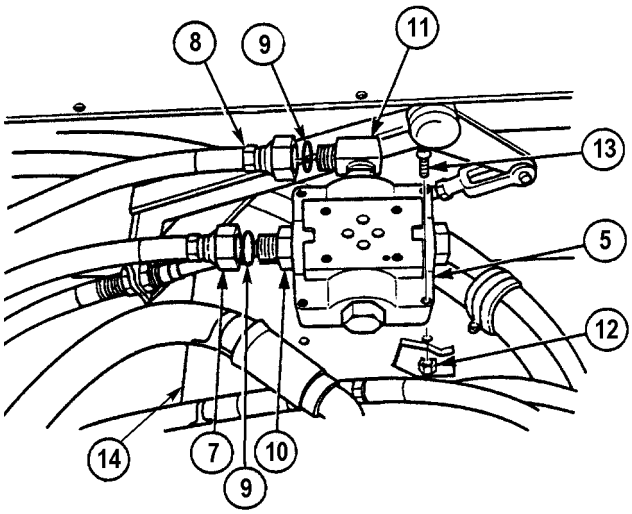

b. Disassembly.

(1) Remove adapter (1), elbow (2) and two plugs (3) from subplate (4).

(2) Remove four preformed packings (5) from adapter (1), elbow (2) and two plugs (3). Discard preformed packings.

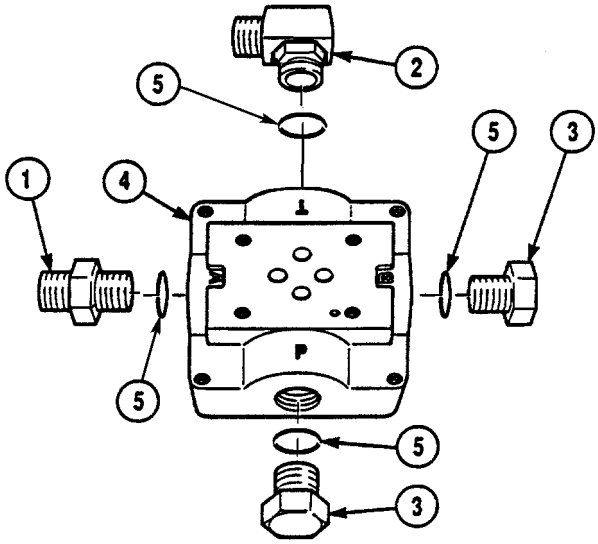

c. Cleaning/Inspection.

WARNING

- Drycleaning Solvent (P-D-680) is TOXIC and flammable. Wear protective goggles, face shield, and gloves; use only in a well-ventilated area; avoid contact with skin, eyes, and clothes, and do not breathe vapors. Keep away from heat or flame. Never smoke when using solvent. The flashpoint for Type II Drycleaning Solvent is 140 degrees F (60 degrees C) and Type III Drycleaning Solvent is 200 degrees F (93 degrees C). Failure to do so may result in injury or death to personnel.
- If personnel become dizzy while using cleaning solvent, immediately get fresh air and medical help. If solvent contacts skin or clothes, flush with cold water. If solvent contacts eyes, immediately flush eyes with water and get immediate medical attention.
- Compressed air used for cleaning purposes will not exceed 30 psi (207 kPa). Use only with effective chip guarding and personal protective equipment (goggles/shield, gloves, etc). Failure to comply may result in injury or death to personnel.

(1) Clean all metal parts with drycleaning solvent and dry with compressed air.

(2) Inspect metal parts for breaks, cracks, and sharp edges.

(3) Replace all damaged parts.

20-5. FAN CONTROL SOLENOID VALVE REPAIR (CONT).

d. Assembly.

(1) Apply hydraulic oil to four preformed packings (5) and install on adapter (1), elbow (2) and two plugs (3).

(2) Install adapter (1), elbow (2) and two plugs (3) on subplate (4).

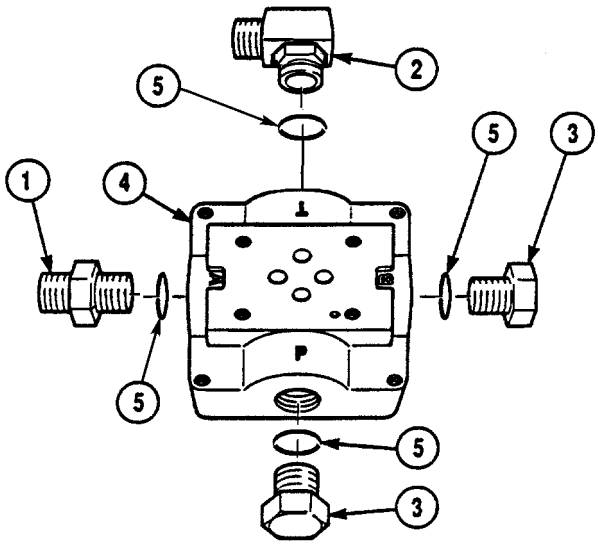

e. Installation.

(1) Install subplate (5) on bracket (14) using four screws (13) and locknuts (12). Tighten to 32 lb-in (3 N·m).

(2) Apply hydraulic oil to two preformed packings (9) and install on adapter (10) and elbow (11).

(3) Install hose (7) on adapter (10) and hose (8) on elbow (11).

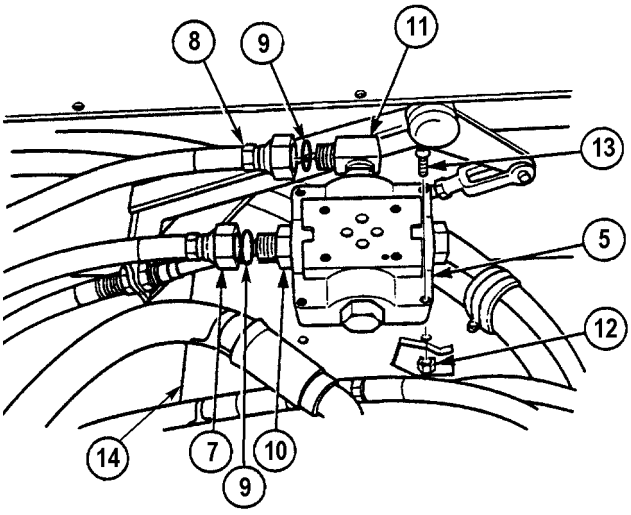

NOTE

- Perform Steps (4) through (22) if replacing fan control solenoid valve and electrical connector.
- Wires in Step (4) are fabricated from bulk 16 ga. wire by 5 in. (12.7 cm) long.

(4) Insert 1 in. (2.5 cm) of two wires (15) through dust boots (16).

CAUTION

Strip wire after placing it through dust boot to prevent damage to individual wire strands.

(5) Strip ends of two wires (15) leaving 1/4 in. (0.64 cm) of bare wire.

(6) Insert terminal (17) in locating hole of weatherpac crimper using proper hole according to the gage of wire (15).

(7) Slide seal (16) down to end of insulation (18) on wire (15).

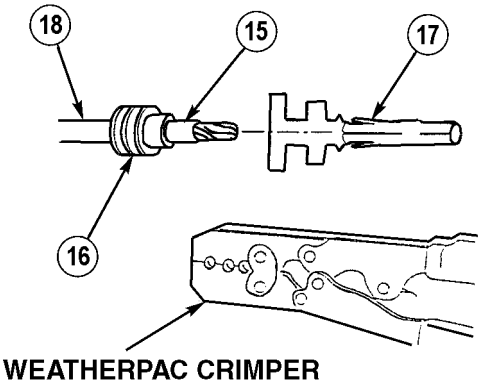

20-5. FAN CONTROL SOLENOID VALVE REPAIR (CONT).

NOTE

Wire and seal should be positioned so larger wings of terminal will crimp around dust boot and smaller wings will crimp around exposed bare wire.

(8) Position wire (15) on terminal (17).

(9) Press handles of weatherpac crimper together until ratchet releases and crimp is complete.

(10) Repeat Steps (6) through (9) for remaining wire.

(11) Position two terminals (17) and wires (15) through connector (1) until seated.

(12) Close two secondary locks (19) on connector (1).

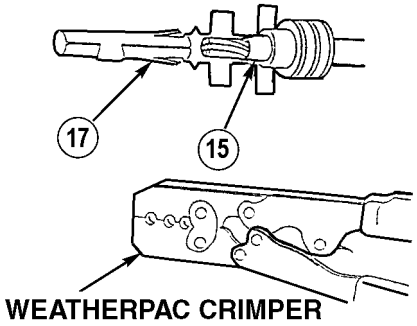

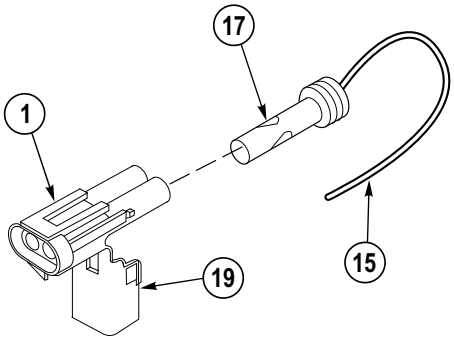

(13) Remove four screws (20), cover (21) and gasket (22) from fan control solenoid valve (2). Discard gasket.

(14) Install cord grip (23) on fan control solenoid valve (2).

(15) Cut and remove two ring terminals (24) from fan control solenoid valve wires (25). Discard ring terminals.

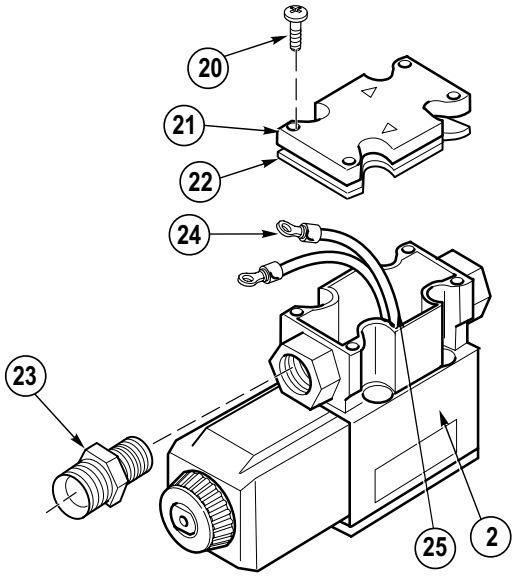

(16) Install two wires (15) through nut (26), washer (27), gasket (28), cord grip (23) and fan control solenoid valve (2).

(17) Position heatshrink (29) on wire (15).

(18) Position ends of wire (15) and fan control solenoid valve wire (30) in conductor splice (31) and crimp in place.

(19) Install heatshrink (29) on conductor splice (31).

(20) Repeat Steps (17) through (19) for remaining wire.

(21) Install gasket (28), washer (27) and nut (26) on cord grip (23).

(22) Install cover (21) and gasket (22) on fan control solenoid valve (2) using four screws (20).

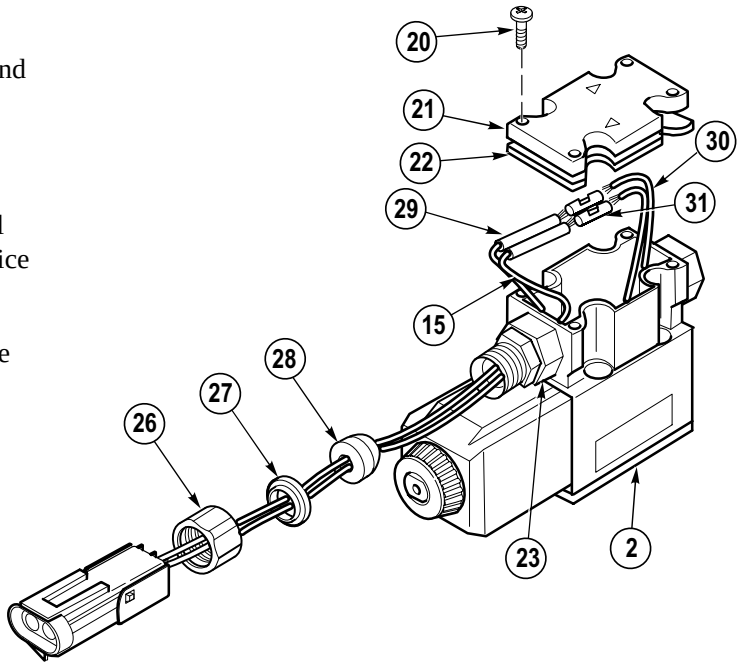

NOTE

Fan control solenoid valve may or may not have spacers in Step (23).

(23) Install fan control solenoid valve (2) on subplate (5) using four spacers (4) and screws (3). Tighten to 32 lb-in (3 N·m).

(24) Apply hydraulic oil to four preformed packings (6) and install on subplate (5).

(25) Connect MC76 connector (1).

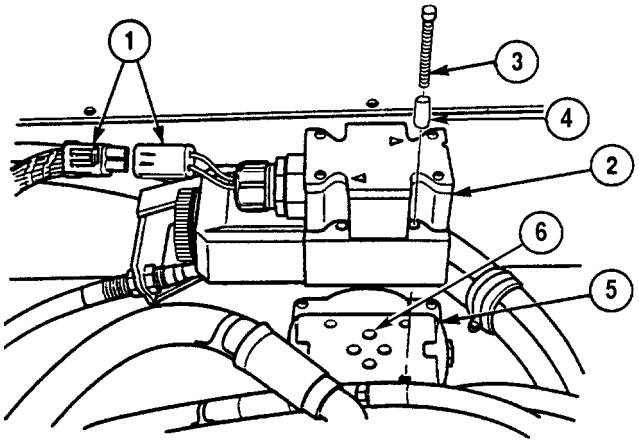

f. Follow-On Maintenance:

- Install Electronic Control Box (ECB), (Para 17-23).
- Start engine. Allow engine to run for three minutes, (TM 9-2320-364-10).
- Shut OFF engine, (TM 9-2320-364-10).
- Check for hydraulic leaks, (TM 9-2320-364-10).
- Remove wheel chocks, (TM 9-2320-364-10).

END OF TASK

20-6. HIGH PRESSURE HYDRAULIC FILTER REPLACEMENT.

This task covers:

a. Removal b. Installation c. Follow-On Maintenance

INITIAL SETUP

Tools and Special Tools
Tool Kit, General Mechanic's: Automotive (Item 74, Appendix G)
Drain Pan (Item 46, Appendix G)
Wrench, Torque (0 to 175 lb-ft [0-237 N·m]) (Item 95, Appendix G)

Materials/Parts
Packing, Preformed (Item 230, Appendix F)
Retainer, Packing (Item 290, Appendix F)

Equipment Condition
Engine OFF, (TM 9-2320-364-10)
Wheels chocked, (TM 9-2320-364-10)

a. Removal.

WARNING

- Ensure engine is cool before performing this task or severe burns from hot hydraulic fluid may result.
- The main hydraulic system operates at oil pressures up to 3675 psi (25,339 kPa). Never disconnect any hydraulic line, fitting or component without first dropping pressure to zero. Failure to comply may result in serious injury or death to personnel.

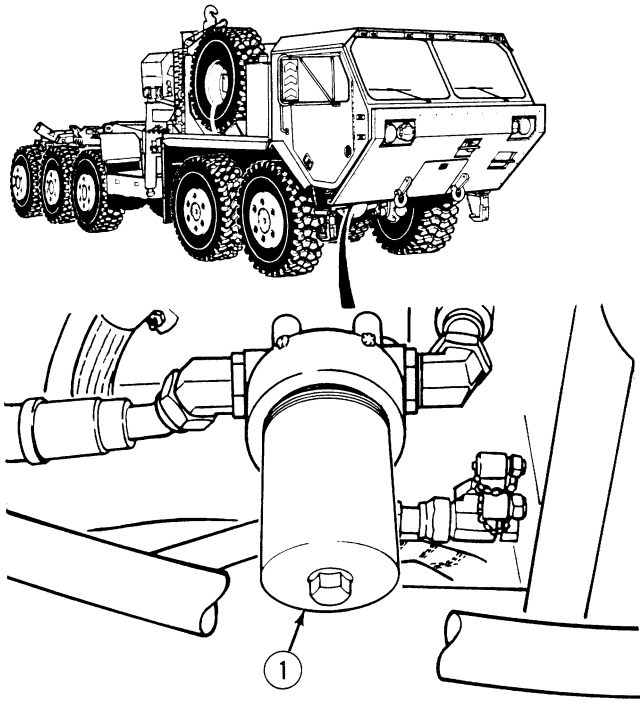

NOTE

Approximately one gallon of oil will drain from filter and filter head. A slow trickle of oil will continue to flow until the 40 gallon reservoir is empty.

(1) Position drain pan under high pressure hydraulic filter bowl (1).

(2) Loosen hydraulic filter bowl (1).

WARNING

Prolonged contact with lubricating oil (MIL-L-2104) may cause a skin rash. Skin and clothing that come in contact with lubricating oil should be thoroughly washed immediately. Saturated clothing should be removed immediately. Areas in which lubricating oil is used should be well-ventilated to keep fumes to a minimum.

CAUTION

Use care not to damage recessed groove in filter head when removing preformed packing.

NOTE

Note shape and position of each preformed packing during removal.

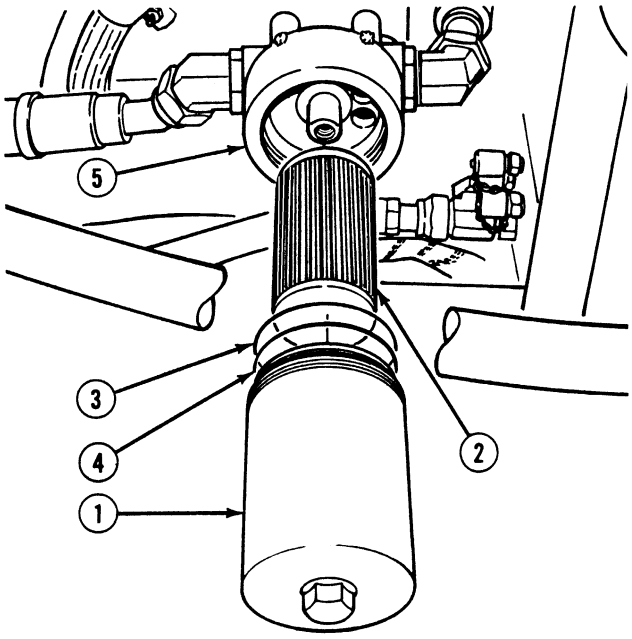

(3) Remove hydraulic filter bowl (1), filter element (2) and preformed packings (3) and (4) from filter head (5). Discard filter element and preformed packings.

b. Installation.

NOTE

Install preformed packings as noted prior to removal.

(1) Lubricate preformed packings (3) and (4) with clean hydraulic oil and install in filter head (5).

(2) Install filter element (2) and hydraulic filter bowl (1) on filter head (5) and tighten to 60 lb-ft (81 N·m).

c. Follow-On Maintenance:

- Check hydraulic fluid level, (TM 9-2320-364-10).
- Start engine, (TM 9-2320-364-10).
- Check hydraulic system for leaks, (TM 9-2320-364-10).
- Shut OFF engine, (TM 9-2320-364-10).
- Remove wheel chocks, (TM 9-2320-364-10).

END OF TASK

20-7. HIGH PRESSURE HYDRAULIC FILTER HEAD ASSEMBLY REPLACEMENT.

This task covers:

a. Removal b. Installation c. Follow-On Maintenance

INITIAL SETUP

Tools and Special Tools
Tool Kit, General Mechanic's: Automotive (Item 74, Appendix G)
Cap and Plug Set (Item 8, Appendix G)
Wrench, Combination 1 5/8 in. (Item 84, Appendix G)
Wrench, Torque (0-175 lb-ft [0-257 N·m]) (Item 95, Appendix G)

Materials/Parts
Lockwasher (4) (Item 168, Appendix F)
Packing, Preformed (Item 234, Appendix F)
Packing, Preformed (Item 252, Appendix F)

Equipment Condition
Engine OFF, (TM 9-2320-364-10)
Wheels chocked, (TM 9-2320-364-10)
High pressure hydraulic filter removed, (Para 20-6)

a. Removal.

WARNING

Prolonged contact with lubricating oil (MIL-L-2104) may cause a skin rash. Skin and clothing that come in contact with lubricating oil should be thoroughly washed immediately. Saturated clothing should be removed immediately. Areas in which lubricating oil is used should be well-ventilated to keep fumes to a minimum.

NOTE

- Tag and mark all hydraulic hoses prior to removal.
- Cap and plug all hydraulic hoses to prevent contamination.

(1) Remove hose 2936 (1) and preformed packing (2) from elbow (3). Discard preformed packing.

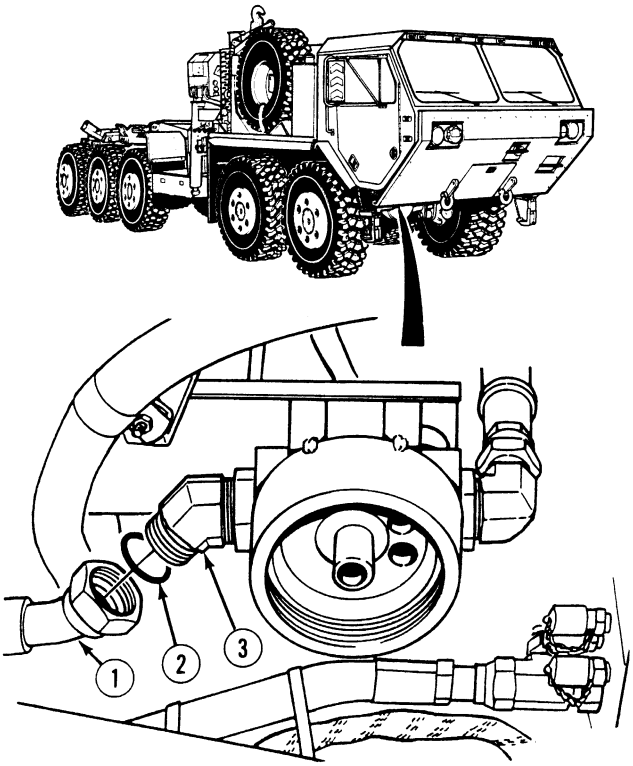

(2) Remove hose 2935 (4) and preformed packing (5) from elbow (6). Discard preformed packing.

(3) Remove four screws (7), lockwashers (8), washers (9) and filter head (10) from bracket (11). Discard lockwashers.

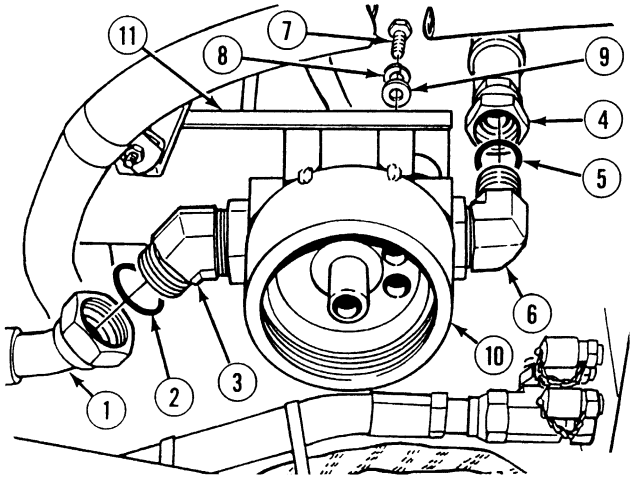

b. Installation.

(1) Install filter head (10), four washers (9), lockwashers (8) and screws (7) on bracket (11). Tighten screws to 23 lb-ft (31 N·m).

(2) Install hose 2935 (3) and preformed packing (5) on elbow (6).

(3) Install hose 2936 (1) and preformed packing (2) on elbow (3).

c. Follow-On Maintenance:

- Install high pressure hydraulic filter, (Para 20-6).
- Remove wheel chocks, (TM 9-2320-364-10).

END OF TASK

20-8. HIGH PRESSURE HYDRAULIC FILTER HEAD REPAIR.

This task covers:

a. Disassembly
b. Cleaning/Inspection
c. Assembly
d Follow-On Maintenance

INITIAL SETUP

Tools and Special Tools
Tool Kit, General Mechanic's: Automotive (Item 74, Appendix G)
Wrench, Combination 1 5/8 in. (Item 84, Appendix G)
Wrench, Combination 1 7/8 in. (Item 87, Appendix G)

Materials/Parts
Tags, Identification (Item 88, Appendix C)
Packing, Preformed (Item 220, Appendix F)

Materials/Parts - Continued
Packing, Preformed (2) (Item 234, Appendix F)
Packing, Preformed (Item 249, Appendix F)
Plug (Item 286, Appendix F)

Equipment Condition
Engine OFF, (TM 9-2320-364-10)
Wheels chocked, (TM 9-2320-364-10)
High pressure hydraulic filter removed, (Para 20-6)

a. Disassembly.

(1) Remove plug (1) and preformed packings (2) and (3) from filter head (4). Discard plug and preformed packings.

NOTE

Note location and position of elbows prior to removal.

(2) Loosen jam nut (5) and remove elbow (6) and preformed packing (7) from filter head (4). Discard preformed packing.

(3) Loosen jam nut (8) and remove elbow (9) and preformed packing (10) from filter head (4). Discard preformed packing.

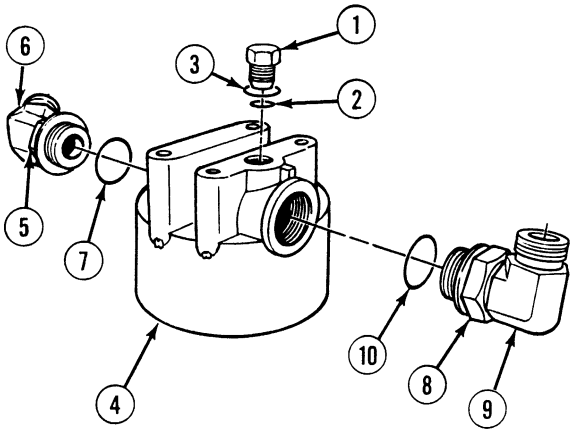

b. Cleaning/Inspection.

(1) Inspect filter head for cracks and stripped threads.

(2) Replace all damaged parts.

c. Assembly.

NOTE

Install elbows in position as noted prior to removal.

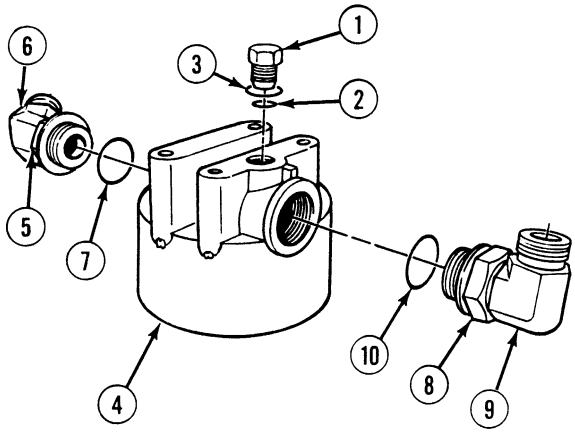

(1) Install preformed packing (10) on elbow (9).

(2) Install elbow (9) in filter head (4). Tighten jam nut (8).

(3) Install preformed packing (7) on elbow (6).

(4) Install elbow (6) in filter head (4). Tighten jam nut (5).

(5) Install two preformed packings (2) and (3) on plug (1).

(6) Install plug (1) in filter head (4).

d. Follow-On Maintenance:

- Install high pressure hydraulic filter, (Para 20-6).
- Remove wheel chocks, (TM 9-2320-364-10).

END OF TASK

20-9. MAIN HYDRAULIC FILTER REPLACEMENT.

This task covers:

a. Removal
b. Installation
c. Cleaning/Inspection
d. Follow-On Maintenance

INITIAL SETUP

Tools and Special Tools
Tool Kit, General Mechanic's: Automotive (Item 74, Appendix G)
Compressor Unit, Air (Item 11, Appendix G)
Gloves, Chemical, Oil Protective (Item 28, Appendix G)
Goggles, Industrial (Item 30, Appendix G)
Gun, Air Blow (Item 31, Appendix G)
Socket Set, 3/8 in. (Item 62, Appendix G)
Wrench, Torque (0 to 60 N·m) (Item 98, Appendix G)

Materials/Parts
Oil, Lubricating (Item 54, Appendix C)
Gasket (Item 46, Appendix F)
Gasket (Item 47, Appendix F)

Equipment Condition
Engine OFF, (TM 9-2320-364-10)
Wheels chocked, (TM 9-2320-364-10)

a. Removal.

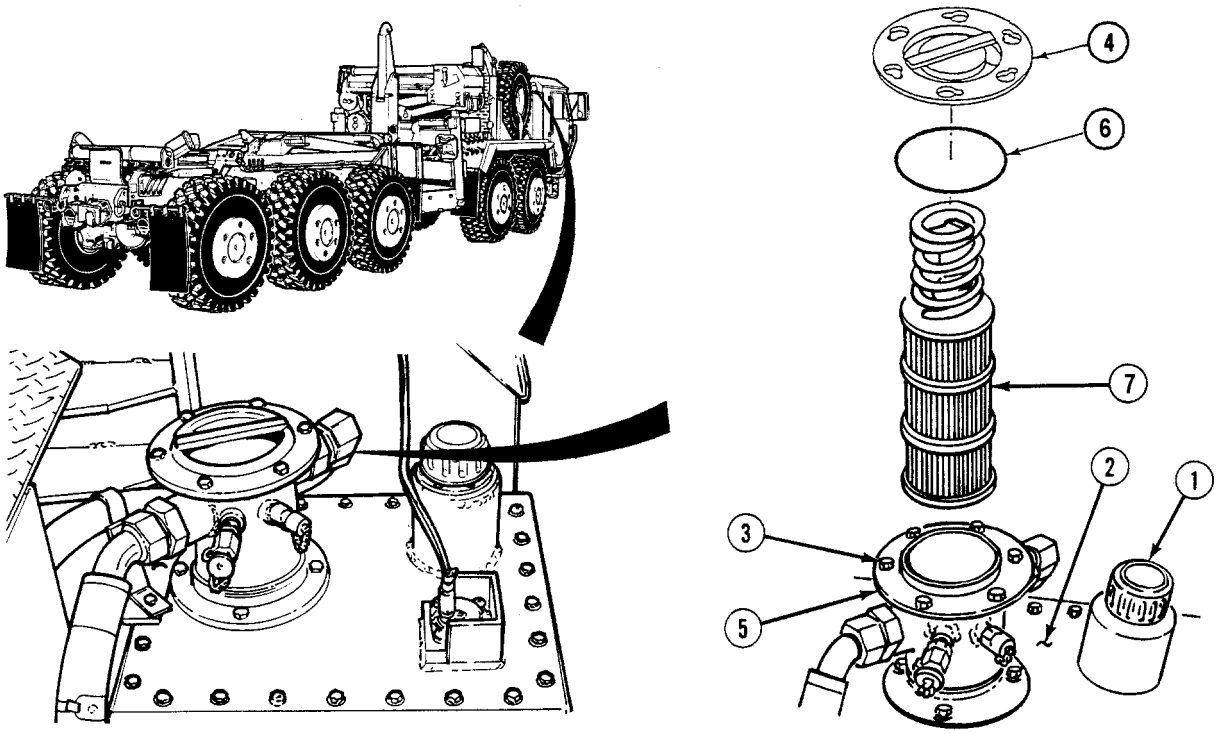

WARNING

Use extreme care when loosening filler cap. Sudden release of pressure could seriously injure personnel. Slowly loosen cap to relieve pressure and ensure proper eye protection is worn.

(1) Loosen filler cap (1) and relieve hydraulic pressure in hydraulic reservoir (2).

CAUTION

Ensure area on and around filter cover is clean prior to removal of filter cover to avoid contamination of hydraulic fluid.

(2) Loosen six screws (3) on filter cover (4).

NOTE

Filter cover is removed from filter base by turning to allow screw heads to pass through large holes in filter cover.

(3) Remove filter cover (4) from filter base (5).

(4) Remove gasket (6) from filter cover (4). Discard gasket.

CAUTION

Remove hydraulic filter by holding the spring to avoid contamination of hydraulic fluid.

(5) Remove hydraulic filter (7) from filter base (5).

20-9. MAIN HYDRAULIC FILTER REPLACEMENT (CONT).

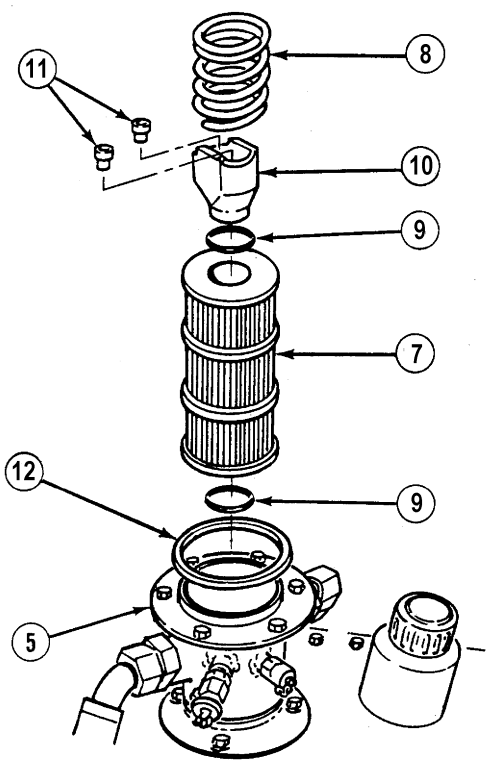

NOTE

Relief valve assembly pulls out of filter.

(6) Remove spring (8), two preformed packings (9) and relief valve assembly (10) from hydraulic filter (7). Discard filter and preformed packings.

(7) Remove two relief valves (11) from relief valve assembly (10).

(8) Remove and discard gasket (12) from filter base (5).

b. Cleaning/Inspection.

WARNING

- Drycleaning Solvent (P-D-680) is TOXIC and flammable. Wear protective goggles, face shield, and gloves; use only in a well-ventilated area; avoid contact with skin, eyes, and clothes, and do not breathe vapors. Keep away from heat or flame. Never smoke when using solvent. The flashpoint for Type II Drycleaning Solvent is 140 degrees F (60 degrees C) and Type III Drycleaning Solvent is 200 degrees F (93 degrees C). Failure to do so may result in injury or death to personnel.
- If personnel become dizzy while using cleaning solvent, immediately get fresh air and medical help. If solvent contacts skin or clothes, flush with cold water. If solvent contacts eyes, immediately flush eyes with water and get immediate medical attention.

(1) Clean all metal parts with drycleaning solvent.

WARNING

Compressed air used for cleaning purposes will not exceed 30 psi (207 kPa). Use only with effective chip guarding and personal protective equipment (goggles/shield, gloves, etc). Failure to comply may result in injury or death to personnel.

(2) Dry metal parts with compressed air.

(3) Inspect metal parts for breaks, cracks and sharp edges.

(4) Manually operate relief valves and inspect for damage.

(5) Replace all damaged parts.

c. Installation.

WARNING

Prolonged contact with lubricating oil (MIL-2104) may cause a skin rash. Skin and clothing that come in contact with lubricating oil should be thoroughly washed immediately. Saturated clothing should be removed immediately. Areas in which lubricating oil is used should be well-ventilated to keep fumes to a minimum.

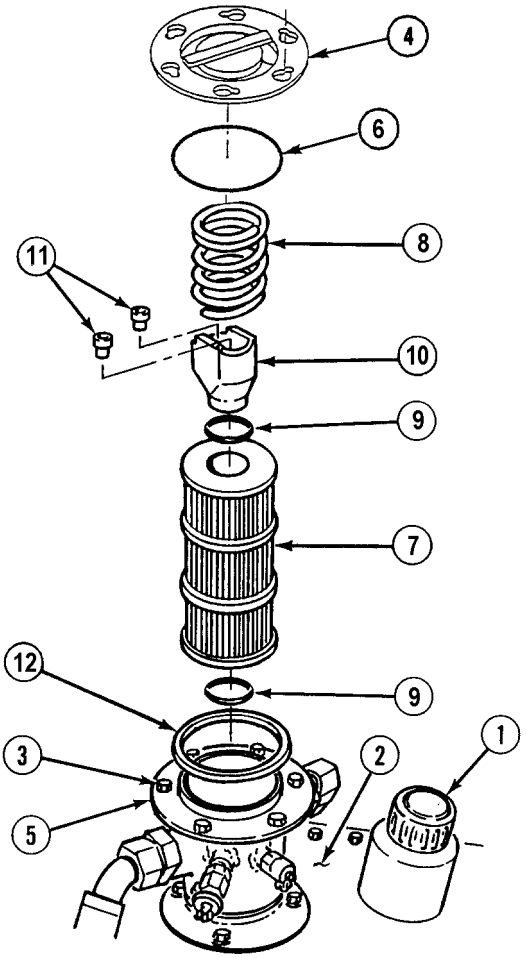

(1) Coat gasket (12) with lubricating oil and install gasket (12) on filter base. (5).

(2) Install two relief valves (10) in relief valve assembly (10).

(3) Install relief valve assembly (10) and spring (8) on hydraulic filter (7).

(4) Coat preformed packings (9) with lubricating oil and install on hydraulic filter (7).

(5) Install filter (7) on filter base (5).

CAUTION

Ensure gasket and filter cover are intact before installation. Failure to comply could result in damage to equipment.

NOTE

Filter cover is installed on filter base by allowing screw heads to pass through large holes in filter cover and turning filter cover until screw heads are positioned in small holes in filter cover.

(6) Coat gasket (6) with lubricating oil and install gasket (6) on filter cover (4).

(7) Install filter cover (4) on filter base (5).

(8) Tighten six screws (3) on filter cover (4) to 18 lb-ft (24 N·m).

(9) Tighten filler cap (1) on hydraulic reservoir (2).

d. Follow-On Maintenance:

- Remove wheel chocks, (TM 9-2320-364-10).

END OF TASK

20-10. MAIN HYDRAULIC RESERVOIR FILTER ASSEMBLY REPLACEMENT.

This task covers:

a. Removal
b. Cleaning/Inspection
c. Installation
d. Follow-on Maintenance

INITIAL SETUP

Tools and Special Tools
Tool Kit, General Mechanic's: Automotive (Item 74, Appendix G)
Socket Set, 3/8 in. (Item 62, Appendix G)
Wrench, Combination, 1-5/8 in. (Item 84, Appendix G)
Wrench, Combination, 1-7/8 in. (Item 87, Appendix G)
Wrench, Pipe 3-1/2 in. Opening (Item 91, Appendix G)
Wrench, Torque (0 to 60 N·m) (Item 98, Appendix G)

Materials/Parts
Sealing Compound (Item 72, Appendix C)
Lockwasher (4) (Item 168, Appendix F)
Packing, Preformed (Item 245, Appendix F)
Packing, Preformed (Item 252, Appendix F)

Equipment Condition
Engine OFF, (TM 9-2320-364-10)
Wheels chocked, (TM 9-2320-364-10)
Hydraulic filter removed, (Para 20-9)

a. Removal.

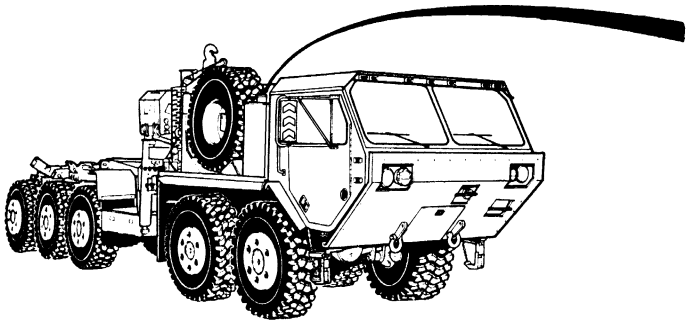

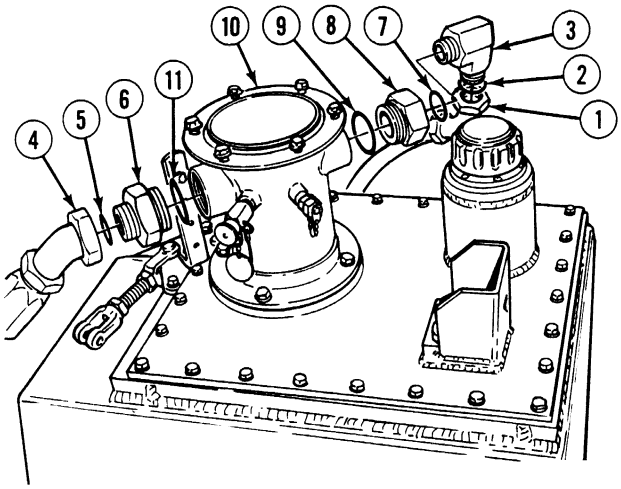

NOTE

- Tag and mark all hydraulic hoses prior to removal.
- Cap and plug all hydraulic hoses to prevent contamination.

(1) Remove hose 2773 (1) and preformed packing (2) from elbow (3). Discard preformed packing.

(2) Remove hose 2918 (4) and preformed packing (5) from adapter (6). Discard preformed packing.

NOTE

Note positions of fittings prior to removal.

(3) Remove elbow (3) and preformed packing (7) from reducer (8). Discard preformed packing.

(4) Remove reducer (8) and preformed packing (9) from filter housing (10). Discard preformed packing.

(5) Remove adapter (6) and preformed packing (11) from filter housing (10). Discard preformed packing.

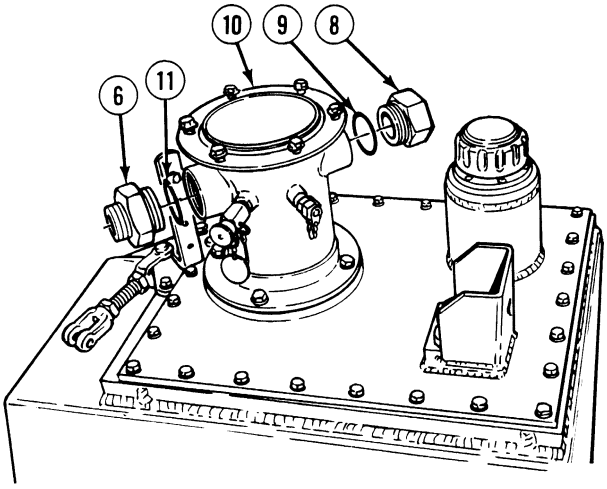

(6) Remove bleeder valve (12) from filter housing (10).

(7) Remove coupling (13) and preformed packing (14) from filter housing (10).

(8) Remove four screws (15) and lockwashers (16) from filter housing (10). Discard lockwashers.

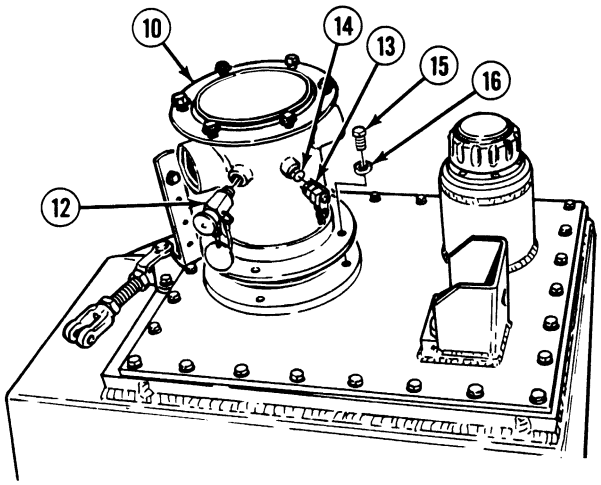

20-10. MAIN HYDRAULIC RESERVOIR FILTER ASSEMBLY REPLACEMENT (CONT).

(9) Remove filter housing (10) and gasket (17) from reservoir (18).

(10) Using a pipe wrench, remove pipe (19) from filter housing (10).

b. Cleaning/Inspection.

(1) Clean sealing compound from threads.

(2) Clean gasket material from reservoir for damage.

(3) Inspect filter housing and fittings for cracks, nicks and stripped threads.

(4) Replace damaged parts.

c. Installation.

NOTE

Install fittings as noted prior to removal.

(1) Using a pipe wrench, install pipe (19) on filter housing (10).

(2) Position gasket (17) and filter housing (10) on hydraulic reservoir (18).

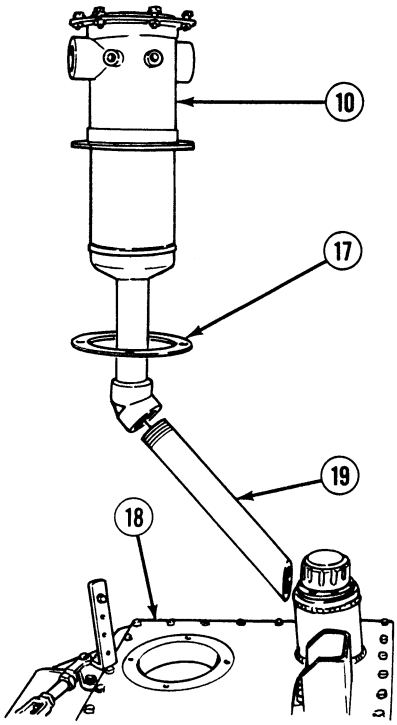

(3) Install four lockwashers (16) and screws (15) to filter housing (10) in sequence shown. Torque screws to 75 to 85 lb-in (9-10 N·m).

(4) Torque screw (15) in sequence shown to 100 to 110 lb-in (11-12 N·m).

(5) Install preformed packing (14) and coupling (13) on filter housing (10).

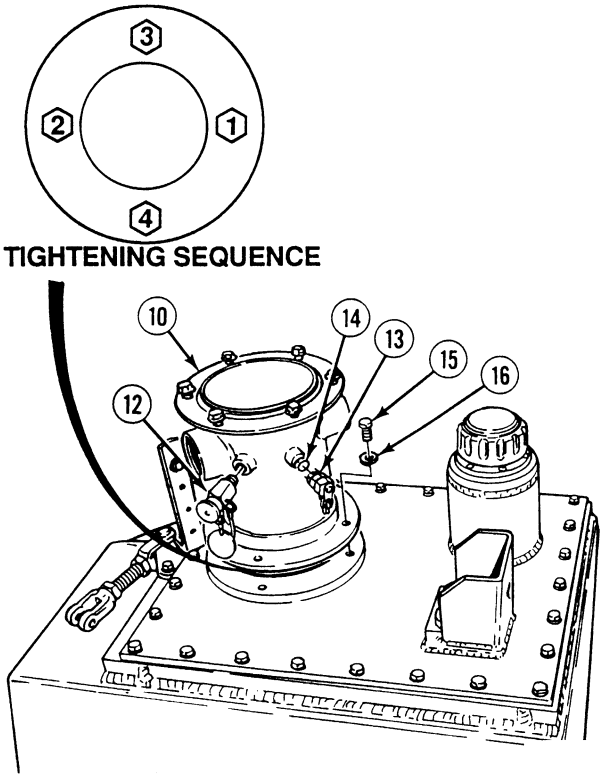

WARNING

Adhesives, solvents, and sealing compounds can burn easily, can give off harmful vapors, and are harmful to skin and clothing. To avoid injury or death, keep away from open fire and use in well-ventilated area. If adhesive, solvent, or sealing compound gets on skin or clothing, wash immediately with soap and water.

(6) Apply sealing compound to threads of bleeder valve (12). Install bleeder valve (12) in filter housing (10).

(7) Install preformed packing (11) and adapter (6) in filter housing (10).

(8) Install preformed packing (9) and reducer (8) in filter housing (10).

(9) Install elbow (3) and preformed packing (7) on reducer (8).

(10) Install preformed packing (5) and hose 2918 (4) on adapter (6).

(11) Install preformed packing (2) and hose 2773 (1) on elbow (3).

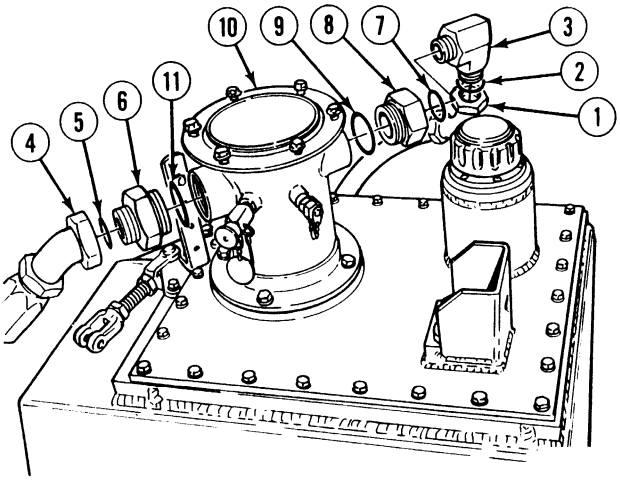

d. Follow-On Maintenance:

- Install main hydraulic filter, (Para 20-9).
- Remove wheel chocks, (TM 9-2320-364-10).

END OF TASK

20-11. MAIN HYDRAULIC RESERVOIR SERVICE.

This task covers:

a. Drain b. Fill c. Follow-On Maintenance

INITIAL SETUP

Tools and Special Tools
Tool Kit, General Mechanic's: Automotive (Item 74, Appendix G)
Dispensing Pump (Item 16, Appendix G)
Drum, Storage (Item 21, Appendix G)
Hose, Drain (Item 37, Appendix G)
Pan, Drain (2) (Item 46, Appendix G)

Materials/Parts
Oil, Lubricating (Item 54, Appendix C)

Materials/Parts - Continued
Gasket (Item 70, Appendix F)
Packing, Preformed (Item 259, Appendix F)
Screw/Washer (6) (Item 307, Appendix F)

Equipment Condition
Engine OFF, (TM 9-2320-364-10)
Wheels chocked, (TM 9-2320-364-10)
Batteries disconnected, (Para 7-87)

a. Drain.

WARNING

Prolonged contact with lubricating oil (MIL-L-2104) may cause a skin rash. Skin and clothing that come in contact with lubricating oil should be thoroughly washed immediately. Saturated clothing should be removed immediately. Areas in which lubricating oil is used should be well-ventilated to keep fumes to a minimum.

CAUTION

Clean area before removing filler breather to keep foreign matter out of hydraulic reservoir and to prevent damage.

NOTE

- Perform Steps (1) through (5) if truck is not equipped with hydraulic drain hose.
- Perform Steps (6) through (10) if truck is equipped with hydraulic drain hose.

(1) Remove cap (1), six screw and washer assemblies (2), strainer (3), and gasket (4) from hydraulic reservoir (5). Discard gasket and screw and washer assemblies.

(2) Remove preformed packing (6) from cap (1). Discard preformed packing.

(3) Position dispensing pump in hydraulic reservoir (5).

(4) Pump oil into storage drum.

(5) Remove dispensing pump from hydraulic reservoir (5).

(6) Remove cap (1) from hydraulic reservoir (5).

(7) Remove hydraulic drain hose (7) from bracket (8).

(8) Remove tethered cap (9) and position hydraulic drain hose over storage drum.

(9) Open valve (10) and drain oil into storage drum.

(10) Close valve (10), install tethered cap (9) and position hydraulic drain hose (7) into bracket (8).

(11) Position drain pan under plug (11).

(12) Remove plug (11) from hydraulic reservoir (5) and drain excess oil.

(13) Remove and discard preformed packing (12) from plug (11).

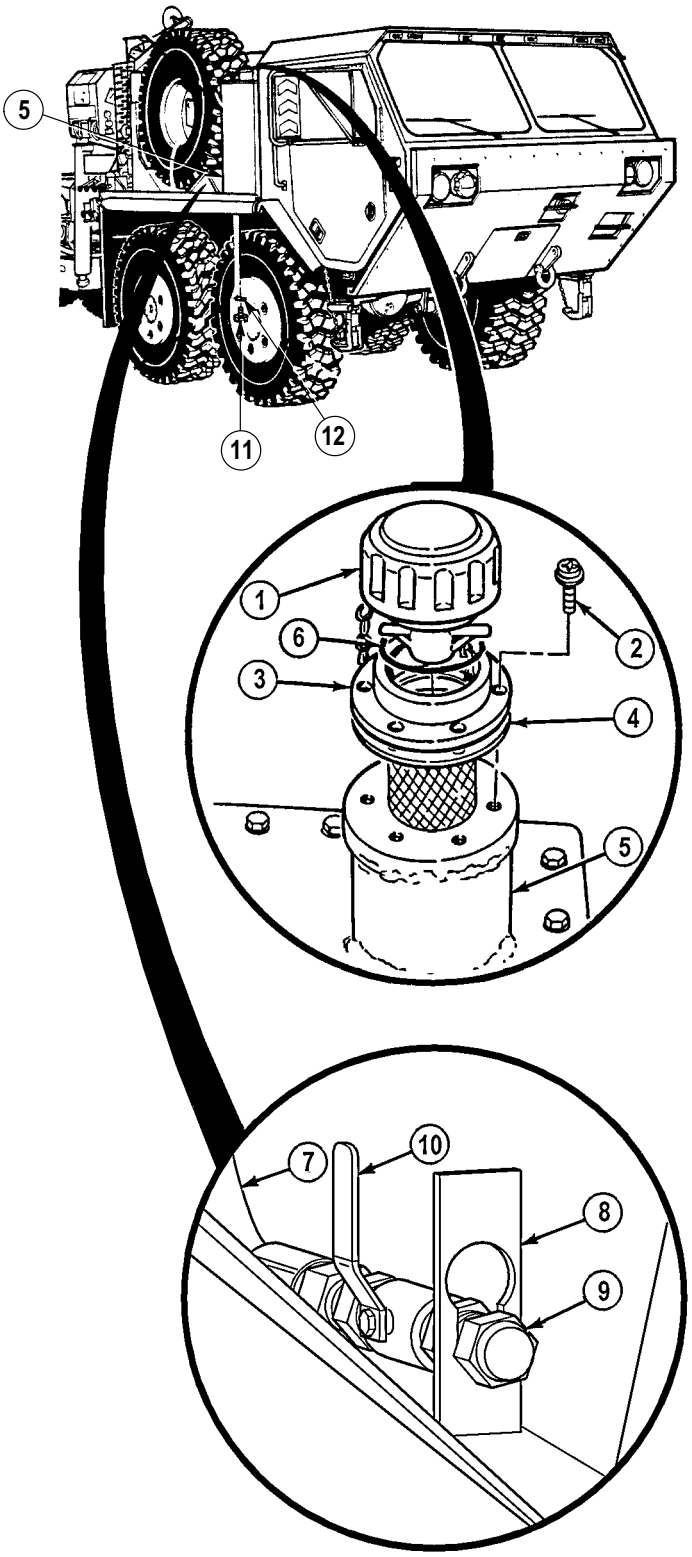

20-11. MAIN HYDRAULIC RESERVOIR SERVICE (CONT).

(14) Apply lubricating oil to preformed packing (12) and install on plug (11).

(15) Install plug (11) in hydraulic reservoir (5).

NOTE

Perform Steps (16) and (17) if preformed packing, gasket, and strainer were removed.

(16) Apply lubricating oil to preformed packing (6) and install on cap (1).

(17) Install gasket (4) and strainer (3) on hydraulic reservoir (5) with six screw and washer assemblies (2). Tighten screws to 10 to 15 lb-in (1 to 2 N·m).

(18) Install cap (1) on strainer (3).

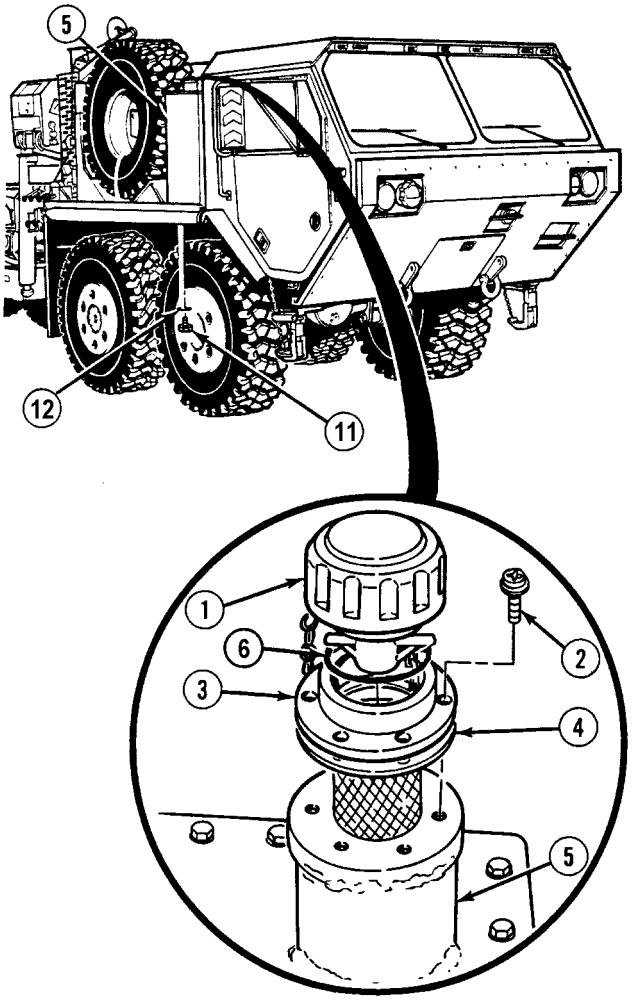

b. Fill.

WARNING

Prolonged contact with lubricating oil (MIL-L-2104) may cause a skin rash. Skin and clothing that come in contact with lubricating oil should be thoroughly washed immediately. Saturated clothing should be removed immediately. Areas in which lubricating oil is used should be well-ventilated to keep fumes to a minimum.

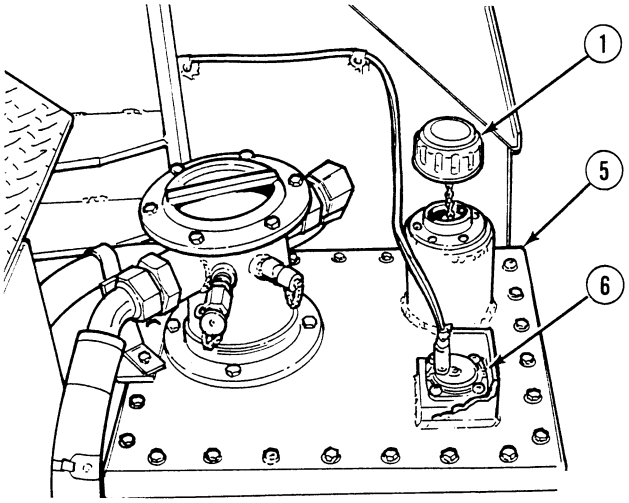

NOTE

Ensure all auxiliary equipment is stowed otherwise reservoir can be overfilled.

(1) Remove filler breather cap (1) from reservoir (5).

CAUTION

Cold hydraulic oil expands when hot. Do not fill reservoir past the word full on fluid level indicator. Failure to comply may result in damage to equipment.

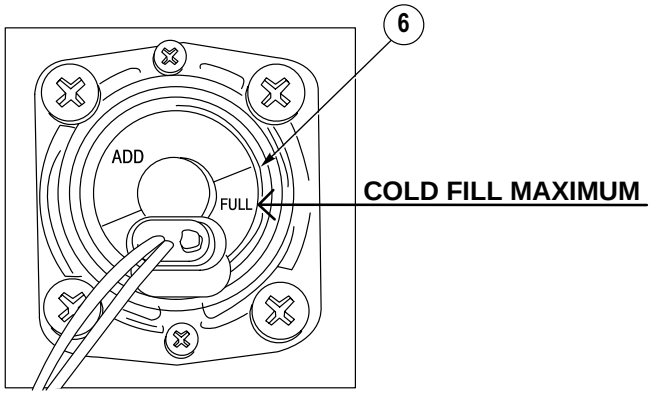

(2) Fill hydraulic reservoir (5) with lubricating oil (MIL-L-2104) until fluid level indicator (6) points to the word full.

(3) Install filler breather cap (1) on reservoir (5).

c. Follow-On Maintenance:

- Connect batteries, (Para 7-87).
- Remove wheel chocks, (TM 9-2320-364-10).

END OF TASK

20-12. MAIN HYDRAULIC RESERVOIR REPLACEMENT.

This task covers:

a. Removal b. Installation c. Follow-On Maintenance

INITIAL SETUP

Tools and Special Tools
Tool Kit, General Mechanic's: Automotive (Item 74, Appendix G)
Wrench, Crowsfoot 3/4 in. (3/8 Drive) (Item 34, Appendix G)
Socket Set, 3/8 in. (Item 62, Appendix G)
Wrench, Combination 1 1/8 in. (Item 79, Appendix G)
Wrench, Combination 1 5/8 in. (Item 84, Appendix G)
Wrench, Combination 1 7/8 in. (Item 87, Appendix G)
Wrench, Combination 2 1/8 in. (Item 89, Appendix G)
Wrench, Torque (0 to 175 lb-ft [0-237 N·m]) (Item 95, Appendix G)
Wrench, Torque (0 to 60 N·m) (Item 98, Appendix G)
Lifting Device, Minimum Capacity 200 lbs. (91 kg)

Materials/Parts
Cable Ties (Item 25, Appendix C)
Tags, Identification (Item 88, Appendix C)
Locknut (Item 96, Appendix F)

Materials/Parts - Continued
Locknut (3) (Item 106, Appendix F)
Lockwasher (3) (Item 180, Appendix F)
Lockwasher (3) (Item 195, Appendix F)
Packing, Preformed (Item 226, Appendix F)
Packing, Preformed (Item 233, Appendix F)
Packing, Preformed (Item 236, Appendix F)
Packing, Preformed (2) (Item 237, Appendix F)
Packing, Preformed (Item 245, Appendix F)
Packing, Preformed (Item 251, Appendix F)
Packing, Preformed (Item 252, Appendix F)
Packing, Preformed (3) (Item 227, Appendix F)
Packing, Preformed (Item 244, Appendix F)
Pin, Cotter (2) (Item 265, Appendix F)

Personnel Required
Two

Equipment Condition
Engine OFF, (TM 9-2320-364-10)
Wheels chocked, (TM 9-2320-364-10)
Spare tire carrier and davit removed, (Para 15-21)
Electronic control box (ECB), (Right side panel removed), (Para 17-21)
Right side noise panel removed, (Para 17-26)
Right fender front skirt removed, (Para 17-33)
Cab engine access panel removed, (Para 17-24)
Main hydraulic reservoir drained, (Para 20-11)

a. Removal.

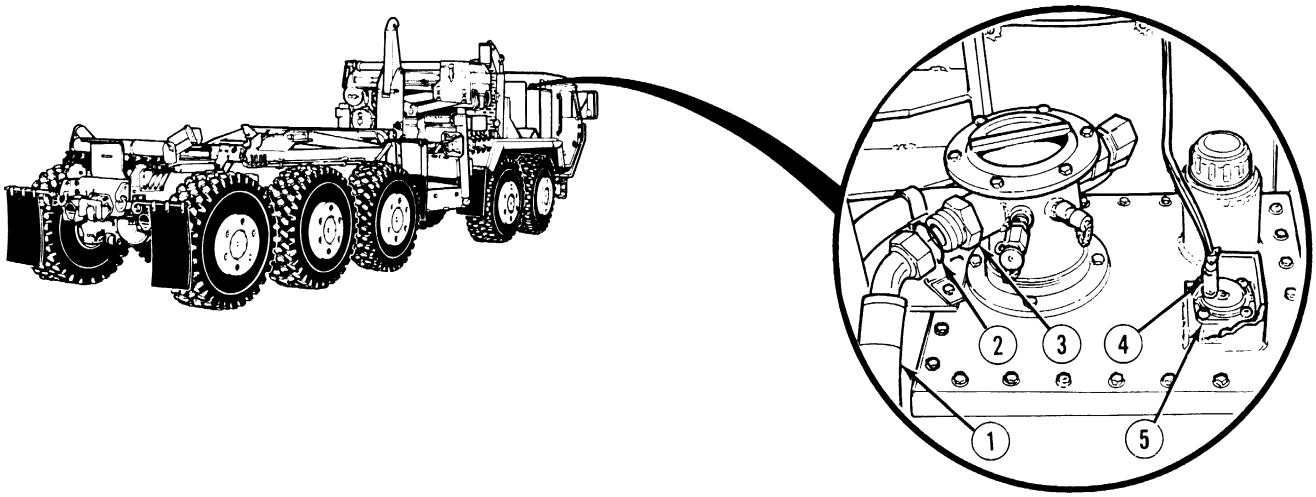

WARNING

Prolonged contact with lubricating oil (MIL-L-2104) may cause a skin rash. Skin and clothing that come in contact with lubricating oil should be thoroughly washed immediately. Saturated clothing should be removed immediately. Areas in which lubricating oil is used should be well-ventilated to keep fumes to a minimum.

NOTE

- Tag and mark all hydraulic hoses prior to removal.
- Cap and plug all hydraulic hoses to prevent contamination.
- Remove cable ties as required.

(1) Remove hose 2918 (1) and preformed packing (2) from fitting (3). Discard preformed packing.

NOTE

Connector is removed by gently prying on tab and pulling connectors apart.

(2) Disconnect connector (4) from fluid level gage (5).

20-12. MAIN HYDRAULIC RESERVOIR REPLACEMENT (CONT).

(3) Remove locknut (6), screw (7) and clip (8) from bracket (9) and hose 2773 (10). Discard locknut.

(4) Remove hose 2773 (10) and preformed packing (11) from elbow (12). Discard preformed packing.

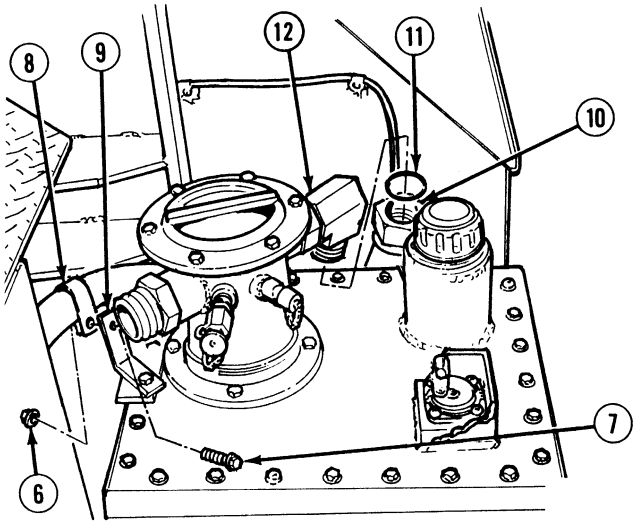

(5) Remove cotter pin (13) from retaining pin (14). Discard cotter pin.

(6) Remove retaining pin (14) from clevis (15) and bracket (16).

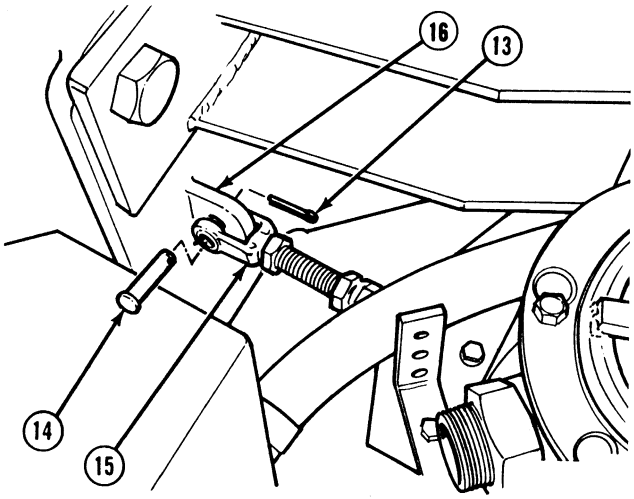

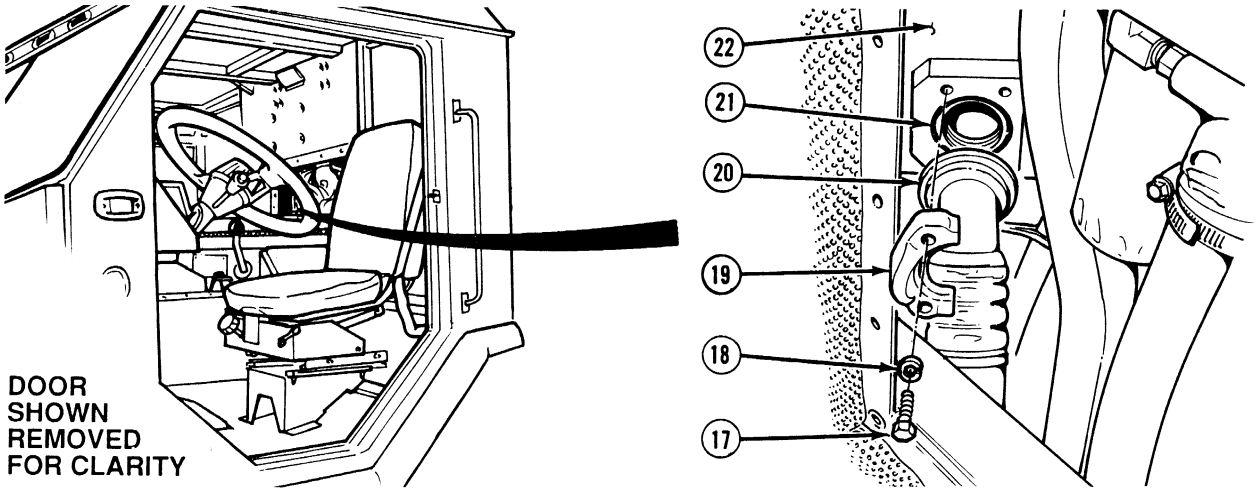

(7) Remove four screws (17), lockwashers (18), two split flanges (19), hose 2498 (20) and preformed packing (21) from hydraulic reservoir (22). Discard lockwashers and preformed packing.

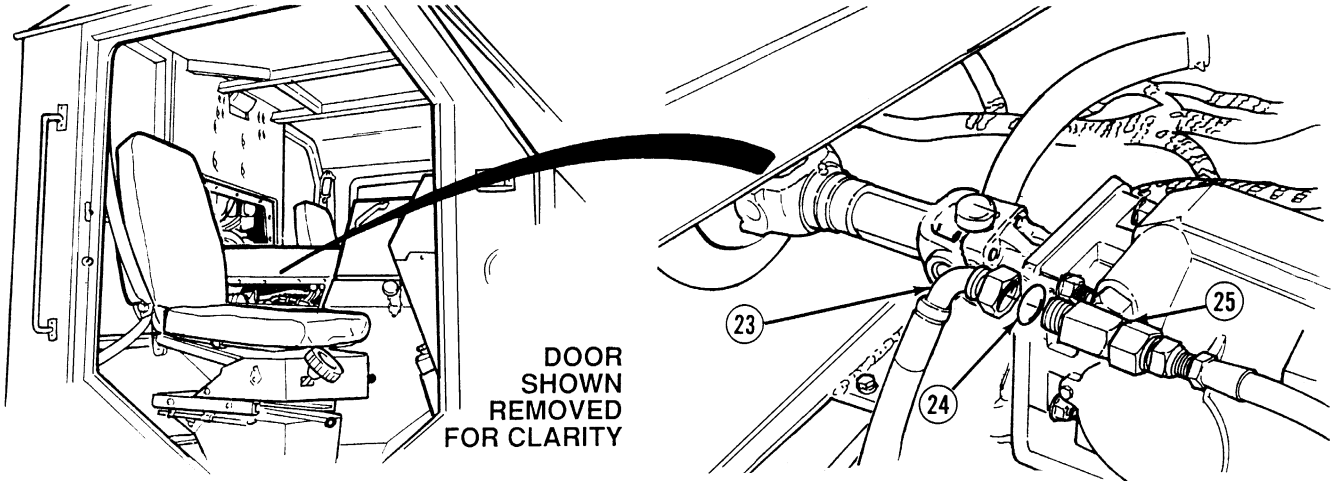

(8) Remove hose 2781 (23) and preformed packing (24) from tee (25). Discard preformed packing.

20-12. MAIN HYDRAULIC RESERVOIR REPLACEMENT (CONT).

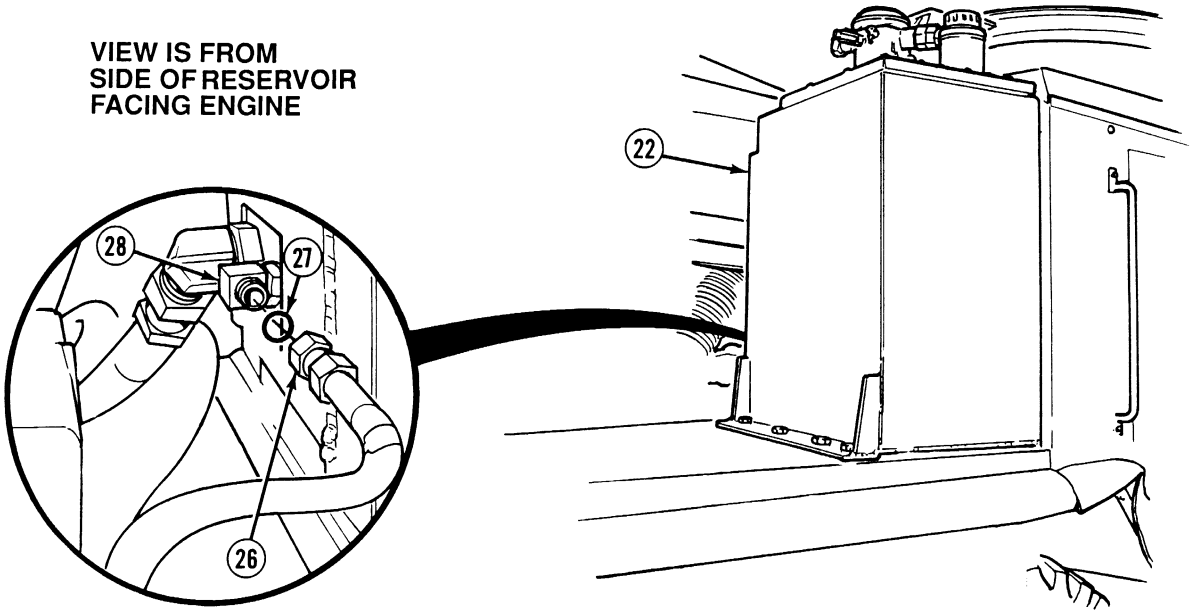

NOTE

If vehicle is equipped with crane, perform Step (9).

(9) Remove hose 2694 (26) and preformed packing (27) from elbow (28) on hydraulic reservoir (22). Discard preformed packing.

(10) Remove three locknuts (29) and screws (30) from hydraulic reservoir (22). Discard locknuts.

(11) Remove locknut (31) and screw (32) from hydraulic reservoir (22). Discard locknut.

WARNING

Hydraulic reservoir weighs 120 lbs (54 kg). The aid of an assistant is required to prevent possible injury to personnel.

CAUTION

Use caution when removing hydraulic reservoir. Hose on the rear of reservoir may be damaged if caution is not taken.

(12) With the aid of an assistant, remove hydraulic reservoir (22) from fender (33).

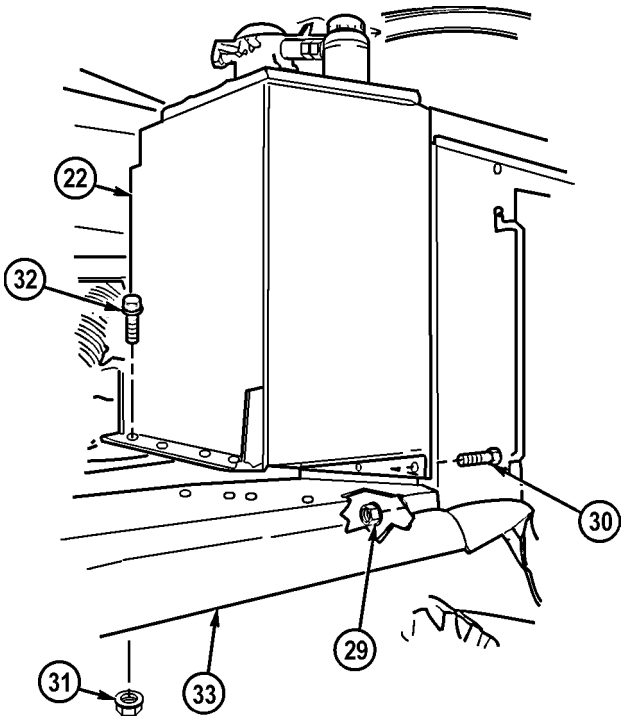

(13) Remove screw (34), lockwasher (35), washer (36) and clip bracket (37) from hydraulic reservoir (22). Discard lockwasher.

(14) Remove two screws (38), lockwashers (39) and plate (40) from hydraulic reservoir (22). Discard lockwashers.

(15) Remove cotter pin (41), clevis pin (42) and clevis (43) from plate (40). Discard cotter pin.

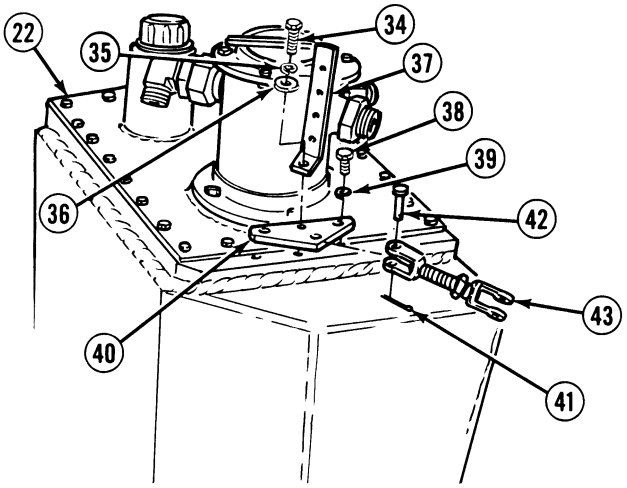

20-12. MAIN HYDRAULIC RESERVOIR REPLACEMENT (CONT).

NOTE

- Perform Steps (16) through (20) if truck is equipped with hydraulic drain hose assembly.
- Perform Steps (21) and (22) if truck is not equipped with hydraulic drain hose assembly.

(16) Remove hose 2781 (44) and preformed packing (45) from adapter (46). Discard preformed packing.

(17) Remove hydraulic drain hose (47), and preformed packing (48) from tee (49). Discard preformed packing.

(18) Remove adapter (46) and preformed packing (50) from tee (49). Discard preformed packing.

(19) Remove tee (49) and preformed packing (51) from hydraulic reservoir (22). Discard preformed packing.

(20) Remove tethered cap (52), adapter (53), valve (54), adapter (55), and preformed packing (56) from hydraulic drain hose (47). Discard preformed packing.

(21) Remove hose 2781 (23) and preformed packing (57) from elbow (58). Discard preformed packing.

NOTE

Note position of fittings before removal.

(22) Loosen backer nut (59) and remove elbow (58) and preformed packing (60) from hydraulic reservoir (22). Discard preformed packing.

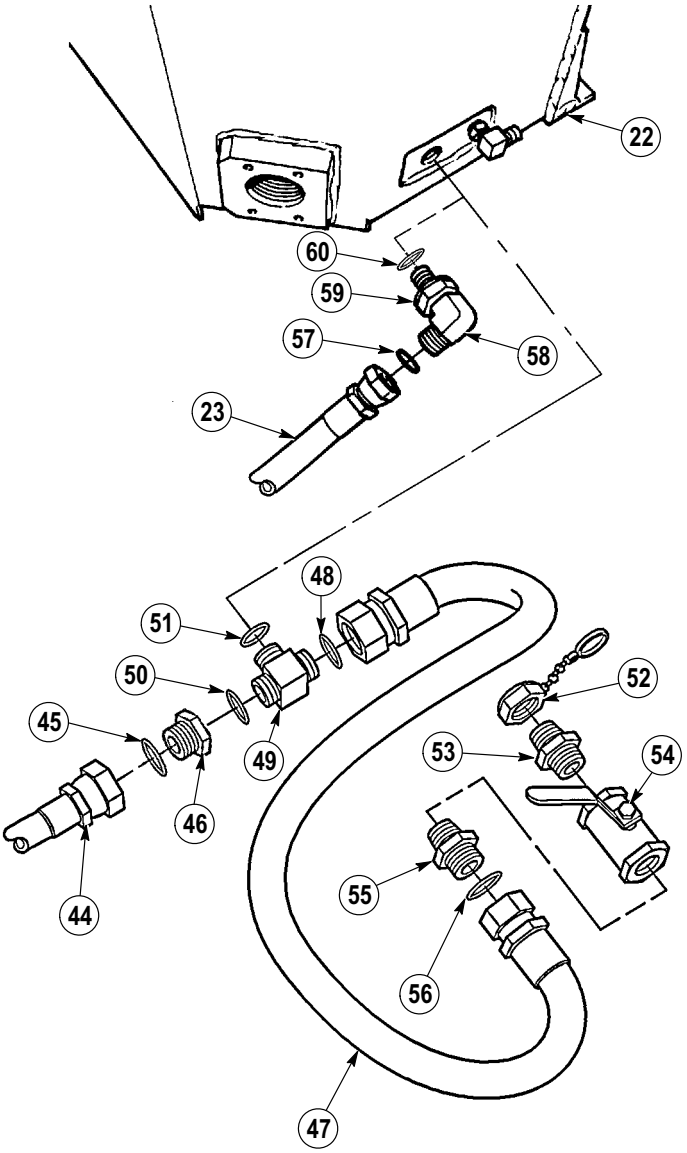

NOTE

- Perform Step (23) if truck is equipped with a crane.
- Perform Step (24) is truck is not equipped with a crane.

(23) Loosen backer nut (61) and remove elbow (28) and preformed packing (62) from hydraulic reservoir (22). Discard preformed packing.

(24) Remove plug (63) and preformed packing (64) from hydraulic reservoir (22). Discard preformed packing.

(25) Remove plug (65) and preformed packing (66) from hydraulic reservoir (22). Discard preformed packing.

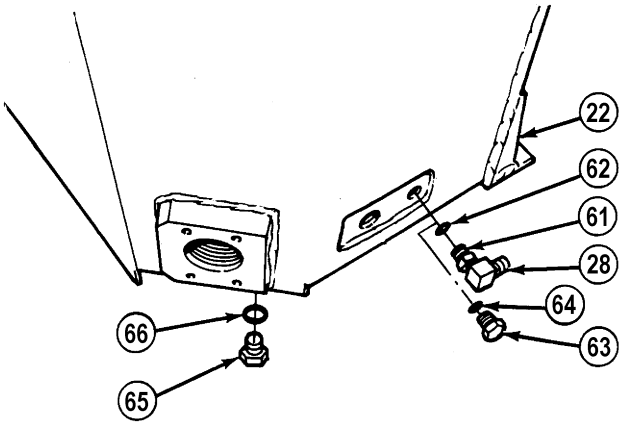

b. Installation.

(1) Install preformed packing (66) and plug (65) in hydraulic reservoir (22).

NOTE

- Perform Step (2) if truck is not equipped with a crane.
- Perform Step (3) if truck is equipped with crane.

(2) Install preformed packing (64) and plug (63) on hydraulic reservoir (22).

(3) Install preformed packing (62) and elbow (28) in hydraulic reservoir (22) and tighten backer nut (61).

20-12. MAIN HYDRAULIC RESERVOIR REPLACEMENT (CONT).

NOTE

- Perform Steps (4) and (5) if truck is not equipped with hydraulic drain hose assembly.
- Perform Steps (6) through (10) if truck is equipped with hydraulic drain hose assembly.

(4) Install preformed packing (60) and elbow (58) in hydraulic reservoir (22) and tighten backer nut (59).

(5) Install preformed packing (57) and hose 2781 (23) on elbow (58).

(6) Install preformed packing (51) and tee (49) on hydraulic reservoir (22).

(7) Install preformed packing (56), adapter (55), valve (54), adapter (53) and tethered cap (52) on hydraulic drain hose (47).

(8) Install preformed packing (50) and adapter (46) on tee (49).

(9) Install preformed packing (48) and hydraulic drain hose (47) on tee (49).

(10) Install preformed packing (45) and hose 2781 (44) on adapter (46).

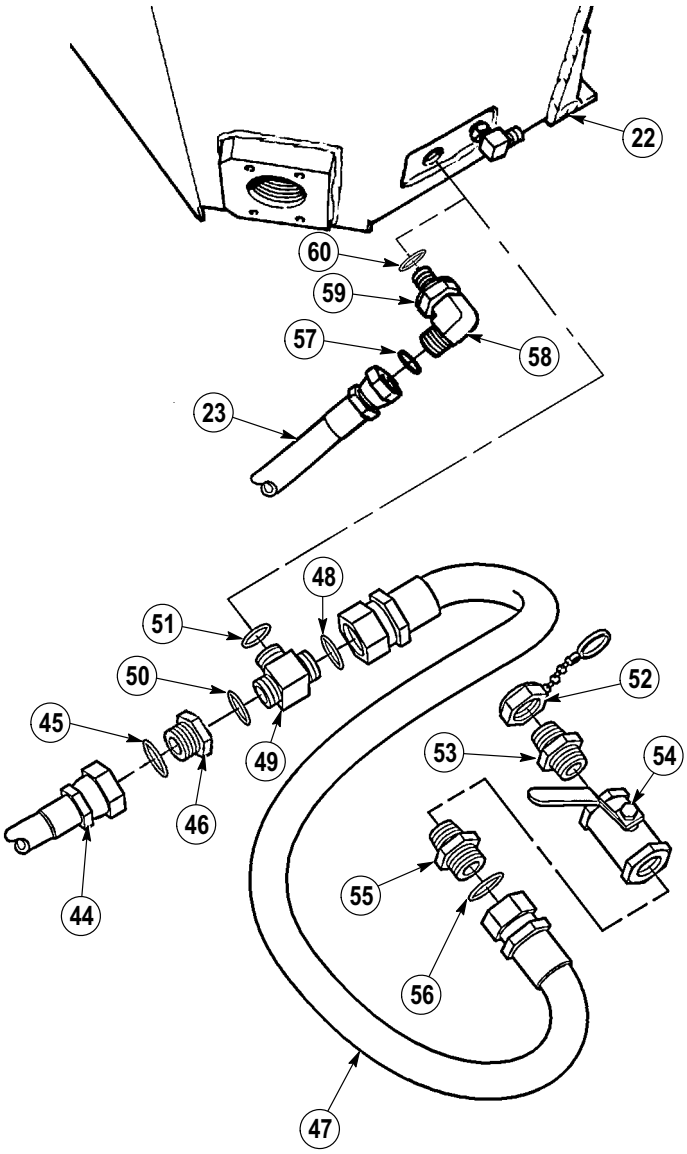

(11) Install clevis (43), clevis pin (42) and cotter pin (41) on plate (40).

(12) Install plate (40) on hydraulic reservoir (22) with two lockwashers (39) and screws (38).

(13) Install clip bracket (37), flat washer (36), lockwasher (35) and screw (34) on hydraulic reservoir (22).

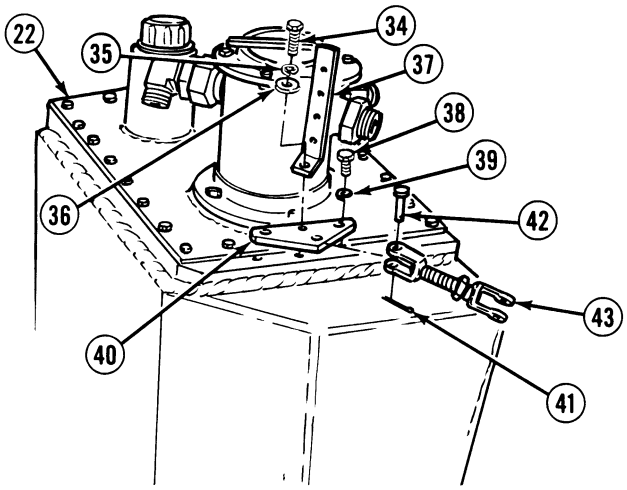

WARNING

Hydraulic reservoir weighs 120 lbs (54 kg). Use the aid of an assistant to install to prevent injury to personnel.

CAUTION

Use caution when installing hydraulic reservoir. Hose on the rear of reservoir may be damaged if caution is not taken.

(14) With the aid of an assistant, position hydraulic reservoir (22) on fender (33).

(15) Install screw (32) and locknut (31) on hydraulic reservoir (22). Tighten locknut to 90 lb-ft (122 N·m).

(16) Install three screws (30) and locknuts (29) on hydraulic reservoir (22). Tighten locknuts to 45 lb-ft (61 N·m).

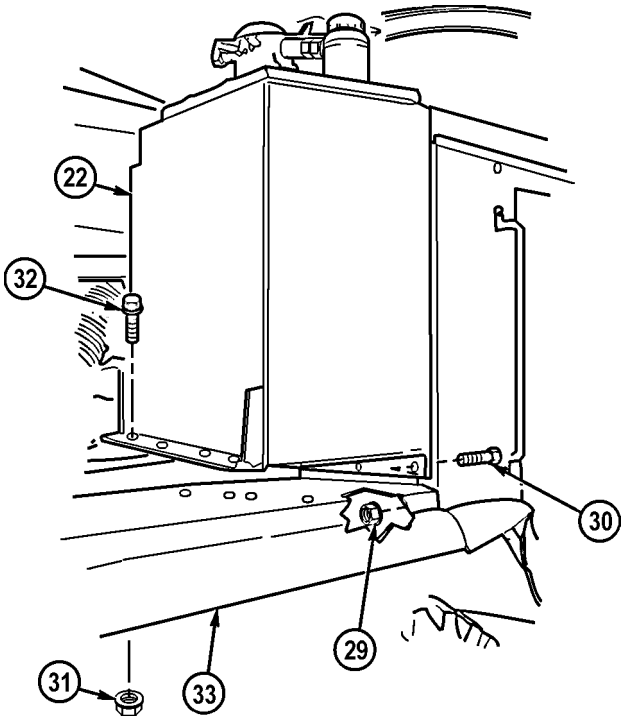

20-12. MAIN HYDRAULIC RESERVOIR REPLACEMENT (CONT).

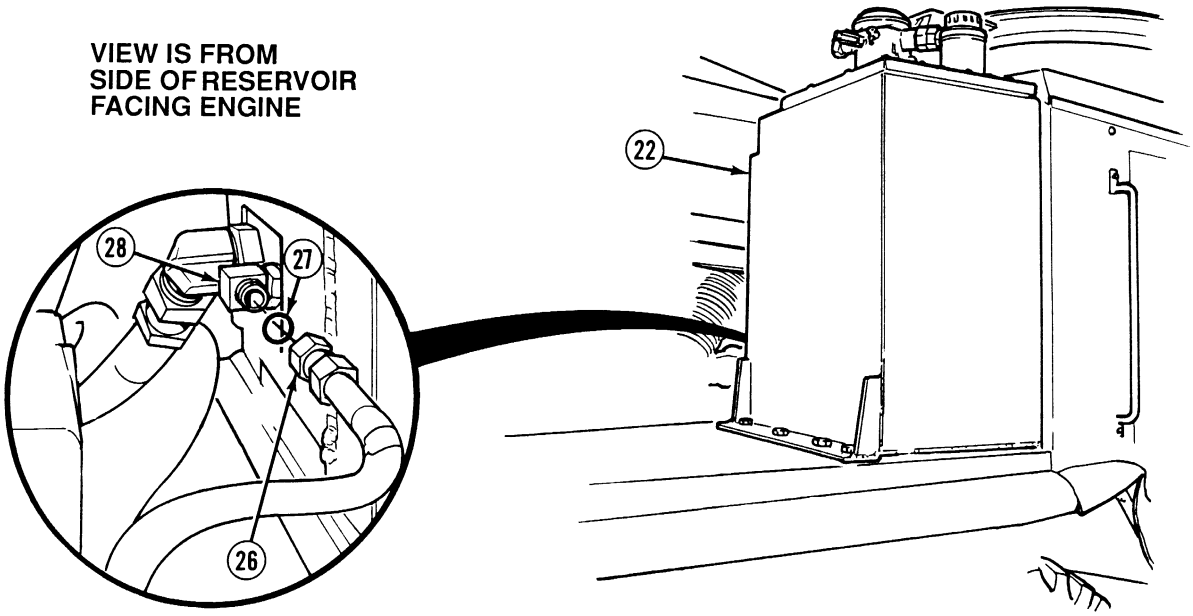

NOTE

Perform Step (12) only if vehicle is equipped with a crane.

(17) Install preformed packing (27) and hose 2694 (26) on elbow (28) on hydraulic reservoir (22).

(18) Install preformed packing (24) and hose 2781 (23) on tee (25).

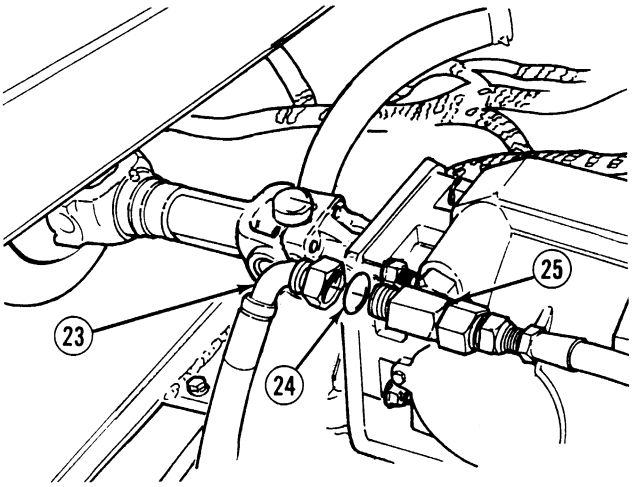

CAUTION

Ensure hose 2498 has minimum of two inches (5 cm) of clearance from cab upon installation. Failure to comply may result in damage to hose.

(19) With the aid of an assistant, install preformed packing (21), hose 2498 (20), two split flanges (19), four lockwashers (18) and screws (17) on hydraulic reservoir (22). Tighten screws to 30 lb-ft (41 N·m).

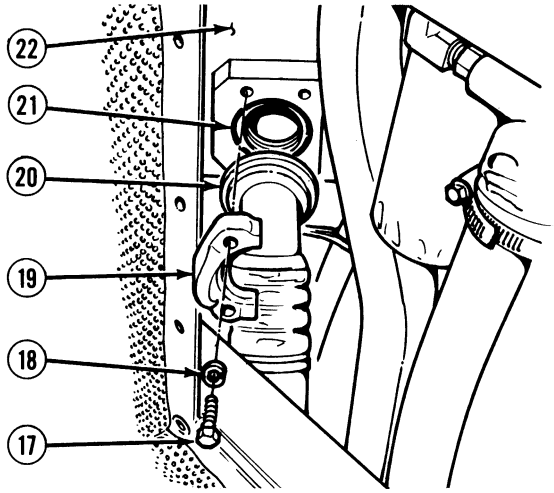

(20) Install yoke (15) on bracket (16) with retainer pin (14).

(21) Install cotter pin (13) in retaining pin (14).

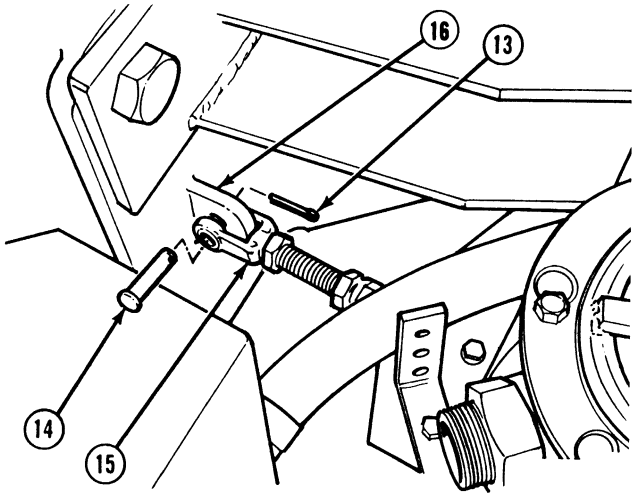

(22) Install preformed packing (11) and hose 2773 (10) on elbow (12).

CAUTION

Ensure clip is mounted in top hole of bracket only. Failure to comply may result in damage to hose 2773.

(23) Install clip (8), screw (7) and locknut (6) on bracket (9) and hose 2773 (10).

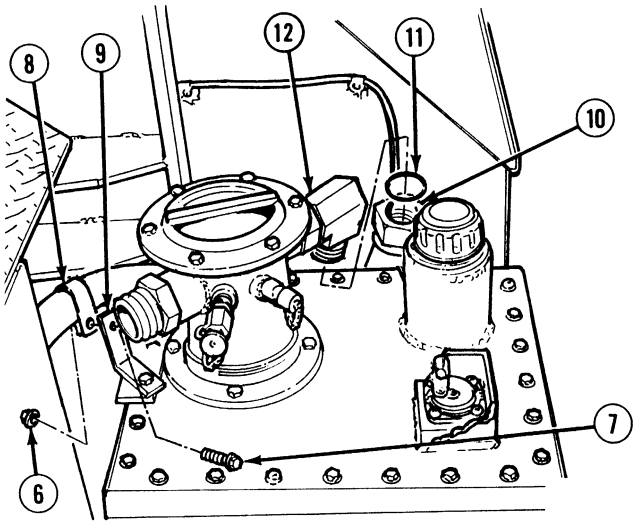

20-12. MAIN HYDRAULIC RESERVOIR REPLACEMENT (CONT).

(24) Connect connector (4) on fluid level gage (5).

(25) Install preformed packing (2) and hose 2918 (1) on fitting (3).

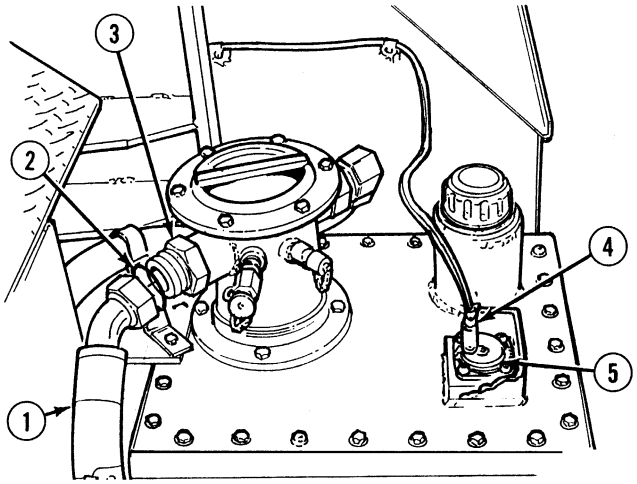

c. Follow-On Maintenance:

- Fill main hydraulic reservoir, (Para 20-11).
- Start engine and allow to idle for five minutes, (TM 9-2320-364-10).
- Shut off engine and check for hydraulic leaks, (TM 9-2320-364-10).
- Install cab engine access panel, (Para 17-24).
- Install right fender front skirt, (Para 17-33).
- Install right side noise panel, (Para 17-26).
- Install Electronic Control Box (ECB), right side panel, (Para 17-21).
- Install spare tire carrier and davit, (Para 15-21).
- Install spare tire, (TM 9-2320-364-10).
- Remove wheel chocks, (TM 9-2320-364-10).

END OF TASK

20-13. HYDRAULIC RESERVOIR STRAINER REPLACEMENT.

This task covers:

a. Removal b. Installation c. Follow-On Maintenance

INITIAL SETUP

Tools and Special Tools
Tool Kit, General Mechanic's: Automotive (Item 74, Appendix G)
Socket Set, 3/8 in. (Item 62, Appendix G)
Strainer Tool (Item 65, Appendix G)
Wrench, Pipe 3 1/2 in. Opening (Item 91, Appendix G)
Wrench, Torque (0 to 60 N·m) (Item 98, Appendix G)

Materials/Parts
Gasket (Item 51, Appendix F)
Lockwasher (27) (Item 180, Appendix F)

Equipment Condition
Engine OFF, (TM 9-2320-364-10)
Wheels chocked, (TM 9-2320-364-10)
Hydraulic reservoir drained, (Para 20-11)
Fluid level gage removed, (Para 20-15)
Main hydraulic reservoir filter assembly removed, (Para 20-10)

a. Removal.

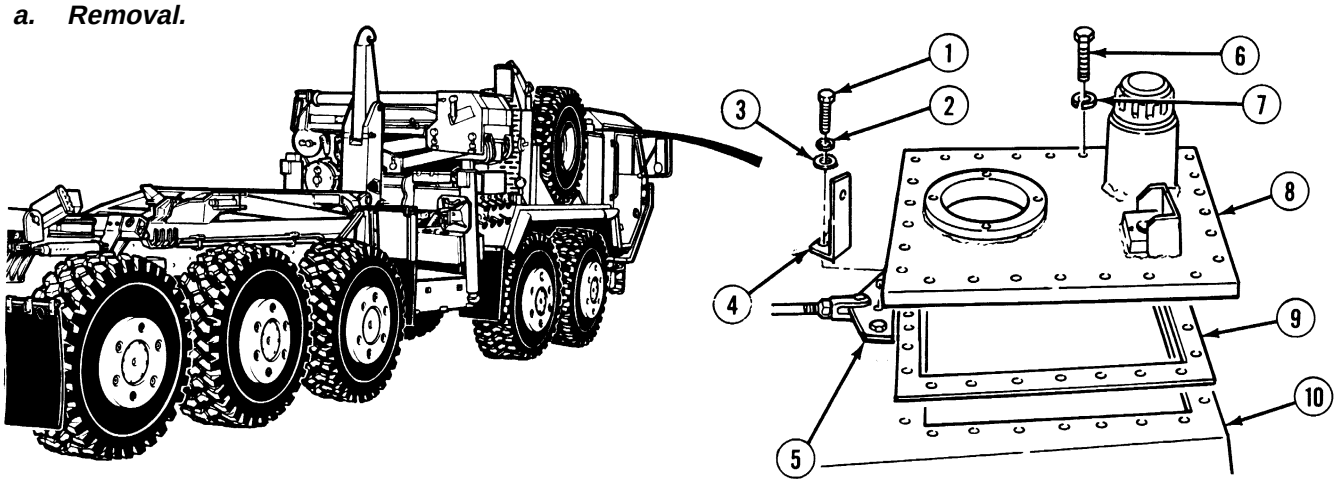

WARNING

Prolonged contact with lubricating oil (MIL-L-2104) may cause a skin rash. Skin and clothing that come in contact with lubricating oil should be thoroughly washed immediately. Saturated clothing should be removed immediately. Areas in which lubricating oil is used should be well-ventilated to keep fumes to a minimum.

NOTE

Note position of bracket prior to removal.

(1) Remove screw (1), lockwasher (2), washer (3) and bracket (4) from reservoir bracket (5). Discard lockwasher.

(2) Remove 26 screws (6) and lockwashers (7) from lid (8). Discard lockwashers.

(3) Remove lid (8) and gasket (9) from hydraulic reservoir (10). Discard gasket.

20-13. HYDRAULIC RESERVOIR STRAINER REPLACEMENT (CONT).

(4) Using strainer tool, remove strainer (11) and nipple (12) from hydraulic reservoir (10).

(5) Remove nipple (12) from strainer (11).

b. Installation.

(1) Install nipple (12) on strainer (11).

(2) Using strainer tool, install nipple (12) and strainer (11) in hydraulic reservoir (10).

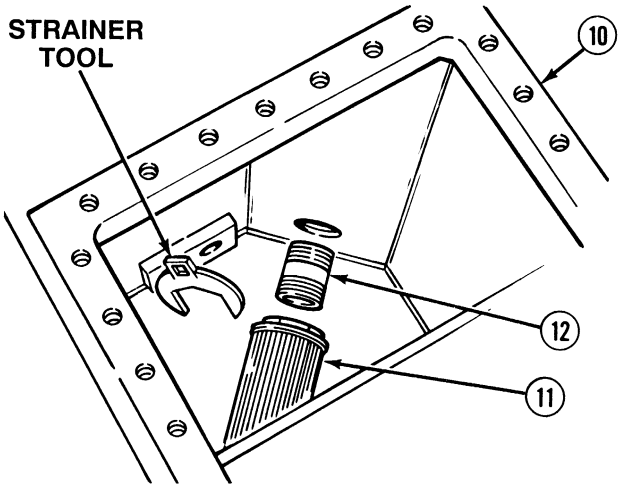

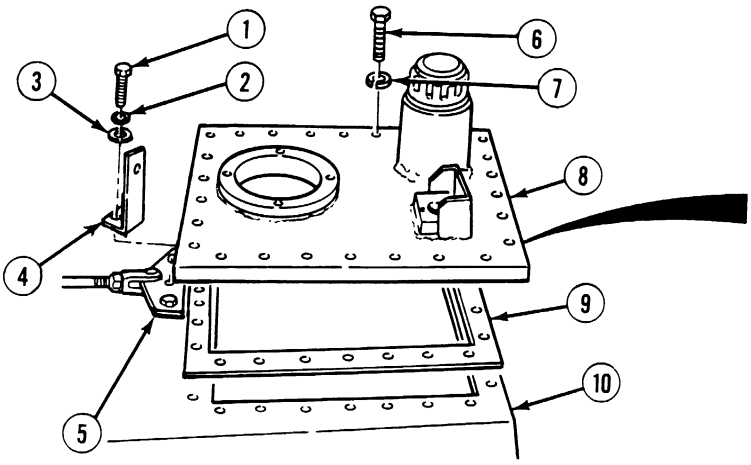

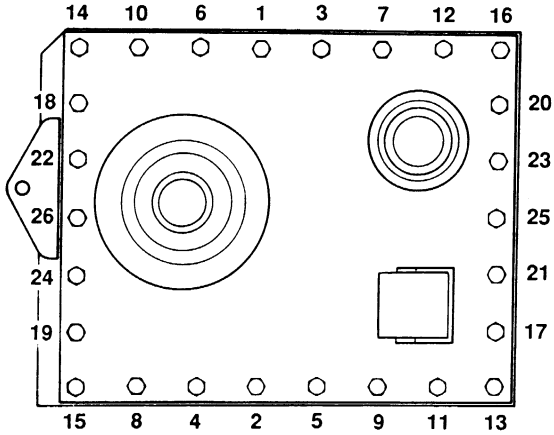

TIGHTENING SEQUENCE

(3) Position gasket (9) and lid (8) on hydraulic reservoir (10).

(4) Install lid (8) with 26 lockwashers (7) and screws (6). Tighten screws to 45 to 65 lb-in (5-7 N·m) using torque sequence as shown. Repeat torque sequence and torque to 60 to 65 lb-in (7 N·m).

NOTE

Install bracket in position as noted prior to removal.

(5) Install bracket (4), washer (3), lockwasher (2) and screw (1) on reservoir bracket (5). Tighten screw to 45 to 65 lb-in (5-7 N·m).

c. Follow-On Maintenance:

- Install main hydraulic reservoir filter assembly, (Para 20-10).
- Install fluid level gage, (Para 20-15).
- Fill hydraulic reservoir, (Para 20-11).
- Check for oil leaks, (TM 9-2320-364-10).
- Remove wheel chocks, (TM 9-2320-364-10).

END OF TASK

20-14. HYDRAULIC RESERVOIR FILLER BREATHER REPLACEMENT.

This task covers:

a. Removal b. Installation c. Follow-On Maintenance

INITIAL SETUP

Tools and Special Tools
Tool Kit, General Mechanic's: Automotive
(Item 74, Appendix G)

Materials/Parts
Oil, Lubricating (Item 54, Appendix C)
Gasket, (Item 70, Appendix F)
Packing, Preformed (Item 259, Appendix F)
Screw/Washer Assembly (6)
(Item 307, Appendix F)

Equipment Condition
Engine OFF, (TM 9-2320-364-10)
Wheels chocked, (TM 9-2320-364-10)

a. Removal.

CAUTION

Clean area before removing filler breather to keep foreign matter out of hydraulic reservoir and to prevent damage.

(1) Remove cap (1), six screw and washer assemblies (2), strainer (3) and gasket (4) from hydraulic reservoir (5). Discard gasket and screw and washer assemblies.

CAUTION

After filler breather is removed, cover opening to keep foreign matter out of hydraulic reservoir and to prevent possible damage.

(2) Cover opening on hydraulic reservoir (5).

(3) Remove chain (6) from cap (1).

(4) Remove preformed packing (7) from cap (1). Discard preformed packing.

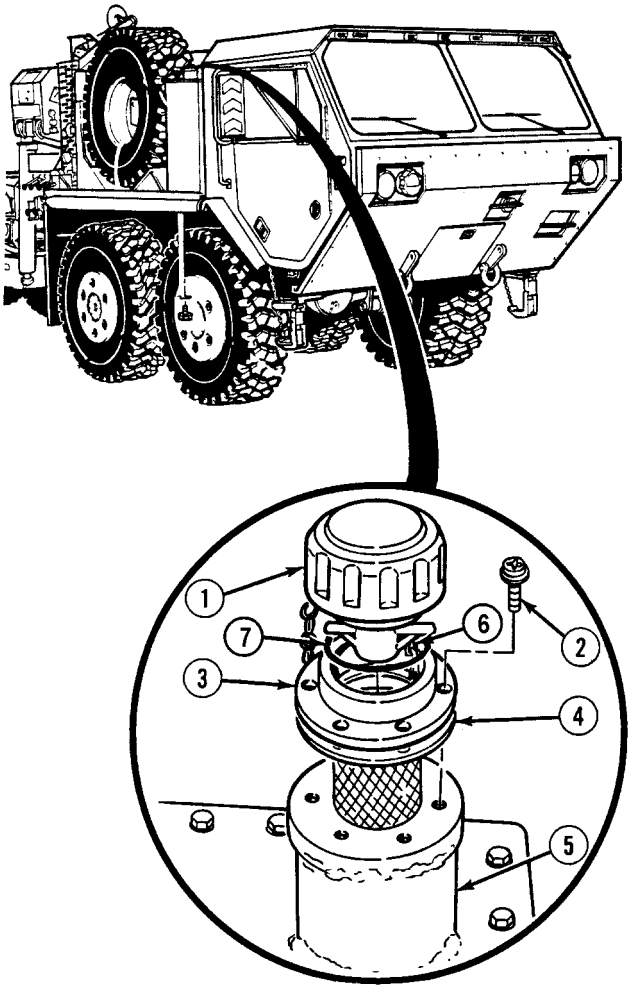

b. Installation.

(1) Remove cover from opening on hydraulic reservoir (5).

(2) Apply lubricating oil to preformed packing (7) and install on cap (1).

(3) Install chain (6) on cap (1).

(4) Position gasket (4) and strainer (3) on hydraulic reservoir (5) with six screw and washer assemblies (2).

(5) Tighten screws (2) down evenly until screw heads contact strainer top (3).

(6) Tighten each screw (2) one full turn.

(7) Install cap (1) on strainer (3).

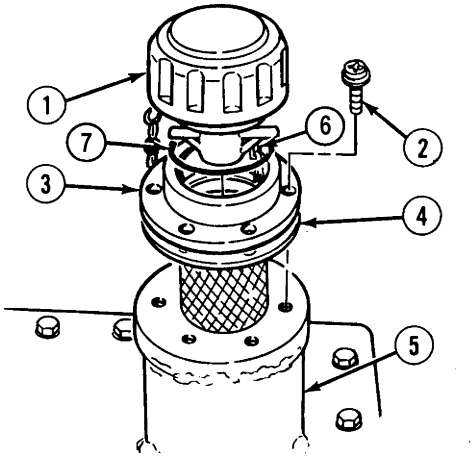

c. Follow-On Maintenance:

- Remove wheel chocks, (TM 9-2320-364-10).

END OF TASK

20-15. HYDRAULIC FLUID LEVEL GAGE REPLACEMENT.

This task covers:

a. Removal b. Installation c. Follow-On Maintenance

INITIAL SETUP

Tools and Special Tools
Tool Kit, General Mechanic's: Automotive (Item 74, Appendix G)
Socket Set, 3/8 in (Item 62, Appendix G)
Wrench, Torque (0 to 60 N·m) (Item 98, Appendix G)

Materials/Parts
Lockwasher (4) (Item 195, Appendix F)

Equipment Condition
Engine OFF, (TM 9-2320-364-10)
Wheels chocked, (TM 9-2320-364-10)

a. Removal.

NOTE

Connector is removed by gently prying on tab and pulling connectors apart.

(1) Disconnect connector (1) from fluid level gage (2).

(2) Remove four screws (3) and lockwashers (4) from fluid level gage (2). Discard lockwashers.

CAUTION

Handle fluid level gage with care to avoid damage to gage.

(3) Remove fluid level gage (2) from hydraulic reservoir (5).

CAUTION

After fluid level gage is removed, cover opening to keep foreign matter out of hydraulic reservoir and to prevent possible damage.

(4) Cover opening of hydraulic reservoir (5).

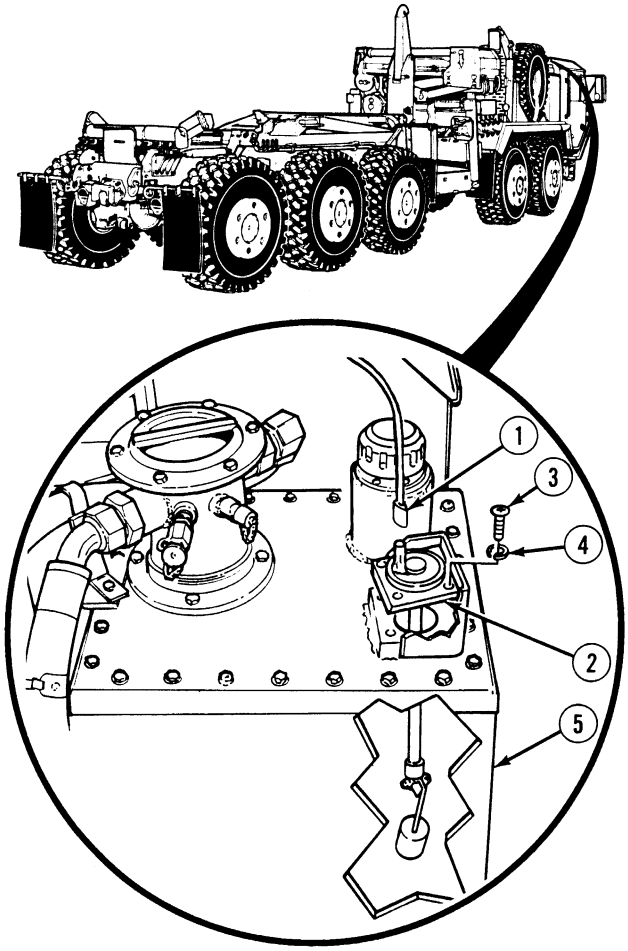

b. Installation.

CAUTION

Handle fluid level gage with care to avoid damage to gage.

(1) Remove cover from opening on hydraulic reservoir (5).

(2) Install fluid level gage (2) on hydraulic reservoir (5) with four lockwashers (4) and screws (3). Tighten screws to 35 to 43 lb-in (4-5 N·m).

(3) Connect connector (1) on fluid level gage (2).

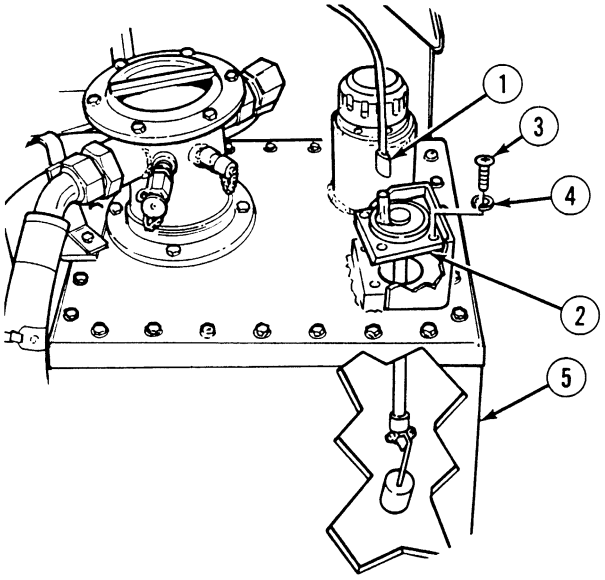

c. Follow-On Maintenance:

- Check gage operation, (TM 9-2320-364-10).
- Remove wheel chocks, (TM 9-2320-364-10).

END OF TASK

20-16. HYDRAULIC DRAIN HOSE KIT INSTALLATION.

This task covers:

a. Installation

b. Follow-On Maintenance

INITIAL SETUP

Tools and Special Tools
Tool Kit, General Mechanic's: Automotive (Item 74, Appendix G)
Socket Set, 3/8 in. (Item 62, Appendix G)
Wrench, Combination 1 1/8 in. (Item 79, Appendix G)
Wrench, Combination 1 5/8 in. (Item 84, Appendix G)
Wrench, Combination 1 7/8 in. (Item 87, Appendix G)
Wrench, Combination 2 1/8 in. (Item 89, Appendix G)

Materials/Parts
Locknut (Item 91, Appendix F)

Equipment Condition
Engine OFF, (TM 9-2320-364-10)
Wheels chocked, (TM 9-2320-364-10)
Spare tire removed, (TM 9-2320-364-10)
Right side noise panel removed, (Para 17-26)
Main hydraulic reservoir drained, (Para 20-11)

a. Installation.

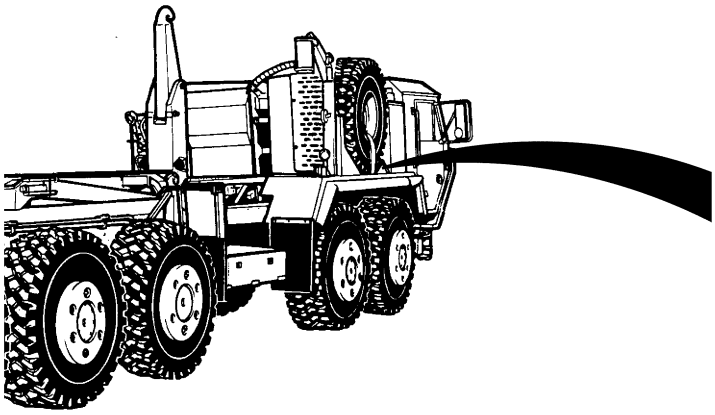

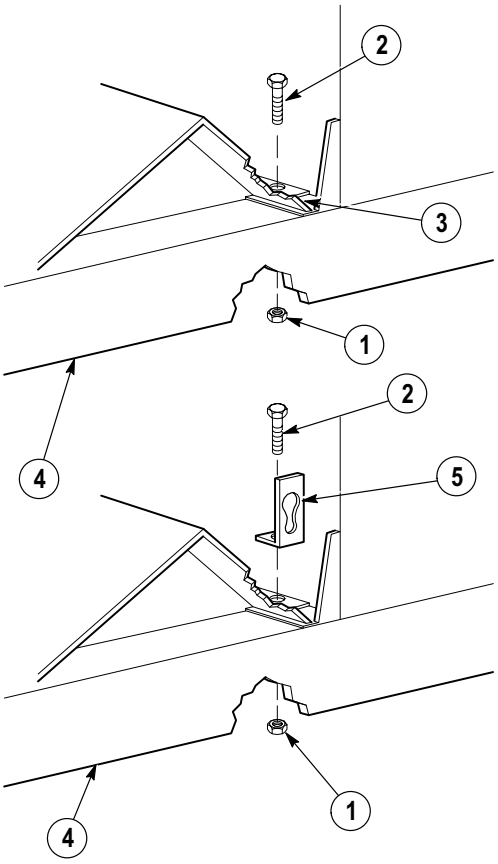

(1) Remove locknut (1) and screw (2) from tire carrier (3) and fender assembly (4). Discard locknut.

(2) Install hydraulic drain hose bracket (5) with screw (2) and locknut (1) on fender (4).

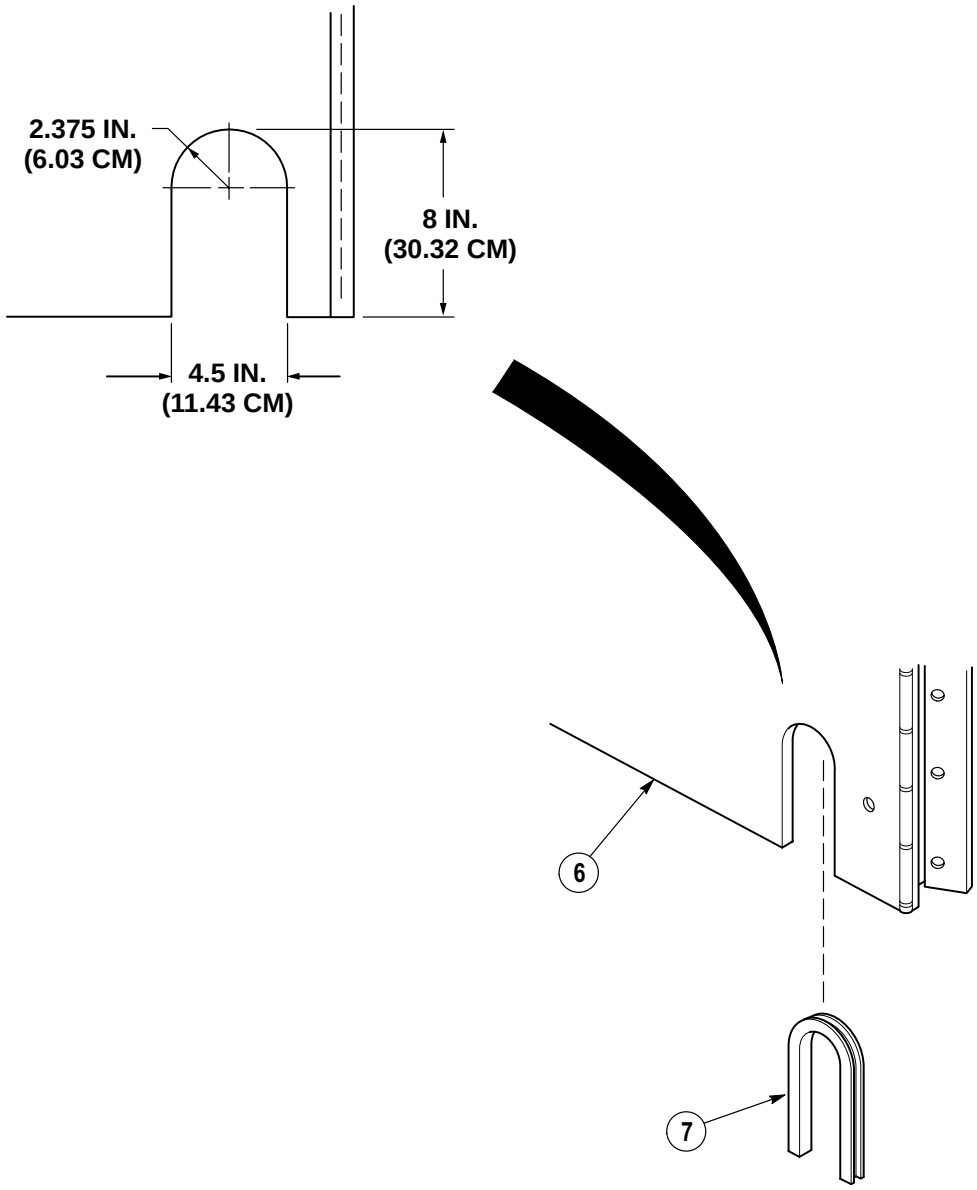

(3) Follow diagram to cut opening in right side noise panel (6).

(4) Install molding (7) on right side noise panel (6).

20-16. HYDRAULIC DRAIN HOSE KIT INSTALLATION (CONT).

(5) Remove hose 2781 (8) and preformed packing (9) from elbow (10). Discard preformed packing.

NOTE

Note position of fitting before removal.

(6) Loosen backer nut (11) and remove elbow (10) and preformed packing (12) from hydraulic reservoir (13). Discard elbow and preformed packing.

(7) Install preformed packing (14), adapter (15), valve (16), adapter (17) and tethered cap (18) on hydraulic drain hose (19).

(8) Install preformed packing (20) and tee (21) on hydraulic reservoir (13).

(9) Install preformed packing (22) and hydraulic drain hose (19) on tee (21).

(10) Install preformed packing (23) and adapter (24) on tee (21).

(11) Install preformed packing (25) and hose 2781 (8) on adapter (24).

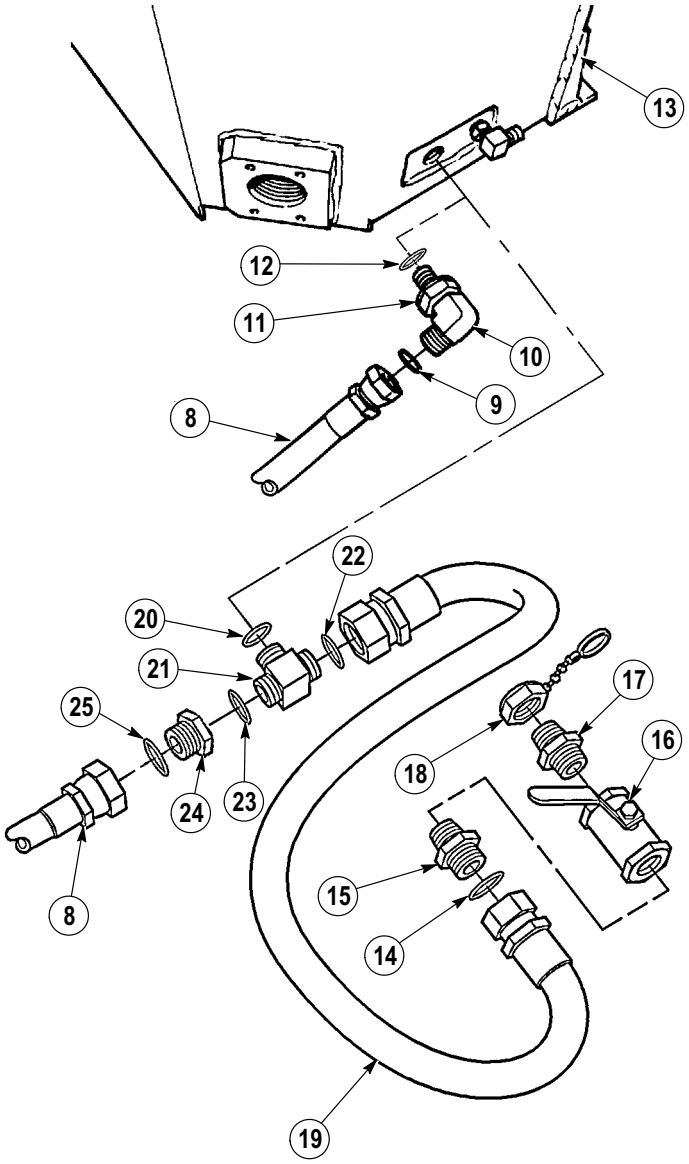

(12) Position hydraulic drain hose (19) onto hydraulic drain hose bracket (8).

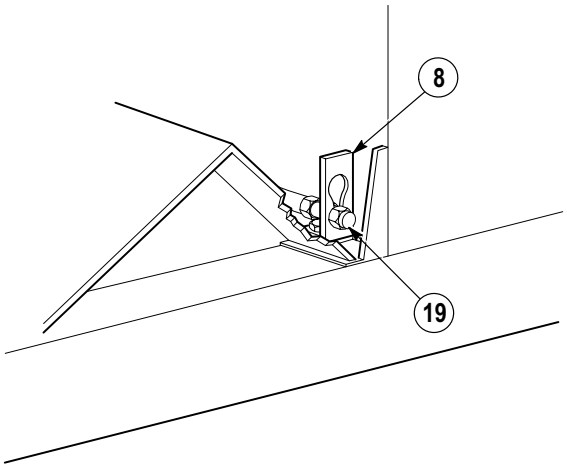

b. Follow-On Maintenance:

- Fill main hydraulic reservoir, (Para 20-11).
- Start engine and allow to idle for five minutes, (TM 9-2320-364-10).
- Shut off engine and check for hydraulic leaks, (TM 9-2320-364-10).
- Install right side noise panel, (Para 17-26).
- Install spare tire, (TM 9-2320-364-10).
- Remove wheel chocks, (TM 9-2320-364-10).

END OF TASK

CHAPTER 21

SPECIAL PURPOSE KITS MAINTENANCE

Para	Contents	Page
21-1	Introduction	21-1
21-2	Arctic Kit Relays Replacement	21-2
21-3	Arctic Pump Switch Replacement	21-4
21-4	Arctic Kit Battery Replacement	21-6
21-5	Arctic Kit Battery Box Replacement	21-8
21-6	Arctic Kit Water Pump Replacement	21-12
21-7	Arctic Kit Waterjacket Replacement	21-22
21-8	Arctic Kit Wire Harness Replacement	21-31
21-9	Arctic Kit Jumperwire Harness Replacement	21-34
21-10	Arctic Kit Switch Wire Harness Replacement	21-36
21-11	Arctic Kit Battery Disconnection/Connection	21-40
21-12	Interface Quick Disconnect Assembly Replacement	21-43
21-13	Interface Mounting Bracket Replacement	21-45
21-14	Interface Wiring Harness Replacement	21-49
21-15	Interface Powerbox Assembly Repair	21-64
21-16	Interface Powerbox Wiring Replacement	21-71
21-17	Interface Auxiliary Hydraulic Valve Replacement	21-76
21-18	Interface Manaul Override Solenoid Valve Replacement	21-79
21-19	Container Handling Unit (CHU) Jumperwire Harness Replacement	21-82
21-20	Container Handling Unit (CHU) Wire Harness Replacement	21-84
21-21	Container Handling Unit (CHU) Control Box Assembly Replacement	21-88
21-22	Container Handling Unit (CHU) Control Box Wiring Replacement	21-91
21-23	Container Handling Unit (CHU) Control Box Repair	21-95
21-24	Container Handling Unit (CHU) Proximity Switch And Sensing Plate Replacement/Adjustment (Hook Arm Up)	21-97
21-25	Container Handling Unit (CHU) Mode Switch Replacement/Adjustment	21-104
21-26	Container Handling Unit (CHU) Rear Lock Limit Switch Replacement/Adjustment	21-108
21-27	Container Handling Unit (CHU) Light Bar And Brackets Assembly Repair	21-114
21-28	Container Handling Unit (CHU) Container Guide Repair	21-123
21-29	Container Handling Unit (CHU) Slider/Pivot Assembly Repair	21-127
21-30	Container Handling Unit (CHU) Short Strut And Pin Bracket Assembly Repair	21-137
21-31	Container Handling Unit (CHU) Slider Arm Assembly Repair	21-144
21-32	Container Handling Unit (CHU) Rear Bracket Assembly Replacement	21-152
21-33	Container Handling Unit (CHU) Long Strut Bracket Assembly Repair	21-158
21-34	Container Handling Unit (CHU) Stow Weldment Replacement	21-168
21-35	Container Handling Unit (CHU) Lifting Frame Assembly Replacement	21-175
21-36	Container Handling Unit (CHU) Lifting Frame Locking Plate Assembly Replacement	21-186
21-37	Container Handling Unit (CHU) Lifting Frame Lower Container Lock Plate Repair	21-188
21-38	Container Handling Unit (CHU) Lifting Frame Flipper Bracket And Lock Plate Repair	21-192
21-39	Self-Recovery Winch (SRW) Container Handling Unit (CHU) Rear Guide Replacement	21-201
21-40	Container Handling Unit (CHU) Deck Weldment Replacement	21-203
21-41	Container Handling Unit (CHU) Bumper Weldment Support Replacement	21-205
21-42	Container Handling Unit (CHU) Air Valve Replacement	21-210
21-43	Container Handling Unit (CHU) Air Cylinder And Rotary Paddle Replacement/Adjustment	21-213
21-44	Container Handling Unit (CHU) Stow Cone Weldment Replacement	21-220
21-45	Container Handling Unit (CHU) Front Crossmember Assembly Replacement	21-223
21-46	Container Handling Unit (CHU) Front Support Brackets Replacement	21-225
21-47	Container Handling Unit (CHU) Lifting Frame Strap Replacement	21-231

21-1. INTRODUCTION.

This chapter contains maintenance instructions for removing, replacing, installing and adjusting components of the special purpose kits as authorized by the Maintenance Allocation Chart (MAC) at the Unit Maintenance level.

21-2. ARCTIC KIT RELAYS REPLACEMENT.

This task covers:

a. Removal b. Installation c. Follow-On Maintenance

INITIAL SETUP

Tools and Special Tools
Tool Kit, General Mechanic's: Automotive
(Item 74, Appendix G)

Equipment Condition
Engine OFF, (TM 9-2320-364-10)
Wheels chocked, (TM 9-2320-364-10)
Batteries disconnected, (Para 7-87)

a. Removal.

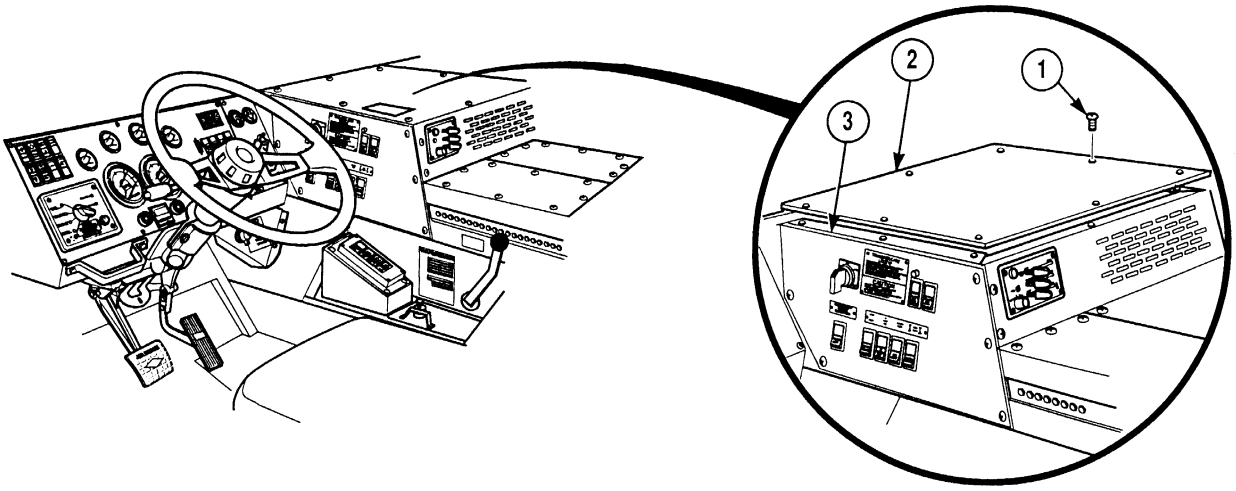

(1) Remove eight screws (1) and heater compartment access panel (2) from heater compartment (3).

(2) Remove four screws (4) from front heater panel (5) and tilt front heater panel forward away from heater compartment (3).

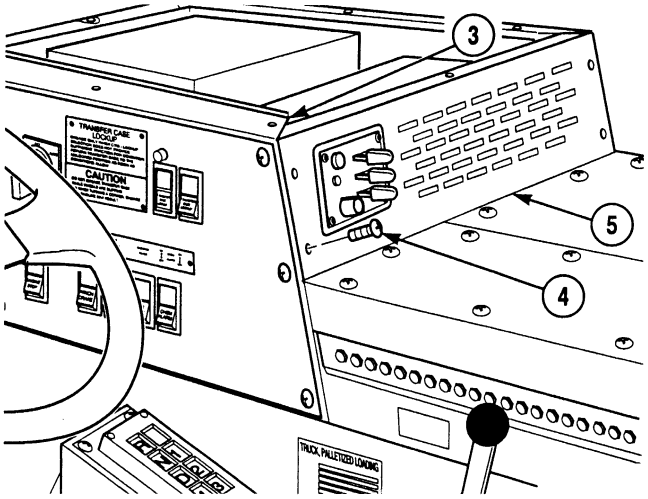

NOTE

These are two 24V relays. Both relays are removed and installed the same way. Refer to electrical schematic for identification of relays.

(3) Remove two arctic relays (6) from relay sockets (7).

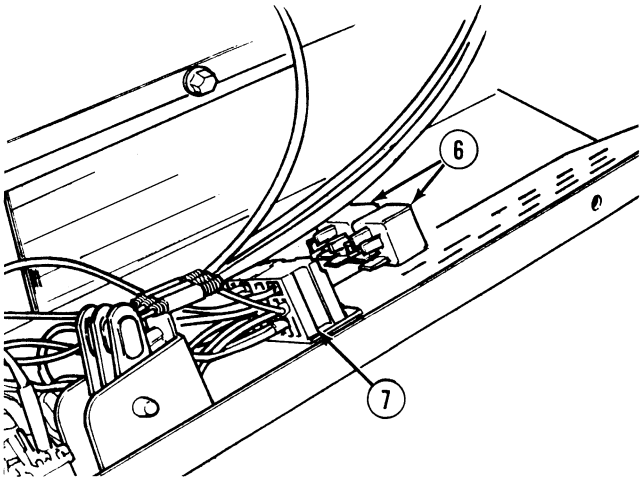

b. Installation.

(1) Install two arctic relays (6) on relay sockets (7).

(2) Install front heater panel (5) on heater compartment (3) with four screws (4).

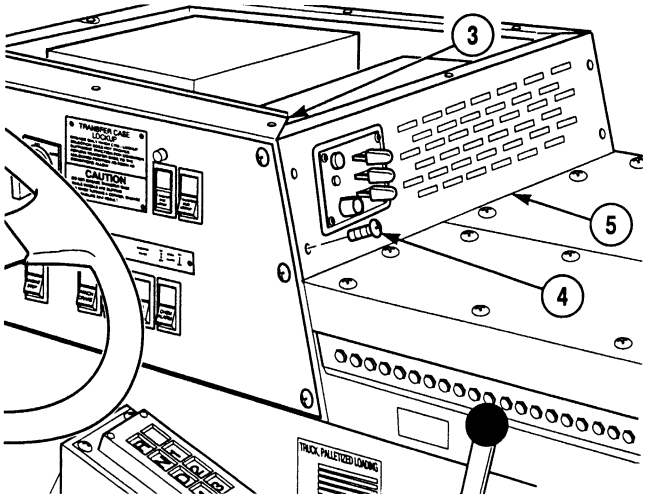

(3) Install heater compartment access panel (2) on heater compartment (3) with eight screws (1).

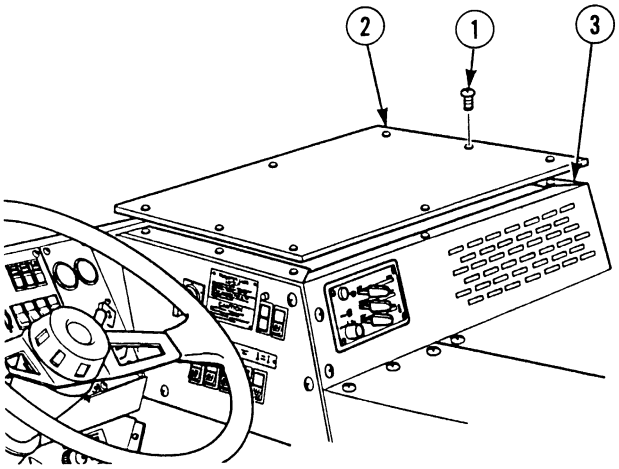

c. Follow-On Maintenance:

- Connect batteries, (Para 7-87).
- Remove wheel chocks, (TM 9-2320-364-10).

END OF TASK

21-3. ARCTIC PUMP SWITCH REPLACEMENT.

This task covers:

a. Removal b. Installation c. Follow-On Maintenance

INITIAL SETUP

Tools and Special Tools
Tool Kit, General Mechanic's: Automotive (Item 74, Appendix G)

Equipment Condition
Engine OFF, (TM 9-2320-364-10)
Wheels chocked, (TM 9-2320-364-10)
Batteries disconnected, (Para 7-87)
Heater compartment cover removed, (Para 17-4)

a. Removal.

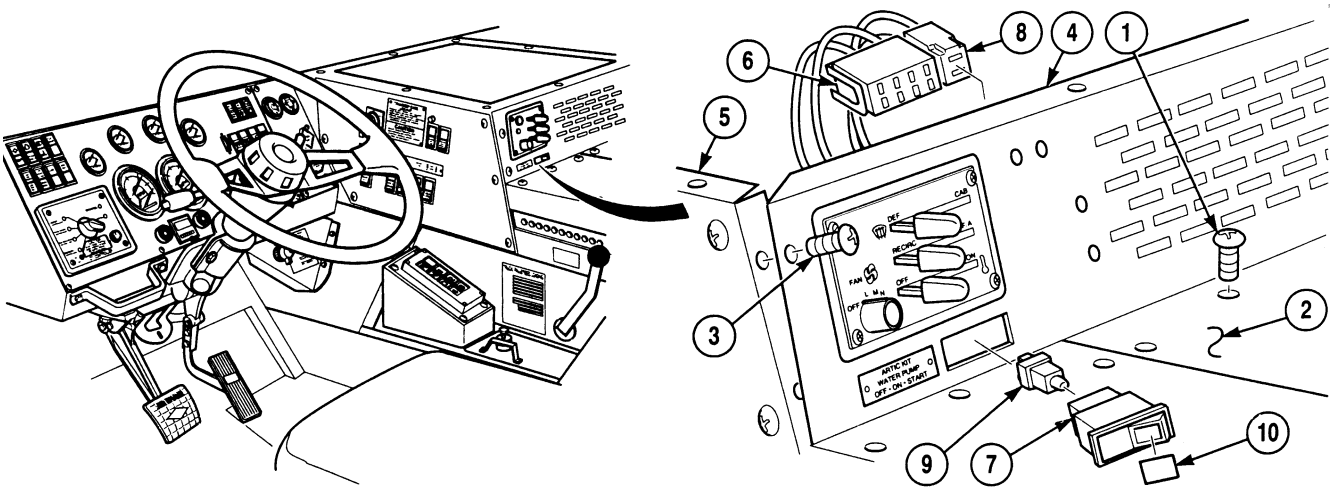

(1) Remove three screws (1) from Electronic Control Box (ECB) cover (2).

(2) Remove four screws (3) from front heater panel (4).

(3) Tilt front heater panel (4) forward away from heater box (5).

(4) Disconnect S29 connector (6) from arctic pump switch (7).

(5) Disconnect arctic pump switch light connector (8) from arctic pump switch (7).

NOTE

Switch is removed by compressing retaining tabs.

(6) Remove arctic pump switch (7) from heater panel (4).

(7) Remove light plug (9) from arctic pump switch (7).

(8) Remove applique (10) from arctic pump switch (7).

b. Installation.

(1) Install applique (10) in arctic pump switch (7).

(2) Install light plug (9) in rear of arctic pump switch (7).

(3) Install arctic pump switch (7) in heater panel (4).

(4) Connect arctic pump switch light connector (8) to arctic pump switch (7).

(5) Connect S29 connector (6) to arctic pump switch (7).

(6) Tilt heater panel (4) back against heater box (5).

(7) Install four screws (3) in heater panel (4).

(8) Install three screws (1) in ECB cover (2).

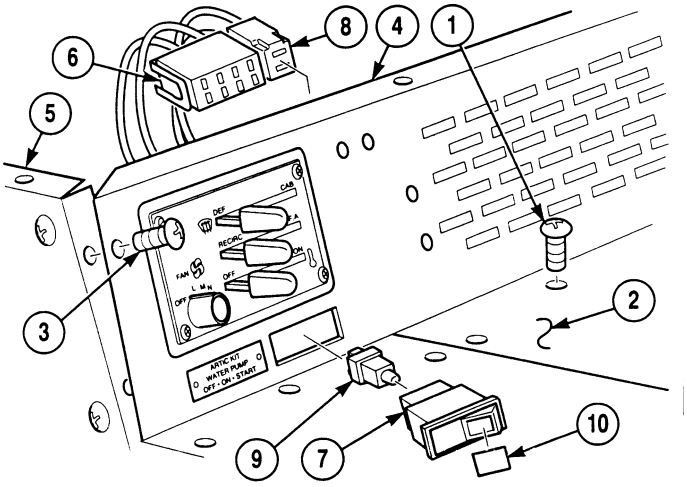

c. Follow-On Maintenance:

- Install heater compartment cover, (Para 17-4).
- Connect batteries, (Para 7-87).
- Check operation of arctic pump switch, (TM 9-2320-364-10).
- Remove wheel chocks, (TM 9-2320-364-10).

END OF TASK

21-4. ARCTIC KIT BATTERY REPLACEMENT.

This task covers:

a. Removal b. Installation c. Follow-On Maintenance

INITIAL SETUP

Tools and Special Tools
Tool Kit, General Mechanic's: Automotive (Item 74, Appendix G)
Gloves, Chemical Oil Protective (Item 28, Appendix G)
Goggles, Industrial (Item 30, Appendix G)

Materials/Parts
Coating Compound, Bituminous Solvent Type (Item 32, Appendix C)
Locknut (4) (Item 114, Appendix F)

Personnel Required
Two

Equipment Condition
Engine OFF, (TM 9-2320-364-10)
Wheels chocked, (TM 9-2320-364-10)
Batteries disconnected, (Para 7-87)
Arctic kit batteries disconnected (if equipped), (Para 21-11)

a. Removal.

WARNING

- Battery acid (electrolyte) is extremely harmful. Always wear safety goggles and rubber gloves, and do not smoke when performing maintenance on batteries. Injury will result if acid contacts skin or eyes. Wear rubber apron to prevent clothing being damaged.
- Remove all jewelry such as rings, dog tags, bracelets, etc. If jewelry or tools contact positive electrical circuits a direct short may result. Damage to equipment, injury or death to personnel may occur.

NOTE

Both batteries are removed the same way.

(1) Remove four locknuts (1), washers (2) two hold down straps (3) and four carrier screws (4) from batteries (5) and battery box (6). Discard locknuts.

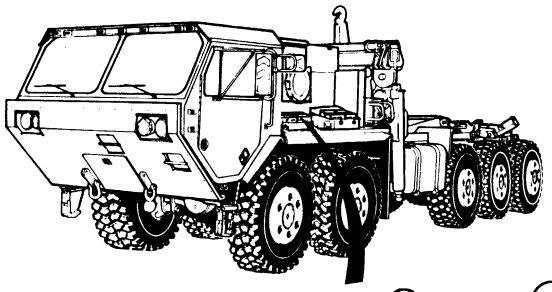

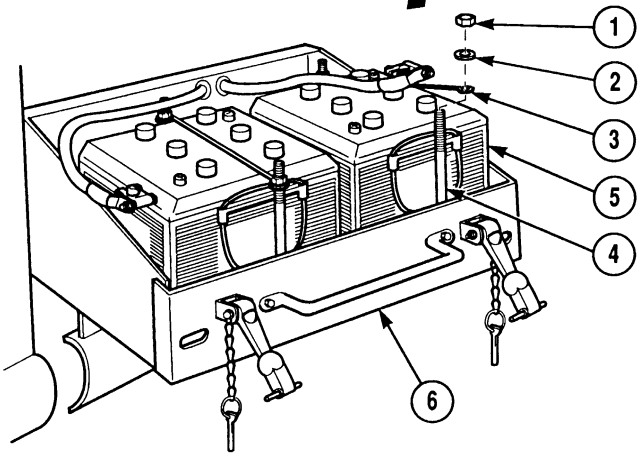

WARNING

Battery weighs 75 lbs (34 kg). Remove battery only with the aid of an assistant to prevent possible injury to personnel.

(2) With the aid of an assistant, remove two batteries (5) from battery box (6).

b. Installation.

WARNING

Battery weighs 75 lbs (34 kg). Install battery only with the aid of an assistant to prevent possible injury to personnel.

NOTE

Refer to TM 9-6140-200-14 for more specific details on battery maintenance.

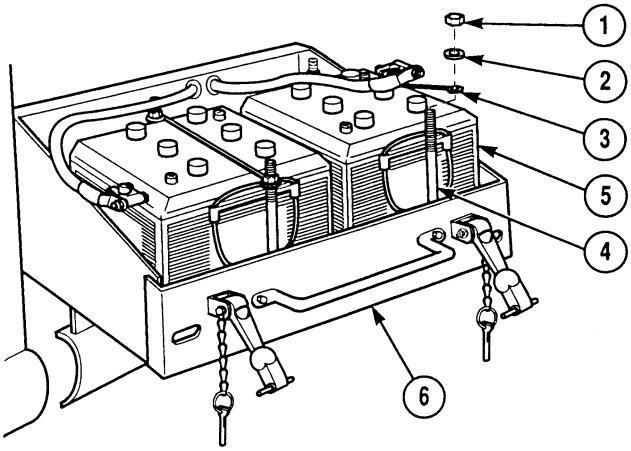

(1) With the aid of an assistant, position two batteries (5) in battery box (6).

(2) Install two hold down straps (3) and four carrier screws (4) with two washers (2) and locknuts (1) in battery box (6).

WARNING

Corrosion inhibitor contains alkali. Do not get in eyes; wear goggles/safety glasses when using. Avoid contact with skin. In case of contact, immediately wash area with soap and water. If eyes are contacted, flush eyes with large amounts of water for at least 15 minutes and get immediate medical attention.

(3) Coat threads of four carrier screws (4), washers (2), and lock nuts (1) with bituminous.

c. Follow-On Maintenance:

- Connect batteries, (Para 7-87).
- Remove wheel chocks, (TM 9-2320-364-10).

END OF TASK

21-5. ARCTIC KIT BATTERY BOX REPLACEMENT.

This task covers:

a. Removal b. Installation c. Follow-On Maintenance

INITIAL SETUP

Tools and Special Tools
Tool Kit, General Mechanic's: Automotive (Item 74, Appendix G)

Materials/Parts
Locknut (4) (Item 106, Appendix F)
Locknut (18) (Item 140, Appendix F)
Lockwasher (2) (Item 168, Appendix F)

Personnel Required
Two

Equipment Condition
Engine off, (TM 9-2320-364-10)
Wheels chocked, (TM 9-2320-364-10)
Arctic kit batteries removed, (Para 21-4)

a. Removal.

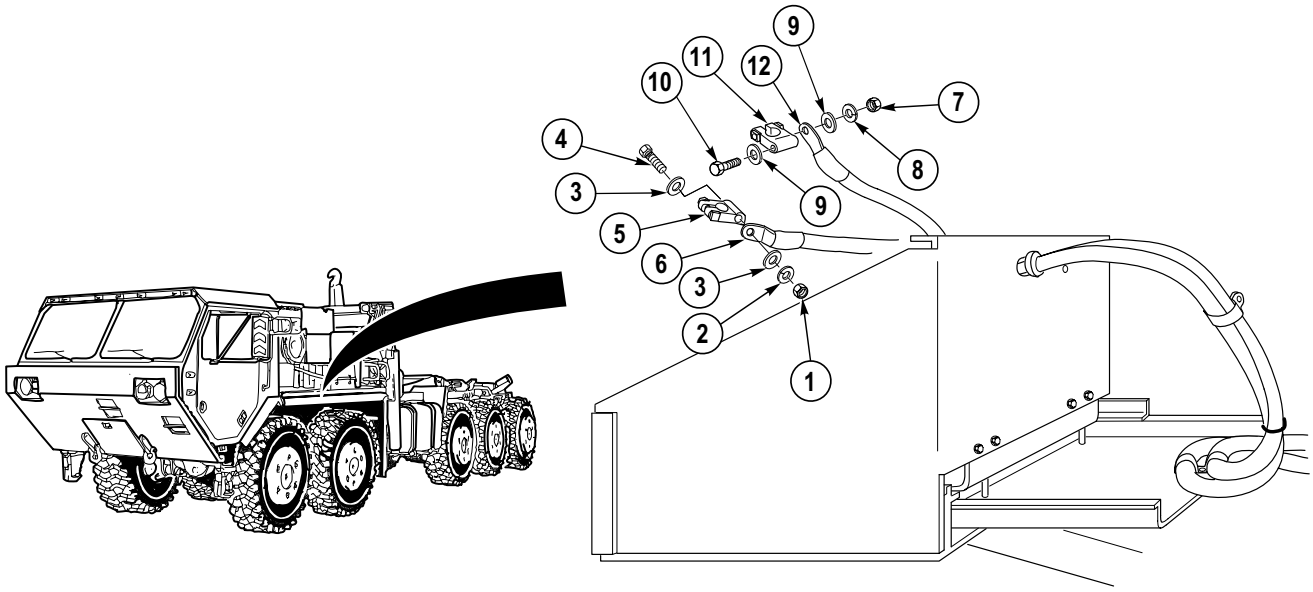

(1) Remove nut (1), lockwasher (2), two washers (3), screw (4) and positive battery post terminal (5) from battery cable 1139 (6). Discard lockwasher.

(2) Remove nut (7), lockwasher (8), two washers (9), screw (10) and negative battery post terminal (11) from battery cable 1137 (12). Discard lockwasher.

(3) Remove locknut (13), screw (14) and cushion clamp (15) from rear of battery box (16). Discard locknut.

(4) Remove locknut (17), screw (18) and two cushion clamps (19) from battery tray (20). Discard locknut.

(5) Remove two rubber grommets (21) and battery cables 1139 (6) and 1137 (12) through battery box (16).

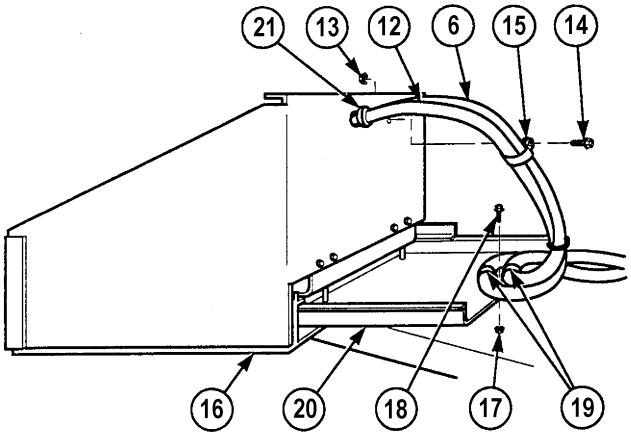

(6) With the aid of an assistant, remove two locknuts (22) and screws (23) from battery tray (20). Discard locknuts.

WARNING

Battery box weighs 75 lbs (34 kg). Use the aid of an assistant to prevent possible injury to personnel.

(7) With the aid of an assistant, remove battery box (16) from left fender (24).

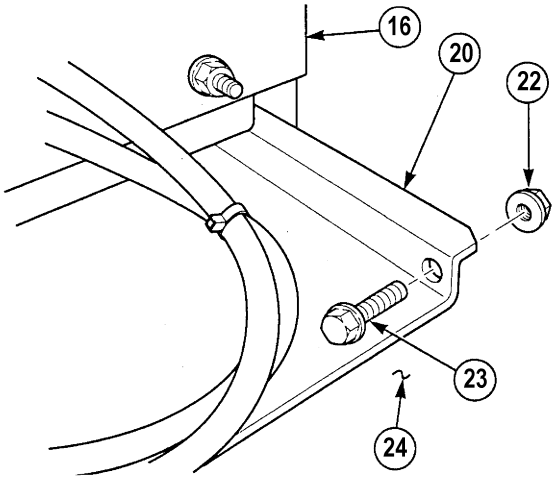

(8) Remove four locknuts (25), screws (26) and left and right guides (27) from left fender (24).

b. Installation.

(1) Install left and right guides (27) on left fender (24) with four screws (26) and locknuts (25).

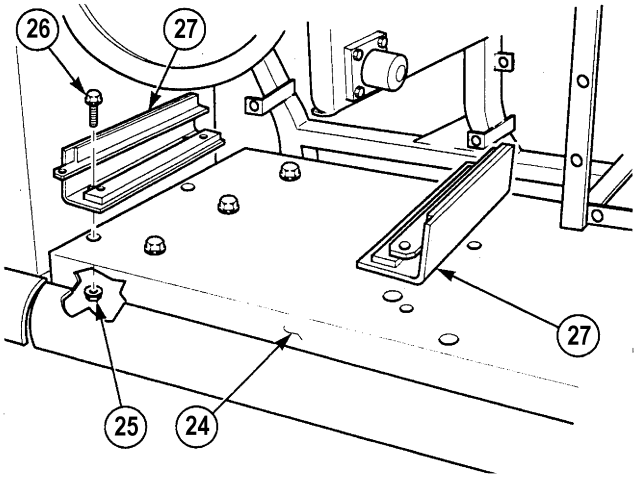

21-5. ARCTIC KIT BATTERY BOX REPLACEMENT (CONT).

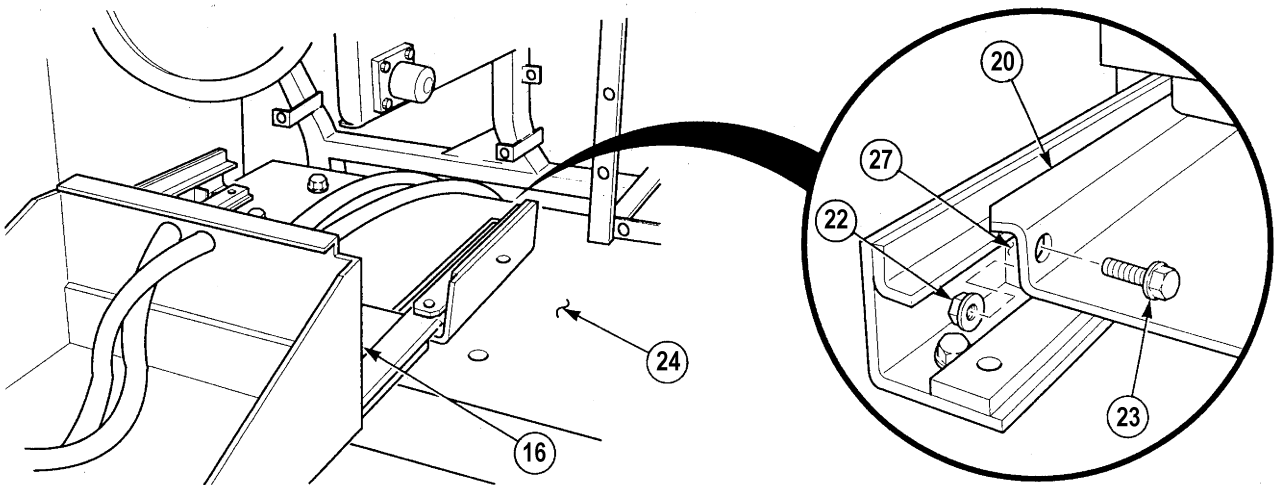

WARNING

Battery box weighs 75 lbs (34 kg). Use the aid of an assistant to prevent possible injury to personnel.

(2) With the aid of an assistant, position battery box (16) on left fender (24).

(3) With the aid of an assistant, install battery tray (20) through left and right guides (27).

(4) Install two screws (23) and locknuts (22) to battery tray (20).

(5) Install two rubber grommets (21) on two battery cables (6) and (12).

(6) Install two battery cables (6) and (12) and rubber grommets (21) in battery box (16).

(7) Install two cushion clamps (19) on rear of battery box tray (20) with screw (18) and locknut (17).

(8) Install cushion clamp (15) on rear of battery box (16) with screw (14) and locknut (13).

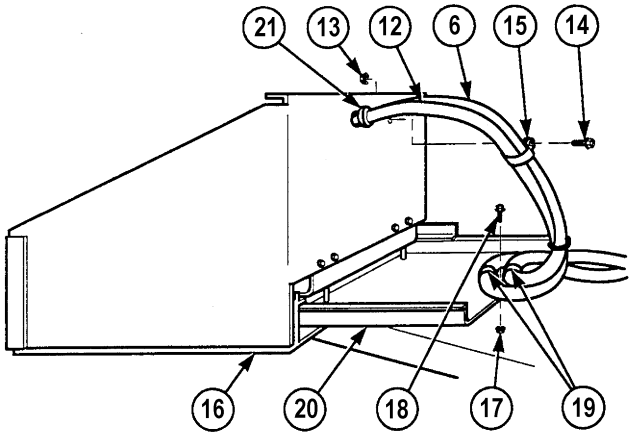

(9) Install negative battery post terminal (11) on battery cable 1137 (12) with screw (10), two washers (9), lockwasher (8) and nut (7).

CAUTION

While applying torque to nut, hold screw with wrench or damage to battery may occur.

(10) Tighten nut (7) to 12 to 16 lb-ft (16-22 N·m).

(11) Install positive battery post terminal (5) on battery cable 1139 (6) with screw (4), two washers (3), lockwasher (2) and nut (1).

CAUTION

While applying torque to nut, hold screw with wrench or damage to battery may occur.

(12) Tighten nut (1) to 12 to 16 lb-ft (16-22 N·m).

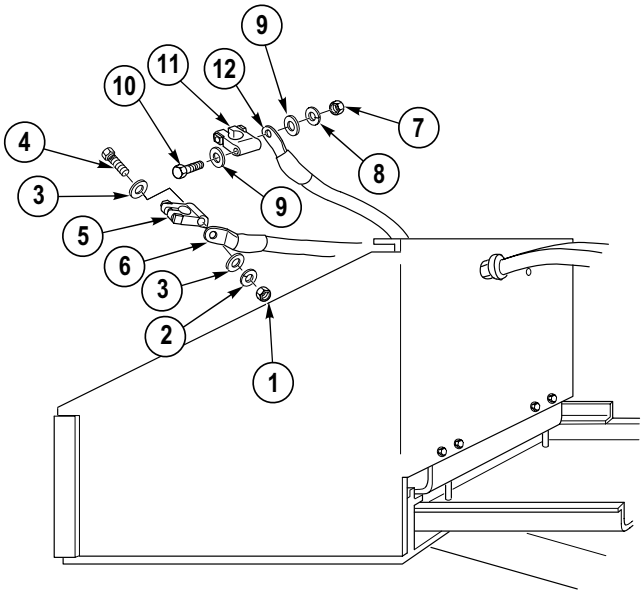

c. Follow-On Maintenance:

- Install arctic kit batteries, (Para 21-4).
- Remove wheel chocks, (TM 9-2320-364-10).

END OF TASK

21-6. ARCTIC KIT WATER PUMP REPLACEMENT.

This task covers:

a. Removal b. Installation c. Follow-On Maintenance

INITIAL SETUP

Tools and Special Tools
Tool Kit, General Mechanic's: Automotive (Item 74, Appendix G)
Pan, Drain (Item 47, Appendix G)
Wrench, Combination, 1 1/8 in. (Item 79, Appendix G)
Wrench, Torque (0-60 N·m) (Item 98, Appendix G)

Materials/Parts
Adhesive (Item 2, Appendix C)
Sealing Compound (Item 72, Appendix C)
Tags, Identification (Item 88, Appendix C)
Locknut (2) (Item 96, Appendix F)
Locknut (Item 140, Appendix F)
Lockwasher (22) (Item 195, Appendix F)
Rubber Pads (Item 292, Appendix F)

Equipment Condition
Engine OFF, (TM 9-2320-364-10)
Wheels chocked, (TM 9-2320-364-10)

a. Removal.

WARNING

Do not remove hoses when cooling system is hot; steam and hot coolant can escape and burn personnel.

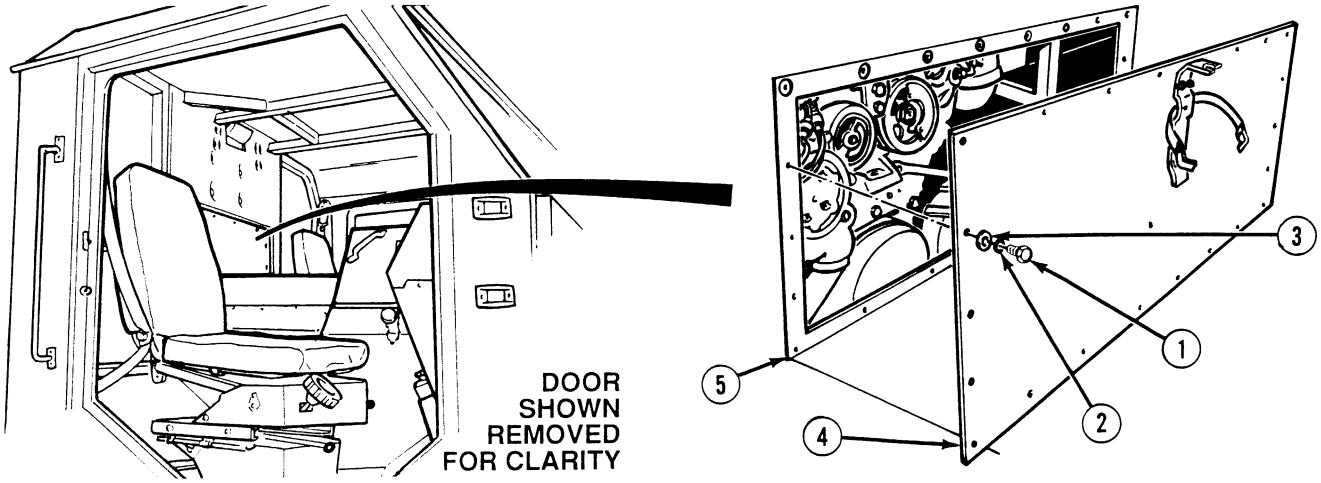

(1) Remove 22 screws (1), lockwashers (2), washers (3) and cab engine access panel (4) from cab (5).

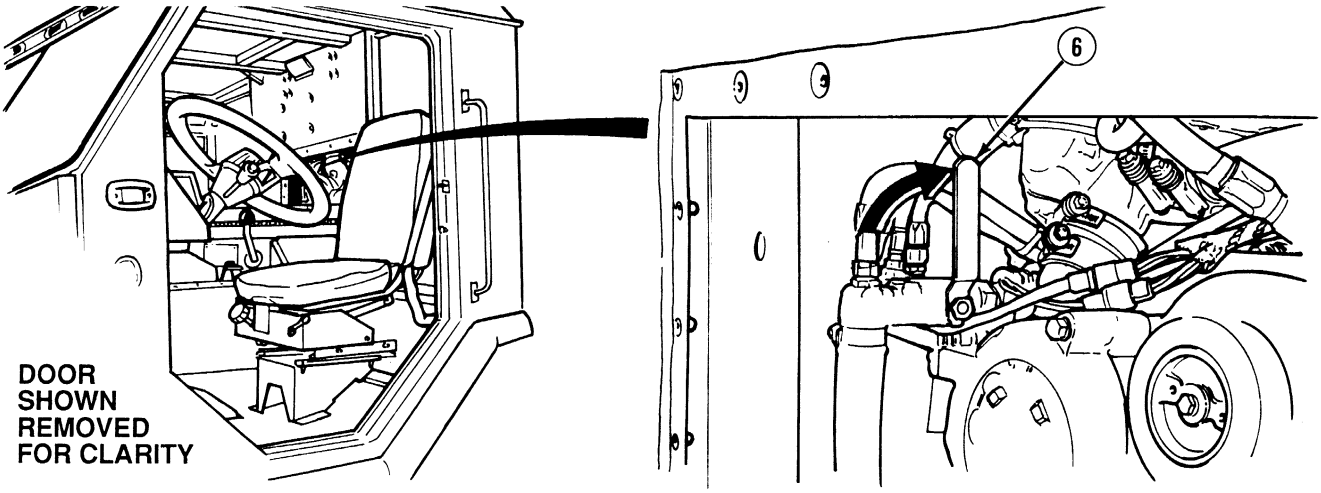

(2) Shut off ball valve (6).

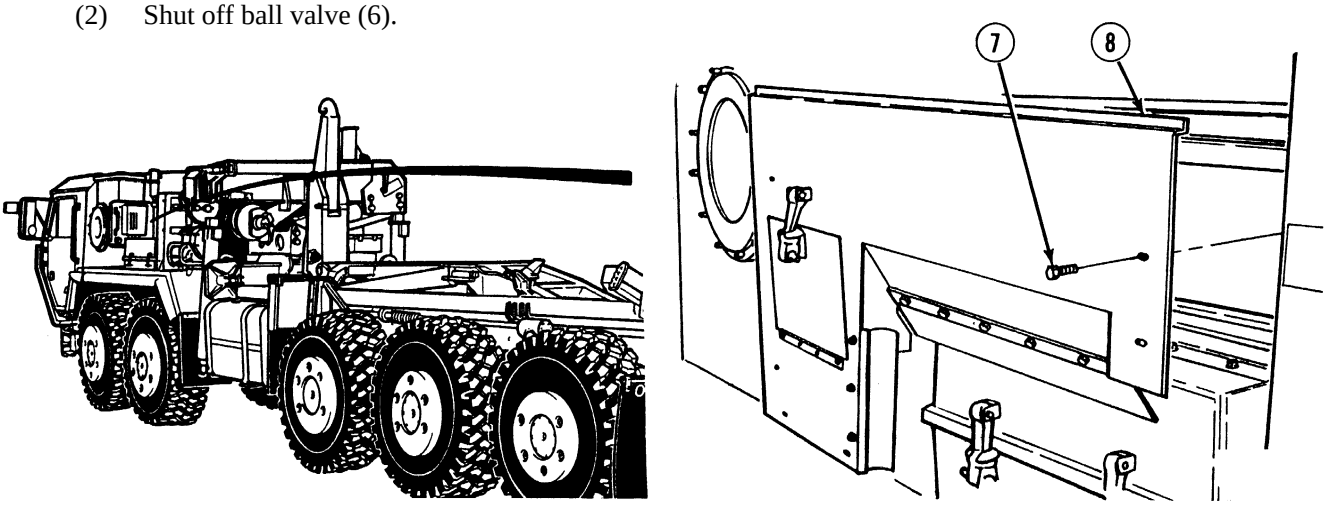

(3) Remove eight screws (7) and left side noise panel (8).

21-6. ARCTIC KIT WATER PUMP REPLACEMENT (CONT).

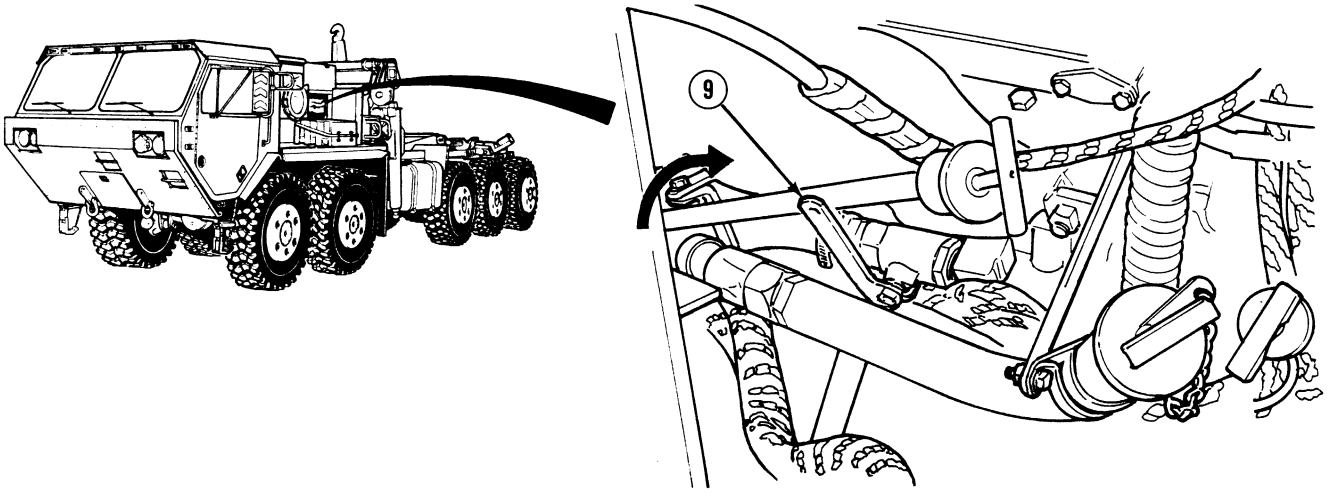

(4) Shut off ball valve (9).

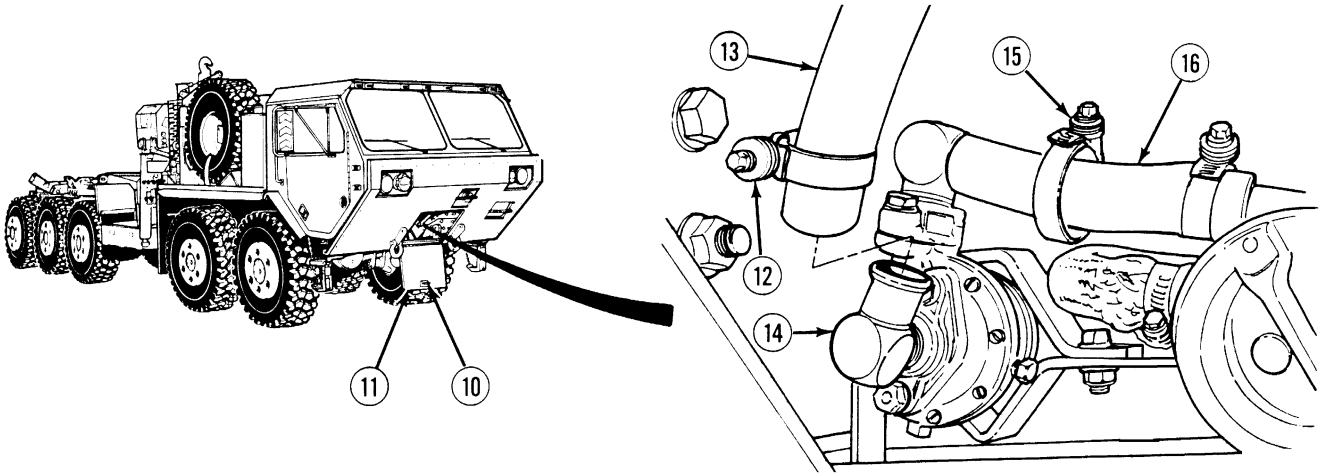

(5) Twist handle (10) and open front access cover (11).

(6) Position drain pan under truck.

(7) Loosen clamp (12) and slide up on hose (13).

(8) Remove hose (13) from fitting (14).

(9) Loosen clamp (15) on hose (16).

(10) Remove two locknuts (17) and screws (18) from clamping bracket (19) and bracket (20). Discard locknuts.

(11) Remove bracket (19) and rubber pads (21) from water pump (22). Discard rubber pad.

(12) Matchmark water pump (22) and bracket (20).

(13) Rotate water pump (22) to the left and remove hose (16) from fitting (23).

(14) Remove nut (24) and screw (25) from bracket (26) and bracket (20).

(15) Pull out water pump (22) until wire 1435 (27) and wire 1644 (28) are exposed.

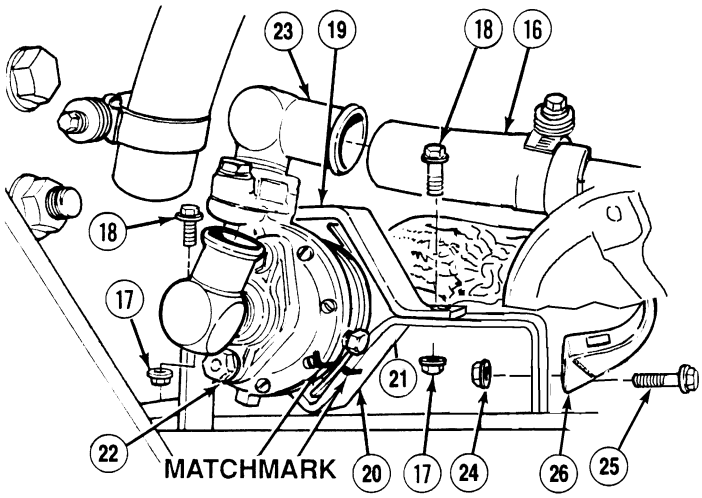

NOTE

Tag and mark all wires upon removal.

(16) Remove nut (29) and wire 1435 (27) from water pump (22).

(17) Remove nut (29) and wire 1644 (28) from water pump (22).

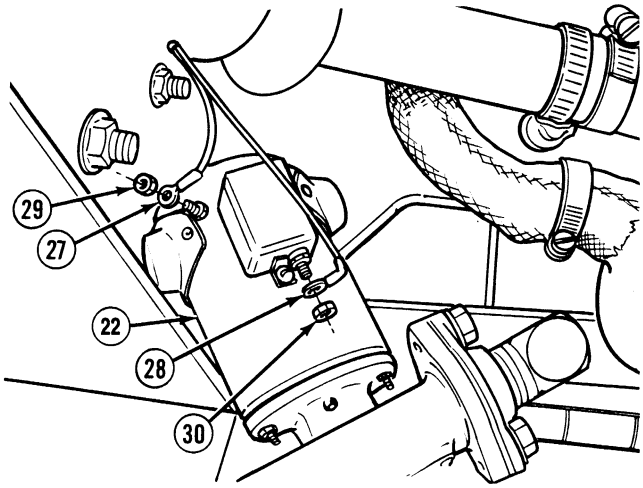

(18) Remove water pump (22) from bracket (20).

(19) Remove fittings (14) and (23) from water pump (22).

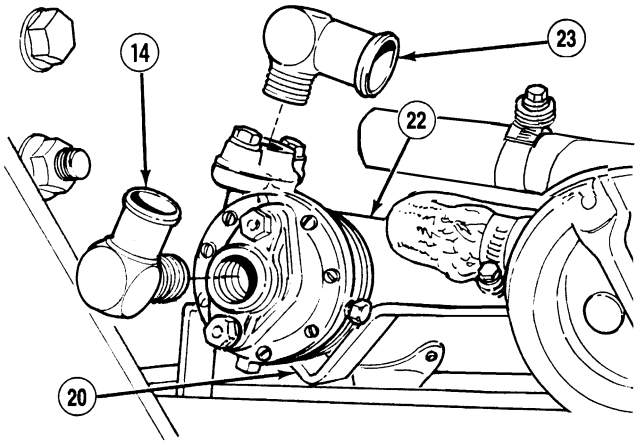

21-6. ARCTIC KIT WATER PUMP REPLACEMENT (CONT).

(20) Remove two locknuts (31), screws (32), retaining plate (33) and bracket (20) from cab (5).

(21) Remove rubber pad (26) from bracket (20). Discard rubber pad.

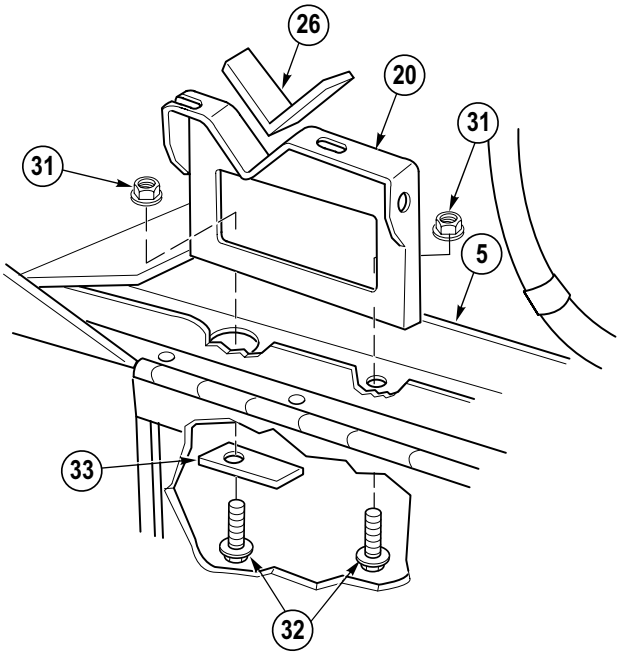

b. Installation.

WARNING

Adhesives, solvents, and sealing compounds can burn easily, can give off harmful vapors, and are harmful to skin and clothing. To avoid injury or death, keep away from open fire and use in well ventilated area. If adhesive, solvent, or sealing compound gets on skin or clothing, wash immediately with soap and water.

(1) Apply adhesive to rubber pad (26) and install rubber pad on bracket (20).

(2) Install bracket (20) and retaining plate (33) in cab (5) with two screws (32) and locknuts (31).

(3) Coat threads of fittings (14) and (23) with sealing compound.

(4) Install fittings (14) and (23) in water pump (22).

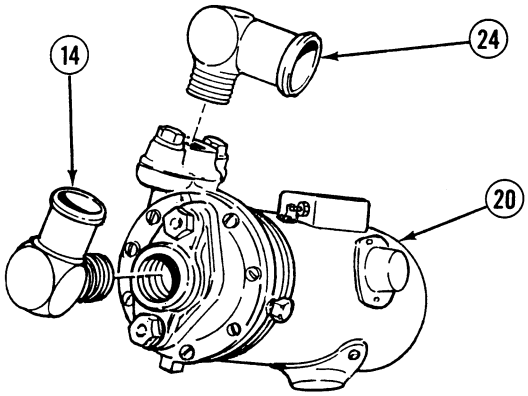

(5) Position water pump (22) on bracket (20).

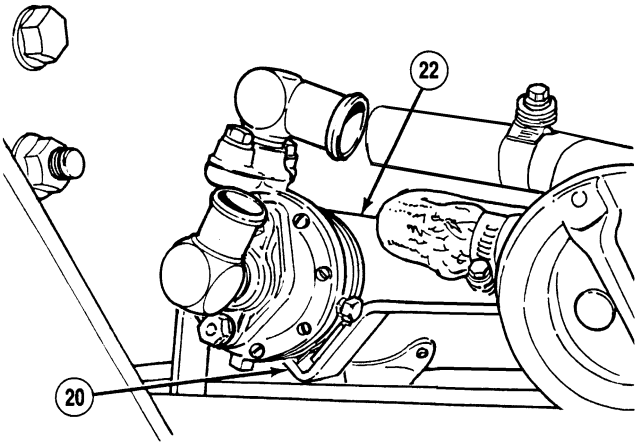

(6) Install wire 1644 (28) and nut (30) on water pump (22).

(7) Install wire 1435 (27) and nut (29) on water pump (22).

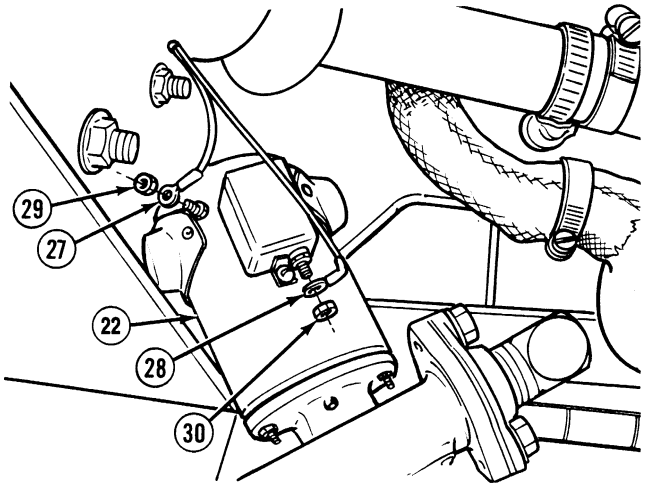

21-6. ARCTIC KIT WATER PUMP REPLACEMENT (CONT).

(8) Slide clamp (15) on hose (16), rotate water pump (22) to the right and install hose on fitting (23).

(9) Tighten clamp (15) to 40 lb-in (5 N·m).

NOTE

Ensure matchmarks are aligned on water pump and bracket.

(10) Reposition water pump (22) on bracket (20).

WARNING

Adhesives, solvents, and sealing compounds can burn easily, can give off harmful vapors, and are harmful to skin and clothing. To avoid injury or death, keep away from open fire and use in well ventilated area. If adhesive, solvent, or sealing compound gets on skin or clothing, wash immediately with soap and water.

(11) Apply adhesive to rubber pad (21) and install rubber pad on clamping bracket (19).

(12) Install clamping bracket (19) on water pump (22) and bracket (20) with two screws (18) and locknuts (17).

(13) Install screw (25), nut (24) and bracket (26) on bracket (20).

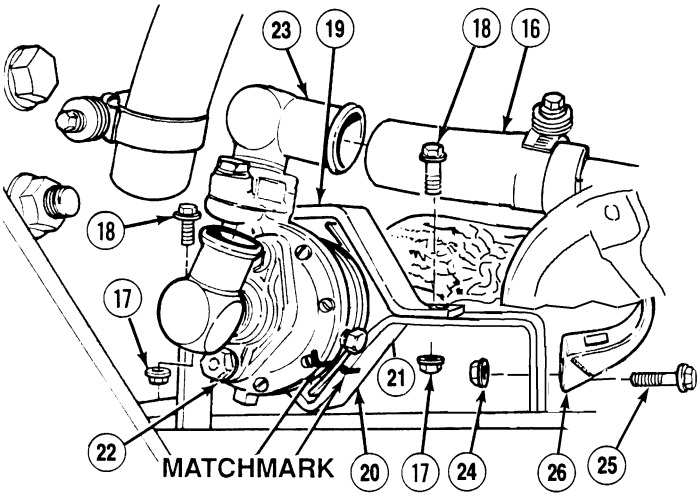

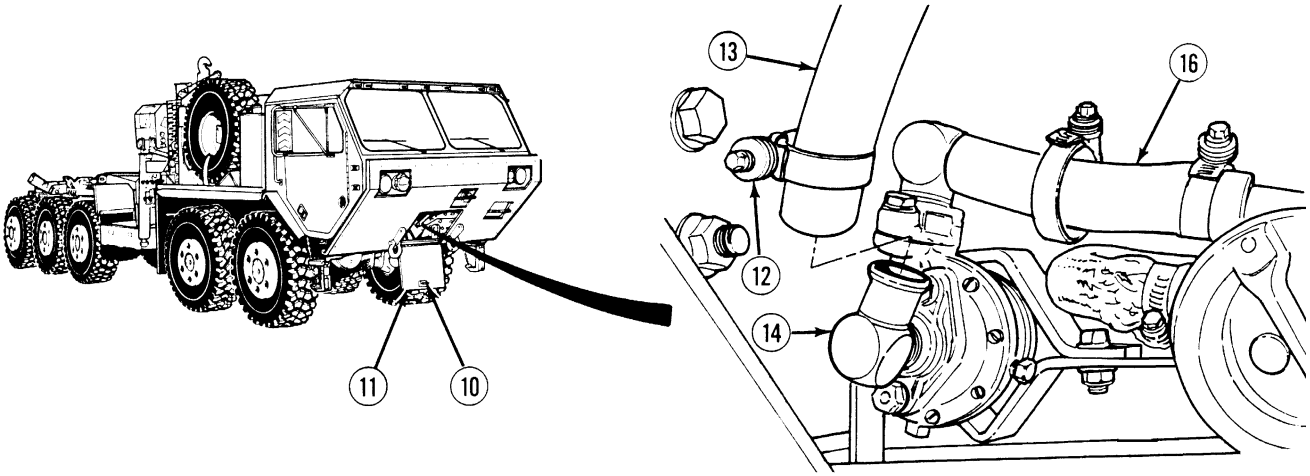

(14) Install hose (13) on fitting (14) and tighten clamp (12) to 40 lb-in (5 N·m).

(15) Close front access cover (11) and latch by twisting handle (10).

(16) Open ball valve (9).

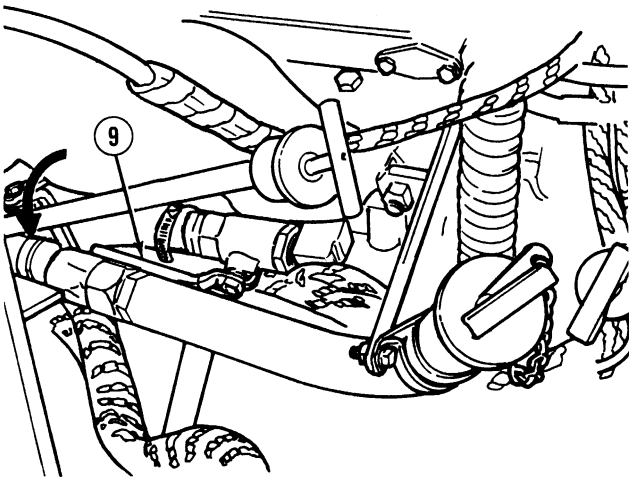

21-6. ARCTIC KIT WATER PUMP REPLACEMENT (CONT).

(17) Install left side noise panel (8) with eight screws (7).

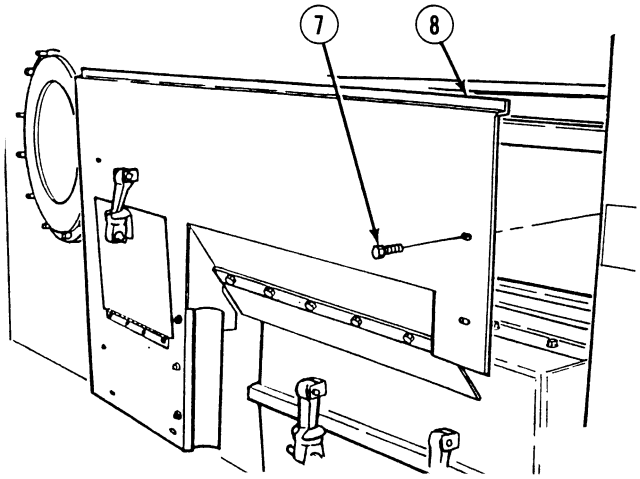

(18) Open ball valve (6).

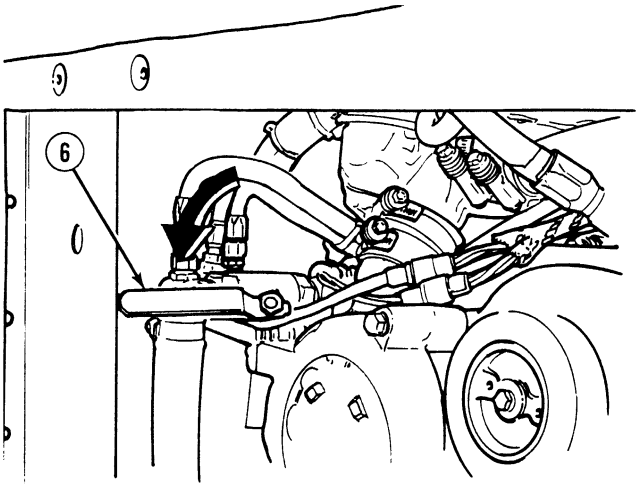

(19) Install cab engine access panel (4) on cab (5) with 22 washers (3), lockwashers (2) and screws (1).

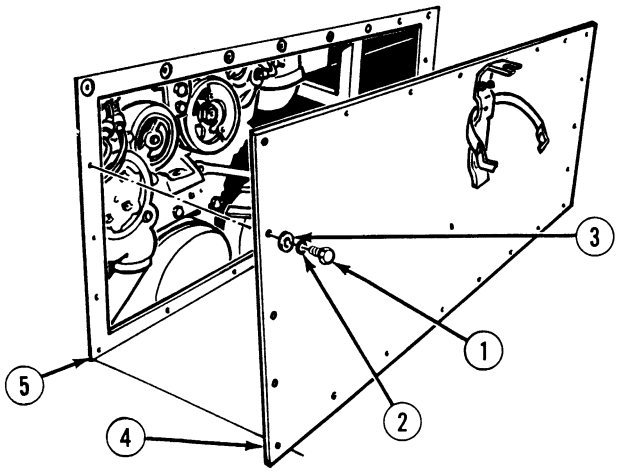

c. Follow-On Maintenance:

- Check coolant level, (TM 9-2320-364-10).
- Start engine, (TM 9-2320-364-10).
- Allow engine to run for three minutes.
- Shut OFF engine, (TM 9-2320-364-10).
- Check for coolant leaks, (TM 9-2320-364-10).
- Remove wheel chocks, (TM 9-2320-364-10).

END OF TASK

21-7. ARCTIC KIT WATERJACKET REPLACEMENT.

This task covers:

a. Removal b. Installation c. Follow-On Maintenance

INITIAL SETUP

Tools and Special Tools
Tool Kit, General Mechanic's: Automotive (Item 74, Appendix G)
Pan, Drain (Item 47, Appendix G)
Wrench, Torque (0-60 N·m) (Item 98, Appendix G)

Materials/Parts
Antifreeze (Item 19, Appendix C)
Gasket (Item 65, Appendix F)

Materials/Parts - Continued
Locknut (2) (Item 102, Appendix F)
Locknut (3) (Item 140, Appendix F)
Lockwasher (22) (Item 195, Appendix F)

Equipment Condition
Engine OFF, (TM 9-2320-364-10)
Wheels chocked, (TM 9-2320-364-10)

a. Removal.

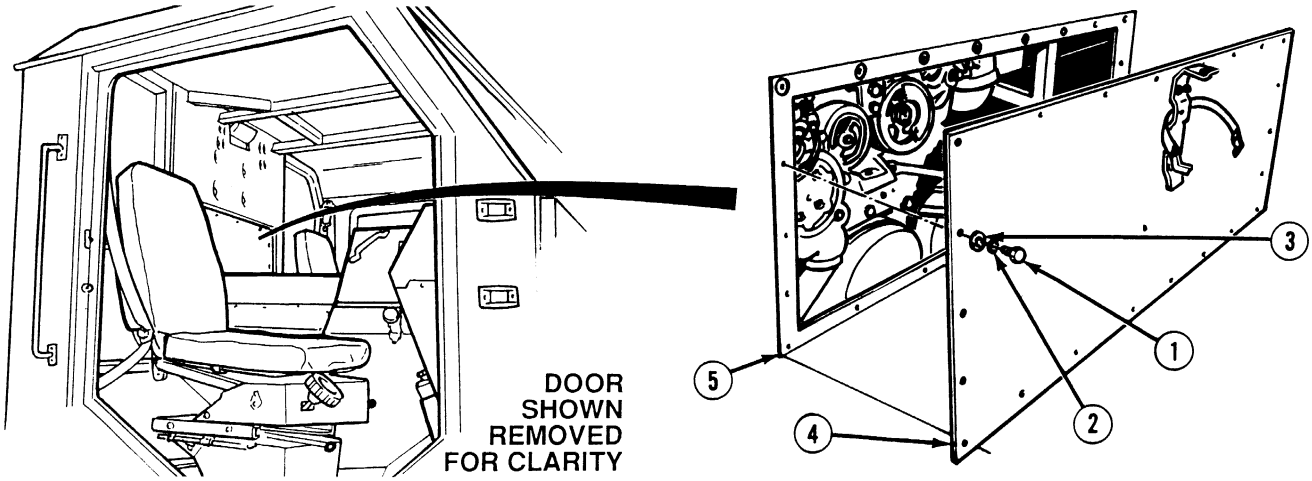

WARNING

Do not remove hoses when cooling system is hot; steam and hot coolant can escape and burn personnel.

(1) Remove 22 screws (1), lockwashers (2), washers (3) and cab engine access panel (4) from cab (5).

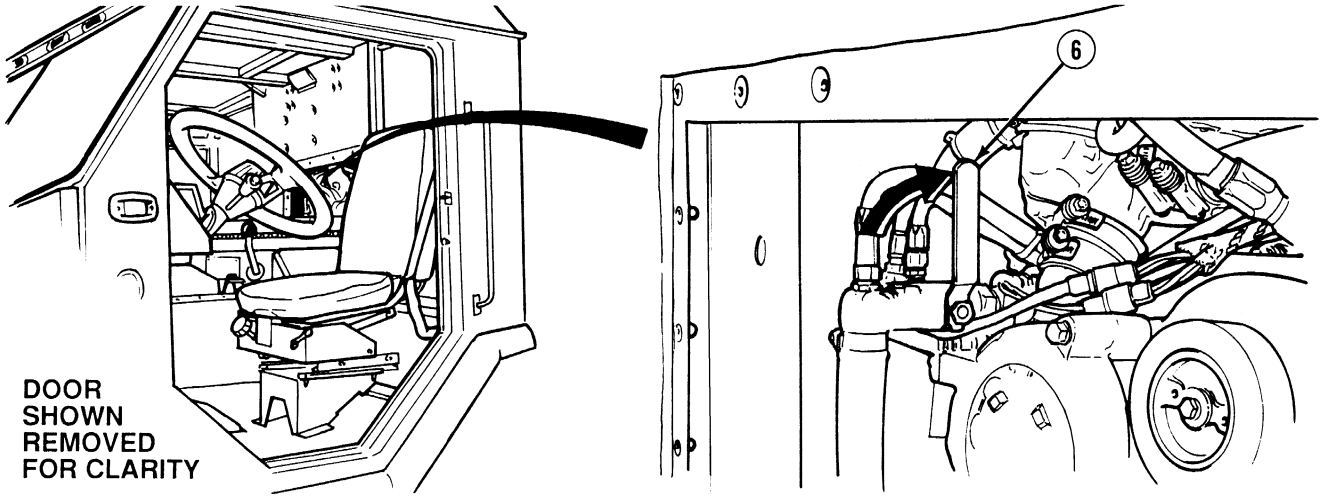

NOTE

There are two ball valves. Both ball valves operate the same way.

(2) Shut off ball valve (6).

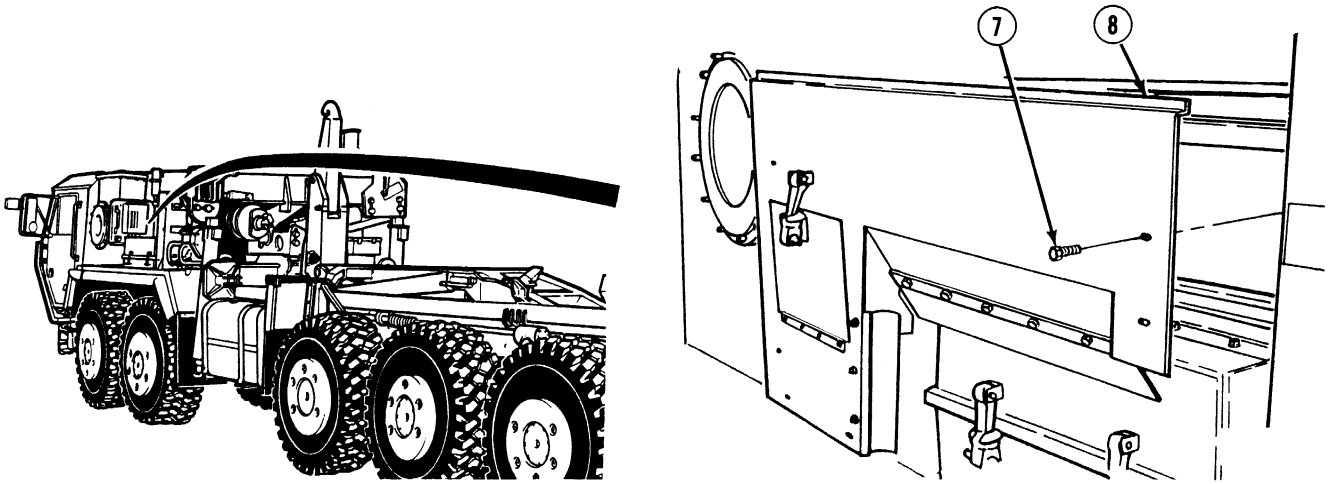

(3) Remove eight screws (7) and left side noise panel (8).

21-7. ARCTIC KIT WATERJACKET REPLACEMENT (CONT).

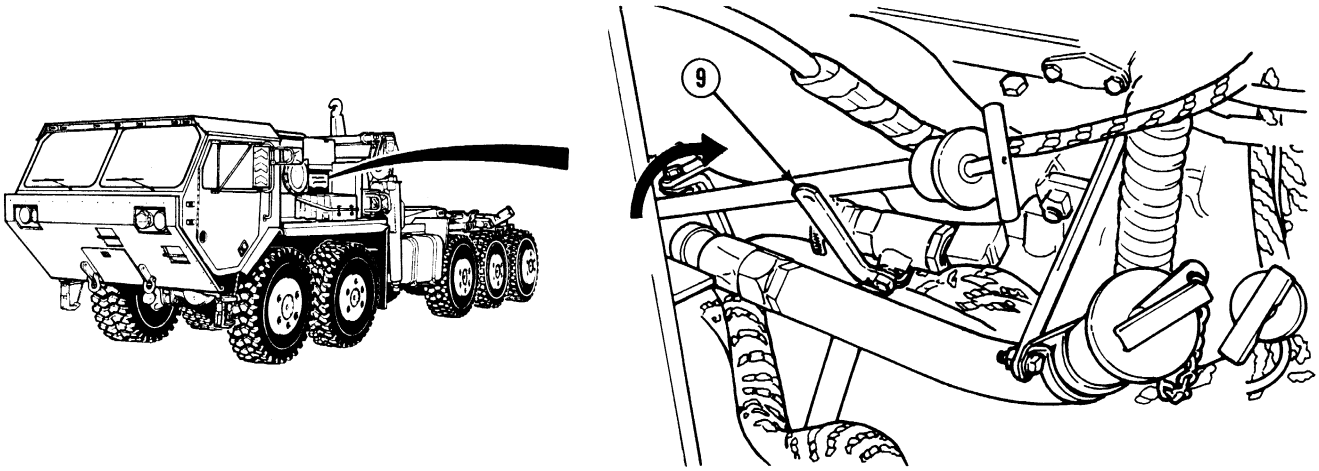

(4) Shut off ball valve (9).

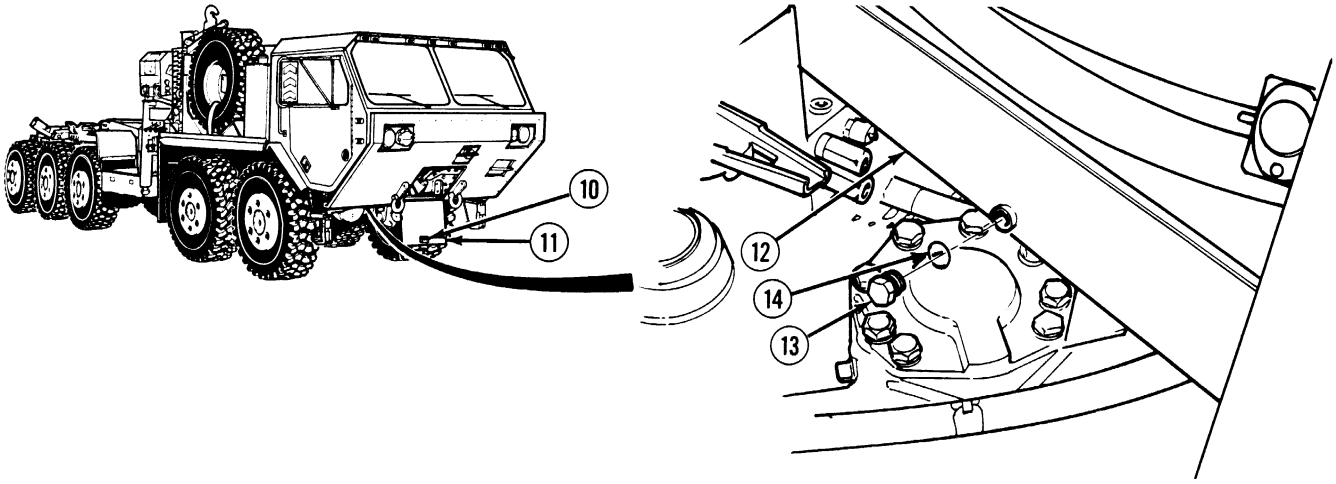

(5) Twist handle (10) and open front access cover (11).

(6) Position drain pan under arctic waterjacket (12).

(7) Remove plug (13) and gasket (14) from arctic waterjacket (12) and allow coolant to drain. Discard gasket.

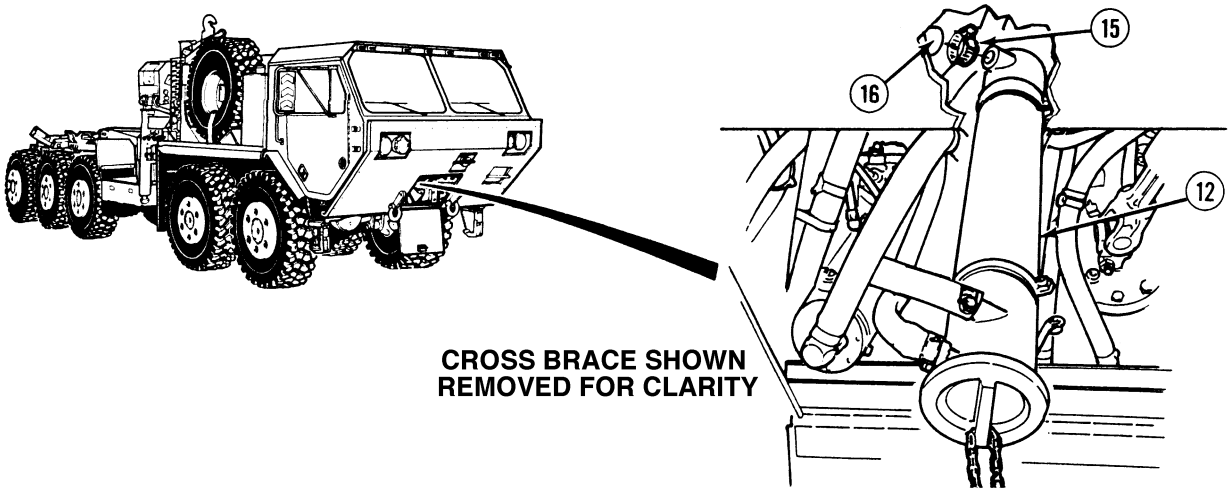

(8) Loosen clamp (15) and remove hose (16) and clamp from arctic waterjacket (12).

WARNING

Sharp edges of exhaust pipe could cause injury to personnel.

(9) Loosen clamp (17) and remove exhaust pipe (18) and clamp from arctic waterjacket (12).

(10) Loosen clamp (19) and remove hose (20) and clamp from arctic waterjacket (12).

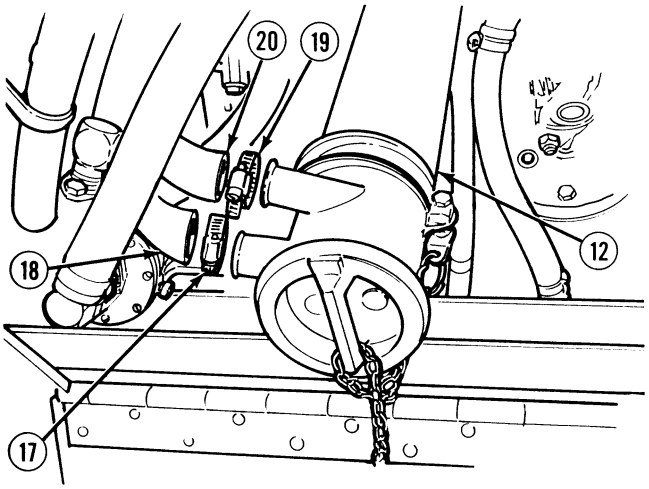

(11) Remove screw (21) from clamp (22).

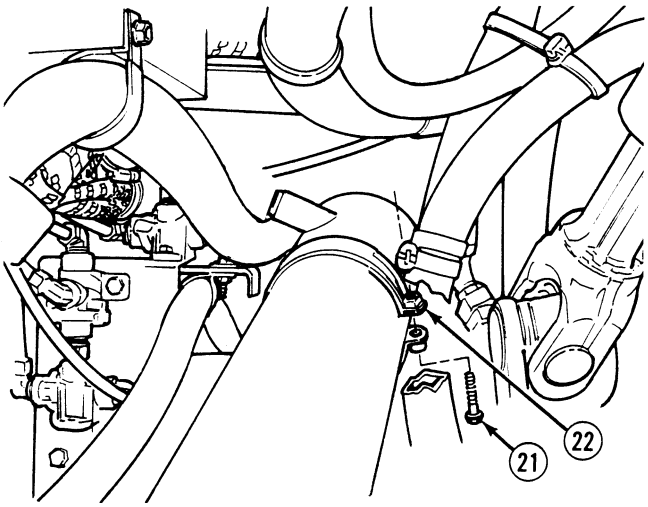

21-7. ARCTIC KIT WATERJACKET REPLACEMENT (CONT).

(12) Remove locknut (23), washer (24), safety chain (25) and screw (26) from clamp (27). Discard locknut.

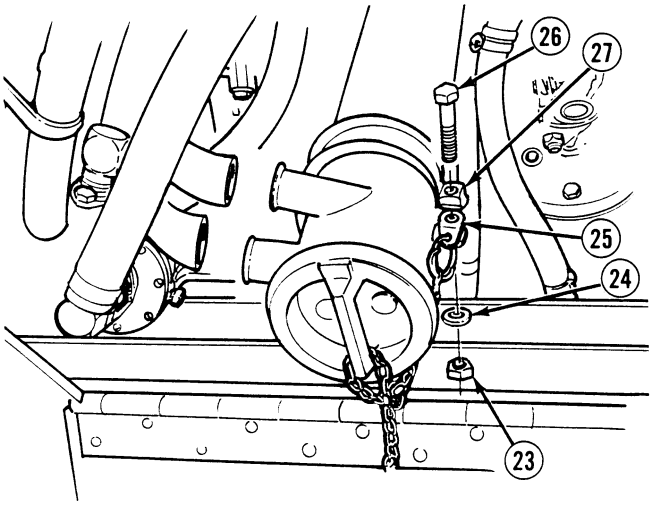

WARNING

Coolant may run out of water jacket when turned. Wear eye protection or injury to personnel may result.

(13) Remove arctic waterjacket (12) from clamps (22) and (27).

(14) Remove clamps (22) and (27) from two holders (28).

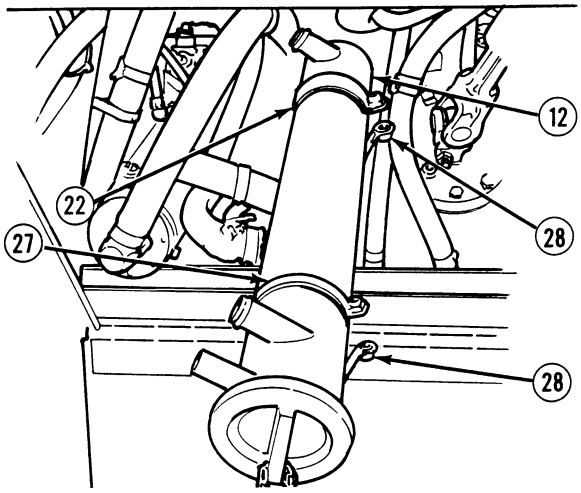

(15) Remove locknut (29), screw (30) and holder (28) from bracket (31). Discard locknut.

(16) Remove locknut (36), screw (37) and holder (28) from bracket (34). Discard locknuts.

(17) Remove two locknuts (32), screws (33), and bracket (34) with holder (28) from frame (35). Discard locknuts.

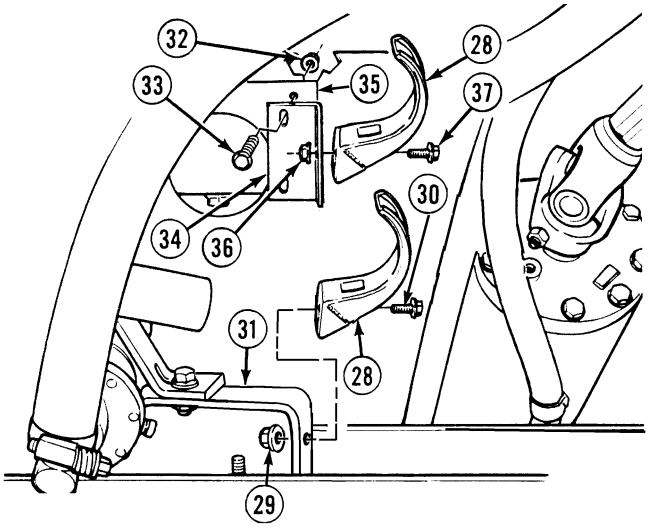

b. Installation.

(1) Install bracket holder (28) on bracket (34) with screw (37) and locknut (36).

(2) Install bracket holder (28) with bracket (34) on frame (35) with two screws (33) and locknuts (32).

(3) Install bracket holder (28) on bracket (31) with screw (30) and locknut (29).

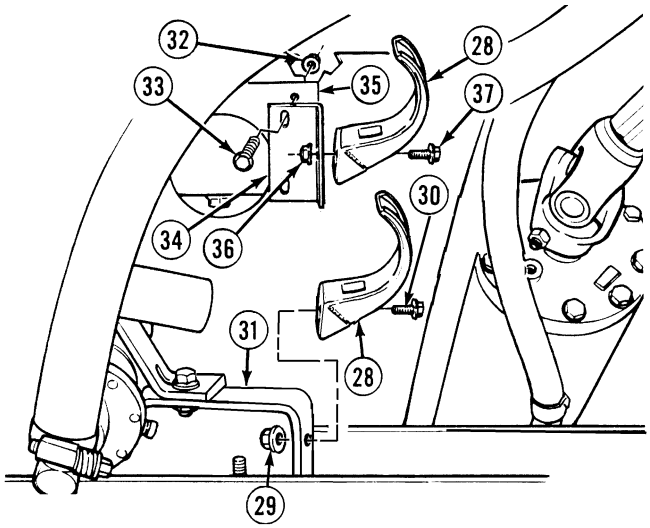

(4) Position clamps (22) and (27) in holders (28).

(5) Position arctic waterjacket (12) in clamps (22) and (27).

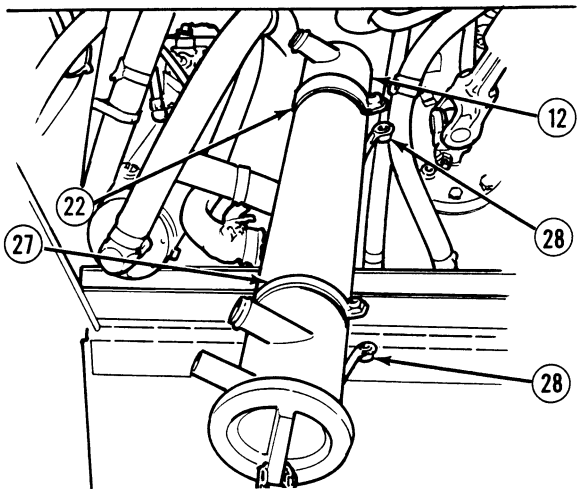

(6) Position clamp (15) and install hose (16) on arctic waterjacket (12).

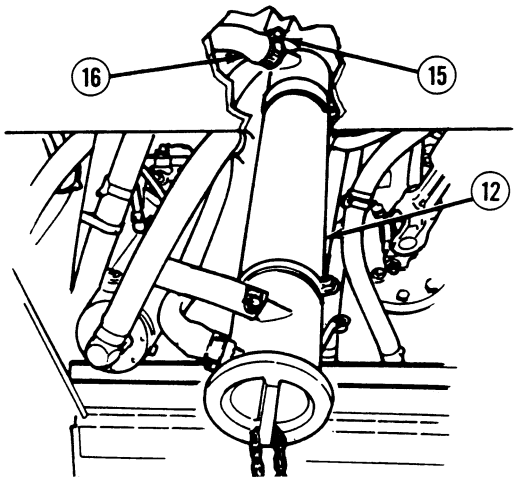

21-7. ARCTIC KIT WATERJACKET REPLACEMENT (CONT).

WARNING

Sharp edges of exhaust pipe could cause injury to personnel.

(7) Position clamps (15) and (17), hose (20) and exhaust pipe (18) on arctic waterjacket (12).

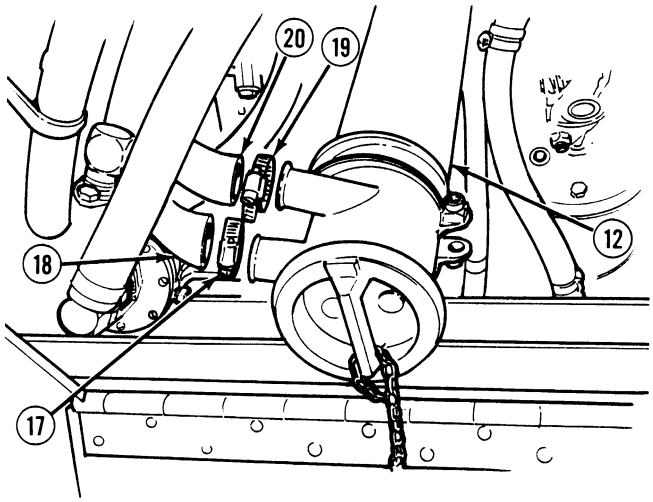

(8) Install screw (26) in clamp (27).

(9) Install safety chain (25), washer (24) and locknut (23) on screw (26).

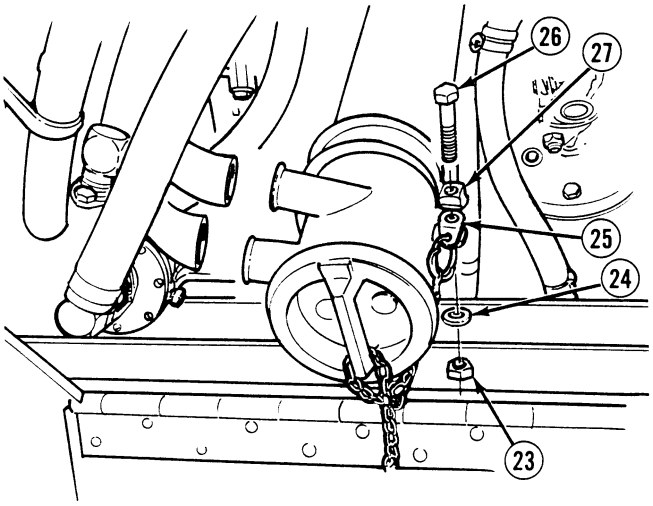

(10) Install screw (21) in clamp (22).

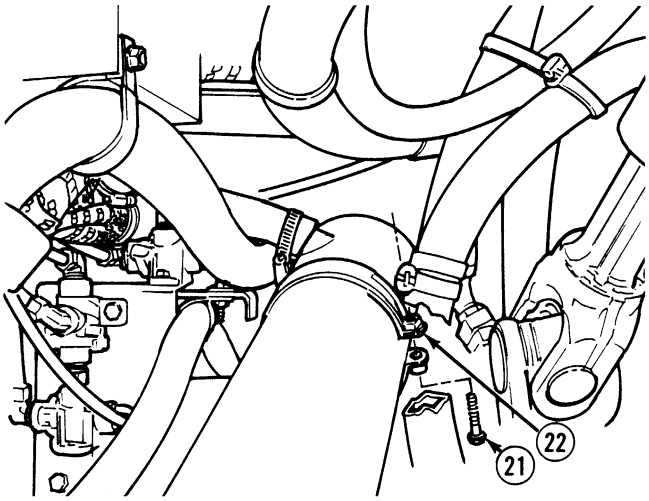

(11) Tighten clamp (15) on hose (16) to 40 lb-in (5 N·m).

(12) Tighten clamp (17) on exhaust tube (18).

(13) Tighten clamp (19) on hose (20).

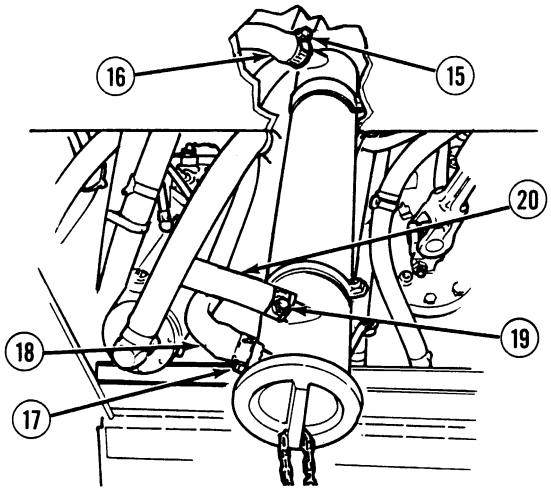

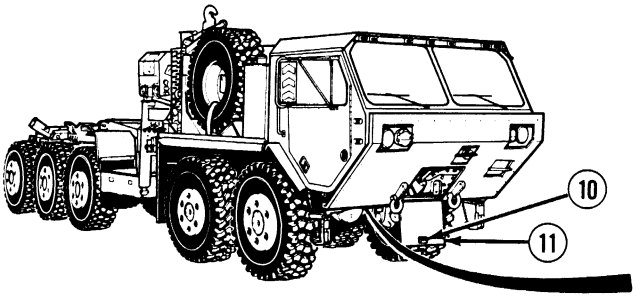

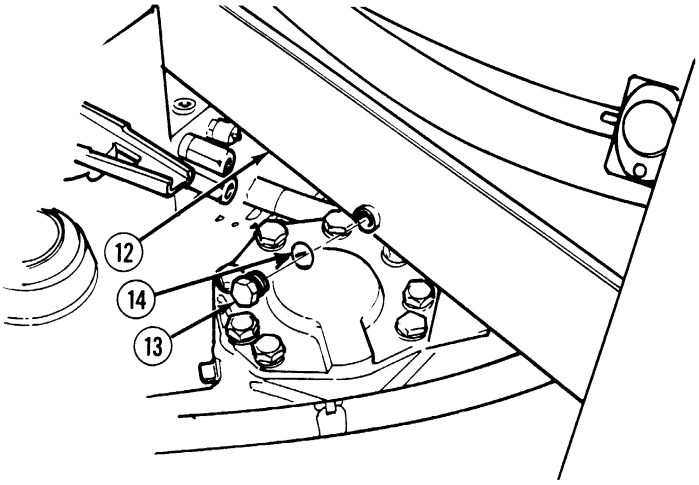

(14) Install gasket (14) and plug (13) in arctic waterjacket (12).

(15) Close front access cover (11) and latch by twisting handle (10).

(16) Open ball valve (9).

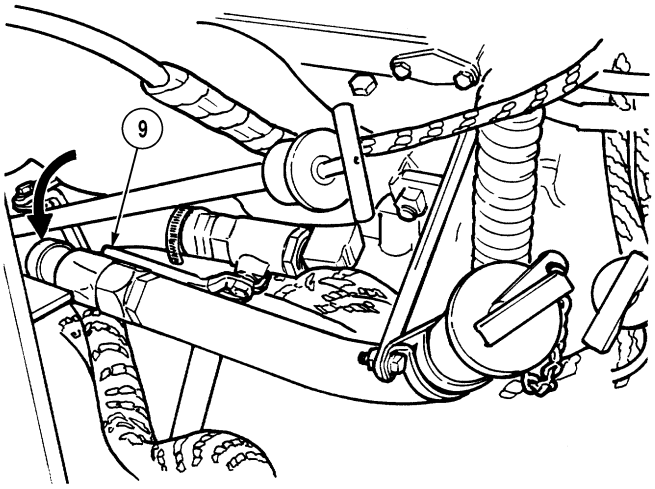

21-7. ARCTIC KIT WATERJACKET REPLACEMENT (CONT).

(17) Install left side noise panel (8) with eight screws (7).

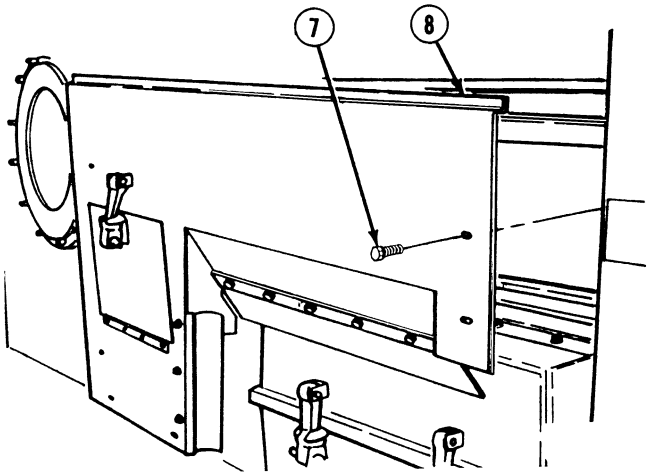

(18) Open ball valve (6).

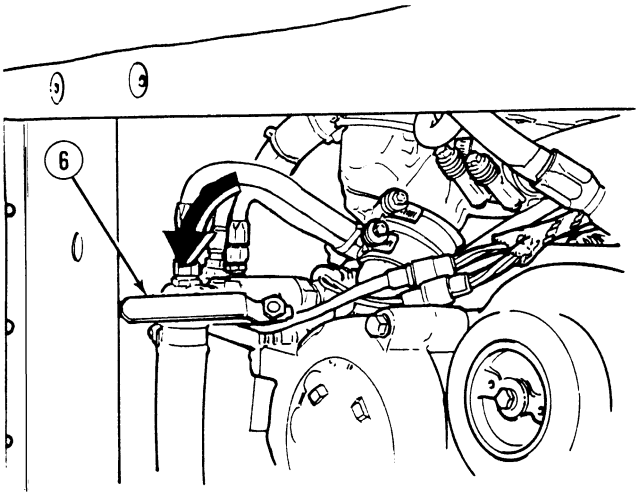

(19) Install cab engine access panel (4) on cab (5) with 22 washers (3), lockwashers (2) and screws (1).

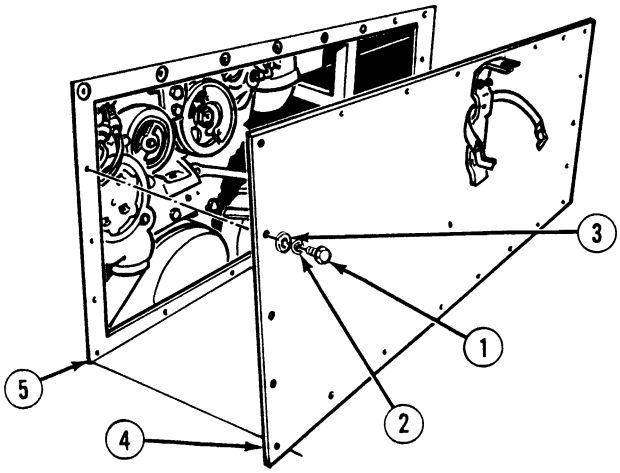

c. Follow-On Maintenance:

- Check coolant level, (TM 9-2320-364-10).
- Start engine, (TM 9-2320-364-10).
- Allow engine to run for three minutes.
- Shut OFF engine, (TM 9-2320-364-10).
- Check for coolant leaks, (TM 9-2320-364-10).
- Remove wheel chocks, (TM 9-2320-364-10).

END OF TASK

21-8. ARCTIC KIT WIRE HARNESS REPLACEMENT.

This task covers:

a. Removal b. Installation c. Follow-On Maintenance

INITIAL SETUP

Tools and Special Tools
Tool Kit, General Mechanic's: Automotive (Item 74, Appendix G)

Materials/Parts
Cable Ties (Item 25, Appendix C)
Tags, Identification (Item 88, Appendix C)

Equipment Condition
Engine OFF, (TM 9-2320-364-10)
Wheels chocked, (TM 9-2320-364-10)
Batteries disconnected, (Para 7-87)

a. Removal.

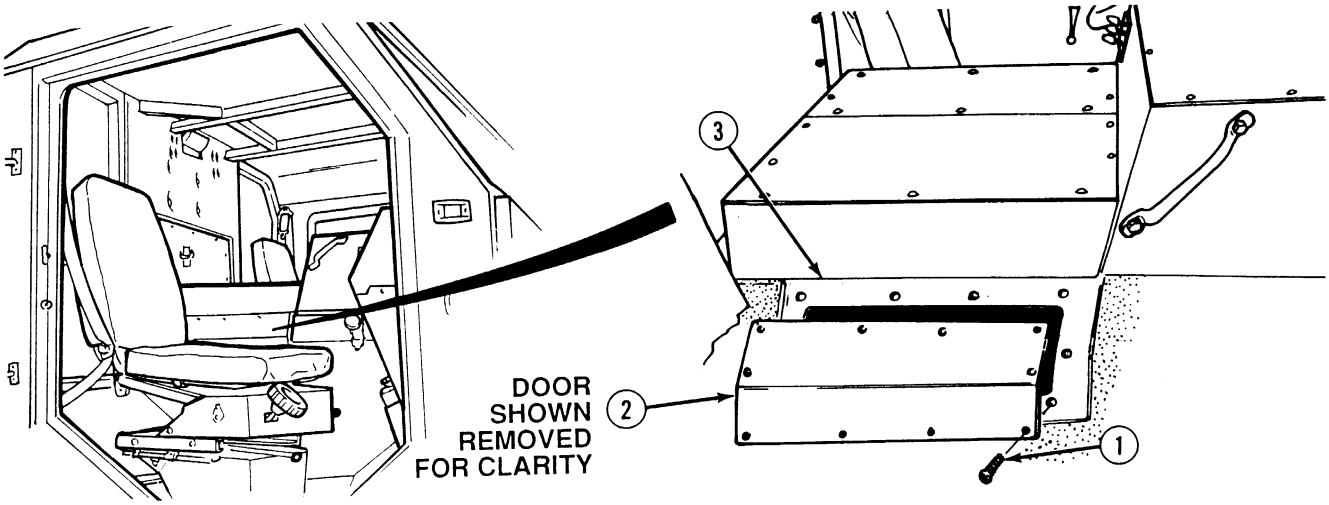

(1) Remove 10 screws (1) and Electronic Control Box (ECB) right side panel (2) from cab (3).

21-8. ARCTIC KIT WIRE HARNESS REPLACEMENT (CONT).

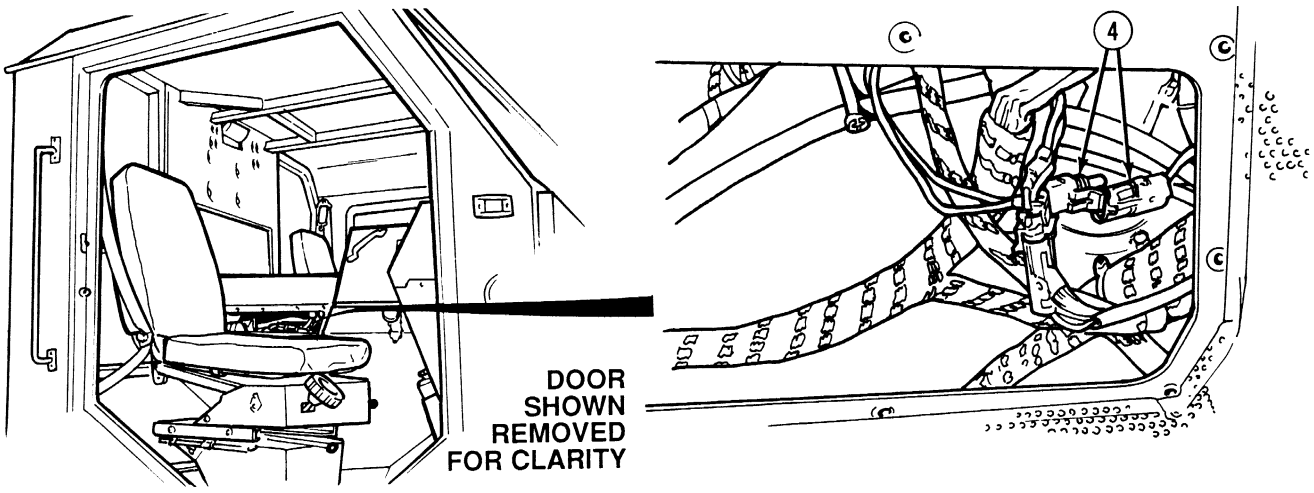

NOTE

- Connectors are removed by gently prying up on tab and pulling connectors apart.
- Tag and mark all wires and connectors prior to removal.
- Remove cable ties as required.

(2) Disconnect MC120 connector (4).

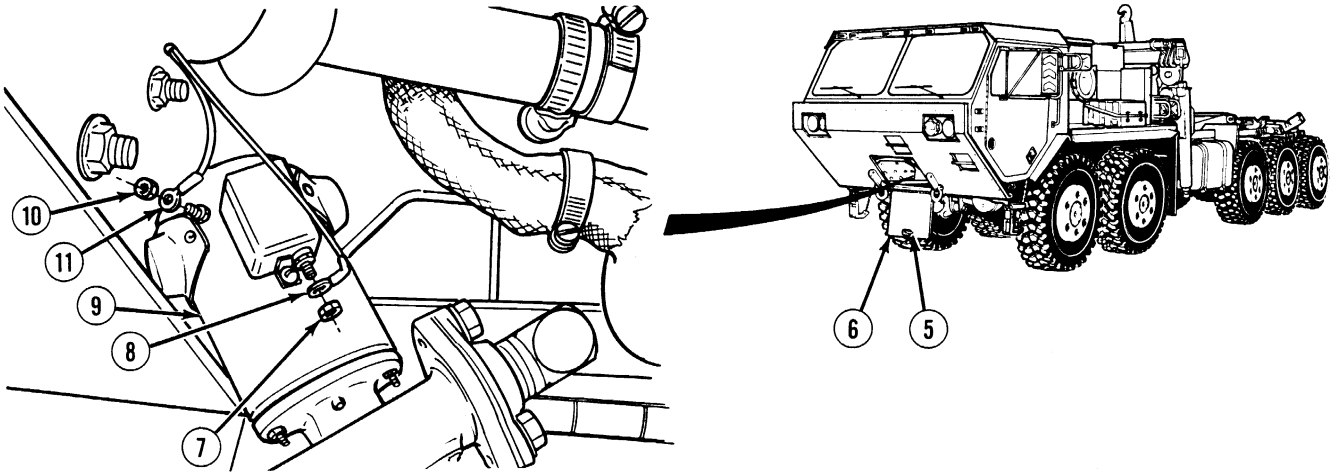

(3) Twist handle (5) and open front access cover (6).

(4) Remove nut (7) and wire 1644 (8) from water pump (9).

(5) Remove nut (10) and wire 1435 (11) from water pump (9).

b. Installation.

NOTE

Install cable ties as required.

(1) Install wire 1435 (11) and nut (10) on water pump (9).

(2) Install wire 1644 (8) and nut (7) on water pump (9).

(3) Close front access cover (6) and latch by twisting handle (5).

(4) Connect MC120 connector (4).

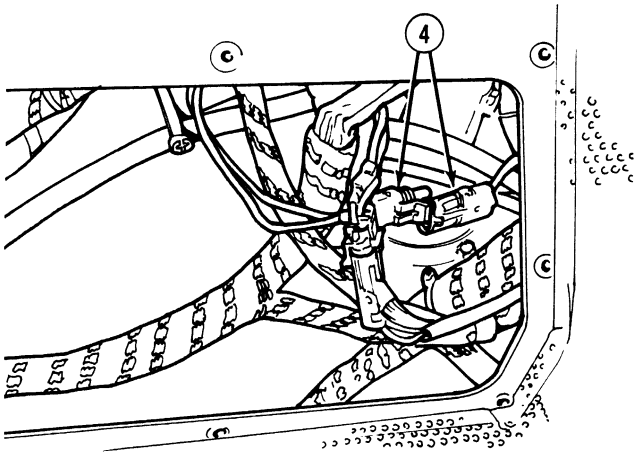

(5) Install ECB right side panel (2) in cab (3) with 10 screws (1).

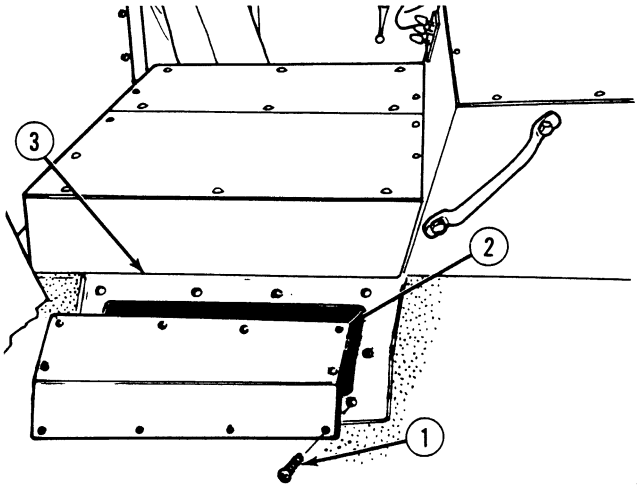

c. Follow-On Maintenance:

- Connect batteries connected, (Para 7-87).
- Remove wheel chocks, (TM 9-2320-364-10).

END OF TASK

21-9. ARCTIC KIT JUMPERWIRE HARNESS REPLACEMENT.

This task covers:

a. Removal b. Installation c. Follow-On Maintenance

INITIAL SETUP

Tools and Special Tools
Tool Kit, General Mechanic's: Automotive (Item 74, Appendix G)

Materials/Parts
Cable Ties (Item 25, Appendix C)
Tags, Identification (Item 88, Appendix C)

Equipment Condition
Engine OFF, (TM 9-2320-364-10)
Wheels chocked, (TM 9-2320-364-10)
Batteries disconnected, (Para 7-87)

a. Removal.

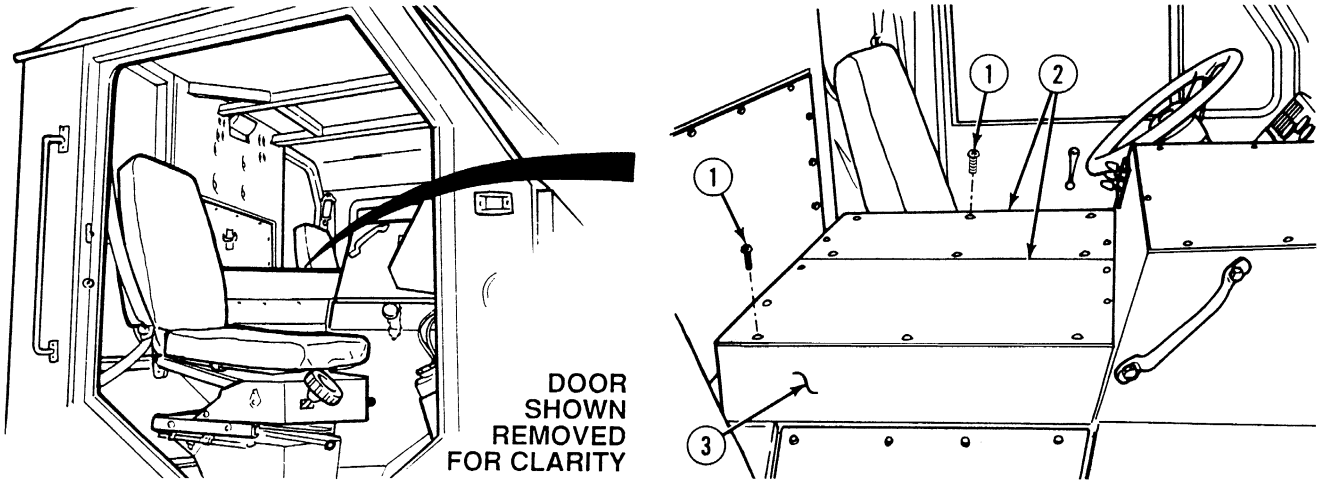

(1) Remove 15 screws (1) and left and right Electronic Control Box (ECB) covers (2) from ECB (3).

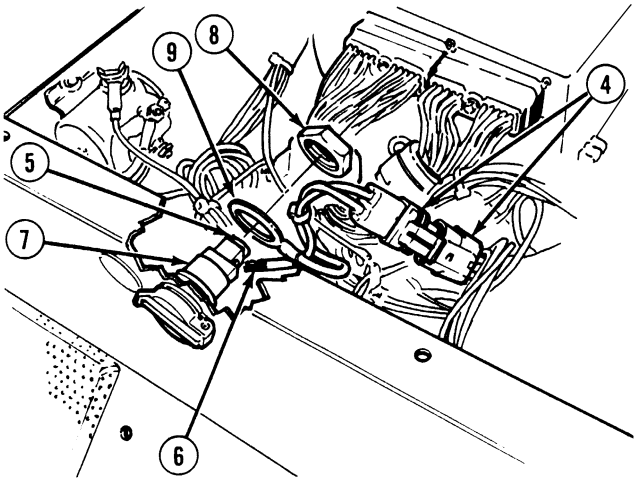

NOTE

- Connectors are removed by gently prying up on tab and pulling connectors apart.
- Tag and mark all wires and connectors prior to removal.
- Remove cable ties as required.

(2) Disconnect MC101 connector (4).

(3) Loosen screw (5) and remove wire 1340 (6) from 24V receptacle (7).

(4) Support 24V receptacle (7) and remove nut (8) and wire 1435 (9) from 24V receptacle (7).

b. Installation.

NOTE

Install cable ties as required.

(1) Support 24V receptacle (7) and install wire 1435 (9) and nut (8) on 24V receptacle (7).

(2) Install wire 1340 (6) on 24V receptacle (7) and tighten screw (5).

(3) Connect MC101 connector (4).

(4) Install left and right ECB covers (2) on ECB (3) with 15 screws (1).

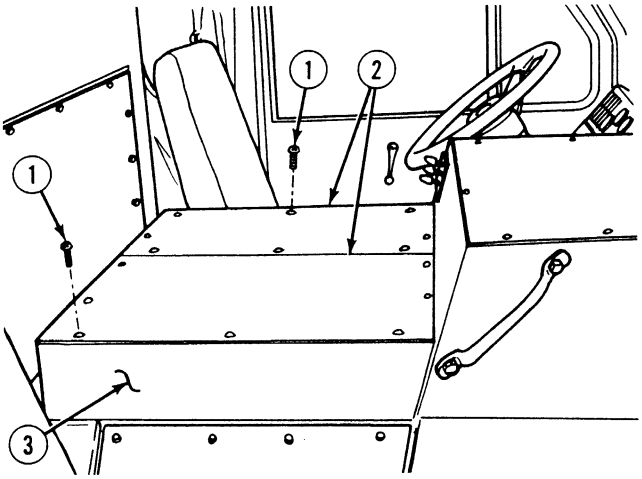

c. Follow-On Maintenance:

- Connect batteries, (Para 7-87).
- Remove wheel chocks, (TM 9-2320-364-10).

END OF TASK

21-10. ARCTIC KIT SWITCH WIRE HARNESS REPLACEMENT.

This task covers:

a. Removal b. Installation c. Follow-On Maintenance

INITIAL SETUP

Tools and Special Tools
Tool Kit, General Mechanic's: Automotive (Item 74, Appendix G)

Equipment Condition
Engine OFF, (TM 9-2320-364-10)
Wheels chocked, (TM 9-2320-364-10)

Materials/Parts
Cable Ties (Item 25, Appendix C)
Tags, Identification (Item 88, Appendix C)
Locknut (2) (Item 103, Appendix F)

a. Removal.

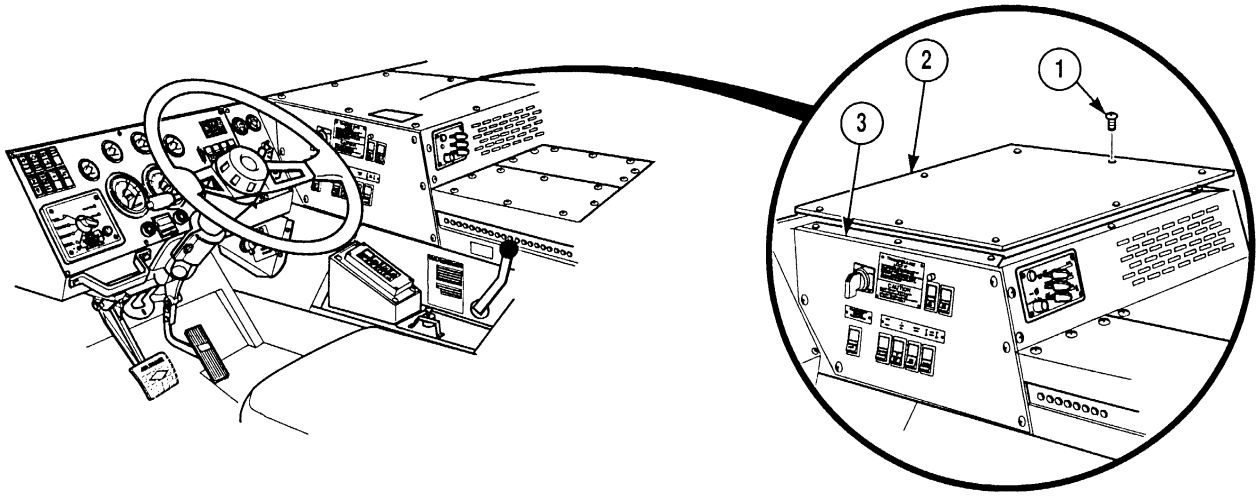

(1) Remove eight screws (1) and heater compartment access panel (2) from heater compartment (3).

(2) Remove 15 screws (4) and left and right Electronic Control Box (ECB) covers (5) from ECB (6).

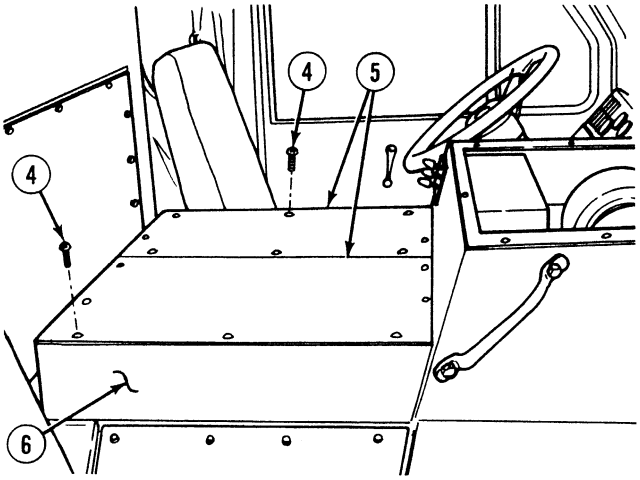

(3) Remove four screws (7) and tilt front heater control panel (8) forward away from heater compartment (3).

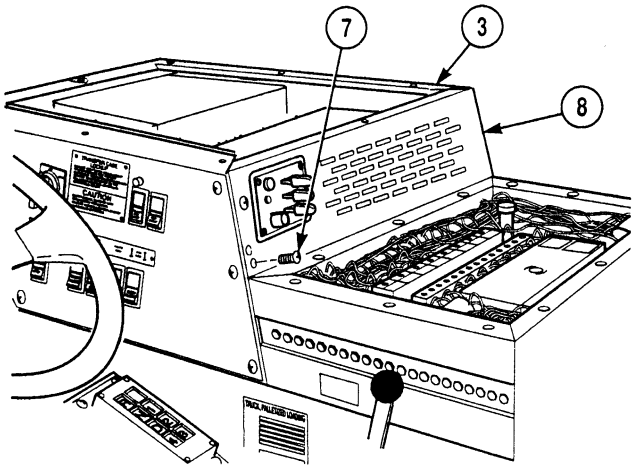

21-10. ARCTIC KIT SWITCH WIRE HARNESS REPLACEMENT (CONT).

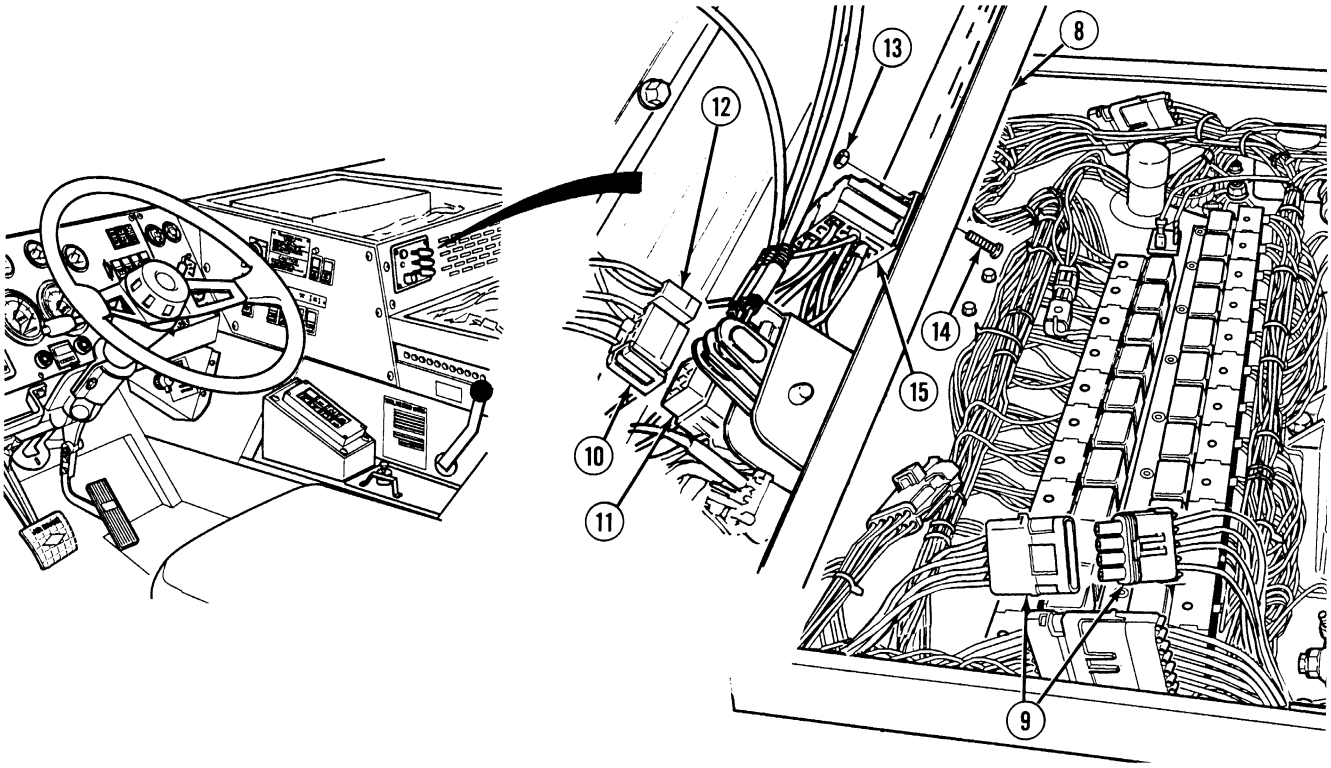

NOTE

- Tag and mark all wire connectors.
- Cut cable ties as required.

(4) Disconnect MC119 connector (9).

(5) Disconnect S 29 connector (10) from arctic pump switch (11).

(6) Disconnect arctic pump switch light (12) from arctic pump switch (11).

(7) Remove two locknuts (13), screws (14) and arctic pump relay sockets (15) from front heater control panel (8). Discard locknuts.

b. Installation.

NOTE

Install cable ties as required.

(1) Install arctic pump relay sockets (15), two screws (14) and locknuts (13) on front heater control panel (8).

(2) Connect arctic pump switch light (12) on arctic pump switch (11).

(3) Connect S 29 connector (10) on arctic pump switch (11).

(4) Connect MC119 connector (9).

(5) Install front heater control panel (8) on heater compartment (3) with four screws (7).

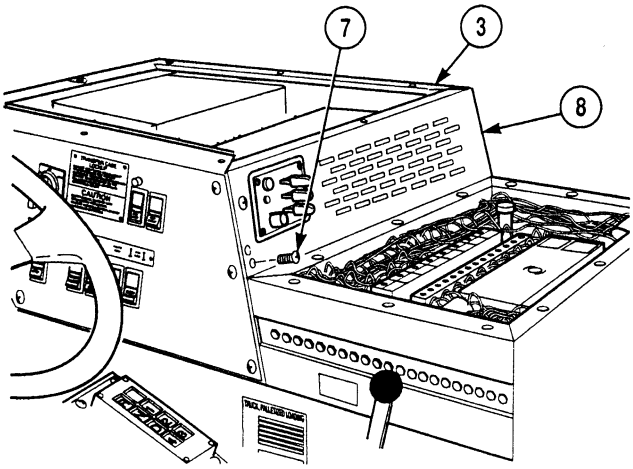

(6) Install left and right ECB covers (5) on ECB (6) with 15 screws (4).

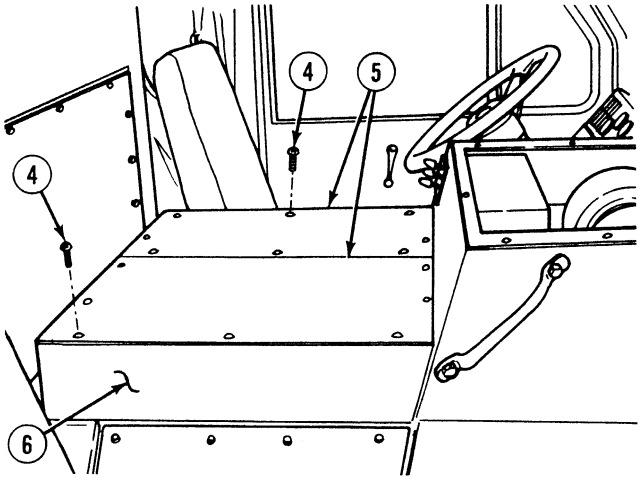

(7) Install heater compartment access panel (2) on heater compartment (3) with eight screws (1).

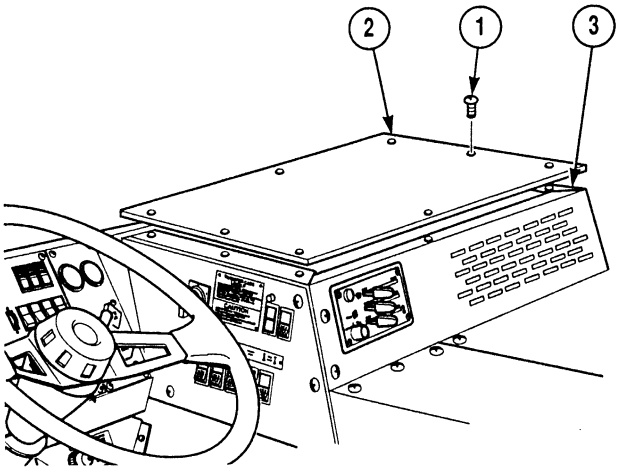

c. Follow-On Maintenance:

- Remove wheel chocks, (TM 9-2320-364-10).

END OF TASK

21-11. ARCTIC KIT BATTERY DISCONNECTION/CONNECTION.

This task covers:

a. Disconnection b. Connection c. Follow-On Maintenance

INITIAL SETUP

Tools and Special Tools
Tool Kit, General Mechanic's: Automotive
(Item 74, Appendix G)

Equipment Condition
Engine OFF, (TM 9-2320-364-10)
Wheels chocked, (TM 9-2320-364-10)

Materials/Parts
Compound, Corrosion Preventive
(Item 35, Appendix C)
Tags, Identification (Item 88, Appendix C)

a. Disconnection.

(1) Remove two flip rings (1) from arctic battery box (2).

(2) Slide battery box (2) out.

(3) Disconnect two latches (3) from battery box cover (4).

(4) Remove arctic battery box cover (4) from battery box (2).

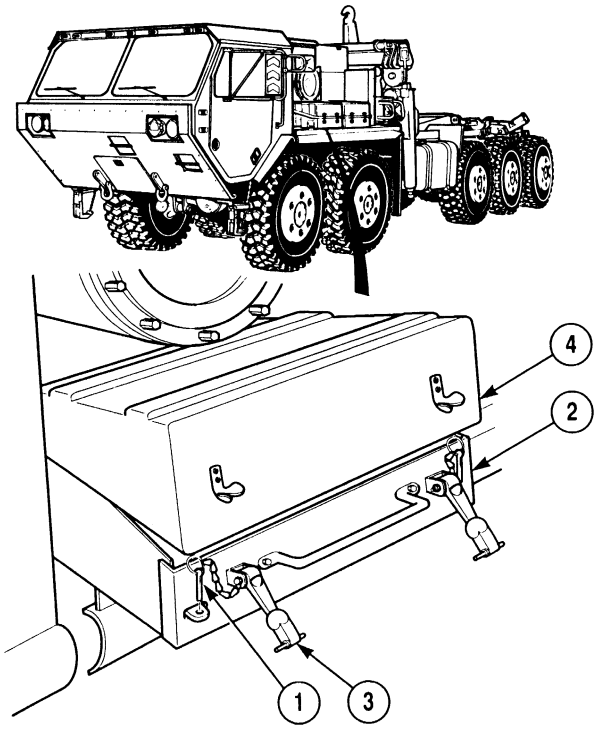

WARNING

- Upon removal of all wires and cables, ensure no contact is made with battery terminals or other wires and cables. Strap wires and cables away from battery terminals and other wires and cables as required to prevent damage to parts, personal injury, or death.
- Battery acid (electrolyte) is extremely harmful. Always wear safety goggles and rubber gloves, and do not smoke when preforming maintenance on batteries. Injury will result if acid contacts skin or eyes. Wear rubber apron to prevent clothing being damaged.
- Remove all jewelry such as rings, dog tags, bracelets, etc. If jewelry or tools contact positive electrical circuits, a direct short may result. Damage to equipment, injury or death to personnel may occur.

NOTE

Tag and mark wires prior to removal.

(5) Loosen two nuts (5) and remove two terminals (6) from negative battery posts (7) on arctic batteries (8).

(6) Loosen two nuts (9) and remove two terminals (10) from positive battery posts (11) on arctic batteries (8).

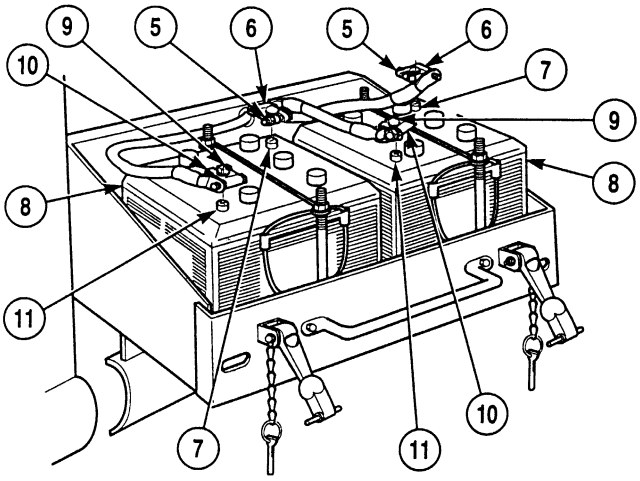

b. Connection.

(1) Install two terminals (10) on positive battery posts (11) and tighten two nuts (9) to 84 to 96 lb-in (9 to 11 N·m).

(2) Install two terminals (6) on negative battery posts (7) and tighten two nuts (5) to 84 to 96 lb-in (9 to 11 N·m).

WARNING

Corrosion inhibitor contains alkali. Do not get in eyes; wear goggles/safety glasses when using. Avoid contact with skin. In case of contact, immediately wash area with soap and water. If eyes are contacted, flush eyes with large amounts of water for at least 15 minutes and get immediate medical attention.

(3) Apply corrosion preventive compound to positive posts (11), negative posts (7) and terminals (10) and (6).

21-11. ARCTIC KIT BATTERY DISCONNECTION/CONNECTION (CONT).

(4) Install arctic battery cover (4) on battery box (2).

(5) Connect two latches (3) to battery box cover (4).

(6) Push in battery box (2) into stored position.

(7) Install two flip rings (1) on battery box (2).

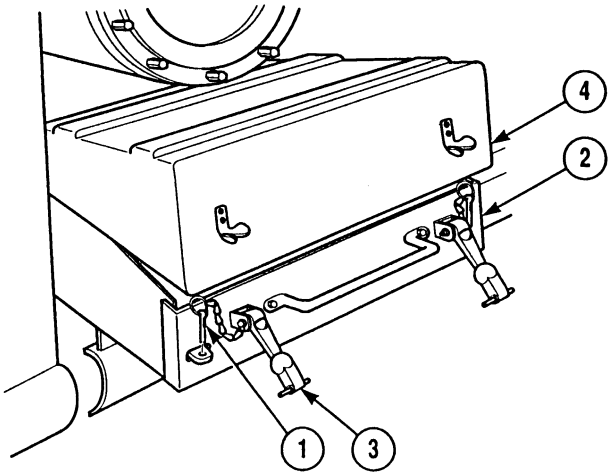

c. Follow-On Maintenance:

- Remove wheel chocks, (TM 9-2320-364-10).

END OF TASK

21-12. INTERFACE QUICK DISCONNECT ASSEMBLY REPLACEMENT.

This task covers:

a. Removal b. Installation c. Follow-On Maintenance

INITIAL SETUP

Tools and Special Tools
Tool Kit, General Mechanic's: Automotive (Item 74, Appendix G)

Materials/Parts
Lockwasher (4) (Item 172, Appendix F)

Equipment Condition
Engine OFF, (TM 9-2320-364-10)
Wheels chocked, (TM 9-2320-364-10)
Batteries disconnected, (Para 7-87)
Hydraulic reservoir drained, (Para 20-11)
Interface hydraulic hoses and tubes removed, (Para 20-3)

a. Removal.

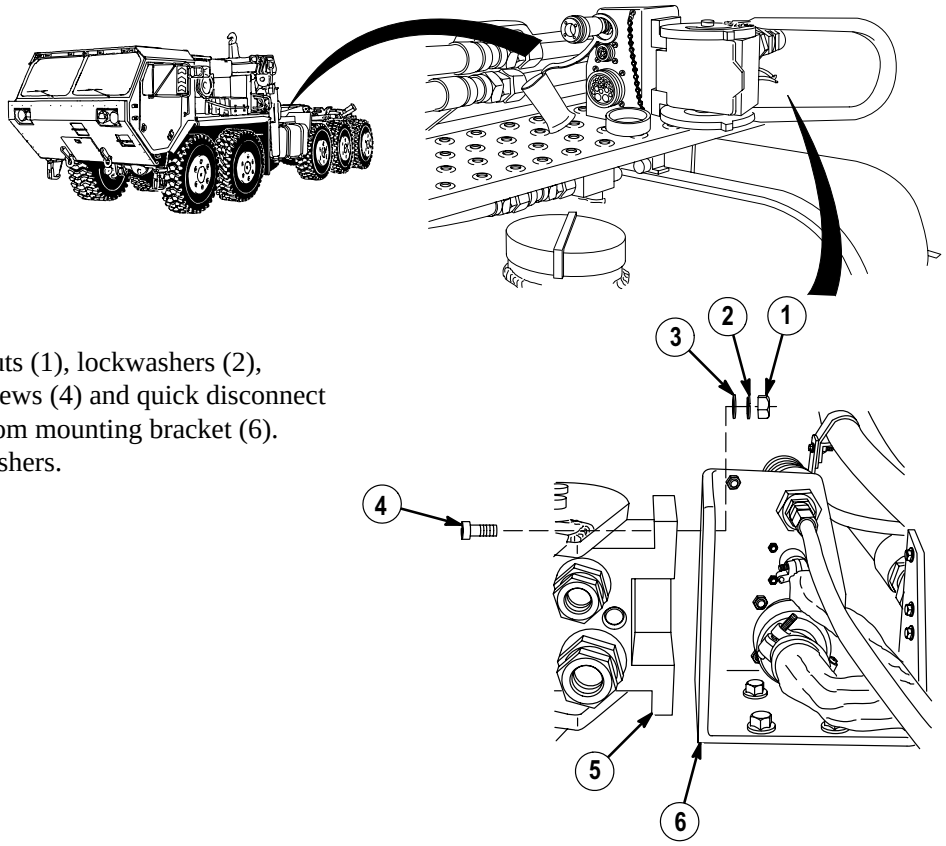

(1) Remove four nuts (1), lockwashers (2), washers (3), screws (4) and quick disconnect assembly (5) from mounting bracket (6). Discard lockwashers.

21-12. INTERFACE QUICK DISCONNECT ASSEMBLY REPLACEMENT (CONT).

b. Installation.

(1) Position four screws (4) in quick disconnect assembly (5).

(2) Install quick disconnect assembly (5) on mounting bracket (6) with four screws (4), washers (3), lockwashers (2) and nuts (1).

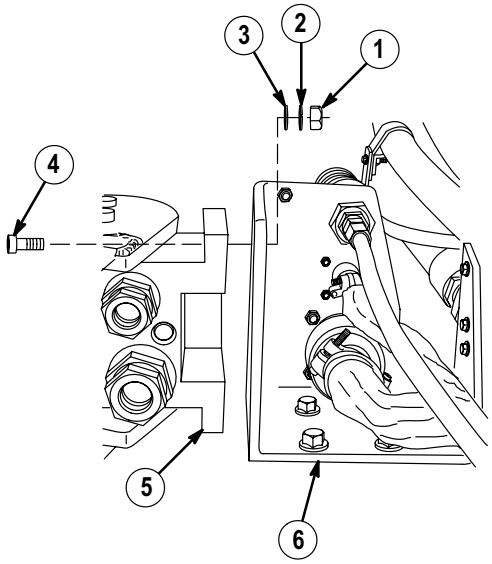

c. Follow-On Maintenance:

- Install interface hydraulic hoses and tubing, (Para 20-3).
- Fill hydraulic reservoir, (Para 20-11).
- Connect batteries, (Para 7-87).
- Remove wheel chocks, (TM 9-2320-364-10).

END OF TASK

21-13. INTERFACE MOUNTING BRACKET REPLACEMENT.

This task covers:

a. Removal b. Installation c. Follow-On Maintenance

INITIAL SETUP

Tools and Special Tools
Tool Kit, General Mechanic's: Automotive (Item 74, Appendix G)

Materials/Parts
Sealing Compound (Item 72, Appendix C)
Locknut (5) (Item 104, Appendix F)
Locknut (4) (Item 106, Appendix F)
Locknut (4) (Item 107, Appendix F)
Locknut (4) (Item 140, Appendix F)
Lockwasher (Item 158, Appendix F)

Equipment Condition
Engine OFF, (TM 9-2320-364-10)
Wheels chocked, (TM 9-2320-364-10)
Quick disconnect removed, (Para 21-12)

a. Removal.

(1) Remove cap (1) from MC130 connector (2).

(2) Remove cap (3) from MC138 connector (4).

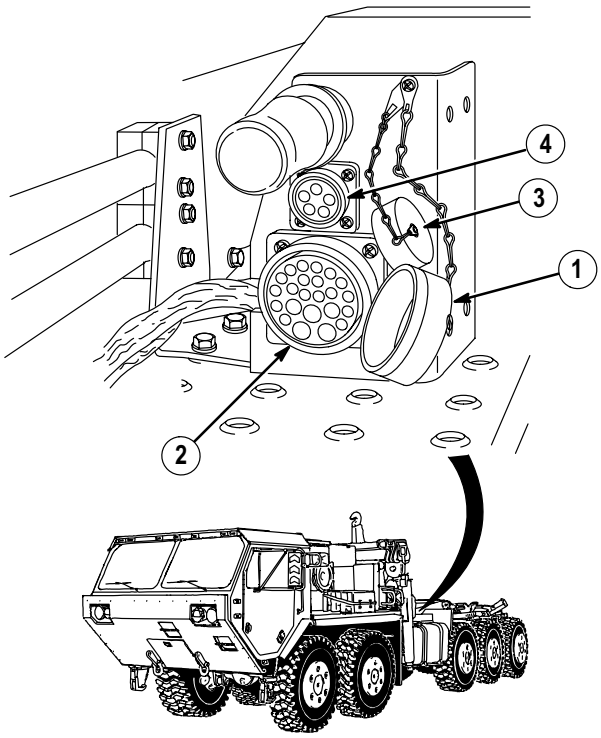

21-13. INTERFACE MOUNTING BRACKET REPLACEMENT. (CONT).

(3) Remove locknut (5), screw (6), cap with chain (1) and cap with chain (3) from interface mounting bracket (7). Discard locknut.

(4) Remove four locknuts (8), screws (9) and MC130 connector (2) from interface mounting bracket (7). Discard locknuts.

(5) Remove four locknuts (10), screws (11) and MC138 connector (4) from interface mounting bracket (7). Discard locknuts.

(6) Remove four locknuts (12), screws (13), two cover plates (14), four clamp halves (15), tube 2810 (16) and tube 2724 (17) from interface mounting bracket (7). Discard locknuts.

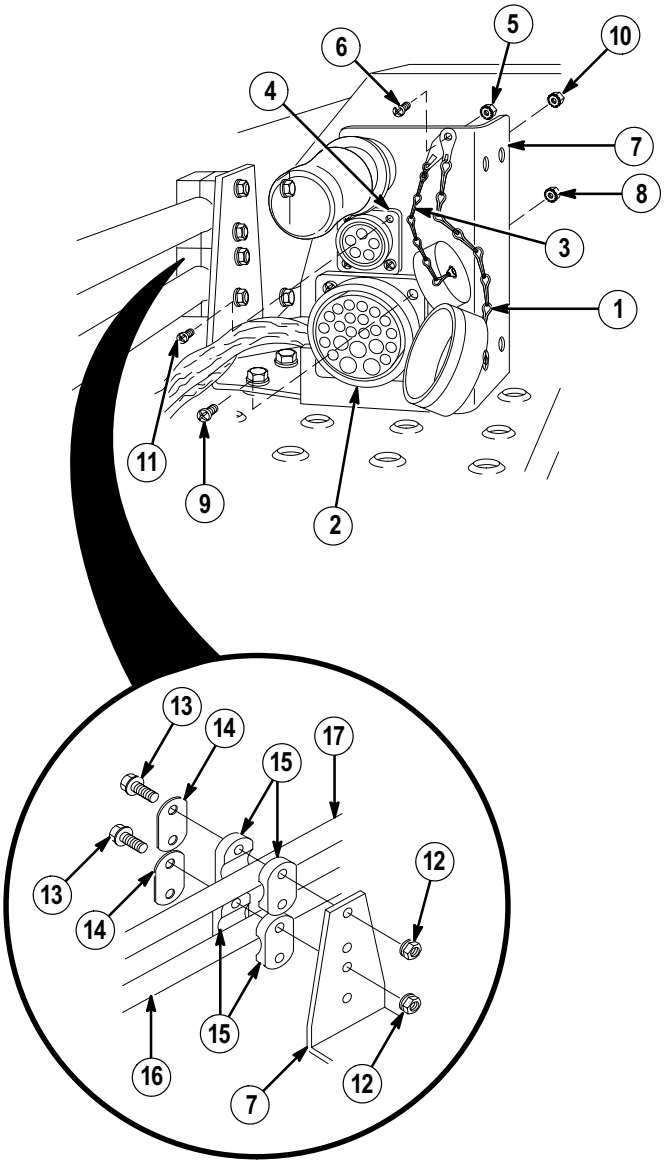

(7) Remove cover (18) from air quick disconnect (19).

(8) Remove air line 2133 (20) from fitting (21).

(9) Remove fitting (21) from fitting (22).

(10) Remove quick disconnect (19) from fitting (22).

(11) Remove jam nut (23), lockwasher (24) and fitting (22) from interface mounting bracket (7). Discard lockwasher.

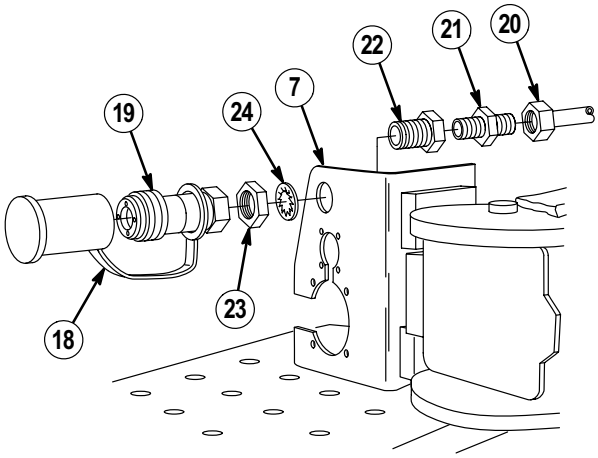

(12) Remove four locknuts (25), screws (26) and interface mounting bracket (7) from step (27). Discard locknuts.

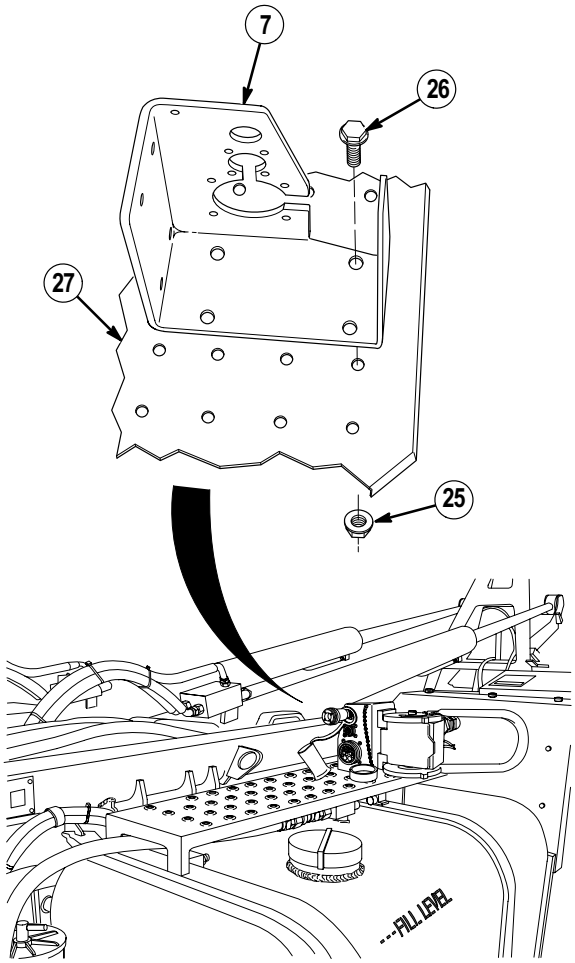

b. Installation.

NOTE

Use existing holes in step to mount interface mounting bracket. Rear inside screw should be located in first hole from the rear and first row from inside.

(1) Install interface mounting bracket (7) to step (27) with four screws (26) and locknuts (25).

(2) Install fitting (22) in interface mounting bracket (7) with lockwasher (24) and jam nut (23).

WARNING

Adhesives, solvents, and sealing compounds can burn easily, can give off harmful vapors, and are harmful to skin and clothing. To avoid injury or death, keep away from open fire and use in a well-ventilated area. If adhesive, solvent, or sealing compound gets on skin or clothing, wash immediately with soap and water.

(3) Apply sealing compound on threads of fitting (22).

(4) Install quick disconnect (19) on fitting (22).

(5) Apply sealing compound on threads of fitting (21).

(6) Install fitting (21) in fitting (22).

(7) Install air line 2133 (20) on fitting (21).

(8) Install cover (18) on air quick disconnect (19).

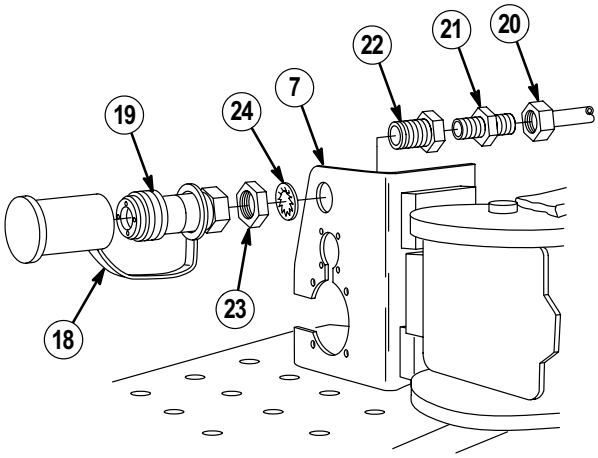

21-13. INTERFACE MOUNTING BRACKET REPLACEMENT. (CONT).

(9) Install four clamp halves (15), two cover plates (14), four screws (13), locknuts (12), tube 2810 (16) and tube 2724 (17) on interface mounting bracket (7).

(10) Position MC138 connector (4) through slots in interface mounting bracket (7) and install with four screws (11) and locknuts (10).

(11) Install MC130 connector (2) to interface mounting bracket (7) with four screws (9) and locknuts (8).

(12) Install cap with chain (1) and cap with chain (3) with screw (6) and locknut (5) on interface mounting bracket (7).

(13) Install cap (1) on MC130 connector (2).

(14) Install cap (3) on MC138 connector (4).

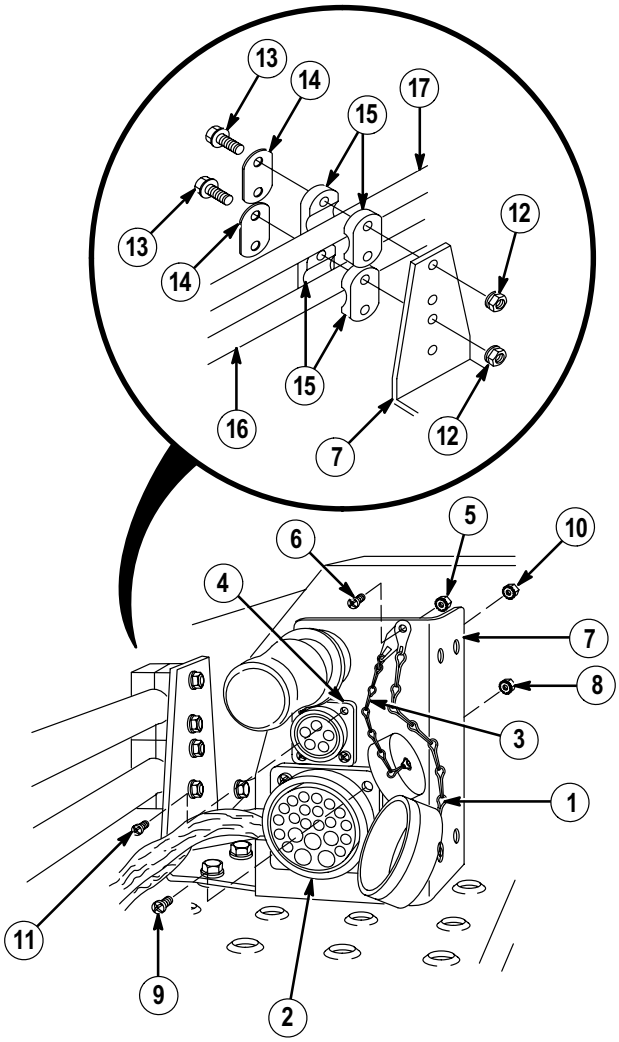

c. Follow-On Maintenance:

- Install quick disconnect, (Para 21-12).
- Start engine and check for air leaks.
- Remove wheel chocks, (TM 9-2320-364-10).

END OF TASK

21-14. INTERFACE WIRING HARNESS REPLACEMENT.

This task covers:

a. Removal b. Installation c. Follow-On Maintenance

INITIAL SETUP

Tools and Special Tools
Tool Kit, General Mechanic's: Automotive (Item 74, Appendix G)

Materials/Parts
Cable Ties (Item 26, Appendix C)
Tags, Identification (Item 88, Appendix C)
Locknut (8) (Item 104, Appendix F)
Locknut (8) (Item 107, Appendix F)
Locknut (Item 140, Appendix F)

Materials/Parts (cont)
Lockwasher (Item 174, Appendix F)
Lockwasher (26) (Item 195, Appendix F)
Lockwasher (Item 196, Appendix F)
Lockwasher (Item 198, Appendix F)

Equipment Condition
Engine OFF, (TM 9-2320-364-10)
Wheels chocked, (TM 9-2320-364-10)
Batteries disconnected, (Para 7-87)

a. Removal.

NOTE

- Tag and mark all wires and connectors prior to removal.
- Remove cable ties as required.

(1) Remove cap (1) from MC130 connector (2).

(2) Remove four locknuts (3), screws (4) and MC130 connector (2) from bracket (5). Discard locknuts.

(3) Remove cap (6) from MC138 connector (7).

(4) Remove four locknuts (8), screws (9) and MC138 connector (7) from bracket (5). Discard locknuts.

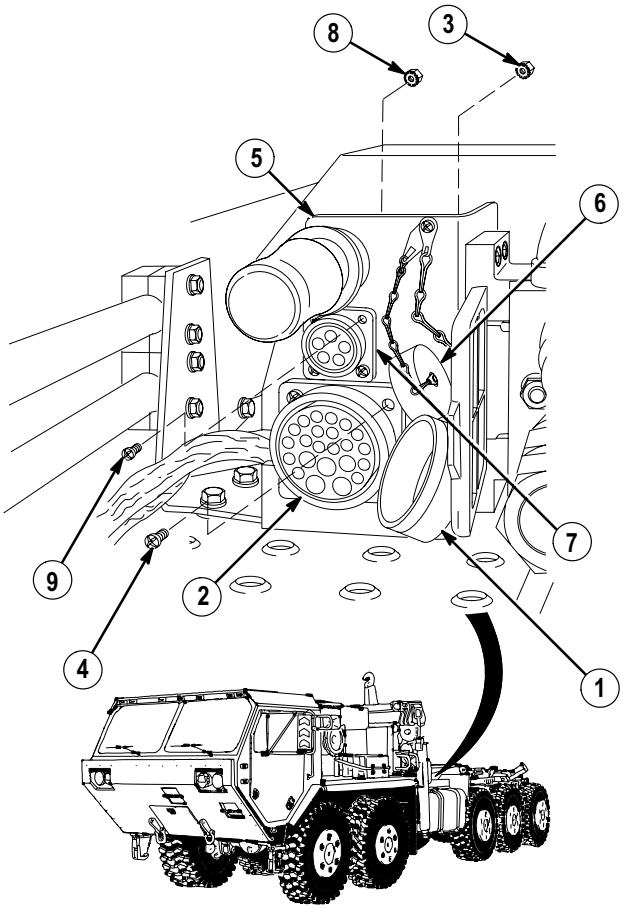

21-14. INTERFACE WIRING HARNESS REPLACEMENT (CONT).

(5) Remove nut (10) from fitting (11).

(6) Remove fitting (11) from female quick disconnect (12).

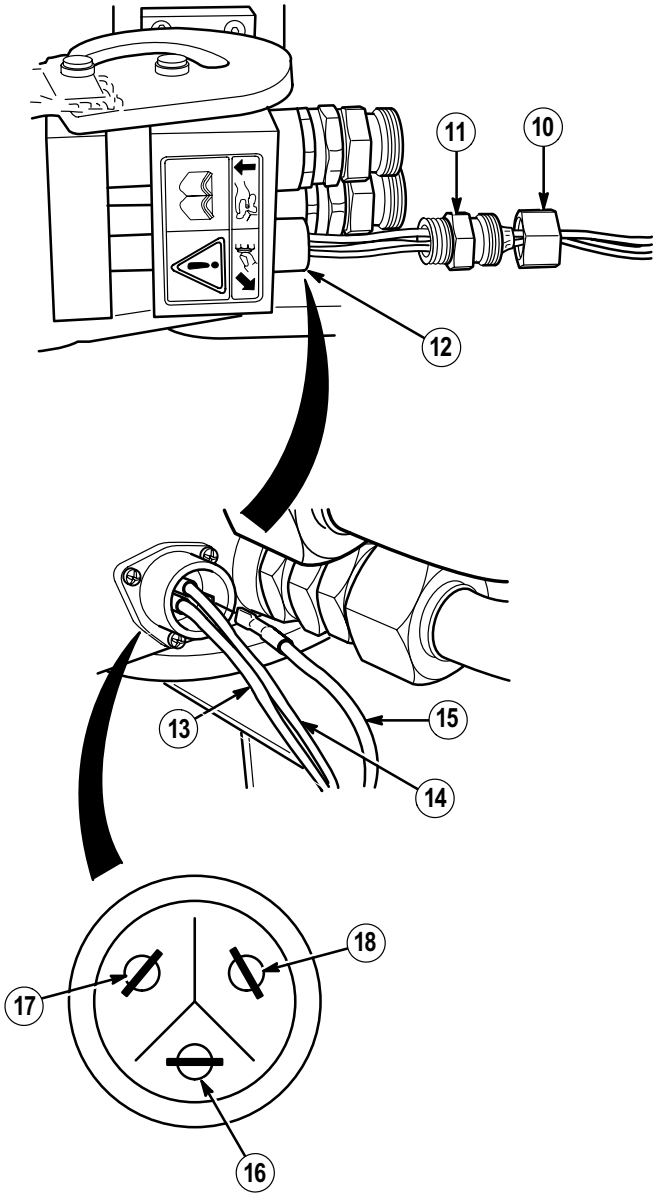

NOTE

Tag and mark wires prior to removal.

(7) Remove wires 1435 (13), 1435A (14) and 1435B (15) from three terminals (16), (17) and (18).

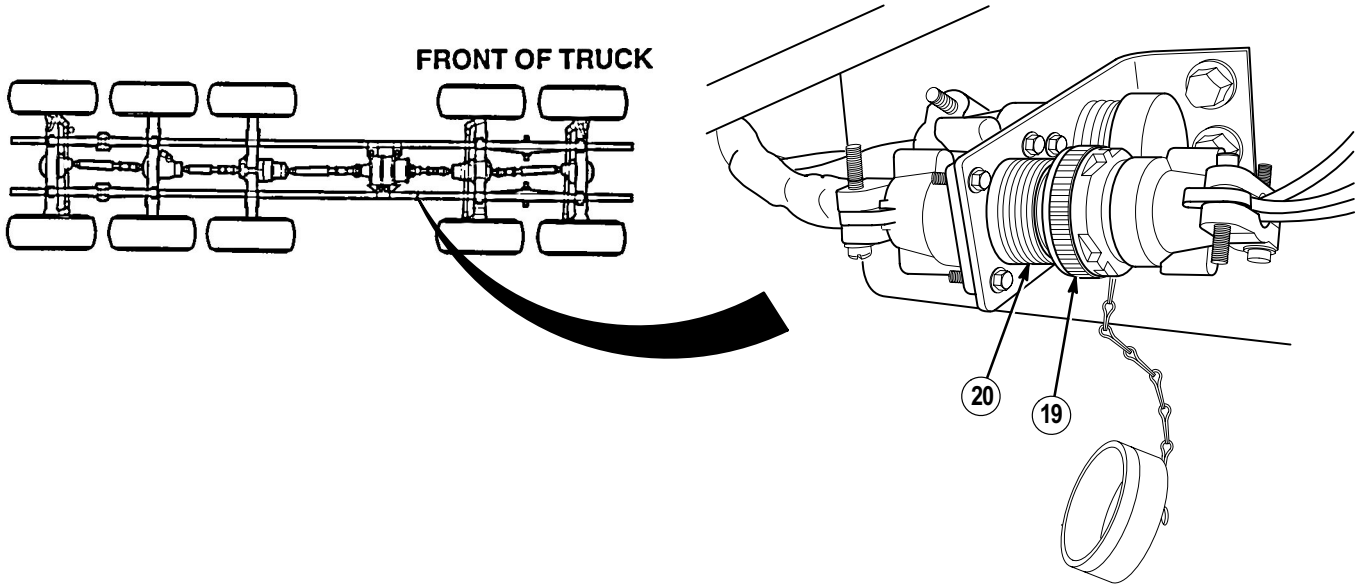

(8) Disconnect power cable MC29 connector (19) from connector (20).

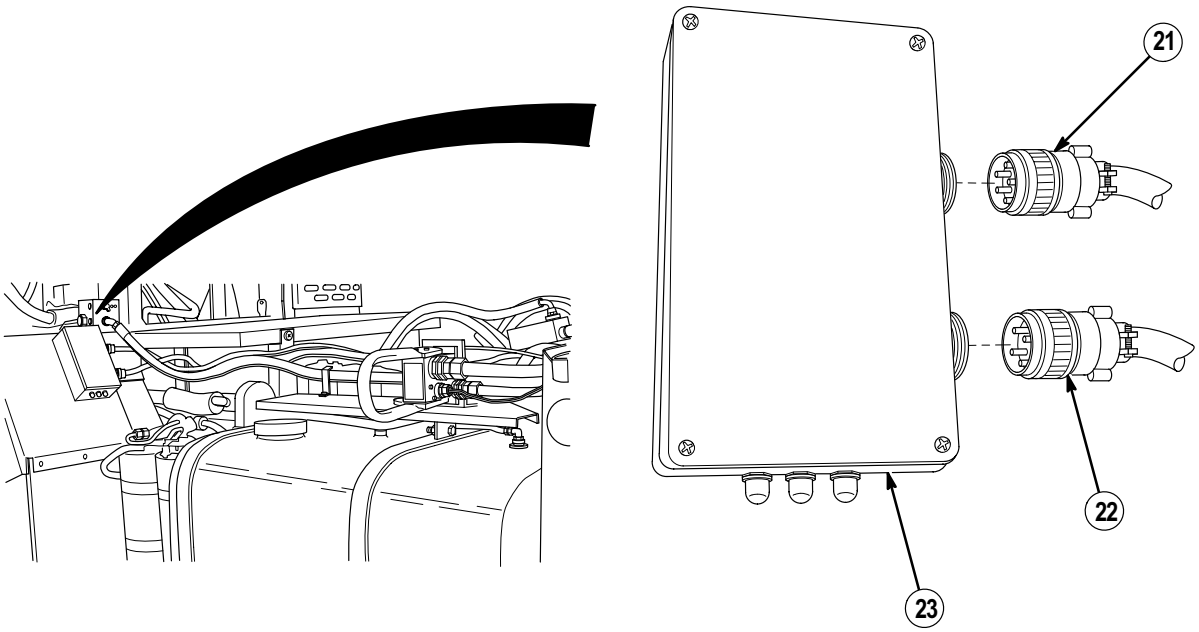

(9) Disconnect MC135 connector (21) and MC136 connector (22) from powerbox (23).

21-14. INTERFACE WIRING HARNESS REPLACEMENT (CONT).

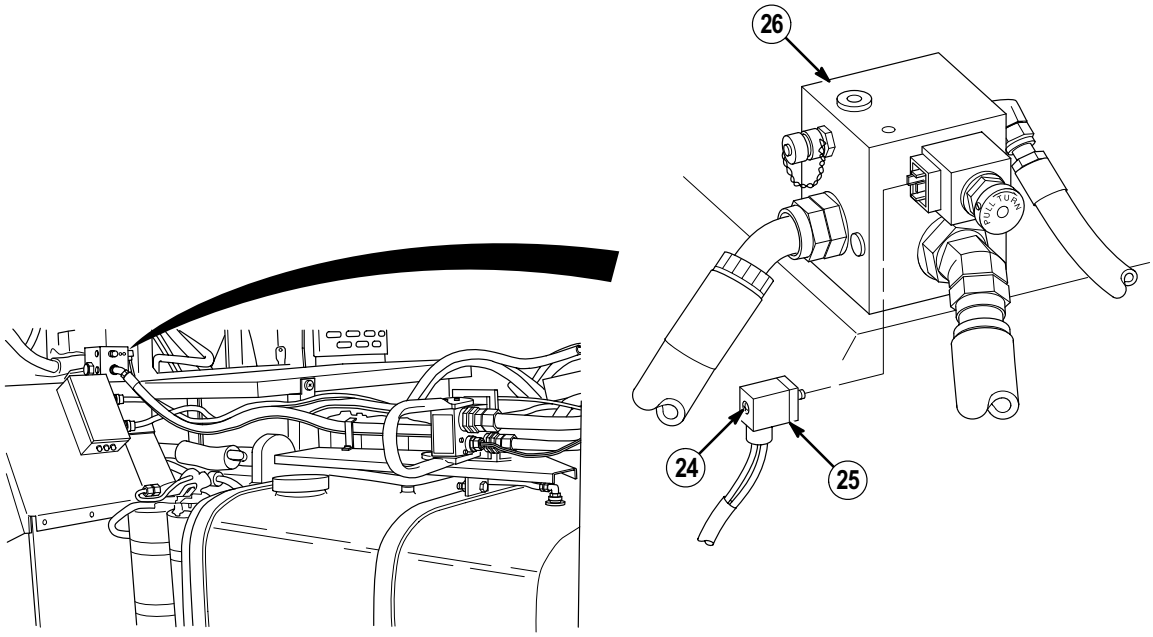

(10) Loosen screw (24) and remove MC134 connector (25) from valve (26).

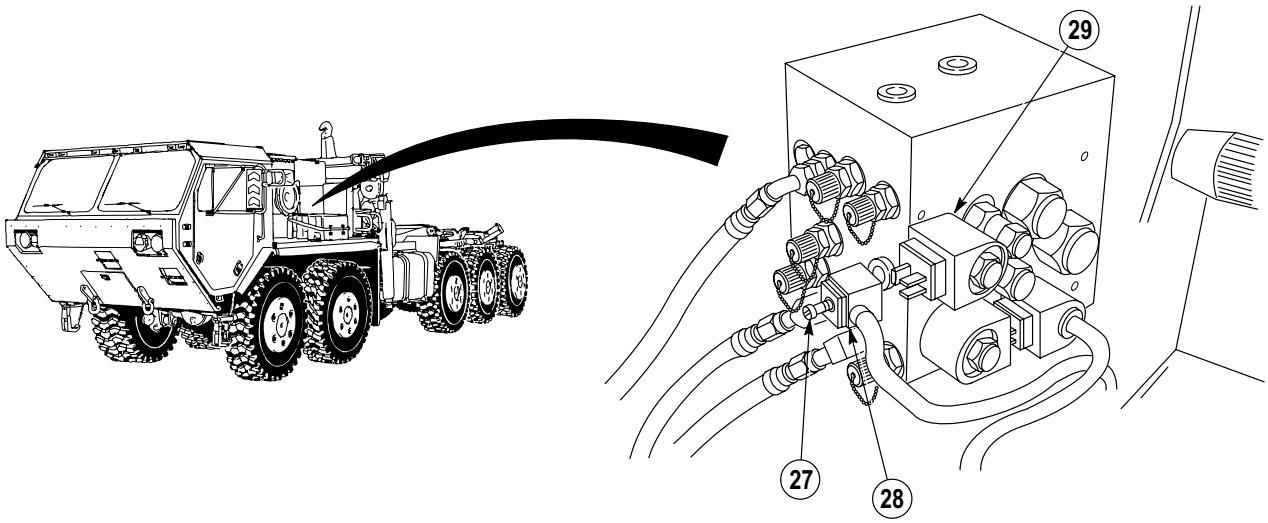

(11) Loosen screw (27) and remove MC133 connector (28) from valve (29).

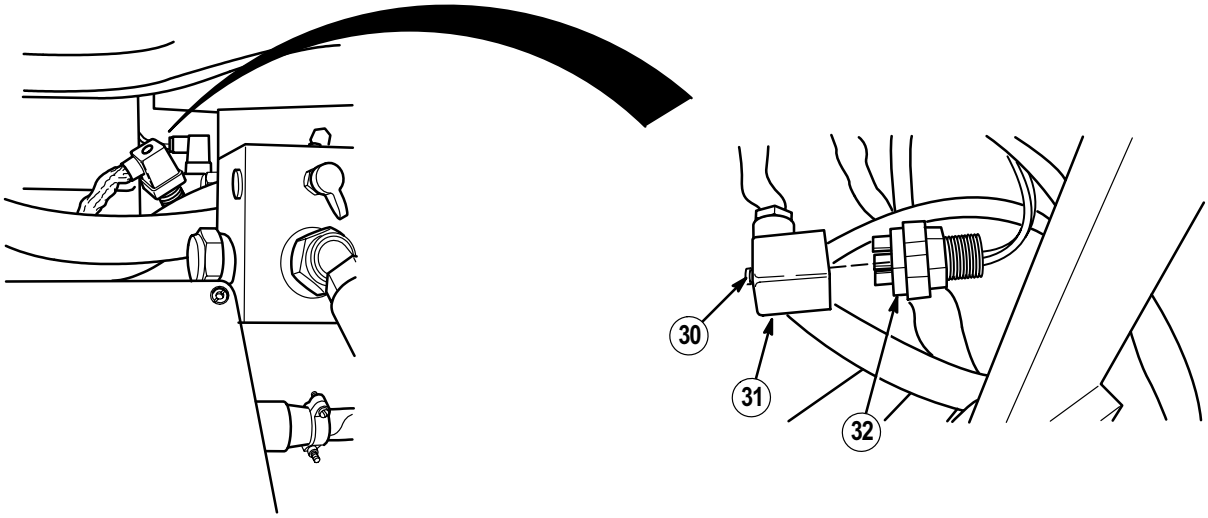

(12) Loosen screw (30) and remove MC132 connector (31) from connector (32).

WARNING

- Battery acid (electrolyte) is extremely harmful. Always wear safety goggles and rubber gloves, and do not smoke when performing maintenance on batteries. Injury will result if acid contacts skin or eyes. Wear rubber apron to prevent clothing being damaged.
- Remove all jewelry such as rings, dog tags, bracelets, etc. If jewelry or tools contact positive electrical circuits, a direct short may result. Damage to equipment, injury or death to personnel may occur.

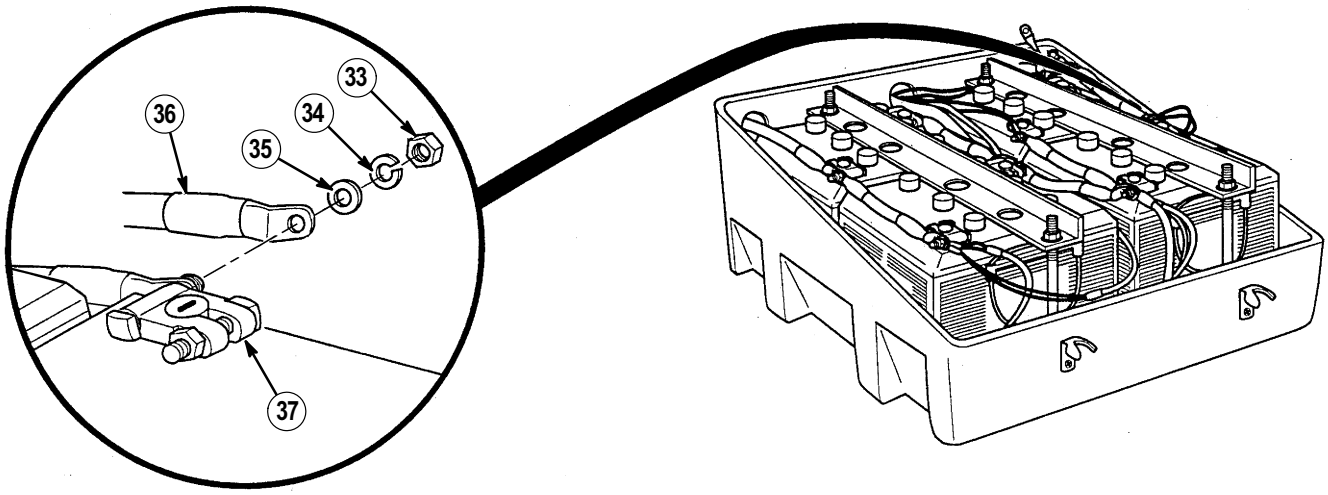

(13) Remove nut (33), lockwasher (34), washer (35) and wire 1435 (36) from negative terminal (37). Discard lockwasher.

21-14. INTERFACE WIRING HARNESS REPLACEMENT (CONT).

(14) Remove four screws (38), lockwashers (39), washers (40) and cover (41) from splash guard (42). Discard lockwashers.

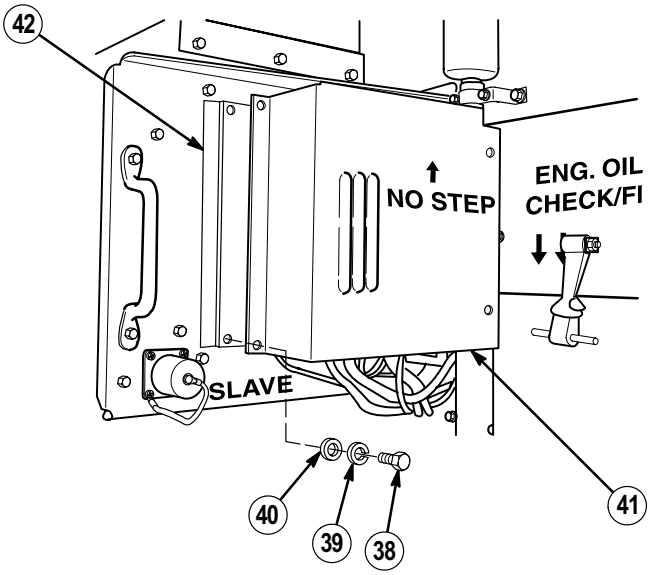

(15) Remove nut (43), lockwasher (44) and wire 1785 (45) from 12V BAT terminal (46). Discard lockwasher.

(16) Remove nut (47), lockwasher (48) and wire 1784 (49) from 24V BAT terminal (50). Discard lockwasher.

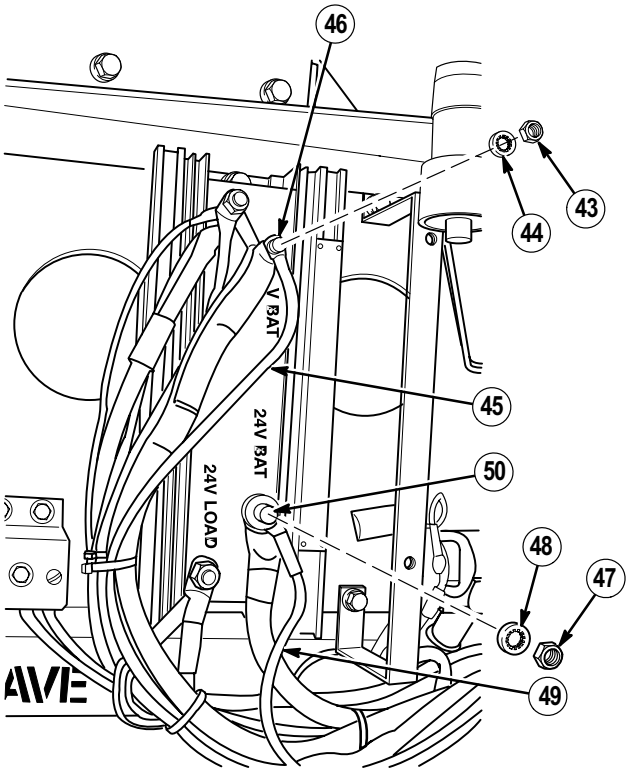

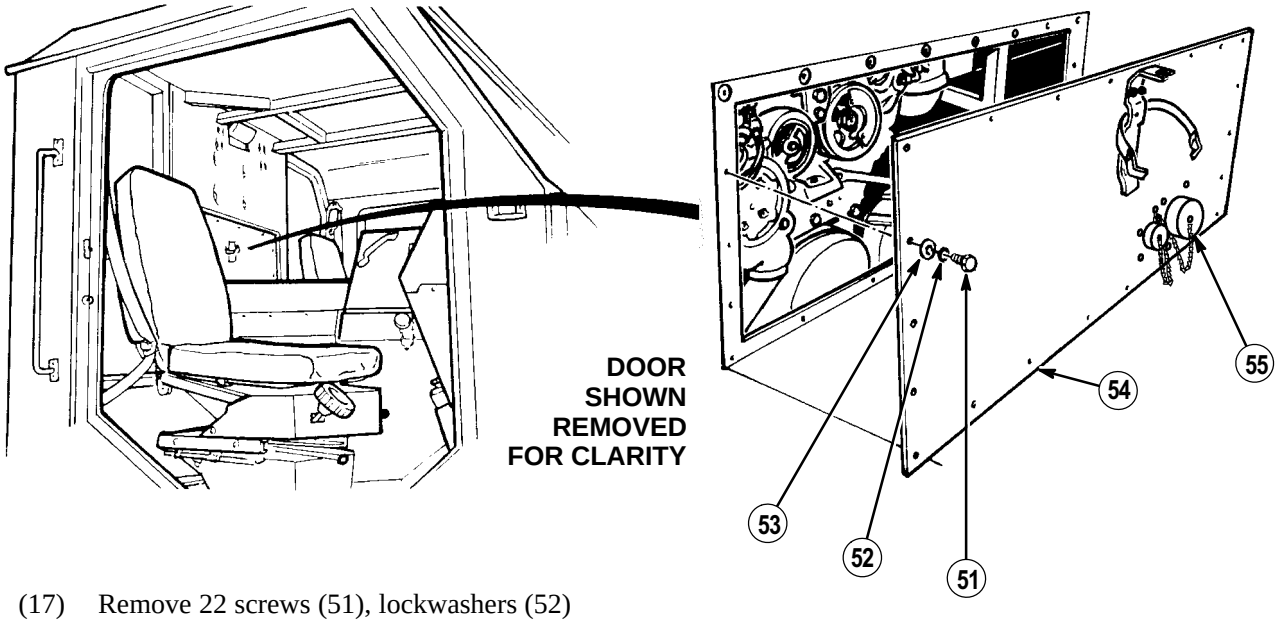

(17) Remove 22 screws (51), lockwashers (52) and washers (53) from cab engine access panel (54). Discard lockwashers.

(18) Position cab engine access panel (54) to access MC129 connector (55).

(19) Remove cap (56) from MC129 connector (55).

(20) Remove four locknuts (57), screws (58) and MC129 connector (55) from cab engine access panel (54). Discard locknuts.

(21) Remove cap (59) from MC137 connector (60).

(22) Remove four locknuts (61), screws (62) and MC137 connector (60) from cab engine access panel (54). Discard locknuts.

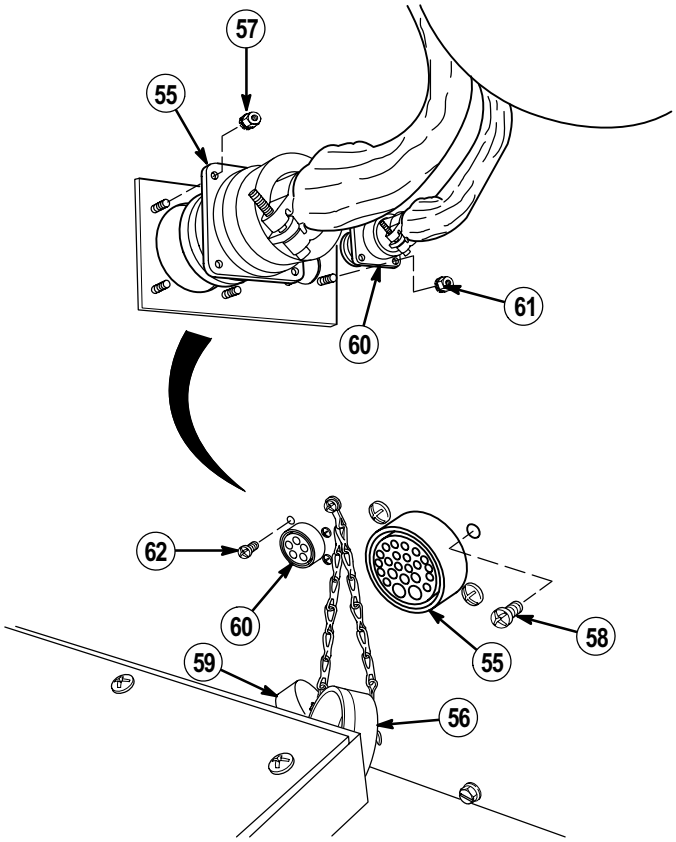

21-14. INTERFACE WIRING HARNESS REPLACEMENT (CONT).

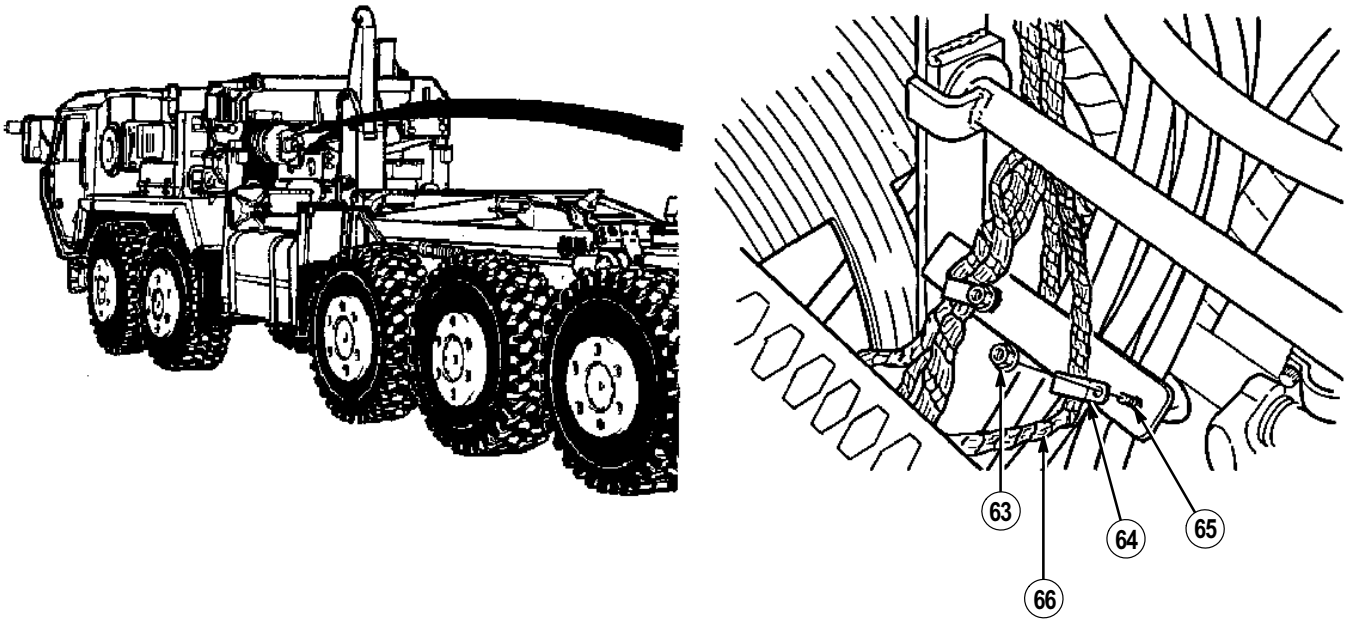

NOTE

Note location of cushion clips prior to removal.

(23) Remove locknut (63) and cushion clip (64) from U-bolt (65). Discard locknut.

(24) Remove wiring harness (66) from truck.

b. Installation.

NOTE

Install cable ties as required.

(1) Position wire harness (66) in truck.

(2) Install MC137 connector (60) to cab engine access panel (54) with four screws (62) and locknuts (61).

(3) Install cap (59) on MC137 connector (60).

(4) Install MC129 connector (55) to cab engine access panel (54) with four screws (58) and locknuts (57).

(5) Install cap (56) on MC129 connector (55).

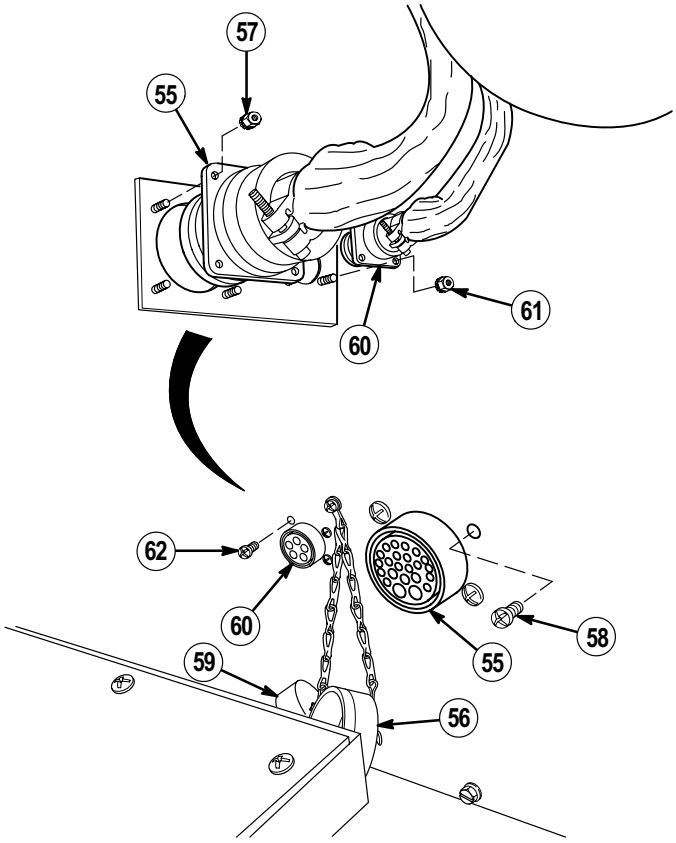

(6) Install cab engine access panel (54) with 22 screws (51), lockwashers (52) and washers (53).

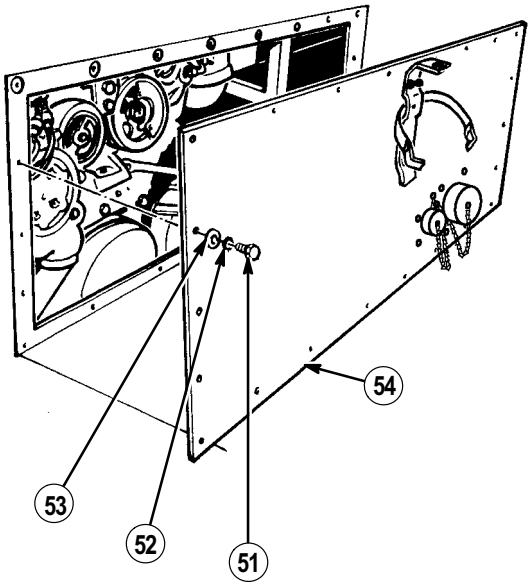

21-14. INTERFACE WIRING HARNESS REPLACEMENT (CONT).

(7) Install wire 1784 (49), lockwasher (48) and nut (47) on 24V BAT terminal (50).

(8) Install wire 1785 (45), lockwasher (44) and nut (43) on 12V BAT terminal (46).

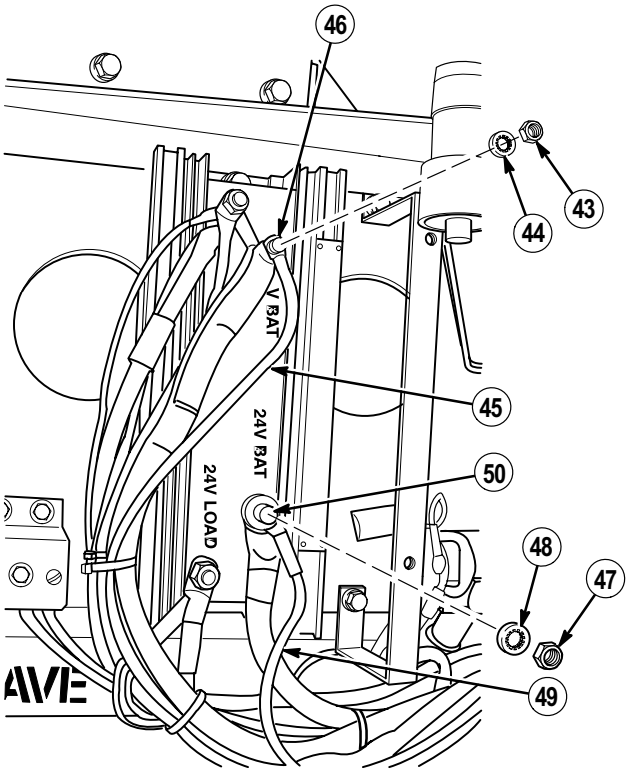

(9) Install cover (41) with four screws (38), washers (40) and lockwashers (39) on splash guard (42).

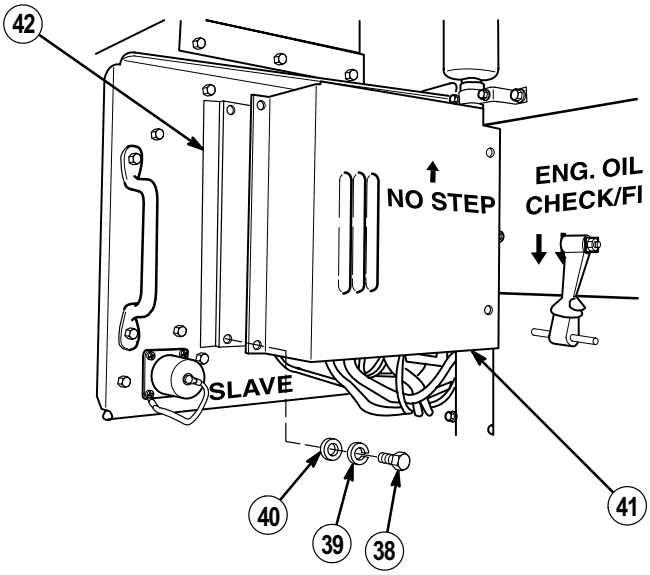

WARNING

- Battery acid (electrolyte) is extremely harmful. Always wear safety goggles and rubber gloves, and do not smoke when performing maintenance on batteries. Injury will result if acid contacts skin or eyes. Wear rubber apron to prevent clothing being damaged.
- Remove all jewelry such as rings, dog tags, bracelets, etc. If jewelry or tools contact positive electrical circuits, a direct short may result. Damage to equipment, injury or death to personnel may occur.

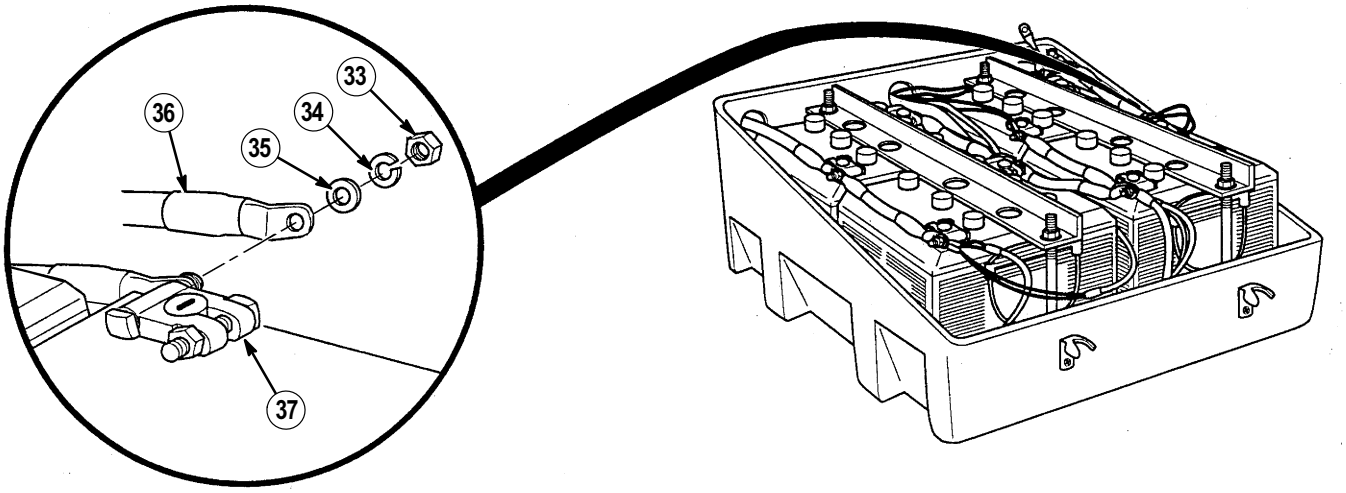

(10) Install wire 1435 (36), washer (35), lockwasher (34) and nut (33) to negative terminal (37).

(11) Install MC132 connector (31) to M10 connector (32) and tighten screw (30).

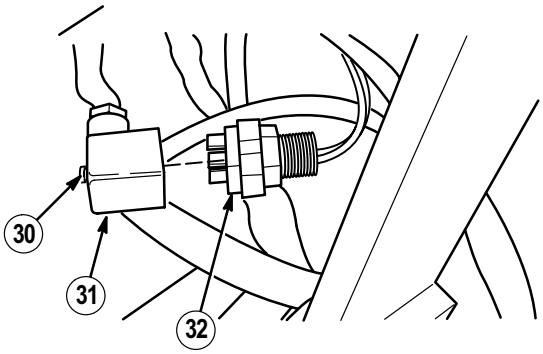

21-14. INTERFACE WIRING HARNESS REPLACEMENT (CONT).

(12) Install MC133 connector (28) to valve (29) and tighten screw (27).

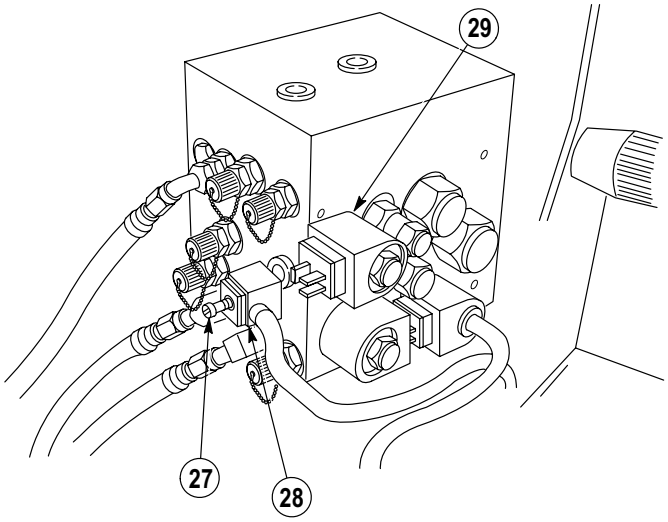

(13) Install MC134 connector (25) to valve (26) and tighten screw (24).

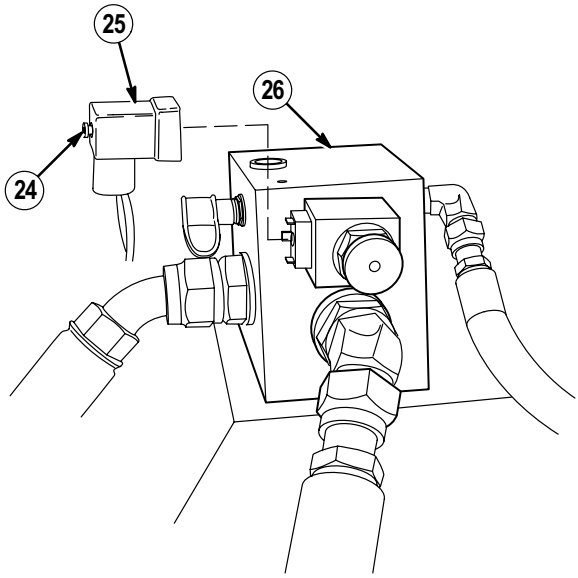

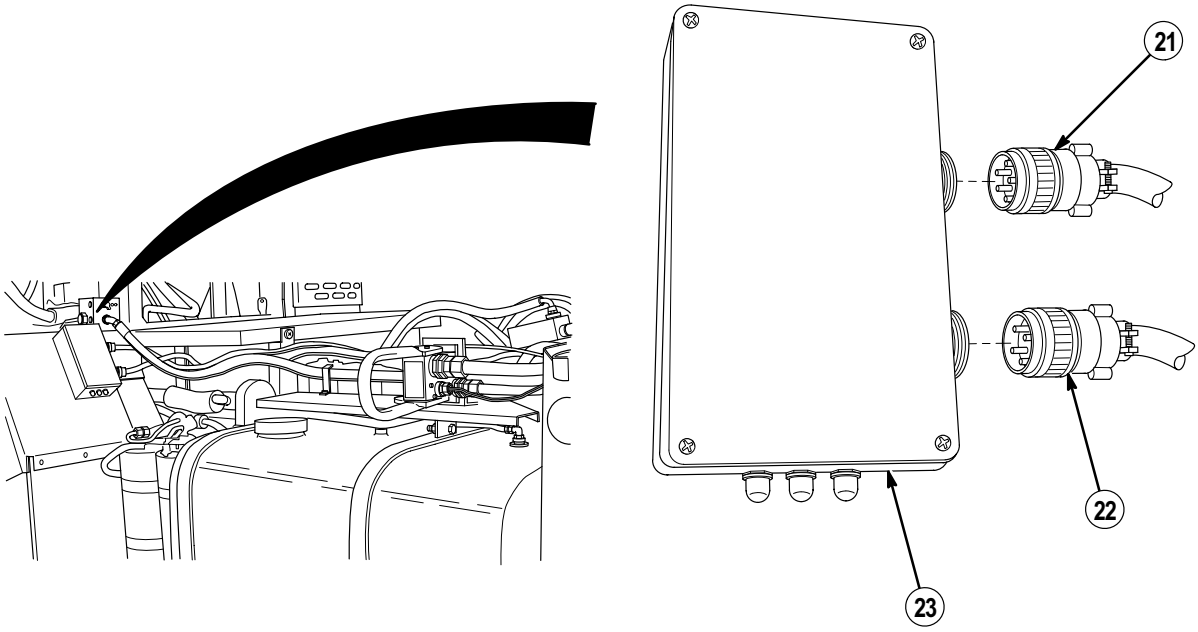

(14) Install MC135 connector (21) and MC136 connector (22) to powerbox (23).

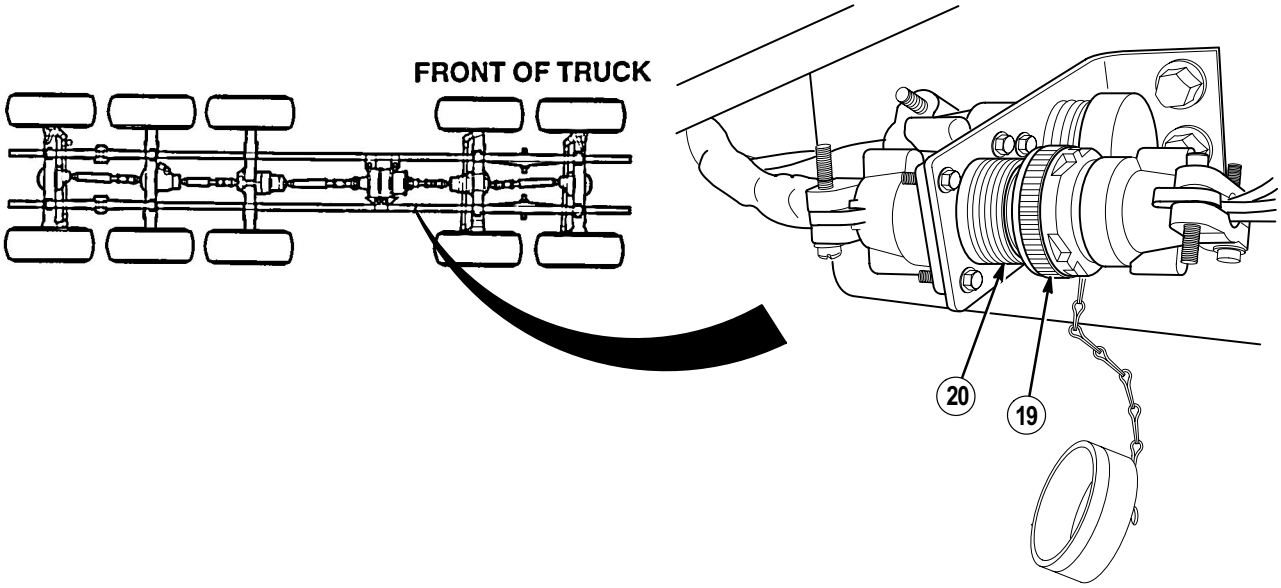

(15) Connect power cable MC29 connector (19) to connector (20).

21-14. INTERFACE WIRING HARNESS REPLACEMENT (CONT).

(16) Position wire 1435 (13), 1435A (14) and 1435B (15) through nut (10) and fitting (11).

(17) Install wire 1435 (13) to terminal (16).

(18) Install wire 1435A (14) to terminal (17).

(19) Install wire 1435B (15) to terminal (18).

(20) Install fitting (11) on female quick disconnect (12).

(21) Install nut (10) on fitting (11).

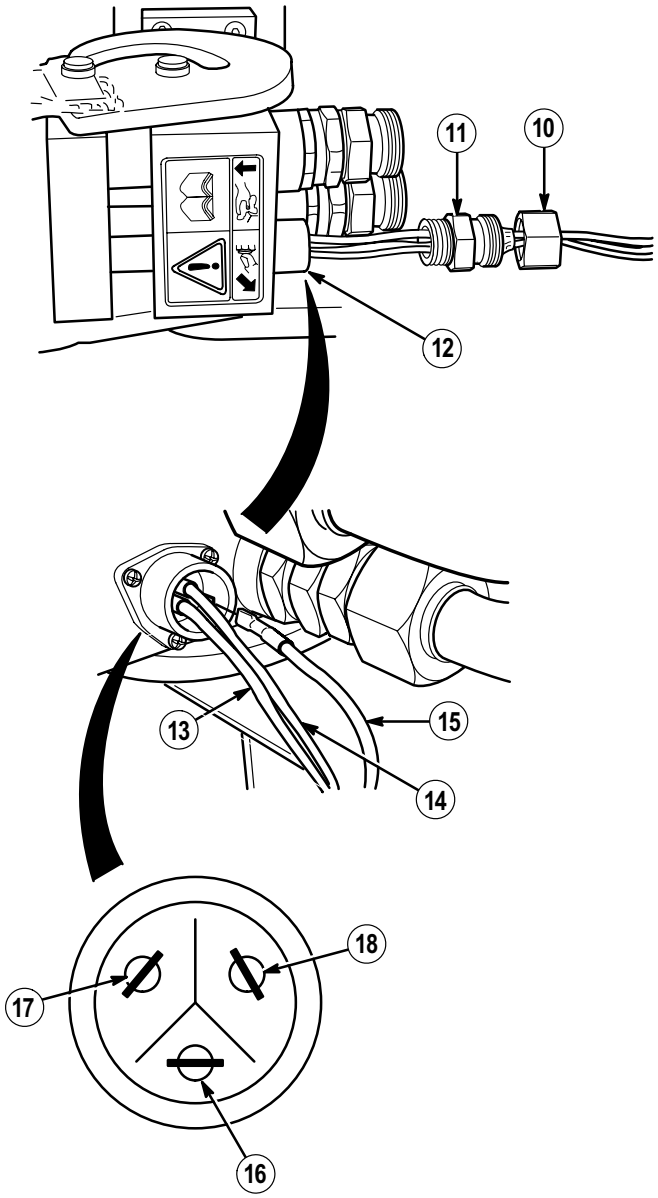

(22) Install MC138 connector (7) on bracket (5) with four screws (9) and locknuts (8).

(23) Install cap (6) on MC138 connector (7).

(24) Install MC130 connector (2) on bracket (5) with four screws (4) and locknuts (3).

(25) Install cap (1) on MC130 connector (2).

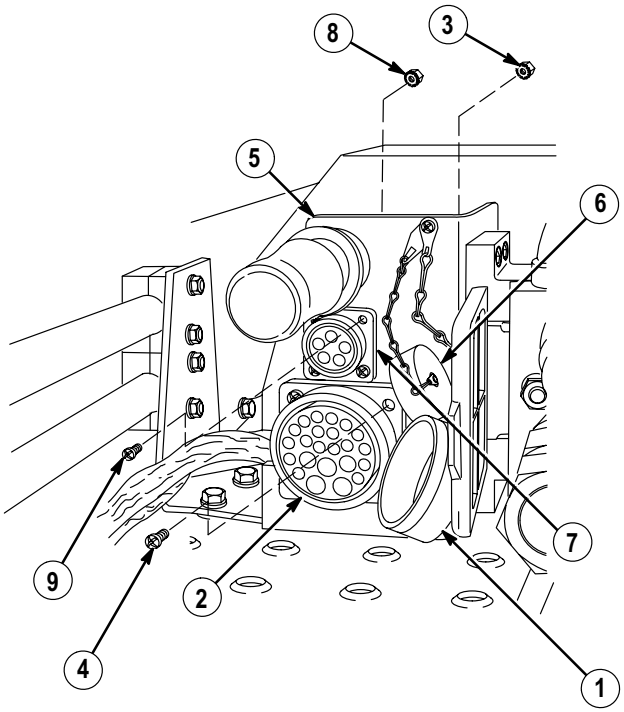

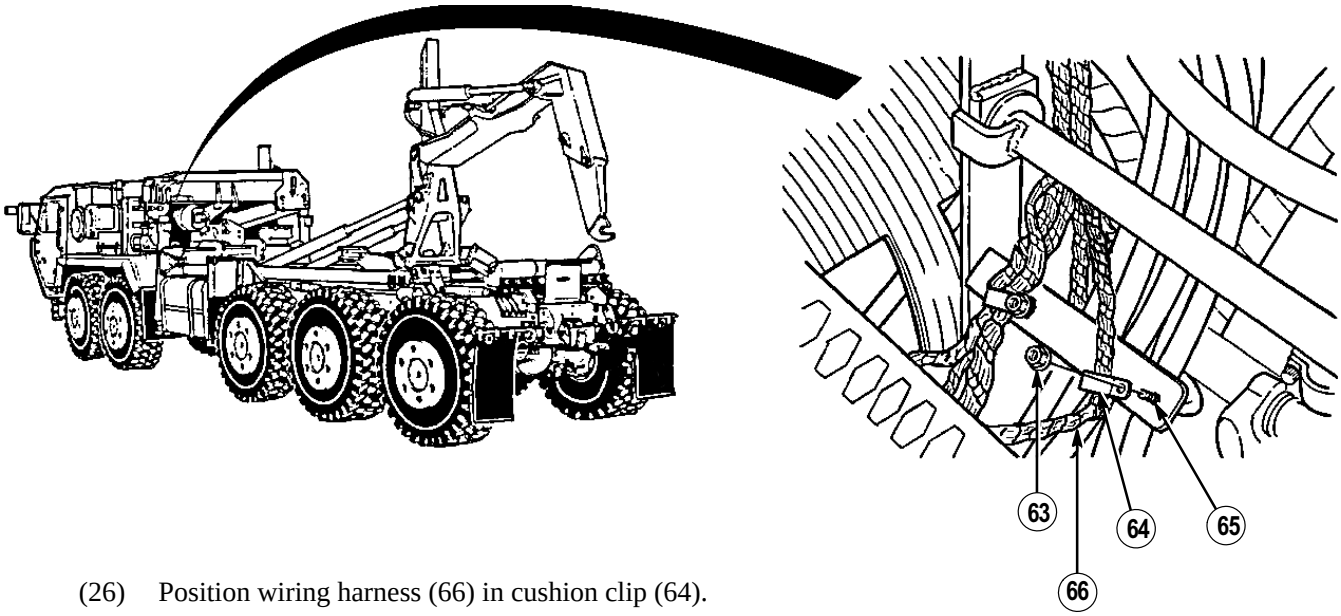

(26) Position wiring harness (66) in cushion clip (64).

(27) Install cushion clip (64) and locknut (63) on U–bolt (65).

c. Follow-on Maintenance:

- Connect batteries, (Para 7-87).
- Remove wheel chocks, (TM 9-2320-364-10).

END OF TASK

21-15. INTERFACE POWERBOX ASSEMBLY REPAIR.

This task covers:

a. Removal
b. Disassembly
c. Cleaning/Inspection
d. Assembly
e. Installation
f. Follow-On Maintenance

INITIAL SETUP

Tools and Special Tools
Tool Kit, General Mechanic's: Automotive (Item 74, Appendix G)
Drill, Electric, Portable 1/4" (Item 17, Appendix G)
Drill Set, Twist (Item 19, Appendix G)
Gloves, Chemical Oil Protective (Item 28, Appendix G)
Goggles, Industrial (Item 30, Appendix G)

Materials/Parts
Solvent, Drycleaning (Item 87, Appendix C)
Tags, Identification (Item 88, Appendix C)

Materials/Parts (cont)
Locknut (4) (Item 104, Appendix F)
Locknut (4) (Item 106, Appendix F)
Locknut (4) (Item 107, Appendix F)
Lockwasher (3) (Item 205, Appendix F)

Equipment Condition
Engine OFF, (TM 9-2320-364-10)
Wheels chocked, (TM 9-2320-364-10)
Batteries disconnected, (Para 7-87)
Interface wiring harness disconnected, (Para 21-14)
Powerbox wiring removed, (Para 21-16)

a. Removal.

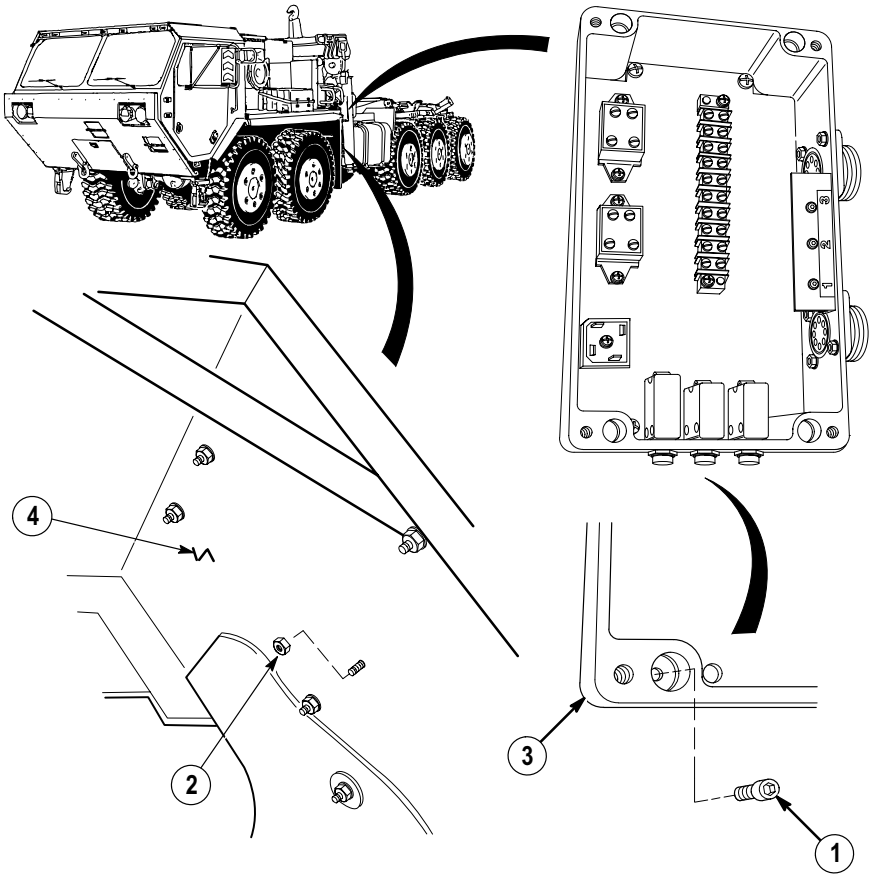

(1) Remove four screws (1), locknuts (2) and powerbox (3) from left front fender (4). Discard locknuts.

b. Disassembly.

NOTE

Note location and position of connectors, terminal strip, relays and rectifier prior to removal.

(1) Remove four locknuts (1), screws (2) and 8 pin connector (3) from powerbox (4). Discard locknuts.

(2) Remove four locknuts (5), screws (6), 4 pin connector (7) and LED (8) from powerbox (4). Discard locknuts.

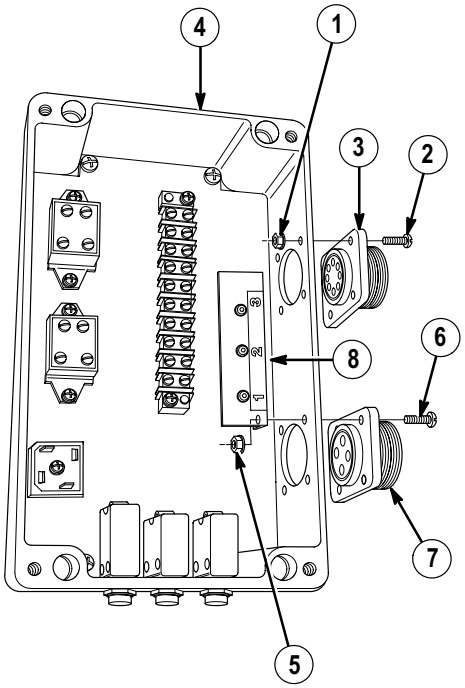

(3) Remove two screws (9) and terminal strip (10) from powerbox (4).

(4) Remove four screws (11) and two relays (12) from powerbox (4).

(5) Remove screw (13) and rectifier (14) from powerbox (4).

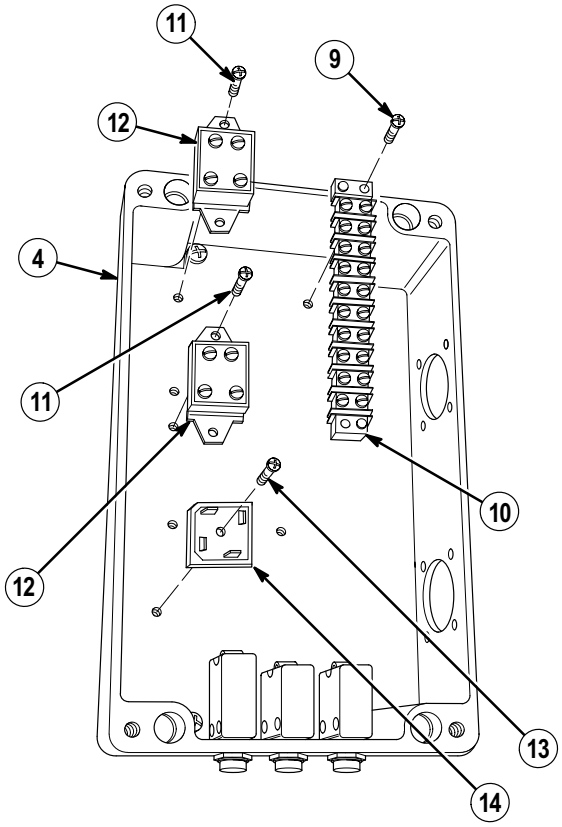

21-15. INTERFACE POWERBOX ASSEMBLY REPAIR (CONT).

NOTE

Tag and mark circuit breakers prior to removal.

(6) Remove nut (15), circuit breaker (16) and lockwasher (17) from powerbox (4). Discard lockwasher.

(7) Repeat Step (6) for remaining two circuit breakers (16).

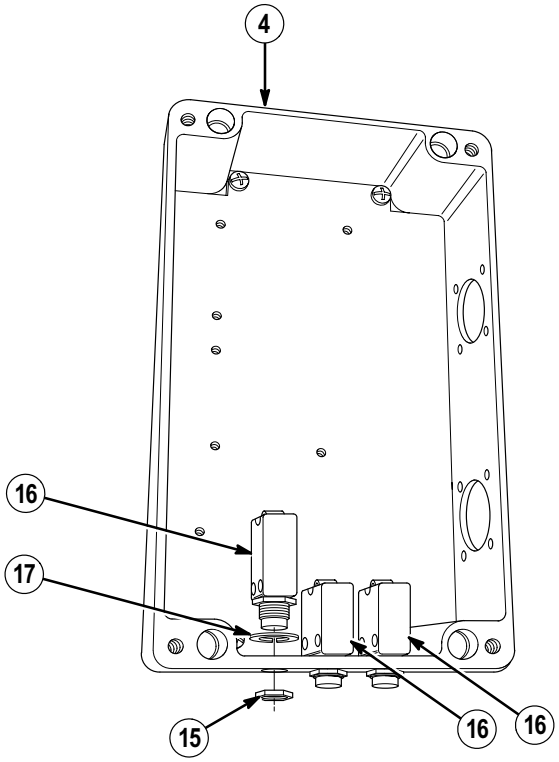

NOTE

Before removal of insulator mounting plate, all components must be removed.

(8) Remove four screws with captive lockwashers (18) and insulator mounting plate (19) from powerbox (4).

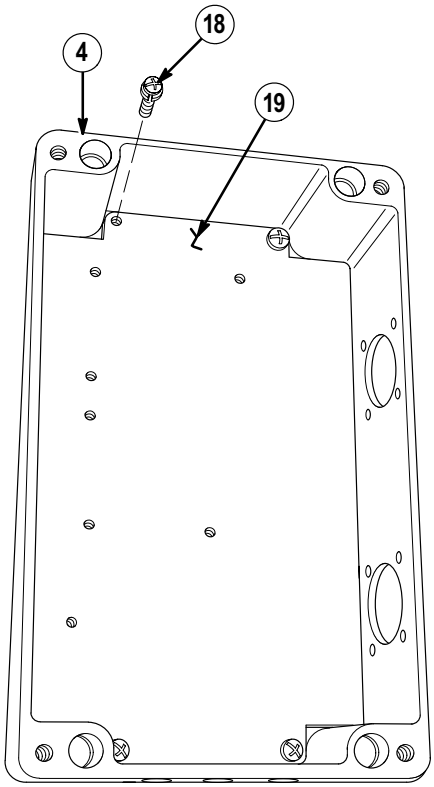

c. Cleaning/Inspection.

WARNING

- Drycleaning Solvent (P-D-680) is TOXIC and flammable. Wear protective goggles, face shield, and gloves; use only in a well-ventilated area; avoid contact with skin, eyes, and clothes, and do not breathe vapors. Keep away from heat or flame. Never smoke when using solvent. The flashpoint for Type II Drycleaning Solvent is 140 degrees F (60 degrees C) and Type III Drycleaning Solvent is 200 degrees F (93 degrees C). Failure to do so may result in injury or death to personnel.
- If personnel become dizzy while using cleaning solvent, immediately get fresh air and medical help. If solvent contacts skin or clothes, flush with cold water. If solvent contacts eyes, immediately flush eyes with water and get immediate medical attention.

(1) Wash metal parts in drycleaning solvent.

(2) Inspect metal parts for cracks, dents, and broken welds. Replace damaged parts.

(3) Inspect relays and terminal strip for cracks, broken terminals and stripped threads. Replace damaged parts.

(4) Check wires for loose or broken connections, or mission insulation. Replace damaged parts.

21-15. INTERFACE POWERBOX ASSEMBLY REPAIR (CONT).

d. Assembly.

(1) Install insulator mounting plate (19) with four screws with captive lockwashers (18) in powerbox (4).

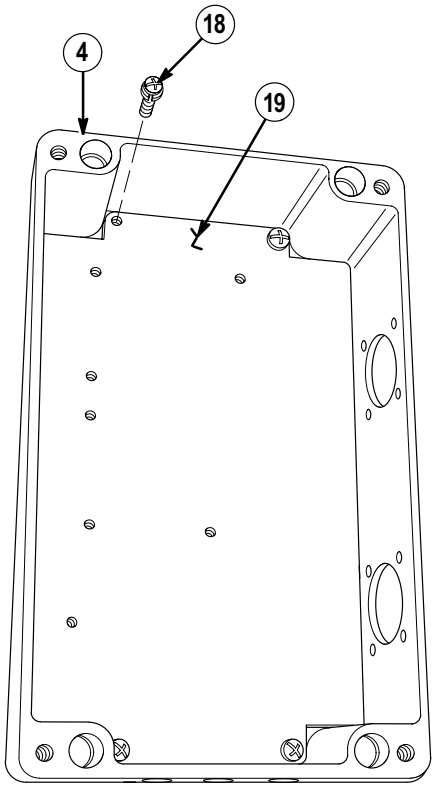

NOTE

- Install circuit breakers as noted prior to removal.
- 2 AMP circuit breaker is at bottom left. 25 AMP breakers are at bottom center and right.

(2) Install three circuit breakers (16) in powerbox (4) with three lockwashers (17) and nuts (15).

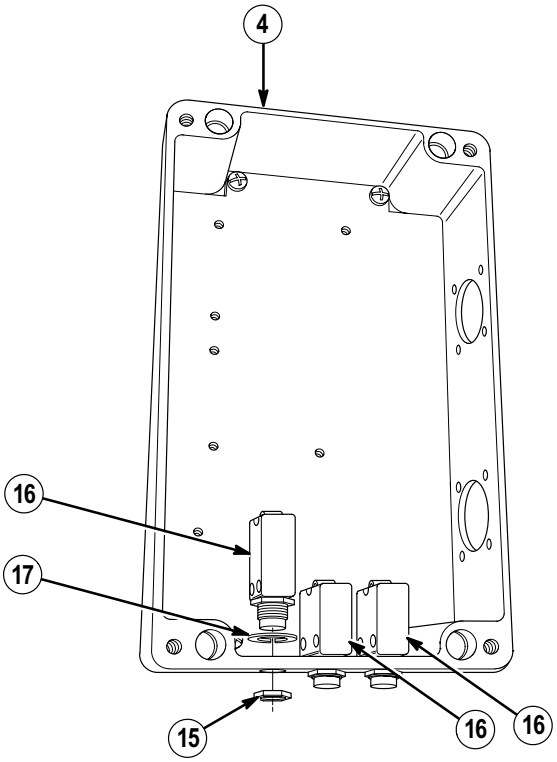

NOTE

Install rectifier, relays, terminal strip and connectors in position and location as noted prior to removal.

(3) Install rectifier (14) with screw (13) in powerbox (4).

(4) Install two relays (12) with four screws (11) in powerbox (4).

(5) Install terminal strip (10) with two screws (9) in powerbox (4).

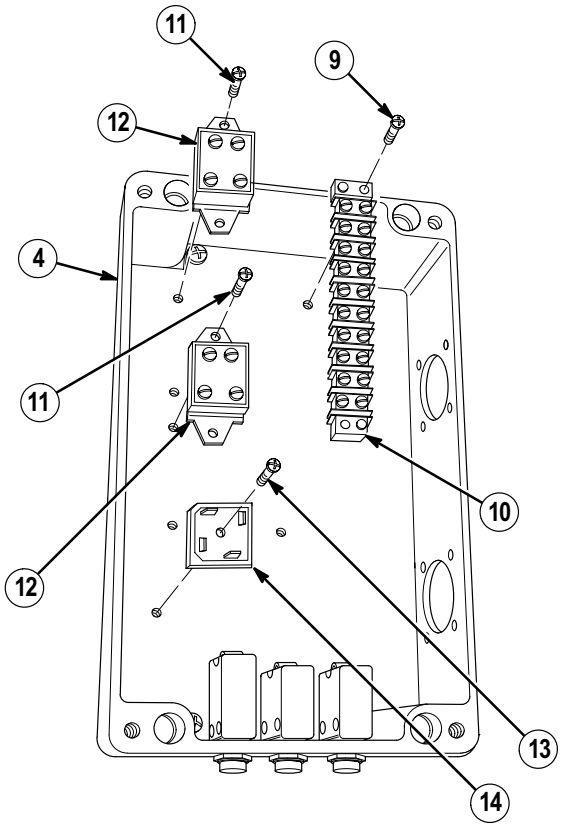

(6) Install 4 pin connector (7) and LED (8) in powerbox (4) with four screws (6) and locknuts (5).

(7) Install 8 pin connector (3) in powerbox (4) with four screws (2) and locknuts (1).

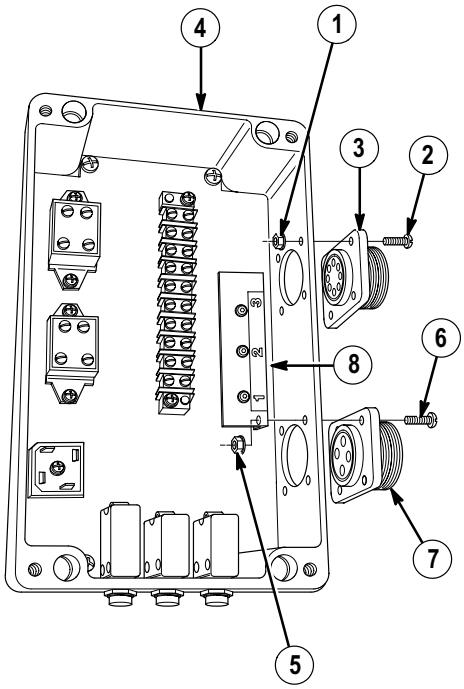

21-15. INTERFACE POWERBOX ASSEMBLY REPAIR (CONT).

e. Installation.

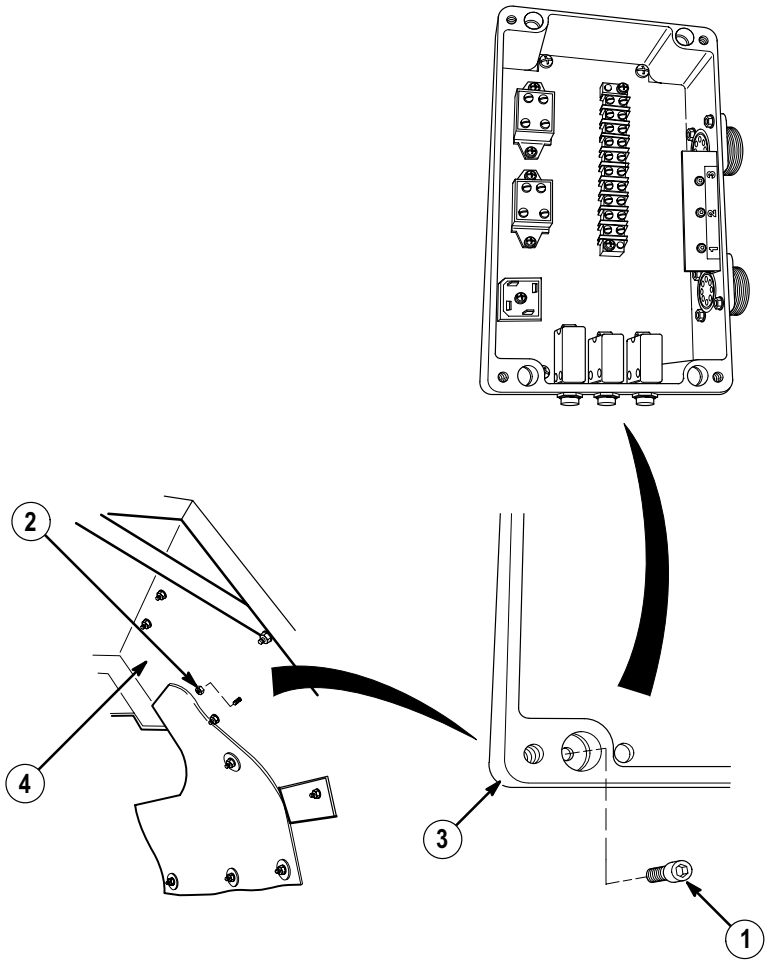

(1) Install powerbox (3) on left front fender (4) with four screws (1) and locknuts (2).

f. Follow-On Maintenance:

- Install powerbox wiring, (Para 21-16).
- Connect interface wiring harness, (Para 21-14).
- Connect batteries, (Para 7-87).
- Remove wheel chocks, (TM 9-2320-364-10).

END OF TASK

21-16. INTERFACE POWERBOX WIRING REPLACEMENT.

This task covers:

a. Removal b. Installation c. Follow-On Maintenance

INITIAL SETUP

Tools and Special Tools
Tool Kit, General Mechanic's: Automotive (Item 74, Appendix G)

Materials/Parts
Tags, Identification (Item 88, Appendix C)

Equipment Condition
Engine OFF, (TM 9-2320-364-10)
Wheels chocked, (TM 9-2320-364-10)
Batteries disconnected, (Para 7-87)

a. Removal.

NOTE

This procedure shows removal of interface wiring for interface power box. Only remove wiring that is required to complete task.

(1) Loosen four screws (1) and remove cover (2) from powerbox (3).

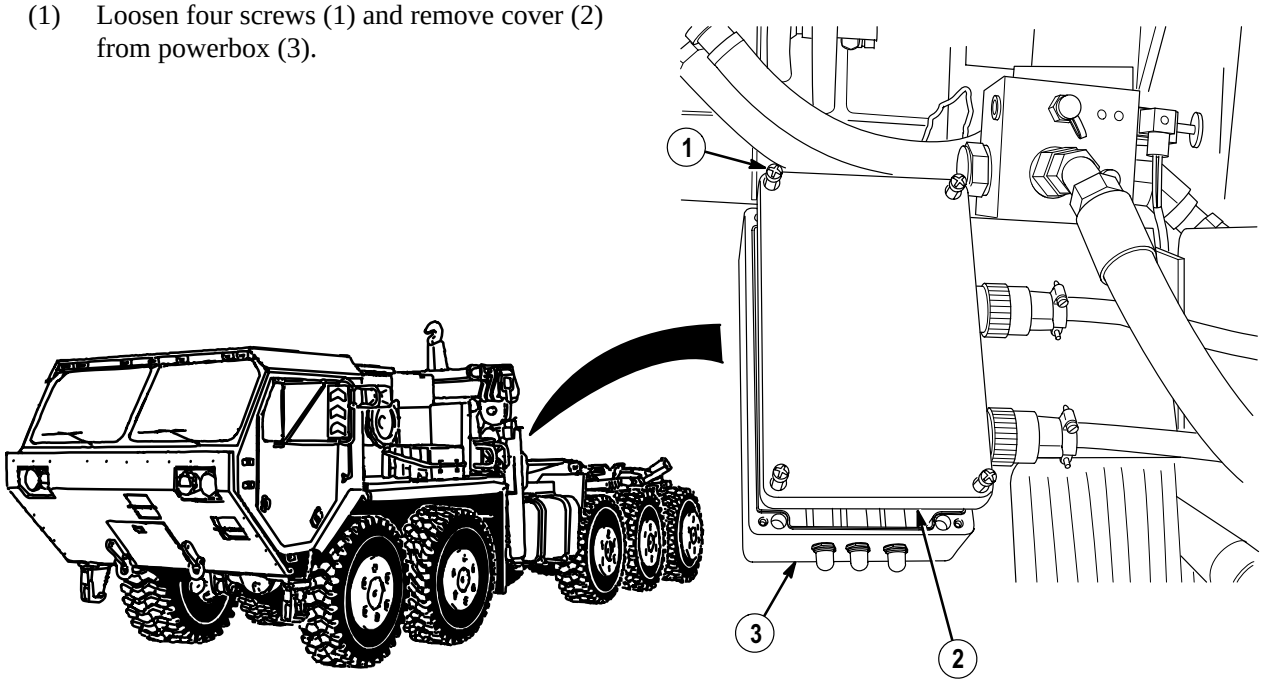

21-16. INTERFACE POWERBOX WIRING REPLACEMENT (CONT).

NOTE

- Disconnect only wires required to complete task. Refer to the electrical schematic drawing 3123995 and Table 21-1 Powerbox Wiring for specific powerbox wiring replacement.
- Tag and mark wires prior to removal.

(2) Follow Table 21-1 to disconnect wires.

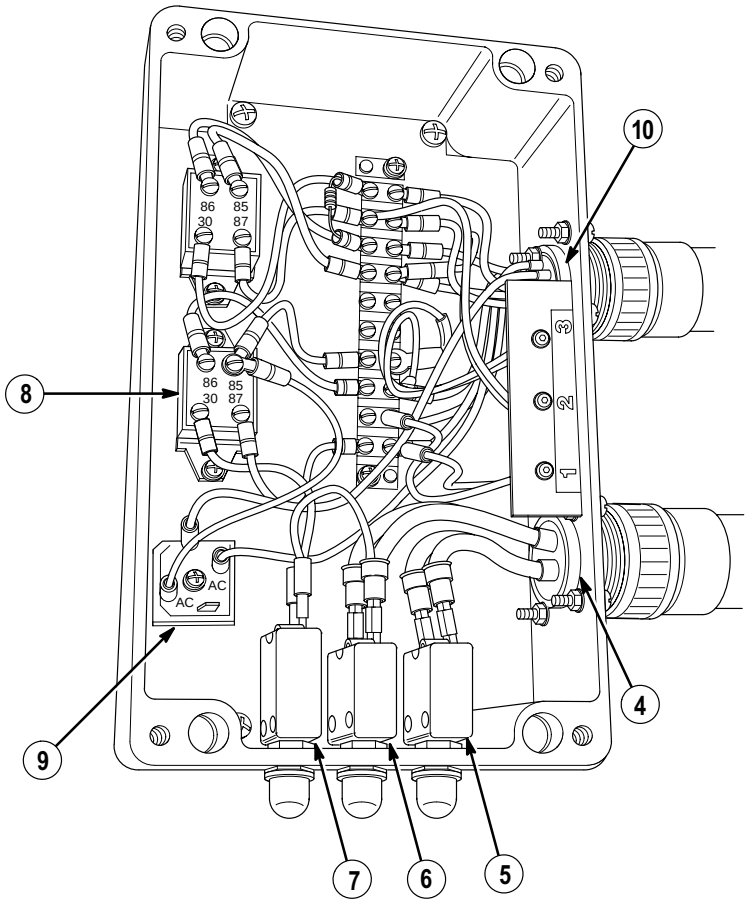

Table 21-1. Powerbox Wiring

Cable No.	Color	From	To
1785	BLK	4 Pin Connector-A (MC136) (4)	CB27/25AMP - Front (5)
1785	BLK	4 Pin Connector-B (MC136) (4)	CB27/25AMP - Back (5)
1784	BLK	4 Pin Connector-D (MC136) (4)	CB28/25AMP - Front (6)
1784	BLK	4 Pin Connector-C (MC136) (4)	CB28/25AMP - Back (6)
1784	BLK	CB28/25AMP - Front (6)	CB29/2AMP - Front (7)
1789	BLK	CB29/2AMP - Back (7)	Relay R36 / Terminal 30 (8)
1435	BLK	Rectifier/AC (9)	Relay R36 / Terminal 85 (8)
1435A	BLK	Rectifier/+ (9)	MC 135 / 8 Pin Connector - H (10)

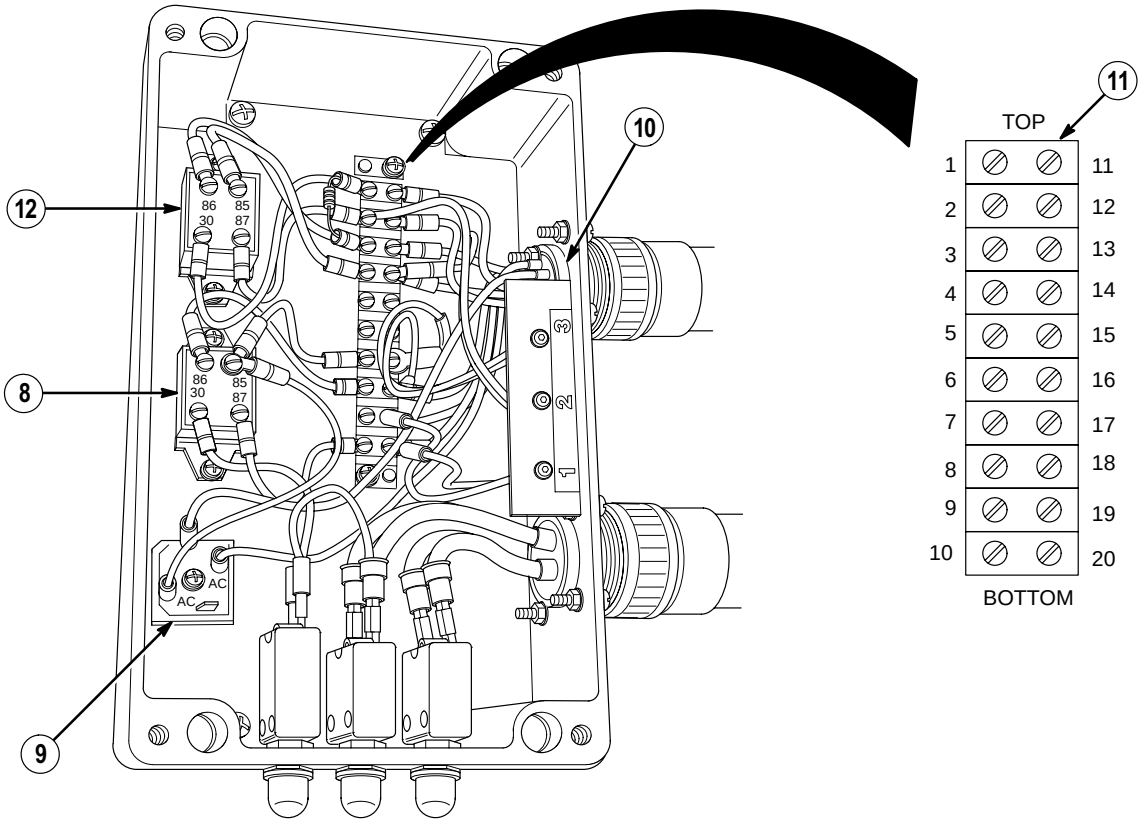

Table 21-1. Powerbox Wiring – CONT.

Cable No.	Color	From	To
1734	BLK	Rectifier/AC (9)	Terminal 13 (11)
1435	BLK	Relay R36/Terminal 85 (8)	Terminal 7 (11)
1731	BLK	Relay R36/Terminal 86 (8)	Terminal 8 (11)
1792	BLK	Relay R36/Terminal 87 (8)	Terminal 10 (11)
1734	BLK	Relay R35/Terminal 30 (12)	Terminal 1 (11)
1790	BLK	Relay R35/Terminal 87 (12)	Terminal 2 (11)
1435	BLK	Relay R35/Terminal 85 (12)	Terminal 4 (11)
1734	BLK	Relay R35/Terminal 86 (12)	Terminal 3 (11)
1734	BLK	Terminal 11 (11)	MC135 / 8 Pin Connector - B (10)
1790	BLK	Terminal 12 (11)	MC135 / 8 Pin Connector - D (10)
1435	BLK	Terminal 14 (11)	MC135 / 8 Pin Connector - C (10)
1435	BLK	Terminal 14 (11)	MC135 / 8 Pin Connector - E (10)
1731	BLK	Terminal 18 (11)	MC135 / 8 Pin Connector - A (10)
1435B	BLK	Terminal 19 (11)	MC135 / 8 Pin Connector - G (10)
1792	BLK	Terminal 20 (11)	MC135 / 8 Pin Connector - F (10)

21-16. INTERFACE POWERBOX WIRING REPLACEMENT (CONT).

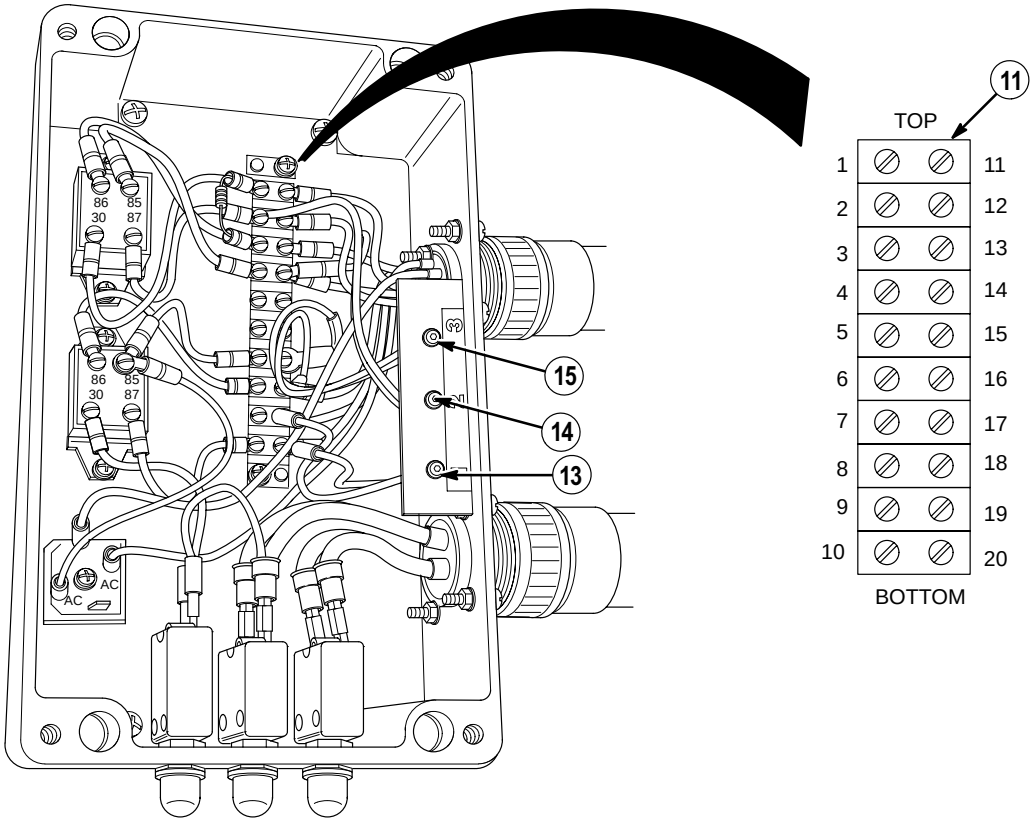

Table 21-1. Powerbox Wiring – CONT.

Cable No.	Color	From	To
1734	BLK	Terminal 1 (11)	Terminal 3 (11)
LED#1	RED	Green LED (13)	Terminal 20 (11)
LED#1	WHITE	Green LED (13)	Terminal 19 (11)
LED#2	RED	Yellow LED (14)	Terminal 4 (11)
LED#2	WHITE	Yellow LED (14)	Terminal 12 (11)
LED#3	RED	Green LED (15)	Terminal 18 (11)
LED#3	WHITE	Green LED (15)	Terminal 17 (11)

b. Installation.

NOTE

Connect only wires required to complete task. Refer to the electrical schematic drawing 3123995 and Table 21-1 Powerbox Wiring for specific powerbox wiring replacement.

(1) Follow Table 21-1 to connect wires.

(2) Position cover (2) on power box (3).

(3) Tighten four screws (1) on cover (2).

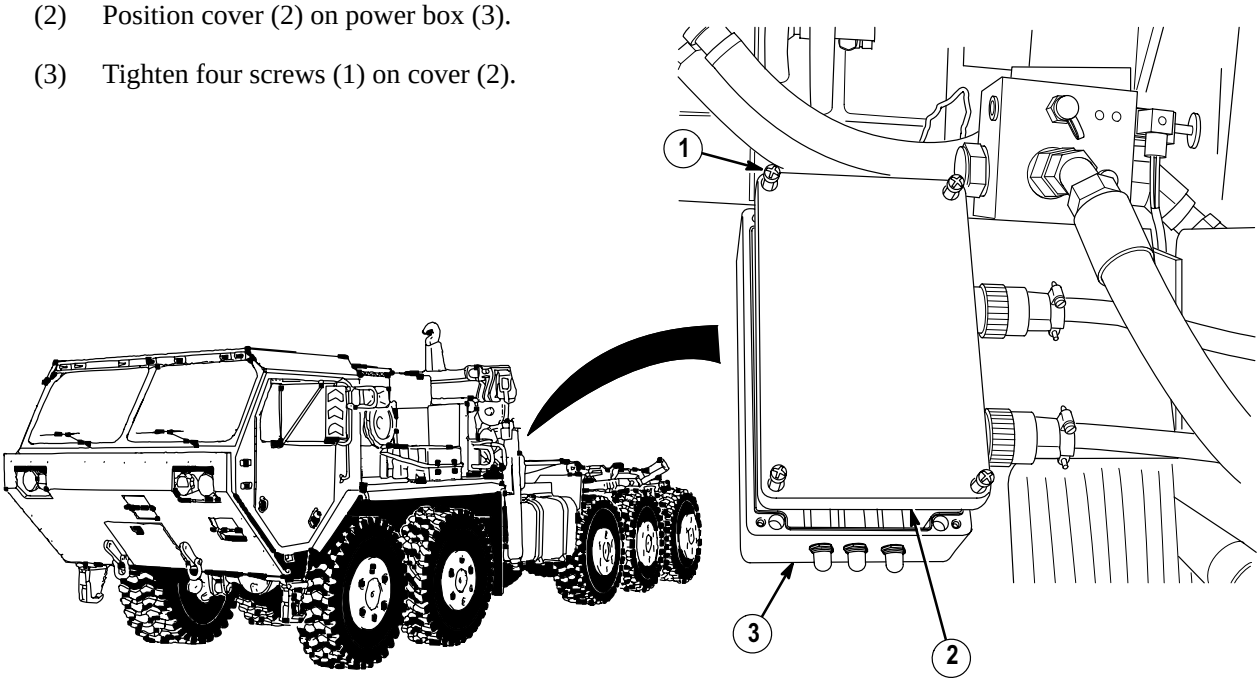

c. Follow-On Maintenance:

- Connect batteries, (Para 7-87).
- Remove wheel chocks, (TM 9-2320-364-10).

END OF TASK

21-17. INTERFACE AUXILIARY HYDRAULIC VALVE REPLACEMENT.

This task covers:

a. Removal b. Installation c. Follow-On Maintenance

INITIAL SETUP

Tools and Special Tools
Tool Kit, General Mechanic's: Automotive (Item 74, Appendix G)
Cap and plug set (Item 8, Appendix G)
Pan, Drain (Item 47, Appendix G)

Materials/Parts
Oil, Hydraulic (Item 50, Appendix C)
Tags, Identification (Item 88, Appendix C)
Lockwasher (Item 168, Appendix F)
Preformed Packing (Item 233, Appendix F)
Preformed Packing (Item 237, Appendix F)
Preformed Packing (2) (Item 252, Appendix F)
Preformed Packing (Item 250, Appendix F)
Preformed Packing (Item 235, Appendix F)

Equipment Condition
Engine OFF, (TM 9-2320-364-10)
Wheels chocked, (TM 9-2320-364-10)
Batteries disconnected, (Para 7-87)

a. Removal.

WARNING

The hydraulic system operates at high pressures. Never disconnect any hydraulic line or fitting without first dropping pressure to zero. Failure to comply may result in serious injury or death to personnel.

NOTE

- Tag and mark hoses prior to removal.
- Cap and plug hoses after removal.
- Position drain pan under valve.

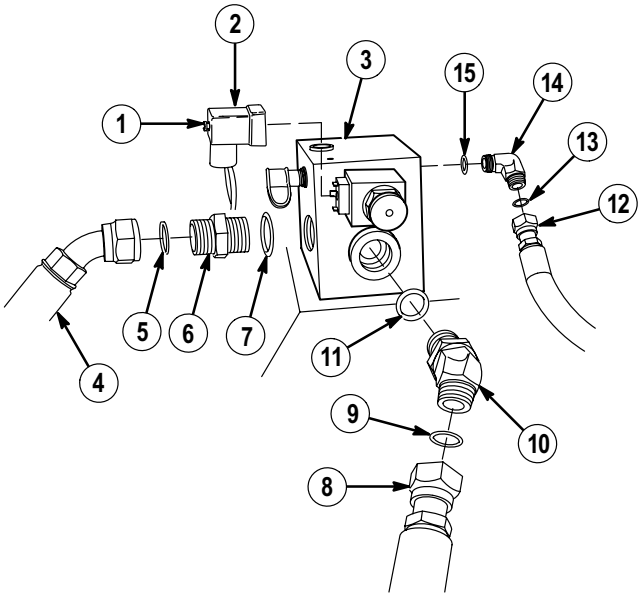

(1) Loosen screw (1) and disconnect MC134 connector (2) from auxiliary hydraulic valve (3).

(2) Remove hose 2810 (4), preformed packing (5), fitting (6) and preformed packing (7). Discard preformed packings.

(3) Remove hose 2902 (8), preformed packing (9), elbow (10) and preformed packing (11). Discard preformed packings.

(4) Remove hose 2774 (12), preformed packing (13), elbow (14) and preformed packing (15). Discard preformed packings.

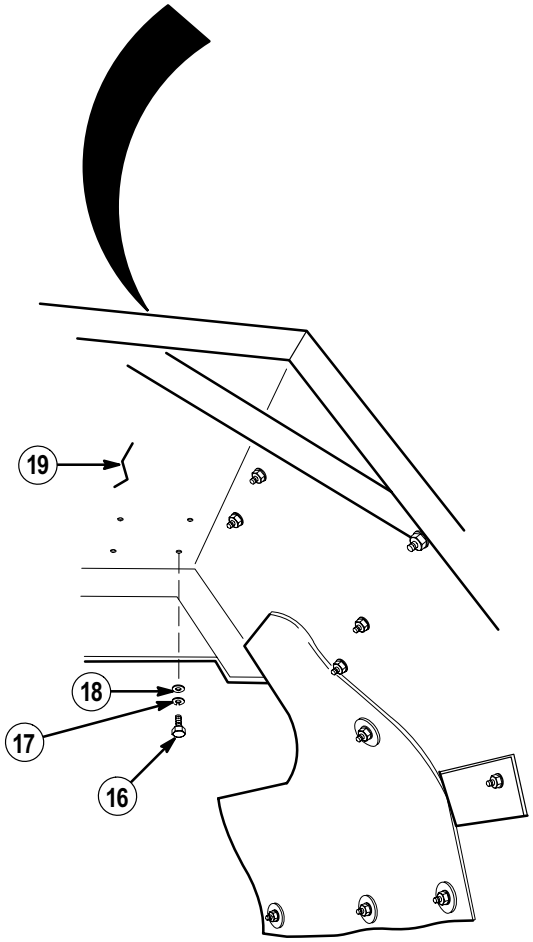

(5) Remove four screws (16), lockwashers (17), washers (18) and auxiliary hydraulic valve (3) from fender (19). Discard lockwashers.

21-17. INTERFACE AUXILIARY HYDRAULIC VALVE REPLACEMENT (CONT).

b. Installation.

(1) Install auxiliary hydraulic valve (3) on fender (19) with four screws (16), lockwashers (17) and washers (18).

(2) Apply hydraulic oil to preformed packings (5), (7), (9), (11), (13) and (15).

(3) Install preformed packing (15), elbow (14), preformed packing (13) and hose 2774 (12) on auxiliary hydraulic valve (3).

(4) Install preformed packing (11), elbow (10), preformed packing (9) and hose 2902 (8) on auxiliary hydraulic valve (3).

(5) Install preformed packing (7), fitting (6), preformed packing (5) and hose 2810 (4) on auxiliary hydraulic valve (3).

(6) Connect MC134 connector (2) to auxiliary hydraulic valve (3) and tighten screw (1).

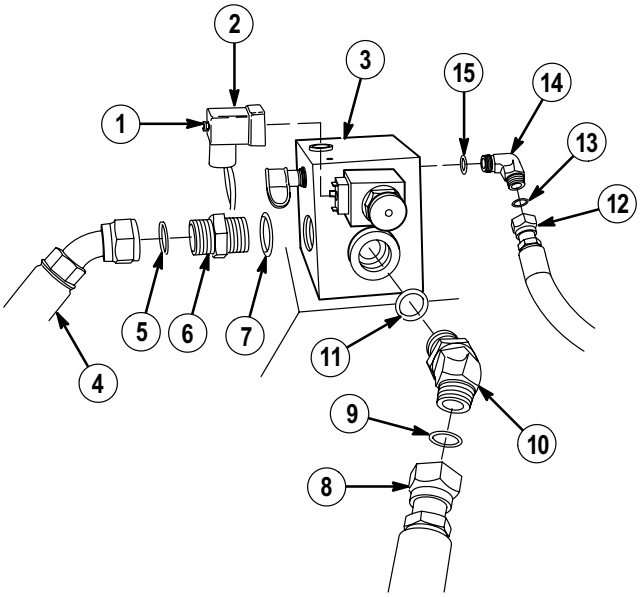

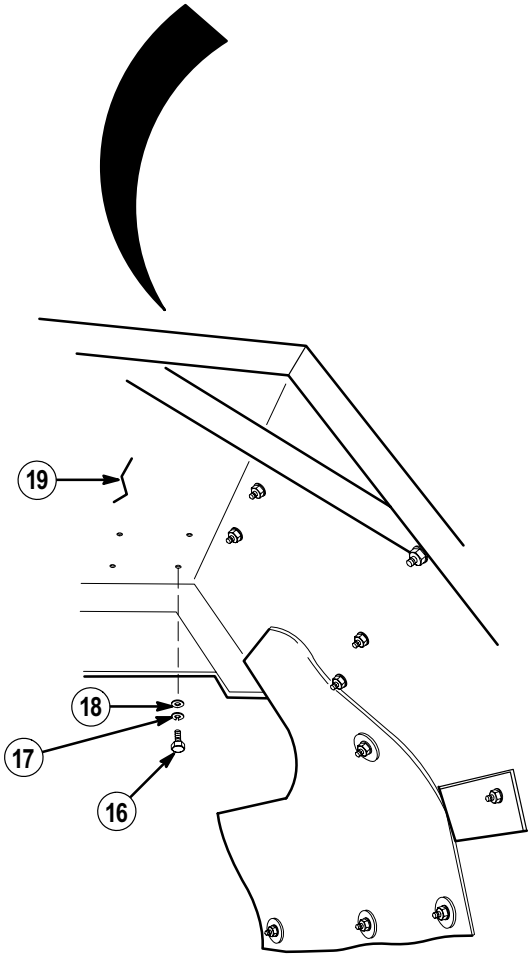

c. Follow-on Maintenance:

- Connect batteries, (Para 7-87).
- Remove wheel chocks, (TM 9-2320-364-10).

END OF TASK

21-18. INTERFACE MANUAL OVERRIDE SOLENOID VALVE REPLACEMENT.

This task covers:

a. Removal b. Installation c. Follow-On Maintenance

INITIAL SETUP

Tools and Special Tools
Tool Kit, General Mechanic's: Automotive (Item 74, Appendix G)
Cap and Plug Set (Item 8, Appendix G)
Pan, Drain, 4 Gallon (Item 47, Appendix G)
Socket Set, 3/8 in. Drive (Item 62, Appendix G)
Wrench, Torque 3/8 in. Drive (0-60 N·m) (Item 98, Appendix G)

Materials/Parts
Gasket (Item 59, Appendix F)
Kit, Packing (Item 87, Appendix F)

Equipment Condition
Engine OFF, (TM 9-2320-364-10)
Wheel chocked, (TM 9-2390-364-10)
Batteries disconnected, (Para 7-87)

a. Removal.

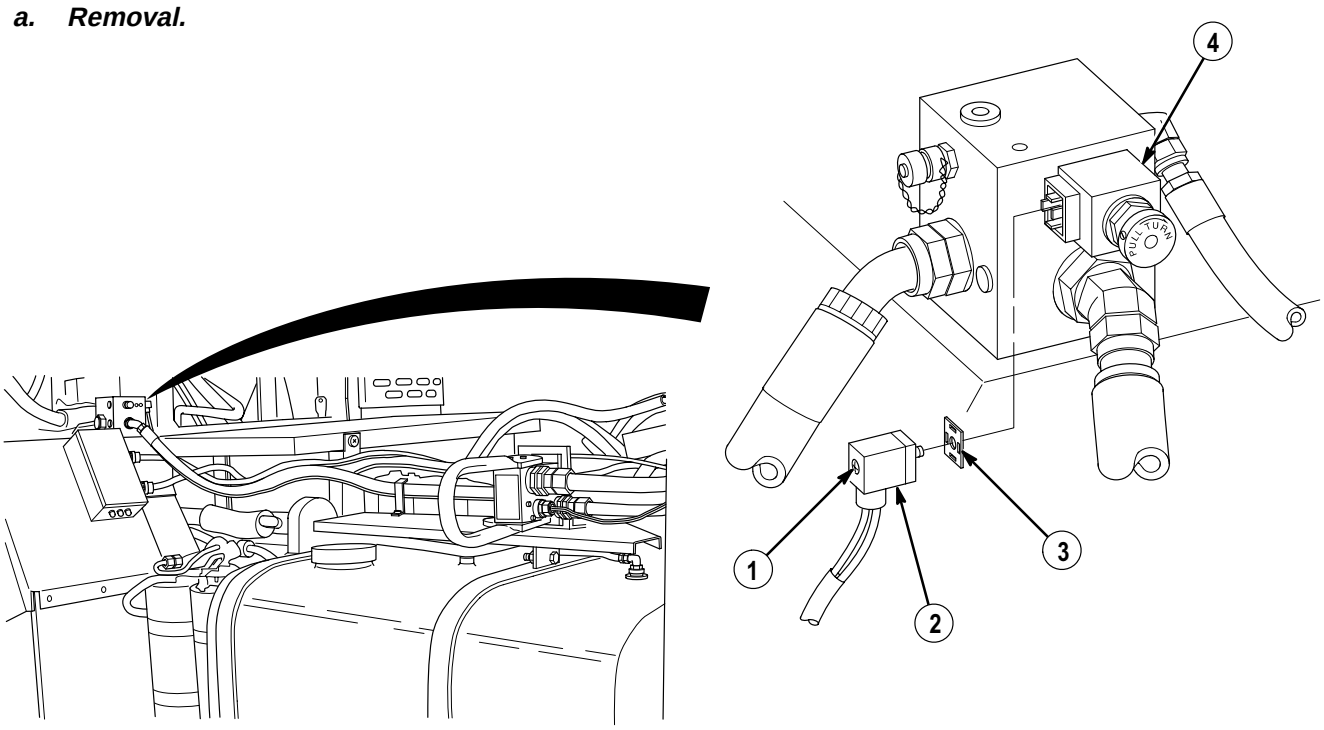

(1) Loosen screw (1) and remove connector MC134 (2) and gasket (3) from coil (4). Discard gasket.

21-18. INTERFACE MANUAL OVERRIDE SOLENOID VALVE REPLACEMENT (CONT).

NOTE

Pull button out and turn to access screw.

(2) Loosen screw (5) and remove button (6) from valve (7).

(3) Remove nut (8) and coil (4) from valve (7).

(4) Remove valve (7) from auxiliary supply valve (9).

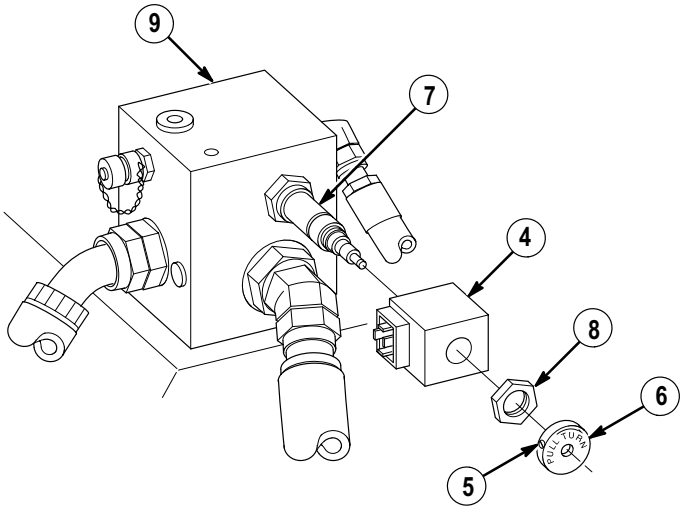

(5) Remove three back-up rings (10) and four preformed packings (11) from valve (7). Discard back-up rings and preformed packings.

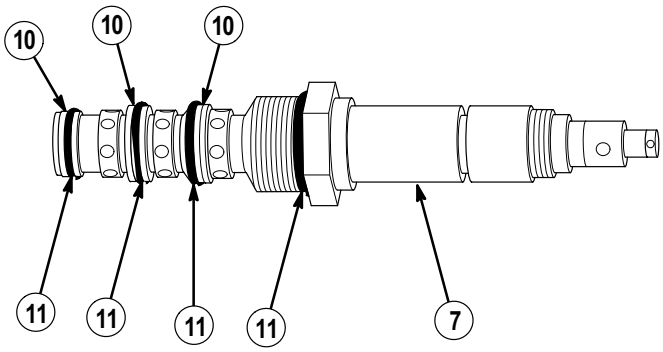

b. Installation.

(1) Install four preformed packings (11) and three back-up rings (10) on valve (7).

(2) Install valve (7) into auxiliary supply valve (9).

(3) Install coil (4) on valve (7) with nut (8). Tighten nut to 48-72 lb-in (5-8 N·m).

(4) Install button (6) on valve (7) with screw (5).

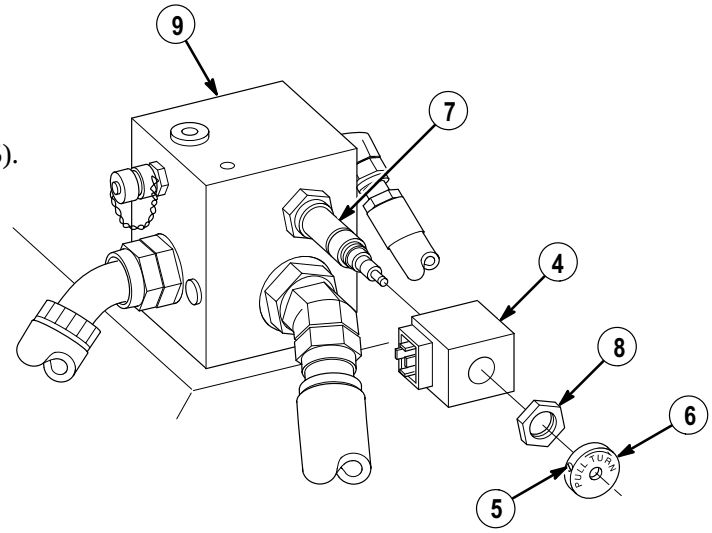

(5) Install gasket (3) and connector MC134 (2) on coil (4) with screw (1).

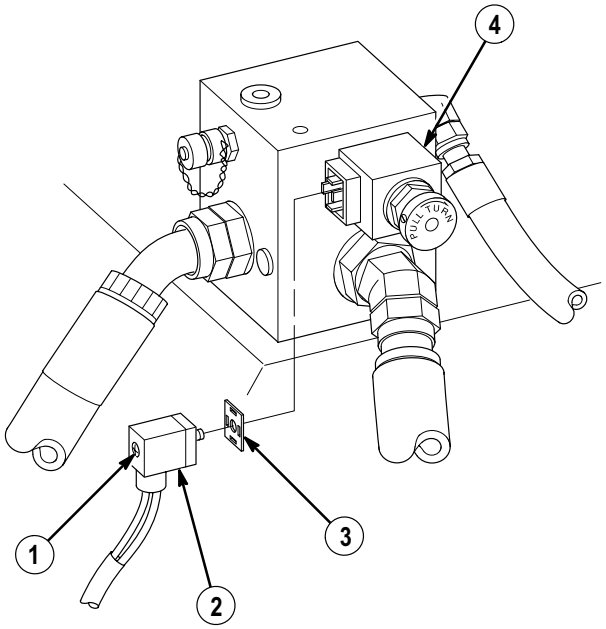

c. Follow-on Maintenance:

- Fill main hydraulic reservoir, (Para 20-11).
- Connect batteries, (Para 7-87).
- Start engine and allow to idle for five minutes, (TM 9-2320-364-10).
- Shut off engine and check for hydraulic leaks, (TM 9-2320-364-10).
- Remove wheel chocks, (TM 9-2320-364-10).

END OF TASK

21-19. CONTAINER HANDLING UNIT (CHU) JUMPERWIRE HARNESS REPLACEMENT.

This task covers:

a. Removal b. Installation c. Follow-On Maintenance

INITIAL SETUP

Tools and Special Tools
Tool Kit, General Mechanic's: Automotive (Item 74, Appendix G)

Materials/Parts
Cable Ties (Item 27, Appendix C)
Tags, Identification (Item 88, Appendix C)

Equipment Condition
Engine OFF, (TM 9-2320-364-10)
Wheels chocked, (TM 9-2320-364-10)
Batteries disconnected, (Para 7-87)
Deck weldment removed (left side only), (Para 21-40)

a. Removal.

NOTE

- Tag and mark all wires and connectors prior to removal.
- Note routing of CHU jumperwire harness prior to removal.
- Remove cable ties as required.

(1) Disconnect MC85 connector (1) from LHS main junction box (2).

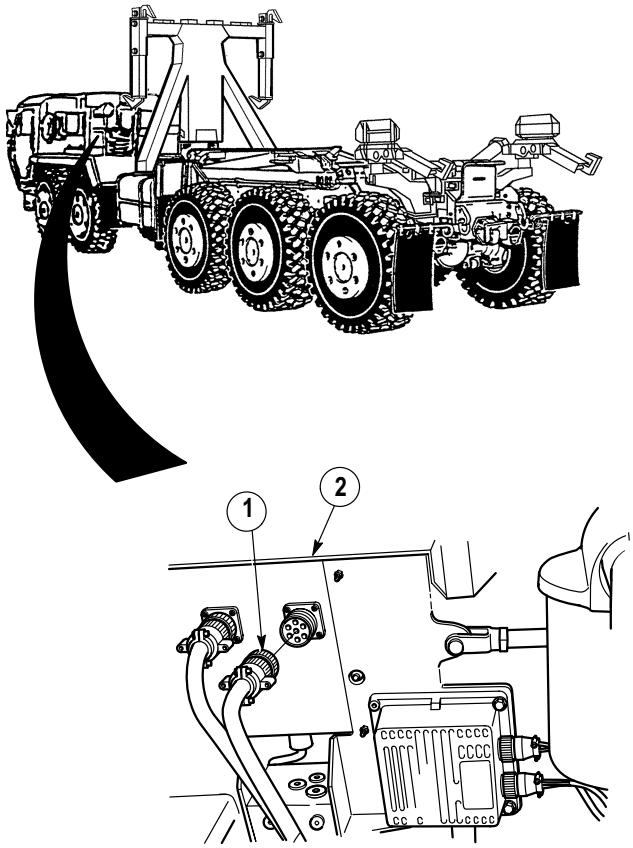

(2) Disconnect MC82B connector (3) from CHU control box (4).

(3) Remove CHU jumper harness (5) from truck.

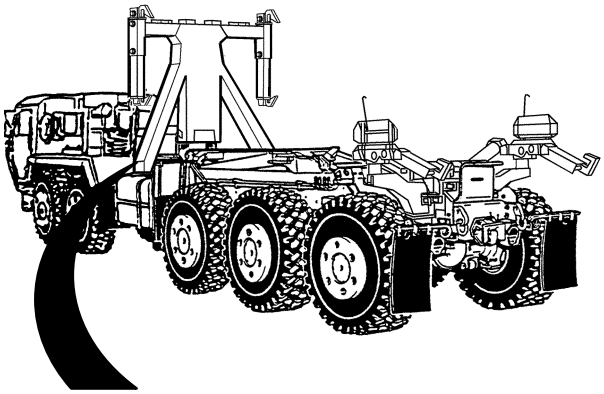

b. Installation.

NOTE

- Install cable ties as required.
- Position CHU jumperwire harness as noted during removal.

(1) Position CHU jumper harness (5) in truck.

(2) Connect MC82B connector (3) to CHU control box (4).

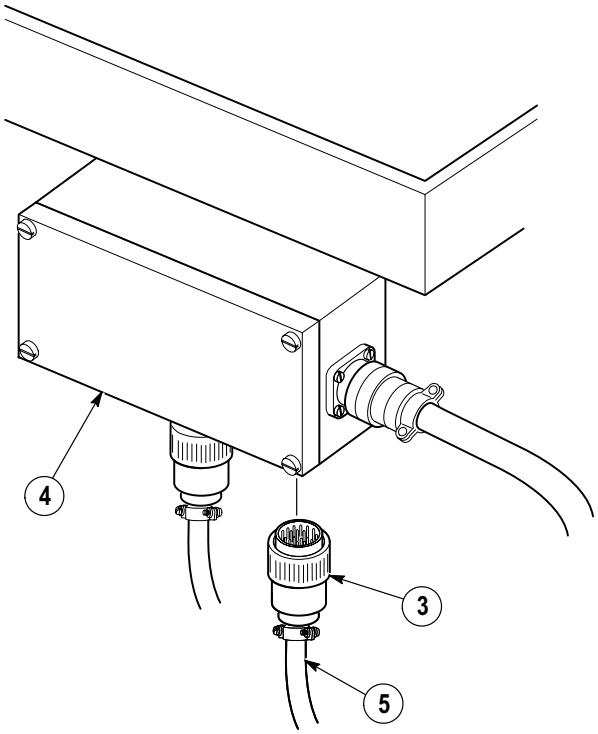

(3) Connect MC85 connector (1) to LHS main junction box (2).

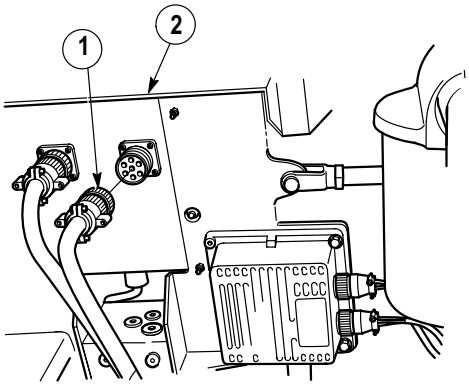

c. Follow-on Maintenance:

- Install deck weldment (left side only), (Para 21-40).
- Connect batteries, (Para 7-87).
- Remove wheel chocks, (TM 9-2320-364-10).

END OF TASK

21-20. CONTAINER HANDLING UNIT (CHU) WIRE HARNESS REPLACEMENT.

This task covers:

a. Removal b. Installation c. Follow-On Maintenance

INITIAL SETUP

Tools and Special Tools
Tool Kit, General Mechanic's: Automotive (Item 74, Appendix G)

Materials/Parts
Cable Ties (Item 27, Appendix C)
Tags, Identification (Item 88, Appendix C)

Equipment Condition
Engine OFF, (TM 9-2320-364-10)
Wheels chocked, (TM 9-2320-364-10)
Batteries disconnected, (Para 7-87)
Deck weldment removed (left side only), (Para 21-40)

a. Removal.

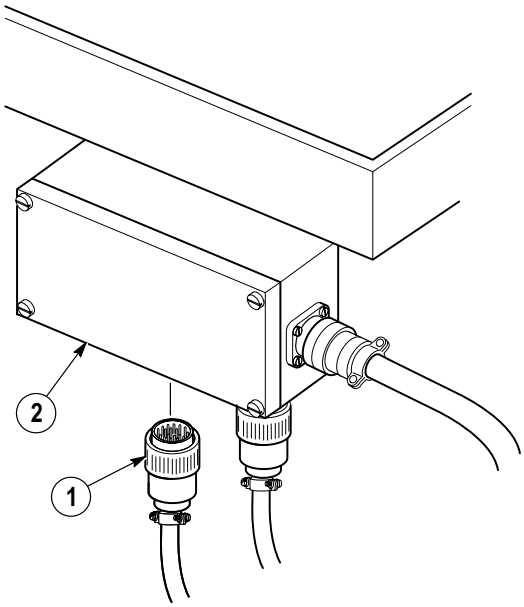

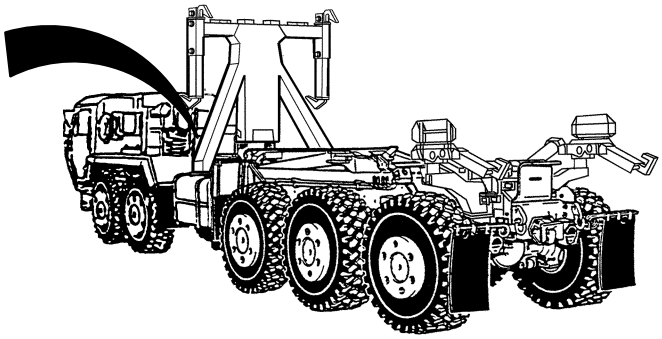

NOTE

- Tag and mark all wires and connectors prior to removal.
- Remove cable ties as required.

(1) Disconnect MC185 connector (1) from CHU control box (2).

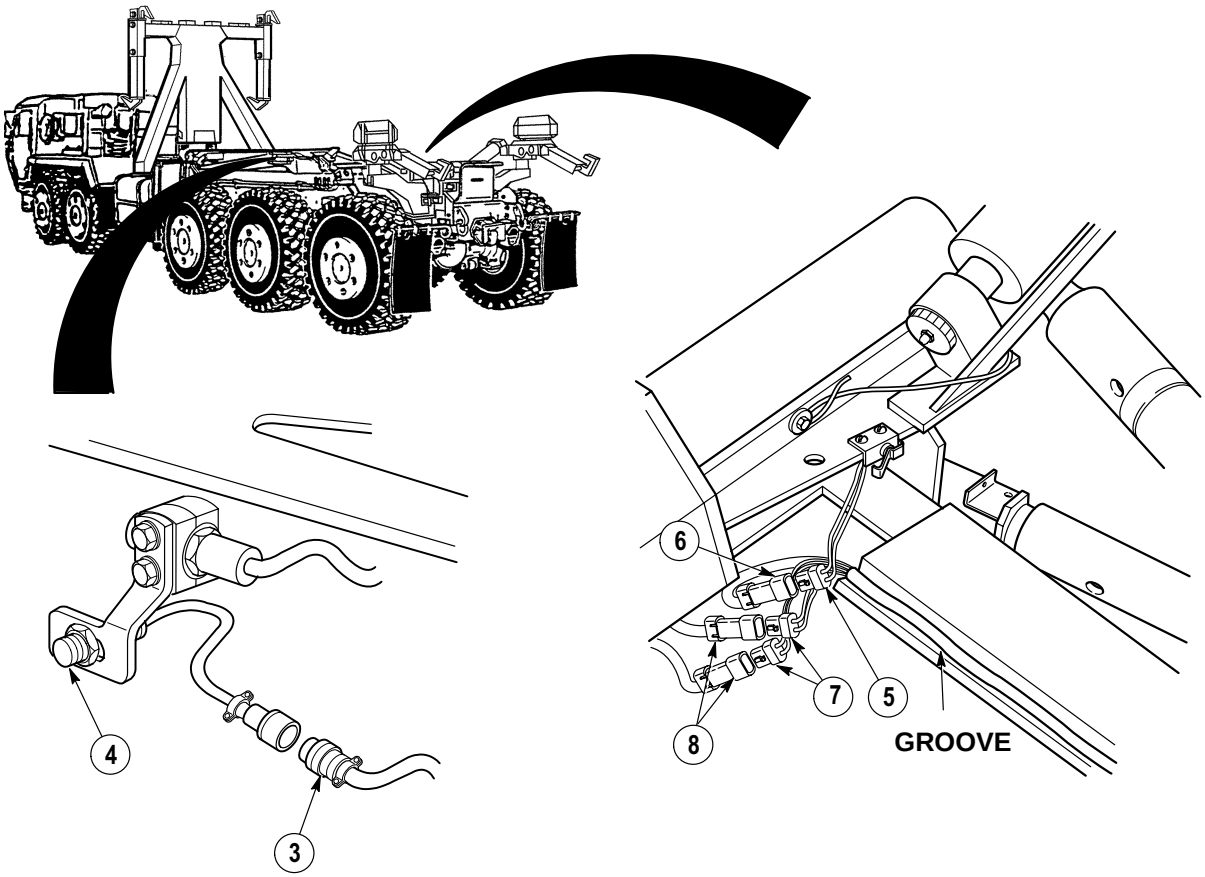

(2) Disconnect MC188 connector (3) from hook up arm proximity switch (4).

(3) Disconnect MC189 connector (5) from mode switch (6).

(4) Disconnect two MC190 connectors (7) from right and left rear lock limit switch (8).

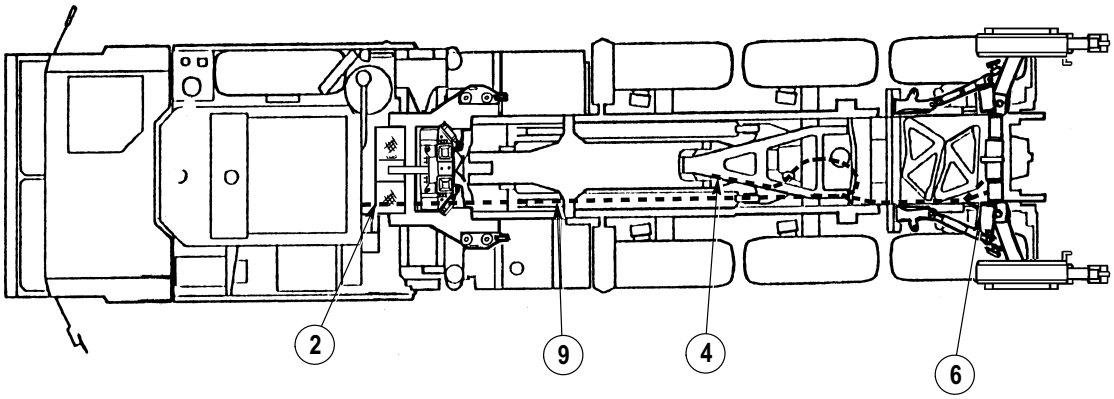

(5) Remove CHU wire harness (9) from truck.

21-20. CONTAINER HANDLING UNIT (CHU) WIRE HARNESS REPLACEMENT (CONT).

b. Installation.

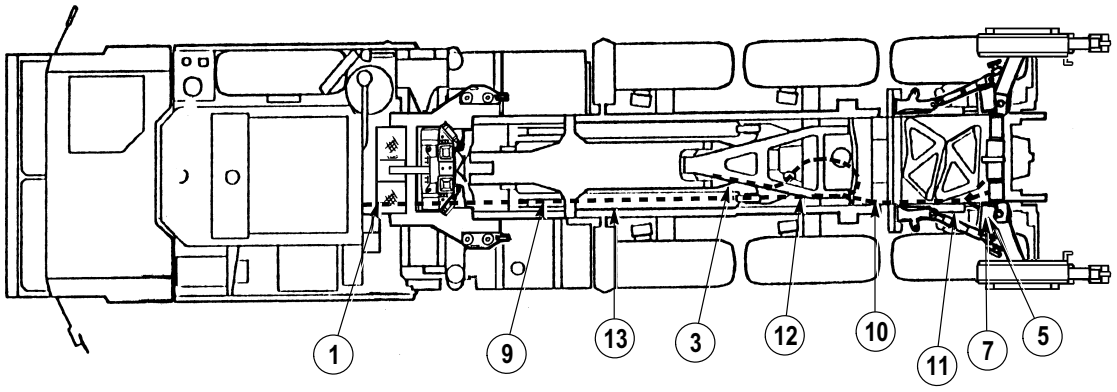

NOTE

Install cable ties as required.

(1) Position CHU wire harness (9) with MC189 connector (5) and two MC190 connectors (7) along inside of frame (10) and in groove of left hard lift deck bracket (11).

(2) Position CHU wire harness (9) with MC188 connector (3) along inside of frame (12) with existing wires.

(3) Position CHU wire harness with MC185 connector (1) along inside of frame (13) with existing wires.

(4) Connect two MC190 connectors (7) to right and left rear lock limit switch (8).

(5) Connect MC189 connector (5) to mode switch (6).

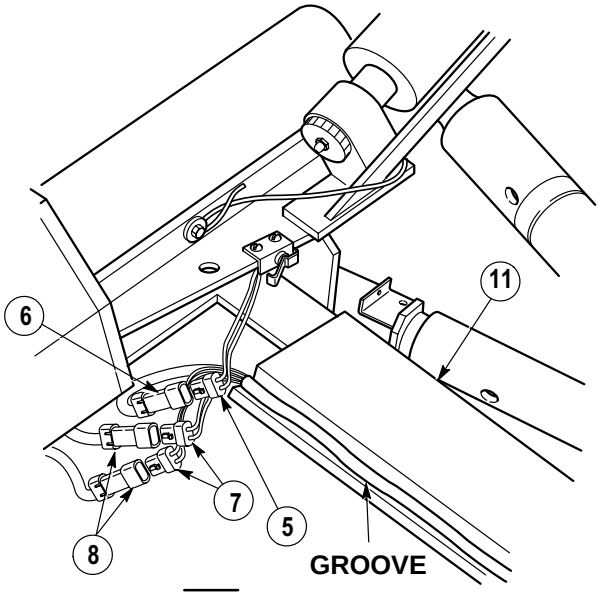

(6) Connect MC188 connector (3) to hook up arm proximity switch (4).

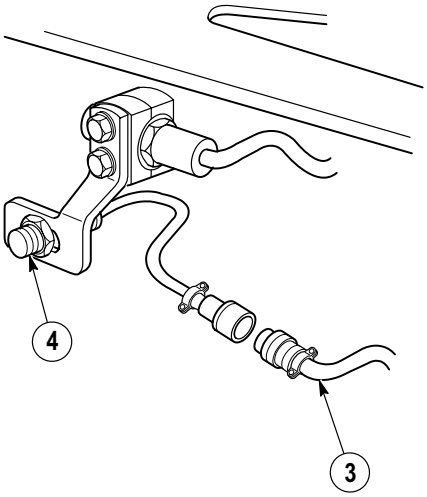

(7) Connect MC185 connector (1) to CHU control box (2).

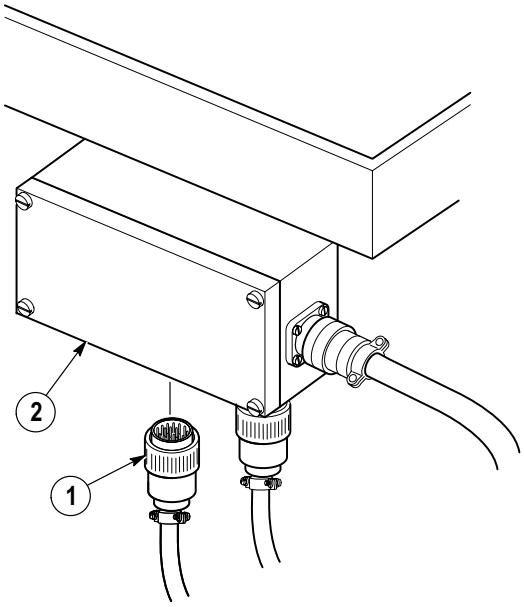

c. Follow-on Maintenance:

- Install deck weldment (left side only), (Para 21-40).
- Connect batteries, (Para 7-87).
- Remove wheel chocks, (TM 9-2320-364-10).

END OF TASK

21-21. CONTAINER HANDLING UNIT (CHU) CONTROL BOX ASSEMBLY REPLACEMENT.

This task covers:

a. Removal b. Installation c. Follow-On Maintenance

INITIAL SETUP

Tools and Special Tools
Tool Kit, General Mechanic's: Automotive (Item 74, Appendix G)

Materials/Parts
Locknut (4) (Item 103, Appendix F)

Equipment Condition
Engine OFF, (TM 9-2320-364-10)
Wheels chocked, (TM 9-2320-364-10)
Batteries disconnected, (Para 7-87)
Deck weldment removed (left side only), (Para 21-40)

a. Removal.

(1) Disconnect MC185 connector (1), MC82B connector (2) and MC82A connector (3) from CHU control box assembly (4).

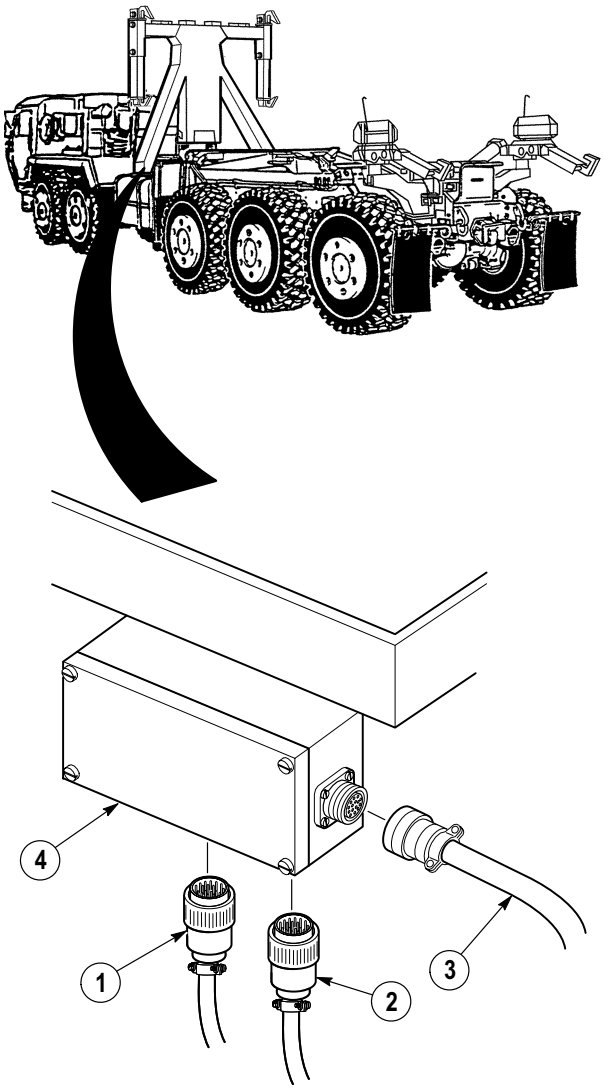

(2) Loosen four screws (5) and remove cover (6) from CHU control box assembly (4).

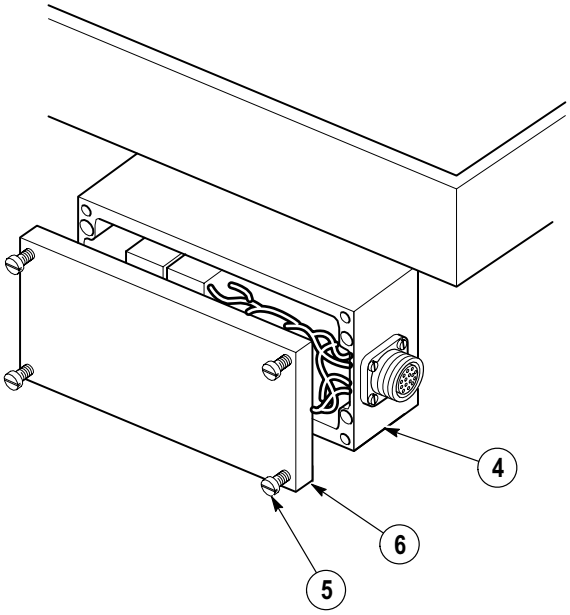

(3) Remove four screws (7), locknuts (8), and CHU control box assembly (4) from front support crossmember (9). Discard locknuts.

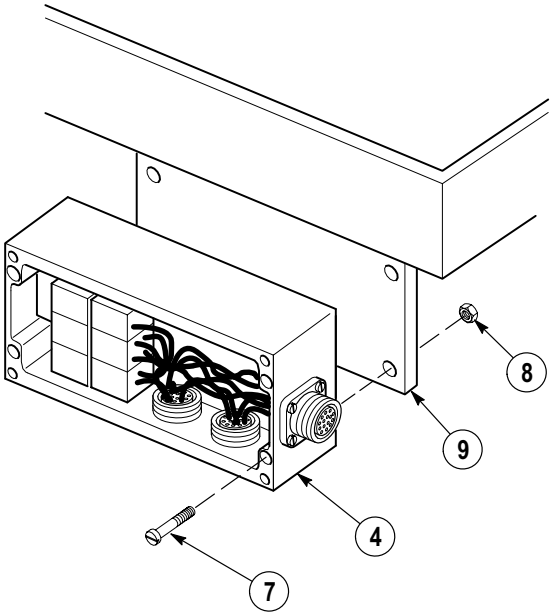

b. Installation.

(1) Install CHU control box assembly (4), four screws (7) and locknuts (8) on front support crossmember (9).

21-21. CONTAINER HANDLING UNIT (CHU) CONTROL BOX ASSEMBLY REPLACEMENT (CONT).

(2) Position cover (6) on CHU control box assembly (4) and tighten four screws (5).

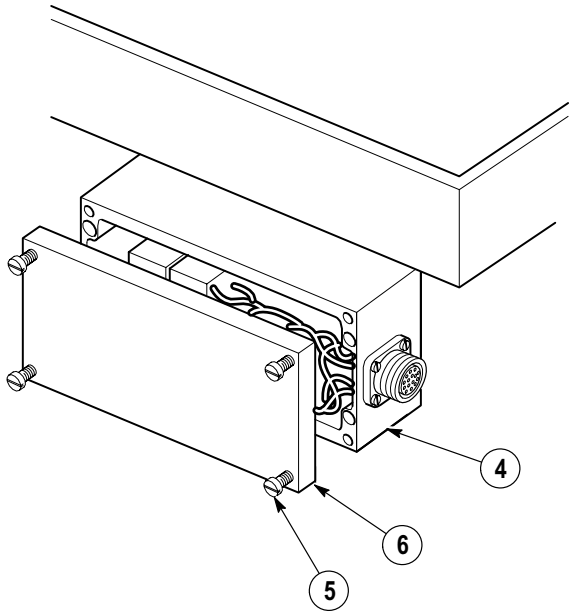

(3) Connect MC185 connector (1), MC82B connector (2) and MC82A connector (3) on CHU control box assembly (4).

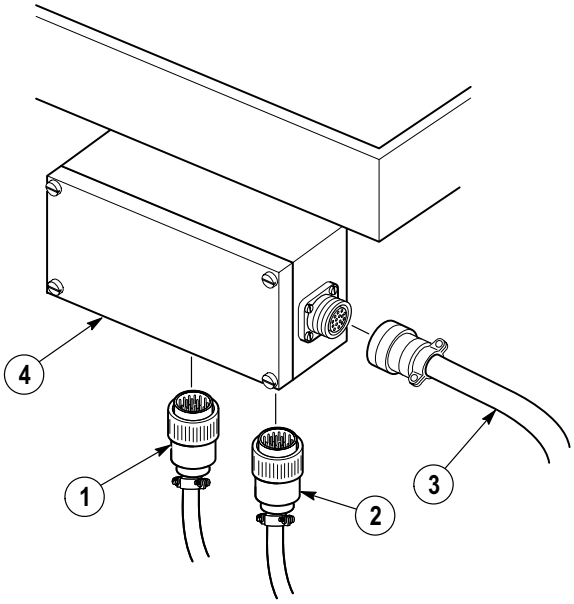

c. Follow-on Maintenance:

- Install deck wekdment (left side only), (Para 21-40).
- Connect batteries, (Para 7-87).
- Remove wheel chocks, (TM 9-2320-364-10).

END OF TASK

21-22. CONTAINER HANDLING UNIT (CHU) CONTROL BOX WIRING REPLACEMENT.

This task covers:

a. Removal b. Installation c. Follow-On Maintenance

INITIAL SETUP

Tools and Special Tools
Tool Kit, General Mechanic's: Automotive (Item 74, Appendix G)

Materials/Parts
Tags, Identification (Item 88, Appendix C)

Equipment Condition
Disconnnect batteries, (Para 7-87)
Wheels chocked, (TM 9-2320-364-10)
CHU control box assembly removed, (Para 21-21)

a. Removal.

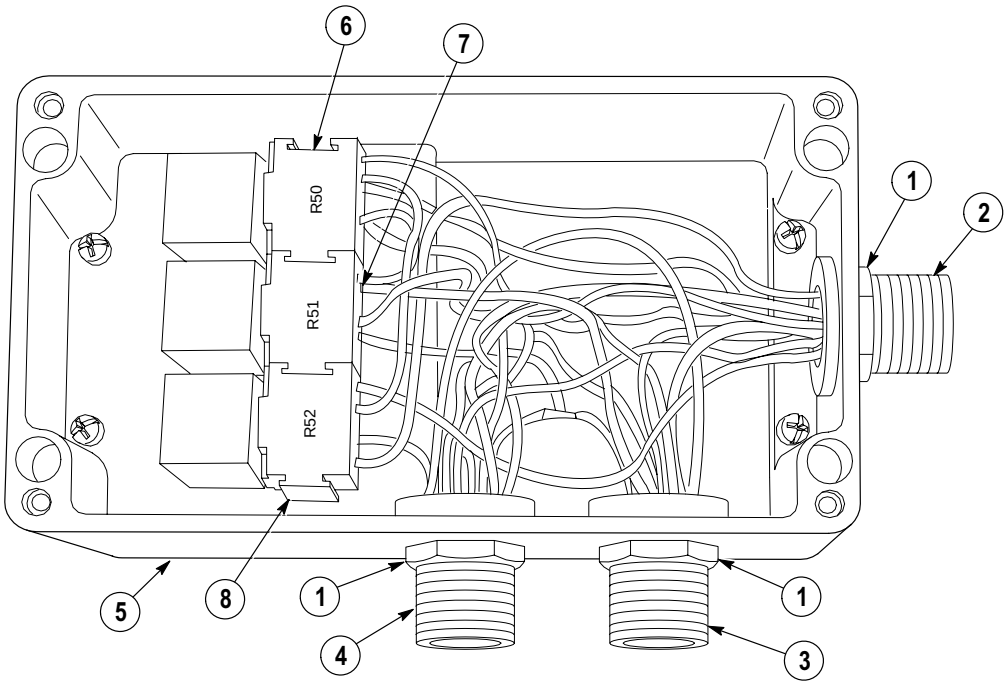

NOTE

This procedure shows removal of CHU wiring for CHU control box. Only remove wiring required to complete task.

(1) Remove three nuts (1) from connectors MC82A (2), MC82B (3) and MC185 (4) on control box (5).

NOTE

- Disconnect only wires required to complete task. Refer to Table 21-2 CHU Control Box Wiring for specific control box wiring replacement.
- Tag and mark wires prior to removal.

21-22. CONTAINER HANDLING UNIT (CHU) CONTROL BOX WIRING REPLACEMENT (CONT).

Table 21-2. CHU Control Box Wiring

Cable No.	Color	From	To
1435	BLK	10 Pin Connector A (MC185) (4)	10 Pin Connector E (MC185) (4) 17 Pin Connector L (MC82A) (2) 17 Pin Connector L (MC82B) (3)
1474	BLK	10 Pin Connector B (MC185) (4)	Relay R50/Terminal 86 (6)
1466b	BLK	10 Pin Connector C (MC185) (4)	Relay R50/Terminal 87 (6)
1495	BLK	10 Pin Connector D (MC185) (4)	10 Pin Connector F (MC185) (4) Relay R50/Terminal 85 (6)
1435	BLK	10 Pin Connector E (MC185) (4)	10 Pin Connector A (MC185) (4) 17 Pin Connector L (MC82A) (2) 17 Pin Connector L (MC82B) (3)
1495	BLK	10 Pin Connector F (MC185) (4)	10 Pin Connector D (MC185) (4) Relay R50/Terminal 85 (6)
1496	BLK	10 Pin Connector G (MC185) (4)	Relay R51/Terminal 85 (7)
1465	BLK	17 Pin Connector A (MC82A) (2)	Relay R52/Terminal 86 (8) 17 Pin Connector A (MC82B) (3)
1467	BLK	17 Pin Connector B (MC82A) (2)	17 Pin Connector B (MC82B) (3)
1468	BLK	17 Pin Connector C (MC82A) (2)	17 Pin Connector C (MC82B) (3)
1464	BLK	17 Pin Connector D (MC82A) (2)	Relay R51/Terminal 30 (7)
1466	BLK	17 Pin Connector E (MC82A) (2)	Relay R50/Terminal 30 (6)
1472	BLK	17 Pin Connector F (MC82A) (2)	17 Pin Connector F (MC82B) (3) Relay R50/Terminal 86 (6)
1469	BLK	17 Pin Connector G (MC82A) (2)	17 Pin Connector G (MC82B) (3)
1463	BLK	17 Pin Connector H (MC82A) (2)	17 Pin Connector H (MC82B) (3)
1462	BLK	17 Pin Connector J (MC82A) (2)	17 Pin Connector J (MC82B) (3)
1435	BLK	17 Pin Connector K (MC82A) (2)	Relay R52/Terminal 85 (8) 17 Pin Connector K (MC82B) (3)
1435	BLK	17 Pin Connector L (MC82A) (2)	10 Pin Connector A & E (MC185) (4) 17 Pin Connector L (MC82B) (3)
1471	BLK	17 Pin Connector M (MC82A) (2)	17 Pin Connector M (MC82B) (3)
1460	BLK	17 Pin Connector N (MC82A) (2)	17 Pin Connector N (MC82B) (3)
1459	BLK	17 Pin Connector P (MC82A) (2)	17 Pin Connector P (MC82B) (3)
1435	BLK	17 Pin Connector R (MC82A) (2)	17 Pin Connector R (MC82B) (3)
1435	BLK	17 Pin Connector S (MC82A) (2)	17 Pin Connector S (MC82B) (3)
1465		17 Pin Connector A (MC82B) (3)	17 Pin Connector A (MC82A) (2) Relay R52/Terminal 86 (8)
1467		17 Pin Connector B (MC82B) (3)	17 Pin Connector B (MC82A) (2)
1468		17 Pin Connector C (MC82B) (3)	17 Pin Connector C (MC82A) (2)

Cable No.	Color	From	To
1464		17 Pin Connector D (MC82B) (3)	Relay R51/Terminal 87A (7)
1466	BLK	17 Pin Connector E (MC82B) (3)	Relay R50/Terminal 87A (6)
1472	BLK	17 Pin Connector F (MC82B) (3)	17 Pin Connector F (MC82A) (2) Relay R50/Terminal 86 (6)
1469	BLK	17 Pin Connector G (MC82B) (3)	17 Pin Connector G (MC82A) (2)
1463	BLK	17 Pin Connector H (MC82B) (3)	17 Pin Connector H (MC82A) (2)
1462	BLK	17 Pin Connector J (MC82B) (3)	17 Pin Connector J (MC82A) (2)
1435	BLK	17 Pin Connector K (MC82B) (3)	Relay R52/Terminal 85 (8) 17 Pin Connector K (MC82A) (2)
1435	BLK	17 Pin Connector L (MC82B) (3)	10 Pin Connector A & E (MC185) (4) 17 Pin Connector L (MC82A) (2)
1471	BLK	17 Pin Connector M (MC82B) (3)	17 Pin Connector M (MC82A) (2)
1460	BLK	17 Pin Connector N (MC82B) (3)	17 Pin Connector N (MC82A) (2)
1459	BLK	17 Pin Connector P (MC82B) (3)	17 Pin Connector P (MC82A) (2)
1435	BLK	17 Pin Connector R (MC82B) (3)	17 Pin Connector R (MC82A) (2)
1435	BLK	17 Pin Connector S (MC82B) (3)	17 Pin Connector S (MC82A) (2)
1495	BLK	Relay R50/Terminal 85 (6)	Relay R52/Terminal 30 (8)
1464	BLK	Relay R51/Terminal 30 (7)	Relay R51/Terminal 86 (7)
1496	BLK	Relay R51/Terminal 85 (7)	Relay R52/Terminal 87 (8)

21-22. CONTAINER HANDLING UNIT (CHU) CONTROL BOX WIRING REPLACEMENT (CONT).

b. Installation.

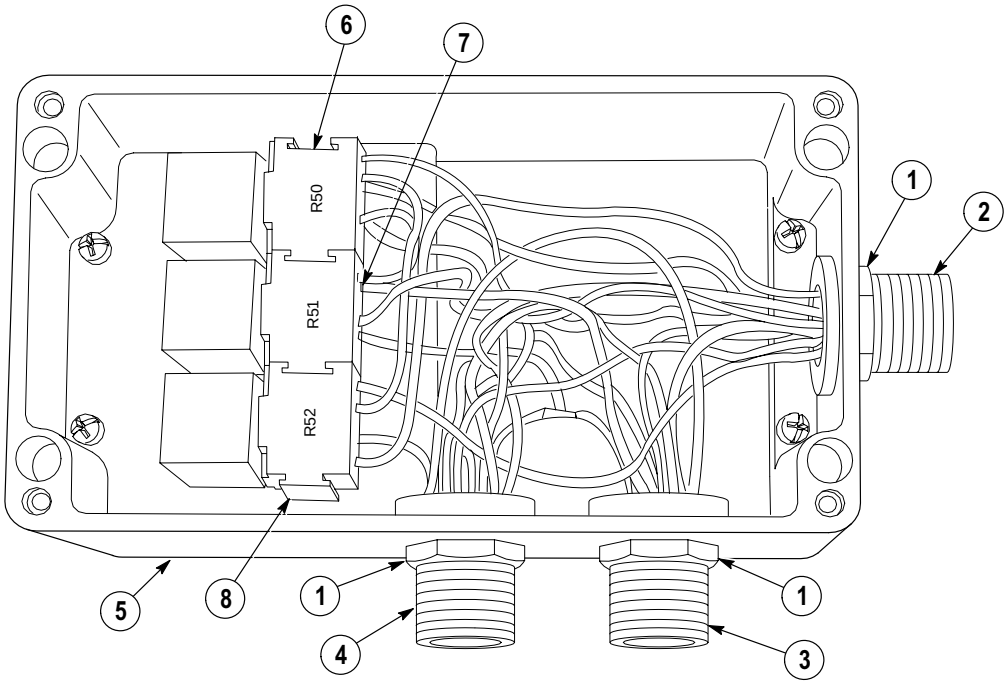

NOTE

Connect only wires required to complete task. Refer to Table 21-2 CHU Control Box Wiring for specific control box wiring replacement.

(1) Follow Table 21-2 to connect wires.

(2) Install connectors MC185 (4), MC82B (3) and MC82A (2) to control box (5) using three nuts (1).

c. Follow-On Maintenance:

- Install CHU control box assembly, (Para 21-21).
- Connect batteries, (Para 7-87).
- Remove wheel chocks, (TM 9-2320-364-10).

END OF TASK

21-23. CONTAINER HANDLING UNIT (CHU) CONTROL BOX REPAIR.

This task covers:

a. Disassembly b. Assembly c. Follow-On Maintenance

INITIAL SETUP

Tools and Special Tools
Tool Kit, General Mechanic's: Automotive (Item 74, Appendix G)

Materials/Parts
Lockwasher (2) (Item 171, Appendix F)
Lockwasher (2) (Item 175, Appendix F)

Equipment Condition
CHU control box wiring removed, (Para 21-22)

a. Disassembly.

(1) Remove relay R50 (1), R51 (2) and R52 (3) from three relay socket modules (4).

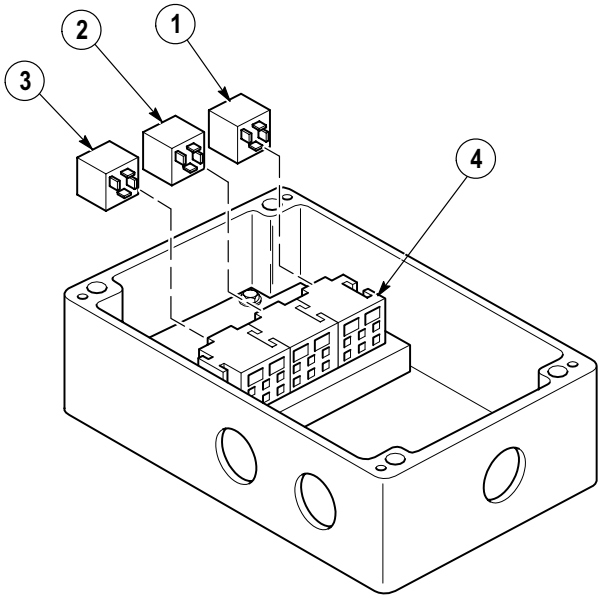

21-23. CONTAINER HANDLING UNIT (CHU) CONTROL BOX REPAIR (CONT).

(2) Remove two screws (5), lockwashers (6), relay mount bracket (7) and relay mount spacer (8) from control box (9). Discard lockwashers.

(3) Remove two screws (10), lockwashers (11), washers (12) and relay mount spacer (4) from relay mount bracket (7). Discard lockwashers.

NOTE

Perform Step (4) if inserts are damaged.

(4) Remove two inserts (13) from relay mount bracket (7).

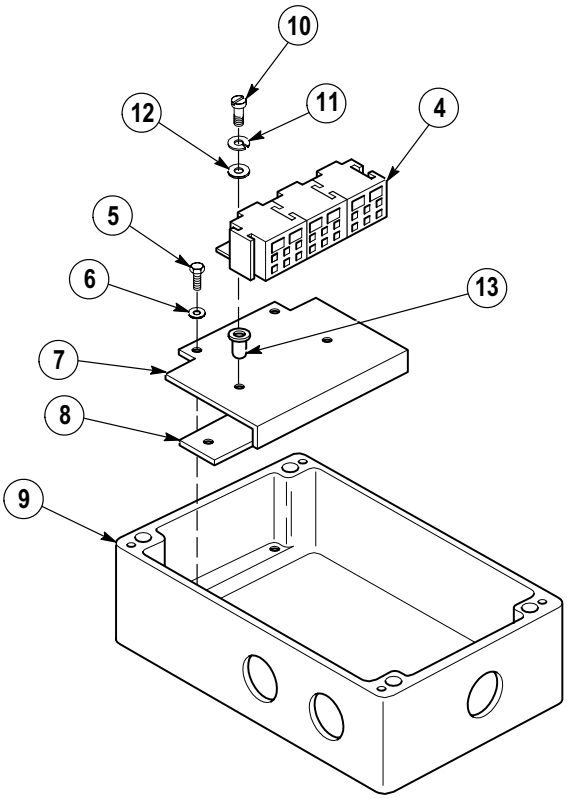

b. Assembly.

NOTE

Perform Step (1) if inserts were removed.

(1) Install two inserts (13) in relay mount bracket (7).

(2) Install three relay socket modules (4), two washers (12), lockwashers (11) and screws (10) to relay mount bracket (7).

(3) Install relay mount spacer (8), relay mount bracket (7), two lockwashers (6) and screws (5) to control box (9).

(4) Install relay R52 (3), R51 (2) and R50 (1) to three relay socket modules (4).

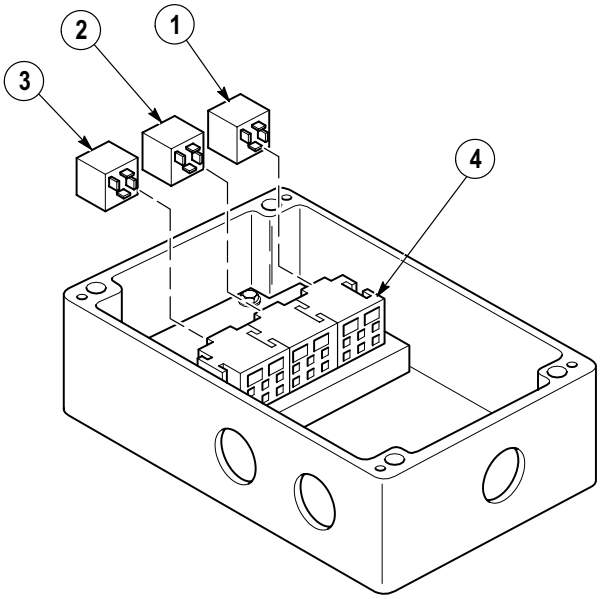

c. Follow-On Maintenance:

- Install CHU box wiring, (Para 21-22).

END OF TASK

21-24. CONTAINER HANDLING UNIT (CHU) PROXIMITY SWITCH AND SENSING PLATE REPLACEMENT/ADJUSTMENT (HOOK ARM UP).

This task covers:

a. Removal
b. Installation
c. Adjustment
d. Follow-On Maintenance

INITIAL SETUP

Tools and Special Tools
Tool Kit, General Mechanic's: Automotive (Item 74, Appendix G)
Clamp, Machinist (2) (Item 10, Appendix G)
Gage, Feeler (Item 27, Appendix G)
Goggles, Industrial (Item 30, Appendix G)

Materials/Parts
Epoxy (Item 38, Appendix C)
Tags, Identification (Item 88, Appendix C)
Lockwasher (2) (Item 195, Appendix F)

References
TM 9-2320-364-10
TM 43-0139

Equipment Condition
Engine OFF, (TM 9-2320-364-10)
Wheels chocked, (TM 9-2320-364-10)
Batteries disconnected, (Para 7-87)

a. Removal.

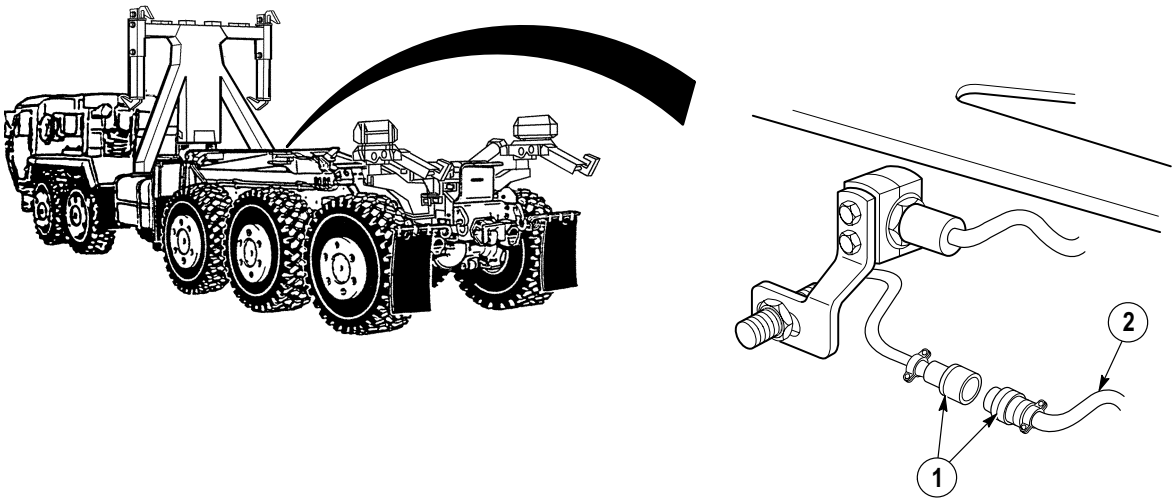

(1) Disconnect CHU proximity switch MC188 connector (1) from CHU wire harness (2).

21-24. CONTAINER HANDLING UNIT (CHU) PROXIMITY SWITCH AND SENSING PLATE REPLACEMENT/ADJUSTMENT (HOOK ARM UP) (CONT).

(2) Remove two nuts (3) and proximity switch (4) from proximity switch mount (5).

(3) Remove two screws (6), lockwashers (7) and proximity switch mount (5) from two clamp halves (8). Discard lockwashers.

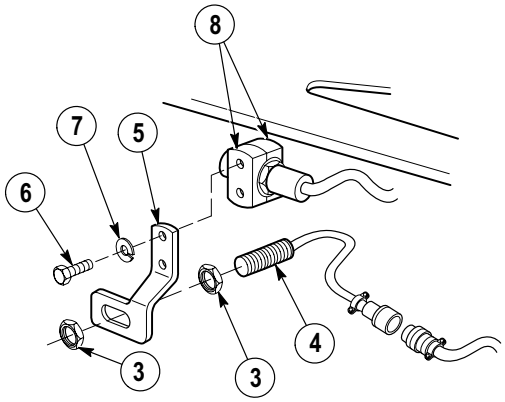

NOTE

Perform Step (4) if sensor plate is damaged.

(4) Remove sensor plate (9) from LHS hook arm (10).

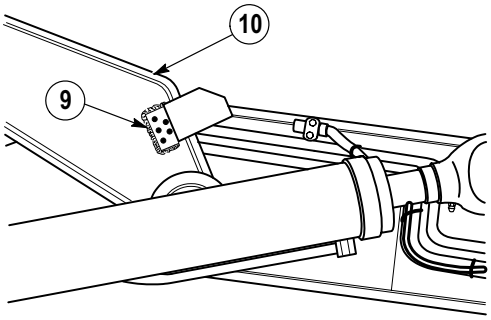

b. Installation.

NOTE

- Perform Steps (1) through (20) if sensor plate was removed.
- LHS is being raised to expose area to install sensor plate.

(1) Start engine and stow LHS (TM 9-2320-364-10).

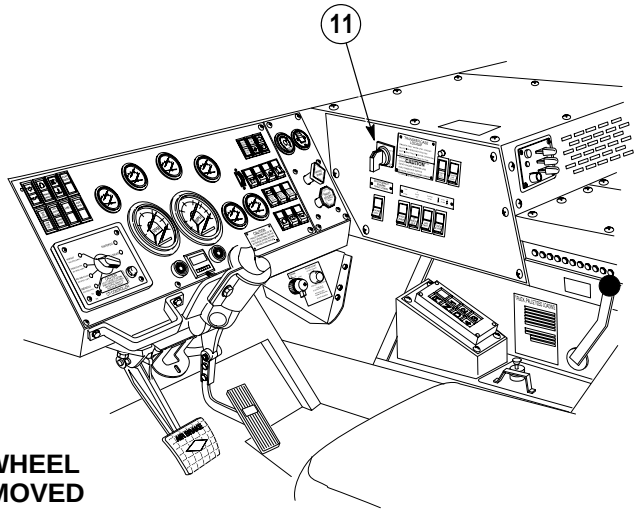

STEERING WHEEL SHOWN REMOVED FOR CLARITY

CAUTION

Engine speed must be at idle before using hydraulic selector switch, or damage to equipment may result.

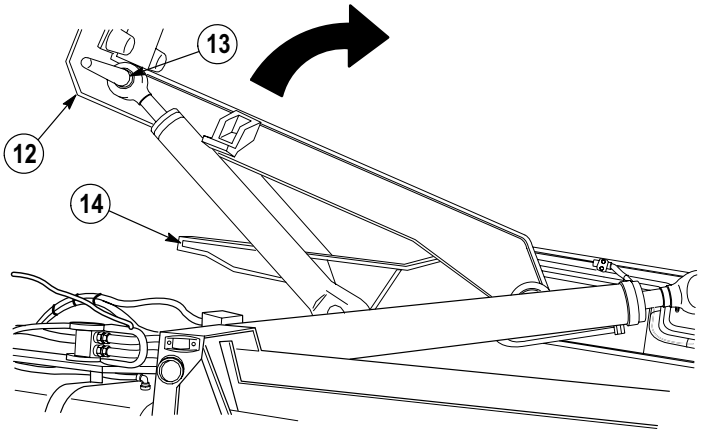

(2) Set hydraulic selector switch (11) to MAN H.A. and raise hook arm (12) until hook arm cylinder pivot pin (13) is 25 in. (63.5 cm) from main frame (14).

(3) Set hydraulic selector switch (11) to MAN M.F. and raise main frame (14) until hook arm cylinder pivot pin (13) is 45 in. (114.3 cm) from main frame (14).

(4) Shut OFF engine.

(5) Disconnect batteries (Para 7-87).

21-24. CONTAINER HANDLING UNIT (CHU) PROXIMITY SWITCH AND SENSING PLATE REPLACEMENT/ADJUSTMENT (HOOK ARM UP) (CONT).

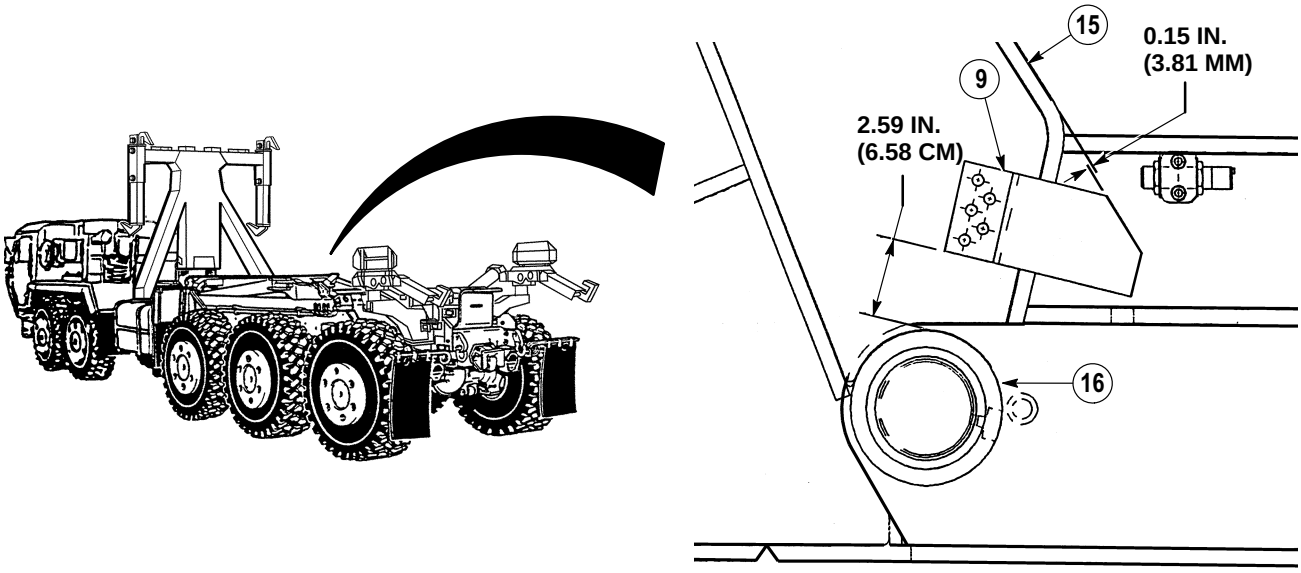

(6) Measure and mark an area on hook arm (15) for sensor plate (9) to be mounted as shown.

WARNING

CARC paint contains isocyanate (HDI) which is highly irritating to skin and respiratory system. High concentrations of HDI can produce symptoms of itching and reddening of skin, a burning sensation in throat and nose and watering of the eyes. In extreme concentrations, HDI can cause cough, shortness of breath, pain during respiration, increased sputum production, and chest tightness. The following precautions must be taken whenever using CARC paint:

- ALWAYS use air line respirators when using CARC paint unless air sampling shows exposure to be below standards. Use chemical cartridge respirator if air sampling is below standards.
- DO NOT let skin or eyes come in contact with CARC paint. Always wear protective equipment (gloves, ventilation mask, safety goggles, etc.).
- DO NOT use CARC paint without adequate ventilation.
- NEVER weld or cut CARC-coated materials.
- DO NOT grind or sand painted equipment without high-efficiency air purifying respirators in use.
- BE AWARE of CARC paint exposure symptoms; symptoms can occur a few days after initial exposure. Seek medical help immediately if symptoms are detected.

(7) Grind off paint in area marked in Step (6) for sensor plate (9) to be mounted.

(8) Mark hook arm (15) 2.59 in. (6.59 cm) from boss (16) on hook arm.

(9) Align sensor plate (9) .15 in. (3.81 mm) below top edge of hook arm (15).

(10) Position sensor plate (9) with two clamps on hook arm (15) as shown.

(11) Mark line around sensor plate (9) on hook arm (15).

(12) Remove two clamps and sensor plate (9) from hook arm (15).

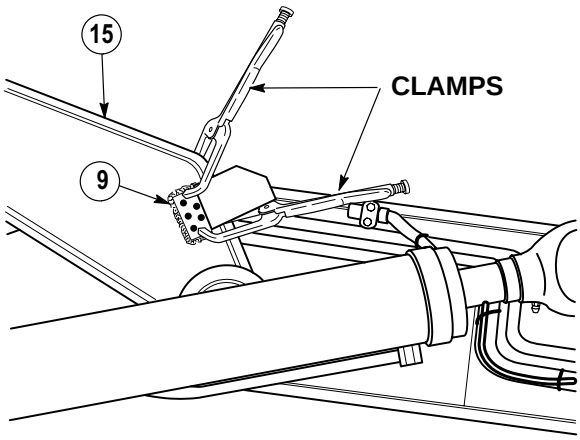

WARNING

Adhesives, solvents, and sealing compounds can burn easily, can give off harmful vapors, and are harmful to skin and clothing. To avoid injury or death, keep away from open fire and use in well-ventilated area. If adhesive, solvent, or sealing compound gets on skin or clothing, wash immediately with soap and water.

NOTE

Mix epoxy according to directions on package.

(13) Mix epoxy and apply to sensor plate (9) and hook arm (15).

NOTE

Epoxy takes approximately 15 minutes to cure.

(14) Clamp sensor plate (9) to hook arm (15) in position marked until cured.

(15) Remove clamps from hook arm (15).

(16) Prime and paint area as necessary. (TM 43-0139).

21-24. CONTAINER HANDLING UNIT (CHU) PROXIMITY SWITCH AND SENSING PLATE REPLACEMENT/ADJUSTMENT (HOOK ARM UP) (CONT).

(17) Measure and mark an area on hook arm (15) for sensor plate (9) to be mounted.

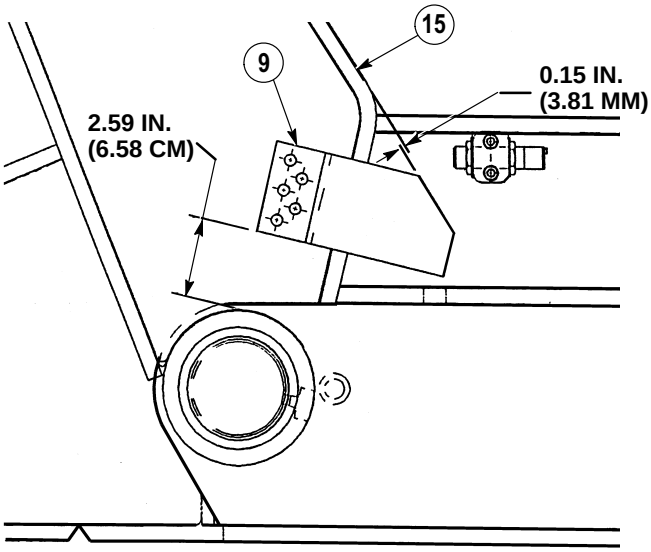

WARNING

Adhesives, solvents, and sealing compounds can burn easily, can give off harmful vapors, and are harmful to skin and clothing. To avoid injury or death, keep away from open fire and use in well-ventilated area. If adhesive, solvent or sealing compound gets on skin or clothing, wash immediately with soap and water.

(18) Using epoxy, mount sensor plate (9) and clamp in place until cured (approximately 15 minutes).

(19) Remove clamps from hook arm (15).

(20) Prime and paint area as necessary.

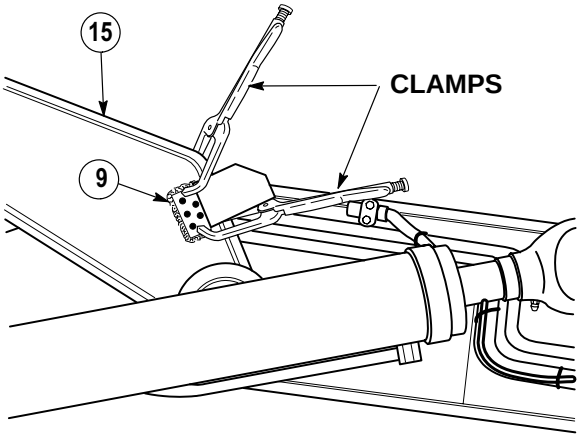

(21) Install two screws (6), lockwashers (7) and proximity switch mount (5) on two clamp halves (8).

(22) Install CHU proximity switch (4) and two nuts (3) on proximity switch mount (5).

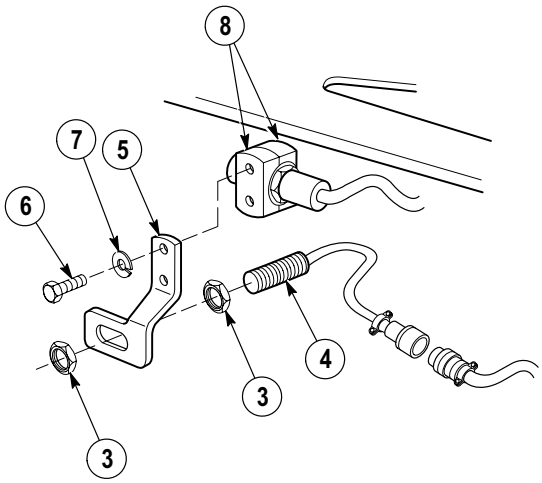

(23) Connect CHU proximity switch MC188 connector (1) on CHU wire harness (2).

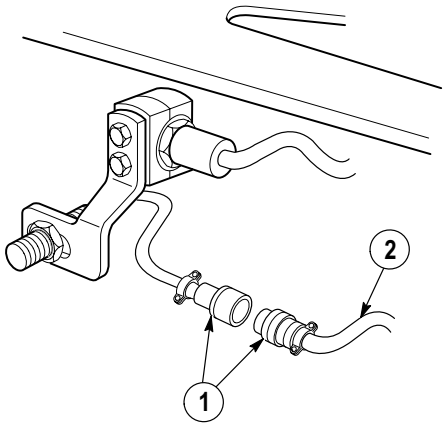

c. Adjustment.

(1) Connect batteries, (Para 7-87).

(2) Start engine, set hydraulic selector switch (1) to MAN H.A. and raise hook arm (2) until sensor plate (3) covers approximately half of proximity switch (4) (TM 9-2320-364-10).

(3) Shut OFF engine.

(4) Using feeler gage, adjust clearance between CHU proximity switch (4) and sensor plate (3) to 0.125 in. ± 0.01 in. (3.18 mm ± 0.25 mm) and tighten nuts (5).

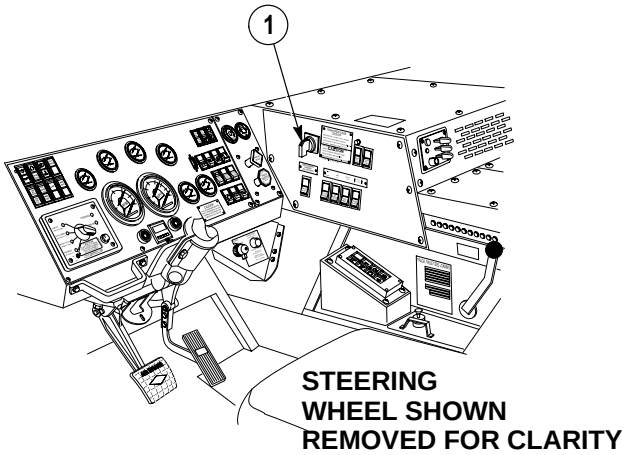

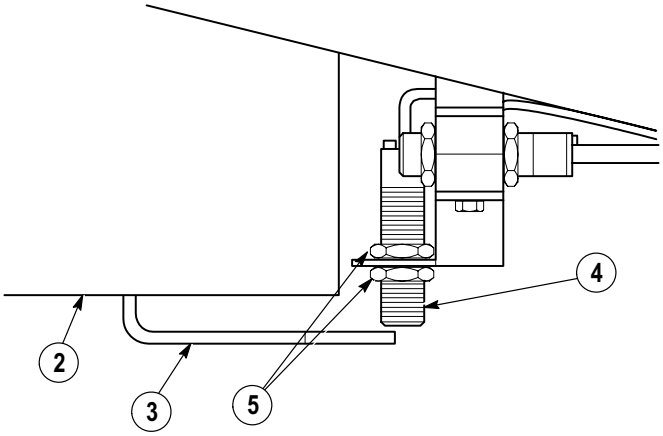

d. Follow-on Maintenance:

- Check operation of hook arm, (TM 9-2320-364-10).
- Remove wheel chocks, (TM 9-2320-364-10).

END OF TASK

21-25. CONTAINER HANDLING UNIT (CHU) MODE SWITCH REPLACEMENT/ ADJUSTMENT.

This task covers:

a. Removal
b. Installation
c. Adjustment
d. Follow-On Maintenance

INITIAL SETUP

Tools and Special Tools
Tool Kit, General Mechanic's: Automotive (Item 74, Appendix G)

Materials/Parts
Locknut (2) (Item 103, Appendix F)

Equipment Condition
Engine OFF, (TM 9-2320-364-10)
Wheels chocked, (TM 9-2320-364-10)
Batteries disconnected, (Para 7-87)
Left slider in container mode, (TM 9-2320-364-10)

a. Removal.

(1) Disconnect MC189 connector (1) from CHU wire harness (2).

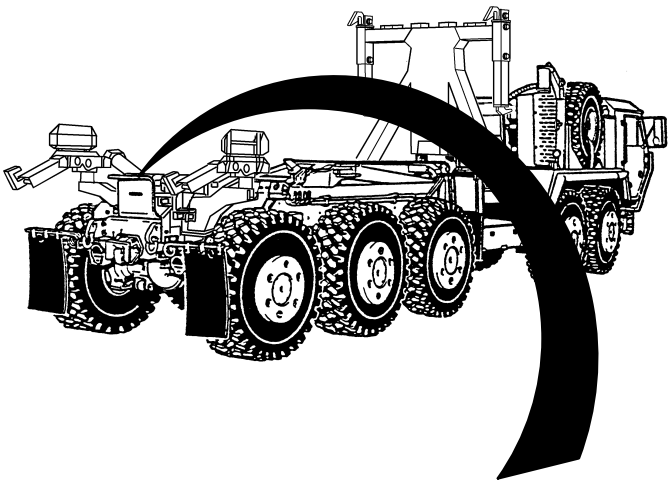

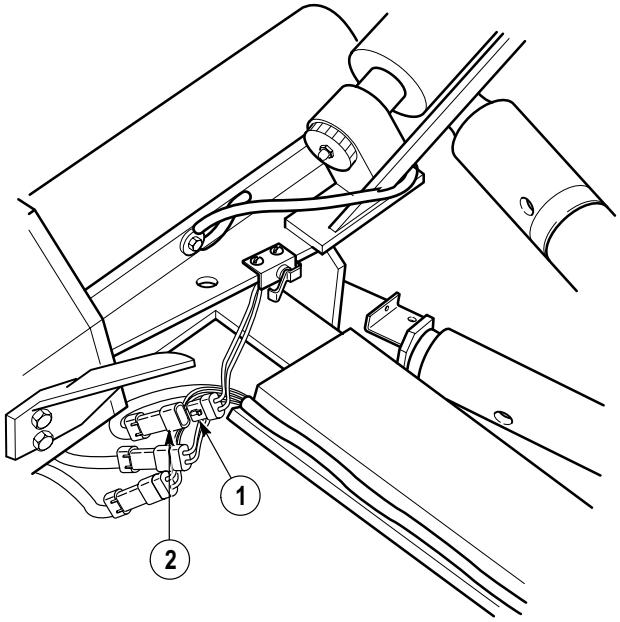

(2) Remove two screws (3), locknuts (4) and mode switch (5) from left rear roller bracket (6). Discard locknuts.

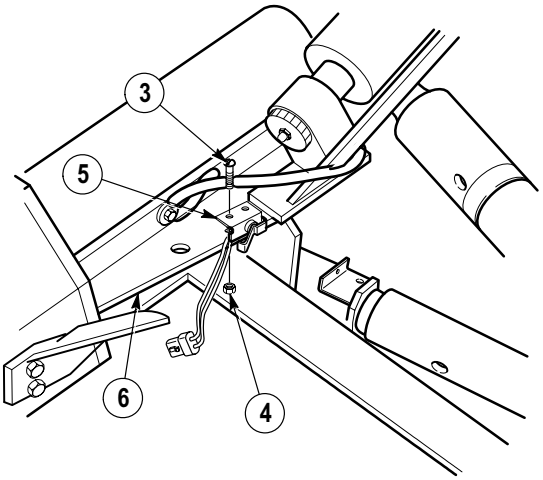

b. Installation.

(1) Install mode switch (5), two screws (3) and locknuts (4) on left rear roller bracket (6). Do not tighten locknuts.

(2) Connect MC189 connector (1) to CHU wire harness (2).

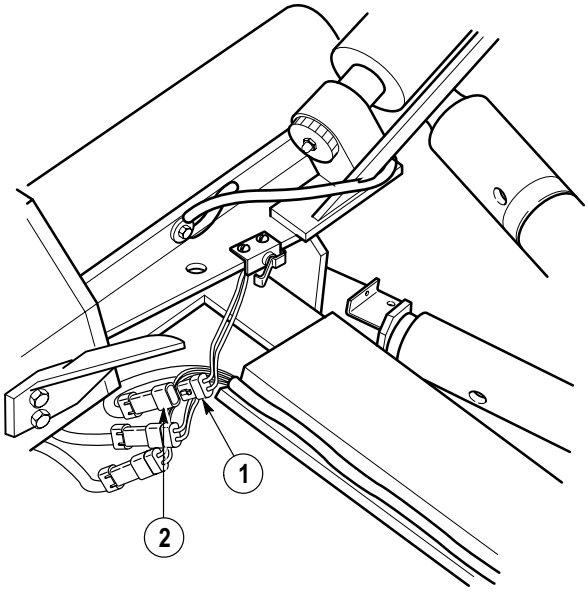

c. Adjustment.

(1) Remove quick release pin (1) and pin (2) from left side short strut (3) and long strut (4).

(2) With the aid of an assistant and using handle of arm assembly (5), rotate arm assembly out and separate short strut (3) from long strut (4).

(3) With the aid of an assistant holding arm assembly (5), position flip lock (6) up.

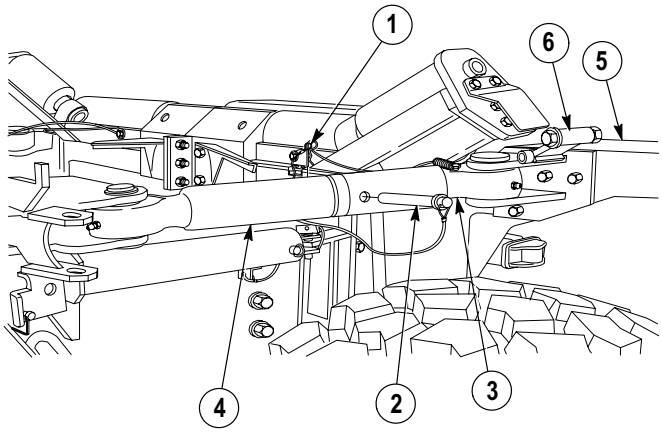

21-25. CONTAINER HANDLING UNIT (CHU) MODE SWITCH REPLACEMENT/ ADJUSTMENT (CONT).

(4) Position long strut (4) half on stowage bracket (7) and install pin (2) and quick release pin (1).

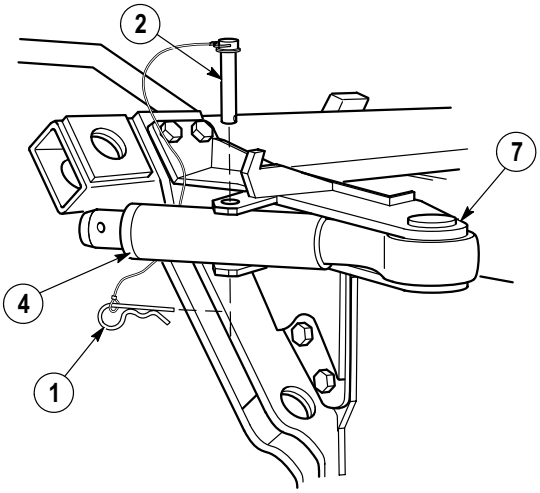

(5) Using handle of arm assembly (5), rotate arm assembly out and release flip lock (6).

(6) Position short strut (3) in stowed position on stow plate (8).

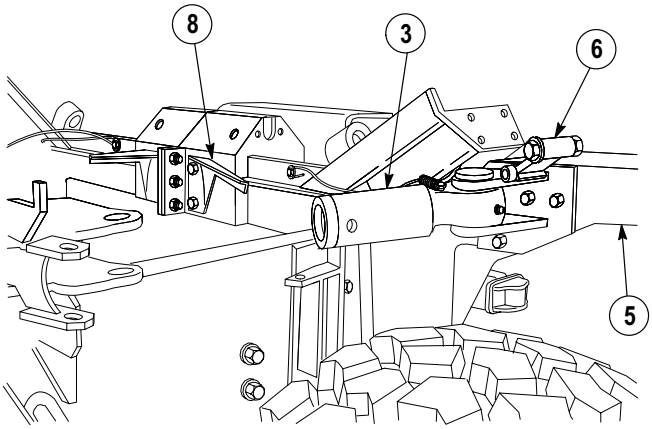

(7) Push down handle (9) and stow slider assembly (10) in forward position.

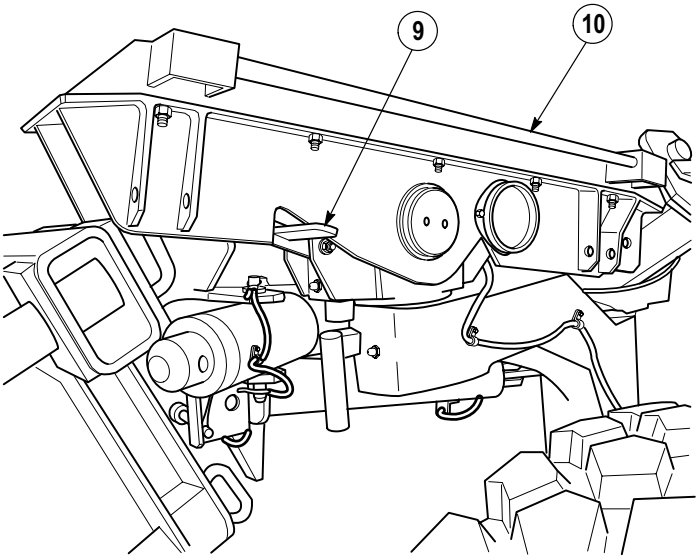

(8) Measure distance between short strut (3) and mode switch bracket (11).

NOTE

- If gap between short strut and mode switch bracket is not 7/16 in. ± 1/16 in. (1.59 mm), perform Step (9).
- If gap between short strut and mode switch bracket is 7/16 in. ± 1/16 in. (1.59 mm), go to Step (10).

(9) Position mode switch (12) to dimension shown.

(10) Tighten two screws (13) and lock nuts (14) on mode switch (12) and rear roller bracket (15).

(11) Deploy left arm assembly (TM 9-2320-364-10).

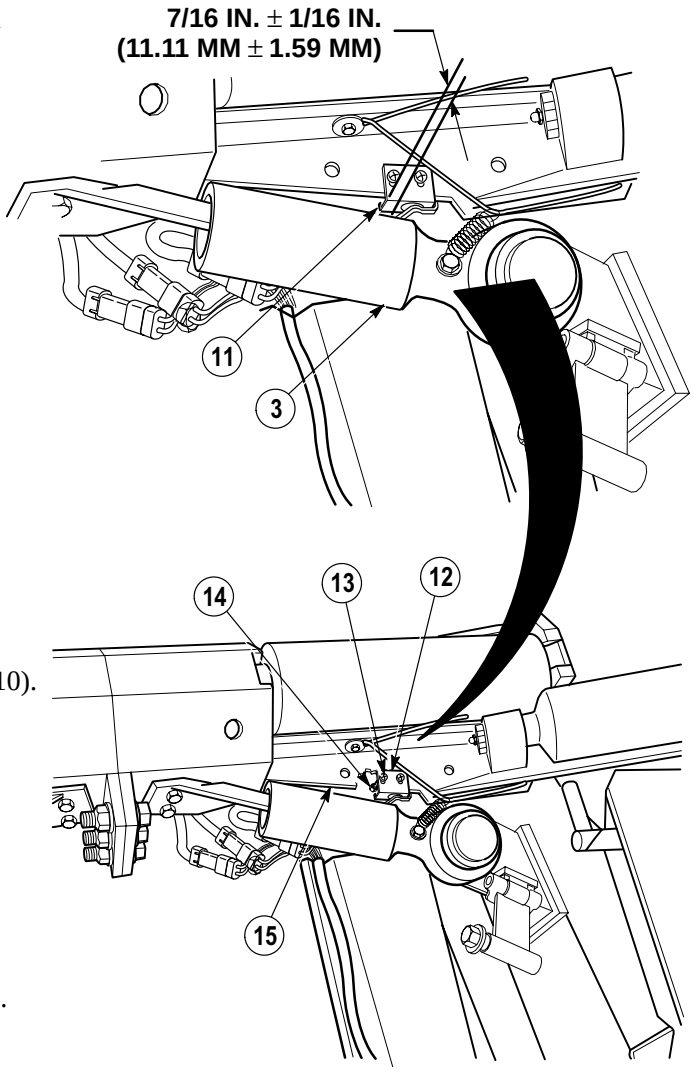

d. Follow-on Maintenance:

- Connect batteries, (Para 7-87).
- Remove wheel chocks, (TM 9-2320-364-10).

END OF TASK

21-26. CONTAINER HANDLING UNIT (CHU) REAR LOCK LIMIT SWITCH REPLACEMENT/ADJUSTMENT.

This task covers:

a. Removal
b. Installation
c. Adjustment
d. Follow-On Maintenance

INITIAL SETUP

Tools and Special Tools
Tool Kit, General Mechanic's: Automotive (Item 74, Appendix G)

Materials/Parts
Cable ties (Item 25, Appendix C)
Sealing Compound (Item 77, Appendix C)

Equipment Condition
Engine OFF, (TM 9-2320-364-10)
Wheels chocked, (TM 9-2320-364-10)
Batteries disconnected, (Para 7-87)
Sliders in container mode, (TM 9-2320-364-10)

a. Removal.

NOTE

- Note routing of switch wire harness prior to removal.
- Remove required cable ties.
- Left and right lock limit switches are identical. Right lock limit switch is shown.

(1) Disconnect MC190 connectors (1) from CHU wire harness connectors (2).

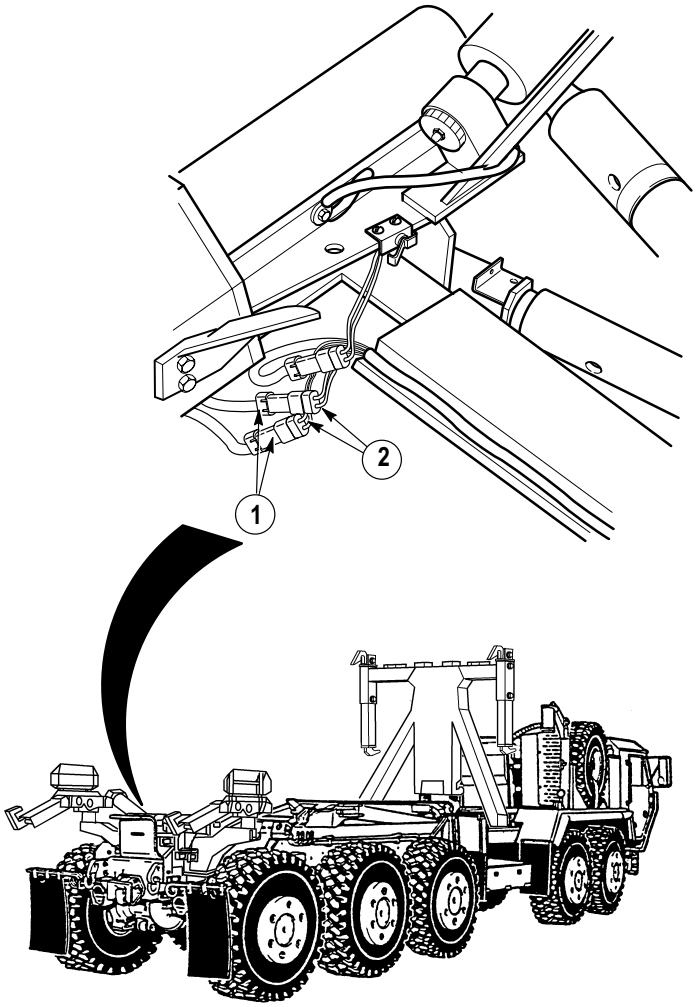

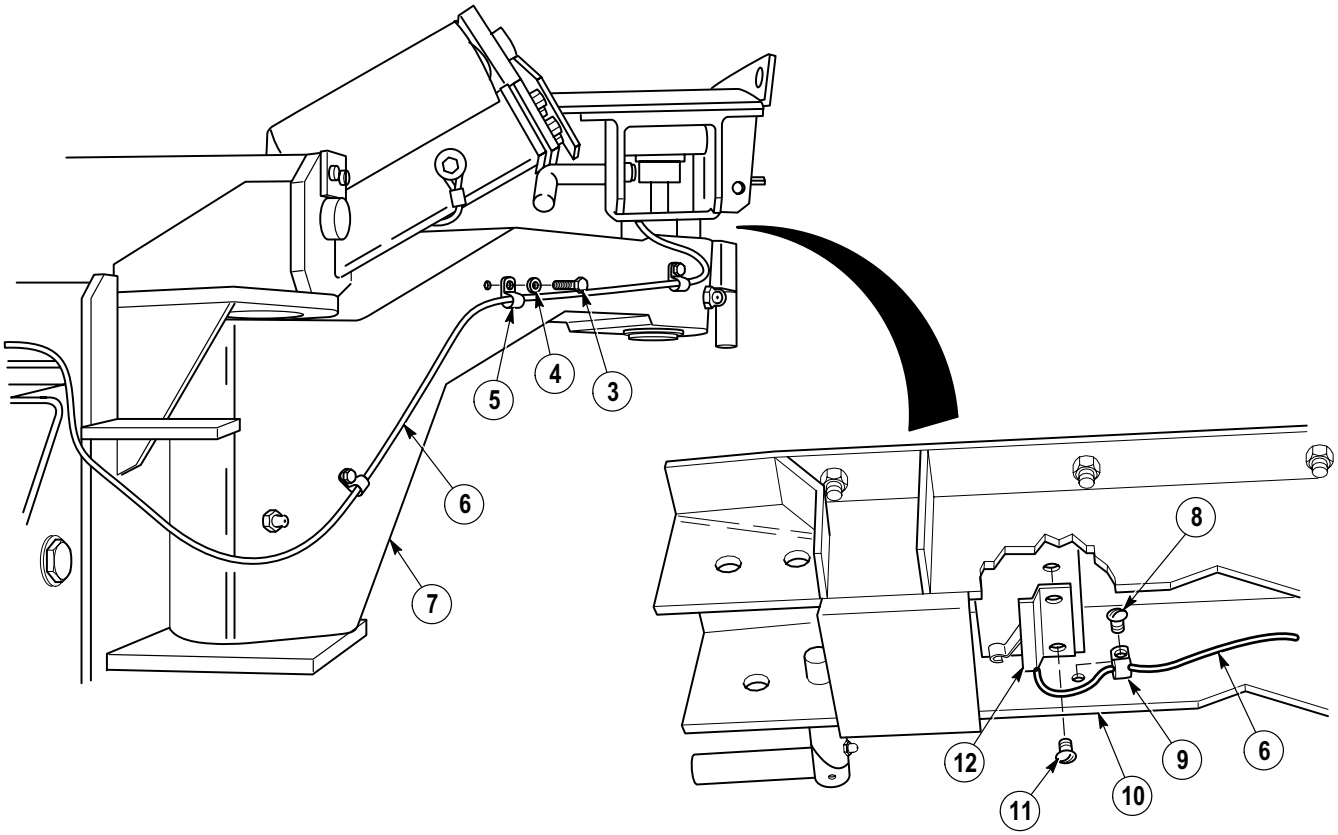

(2) Remove three screws (3), washers (4) and cushion clips (5) from CHU wire harness (6) and arm assembly (7).

(3) Remove screw (8) and cushion clip (9) from CHU wire harness (6) and slider (10).

(4) Remove two screws (11) and lock limit switch (12) from slider (10).

b. Installation.

NOTE

- Left and right lock limit switches are identical. Right lock limit switch is shown.
- Install cable ties as required.

(1) Position lock limit switch (12) with two screws (11) on slider (10). Do not tighten screws.

WARNING

Adhesives, solvents, and sealing compounds can burn easily, can give off harmful vapors, and are harmful to skin and clothing. To avoid injury or death, keep away from open fire and use in well-ventilated area. If adhesive, solvent, or sealing compound gets on skin or clothing, wash immediately with soap and water.

(2) Apply sealing compound to threads of screw (8).

(3) Position cushion clip (9) on CHU wire harness (6) and install on slider (10) with screw (8).

21-26. CONTAINER HANDLING UNIT (CHU) REAR LOCK LIMIT SWITCH REPLACEMENT/ADJUSTMENT (CONT).

(4) Stow right slider (TM 9-2320-364-10).

(5) Position CHU wire harness (6) along arm assembly (7) and under rear roller assembly (13).

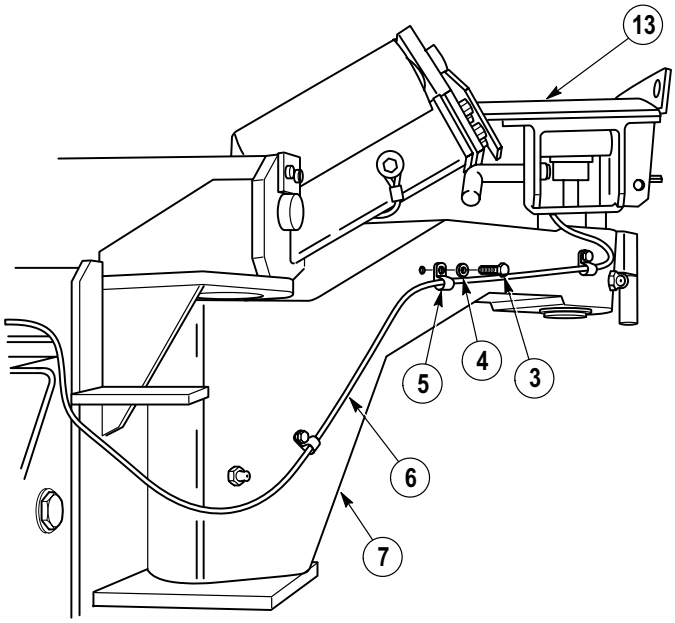

WARNING

Adhesives, solvents, and sealing compounds can burn easily, can give off harmful vapors, and are harmful to skin and clothing. To avoid injury or death, keep away from open fire and use in well-ventilated area. If adhesive, solvent, or sealing compound gets on skin or clothing, wash immediately with soap and water.

(6) Apply sealing compound to threads of three screws (3).

CAUTION

Ensure there is enough slack in wire harness to rotate arm assembly without causing harness to stretch.

(7) Position three cushion clips (5) on CHU wire harness (6) and install on arm assembly (7) with three screws (3) and washers (4).

(8) Connect MC190 connector (1) to CHU wire harness connectors (2).

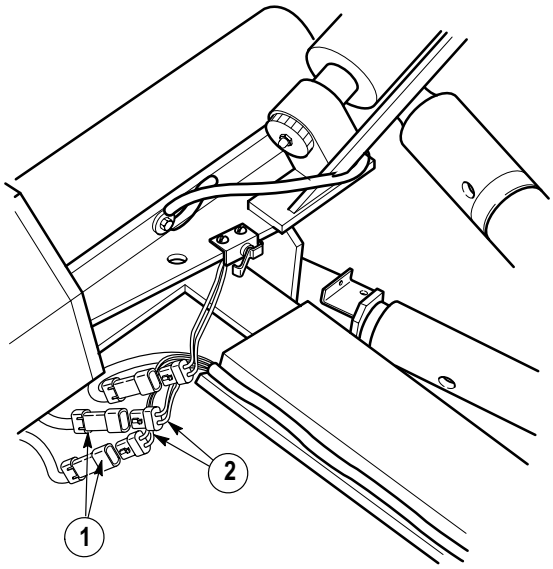

c. Adjustment.

(1) Position slider in container mode (TM 9-2320-364-10).

(2) Raise LHS in AUTO mode approximately 18 inches (46 cm). Release joy stick (1).

NOTE

- Both rear container locks are installed the same way. Left side shown.
- Lock handle is unlocked when facing front of slider.

(3) Turn lock handle (2) on left rear slider assembly (3) forward to unlocked position.

(4) Remove lock pin (4), pin (5) and rear container lock (6) from lifting frame (7).

(5) Position rear container lock (6) in locked position on left rear slider assembly (3) and install pin (5) and lock pin (4).

(6) Turn lock handle (2) on left rear slider assembly (3) back to locked position.

NOTE

- LHS should not move when joystick is in unload position.
- If LHS does not move in unload position, go to Step (14).
- If LHS moves in unload position, perform Steps (8) through (12).

(7) Move joystick (1) to UNLOAD position and check LHS for movement.

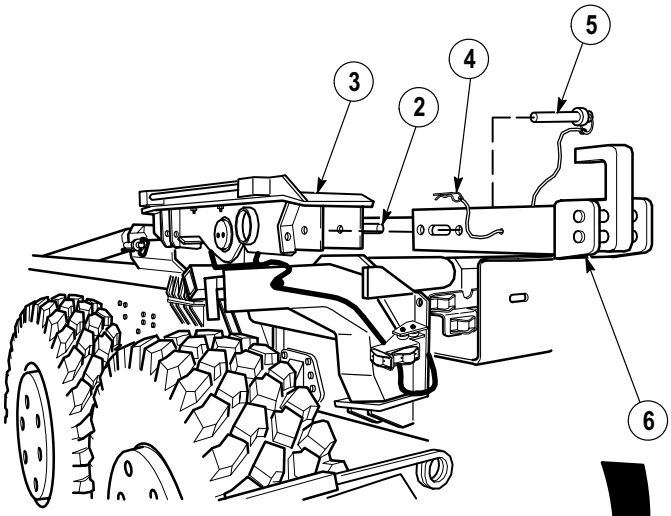

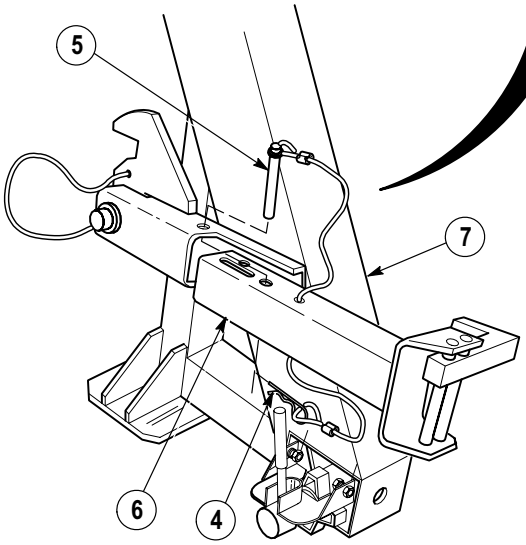

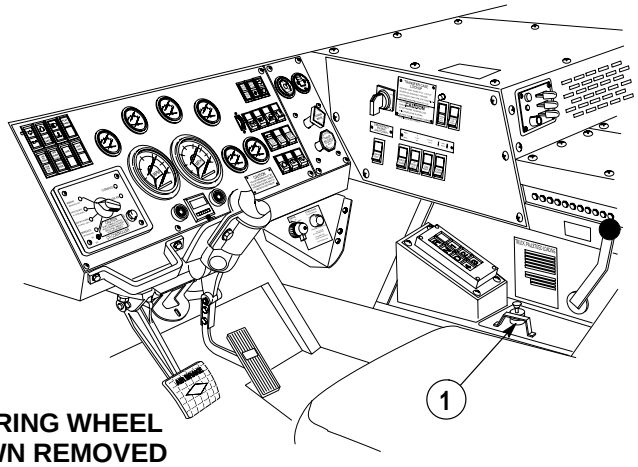

STEERING WHEEL SHOWN REMOVED FOR CLARITY

21-26. CONTAINER HANDLING UNIT (CHU) REAR LOCK LIMIT SWITCH REPLACEMENT/ADJUSTMENT (CONT).

(8) Position container lock (6) in locked position and install pin (5) and lock pin (4).

(9) Remove two screws (8) from lock limit switch (9).

WARNING

Adhesives, solvents, and sealing compounds can burn easily, can give off harmful vapors, and are harmful to skin and clothing. To avoid injury or death, keep away from open fire and use in well-ventilated area. If adhesive, solvent, or sealing compound gets on skin or clothing, wash immediately with soap and water.

(10) Apply sealing compound to threads of two screws (8).

(11) Position lock limit switch (9) with two screws (8) on slider.

NOTE

Lock limit switch is properly adjusted when lever is depressed and lock limit switch makes an audible click.

(12) Position lock limit switch (9) against container lock (6) until audible click is heard and tighten two screws (8).

(13) Repeat Step (7) to check LHS for movement.

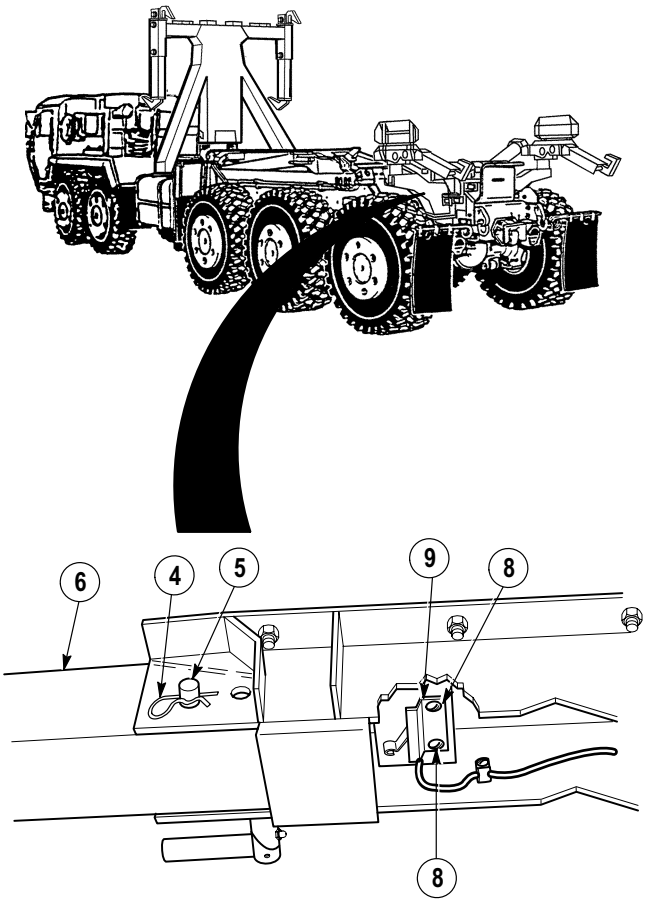

WARNING

Container lock could drop suddenly if not supported. Failure to comply may result in injury to personnel.

(14) Support rear container lock (6) and remove lock pin (4) and pin (5) from rear container lock.

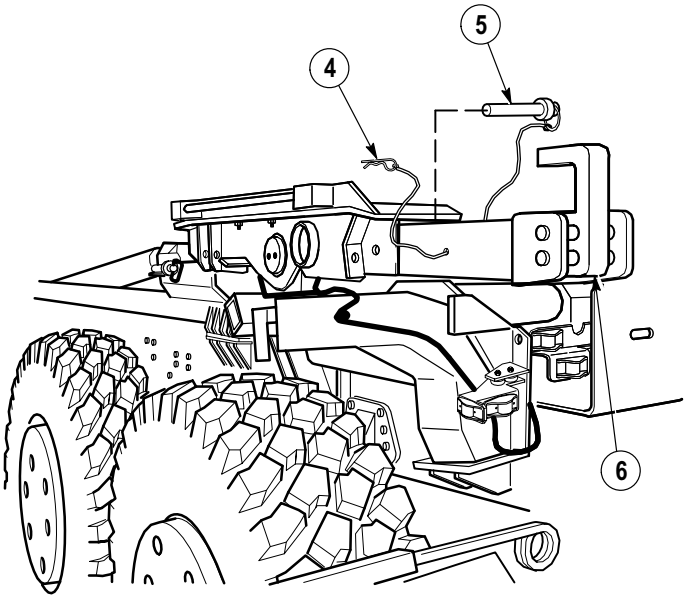

(15) Position and lock rear container lock (6) in ready mode position by pulling out, rotating down, and inserting pin (5) and lock pin (4).

(16) Repeat Steps (3) through (15) for right side of truck.

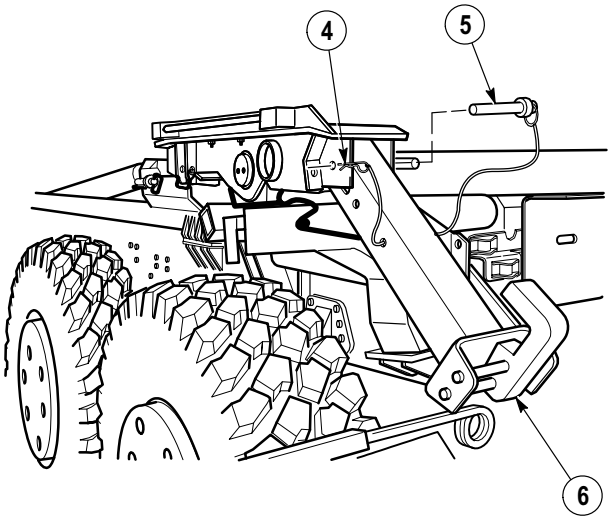

d. Follow-on Maintenance:

- Connect batteries, (Para 7-87).
- Remove wheel chocks, (TM 9-2320-364-10).

END OF TASK

21-27. CONTAINER HANDLING UNIT (CHU) LIGHT BAR AND BRACKETS ASSEMBLY REPAIR.

This task covers:

a. Removal
b. Disassembly
c. Cleaning/Inspection
d. Assembly
e. Installation
f. Follow-On Maintenance

INITIAL SETUP

Tools and Special Tools
Tool Kit, General Mechanic's: Automotive (Item 74, Appendix G)
Goggles, Industrial (Item 30, Appendix G)
Socket Set, 3/8 in. (Item 62, Appendix G)

Materials/Parts
Cable Ties (Item 25, Appendix C)
Compound, Corrosive Preventive (Item 34, Appendix C)

Materials/Parts (cont)
Silicone Compound, Anti-Corrosion (Item 85, Appendix C)
Locknut (18) (Item 103, Appendix F)
Lockwasher (12) (Item 168, Appendix F)

Equipment Condition
Engine OFF, (TM 9-2320-364-10)
Wheels chocked, (TM 9-2320-364-10)
Batteries disconnected, (Para 7-87)

a. Removal.

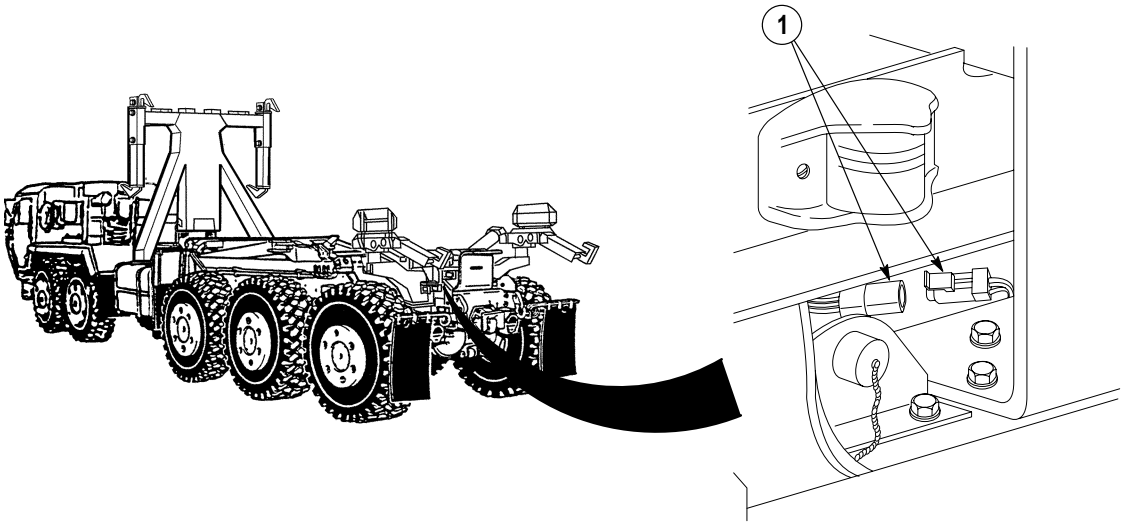

NOTE

Connectors are removed by gently prying on tab and pulling apart.

(1) Disconnect MC90 connector (1).

NOTE

- There are seven red marker lights. All red marker lights are removed the same way.
- Remove cable ties as required.
- Loop clamp is removed by first pulling out lock button and then removing loop clamp.
- Note position of wires and ground wires prior to removal.

(2) Remove push clip (2) and two wires 489 (3) from rear light bar assembly (4).

(3) Disconnect wire 1012 (5) from wire 489 (3).

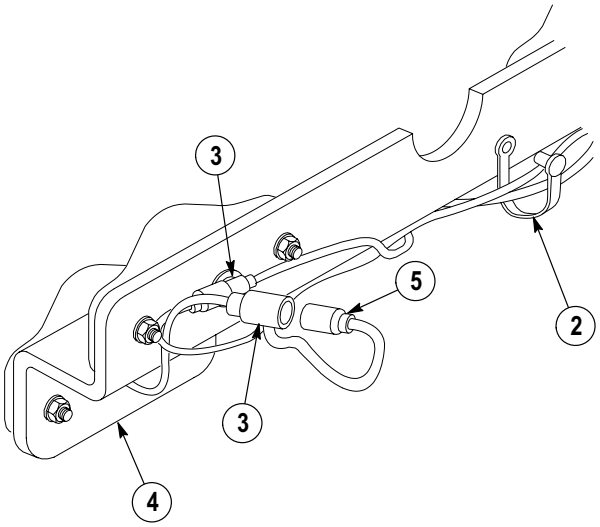

NOTE

- Perform Steps (4) through (6) for marker light with lamp.
- Perform Steps (7) through (9) for marker light with LED.

(4) Remove two screws (6) and lens cover (7) from marker light assembly (8).

(5) Remove marker lamp (9) from marker lamp socket (10).

(6) Remove two locknuts (11), wire 1435 (12), two screws (13), marker light assembly (8) and gasket (14) from marker light bracket (15). Discard locknuts.

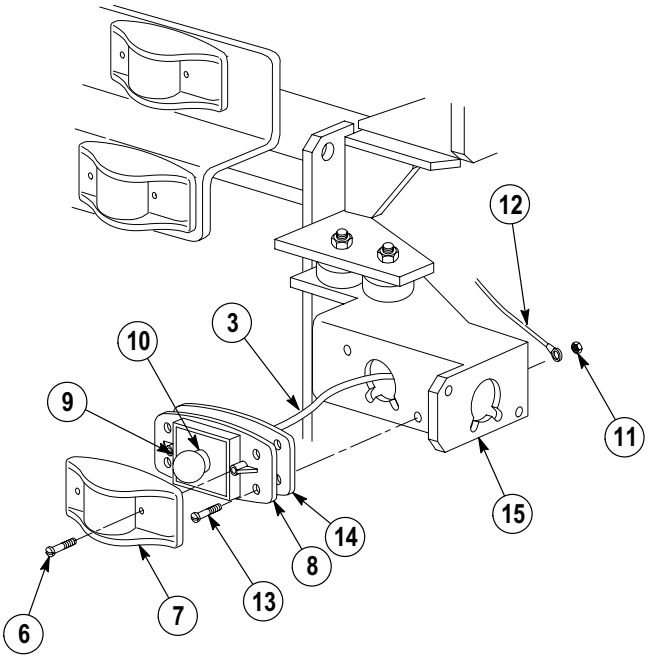

21-27. CONTAINER HANDLING UNIT (CHU) LIGHT BAR AND BRACKETS ASSEMBLY REPAIR (CONT).

(7) Remove two screws (16) and lens cover (17) from marker light assembly (18).

(8) Remove two locknuts (19), wire 489 (20), ground wire (21), two screws (22), ground wire (23) marker light assembly (18) and gasket (24) from marker light bracket (25). Discard locknuts.

(9) Turn LED (26) counterclockwise 1/4 turn and remove from marker light assembly (18).

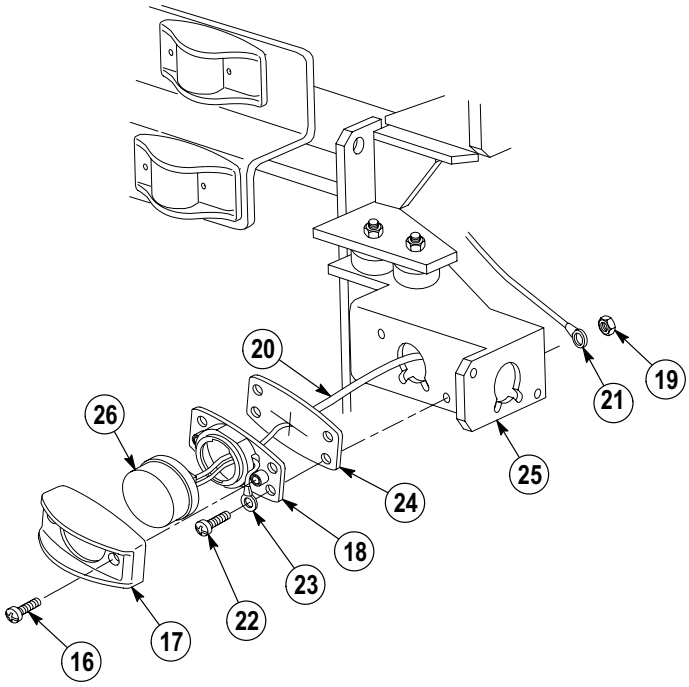

(10) Support marker light bracket (25), remove two nuts (27), lockwashers (28) and marker light bracket (25) from rear roller brackets (29). Discard lockwashers.

(11) Remove two nuts (30), lockwashers (31) and mounts (32) from marker light bracket (25). Discard lockwashers.

NOTE

Both marker light brackets are removed the same way.

(12) Repeat Steps (10) and (11) for left side of truck.

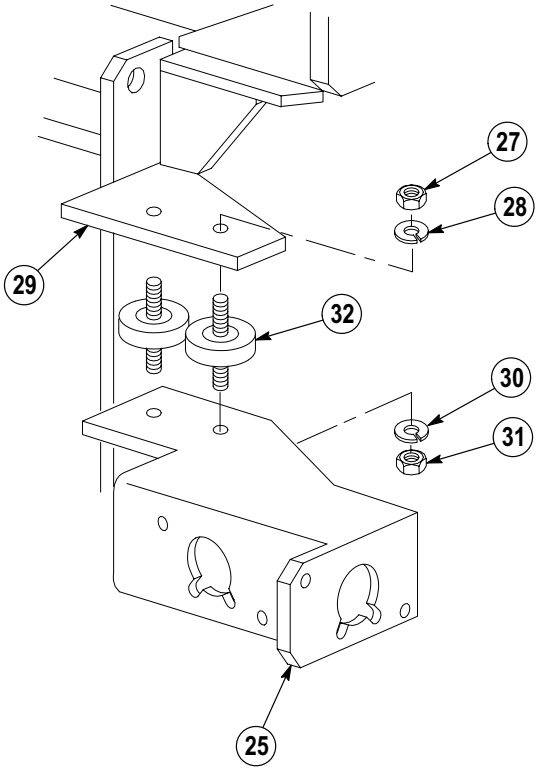

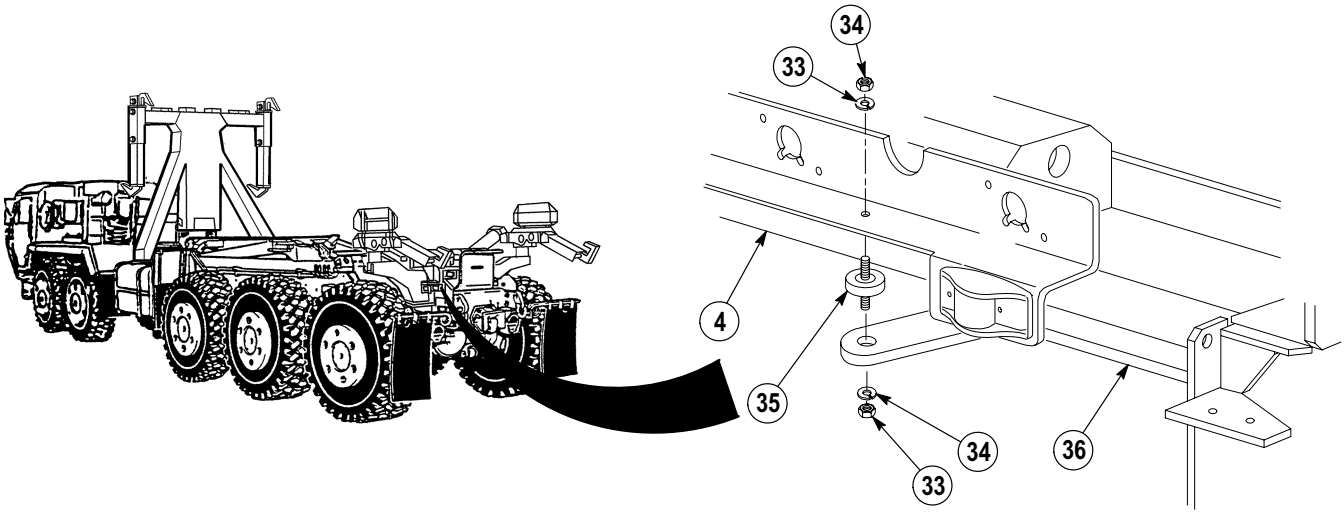

CAUTION

Use care when removing bracket to prevent wires from being damaged.

NOTE

- Perform Step (13) for both sides of rear light bar assembly.
- Lift and tilt bracket to remove mounts.

(13) Remove two nuts (33), lockwashers (34), mount (35), and rear light bar assembly (4) from right rear roller bracket (36). Discard lockwashers.

21-27. CONTAINER HANDLING UNIT (CHU) LIGHT BAR AND BRACKETS ASSEMBLY REPAIR (CONT).

b. Disassembly.

CAUTION

Use care when removing bracket to prevent wires from being damaged.

NOTE

- Perform Step (1) for both sides of rear light bar assembly.
- Note position of wires and ground wires prior to disassembly.

(1) Disconnect wire 1680 (1) from wire 490 (2).

(2) Remove two screws (3) from blackout lens cover (4).

(3) Remove blackout lamp (5) from blackout lamp socket (6).

(4) Remove two screws (7), locknuts (8), ground wire (9), blackout light assembly (10) and gasket (11) from rear light bar assembly (12). Discard locknuts.

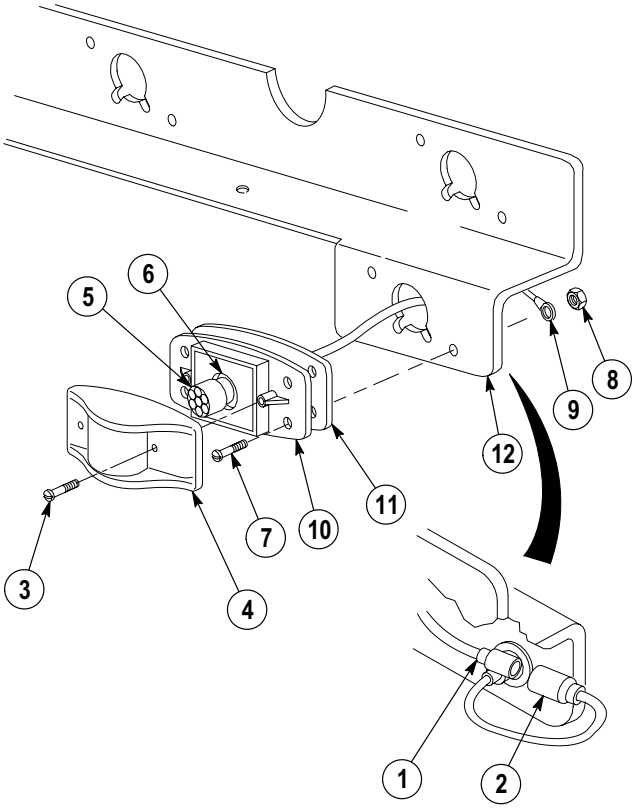

c. Cleaning and Inspection.

(1) Inspect all wires and connectors for damage.

(2) Inspect bulbs, LEDs and lens for cracks.

(3) Inspect all other parts for cracks or other damage.

(4) Replace all damaged parts. If entire marker light assembly is being replaced, new marker light assembly will be a LED.

d. Assembly.

CAUTION

Keep all moisture and oils off lamp. Do not touch lamp with bare hands. Use a clean dry, oil free cloth to hold lamp while installing lamp in blackout light.

NOTE

- There are two blackout lights. Both blackout lights are installed the same way.
- Install cable ties as required.
- Install ground wire as noted prior to removal.

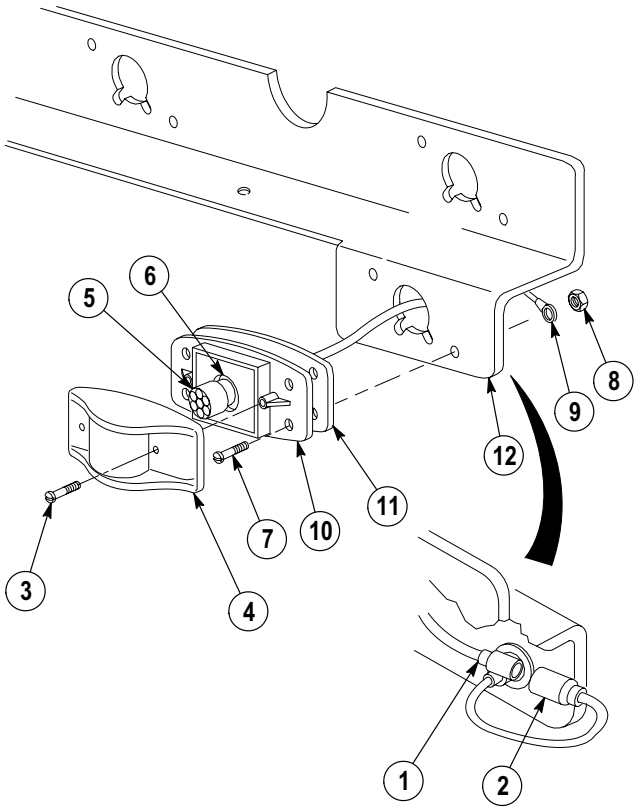

(1) Install gasket (11), blackout light assembly (10), two screws (7), ground wire (9) and two locknuts (8) on rear light bar assembly (12).

WARNING

Corrosion inhibitor contains alkali. Do not get in eyes; wear goggles/safety glasses when using. Avoid contact with skin. In case of contact, immediately wash area with soap and water. If eyes are contacted, flush eyes with large amounts of water for at least 15 minutes and get immediate medical attention.

(2) Apply anti-corrosion inhibitor silicone compound to inside of lamp socket (6).

(3) Install blackout lamp (5) in blackout lamp socket (6).

(4) Install lens cover (4) with two screws (3) in blackout light assembly (10).

(5) Connect wire 1680 (1) to wire 490 (2).

(6) Apply corrosive preventive compound to ground wire (9).

21-27. CONTAINER HANDLING UNIT (CHU) LIGHT BAR AND BRACKETS ASSEMBLY REPAIR (CONT).

e. Installation.

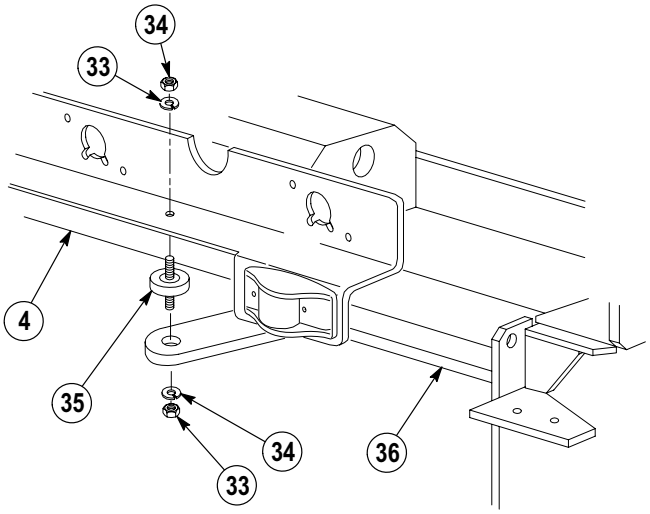

NOTE

- Perform Step (1) for both sides of rear light bar assembly.
- Install ground wire as noted prior to removal.
- Both marker light brackets are installed the same way. Right side is shown.

(1) Install mount (35), two lockwashers (34), nuts (33) and rear marker light assembly (4) in right rear roller bracket (36).

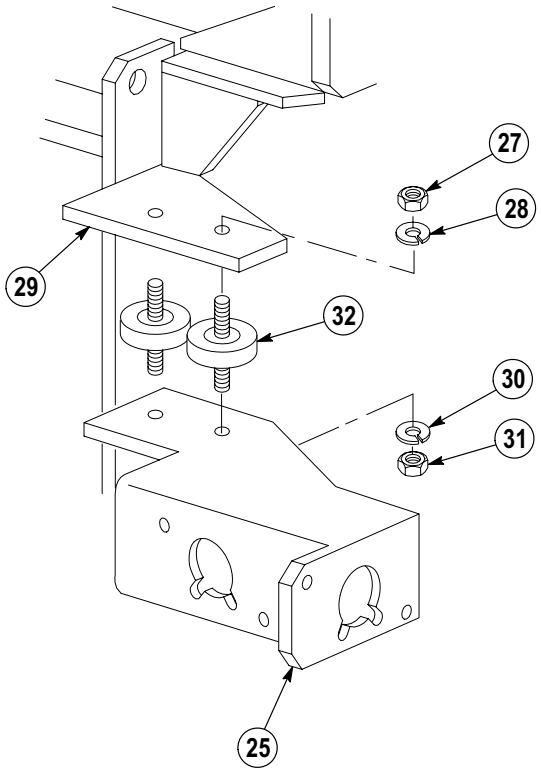

(2) Install two mounts (32) on marker light bracket (25) with two lockwashers (31) and nuts (30).

(3) Install marker light bracket (25) with two lockwashers (28) and nuts (27) on rear roller brackets (29).

(4) Repeat Steps (2) and (3) for left side of truck.

NOTE

- All seven red marker lights are installed the same way.
- Perform Steps (5) through (8) for rear marker light with lamp.
- Perform Steps (10) through (14) for rear marker light with LED.

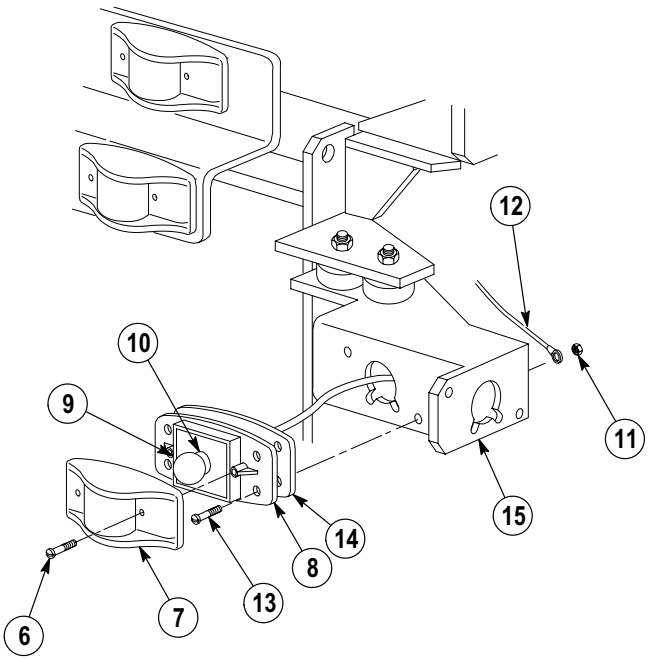

(5) Install gasket (14), marker light assembly (8), two screws (13), wire 1435 (12) and two locknuts (11) on marker light bracket (15).

WARNING

Corrosion inhibitor contains alkali. Do not get in eyes; wear goggles/safety glasses when using. Avoid contact with skin. In case of contact, immediately wash area with soap and water. If eyes are contacted, flush eyes with large amounts of water for at least 15 minutes and get immediate medical attention.

(6) Apply anti-corrosion silicone compound to inside of rear lamp socket (10).

(7) Install lamp (9) in lamp socket (10).

(8) Install lens cover (7) with two screws (6) in light assembly (8).

(9) Apply corrosive preventive compound to wire 1435 (12).

21-27. CONTAINER HANDLING UNIT (CHU) LIGHT BAR AND BRACKETS ASSEMBLY REPAIR (CONT).

(10) Position ground wire (23) through hole in marker light assembly (18).

(11) Install LED (26) in marker light assembly (18) and turn 1/4 turn clockwise.

(12) Install gasket (24), marker light assembly (18), two screws (22), ground wire (23), ground wire (21), wire 489 (20) and two locknuts (19) on marker light bracket (25).

(13) Install lens cover (17) with two screws (16) on marker light assembly (18).

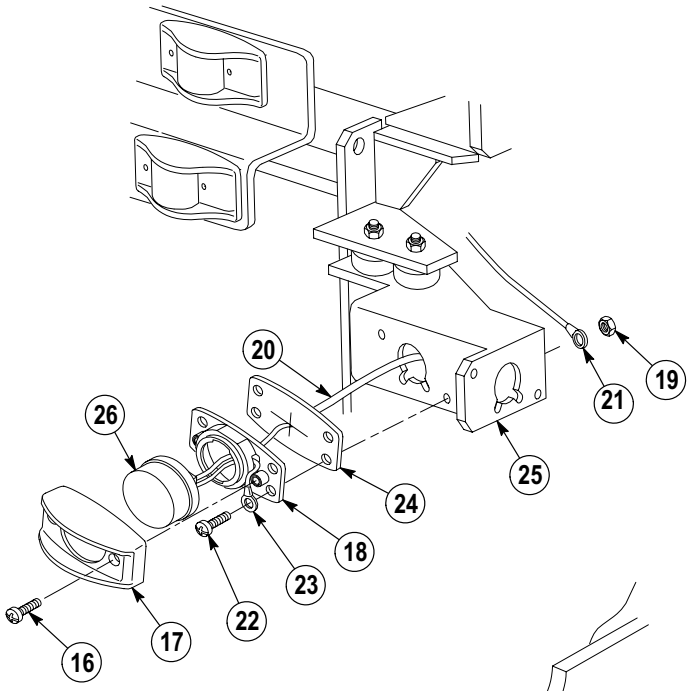

WARNING

Corrosion inhibitor contains alkali. Do not get in eyes; wear goggles/safety glasses when using. Avoid contact with skin. In case of contact, immediately wash area with soap and water. If eyes are contacted, flush eyes with large amounts of water for at least 15 minutes and get immediate medical attention.

(14) Apply corrosive preventive compound to ground wire (21).

(15) Connect wire 1012 (5) to wire 489 (3).

(16) Install push clip (2) and two wires 489 (3) on rear marker light assembly (4).

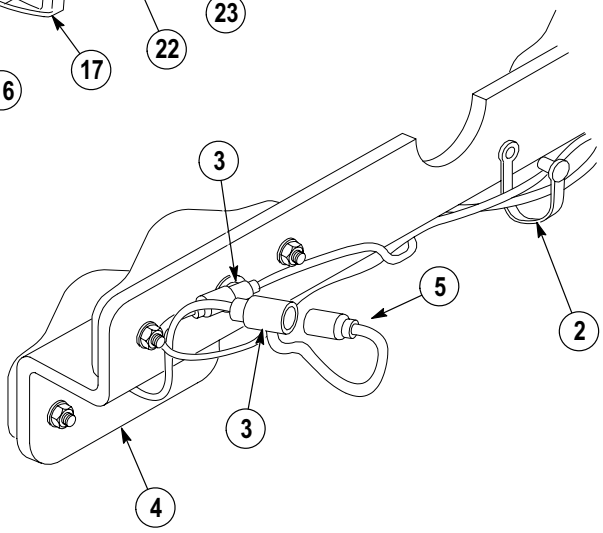

(17) Connect MC90 connector (1).

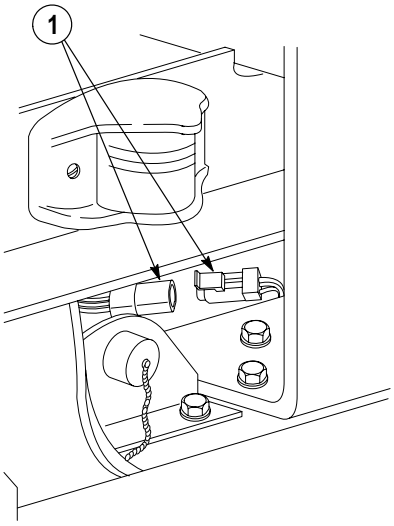

f. *Follow-On Maintenance:*

- Connect batteries, (Para 7-87).
- Check operation of rear marker light assembly, (TM 9-2320-364-10).
- Remove wheel chocks, (TM 9-2320-364-10).

END OF TASK

21-28. CONTAINER HANDLING UNIT (CHU) CONTAINER GUIDE REPAIR.

This task covers:

a. Removal
b. Disassembly
c. Cleaning/Inspection
d. Assembly
e. Installation
f. Follow-On Maintenance

INITIAL SETUP

Tools and Special Tools
Tool Kit, General Mechanic's: Automotive (Item 74, Appendix G)
Compressor Unit, Air (Item 11, Appendix G)
Gloves, Chemical Oil Protective (Item 28, Appendix G)
Goggles, Industrial (Item 30, Appendix G)
Gun, Air Blow (Item 31, Appendix G)

Equipment Condition
Engine OFF, (TM 9-2320-364-10)
Wheels chocked, (TM 9-2320-364-10)

a. Removal.

NOTE

- If CHU is in container mode, perform Step (1). If CHU is in flatrack mode, perform Step (2).
- There are two container guides. Left and right side are removed the same way. Left side is shown.

(1) Remove two lock pins (1) and container guide (2) from slider (3).

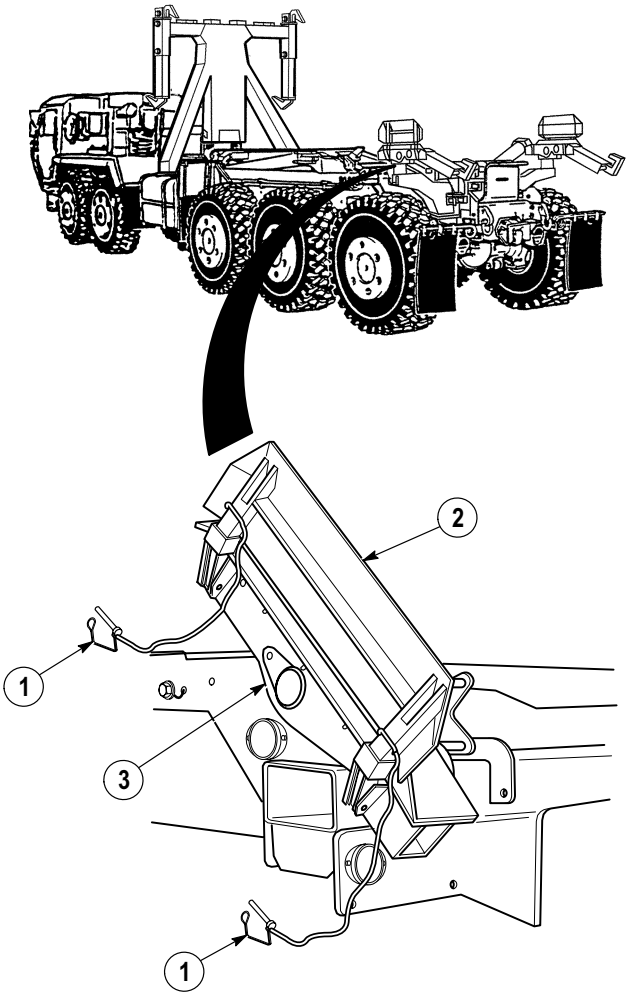

21-28. CONTAINER HANDLING UNIT (CHU) CONTAINER GUIDE REPAIR (CONT).

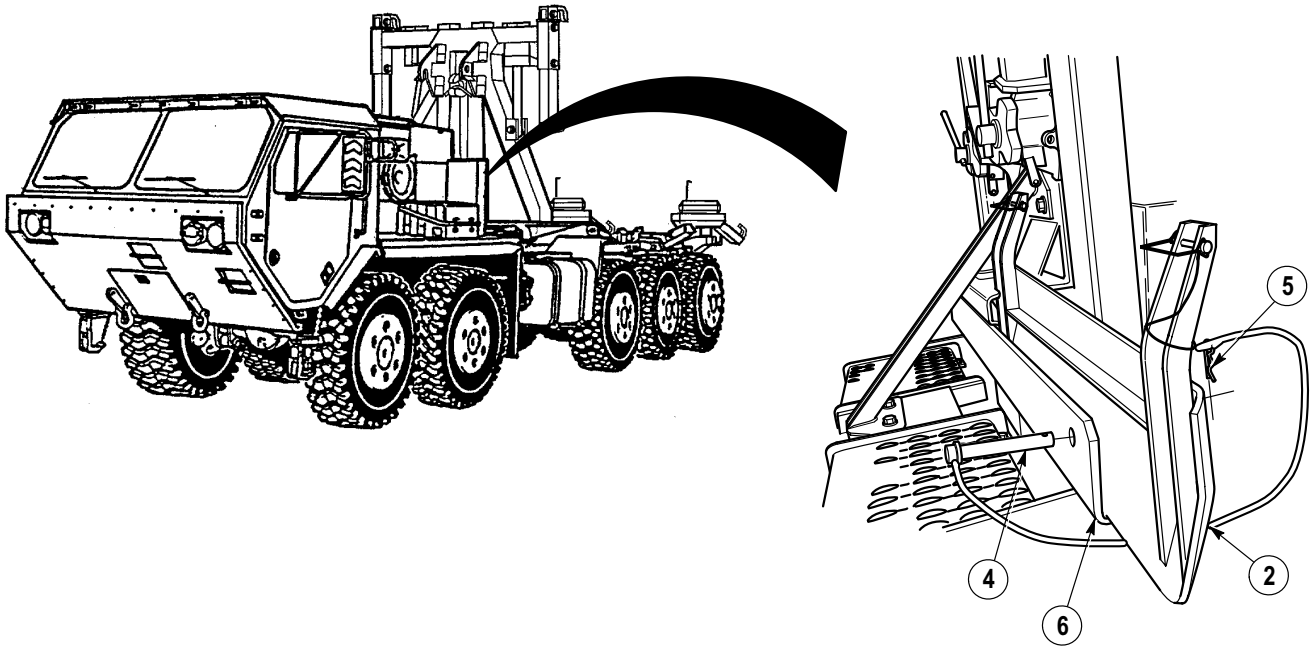

(2) Remove lock pin (4), pin (5) and container guide (2) from stow bracket (6).

b. Disassembly.

NOTE

- Perform Step (1) if wire rope or lock pin is damaged.
- There are two lock pins on container guide. Left side is shown.

(1) Remove two swaging sleeves (1), wire rope (2) and lock pin (3) from container guide (4). Discard wire rope and swaging sleeves.

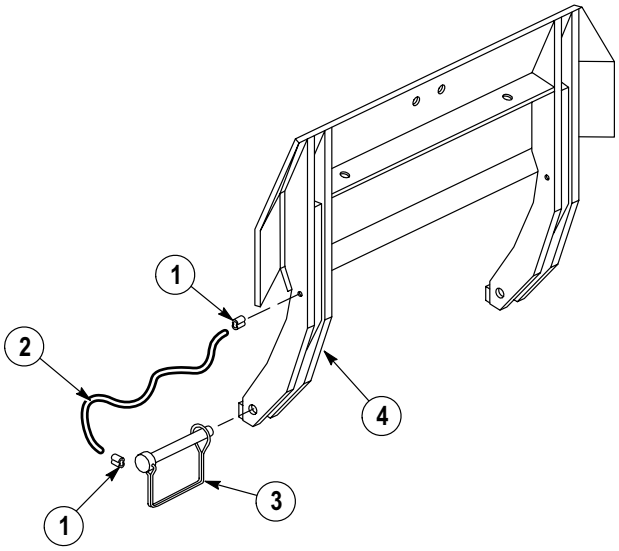

c. Cleaning/Inspection.

WARNING

- Drycleaning Solvent (P-D-680) is TOXIC and flammable. Wear protective goggles, face shield, and gloves; use only in a well-ventilated area; avoid contact with skin, eyes, and clothes, and do not breathe vapors. Keep away from heat or flame. Never smoke when using solvent. The flashpoint for Type II Drycleaning Solvent is 140 degrees F (60 degrees C) and Type III Drycleaning Solvent is 200 degrees F (93 degrees C). Failure to do so may result in injury or death to personnel.
- If personnel become dizzy while using cleaning solvent, immediately get fresh air and medical help. If solvent contacts skin or clothes, flush with cold water. If solvent contacts eyes, immediately flush eyes with water and get immediate medical attention.

(1) Clean all metal parts with drycleaning solvent.

WARNING

Compressed air used for cleaning purposes will not exceed 30 psi (207 kPa). Use only with effective chip guarding and personal protective equipment (goggles/shield, gloves, etc.) or injury to personnel may result.

(2) Dry parts with compressed air.

(3) Inspect parts for breaks, cracks, burrs and sharp edges. Look for unusual signs of wear on container guide.

(4) Replace all damaged parts.

d. Assembly.

NOTE

- Perform Step (1) if wire rope or lock pin were removed.
- There are two lock pins on container guide. Left side is shown.

(1) Install wire rope (2), swaging sleeves (1) and lock pin (3) on container guide (4).

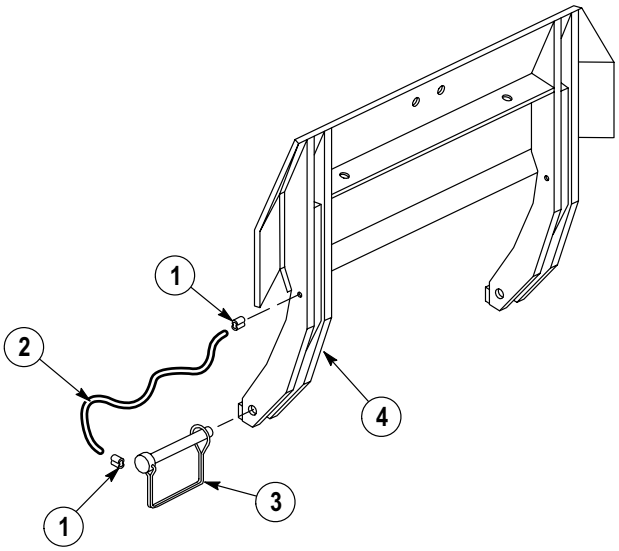

21-28. CONTAINER HANDLING UNIT (CHU) CONTAINER GUIDE REPAIR (CONT).

e. Installation.

NOTE

- If CHU is in flatrack mode, perform Step (1). If CHU is in container mode, perform Step (2).
- Installation of left and right side container guides is the same. Left side is shown.

(1) Install container guide (2) with pin (5) and lock pin (4) on stow bracket (6).

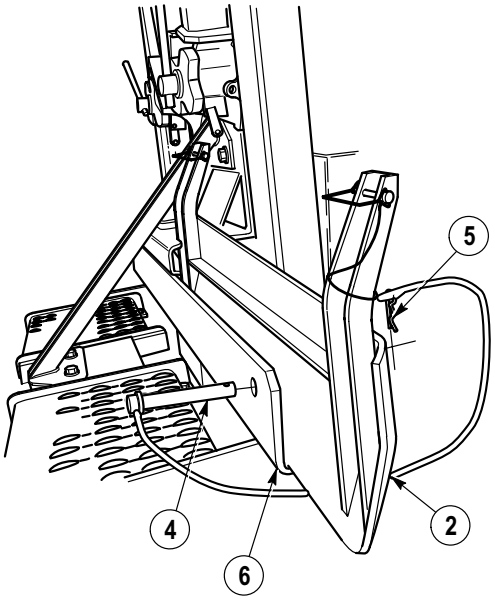

(2) Install container guide (2) on slider (3) with two lock pins (1).

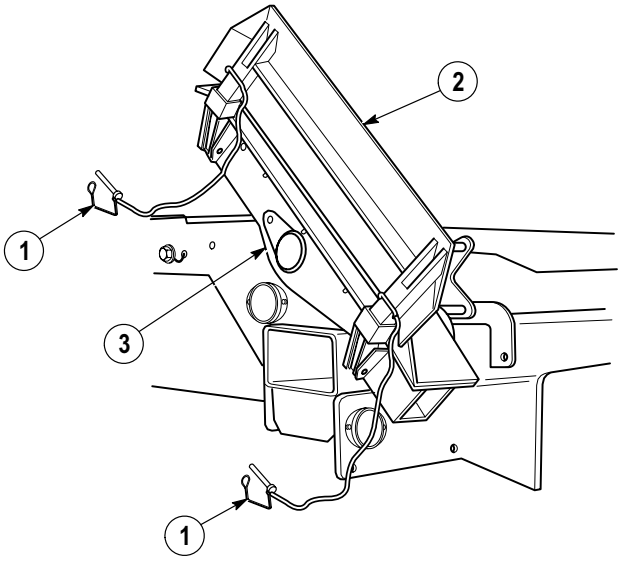

f. Follow-On Maintenance:

- Remove wheel chocks, (TM 9-2320-364-10).

END OF TASK

21-29. CONTAINER HANDLING UNIT (CHU) SLIDER/PIVOT ASSEMBLY REPAIR.

This task covers:

a. Removal
b. Disassembly
c. Cleaning/Inspection
d. Assembly
e. Installation
f. Follow-On Maintenance

INITIAL SETUP

Tools and Special Tools
Tool Kit, General Mechanic's: Automotive (Item 74, Appendix G)
Compressor Unit, Air (Item 11, Appendix G)
Gloves, Chemical Oil Protective (Item 28, Appendix G)
Goggles, Industrial (Item 30, Appendix G)
Gun, Air Blow (Item 31, Appendix G)
Lifting Device, Minimum Capacity 140 lbs (64 kg)
Pliers, Retaining Ring (Item 49, Appendix G)

Materials/Parts
Grease (Item 41, Appendix C)
Sealing Compound (Item 77, Appendix C)
Sealing Compound (Item 83, Appendix C)
Pin, Cotter (2) (Item 267, Appendix F)
Pin, Roll (Item 279, Appendix F)

Materials/Parts (cont)
Locknut (10) (Item 96, Appendix F)
Locknut (2) (Item 140, Appendix F)
Screw, Self-Tapping (2) (Item 314, Appendix F)
Seal (2) (Item 320, Appendix F)

Personnel Required
Two

Equipment Condition
Engine OFF, (TM 9-2320-364-10)
Wheels chocked, (TM 9-2320-364-10)
Limit switch removed, (Para 21-26)
Slider in container mode, (TM 9-2320-364-10)

21-29. CONTAINER HANDLING UNIT (CHU) SLIDER/PIVOT ASSEMBLY REPAIR (CONT).

a. Removal.

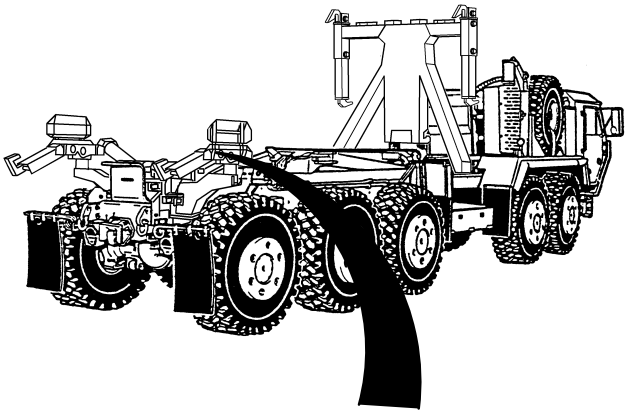

NOTE

- Left side and right side slider/pivot assembly are identical unless noted.
- Right side slider/pivot assembly is shown.

WARNING

Slider weighs 142 lbs (64 kg). Attach suitable lifting device to prevent possible injury to personnel.

(1) Attach lifting device to slider assembly (1).

WARNING

Use care when removing snap and retaining rings. Snap and retaining rings are under spring tension and can act as projectiles when released and could cause severe eye injury.

(2) Remove retaining ring (2) and spacer (3) from pivot pin (4) and slider assembly (1). Discard retaining ring.

(3) With the aid of an assistant, remove slider assembly (1) from arm assembly (5).

(4) Position slider assembly (1) on clean work surface and remove lifting device.

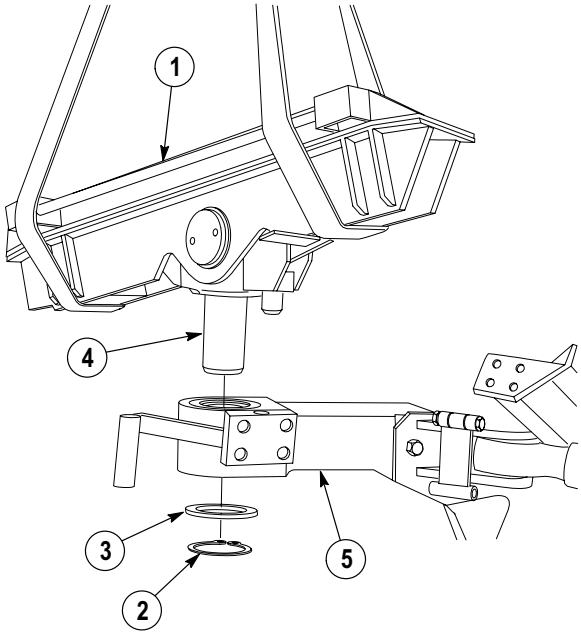

b. Disassembly.

WARNING

Use care when removing snap and retaining rings. Snap and retaining rings are under spring tension and can act as projectiles when released and could cause severe eye injury.

(1) With the aid of an assistant, remove retaining ring (1), pivot pin (2), spacer (3) and slider pivot (4) from slider (5).

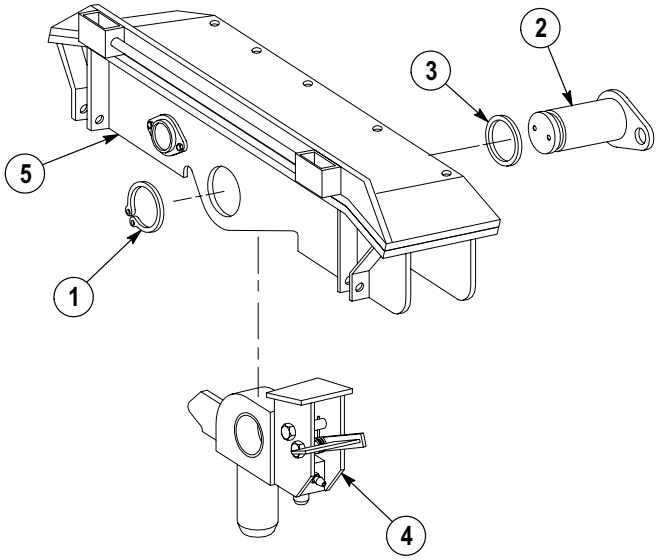

NOTE

Note position of torsion spring prior to removal.

(2) Remove locknut (6) from screw (7). Discard locknut.

WARNING

Use care when removing springs. Springs are under tension and can act as projectiles when released and could cause injury to personnel.

(3) Push in on end of torsion spring (8) and remove screw (7) from slider pivot (4).

(4) Remove locknut (9), screw (10), torsion spring (8) and pivot lock arm (11) from slider pivot (4). Release torsion spring and discard locknut.

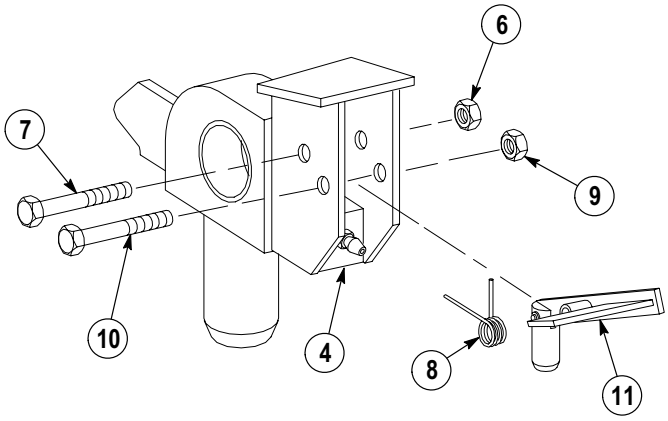

(5) Remove two cotter pins (12), washers (13), pivot lock slot pin (14) and pivot lock pin (15) from pivot lock arm (11). Discard cotter pins.

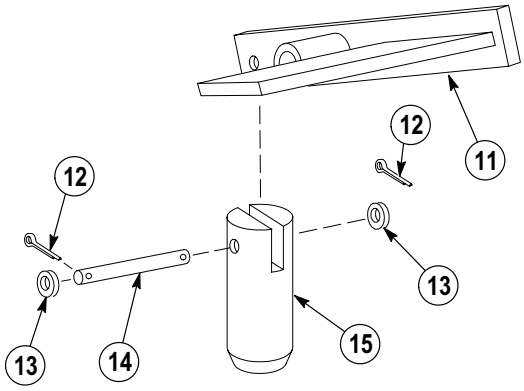

21-29. CONTAINER HANDLING UNIT (CHU) SLIDER/PIVOT ASSEMBLY REPAIR (CONT).

(6) Remove two grease fittings (16) from slider pivot (4).

(7) Remove two seals (17) from slider pivot (4). Discard seals.

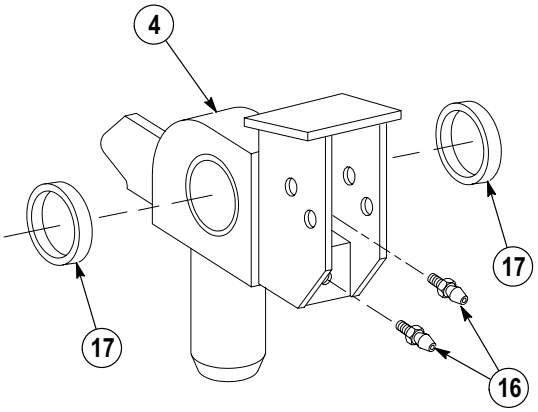

(8) Remove ten socket head screws (18), locknuts (19) and wear plate (20) from slider (5). Discard locknuts.

(9) Remove two self-tapping screws (21), reflector (22) and reflector housing (23) from slider (5). Discard self-tapping screws.

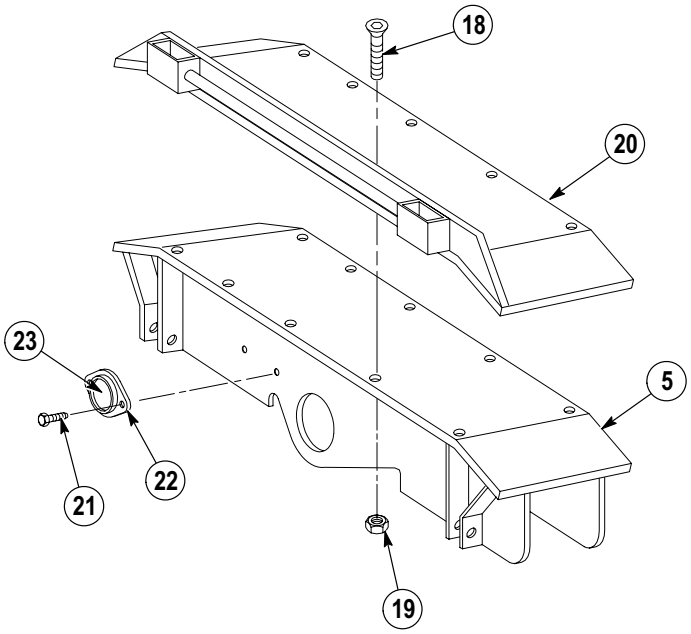

(10) Remove grease fitting (24) from slider (5).

(11) Remove roll pin (25), handle (26), spring (27) and pin (28) from slider (5). Discard roll pin.

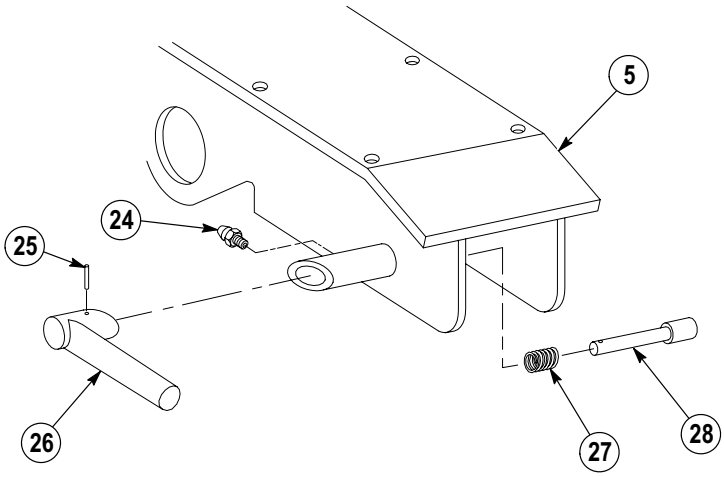

c. Cleaning/Inspection.

WARNING

- Drycleaning Solvent (P-D-680) is TOXIC and flammable. Wear protective goggles, face shield, and gloves; use only in a well-ventilated area; avoid contact with skin, eyes, and clothes, and do not breathe vapors. Keep away from heat or flame. Never smoke when using solvent. The flashpoint for Type II Drycleaning Solvent is 140 degrees F (60 degrees C) and Type III Drycleaning Solvent is 200 degrees F (93 degrees C). Failure to do so may result in injury or death to personnel.
- If personnel become dizzy while using cleaning solvent, immediately get fresh air and medical help. If solvent contacts skin or clothes, flush with cold water. If solvent contacts eyes, immediately flush eyes with water and get immediate medical attention.

(1) Clean all metal parts with drycleaning solvent.

WARNING

Compressed air used for cleaning purposes will not exceed 30 psi (207 kPa). Use only with effective chip guarding and personal protective equipment (goggles/shield, gloves, etc.) or injury to personnel may result.

(2) Dry parts with compressed air.

(3) Inspect parts for breaks, cracks, burrs and sharp edges. Look for unusual signs of wear on slider.

(4) Replace all damaged parts.

d. Assembly.

(1) Install spring (27), pin (28), handle (26) and roll pin (25) on slider (5).

(2) Install grease fitting (24) on slider (5).

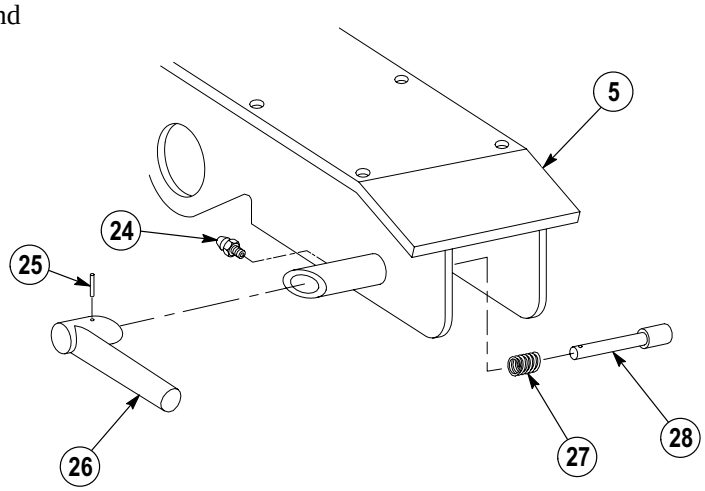

21-29. CONTAINER HANDLING UNIT (CHU) SLIDER/PIVOT ASSEMBLY REPAIR (CONT).

(3) Install reflector housing (23), reflector (22) and two self-tapping screws (21) on slider (5).

(4) Position wear plate (20) on slider (5) and install ten socket head screws (18) and locknuts (19).

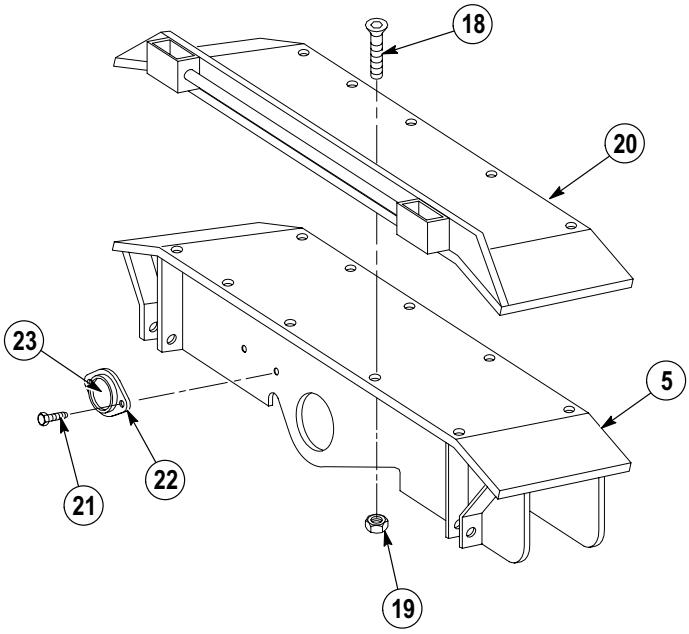

NOTE

Seals must be installed with open groove to the outside.

(5) Install two seals (17) in slider pivot (4).

(6) Install two grease fittings (16) in slider pivot (4).

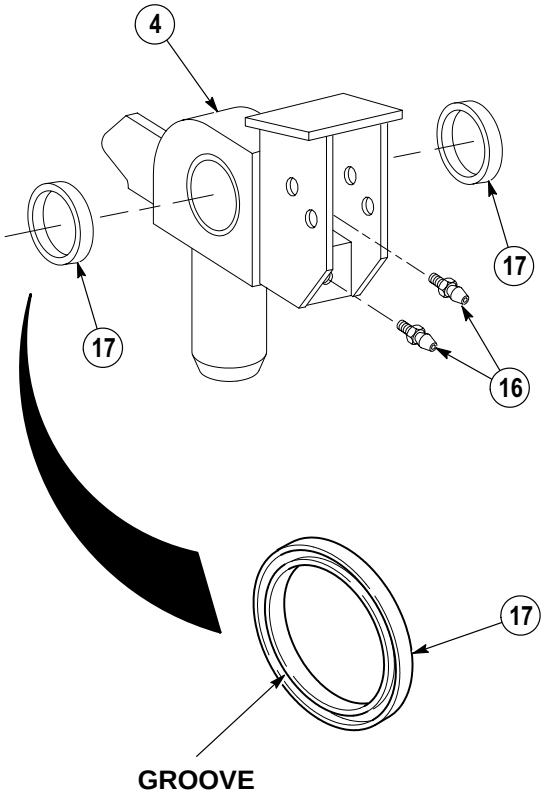

(7) Install pivot lock pin (15), pivot lock slot pin (14), two washers (13) and cotter pins (12) on pivot lock arm (11).

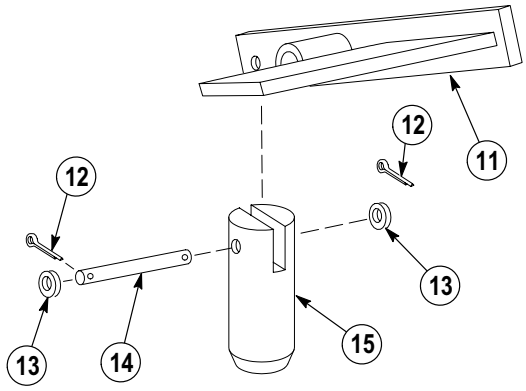

NOTE

Ensure torsion spring is installed as noted prior to removal.

(8) Install pivot lock arm (11), torsion spring (8), screw (10) and locknut (9) in slider pivot (4).

(9) Push in on end of torsion spring (8) and install screw (7) and locknut (6) in slider pivot (4).

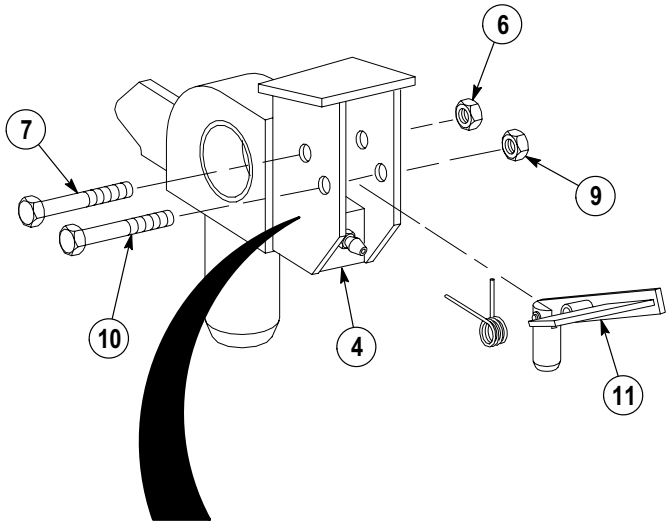

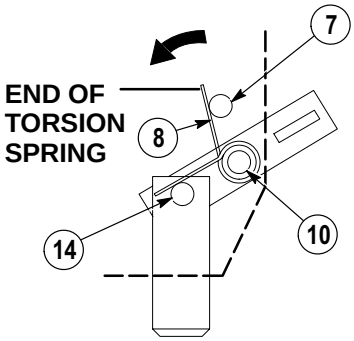

21-29. CONTAINER HANDLING UNIT (CHU) SLIDER/PIVOT ASSEMBLY REPAIR (CONT).

NOTE

Ensure end of pivot pin aligns with stud on slider during installation.

(10) With the aid of an assistant, position slider pivot (4) in slider (5) and install spacer (3), pivot pin (2) and retaining ring (1).

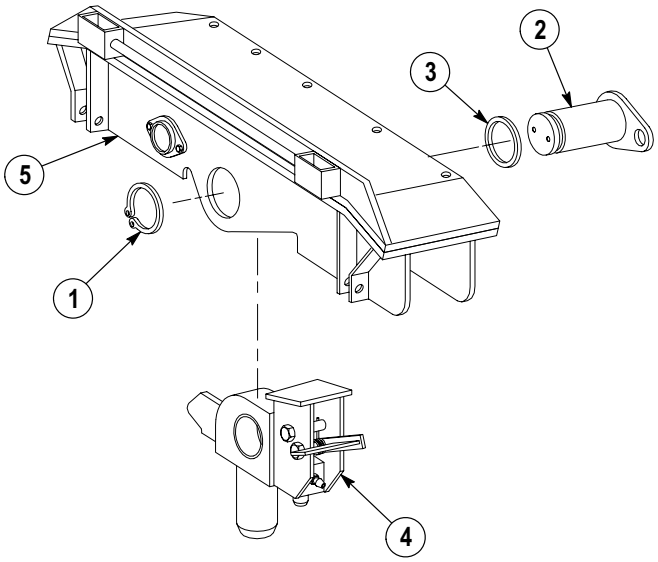

e. Installation.

WARNING

Slider weights 142 lbs (64 kg). Attach suitable lifting device to prevent possible injury to personnel.

(1) Attach lifting device to slider assembly (1).

(2) Apply light coat of grease to outer surface of slider pivot pin (4), washer (3) and retaining ring (2).

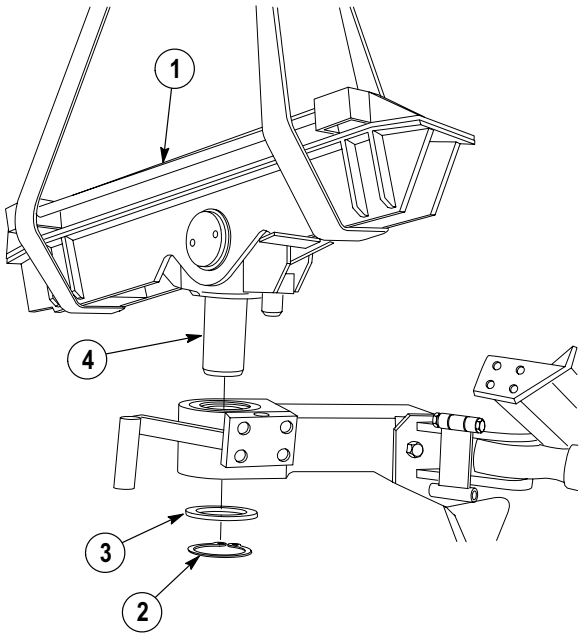

NOTE

Ensure retaining ring is fully seated in Step (3).

(3) With the aid of an assistant, position slider pivot pin (4) in arm assembly (5) and install washer (3) and retaining ring (2).

(4) Remove lifting device from slider assembly (1).

(5) Check that pivot lock pin (6) properly locks into handle (7).

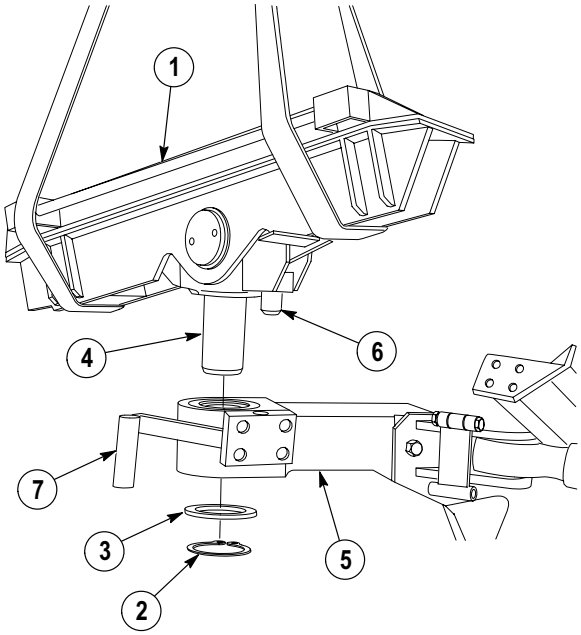

NOTE

If pivot lock pin does not properly lock into handle perform Steps (6) through (10).

(6) Remove four screws (8), shim(s) (9) (if present) and handle (7) from arm assembly (5).

(7) Remove or add shim(s) (9) to arm assembly (5) as required.

WARNING

Adhesives, solvents, and sealing compounds can burn easily, can give off harmful vapors, and are harmful to skin and clothing. To avoid injury or death, keep away from open fire and use in well-ventilated area. If adhesive, solvent, or sealing compound gets on skin or clothing, wash immediately with soap and water.

(8) Apply sealing compound (loctite 242) to threads of four screws (8).

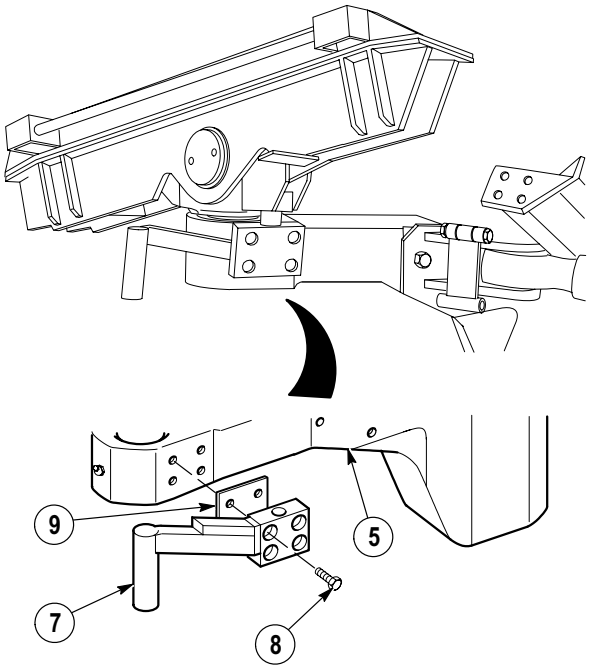

21-29. CONTAINER HANDLING UNIT (CHU) SLIDER/PIVOT ASSEMBLY REPAIR (CONT).

(9) Install four screws (8), handle (7) and shim(s) (9) (as required) on right arm assembly (5).

(10) Repeat Step (5).

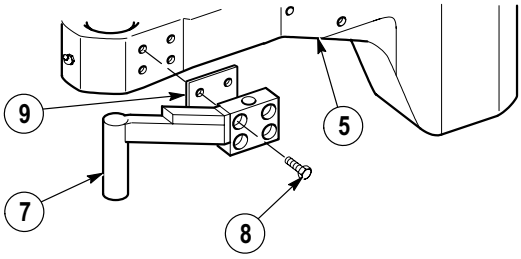

f. Follow-On Maintenance:

- Install limit switch, (Para 21-26).
- Lubricate CHU slider/pivot assembly, (TM 9-2320-364-10).
- Remove wheel chocks, (TM 9-2320-364-10).

END OF TASK

21-30. CONTAINER HANDLING UNIT (CHU) SHORT STRUT AND PIN BRACKET ASSEMBLY REPAIR.

This task covers:

a. Removal
b. Disassembly
c. Cleaning/Inspection
d. Assembly
e. Installation
f. Adjustment
g. Follow-On Maintenance

INITIAL SETUP

Tools and Special Tools
Tool Kit, General Mechanic's: Automotive (Item 74, Appendix G)
Compressor Unit, Air (Item 11, Appendix G)
Gloves, Chemical Oil Protective (Item 28, Appendix G)
Goggles, Industrial (Item 30, Appendix G)
Gun, Air Blow (Item 31, Appendix G)
Pliers, Retaining Ring (Item 49, Appendix G)

Materials/Parts
Antiseize Compound (Item 21, Appendix C)
Sealing Compound (Item 83, Appendix C)

Personnel Required
Two

Equipment Condition
Engine OFF, (TM 9-2320-364-10)
Wheels chocked, (TM 9-2320-364-10)
Slider arm in container mode, (TM 9-2320-364-10)

a. Removal.

NOTE

- There are two pin bracket assemblies. Both are removed the same way. Right side is shown.
- Do not support slider arm with flip lock.

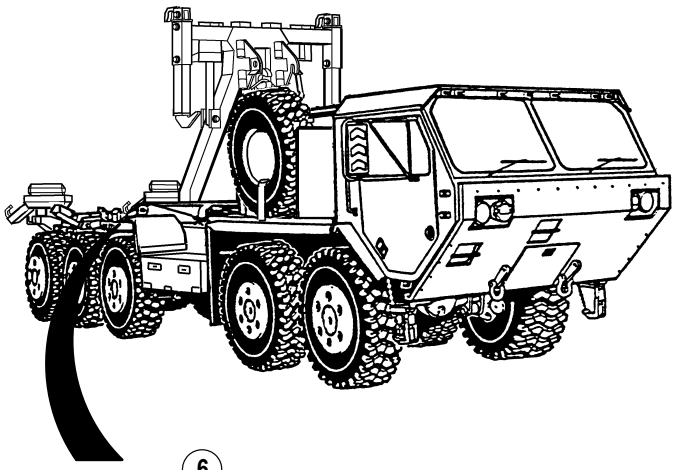

(1) With the aid of an assistant, remove quick release pin (1) and pin (2) from short strut (3) and long strut (4).

(2) With the aid of an assistant, rotate slider arm (5) toward front of truck.

WARNING

Use care when removing springs. Springs are under tension and can act as projectiles when released and could cause injury to personnel.

(3) Unhook spring (6) from wire (7).

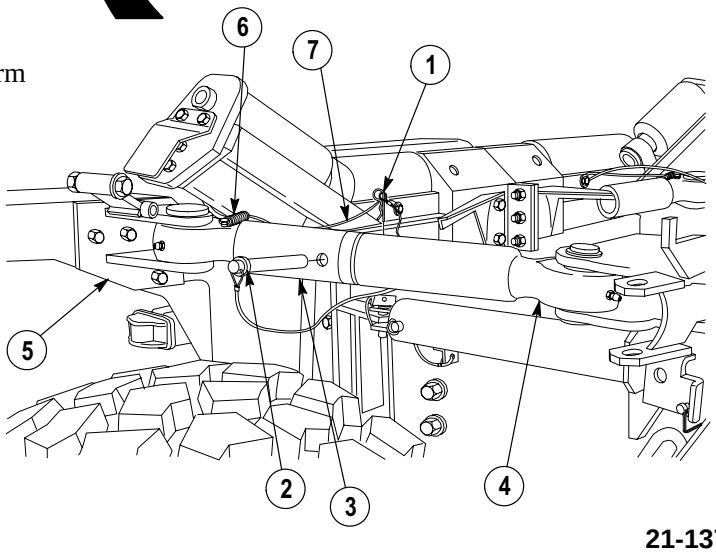

21-30. CONTAINER HANDLING UNIT (CHU) SHORT STRUT AND PIN BRACKET ASSEMBLY REPAIR (CONT).

WARNING

Use care when removing snap and retaining rings. Snap and retaining rings are under spring tension and can act as projectiles when released and could cause severe eye injury.

(4) Remove retaining ring (8) and ring support (9) from short strut (3).

(5) Remove short strut (3) and spacer (10) from pin bracket (11).

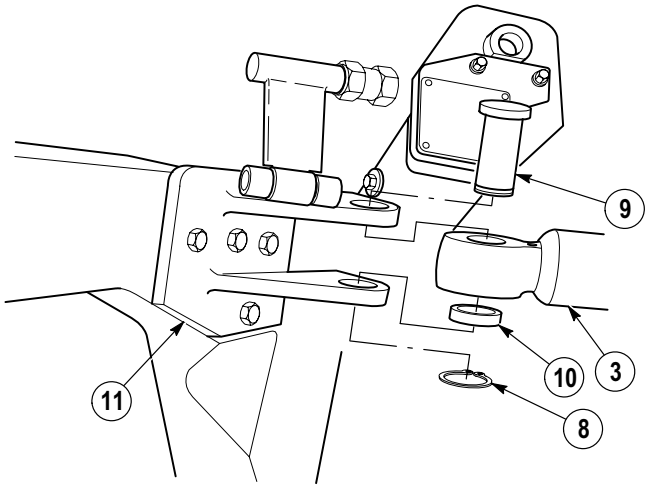

(6) Remove four screws (12) and pin bracket (11) from arm assembly (13).

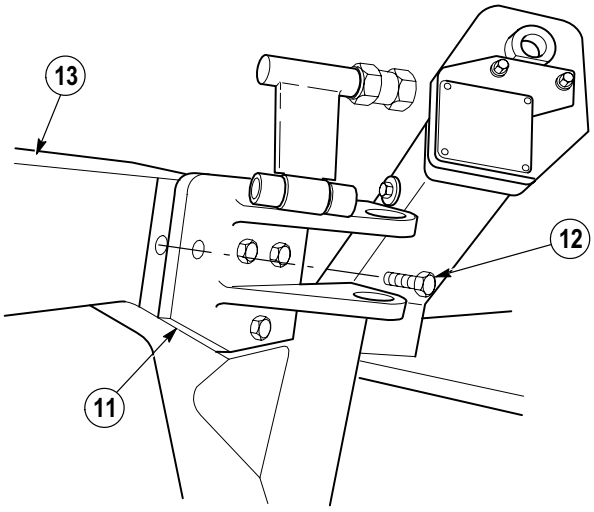

b. Disassembly.

NOTE

Perform Steps (1) through (5) only if components are damaged.

(1) Remove screw (1), washer (2), washer (3) and spring (4) from short strut (5).

(2) Remove grease fitting (6) from short strut (5).

(3) Remove retaining ring (7), spacer (8) and bearing (9) from short strut (5).

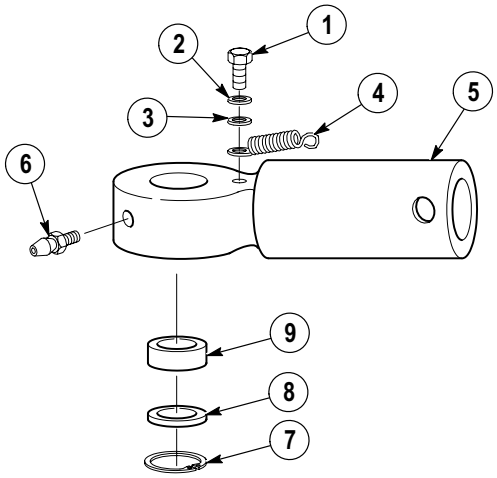

(4) Remove screw (10) and jam nut (11) from flip lock (12).

(5) Remove roll pin (13), pin (14) and flip lock (12) from pin bracket (15).

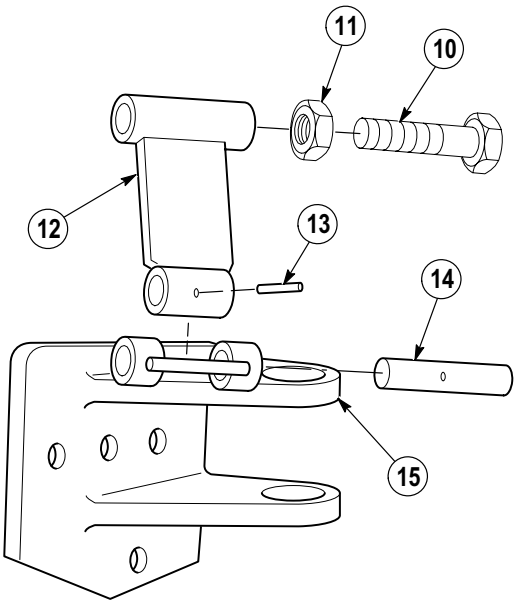

c. Cleaning/Inspection.

WARNING

- Drycleaning Solvent (P-D-680) is TOXIC and flammable. Wear protective goggles, face shield, and gloves; use only in a well-ventilated area; avoid contact with skin, eyes, and clothes, and do not breathe vapors. Keep away from heat or flame. Never smoke when using solvent. The flashpoint for Type II Drycleaning Solvent is 140 degrees F (60 degrees C) and Type III Drycleaning Solvent is 200 degrees F (93 degrees C). Failure to do so may result in injury or death to personnel.
- If personnel become dizzy while using cleaning solvent, immediately get fresh air and medical help. If solvent contacts skin or clothes, flush with cold water. If solvent contacts eyes, immediately flush eyes with water and get immediate medical attention.

(1) Clean all metal parts with drycleaning solvent.

WARNING

Compressed air used for cleaning purposes will not exceed 30 psi (207 kPa). Use only with effective chip guarding and personal protective equipment (goggles/shield, gloves, etc.) or injury to personnel may result.

(2) Dry parts with compressed air.

(3) Inspect parts for breaks, cracks, burrs and sharp edges. Look for unusual signs of wear on short strut.

(4) Replace all damaged parts.

21-30. CONTAINER HANDLING UNIT (CHU) SHORT STRUT AND PIN BRACKET ASSEMBLY REPAIR (CONT).

d. Assembly.

NOTE

Perform Steps (1) through (7) only if components were removed.

(1) Install flip lock (12) to pin bracket (15) with roll pin (13) and pin (14).

(2) Position jam nut (11) on screw (10) and install screw (10) on flip lock (12). Do not tighten nut.

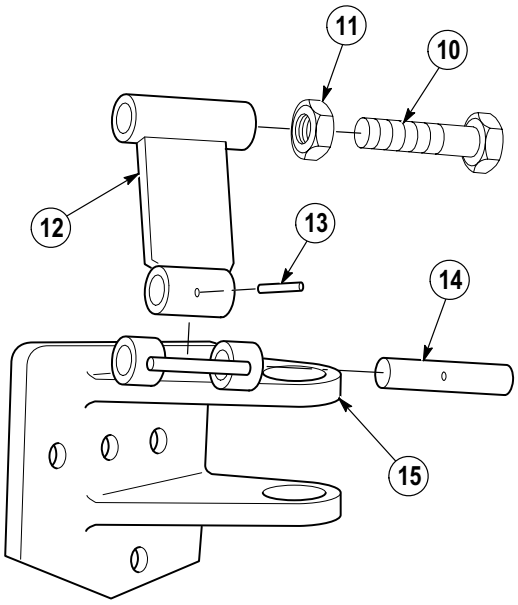

WARNING

Adhesives, solvents, and sealing compounds can burn easily, can give off harmful vapors, and are harmful to skin and clothing. To avoid injury or death, keep away from open fire and use in well-ventilated area. If adhesive, solvent, or sealing compound gets on skin or clothing, wash immediately with soap and water.

(3) Apply a light coat of antiseize to outer surface of bearing (9).

(4) Install bearing (9), spacer (8) and retaining ring (7) in short strut (5).

(5) Install grease fitting (6) in short strut (5).

(6) Apply sealing compound to threads of screw (1).

(7) Install spring (4), washer (3), washer (2) and screw (1) on short strut (5).

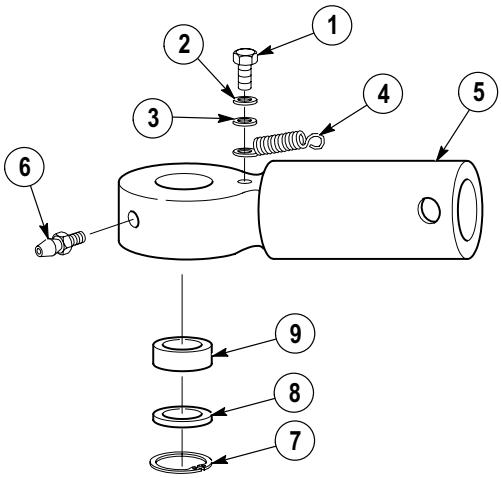

e. Installation.

WARNING

Adhesives, solvents, and sealing compounds can burn easily, can give off harmful vapors, and are harmful to skin and clothing. To avoid injury or death, keep away from open fire and use in well-ventilated area. If adhesive, solvent, or sealing compound gets on skin or clothing, wash immediately with soap and water.

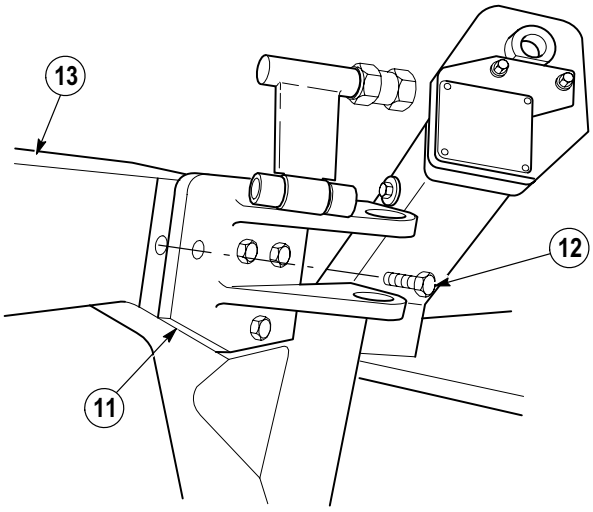

NOTE

There are two pin bracket assemblies. Both are installed the same way. Right side is shown.

(1) Apply sealing compound to threads of four screws (12).

(2) Install four screws (12) and pin bracket (11) on arm assembly (13).

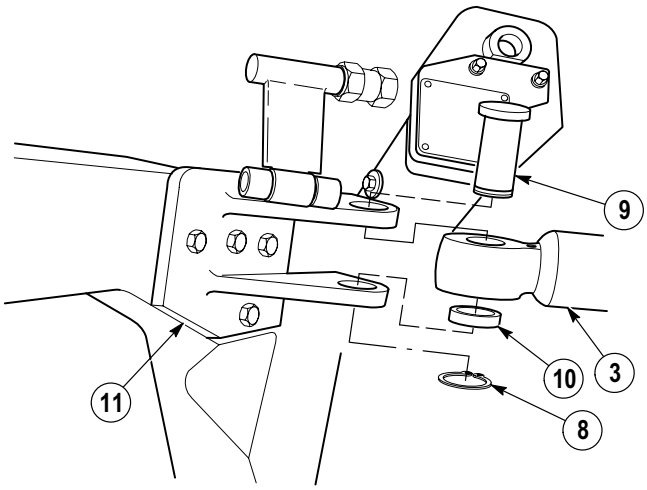

WARNING

Use care when installing snap and retaining rings. Snap and retaining rings are under spring tension and can act as projectiles when released and could cause severe eye injury.

NOTE

Beveled edge of spacer faces bearing in short strut.

(3) Install ring support (9), spacer (10), short strut (3) and retaining ring (8) on pin bracket (11).

(4) Hook spring (6) on wire (7).

(5) With the aid of an assistant, support slider arm (5) and position short strut (3) in long strut (4) and install pin (2) and quick release pin (1).

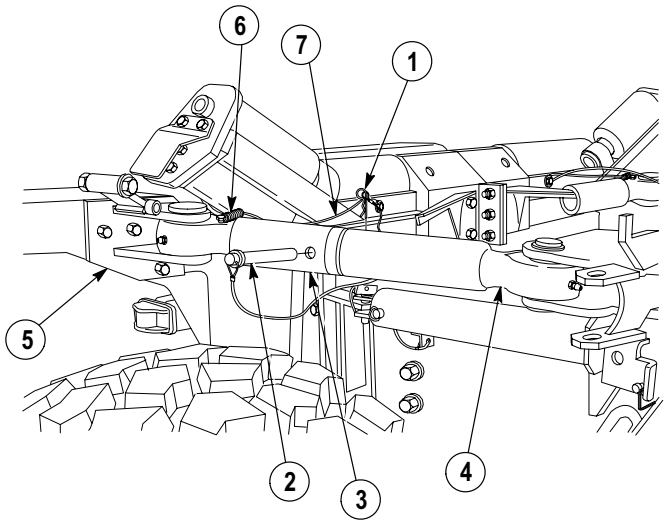

21-30. CONTAINER HANDLING UNIT (CHU) SHORT STRUT AND PIN BRACKET ASSEMBLY REPAIR (CONT).

f. Adjustment.

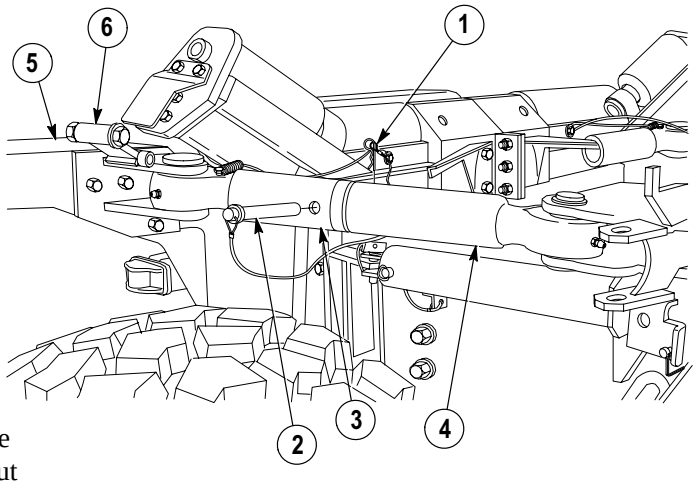

NOTE

- Ensure slider arm is deployed.
- Both flip lock brackets are adjusted the same way. Right side shown.

(1) Remove quick release pin (1) and pin (2) from short strut (3) and long strut (4).

(2) With the aid of an assistant and using handle of arm assembly (5), rotate arm assembly out and separate short strut (3) from long strut (4).

(3) With assistant holding arm assembly (5) out, position flip lock (6) up.

(4) Measure gap between stop bolt (7) and right rear roller bracket (8).

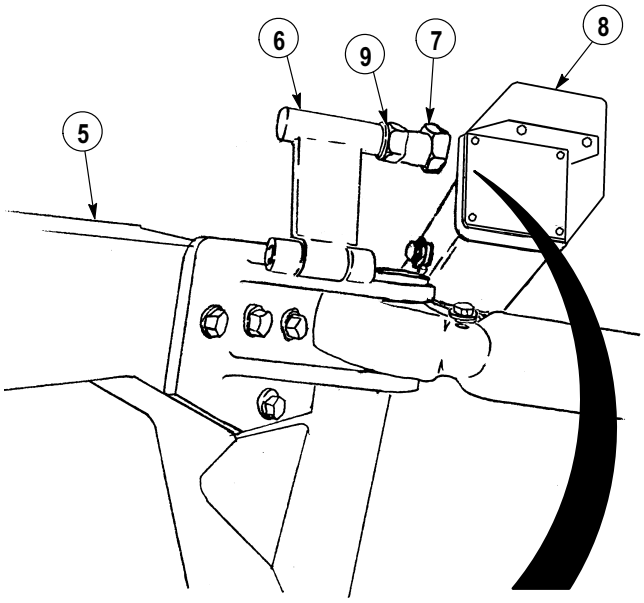

NOTE

- If gap is not 3/8 in. ± 1/8 in. (9.5 mm ± 3.2 mm), perform Steps (5) and (6).
- If gap is 3/8 in. ± 1/8 in. (9.5 mm ± 3.2 mm), go to Step (8).
- If dimension of gap is greater than 1.25 in. (3.18 cm) following adjustment or proper adjustment can not be done, replace stop bolt with 2.50 in. (6.35 cm) long stop bolt.

(5) Loosen jam nut (9) and adjust stop bolt (7) as required.

(6) Tighten jam nut (9) on stop bolt (7).

(7) If proper adjustment could not be made repeat Steps (3) through (6) using longer bolt.

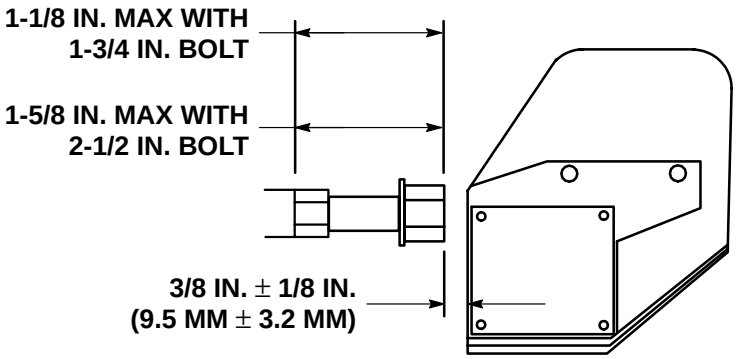

(8) Align long strut (4) with short strut (3).

(9) Using handle of arm assembly (5), rotate arm assembly out and release flip lock (6).

(10) Position long strut (4) into short strut (3) and install pin (2) and quick release pin (1).

(11) Repeat Steps (1) through (10) for left side.

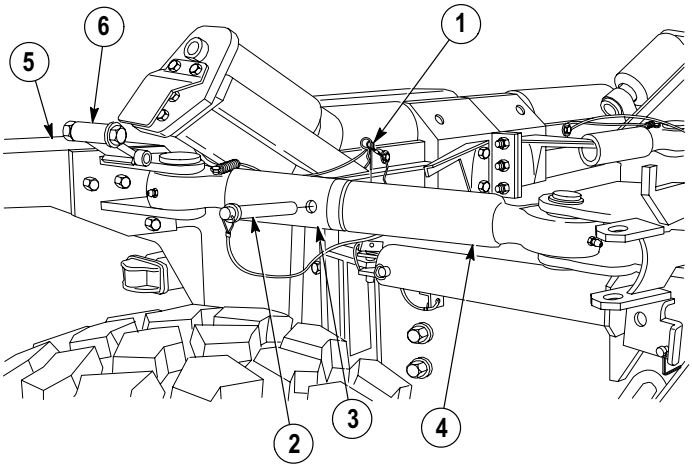

g. Follow-On Maintenance:

- Lubricate rear slider arm, (TM 9-2320-364-10).
- Remove wheel chocks, (TM 9-2320-364-10).

END OF TASK

21-31. CONTAINER HANDLING UNIT (CHU) SLIDER ARM ASSEMBLY REPAIR.

This task covers:

a. Removal
b. Disassembly
c. Cleaning/Inspection
d. Assembly
e. Installation
f. Follow-On Maintenance

INITIAL SETUP

Tools and Special Tools
Tool Kit, General Mechanic's: Automotive (Item 74, Appendix G)
Compressor Unit, Air (Item 11, Appendix G)
Gloves, Chemical Oil Protective (Item 28, Appendix G)
Goggles, Industrial (Item 30, Appendix G)
Gun, Air Blow (Item 31, Appendix G)
Lifting Device, Minimum Capacity 240 lbs. (109 kg)
Pliers, Retaining Ring (Item 49, Appendix G)

Materials/Parts
Adhesive (Item 2, Appendix C)
Grease (Item 41, Appendix C)
Sealing Compound (Item 73, Appendix C)
Sealing Compound (Item 77, Appendix C)

Materials/Parts (cont)
Sealing Compound (Item 79, Appendix C)
Preformed Packing (Item 238, Appendix F)
Preformed Packing (Item 239, Appendix F)
Seal (Item 322, Appendix F)
Seal (Item 323, Appendix F)

Personnel Required
Two

Equipment Condition
Wheels chocked, (TM 9-2320-364-10)
Engine OFF, (TM 9-2320-364-10)
Slider/Pivot assembly removed, (Para 21-29)
Pin bracket assembly removed, (Para 21-30)
Horizontal roller removed, (Para 15-15)

a. Removal.

WARNING

Arm assembly weighs 240 lbs (109 kg). Attach suitable lifting device to prevent possible injury to personnel.

NOTE

There are two arm assemblies. Both are removed the same way. Right side is shown.

(1) Attach lifting device to arm assembly (1).

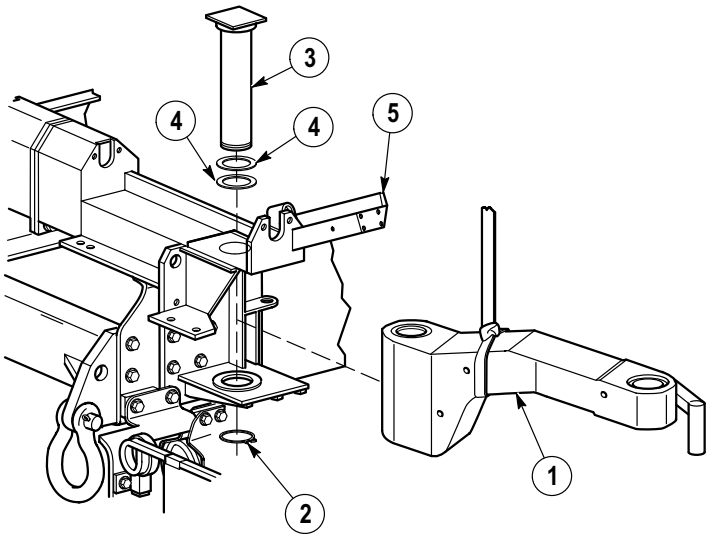

WARNING

Use care when removing snap and retaining rings. Snap and retaining rings are under spring tension and can act as projectiles when released and could cause severe eye injury.

NOTE

Note quantity of shims prior to removal.

(2) Remove retaining ring (2), pivot pin (3) and shim(s) (4) from rear roller bracket (5) and arm assembly (1).

(3) With the aid of an assistant, remove arm assembly (1) from rear roller bracket (5).

(4) Position arm assembly (1) on clean work surface and remove lifting device.

21-31. CONTAINER HANDLING UNIT (CHU) SLIDER ARM ASSEMBLY REPAIR (CONT).

b. Disassembly.

(1) Remove seal (1), thrust washer (2) and preformed packing (3) from large end of arm assembly (4). Discard seal and preformed packing.

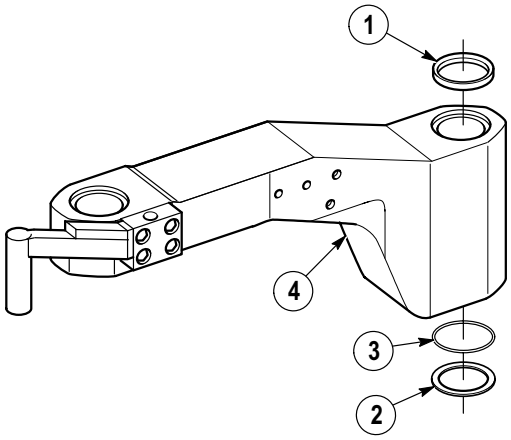

(2) Remove seal (5), preformed packing (6) and thrust washer (7) from small end of arm assembly (4). Discard seal and preformed packing.

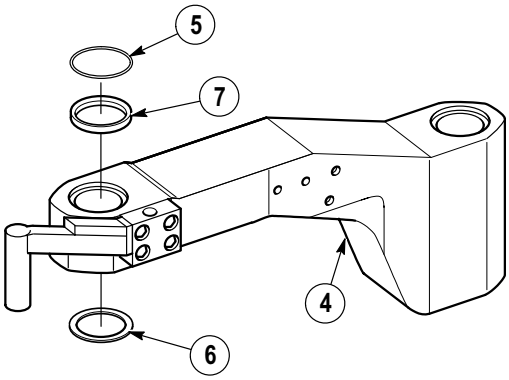

NOTE

Note quantity of shim(s) for assembly.

(3) Remove four screws (8), handle (9) and shim(s) (10) from arm assembly (4).

(4) Remove grease fittings (11) and grease fitting (12) from arm assembly (4).

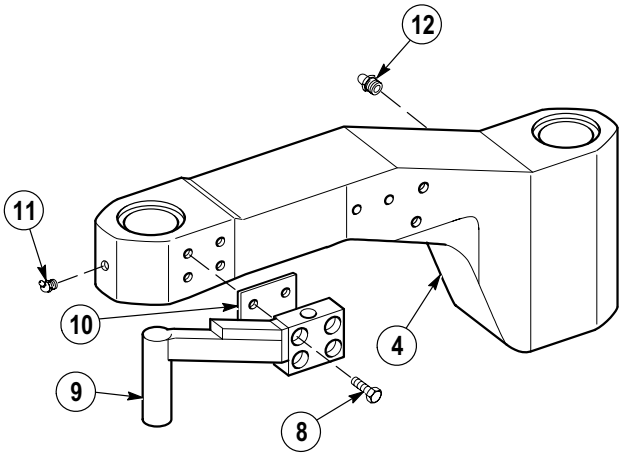

c. Cleaning/Inspection.

WARNING

- Drycleaning Solvent (P-D-680) is TOXIC and flammable. Wear protective goggles, face shield, and gloves; use only in a well-ventilated area; avoid contact with skin, eyes, and clothes, and do not breathe vapors. Keep away from heat or flame. Never smoke when using solvent. The flashpoint for Type II Drycleaning Solvent is 140 degrees F (60 degrees C) and Type III Drycleaning Solvent is 200 degrees F (93 degrees C). Failure to do so may result in injury or death to personnel.
- If personnel become dizzy while using cleaning solvent, immediately get fresh air and medical help. If solvent contacts skin or clothes, flush with cold water. If solvent contacts eyes, immediately flush eyes with water and get immediate medical attention.

(1) Clean all metal parts with drycleaning solvent.

WARNING

Compressed air used for cleaning purposes will not exceed 30 psi (207 kPa). Use only with effective chip guarding and personal protective equipment (goggles/shield, gloves, etc.) or injury to personnel may result.

(2) Dry parts with compressed air.

(3) Inspect parts for breaks, cracks, burrs and sharp edges. Look for unusual signs of wear on arm.

(4) Replace all damaged parts.

21-31. CONTAINER HANDLING UNIT (CHU) SLIDER ARM ASSEMBLY REPAIR (CONT).

d. Assembly.

(1) Install grease fitting (11) and grease fitting (12) in arm assembly (4).

WARNING

Adhesives, solvents, and sealing compounds can burn easily, can give off harmful vapors, and are harmful to skin and clothing. To avoid injury or death, keep away from open fire and use in well-ventilated area. If adhesive, solvent, or sealing compound gets on skin or clothing, wash immediately with soap and water.

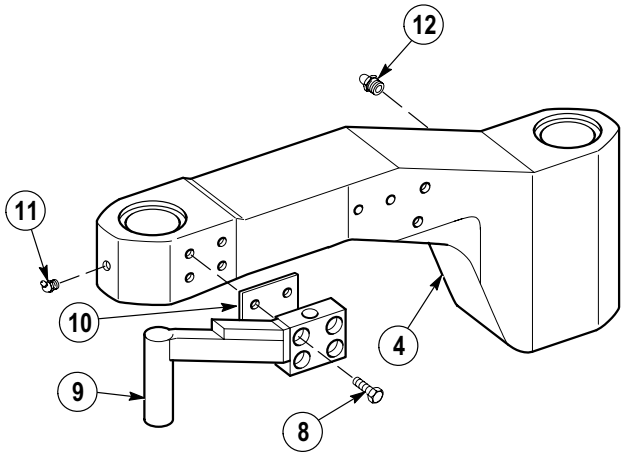

(2) Apply sealing compound to threads of four screws (8).

NOTE

Install quantity of shim(s) as noted during disassembly.

(3) Install handle (9) and shim(s) (10) with four screws (8) on arm assembly (4).

NOTE

Sealing compound is applied to metallic side of thrust washer.

(4) Apply sealing compound (loctite 680) to thrust washer (7).

(5) Apply adhesive (loctite 409) to six points in recessed groove for preformed packing (6).

NOTE

Thrust washer is properly installed with metallic side to arm assembly.

(6) Install thrust washer (7), preformed packing (6) and seal (5) in arm assembly (4).

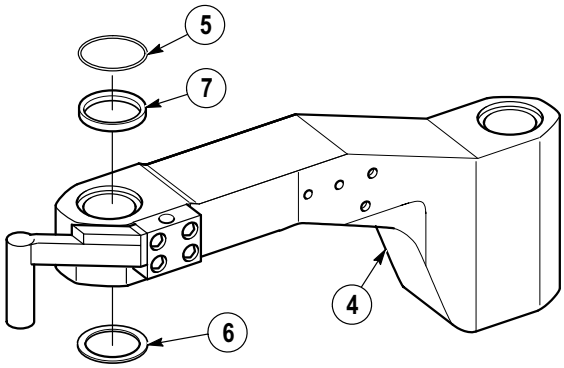

WARNING

Adhesives, solvents, and sealing compounds can burn easily, can give off harmful vapors, and are harmful to skin and clothing. To avoid injury or death, keep away from open fire and use in well-ventilated area. If adhesive, solvent, or sealing compound gets on skin or clothing, wash immediately with soap and water.

NOTE

Sealing compound is applied to metallic side of thrust washer.

(7) Apply sealing compound (loctite 680) to thrust washer (2).

(8) Apply adhesive (loctite 409) to six points in recessed groove for preformed packing (3).

NOTE

Thrust washer is properly installed with metallic side to arm assembly.

(9) Install preformed packing (3), thrust washer (2) and seal (1) on assembly (4).

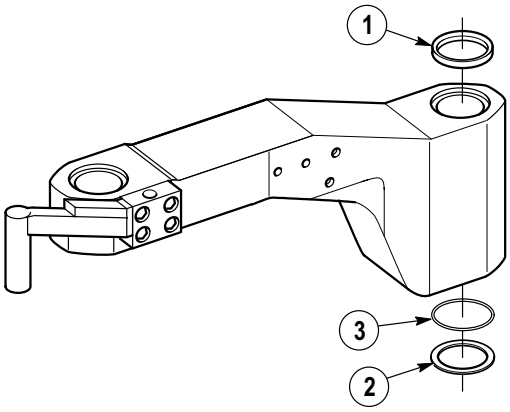

21-31. CONTAINER HANDLING UNIT (CHU) SLIDER ARM ASSEMBLY REPAIR (CONT).

e. Installation.

(1) Apply grease to face of thrust washer, seal, bore in arm assembly (1), and bores and thrust face of rear roller bracket (5).

WARNING

Arm assembly weighs 240 lbs (109 kg). Attach suitable lifting device to prevent possible injury to personnel.

(2) Attach lifting device to arm assembly (1).

CAUTION

Ensure not to damage bottom of preformed packing during arm installation.

(3) With the aid of an assistant, position large end of arm assembly (1) in rear roller bracket (5).

WARNING

Use care when installing snap and retaining rings. Snap and retaining rings are under spring tension and can act as projectiles when released and could cause severe eye injury.

NOTE

Install amount of shims as noted prior to removal.

(4) Apply grease to outer surface of pivot pin (3) and install pivot pin, shim(s) (4) and retaining ring (2) in arm assembly (1) and rear roller bracket (5).

(5) Remove lifting device from arm assembly (1).

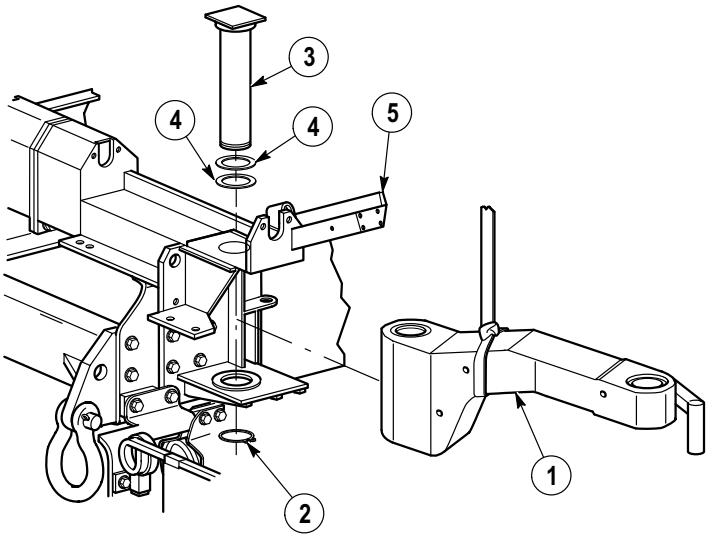

f. Follow-On Maintenance:

- Install horizontal roller, (Para 15-15).
- Install pin bracket assembly, (Para 21-30).
- Install slider/pivot assembly, (Para 21-29).
- Lubricate slider arm, (TM 9-2320-364-10).
- Remove wheel chocks, (TM 9-2320-364-10).

END OF TASK

21-32. CONTAINER HANDLING UNIT (CHU) REAR BRACKET ASSEMBLY REPLACEMENT.

This task covers:

a. Removal
b. Installation
c. Adjustment
d. Follow-On Maintenance

INITIAL SETUP

Tools and Special Tools
Tool Kit, General Mechanic's: Automotive (Item 74, Appendix G)
Lifting Device, Minimum Capacity, 150 lbs (68 kg)

Materials/Parts
Sealing Compound (Item 82, Appendix C)
Locknut (2) (Item 91, Appendix F)
Locknut (16) (Item 93, Appendix F) (left side only)
Locknut (17) (Item 93, Appendix F) (right side only)
Locknut (2) (Item 101, Appendix F)

Personnel Required
Two

Equipment Condition
Engine OFF, (TM 9-2320-364-10)
Wheels chocked, (TM 9-2320-364-10)
Slider removed, (Para 21-29)
Slider arm removed, (Para 21-31)
Hard lift strut removed, (Para 15-8)
Light bar and brackets removed, (Para 21-27)
Rear splash guard assembly removed, (Para 17-39)
Horizontal roller removed, (Para 15-15)
Angled roller removed, (Para 15-16)

a. Removal.

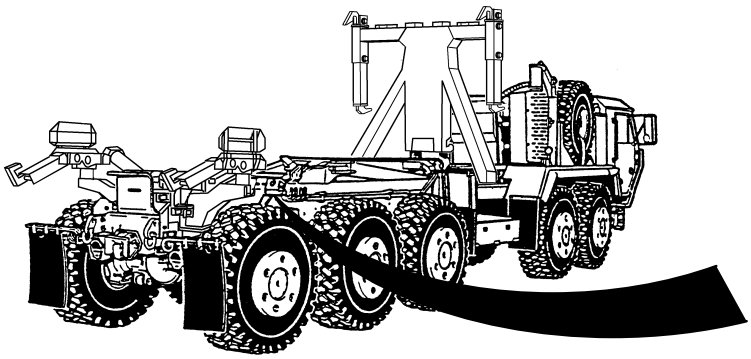

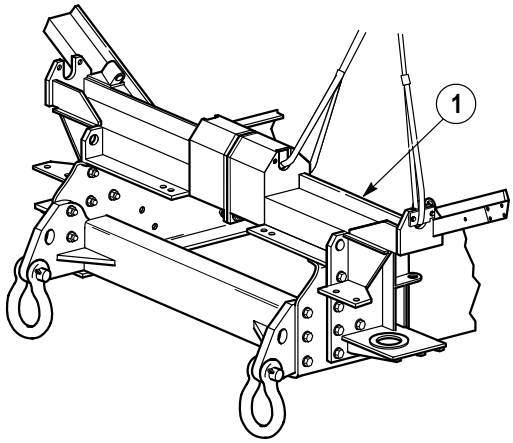

WARNING

Rear roller bracket weighs 150 lbs (68 kg). When removing one rear roller bracket, ensure remaining rear roller bracket is supported. Attach suitable lifting device to prevent possible injury to personnel.

NOTE

- Right rear roller bracket and left rear roller bracket are identical unless noted.
- Right rear roller bracket is shown.

(1) Attach lifting device to rear roller bracket (1).

NOTE

Note quantity of shims prior to removal.

(2) Remove six screws (2), locknuts (3) and shim(s) (4) from rear roller bracket (1) and left rear roller bracket (5). Discard locknuts.

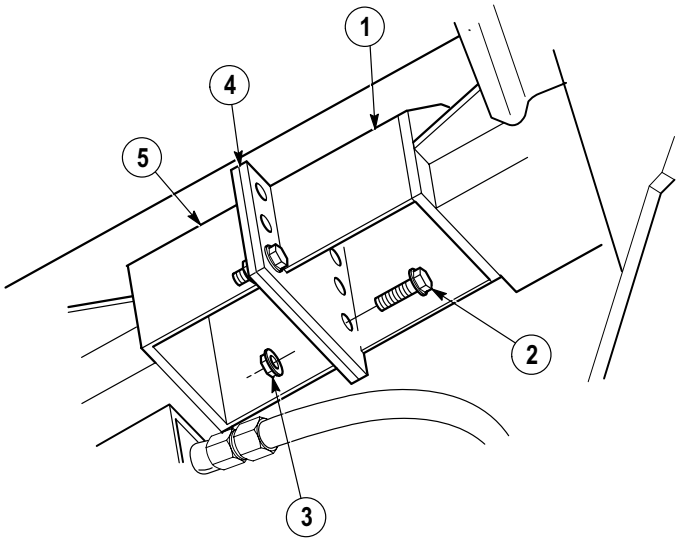

NOTE

Perform Step (3) for right side of truck only.

(3) Remove locknut (6), two washers (7) and screw (8) from rear roller bracket (1). Discard locknut.

(4) With the aid of an assistant, remove five screws (9) and locknuts (10) from rear roller bracket (1) frame (11) and rear crossmember (12). Discard locknuts.

(5) With the aid of an assistant, remove five screws (13) and locknuts (14) from rear roller bracket (1) and frame (11).

(6) With the aid of an assistant, remove rear roller bracket (1) from truck.

(7) Remove lifting device from rear roller bracket (1).

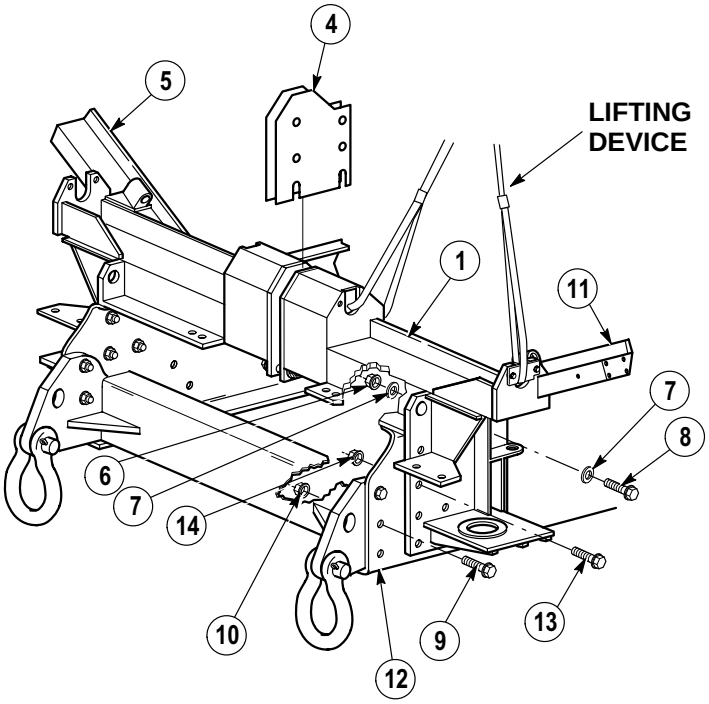

21-32. CONTAINER HANDLING UNIT (CHU) REAR BRACKET ASSEMBLY REPLACEMENT (CONT).

(8) Remove two screws (15), locknuts (16) and light mounting plate (17) from rear roller bracket (1). Discard locknuts.

(9) Remove screw (18), washer (19) and wire rope (20) from rear roller bracket (1).

(10) Remove screw (21), washer (22) and wire rope (20) from rear roller bracket (1).

NOTE

Perform Step (11) if wire rope is damaged.

(11) Remove swaging sleeve (23) from wire rope (20).

(12) Remove two screws (24), locknuts (25) and stow plate (26) from rear roller bracket (1). Discard locknuts.

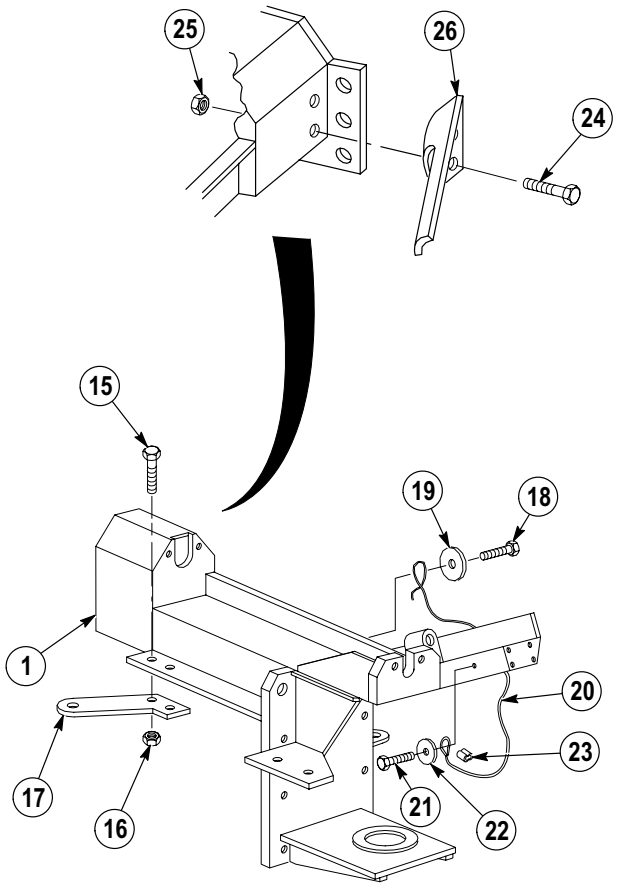

b. Installation.

NOTE

- Right rear roller bracket and left rear roller bracket are identical unless noted.
- Right rear roller bracket is shown.

(1) Position stow plate (26), two screws (24) and locknuts (25) to rear roller bracket (1). Do not tighten screws.

NOTE

Perform Step (2) if wire rope was removed.

(2) Install swaging sleeve (23) to wire rope (20).

WARNING

Adhesives, solvents, and sealing compounds can burn easily, can give off harmful vapors, and are harmful to skin and clothing. To avoid injury or death, keep away from open fire and use in well-ventilated area. If adhesive, solvent, or sealing compound gets on skin or clothing, wash immediately with soap and water.

(3) Apply sealing compound to threads of screw (18) and screw (21).

(4) Install screw (21), washer (22) and loop end of wire rope (20) on rear roller bracket (1). Do not tighten screw.

(5) Position screw (18), washer (19) and end of wire rope (20) on rear roller bracket (1).

NOTE

Wire must be pulled tight against roller bracket when installed.

(6) Wrap wire (20) around screw (18) and under washer (19) and tighten screws (18) and (21).

(7) Install light mounting plate (17), two screws (15) and locknuts (16) to rear roller bracket (1).

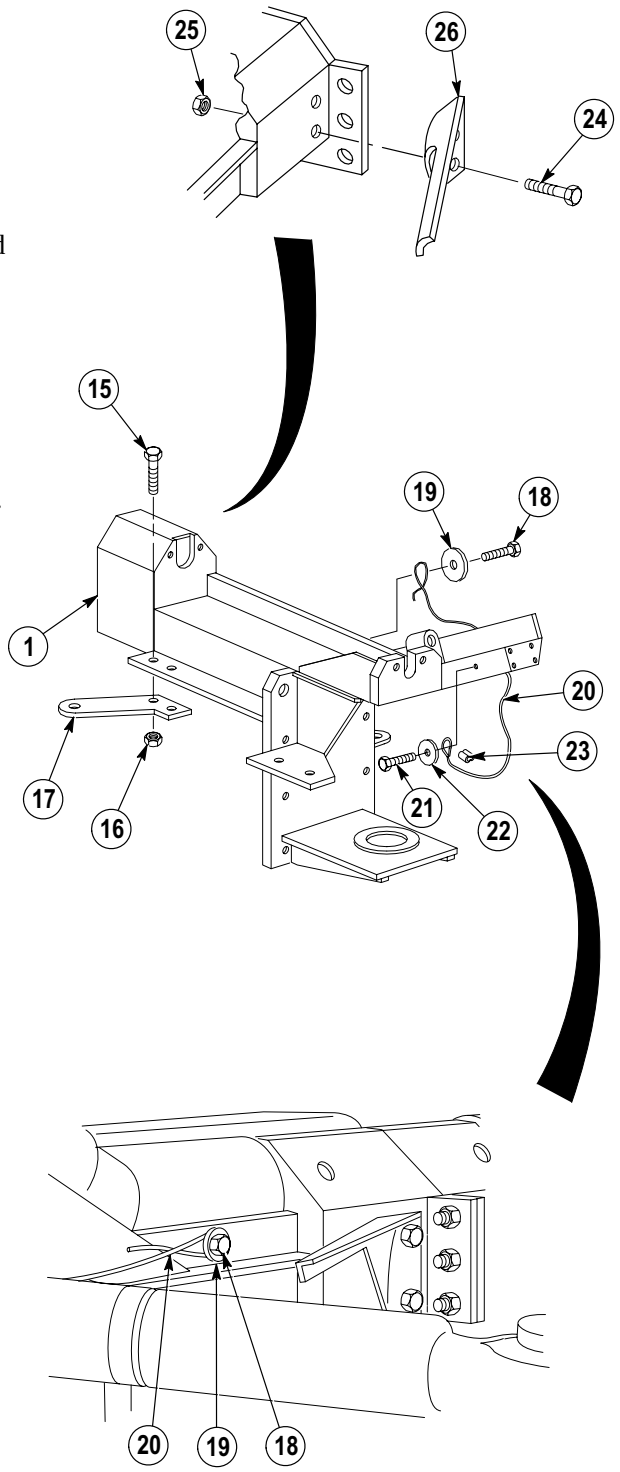

21-32. CONTAINER HANDLING UNIT (CHU) REAR BRACKET ASSEMBLY REPLACEMENT (CONT).

WARNING

Rear roller bracket weighs 150 lbs (68 kg). When removing one rear roller bracket, ensure remaining rear roller bracket is supported. Attach suitable lifting device to prevent possible injury to personnel.

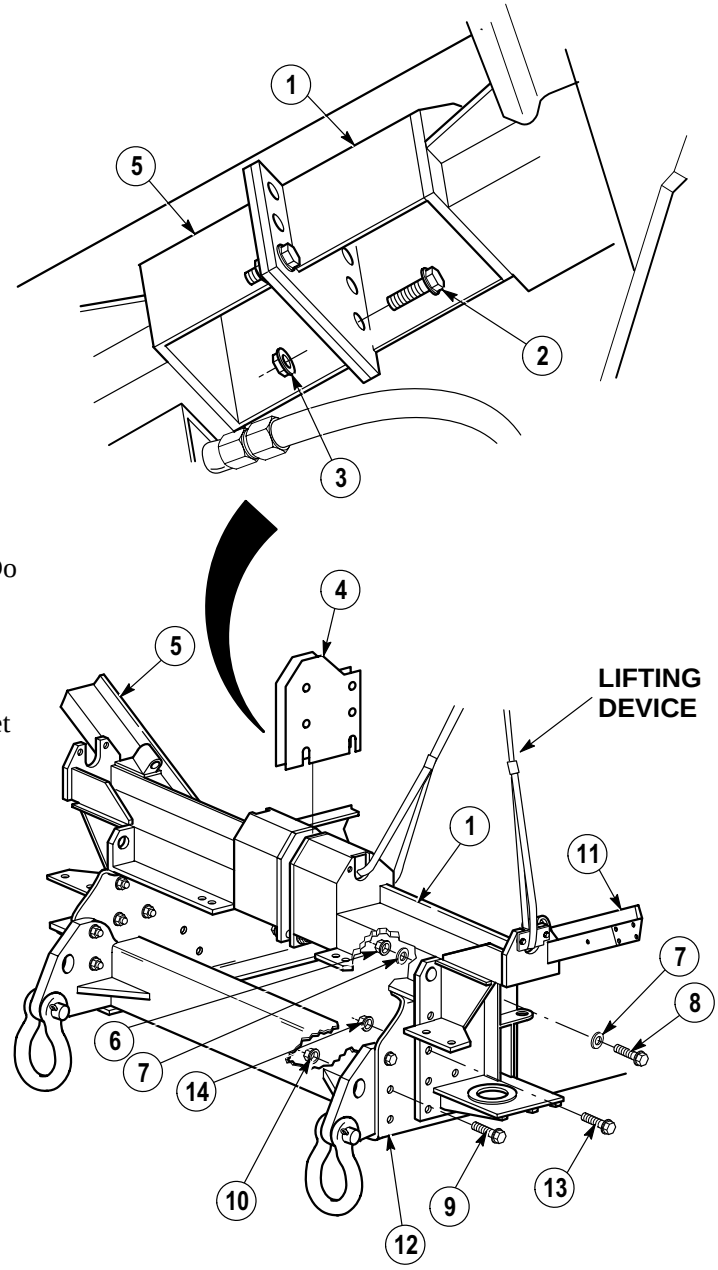

(8) Attach lifting device to rear roller bracket (1).

(9) With the aid of an assistant, position rear roller bracket (1) on frame (11) and secure with five screws (13) and locknuts (14). Do not tighten screws.

(10) Position bottom two screws (2) and locknuts (3) at center split of right rear roller bracket (1) and left rear roller bracket (5) to maintain alignment.

NOTE

Install shims as noted during removal.

(11) Position shim(s) (4), if required, in center split and install remaining four screws (2) and locknuts (3).

(12) With the aid of an assistant, position five screws (9) and locknuts (10) on rear roller bracket (1) truck frame (11) and rear crossmember (12).

NOTE

Perform Step (13) for right side only.

(13) Install screw (8), two washers (7) and locknut (6) on rear roller bracket (1).

(14) Tighten six locknuts (3) on screws (2).

(15) Tighten ten locknuts (14) and (10) on screws (2) and (9).

(16) Remove lifting device from rear roller bracket (1).

(17) Install slider arm, (Para 21-31).

(18) Install slider, (Para 21-29).

c. Adjustment.

NOTE

Both stow plates and wire ropes are adjusted the same way. Right side shown.

(1) Remove quick release pin (1) and pin (2) from short strut (3).

NOTE

- Stow plate should be positioned in center of short strut.
- Ensure slider arm is fully stowed and slider arm handle contacts long strut prior to tightening screws.

(2) Position short strut (3) on stow plate (4) in stowed position and that handle of arm assembly (5) contacts long strut (6).

(3) Tighten two screws (7) and locknuts (8) on stow plate (4).

(4) Ensure wire rope (9) is tight.

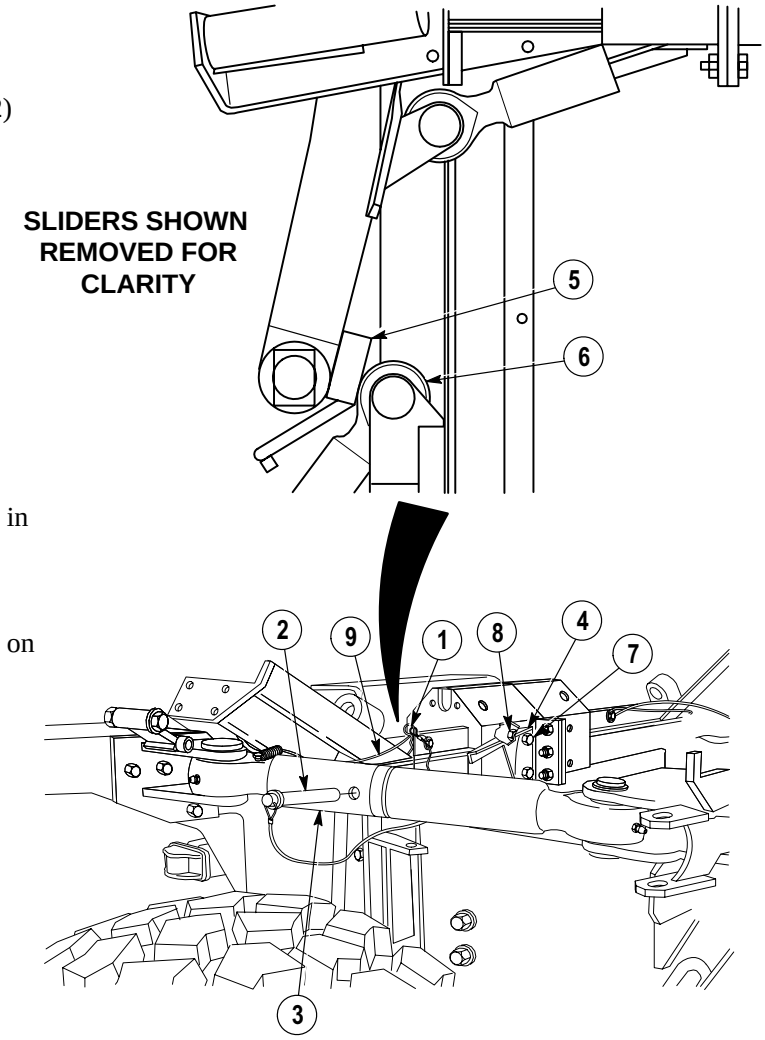

d. Follow-on Maintenance:

- Install angled roller, (Para 15-16)
- Install horizontal roller, (Para 15-15)
- Install rear splash guard, (Para 17-39)
- Install light bar and brackets, (Para 21-27)
- Install hard lift strut, (Para 15-8)
- Remove wheel chocks, (TM 9-2320-364-10).

END OF TASK

21-33. CONTAINER HANDLING UNIT (CHU) LONG STRUT BRACKET ASSEMBLY REPAIR.

This task covers:

a. Removal
b. Disassembly
c. Cleaning/Inspection
d. Assembly
e. Installation
f. Adjustment
g. Follow-On Maintenance

INITIAL SETUP

Tools and Special Tools
Tool Kit, General Mechanic's: Automotive (Item 74, Appendix G)
Compressor Unit, Air (Item 11, Appendix G)
Gloves, Chemical Oil Protective (Item 28, Appendix G)
Goggles, Industrial (Item 30, Appendix G)
Gun, Air Blow (Item 31, Appendix G)
Pliers, Retaining Ring (Item 49, Appendix G)
Puller Kit, Universal (Item 51, Appendix G)

Materials/Parts
Antiseize Compound (Item 21, Appendix C)

Materials/Parts - Continued
Sealing Compound (Item 82, Appendix C)
Locknut (4) (Item 92, Appendix F)
Locknut (4) (Item 93, Appendix F)

Personnel Required
Two

Equipment Condition
Engine OFF, (TM 9-2320-364-10)
Wheels chocked, (TM 9-2320-364-10)
Slider arm in container mode, (TM 9-2320-364-10)
Hardlift strut removed, (Para 15-6)

a. Removal.

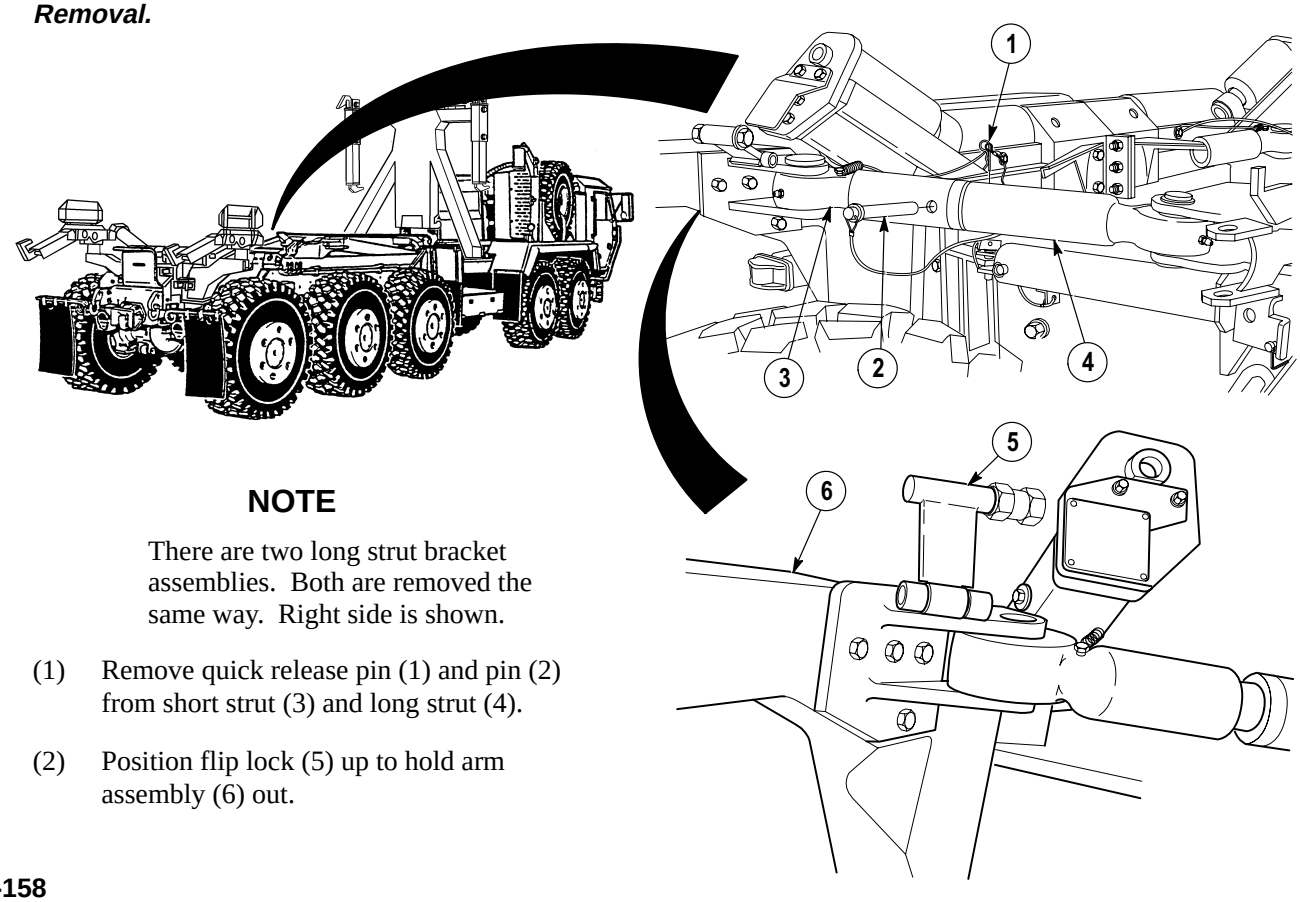

NOTE

There are two long strut bracket assemblies. Both are removed the same way. Right side is shown.

(1) Remove quick release pin (1) and pin (2) from short strut (3) and long strut (4).

(2) Position flip lock (5) up to hold arm assembly (6) out.

WARNING

Right strut bracket assembly weighs 80 lbs (36 kg). Attach suitable lifting device to prevent possible injury to personnel.

(3) Remove two screws (7) and locknuts (8) from strut bracket (9) and crossover tube (10). Discard locknuts.

(4) Remove two screws (11) and locknuts (12) from strut bracket (9), hardlift bracket (13) and frame (14). Discard locknuts.

(5) Remove two screws (15), locknuts (16) and strut bracket (9) from deck bracket (17) and frame (14). Discard locknuts.

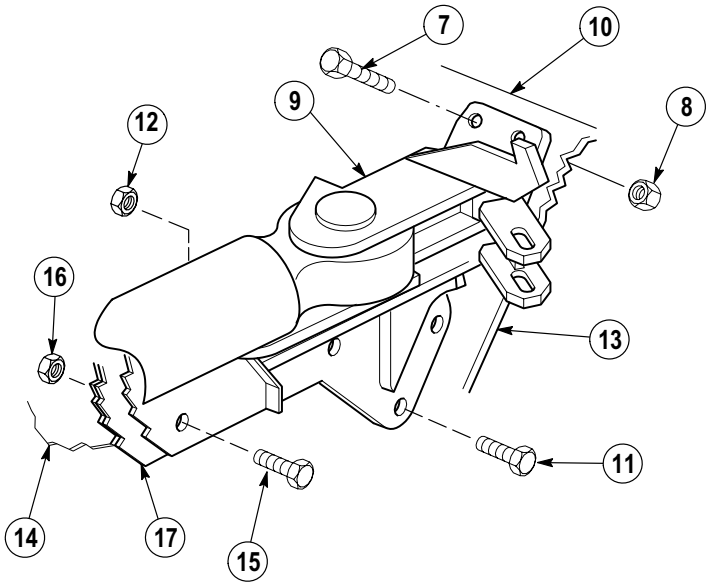

b. Disassembly.

WARNING

Use care when removing snap and retaining rings. Snap and retaining rings are under spring tension and can act as projectiles when released and could cause severe eye injury.

(1) Remove retaining ring (1), spacer (2) and pin (3) from long strut (4). Discard retaining ring.

(2) Remove long strut (4) from strut bracket (5).

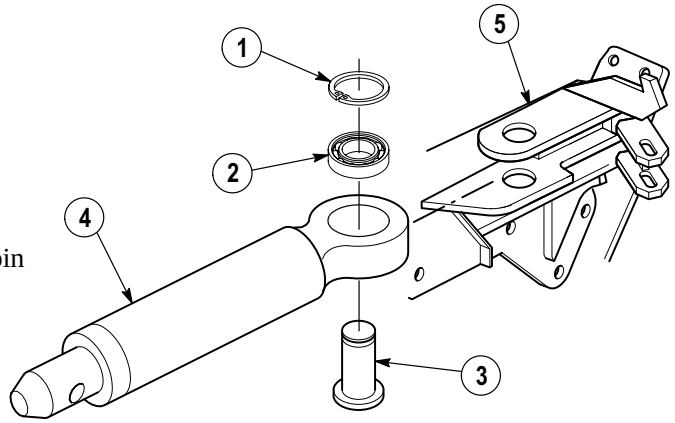

21-33. CONTAINER HANDLING UNIT (CHU) LONG STRUT BRACKET ASSEMBLY REPAIR (CONT).

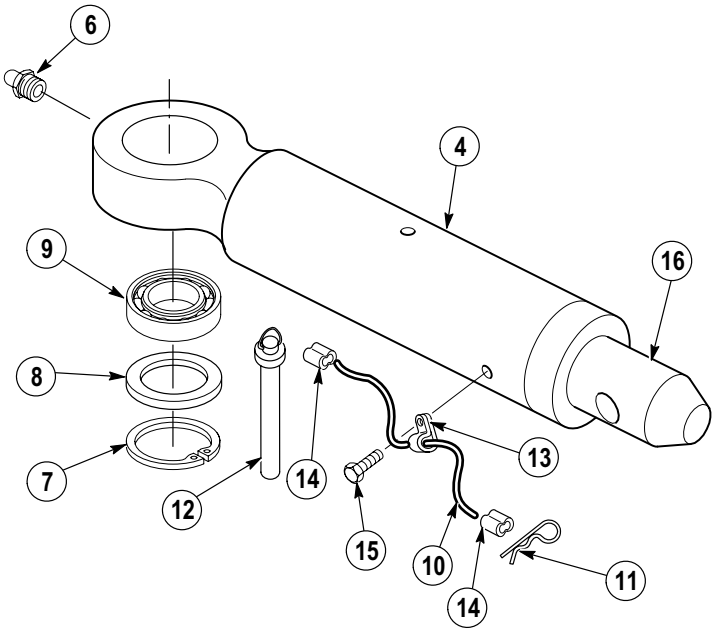

(3) Remove grease fitting (6) from end of long strut (4).

WARNING

Use care when removing snap and retaining rings. Snap and retaining rings are under spring tension and can act as projectiles when released and could cause severe eye injury.

(4) Remove retaining ring (7), spacer (8) and bearing (9) from long strut (4).

(5) Remove wire rope (10), quick release pin (11), and pin (12) from cushion clip (13).

NOTE

Perform Step (6) if wire rope is damaged.

(6) Remove two swaging sleeves (14) from wire rope (10).

NOTE

- Perform Steps (7) and (8) if pin end is damaged.
- Screw is used to secure pin end to long strut.
- Note position of pin end prior to removal.

(7) Remove screw (15) and cushion clip (13) from long strut (4).

(8) Remove pin end (16) from end of long strut (4).

c. Cleaning/Inspection.

WARNING

- Drycleaning Solvent (P-D-680) is TOXIC and flammable. Wear protective goggles, face shield, and gloves; use only in a well-ventilated area; avoid contact with skin, eyes, and clothes, and do not breathe vapors. Keep away from heat or flame. Never smoke when using solvent. The flashpoint for Type II Drycleaning Solvent is 140 degrees F (60 degrees C) and Type III Drycleaning Solvent is 200 degrees F (93 degrees C). Failure to do so may result in injury or death to personnel.
- If personnel become dizzy while using cleaning solvent, immediately get fresh air and medical help. If solvent contacts skin or clothes, flush with cold water. If solvent contacts eyes, immediately flush eyes with water and get immediate medical attention.

(1) Clean all metal parts with drycleaning solvent.

WARNING

Compressed air used for cleaning purposes will not exceed 30 psi (207 kPa). Use only with effective chip guarding and personal protective equipment (goggles/shield, gloves, etc.) or injury to personnel may result.

(2) Dry parts with compressed air.

(3) Inspect parts for breaks, cracks, burrs and sharp edges. Look for unusual signs of wear on strut.

(4) Replace all damaged parts.

21-33. CONTAINER HANDLING UNIT (CHU) LONG STRUT BRACKET ASSEMBLY REPAIR (CONT).

d. Assembly.

WARNING

Adhesives, solvents, and sealing compounds can burn easily, can give off harmful vapors, and are harmful to skin and clothing. To avoid injury or death, keep away from open fire and use in well-ventilated area. If adhesive, solvent, or sealing compound gets on skin or clothing, wash immediately with soap and water.

NOTE

- Perform Steps (1) through (4) if pin end was removed.
- If strut bracket and/or long strut are being replaced, perform ***f. Adjustment***.
- Position pin end in long strut as noted during disassembly.

(1) Apply antiseize compound to threads of pin end (16).

(2) Position pin end (16) in end of long strut (4).

(3) Position cushion clip (13) on pin (12), lock pin (11), wire rope (10) and swaging sleeves (14).

(4) Position cushion clip (13) and screw (15) on long strut (4).

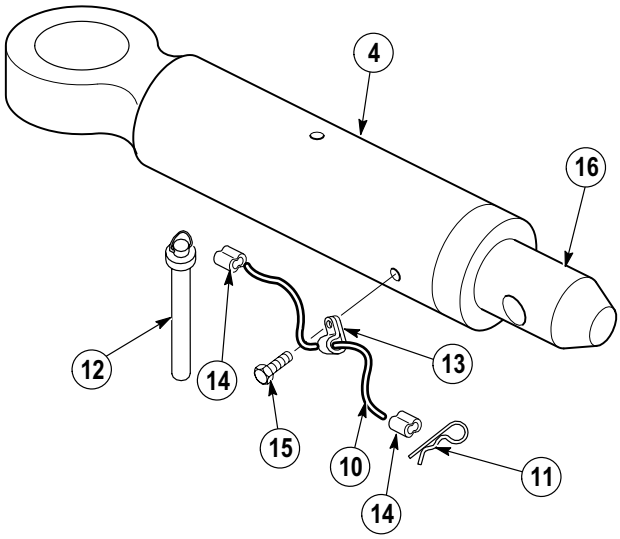

(5) Apply antiseize compound to outer surface of bearing (9).

WARNING

Use care when installing snap and retaining rings. Snap and retaining rings are under spring tension and can act as projectiles when released and could cause severe eye injury.

(6) Install bearing (9), spacer (8) and retaining ring (7) in bore of long strut (4).

(7) Install grease fitting (6) in long strut (4).

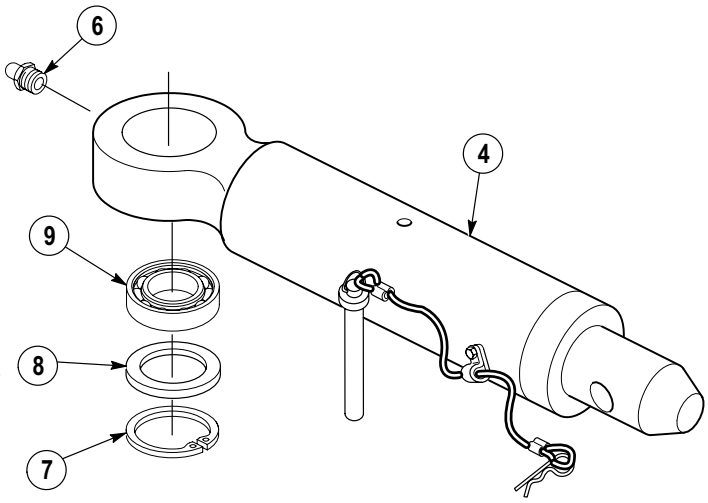

NOTE

Beveled edge of spacer faces bearing in long strut.

(8) Install long strut (4) in strut bracket (5) with pin (3), spacer (2) and retaining ring (1).

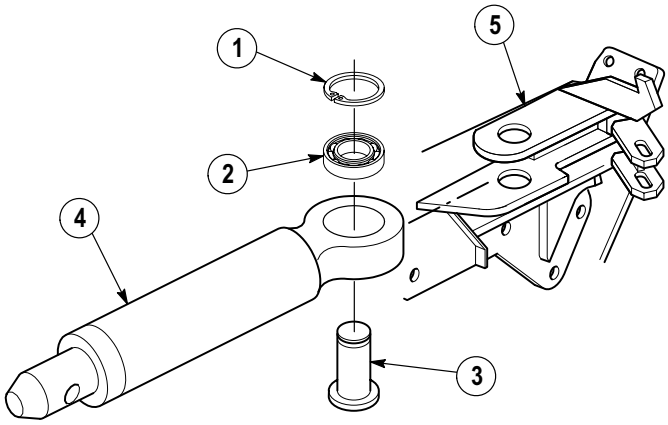

21-33. CONTAINER HANDLING UNIT (CHU) LONG STRUT BRACKET ASSEMBLY REPAIR (CONT).

e. Installation.

WARNING

Right strut bracket assembly weighs 80 lbs (36 kg). Attach suitable lifting device to prevent possible injury to personnel.

NOTE

There are two long strut bracket assemblies. Both are installed the same way. Right side is shown.

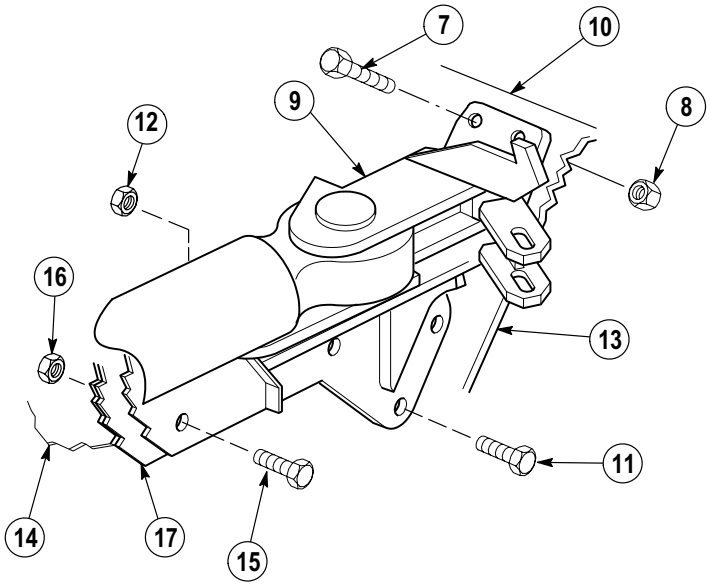

(1) Install two screws (15), locknuts (16) and strut bracket (9) on deck bracket (17) and frame (14).

(2) Install two screws (11) and locknuts (12) on strut bracket (9), hardlift bracket (13) and frame (14).

(3) Install two screws (7) and locknuts (8) on strut bracket (9) and crossover tube (10).

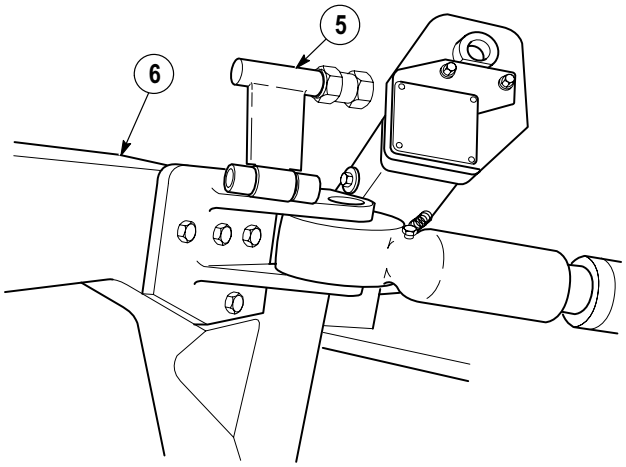

(4) Rotate arm assembly (6) with handle and disengage flip lock (5).

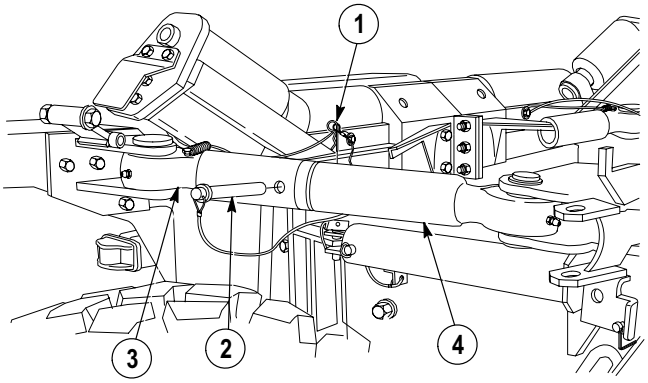

(5) Attach long strut (4) and short strut (3) with pin (2) and quick release pin (1).

f. Adjustment.

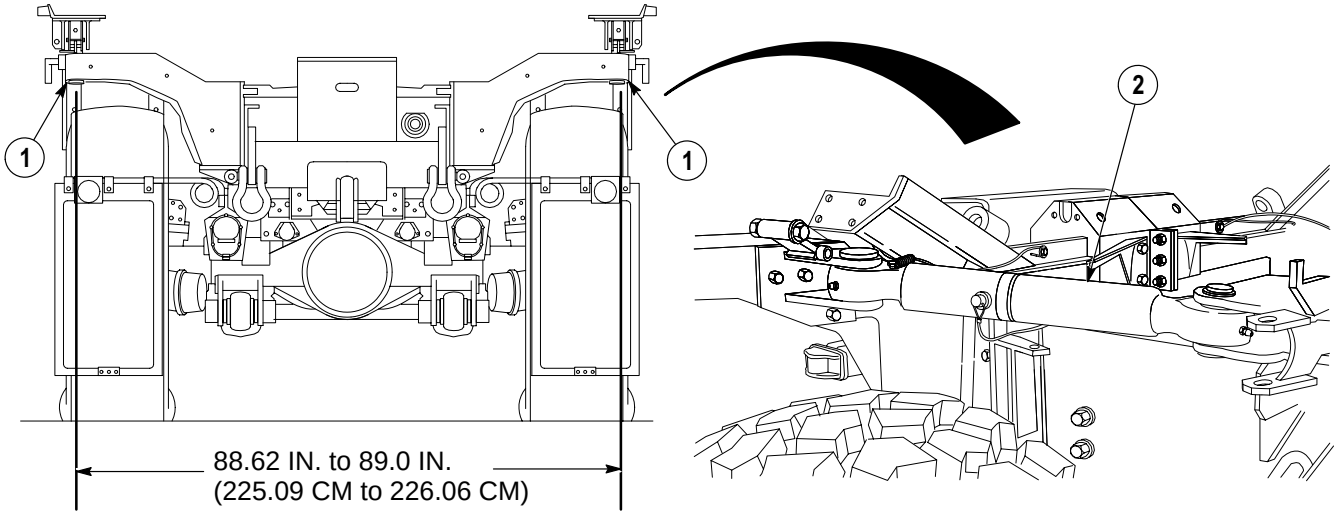

(1) Deploy both slider assemblies by extending short and long struts (TM 9-2320-364-10).

(2) With the aid of an assistant, measure distance between center of slider pivot pins (1).

NOTE

- Adjustment of struts is performed in Steps (4) through (13).
- If distance measured is 88.62 in. to 89 in. (225.09 cm to 226.06 cm), no adjustment is required.

(3) Adjust long struts (2) so distance measured is 88.62 in. to 89 in. (225.09 cm to 226.06 cm) between slider pivot pin (1) centers.

21-33. CONTAINER HANDLING UNIT (CHU) LONG STRUT BRACKET ASSEMBLY REPAIR (CONT).

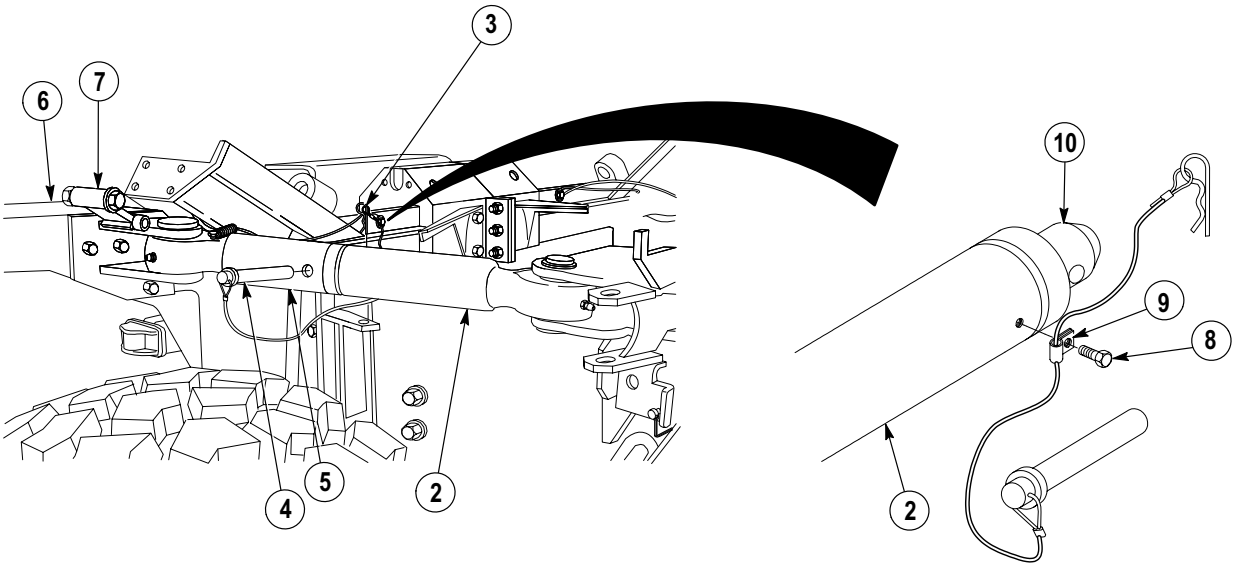

(4) Remove quick release pin (3) and pin (4) from short strut (5) and long strut (2).

(5) Using handle of arm assembly (6), rotate arm assembly out to separate short strut (5) and long strut (2).

(6) Position flip lock (7) up to hold arm assembly (6) out. Release arm assembly.

NOTE

- Rotating pin end of long strut counterclockwise 1/2 turn will decrease width measurement by approximately 1/16 in. (1.59 mm).
- Rotating pin end of long strut clockwise 1/2 turn will increase width measurement by approximately 1/16 in. (1.59 mm).
- Adjust both RH and LH long struts equally to obtain the correct width measurement.

(7) Remove screw (8) and cushion clip (9) from long strut (2).

CAUTION

Do not unscrew pin end too far. Gap between long strut tube and pin end flange should not exceed 0.75 inches (19 mm). Failure to have sufficient engagement of pin end into long strut could result in damage to equipment.

(8) Rotate pin end (10) as required for correct width measurement.

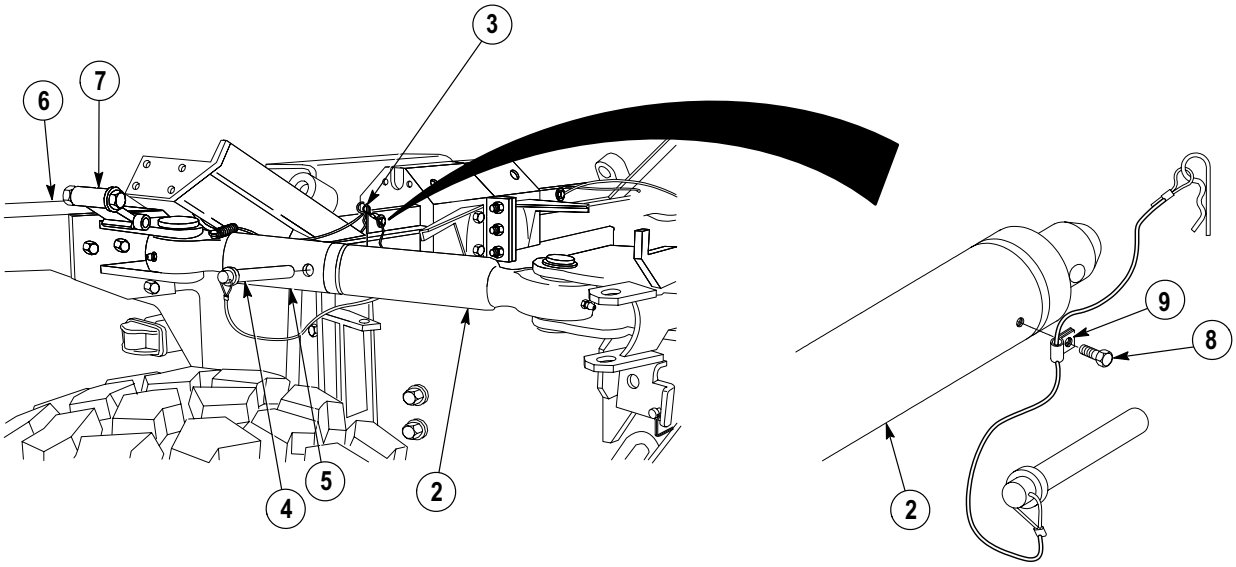

WARNING

Adhesives, solvents, and sealing compounds can burn easily, can give off harmful vapors, and are harmful to skin and clothing. To avoid injury or death, keep away from open fire and use in well-ventilated area. If adhesive, solvent, or sealing compound gets on skin or clothing, wash immediately with soap and water.

NOTE

Ensure hole in pin end align with hole for cushion clip.

(9) Apply sealing compound (loctite 242) to threads of screw (8).

(10) Install screw (8) and cushion clip (9) to long strut (2).

(11) Align long strut (2) with short strut (5).

(12) Using handle of arm assembly (6), rotate arm assembly and disengage flip lock (7).

(13) Position long strut (2) in short strut (5) and install pin (4) and quick release pin (3).

(14) Repeat Steps (4) through (13) for left side.

(15) Repeat Steps (2) through (14) as necessary.

g. Follow-On Maintenance:

- Install hardlift strut, (Para 15-6).
- Remove wheel chocks, (TM 9-2320-364-10).

END OF TASK

21-34. CONTAINER HANDLING UNIT (CHU) STOW WELDMENT REPLACEMENT.

This task covers:

a. Removal
b. Disassembly
c. Cleaning/Inspection
d. Assembly
e. Installation
f. Adjustment
g. Follow-On Maintenance

INITIAL SETUP

Tools and Special Tools
Tool Kit, General Mechanic's: Automotive (Item 74, Appendix G)
Compressor Unit, Air (Item 11, Appendix G)
Gloves, Chemical Oil Protective (Item 28, Appendix G)
Goggles, Industrial (Item 30, Appendix G)
Gun, Air Blow (Item 31, Appendix G)
Lifting Device, Minimum Capacity 400 lbs (181 kg)

Materials/Parts
Locknuts (12) (Item 91, Appendix F)
Locknuts (4) (Item 92, Appendix F)

Personnel Required
Two

Equipment Condition
Engine OFF, (TM 9-2320-364-10)
Wheels chocked, (TM 9-2320-364-10)
Rail transport corner ISO locks removed, (TM 9-2320-364-10)
Lifting frame on ground, (TM 9-2320-364-10)
Container guides removed, (TM 9-2320-364-10)

a. Removal.

WARNING

Stow weldment weighs 410 lbs (186 kg). Attach suitable lifting device to prevent possible injury to personnel.

(1) Attach lifting device to stow weldment (1).

(2) Support stow weldment (1) and remove two screws (2) and locknuts (3) from top of stow weldment support brace (4). Discard locknuts.

(3) Remove two screws (5) and locknuts (6) from bottom of stow weldment support brace (4) and crossmember assembly (7). Discard locknuts.

(4) Remove stow weldment support brace (4) from stow weldment (1).

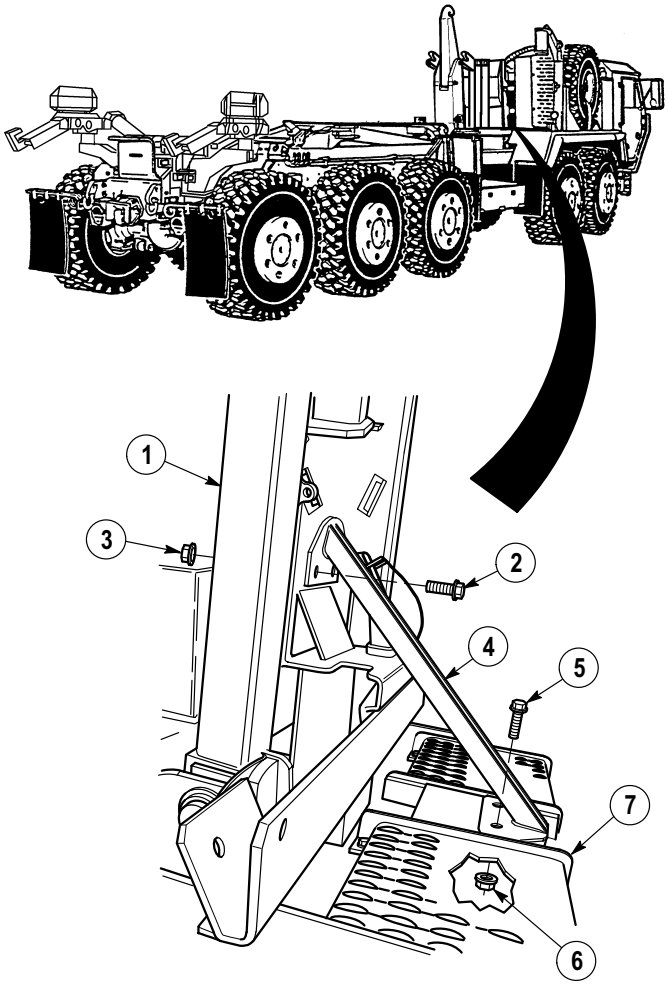

(5) Remove four screws (8) and locknuts (9) from stow weldment (1) and front support assembly (10). Discard locknuts.

(6) With the aid of an assistant, remove stow weldment (1) from front support assembly (10).

(7) Position stow weldment (1) on clean work surface and remove lifting device.

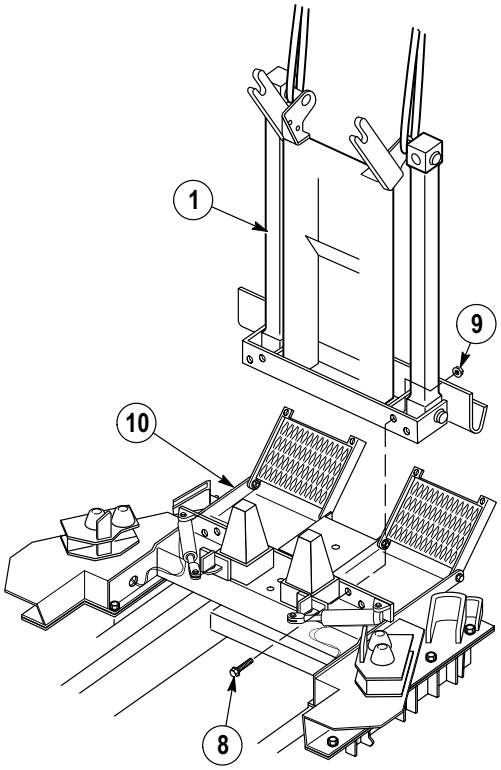

b. Disassembly.

(1) Remove four snap pins (1), pins (2) and two rail transport struts (3) from stow weldment (4).

NOTE

Perform Step (2) if wire ropes are damaged.

(2) Remove four swaging sleeves (5) from two wire ropes (6),

(3) Remove eight screws (7), locknuts (8) and lifting frame stow hooks (9) from stow weldment (4). Discard locknuts.

NOTE

Perform Step (4) if tether pin is damaged.

(4) Remove four swaging sleeves (10) and two wire ropes (11) from tether pins (12) and quick release pins (13) from bottom of stow weldment (4).

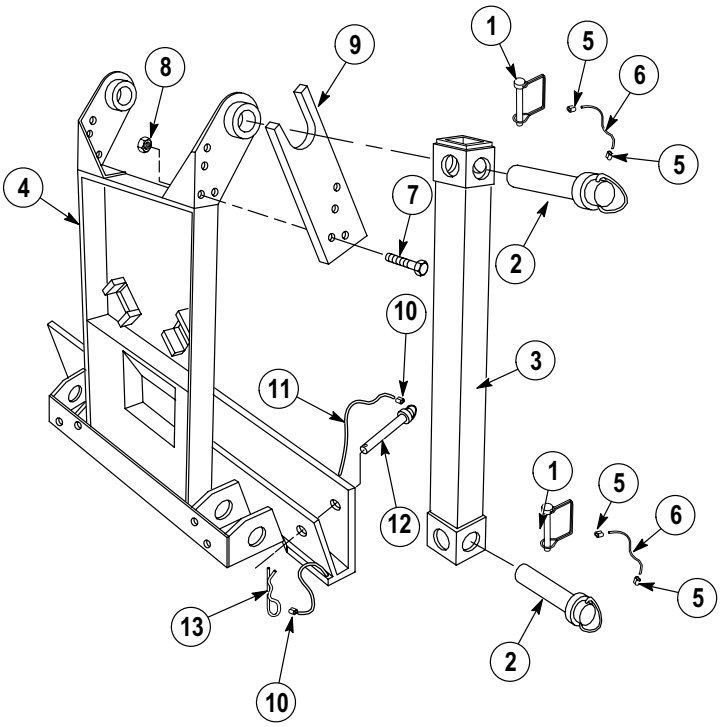

21-34. CONTAINER HANDLING UNIT (CHU) STOW WELDMENT REPLACEMENT (CONT).

c. Cleaning/Inspection.

WARNING

- Drycleaning Solvent (P-D-680) is TOXIC and flammable. Wear protective goggles, face shield, and gloves; use only in a well-ventilated area; avoid contact with skin, eyes, and clothes, and do not breathe vapors. Keep away from heat or flame. Never smoke when using solvent. The flashpoint for Type II Drycleaning Solvent is 140 degrees F (60 degrees C) and Type III Drycleaning Solvent is 200 degrees F (93 degrees C). Failure to do so may result in injury or death to personnel.
- If personnel become dizzy while using cleaning solvent, immediately get fresh air and medical help. If solvent contacts skin or clothes, flush with cold water. If solvent contacts eyes, immediately flush eyes with water and get immediate medical attention.

(1) Clean all metal parts with drycleaning solvent.

WARNING

Compressed air used for cleaning purposes will not exceed 30 psi (207 kPa). Use only with effective chip guarding and personal protective equipment (goggles/shield, gloves, etc.) or injury to personnel may result.

(2) Dry parts with compressed air.

(3) Inspect parts for breaks, cracks, burrs and sharp edges. Look for unusual signs of wear on stow weldment frame.

(4) Replace all damaged parts.

d. Assembly.

NOTE

- Perform Step (1) if tether pin was removed.
- Wire rope is positioned through hole in bottom of stow weldment.

(1) Attach two tether pins (12) and quick release pins (13) to bottom of stow weldment (4) with two wire ropes (11) and four swaging sleeves (10).

(2) Position two lifting frame stow hooks (9) on stow weldment (4) with eight screws (7) and locknuts (8). Do not tighten.

NOTE

Perform Step (3) if wire ropes were removed.

(3) Attach two wire ropes (6) with four swaging sleeves (5) to pins (2) and snap pins (1).

(4) Install two rail transport struts (3) on stow weldment (4) with four pins (2) and snap pins (1).

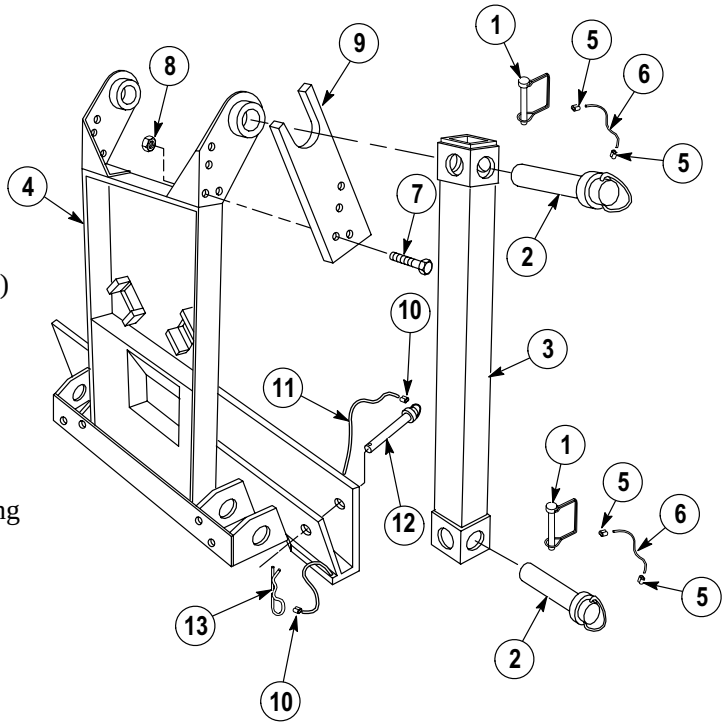

21-34. CONTAINER HANDLING UNIT (CHU) STOW WELDMENT REPLACEMENT (CONT).

e. Installation.

WARNING

Stow weldment weighs 410 lbs (186.14 kg). Attach suitable lifting device to prevent possible injury to personnel.

(1) Attach suitable lifting device to stow weldment (1).

(2) With the aid of an assistant, position stow weldment (1) on front support assembly (10).

(3) Install four screws (8) and locknuts (9) on stow weldment (1) and front support assembly (10).

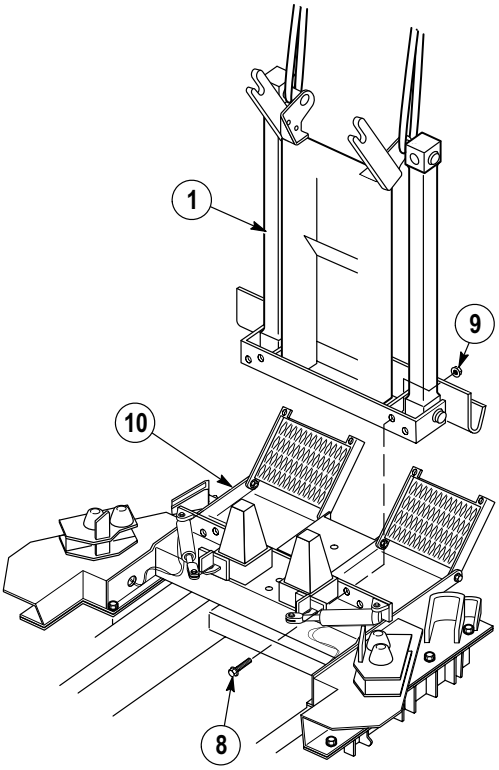

(4) With the aid of an assistant, position stow weldment support brace (4) on stow weldment (1).

(5) Install bottom of stow weldment support brace (4) with two screws (5) and locknuts (6) on crossmember assembly (7).

(6) Install top of stow weldment support brace (4) with two screws (2) and locknuts (3) on stow weldment (1).

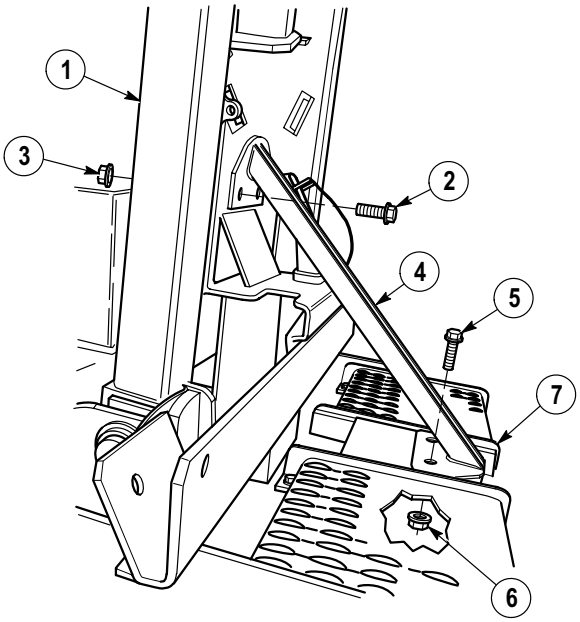

f. Adjustment.

(1) Position lifting frame (1) in stow mode (TM 9-2320-364-10).

(2) Start engine (TM 9-2320-364-10).

CAUTION

Engine speed must be at idle before using hydraulic selector switch, or damage to equipment may result.

(3) Set hydraulic selector switch (2) to AUTO and stow LHS (TM 9-2320-364-10).

(4) Extend LHS (3) to lifting frame (1).

(5) Position lifting frame (1) on truck with LHS in stow mode (TM 9-2320-364-10).

NOTE

Lifting frame is properly stowed when completely seated on cone weldment.

(6) Ensure lifting frame (1) is completely seated on cone weldment (4).

NOTE

Perform Steps (7) and (8), as necessary, if lifting frame is not completely seated.

(7) Raise lifting frame (1) with LHS (3) approximately 12 in. (30 cm) then lower lifting frame on cone weldment (4).

(8) Repeat Step (6).

(9) Shut OFF engine.

NOTE

Ensure lifting frame wear pads contact LHS hook arm.

(10) With the aid of an assistant, position lifting frame (1) towards rear of truck until lifting frame wear pads (5) contact LHS.

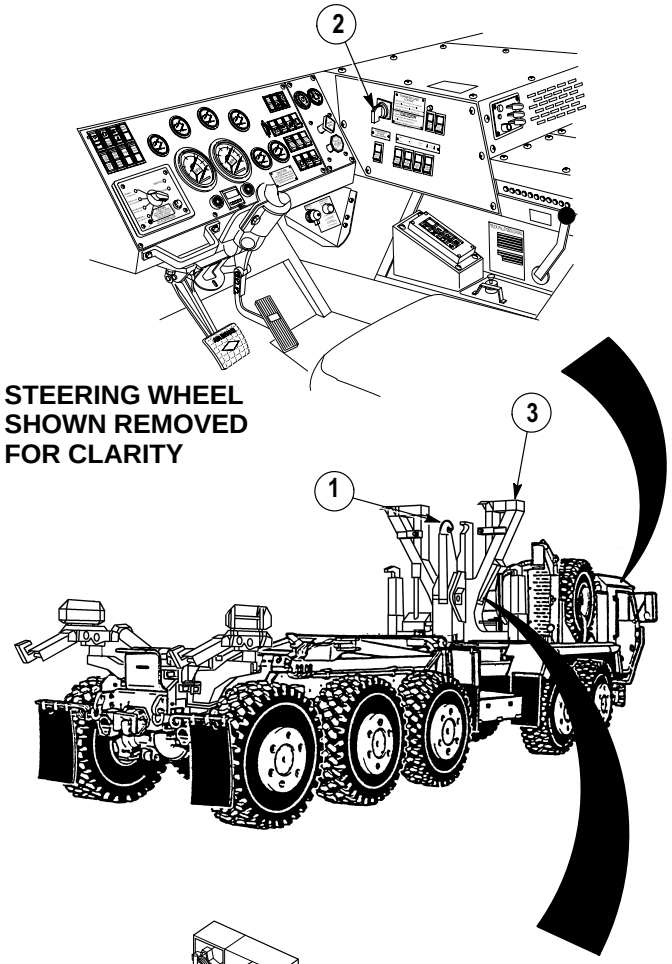

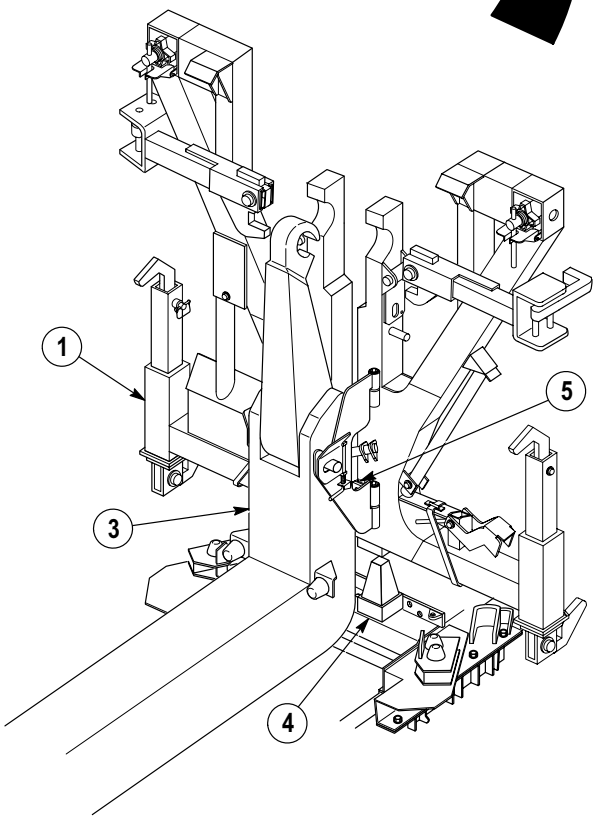

21-34. CONTAINER HANDLING UNIT (CHU) STOW WELDMENT REPLACEMENT (CONT).

NOTE

- Stow hooks are not tightened on stow weldment.
- Stow hook should have an even gap around lifting frame pin.

(11) Tighten six screws (6) and locknuts (7) on two hooks (8) and stow weldment (9).

(12) Verify lifting frame wear pad gap to LHS hook arm is less than 1/8 in. (3.2 mm). If not repeat Steps (6) through (11).

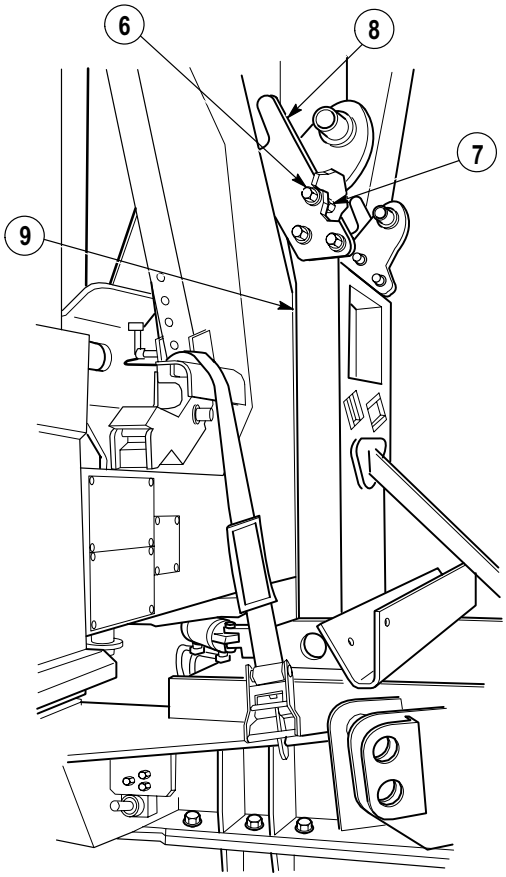

g. Follow-On Maintenance:

- Install rail transport corner ISO locks, (TM 9-2320-364-10).
- Install container guides, (TM 9-2320-364-10).
- Remove wheel chocks, (TM 9-2320-364-10).

END OF TASK

21-35. CONTAINER HANDLING UNIT (CHU) LIFTING FRAME ASSEMBLY REPLACEMENT.

This task covers:

a. Removal b. Installation c. Follow-On Maintenance

INITIAL SETUP

Tools and Special Tools
Tool Kit, General Mechanic's: Automotive (Item 74, Appendix G)

Materials/Parts
Sealing Compound (Item 83, Appendix C)

Personnel Required
Two

Equipment Condition
Lifting frame in 82 in. (208 cm) mode, (TM 9-9-2320-364-10)
Lifting frame removed from truck, (TM 9-2320-364-10)
Locking plate removed, (Para 21-36)
Lower container lock plate removed, (Para 21-37)
Flipper bracket and lock plate removed, (Para 21-38)
Lifting frame strap removed, (Para 21-47)

a. Removal.

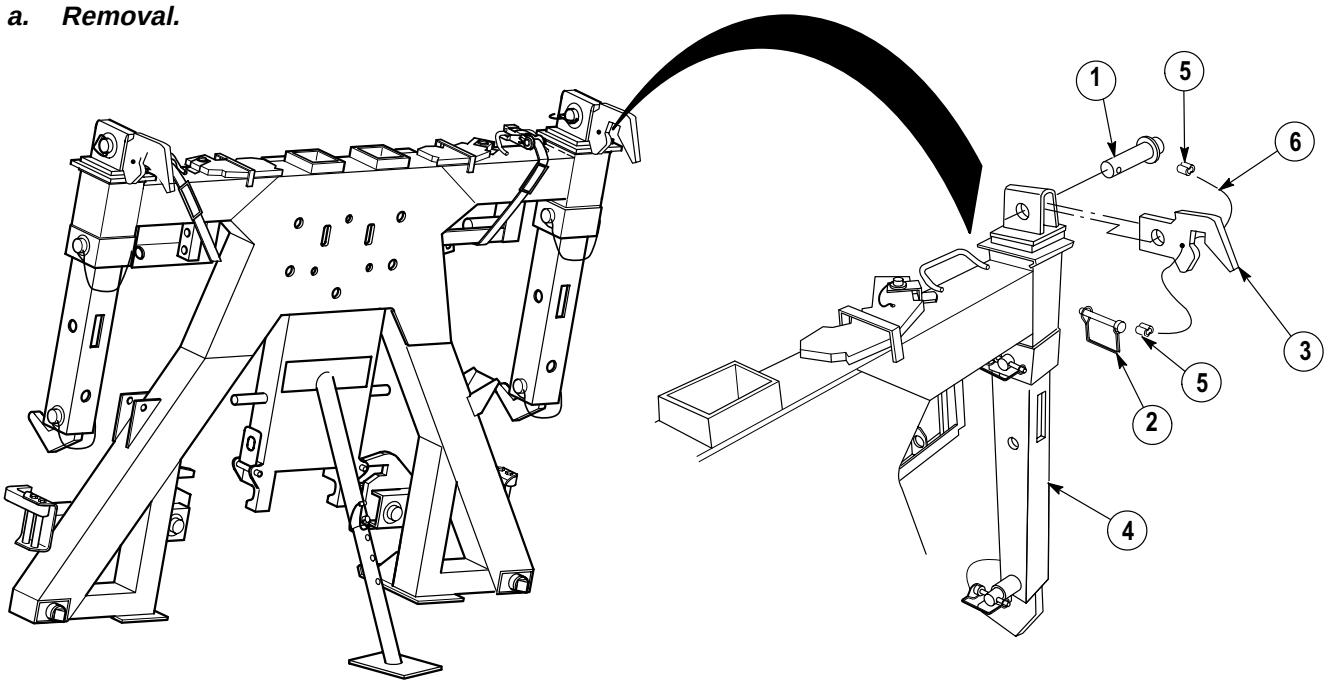

NOTE

- There are two slide arms. Both are removed the same way. Right side is shown.
- Only remove wire ropes, swaging sleeves, pins and lock pins if components are damaged.

(1) Remove pin (1), lock pin (2) and upper hook (3) from slide arm (4).

(2) Remove two swaging sleeves (5) and wire rope (6) from pin (1) and lock pin (2).

21-35. CONTAINER HANDLING UNIT (CHU) LIFTING FRAME ASSEMBLY REPLACEMENT (CONT).

(3) Remove lock pin (7) and pin (8) from lifting frame stow bracket (9).

(4) Remove two swaging sleeves (10) and wire rope (11) from pin (8) and lock pin (7).

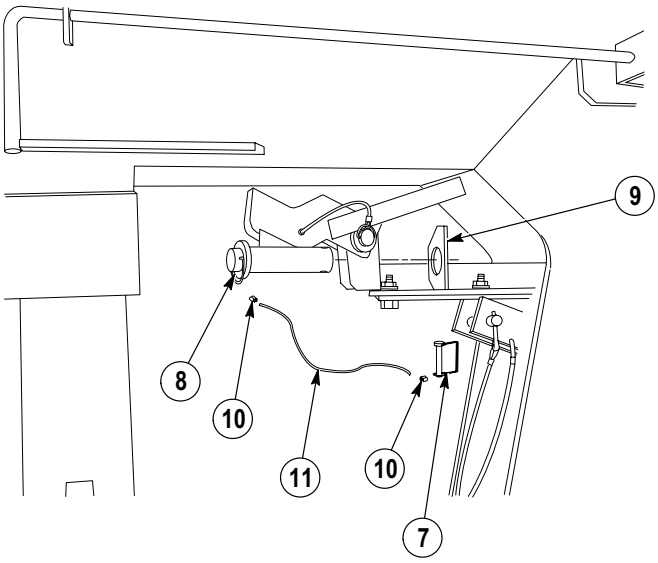

(5) Remove lock pin (12), collar (13), pin (14) and lifting hook (15) from slide arm (4).

(6) Remove two swaging sleeves (16) and wire rope (17) from pin (14) and lock pin (12).

WARNING

Slide arm weighs 65 lbs (29 kg). Attach suitable lifting device to prevent possible injury to personnel.

(7) Attach lifting device to slide arm (4).

(8) With the aid of an assistant, remove slide arm (4) from lifting frame (18).

(9) Remove lifting device from slide arm (4).

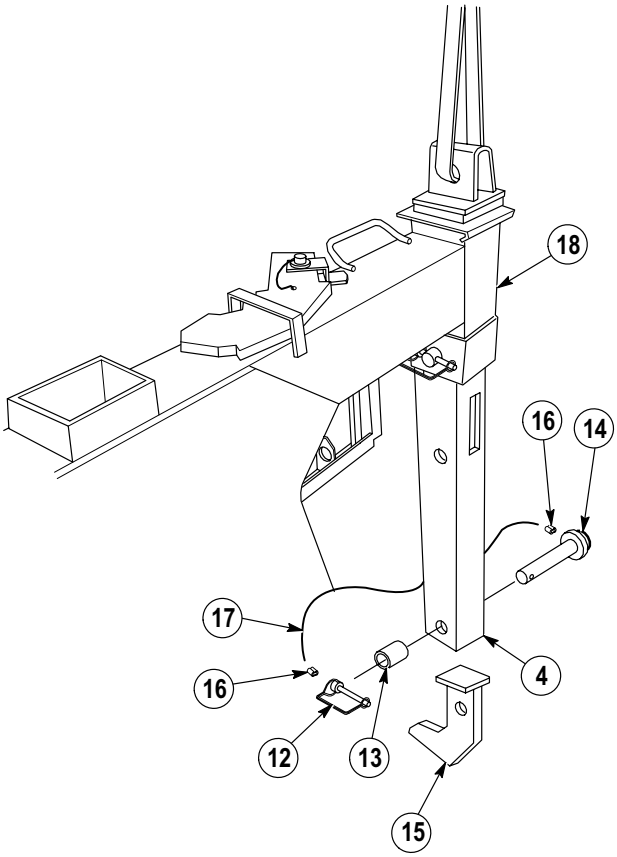

NOTE

There are two six foot hooks.
Both are removed the same way.
Right side is shown.

(10) Remove lock pin (19), pin (20) and six foot hook (21) from lifting frame stow bracket (22).

(11) Remove two swaging sleeves (23) and wire rope (24) from six foot hook (21), pin (20) and lock pin (19).

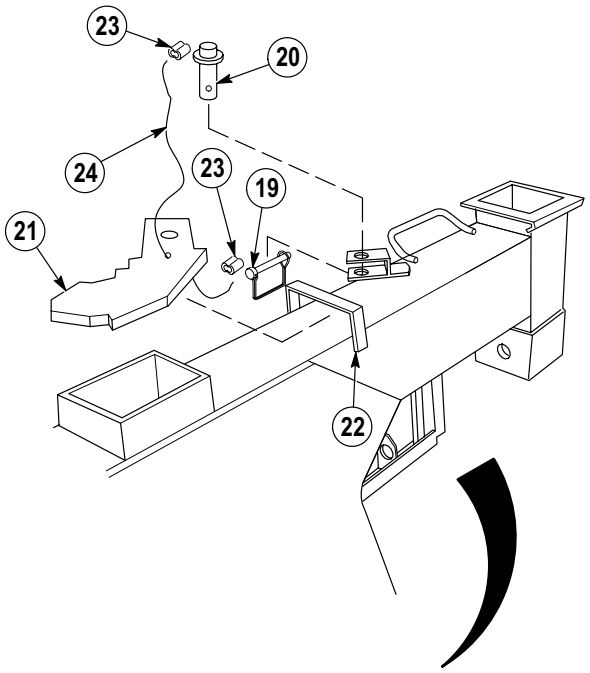

(12) Remove lock pin (25), pin (26) and bail bar lock (27) from lifting frame stow bracket (28).

(13) Remove two swaging sleeves (29), wire rope (30) from bail bar lock (27), pin (26) and lock pin (25).

(14) Remove lock pin (31) from lifting frame stow bracket (32).

(15) Remove two swaging sleeves (33) and wire rope (34) from lifting frame stow bracket (32) and lock pin (31).

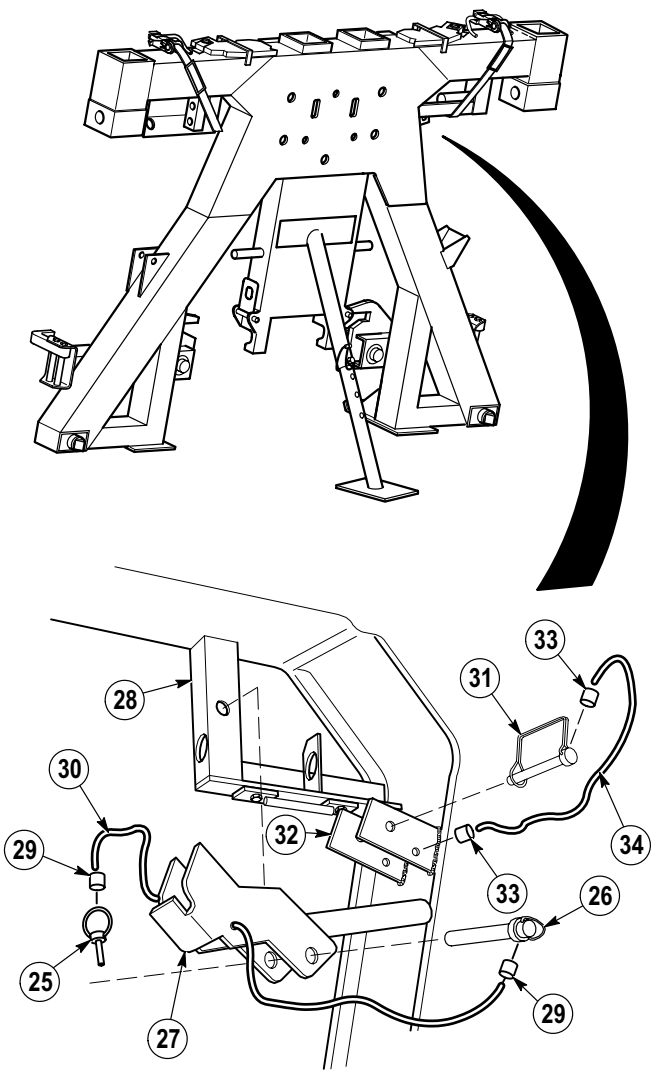

21-35. CONTAINER HANDLING UNIT (CHU) LIFTING FRAME ASSEMBLY REPLACEMENT (CONT).

NOTE

There are two container locks and half height container hooks. Both are removed the same way. Right side is shown.

(16) Remove lock pin (35), pin (36) and container lock (37) from lifting frame stow bracket (38).

(17) Remove two swaging sleeves (39) and wire rope (40) from container lock (37), pin (36) and lock pin (35).

(18) Remove lock pin (41), pin (42) and half height container hook (43) from lifting frame stow bracket (38).

(19) Remove two swaging sleeves (44) and wire rope (45) from half height container hook (43), pin (42) and lock pin (41).

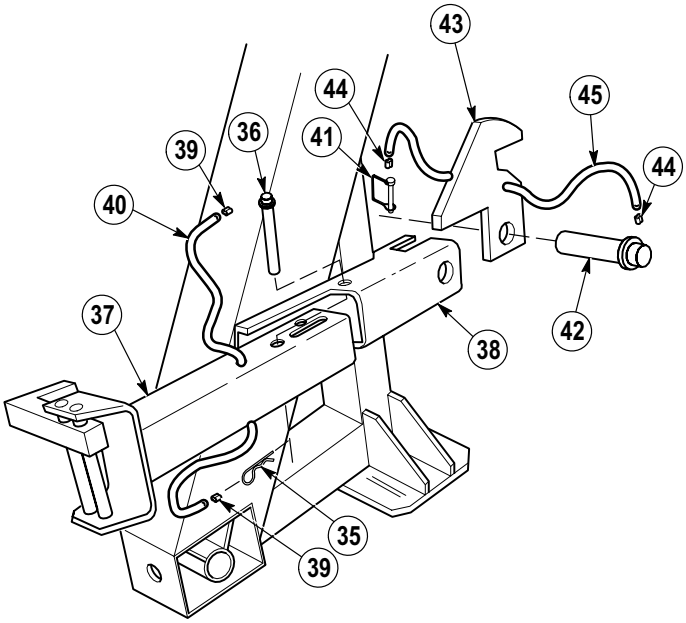

(20) Remove four screws (46) and two long wear pads (47) from lifting frame (18).

(21) Remove four screws (48) and two short wear pads (49) from lifting frame (18).

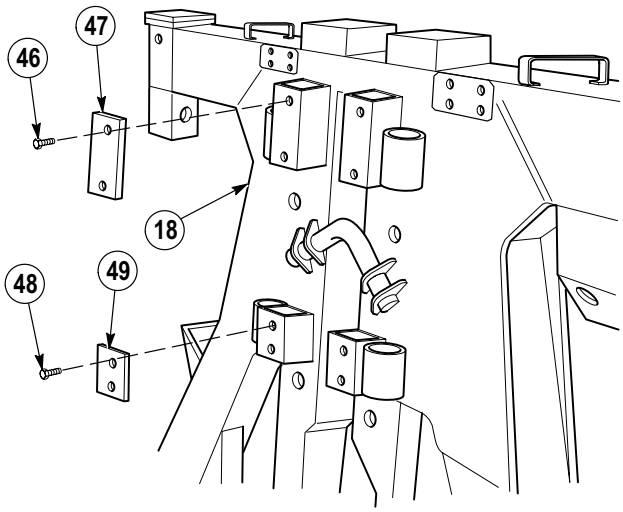

WARNING

Lifting frame weighs 1600 lbs (726 kg). Attach suitable lifting device to prevent possible injury to personnel.

(22) Attach lifting device to lifting frame (18).

(23) With the aid of an assistant, lift and support lifting frame (18).

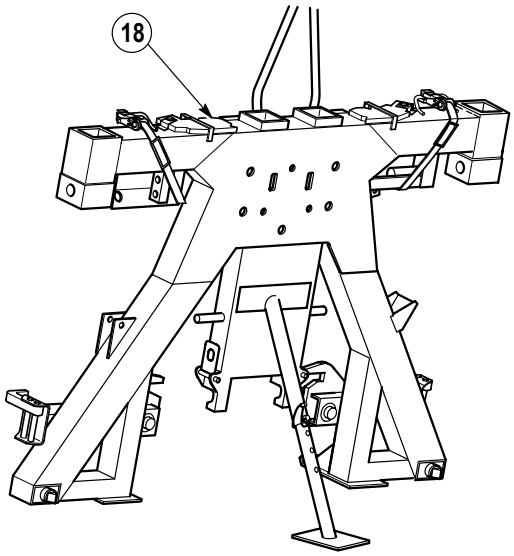

(24) Support lower half of support leg (50) and remove lock pin (51) and pin (52).

(25) Remove lower half of support leg (50) from upper half of support leg (53).

(26) With the aid of an assistant, support upper half of support leg (53) and remove two lock pins (54) from upper half of support leg and lifting frame (18).

(27) Remove upper half of support leg (53) from lifting frame (18).

(28) Lower lifting frame (18) to ground and remove lifting device.

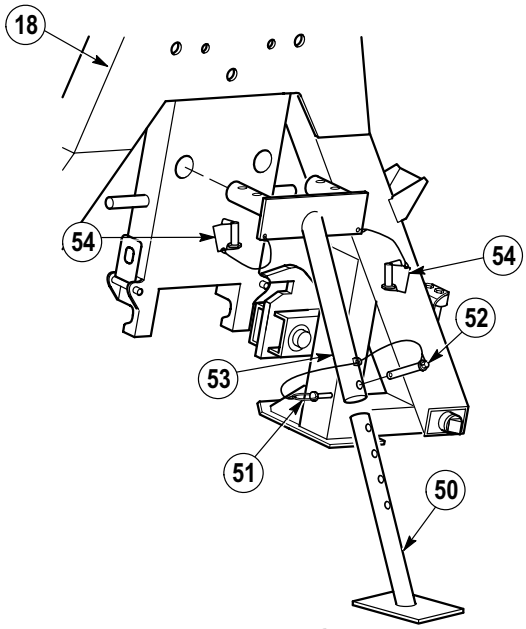

(29) Remove two swaging sleeves (55) and wire rope (56) from lockpin (51), pin (52) and upper half of support leg (53).

(30) Remove four swaging sleeves (57) and two wire ropes (58) from two lock pins (54) and upper half of support leg (53).

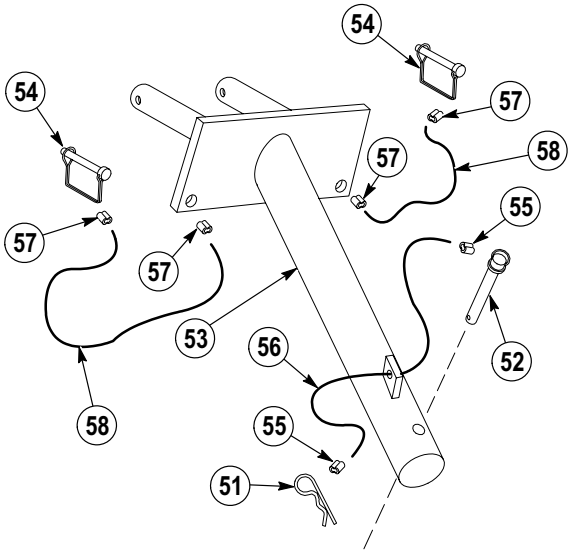

21-35. CONTAINER HANDLING UNIT (CHU) LIFTING FRAME ASSEMBLY REPLACEMENT (CONT).

b. Installation.

NOTE

Install wire ropes, swaging sleeves, pins and lock pins, only if removed.

(1) Install two lock pins (54) with wire ropes (58) and four swaging sleeves (57) on upper half of support leg (53).

(2) Install pin (52), lockpin (51) with wire rope (56) and two swaging sleeves (55) on upper half of suport leg (53).

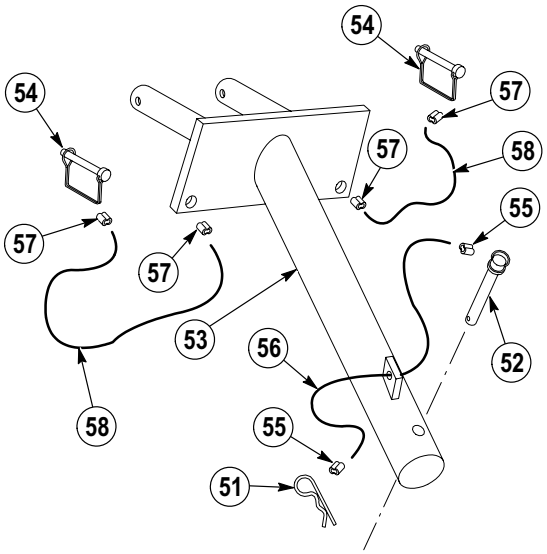

WARNING

Lifting frame weighs 1600 lbs (726 kg). Attach suitable lifting device to prevent possible injury to personnel.

(3) Attach lifting device to lifting frame (18).

(4) With the aid of an assistant, lift and support lifting frame (18).

(5) With the aid of an assistant, install upper half of support leg (53) on lifting frame (18) with two lock pins (54).

(6) Install lower half of support leg (50) on upper half of support leg (53) with pin (52) and lockpin (51).

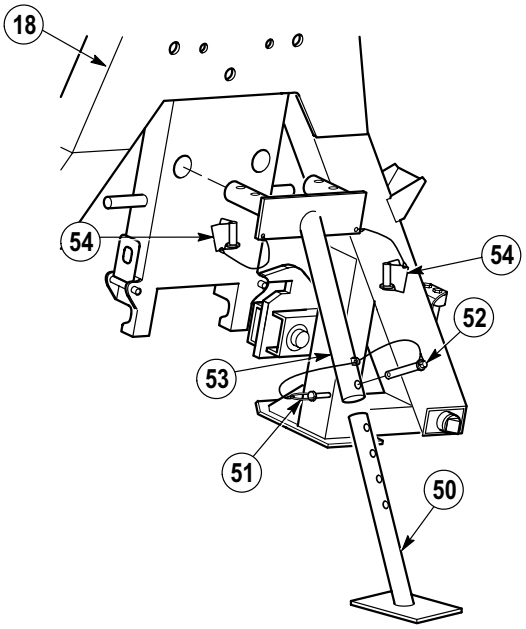

(7) With lifting device, position lifting frame (18) on ground.

(8) Remove lifting device from lifting frame (18).

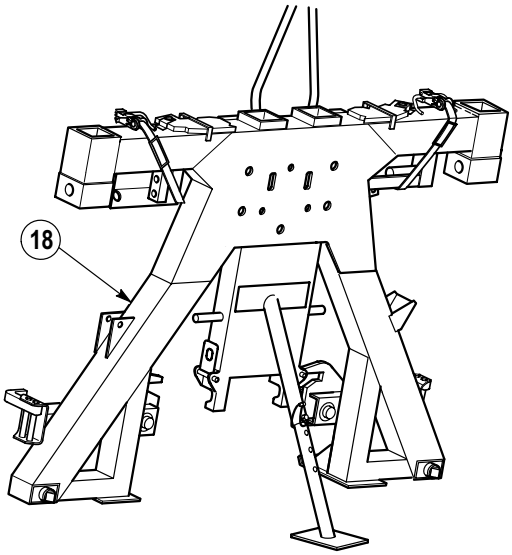

WARNING

Adhesives, solvents, and sealing compounds can burn easily, can give off harmful vapors, and are harmful to skin and clothing. To avoid injury or death, keep away from open fire and use in well-ventilated area. If adhesive, solvent, or sealing compound gets on skin or clothing, wash immediately with soap and water.

(9) Apply sealing compound to threads of four screws (46) and (48).

(10) Install two short wear pads (49) to lifting frame (18) with four screws (48).

(11) Install two long wear pads (47) to lifting frame (18) with four screws (46).

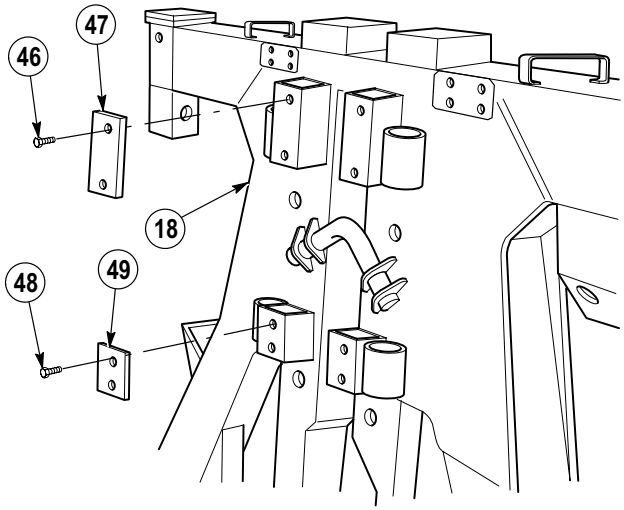

21-35. CONTAINER HANDLING UNIT (CHU) LIFTING FRAME ASSEMBLY REPLACEMENT (CONT).

NOTE

There are two container locks and half height container hooks. Both are installed the same way. Right side is shown.

(12) Install pin (42) and lock pin (41) with wire rope (45) and swaging sleeves (44) on half height container hook (43).

(13) Install half height container hook (43) on lifting frame stow bracket (38) with pin (42) and lock pin (41).

(14) Install pin (36) and lock pin (35) with wire rope (40) and swaging sleeves (39) on container lock (37).

(15) Install container lock (37) on lifting frame stow bracket (38) with pin (36) and lock pin (35).

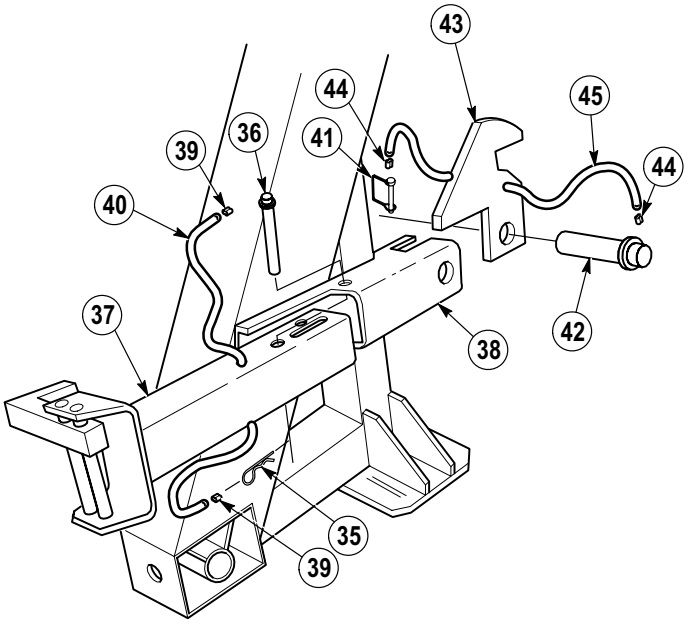

(16) Install lock pin (31) with wire rope (34) and swaging sleeves (33) on lifting frame stow bracket (28).

(17) Install pin (26) and lock pin (25) with wire rope (30) and swaging sleeves (29) on bail bar lock (27).

(18) Install bail bar lock (27) on lifting frame stow bracket (28) with pin (26) and lock pin (25).

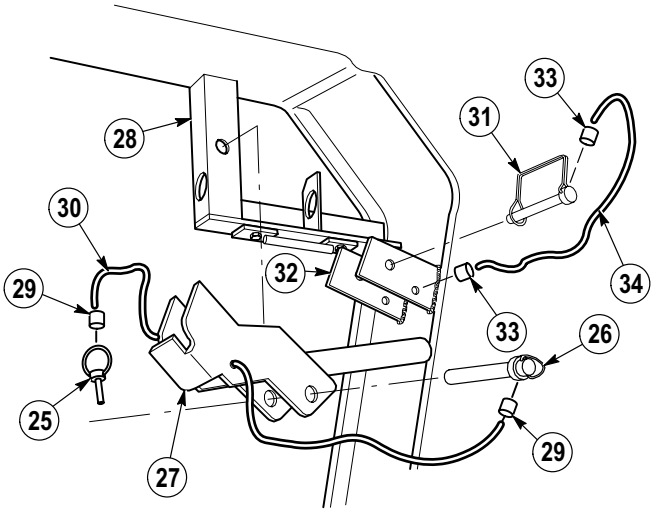

NOTE

There are two six foot hooks.
Both are installed the same way.
Right side is shown.

(19) Install pin (20) and lock pin (19) with wire rope (24) and swaging sleeves (23) on six foot hook (21).

(20) Install six foot hook (21) on lifting frame stow bracket (22) with pin (20) and lock pin (19).

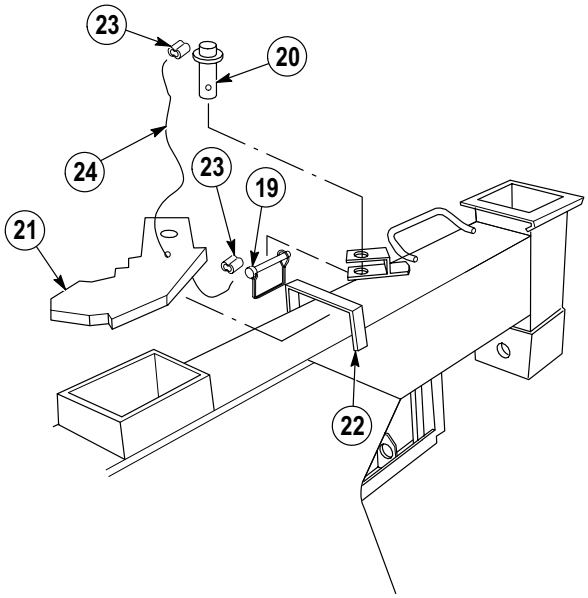

21-35. CONTAINER HANDLING UNIT (CHU) LIFTING FRAME ASSEMBLY REPLACEMENT (CONT).

WARNING

Slide arm weighs 65 lbs (29 kg). Attach suitable lifting device to prevent possible injury to personnel.

(21) Attach lifting device to slide arm (4).

(22) With the aid of an assistant, position slide arm (4) on lifting frame (18).

(23) Install wire rope (17) and swaging sleeves (16) on pin (14) and lockpin (12).

(24) Install lifting hook (15) on slide arm (4) with pin (14), collar (13) and lock pin (12).

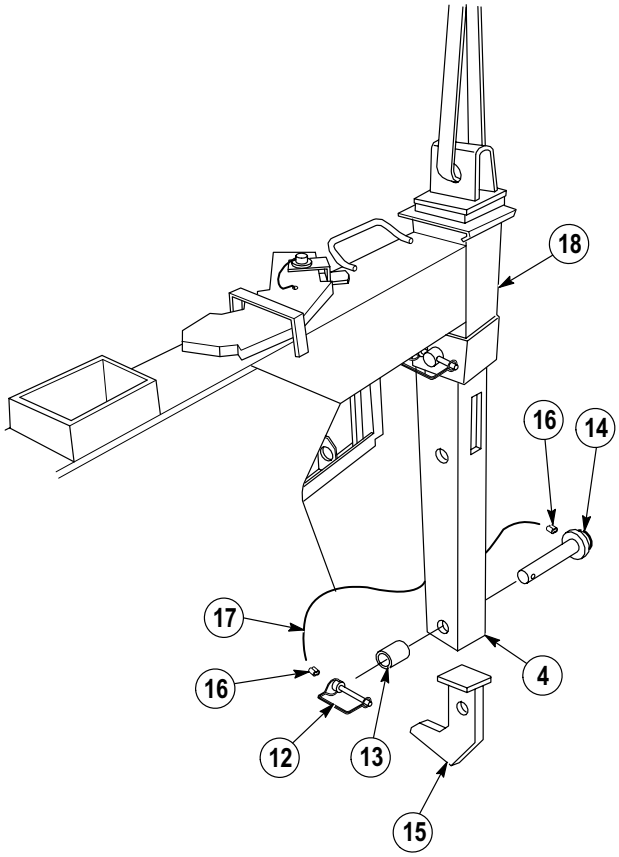

(25) Install pin (8) and lock pin (7) with wire rope (11) and two swaging sleeves (10) on lifting frame stow bracket (9)

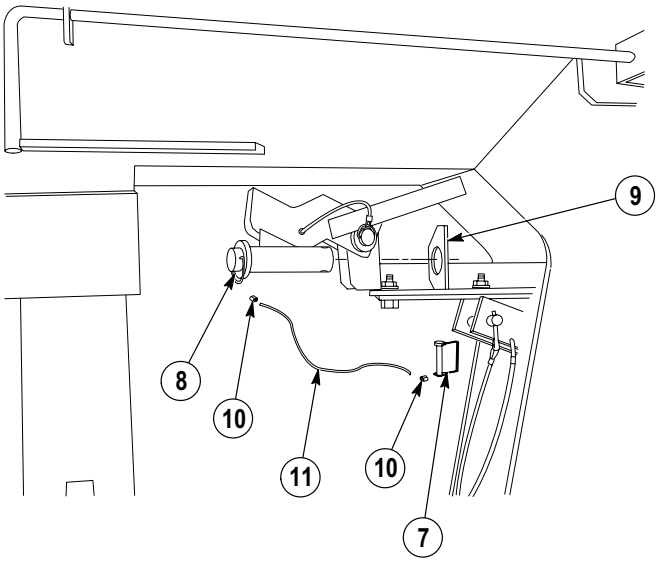

(26) Install pin (1) and lock pin (2) with wire rope (6) and two swaging sleeves (5) on upper hook (3).

(27) Install upper hook (3) on slide arm (4) with pin (1) and lock pin (2).

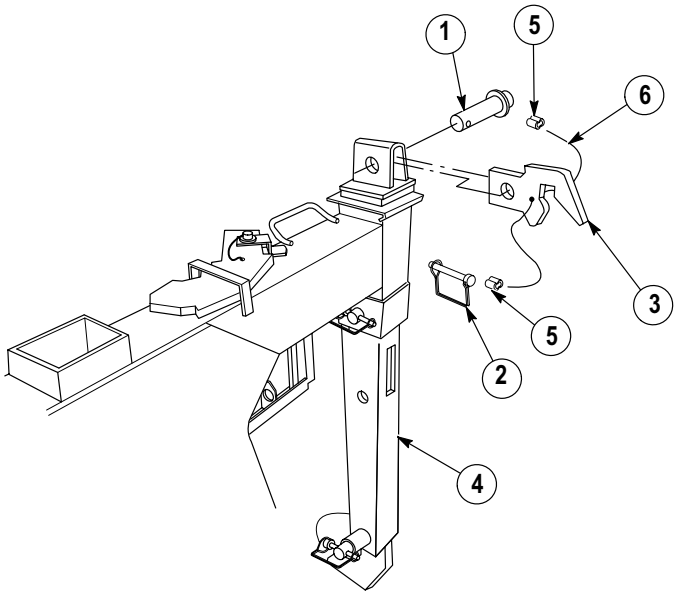

c. Follow-on Maintenance:

- Install lifting frame strap, (Para 21-47).
- Install flipper bracket and lock plate, (Para 21-38).
- Install lower container lock plate, (Para 21-37).
- Install locking plate, (Para 21-36).
- Lubricate lifting frame, (TM 9-2320-364-10).
- Install lifting frame on truck, (TM 9-2320-364-10).
- Remove wheel chocks, (TM 9-2320-364-10).

END OF TASK

21-36. CONTAINER HANDLING UNIT (CHU) LIFTING FRAME LOCKING PLATE ASSEMBLY REPLACEMENT.

This task covers:

a. Removal b. Installation c. Follow-On Maintenance

INITIAL SETUP

Tools and Special Tools
Tool Kit, General Mechanic's: Automotive (Item 74, Appendix G)

Materials/Parts
Pin, Cotter (2) (Item 267, Appendix F)

Equipment Condition
Lifting frame removed from truck, (TM 9-2320-364-10)
Engine OFF, (TM 9-2320-364-10)
Wheels chocked, (TM 9-2320-364-10)

a. Removal.

NOTE

There are two locking plate assemblies. Both are installed the same way. Left side is shown.

(1) Remove quick release pin (1) from lifting frame (2).

(2) Remove two cotter pins (3), hinge pin (4) and locking plate (5) from lifting frame (2). Discard cotter pins.

NOTE

Perform Step (3) if wire rope or pins are damaged.

(3) Remove two swaging sleeves (6), wire rope (7) and quick release pin (1) from locking plate (5).

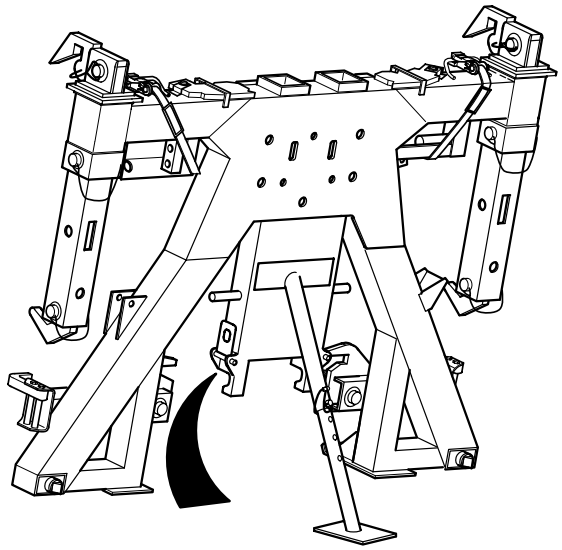

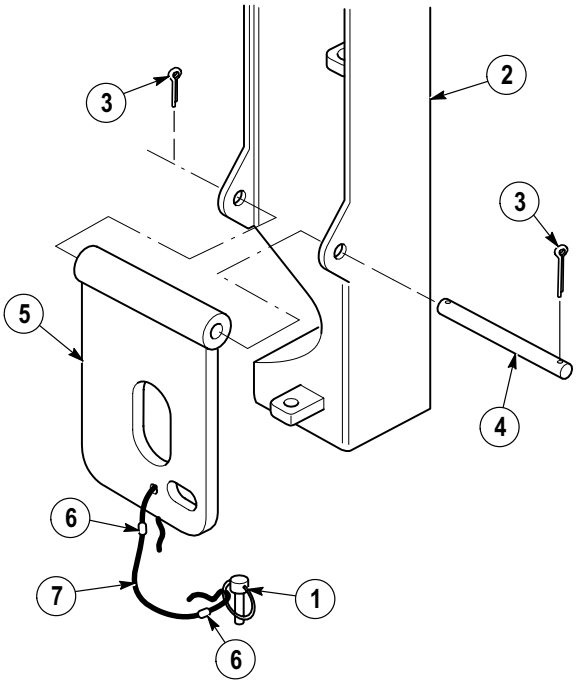

b. Disassembly.

NOTE

- There are two locking plate assemblies. Both are installed the same way. Left side is shown.
- Perform Step (1) if wire rope or pins were removed.

(1) Install wire rope (7) to quick release pin (1) and locking plate (5) with two swaging sleeves (6).

(2) Install locking plate (5) on lifting frame (2) with hinge pin (4) and two cotter pins (3) .

(3) Install quick release pin (1) on lifting frame (2).

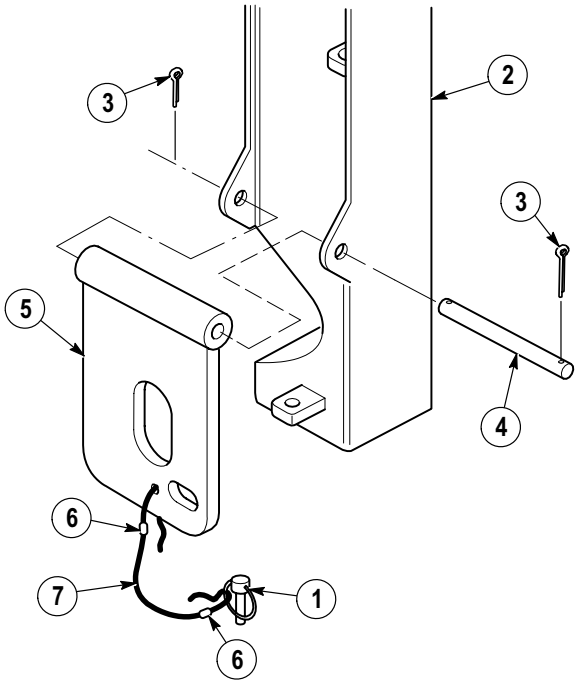

c. Follow-On Maintenance:

- Lubricate locking plate, (TM 9-2320-364-10).
- Install lifting frame on truck, (TM 9-2320-364-10).
- Remove wheel chocks, (TM 9-2320-364-10).

END OF TASK

21-37. CONTAINER HANDLING UNIT (CHU) LIFTING FRAME LOWER CONTAINER LOCK PLATE REPAIR.

This task covers:

a. Removal
b. Cleaning/Inspection
c. Installation
d. Follow-On Maintenance

INITIAL SETUP

Tools and Special Tools
Tool Kit, General Mechanic's: Automotive (Item 74, Appendix G)
Compressor Unit, Air (Item 11, Appendix G)
Gloves, Chemical Oil Protective (Item 28, Appendix G)
Goggles, Industrial (Item 30, Appendix G)
Gun, Air Blow (Item 31, Appendix G)

Materials/Parts
Sealing Compound (Item 83, Appendix C)

Equipment Condition
Lifting frame removed from truck, (TM 9-2320-364-10)
Engine OFF, (TM 9-2320-364-10)
Wheels chocked, (TM 9-2320-364-10)

a. Removal.

NOTE

There are two lower container lock plates. Both are removed the same way. Right side is shown.

(1) Raise handle lock plate (1) and rotate lower container lock handle (2) towards center of lifting frame (3) to unlock.

NOTE

Ensure tab on hand nut faces up.

(2) Release handle lock plate (1) on lifting frame (3).

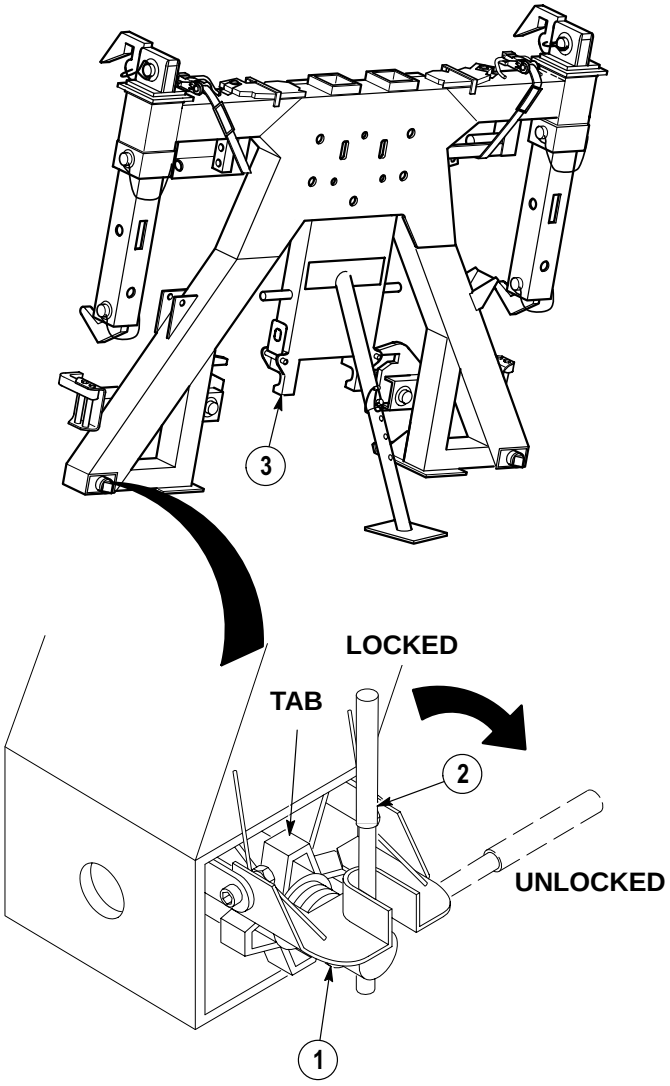

(3) Remove two nuts (4) from screws (5).

NOTE

Note position of springs prior to removal.

(4) Remove two screws (5), with springs (6) and handle lock plate (1) from lifting frame (3).

(5) Remove springs (6) from screws (5).

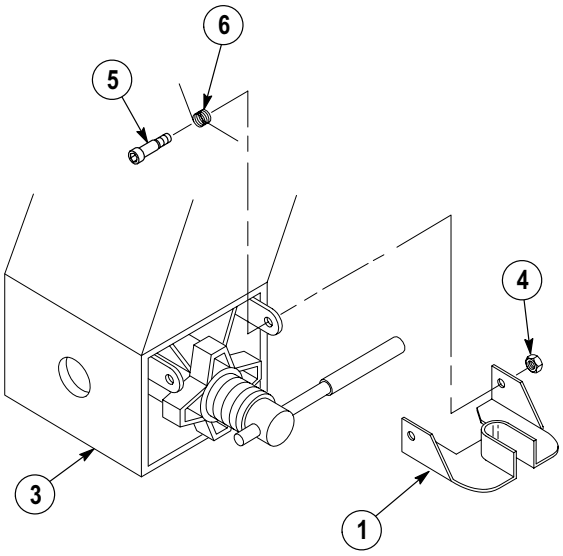

b. Cleaning/Inspection.

WARNING

- Drycleaning Solvent (P-D-680) is TOXIC and flammable. Wear protective goggles, face shield, and gloves; use only in a well-ventilated area; avoid contact with skin, eyes, and clothes, and do not breathe vapors. Keep away from heat or flame. Never smoke when using solvent. The flashpoint for Type II Drycleaning Solvent is 140 degrees F (60 degrees C) and Type III Drycleaning Solvent is 200 degrees F (93 degrees C). Failure to do so may result in injury or death to personnel.
- If personnel become dizzy while using cleaning solvent, immediately get fresh air and medical help. If solvent contacts skin or clothes, flush with cold water. If solvent contacts eyes, immediately flush eyes with water and get immediate medical attention.

(1) Clean all metal parts with drycleaning solvent.

WARNING

Compressed air used for cleaning purposes will not exceed 30 psi (207 kPa). Use only with effective chip guarding and personal protective equipment (goggles/shield, gloves, etc.) or injury to personnel may result.

(2) Dry parts with compressed air.

(3) Inspect parts for breaks, cracks, burrs and sharp edges. Look for unusual signs of wear on lockplate.

(4) Replace all damaged parts.

21-37. CONTAINER HANDLING UNIT (CHU) LIFTING FRAME LOWER CONTAINER LOCK PLATE REPAIR (CONT).

c. Installation.

NOTE

- There are two lower container lock plates. Both are installed the same way. Right side is shown.
- Install springs as noted prior to removal.

(1) Position springs (6) on screws (5).

NOTE

It will be necessary to compress springs before installing screws.

(2) Install handle lock plate (1) on lifting frame (3) with two screws (5) and springs (6).

WARNING

Adhesives, solvents, and sealing compounds can burn easily, can give off harmful vapors, and are harmful to skin and clothing. To avoid injury or death, keep away from open fire and use in well-ventilated area. If adhesive, solvent, or sealing compound gets on skin or clothing, wash immediately with soap and water.

(3) Apply sealing compound to threads of two screws (5).

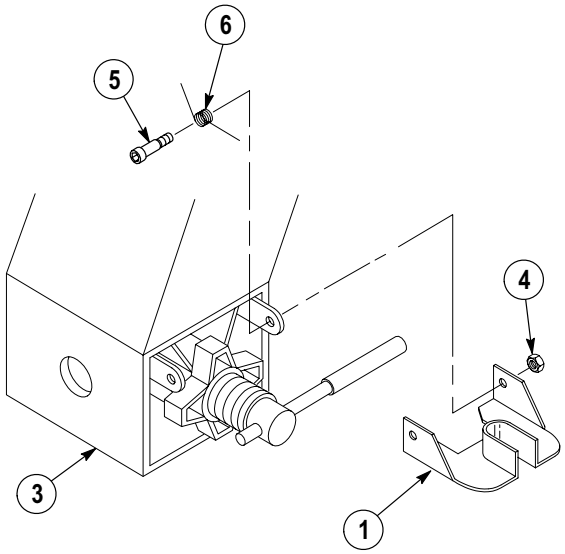

(4) Install two nuts (4) on screws (5).

NOTE

Ensure tab on hand nut faces up.

(5) Hold handle lock plate (1) up and rotate lower container lock handle (2) up to (locked) position.

(6) Release handle lock plate (1) on lifting frame (3).

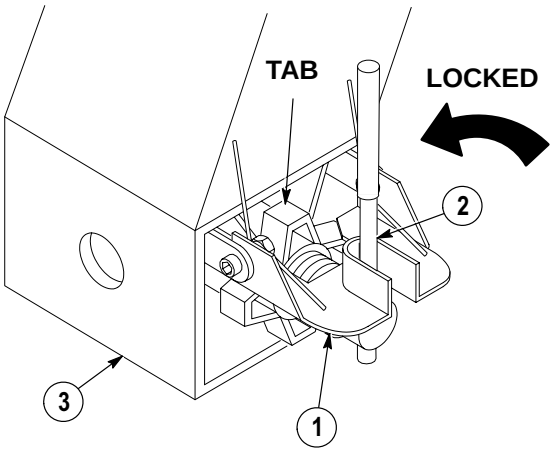

d. Follow-On Maintenance:

- Lubricate lock plate, (TM 9-2320-364-10).
- Install lifting frame on truck, (TM 9-2320-364-10).
- Remove wheel chocks, (TM 9-2320-364-10).

END OF TASK

21-38. CONTAINER HANDLING UNIT (CHU) LIFTING FRAME FLIPPER BRACKET AND LOCK PLATE REPAIR.

This task covers:

a. Removal
b. Cleaning/Inspection
c. Installation
d. Adjustment
e. Follow-On Maintenance

INITIAL SETUP

Tools and Special Tools
Tool Kit, General Mechanic's: Automotive (Item 74, Appendix G)
Compressor Unit, Air (Item 11, Appendix G)
Gloves, Chemical Oil Protective (Item 28, Appendix G)
Goggles, Industrial (Item 30, Appendix G)
Gun, Air Blow (Item 31, Appendix G)

Materials/Parts
Antiseize Compound (Item 21, Appendix C)
Sealing, Compound (Item 83, Appendix C)

Materials/Parts (cont)
Lockwasher (2) (Item 172, Appendix F)
Cotter pin (2) (Item 267, Appendix F)
Cotter pin (Item 268, Appendix F)
Spring pin (2) (Item 285, Appendix F)

Equipment Condition
Engine OFF, (TM 9-2320-364-10)
Wheels chocked, (TM 9-2320-364-10)
Remove lifting frame from truck, (TM 9-2320-364-10)

a. Removal.

WARNING

Use care when removing springs. Springs are under tension and can act as projectiles when released and could cause injury to personnel.

NOTE

There are two flipper pin brackets. Both are removed the same way. Left side is shown.

(1) Remove cotter pin (1), flipper lock pin (2), spring (3) and lock handle (4) from flipper pin bracket (5) and lifting frame (6). Discard cotter pin.

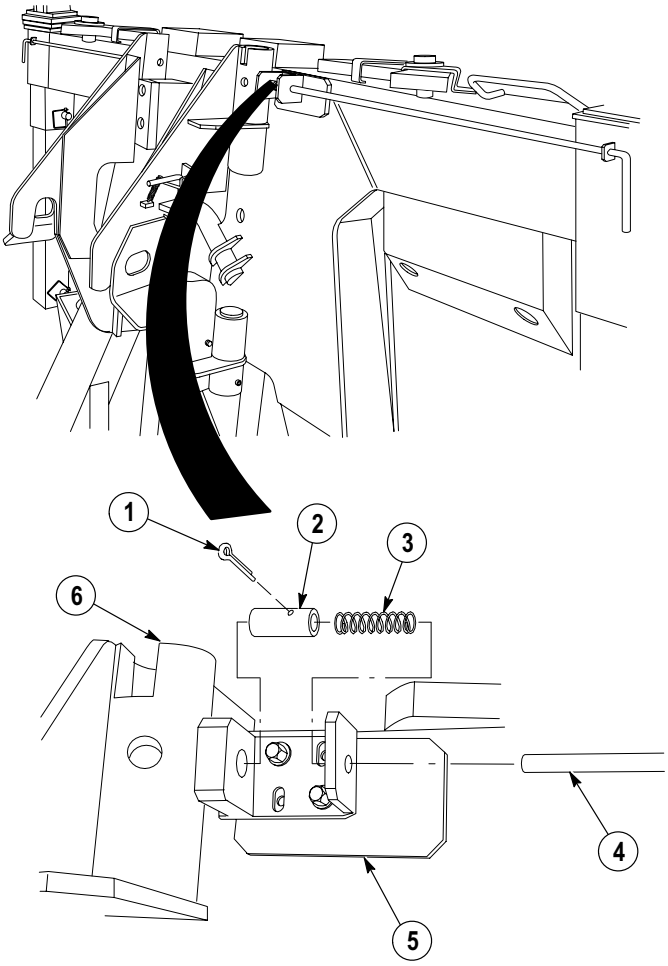

(2) Remove two screws (7), lockwashers (8), washers (9) and flipper pin bracket (5) from lifting frame (6). Discard lockwashers.

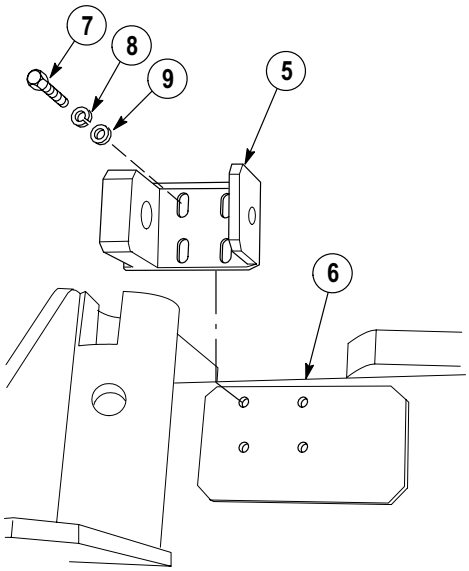

NOTE

There are two flippers and flipper locks. Both are removed the same way. Left side is shown.

(3) Remove screw (10) and washer (11) from pin (12).

(4) Remove screw (13) and washer (14) from pin (15).

(5) Remove two spring pins (16) from flipper bracket (17). Discard spring pins.

(6) Remove pin (12) from flipper bracket (17) and boss (18).

(7) Remove pin (15) from boss (19) and flipper bracket (17).

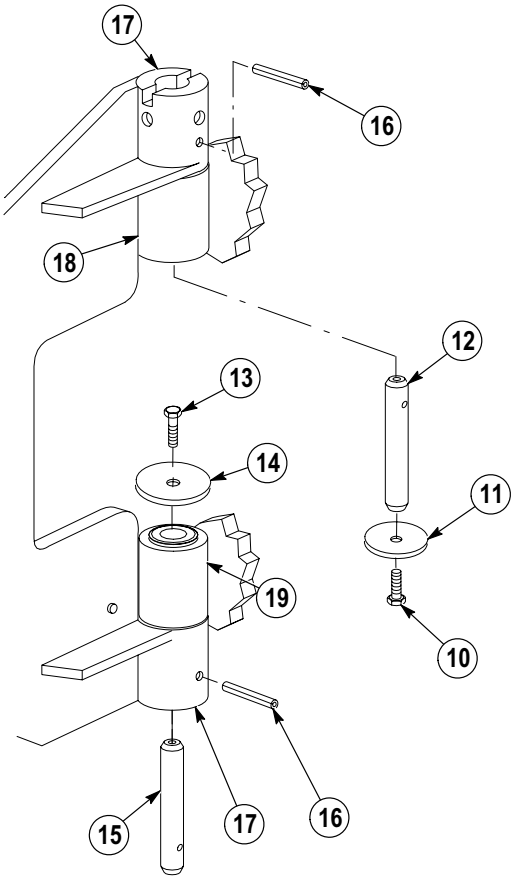

21-38. CONTAINER HANDLING UNIT (CHU) LIFTING FRAME FLIPPER BRACKET AND LOCK PLATE REPAIR (CONT).

(8) Remove flipper bracket (17) from boss (18) and boss (19).

(9) Remove four bushings (20) from boss (18) and boss (19).

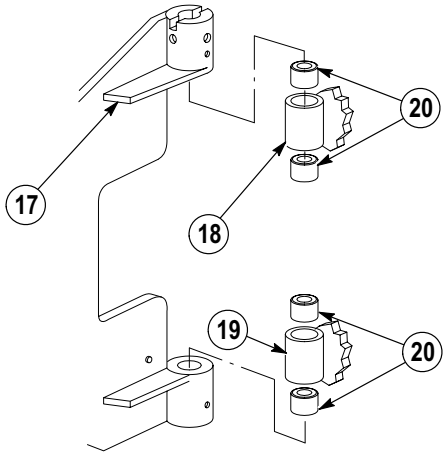

WARNING

Use care when removing springs. Springs are under tension and can act as projectiles when released and could cause injury to personnel.

(10) Remove spring (21) from flipper bracket (17) and lock plate (22).

(11) Remove retaining ring (23), washer (24), spring (25) and pin handle (26) from flipper bracket (17).

(12) Remove two cotter pins (27), pivot pin (28) and lock plate (22) from flipper bracket (17). Discard cotter pins.

(13) Remove jam nut (29) and screw (30) from flipper bracket (17).

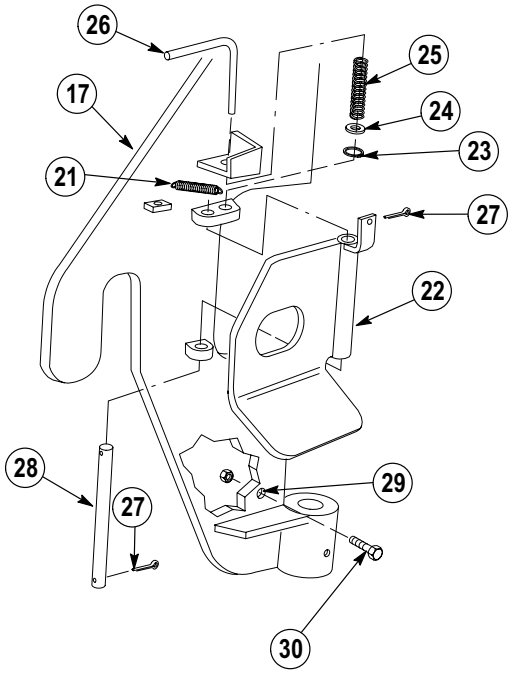

b. Cleaning/Inspection.

WARNING

- Drycleaning Solvent (P-D-680) is TOXIC and flammable. Wear protective goggles, face shield, and gloves; use only in a well-ventilated area; avoid contact with skin, eyes, and clothes, and do not breathe vapors. Keep away from heat or flame. Never smoke when using solvent. The flashpoint for Type II Drycleaning Solvent is 140 degrees F (60 degrees C) and Type III Drycleaning Solvent is 200 degrees F (93 degrees C). Failure to do so may result in injury or death to personnel.
- If personnel become dizzy while using cleaning solvent, immediately get fresh air and medical help. If solvent contacts skin or clothes, flush with cold water. If solvent contacts eyes, immediately flush eyes with water and get immediate medical attention.

(1) Clean all metal parts with drycleaning solvent.

WARNING

Compressed air used for cleaning purposes will not exceed 30 psi (207 kPa). Use only with effective chip guarding and personal protective equipment (goggles/shield, gloves, etc.) or injury to personnel may result.

(2) Dry parts with compressed air.

(3) Inspect parts for breaks, cracks, burrs and sharp edges.

(4) Replace all damaged parts.

21-38. CONTAINER HANDLING UNIT (CHU) LIFTING FRAME FLIPPER BRACKET AND LOCK PLATE REPAIR (CONT).

c. Installation.

NOTE

There are two flippers and flipper locks. Both are removed the same way. Left side is shown.

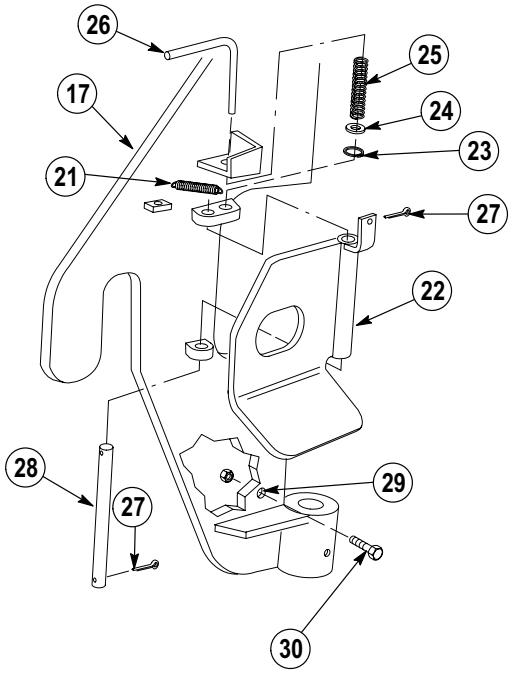

(1) Install screw (30) and jam nut (29) on flipper bracket (17). Do not tighten jam nut.

(2) Install lock plate (22) with pivot pin (28) and two cotter pins (27) on flipper bracket (17).

WARNING

Use care when removing springs. Springs are under tension and can act as projectiles when released and could cause injury to personnel.

(3) Install pin handle (26), spring (25), washer (24) and retaining ring (23) on flipper bracket (17).

(4) Install spring (21) on lock plate (22) and flipper bracket (17).

WARNING

Adhesives, solvents, and sealing compounds can burn easily, can give off harmful vapors, and are harmful to skin and clothing. To avoid injury or death, keep away from open fire and use in well-ventilated area. If adhesive, solvent, or sealing compound gets on skin or clothing, wash immediately with soap and water.

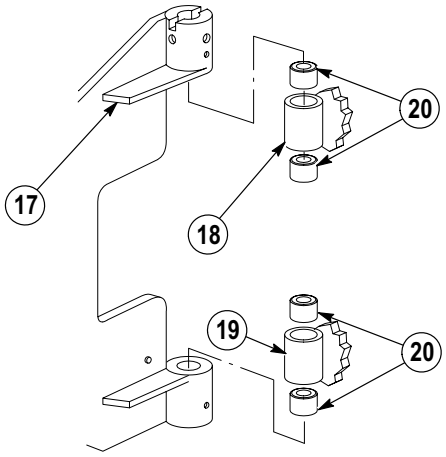

(5) Apply light coat of sealing compound to four bushings (20).

(6) Install four bushings (20) in boss (19) and boss (18).

(7) Position flipper bracket (17) on boss (19) and boss (18).

WARNING

Adhesives, solvents, and sealing compounds can burn easily, can give off harmful vapors, and are harmful to skin and clothing. To avoid injury or death, keep away from open fire and use in well-ventilated area. If adhesive, solvent, or sealing compound gets on skin or clothing, wash immediately with soap and water.

(8) Apply antiseize on pin (15).

(9) Align pin hole in pin (15) with pin hole in lower part of flipper bracket (17) and install pin in flipper bracket and boss (19).

(10) Apply antiseize on pin (12).

(11) Align pin hole in pin (12) with pin hole in upper part of flipper bracket (17) and install pin into flipper bracket and boss (18).

(12) Install two spring pins (16) into flipper bracket (17), pin (12) and pin (15).

(13) Position washer (14) and screw (13) in end of pin (15). Do not tighten screw.

(14) Position washer (11) and screw (10) in end of pin (12). Do not tighten screw.

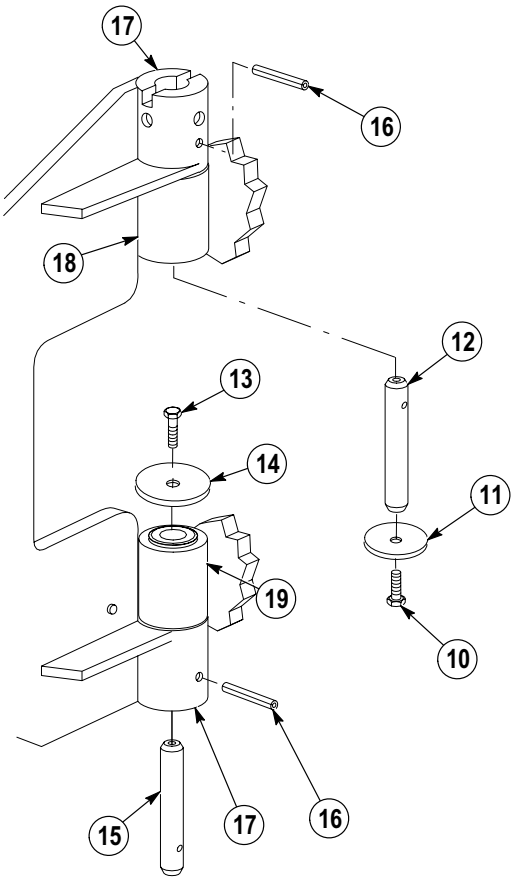

21-38. CONTAINER HANDLING UNIT (CHU) LIFTING FRAME FLIPPER BRACKET AND LOCK PLATE REPAIR (CONT).

NOTE

There are two flipper pin brackets. Both are installed the same way. Left side is shown.

(15) Install flipper pin bracket (5), two washers (9), lockwashers (8) and screws (7) on lifting frame (6).

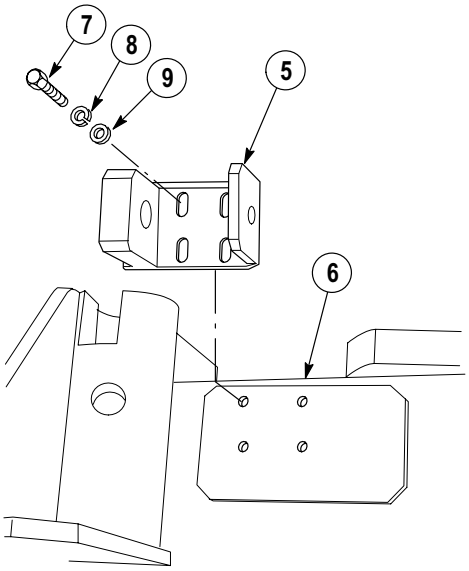

WARNING

Use care when installing springs. Springs are under tension and can act as projectiles when released and could cause injury to personnel.

(16) Position lock handle (4) through welded support on lifting frame (6), through flipper pin bracket (5) and install using spring (3), flipper lock pin (2) and cotter pin (1).

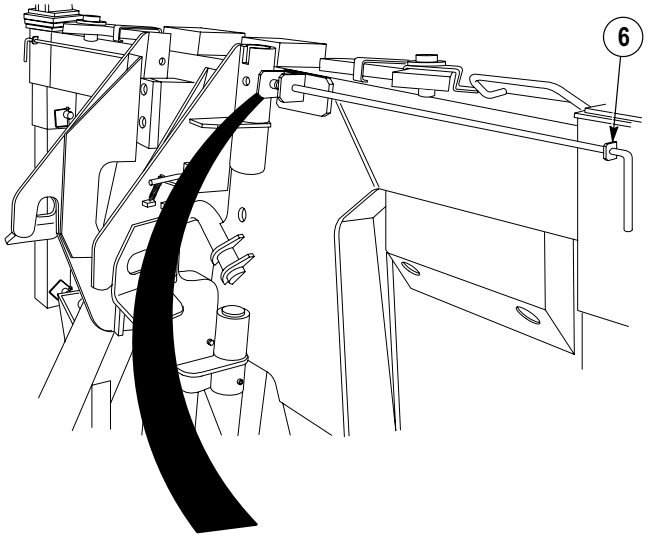

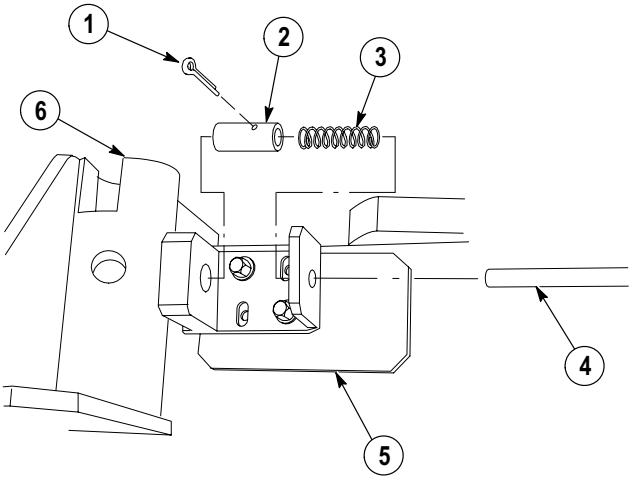

d. Adjustment.

(1) Remove screw (1) and washer (2) in boss (3) of flipper bracket (4).

(2) Remove screw (5) and washer (6) in boss (7) of flipper bracket (4).

WARNING

Adhesives, solvents, and sealing compounds can burn easily, can give off harmful vapors, and are harmful to skin and clothing. To avoid injury or death, keep away from open fire and use in well-ventilated area. If adhesive, solvent, or sealing compound gets on skin or clothing, wash immediately with soap and water.

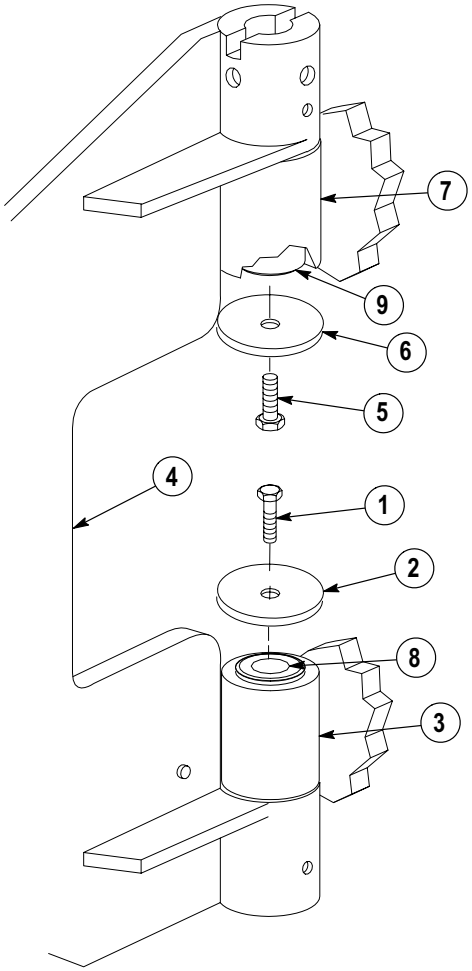

(3) Apply sealing compound to threads of screw (5).

(4) Position washer (6) and screw (5) on pin (8) and boss (7) of flipper bracket (4).

(5) Tighten screw (5) until washer (6) is tight against boss (7) of flipper bracket (4).

(6) Loosen screw (5) approximately 1/4 turn until washer (6) moves freely.

(7) Apply sealing compound to threads of screw (1).

(8) Position washer (2) and screw (1) on pin (9) and boss (3) of flipper bracket (4).

(9) Tighten screw (1) until washer (2) is tight against boss (3) of flipper bracket (4).

(10) Loosen screw (1) approximately 1/4 turn until washer (2) moves freely.

(11) Ensure washer (6) on boss (7) moves freely.

NOTE

Let sealing compound cure, approximately 15 minutes before operating flipper bracket.

(12) Rotate flipper bracket (4) and ensure screws (1) and (5) rotate flipper bracket, and washers (2) and (6) move freely.

21-38. CONTAINER HANDLING UNIT (CHU) LIFTING FRAME FLIPPER BRACKET AND LOCK PLATE REPAIR (CONT).

(13) Loosen jam nut (10) on screw (11).

(14) Adjust screw (11) to contact plate (12) on wear pad (13) when flipper lock pin (14) is aligned with hole in end of flipper bracket (15).

(15) Tighten jam nut (10) to flipper bracket (15).

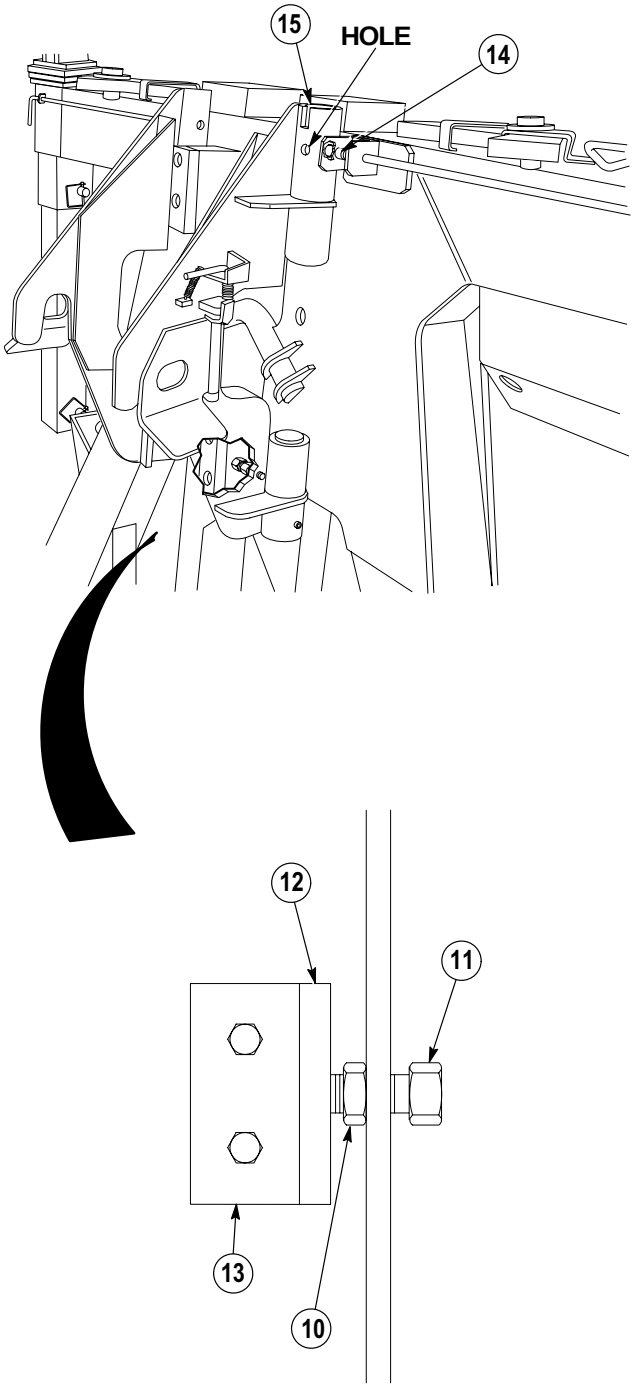

e. Follow-On Maintenance:

- Lubricate flipper bracket, (TM 9-2320-364-10).
- Install lifting frame on truck, (TM 9-2320-364-10).
- Remove wheel chocks, (TM 9-2320-364-10).

END OF TASK

21-39. SELF-RECOVERY WINCH (SRW) CONTAINER HANDLING UNIT (CHU) REAR GUIDE REPLACEMENT.

This task covers:

a. Removal b. Installation c. Follow-On Maintenance

INITIAL SETUP

Tools and Special Tools
Tool Kit, General Mechanic's: Automotive (Item 74, Appendix G)
Lifting Device, Minimum Capacity 70 lbs (32 kg)

Materials/Parts
Sealing Compound (Item 82, Appendix C)
Locknut (4) (Item 92, Appendix F)

Materials/Parts (cont)
Locknut (Item 100, Appendix F)
Lockwasher (2) (Item 166, Appendix F)

Personnel Required
Two

Equipment Condition
Engine OFF, (TM 9-2320-364-10)
Wheels chocked, (TM 9-2320-364-10)

a. Removal.

WARNING

Rear guide assembly weighs 70 lbs (32 kg). Attach suitable lifting device to prevent possible injury to personnel.

(1) Attach lifting device to rear guide (1).

(2) With the aid of an assistant, remove four locknuts (2) and screws (3) from rear guide (1). Discard locknuts.

(3) With the aid of an assistant, remove locknut (4), washer (5) and screw (6) from rear guide (1). Discard locknut.

(4) With the aid of an assistant, remove two screws (7), lockwashers (8) and rear guide (1) from frame (9). Discard lockwashers.

(5) Position rear guide (1) on clean work surface and remove lifting device.

(6) Remove screw (10) and axle stop (11) from rear guide (1).

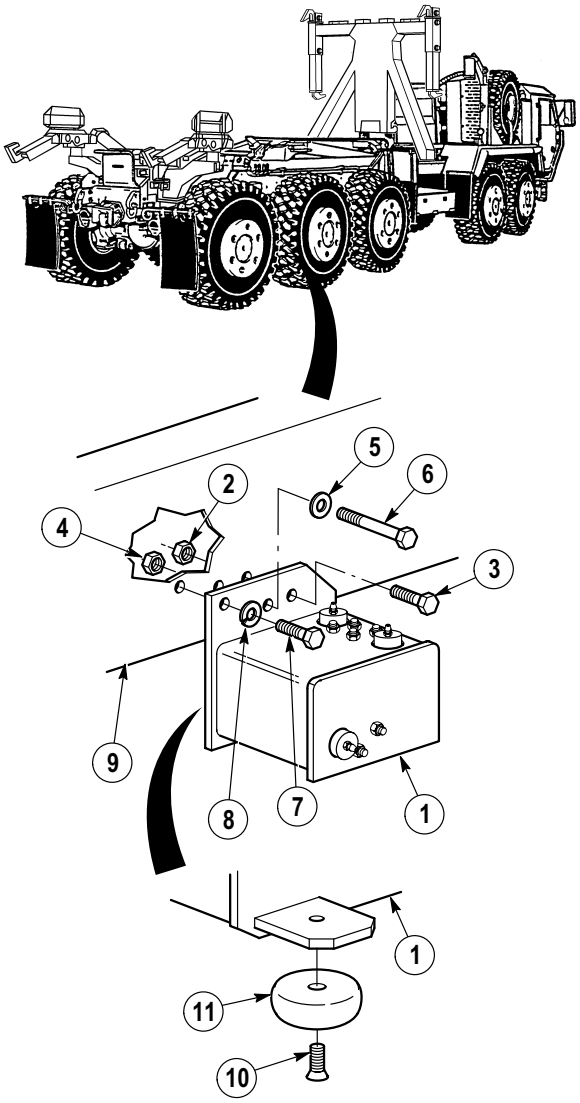

21-39. SELF-RECOVERY WINCH (SRW) CONTAINER HANDLING UNIT (CHU) REAR GUIDE REPLACEMENT (CONT).

b. Installation.

WARNING

Adhesives, solvents, and sealing compounds can burn easily, can give off harmful vapors, and are harmful to skin and clothing. To avoid injury or death, keep away from open fire and use in well-ventilated area. If adhesive, solvent, or sealing compound gets on skin or clothing, wash immediately with soap and water.

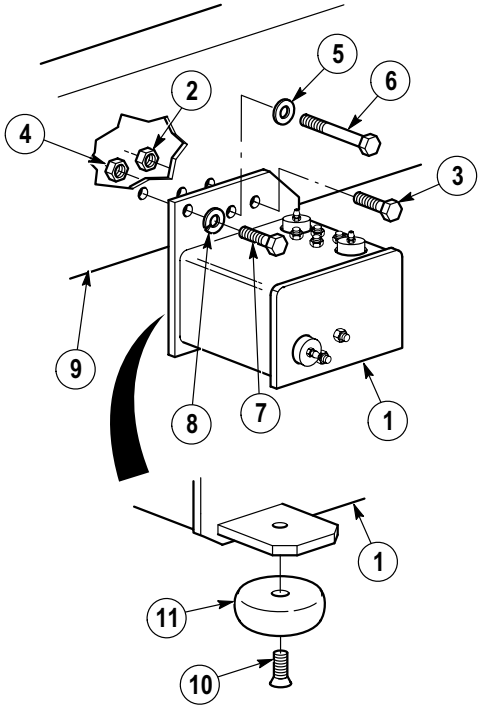

(1) Apply sealing compound to threads of screw (10).

(2) Install screw (10) and axle stop (11) on rear guide (1).

WARNING

Rear guide assembly weighs 70 lbs (32 kg). Attach suitable lifting device to prevent possible injury to personnel.

(3) Attach lifting device to rear guide (1).

(4) With the aid of an assistant, position rear guide (1) on frame (9) with two lockwashers (8) and screws (7).

(5) Install screw (6), washer (5) and locknut (4) on rear guide (1).

(6) With the aid of an assistant, position four locknuts (2) and screws (3) on rear guide (1).

(7) With the aid of an assistant, tighten two screws (7) on rear guide (1).

(8) With the aid of an assistant, tighten four locknuts (2) on rear guide (1).

(9) Remove lifting device from rear guide (1).

c. Follow-On Maintenance:

- Remove wheel chocks, (TM 9-2320-364-10).

END OF TASK

21-40. CONTAINER HANDLING UNIT (CHU) DECK WELDMENT REPLACEMENT.

This task covers:

a. Removal b. Installation c. Follow-On Maintenance

INITIAL SETUP

Tools and Special Tools
Tool Kit, General Mechanic's: Automotive (Item 74, Appendix G)

Equipment Condition
Engine OFF, (TM 9-2320-364-10)
Wheels chocked, (TM 9-2320-364-10)

Materials/Parts
Lockwasher (4) (Item 168, Appendix F)

a. Removal.

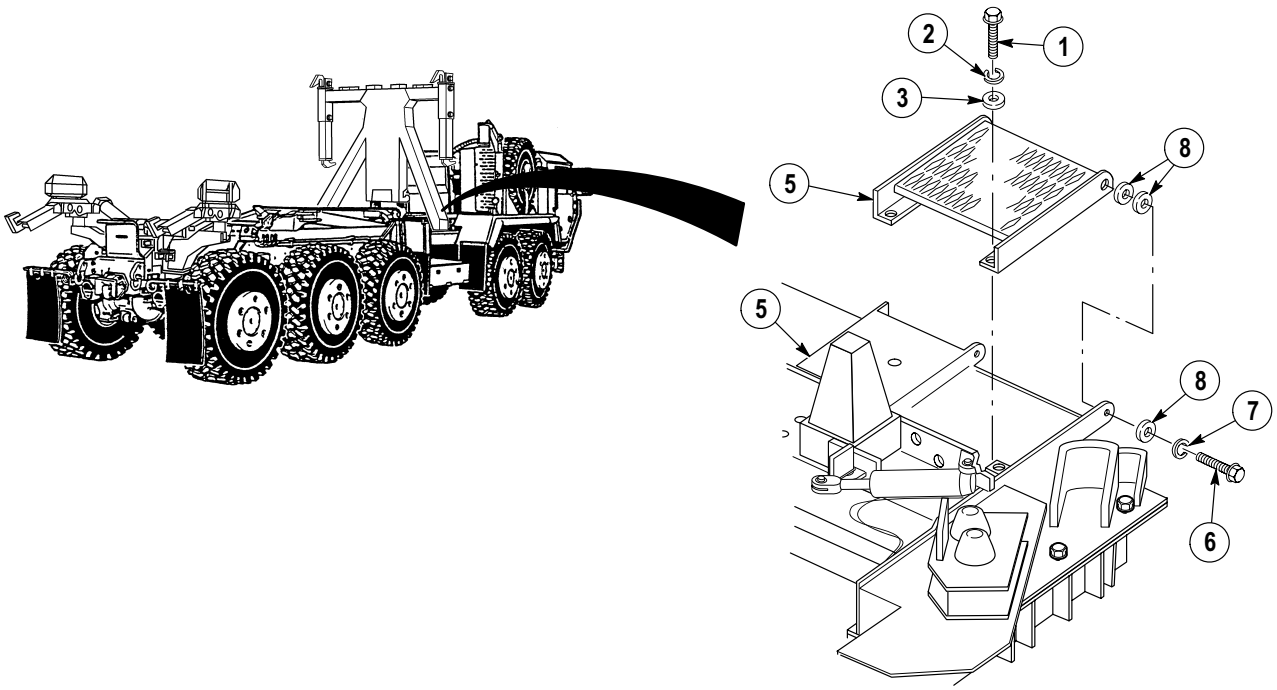

NOTE

Left and right deck weldments are identical. Right deck weldment is shown.

(1) Remove two screws (1), lockwashers (2) and washers (3) from deck weldment (4) and front support assembly (5). Discard lockwashers.

(2) Remove two screws (6), lockwashers (7) and six washers (8) from deck weldment (4). Discard lockwashers.

(3) Remove deck weldment (4) from front support assembly (5).

21-40. CONTAINER HANDLING UNIT (CHU) DECK WELDMENT REPLACEMENT (CONT).

b. Installation.

NOTE

Left and right deck weldments are identical. Right deck weldment is shown.

(1) Position deck weldment (5) on front support assembly (5).

(2) Install six washers (8), two lockwashers (7) and screws (6) and deck weldment (5) on front support assembly (5).

(3) Install two washers (3), lockwashers (2) and screws (1) to deck weldment (5) and front support assembly (5).

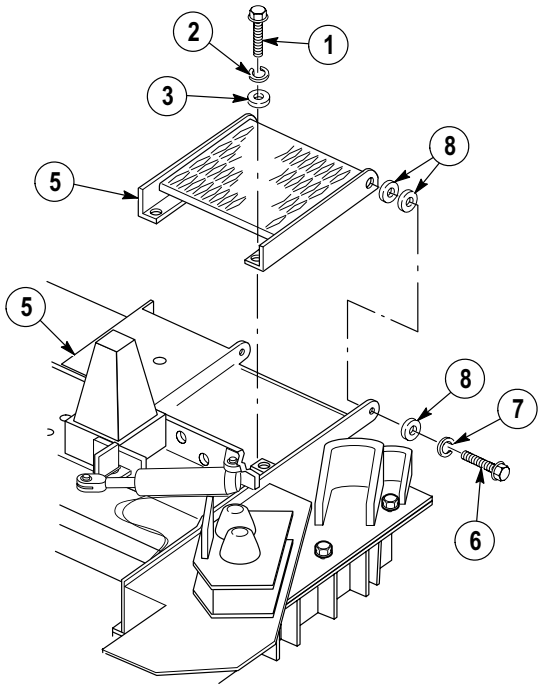

c. Follow-on Maintenance:

Remove wheel chocks, (TM 9-2320-364-10).

END OF TASK

21-41. CONTAINER HANDLING UNIT (CHU) BUMPER WELDMENT SUPPORT REPLACEMENT.

This task covers:

a. Removal
b. Installation
c. Adjustment
d. Follow-On Maintenance

INITIAL SETUP

Tools and Special Tools
Tool Kit, General Mechanic's: Automotive (Item 74, Appendix G)

Materials/Parts
Sealing Compound (Item 77, Appendix C)
Locknut (2) (Item 105, Appendix F)

Equipment Condition
Lifting frame removed from truck, (TM 9-2320-364-10)
Engine OFF, (TM 9-2320-364-10)
Wheels chocked, (TM 9-2320-364-10)

a. Removal.

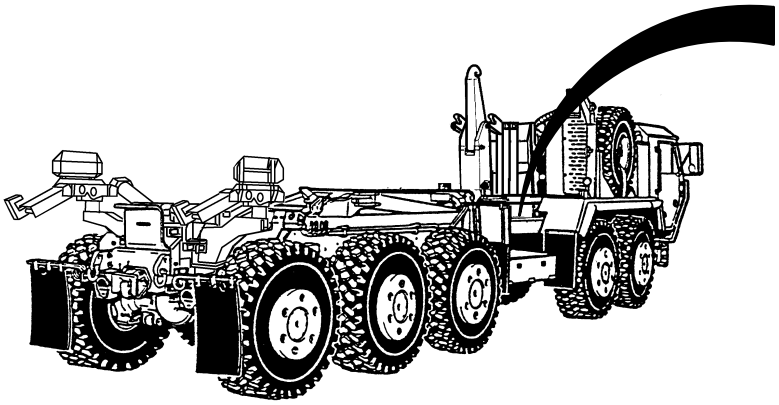

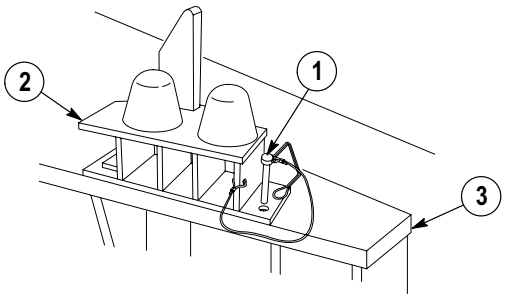

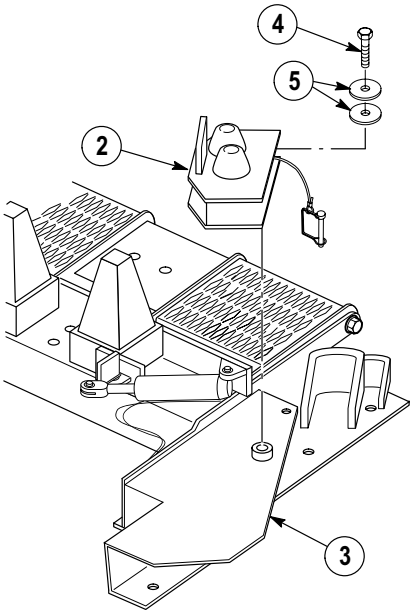

NOTE

Left and right bumper weldments are identical. Right bumper weldment is shown.

(1) Remove snapper pin (1) from bumper weldment (2) and front support assembly (3).

(2) Remove screw (4), two washers (5) and bumper weldment (2) from front support assembly (3).

21-41. CONTAINER HANDLING UNIT (CHU) BUMPER WELDMENT REPLACEMENT (CONT).

NOTE

- Shims may or may not be present in Step (3).
- Note number of shims prior to removal.

(3) Remove two locknuts (6), shim(s) (7) and two bumpers (8) from bumper weldment (2). Discard locknuts.

NOTE

Perform Step (4) only if wire rope is damaged.

(4) Remove two swaging sleeves (9) and wire rope (10) from bumper weldment (2) and snapper pin (1).

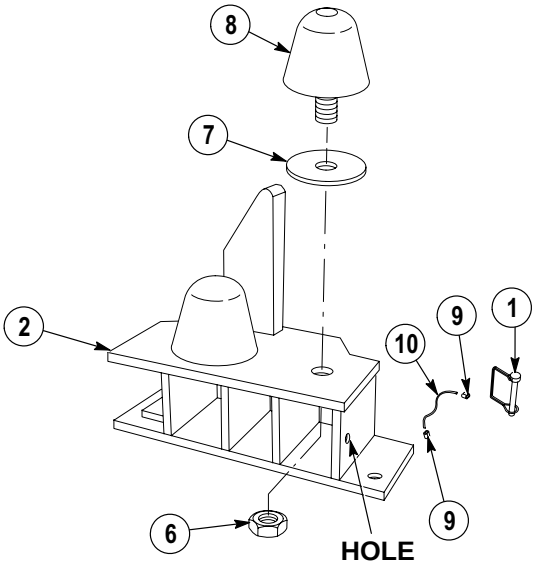

b. Installation.

NOTE

- Left and right bumper weldments are identical. Right bumper weldment is shown.
- Perform Steps (1) and (2) only if wire rope was removed.

(1) Position wire rope (10) through hole of bumper weldment (2).

(2) Install two swaging sleeves (9) and wire rope (10) on snapper pin (1) and bumper weldment (2).

NOTE

Install shims as noted prior to removal.

(3) Install two bumpers (8), shim(s) (7) and two locknuts (6) on bumper weldment (2).

WARNING

Adhesives, solvents, and sealing compounds can burn easily, can give off harmful vapors, and are harmful to skin and clothing. To avoid injury or death, keep away from open fire and use in a well-ventilated area. If adhesive, solvent, or sealing compound gets on skin or clothing, wash immediately with soap and water.

(4) Apply sealing compound to threads of screw (4).

(5) Position bumper weldment (2) on front support assembly (3) and install two washers (5) and screw (4).

(6) Tighten screw (4) until bottom washer is tight against front support assembly (3).

(7) Loosen screw (4) 1/4 turn or until bumper weldment (2) moves freely.

(8) Install snapper pin (1) and bumper weldment (2) to front support assembly (3).

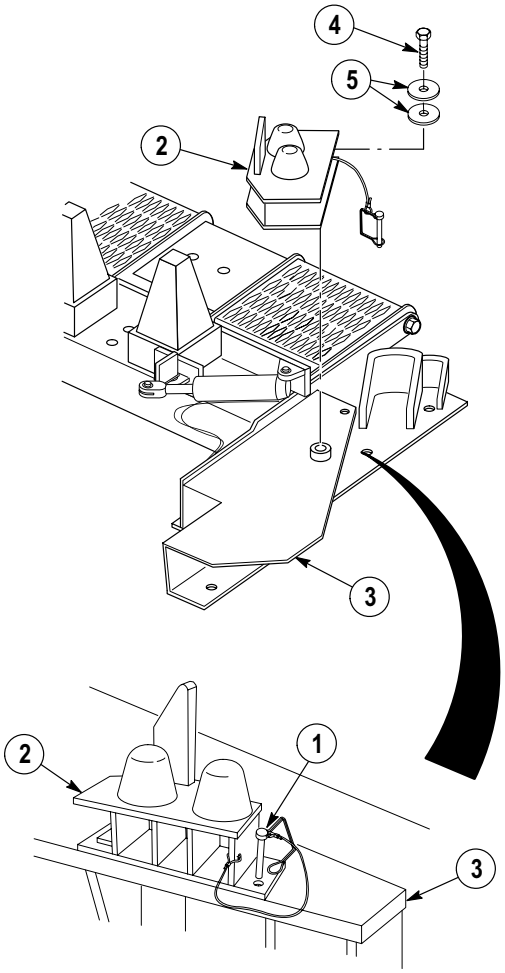

21-41. CONTAINER HANDLING UNIT (CHU) BUMPER WELDMENT REPLACEMENT (CONT).

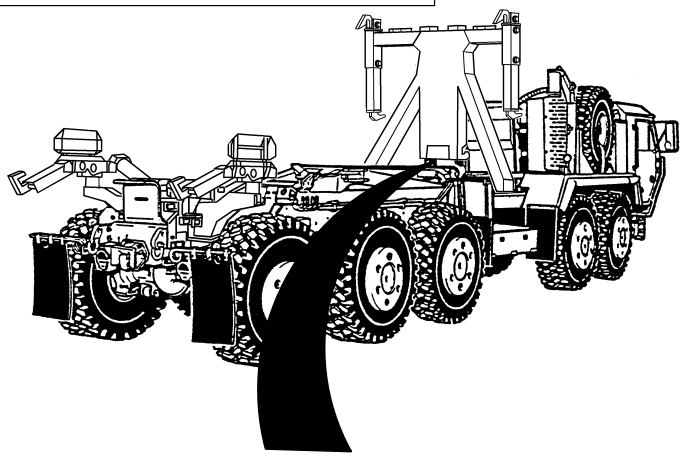

c. Adjustment.

(1) Position lifting frame (1) in container mode on truck using LHS (TM 9-2320-364-10).

(2) Measure gap between bail bar (2) and hook (3) as shown.

NOTE

- Both rubber bumpers are removed the same way. Right side shown.
- Shims are 0.104 in. (2.7 mm) thick.
- Add shims to decrease clearance.
- Remove shims to increase clearance.
- If gap is not 0.38 in. ± 0.25 in. (9.65 mm ± 6.35 mm), perform Steps (3) through (7).
- If gap is 0.38 in. ± 0.25 in. (9.65 mm ± 6.35 mm), no adjustment is necessary.

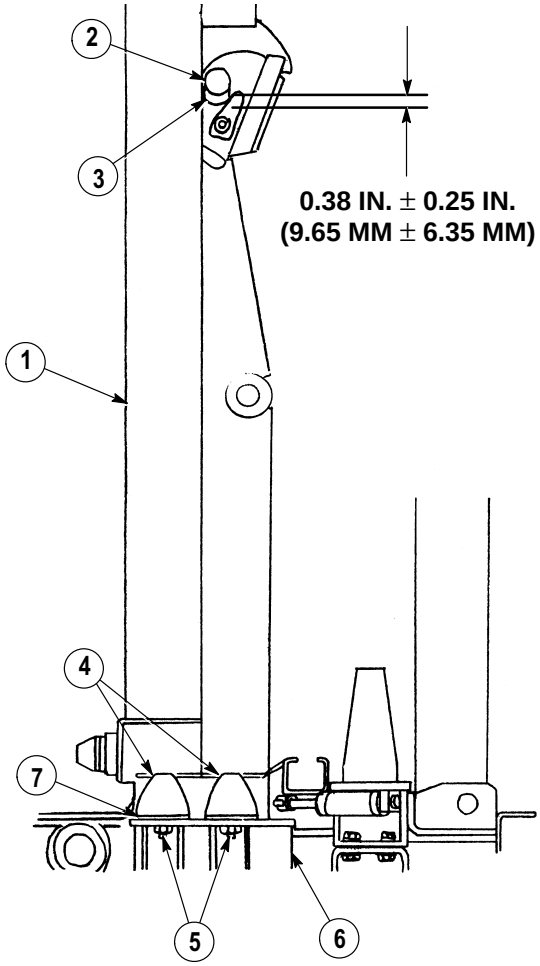

(3) Start engine (TM 9-2320-364-10).

(4) Using LHS, raise lifting frame (1) approximately 12 in. (30 cm) off of rubber bumpers (4).

(5) Shut OFF engine.

(6) Remove two locknuts (5) and rubber bumpers (4) from bumper weldment (6). Discard locknuts.

(7) Install two rubber bumpers (4), shim(s) (7), as required, and two locknuts (5) on bumper weldment (6).

(8) Repeat Steps (6) and (7) for left side.

(9) Start engine (TM 9-2320-364-10).

(10) Position lifting frame on cone weldment (TM 9-2320-364-10).

(11) Shut OFF engine (TM 9-2320-364-10).

d. Follow-on Maintenance:

- Lubricate CHU bumper weldment, (TM 9-2320-364-10).
- Install lifting frame on truck, (TM 9-2320-364-10).
- Remove wheel chocks, (TM 9-2320-364-10).

END OF TASK

21-42. CONTAINER HANDLING UNIT (CHU) AIR VALVE REPLACEMENT.

This task covers:

a. Removal b. Installation c. Follow-On Maintenance

INITIAL SETUP

Tools and Special Tools
Tool Kit, General Mechanic's: Automotive (Item 74, Appendix G)

Materials/Parts
Sealing Compound (Item 72, Appendix C)
Tag, Identification (Item 88, Appendix C)
Lockwasher (3) (Item 156, Appendix F)

Equipment Condition
Engine OFF, (TM 9-2320-364-10)
Wheels chocked, (TM 9-2320-364-10)

a. Removal.

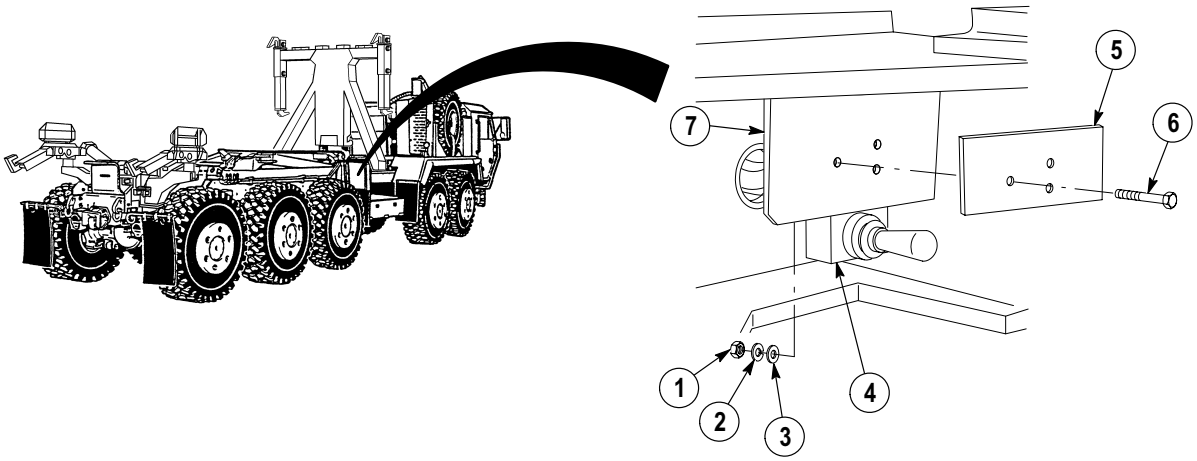

NOTE

Left and right air valves are identical. Right air valve is shown.

(1) Remove three nuts (1), lockwashers (2), washers (3), air valve (4), data plate (5) and three screws (6) from front support assembly (7). Discard lockwashers.

NOTE

- Tag and mark air lines prior to removal.
- Air lines 2502, 2504 and 2505 are to left air valve.

(2) Remove air line 2503 (8), air line 2506 (9) and air line 2507 (10) from three elbows (11).

(3) Remove three elbows (11) from air valve (4).

(4) Remove two breather vents (12) from air valve (4).

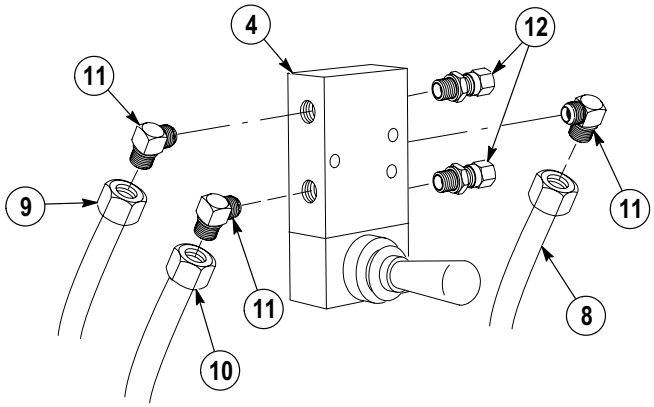

NOTE

Perform Step (5) if grommet is damaged.

(5) Remove grommet (13) from front support assembly (7).

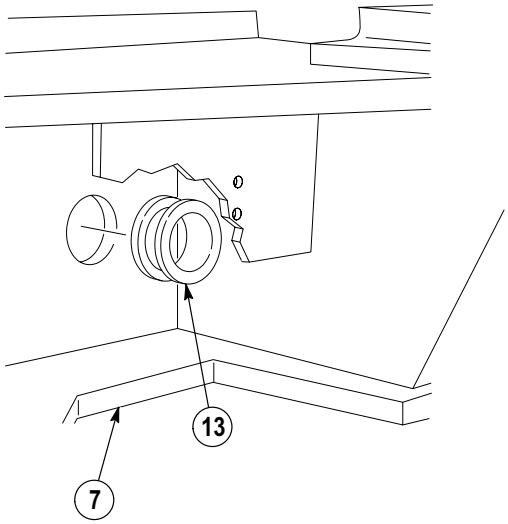

b. Installation.

NOTE

- Left and right air valves are identical. Right air valve is shown.
- Perform Step (1) if grommet was removed.

(1) Install grommet (13) in front support assembly (7).

21-42. CONTAINER HANDLING UNIT (CHU) AIR VALVE REPLACEMENT (CONT).

WARNING

Adhesives, solvents, and sealing compounds can burn easily, can give off harmful vapors, and are harmful to skin and clothing. To avoid injury or death, keep away from open fire and use in a well-ventilated area. If adhesive, solvent, or sealing compound gets on skin or clothing, wash immediately with soap and water.

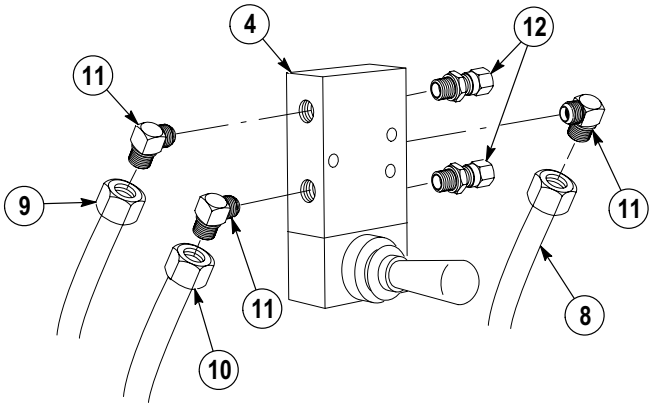

(2) Apply sealing compound to threads of three elbows (11) and two breather vents (12).

(3) Install three elbows (11) and two breather vents (12) on air valve (4).

NOTE

- Air line 2502, 2504 and 2505 are to left air valve.
- Install air lines as noted prior to removal.

(4) Install air line 2507 (10), air line 2506 (9) and air line 2503 (8) to three elbows (11).

(5) Install air valve (4) and data plate (5) on front support assembly (7) with three screws (6), washers (3), lockwashers (2) and nuts (1).

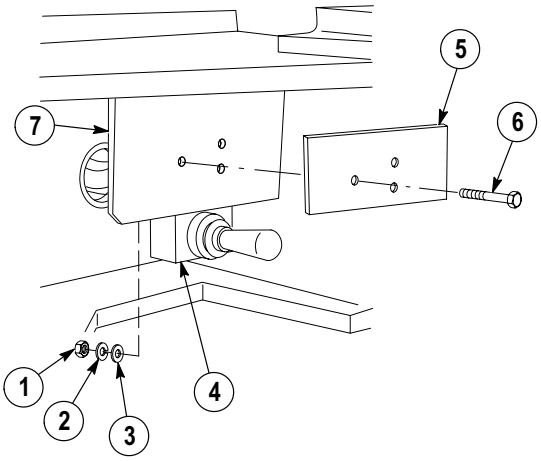

c. Follow-on Maintenance:

- Start engine, (TM 9-2320-364-10).
- Build air pressure to 125 psi (861 kPa).
- Shut OFF engine, (TM 9-2320-364-10).
- Check for air leaks.
- Check operation of rotary paddles, (TM 9-2320-364-10).
- Remove wheel chocks, (TM 9-2320-364-10).

END OF TASK

21-43. CONTAINER HANDLING UNIT (CHU) AIR CYLINDER AND ROTARY PADDLE REPLACEMENT/ADJUSTMENT.

This task covers:

a. Removal
b. Installation
c. Adjustment
d. Follow-On Maintenance

INITIAL SETUP

Tools and Special Tools
Tool Kit, General Mechanic's: Automotive (Item 74, Appendix G)
Pliers, Retaining Ring (Item 49, Appendix G)

Materials/Parts
Antiseize Compound (Item 20, Appendix C)
Sealing Compound (Item 77, Appendix C)
Tag, Identification (Item 88, Appendix C)
Locknut (3) (Item 101, Appendix F)

Materials/Parts - Continued
Locknut (Item 140, Appendix F)

Personnel Required
Two

Equipment Condition
Engine OFF, (TM 9-2320-364-10)
Wheels chocked, (TM 9-2320-364-10)
Lifting frame removed from truck (TM 9-2320-364-10)

a. Removal.

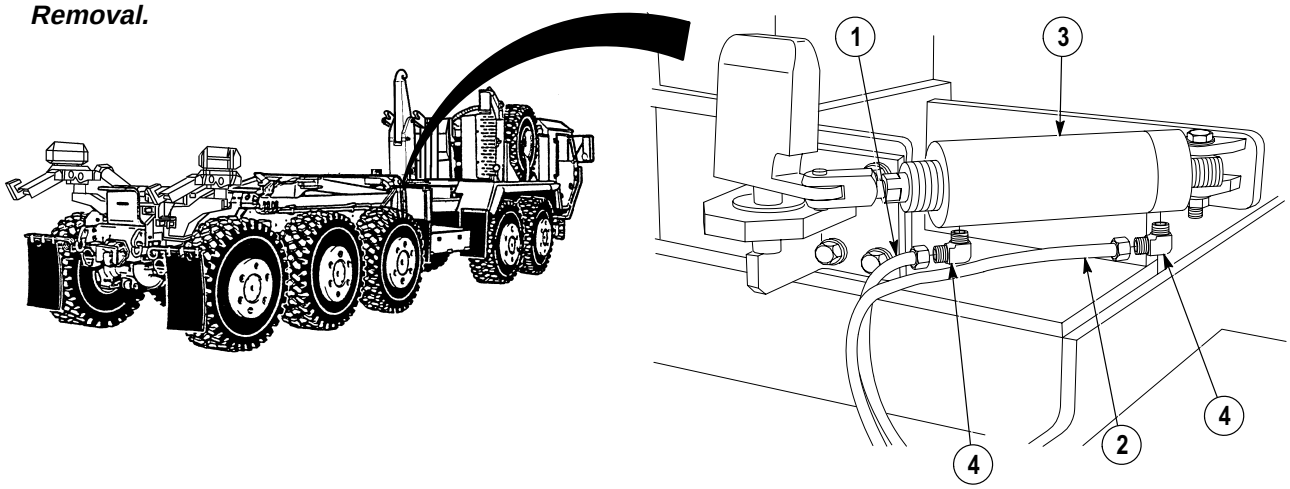

NOTE

- Tag and mark air lines prior to removal.
- Left and right air cylinders and rotary paddles are removed the same way. Right side is shown.
- Air lines 2504 and 2505 are to left hand cylinder.

(1) Remove air line 2506 (1) and air line 2507 (2) from air cylinder (3).

(2) Remove two elbows (4) from air cylinder (3).

21-43. CONTAINER HANDLING UNIT (CHU) AIR CYLINDER AND ROTARY PADDLE REPLACEMENT (CONT).

(3) Remove locknut (5) and screw (6) from air cylinder (3) and stow cone weldment (7). Discard locknut.

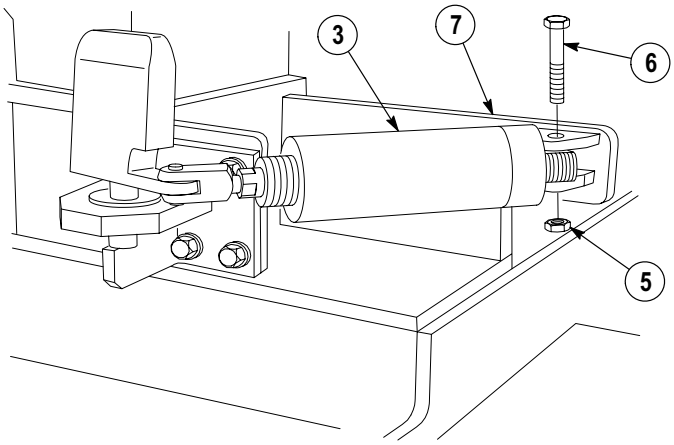

WARNING

Use care when removing snap and retaining rings. Snap and retaining rings are under spring tension and can act as projectiles when released and could cause severe eye injury.

(4) Remove two retaining rings (8) and pin (9) securing air cylinder (3) to rotary paddle (10).

(5) Remove air cylinder (3) from stow cone weldment (7).

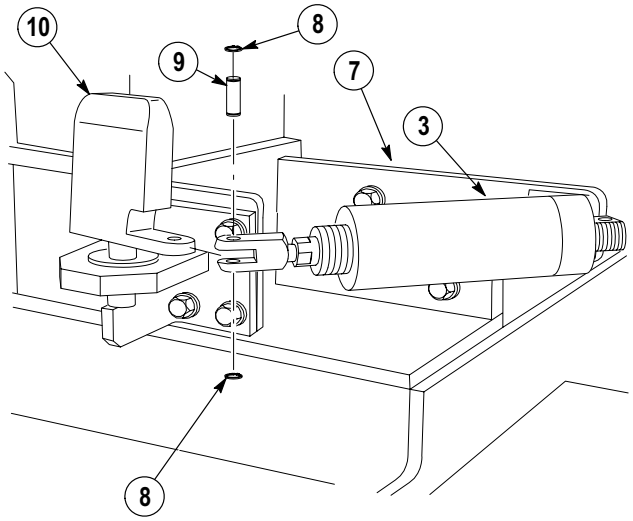

(6) Remove rod clevis (11) from air cylinder (3).

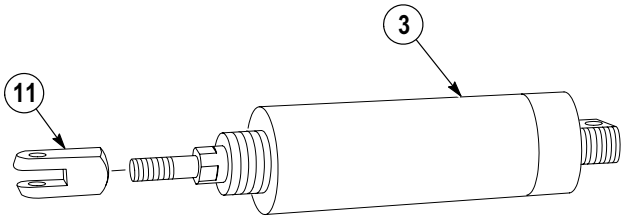

WARNING

Use care when removing snap and retaining rings. Snap and retaining rings are under spring tension and can act as projectiles when released and could cause severe eye injury.

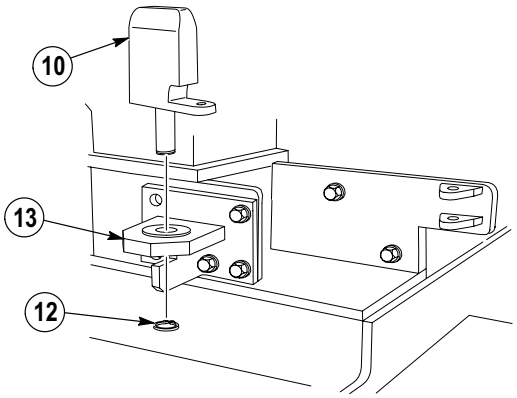

(7) Remove retaining ring (12) and rotary paddle (10) from rotary paddle bracket (13).

(8) Remove three locknuts (14), screws (15) and rotary paddle bracket (13) from stow cone weldment (7). Discard locknuts.

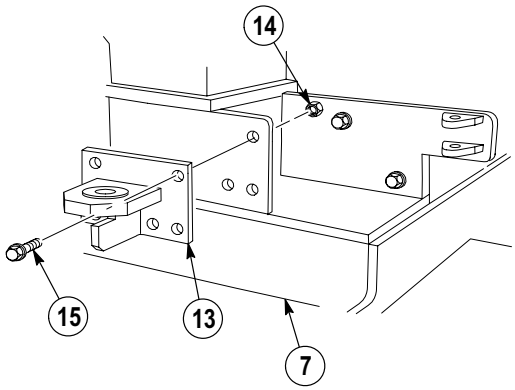

NOTE

Perform Step (9) if bearing is damaged.

(9) Remove bearing (16) from rotary paddle bracket (13).

b. Installation.

WARNING

Adhesives, solvents, and sealing compounds can burn easily, can give off harmful vapors, and are harmful to skin and clothing. To avoid injury or death, keep away from open fire and use in well-ventilated area. If adhesive, solvent, or sealing compound gets on skin or clothing, wash immediately with soap and water.

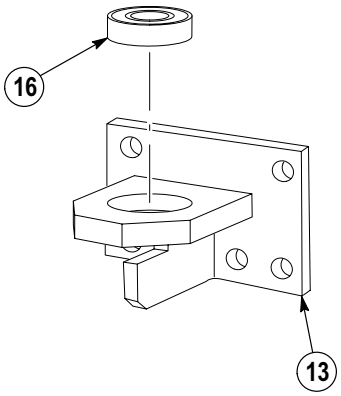

NOTE

Left and right air cylinders and rotary paddles are identical unless noted. Right side is shown.

(1) Apply antiseize to outer surface of bearing (16).

(2) Install bearing (16) in rotary paddle bracket (13).

21-43. CONTAINER HANDLING UNIT (CHU) AIR CYLINDER AND ROTARY PADDLE REPLACEMENT (CONT).

(3) Install rotary paddle bracket (13) with three screws (15) and locknuts (14) to stow cone weldment (7).

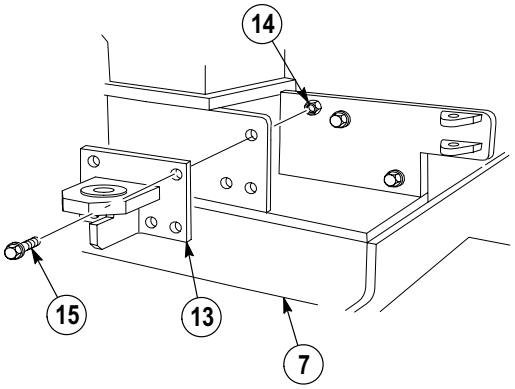

WARNING

Use care when installing snap and retaining rings. Snap and retaining rings are under spring tension and can act as projectiles when released and could cause severe eye injury.

(4) Install rotary paddle (10) in rotary paddle bracket (13) with retaining ring (12).

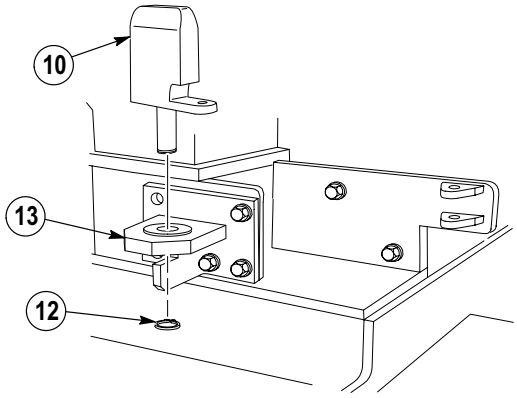

NOTE

Rod clevis will be tightened in ***c. Adjustment***.

(5) Position rod clevis (11) on air cylinder (3).

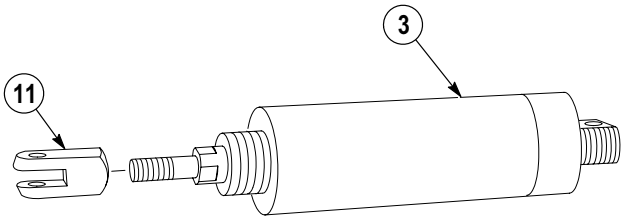

(6) Position air cylinder (3) on rotary paddle (10) and stow cone weldment (7).

WARNING

Use care when installing snap and retaining rings. Snap and retaining rings are under spring tension and can act as projectiles when released and could cause severe eye injury.

(7) Install rotary paddle (10) to air cylinder (3) with pin (9) and two retaining rings (8).

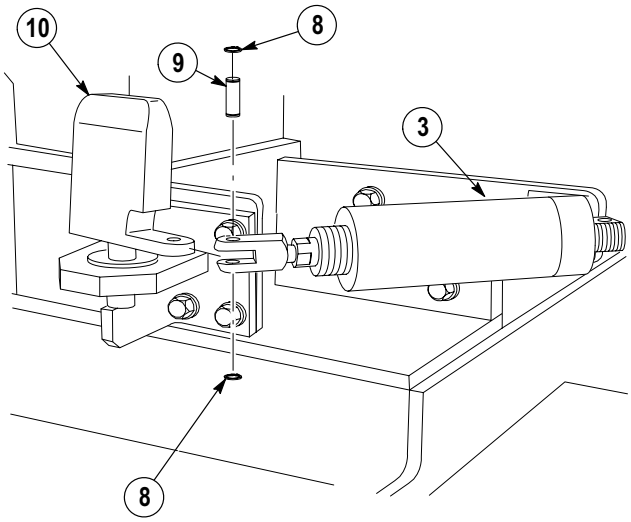

(8) Install air cylinder (3) to stow cone weldment (7) with screw (6) and locknut (5).

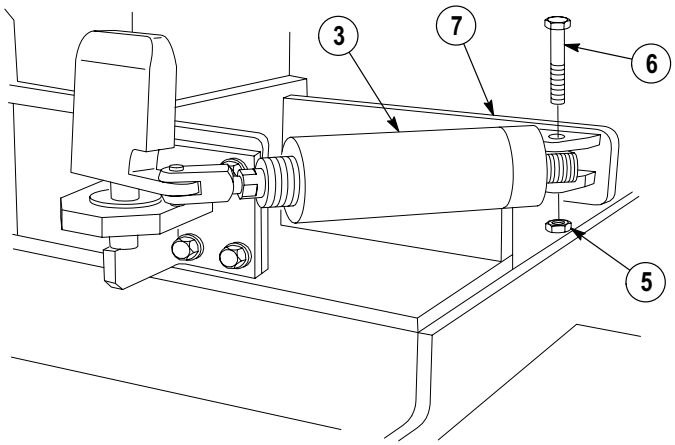

21-43. CONTAINER HANDLING UNIT (CHU) AIR CYLINDER AND ROTARY PADDLE REPLACEMENT (CONT).

WARNING

Adhesives, solvents, and sealing compounds can burn easily, can give off harmful vapors, and are harmful to skin and clothing. To avoid injury or death, keep away from open fire and use in a well-ventilated area. If adhesive, solvent, or sealing compound gets on skin or clothing, wash immediately with soap and water.

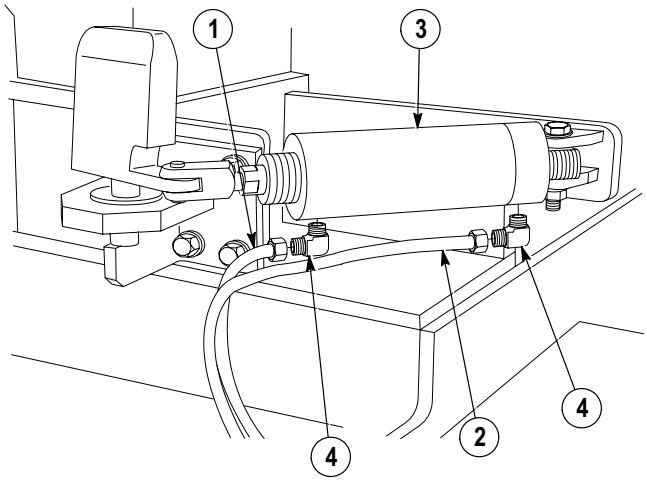

(9) Apply sealing compound to threads of two elbows (4).

(10) Install two elbows (4) on air cylinder (3).

NOTE

- Install air lines as noted prior to removal.
- Air lines 2504 and 2505 are to left hand cylinder.

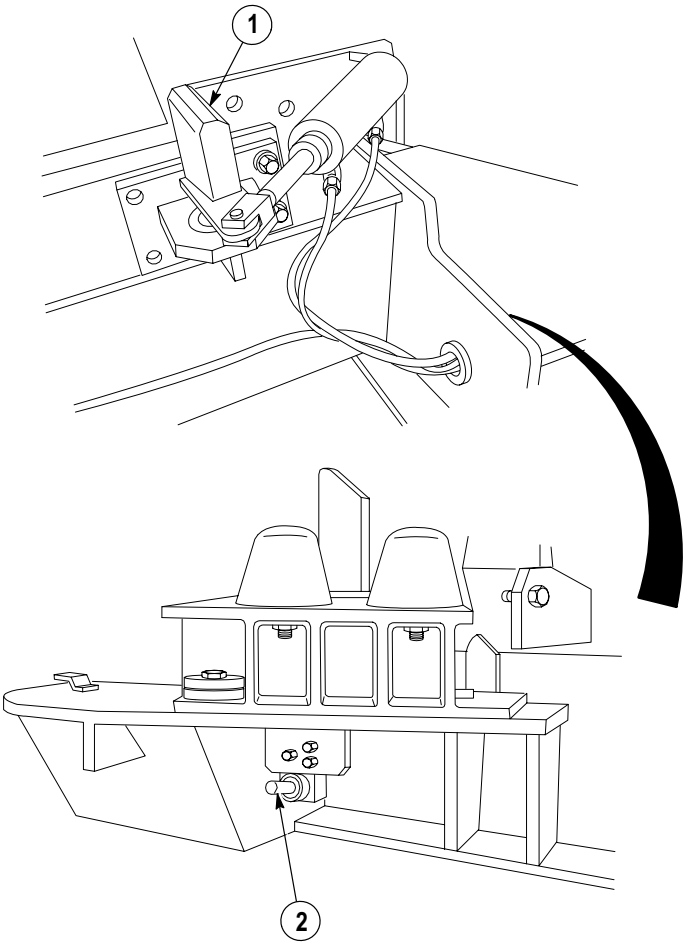

(11) Install air line 2507 (2) and air line 2506 (1) to air cylinder (3).

c. Adjustment.

NOTE

Left and right air cylinders and rotary paddles are adjusted the same. Right air cylinder and rotary paddle are shown.

(1) Start engine (TM 9-2320-364-10).

(2) Build air pressure to 125 psi (861 kPa).

(3) Shut OFF engine (TM 9-2320-364-10).

(4) Check for air leaks.

(5) Check operation of right rotary paddle (1) using right air valve (2).

(6) Position lifting frame (3) in stow mode (TM 9-2320-364-10).

(7) With the aid of an assistant, position lifting frame (3) using LHS, approximately 6 in. (15 cm) before slot in flipper bracket (4) engages with rotary paddle (1).

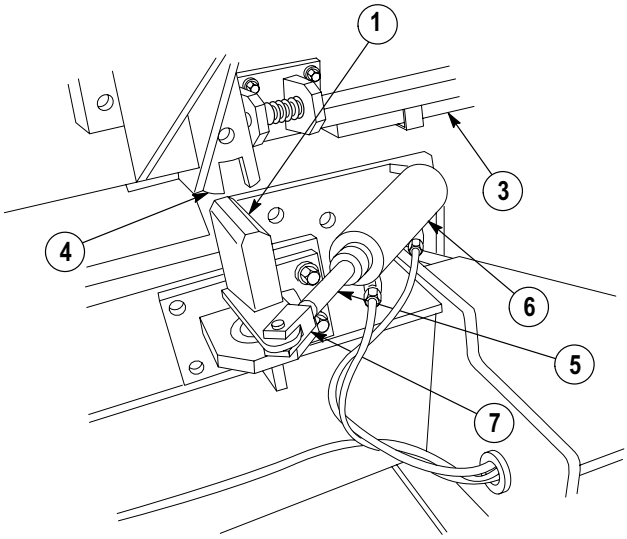

WARNING

Adhesives, solvents, and sealing compounds can burn easily, can give off harmful vapors, and are harmful to skin and clothing. To avoid injury or death, keep away from open fire and use in a well-ventilated area. If adhesive, solvent, or sealing compound gets on skin or clothing, wash immediately with soap and water.

NOTE

Shaft of air cylinder is loosened and tightened by using wrench on flats near clevis.

(8) Loosen shaft (5) on air cylinder (6) and apply sealing compound to threads.

(9) Tighten shaft (5) on air cylinder (6) and clevis (7) until rotary paddle (1) aligns with slot in flipper bracket (4).

(10) Stow lifting frame (3) on truck and check operation of flipper bracket (4) (TM 9-2320-364-10).

(11) Repeat Steps (6) through (10) as necessary.

d. Follow-on Maintenance:

- Position lifting frame on truck in container mode, (TM 9-2320-364-10).
- Remove wheel chocks, (TM 9-2320-364-10).

END OF TASK

21-44. CONTAINER HANDLING UNIT (CHU) STOW CONE WELDMENT REPLACEMENT.

This task covers:

a. Removal
b. Installation
c. Adjustment
d. Follow-On Maintenance

INITIAL SETUP

Tools and Special Tools
Tool Kit, General Mechanic's: Automotive (Item 74, Appendix G)
Lifting Device, Minimum Capacity 225 lbs (102 kg)

Materials/Parts
Locknut (6) (Item 92, Appendix F)

Personnel Required
Two

Equipment Condition
Engine OFF, (TM 9-2320-364-10)
Wheels chocked, (TM 9-2320-364-10)
CHU air cylinders and rotary paddles removed, (Para 21-43)
Stow weldment removed, (Para 21-34)
Lifting frame removed from truck, (TM 9-2320-364-10)

a. Removal.

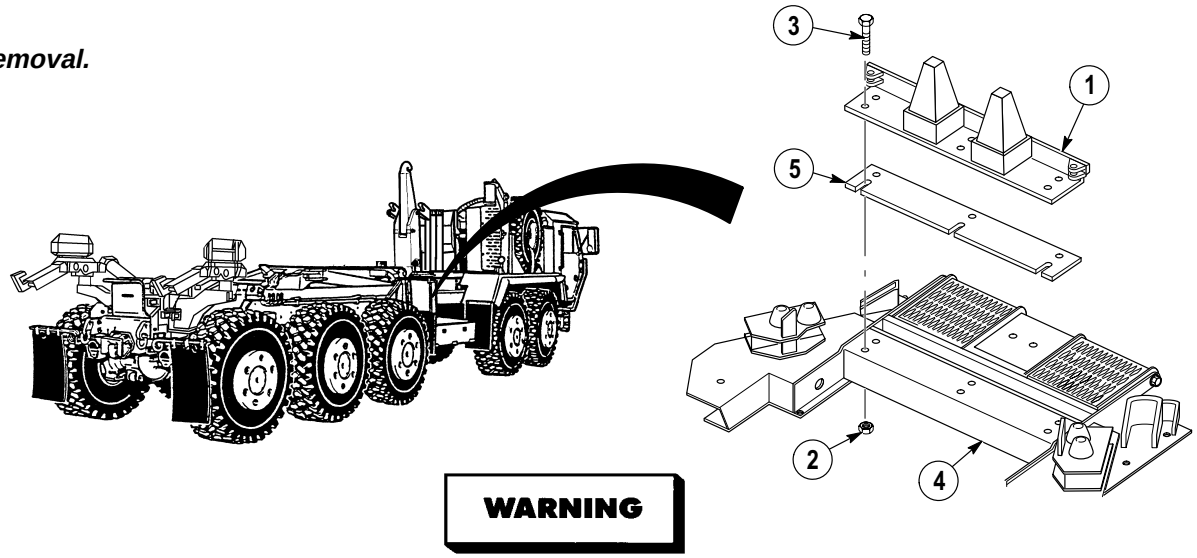

WARNING

Stow cone weldment weighs approximately 225 lbs (102 kg). Attach suitable lifting device to prevent possible injury to personnel.

(1) Attach lifting device to stow cone weldment (1).

(2) Remove six locknuts (2) and screws (3) from stow cone weldment (1) and front support assembly (4).

NOTE

- Shims may or may not be present in Step (3).
- Note quantity of shims prior to removal.

(3) Remove stow cone weldment (1) and shim(s) (5) from front support assembly (4).

(4) Remove lifting device from stow weldment (1).

b. Installation.

WARNING

Stow cone weldment weighs approximately 225 lbs (102 kg). Attach suitable lifting device to prevent possible injury to personnel.

NOTE

Install shims as noted prior to removal.

(1) Position shim(s) (5) and stow weldment (1) on front support assembly (4).

NOTE

Screws and locknuts will be tightened in ***c. Adjustment*** procedures.

(2) Position six screws (3) and locknuts (2) on stow weldment (1) and front support assembly (4).

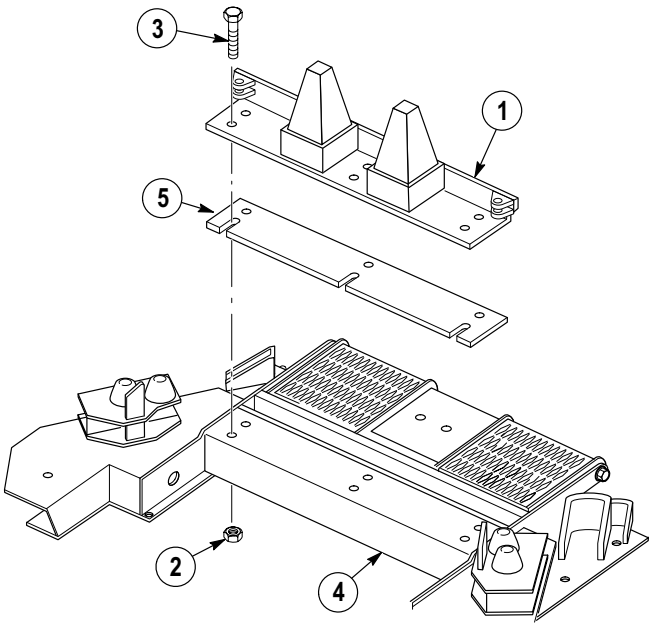

c. Adjustment.

NOTE

- Measurements should be taken on both sides of stow cone weldment.
- If measurement “A” is not 18.1 in. (46 cm) ± 0.125 in. (3.18 mm), perform Steps (3) and (6).
- If measurement “A” is 18.1 in. (46 cm) ± 0.125 in. (3.18 mm), go to Step (2).
- Stow cone weldment shims are already installed. Remove shims as required.

(1) Measure distance between base of stow cone weldment (1) and bottom of pivot pin (2). Record as measurement “A”.

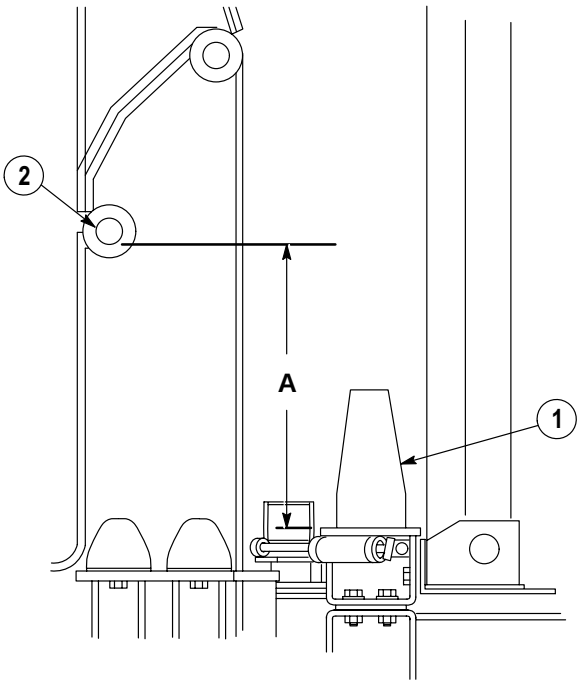

21-44. CONTAINER HANDLING UNIT (CHU) STOW WELDMENT REPLACEMENT (CONT).

NOTE

- Measurements should be taken on both sides of cone weldment.
- If measurement “B” is not 5.87 in. (15 cm) ± 0.125 in. (3.18 mm), perform Steps (4) through (6).
- If measurement “B” is 5.87 in. (15 cm) ± 0.125 in. (3.18 mm), go to Step (8).

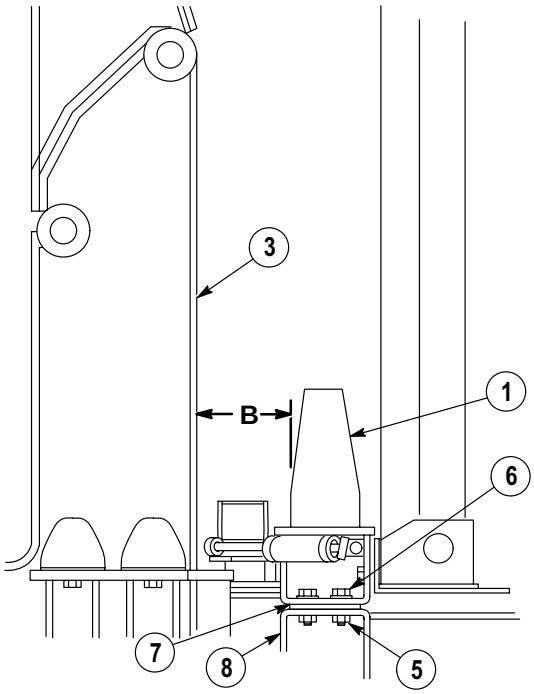

(2) Measure distance between base of stow cone weldment (1) and LHS hook arm (4). Record as measurement “B”.

(3) Remove six locknuts (5), screws (6), stow cone weldment (1) and shim(s), as required, (7) from front support assembly (8). Discard locknuts and shim(s).

(4) Remove six locknuts (5) and screws (6) from cone weldment (1) and front support assembly (8). Discard locknuts.

(5) Position stow cone weldment (1) to proper position to achieve measurement “B”.

(6) Install stow cone weldment (1) and shim(s) (7) on front support assembly (8) with six screws (6) and locknuts (5).

(7) Repeat Steps (1) and (2).

(8) Remove lifting device from stow cone weldment (1).

d. Follow-on Maintenance:

- Install remainder of stow weldment, (Para 21-34).
- Install CHU air cylinders and rotary paddles, (Para 21-43).
- Wheels chocked, (TM 9-2320-364-10).

END OF TASK

21-45. CONTAINER HANDLING UNIT (CHU) FRONT CROSSMEMBER ASSEMBLY REPLACEMENT.

This task covers:

a. Removal b. Installation c. Follow-On Maintenance

INITIAL SETUP

Tools and Special Tools
Tool Kit, General Mechanic's: Automotive (Item 74, Appendix G)
Lifting Device, Minimum Capacity 500 lbs (227 kg)

Materials/Parts
Locknut (18) (Item 92, Appendix F)

Personnel Required
Two

Equipment Condition
Engine OFF, (TM 9-2320-364-10)
Wheels chocked, (TM 9-2320-364-10)
Bumper weldment removed, (Para 21–42)
CHU air lines removed, (Para 12-36)
CHU air valves removed, (Para 21-42)
CHU air cylinders and rotary paddles removed, (Para 21-43)
CHU stow cone weldment removed, (Para 21-44)
Deck weldment removed, (Para 21–41)
Auxiliary fuel tank removed (if equipped), (Para 4-9)

a. Removal.

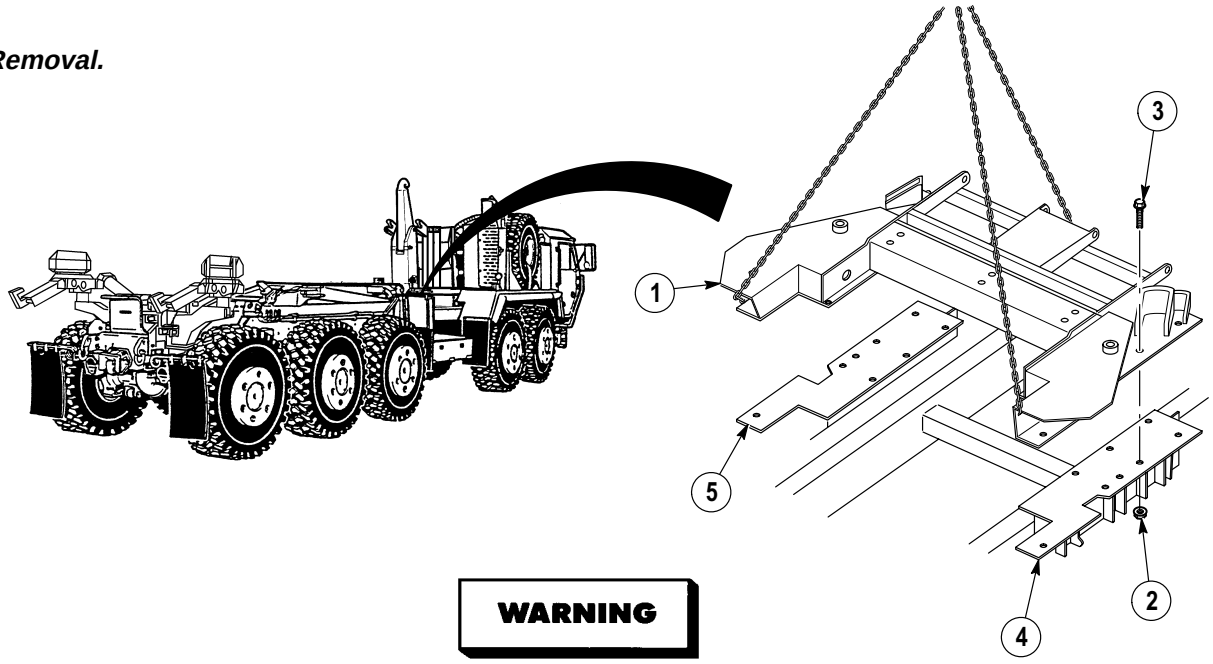

WARNING

Front crossmember assembly weighs approximately 500 (227 kg). Attach suitable lifting device to prevent possible injury to personnel.

(1) Attach lifting device to front crossmember assembly (1).

(2) Remove 18 locknuts (2) and screws (3) from front crossmember assembly (1), right front support bracket (4) and left front support bracket (5). Discard locknuts.

(3) Remove front crossmember assembly (1) from support brackets (4) and (5).

(4) Position front crossmember assembly (1) on ground and remove lifting device.

21-45. CONTAINER HANDLING UNIT (CHU) FRONT CROSSMEMBER ASSEMBLY REPLACEMENT (CONT).

b. Installation.

WARNING

Front crossmember assembly weighs approximately 500 (227 kg). Attach suitable lifting device to prevent possible injury to personnel.

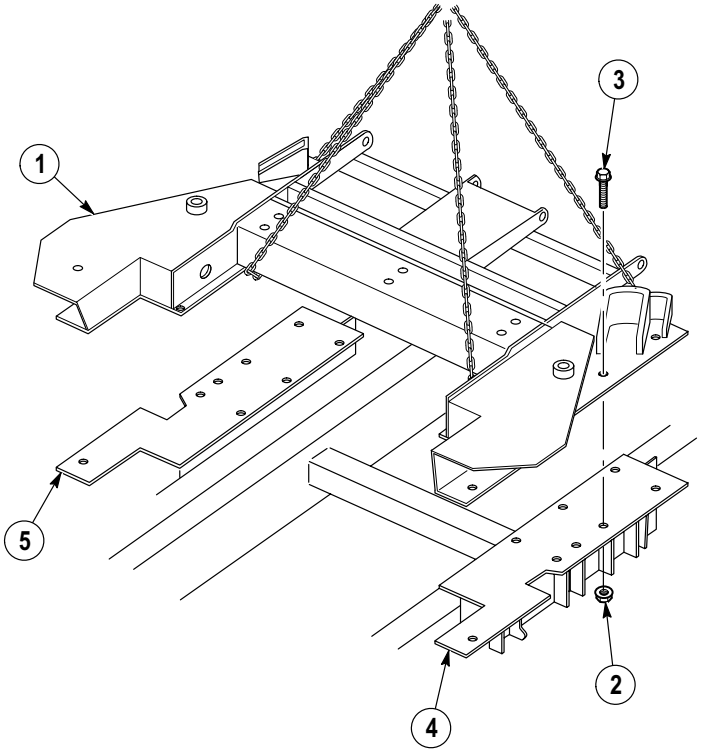

(1) Attach lifting device to front crossmember assembly (1).

(2) With the aid of an assistant, position front crossmember assembly (1) on left front support bracket (5) and right front support bracket (4).

(3) Install front crossmember assembly (1) to front support brackets (5) and (4) with 18 screws (3) and locknuts (2).

(4) Remove lifting device from front crossmember assembly (1).

c. Follow-on Maintenance:

- Install auxiliary fuel tank (if equipped), (Para 4-9).
- Install deck weldment, (Para 21-40).
- Install CHU stow cone weldment, (Para 21-44).
- Install CHU air cylinders and rotary paddles, (Para 21-43).
- Install CHU air valves, (Para 21-42).
- Install CHU air lines, (Para 12-36).
- Install bumper weldment, (Para 21-41).
- Remove wheel chocks, (TM 9–2320–364–10).

END OF TASK

21-46. CONTAINER HANDLING UNIT (CHU) FRONT SUPPORT BRACKETS REPLACEMENT.

This task covers:

a. Removal b. Installation c. Follow-On Maintenance

INITIAL SETUP

Tools and Special Tools
Tool Kit, General Mechanic's: Automotive (Item 74, Appendix G)
Lifting Device, Minimum Capacity 660 lbs (299 kg)

Materials/Parts
Locknut (29) (Item 92, Appendix F)
Locknut (10) (Item 93, Appendix F)

Personnel Required
Two

Equipment Condition
Engine OFF, (TM 9-2320-364-10)
Wheels chocked, (TM 9-2320-364-10)
CHU air lines removed, (Para 12-36)
CHU deck weldments removed, (Para 21-40)

a. Removal.

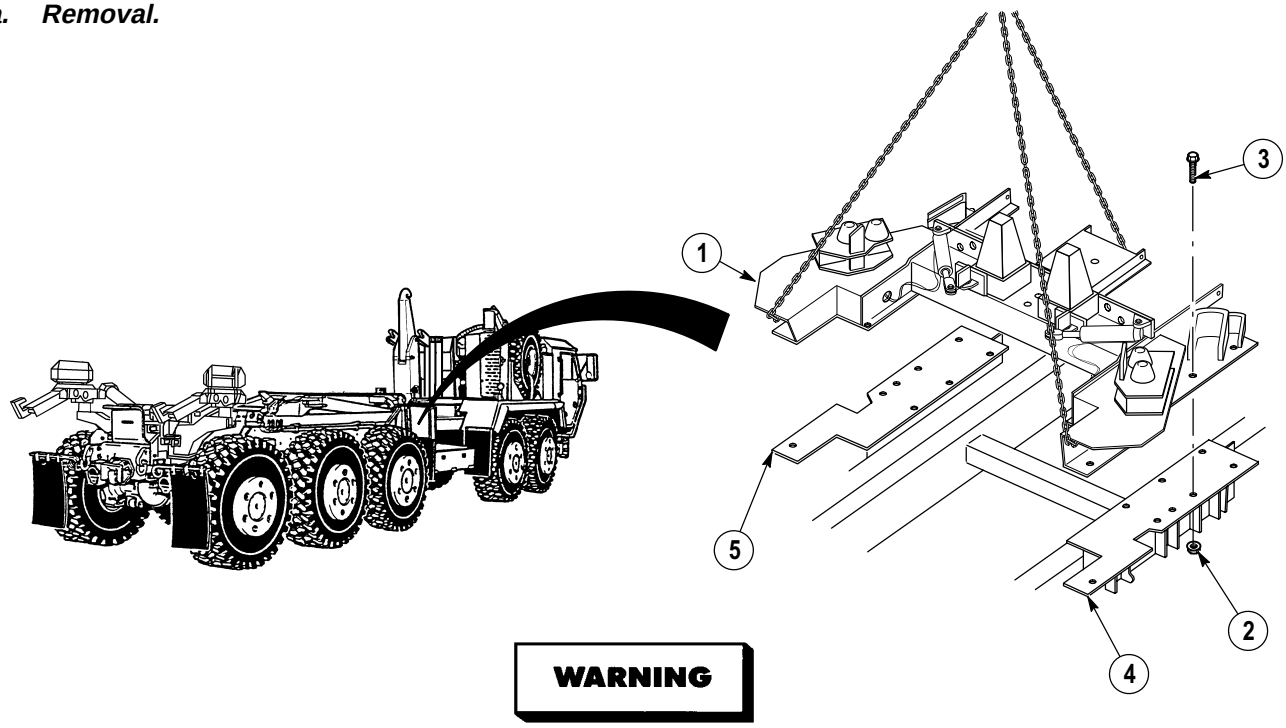

WARNING

Front support assembly weighs 660 lbs (299 kg). Attach suitable lifting device to prevent possible injury to personnel.

(1) Attach lifting device to front support assembly (1).

(2) Remove 18 locknuts (2) and screws (3) from front support assembly (1), right front support bracket (4) and left front support bracket (5). Discard locknuts.

(3) Remove front support assembly (1) from support brackets (4) and (5).

(4) Position front support assembly (1) on ground and remove lifting device.

21-46. CONTAINER HANDLING UNIT (CHU) FRONT SUPPORT BRACKETS REPLACEMENT (CONT).

WARNING

Right front support bracket weighs 98 lbs (44 kg). Attach suitable lifting device to prevent possible injury to personnel.

(5) Attach lifting device to right front support bracket (4).

NOTE

Perform Steps (6) and (7) if truck is equipped with auxiliary fuel tank.

(6) Loosen bottom screw (6) and locknut (7) on right hand bracket (8).

(7) Loosen two bottom screws (9) and locknuts (10) on auxiliary fuel tank support (11).

NOTE

- Perform Step (8) for trucks equipped with auxiliary fuel tank.
- Perform Step (9) for trucks not equipped with auxiliary fuel tank.

(8) With the aid of an assistant, remove screw (12), four screws (13), screw (14), six locknuts (15), two screws (16), locknuts (17), screw (18) and locknut (19) from right front support bracket (4) and auxiliary fuel tank support (11). Discard locknuts.

(9) With the aid of an assistant, remove six screws (13), screw (14), seven locknuts (15), two screws (16) and locknuts (17) from right front support bracket (4). Discard locknuts.

(10) Remove right front support bracket (4) from frame (20).

(11) Position right front support bracket (4) on ground and remove lifting device.

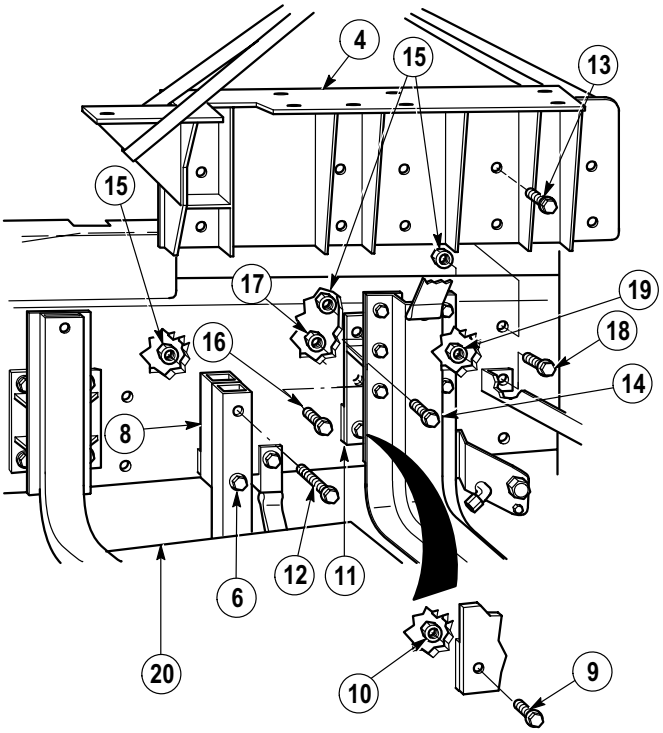

WARNING

Left front support bracket weighs 98 lbs (44 kg). Attach suitable lifting device to prevent possible injury to personnel.

(12) Attach lifting device to left front support bracket (5).

(13) Remove two screws (21), locknuts (22), screw (23), five screws (24), screw (25) and seven locknuts (26) from front support bracket (5) and frame (20). Discard locknuts.

(14) Loosen bottom front screw (27), rear bottom screw (28) and two locknuts (29) on air dryer bracket (30).

(15) With the aid of an assistant, remove left front support bracket (5) from frame (20).

(16) Position left front support bracket (5) on ground and remove lifting device.

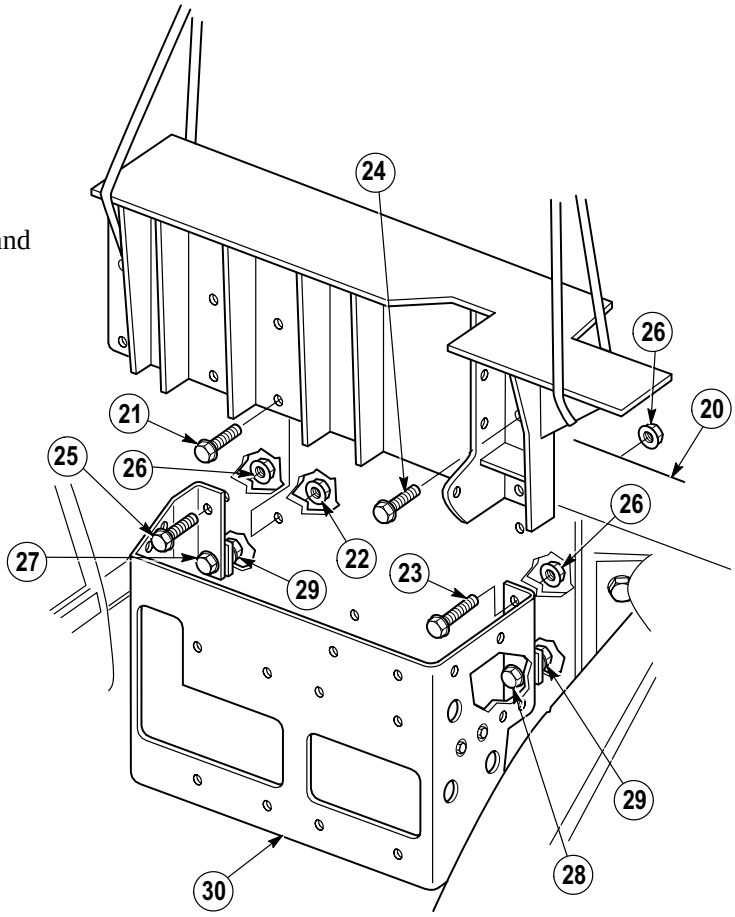

AIR DRYERS AND FUEL WATER SEPARATOR SHOWN REMOVED FOR CLARITY

21-46. CONTAINER HANDLING UNIT (CHU) FRONT SUPPORT BRACKETS REPLACEMENT (CONT).

b. Installation.

WARNING

Left front support bracket weighs 98 lbs (44 kg). Attach suitable lifting device to prevent possible injury to personnel.

(1) Attach lifting device to left front support bracket (5).

(2) Position five screws (24), screw (23) and six locknuts (26) to left front support bracket (5) and frame (20). Do not tighten.

(3) Position two screws (21) and locknuts (22) to left front support bracket (5) and frame (20). Do not tighten.

(4) Position screw (25) and locknut (26) to left front support bracket (5) and frame (20). Do not tighten.

(5) Remove two locknuts (29) from screw (28) and screw (27). Discard locknut.

(6) Position two locknuts (29) on screw (28) and screw (27). Do not tighten.

(7) Tighten six locknuts (26), two locknuts (29) and (22), locknut (26) on screw (27), (28), (25) and (23), five screws (23) and two screws (21).

(8) Remove lifting device from left front support bracket (5).

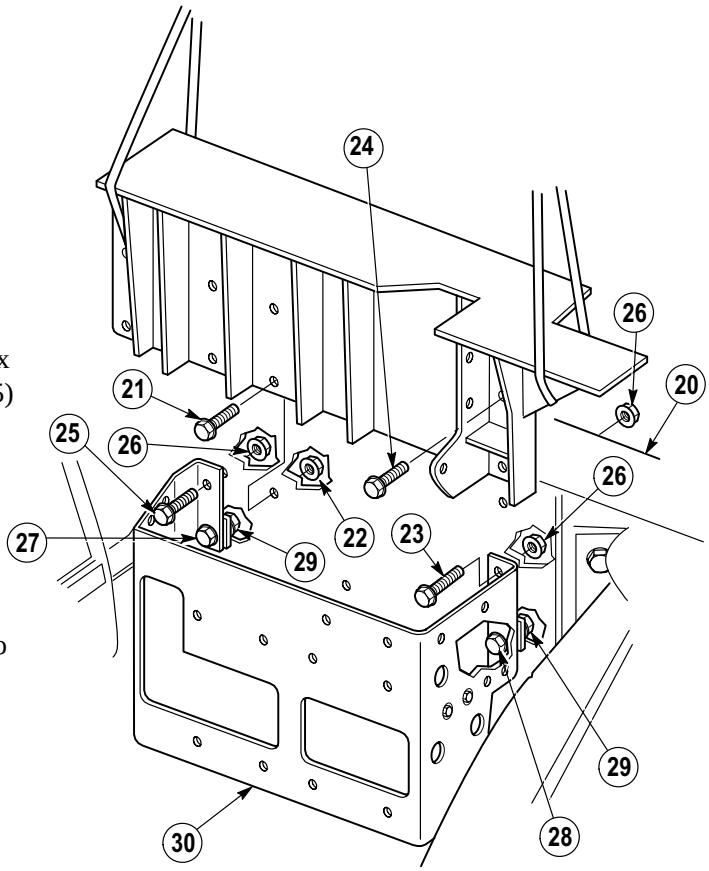

AIR DRYERS AND FUEL WATER SEPARATOR SHOWN REMOVED FOR CLARITY

WARNING

Right front support bracket weighs 98 lbs (44.49 kg). Attach suitable lifting device to prevent possible injury to personnel.

(9) Attach suitable lifting device to right front support bracket (4).

(10) With the aid of an assistant, position right front support bracket (4) between frame (20), bracket (8), auxiliary fuel tank support (11) and rear fender support (31).

NOTE

- Ensure top front screw is installed from the inside of truck frame.
- Perform Step (11) for trucks equipped with auxiliary fuel tank.
- Perform Step (12) for trucks not equipped with auxiliary fuel tank.

(11) With the aid of an assistant, install screw (12), four screws (13), screw (14), six locknuts (15), two screws (16), locknuts (17), screw (18) and locknut (19) from auxiliary fuel tank support (11).

(12) With the aid of an assistant, install six screws (13), six locknuts (15), two screws (16), locknuts (17), screw (18) and locknut (19) from auxiliary fuel tank support (11).

(13) Remove two locknuts (10) from screws (9). Discard locknuts.

(14) Install two locknuts (10) on two screws (9).

(15) Remove lifting device from right front support bracket (4).

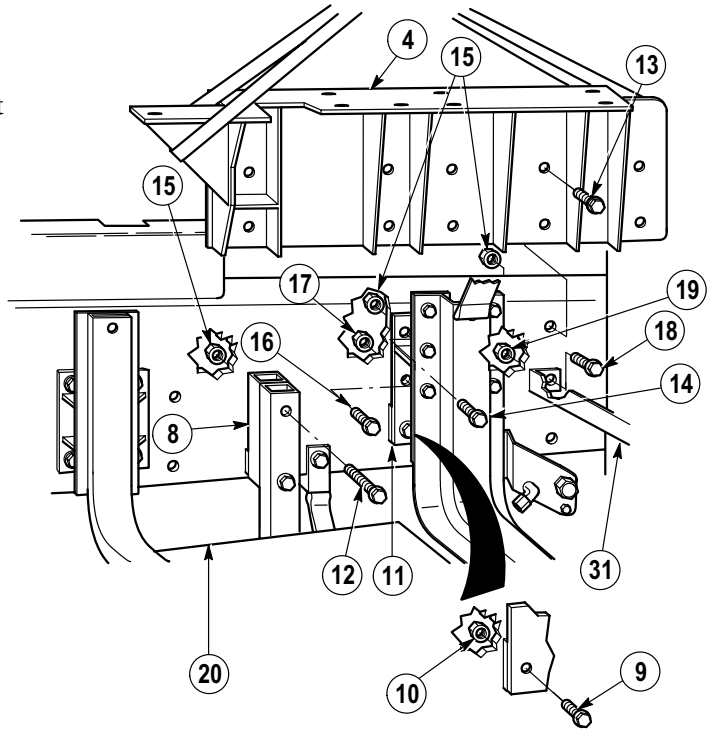

21-46. CONTAINER HANDLING UNIT (CHU) FRONT SUPPORT BRACKETS REPLACEMENT (CONT).

WARNING

Front support assembly weighs 660 lbs (299 kg). Attach suitable lifting device to prevent possible injury to personnel.

(16) Attach lifting device to front support assembly (1).

(17) Position front support assembly (1) on right support assembly (4) and left support assembly (5).

(18) Install 18 screws (3) and locknuts (2) to front support assembly (1), right front support bracket (4) and left front support bracket (5).

(19) Remove lifting device from front support assembly (1).

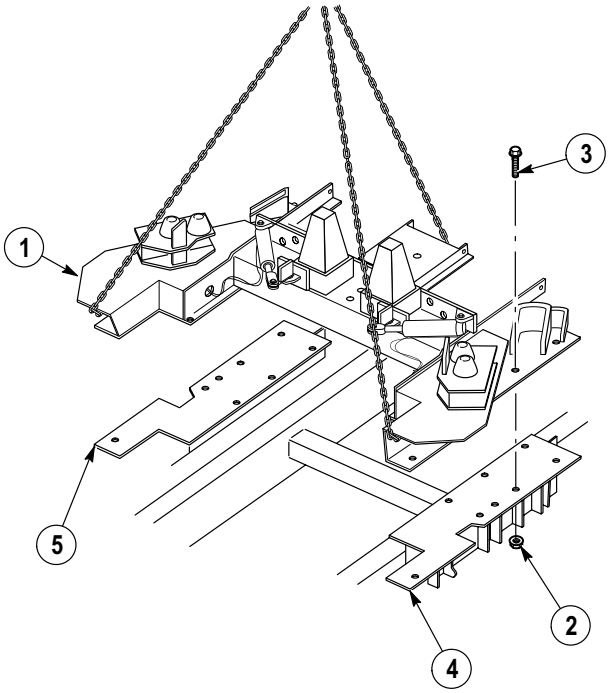

c. Follow-on Maintenance:

- Install CHU air lines, (Para 12-36).
- Install CHU deck weldment, (Para 21-40).
- Remove wheel chocks, (TM 9-2320-364-10).

END OF TASK

21-47. CONTAINER HANDLING UNIT (CHU) LIFTING FRAME STRAP REPLACEMENT.

This task covers:

a. Removal b. Installation c. Follow-On Maintenance

INITIAL SETUP

Tools and Special Tools
Tool Kit, General Mechanic's: Automotive (Item 74, Appendix G)

Materials/Parts
Locknut (2) (Item 91, Appendix F)

Equipment Condition
Lifting frame removed from truck, (TM 9-2320-364-10)
Engine OFF, (TM 9-2320-364-10)
Wheels chocked, (TM 9-2320-364-10)

a. Removal.

NOTE

There are two retaining straps.
Both are removed the same way.
Right side is shown.

(1) Loosen and remove hook end of retaining strap (1) from strap stow bar (2) on lifting frame stow bracket (3).

(2) Remove two locknuts (4), screws (5), strap anchor (6) and retaining strap (1) from lifting frame stow bracket (3). Discard locknuts.

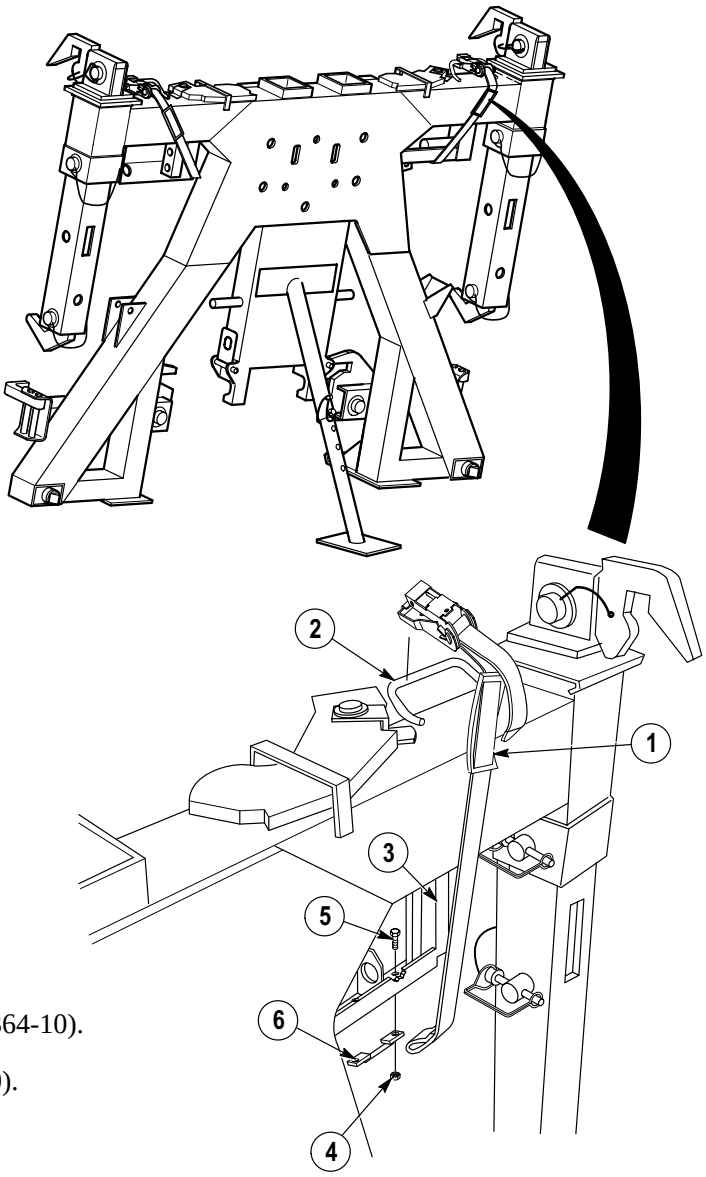

b. Installation.

NOTE

There are two retaining straps.
Both are installed the same way.
Right side is shown.

(1) Install retaining strap (1), strap anchor (6), two screws (5) and locknuts (4) on lifting frame stow bracket (3).

(2) Position hook end of retaining strap (1) on strap stow bar (2) and tighten strap.

c. Follow-On Maintenance:

- Install lifting frame on truck, (TM 9-2320-364-10).
- Remove wheel chocks, (TM 9-2320-364-10).

END OF TASK

CHAPTER 22

ARMAMENT MAINTENANCE

Para	Contents	Page
22-1	Introduction	22-1
22-2	Machine Gun Ring Replacement	22-2
22-3	Machine Gun Ring Rear Support Replacement	22-4
22-4	Machine Gun Ring Front Support Replacement	22-6
22-5	Machine Gun Platform Installation/Storage	22-8
22-6	Machine Gun Hatch Ring Replacement	22-11

22-1. INTRODUCTION.

This chapter contains maintenance instructions for removing, replacing, installing and adjusting components of the special purpose kits as authorized by the Maintenance Allocation Chart (MAC) at the Unit Maintenance level.

22-2. MACHINE GUN RING REPLACEMENT.

This task covers:

a. Removal b. Installation c. Follow-On Maintenance

INITIAL SETUP

Tools and Special Tools
Tool Kit, General Mechanic's: Automotive (Item 74, Appendix G)
Lifting Device, Minimum Capacity 350 lbs (159 kg)

Materials/Parts
Locknut (12) (Item 91, Appendix F)

Personnel Required
Two

Equipment Condition
Engine OFF, (TM 9-2320-364-10)
Wheels chocked, (TM 9-2320-364-10)

a. Removal.

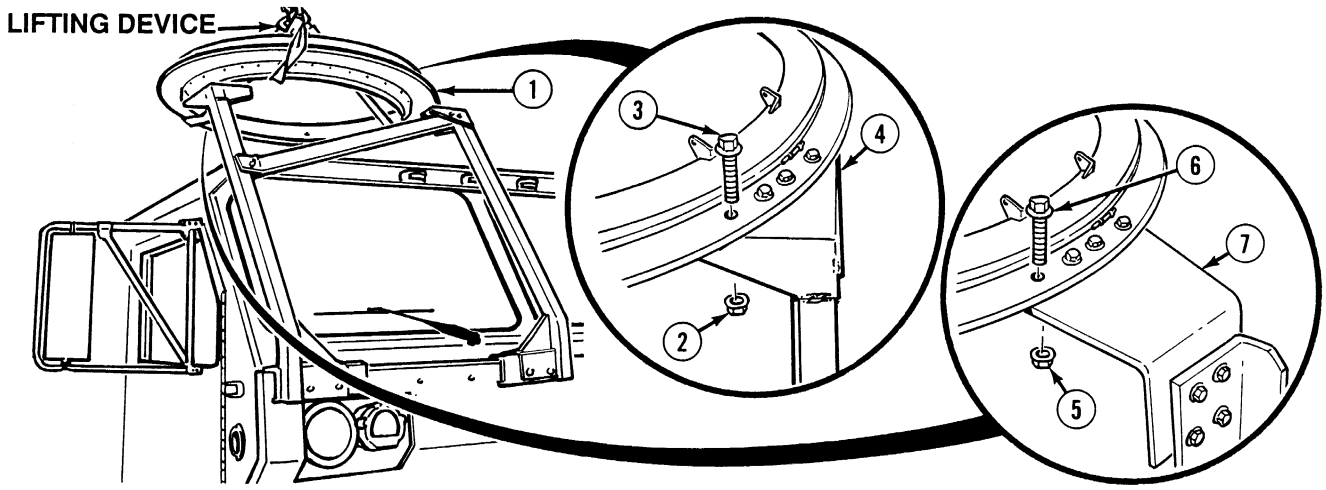

WARNING

Machine gun ring weighs 295 lbs (134 kg). Attach suitable lifting device to prevent injury to personnel.

(1) Attach lifting device to machine gun ring (1).

(2) Remove eight locknuts (2) and screws (3) from machine gun ring front support (4). Discard locknuts.

(3) Remove four locknuts (5) and screws (6) from machine gun ring rear support (7). Discard locknuts.

(4) With the aid of an assistant, remove machine gun ring (1) from machine gun ring front and rear supports (4) and (7) and lower machine gun ring to ground.

(5) Remove lifting device from machine gun ring (1).

b. Installation.

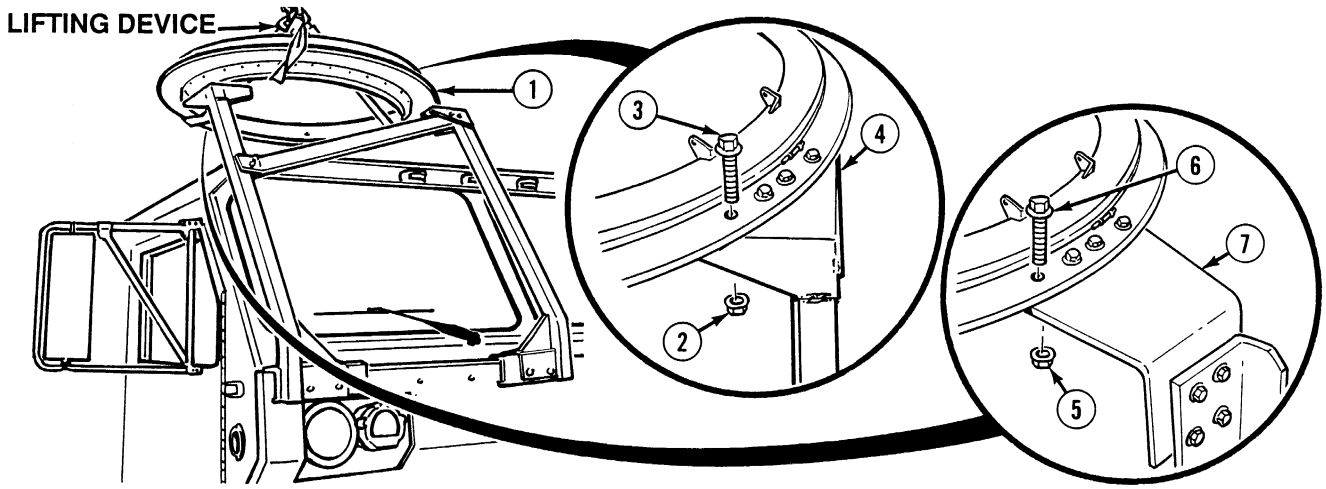

WARNING

Machine gun ring weighs 295 lbs (134 kg). Attach suitable lifting device to prevent injury to personnel.

(1) Attach lifting device to machine gun ring (1).

(2) With the aid of an assistant, position machine gun ring (1) on machine gun ring front and rear supports (4) and (7).

(3) Position four screws (6) and locknuts (5) on machine gun ring rear support (7).

(4) Install eight screws (3) and locknuts (2) on machine gun ring front support (4).

(5) Tighten four locknuts (5) on screws (6).

(6) Remove lifting device from machine gun ring (1).

c. Follow-On Maintenance:

- Remove wheel chocks, (TM 9-2320-364-10).

END OF TASK

22-3. MACHINE GUN RING REAR SUPPORT REPLACEMENT.

This task covers:

a. Removal b. Installation c. Follow-On Maintenance

INITIAL SETUP

Tools and Special Tools
Tool Kit, General Mechanic's: Automotive (Item 74, Appendix G)
Wrench, Torque (0-175 lb-ft [0-237 N·m]) (Item 95, Appendix G)

Materials/Parts
Sealing Compound (Item 77, Appendix C)
Locknut (4) (Item 91, Appendix F)
Lockwasher (2) (Item 165, Appendix F)

Equipment Condition
Engine OFF, (TM 9-2320-364-10)
Wheels chocked, (TM 9-2320-364-10)
Machine gun ring removed, (Para 22-2)

a. Removal.

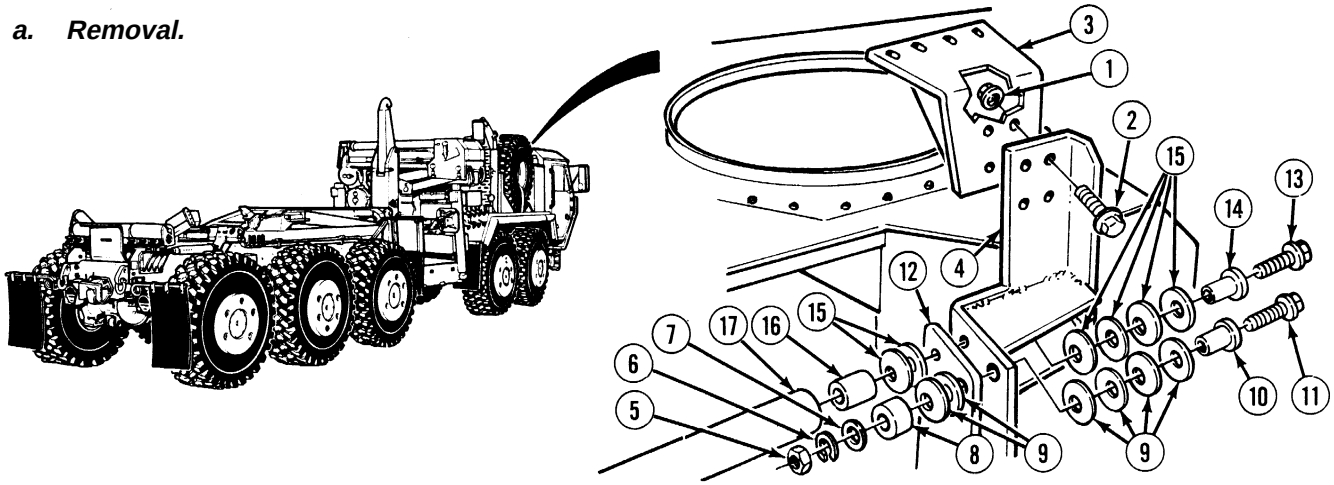

(1) Remove four locknuts (1), screws (2) and machine gun ring mount (3) from machine gun ring rear support (4). Discard locknuts.

(2) Remove nut (5), lockwasher (6), washer (7), spacer (8), six spring washers (9), sleeve (10) and screw (11) from power module right frame (12). Discard lockwasher.

(3) Remove screw (13), sleeve (14), six spring washers (15), machine gun ring rear support (4) and sleeve spacer (16) from power module right frame (12) and cross tube (17).

b. Installation.

WARNING

Adhesives, solvents, and sealing compounds can burn easily, can give off harmful vapors, and are harmful to skin and clothing. To avoid injury or death, keep away from open fire and use in a well-ventilated area. If adhesive, solvent, or sealing compound gets on skin or clothing, wash immediately with soap and water.

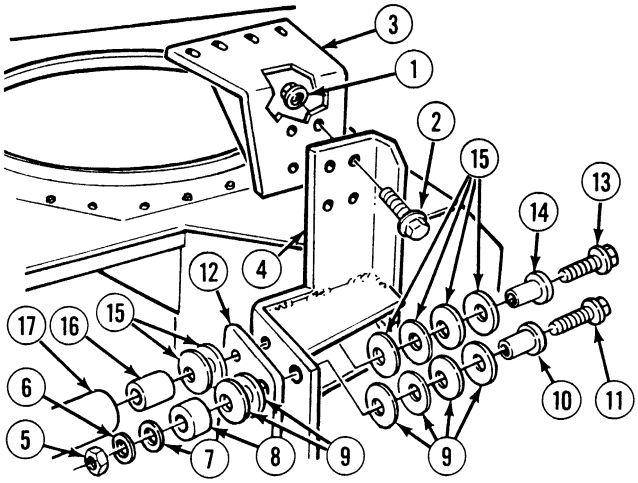

(1) Apply sealing compound on threads of screw (13).

(2) Install sleeve spacer (16) in cross tube (17).

(3) Position machine gun ring rear support (4) on power module right frame (12) with sleeve spacer (16), six spring washers (15), sleeve (14) and screw (13).

(4) Apply sealing compound on threads of screw (11).

(5) Install screw (11), sleeve (10), six spring washers (9), spacer (8), washer (7), lockwasher (6) and nut (5) on power module right frame (12). Tighten to 170 lb-ft (230 N·m).

(6) Tighten screw (13) to 128 lb-ft (174 N·m).

(7) Install machine gun ring mount (3) on machine gun ring rear support (4) with four screws (2) and locknuts (1).

c. Follow-On Maintenance:

- Install machine gun ring, (Para 22-2).
- Remove wheel chocks, (TM 9-2320-364-10).

END OF TASK

22-4. MACHINE GUN RING FRONT SUPPORT REPLACEMENT.

This task covers:

a. Removal b. Installation c. Follow-On Maintenance

INITIAL SETUP

Tools and Special Tools
Tool Kit, General Mechanic's: Automotive (Item 74, Appendix G)
Lifting Device, Minimum Capacity 100 lbs (45 kg)

Materials/Parts
Locknut (8) (Item 91, Appendix F)
Lockwasher (4) (Item 165, Appendix F)

Personnel Required
Two

Equipment Condition
Engine OFF, (TM 9-2320-364-10)
Wheels chocked, (TM 9-2320-364-10)
Machine gun ring removed, (Para 22-2)

a. Removal.

WARNING

Machine gun ring front support weighs 55 lbs (25 kg). Attach suitable lifting device to prevent injury to personnel.

(1) Attach lifting device to machine gun ring front support (1).

(2) Remove four locknuts (2), screws (3) and washers (4) from machine gun ring front support (1). Discard locknuts.

(3) With the aid of an assistant, remove four locknuts (5), screws (6), washers (7), machine gun ring front support (1) and two spacers (8) from skid plate (9). Discard locknuts.

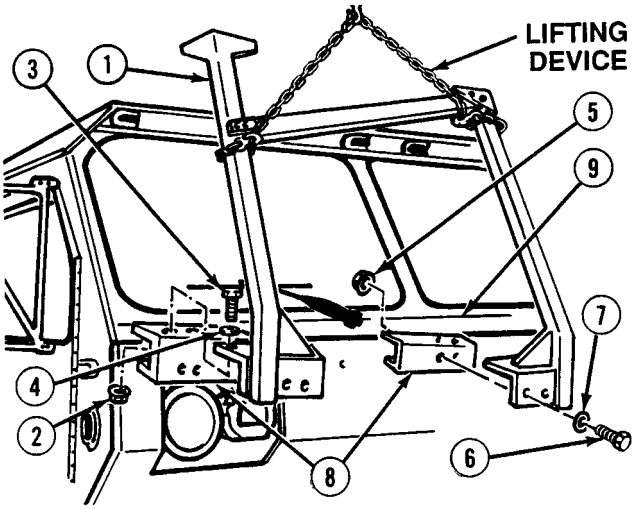

(4) Remove four nuts (10), lockwashers (11), screws (12), washers (13) and machine gun ring front support channel (14) from left and right front supports (15) and (16). Discard lockwashers.

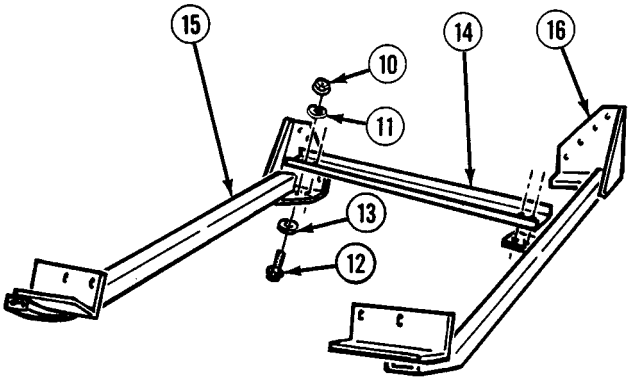

b. Installation.

(1) Install machine gun ring front support channel (14), four washers (13), screws (12), lockwashers (11) and nuts (10) on left and right front supports (15) and (16).

WARNING

Machine gun ring front support weighs 55 lbs (25 kg). Attach suitable lifting device to prevent injury to personnel.

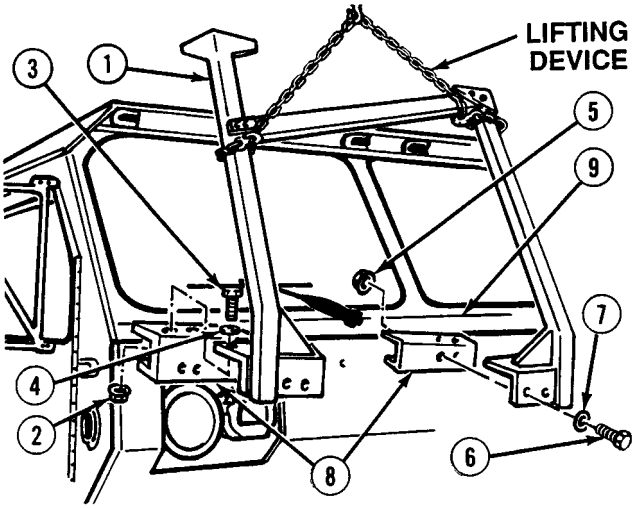

(2) With the aid of an assistant, position two spacers (8), machine gun ring front support (1), four washers (7), screws (6) and locknuts (5) on skid plate (9).

(3) Position four washers (4), screws (3) and locknuts (2) on machine gun ring front support (1).

(4) Tighten four locknuts (5) on screws (6).

(5) Tighten four locknuts (2) on screws (3).

c. Follow-On Maintenance:

- Install machine gun ring, (Para 22-2).
- Remove wheel chocks, (TM 9-2320-364-10).

END OF TASK

22-5. MACHINE GUN PLATFORM INSTALLATION/STORAGE.

This task covers:

a. Installation b. Storage c. Follow-On Maintenance

INITIAL SETUP

Tools and Special Tools
Tool Kit, General Mechanic's: Automotive (Item 74, Appendix G)

Materials/Parts
Locknut (5) (Item 91, Appendix F)

Equipment Condition
Engine OFF, (TM 9-2320-364-10)
Wheels chocked, (TM 9-2320-364-10)

a. Installation.

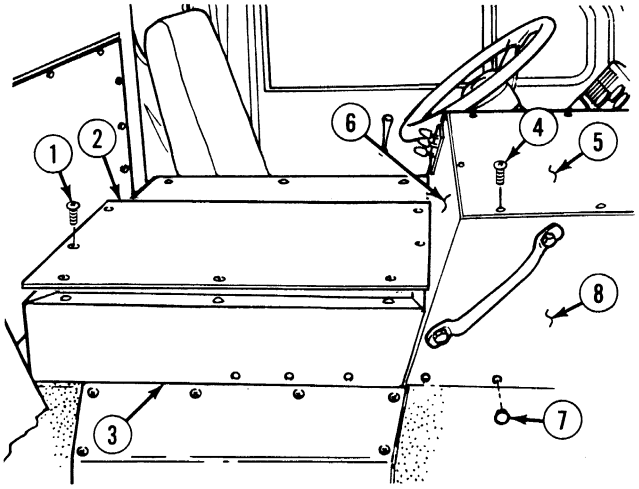

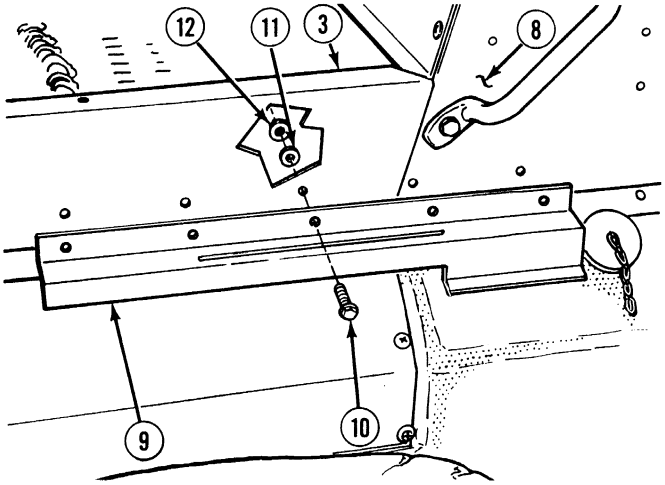

(1) Remove eight screws (1) and right Electronic Control Box (ECB) cover (2) from right ECB (3).

(2) Remove eight screws (4) and heater access panel (5) from heater compartment (6).

(3) Remove five plugs (7) from right ECB (3) and heater control side panel (8).

(4) Install platform bracket (9) on right ECB (3) and heater control side panel (8) with five screws (10), washers (11) and locknuts (12).

(5) Release leg assembly (13) from spring clip (14).

NOTE

Tilt platform assembly and fit tab in slot in platform bracket.

(6) Position platform assembly (15) on platform bracket (9).

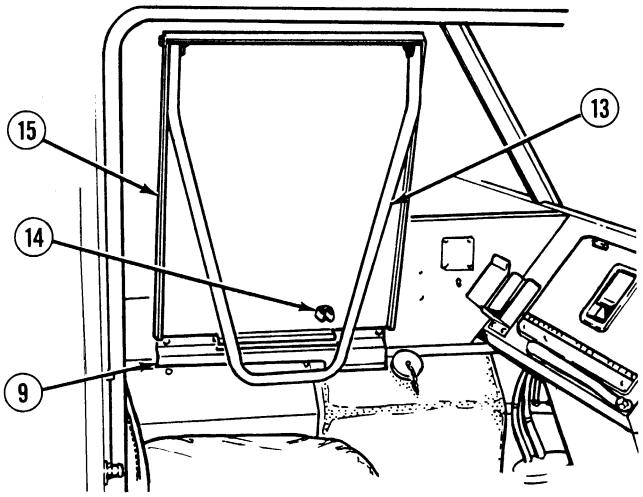

(7) Extend leg assembly (13) out from platform assembly (15).

(8) Lower platform assembly (15) to floor (16).

(9) Store strap (17) in glove compartment (18).

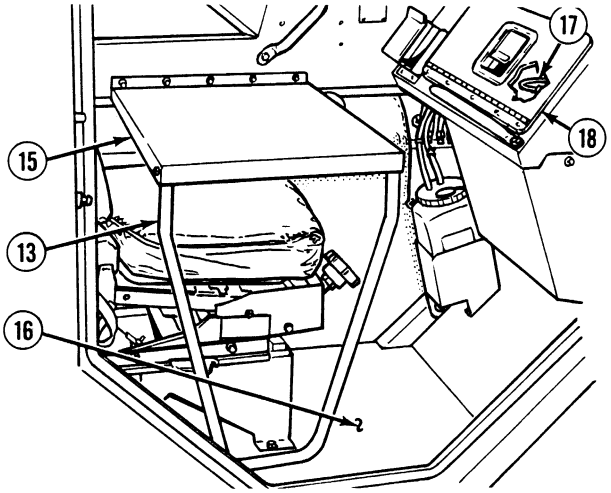

(10) Install heater access panel (5) on heater compartment (6) with eight screws (4).

(11) Install right ECB cover (2) on right ECB (3) with eight screws (1).

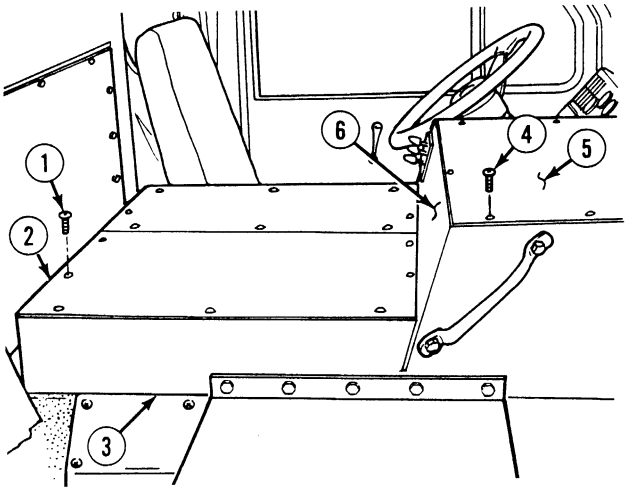

22-5. MACHINE GUN PLATFORM INSTALLATION/STORAGE (CONT).

b. Storage.

(1) Raise platform assembly (1) and lower leg assembly (2).

(2) Remove platform assembly (1) from platform bracket (3).

(3) Position leg assembly (2) in spring clip (4).

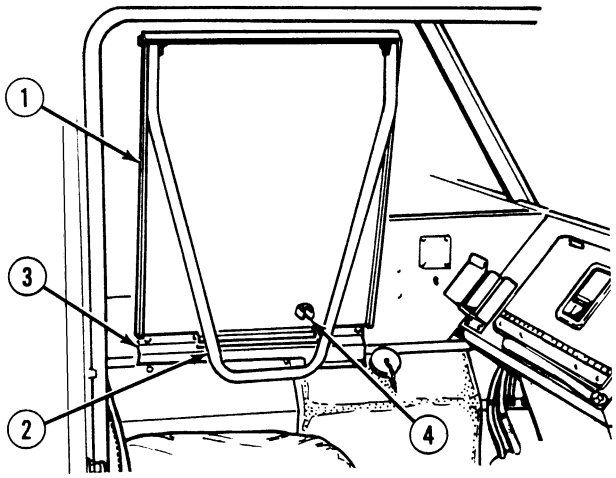

(4) Store platform assembly (1) between passenger seat (5) and cab (6).

(5) Remove strap (7) from glove compartment (8).

(6) Secure platform assembly (1) by hooking strap (7) in platform bracket (3) and angle bracket (9).

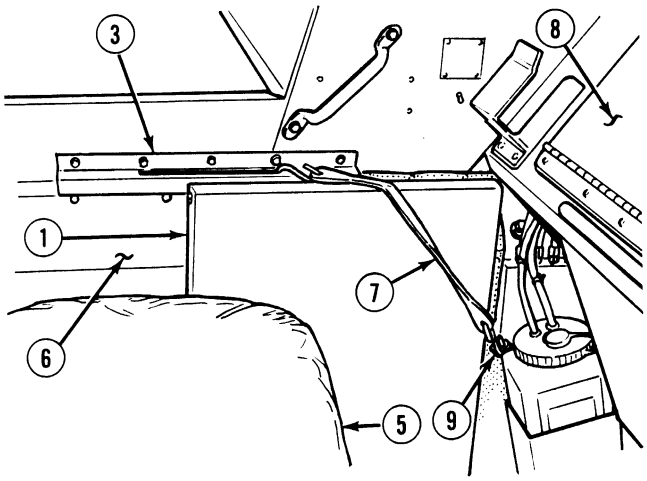

c. Follow-On Maintenance:

- Remove wheel chocks, (TM 9-2320-364-10).

END OF TASK

22-6. MACHINE GUN HATCH RING REPLACEMENT.

This task covers:

a. Removal b. Installation c. Follow-On Maintenance

INITIAL SETUP

Tools and Special Tools
Tool Kit, General Mechanic's: Automotive (Item 74, Appendix G)
Socket Set, 3/8 in. (Item 62, Appendix G)
Wrench, Torque (0 to 60 N·m) (Item 98, Appendix G)

Materials/Parts
Gasket (Item 68, Appendix F)
Washer, Sealing (34) (Item 353, Appendix F)

Equipment Condition
Engine OFF, (TM 9-2320-364-10)
Wheels chocked, (TM 9-2320-364-10)

a. Removal.

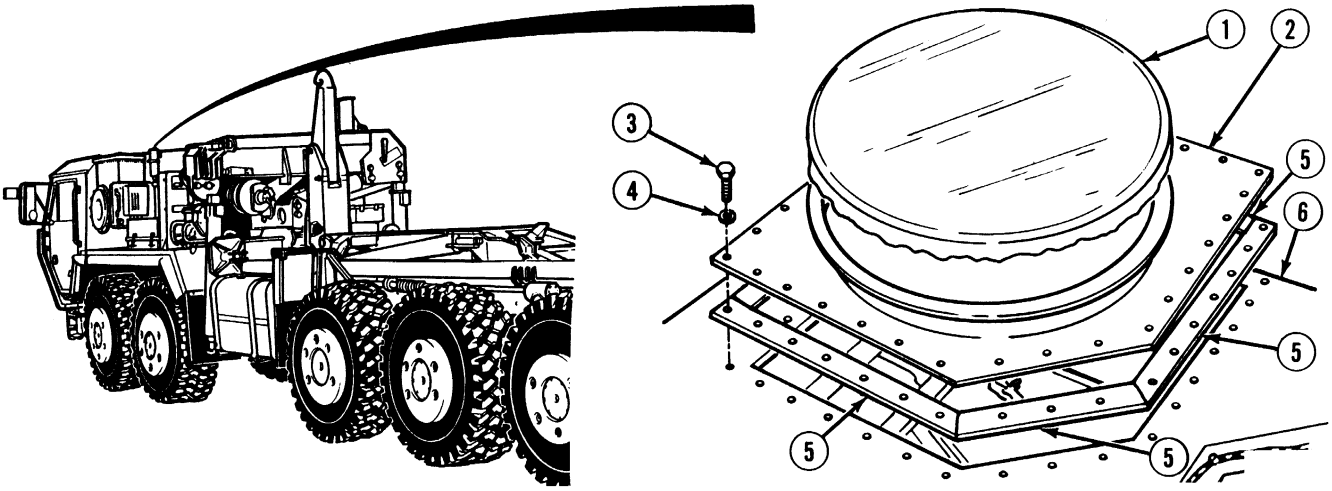

(1) Remove hatch cover (1) from hatch ring assembly (2).

(2) Remove 34 screws (3), sealing washers (4), hatch ring assembly (2) and gasket (5) from cab roof (6). Discard sealing washers and gasket.

22-6. MACHINE GUN HATCH RING REPLACEMENT (CONT).

b. Installation.

NOTE

Gaskets do not come preformed. Five gasket strips must be cut in the following lengths:

- 34 in. - two strips.
- 24 in. - one strip.
- 14 in. - one strip.
- 24-1/2 in. - one strip.

(1) Cut gasket (5) strips to correct lengths.

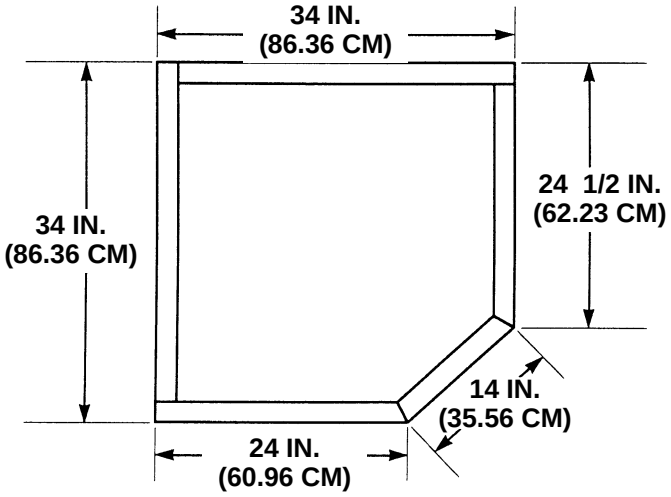

(2) Install gasket (5) strips, hatch ring assembly (2), 34 sealing washers (4) and screws (3) on cab roof (6). Tighten screws to 204 lb-in (23 N·m).

(3) Install hatch cover (1) on hatch ring assembly (2).

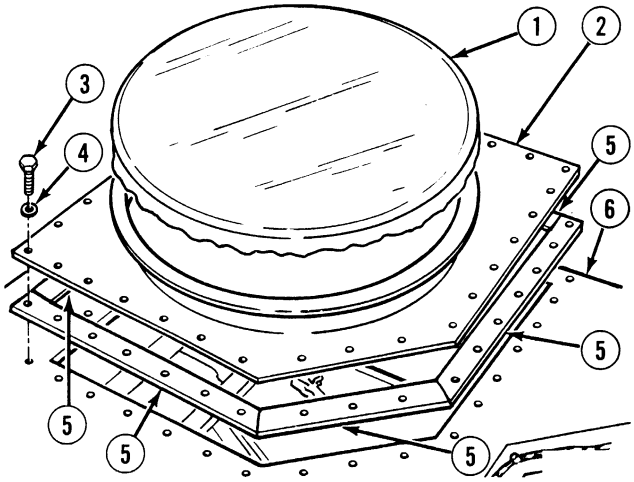

c. Follow-On Maintenance:

- Remove wheel chocks, (TM 9-2320-364-10).

END OF TASK

CHAPTER 23

GAGES (NON-ELECTRICAL) MAINTENANCE

Para **Contents** **Page**

23-1	Introduction	23-1
23-2	Air Pressure Indicator Replacement	23-2
23-3	Air Restriction Indicator Replacement	23-5

23-1. INTRODUCTION.

This chapter contains maintenance instructions for removing, replacing and installing non-electrical gages as authorized by the Maintenance Allocation Chart (MAC) at the Unit Maintenance level.

23-2. AIR PRESSURE INDICATOR REPLACEMENT.

This task covers:

a. Removal b. Installation c. Follow-On Maintenance

INITIAL SETUP

Tools and Special Tools
Tool Kit, General Mechanic's: Automotive (Item 74, Appendix G)

Materials/Parts
Sealing Compound (Item 73, Appendix C)
Tags, Identification (Item 88, Appendix C)
Lockwasher (2) (Item 183, Appendix F)

Equipment Condition
Engine OFF, (TM 9-2320-364-10)
Wheels chocked, (TM 9-2320-364-10)
Air system drained, (TM 9-2320-364-10)

a. Removal.

(1) Remove eight screws (1) and sunshield (2) from dash (3) and air dash panel assembly (4).

NOTE

- Tag and mark all lines prior to removal.
- Note position of elbows prior to removal.

(2) Remove two screws (1) from air dash panel assembly (4) and tilt air dash panel assembly (4) forward.

(3) Remove light socket (5) from rear of air pressure indicator (6).

(4) Remove air line 2641 (7) and air line 2610 (8) from two adapters (9).

(5) Remove two adapters (9) from elbows (10).

(6) Remove two elbows (10) from rear of air pressure indicator studs (11).

(7) Remove two nuts (12), lockwashers (13) and air pressure indicator mounting bracket (14) from air pressure indicator (6). Discard lockwashers.

(8) Remove air pressure indicator (6) from air dash panel assembly (4).

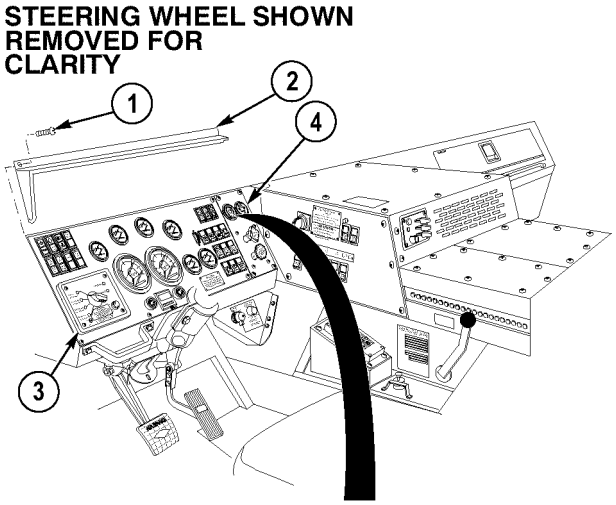

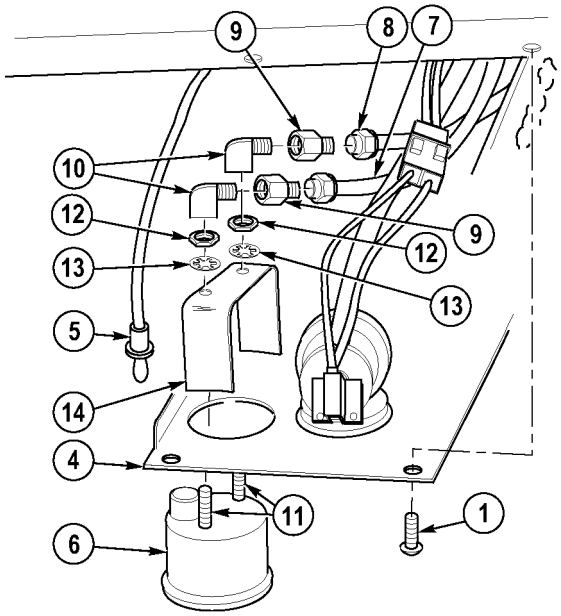

b. Installation.

NOTE

During installation, ensure face of gage is aligned properly.

(1) Position air pressure indicator (6) in air dash panel assembly (4).

(2) Install air pressure indicator mounting bracket (14), two lockwashers (13) and nuts (12) on rear of air pressure indicator (6).

WARNING

Adhesives, solvents, and sealing compounds can burn easily, can give off harmful vapors, and are harmful to skin and clothing. To avoid injury or death, keep away from open fire and use in well-ventilated area. If adhesive, solvent, or sealing compound gets on skin or clothing, wash immediately with soap and water.

(3) Apply sealing compound to threads of air pressure indicator studs (11).

NOTE

Install elbows as noted during removal.

(4) Install two elbows (10) on air pressure indicator studs (11).

(5) Apply sealing compound to threads of two elbows (10).

(6) Install two adapters (9) on elbows (10).

(7) Install air line 2641 (7) and air line 2610 (8) on two adapters (9).

(8) Install light socket (5) on rear of air pressure indicator (6).

(9) Install two screws (1) on air dash panel assembly (4).

(10) Install sunshield (2) on dash (3) and air dash panel assembly (4) with eight screws (1).

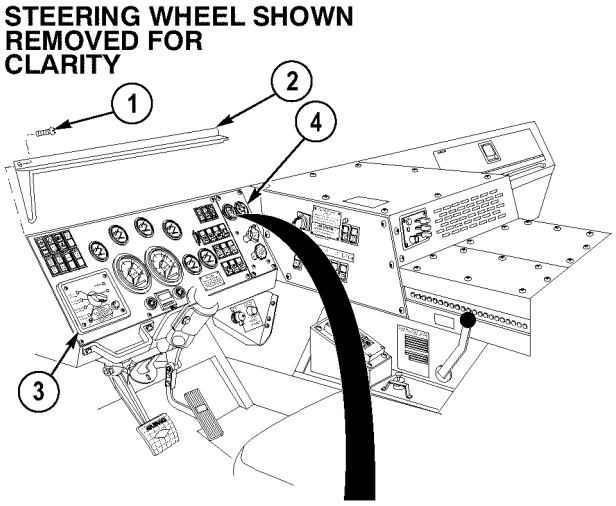

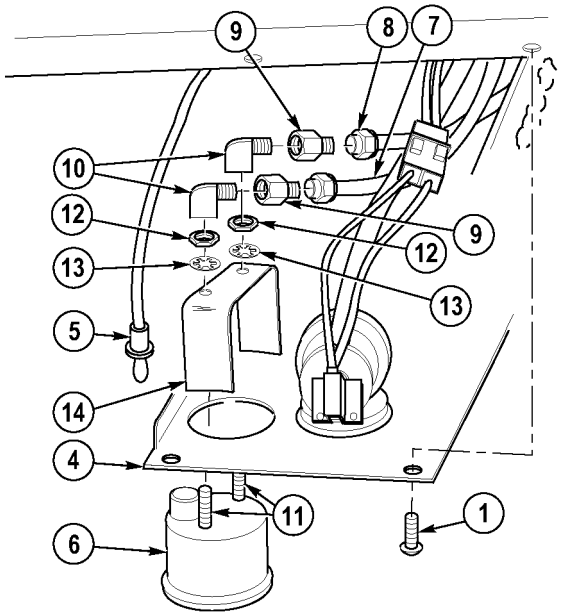

23-2. AIR PRESSURE INDICATOR REPLACEMENT (CONT).

c. Follow-On Maintenance:

- Start engine, (TM 9-2320-364-10).
- Build air pressure to 125 psi (861 kPa).
- Shut OFF engine, (TM 9-2320-364-10).
- Check for air leaks, (TM 9-2320-364-10).
- Remove wheel chocks, (TM 9-2320-364-10).

END OF TASK

23-3. AIR RESTRICTION INDICATOR REPLACEMENT.

This task covers:

a. Removal b. Installation c. Follow-On Maintenance

INITIAL SETUP

Tools and Special Tools
Tool Kit, General Mechanic's: Automotive (Item 74, Appendix G)

Equipment Condition
Engine OFF, (TM 9-2320-364-10)
Wheels chocked, (TM 9-2320-364-10)

a. Removal.

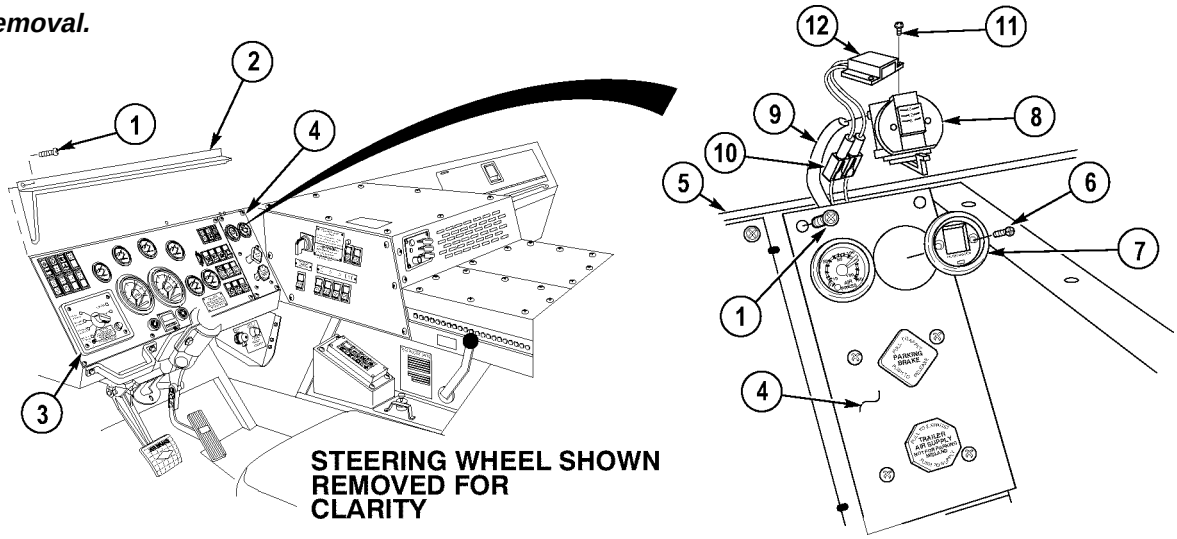

(1) Remove six screws (1) and sunshield (2) from dash (3) and air dash panel (4).

(2) Remove two screws (1) from air dash panel (4).

(3) Pull air dash panel (4) away from dash (5).

(4) Remove two screws (6) from gage face (7).

(5) Remove gage face (7) from restriction indicator (8).

CAUTION

Ensure instrument panel is only pulled away from dash far enough to route restrictor indicator between instrument panel and dash. If instrument panel is pulled away further than necessary, damage to equipment may result.

(6) Route restrictor indicator (8) up between air dash panel (4) and dash (5).

(7) Remove restrictor indicator (8) from hose (9).

(8) Disconnect MC125 connector (10).

NOTE

Perform Step (9) if replacing light kit.

(9) Remove two screws (11) and light kit (12) from restrictor indicator (8).

23-3. AIR RESTRICTION INDICATOR REPLACEMENT (CONT).

b. Installation.

NOTE

Perform Step (1) if light kit was removed.

(1) Install light kit (12) on restrictor indicator (8) using two screws (11).

(2) Pull air dash panel (4) away from dash (5).

(3) Connect MC125 connector (10).

(4) Install restrictor indicator (8) on hose (9).

CAUTION

Ensure air dash panel is only pulled away from dash far enough to route restrictor indicator between air dash panel and dash. If air dash panel is pulled away further than necessary, damage may result to equipment.

(5) Route restrictor indicator (8) down through air dash panel (4) and dash (5).

NOTE

Ensure restrictor indicator is positioned in upright position in air dash panel.

(6) Position restrictor indicator (8) in air dash panel (4).

(7) Install gage face (7) in air dash panel (4) with two screws (6).

(8) Position air dash panel (4) on dash (5).

(9) Install two screws (1) in air dash panel (4).

(10) Install sunshield (2) on dash (3) and air dash panel (4) with six screws (1).

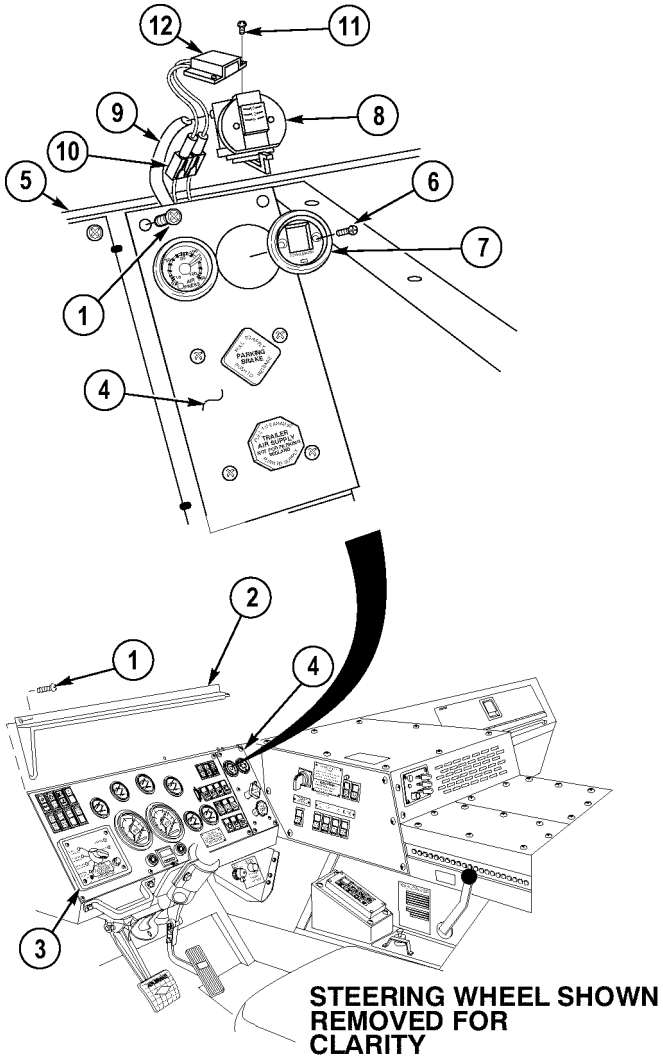

c. Follow-On Maintenance:

- Remove wheel chocks, (TM 9-2320-364-10).

END OF TASK

CHAPTER 24

CHEMICAL, BIOLOGICAL AND RADIOLOGICAL (CBR) MAINTENANCE

Para	Contents	Page
24-1	Introduction	24-1
24-2	Gas Particulate Filter Unit Kit Mounting/Installation	24-2
24-3	Decontamination Kit Bracket Replacement	24-5

24-1. INTRODUCTION.

This chapter contains maintenance instructions for removing, installing and servicing components of the chemical, biological and radiological (CBR) equipment as authorized by the Maintenance Allocation Chart (MAC) at the Unit Maintenance level.

24-2. GAS PARTICULATE FILTER UNIT KIT MOUNTING/INSTALLATION.

This task covers:

a. Installation

b. Follow-On Maintenance

INITIAL SETUP

Tools and Special Tools
Tool Kit, General Mechanic's: Automotive (Item 74, Appendix G)

Materials/Parts
Locknut (2) (Item 91, Appendix F)
Locknut (Item 120, Appendix F)
Lockwasher (Item 171, Appendix F)

Personnel Required
Two

Equipment Condition
Engine OFF, (TM 9-2320-364-10)
Wheels chocked, (TM 9-2320-364-10)
Electronic Control Box (ECB) cover removed, (Para 17-22)
Electronic Control Box (ECB) side panel removed, (Para 17-20)

a. Installation.

(1) Remove blank insert (1) from Electronic Control Box (ECB) side panel (2).

(2) Install gas particulate filter switch S19 (3) in ECB side panel (2).

(3) Install lamp (4) in bottom of gas particulate filter switch S19 (3).

(4) Connect wire harness MC58 connector (5) to gas particulate switch S19 (3).

(5) Install applique (6) on front of gas particulate switch S19 (3).

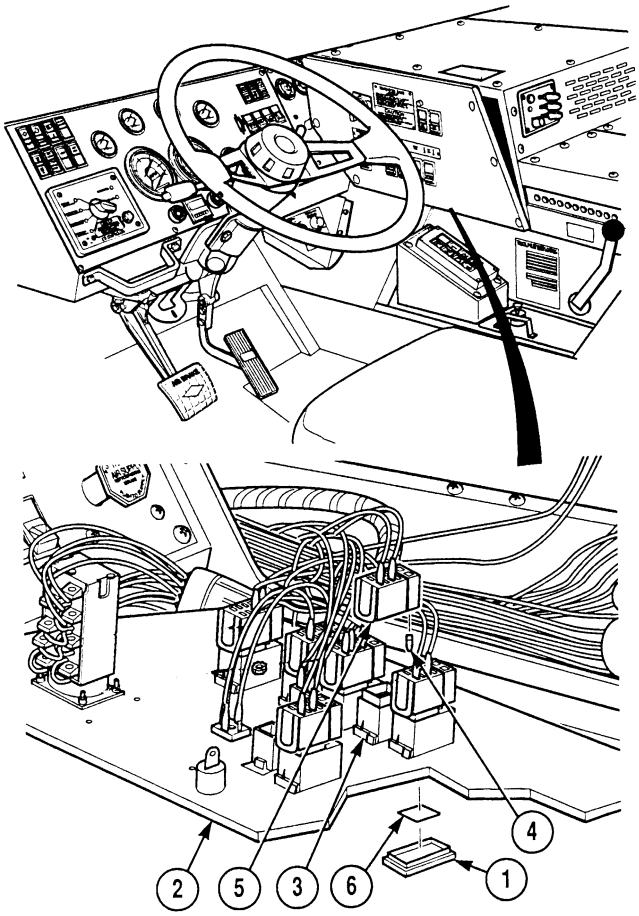

(6) Remove hole plug (7) from back of ECB (8).

(7) Install grommet (9) on wire harness (10).

(8) Install wire harness (10) and grommet (9) in back of ECB (8).

(9) Connect wire harness MC58 connector (5) inside of ECB (8).

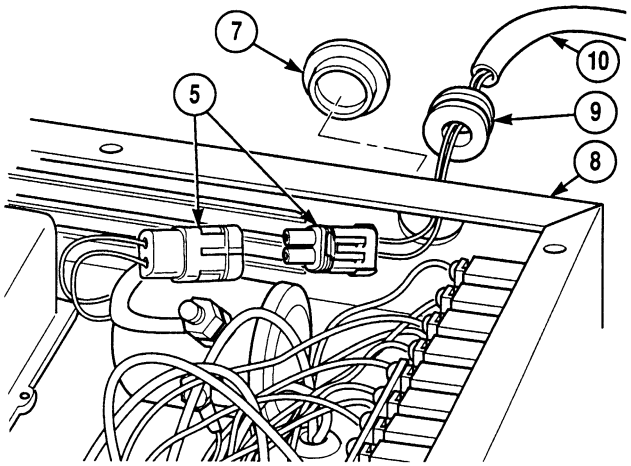

NOTE

Keep cushion clip and mounting hardware to secure wire harness to gas particulate filter bracket, when installed.

(10) With the aid of an assistant, remove screw (11) and locknut (12) from dome light bracket (13).

(11) With the aid of an assistant, install two ground wires 1435 (14) on dome light bracket (13) with screw (11) and locknut (12).

(12) With the aid of an assistant, remove screw (15) and locknut (16) from dome light bracket (13).

(13) With the aid of an assistant, install ground wire 1435 (17) on dome light bracket (13) with screw (15) and locknut (16).

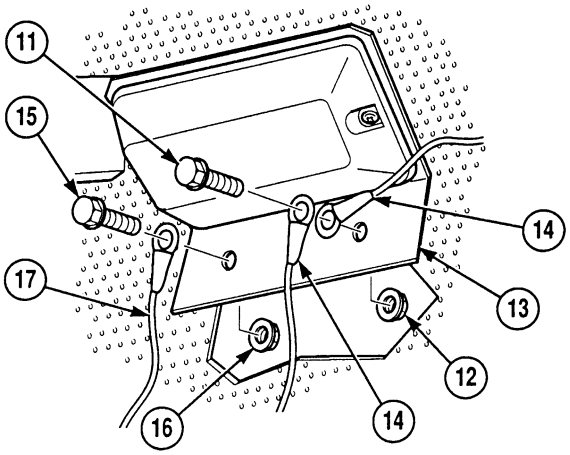

24-2. GAS PARTICULATE FILTER UNIT KIT MOUNTING/INSTALLATION (CONT).

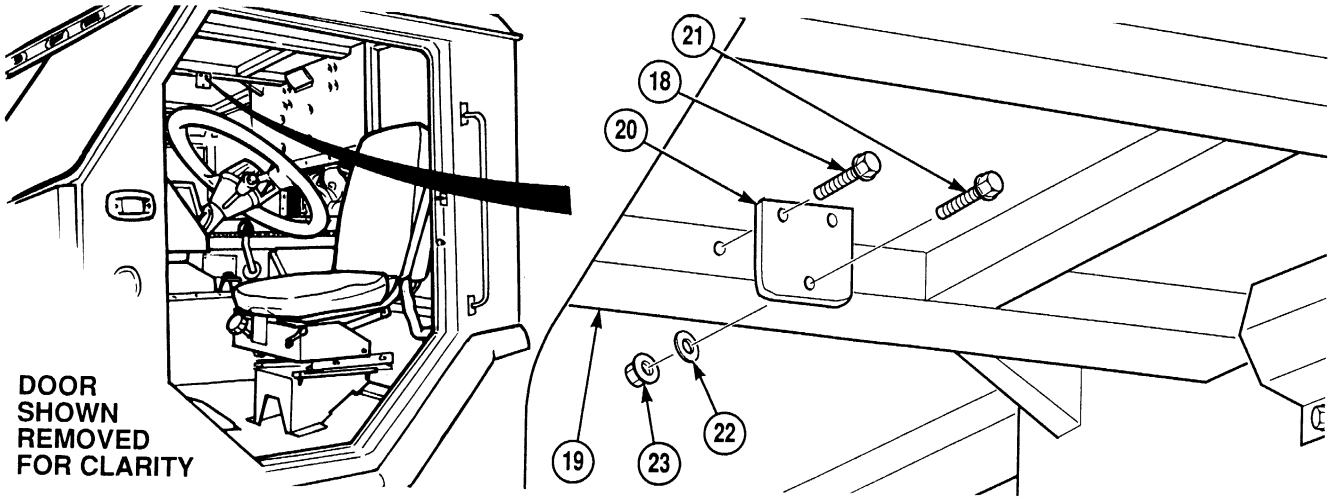

(14) Remove two screws (18) from cab frame (19).

(15) Install bracket (20) on cab frame (19) with two screws (18).

(16) Install screw (21) in bracket (20) with washer (22) and locknut (23).

b. Follow-On Maintenance:

- Install Electronic Control Box (ECB) side panel, (Para 17-20).
- Install Electronic Control Box (ECB) cover, (Para 17-22).
- Remove wheel chocks, (TM 9-2320-364-10).

END OF TASK

24-3. DECONTAMINATION KIT BRACKET REPLACEMENT.

This task covers:

a. Removal b. Installation c. Follow-On Maintenance

INITIAL SETUP

Tools and Special Tools
Tool Kit, General Mechanic's: Automotive (Item 74, Appendix G)
Wrench, Torque (0 to 175 lb-ft [0-237 N·m]) (Item 95, Appendix G)

Materials/Parts
Locknut (8) (Item 140, Appendix F)

Equipment Condition
Engine OFF, (TM 9-2320-364-10)
Wheels chocked, (TM 9-2320-364-10)

a. Removal.

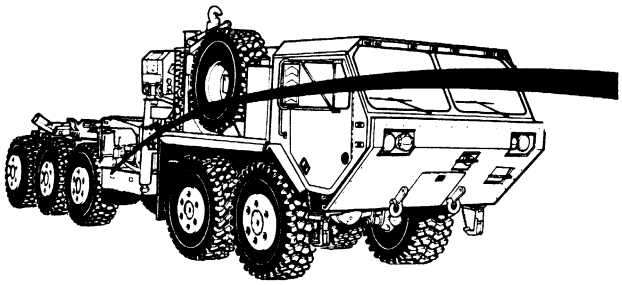

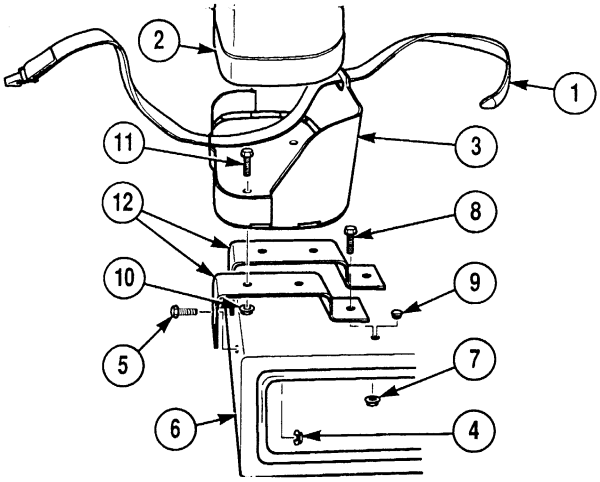

(1) Remove strap (1) and decontamination can (2) from bracket (3).

(2) Remove two locknuts (4) and screws (5) from box assembly (6). Discard locknuts.

(3) Remove two locknuts (7), screws (8) and pull decontamination assembly from box assembly (6). Discard locknuts.

(4) Install four plugs (9) into box assembly (6).

(5) Remove four locknuts (10), screws (11) and two brackets (12) from bracket (3). Discard locknuts.

24-3. DECONTAMINATION KIT BRACKET REPLACEMENT (CONT).

b. Installation.

(1) Install two brackets (12) on bracket (3) with four screws (11) and locknuts (10). Tighten locknuts to 45 lb-ft (61 N·m).

(2) Remove four plugs (9) from box assembly (6).

(3) Install two brackets (12) on box assembly (6) and secure with two screws (8) and locknuts (7).

(4) Install two screws (5) and locknuts (4) in box assembly (6).

(5) Tighten locknuts (4) and (7) to 45 lb-ft (61 N·m).

(6) Install decontamination can (2) in bracket (3) and secure with strap (1).

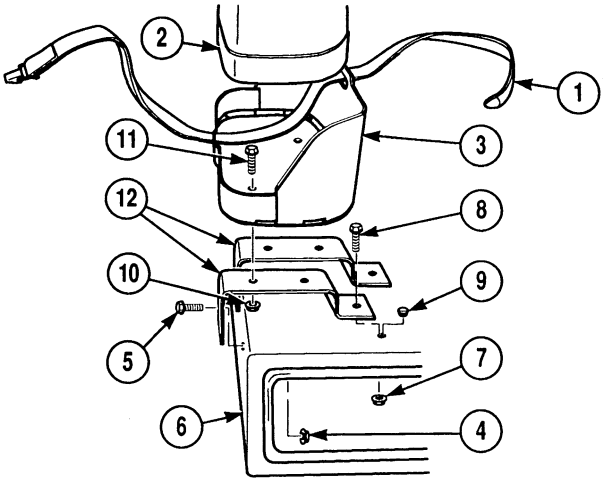

c. Follow-On Maintenance:

- Remove wheel chocks, (TM 9-2320-364-10).

END OF TASK

APPENDIX A

REFERENCES

A-1. SCOPE.

Indexes should be consulted frequently for latest changes or revisions of references given in this appendix and for new publications relating to material covered in this publication.

Military Publication Indexes.

Consolidated Index of Army Publications and Forms ..... DA PAM 310-1

A-2. FORMS.

Refer to DA PAM 738-750, The Army Maintenance Management System (TAMMS), for instructions on the use of maintenance forms pertaining to the vehicle.

A-3. FIELD MANUALS.

The following publications contain information pertinent to the vehicle material.

Camouflage ..... FM 20-3

Manual for Wheel Vehicle Driver ..... FM 21-305

Nuclear, Biological, and Chemical Defense ..... FM 21-40

Basic Cold Weather Manual ..... FM 31-70

Northern Operations ..... FM 31-71

Chemical, Biological, and Radiological (CBR) Decontamination ..... FM 3-5

Nuclear, Biological, and Chemical (NBC) Reconnaissance and Decontamination Operations (How to Fight) ..... FM 3-87 (HTF)

Army Motor Transport Units and Operations ..... FM 55-30

Operation and Maintenance of Ordnance Materiel in Cold Weather 0°F to -65°F ..... FM 9-207

A-4. TECHNICAL MANUALS.

Painting Instructions ..... TM 43-0139

General Shop Practice Requirements for Repair, Maintenance, and Test of Electronic Equipment ..... TM 43-0158

A-4. TECHNICAL MANUALS (CONT).

Procedures for Destruction of Tank Automotive Equipment to Prevent
Enemy Use (U.S. Army Tank-Automotive Command) ..... TM 750-244-6

Inspection, Care, and Maintenance of Antifriction Bearings ..... TM 9-214

Materials Used for Cleaning, Preserving, Abrading, and Cementing
Ordinance Material and Related Materials Including Chemicals ..... TM 9-247

Operator/Unit/Direct Support/General Support Maintenance Manual
for Care, Maintenance, Repair, and Inspection of Pneumatic
Tires and Inner Tubes ..... TM 9-2610-200-14

Operator's and Organizational Maintenance Manual Including Repair Parts and
Special Tools List for Simplified Test Equipment for Internal
Combustion Engines ..... TM 9-4910-571-12&P

Maintenance and Repair for Lead-Acid Storage Batteries ..... TM 9-6140-200-14

A-5. MISCELLANEOUS PUBLICATIONS.

Description, Use, Bonding Techniques, and Properties of Adhesives ..... TB ORD1032

Safety Inspection and Testing of Lifting Devices ..... TB 43-0142

Operator's Circular for Welding Theory and Application ..... TC 9-237

APPENDIX B

MAINTENANCE ALLOCATION CHART (MAC)

Section I. INTRODUCTION

B-1. GENERAL.

a. This section provides a general explanation of all maintenance and repair functions authorized at various maintenance levels.

b. The Maintenance Allocation Chart (MAC) in Section II designates overall authority and responsibility for the performance of maintenance functions on the identified end item or component. The application of the maintenance functions to the end item or component will be consistent with the capacities and capabilities of the designated maintenance levels.

c. Section III lists the tools and test equipment required for each maintenance function as referenced from Section II.

d. Section IV lists remarks (identified by an alphabetic code in Column 6 of the MAC) to provide a ready reference to the definition of the remark.

B-2. MAINTENANCE FUNCTIONS.

Maintenance functions will be limited to and defined as follows:

a. Inspect. To determine the serviceability of an item by comparing its physical, mechanical, and/or electrical characteristics with established standards through examination (e.g., by sight, sound, or feel).

b. Test. To verify serviceability by measuring the mechanical, pneumatic, hydraulic, or electrical characteristics of an item and comparing those characteristics with prescribed standards.

c. Service. Operations required periodically to keep an item in proper operating condition, i.e., to clean (includes decontaminate, when required), to preserve, to drain, to paint, or to replenish fuel, lubricants, chemical fluids, or gases.

d. Adjust. To maintain or regulate, within prescribed limits, by bringing into proper or exact position, or by setting the operating characteristics to specified parameters.

e. Align. To adjust specified variable elements of an item to bring about optimum or desired performance.

f. Calibrate. To determine and cause corrections to be made or to be adjusted on instruments or test, measuring, and diagnostic equipments used in precision measurement. Consists of comparisons of two instruments, one of which is a certified standard of known accuracy, to detect and adjust any discrepancy in the accuracy of the instrument being compared.

g. Remove/Install. To remove and install the same item when required to perform service or other maintenance functions. Install may be the act of emplacing, seating, or fixing into position a spare, repair part, or module (component or assembly) in a manner to allow the proper functioning of an equipment or system.

h. Replace. To remove an unserviceable item and install a serviceable counterpart in its place. "Replace" is authorized by the MAC and is shown as the 3rd position code of the SMR code.

i. Repair. The application of maintenance services, including fault location/troubleshooting, removal/installation, and disassembly/assembly procedures, and maintenance actions to identify troubles and restore serviceability to an item by correcting specific damage, fault, malfunction, or failure in a part, subassembly, module (component or assembly), end item, or system.

(1). Service includes inspection, testing, service, adjustment, alinement, calibration and/or replacement.

(2). Fault locate/troubleshooting is the process of investigating and detecting the cause of equipment malfunctioning; the act of isolating a fault within a system or Unit Under Test (UUT).

(3). Disassemble/Assemble encompasses the step-by-step taking apart (or breakdown) of a spare/functional group coded item to the level of its least componency identified as maintenance significant (i.e., assigned an SMR code) for the category of maintenance under consideration.

(4). Actions include welding, grinding, riveting, straightening, facing, remachining and/or resurfacing.

j. Overhaul. The maintenance effort (service/action) prescribed to restore an item to a completely serviceable/operational condition as required by maintenance standards in appropriate technical publications (i.e., DMWR). Overhaul is normally the highest degree of maintenance performed by the Army. Overhaul does not normally return an item to like new condition.

k. Rebuild. Consists of those services/actions necessary for the restoration of unserviceable equipment to a like new condition in accordance with original manufacturing standards. Rebuild is the highest degree of material maintenance applied to Army equipment. The rebuild operation includes the act of returning to zero those age measurements (hours/miles, etc.) considered in classifying Army equipment/components.

B-3. EXPLANATION OF COLUMNS IN SECTION II.

a. Column 1, Group Number. Column 1 lists functional group code numbers, the purpose of which is to identify maintenance significant components, assemblies, subassemblies, and modules with the next higher assembly. End item group number shall be "OO."

b. Column 2, Component/Assembly. Column 2 contains the names of components, assemblies, subassemblies, and modules for which maintenance is authorized.

c. Column 3, Maintenance Function. Column 3 lists the functions to be performed on the item listed in Column 2.

d. Column 4, Maintenance Level. Column 4 specifies, by the listing of a work time figure in the appropriate subcolumn(s), the level of maintenance authorized to perform the function listed in Column 3. This figure represents the active time required to perform that maintenance function at the indicated level of maintenance. If the number or complexity of the tasks within the listed maintenance function vary at different maintenance levels, appropriate work time figures will be shown for each level. The work time figure represents the average time required to restore an item (assembly, subassembly, component, module, end item, or system) to a serviceable condition under typical field operating conditions. This time includes preparation time (including any necessary disassembly/assembly time), troubleshooting/fault location time, and quality assurance/quality control time in addition to the time required to perform the specific tasks identified for the maintenance functions authorized in the maintenance allocation chart. The symbol designations for the various maintenance levels are as follows:

C	Operator or Crew	H	General Support Maintenance
O	Unit Maintenance	D	Depot Maintenance
F	Direct Support Maintenance		

***** Asterisk indicates level of maintenance authorized to complete this function. No time is established.

e. Column 5, Tools and Equipment. Column 5 specifies, by code, those common tool sets (not individual tools) and special tools, TMDE, and support equipment required to perform the designated function.

f. Column 6, Remarks. This column shall, when applicable, contain a letter code in alphabetic order, which shall be keyed to the remarks contained in Section IV.

B-4. EXPLANATION OF COLUMNS IN TOOL AND TEST EQUIPMENT REQUIREMENTS, SECTION III.

a. Column 1, Reference Code. The tool and test equipment reference code correlates with a code used in the MAC, Section II, Column 5.

b. Column 2, Maintenance Level. The lowest category of maintenance authorized to use the tool or test equipment.

c. Column 3, Nomenclature. Name or identification of the tool or test equipment.

d. Column 4, National Stock Number. The national stock number of the tool or test equipment.

e. Column 5, Tool Number. The manufacturers part number.

B-5. EXPLANATION OF COLUMNS IN REMARKS, SECTION IV.

a. Column 1, Reference Code. An alphabetic code listed in the sixth column of the MAC and first column of the Remarks section to identify remarks made to the MAC.

b. Column 2, Remarks. The complete text of the remarks made to the MAC.

Section II. MAINTENANCE ALLOCATION CHART

(1)	(2)	(3)	(4) Maintenance Level					(5)	(6)
			Unit		Direct Support	General Support	Depot		
Group Number	Component/Assembly	Maintenance Function	C	O	F	H	D	Tools and Equipment	Remarks
01	ENGINE								
0100	Engine Assembly:								
	Engine Assembly	Inspect	0.4						
		Test		1.0				23, 31,148	A
		Service		1.0				1, 126	
		Adjust			2.0			5, 6, 79	
		Replace			21.5			5, 6, 7,205	B
		Repair				44.4		5, 14, 86, 179	D
		Overhaul					*		
0101	Crankcase, Block, Cylinder Head:								
	Cylinder Block Assembly	Replace				4.0			
		Repair				3.0		5, 6,10,12, 67, 81, 97, 117, 133, 166, 187	
	Cylinder Head Assembly (One)	Replace			17.7			5, 6,41,62, 100, 128	
		Repair				3.0		5, 6, 10, 29, 64	
	Cylinder Liner	Replace				1.0		5, 155	C
		Repair				2.0		5, 6,10,28, 67, 68, 87	C
0102	Crankshaft:								
	Crankshaft and Main Bearing	Replace				6.8		5, 6, 144,	
		Repair				*		5, 6, 24,26	C
	Crankcase Front Cover and Oil Seal	Inspect	0.2					5, 6, 107	
		Replace			6.5				
0103	Flywheel Assembly:								
	Flexplate Assembly	Replace			25.9			5, 6	
		Repair			*				

Section II. MAINTENANCE ALLOCATION CHART (CONT).

(1)	(2)	(3)	(4) Maintenance Level					(5)	(6)
			Unit		Direct Support	General Support	Depot		
Group Number	Component/Assembly	Maintenance Function	C	O	F	H	D	Tools and Equipment	Remarks
0103	Flywheel Assembly - CONT:								
	Rear Oil Seal	Inspect Replace	0.2		 26.2			 5, 6, 53, 81, 102, 163	
0104	Pistons, Connecting Rods:								
	Piston and Connecting Rod	Replace Repair				4.4 *		5, 37, 155 5, 6,10,22, 46, 73,115	 C
0105	Valves, Camshafts and Timing System:								
	Rocker Covers	Replace Repair		3.2		 *		1, 2, 4 5, 6, 10	 C
	Exhaust Valve Bridge	Replace Repair			7.1	 *		5, 6 5, 6, 10	 C
	Exhaust Bridge Guide	Repair				*		5, 6, 113, 151, 156	C
	Exhaust Valve	Replace Repair			25.6	 *		5,6,10,100 5, 6,42,95, 106, 179	 C
	Exhaust Valve Guide	Repair				*		5, 100,157	C
	Valve Seat Insert	Repair				*		5, 116,153	C
	Camshaft Assembly	Replace Repair				1.5 *		5, 6 5, 6, 10	 C
	Cam Follower/ Push Rod	Replace Repair			23.5	 *		5, 6 5, 6, 10	 C
	Rocker Arm	Replace Repair			5.4	 0.5		5 5, 6, 10	
	Idler Gear Assembly	Replace Repair				0.5 0.3		5, 6 5,6,10,130	

Section II. MAINTENANCE ALLOCATION CHART (CONT).

(1)	(2)	(3)	(4) Maintenance Level					(5)	(6)
			Unit		Direct Support	General Support	Depot		
Group Number	Component/Assembly	Maintenance Function	C	O	F	H	D	Tools and Equipment	Remarks
0106	Engine Lubrication System:								
	Adapter Assembly, Oil Filter	Replace Repair		1.1 *				1, 2 2, 4	C
	Oil Cooler Assembly, Engine	Replace Test			4.9	 *		5, 6 5, 6, 10	A
0108	Manifolds:								
	Exhaust Manifold	Inspect Replace		0.3	 4.6			 5, 6	
0112	Engine Brake:								
	Engine Brake Retarder	Adjust Replace Repair			0.9 4.2	 *		5 5, 6 5, 6, 10	 C
03	FUEL SYSTEM								
0301	Carburetor, Fuel Injector:								
	Fuel Injector	Adjust Test			0.5 1.5			5 1, 4, 5, 31, 42, 91,148	
		Replace			4.9			5, 6, 30, 208	
0302	Fuel Pumps:								
	Fuel Pump Assembly	Replace			3.2			5, 6, 20	
	Fuel Pump, Priming	Replace		1.5				1, 2, 30	
0304	Air Cleaner:								
	Air Cleaner Assembly	Replace Repair		1.6 2.8				1, 4 1, 2, 4	
0305	Supercharger, Blower, Turbocharger or Altitude Compensator:								
	Blower Assembly	Replace Repair			12.1	 3.0		5, 6, 20 5, 6,10,14, 117, 189	
	Blower Drive Assembly	Replace Repair			12.4	 1.0		5, 6 5, 6, 10	

Section II. MAINTENANCE ALLOCATION CHART (CONT).

(1)	(2)	(3)	(4) Maintenance Level					(5)	(6)
			Unit		Direct Support	General Support	Depot		
Group Number	Component/Assembly	Maintenance Function	C	O	F	H	D	Tools and Equipment	Remarks
0305	Supercharger, Blower, Turbocharger or Altitude Compensator - CONT:								
	Turbocharger Assembly	Inspect	0.1					5, 6	
		Replace			5.6			5, 6,10,61, 89, 132	
		Repair				2.0			
0306	Tanks, Lines, Fittings, Headers:								
	Fuel Lines and Fittings (each)	Inspect	0.1					1, 30	
		Replace		0.2					
0309	Fuel Filters:								
	Fuel Strainer	Service		0.1				1, 4	
	Fuel/Water Separator	Inspect	0.1						
		Service	0.4					1, 2, 30	
		Replace		2.0				1, 2, 30	
		Repair			0.8			5, 6	
0311	Engine Starting Aids:								
	Ether Starting Aid	Replace		1.0				1	
04	EXHAUST SYSTEM								
0401	Muffler and Pipes:								
	Muffler	Inspect	0.1						
		Replace		1.9				1, 2, 4	
	Pipes	Inspect	0.1						
		Replace		1.5				1	
05	COOLING SYSTEM								
0501	Radiator, Evaporative Cooler or Heat Exchanger:								
	Cooling Assembly	Inspect	0.1					1, 15, 186	
		Test		0.2				1, 2, 4, 30, 126	
		Replace		1.9					
	Radiator	Service	0.3					1, 2, 52	
		Test			0.5			186	
		Replace		6.6				1, 2, 4, 30, 126	
		Repair			1.0			5, 6, 30	

Section II. MAINTENANCE ALLOCATION CHART (CONT).

(1)	(2)	(3)	(4) Maintenance Level					(5)	(6)
			Unit		Direct Support	General Support	Depot		
Group Number	Component/Assembly	Maintenance Function	C	O	F	H	D	Tools and Equipment	Remarks
0503	Water Manifold, Headers, Thermo-stats and Housing Gaskets:								
	Right Thermostat Housing	Replace			8.4			5, 6, 84, 109	
	Left Thermostat, Housing	Replace			2.4			5, 6, 84, 109	
	Cooling System Hoses and Tubes (each)	Inspect Replace	0.1	 0.4				 1, 4, 30	
	Aftercooler	Inspect Replace			* 13.1			 5, 6	A
0504	Water Pump:								
	Water Pump Assembly	Replace Repair			2.0	 0.6		5, 6, 30 5, 6,15,49, 84, 114, 143, 158	
0505	Fan Assembly:								
	Fan	Inspect Adjust Replace	0.1		 0.5 1.9			 5, 6	
	Fan Control Solenoid Valve	Inspect Test Replace		0.1 0.5 0.5				 1 1, 30, 126	
06	ELECTRICAL SYSTEM								
0601	Generator, Alternator:								
	Alternator Assembly	Test Replace Repair		0.3 2.0	 3.2			2 1, 2, 65 6, 8, 10	
	Alternator Belts	Inspect Adjust Replace	0.1	 0.2 1.2				 1, 2, 65 1, 2, 65	

Section II. MAINTENANCE ALLOCATION CHART (CONT).

(1)	(2)	(3)	(4) Maintenance Level					(5)	(6)
			Unit		Direct Support	General Support	Depot		
Group Number	Component/Assembly	Maintenance Function	C	O	F	H	D	Tools and Equipment	Remarks
0602	Generator Alternator (Voltage):								
	Voltage Regulator	Adjust		0.3				1, 4	
		Test		0.5				4	A
		Replace		0.1				1	
	Polarity Protection Control (145 AMP)	Adjust		0.3				1, 4	
		Test		0.5				4	A
		Replace		1.5				1	
	Polarity Protection Control (200 AMP)	Test		0.5				4	
		Replace		1.5				1	A
0603	Starting Motor:								
	Starter Motor	Test		0.3				4	
		Replace		2.6				1, 2, 4	
		Repair			4.0			6, 8, 10	
0607	Instrument or Engine Control Panel:								
	Instrument Panel Gages Wire Harness	Replace		2.5				1	
		Repair		*					C,E
	Instrument Panel Switch Wire Harness	Replace		1.0				1	
		Repair		*					C,E
0608	Miscellaneous Items:								
	Ether Start Aid Switch	Service		0.4					
		Replace		1.2				1	
	Crane Junction Box	Replace			2.0			5, 6	
		Repair			1.0			5, 6	
	Proximity Switches (LHS) (each)	Replace		0.5				1, 2, 71	
		Adjust		*					C
		Test		0.5				1, 4	
	Proximity Switch (Outrigger)	Replace		0.5				1	
		Adjust		*					C
		Test		0.5				1, 2	

Section II. MAINTENANCE ALLOCATION CHART (CONT).

(1)	(2)	(3)	(4) Maintenance Level					(5)	(6)
			Unit		Direct Support	General Support	Depot		
Group Number	Component/Assembly	Maintenance Function	C	O	F	H	D	Tools and Equipment	Remarks
0609	Lights:								
	Head Light Assembly (each)	Inspect	0.1						
		Adjust		0.2				1	
		Replace		0.2				1, 4	
	Lights (each)	Inspect	0.1						
		Replace		0.5				1	
		Repair		*				1, 4	C
	Work Lamps	Replace		1.0				1, 4	
		Repair		0.3				1, 4	
0610	Sending Units and Warning Switches:								
	Engine Cold Plate/ECM	Inspect		0.2					
		Test		*				1, 4, 23, 31, 148	A
		Replace		2.0				1, 2, 4, 42	
	Warning Buzzer	Inspect	0.1						
		Replace		0.5				1	
	TRS/SRS	Replace			3.0			5, 6	
		Test			*			1,4,23,31, 32, 148	A
		Adjust			*			88, 194	A
	Engine Throttle Sensor	Test		0.3				1,4,23,31, 32, 148	
		Replace		0.8				1	
	Fuel Temperature Sensor	Test		0.4				1,4,23,31, 32, 148	
		Replace		0.4				1	
	Engine Water Temperature Sensor	Test		0.3				1, 4	
		Replace		0.5				1	
	Engine Oil Temperature Sensor	Test		0.3				1, 4	
		Replace		0.5				1, 2	
	DDEC Engine Oil Pressure Sensor	Test		0.3				1,4,23,31, 32, 42,148	
		Replace		0.5				1, 2	
	Manifold Pressure Sensor	Test		0.3				1,4,23,31, 32, 148	
		Replace		0.5				1, 4	

Section II. MAINTENANCE ALLOCATION CHART (CONT).

(1)	(2)	(3)	(4) Maintenance Level					(5)	(6)
			Unit		Direct Support	General Support	Depot		
Group Number	Component/Assembly	Maintenance Function	C	O	F	H	D	Tools and Equipment	Remarks
0610	Sending Units and Warning Switches-CONT:								
	Engine Fuel Pressure Sensor	Test Replace		0.3 1.0				1, 4 1	
	Transmission Electronic Control Unit (ECU)	Test Replace		0.5 1.0				1, 4 1	
	Magnetic Speed Sensor	Test Replace			0.3 0.7			5 5, 6	
	Tachometer Drive Assembly	Test Replace		* 1.1				 1	A
	Sending Units (each)	Test Replace		* 0.5				 1, 4	A
	EPAC	Test Adjust Replace			* * *			5, 6 5 5	A C C
	Differential Pressure Switch	Test Replace		* 0.9				 11, 2, 4,30	A
0611	Horn, Siren:								
	Electric Horn	Replace		0.2				1	
	Horn Relay	Replace		0.4				1	
	Horn Button	Replace		0.1				1	C
0612	Batteries, Storage (Wet or Dry):								
	Batteries	Inspect Test Service Replace	0.1	 0.3 0.3 1.0				 1,4,23,31, 32, 42,148 1, 4 1	
	Battery Box Assembly	Inspect Replace Repair	0.1	 1.6 1.0				 1 1, 2	

Section II. MAINTENANCE ALLOCATION CHART (CONT).

(1)	(2)	(3)	(4) Maintenance Level					(5)	(6)
			Unit		Direct Support	General Support	Depot		
Group Number	Component/Assembly	Maintenance Function	C	O	F	H	D	Tools and Equipment	Remarks
0613	Hull or Chassis Wiring Chassis								
	Engine Wiring Harness	Test		*				1,4,23,31, 32, 42,148	A
		Replace			12.0			5	F
		Repair		*	*			1, 4, 45,96	C,E
	DDEC Power Wiring Harnesses	Test		*				1,4,23,31, 32, 148	A
		Replace			0.5			5, 42	
		Repair		0.5				1,4, 42,43, 44, 56, 57, 183, 184, 185, 197, 198	
	Cab Wiring Harness	Test		*				1,4,23,31, 32, 42,148	A
		Replace			12.0			2, 5	F
		Repair		*	*			1,4,45,96	C,E
	STE/ICE Wiring Harness	Test		*					A
		Replace			2.0			5	F
		Repair		*				1,4,45,96	C,E
	Chassis Wiring Harness	Test		*					A
		Replace			4.0			5	F
		Repair		*	*			1,4,45,96	C,E
	Crane Wiring	Replace			*			5	C
		Repair		*				1, 4	C,E
	LHS/Cab Interface Harness	Replace			0.8			5	
		Repair		0.5				1,4,45,96	
07	TRANSMISSION								
0705	Transmission Shifting Components								
	Transmission Shift Selector	Replace		0.4				1	
		Repair		0.2				1	
	Electronic Shifter Harness	Replace			*			5, 6	C

Section II. MAINTENANCE ALLOCATION CHART (CONT).

(1)	(2)	(3)	(4) Maintenance Level					(5)	(6)
			Unit		Direct Support	General Support	Depot		
Group Number	Component/Assembly	Maintenance Function	C	O	F	H	D	Tools and Equipment	Remarks
0710	Transmission Assy:								
	Flywheel	Replace			0.8			5, 6, 121, 127	
		Repair			0.2			5, 6	
	Torque Convertor Stator	Replace				1.0		5, 10, 86	
		Repair				*			C
	Torque Converter Housing	Replace				0.6		5, 6	
		Repair				0.3		5,6,10, 41, 73, 82, 83, 99, 108, 127,152	G
	Torque Converter Pump	Replace				1.0		5, 6, 142, 164	
		Repair				0.3		5, 10, 150	G
	Transmission Assembly	Inspect	0.1						
		Test		0.5	*			5, 6, 32, 85, 148	A
		Service		1.0				1,2,4,126	
		Replace			3.0	27.4		5, 6	
		Repair						5,6,30,61, 86, 177	B
		Overhaul					*		D
	Output Shaft Assembly	Replace				0.2		5	
		Repair				0.2		5, 6	
	Rear Transmission Cover Assembly	Replace				0.2		5, 6	
		Repair				*		5,6,10,41, 83, 99, 104, 111, 137	C
	Transmission Yoke/ Dust Shield/Oil Seal	Replace			3.0			5, 6,16,84, 103, 143, 169	
0713	Intermediate Clutch:								
	First Clutch Assembly	Replace				0.1		5	
		Repair				*		5,6,10, 101	C
	Adapter Housing	Replace				0.2		5	
		Repair				*		5, 6	C

Section II. MAINTENANCE ALLOCATION CHART (CONT).

(1)	(2)	(3)	(4) Maintenance Level					(5)	(6)
			Unit		Direct Support	General Support	Depot		
Group Number	Component/Assembly	Maintenance Function	C	O	F	H	D	Tools and Equipment	Remarks
0713	Intermediate Clutch-CONT:								
	Forward Clutch and Input Shaft	Replace Repair				0.1 0.7		5,6,10,192 5,10, 21, 39,138, 159,193	
	Fifth Clutch	Replace Repair				0.1 0.3		5, 6, 123 5, 39	
	Fourth Clutch	Replace Repair				0.6 2.5		5, 6, 39 5, 10, 39	
	Third Clutch	Replace Repair				0.6 2.5		5, 27 5, 105	
	Center Support	Replace Repair				0.1 1.0		5,6,27,123 5,6,10,35, 66, 72, 101, 122	
0714	Servo Unit:								
	Control Valve Assembly	Replace Repair				* *		5, 6 5, 6	C C
	Front Plate Assembly	Replace Repair				0.5 *		5, 6 5	 C
	First Shift Valve Body Assembly	Replace Repair				* *		5 5, 6, 10	C C
	First Trimmer Valve Body Assembly	Replace Repair				0.1 0.1		5 5, 6, 10	
0721	Coolers, Pumps, Motors:								
	Oil Pump Assembly	Replace Repair				* *		5 5, 6	C C
	Low Oil Sensor Assembly	Test Replace			0.1 3.2			5 5, 6	
08	TRANSFER, FINAL DRIVE, PLANETARY AND DROP GEARBOX ASSEMBLIES (ON VEHICLE)								

Section II. MAINTENANCE ALLOCATION CHART (CONT).

(1)	(2)	(3)	(4) Maintenance Level					(5)	(6)
			Unit		Direct Support	General Support	Depot		
Group Number	Component/Assembly	Maintenance Function	C	O	F	H	D	Tools and Equipment	Remarks
0801	Power Transfer and Final Drive Assy:								
	Transfer Case Assembly	Inspect	0.1					1, 2, 126	
		Service		0.3				5, 6, 30	C
		Replace			*			5, 6, 19	B
		Repair				8.0		58, 59, 60, 61, 177	
		Overhaul					*		D
	Yokes	Replace			2.8			5, 6	C
	Oil Seals	Inspect	0.1						
		Replace			1.6			5	
	Upper Shaft Assembly	Repair				1.0		5, 6, 10	
	Center Shaft Assembly	Repair				0.5		5, 6,10, 58	
	Rear Shaft Assembly	Repair				1.0		5, 6, 10	
	Differential Shaft Assembly	Repair				1.0		5, 6, 10	
	Front Shaft Assembly	Repair				1.0		5, 6, 10	
	Differential Assembly	Repair				0.6		5, 6, 10, 60	
0803	Gear Shift, Vacuum Booster and Controls:								
	Air Chamber, Differential	Inspect	0.3						
		Adjust		0.5				1	
		Replace		1.0				1, 2, 4	
	Upper Shift Rod Assembly	Repair				1.0		5, 6, 10	
	Lower Shift Rod Assembly	Repair				1.0		5, 6, 10	
	Shift Control Cable	Adjust		0.3				1	
		Replace		2.5				1, 2	
0804	Lubrication, Cooling, or Hyd Components:								
	Lube Pump	Replace			0.8			5, 6, 30	
		Repair				0.5		5, 6	

Section II. MAINTENANCE ALLOCATION CHART (CONT).

(1)	(2)	(3)	(4) Maintenance Level					(5)	(6)
			Unit		Direct Support	General Support	Depot		
Group Number	Component/Assembly	Maintenance Function	C	O	F	H	D	Tools and Equipment	Remarks
0804	Lubrication, Cooling, or Hyd Components: (CONT)								
	Lube Hoses (each)	Inspect Replace	0.1	 0.5				1,2,4, 30	
	Breather	Inspect Service Replace	0.1	 0.1 0.1				1 1	
09	PROPELLER, PROPELLER SHAFTS, UNIVERSAL JOINTS, COUPLER AND CLAMP ASSEMBLY								
0900	Propeller Shafts:								
	Propeller Shafts and Universal Joints	Inspect Service Replace Repair	0.2	 0.1 0.9 0.9				 1 1, 2, 4 1, 2, 4	
10	FRONT AXLE								
1000	Front Axle Assembly:								
	Axle No. 1 Assy	Inspect Service Replace Repair	0.1	 0.6	 15.2	 10.0		 1, 2, 5, 6, 119 5, 176	
	Axle No. 2 Assy	Inspect Service Replace Repair	0.1	 0.5	 11.0	 10.0		 1, 2, 5, 6, 119 5, 176	
1002	Differential:								
	Axle No. 1 Differential Assembly	Replace Repair				1.0 5.5		5, 6 5, 6, 10, 13, 19,177	

Section II. MAINTENANCE ALLOCATION CHART (CONT).

(1)	(2)	(3)	(4) Maintenance Level					(5)	(6)
			Unit		Direct Support	General Support	Depot		
Group Number	Component/Assembly	Maintenance Function	C	O	F	H	D	Tools and Equipment	Remarks
1002	Differential: (CONT)								
	Axle No. 2 Differential Assembly	Replace Repair				1.5 9.8		5, 6 5, 6, 10, 13, 19, 177	
	Axle No.2 Rear Output Assembly	Replace Repair				1.0 1.0		5, 6 5	
1003	Planetary or Final Drive:								
	Axles No. 1 and 2 Planetary Hub Gears	Service Replace		* 	 2.9			 2, 5, 58	A
1004	Steering and Leaning Wheel Mechanism:								
	Constant Velocity Joint	Service Replace Repair	0.2 		 4.5 2.0			 5, 6 6, 54, 55	
	Pivot and Spindle Assembly	Inspect Service Replace Repair		0.1 * 	 3.0 	 3.0		2, 4 5,6, 54,55, 69, 191, 5, 6, 54 55, 191	 A
11	REAR AXLE								
1100	Rear Axle Assembly:								
	Axle No. 3 Assy	Inspect Service Replace	0.1 	 0.5 	 8.0			 1, 2 5, 6, 119 201	
	Axle No. 4 Assy	Inspect Service Replace	0.1 	 0.5 	 8.0			 1, 2 5, 6, 119	
	Axle No. 5 Assy	Inspect Service Replace	0.1 	 0.5 	 11.0			 1, 2 5, 6, 119	
	Axles No. 3 and 4 Spindle Assembly	Replace Repair			3.2 *			5, 6 5, 6, 142	C

Section II. MAINTENANCE ALLOCATION CHART (CONT).

(1) Group Number	(2) Component/Assembly	(3) Maintenance Function	(4) Maintenance Level: Unit C	Unit O	Direct Support F	General Support H	Depot D	(5) Tools and Equipment	(6) Remarks
1102	Differential:								
	Axle No. 3 Differential Assembly	Replace Repair				1.6 4.9		5, 6 5, 6, 10, 13, 19, 51, 142, 173, 174, 175, 176	
	Axle No. 4 Differential Assembly	Replace Repair				1.6 4.9		5, 6 5, 6, 10, 13, 19, 177	
	Axle No. 5 Differential Assembly	Replace Repair				1.0 5.5		5, 6 5, 6, 10, 13, 19, 177	
1103	Planetary or Final Drive:								
	Axles No. 3, 4 and 5 Planetary Hub Gear	Service Replace		* 	 2.9			 2, 5, 58	A
1104	Steering, Sideshift, and Wheel Leaning Mechanisms								
	Axle No. 5 Constant Velocity, Pivot & Spindle Assembly	Replace Repair			* 	 *		5,6, 54,55, 69, 191 5,6,10,165	C C
12	BRAKES								
1202	Service Brakes:								
	Brakes	Inspect		0.2				1	
	Brake Assemblies (all)	Replace Repair			1.0 7.5			5, 6 5, 6	
	Brake Shoes	Inspect Adjust Replace		0.2 0.5 1.0				1, 71 1, 4, 71	
1206	Mechanical Brake System:								
	Pneumatic Brake Valve	Replace Repair		3.0	 1.5			1 1, 6, 135	

Section II. MAINTENANCE ALLOCATION CHART (CONT).

(1)	(2)	(3)	(4) Maintenance Level					(5)	(6)
			Unit		Direct Support	General Support	Depot		
Group Number	Component/Assembly	Maintenance Function	C	O	F	H	D	Tools and Equipment	Remarks
1208	Air Brake System:								
	Air Dryer	Inspect	0.1					1	
		Service		0.6				1, 2	
		Replace		3.0				1, 2, 4	
		Repair		1.0					
	Coalescing Filter/ Aftercooler	Inspect		0.1					
		Replace		0.7				1, 2	
		Repair		0.1				1, 4	
1209	Air Compressor Assembly:								
	Air Compressor	Inspect	0.2						
		Replace			3.2			5, 6, 30	
		Repair				4.0		5,6, 10,36, 117	
	Air Governor Assembly	Adjust		0.2				1	
		Replace		1.5				1, 30	
	Air Lines	Replace		*				1, 30	C
		Repair		*				1, 4	C
1211	Trailer Brake Connections and Controls:								
	Load Sensing Valve	Adjust		1.0				1, 135	
		Replace		2.0				1, 4	
13	WHEELS AND TRACKS								
1311	Wheel Assembly:								
	Wheel Assembly	Inspect	0.1						
		Replace	0.2						
		Repair		1.0				1, 4, 74	
	Wheel Hub Assembly	Inspect		0.2					
		Service		0.1				1, 4	
		Replace			3.4			5, 6,169	
		Repair			2.1			5, 6, 50, 51, 81,139	
	Brake Drums (all axles)	Inspect		0.2					
		Replace		1.2				1, 4	
		Repair			*				C

Section II. MAINTENANCE ALLOCATION CHART (CONT).

(1)	(2)	(3)	(4) Maintenance Level					(5)	(6)
			Unit		Direct Support	General Support	Depot		
Group Number	Component/Assembly	Maintenance Function	C	O	F	H	D	Tools and Equipment	Remarks
1311	Wheel Assembly-CONT:								
	Central Tire Inflation System (CTIS)	Inspect	0.2						
	CTIS Controller	Replace		0.2				1	
		Repair		0.1				1	
	CTIS Front Manifold	Replace		0.7				1,4,30,206	
		Repair		0.7				1	
		Test		2.0				1	
	CTIS Rear Manifold	Replace		0.3				1,4,30,206	
		Repair		0.7				1	
		Test		2.0				1	
1313	Tires, Tubes, Tire Chains:								
	Tire	Inspect	0.1						
		Replace		*				1	C
		Repair		*					C
14	STEERING								
1400	Steering System	Inspect	0.2						
		Service		0.6				1, 2	
		Adjust		*	3.5			1, 2, 4, 5, 136	A
1401	Mechanical Steering Gear Assembly:								
	Steering Column	Inspect	0.2						
		Service		*					A
		Replace		2.2				1, 2	
	Drag Links (each)	Inspect		0.1					
		Service			*				A
		Replace			*			5, 6	C
		Repair			*			5, 6, 10	C
	Intergear Link	Inspect		0.1					
		Service		*					A
		Replace			*			5, 6	C
		Repair			*			5, 6, 10	C
	Steering Shafts	Inspect		0.2					A
		Service		*					
		Replace		1.5				1, 2	

Section II. MAINTENANCE ALLOCATION CHART (CONT).

(1)	(2)	(3)	(4) Maintenance Level					(5)	(6)
			Unit		Direct Support	General Support	Depot		
Group Number	Component/Assembly	Maintenance Function	C	O	F	H	D	Tools and Equipment	Remarks
1401	Mechanical Steering Gear Assembly-CONT:								
	Tie-Rod	Inspect		0.1					A
		Service		*					
		Adjust		2.5				1, 2	
		Replace		1.3				1, 2, 4,119	
		Repair		2.2				1, 2, 4	
	90° Gear Box	Replace		1.0				1, 2	
		Repair			3.2			5, 6, 10	
	2.21:1 Gear Reducer	Service		*					A
		Replace			0.5			5, 6	
		Repair				0.1		5,6,10,143	
	Axle No. 1	Align			4.0			5, 6, 26, 134	
	Axle No. 2	Align			4.0			5, 6, 26, 134	
	Axle No. 5	Align			1.0			5, 6, 26, 134	
1407	Power Steering Gear Assembly:								
	Front Steering Gear Assembly	Inspect		0.1					
		Service		*					A
		Adjust			0.5			5	
		Replace			1.3			5,6,30,196	
		Repair				2.1		5, 6, 10, 143, 196	
	Intermediate Steering Gear Assembly	Inspect		0.1					
		Service		*					A
		Replace			1.0			5,6,30,196	
		Repair				0.7		5, 6, 10, 143, 196	
	Rear Steering Gear Assembly	Inspect		0.1					
		Service		*					A
		Adjust			0.5			5	
		Replace			1.0			5,6,30,196	
		Repair				2.2		5, 6, 10, 143, 196	

Section II. MAINTENANCE ALLOCATION CHART (CONT).

(1)	(2)	(3)	(4) Maintenance Level					(5)	(6)
			Unit		Direct Support	General Support	Depot		
Group Number	Component/Assembly	Maintenance Function	C	O	F	H	D	Tools and Equipment	Remarks
1410	Hydraulic Pump or Fluid Motor Assembly:								
	Emergency Steering Hydraulic Pump,	Adjust Replace		1.0 2.0				1 1	
	Emergency Steering Hydraulic Valve	Adjust Replace			1.0 1.5			5 5, 6, 205	
1411	Hoses, Lines, and Fittings:								
	Hydraulic Lines and Fittings	Replace		*				1, 30	C
1413	Tanks, Reservoirs:								
	Steering Reservoir Assembly	Inspect Service Replace Repair	0.1	 * 1.2 1.3				 1, 2, 4, 30, 126, 205 1, 2, 4,205	A
	Steering Hydraulic Filter	Service Replace		* 0.2				 1, 2, 4	A
	Steering Hydraulic Manifold	Replace Repair			1.3 0.3			5, 6 ,30 5, 6	
15	FRAME, TOWING ATTACHMENTS, DRAWBARS, AND ARTICULATION SYSTEMS								
1501	Frame Assembly:								
	Cab Step Assembly	Replace Repair		0.5 0.2				1 1	
	Frame Assembly	Inspect Repair	0.1					 5, 6, 9,205	C
1503	Pintles and Towing Attachments:								
	Self-Guided Coupler	Inspect Service Replace Repair	0.1	 0.1 1.0 1.5				 1 1, 2, 4 1, 2, 4, 6	

Section II. MAINTENANCE ALLOCATION CHART (CONT).

(1)	(2)	(3)	(4) Maintenance Level					(5)	(6)
			Unit		Direct Support	General Support	Depot		
Group Number	Component/Assembly	Maintenance Function	C	O	F	H	D	Tools and Equipment	Remarks
1504	Spare Wheel Carrier and Tire Lock:								
	Tire Carrier and Davit	Inspect Service Replace	0.1	 * 2.3				 1	 A
16	SPRINGS AND SHOCKS ABSORBERS								
1601	Springs:								
	Spring Hangers	Inspect Service Replace	0.1	 *	 *			 5	 A C
	Springs	Inspect Replace	0.1		 *			 5, 6, 118	 C
	No.3 Axle Suspension Air Bags	Inspect Replace	0.1		 1.0			 5, 6	
1604	Shock Absorber Equipment:								
	Shock Absorber and Bushings (each)	Inspect Replace		0.1 0.3				 1, 2	
1605	Torque, Radius, and Stabilizer Rods:								
	Equalizer Beam (each)	Replace Repair			2.2 2.0			5, 6, 118 5, 93, 190	
	No. 3 Axle Air Suspension Beam Assembly	Replace Repair			3.0 1.5			5, 6 5	
	No. 3 Axle Suspension Arm	Inspect Replace Repair	0.1		 * 3.0			5, 6 5, 6 35, 202	 C
	Torque Rods (each)	Inspect Replace		0.1	 1.3			 5, 6, 119	

Section II. MAINTENANCE ALLOCATION CHART (CONT).

(1)	(2)	(3)	(4) Maintenance Level					(5)	(6)
			Unit		Direct Support	General Support	Depot		
Group Number	Component/Assembly	Maintenance Function	C	O	F	H	D	Tools and Equipment	Remarks
18	BODY, CAB, HOOD AND HULL								
1801	Body, Cab, Hood, and Hull Assemblies:								
	Cab Assembly	Inspect Service Replace	0.2 0.1		 7.5			 5,6	
	Cab Door	Adjust Replace Repair		0.3 1.5 2.5				1 1 1, 4	
	Engine Cover Assembly	Replace Repair		01. 0.4				1 1	
1802	Fenders, Running Boards with Mounting and Attaching Parts, Windshield, Glass, Etc.:								
	Windshield Glass	Inspect Replace	0.1		 1.4			 5	
1806	Upholstery Seats and Carpets:								
	Seat Assembly	Replace Repair Alignment		0.6 1.5 .4				1, 4 1, 4 1, 4	
	Sun Visor Assembly	Inspect Replace		0.1 0.3				 1	
1808	Stowage Racks, Boxes, Straps, Carrying Cases, Cable Reels, Hose Reels:								
	Ladder Support	Replace Repair		0.5 *				1, 2 1, 2	
	Stowage Box, Crane	Replace Repair		0.5 0.4				1, 4 1, 2, 4	

Section II. MAINTENANCE ALLOCATION CHART (CONT).

(1)	(2)	(3)	(4) Maintenance Level					(5)	(6)
			Unit		Direct Support	General Support	Depot		
Group Number	Component/Assembly	Maintenance Function	C	O	F	H	D	Tools and Equipment	Remarks
20	HOIST, WINCH, CAPSTAN, WINDLASS, POWER CONTROL UNIT, AND POWER TAKE-OFF								
2001	Hoist, Capstan, Windlass, Crane or Winch Assembly:								
	Crane Assembly	Inspect	0.1						
		Service		0.5				1	
		Test		*	*			1, 5,188 5, 6	A
		Adjust			0.5			5, 6, 30, 201	
		Replace			4.0			5, 6	
		Repair			2.0				
	Boom Assembly	Replace			2.0			5, 6, 30	
		Repair			4.8			5, 6	
	Erection Cylinder	Replace			0.6			5, 6, 30	
		Repair				1.5		5, 6	
	Lift Cylinder Assembly	Replace			0.7			5, 6, 30	
		Repair				0.9		5, 6, 196	
	Tension Link Assembly	Replace			0.2			5, 6	
		Repair				0.5		5, 6	
	Mast Assembly	Replace			0.6			5, 6, 30	
		Repair				*		5, 6	C
	Telescope Cylinder Assembly	Replace			0.7			5, 6, 30	
		Repair				0.8		5, 6	
	Hoist Assembly	Inspect	0.1						
		Service		0.3				1	
		Replace			1.4			5, 6	
		Repair				1.6		5, 6, 10	
	Hydraulic Hoist Motor	Replace			0.2			5, 6, 30	
		Repair				5.3		5, 6	
	Remote Control Box	Replace		0.3				1	
		Repair		1.0				1, 2, 4, 202	

Section II. MAINTENANCE ALLOCATION CHART (CONT).

(1)	(2)	(3)	(4) Maintenance Level					(5)	(6)
			Unit		Direct Support	General Support	Depot		
Group Number	Component/Assembly	Maintenance Function	C	O	F	H	D	Tools and Equipment	Remarks
2001	Hoist, Capstan, Windlass Crane or Winch Assembly - CONT:								
	Crane Cable	Inspect		*					A
		Service		*					A
		Replace		1.0				1, 4	
	Motor Valve Assembly	Replace			0.1			5, 6, 30	
		Repair			0.4			5, 6	
	Hoist Brake Assembly	Replace			0.4			5, 6, 30	
		Repair			1.4			5, 6	
	Cable Follower Assembly	Replace			0.7			5, 6, 30	
		Repair			0.6			5, 6	
	Sub-Frame Assembly	Replace			1.7			5, 6	
		Repair			7.0			5, 6	
	Swing Drive Brake	Replace			2.0			5, 6	
		Repair				1.0		5, 6	
	Gear Reducer	Replace			1.7			5,6,30,172	
		Repair				1.2		5, 6, 175	
	Override Solenoid Manifold	Replace			1.3			5, 6, 30	
		Repair			2.1			5, 6	
		Test			0.5			6	
	Hook Block Assembly	Replace		0.5				1, 2	
		Repair		0.5				1, 2, 4,132	
	Hoist Motor Control Valves	Replace			0.5			5,6,30,201	
		Repair			0.1			5, 6	
	Hand Pump	Replace		1.5				1, 2, 30	
		Repair		0.5				1, 2, 4,	
	Accumulator	Service			*			1, 33	A
		Replace		0.2				1	
	Remote Control Box Cable Assembly	Replace		0.3				1	
		Repair		0.2				1	
		Test		0.5				2	

Section II. MAINTENANCE ALLOCATION CHART (CONT).

(1)	(2)	(3)	(4) Maintenance Level					(5)	(6)
			Unit		Direct Support	General Support	Depot		
Group Number	Component/Assembly	Maintenance Function	C	O	F	H	D	Tools and Equipment	Remarks
2001	Hoist, Capstan, Windlass Crane or Winch Assembly - CONT:								
	Self-Recovery Winch Assembly	Inspect	0.1						
		Service		0.3					
		Replace		4.5				1, 2, 4, 30, 201	
		Repair				*		5, 6, 10	C
	Counter Balance Valve	Replace			0.9			5, 6, 30	
		Repair			0.9			5, 6, 10	
	Winch Brake	Replace				1.0		4, 5	
		Repair				*		5, 6, 10	C
	Front Tensioner Assembly	Service		*					A
		Replace		1.0				1	
		Repair		0.4				1, 2, 4	
	Front Cable Guide	Service		*					A
		Replace		0.1				1, 4	
	Rear Tensioner Assembly	Service		*					A
		Replace		1.0				1, 4	
		Repair		0.4				1, 2, 4	
	Rear Cable Guide	Service		*					A
		Replace		1.0				1	
	Winch Cable	Inspect	*						A
		Service		*					A
		Replace		0.8				1, 4	
	Hook Machining Arm	Replace			1.8			5, 6, 207	
		Repair			*			5, 6	C
	Middle Mach Frame	Replace			6.8			5,6,30,204	
		Repair			*			5	C
2006	Bulldozer Tripod, Main Frame, Jack and Mounting:								
	Outrigger Cylinder	Replace			1.0			5, 6, 30	
		Repair				4.1		5, 6	
	Outrigger Pad Assembly	Replace		0.2					
		Repair		0.2				1, 2, 4	

Section II. MAINTENANCE ALLOCATION CHART (CONT).

(1)	(2)	(3)	(4) Maintenance Level					(5)	(6)
			Unit		Direct Support	General Support	Depot		
Group Number	Component/Assembly	Maintenance Function	C	O	F	H	D	Tools and Equipment	Remarks
22	BODY, CHASSIS, AND HULL ACCESSORY ITEMS								
2202	Accessory Items:								
2202	Heater	Replace Repair		1.3 3.2				1 1	
	Heater Blower Motor	Replace Repair		1.0 *				1 1, 4	 C
	Heater Control Panel	Replace Repair		0.8 *				1 1	 C
2210	Data Plates and Instruction Holders:								
	Data Plate (each)	Replace		0.2				1, 2	
24	HYDRAULIC AND FLUID SYSTEMS								
2400	Major Assemblage (Load Handling System):								
	Load Handling System	Inspect Service Test Replace Repair	0.1	 *	 0.6 2.0 2.0			 5, 6 5, 6, 30, 201	 A
2401	Hydraulic Pump:								
	Main Hydraulic Pump Assembly	Inspect Replace Repair		0.2	 12 19.3			 5,6,30,146 5, 6, 10, 199	
	Pump Driveshaft	Inspect Service Replace Repair		* * 1.0 0.5				 1, 2 1, 2, 4	A C

Section II. MAINTENANCE ALLOCATION CHART (CONT).

(1)	(2)	(3)	(4) Maintenance Level					(5)	(6)
			Unit		Direct Support	General Support	Depot		
Group Number	Component/Assembly	Maintenance Function	C	O	F	H	D	Tools and Equipment	Remarks
2402	MANIFOLD AND/OR CONTROL VALVES:								
	LHS Load Sensing Valve	Replace Test		* 0.5				1, 2	C
	Multifunction Manifold	Replace Repair			3.0 *			5, 6 5, 6	 C
2405	Mast Column:								
	LHS Hook Arm Cylinder	Service Replace Repair		* 	 1.4 2.5			 5, 6, 131, 210 5,6,23,196	A
2406	Strainers, Filters, Lines and Fittings, etc.:								
	LHS Main Manifold Relief Valve	Adjust Replace Test			0.5 1.0 0.5			6 5, 6 6	
	LHS Main Cylinder	Replace Repair			1.1 2.5			5 5,6,23,196	
	Hose Assembly, Low Pressure	Replace Repair		1.0 *				1, 30, 126	 C
	High Pressure Hydraulic Filter Head	Replace Repair		2.0 *				1, 4	 C
	LHS Hook Arm Manifold Assembly	Replace Repair			1.6 1.6			1,201,205	
	LHS Main Manifold	Replace Repair			0.6 0.6			5, 6, 30 5	
2408	Liquid Tanks or Reservoirs:								
	Hydraulic Reservoir Assembly	Service Replace Repair		0.5 5.9 0.5				1, 2, 4, 52, 126 1, 2,4,201, 205, 207 1	

Section II. MAINTENANCE ALLOCATION CHART (CONT).

(1)	(2)	(3)	(4) Maintenance Level					(5)	(6)
			Unit		Direct Support	General Support	Depot		
Group Number	Component/Assembly	Maintenance Function	C	O	F	H	D	Tools and Equipment	Remarks
33	SPECIAL PURPOSE KITS								
3303	Winterization Kits:								
	Engine Arctic Kit	Inspect	0.1						
		Install			*			5, 6	C
		Replace		4.5				1	
		Repair		*				1, 2, 4	C
3307	Special Purpose Kits:								
	EMM Power Interface Kit	Replace							
		Repair							
		Install							
34	ARMAMENT AND SIGHTING AND FIRE CONTROL (ELECTRIC/ ELECTRONIC MATERIAL)								
3402	Small Arms:								
	Machine Gun Mounting Kit	Inspect	0.1						
		Replace		1.0				1, 2	
		Install			*			5, 6	C
47	GAGES (NON-ELECTRICAL) WEIGHING AND MEASURING DEVICES								
4702	Gages, Mounting, Lines, and Fittings:								
	Restrictor Indicator Assembly	Inspect	0.1						
		Replace		0.5				1	
68	RADIO TELEPHONE SYSTEM								
6809	Radio Telephone System								
	Radio Kit	Replace		1.0				1, 2	
		Install			*			5	C

Section II. MAINTENANCE ALLOCATION CHART (CONT).

(1)	(2)	(3)	(4) Maintenance Level					(5)	(6)
			Unit		Direct Support	General Support	Depot		
Group Number	Component/Assembly	Maintenance Function	C	O	F	H	D	Tools and Equipment	Remarks
91	CHEMICAL, BIOLOGICAL, AND RADIOLOGICAL (CBR) EQUIPMENT								
9111	Gas Particulate Filter Units:								
	Gas Particulate Filter Unit Kit	Inspect	0.2						
		Install			2.0			5	
		Replace		2.2				1	
9131	Chemical Agent Alarms:								
	Chemical Alarm Kit	Inspect	0.2						
		Install			2.3			5, 6	
		Replace		1.8				1	
	Decontamination Kit	Inspect	0.2						
		Install			1.0			5	
		Replace		0.5				1, 2	

Section III. TOOL AND TEST EQUIPMENT REQUIREMENTS

Table B-1. Tool and Test Equipment Requirements

Tool or Test Equipment Ref Code	Maintenance Category	Nomenclature	National/ NATO Stock Number	Tool Number
1	O	TOOL KIT, General Mechanic's: Automotive	5180-00-177-7033	SC 5180-90-N26
2	O	SHOP EQUIPMENT, Automotive Maint and Repair: Common No. 1	4910-00-754-0654	SC 4910-95-A74
3	O	SHOP EQUIPMENT, Automotive Maintenance and Repair: Supp. 1	4910-00-754-0653	SC 4910-95-A73
4	O	SHOP EQUIPMENT, Automotive Maint and Repair: Common No. 2	4910-00-754-0650	SC 4910-95-A72-HR
5	F	TOOL KIT, General Mechanic's	5180-00-699-5273	SC 5180-90-N05-HR
6	F	SHOP EQUIPMENT, Automotive Maintenance and Repair: Field Maintenance, Basic	4910-00-754-0705	SC 4910-95-A31
7	F	SHOP EQUIPMENT, Automotive Maintenance and Repair: Field Maintenance	4910-00-754-0706	SC 4910-95-A62
8	F	SHOP EQUIPMENT, Fuel and Electrical System, Engine: Field Maintenance, Basic	4940-00-754-0714	SC 4940-95-B20-HR
9	F	SHOP WELDING SET	3433-00-357-6311	SC 3433-90-N01-HR
10	H	SHOP EQUIPMENT, Automotive Maintenance and Repair: Field Maintenance, Supp. 2	4910-00-754-0707	SC 4910-95-A63
11	F	SHOP EQUIPMENT, Machine Shop	3470-00-754-0708	SC 3470-95-A02
12	H	ADAPTER, Engine Stand	4910-00-146-9624	J33850
13	H	ADAPTER, Maintenance Stand, Differential	4910-01-384-6264	J-39929-A
14	F	ADAPTER, Mechanical Puller	5120-00-733-8890	J7932
15	F	ADAPTER, Quick Disconnect	5935-01-297-2481	J33765
16	O	ADAPTER, Radiator	4910-01-170-4929	J29003-A
17	F	ADAPTER, Socket (3/4 in. Female to 1/2 in. Male)	5120-00-227-8088	97-3725
18	F	ADAPTER, Socket (3/4 in. Female to 1 in. Male)	5120-00-227-8104	A-A-2172
19	H	ADAPTER KIT, Transfer Case	4910-01-385-6779	J-39911
20	F	ALIGNMENT TOOL, Blower	5120-01-158-3991	J33001

Table B-1. Tool and Test Equipment Requirements (Cont).

Tool or Test Equipment Ref Code	Maintenance Category	Nomenclature	National/ NATO Stock Number	Tool Number
21	H	ALIGNMENT TOOL, Clutch	5120-01-115-1156	J24221
22	H	ALIGNMENT TOOL, Pin	5120-01-232-0007	J24285
23	O	ANALYZER SET, STE/ICE-R	1910-01-222-6589	12259266
24	H	ATTMENT, BALL, MICRO	5120-00-221-1921	J4757
25	H	BRACKET, Lifting	5306-01-338-6292	J24408-A
26	F	BOX, Chalk, Reel and Line	5210-00-273-9793	GGG-C-291
27	H	BRACKET, Lifting	5120-01-115-1157	J24196
28	H	BRACKET, Mounting, Cylinder Liner	5340-01-158-3984	J24565-02
29	H	BRUSH, Wire, Valve Cylinder	5120-00-766-2141	J5437
30	O	CAP AND PLUG SET	5340-00-450-5718	10935405
31	O	CARTRIDGE, DDEC	7030-01-354-6174	J38500-750
32	O	CARTRIDGE, ATEC	4940-01-367-6194	J38500-300
33	F	CHARGING KIT, Pressure	4910-01-046-7109	12252157
34	F	COMPRESSOR, Air Unit	4130-00-752-9633	MIL-C-13874
35	H	COMPRESSOR SET, Snap Ring	5120-01-116-5016	J24208-D
36	H	COMPRESSOR, Ring	5120-01-048-3129	J24204-1
37	H	COMPRESSOR, Ring	4910-01-158-3974	J24227
38	F	COMPRESSOR, Ring, Piston	5120-00-250-6055	RC40C
39	H	COMPRESSOR, Seal	5120-01-048-2159	J24204-3
40	F	COMPRESSOR, Spring Valve	5120-01-297-2397	J7455-A
41	H	COMPRESSOR, Spring	5120-01-048-2160	J24219
42	O	CONNECTOR REMOVER	5120-01-355-3012	J38384
43	O	CONNECTOR REMOVER Electrical Contact	5120-01-158-4707	114010
44	O	CRIMPING TOOL	5120-01-355-0844	J35123
45	O	CRIMPING TOOL (CANNON)		995-0001-904
46	H	DETECTOR, Leak, Vacuum Gage	6685-01-061-4253	J23987-B
47	F	DRILL MACHINE, Upright	3413-00-165-4117	MIL-D-80038
48	F	DRIVER	5120-01-374-6200	2HE496
49	H	DRIVER BEARING, Gear	5120-01-033-8902	J25257
50	F	DRIVER, CTIS Seal	5120-01-355-0857	J41112
51	F	DRIVER, CTIS Seal	5120-01-355-0858	J41113
52	O	DRUM, Storage 57 gal	8110-00-082-2626	MIL-D-6054
53	F	EXPANDER, Seal, Oil	5120-00-336-0445	J4239
54	F	EXTRACTOR, Inertial		2HE226

Table B-1. Tool and Test Equipment Requirements (Cont).

Tool or Test Equipment Ref Code	Maintenance Category	Nomenclature	National/ NATO Stock Number	Tool Number
55	F	EXTRACTOR, Inertial	5120-01-354-9543	2HE227
56	O	EXTRACTOR TOOL, Elect	5120-01-015-2154	91019-3
57	O	EXTRACTOR TOOL, Elect	5120-00-020-5926	305183R
58	F	EYES, Lifting	5306-01-197-6569	3016T39
59	F	EYES, Lifting	5306-01-333-5486	8891T82
60	F	EYES, Lifting	5306-01-239-5053	3016T65
61	H	FIXTURE, Holding	5120-01-115-1165	J24310
62	F	FIXTURE, Lifting, Cylinder Head	4910-00-456-7620	J22062-01
63	H	FIXTURE, PTO, Gear	4910-01-158-3969	J26899
64	H	FIXTURE, Test, Head	4910-01-158-3985	J28454
65	O	GAGE, Belt Tension	4935-01-254-9808	BT-33-73-BF
66	H	GAGE, Center and Front	5210-01-133-6888	J29198-3
67	H	GAGE, Cylinder, Bore	5210-01-070-4543	J5347-B
68	H	GAGE, Depth Cylinder, Liner	5210-01-174-4498	J24898
69	F	GAGE, Depth	5210-00-023-4798	J22273-01
70	F	GAGE, Dial	5120-00-494-1846	J-8165-2
71	O	GAGE, Feeler, Jacobs Brake	5210-01-214-2138	007958
72	F	GAGE, Feeler	5120-00-671-2275	J3174-02
73	H	GAGE, Groove	5220-01-028-1109	J24599
74	O	GAGE, Inflation	4910-00-204-2644	100708
75	F	GAGE Set, Feeler	5210-01-119-7601	FB310B
76	F	GAGE Set, Feeler	5210-01-245-9564	J1698-02
77	F	GAGE Set, Feeler, Piston	5210-00-416-1631	J5438-01
78	F	GAGE, Timing, Injector	5220-01-348-1638	J25502
79	F	GAGE, Valve, Adjustable	5220-00-176-0638	J9708-15
80	F	HAMMER, Slide	5120-01-112-2165	J6125-16
81	F	HANDLE, Driver	5120-00-677-2259	J8092
82	H	HANDLE, Driver	5120-00-808-5082	J3154-1
83	H	HANDLE, Driver	5120-01-054-4048	J24202-4
84	O	HANDLE, Installer	5120-00-977-5578	J7079-2
85	O	HARNESS, Breakout	6150-01-373-7771	J34517
86	F	HOLDER, Stator, Roller	5120-01-115-1158	J24218-2
87	H	HONING UNIT	5130-00-629-9782	J5902-01
88	F	INDICATOR, Dial, Timing Tool	2815-01-355-6628	J34930-A

Table B-1. Tool and Test Equipment Requirements (Cont).

Tool or Test Equipment Ref Code	Maintenance Category	Nomenclature	National/ NATO Stock Number	Tool Number
89	F	INDICATOR, Dial	5120-00-402-9619	J7872
90	H	INDICATOR, Dial, Set	5120-00-794-9178	J5959-01
91	F	RECONDITIONING SET Injector, Tube	5180-00-146-9619	J22525-B
92	F	INSERTER AND REMOVER	5120-01-166-0572	J33080
93	H	INSERTER, Bearing and Bushing	5120-01-158-3946	J25562
94	H	INSERTER, PLUG, Cylinder Block	5120-01-166-5419	J21850
95	H	INSERTER, SEAL	5120-01-340-1820	J35373
96	O	INSERTION TOOL (CANNON)	5120-01-374-8968	CIT-SS-10
97	H	INSTALLER AND REMOVER	5120-01-048-2180	J25275
98	H	INSTALLATION TOOL, Cup Plug	5120-01-297-2457	J33420
99	H	INSTALLER, Bearing	5120-01-115-1160	J24197
100	F	INSTALLER, Guide, Valve	5120-00-999-8617	J21520
101	H	INSTALLER, Lock Ring	5120-01-054-4050	J24453
102	F	INSTALLER, Oil Seal	5120-01-227-8483	J21983
103	H	INSTALLER, Output Shaft	5120-01-054-4042	J24202-1A
104	H	INSTALLER, Plug	5120-01-385-7288	J24411
105	H	INSTALLER, Plug	5120-01-054-4053	J24369
106	F	INSTALLER, Seal	5120-01-054-4049	J24198
107	F	INSTALLER, Seal, Crankshaft, Front	5120-00-936-4377	J9783
108	F	INSTALLER, Seal	5120-01-013-1678	J9791
109	O	INSTALLER, Seal	5120-00-977-5579	J8550
110	F	INSTALLER, Seal, Flywheel	4910-01-176-4230	J21112-B
111	H	INSTALLER, Seal, Oil	5120-00-937-7267	J8501
112	H	INSTALLER, Seal, Transfer Case	5120-01-383-7878	TRS6227
113	H	INSTALLER, Valve Bridge	5120-00-999-8616	J7482
114	H	INSTALLER, Water Pump Seal	5120-01-365-4079	J-38858
115	H	INSTALLING TOOL, Piston	5120-00-127-7757	J23762-A
116	H	INSTALLING TOOL, Valve	5120-01-048-3118	J24357
117	H	INSTALLING/REMOVING Tool	5120-01-130-8864	J23019
118	F	JACK, Stabilizer	2590-00-23-7418	10876244
119	O	JACK KIT, Hydraulic, Hand	5120-00-587-4144	GGG-J-60
120	F	LEVEL	4920-00-064-8974	2579573-002
121	F	LIFTING BRACKET, Flywheel	5120-01-116-6049	J24365

Table B-1. Tool and Test Equipment Requirements (Cont).

Tool or Test Equipment Ref Code	Maintenance Category	Nomenclature	National/ NATO Stock Number	Tool Number
122	H	LIFTING Bracket, Center	5120-01-116-6048	J24195
123	H	LIFTING Fixture, Clutch	5120-01-115-1159	J24209
124	H	MAG INS. UNIT, Stat	6635-00-566-9772	MIL-M-6867C
125	F	OIL, Seal, Expander	5120-01-232-0005	J8682
126	O	PAN, DRAIN 6 Gal	4910-00-287-2944	MIL-P-45819
127	F	PIN, Guide Set	5120-01-115-1163	J24315
128	F	STUDS, Guide	5315-01-162-3630	J24748
129	H	PIN, GUIDE	5315-01-165-1469	J1126
130	H	PLATE KIT, Gear Bearing	5180-01-167-4285	2SK900
131	F	PLIERS, Channel Lock	5120-00-287-2512	GGG-W-649
132	O	PLIERS, Retaining Ring	5120-01-375-5699	2BH945
133	F	PLUG, Cylinder Block	5120-01-166-5421	J24597
134	F	PLUMB BOB	5210-00-007-8229	GGG-P-501
135	O	PRESSURE TEST KIT	4910-01-378-9068	3SK911
136	F	PRESSURE TEST KIT	4910-01-378-8863	3SK912
137	H	PROTECTOR, Piston	5120-01-048-2156	J24210
138	H	PROTECTOR, Seal	5120-01-048-2157	J24216-01
139	F	PROTECTOR, Spindle	3830-01-349-7390	2HE234
140	F	PROTRACTOR, Magnetic	5210-01-415-0075	2150A251
141	F	PROTRACTOR, Square	5210-00-273-1937	05-12INCH
142	F	PULLER, Bolts	5120-01-185-6811	J26901-A
143	H	PULLER, Mech	5120-00-219-8397	J1902-B
144	F	PULLEY REMOVER	5120-00-944-0363	J5356
145	F	PUMP, FORCE	4130-01-192-0496	466-46485
146	O	PULLEY KIT, Pump, Roof Mount	5120-01-375-5700	2HP645
147	F	PUNCH, DRIFT	5120-00-004-4921	PWA14920
148	O	READER, Diagnostic (DDEC)	4910-01-343-3508	J38500-1
149	H	REMOVER, Bearing, Front Support	5120-01-117-2523	J28557
150	H	REMOVER, Snap Ring	4910-01-158-3996	J26598-A
151	H	REMOVER, Valve Bridge	5120-00-999-8615	J7453
152	H	REMOVER, Valve Pin	5120-01-048-3128	J-24412-2
153	H	REMOVER, Valve Seat	5120-01-165-1935	J23479-E
154	F	REMOVER AND INSTALLER, Piston Ring	5120-00-494-1846	7950177

Table B-1. Tool and Test Equipment Requirements (Cont).

Tool or Test Equipment Ref Code	Maintenance Category	Nomenclature	National/ NATO Stock Number	Tool Number
155	F	REMOVER ASSEMBLY	4910-01-158-3982	J24563-A
156	H	REMOVER SET, Valve Bridge	5120-00-999-8614	J7091-01
157	H	REMOVER, Guide Valve	5120-00-733-8880	J6569
158	H	REMOVER, Seal, Waterpump	4910-01-158-3979	J22150-B
159	H	COLLECTOR RING, Installer/Stalking SET	5120-01-048-3126	J24200
160	F	RIVET GUN	5130-00-982-8078	352
161	F	RULE, STEEL, Machinist	5120-00-204-1283	GGG-R-791
162	F	SCALE, TENSION	4910-00-779-6832	J-8129
163	F	SCREW, Guide	5120-01-144-4483	J1927-01
164	H	SLEEVE, Puller	4910-01-162-3633	J25007-4
165	H	SOCKET, 1-11/16 in.	5120-01-024-0168	GGG-W-641
166	H	SOCKET WRENCH Attachment, Screwdriver	5120-01-297-2374	J34650
167	H	SOCKET, 55mm	5120-01-386-5999	J39938
168	H	SOCKET, 63mm	5120-01-386-5988	J39939
169	F	SOCKET, Spindle Nut	5120-01-354-9451	J41111
170	H	SOCKET, Socket Head Screw	4470-01-350-0895	LAW124A
171	H	SOCKET, 12mm Hex Head	5120-00-240-6148	849550-3-8AF
172	F	SOCKET, Swivel 13/16 in.	5120-00-236-7619	A-A-1396
173	H	SPANNER	5120-01-354-9452	12379639
174	H	SPANNER	5120-01-354-9450	12379638
175	H	SPANNER	5120-01-354-9449	12379637
176	H	STAND, Maintenance, Axle	4910-00-241-3329	150-AX
177	H	STAND, Maintenance, Engine	4910-00-808-3372	J29109
178	H	STEAM CLEANER	7910-01-157-8272	PRO 12-5
179	H	STONE, Abrasive Cylinder	5130-00-937-7280	J5902-14
180	H	STONE, Sharpening	5345-00-584-4607	A6F0
181	H	STUD SET	5120-01-048-2155	J25002
182	F	TAP AND DIE SET	5136-01-119-0005	TDM99117
183	O	TERMINAL CRIMPER	5120-01-355-0845	J35688
184	O	TERMINAL REMOVER	5120-01-357-2937	J35689-A
185	O	TERMINAL REMOVER	5120-01-353-2534	J33095
186	O	TESTER, Pressure, Radiator	4910-01-170-4928	J24460-01
187	H	TESTING KIT, Cylinder	5180-01-252-9800	2SK737

Table B-1. Tool and Test Equipment Requirements (Cont).

Tool or Test Equipment Ref Code	Maintenance Category	Nomenclature	National/ NATO Stock Number	Tool Number
188	F	OSS TESTER	4910-01-370-4908	13189
189	H	TOOL SET, Blower	4940-00-611-7945	J6270-G
190	F	TOOL SET, Equalizer Beam	4940-01-386-6108	1764
191	F	TOOL, Knuckle, Adjusting	5120-01-355-6571	J41115
192	H	TOOL, Lifting	5120-01-159-1736	J33079-1
193	H	TOOL, Staking	5120-01-359-2757	J24200-1
194	O	TOOL, SRS/TRS Alignment	5120-01-343-1001	J39815
195	F	TORCH, Propane	3433-01-161-4998	737-1-0000
196	F	VISE, Pipe, Chain	5120-00-078-6662	CV12
197	O	WEATHERPAC CRIMPER	5120-01-374-8936	J38852
198	O	WEATHER TERMINAL REMOVER	5120-01-374-8969	J36400-5
199	F	WINCH, Cable, Hand Operating	3950-00-079-1202	415526-1
200	F	WRENCH, Chain	5120-01-192-9403	CW24
201	O	WRENCH, Combination 1 5/8 in.	5120-01-016-7144	1180
202	O	WRENCH, Combination 1 11/16 in.	5120-00-184-8566	A-A-1351
203	O	WRENCH, Combination 1 3/4 in.	5120-00-020-8658	1256
204	F	WRENCH, Combination 1 13/16 in.	5120-00-081-9099	GGG-W-636
205	O	WRENCH, Combination 1 7/8 in.	5120-00-020-8632	1260
206	O	WRENCH, Combination 2 in.		
207	O	WRENCH, Combination 2 1/8 in.	5120-00-203-4795	1268
208	O	WRENCH, Fuel Line	5120-00-019-5232	J-8932-B
209	F	WRENCH SET, Pushrod	5120-00-132-2109	J21100-D
210	H	WRENCH, Spanner	5120-01-375-4502	J41108

Section IV. REMARKS

REFERENCE CODE	REMARK
A	No specific times established. Times required for inspection, service, or test will depend on extent of testing required.
B	This task covers the entire on-stand repair. Use tools listed in the individual tasks for those tasks.
C	No specific times established. Times required for replacement or repair will depend on extent of work required.
D	No specific times established. Times required for overhaul will depend on extent of work required.
E	In the “O” category repair is limited to splicing of wires, taping of the harness or wires, and the replacement of wire ends.
F	At the “F” level the entire wire harnes is replaced.
G	Repair consists of replacing individual items.
H	High pressure hoses are non-repairable.
I	Repair of the gas particulate filter is covered in TM-(TBD).
J	Repair of the M-8 chemical alarm is covered in TM 3-6665-225-12.
K	Repair of the M-13 decontamination unit is covered in TM 3-4230-214-12&P.

APPENDIX C

EXPENDABLE SUPPLIES AND MATERIALS LIST

Section I. INTRODUCTION.

C-1. SCOPE.

This appendix lists expendable supplies and materials you will need to operate and maintain the PLS. These items are authorized to you by CTA50-970, Expendable Items (Except Medical, Class V, Repair parts and Heraldic Items) or CTA8-100, Army Medical Department Expendable/Durable Items.

C-2. EXPLANATION OF COLUMNS.

a. Column (1) - Item Number. This number is assigned to the entry in the listing and is referenced in the narrative task box to identify the material (e.g., “Compound, Cleaning, Item 5, Appendix C”).

b. Column (2) - Level. This is the maintenance level approved to use the item listed.

c. Column (3) - National Stock Number. This is the National Stock Number assigned to the item; use it to request or requisitely the item.

d. Column (4) - Description. Indicates the Federal item name and, if required, a description to identify the item. The last line for each item indicates the Commercial and Government Entity (CAGE) code in parentheses followed by the part number.

e. Column (5) - Unit of Measure. Indicates the measure used in performing the actual maintenance function. This measure is expressed by a two-character alphabetical abbreviation (e.g., ea, in. or pr). If the unit of measure differs from the unit of issue, requisition the lowest unit of issue that will satisfy your requirements.

Section II. EXPENDABLE SUPPLIES AND MATERIALS LIST

(1) Item Number	(2) Level	(3) National Stock Number	(4) Description	(5) U/M
1	O		Adhesive	
			(45152) 1490170	
			Sikaflex 221 gray	gl
2	O		Adhesive	
			(05972) Loctite #409	
		8040-01-321-1254	20 gram tube	gm
3	O		Adhesive	
			(04963) EC847	
		8040-01-033-7507	5 ounce tube	oz
		8040-00-691-6134	1 gallon can	gl
4	O		Adhesive	
			(05972) Loctite #44581	
		8040-01-046-5061	4 gram kit	gm
5	O		Adhesive	
			(04963) 1300	
		8040-00-148-7182	5 ounce tube	oz
6	O		Adhesive	
			(71984) RTV 732 Black	
		8040-00-851-0211	5 oz kit	oz
		8040-00-865-8991	12 oz kit	oz
			(80244) MIL-A-46106 Group 1 Type 1	
		8040-01-331-7470	5 oz tube	oz
7	O		Adhesive	
			(71984) RTV 732 Clear	
		8040-00-701-9546	5 oz kit	oz
		8040-01-010-8758	12 oz kit	oz
			(80244) MIL-A-46106 Group 1 Type 1	
		8040-01-331-7469	3 oz tube	oz
		8040-01-331-7475	12 oz cartridge	oz
8	O		Adhesive	
			(71984) RTV 738	
		8040-01-260-1939	5 oz tube	oz
9	O		Adhesive	
			(01139) RTV-162	
			(71984) Silastic 738 RTV	
			(81349) MIL-A-46146	
		8040-00-118-2695	3 oz kit	oz
10	O		Adhesive	
			(01139) RTV 108	
		8040-00-843-0802	3 ounce kit	oz
		8040-01-173-9815	12 ounce tube	oz
11	O		Adhesive	
			(18876) 13086263	
		8040-00-390-7959	1 quart can	qt

Section II. EXPENDABLE SUPPLIES AND MATERIALS LIST (Cont)

(1) Item Number	(2) Level	(3) National Stock Number	(4) Description	(5) U/M
12	O		Adhesive, Insulation (28112) 4289 5 gallon can	 gl
13	O	 8030-01-303-0502	Adhesive, Retaining (05972) 68035 50 ml bottle	 bt
14	O		Adhesive Sealant (45152) 24758FX	 oz
15	O		Adhesive, (0PMN0) Sika 255 FC Blk (45152) 3145938	 oz
16	O		Adhesive Spray (45152) 1537350	 oz
17	O	 6810-01-075-5546	Alcohol, Isopropyl (53390) 7618-19-4 40 oz bottle	 oz
18	O	 6850-00-174-1806	Antifreeze (81349) MIL-A-11755 55 gallon drum	 gl
19	O	 6850-00-181-7929 6850-00-181-7940	Antifreeze (81349) MIL-A-46153 1 gallon bottle 55 gallon drum	 gl gl
20	O	 8030-00-155-6444	Antiseize Compound (81349) MIL-A-907 16 oz aerosol can	 oz
21	O	 8030-00-251-3980	Antiseize Compound (81349) MIL-A-907 1 lb can	 lb
22	O	 8030-00-597-5367	Antiseize Compound, High Temperature (81349) MIL-A-907 2-1/2 lb can	 lb
23	O	 8020-00-178-8305	Brush, Paint (96906) MS16866	 ea
24	O	 6840-00-300-6373 6840-01-173-6940	Biocide, Fuel Preservative (OU7J1) Biobar J.F. 1 quart 5 gallon	 qt gl
25	O	 5975-01-273-8133	Cable Ties (96906) MS3367-3 12 inches long, 100 per package	 hd
26	O	 5975-00-074-2072	Cable Ties (96906) MS3367-1 6 inches long, 100 per package	 hd

Section II. EXPENDABLE SUPPLIES AND MATERIALS LIST (Cont)

(1) Item Number	(2) Level	(3) National Stock Number	(4) Description	(5) U/M
27	O		Cable Ties	
		4310-01-115-2297	(56501) TY525MX	ea
28	O		Chalk, Marking, White	
		7510-00-537-6426	(83030) 1400	ea
29	O		Cleaner, Lubricant A	
			(81349) MIL-L-63460	
		9150-01-079-6124	4 oz bottle, w/extender tube	oz
30	O		Cloth, Abrasive (Crocus)	
			(58536) A-A-1206	
		5350-00-221-0872	50 sheet package	sh
31	O		Cloth, Cleaning	
			(81349) MIL-C-85043	
		7920-00-165-7195	Type 1 - 10 lb box	lb
		7920-00-044-9281	Type 2 - 10 lb box	lb
32	O		Coating Compound, Bituminous, Solvent Type	
			(70842) 765-1505	
		8030-00-546-8621	21 ounce aerosol can	oz
33	O		Coating, Rust Arresting	
			(81349) MIL-R-10036	
		8030-00-231-2349	1 gallon can	gl
		8030-00-231-2344	5 gallon can	gl
		8030-00-174-3242	55 gallon drum	gl
34	O		Corrosion Preventive Compound	
			(81349) MIL-C-16173	
		8030-00-062-6950	Grade 1 - 1 quart can	qt
		8030-01-149-1731	Grade 2 - 1 quart can	qt
		8030-00-837-6557	Grade 3 - 1 pint can	pt
		8030-00-903-0931	Grade 4 - 1 pint can	pt
35	O		Corrosion Preventive Compound	
			(13548) 97940	
			8 ounce can	oz
36	O		Corrosion Preventive Compound	
			(81349) MIL-C-11796	
		8030-00-231-2353	5 lb	lb
		8030-00-285-1570	35 lb	lb
37	O		Dye, Prussian Blue	
		8010-00-652-3626	(81349) MIL-P-30501	oz
38	O		Epoxy	
		8040-00-092-2816	(96900) 04001	ea
39	O		Gasket, Forming Compound	
			(0597) Loctite #515	
		5330-01-325-6993	50 ml tube	ml

Section II. EXPENDABLE SUPPLIES AND MATERIALS LIST (Cont)

(1) Item Number	(2) Level	(3) National Stock Number	(4) Description	(5) U/M
40	O		Gasket, Strip	
			(45152) 2011160	
			50 ft. roll	in
41			Grease	
			(45152) 1864450	
		9150-01-197-7688	2.25 oz tube	oz
		9150-01-197-7690	1.75 lb can	lb
		9150-01-197-7689	6.5 lb can	lb
42	O		Grease, Automotive And Artillery	
			(70878) 5542P	
			(81349) MIL-G-10924	
		9150-01-197-7688	2.25 oz tube	oz
		9150-01-197-7690	1.75 lb can	lb
		9150-01-197-7689	6.5 lb can	lb
43	O		Grease, General Purpose	
			(81349) MIL-G-23549	
		9150-01-306-9202	1 pound can	lb
		9150-00-235-5555	6.5 pound can	lb
		9150-00-823-8047	35 pound can	lb
44	O		Grease, High Temperature	
		9150-01-154-1259	(81349) DOD-G-85733	qt
45	O		Grease, Instrument	
			(97343) SRI2	
		9150-01-235-5057	1 pint can	pt
46	O		Grease, Lubriplate	
		9150-00-076-1887	(73219) 06706	oz
47	O		Grease, Molybdenum Disulfide	
			(58372) 60G	
		9150-01-091-9336	1.5 lb can	lb
			(81349) MIL-G-21164	
		9150-00-754-2595	1.75 lb can	lb
		9150-00-223-4004	6.5 lb can	lb
		9150-00-965-2003	35 lb can	lb
48	O		Heatshrink, Sealed	
			(45152) 1704950	ea
49	O		Hot Melt	
			(04963) 3783	oz
50	O		Hydraulic Oil, OE/HDO 10	
			(81349) MIL-L-2104	
		9150-00-189-6727	1 quart can	qt
		9150-01-177-3988	12 quart box	qt
		9150-00-191-2772	55 gallon drum	gl
		9150-00-183-7807	Bulk	gl

Section II. EXPENDABLE SUPPLIES AND MATERIALS LIST (Cont)

(1) Item Number	(2) Level	(3) National Stock Number	(4) Description	(5) U/M
51	O		Injector Test Oil	
		6850-00-779-6851	(33287) J-26400-5	oz
52	O		Insulation, Cab	
			(40501) MC5150-1/2 blk	ft
53	O		Lubricant, Tire	
			(96980) AA20	
		2540-00-256-5529	5 gallon can	gl
		2540-00-256-5526	1 quart can	qt
			(96980) AA17	
		2540-00-256-5527	1 gallon can	gl
54	O		Lubricating Oil, Engine OE/HDO 30	
			(81349) MIL-L-2104	
		9250-00-186-6681	1 quart can	qt
		9150-00-188-9858	5 gallon can	gl
		9150-00-189-6729	55 gallon drum	gl
55	O		Lubricating Oil, Engine OE/HDO 40	
			(81349) MIL-L-2104	
		9150-00-189-6730	1 quart can	qt
		9150-00-188-9862	55 gallon drum	gl
		9150-00-405-2987	Bulk	gl
56	O		Lubricating Oil, Engine OE/HDO 15W/40	
			(81349) MIL-L-2104	
		9150-01-152-4117	1 quart can	qt
		9150-01-178-4725	12 quart box	qt
		9150-01-152-4118	5 gallon can	gl
		9150-01-152-4119	55 gallon drum	gl
57	O		Lubricating Oil, Engine OEA	
			(81349) MIL-L-46167	
		9150-00-402-4478	1 quart can	qt
		9150-00-402-2372	5 gallon can	gl
		9150-00-491-7197	55 gallon can	gl
58	O		Lubricating Oil, Gear GO 75W	
			(81349) MIL-L-2105	
		9150-01-035-5390	1 quart can	qt
		9150-01-048-4593	1 gallon can	gl
		9150-01-035-5391	5 gallon can	gl
59	O		Lubricating Oil, Gear GO 80W/90	
			(81349) MIL-L-2105	
		9150-01-035-5392	1 quart can	qt
		9150-01-313-2191	1 gallon can	gl
		9150-00-001-9395	5 gallon can	gl

Section II. EXPENDABLE SUPPLIES AND MATERIALS LIST (Cont)

(1) Item Number	(2) Level	(3) National Stock Number	(4) Description	(5) U/M
60	O		Lubricating Oil, Preservative (15W40) (Engine) (81349) MIL-L-21260C	
		9150-01-293-7696	5 gallon	gl
		9150-01-293-2792	55 gallon	gl
61	C		Oil, Fuel, Diesel Winter	
		9140-00-286-5286	Bulk	gl
62	C		Oil, Fuel, Diesel Regular	gl
		9140-00-286-5294	Bulk	
63	O		Petrolatum, Technical (81348) VV-P-236	
		9150-00-250-0931	8 ounce tube	oz
		9150-00-250-0926	1.75 pound can	lb
		9150-00-250-0933	7.5 pound can	lb
64	O		Primer, (0PMN0) Sika Cleaner 205 (45152) 3145939	oz
65	O		Primer, “T” 7471	oz
		8030-01-388-5604	(05972) 19267	
66	O		Protective Coating (45152) 1412020	
			1 quart can	qt
67	O		Rags, Wiping (58536) A-A-531	
		7920-00-205-1711	50 pound bale	lb
68	O		Sealant, Electrical (00CE9) RTV200-257	
69	O		Sealant, Metal (45152) 1317520)	
70	O		Sealant, Rubber (45152) 1494320	
71	O		Sealant, Teflon Pipe (19207) 12297953	
		1015-01-255-4144	50 ml tube	ml
72	O		Sealing Compound (05972) Loctite #567	
		8030-01-054-0740	50 ml bottle	ml
		8030-00-204-9149	250 ml tube	ml
			(05972) Loctite #567-47	
		8030-01-166-0675	50 ml tube	ml

Section II. EXPENDABLE SUPPLIES AND MATERIALS LIST (Cont)

(1) Item Number	(2) Level	(3) National Stock Number	(4) Description	(5) U/M
73	O		Sealing Compound	
			(05972) Loctite #290	
			(80244) MIL-S-46163 Type 3 Grade R	
		8030-00-111-2763	10 ml bottle	ml
		8030-00-111-2762	50 ml bottle	ml
		8030-01-050-8288	150 ml bottle	ml
74	O		Sealing Compound	
			(05972) Loctite #271	
			(80244) MIL-S-46163 Type 1 Grade K	
		8030-00-148-9833	10 ml bottle	ml
		8030-01-158-6070	50 ml bottle	ml
75	O		Sealing Compound	
			(77247) Permatex-3D	
			(80244) MIL-S-45180 Type 3	
		8030-00-656-1426	1 pint can	pt
76	O		Sealing Compound	
			(05972) Loctite #262	
		8030-01-159-4374	10 ml bottle	ml
		8030-01-142-9830	50 ml bottle	ml
		8030-01-142-3131	250 ml bottle	ml
77	O		Sealing Compound	
			(05972) Loctite #242	
			(80244) MIL-S-46163A Type 2 Grade N	
		8030-01-104-5392	10 ml bottle	ml
		8030-01-014-5869	50 ml bottle	ml
		8030-01-025-1692	250 ml bottle	ml
78	O		Sealing Compound	
			(05972) Loctite 222	
			(80244) MIL-S-46163A Type II Grade M	
		8030-01-054-3968	10 ml bottle	ml
		8030-01-069-3046	50 ml bottle	ml
		8030-01-055-6126	250 ml bottle	ml
79			Sealing Compound	
			(05972) Loctite #680	
		8030-01-303-0502	50 ml bottle	ml
		8030-01-387-2007	250 ml bottle	ml
80	O		Sealing Compound	
		8030-01-023-4535	(04963) 3M2084	oz
81	O		Sealing Compound	
			(77247) 51D	
		8030-00-954-9371	1 pint can	pt

Section II. EXPENDABLE SUPPLIES AND MATERIALS LIST (Cont)

(1) Item Number	(2) Level	(3) National Stock Number	(4) Description	(5) U/M
82	O		Sealing Compound	
			(45152) 079-820400	
		8030-01-104-5392	10 ml bottle	ml
		8030-01-014-5869	50 ml bottle	ml
		8030-01-025-1692	250 ml bottle	ml
83	O		Sealing Compound	
			(45152) 65270AX	
		8030-01-104-5392	10 ml bottle	ml
		8030-01-014-5869	50 ml bottle	ml
		8030-01-025-1692	250 ml bottle	ml
84	O		Silicone Compound	
			(72984) DC 111	
		6850-00-294-0860	5 ounce Tube	oz
85	O		Silicone Compound, Anti-Corrosion	
			(71984) DC4-2OZ	
		6850-00-177-5094	2 ounce tube	oz
86	O		Solution, Soap	
			(81349) MIL-W-15000 Class C	
		6810-00-252-1345	1 quart bottle	qt
87	O		Solvent, Drycleaning	
			(58536) A-A-711	
			(81348) P-D-680	
		6850-00-664-5685	1 quart can	qt
		6850-00-264-9038	5 gallon can	gl
			(Environmentally Compliant Solvent)	
			(0K209) Breakthrough	
		6850-01-378-0679	5 gallon can	gl
88	O		Tag, Identification	
			(16956) 12-105	
		9905-00-720-3577	white	ea
89	O		Tags, Identification	
			(81349) MIL-T-12755	
		9905-00-537-8957	white	ea
		9905-00-537-8955	yellow	ea
90	O		Tape, Adhesive	
			(26066) 4516	
		7510-00-079-7604	36 yard roll	yd
91	O		Tape, Foam	
			36 yard roll	yd
92	O		Tape, Foam	
		5330-01-084-5058	(45152) 107685A	in

Section II. EXPENDABLE SUPPLIES AND MATERIALS LIST (Cont)

(1) Item Number	(2) Level	(3) National Stock Number	(4) Description	(5) U/M
93	O	8030-00-889-3535	Tape, Antiseizing (81755) P5025-2R (81349) MIL-T-27730 260 inch spool	in
94	O	7510-01-358-8770	Tape, Pressure Sensitive (52152) 4950 36 yard roll	yd
95	O		Vapor Corrosion Inhibitor (44695) VCI 326 (81349) MIL-P-46002B 1 pint	pt
96	O		Vapor Corrosion Inhibitor (44695) VCI 329 (81349) MIL-P-46002B 1 pint	pt
97	O	8010-00-401-0421	Varnish (79819) FIXATIF 1 quart can	qt
98	C	6850-00-926-2275	Washer Fluid (81348) O-C-1901 1 gallon bottle	gl
99	O	6145-01-074-7535	Wire, 16 Gage (45152) 1927FX	ft
100	O	9505-00-331-3275	Wire, Safety (96906) MS20995C41	lb
101	O	5330-01-325-6993	Wrench, Loctite #515 (05972) 25824AX	ml

APPENDIX D

ILLUSTRATED LIST OF MANUFACTURED ITEMS

Section I. INTRODUCTION

D-1. SCOPE.

This appendix includes complete instructions for manufacturing or fabricating authorized items locally. All bulk materials needed to manufacture an item are listed by part number or specification number in a tabular list with an illustration, as needed.

Section II. MANUFACTURED ITEMS

D-2. FUEL HOSE FABRICATION.

The following hoses are cut from bulk hose using a fine toothed hacksaw or suitable cutting device. Locations and installation instructions for fuel hoses are found in Para 4-12. Table D-1 lists the fuel hoses.

Table D-1. Fuel System Hoses

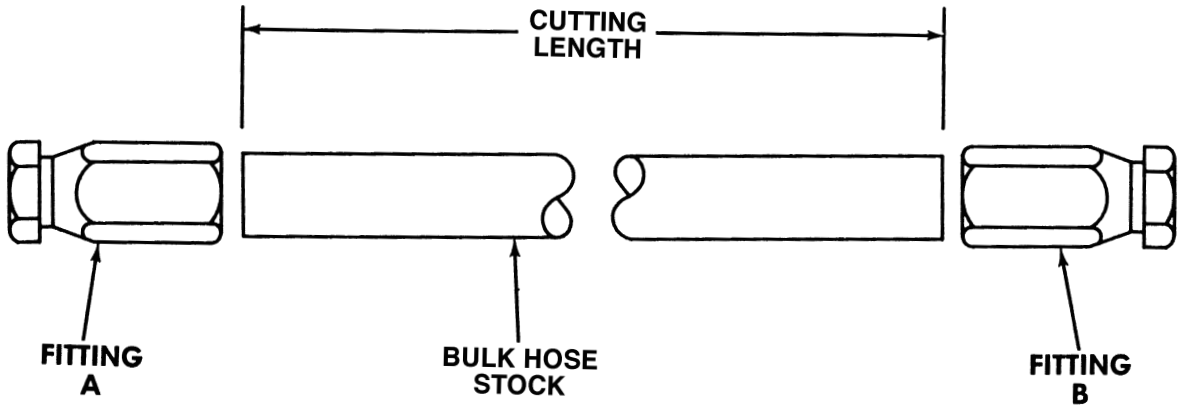

Hose Assembly Part Number	Bulk Hose Part Number	Cutoff Length	
		Inches	cm
65068AX-024	2575-48RL	24	61
47371AXU-018	FC350-04	18	46
EU102958-025	FC350-06	25	64
EU102958-052	FC350-06	52	132
1924600U-034	FC350-10	34	86
56845AXU-005	FC350-10	5	13

D-3. AIR INTAKE HOSE FABRICATION.

There are two hoses in the air intake system that require fabrication. Both hoses can be cut from bulk stock using a fine-toothed hacksaw or suitable cutting device. Refer to Para 4-7 for locations and installation instructions.

Table D-2. Air Intake Hoses

Hose Assembly Part Number	Bulk Hose Part Number	Cutoff Length	
		Inches	cm
21033FXW-120	21020FX	120	305
1732400U-067	FC300-16	67	170

D-4. COOLING SYSTEM HOSES FABRICATION.

The following hoses for the cooling system are cut from bulk hose using a fine-toothed hacksaw or suitable cutting device. Locations and installation instructions are found in Para 6-8.

Table D-3. Cooling System Hoses

Hose Assembly Part Number	Bulk Hose Part Number	Cutoff Length	
		Inches	cm
69940AX-048	3230-0293	48	122
4811FX-100	4811FX	100	254
46754AX-U-020	FC350-06	20	51

D-5. SEAL FABRICATION.

Fabricate seals from bulk seal stock listed in Table D-4. Use a suitable cutting tool to cut seal to length required.

Table D-4. Seal, Nonmetallic

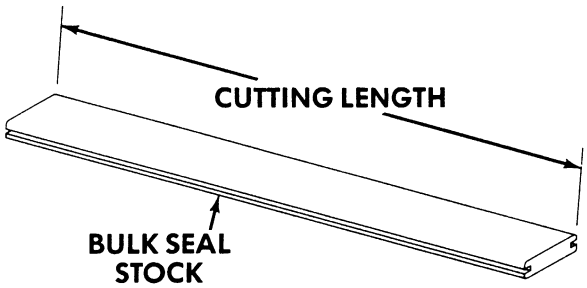

Seal Part Number	Seal Bulk Part Number	Cutoff Length	
		Inches	cm
59747AX-040	101-2203	40	102
59747AX-055	101-2203	55	140
59745AX-040	75000519	40	102
59745AX-055	75000519	55	140
125865A-047	75001366	47	119
125865A-116	75001366	116	295
125865A-160	75001366	160	409

D-6. EDGING AND MOLDING FABRICATION.

Edging and molding can be fabricated from bulk stock listed in Table D-5. Use suitable cutting tool to cut to length required.

Table D-5. Edging and Molding

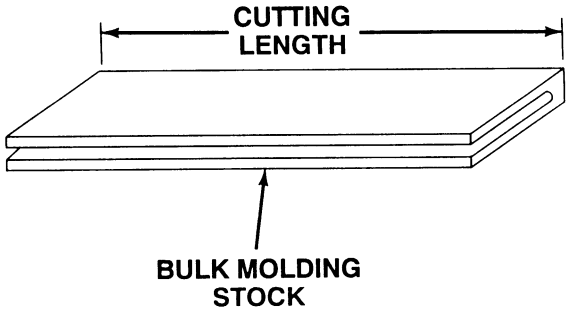

Edging/Molding Part Number	Edging/Molding Part Number	Cutoff Length	
		Inches	cm
1339700-011	1339700	11	28
26927AX-026	26927AX	26	66
26947BX-002	75000317	2	5
26947BX-003	75000317	3	8
26947BX-004	75000317	4	10
26947BX-005	75000317	5	13
26947BX-006	75000317	6	15
26947BX-017	75000317	17	43
26947BX-018	75000317	18	46
1467160-012	75000317	12	31
42925AX-005	OR40	5	13
27022AX-002	R-422-N	2	5
27002AX-019	R-422-N	19	48
27022AX-024	R-422-N	24	61
27022AX-043	R-422-N	43	109
27022AX-093	R-422-N	93	236
27022AX-101	R-422-N	101	257
27022AX-130	R-422-N	130	330

D-7. LOCKWIRE ROPE FABRICATION.

The lockwire length is shown in Table D-6. Crimped button stop caps are used to attach the lockwire to other components. Each application requires two swaging sleeve clips.

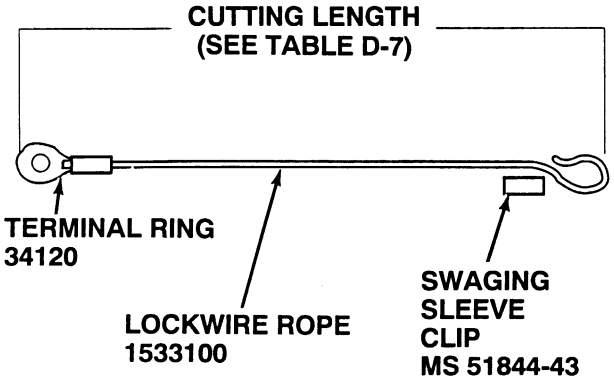

NOTES:

1. OBTAIN ALL COMPONENTS REQUIRED TO FABRICATE LOCKWIRE.
2. USE A FINE TOOTHED HACKSAW OR SUITABLE CUTTING DEVICE, AND CUT LOCKWIRE TO LENGTH REQUIRED.
3. SLIDE WIRE THROUGH HOLE IN COMPONENT, UNTIL LOCKWIRE COMES THROUGH OTHER SIDE.
4. SLIDE CAP ONTO LOCKWIRE, UNTIL CAP BOTTOMS AGAINST COMPONENT AND WIRE COMES THROUGH CAP.
5. CRIMP CAP TO LOCKWIRE.
6. SLIDE OPPOSITE END OF WIRE THROUGH ASSEMBLY, AND SLIDE OTHER CAP OVER END OF WIRE.
7. SLIDE WIRE THROUGH HOLE IN COMPONENT, UNTIL LOCKWIRE COMES THROUGH OTHER SIDE.
8. SLIDE CAP ONTO LOCKWIRE, UNTIL CAP BOTTOMS AGAINST COMPONENT AND WIRE COMES THROUGH CAP.
9. CRIMP CAP TO LOCKWIRE.

The following wire rope is cut from bulk stock. Refer to Table D-6 for cutting lengths.

Table D-6. Lockwire Rope

Lockwire Rope Part Number	Lockwire Rope Part Number	Cutoff Length	
		Inches	cm
1533100-010	1533100	10	25
1533100-015	1533100	15	38
1533100-020	1533100	20	51
1533100-024	1533100	24	61

D-8. WIRE AND WIRE ASSEMBLIES FABRICATION.

Fabricate from bulk wire stock listed in Table D-7. Use wire cutters to cut wire to required length, then strip ends of wire ¼ in. (6.35 mm). Crimp the required lugs or terminals onto wire ends.

Table D-7. Wire And Wire Assemblies

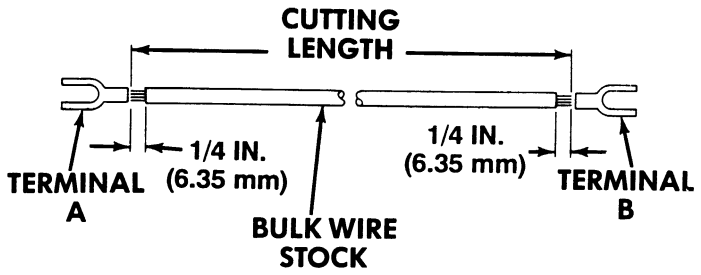

Wire/Assembly Part Number	Bulk Wire Part Number	Cutoff Length	
		Inches	cm
1884540W-012	121782A	12	31
1947560W-012	121782A	12	31
1959390W-012	121782A	12	31
1969600W-012	121782A	12	31
1977300W-010	4127FX	10	25
1974580-013	R-64951	13	33
1974590-005	R-64951	5	13
1978470W-005	R-64951	5	13

D-9. HOSES AND TUBES.

Fabricate hoses and tubes from bulk hose or tube stock listed in Table D-8. Use a fine toothed hacksaw or suitable cutting device and cut hose/tube to desired length. Place fitting A in vise and screw hose/tube counterclockwise until hose/tube bottoms out in fitting. Back off ¼ turn. Repeat for fitting B.

Table D-8. Hoses and Tubes

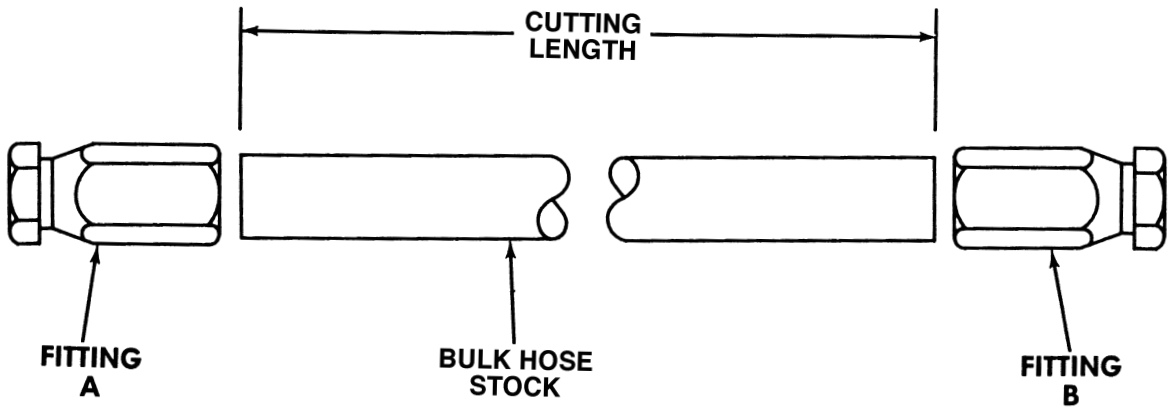

Hose/Tube Part Number	Bulk Hose Part Number	Cutoff Length Inches	Cutoff Length cm
5113689-12	1525-6	12	31
21021FX-026	2102CFX	26	66
32850AX-014	22020	14	36
32850AX-016	22020	16	41
32850AX-030	22020	30	76
32850AX-036	22020	36	91
32850AX-51	22020	51	130
31270AX-029	31270AX	29	74
31270AX-082	31270AX	83	208
31270AX-096	31270AX	96	244
31270AX-140	31270AX	140	356
69940AX-006	3230-0293	6	15
69940AX-065	3230-0293	65	165
31271AX-040	3250-101	40	102
31271AX-047	3250-101	47	119
31271AX-053	3250-101	53	135
31271AX-092	3250-101	92	234

Table D-8. Hoses and Tubes

Hose/Tube Part Number	Bulk Hose Part Number	Cutoff Length	
		Inches	cm
31271AX-150	3250-101	150	381
AAAC0085	51995757	85	216
AAAC0105	5199575	105	267
AAAC0190	5199575	190	483
AAAC0260	5199575	260	660
AAAE0090	5199575	90	229
1944510	70-062		Variable
1944520	70-062		Variable
23319FX-012	C604-200 BLK	12	31
23319FX-023	C604-200 BLK	23	58
23319FX-029	C604-200 BLK	29	74
23319FX-244	C604-200 BLK	244	620
23319FX-257	C604-200 BLK	257	653
23323FX-008	C606 BLACK	8	20
23323FX-008	C606 BLACK	8	20
23323FX-010	C606 BLACK	10	25
23323FX-010	C606 BLACK	10	25
23323FX-012	C606 BLACK	12	31
23323FX-014	C606 BLACK	14	36
23323FX-019	C606 BLACK	19	48
23323FX-022	C606 BLACK	22	56
23323FX-026	C606 BLACK	26	66
23323FX-030	C606 BLACK	30	76
23323FX-033	C606 BLACK	33	84
23323FX-042	C606 BLACK	42	107
23323FX-042	C606 BLACK	42	107
23323FX-044	C606 BLACK	44	112
23323FX-046	C606 BLACK	46	117
23323FX-050	C606 BLACK	50	127
23323FX-052	C606 BLACK	52	132
23323FX-055	C606 BLACK	55	140
23323FX-057	C606 BLACK	57	145
23323FX-060	C606 BLACK	60	152
23323FX-060	C606 BLACK	60	152
23323FX-082	C606 BLACK	82	208
23323FX-087	C606 BLACK	87	221

Table D-8. Hoses and Tubes

Hose/Tube Part Number	Bulk Hose Part Number	Cutoff Length	
		Inches	cm
23323FX-089	C606 BLACK	89	226
23323FX-148	C606 BLACK	148	376
23323FX-159	C606 BLACK	159	404
23323FX-163	C606 BLACK	163	414
23323FX-200	C606 BLACK	200	508
23323FX-335	C606 BLACK	335	851
23323FX-377	C606 BLACK	377	958
198872A U-200	FC300-04	20	51
115134A W-004	FC300-04	4	10
1732400 U-067	FC300-16	67	170
1620950 U-099	FC350-04	99	252
47371AX U-055	FC350-04	5	13
47371AX U-006	FC350-04	6	15
47371AX U-012	FC350-04	12	31
47371AX U-017	FC350-04	17	43
47371AX U-018	FC350-04	18	46
47371AX U-120	FC350-04	120	305
60264AX U-031	FC350-04	31	79
60264AX U-034	FC350-04	34	86
60264AX U-054	FC350-04	54	137
60264AX U-057	FC350-04	57	145
60264AX U-063	FC350-04	63	160
60264AX U-082	FC350-04	82	208
60296AX U-029	FC350-04	29	74
60296AX U-036	FC350-04	36	91
60296AX U-061	FC350-04	61	155
1780700 U-032	FC350-06	32	81
1780700 U-035	FC350-06	35	89
1780700 U-039	FC350-06	39	99
1780700 U-041	FC350-06	41	104
1782400 U-022	FC350-06	22	56
1782410 U-021	FC350-06	21	53
1782450 U-025	FC350-06	25	64
47336AX-060	FC350-06	60	152
47554AX U-020	FC350-06	20	51
118971A U-022	FC350-06	22	56

Table D-8. Hoses and Tubes

Hose/Tube Part Number	Bulk Hose Part Number	Cutoff Length	
		Inches	cm
118971A U-095	FC350-06	95	241
119784A U-010	FC350-06	10	25
119784A U-021	FC350-08	21	53
119784A U-047	FC350-08	47	119
1782340 U-019	FC350-08	19	48
1782360 U-020	FC350-08	20	51
1921290 U-025	FC350-08	25	64
1936150 U-032	FC350-08	32	81
1936150 U-034	FC350-08	34	86
1936150 U-038	FC350-08	38	97
1936150 U-040	FC350-08	40	102
69390AX U-006	FC350-08	6	15
69390AX U-019	FC350-08	19	48
69390AX U-020	FC350-08	20	51
69390AX U-020	FC350-08	20	51
69390AX U-021	FC350-08	21	53
69390AX U-025	FC350-08	25	37
1780720 U-020	FC350-10	20	51
1780720 U-051	FC350-10	51	130
1782370 U-037	FC350-10	37	94
1782380 U-031	FC350-10	31	79
1782390 U-020	FC350-10	20	51
1782420 U-039	FC350-10	39	99
1782430 U-031	FC350-10	31	79
1782440 U-019	FC350-10	19	48
1924600 U-090	FC350-10	90	229
47750AX U-009	FC350-10	9	23
58989AX U-020	FC350-10	20	51
58989AX U-034	FC350-10	34	86
58989AX U-064	FC350-10	64	163
66798AX U-020	FC350-10	20	51
66798AX U-025	FC350-10	25	64
66798AX U-030	FC350-10	30	76
66798AX U-077	FC350-10	77	196
1780710 U-082	FC350-12	82	208
1780710 U-083	FC350-12	83	211

Table D-8. Hoses and Tubes

Hose/Tube Part Number	Bulk Hose Part Number	Cutoff Length	
		Inches	cm
47369AX U-127	FC350-12	127	323
61608AX U-093	FC350-12	93	236
61608AX U-142	FC350-12	142	361
47468AX U-011	FC350-16	11	28
47468AX U-022	FC350-16	22	56
47468AX U-045	FC350-16	45	114
47468AX U-046	FC350-16	46	117
47468AX U-089	FC350-16	89	226
47213AX-012	NT10012-50FT	12	31
47213AX-015	NT10012-50FT	16	41
47213AX-021	NT10012-50FT	21	53
47213AX-023	NT10012-50FT	23	58
47213AX-025	NT10012-50FT	25	64
47213AX-025	NT10012-50FT	25	64
47213AX-060	NT10012-50FT	60	152
47213AX-073	NT10012-50FT	73	185
47213AX-073	NT10012-50FT	73	185
47213AX-173	NT10012-50FT	173	439
47213AX-194	NT10012-50FT	194	493
1656500-128	PFT-10B-GRN	128	325
1656500-183	PFT-10B-GRN	183	465
1656490-102	PFT-10B-RED	102	259
1656490-202	PFT-10B-RED	202	513
1656490-257	PFT-10B-RED	257	653
1656470-030	PFT-4A-BLU	30	76
1656470-104	PFT-4A-BLU	104	264
1656470-115	PFT-4A-BLU	115	292
1656470-139	PFT-4A-BLU	139	353
1605260-008	PFT-4A-GRN	8	20
1605330-020	PFT-4A-ORG	20	51
1605330-040	PFT-4A-ORG	40	102
1605330-071	PFT-4A-ORG	71	180
1605330-112	PFT-4A-ORG	112	285
1605330-124	PFT-4A-ORG	124	315
1605170-007	PFT-4A-RED	7	18
1605270-023	PFT-6B-GRN	23	58

Table D-8. Hoses and Tubes

Hose/Tube Part Number	Bulk Hose Part Number	Cutoff Length	
		Inches	cm
1605270-028	PFT-6B-GRN	28	71
1605270-056	PFT-6B-GRN	56	142
1605270-057	PFT-6B-GRN	57	145
1605270-100	PFT-6B-GRN	100	254
1605270-108	PFT-6B-GRN	108	274
1605270-146	PFT-6B-GRN	146	371
1605320-205	PFT-6B-ORG	205	521
1605160-012	PFT-6B-RED	12	31
1605160-014	PFT-6B-RED	14	36
1605160-030	PFT-6B-RED	30	76
1605160-031	PFT-6B-RED	31	79
1605160-047	PFT-6B-RED	47	119
1605160-048	PFT-6B-RED	48	122
1605160-049	PFT-6B-RED	49	125
1605160-055	PFT-6B-RED	55	140
1605160-102	PFT-6B-RED	102	259
1605160-103	PFT-6B-RED	103	262
1605160-114	PFT-6B-RED	114	290
1605160-165	PFT-6B-RED	165	419
1605160-213	PFT-6B-RED	213	541
1605300-026	PFT-6B-YEL	26	66
1605300-066	PFT-6B-YEL	66	168
1605300-070	PFT-6B-YEL	70	179
1605300-129	PFT-6B-YEL	129	328
1605300-132	PFT-6B-YEL	132	335
1605300-150	PFT-6B-YEL	150	381
1605300-022	PFT-8B-BLU	22	56
1605300-316	PFT-8B-BLU	316	803
W-22-13	W-22	13	33
W-22-9	W-22	9	23
40AW168-010	W-22-L	10	25
40AW168-050	W-22-L	50	127
40AW168-19	W-22-L	19	48
40AW168-27	W-22-L	27	69
40AW168-45	W-22-L	45	114

D-10. WOODEN BLOCKS.

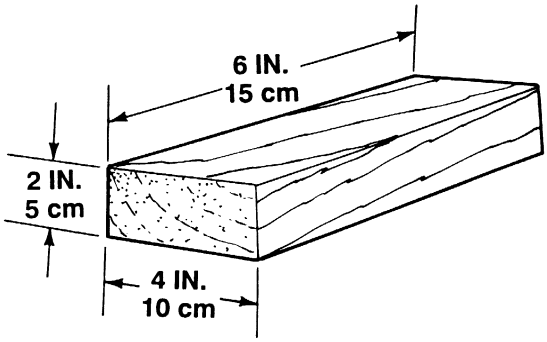

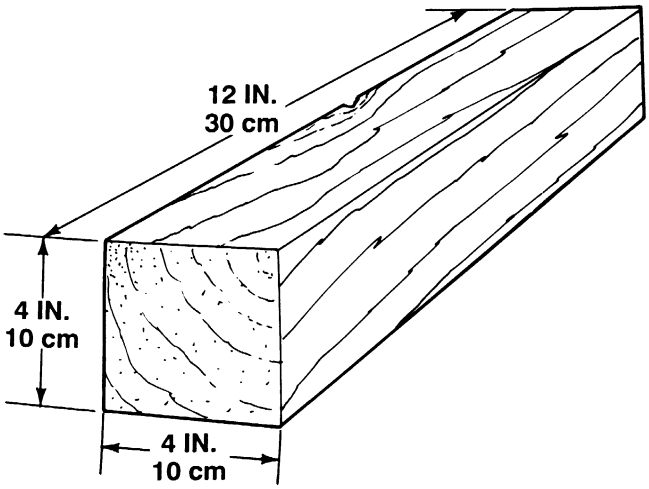

b. Fabricate from MML751 lumber stock.

b. Using saw and standard planing machine, cut stock to size required in Table D-9.

Table D-9. Wooden Blocks

Para Number	Finished Dimensions of Block In. (cm)
2-28	4 by 4 by 12 in. (10 by 10 by 30 cm)
5-2	2 by 4 by 6 in. (5 by 10 by 15 cm)
13-2	4 by 4 by 12 in. (10 by 10 by 30 cm)

D-11. STEERING STOP PLATE.

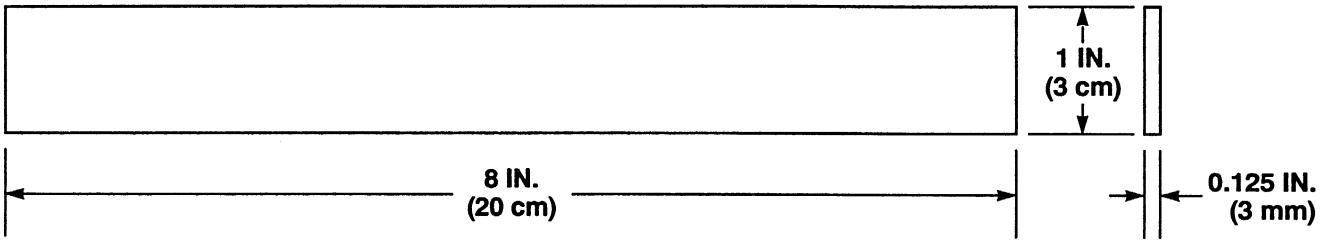

Fabricate steering stop plate from 1/8 in. (3mm) thick mild steel stock. Using a hacksaw, cut to dimension shown. File off rough edges.

D-12. BAR-BRAKE RETURN SPRING REMOVAL TOOL.

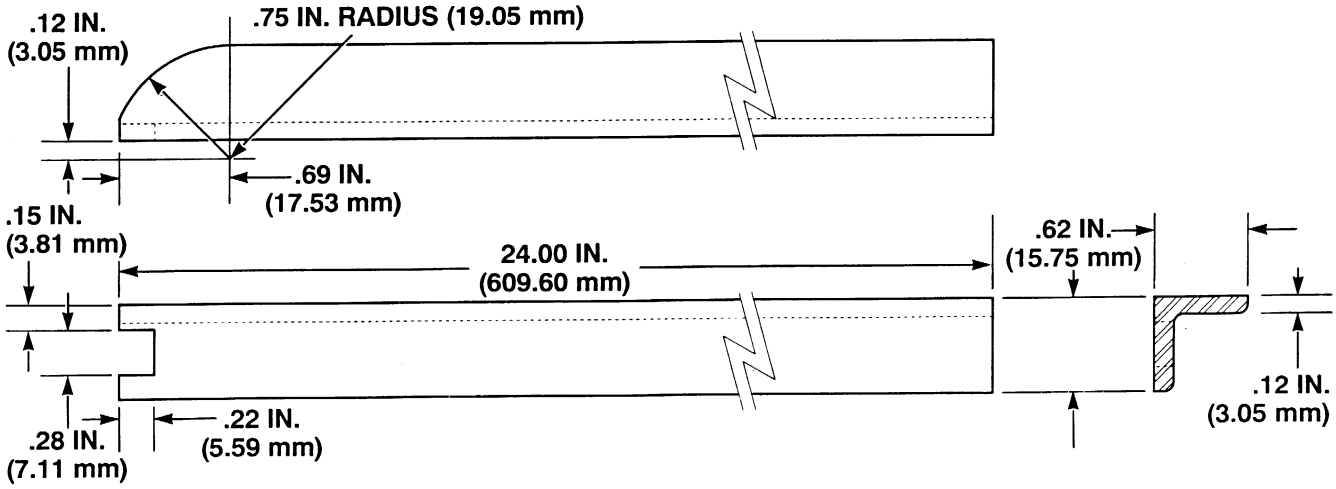

Fabricate bar-brake return spring removal tool from ASTM A36 angle aluminum. Using a hacksaw, cut to dimension shown. File off rough edges.

D-13. ADAPTER,TORQUE, 3/4 IN. DRIVE.

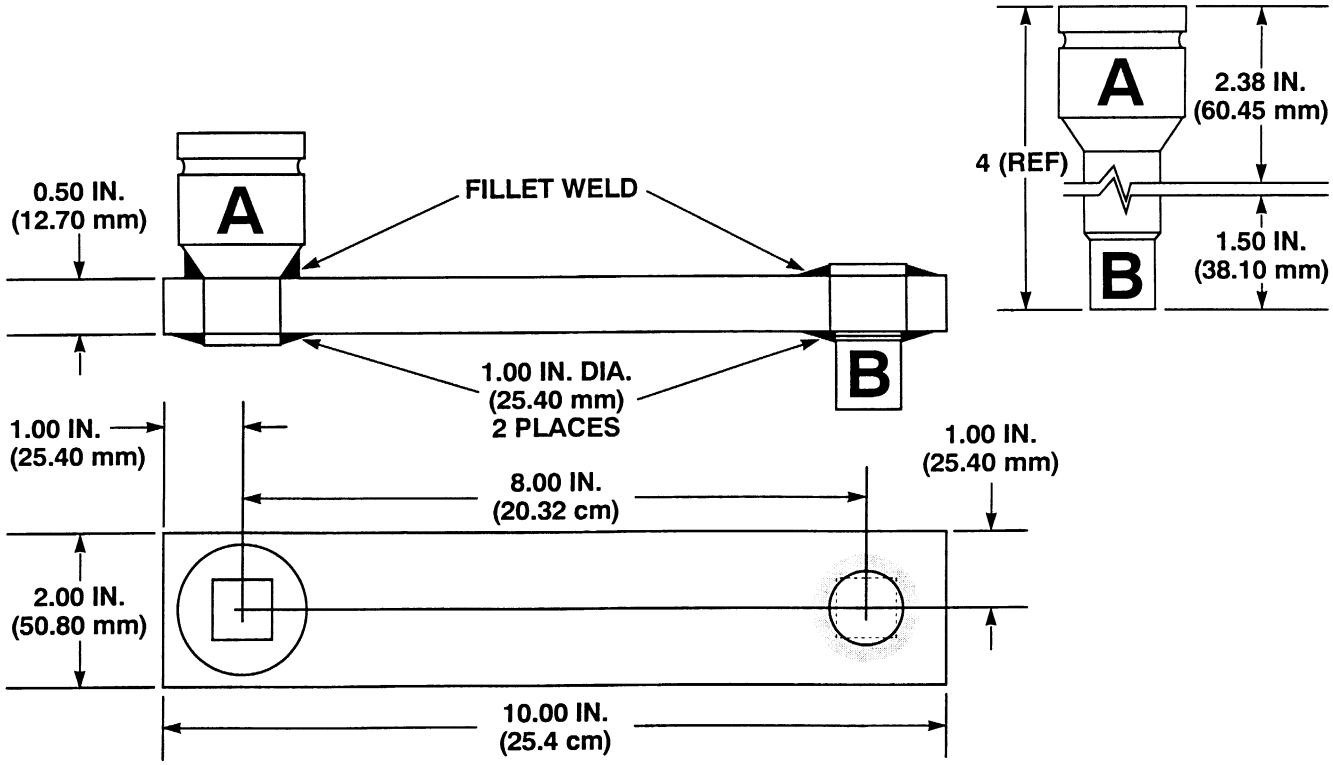

Fabricate torque adapter from Extension, P/N L32, NSN 5120-00-273-9208, and bar stock, Spec 23 or better. Cut part A and part B to dimensions shown.

D-14. JUMPER HARNESS (DDEC III).

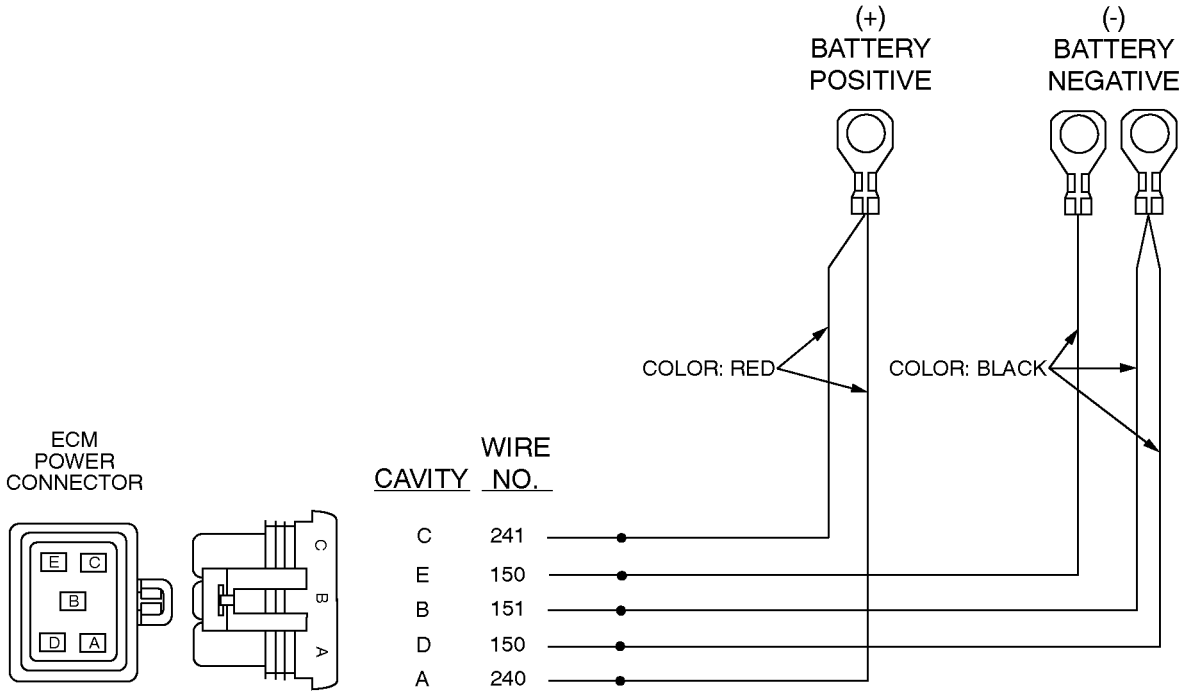

(1) Fabricate from 16-gage wire.

(2) Using wire cutters, cut five pieces of 16-gage wire to 180 in. (457 cm).

(3) Strip both ends of each wire .25 inch (6.4 mm).

(4) Crimp five terminals (PN 12077413) and five cable seals (PN 12015193) on wires.

(5) Insert terminals and cable seals into connector body (PN 12124634) as illustrated.

(6) Secure terminals and cable seals in connector body with secondary lock (PN 12052816).

(7) Attach terminals (PN D-351-38) to other end of wires 150, 150 & 151, and 240 & 241, as illustrated.

APPENDIX E

TORQUE LIMITS

E-1. SCOPE.

This section provides general torque limits for the screws, hoses and fittings used on the truck. Special torque limits are listed in the maintenance procedures for applicable components. The general torque limits given in this appendix shall be used when specific torque limits are not indicated in the maintenance procedure. These general torque limits cannot be applied to screws that retain rubber components. The rubber components will be damaged before the torque limit is reached. If a special torque limit is not given in the maintenance instructions, tighten the screw or nut until it touches the metal bracket then tighten it one more turn.

E-2. TORQUE LIMITS.

Table E-1 lists the torque limits for wet flange nuts. Table E-2 lists the torque limits for wet socket head capscrews. Table E-3 lists dry torque limits for capscrews. Dry torque limits are used on screws that do not have high pressure lubricants applied to the threads. Table E-4 lists wet torque limits for capscrews. Wet torque limits are used on screws that have high pressure lubricants applied to the threads. Table E-5 lists the torque limits for SAE 37 degree flare hose connections. Table E-6 lists the torque limits for SAE 45 degree flare hose connections. Table E-7 lists the torque limits for ORS preformed packing face seal hose connections. Table E-8 lists the torque limits for NPSM swivel connections.

E-3. HOW TO USE TORQUE TABLE.

a. Screws and Nuts.

(1) Measure the diameter of the screw you are installing with a ruler.

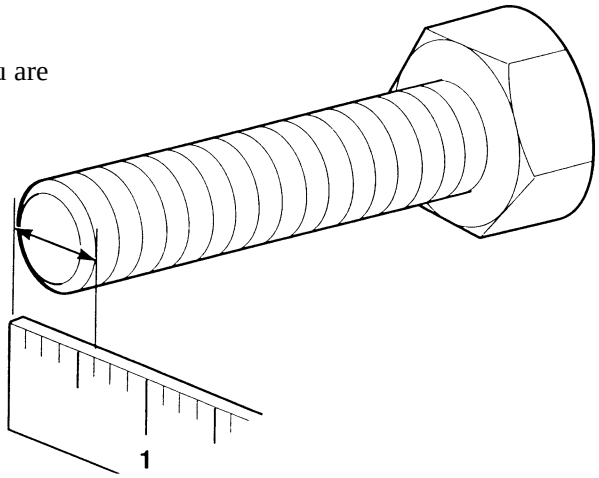

E-3. HOW TO USE TORQUE TABLE (CONT).

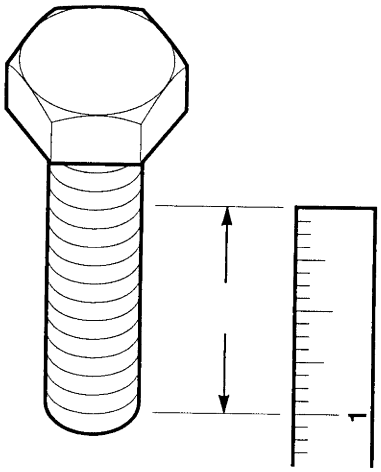

(2) Measure out one inch with a ruler and count the number of threads per inch.

(3) Under the heading SIZE, look down the left hand column until you find the diameter of the screw you are installing (there will usually be two lines beginning with the same size).

(4) In the second column under SIZE, find the number of threads per inch that matches the number of threads per inch you counted in Step 2. (Not required for metric screws).

(5) To find the grade screw you are installing, match the markings on the head to the correct picture of CAPSCREW HEAD MARKINGS on the torque table.

(6) Look down the column under the picture you found in Step 5. until you find the torque limit (lb-ft or N·m) for the diameter and threads per inch of the screw you are installing.

(7) Use wet torque values.

CAPSCREW HEAD MARKINGS

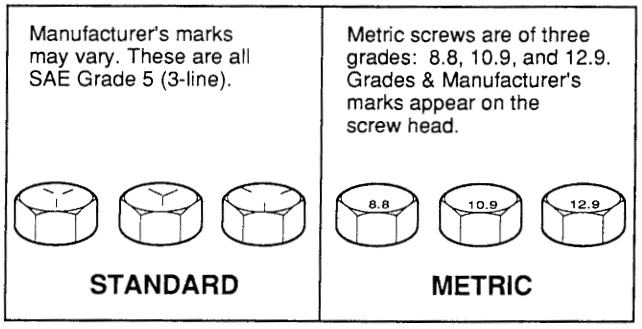

Table E-1. Torque Limits For Wet Flange Nuts

SPIRALOCK FLANGE NUT MARKINGS GRADE 8	DIAMETER IN.	DIAMETER MM	THREADS PER INCH	TORQUE LB-FT	TORQUE N·m
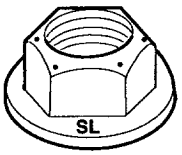	1/4	6.35	20	15	20
	5/16	7.94	18	25	34
	3/8	9.65	16	45	61
	1/2	12.70	13	110	149
	5/8	15.87	11	210	285
	3/4	19.05	10	375	508

Table E-2. Torque Limits For Wet Socket Head Cap Screws

SOC HEAD/12 PT.	TORQUE IN FT. LBS. (CAP SCREWS) LUBED		
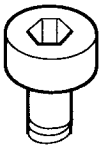	SIZE	SOC HD OR 12 PT	SOC FLAT HD
	.10-24	5	2.5
	.25-20	12	6
	.31-18	25	12
	.38-16	44	22
SOC FLAT HEAD 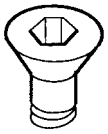	.50-13	70	36
	.56-12	106	53
	.62-11	212	106
	.75-10	375	187
	1.00-8	781	

b. Hoses and Fittings.

NOTE

Most fluid piping system sizes are measured by dash numbers. These are universally used abbreviations for the size of the component expressed as the numerator of the fraction with the denominator always being 16. For example, a -04 port is 4/16 or 1/4-inch. Dash numbers are usually nominal (in name only) and are abbreviations that make ordering of components easier.

(1) Measure the I.D./O.D. diameter with a caliper as shown.

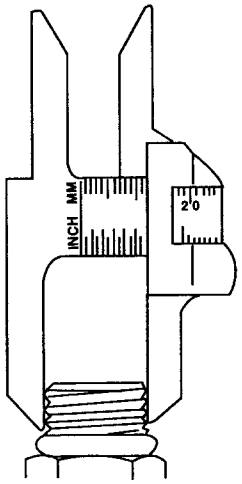

O.D.
(MALE THREADS)

(2) Under the heading MALE THREAD O.D. and FEMALE THREAD I.D., match the measurements with the row in table to determine proper torque.

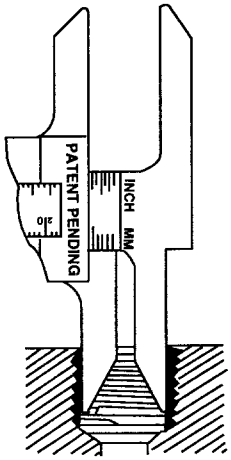

I.D.
(FEMALE THREADS)

(3) To find the sealing surface angle, use a protractor and measure the sealing surface parallel to the center line of the fitting.

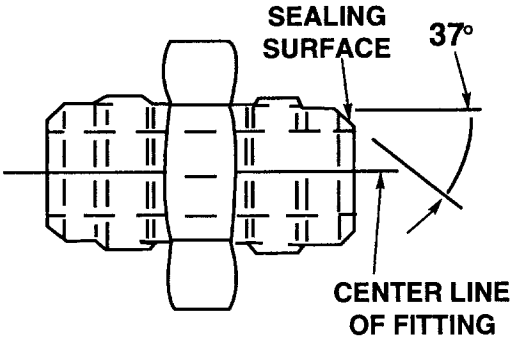

Table E-3. Torque Limits For Dry Fasteners

CAPSCREW HEAD MARKINGS

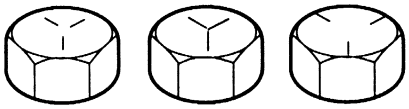

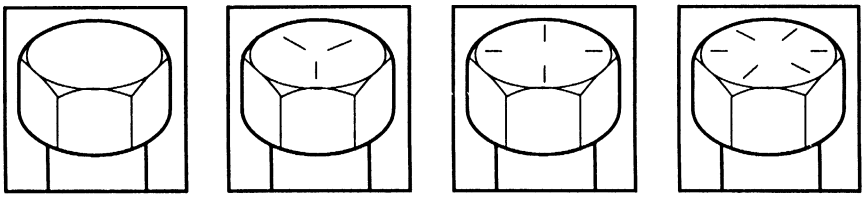

Manufacturer's marks may vary.
These are all SAE Grade 5 (3-line).

SIZE			TORQUE							
			SAE GRADE NO. 2		SAE GRADE NO. 5		SAE GRADE NO. 6 or 7		SAE GRADE NO. 8	
DIA. INCHES	THREADS PER INCH	MILLIMETERS	POUNDS FEET	NEWTON METERS	POUNDS FEET	NEWTON METERS	POUNDS FEET	NEWTON METERS	POUNDS FEET	NEWTON METERS
1/4	20	6.35	5	7	8	11	10	14	12	16
1/4	28	6.35	6	9	10	14	12	16	14	19
5/16	18	7.94	11	15	17	23	21	28	25	34
5/16	24	7.94	12	16	19	26	24	33	25	34
3/8	16	9.53	20	27	30	41	40	54	45	61
3/8	24	9.53	23	31	35	47	45	61	50	68
7/16	14	11.11	30	41	50	68	60	81	70	95
7/16	20		35	47	55	75	70	95	80	108
1/2	13	12.70	50	68	75	102	95	129	110	149
1/2	20		55	75	90	122	100	136	120	163
9/16	12	14.29	65	88	110	149	135	183	150	203
9/16	18		75	102	120	163	150	203	170	231
5/8	11	15.88	90	122	150	203	190	258	220	298
5/8	18		100	136	180	244	210	285	240	325
3/4	10	19.05	160	217	260	353	320	434	380	515
3/4	16		180	244	300	407	360	488	420	569
7/8	9	22.23	140	190	400	542	520	705	600	814
7/8	14		155	210	440	597	580	786	660	895
1	8	25.40	220	298	580	786	800	1085	900	1220
1	12		240	325	640	868	860	1166	1000	1356
1-1/8	7	25.58	300	407	800	1085	1120	1519	1280	1736
1-1/8	12		340	461	880	1193	1260	1709	1440	1953
1-1/4	7	31.75	420	597	1120	1519	1580	2142	1820	2468
1-1/4	12		460	624	1240	1681	1760	2387	2000	2712
1-3/8	6	34.93	560	759	1460	1980	2080	2820	2380	3227
1-3/8	12		640	868	1680	2278	2380	3227	2720	3688
1-1/2	6	38.10	740	1003	1940	2631	2780	3770	3160	4285
1-1/2	12		840	1139	2200	2983	3100	4204	3560	4827

Table E-4. Torque Limits For Wet Fasteners

CAPSCREW HEAD MARKINGS

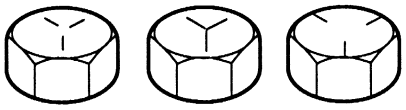

Manufacturer's marks may vary.
These are all SAE Grade 5 (3-line).

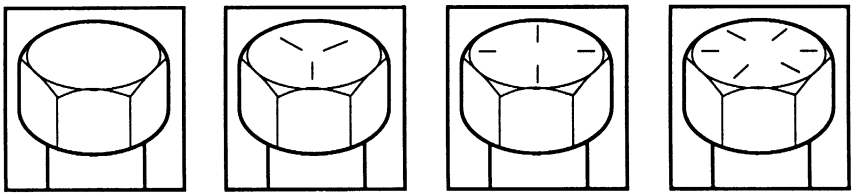

SIZE			TORQUE							
			SAE GRADE NO. 2		SAE GRADE NO. 5		SAE GRADE NO. 6 or 7		SAE GRADE NO. 8	
DIA. INCHES	THREADS PER INCH	MILLIMETERS	POUNDS FEET	NEWTON METERS	POUNDS FEET	NEWTON METERS	POUNDS FEET	NEWTON METERS	POUNDS FEET	NEWTON METERS
1/4	20	6.35	4	6	6	8	8	11	9	12
1/4	28	6.35	5	7	7	9	9	12	10	14
5/16	18	7.94	8	11	13	18	16	22	18	24
5/16	24	7.94	9	12	14	19	18	24	20	27
3/8	16	9.53	15	20	23	31	30	41	35	47
3/8	24	9.53	17	23	25	34	30	41	35	47
7/16	14	11.11	24	33	35	47	45	61	55	75
7/16	20		25	34	40	54	50	68	60	81
1/2	13	12.70	35	47	55	75	70	95	80	108
1/2	20		40	54	65	88	80	108	90	122
9/16	12	14.29	50	68	80	108	100	136	110	149
9/16	18		55	75	90	122	110	149	130	176
5/8	11	15.88	70	95	110	149	140	190	170	231
5/8	18		80	108	130	176	160	217	180	244
3/4	10	19.05	120	163	200	271	240	325	280	380
3/4	16		140	190	220	298	280	380	320	434
7/8	9	22.23	110	149	300	407	400	542	460	624
7/8	14		120	163	320	434	440	597	500	678
1	8	25.40	160	217	440	597	600	814	680	922
1	12		170	231	480	651	660	895	740	1003
1-1/8	7	25.58	220	298	600	814	840	1139	960	1320
1-1/8	12		260	353	660	895	940	1275	1080	1464
1-1/4	7	31.75	320	434	840	1139	1100	1492	1360	1844
1-1/4	12		360	488	920	1248	1320	1790	1500	2034
1-3/8	6	34.93	420	570	1100	1492	1560	2115	1780	2414
1-3/8	12		460	624	1260	1709	1780	2414	2040	2776
1-1/2	6	38.10	560	760	1460	1980	2080	2820	2360	3200
1-1/2	12		620	841	1640	2224	2320	3146	2660	3607

E-5. Torque Limits For 37 Degree Flare Hose Connections

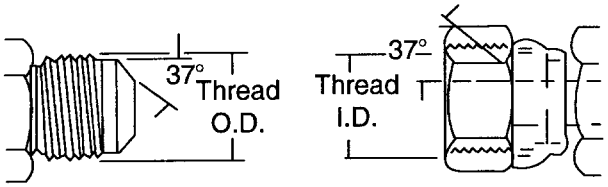

Male Half **Female Half**

INCH SIZE	DASH NO.	THREAD SIZE	TORQUE LB.FT.	TORQUE N·m
1/4	04	7/16-20	11-12	15-16
3/8	06	9/16-18	18-21	24-28
1/2	08	3/4-16	36-39	49-53
5/8	10	7/8-14	57-62	77-84
3/4	12	1 1/16-12	79-87	107-118
7/8	14	1 3/16-12	83-91	113-123
1	16	1 5/16-12	108-113	146-153
1 1/4	20	1 5/8-12	127-133	172-180
1 1/2	24	1 7/8-12	158-167	214-224
2	32	2 1/2-12	245-258	332-350

Table E-6. Torque Limits For 45 Degree Flare Hose Connections

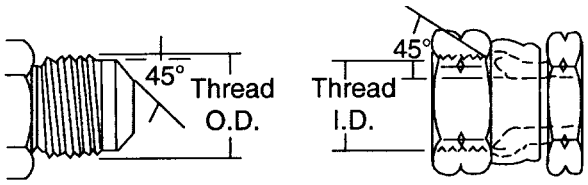

Male Half **Female Half**

INCH SIZE	DASH NO.	THREAD SIZE	TORQUE LB.FT.	TORQUE N·m
1/4	04	7/16-20	8-9	11-12
3/8	06	5/8-18	18-20	24-27
1/2	08	3/4-16	36-38	49-51
5/8	10	7/8-14	52-54	70-73
3/4	12	1 1/16-14	71-74	97-100

Table E-7. Torque Limits For ORS Preformed Packing Face Seal Hose Connections

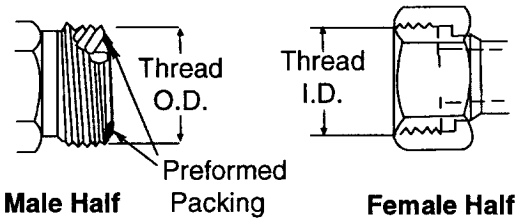

INCH SIZE	DASH NO.	THREAD SIZE	TORQUE LB.FT.	TORQUE N·m
1/4	04	9/16-18	10-12	14-16
3/8	06	11/16-16	18-20	24-27
1/2	08	13/16-16	32-35	43-47
5/8	10	1-14	46-50	62-68
3/4	12	1 3/16-12	65-70	88-95
1	16	1 7/16-12	108-113	146-153
1 1/4	20	1 11/16-12	127-133	172-180
1 1/2	24	2-12	158-167	214-226

Table E-8. Torque Limits For NPSM Swivel Connections

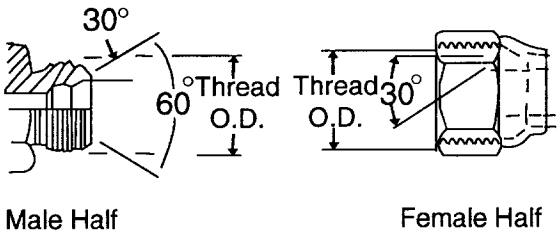

INCH SIZE	DASH NO.	THREAD SIZE	TORQUE LB.FT.	TORQUE N·m
1/8	02	1/8-27	3-4	4-5
1/4	04	1/4-18	10-11	14-15
3/8	06	3/8-18	16-18	22-24
1/2	08	1/2-14	25-27	34-37
3/4	12	3/4-14	46-48	62-65
1	16	1-1 1/2	80-83	108-113
1 1/4	20	1 1/4-11/2	130-134	176-182
1 1/2	24	1 1/2-11/2	160-164	217-222
2	32	2-11/2	170-174	231-240

APPENDIX F

MANDATORY REPLACEMENT PARTS

Section I. INTRODUCTION

F-1. SCOPE.

This appendix lists all mandatory replacement parts required for performance of Unit Support Maintenance of the PLS truck. It authorizes the requisitioning, issue, and disposition of consumable repair parts. All consumable repair parts listed in the maintenance tasks are listed here for ease of reference.

F-2. EXPLANATION OF COLUMNS (SECTION II).

a. Column (1) - Replacement Part Reference Code. This number is assigned to the entry in the listing and is referenced in the narrative task box to identify the part e.g., Clamp (Item 12, Appendix F).

b. Column (2) - Nomenclature. Indicates the federal item name and, if required, a description to identify the item.

c. Column (3) - Part Number. This is the vendor number assigned to the item.

d. Column (4) - National Stock Number. This is the National Stock Number assigned to the item; use it to request or requisition the item.

Section II. MANDATORY REPLACEMENT PARTS LIST

(1) Index No.	(2) Nomenclature	(3) Part Number	(4) National Stock Number
1	Belt Set, (3)	3113452	
2	Belt Set, Vee, (2)	1934800	3030-00-492-8106
3	Bushing	1X1/4PTR-B	4730-01-338-1459
4	Bushing	12406FX	5365-00-402-5376
5	Bypass Valve	A-DF-216	4820-01-359-1067
6	Cable, Drain Valve	SN-153	4010-01-348-6039
7	Cap, End Splice	7040700	
8	Capacitor	1972630	5910-01-364-9163
9	Channel	126916B	2540-01-155-5836
10	Channel, Rubber	101-2203	5330-01-267-7542
11	Channel, Rubber	126890	5330-01-155-1938
12	Clamp	24433	5340-01-131-8313
13	Clamp	32664AX	5340-01-131-8312
14	Clamp	5137620	5340-01-114-5623
15	Clamp	700-118	4730-01-212-8276
16	Clamp	700-120	4730-01-199-1458
17	Clamp	700-88	5340-01-355-7648
18	Clamp	90359-A	4730-01-353-9723
19	Clamp	B54-32780	4730-00-278-2523
20	Clamp	C0V-2515	5340-01-060-8686
21	Clamp	51689AX	5340-01-167-4146
22	Clamp, Loop	H360-4-2	5340-01-151-8391
23	Clip, Cable	57972	5340-01-193-9654
24	Clip, Push	H360-6-2	5340-01-224-8368
25	Contact, Electrical	12034051	5940-01-342-0712
26	Contact, Electrical	12084563	5999-01-321-1925
27	Contact, Electrical	12089305	5999-01-319-7394
28	Cross and Bearing	5-103X	2530-01-244-4949
29	Dust Boot	12010293	5975-01-226-8078
30	Dust Boot	12015323	5975-01-310-5011
31	Element, Filter	100696-E	2940-01-213-1135
32	Element, Filter	1317673	2940-01-347-7460

Section II. MANDATORY REPLACEMENT PARTS LIST (Cont)

(1) Index No.	(2) Nomenclature	(3) Part Number	(4) National Stock Number
33	Element, Filter	2020-PMOR	2910-01-344-5791
34	Element, Strainer	5106910	4730-01-160-5668
35	Fastener And Seal Kit	50009501	5340-01-363-9215
36	Fastener And Seal Kit	50009503	5330-01-358-9309
37	Fastener And Seal Kit	50009504	5330-01-358-9308
38	Filter and Gasket	23518524	2940-01-314-1345
39	Filter Element Kit	MTP-95-551	4330-01-026-6371
40	Filter, Fuel	23518481	2910-01-423-2859
41	Filter, Hydraulic	1314130	4330-01-232-8305
42	Fitting, Lubrication	MS15002-3	4730-00-172-0015
43	Gasket	02343-02	5330-01-193-5315
44	Gasket	0-615C46XA	5330-01-348-8345
45	Gasket	11007B	5330-01-344-0539
46	Gasket	1198559	5330-01-358-8219
47	Gasket	1199479	5330-01-234-2618
48	Gasket	12357897	6220-01-319-5509
49	Gasket	14079550	5330-00-107-3925
50	Gasket	1728230	5330-01-347-9858
51	Gasket	1958330	5330-01-358-5561
52	Gasket	23016336	5330-01-328-7634
53	Gasket	5100860	5300-01-058-8267
54	Gasket	5104081	5330-01-078-7186
55	Gasket	5117786	5330-00-781-7117
56	Gasket	5130995	5330-00-980-1546
57	Gasket	5136678	5330-00-198-7953
58	Gasket	5766-1211-6	5330-01-242-2698
59	Gasket	731740-002	
60	Gasket	7716570	5330-00-771-6570
61	Gasket	8921312	5330-01-206-3263
62	Gasket	8924413	
63	Gasket	92-158	5330-01-058-7118
64	Gasket	A/281	5330-01-352-1997

Section II. MANDATORY REPLACEMENT PARTS LIST (Cont)

(1) Index No.	(2) Nomenclature	(3) Part Number	(4) National Stock Number
65	Gasket	DIN7603A 14X18	
66	Gasket	EE100969	9330-01-185-4466
67	Gasket	M25988/1-246	5330-01-189-6351
68	Gasket	NE-71A	5330-01-277-5103
69	Gasket Strip	2050690	5330-01-394-8346
70	Gasket, Breather Filler	FB-7	5330-01-406-8221
71	Gasket, Headlight	1400940	5330-01-234-7640
72	Grommet	459-A	5330-01-049-0550
73	Guide Assy, Pawl	NA1779M195	3040-01-351-4061
74	Guide Assy, Pawl	NA22297U4597	3040-01-350-3980
75	Hardware, Mounting	GS-2655	5340-01-365-3144
76	Housing, Tach	5106771	6680-01-086-4470
77	Insulation	1949200	2540-01-370-6144
78	Insulation	1949220	2540-01-367-7392
79	Insulation	1949230	2540-01-368-9962
80	Insulation	C04610	2510-01-389-0708
81	Isolator	23512307	5340-01-414-2177
82	Journal And Bearing Kit	5-438X	2520-01-339-0533
83	Journal And Bearing Kit	5-510X	2520-01-339-0532
84	Journal And Bearing Kit	5-515X	2520-01-289-8307
85	Key	1363190	5315-01-165-2188
86	Kit, Mounting	893236	4810-01-400-6041
87	Kit, Packing	SK-10-4	
88	Lamp	E-013-001	6210-01-345-6315
89	Locknut	0-952A14	5310-00-725-9479
90	Locknut	10095	5310-01-063-1755
91	Locknut	110310A	5310-01-159-8178
92	Locknut	110311A	5310-01-111-0645
93	Locknut	110312A	5310-01-150-5918
94	Locknut	112556A	5310-01-372-6378
95	Locknut	114358AX	
96	Locknut	115307A	5310-01-151-1036

Section II. MANDATORY REPLACEMENT PARTS LIST (Cont)

(1) Index No.	(2) Nomenclature	(3) Part Number	(4) National Stock Number
97	Locknut	1244954-2	5310-00-074-1387
98	Locknut	1333510	5310-01-340-5671
99	Locknut	1334320	5310-01-161-9123
100	Locknut	1408910	5310-01-111-0645
101	Locknut	1437220	
102	Locknut	1525130	5310-01-357-8840
103	Locknut	1571850	5310-01-288-5096
104	Locknut	1571870	5310-01-352-7732
105	Locknut	1598030	5310-01-342-8595
106	Locknut	1600460	5310-01-346-9445
107	Locknut	1605420	5310-00-542-0087
108	Locknut	203145	5310-00-012-0368
109	Locknut	21NE-040	5310-01-066-6759
110	Locknut	22NM04	5310-00-207-9341
111	Locknut	2-X-5731	5310-00-447-4251
112	Locknut	40X-1239	5310-01-377-1996
113	Locknut	41NE120	5310-00-530-0239
114	Locknut	434-A	5310-01-063-8970
115	Locknut	44NTE-1210	5310-01-346-3789
116	Locknut	5340910	5310-01-280-6538
117	Locknut	60860AX	
118	Locknut	60861A	5310-01-061-5678
119	Locknut	7-660-082504	5310-01-354-8734
120	Locknut	767HX1	5310-01-058-3183
121	Locknut	76985	5310-00-432-3959
122	Locknut	88881	5310-01-349-0759
123	Locknut	93604342	5310-01-081-5351
124	Locknut	AN365-1024A	5310-00-208-1918
125	Locknut	ATS2-518	5340-01-196-0380
126	Locknut	F41NE2076-1216	5310-01-357-4700
127	Locknut	L-10-MNS-500-X-1	5310-01-345-2350
128	Locknut	MS17828-7C	5310-01-117-5055

Section II. MANDATORY REPLACEMENT PARTS LIST (Cont)

(1) Index No.	(2) Nomenclature	(3) Part Number	(4) National Stock Number
129	Locknut	MS21044C08	5310-00-982-6814
130	Locknut	MS51849-74	5305-00-470-3321
131	Locknut	MS51922-1	5310-00-088-1251
132	Locknut	MS51922-17	5310-00-087-4652
133	Locknut	MS51922-9	5310-00-984-3806
134	Locknut	MS51943-31	5310-00-061-4560
135	Locknut	MS51968-14	5310-00-732-0560
136	Locknut	N08	5310-00-185-6389
137	Locknut	N9406	5310-01-362-6171
138	Locknut	N9410	5310-01-348-8398
139	Locknut	SN104-NM-22	5310-01-355-0217
140	Locknut	T893R	5310-01-288-1116
141	Locknut	TLA-1213-GRC	5310-01-081-8244
142	Locknut	TLA-3410-GRC	5310-01-080-5747
143	Locknut	TLA-3816-GRC	5310-01-222-9097
144	Locknut	TLA-7809-GRC	5310-01-107-3586
145	Locknut	V75700689	5310-01-345-3757
146	Locknut	XB-769	5310-01-150-8599
147	Lockscrew	11504603	5305-01-336-6757
148	Lockscrew	31 WLFS 1420	5310-01-393-7077
149	Lockwasher	100-0000-051	5310-00-045-3299
150	Lockwasher	114021	5310-01-081-0798
151	Lockwasher	1244954-2	5310-00-074-1387
152	Lockwasher	1344950	5305-01-155-6107
153	Lockwasher	138526	5310-00-013-8526
154	Lockwasher	1459-254	5310-00-171-1734
155	Lockwasher	16FW008032	5310-00-988-8820
156	Lockwasher	1978HX	
157	Lockwasher	201506	5310-01-373-2539
158	Lockwasher	201946	5310-00-013-8572
159	Lockwasher	202210	5310-01-101-2490
160	Lockwasher	210104	5310-01-K49-2583
161	Lockwasher	2239HX	5310-00-209-1218

Section II. MANDATORY REPLACEMENT PARTS LIST (Cont)

(1) Index No.	(2) Nomenclature	(3) Part Number	(4) National Stock Number
162	Lockwasher	2249HX	
162.1	Lockwasher	2250HX	
163	Lockwasher	2251HX	5310-01-354-3729
164	Lockwasher	2434	5310-00-775-5139
165	Lockwasher	318B	5310-01-061-5302
166	Lockwasher	318BX	
167	Lockwasher	3231	5310-00-032-1814
168	Lockwasher	351AX	5310-01-129-0450
169	Lockwasher	352A	5310-01-081-1283
170	Lockwasher	352AX	5310-01-081-1283
171	Lockwasher	353AX	5310-00-582-5965
172	Lockwasher	354AX	5310-01-068-8446
173	Lockwasher	355AX	5310-01-133-2130
174	Lockwasher	362AX	5310-01-062-3379
175	Lockwasher	371AX	5310-00-775-5139
176	Lockwasher	62ANBH-4	4730-01-349-7765
177	Lockwasher	777-A	5310-01-061-4481
178	Lockwasher	7-950-160050	5310-01-292-4150
179	Lockwasher	8104200064	5310-01-358-6624
180	Lockwasher	93613642	5310-01-068-8446
181	Lockwasher	C-972	5310-01-210-7427
182	Lockwasher	HLKW025EG	5310-01-105-2652
183	Lockwasher	L051275	5310-10-244-8747
184	Lockwasher	MS35333-37	5310-00-579-0079
185	Lockwasher	MS35333-40	5310-00-550-1130
186	Lockwasher	MS35333-51	5310-00-655-6927
187	Lockwasher	MS35335-30	5310-00-209-0788
188	Lockwasher	MS35335-31	5310-00-596-7693
189	Lockwasher	MS35335-49	5310-00-582-6714
190	Lockwasher	MS35338-100	5310-00-261-8278
191	Lockwasher	MS35338-103	5310-00-184-8971
192	Lockwasher	MS35338-15	5310-00-012-1326

Section II. MANDATORY REPLACEMENT PARTS LIST (Cont)

(1) Index No.	(2) Nomenclature	(3) Part Number	(4) National Stock Number
193	Lockwasher	MS35338-42	5310-00-045-3299
194	Lockwasher	MS35338-43	5310-00-045-3296
195	Lockwasher	MS35338-44	5310-00-582-5965
196	Lockwasher	MS35338-45	5310-00-407-9566
197	Lockwasher	MS35338-46	5310-00-637-9541
198	Lockwasher	MS35338-48	5310-00-584-5272
199	Lockwasher	MS35338-50	5310-00-820-6653
200	Lockwasher	MS35338-51	5310-00-584-7888
201	Lockwasher	MS35338-6	5310-00-010-3319
202	Lockwasher	MS35338-8	5310-00-261-7340
203	Lockwasher	MS35649-204	5310-00-954-9760
204	Lockwasher	MS45904-60	5310-00-080-9786
205	Lockwasher	MS51413-8	
206	Lockwasher	MS51848-12	5310-00-688-2195
207	Lockwasher	N405P13C16	5310-01-044-2295
208	Lockwasher	N9015	5310-01-046-0186
209	Lockwasher	N9018	5310-01-032-4827
210	Lockwasher	N9461	5310-01-348-8392
211	Lockwasher	W08	5310-01-355-8794
212	Lockwasher (#10 Stud)	85020	5310-01-373-6180
213	Nut	MS35650-103	5310-00-988-2652
214	Nut	MS51967-32	5310-00-762-6242
215	Nut	MS51967-35	5310-00-762-6241
216	Nut	MS51967-38	5310-00-762-6247
217	Nut, Push On	C12044-017-4	5310-00-110-8742
218	Nut, Stop	A1300R	
219	Nut, Tenz	1244954-2	5310-00-074-1387
220	Packing, Preformed	0526453-00	5330-00-071-6651
221	Packing, Preformed	11-222	5330-00-198-6190
222	Packing, Preformed	11350	5330-01-147-6003
223	Packing, Preformed	11639519-1	5330-00-463-0200
224	Packing, Preformed	11639519-2	5330-00-462-0907

Section II. MANDATORY REPLACEMENT PARTS LIST (Cont)

(1) Index No.	(2) Nomenclature	(3) Part Number	(4) National Stock Number
225	Packing, Preformed	2014N103-70	5330-00-213-8722
226	Packing, Preformed	2-016N552-90	5330-01-115-8225
227	Packing, Preformed	2-021N0552	4730-00-541-0938
228	Packing, Preformed	22012-6	5330-00-200-8125
229	Packing, Preformed	22012-8	5330-00-996-8627
230	Packing, Preformed	2-238N674-70	5330-00-172-7223
231	Packing, Preformed	22617-10	5330-01-040-4772
232	Packing, Preformed	22617-12	5330-00-228-7196
233	Packing, Preformed	22617-16	5330-01-168-0885
234	Packing, Preformed	22617-20	5330-01-168-1802
235	Packing, Preformed	22617-4	
236	Packing, Preformed	22617-6	5330-01-198-8439
237	Packing, Preformed	22617-8	5330-01-224-2273
238	Packing, Preformed	2282320	
239	Packing, Preformed	2282330	
240	Packing, Preformed	23017303	5330-01-334-9946
241	Packing, Preformed	23504641	5330-01-336-2997
242	Packing, Preformed	235063	5330-00-454-0370
243	Packing, Preformed	262332	5330-00-443-2045
244	Packing, Preformed	3-916N0552	
245	Packing, Preformed	3-924N552-90	5330-01-038-3074
246	Packing, Preformed	52-49529-00	5330-01-348-8331
247	Packing, Preformed	A-103	5330-00-115-6327
248	Packing, Preformed	A307777000-8	5330-00-920-4157
249	Packing, Preformed	ARP568-014	5330-01-213-6795
250	Packing, Preformed	FF9446-14	
251	Packing, Preformed	FF9446-18	5330-01-092-5503
252	Packing, Preformed	FF9446-21	5330-01-269-4323
253	Packing, Preformed	FF9446-219	5330-00-013-7784
254	Packing, Preformed	FF9446-222	5330-00-984-3808
255	Packing, Preformed	FF9446-25	5330-01-269-6152
256	Packing, Preformed	FF9855-12	5330-01-376-9629

Section II. MANDATORY REPLACEMENT PARTS LIST (Cont)

(1) Index No.	(2) Nomenclature	(3) Part Number	(4) National Stock Number
257	Packing, Preformed	GG108-NP04-10	4730-01-346-4684
258	Packing, Preformed	MS28775-013	5331-00-684-3420
259	Packing, Preformed	MS28775-223	5330-00-171-6649
260	Packing, Preformed	MS29512-16	5330-00-263-8034
261	Packing, Preformed	V75500858	5330-01-350-6007
262	Packing, Preformed	VS-1087-4	5330-01-371-5119
263	Packing, Pump Piston	P4-4	5330-00-122-0624
264	Pad, Rubber	1946480	5330-01-363-7020
265	Pin, Cotter	0900806-1	5315-00-254-1657
266	Pin, Cotter	126761A	5315-01-157-0960
267	Pin, Cotter	1749HX	
268	Pin, Cotter	1840070	
269	Pin, Cotter	L6451-101	5315-00-187-9591
270	Pin, Cotter	MS24665-134	5315-00-839-5820
271	Pin, Cotter	MS24665-151	5315-00-815-1405
272	Pin, Cotter	MS24665-319	5315-01-267-7570
273	Pin, Cotter	MS24665-353	5315-00-839-5822
274	Pin, Cotter	MS24665-491	5315-00-059-0206
275	Pin, Cotter	MS24665-498	5315-00-849-9854
276	Pin, Cotter	MS24665-624	5315-00-059-0217
277	Pin, Cotter	MS24665-627	5315-00-013-7508
278	Pin, Cotter	XB-T-60	5315-01-204-4893
279	Pin, Roll	1840070	
280	Pin, Roll	XB-21-S-187-1250	5315-01-448-0604
281	Pin, Roll	XB-21-S-312-1250	
282	Pin, Roll	XB-21-S-312-2500	
283	Pin, Roll	XB-21-S-500-1000	5315-01-448-0599
284	Pin, Roll	XB-S05742	
285	Pin, Spring	3145955	
286	Plug	A-LF-2550	5330-01-276-7351
287	Preformed Packing Kit	RN-60-A	4440-01-337-7324
288	Preformed Packing Kit	RN-60-V	5330-01-377-2460

Section II. MANDATORY REPLACEMENT PARTS LIST (Cont)

(1) Index No.	(2) Nomenclature	(3) Part Number	(4) National Stock Number
289	Quick Edge	75000317	2510-01-176-1177
290	Retainer, Packing	8-238N300-90	5330-01-065-5959
291	Rubber Liner	124660A	
292	Rubber Strip	70-17-30	9320-00-491-5351
293	Screw	118941A	5305-01-156-5099
294	Screw	1344950	5305-01-155-6107
295	Screw	1778HX	5305-01-133-2114
296	Screw	23512308	5306-01-411-6384
297	Screw	5103642	5305-01-078-1999
298	Screw	59030AX	5305-00-984-6210
299	Screw	B71-10015-002	5305-01-352-2066
300	Screw	MS35206-267	5305-00-984-6214
301	Screw	MS35207-267	5305-00-993-1851
302	Screw	MS90725-34	5306-00-225-8499
303	Screw	MS90725-60	5305-00-269-3211
304	Screw	MS90725-8	5305-00-225-3839
305	Screw	SPLE101D05	5306-01-156-8678
306	Screw (Sheet Metal)	1381HX1	5305-01-134-2052
307	Screw Washer Assembly	1756840	5305-01-354-5708
308	Screw Washer Assembly	2050700	5305-01-394-3551
309	Screw, Self-locking	02092	5305-00-696-5115
310	Screw, Self-locking	1367HX1	5305-01-062-1017
311	Screw, Self-locking	23015458	5306-01-363-4057
312	Screw, Self-locking	96-212	5305-01-205-0041
313	Screw, Self-tapping	1324510	5305-01-157-5624
314	Screw, Self-tapping	1345280	5305-01-159-8544
315	Screw, Self-tapping	1354490	5305-01-274-0028
316	Screw, Self-tapping	1723180	5305-01-145-4003
317	Screw, Self-tapping	54067AX	5305-01-150-8714
318	Screw, Tapping	2763HX	5305-01-353-6120
319	Screws, Self-locking	31 WLFS 51618-062	5306-01-350-8223
320	Seal	1862760	

Section II. MANDATORY REPLACEMENT PARTS LIST (Cont)

(1) Index No.	(2) Nomenclature	(3) Part Number	(4) National Stock Number
321	Seal	1941570	5330-01-363-7019
322	Seal	2282340	
323	Seal	2282350	
324	Seal	23504641	5330-01-336-2997
325	Seal	3S9643-00	5330-00-246-6380
326	Seal	5104105	5330-01-163-8178
327	Seal	75001366	9390-01-179-4508
328	Seal	NE-71A	5330-01-277-5103
329	Seal, Door	75001366	9390-01-179-4508
330	Seal, Plain	5103646	5330-01-088-2740
331	Seal, Preformed	101-2203	5330-01-267-7542
332	Seal, Ring	N1205B1666	5330-01-351-7881
333	Seal, Ring	N1205C1667	5330-01-350-5385
334	Splice, Conductor	327025	5940-01-368-9579
335	Stem, Valve	N-1268	2640-01-354-9424
336	Strip, Nut	128757A	5310-01-157-0894
337	Strip, Rubber	350907	5330-01-156-5266
338	Strip, Rubber	352731	5330-00-114-2073
339	Stud	52-49523-00	5307-01-348-7046
340	Tape, Rubber Adhesive	SJ5816	9320-01-299-3332
341	U-joint Kit	5-471X	2520-01-359-8444
342	Valve Core	8500V	2640-00-004-8297
343	Washer	1605640	5310-01-383-7327
344	Washer	MS27183-10	5310-00-809-4058
345	Washer	MS27183-7	5310-00-809-8544
346	Washer	MS27183-8	5310-00-809-8546
347	Washer	MS37183-62	5310-01-380-3474
348	Washer	V75503675	5310-01-389-2364
349	Washer, Copper	31425BX	2520-01-041-3542
350	Washer, Key	TW107	5310-01-014-5136
351	Washer, Plastic	16FW008032	5310-00-988-8820
352	Washer, Rubber	8-325N300-90	5330-00-156-3208

Section II. MANDATORY REPLACEMENT PARTS LIST (Cont)

(1) Index No.	(2) Nomenclature	(3) Part Number	(4) National Stock Number
353	Washer, Sealing	1760040	5310-01-353-2062
354	Washer, Star	50001716	5310-01-372-6391

APPENDIX G

TOOL IDENTIFICATION LIST

Section I. INTRODUCTION

G-1. SCOPE.

This appendix lists all of the tools needed to repair the truck.

G-2. GENERAL.

This appendix is a list of tools, both common and special, test equipment and tool kits used at unit level to repair the truck. This list is arranged alphabetically and shows the nomenclature, part number (P/N), National Stock Number (NSN) and references when applicable. The index number corresponds to the index number found in the task box of maintenance procedures.

Section II. COMMON TOOLS, TEST EQUIPMENT AND TOOL KITS

Item No.	Description	Part No.	NSN	Reference
1	Adapter, Torque Wrench	J-8932-B	5120-00-019-5232	
2	Adapter, Radiator	J-29003-A	4910-01-170-4929	
3	Analyzer Set, STE/ICE-R	12259266	4910-01-222-6589	
4	Bar, Crow	10501985	5120-00-224-1390	SC 4910-95-A74
5	Bar, Wrecking	130	5120-00-293-0665	SC 4910-95-A72-HR
6	Bit, Set	38699-1	5120-01-170-4454	SC 4910-95-A72-HR
7	Caliper, Micrometer, Inside	124B	5120-00-221-1921	
8	Cap And Plug Set	10935405	5340-00-450-5718	
9	Caps, Vise Jaw	GGG-C-137	5120-00-221-1506	SC 4910-95-A74
10	Clamp, Machinist's	GGG-C-406	5120-00-222-1612	SC 4910-95-A72-HR
11	Compressor Unit, Air	MIL-C-13874	4130-00-752-9633	SC 4910-95-A72-HR
12	Connector Remover (DEUTSCH)	114010	5120-01-158-4707	
13	Crimping Tool	J35123	5120-01-355-0844	
14	Crimping Tool (Cannon)	995-0001-904	5120-01-374-8937	
15	DDEC Repair Kit	J-35888	2815-01-355-5993	
16	Dispensing Pump	FEDXXD370	4930-00-287-8293	SC 4910-95-A72-HR
17	Drill, Electric, Portable	WD00661	5130-00-293-1849	SC 4910-95-A74
18	Drill, Electric, Portable, 1/4 in.	1070	5130-00-889-8993	SC 4910-95-A31
19	Drill Set, Twist	GGG-D-751	5133-00-293-0983	SC 4910-95-A74
20	Drill Set, Twist	GGG-D-751	5133-00-449-6775	SC 3470-95-A02
21	Drum, Storage 57 Gal	MIL-D-6054	8110-00-082-2626	
22	Extractor Tool, Electrical	901019-3	5120-01-015-2154	
23	Extractor Tool, Electrical	305183	5120-01-020-5926	
24	Funnel	L-F-1593	7240-00-404-9795	SC 4910-95-A74

Section II. COMMON TOOLS, TEST EQUIPMENT AND TOOL KITS (CONT)

Item No.	Description	Part No.	NSN	Reference
25	Gage, Air Inflation	1506	4910-00-204-2644	
26	Gage, Belt Tension (Tensiometer)	BT-33-73BF	4935-01-254-9808	
27	Gage, Feeler	007958	5210-01-214-2138	
28	Gloves, Chemical Oil Protective	ZZ-G-381	8415-00-641-4601	SC 4910-95-A74
29	Gloves, Heavy Duty	A-A-50022	8415-00-268-7859	SC 4910-95-A72-HR
30	Goggles, Industrial	GGG-G-13	4140-00-269-7912	SC 4910-95-A74
31	Gun, Air Blow	GGG-G-770	4940-00-333-5541	SC 4910-95-A72-HR
32	Gun, Heat	500	4940-00-561-1002	
33	Hammer, Hand Soft Plastic	3-HD	5120-01-065-9037	SC 4910-95-A72-HR
34	Handle, Driver	J-3154-1	5120-00-808-5082	
35	Handler, Installer	J7079-2	5120-01-977-5578	
36	Harness, Breakout	J34517	6150-01-373-7771	
37	Hose, Drain	ZZ-H-461	4720-00-356-8557	SC 4910-95-A74
38	Insertion Tool, (Cannon)	CIT-SS-10	5120-01-374-8968	
39	Installer, Seal	J8550	5120-00-977-5579	
40	Jack, Hydraulic, Hand	5029209-111-101	5120-00-224-7330	SC 4910-95-A74
41	Jack, Kit, Hydraulic, Hand	GGG-J-60	5120-00-587-4144	
42	Jackstand, Trestle	306	4910-00-251-8013	SC 4910-95-A74
43	Measure, Liquid	MIL-M-43530	7240-00-138-7984	
44	Multimeter	ANURM105C	6625-00-999-6282	SC 4910-95-A72-HR
45	Multiplier, Torque	292	5120-00-574-9318	SC 4910-95-A72-HR
46	Pan, Drain (6 Gal)	MIL-P-45819	4940-00-795-3595	
47	Pan, Drain (4 Gal)	450	4940-00-387-9592	SC 4910-95-A74
48	Pliers, Brake Repair	131A	5120-00-690-8044	SC 4910-95-A74
49	Pliers, Retaining Ring	2BH945	5120-01-375-5699	
50	Pressure Test Kit	3SK911	4910-01-378-9068	
51	Puller Kit, Universal	1677	5180-00-423-1596	SC 4910-95-A73
52	Pulley Kit, Pump, Roof Mount	2HP645	5120-01-375-5700	
53	Reader, Diagnostic	J38500-1	4910-01-343-3508	
54	Removal Tool, Oil Filter	2304	5120-00-865-0933	SC 4910-95-A72-HR
55	Remover, Connector	J38384	5120-01-355-3012	
56	Repair Tool, Pneumatic Tire, Valve	7471	5120-00-308-3809	SC 4910-95-A74
57	Respirator, Air Filter	GGG-M-125/6	4240-00-022-2524	SC 4910-95-A72-HR
58	Rivet Gun	352	5130-00-982-8078	
59	Scriber, Machinist's, 8 To 9 In Long	68A	5120-00-221-7063	
60	Socket Set, Deepwell, 1/2 In.	GGG-W-641	5120-00-596-8622	SC 4910-95-A72-HR
61	Socket Set, 3/4 In.	GGG-W-641	5120-00-204-1999	SC 4910-95-A72-HR
62	Socket Set, 3/8 In.	221FSMY	5120-01-117-3876	SC 4910-95-A72-HR
63	Socket, Wheel Bearing Adj. Nut 3 1/4 In. 6 Pt.	1908	5120-01-144-5331	SC 4910-95-A74
64	Soldering Kit, Torch	LP-999G	3439-00-542-0531	SC 4910-94-A74

Section II. COMMON TOOLS, TEST EQUIPMENT AND TOOL KITS (CONT)

Item No.	Description	Part No.	NSN	Reference
65	Strainer Tool	FC 88A	5120-01-328-2504	
66	Tape, Measurer	GGG-T-106	5120-01-554-7085	SC 4910-95-A72-HR
67	Terminal Crimper	J35688	5120-01-355-0845	
68	Terminal Remover	J33095	5120-01-353-2534	
69	Terminal Remover	J35689-A	5120-01-357-2937	
70	Terminal Remover, Weatherpac	J36400-5	5120-01-374-8969	
71	Tester, Pressure, Radiator	J24460-01	4910-01-170-4928	
72	Tool Kit, Blind Rivet	D-100-MIL-1	5180-01-201-4978	SC 4910-95-A74
73	Tool Kit, Electric	7550526	5180-00-876-9336	SC 4910-95-A72-HR
74	Tool Kit, General Mechanic's: Automotive	SC-5180-90-N26	5180-00-177-7033	SC 5180-90-N26
75	Vise, Machinist's	504M2	5120-00-293-1439	SC 4910-95-A74
76	Weatherpac Crimper	J38852	5120-01-374-8936	
77	Wrench, Box 1/2 In.	J4242	5120-00-591-2685	
78	Wrench, Combination 1 1/16 In.	1234	5120-00-228-9515	SC 4910-95-A74
79	Wrench, Combination 1 1/8 In.	1172	5120-00-228-9516	SC 4910-95-A74
80	Wrench, Combination 1 1/4 In.	1173	5120-00-228-9517	SC 4910-95-A74
81	Wrench, Combination 1 5/16 In.	1174	5120-00-228-9518	SC 4910-95-A74
82	Wrench, Combination 1 3/8 In.	1176A	5120-00-228-9519	SC 4910-95-A74
83	Wrench, Combination 1 1/2 In.	1178	5120-00-277-8834	SC 4910-95-A74
84	Wrench, Combination 1 5/8 In.	1180	5120-01-016-7144	
85	Wrench, Combination 1 11/16 In.	A-A-1351	5120-00-184-8566	
86	Wrench, Combination 1 3/4 In.	1256	5120-00-020-8658	
87	Wrench, Combination 1 7/8 In.	1260	5120-00-020-8632	
88	Wrench, Combination 2 In.	1190	5120-00-957-3115	
89	Wrench, Combination 2 1/8 In.	1268	5120-00-203-4795	
90	Wrench, Crowfoot 1/2 In., 3/8 In Drive	FRH-1605	5120-01-114-4933	SC 4910-95-A74
91	Wrench, Pipe 3 1/2 In. Opening	GGG-W-651	5120-00-277-1485	
92	Wrench, Set, Combination	GGG-W-00645	5120-00-895-9566	SC 4910-95-CL-A74
93	Wrench Set, Socket 3/8 In. Drive	51200017510	5120-00-322-6231	SC 4910-95-A31
94	Wrench, Spanner	2HS129	5120-01-375-4502	
95	Wrench, Torque (0 To 175 Lb-Ft [0–237 N·M])	1753LDF	5120-00-640-6364	SC 4910-95-A74
96	Wrench, Torque (0 To 300 Lb-Ft [0–407 N·M])	6134A	5120-00-555-1523	SC 4910-95-A72-HR
97	Wrench, Torque (0 To 600 Lb-Ft [0–814 N·M])	SW130-301	5120-00-221-7983	SC 4910-95-A31
98	Wrench, Torque, 3/8 In. Drive (0 To 60 N·M)	TESI60	5120-01-112-9531	SC 4910-95-A72-HR
99	Zonal Separator, Oil And Water Spray Gun	MIL-S-12928CLASS1	4940-00-242-4100	SC 4910-95-A73

INDEX

Subject, Para

A

Accessory Items Introduction, 19-1
Accumulator, Crane, Replacement, 18-10
Adapter, Engine Oil Filter, Repair, 3-8
Adapter, Power Take-Off (PTO), Replacement, 3-3
After Cooler Repair, 12-22
After Cooler, Air Dryer/, Replacement, 12-20
Air Bag, Axle No. 3, Troubleshooting, 2-25
Air Box Pressure Transducer Replacement, 7-77
Air Box, Fresh, Replacement, 19-16
Air Chamber
  Axle No. 1 and 2, Replacement, 12-9
  Axle No. 3, 4 and 5, Replacement, 12-10
  Transfer Case Differential, Replacement, 9-3
Air Cleaner
  Assembly Repair, 4-4
  Mounting Bracket Grab Handle Replacement, 4-6
  Pressure Transducer Replacement, 7-75
  Skirt Replacement, 17-16
Air Cylinder and Rotary Paddle, CHU, Replacement/ Adjustment, 21-43
Air Dryer
  After Cooler, Replacement, 12-20
  Bracket, Replacement, 15-7
  Coelescing Filter Replacement, 12-24
  Guard Replacement, 12-19
  Repair, 12-21
  Reservoir Replacement, 12-35
Air Filter Replacement, 4-5
Air Governor & Bracket, Replacement/Adjustment, 12-41
Air Horn Replacement, 19-10
Air Horn Valve Replacement, 19-11
Air Intake Ducting Replacement, 4-7
Air Line Replacement, 12-36
Air Manifold (Cab) Replacement, 12-25
Air Manifold/Air Regulator/Pressure Protection Valve Assembly Repair, 12-38
Air Pressure Indicator Replacement, 23-2
Air Regulator, Cab, Windshield Washer, Replacement, 12-26
Air Regulator, Air Manifold/, /Pressure Protection Valve Assembly Repair, 12-38
Air Reservoir
  No. 1 Replacement, 12-27
  No. 2 Replacement, 12-28
  No. 3 Replacement, 12-29

Subject, Para

A (CONT).

Air Reservoir (continued)
  No. 4 Replacement, 12-30
  No. 5 Replacement, 12-31
Air Restriction Indicator Replacement, 23-3
Air System Troubleshooting, 2-27
Air-to-Oil Cooler Replacement, 20-4
Air Valve, CHU, Replacement, 21-42
Alternator
  Belts Replacement/Adjustment (145 Amp), 7-4
  Belts Replacement/Adjustment (200 Amp), 7-5
  Replacement (145 Amp), 7-2
  Replacement (200 Amp), 7-3
Amber Marker Light Replacement, 7-54
Angled Roller Replacement, 15-16
Arctic Kit
  Battery Box Replacement, 21-5
  Battery Disconnection/Connection, 21-11
  Battery Replacement, 21-4
  Jumperwire Harness Replacement, 21-9
  Relays Replacement, 21-2
  Switch Wire Harness Replacement, 21-10
  Water Pump Replacement, 21-6
  Waterjacket Replacement, 21-7
  Wire Harness Replacement, 21-8
Arctic Pump
  Switch Replacement, 21-3
  Troubleshooting, 2-36
Arm Assembly, CHU Slider, Repair, 21-31
Arm, Wiper, Replacement, 19-5
Armament Maintenance Introduction, 22-1
ATEC Troubleshooting, 2-15
Auxiliary Fuel Tank and Brackets Replacement, 4-9
Auxiliary Fuel Tank Tread Platform Assembly Replacement, 15-24
Auxiliary Hand Pump Repair, 18-9
Axle
  Brake Drum Replacement, 13-3
  Breather Elbow Replacement, 11-3
  Maintenance Introduction, 11-1
  No. 1 and 2 Air Chamber Replacement, 12-9
  No. 1, 2 and 5 Tie-Rod Repair, 14-11
  No. 1, 2 and 5 CTIS Spindle Fittings Replacement, 13-4
  No. 1, 2 and 5 Pivot and Spindle Inspection, 11-4

Subject, Para

A (CONT).

Axle (continued)
No. 1 Locking Cylinder Lines and Fittings Replacement, 11-5
No. 2 Locking Cylinder Lines and Fittings Replacement, 11-6
No. 3 Air Bag Troubleshooting, 2-37
No. 3 and 4 CTIS Spindle Fittings Replacement, 13-5
No. 3, 4 and 5 Air Chamber Replacement, 12-10
No. 3 Locking Cylinder Lines and Fittings Replacement, 11-7
No. 4 Locking Cylinder Lines and Fittings Replacement, 11-8
No. 5 Locking Cylinder Lines and Fittings Replacement, 11-9
No. 5 Steering Shaft Repair, 14-10
Oil Service, 11-2
Stop Replacement, 15-12
Troubleshooting, 2-33

B

Baffle, Right Hand, Replacement, 17-18
Ball Valve Replacement, 12-12
Battery
Arctic Kit, Disconnection/Connection, 21-11
Arctic Kit, Replacement, 21-4
Box and Shunt Repair, 7-89
Box Wiring Replacement (145 AMP), 7-90
Box Wiring Replacement (200 AMP), 7-91
Box, Arctic Kit, Replacement, 21-5
Disconnection/Connection, 7-87
Disconnect Switch Box Repair, 7-106
Gage Replacement, 7-22
Replacement, 7-88
Beacon Bracket Replacement, 19-9
Belt, Seat, Replacement, 17-44
Belts
Alternator, Replacement/Adjustment (145 AMP), 7-4
Alternator, Replacement/Adjustment (200 AMP), 7-5
Blackout Light Repair, 7-51
Blade, Wiper, Replacement, 19-6
Blower, Heater, Motor Replacement, 19-13
Body, Cab and, Maintenance Introduction, 17-1
Boom Sheave Replacement, 18-2
Boom Wear Pads Inspection/Replacement, 18-3

Subject, Para

B (CONT).

Bracket
Beacon, Replacement, 19-9
Decontamination Kit, Replacement, 24-3
Diagnostic Request Switch, Replacement, DDEC III, 7-28
First Aid Kit, Replacement, 17-56
Rear Composite Light and, Repair, 7-47
Rifle Stowage, Replacement, 17-57
Stowage Box and, Replacement, 17-54
Brackets,
Auxiliary Fuel Tank and, Replacement, 4-9
CHU Front Support, Replacement, 21-46
Main Fuel Tank and, Replacement, 4-8
Brake
Axle, Drum, Replacement, 13-3
Maintenance Introduction, 12-1
Pressure Switch Replacement, 12-5
Shoe/Self-Adjuster Repair, 12-2
Shoe Adjustment, 12-3
System Troubleshooting, 2-24
Treadle Valve Replacement, 12-4
Breather
Axle, Elbow, Replacement, 11-3
Hydraulic Reservoir Filler, Replacement, 20-14
Transfer Case, Replacement, 9-8
Transmission, Replacement/Service, 8-5
Bumper Stop Bracket, 15-18
Bumper Weldment Support, CHU, Replacement, 21-41
Bushing, Shock Absorber and, Replacement, 16-2
Button
Horn, Replacement, 14-4
Safe Lowering, Replacement, 7-41
Buzzer, Warning, Replacement, 7-25

C

Cab Air Regulator, Windshield Washer, Replacement, 12-26
Cab and Body Maintenance Introduction, 17-1
Cab Dome Light Assembly Replacement, 7-49
Cab Door
Adjustment, 17-7
and Hinge Replacement, 17-8
Repair, 17-9
Cab Engine Access Panel Replacement, 17-24
Cab Fender Edging Replacement, 17-2
Cab Floor Drain Plug Replacement, 17-48
Cab Insulation Replacement, 17-19

Subject, Para

C (CONT).

Cab Seat
Lock Alignment Procedure, 17-41
Repair, 17-40
Support Replacement, 17-42
Cab Step Replacement, 15-5
Cable
Crane Hoist, Replacement, 18-5
Self-Recovery Winch (SRW), Replacement, 18-17
Slave Connector and, Replacement, 7-99
Transfer Case Shift, Adjustment, 9-5
Transfer Case Shift, Replacement, 9-6
Cargo Net Replacement, 17-43
Center Mud Flap Replacement, 17-38
Central Tire Inflation System (CTIS)
Controller Protection Kit Installation/Replacement, 13-13
Troubleshooting, 2-26
Chemical, Biological, Radiological (CBR)
Introduction, 24-1
Circuit Breaker Replacement, 7-16
Cleaner, Air, Assembly, Replacement, 4-4
Clevis, Crane Hook Block, & Hook, Repair, 18-8
Coalescing Filter Assembly Replacement, 12-23
Cold Plate, DDEC II Engine, Electronic Control Module (ECM), Replacement, 7-56
Cold Plate, DDEC III Engine, Electronic Control Module (ECM), Replacement, 7-57
Common Tools and Equipment, 2-1
Connector Bracket, Truck-to-Trailer LHS Electrical, Replacement, 15-19
Container Guide, CHU, Repair, 21-28
Container Handling Unit (CHU)
Air Cylinder and Rotary Paddle Replacement/Adjustment, 21-43
Air Valve Replacement, 21-42
Bumper Weldment Support Replacement, 21-41
Container Guide Repair, 21-28
Control Box Assembly Replacement, 21-21
Control Box Repair, 21-23
Control Box Wiring Replacement, 21-22
Deck Weldment Replacement, 21-40
Front Crossmember Assembly Replacement, 21-45
Front Support Brackets Replacement, 21-46
Jumperwire Harness Replacement, 21-19
Lifting Frame Assembly Replacement, 21-35
Lifting Frame Flipper Bracket and Lock Plate Repair, 21-38
Lifting Frame Locking Plate Assembly Replacement, 21-36

Subject, Para

C (CONT).

Container Handling Unit (CHU) (continued)
Lifting Frame Lower Container Lock Plate Repair, 21-37
Lifting Frame Strap Replacement, 21-47
Light Bar and Brackets Assembly Repair, 21-27
Long Strut Bracket Assembly Repair, 21-33
Mode Switch Replacement/Adjustment, 21-25
Proximity Switch and Sensing Plate Replacement/Adjustment (Hook Arm Up), 21-24
Rear Bracket Assembly Replacement, 21-32
Rear Lock Limit Switch Replacement/Adjustment, 21-26
Self-Recovery Winch (SRW), Rear Guide Replacement, 21-39
Short Strut and Pin Bracket Assembly Repair, 21-30
Slider Arm Assembly Repair, 21-31
Slider/Pivot Assembly Repair, 21-29
Stow Cone Weldment Replacement, 21-44
Stow Weldment Replacement, 21-34
Troubleshooting, 2-38
Wire Harness Replacement, 21-20
Control Assembly, LHS (Cab), Replacement, 7-40
Control Box
Assembly, CHU Replacement, 21-21
CHU, Repair, 21-23
Crane Remote, Repair, 18-4
Electronic, Replacement, 17-23
Electronic Cover, Replacement, 17-22
Electronic Right Side Panel, Replacement, 17-21
Electronic Side Panel, Replacement, 17-20
Wiring, CHU, Replacement, 21-22
Control, Polarity Protection, Replacement (200 AMP), 7-11
Control, Vernier, Replacement, 7-100
Coolant Level Sight Glass Replacement, 6-6
Cooling System
Assembly Replacement, 6-3
Hoses and Tubes Replacement, 6-8
Maintenance Introduction, 6-1
Pressure Test, 6-2
Service, 6-4
Skirt Replacement, 17-17
Troubleshooting, 2-18
Core, Heater, Replacement, 19-14
Coupler, Self-Guided, Repair, 15-20
Cover, Heater Compartment Front, Replacement, 17-5

Subject, Para

C (CONT).

Crane
Accumulator Replacement, 18-10
Angle Indicator Replacement, 18-7
Hoist Cable Replacement, 18-5
Hook Block, Hook & Clevis Repair, 18-8
Hydraulic Hoses, Tubes and Fittings Replacement, 18-11
On/Off and High Idle Switch Replacement, 7-36
Remote Control Box Repair, 18-4
Stowage Box Repair, 17-55
Troubleshooting, 2-29
Winch, LHS Maintenance Introduction, 18-1
Crossmember Assembly, CHU Front Replacement, 21-45
Crossmember, Skid Plate, Replacement, 15-4
CTIS
Air Line Replacement, 13-6
Controller Protection Kit Installation/Replacement, 13-13
Controller Replacement, 13-7
Front and Rear Manifold Repair, 13-10
Front Manifold Replacement, 13-8
Rear Manifold Replacement, 13-9
Troubleshooting, 2-26
Wheel Valve Replacement, 13-11

D

Dash Manifold Valve Replacement, 12-37
Data Plate Replacement, 19-20
Davit, Spare Tire Carrier and, Replacement, 15-21
DDEC
Coolant Temperature Sensor Replacement, DDEC III, 7-69
Diagnostic Request Switch and Bracket Replacement, DDEC III, 7-28
Engine Oil Pressure Sensor Replacement, DDECII, 7-67
Engine Oil Pessure Sensor Replacement, DDEC III, 7-68
Oil Temperature Sensor Replacement, 7-70
Troubleshooting, 2-26
Turbo Boost Sensor, 7-63
Decontamination Kit Bracket Replacement, 24-3
Defroster Plenum Replacement, 17-3
Defroster, Heater/, Tubing Replacement, 19-19
Destruction Of Army Material To Prevent Enemy Use, 1-3

Subject, Para

D (CONT).

Diagnostic Request Switch and Bracket Replacement, DDEC III, 7-28
Differential Pressure Switch Replacement, 7-84
Disconnection/Connection, Battery, 7-87
Disconnect Switch Box, Battery, Repair, 7-106
Door
Cab, Adjustment, 17-7
Cab, and Hinge Replacement, 17-8
Cab, Repair, 17-9
Drain/Fill (Service)
Axle Oil, 11-2
Cooling System, 6-4
Engine Oil, 3-2
Fuel/Water Separator, 4-15
Main Hydraulic Reservoir, 20-11
Steering System, 14-2
Transfer Case, 9-2
Transmission Oil, 8-3
Driveshaft
and U-Joint Repair, 10-2
Main Hydraulic Pump, Repair, 20-2
Maintenance Introduction, 10-1
Troubleshooting, 2-23
DUVAC (Dual Voltage Alternator Control)
Adjustment (145 AMP), 7-10
Replacement (145 AMP), 7-9

E

ECM, DDEC II Engine Cold Plate/, Replacement, 7-56
ECM, DDEC III Engine Cold Plate/, Replacement, 7-57
ECU, Transmission, Replacement, 7-71
Electric
Gage Replacement, 7-21
Horn Replacement, 7-85
Resistor Replacement, 7-96
Electrical System
Maintenance Introduction, 7-1
Troubleshooting, 2-20
Electronic Control Box (ECB)
Cover Replacement, 17-22
Replacement, 17-23
Right Side Panel Replacement, 17-21
Side Panel Replacement, 17-20

Subject, Para

E (CONT).

Emergency Air Quick Disconnect Replacement, 12-42
Emergency Gladhand Bracket Replacement, 12-44
Emergency Steering Switch Replacement, 7-105
Engine Brake Wire Harness Replacement, 7-102
Engine Cold Plate/Electronic Control Module (ECM) Replacement, DDEC II, 7-56
Engine Cold Plate/Electronic Control Module (ECM) Replacement, DDEC III, 7-57
Engine Cover
  Engine Panel, Assembly, Replacement, 17-10
  Grab Handle Replacement, 17-13
  Latch Replacement, 17-12
  Latch/Stowage Box, Adjustment 17-60
  Rubber Replacement, 17-11
Engine Maintenance Introduction, 3-1
Engine Oil
  Filter Adapter Cover Repair, 3-8
  Filter Replacement, 3-6
  Pressure Sending Unit Replacement, 7-79
  Pressure Sensor, DDEC II, Replacement, 7-67
  Pressure Sensor, DDEC III, Replacement 7-68
  Pressure Switches, Replacement, 7-60
  Remote, Filter Manifold Replacement, 3-9
  Remote, Filter Replacement, 3-7
  Service, 3-2
  Temperature Sensor, STE/ICE, Replacement, 7-66
Engine Panel and Cover Assembly Replacement, 17-10
Engine Switch Replacement, 7-32
Engine Troubleshooting, 2-16
Engine, Cab Access Panel, Replacement, 17-24
Engine/Transmission Hose Replacement, 3-10
Equipment Characteristics, Capabilities, And Features, 1-7
Equipment Data, 1-9
Ether Start Aid
  Assembly Replacement, 4-18
  Hose and Fittings Replacement, 4-19
  Switch Replacement, 7-33
  Thermostat Replacement, 4-20
Exhaust
  Muffler Replacement, 5-2
  Pipes Replacement, 5-3
  System Maintenance Introduction, 5-1
  Troubleshooting, 2-31

Subject, Para

F

Fan Control Solenoid Valve Replacement, 20-5
Fender
  Left Front, and Rear Skirt, Replacement, 17-34
  Rear, and Fender Support Arm, Replacement, 17-35
  Right Front, and Rear Skirt, Replacement, 17-33
Filler Breather, Hydraulic Reservoir Replacement, 20-14
Filter
  Air, Replacement, 4-5
  Air Dryer Coelescing, Replacement, 12-24
  Engine Oil, Adapter Cover Repair, 3-8
  Engine Oil, Replacement, 3-6
  Fuel/Water Separator, Replacement, 4-17
  Gas Particulate Unit Kit, Mounting/Installation, 24-2
  High Pressure Hydraulic, Replacement, 20-6
  High Pressure Hydraulic Head, Repair, 20-8
  High Pressure Hydraulic Head, Assembly Replacement, 20-7
  Main Hydraulic, Replacement, 20-9
  Main Hydraulic Reservoir, Assembly Replacement, 20-10
  Remote Engine Oil, Manifold Replacement, 3-9
  Remote Engine Oil, Replacement, 3-7
  Secondary Fuel, Head, Replacement, 4-14
  Secondary Fuel, Replacement, 4-13
  Steering, Replacement, 14-16
  Steering, Adapter Head, Replacement, 14-17
Fire Extinguisher Mount Replacement, 17-6
First Aid Kit Bracket Replacement, 17-56
Fittings
  Axles No. 1, 2 and 5 CTIS Spindle, Replacement, 13-4
  Axles No. 3 and 4 CTIS Spindle, Replacement, 13-5
Flasher Unit, Replacement, 7-97
Fluid Level Gage, Hydraulic, Replacement, 20-15
Foot Rest Repair, 17-47
Frame
  Assembly, CHU Lifting, Replacement, 21-35
  Flipper Bracket and Lock Plate, CHU Lifting, Repair, 21-38
  Locking Plate Assembly, CHU Lifting, Replacement, 21-36
  Lower Container Lock Plate, CHU Lifting, Repair 21-37
  Maintenance Introduction, 15-1
  Strap, CHU, Replacement, 21-47

Subject, Para

F (CONT).

Fresh Air Box Replacement, 19-16
Front Composite Light Repair, 7-46
Front Crossmember Assembly, CHU, Replacement, 21-45
Front Double Check Valve Replacement, 12-11
Front Gladhand Bracket Replacement, 12-32
Front Marker Light Assembly Repair, 7-52
Front Support Brackets, CHU, Replacement, 21-46
Front Support, Machine Gun Ring, Replacement, 22-4
Front Tandem Crossmember Torquing Procedure, 15-6
Fuel
  Auxiliary, Tank and Brackets Replacement, 4-9
  Auxiliary, Tank Tread Platform Assembly Replacement, 15-24
  Filter Pressure Transducer Replacement, 7-78
  Hoses and Tubes Replacement, 4-12
  Level Sending Unit Replacement, 4-11
  Main, Tank and Brackets Replacement, 4-8
  Pressure Transducer Replacement, 7-74
  Priming Pump Filter Replacement, 4-3
  Priming Pump Replacement, 4-2
  Shutoff Valve Replacement, 4-10
  System Maintenance Introduction, 4-1
  System Troubleshooting, 2-29
  Temperature Sensor Replacement, 7-62
Fuel/Water Separator
  and Bracket Replacement, 4-16
  Filter Replacement, 4-17
  Service, 4-15

G

Gage
  Battery, Replacement, 7-22
  Electric, Replacement, 7-21
  Hydraulic Fluid Level, Replacement, 20-15
  Wiring Harness, Instrument Panel, Replacement, 7-14
Gages (Non-electrical) Introduction, 23-1
Gas Particulate Filter Unit Kit,
  Mounting/Installation, 24-2
Gasket
  Left Rocker Cover and, Replacement, 3-4
  Right Rocker Cover and, Replacement, 3-5
Gear Box
  90 Degree, Replacement, 14-13
  Steering Shaft, Repair, 14-9

Subject, Para

G (CONT).

General Instructions
  Assembly, 2-46
  Cleaning, 2-43
  Disassembly, 2-42
  Inspection, 2-44
  Installation, 2-47
  Removal, 2-41
  Repair, 2-45
General Maintenance Procedures, 2-8
General Wire Harness Repair, 7-101
Gladhand Replacement, 12-43
Glove Box Grab Handle Replacement, 17-50
Glove Box Replacement, 17-53
Grab Handle
  Air Cleaner Mounting Bracket, Replacement, 4-6
  Engine Cover, Replacement, 17-13
  Glove Box, Replacement, 17-50
  Heater Control Side Panel, Replacement, 17-49
  Instrument Panel, Replacement, 17-51
  Side Cab, Replacement, 17-52
Grille, Radiator, Assembly, Replacement, 17-14
Grille Skins, Right, Left and Rear, Replacement, 17-15
Ground Handling, 2-40
Guard, Window, Replacement, 17-46
Guide, Self-Recovery Winch (SRW)
  Front Tension, Repair, 18-13
  Front, Replacement, 18-14
  Rear Tension, Repair, 18-15
  Rear, Replacement, 18-16

H

Hand Brake
  Switch Replacement, 12-8
  Valve Replacement, 12-46
Hand Held Work Lamp Assembly Repair, 7-55
Hand Pump, Auxiliary, Repair, 18-9
Hand Receipt Manual and Inventory of Equipment, 2-5
Hard Lift Assembly, Rear, Replacement, 15-8
Harness, CHU Jumperwire, Replacement, 21-19
Hatch Ring, Machine Gun, Replacement, 22-6
Hazard Switch, Replacement, 7-35
Head, High Pressure Hydraulic Filter, Repair, 20-8
Head Assembly, High Pressure Hydraulic Filter, Replacement, 20-7
Head Light Adjustment, 7-44
Head Light Assembly Replacement, 7-45

Subject, Para

H (CONT).

Heater
Assembly Replacement, 19-12
Blower Motor Replacement, 19-13
Compartment Access Panel Replacement, 17-4
Compartment Front Cover Replacement, 17-5
Control Panel Repair, 19-17
Control Side Panel Grab Handle Replacement, 17-49
Control Valve Replacement, 19-18
Core Replacement, 19-14
Defroster Tubing Replacement, 19-19
Hoses and Fittings Replacement, 19-15
High Pressure Hydraulic Filter
Head Assembly Replacement, 20-7
Head Repair, 20-8
Replacement, 20-6
Hoist, Crane Cable, Replacement, 18-5
Hook, Crane, Block, Hook & Clevis Repair, 18-8
Horizontal Roller Replacement, 15-15
Horn
Button Replacement, 14-4
Electric, Replacement, 7-85
Hoses, Lines, and Fittings
Air, Replacement, 12-36
Heater, Replacement, 19-15
Hose and Fittings, Ether Start Aid, Replacement, 4-19
Hose, Engine/Transmission, Replacement, 3-10
Hose, Transfer Case, Replacement, 9-7
Hoses and Tubes, Cooling System, Replacement, 6-8
Hoses and Tubes, Fuel, Replacement, 4-12
Main Hydraulic, Replacement, 20-3
Steering Hydraulic, Replacement, 14-14
Hydraulic
Drain Hose Kit Installation, 20-16
Fluid Level Gage Replacement, 20-15
Reservoir Filler Breather Replacement, 20-14
Reservoir Strainer Replacement, 20-13
Selector Switch Replacement, 7-31
System Maintenance, Introduction, 20-1
System Troubleshooting, 2-31

I

Idler Shaft, Windshield Wiper, Replacement, 19-7
Introduction to Logic Tree Troubleshooting, 2-25
Indicator
Air Pressure, Replacement, 23-2
Air Restriction, Replacement, 23-3
Crane Angle, Replacement, 18-7

Subject, Para

I (CONT).

Instrument Panel
Gage Wiring Harness Replacement, 7-14
Grab Handle Replacement, 17-51
Replacement, 7-13
Switch Wiring Harness Replacement, 7-15
Insulation, Cab, Replacement, 17-19
Intake Ducting, Air, Replacement, 4-7
Interface
Auxiliary Hydraulic Valve Replacement, 21-17
Manual Override Solenoid Valve Replacement, 21-18
Mounting Bracket Replacement, 21-13
Powerbox Assembly Repair, 21-15
Powerbox Wiring Replacement, 21-16
Quick Disconnect Assembly Replacement, 21-12
Troubleshooting, 2-37
Wiring Harness Replacement, 21-14
Isolator Replacement (145 AMP), 7-34

J

Jumperwire Harness, Arctic Kit, Replacement, 21-9
Jumperwire Harness, CHU, Replacement, 21-19

L

Ladder Support Repair, 17-58
Lamp
Hand Held Work, Assembly, Repair, 7-55
Warning, Replacement, 7-24
Left
Fender Front and Rear Skirt Replacement, 17-34
Front Mud Flap Replacement, 17-36
Front Noise Panel Replacement, 17-27
Rocker Cover and Gasket Replacement, 3-4
Side Noise Panel Replacement, 17-28
LHS (Load Handling System)
Control Assembly (Cab) Replacement, 7-40
Crane, Winch Maintenance Introduction, 18-1
Electrical Connector Bracket, Truck-to-Trailer, Replacement, 15-19
Junction Box Replacement, 7-42
Troubleshooting, 2-28
Lifting Frame
Assembly, CHU, Replacement, 21-35
Flipper Bracket and Lock Plate, CHU, Repair, 21-38
Locking Plate Assembly, CHU, Replacement, 21-36
Lower Container Lock Plate, CHU, Repair, 21-37
Strap, CHU, Replacement, 21-47

Subject, Para

L (CONT).

Light
Amber Marker, Replacement, 7-54
Assembly, Rear Marker, Repair, 7-53
Assembly, Front Marker, Repair, 7-52
Bar and Bracket, CHU, Repair, 21-27
Blackout, Repair, 7-51
Cab Dome, Assembly, Replacement, 7-49
Front Composite, Repair, 7-46
Panel, Replacement, 7-23
Rear Composite, and Bracket, Repair, 7-47
Rear Fender Side Marker, Replacement, 7-48
Reverse, Repair, 7-50
Lines, Air, CTIS, Replacement, 13-6
Lines, Air, Replacement, 12-36
Lines/Fittings
No. 1 Axle Locking Cylinder, Replacement, 11-5
No. 2 Axle Locking Cylinder, Replacement, 11-6
No. 3 Axle Locking Cylinder, Replacement, 11-7
No. 4 Axle Locking Cylinder, Replacement, 11-8
No. 5 Axle Locking Cylinder, Replacement, 11-9
Load Sensing Valve Adjustment, 12-34
Load Sensing Valve Replacement, 12-33
Location And Description Of Major Components, 1-8
Lock, Steering, Replacement, 14-7
Locking Cylinder
Lines/Fittings, No. 1 Axle, Replacement, 11-5
Lines/Fittings, No. 2 Axle, Replacement, 11-6
Lines/Fittings, No. 3 Axle, Replacement, 11-7
Lines/Fittings, No. 4 Axle, Replacement, 11-8
Lines/Fittings, No. 5 Axle, Replacement, 11-9
Long Strut Bracket Assembly, CHU, Repair, 21-33
Low Air Switch Replacement, 12-6

M

Machine Gun
Hatch Ring Replacement, 22-6
Platform, Installation/Storage, 22-5
Ring Front Support Replacement, 22-4
Ring Rear Support Replacement, 22-3
Ring Replacement, 22-2
Magnetic Speed Sensor Replacement, 7-72
Magnetic Switch
12 Volt, Replacement, 7-92
24 Volt, Replacement, 7-94
24 Volt Side Panel, Replacement, 7-93

Subject, Para

M (CONT).

Main Hydraulic
Filter Replacement, 20-9
Hoses Replacement, 20-3
Pump Driveshaft Repair, 20-2
Reservoir Filter Assembly Replacement, 20-10
Reservoir Replacement, 20-12
Reservoir Service, 20-11
Maintenance Forms, Records, and Reports, 1-2
Maintenance Introduction, 2-39
Manifold
Air (Cab), Replacement, 12-25
Air, Air Regulator/Pressure Protection Valve Assembly Repair, 12-38
CTIS Front and Rear, Repair, 13-10
CTIS Front, Replacement, 13-8
CTIS Rear, Replacement, 13-9
Remote Engine Oil Filter, Replacement, 3-9
Manual Override Solenoid Valve, Interface, Replacement, 21-18
Material Handling Crane (MHC), Self-Recovery Winch (SRW) and Load Handling System (LHS) Maintenance Introduction, 18-1
Mirror Assembly Repair, 19-3
Mode Switch, CHU, Replacement/Adjustment, 21-25
Motor
Heater Blower, Replacement, 19-13
Windshield Wiper, Replacement, 19-4
Mount, Fire Extinguisher, Replacement, 17-6
Mounts, Shock Absorber, Replacement, 16-3
Mud Flap
Center, Replacement, 17-38
Left Front, Replacement, 17-36
Rear Splash Guard/Reflector/Spring Bar Replacement, 17-39
Right Front, Replacement, 17-37
Muffler Replacement, 5-2

N

90 Degree Gear Box Replacement, 14-13
Net, Cargo, Replacement, 17-43
Noise Panel
Left Front, Replacement, 17-27
Left Side, Replacement, 17-28
Rear, Replacement, 17-29
Rear, Rubber Replacement, 17-30
Right Side, Replacement, 17-26

Subject, Para

O

Odometer (KM) Replacement, 7-18
Official Nomenclature, Names, and Designations, 1-4
Oil Filter, Transmission, (External), Replacement, 8-4
Oil Pressure Sensor, DDEC II Engine, Replacement, 7-67
Oil Pressure Sensor, DDEC III Engine, Replacement, 7-68
Oil Pressure Switches, Engine, Replacement, 7-60
Oil Temperature Sensor Replacement, DDEC, 7-70
Outrigger Pads Repair, 18-18
Outrigger Proximity Switch Replacement, 7-43

P

Paddle, CHU Air Cylinder and Rotary, Replacement/ Adjustment, 21-43
Pads, Outrigger, Repair, 18-18
Panel
- Cab Engine Access, Replacement, 17-24
- Engine, and Cover Assembly Replacement, 17-10
- Electronic Control Box (ECB) Side, Replacement, 17-20
- Electronic Control Box (ECB) Right Side, Replacement, 17-21
- Heater Compartment Access, Replacement, 17-4
- Heater Control, Replacement, 19-17
- Left Front Noise, Replacement, 17-27
- Left Side Noise, Replacement, 17-28
- Light Replacement, 7-23
- Rear Noise, Replacement, 17-29
- Rear Noise, Rubber Replacement, 17-30
- Right Side Noise, Replacement, 17-26

Parking Brake Switch Replacement, 12-7
Peep Window Replacement, 17-31
Pin Bracket Assembly, CHU Short Strut and, Repair, 21-30
Pipes, Exhaust, Replacement, 5-3
Pivot and Spindle, Axle No. 1, 2 and 5, Inspection, 11-4
Pivot Assembly, CHU Slider/, Repair, 21-29
Plate
- Data, Replacement, 19-20
- Roof Cover, Replacement, 17-25
- Skid, Crossmember Replacement, 15-4
- Skid, Structure Replacement, 15-3
- Skid, Replacement, 15-2

Subject, Para

P (CONT).

Platform, Machine Gun, Installation/Storage, 22-5
Platform Assembly Replacement (Model 1075 only), 15-10
Plenum, Defroster, Replacement, 17-3
Polarity Protection Control Replacement (200 AMP), 7-11
Power Take-Off (PTO) Adapter Replacement, 3-3
Preparation For Storage or Shipment, 2-55
Preparation For Storage or Shipment Introduction, 2-48
Pressure Protection Valve Assembly, Air Manifold/ Air Regulator Replacement, 12-38
Pressure Test, Cooling System, 6-2
Preventive Maintenance Checks and Services (PMCS)
- Introduction, 2-7
- Tables, 2-9

Priming Pump Filter, Fuel, Replacement, 4-3
Priming Pump, Fuel, Replacement, 4-2
Principles of Operation
- Air System, 1-13
- Cab, 1-21
- Central Tire Inflation System (CTIS), 1-20
- Electrical System, 1-12
- Engine Systems, 1-11
- Hydraulic System, 1-14
- Load Handling System (LHS), 1-18
- Material Handling Crane (MHC), 1-17
- PLS Flatrack (FR), 1-23
- PLS Trailer (PLST), 1-22
- Power Train, 1-10
- Self-Recovery Winch (SRW), 1-16
- Steering System, 1-15
- Wheels And Tires, 1-19

Proximity Switch
- Hookarm Down, Replacement/Adjustment, 7-37
- Hookarm Up, CHU, and Sensing Plate Replacement/Adjustment, 21-24
- Hookarm Up, Replacement/Adjustment, 7-38
- Mainframe Down, Replacement/Adjustment, 7-39
- Outrigger, Replacement, 7-43

PTO Adapter, Replacement, 3-3
Pump
- Arctic Kit Water, Replacement, 21-6
- Auxiliary Hand, Repair, 18-9
- Main Hydraulic Driveshaft Repair, 20-2

Subject, Para

Q

Quick Disconnect Assembly, Interface, Replacement, 21-12
Quick Release Valve Replacement, 12-39

R

Radiator Grille Assembly Replacement, 17-14
Radiator Replacement, 6-5
Rear
  Bracket Assembly, CHU, Replacement, 21-32
  Composite Light and Bracket Repair, 7-47
  Fender and Fender Support Arm Replacement, 17-35
  Fender Side Marker Light Replacement, 7-48
  Guide, CHU, (SRW), Replacement, 21-39
  Hard Lift Assembly Replacement, 15-8
  Hard Lift Bracket Replacement, 15-11
  Lock Limit Switch, CHU, Replacement/ Adjustment, 21-26
  Marker Light Assembly Repair, 7-53
  Noise Panel Replacement, 17-29
  Noise Panel Rubber Replacement, 17-30
  Roller Assembly Replacement, 15-17
  Splash Guard (Mud Flap)/Reflector/Spring Bar Replacement, 17-39
  Support, Machine Gun Ring, Replacement, 22-3
Rectifier Replacement, 7-19
Reflector
  Replacement, 19-2
  Rear Splash Guard (Mud Flap)/Spring Bar Replacement, 17-39
Regulator
  Air, Air Manifold/Pressure Protection Valve Assembly, Repair, 12-38
  Voltage, Adjustment, (145 AMP), 7-7
  Voltage, Replacement, (145 AMP), 7-6
  Voltage, Replacement, (200 AMP), 7-8
Relay Replacement, 7-95
Relay Spring
  Valve No. 1 Replacement, 12-16
  Valve No. 2 Replacement, 12-17
Relays, Arctic Kit, Replacement, 21-2
Repair Parts, 2-3
Reporting Equipment Improvement Recommendations (EIR), 1-5
Remote Control Box, Crane, Repair, 18-4
Remote Engine Oil Filter Manifold Replacement, 3-9

Subject, Para

R (CONT).

Remote Engine Oil Filter Replacement, 3-7
Request Switch and Bracket, DDEC III Diagnostic, Replacement, 7-28
Reservoir
  Air Dryer, Replacement, 12-35
  Air No. 1, Replacement, 12-27
  Air No. 2, Replacement, 12-28
  Air No. 3, Replacement, 12-29
  Air No. 4, Replacement, 12-30
  Air No. 5, Replacement, 12-31
  Hydraulic, Filler Breather Replacement, 20-14
  Hydraulic, Strainer Replacement, 20-13
  Main Hydraulic, Filter Assembly Replacement, 20-10
  Main Hydraulic, Replacement, 20-12
  Main Hydraulic, Service, 20-11
  Steering Hydraulic, Repair, 14-15
  Windshield Washer, and Bracket Repair, 19-8
Resistor, Electric, Replacement, 7-96
Retainer Bar/Roller Replacement, 18-6
Reverse Alarm Replacement, 7-86
Reverse Light Repair, 7-50
Rifle Stowage Brackets Replacement, 17-57
Right
  Fender Front and Rear Skirt Replacement, 17-33
  Front Mud Flap Replacement, 17-37
  Hand Baffle Replacement, 17-18
  Left and Rear Grille Skins Replacement, 17-15
  Rocker Cover and Gasket Replacement, 3-5
  Side Noise Panel Replacement, 17-26
Ring, Machine Gun, Replacement, 22-2
Ring, Tie Down Replacement 15-13
Rocker
  Cover and Gasket, Left, Replacement, 3-4
  Cover and Gasket, Right, Replacement, 3-5
  Switch Replacement, 7-27
Roller
  Angled, Replacement, 15-16
  Horizontal, Replacement, 15-15
  Rear, Assembly, Replacement, 15-17
  Retainer Bar/, Replacement, 18-6
Roof Cover Plate Replacement, 17-25
Rotary Paddle, and Air Cylinder, CHU, Replacement/ Adjustment, 21-43
Rubber Fender Edging Replacement, 17-32

Subject, Para

S

7-Pin Electrical Connector Replacement, 7-103
Safe Lowering Button Replacement, 7-41
Scope, 1-1
Seat Belt Replacement, 17-44
Seat, Cab, Repair, 17-40
Secondary Fuel Filter
  Head Replacement, 4-14
  Replacement, 4-13
Self-Adjuster, Brake Shoe/, Repair, 12-2
Self-Guided Coupler Repair, 15-20
Self-Recovery Winch (SRW)
  Cable Replacement, 18-17
  CHU, Rear Guide Replacement, 21-39
  Front Guide Replacement, 18-14
  Front Tension Guide Repair, 18-13
  Rear Guide Replacement, 18-16
  Rear Tension Guide Repair, 18-15
  Replacement, 18-12
  Troubleshooting, 2-30
Sending Unit
  Engine Oil Pressure, Replacement, 7-79
  Fuel Level, Replacement, 4-11
  Transfer Case, Replacement, 7-82
  Water Temperature, /Temperature Switch Replacement, 7-80
  Oil Temperature, Transmission, Replacement, 7-81
Sensing Plate, CHU Proximity Switch and, (Hookarm Up), Replacement/Adjustment, 21-24
Sensor
  Coolant Temperature Sensor Replacement, DDEC III, 7-69
  DDEC Turbo Boost, Replacement, 7-63
  DDEC II Engine Oil Pressure, Replacement, 7-67
  DDEC III Engine Oil Pressure, Replacement, 7-68
  Fuel Temperature, Replacement, 7-62
  Oil Temperature, Replacement, DDEC, 7-70
  STE/ICE Engine Oil Temperature, Replacement, 7-66
  STE/ICE Water Temperature, Replacement, 7-64
  Throttle, Replacement, 7-58
  Water Temperature Gage/Fan Control, Replacement, 7-65

Subject, Para

S (CONT).

Separator,
  and Bracket, Fuel/Water, Replacement, 4-16
  Filter, Fuel/Water, Replacement, 4-17
  Fuel/Water, Service, 4-15
Service Before Operation, 2-6
Service Gladhand Bracket Replacement, 15-14
Service Relay Valve
  No. 1, Replacement, 12-13
  No. 2, Replacement, 12-14
  No. 3, Replacement, 12-15
Shaft
  Axle No. 5 Steering, Repair, 14-10
  Gear Box Steering, Repair, 14-9
  Steering Column, Replacement, 14-8
Shift Assembly, Transfer Case, Replacement, 9-4
Shift Selector, Transmission, Repair, 8-2
Shock Absorber
  and Bushing Replacement, 16-2
  Mounts Replacement, 16-3
Shocks, Springs and, Introduction, 16-1
Short Strut and Pin Bracket Assembly, CHU, Repair, 21-30
Shunt, Battery Box and, Repair, 7-89
Shut-off Valve, Fuel, Replacement, 4-10
Side Cab Grab Handle Replacement, 17-52
Sight Glass, Coolant Level, Replacement, 6-6
Skid Plate
  Crossmember Replacement, 15-4
  Replacement, 15-2
  Structure Replacement, 15-3
Skins, Right, Left and Rear Grille, Replacement, 17-15
Skirt
  Air Cleaner, Replacement, 17-16
  Cooling, Replacement, 17-17
  Left Fender Front and Rear, Replacement, 17-34
  Right Fender Front and Rear, Replacement, 17-33
Slave Connector and Cable Replacement, 7-99
Slider Arm Assembly, CHU, Repair, 21-31
Slider/Pivot Assembly, CHU, Repair, 21-29
Solenoid
  Fan Control, Valve Repair, 20-5
  Four Position Valve Replacement, 12-40

Subject, Para

S (CONT).

Spare Tire Carrier
and Davit Replacement, 15-21
Winch Replacement, 15-22
Wire Rope Replacement, 15-23
Special Purpose Kits Maintenance, Introduction, 21-1
Special Tools, TMDE, and Support Equipment, 2-2
Speedometer Replacement, 7-17
Spindle, Axle No. 1, 2 and 5 Pivot and, Inspection, 11-4
Spring Bar, Rear Splash Guard (Mud Flap)/Reflector Replacement, 17-39
Spring Brake Valve Replacement, 12-18
Springs and Shocks Introduction, 16-1
STE/ICE Engine Oil Temperature Sensor Replacement, 7-66
STE/ICE Water Temperature Sensor Replacement, 7-64
STE/ICE-R Toggle Switch Replacement, 7-29
Start Aid, Ether, Assembly, Replacement, 4-18
Starter Motor Replacement, 7-12
Steering
Column and Bracket Replacement, 14-6
Column Shaft, Replacement, 14-8
Filter Adapter Head Replacement, 14-17
Filter Replacement, 14-16
Gear Torquing, Front, Procedure, 14-18
Hydraulic Hoses and Fittings Replacement, 14-14
Hydraulic Reservoir Repair, 14-15
Lock Replacement, 14-7
Shaft, Axle No. 5, Repair, 14-10
Shaft, Gear Box, Repair, 14-9
Stop Bolt Replacement, 11-10
System Maintenance, Introduction, 14-1
System Service, 14-2
System Troubleshooting, 2-32
Toe-in Adjustment, 14-3
Wheel Replacement, 14-5
Step, Cab Replacement, 15-5
Storage Maintenance Procedures, 2-50
Stowage Box
and Bracket Replacement, 17-54
Crane, Repair, 17-55
/Engine Cover Latch Adjustment, 17-60
Stow Cone Weldment, CHU, Replacement, 21-44
Stow Weldment, CHU, Replacement, 21-34
Strainer, Hydraulic Reservoir, Replacement, 20-13

Subject, Para

S (CONT).

Sunvisor Replacement, 17-45
Support Brackets, CHU Front, Replacement, 21-46
Support, Cab Seat, Replacement, 17-42
Support, CHU Bumper Weldment, Replacement, 21-41
Support, Ladder, Repair, 17-58
Suspension System Troubleshooting, 2-34
Switch Wiring Harness, Instrument Panel, Replacement, 7-15
Switch
12V Magnetic, Replacement, 7-92
24V Magnetic, Replacement, 7-94
24V Side Panel Magnetic, Replacement, 7-93
Arctic Pump, Replacement, 21-3
Battery Disconnect, Box Repair, 7-106
Brake Pressure, Replacement, 12-5
DDEC III Diagnostic Request, and Bracket Replacement, 7-28
Differential Pressure, Replacement, 7-84
Emergency Steering, Replacement, 7-105
Engine Oil Pressure, Replacement, 7-60
Engine, Replacement, 7-32
Ether Start Aid, Replacement, 7-33
Hand Brake, Replacement, 12-8
Hazard, Replacement, 7-35
Hydraulic Selector, Replacement, 7-31
Low Air, Replacement, 12-6
Outrigger Proximity, Replacement, 7-43
Mode, CHU, Replacement/Adjustment, 21-25
Parking Brake, Replacement, 12-7
Proximity, (Hookarm Down), Replacement/ Adjustment, 7-37
Proximity, and Sensing Plate (Hookarm Up), CHU, Replacement/Adjustement, 21-24
Proximity, (Hookarm Up), Replacement/ Adjustment, 7-38
Proximity, (Mainframe Down), Replacement/ Adjustment, 7-39
Rocker, Replacement, 7-27
STE/ICE-R Toggle, Replacement, 7-29
Thumbwheel Rheostat, Replacement, 7-26
Transfer Case Lockup, Replacement, 7-30
Transfer Case Neutral Start, Replacement, 7-83
Turbo Boost Pressure, Replacement, 7-61
Turbo Throttle, Replacement/Adjustment, 7-59
Turn Signal, Replacement, 7-35

Subject, Para

T

12-Pin Electrical Connector Replacement, 7-104
12 Volt Magnetic Switch Replacement, 7-92
24 Volt
  Magnetic Switch Replacement, 7-94
  Side Panel Magnetic Switch Replacement, 7-93
200 AMP Alternator Belts Replacement/Adjustment, 7-5
200 AMP Alternator Replacement, 7-3
200 AMP Voltage Regulator Replacement, 7-8
Tachometer
  Drive Assembly Replacement, 7-73
  Replacement, 7-20
Temperature Sensor DDEC Oil, Replacement, 7-70
Temperature Sensor DDEC III Coolant, Replacement, 7-69
Thermostat
  Ether Start Aid, Replacement, 4-20
  Replacement, 6-7
Threaded Screw Insert Replacement, 17-59
Throttle
  Position Control Replacement, 7-98
  Sensor Replacement, 7-58
  Turbo, Switch Replacement/Adjustment, 7-59
Thumbwheel Rheostat Switch Replacement, 7-26
Tie Down Ring Replacement, 15-13
Tie-Rod and Drag Link Inspection, 14-12
Tie-Rod, Axle No. 1, 2 and 5, Repair, 14-11
Tire Carrier
  Spare, and Davit, Replacement, 15-21
  Spare, Winch, Replacement, 15-22
  Spare, Wire Rope Replacement, 15-23
Tire Repair, 13-12
Tire, Wheel/, Assembly Repair, 13-2
Toe-in, Steering, Adjustment, 14-3
Tractor Protection Valve Replacement, 12-45
Transducer
  Air Box Pressure, Replacement, 7-77
  Air Cleaner Pressure, Replacement, 7-75
  Fuel Filter Pressure, Replacement, 7-78
  Fuel Pressure, Replacement, 7-74
  Turbocharger Outlet Pressure, Replacement, 7-76
Transfer Case
  Breather Replacement, 9-8
  Differential Air Chamber Replacement, 9-3
  Hose Replacement, 9-7
  Lockup Switch Replacement, 7-30

Subject, Para

T (CONT).

Transfer Case (continued)
  Maintenance Introduction, 9-1
  Neutral Start Switch, Replacement, 7-83
  Sending Unit, Replacement, 7-82
  Service, 9-2
  Shift Assembly Replacement, 9-4
  Shift Cable Adjustment, 9-5
  Shift Cable Replacement, 9-6
  Troubleshooting, 2-22
Transmission
  Breather Replacement/Service, 8-5
  ECU Replacement, 7-71
  Hose, Engine/, Replacement, 3-10
  Introduction, 8-1
  Oil Filter (External) Replacement, 8-4
  Oil Service, 8-3
  Oil Temperature Sending Unit, Replacement, 7-81
  Shift Selector Repair, 8-2
  Troubleshooting, 2-21
Tread Platform Assembly, Auxiliary Fuel Tank, Replacement, 15-24
Tread Platform Assembly Replacement, 15-9
Treadle Valve, Brake, Replacement, 12-4
Troubleshooting
  Air System, 2-27
  Arctic Pump, 2-36
  ATEC, 2-15
  Axle, 2-33
  Axle No. 3 Air Bag, 2-25
  Brake System, 2-24
  Central Tire Inflation System (CTIS), 2-26
  Container Handling Unit (CHU), 2-38
  Cooling System, 2-18
  Crane, 2-29
  DDEC II, 2-13
  DDEC III, Appendix H
  Driveshaft, 2-23
  Electrical System, 2-20
  Engine, 2-16
  Exhaust System, 2-19
  Fuel System, 2-17
  Hydraulic System, 2-31
  Instructions, 2-11
  Interface, 2-37
  Introduction, 2-10
  Introduction to Logic Tree, 2-25

Subject, Para

T (CONT).

Troubleshooting (continued)
Load Handling System (LHS), 2-28
Steering System, 2-32
Suspension System, 2-34
Transfer Case, 2-22
Transmission, 2-21
Wheels and Tires, 2-35
Winch, 2-30
Truck-to-Trailer LHS Electrical Connector Bracket Replacement, 15-19
Tubing, Heater/Defroster, Replacement, 19-19
Turbo Boost Pressure Switch Replacement, 7-61
Turbocharger Outlet Pressure Transducer Replacement, 7-76
Turbo Throttle Switch Replacement/Adjustment, 7-59
Turn Signal Switch/Hazard Switch Replacement, 7-35

U

Univeral Joints, Driveshaft and, Repair, 10-2
Unpacking and Deprocessing, 2-4

V

Valve
Air, CHU, Replacement, 21-42
Brake Treadle, Replacement, 12-4
CTIS Wheel, Replacement, 13-11
Dash Manifold, Replacement, 12-37
Fan Control Solenoid, Repair, 20-5
Hand Brake, Replacement, 12-46
Heater Control, Replacement, 19-18
Interface Auxiliary Hydraulic, Replacement, 21-17
Interface Manual Override Solenoid, Replacement, 21-18
No. 1, Relay Spring, Replacement, 12-16
No. 1, Service Relay, Replacement, 12-13
No. 2, Relay Spring, Replacement, 12-17
No. 2, Service Relay, Replacement, 12-14
No. 3, Service Relay, Replacement, 12-15
Quick Release, Replacement, 12-39
Solenoid Four Position, Replacement, 12-40
Tractor Protection, Replacement, 12-45
Vernier Control Replacement, 7-100
Voltage Regulator Adjustment, (145 AMP), 7-7
Voltage Regulator Replacement, (145 AMP), 7-6
Voltage Regulator Replacement, (200 AMP), 7-8

Subject, Para

W

Warning
Buzzer Replacement, 7-25
Lamp Replacement, 7-24
Warranty Information, 1-6
Water Pump, Arctic Kit, Replacement, 21-6
Water Temperature
Gage/Fan Control Sensors Replacement, 7-65
Sending Unit/Temperature Switch Replacement, 7-80
STE/ICE, Sensor, Replacement, 7-64
Waterjacket, Arctic Kit, Replacement, 21-7
Weight Classification Sign Replacement, 19-21
Weldment
CHU Deck, Replacement, 21-40
CHU Stow Cone, Replacement, 21-44
CHU Stow, Replacement, 21-34
Support, CHU Bumper, Replacement, 21-41
Wheel
/Tire Assembly Repair, 13-2
and Tire Maintenance Introduction, 13-1
and Tires Troubleshooting, 2-35
Steering, Replacement, 14-5
Valve, CTIS, Replacement, 13-11
Winch
Crane, LHS Maintenance Introduction, 18-1
Self-Recovery, Replacement, 18-12
Spare Tire Carrier, Replacement, 15-22
Troubleshooting, 2-30
Window
Guard Replacement, 17-46
Peep, Replacement, 17-31
Windshield
Washer Cab Air Regulator Replacement, 12-26
Washer Reservoir and Bracket Repair, 19-8
Wiper Idler Shaft Replacement, 19-7
Wiper Motor Replacement, 19-4
Wiper
Arm Replacement, 19-5
Blade Replacement, 19-6
Wire Harness
Arctic Kit, Replacement, 21-8
Arctic Kit Switch, Replacement, 21-10
CHU, Replacement, 21-20
Engine Brake, Replacement, 7-102
General, Repair, 7-101

Subject, Para

W (CONT).

Wire Rope, Spare Tire Carrier, Replacement, 15-23
Wiring
  Battery Box, Replacement, (145 AMP), 7-90
  Battery Box, Replacement, (200 AMP), 7-91
  CHU Control Box, Replacement, 21-22
  Harness, Instrument Panel Gage, Replacement, 7-14
  Harness, Instrument Panel Switch, Replacement, 7-15
Work Lamp, Hand Held, Assembly, Repair, 7-55

SCHEMATICS

The following sections contain the schematics which are the same in all volumes of TM 9-2320-364-20 and TM 9-2320-364-34.

Section I contains the schematics for trucks equipped with the 145 amp alternator and the DDEC II engine.

Section II contains the schematics for trucks equipped with the 200 amp alternator and the DDEC III engine.

SCHEMATICS

Section I. 145 AMP ALTERNATOR AND DDEC II ENGINE.

Section I contains the schematics for trucks equipped with the 145 amp alternator and the DDEC II engine.

REVISION W
CN 24230
4-15-93

MULTIPLE CONNECTORS

NUMBER	ZONE	SH	DESCRIPTION
MC1	H3	3	CAB/ELECTRICAL BOX
MC1	C26	4	CAB/ELECTRICAL BOX
MC2	D3	3	CAB/ELECTRICAL BOX
MC2	D26	4	CAB/ELECTRICAL BOX
MC3	C3	3	CHASSIS
MC3	H17	6	CHASSIS
MC4	G10	3	SWITCHES
MC5	B12	3	WIPER MOTOR
MC6	D15	3	THROTTLE SENSOR
MC7	H8	3	TURN SIGNAL
MC8	F19	3	GAUGES
MC9	G4	4	ECU ATEC
MC10	G4	4	ECU ATEC
MC11	D3	4	DDEC
MC11	D26	5	DDEC
MC12	H26	4	SHIFT CONT ATEC
MC13	F6	3	DIGN CONN DDEC
MC15	B4	6	MILITARY CONNECTOR
MC16	D4	6	TRAILER
MC17	G11	5	DDEC
MC18	E11	5	DDEC
MC19	E13	5	TRANSMISSION
MC20	E12	5	TRANSMISSION
MC21	E2	3	ENGINE SENSOR
MC21	H26	5	ENGINE SENSOR
MC22	G21	5	REGULATOR
MC23	B23	5	ETHER START
MC24	G19	5	ALTERNATOR
MC25	C17	6	TRAILER 24VDC
MC27	F18	6	FRONT TOW
MC28	E6	3	BEACON LIGHT
MC29	F8	6	CRANE
MC30	C5	6	TRAILER
MC31	B21	3	CAB/CHASSIS
MC32	B23	3	CTI CHASSIS
MC33	F17	7	LHS CAB
MC34	C19	3	24V METERS
MC35	D24	3	CTI
MC36	A5	4	THROTTLE SENSOR
MC38	C15	3	VERNIER CONTROL
MC39	H7	5	STE/ICE
MC40	G5	5	STE/ICE MODULE
MC41	G2	5	PULSE TACH DRIVE
MC42	H4	5	DIFFERENTIAL PRESS
MC43	F2	5	FUEL PRESSURE
MC44	C5	3	CAB/TRANSMISSION
MC44	F26	4	CAB/TRANSMISSION
MC45	D5	4	ECU ATEC

MULTIPLE CONNECTORS

NUMBER	ZONE	SH	DESCRIPTION
MC50	C7	4	RELAYS/ATEC
MC51	C6	4	ECU ATEC
MC52	B23	4	HEATER/DIMMER
MC53	F23	3	ENGINE BRAKE
MC54	F8	6	WORK LIGHT
MC55	B13	6	SELF RECOVERY WINCH
MC56	C23	5	ETHER THERMOSTAT
MC57	F6	6	DRIVE LINE LOCK
MC58	E7	3	GAS PART FILTER
MC59	G13	6	FAN CONTROL
MC60	G24	5	REVERSE PLRT PROTR
MC61	G10	6	FAN CONTL WTR TEMP
MC62	F13	5	DDEC ENGINE POWER
MC63	G11	6	FAN CONTROL
MC64	D15	6	AUXILIARY CTI MANF
MC65	E5	5	STE/ICE ENGINE
MC66	G2	5	TURBO OUTLET PSI
MC67	E2	5	AIR CLEANER
MC68	D2	5	AIR BOX PSI
MC69	D2	5	FUEL RETURN
MC70	C2	5	ENGINE OIL TEMP
MC71	B2	5	ENGINE WATER TEMP
MC73	F13	6	FAN CONTROL
MC76	F11	6	FAN CONTROL VALVE
MC77	E3	6	BACK UP LIGHT
MC78	F4	6	REAR LIGHT GROUP
MC79	G7	6	WORK LIGHT
MC80	G4	6	REAR LIGHT GROUP
MC81	E13	7	LHS
MC82	E12	7	LHS
MC83	E14	7	LHS
MC84	E15	7	LHS
MC85	E9	7	LHS
MC86	E7	7	LHS
MC87	D5	7	LHS
MC88	E6	7	LHS
MC90	C3	6	REAR LIGHT GP HARN
MC91	G8	3	STRN COL.-CAB HARN
MC92	F8	3	STRG COL.-CAB HARN
MC93	C17	7	LHS
MC94	B17	7	LHS
MC95	B15	5	DDEC BATTERY POWER
MC96	C2	3	LOW HYD OIL
MC97	B10	6	AIR DRYER
MC98	B9	6	AIR DRYER
MC99	B8	6	AFTER COOLER
MC102	A3	4	DDEC 6.8K RESISTOR
MC103	E5	3	CHEM DETECTOR
MC104	E5	3	CHEM ALARM

MULTIPLE CONNECTORS

NUMBER	ZONE	SH	DESCRIPTION
MC105	E24	3	CTI ACCESS OUTPUT
MC106	H4	3	DDEC DIAGNOSTIC
MC107	D6	6	FUEL WATER SEP
MC108	C20	5	FUEL PUMP
MC109	C15	6	CTI POWER MANIFOLD
MC110	C24	3	CTI AUX MANF CAB
MC111	B24	3	CTI POWER MANF CAB
MC112	B19	3	LHS LIGHTS
MC113	F16	6	EMERGENCY STEER SW
MC114	G18	5	200 AMP OPTION
MC115	H16	5	200 AMP OPTION
MC116	B12	4	EMER ENG SHUT DOWN
MC118	A9	5	STE/ICE
MC119	B22	4	ARCTIC PUMP
MC120	B7	6	ARCTIC PUMP
MC121	C12	6	SELF RECOVERY WINCH
MC122	D12	6	SELF RECOVERY WINCH
MC123	D12	6	SELF RECOVERY WINCH
MC124	E3	6	BACK-UP LIGHT/ALARM
MC125	G18	3	AIR RESTRICTION LT
MC126	E11	3	STOP LIGHTS
MC127	B15	3	THROTTLE POSN SW
MC128	G10	6	AUX WATER TEMP SW

LIGHTS

NUMBER	ZONE	SH	DESCRIPTION
L1	G16	3	PARKING BRAKE IND
L2	G17	3	LOW AIR INDICATOR
L3	G17	3	CHECK GAUGES IND
L4	G17	3	RH TURN INDICATOR
L5	G24	3	TRANS CHECK IND
L6	G18	3	CHECK ENGINE IND
L7	G17	3	DRIVE LINE LOCK IND
L8	G24	3	HI WATER TEMP IND
L9	G24	3	LOW OIL PSI IND
L10	G25	3	HI BEAM INDICATOR
L11	G28	3	LH TURN INDICATOR
L12	F27	3	RH HEADLIGHT
L13	G27	3	RH SIDE TURN SIGNAL
L14	F27	3	RH COMPOSITE
L15	E27	3	BLACKOUT DRIVE
L16	D27	3	LH COMPOSITE
L17	C27	3	LH HEADLIGHT
L18	C27	3	LH SIDE TURN SIGNAL
L19	B27	3	ID & CLEARANCE
L20	H10	3	DOME
L21	G7	6	RH WORK LIGHT
L22	G2	6	RH REAR COMPOSITE
L23	G2	6	BACK UP
L24	F2	6	LH REAR COMPOSITE
L25	C2	6	ID/CLEARANCE REAR
L26	E22	3	LHS INDICATOR
L27	E22	3	AUXILLARY HYDR IND
L28	E23	3	TRANSIT INDICATOR
L29	E23	3	LHS OVERLOAD IND
L31	D2	6	RH REAR S MKR (RED)
L32	H4	6	RH SIDE MKR (AMBER)
L33	B2	6	LH SIDE MKR (AMBER)
L34	H4	6	LH REAR S MKR (RED)
L35	G16	3	EMERGENCY STEERING
L36	G16	3	LOW HYD OIL
L37	D21	3	ENGINE BRAKE
L38	D21	3	FLAT RACK
L39	F7	6	LH WORK LIGHT
L40	F7	3	T.C. LOCKUP
L41	C2	6	L.H. B.O. CL LIGHT
L42	D2	6	R.H. B.O. CL LIGHT
L43	B5	3	POST LIGHT
L44	F5	3	HEATER PANEL LIGHT

SWITCHES

NUMBER	ZONE	SH	DESCRIPTION
S1	H6	3	TURN SIGNAL/DIMMER
S2	E13	3	IGNITION
S3	F5	3	HEATER
S4	D8	3	SELF RECOVERY CRANE
S5	H12	3	BEACON LIGHT
S6	H13	3	WORK LIGHT
S7	H14	3	WINDSHIELD WASHER
S8	G15	3	WINDSHIELD WIPER
S9	F16	3	BLACK OUT SVCE SEL
S10	F54	3	BLACK OUT MARKER
S11	F14	3	BLACK OUT DRIVE
S12	F14	3	HEADLIGHTS
S13	F5	6	DRIVE LINE LOCK
S14	F12	3	RHEOSTAT
S15	F7	3	HORN
S16	F13	3	ENGINE BRAKE
S18	D7	3	SELF RECOVERY WINCH
S19	D6	3	GAS PARTIULATE FLTR
S20	D5	3	CHEMICAL ALARM
S21	H15	3	DOME LIGHT
S22	C8	5	STE/ICE ZEROING
S23	C22	7	PROX SW HOOK ARM UP
S24	C23	7	PROX SW MDL FR DOWN
S25	D13	3	ETHER START
S26	F7	3	TC LOCKUP
S27	E5	7	HOOK ARM DOWN
S28	G8	7	OVERLOAD PSI
S29	B19	4	ARCTIC PUMP
S30	E9	3	EMER ENG SHUT DOWN
S31	C16	3	THROTTLE POSITION

PRESSURE SWITCHES

NUMBER	ZONE	SH	DESCRIPTION
PS1	G9	3	FRONT BRAKE
PS2	F9	3	REAR BRAKE
PS3	F9	3	HAND BRAKE
PS4	C14	3	PARKING BRAKE
PS5	B15	3	PARKING BRAKE SW
PS6	D17	3	LOW AIR PRESSURE
PS7	D17	3	LOW AIR PRESSURE
PS8	C22	5	ATEC OIL PRESSURE
PS9	D22	5	ENGINE OIL
PS10			GOVERNOR PRESSURE
PS11			GOVERNOR PRESSURE
PS13	F15	6	EMERGENCY STEER
PS15	F26	5	BOOST PRESSURE

TEMPERATURE SWITCHES

NUMBER	ZONE	SH	DESCRIPTION
TS1	C23	5	ETHER START
TS2	D23	5	ENGINE WATER
TS3	F10	6	ENGINE WATER
TS4	G10	6	ENGINE WATER

RELAYS

NUMBER	ZONE	SH	DESCRIPTION
R1	G24	4	HEADLIGHTS
R2	G23	4	ID/CLEARANCE LIGHTS
R3	G22	4	HORN
R4	G21	4	WORK LIGHTS
R5	G20	4	DIMMER
R6	G19	4	BEACON LIGHTS
R7	G18	4	TRANSMISSION
R8	G18	4	RATARDER
R9	G18	4	CK TRANSMISSION
R10	G17	4	REVERSE
R11	G16	4	NEUTRAL START
R12	G15	4	12 V MAG SWITCH
R13	G15	4	B.O. STOP
R14	G14	4	BO SERVICE TAIL LTS
R15	G13	4	LH TURN SIGNAL
R16	G12	4	RH TURN SIGNAL
R17	G12	4	BLACK OUT TAIL LTS
R18	G11	4	DDEC
R19	G10	4	TRANS DDEC
R20	G9	4	INTER AXLE
R21	G9	4	DIFFERENTIAL LOCK
R22	G8	4	CRANE HI IDLE
R23	G7	4	HIGH RANGE LOCKOUT
R24	G6	4	T.C. DUAL MODE
R25	B17	4	MAGNETIC SWITCH
R26	B18	4	MAGNETIC SWITCH
R27	D19	5	MAGNETIC SWITCH
R28	C21	4	MAGNETIC SWITCH
R29	C10	7	MIDDLE FR LOCKOUT
R32	B21	4	ARCTIC PUMP
R33	B20	4	ARCTIC PUMP

SENDING UNIT

NUMBER	ZONE	SH	DESCRIPTION
SU1	E21	5	WATER TEMPERATURE
SU2	D21	5	TRANSMISSION TEMP
SU3	D21	5	ENGINE OIL PRESSURE
SU4	F6	6	SPEEDOMTER
SU5	D6	6	FUEL LEVEL

FIGURE FO-1. ELECTRICAL SYSTEM SCHEMATIC
FOLDOUT 1 OF 35
ENGINEERING DWG 1878290 SHEET 1
FP-1/FP-2 BLANK

REVISION W
CN 24230
4-15-93

CIRCUIT BREAKERS

NUMBER	ZONE	SH	DESCRIPTION
CB1	D22	4	15 AMP
CB2	D22	4	15 AMP
CB3	D21	4	15 AMP
CB4	D21	4	15 AMP
CB5	D20	4	20 AMP
CB6	D20	4	15 AMP
CB7	D19	4	10 AMP
CB8	D19	4	15 AMP
CB9	D18	4	10 AMP
CB10	D17	4	3 AMP
CB11	D16	4	8 AMP
CB12	D16	4	8 AMP
CB13	D15	4	8 AMP
CB14	D14	4	15 AMP
CB15	D13	4	15 AMP
CB16	D12	4	15 AMP
CB17	D12	4	3 AMP
CB18	D11	4	10 AMP
CB19	D10	4	15 AMP
CB20	D9	4	15 AMP
CB21	D9	4	30 AMP
CB22	D7	4	20 AMP
CB23	D7	4	20 AMP
CB24	C20	5	3 AMP

GAUGES

NUMBER	ZONE	SH	DESCRIPTION
G1	G20	3	WATER TEMPERATURE
G2	G21	3	OIL PRESSURE
G3	G22	3	FUEL LEVEL
G4	G22	3	TACHOMETER
G5	G23	3	SPEEDOMTER
G6	G19	3	VOLTMETER 12V
G7	G19	3	VOLTMETER 24V
G10	G20	3	XMSN OIL TEMP
G11	G18	3	AIR PRESSURE
G12	H18	3	AIR RESTRICTION

MISCELLANEOUS

NUMBER	ZONE	SH	DESCRIPTION
M1	B6	3	WINDSHIELD WSHR SOL
M2	B13	3	WIPER MOTOR
M3	E17	3	LOW OIL & AIR ALARM
M4	A5	4	THROTTLE POSN CONT
M5	C20	4	FLASHER
M6	C16	5	BATTERIES
M7	E17	5	STARTER
M8	B22	5	ETHER START
M9	D6	6	FUEL/WATER SEP
M10	C10	6	LHS SOLENOID VALVE
M11	C8	6	AFTERCOOLER
M12	C20	5	FUEL PUMP
M13	B10	6	AIR DRYER
M14	E6	3	CHEMICAL DETECTOR
M14	B9	6	AIR DRYER
M15	D1	3	HORN
M16	D16	3	VERNIER CONTROL
M17	F5	3	HEATER MOTOR
M18	F24	3	LOW OIL PRESS ALARM
M19	F21	5	REGULATOR/DVS
M20	G22	5	ALTERNATOR.STD
M21	C25	5	RH SIDE ENG BK COIL
M22	C24	5	LH SIDE ENG BK COIL
M23	D18	5	SLAVE CONNECTER
M24	B15	6	CTI POWER MANIFOLOD
M25	D15	6	CTI AUXILIARY MANF
M26	E13	7	LHS CAB CONTROLLER
M27	B13	6	SELF RECOVERY WINCH
M28	E25	3	CTI CONTROLLER
M29	G14	7	CHEMICAL ALARM
M30	D11	3	GAS PART FILTER
M31	D11	3	AIR HEATER DRIVER
M32	D12	3	AIR HEATER PASS
M33	D3	7	SRW SOLENOID VALVE
M35	E15	3	THROTTLE POSITIONER
M36	C9	4	DIODE
M39	F9	4	RECTIFIER
M40	G2	5	PULSE TACH DRIVE
M41	H5	5	DIFFERENTIAL PRESS
M42	F2	5	FUEL PRESSURE
M43	G5	5	STE/ICE MODULE
M45	F10	6	FAN CONTROL VALVE
M48	D16	5	SHUNT
M49	B9	3	XFR CASE LKUP SOL
M50	B8	3	INTER AXLE SOL V
M51	B8	3	DIFF SOLENOID VALVE
M51	C11	6	FAN
M52	A21	4	RECTIFIER
M53	G11	7	LHS HOOK ARM B
M54	G10	7	LHS HOOK ARM A
M55	G10	7	LHS MAIN CYLINDER B
M56	G10	7	LHS MAIN CYLINDER A

MISCELLANEOUS

NUMBER	ZONE	SH	DESCRIPTION
M57	G9	7	LHS FREEFLOW
M58	G9	7	LHS TRANSIT
M59	F3	7	LHS LH HOOK ARM A
M60	F3	7	LHS LH HOOK ARM B
M61	F2	7	LHS RH HOOK ARM A
M62	F2	7	LHS RH HOOK ARM B
M64	H21	5	DUVAC CONTROLLER
M65	G17	5	ALTNTR 200 AMP OPT.
M66	G16	3	RECTIFIER
M67	C8	3	RECTIFIER
M68	G12	7	RECTIFIER
M70	F2	5	TURBO OUTLET PSI
M71	E2	5	AIR CLEANER
M72	D2	5	AIR BOX PSI
M73	C2	5	FUEL RETURN
M74	C2	5	ENGINE OIL TEMP
M75	B2	5	ENGINE WATER TEMP
M76	E10	4	RECTIFIER
M77	B17	5	ARCTIC BATTERIES
M78	E2	6	BACK-UP ALARM
M80	B7	6	ARCTIC PUMP
M81	F4	3	RECTIFIER
M82	E13	3	ISOLATOR

CODE SORT

CODE	ROUTING	SH	DESCRIPTION
104	MC36-M4	4	THROTTLE SENSOR
104	MC10-MC36	4	THROTTLE SENSOR
105	MC10-MC19	4/5	ATEC
106A	MC10-MC36	4	THROTTLE SENSOR
106A	MC36-M4	4	THROTTLE SENSOR
106A	MC10-106B	4/5	ATEC
106B	106A-MC19	4/5	ATEC
107	MC10-MC19	4/5	ATEC
108	MC10-MC19	4/5	ATEC
109	MC10-MC19	4/5	ATEC
110	MC10-MC19	4/5	ATEC
111	MC10-MC19	4/5	ATEC
112	MC10-MC20	4/5	ATEC
113	MC10-MC20	4/5	ATEC
114	MC10-MC19	4/5	ATEC
115	MC11-MC18	5	ECM
115	MC11-MC102	4	6.8K RESISTOR
115	MC10-MC19	4/5	ATEC
116	MC10-MC19	4/5	ATEC
117	MC10-MC19	4/5	ATEC
118	MC10-MC19	4/5	ATEC
119	MC10-MC19	4/5	ATEC
120	MC10-MC19	4/5	ATEC
121	MC10-MC19	4/5	ATEC
122	MC10-MC19	4/5	ATEC
123	MC10-MC19	4/5	ATEC
124	MC36-M4	4	THROTTLE SENSOR
124	MC10-MC36	4	THROTTLE SENSOR
150	MC62-MC62	5/4	
150	MC17-MC62	5	
195	MC5-M2	3	
201	MC51-GROUND	4	
201	MC9-MC51	4	
202A	MC9-SPLICE	4	
203	MC9-MC51	4	
203	MC51-CB12	4	
204	MC9-MC12	4	ATEC
206	MC9-MC12	4	ATEC
207A	MC51-MC106	4	ATEC
207A	MC9-MC51	4	ATEC
207A	MC106-MC13	4	
208/209	MC11-SPLICE	4	
208/209	SPLICE-MC51	4	
208/209	M6-MC95	5	
208/209	MC95-MC11	5	
208/209	MC51-MC9	4	
210A	MC9-MC12	4	
211	R8-MC50	4	
211	MC50-R8	4	RETARDER
211	MC9-MC50	4	

CODE SORT

CODE	ROUTING	SH	DESCRIPTION
212	MC9-MC12	4	
213	MC50-R8	4	RETARDER
213	MC9-MC50	4	
214	MC50-R10	4	REVERSE
214	MC9-MC50	4	
215	MC9-MC50	4	
215	MC50-R9	4	CHECK TRANSMISSION
216A	MC106-MC13	3	
216A	MC9-MC51	4	ATEC
216A	MC51-MC106	4	ATEC
218	MC9-MC12	4	ATEC
219	MC9-MC12	4	ATEC
220	MC9-MC12	4	ATEC
221	MC9-MC12	4	ATEC
222	MC9-GROUND	4	ATEC
223A	MC51-CB14	4	TRANSMISSION
223A	MC51-SPLICE	4	
223A	SPLC-SPLC	4	
223A	SPLC-SPLC	4	
223A	SPLC-SPLC	4	
223A	SPLICE-MC9	4	
223B	MC12-SPLICE	4	
225	CB11-MC12	4	
230	MC12-234	4	
231	MC50-MC12	4	
231	MC50-R22	4	CRANE HI IDLE
231	MC50-M36	4	
231	M36-R11	4	NEUTRAL START
233	MC50-MC12	4	
234	MC12-GROUND	4	
240	MC62-CB23	5/4	
240	CB23-M6	4/5	
240	MC17-MC62	5	
240	MC62-M6	5	
241	MC62-CB22	5/4	
241	MC62-M6	5	
241	MC17-MC62	5	
241	CB22-M6	4/5	
309	MC45-R24	4	TC DUAL MODE
313	MC45-R24	4	TC DUAL MODE
315	MC45-R24	4	TC DUAL MODE
417	MC6-M35	3	
417	MC11-MC44	4	
417	MC11-MC18	5	ECM
417	MC44-MC6	3	THROTTLE SENSOR
419	MC11-MC18	5	ECM
419	MC11-MC44	4	
419	MC44-MC8	3	
419	MC8-L6	3	CHECK ENGINE LIGHT

FIGURE FO-1. ELECTRICAL SYSTEM SCHEMATIC
FOLDOUT 2 OF 35
ENGINEERING DWG 1878290 SHEET 1
FP-3/FP-4 BLANK

REVISION W
CN 24230
4-15-93

CODE SORT

CODE	ROUTING	SH	DESCRIPTION
439	MC116-MC106	4	EMERGENCY ENG STOP
439	MC116-S30	3	EMERGENCY ENG STOP
439	MC116-S30	3	EMERGENCY ENG STOP
439	MC116-CB13	4	DDEC
439	MC106-MC13	3	
439	SPLC-MC106	4	
439	MC11-MC18	5	ECM
439	MC8-L6	3	CHECK ENGINE LIGHT
439	MC8-L3	3	ENGINE STOP LIGHT
439	MC44-MC8	3	
439	MC11-SPLICE	4	
439	SPLICE-MC44	4	
439	SPLC-MC116	4	
451	MC11-MC18	5	ECM
451	MC106-MC13	3	
451	MC11-MC106	4	
505	MC106-MC13	3	
505	MC11-MC106	4	
505	MC11-MC18	5	ECM
508	MC11-R7	4	TRANSMISSION
508	MC11-MC18	5	ECM
509	MC11-MC18	5	ECM
509	MC8-L3	3	ENGINE STOP LIGHT
509	MC44-MC8	3	
509	MC11-MC44	4	
510	MC11-MC18	5	ECM
510	MC44-PS4	3	PARKING BRAKE
510	R22-MC44	4	
510	MC11-R22	4	
900	MC11-MC106	4	
900	MC11-MC18	5	ECM
900	MC106-MC13	3	
901	MC11-MC18	5	ECM
901	MC106-MC13	3	
901	MC11-MC106	4	
908	MC11-MC18	5	ECM
908	MC11-M4	4	THROTTLE POSN CONT
916	MC44-MC6	3	
916	MC11-MC44	4	
916	MC38-M16	3	
916	MC6-MC38	3	VERNIER CONTROL
916	MC6-M35	3	THROTTLE SENSOR
916	MC11-MC18	5	ECM
952	MC38-M16	3	
952	MC11-MC44	4	
952	MC44-MC6	3	THROTTLE SENSOR
952	MC11-MC18	5	ECM
952	MC6-MC38	3	VERNIER CONTROL
1001	MC8-L4	3	
1001	MC7-SPLICE	3	
1001	MC8-SPLICE	3	
1001	SPLICE-L13	3	
1001	SPLICE-L14	3	

CODE SORT

CODE	ROUTING	SH	DESCRIPTION
1001	S1-MC7	3	RH HEADLIGHT
1002	S1-MC7	3	LH HEADLIGHT
1002	MC8-L11	3	
1002	MC7-SPLICE	3	
1002	SPLICE-MC8	3	
1002	SPLICE-L18	3	
1002	SPLICE-L16	3	
1003	MC7-MC3	3	
1003	S1-MC7	3	LH RR TURN SIGNAL
1003	MC3-MC80	6	
1003	MC3-MC16	6	TRAILER CONN 12VDC
1003	MC1-R15	4	LH TURN LIGHT
1003	MC80-L24	6	LH STOP LIGHT
1003	MC27-MC3	6	FRONT TOW
1003	MC7-MC1	3	
1003C	MC25-R17	4	LH TURN LIGHT
1003C	MC25-MC15	6	TRAILER CONN 12VDC
1004	MC7-MC1	3	
1004	MC7-MC3	3	
1004	S1-MC7	3	
1004	MC3-MC80	6	
1004	MC80-L22	6	RH STOP LIGHT
1004	MC27-MC3	6	
1004	MC3-MC78	6	
1004	MC3-MC16	6	
1004	MC1-R16	4	
1004C	MC25-R16	4	RH TURN LIGHT
1004C	MC25-MC15	6	TRAILER CONN 24VDC
1005	MC126-S9	3	
1005	PS3-MC3	3	
1005	MC3-MC16	6	TRAILER CONN 24VDC
1005	MC126-PS1	3	
1005	PS2-PS3	3	
1005	MC27-MC3	6	FRONT TOW
1005	PS1-PS2	3	
1005A	MC7-MC126	3	
1005A	MC126-S9	3	
1005A	S1-MC7	3	TURN SIGNAL/DIM SW
1006	MC2-SPLICE	3	
1006	SPLICE-L12	3	
1006	SPLICE-L17	3	
1006	MC2-R5	4	DIMMER
1007	MC2-R5	4	DIMMER
1007	MC2-SPLICE	3	
1007	SPLICE-L12	3	
1007	SPLICE-L17	3	
1008	MC3-MC78	6	
1008	MC4-S12	3	HEADLIGHTS

CODE SORT

CODE	ROUTING	SH	DESCRIPTION
1008	MC27-MC3	6	FRONT TOW
1008	MC3-SPLICE	3	
1008	MC3-MC4	3	
1008	MC3-MC16	6	TRAILER CONN 12VDC
1008	MC78-L22	6	RH TAIL LIGHT
1008	MC78-L24	6	LH TAIL LIGHT
1008C	MC25-MC15	6	TRAILER CONN 24VDC
1008C	MC25-R14	4	B.O. SERVICE
1009	PS2-PS3	3	
1009	PS1-PS2	3	
1009	MC2-PS1	3	
1009	MC2-CB6	4	STOP LIGHT
1012	MC3-SPLICE	3	
1012	SPLC-SPLC	3	
1012	MC2-SPLICE	3	
1012	SPLC-SPLC	3	
1012	SPLICE-L19	3	
1012	MC2-R2	4	CLEARANCE LIGHTS
1012	MC3-SPLICE	6	
1012	SPLICE-MC27	6	
1012	SPLICE-MC80	6	
1012	SPLICE-L32	6	RH SIDE MARKER
1012	SPLICE-L34	6	LH SIDE MARKER
1012	MC90-L31	6	RR SIDE MARKER
1012	MC90-L25	6	ID LIGHTS
1012	MC80-MC90	6	
1012	MC90-L33	6	RR SIDE MARKER
1016	MC92-MC2	3	
1016	S15-MC92	3	
1016	MC2-R3	4	HORN
1017	SPLICE-R5	4	
1017	MC52-R14	4	
1017	R2-MC52	4	
1017	MC2-SPLICE	4	
1017	SPLICE-R1	4	
1017	MC91-MC2	3	
1017	S1-MC91	3	
1017A	MC91-MC2	3	
1017A	S1-MC91	3	
1017A	MC2-R5	4	
1018	MC8-L10	3	HIGH BEAM
1018	MC8-1007	3	
1019	L15-1679	3	
1020	L14-L16	3	
1020	DUVAC IGN	5	FUEL PUMP
1020	S2-MC21	3	
1020	R27-MC48	5	
1020	MC60-IGN	5	DUVAC CONTROLLER
1020	MC21-MC60	5	
1020	MC108-M81	5	
1020	M81-MC60	5	
1021	MC2-S2	3	
1021	MC2-R11	4	
1021	R11-M76	4	

FIGURE FO-1. ELECTRICAL SYSTEM SCHEMATIC
FOLDOUT 3 OF 35
ENGINEERING DWG 1878290 SHEET 1
FP-5/FP-6 BLANK

REVISION V
CN 23138
11-24-92

CODE SORT

CODE	ROUTING	SH	DESCRIPTION
1021	MC52-R11	4	FRONT TOW
1021A	R11-MC1	4	
1021A	MC1-MC21	3	
1021A	MC21-MC60	5	
1021A	MC60-R27	5	
1026	MC52-CB16	4	
1029	MC2-R6	4	BEACON
1029	MC2-MC28	3	
1031	R3-SPLICE	4	
1032	MC8-MC21	3	
1032	M39-L9	3	LOW OIL PSI
1032	MC8-M39	3	
1032	PS9-MC21	5	ENGINE OIL PSI SW
1033	M39-M18	3	OIL PSI/H WTR ALM
1036	MC23-M8	5	
1036	MC23-M7	5	
1036	MC21-MC56	5	ETHER START
1036	MC21-S25	3	
1040	CB4-R4	4	WORKLIGHT
1040A	S6-MC4	3	
1040A	MC2-R4	4	WORKLIGHT
1040A	MC4-MC2	3	
1040B	MC3-MC79	6	RH WORKLIGHT
1040B	MC2-MC3	3	
1040B	MC2-R4	4	WORKLIGHT
1040B	MC3-MC54	6	LH WORKLIGHT
1045	R27-M7	5	
1049	MC2-R1	4	HEADLIGHTS
1049	MC4-MC2	3	
1049	S12-MC4	3	
1052	S20-S19	3	CHEM ALM-GPF
1052	S19-S18	3	GAS PART FLTR-SRW
1052	S18-S4	3	SRW-SRW/MHC
1052	S4-S30	3	SRW/MHC-EMER ENG S D
1052	S30-SPLICE	3	EMER ENG SHUT DOWN
1052	SPLICE-G11	3	AIR PRESSURE GAUGE
1052	MC4-SPLICE	3	
1052	SPLICE-L44	3	HEATER PANEL LIGHT
1052	S5-S6	3	BEACON LT-WORK LT
1052	S6-S7	3	WORK LT-WSHLD WSHR
1052	S7-S8	3	WSHLD WASHER-WIPERS
1052	S8-S21	3	WIPERS-DOME LIGHT
1052	S21-S9	3	DOME LT-B.O.SERV SEL
1052	S9-S10	3	BO SERV SEL-BO MKR
1052	S10-S11	3	B.O. MARKER-B.O. DR
1052	S11-S12	3	B.O. DRIVE-HEADLTS
1052	S12-S16	3	HEADLIGHTS-ENG BK
1052	S16-S14	3	ENG BRAKE-RHEO/DOME
1052	S14-SPLICE	3	RHEOSTAT/DOME
1052	SPLICE-G6	3	VOLTMETER 12V
1052	SPLC-SPLC	3	
1052	SPLICE-G10	3	XMSN OIL TEMP GAUGE
1052	SPLICE-G1	3	WATER TEMP GAUGE
1052	SPLICE-G2	3	OIL PRESSURE GAUGE
1052	SPLICE-G4	3	TACHOMETER
1052	SPLICE-G5	3	SPEEDOMETER
1052	SPLICE-G3	3	FUEL GAUGE

CODE SORT

CODE	ROUTING	SH	DESCRIPTION
1052	MC1-SPLICE	3	
1052	SPLICE-L43	3	POST LIGHT
1052	SPLC-MC125	3	
1052	MC125-G12	3	AIR RESTRICTION GA
1052	MC1-SPLICE	3	
1052	MC1-CB1	4	15 AMP HEADLIGHT
1052	MC50-MC1	4	
1055	MC115-M7	5	
1055	M7-1277	5	
1055	M7-1281	5	
1056	MC111-MC32	3	
1056	MC32-MC109	6	CTI POWER MANIFOLD
1057	M20-M20	5	
1057	MC111-MC32	3	
1057	MC32-MC109	6	CTI POWER MANIFOLD
1058	MC32-MC109	6	CTI POWER MANIFOLD
1058	MC111-MC32	3	
1059	MC32-MC109	6	CTI POWER MANIFOLD
1059	MC111-MC32	3	
1061	MC22-MC109	6	CTI POWER MANIFOLD
1061	MC111-MC32	3	
1062	MC32-MC109	6	CTI POWER MANIFOLD
1062	MC111-MC32	3	
1063	MC32-MC109	6	CTI POWER MANIFOLD
1064	MC32-MC109	6	CTI POWER MANIFOLD
1064	MC111-MC32	3	
1065	MC32-MC109	6	CTI POWER MANIFOLD
1065	MC111-MC32	3	
1066	MC32-MC64	6	CTI AUX MANIFOLD
1066	MC110-MC32	3	
1067	MC32-MC64	6	CTI AUX MANIFOLD
1068	MC32-MC64	6	CTI AUX MANIFOLD
1068	MC110-MC32	3	
1070	MC32-MC64	6	CTI AUX MANIFOLD
1070	MC110-MC32	3	
1071	MC110-MC32	3	
1071	MC32-MC64	6	CTI AUX MANIFOLD
1072	R26-R25	3	
1072	MC110-MC32	3	
1072	MC32-MC64	6	CTI AUX MANIFOLD
1073	MC32-MC64	6	CTI AUX MANIFOLD
1073	MC110-MC32	3	
1074	MC110-MC32	3	
1074	R25-CB10	4	
1074	MC32-MC64	6	CTI AUX MANIFOLD
1075	M6-R25	4/3	
1075B	R25-R18	4	
1076	MC110-MC32	3	
1076	MC32-MC64	6	CTI AUX MANIFOLD
1079	CB5-M6	4	HAZARD LIGHTS
1080	MC7-MC2	3	

CODE SORT

CODE	ROUTING	SH	DESCRIPTION
1080	MC2-M5	4	TURN SIGNAL/FLASHER
1082	MC2-MC52	4	
1082	MC2-M81	3	
1082	M81-S3	3	
1082	MC52-CB15	4	HEATER
1084	MC1-CB5	4	B.O. LIGHTS
1084	MC4-MC1	3	
1084	MC4-S9	3	
1091	L17-GROUND	3	
1092	L7-MC8	3	
1092	MC8-M51	3	
1093	MC31-MC57	6	
1093	MC1-MC31	3	
1093	MC1-CB16	4	
1093	MC57-S13	6	DRIVE LINE LOCK-UP
1094	S5-S14	3	
1095	R23-R24	4	
1095	MC44-R23	4	
1095	MC31-MC44	3	
1095	MC57-S13	6	DRIVE LINE LOCK-UP
1095	MC31-MC57	6	
1108	MC44-MC8	3	
1108	505-MC44	4	
1108	MC8-G4	3	TACHOMETER
1113	MC8-MC21	3	
1113	G2-MC8	3	OIL PSI GAUGE
1113	SU3-MC21	5	ENG OIL PSI SNDG UN
1114	M66-MC8	3	
1114	MC96-MC8	3	LOW OIL LEVEL LIGHT
1114	MC8-L36	3	
1114	L36-M66	3	
1118	MC4-1919	3	
1118	S8-MC4	3	
1120	M66-MC8	3	
1120	M66-M3	3	
1120	PS6-PS7	3	
1120	PS6-MC8	3	
1120	L2-M66	3	
1137	M6(1)-M6(2)	5	
1137	M6(3)-M6(4)	5	
1138	M48-M7	5	SHUNT
1138	M7-M23	5	SLAVE
1138	M6-M48	5	SHUNT
1138	M77-M7	5	ARCTIC BATTERIES
1139	M7-M23	5	SLAVE
1139	M6-M7	5	
1139	M77-M7	5	ARCTIC BATTERIES
1147	TS2-MC21	5	ENG WTR TEMP SNDG UN
1147	M39-L8	3	HIGH WATER TEMP
1147	MC8-MC21	3	
1147	MC8-M39	3	
1149	MC1-R10	4	REVERSE
1149	MC3-MC78	6	
1149	MC1-MC124	3	
1149	MC78-MC77	6	REVERSE LIGHT
1149	MC124-MC77	6	

FIGURE FO-1. ELECTRICAL SYSTEM SCHEMATIC
FOLDOUT 4 OF 35
ENGINEERING DWG 1878290 SHEET 2
FP-7/FP-8 BLANK

REVISION V
CN 23138
11-24-92

CODE SORT

CODE	ROUTING	SH	DESCRIPTION
1153	S21-MC4	3	
1153	MC4-L20	3	DOME LIGHT
1168	MC2-R3	4	HORN
1168	MC2-M15	3	
1174	BUS BAR	4	
1175	R28-CB5	4	
1176	MC113-PS13	6	EMERGENCY STEER
1184	S5-MC4	3	
1184	MC2-R6	4	
1184	MC2-MC4	3	
1189	MC4-S9	3	
1189	MC44-R28	4	
1189	MC4-SPLICE	3	
1189	MC4-S21	3	
1189	MC2-SPLICE	3	
1189	MC2-M5	4	
1189	SPLICE-MC44	3	
1274	MC115-SPLC.	5	
1274	M64-SPLICE	5	
1274	M8-SPLICE	5	
1275	M6-M20	5	
1275	M6-200 AMP	5	
1276	MC2-MC4	3	
1276	MC2-CB8	3	
1276	SPLICE-S14	3	
1276	SPLICE-MC53	3	
1276	MC4-SPLICE	3	
1276	MC2-SPLICE	4	
1276	MC53-SPLICE	3	
1276	SPLC-SPLC	3	
1276	SPLC-SPLC	3	
1276	SPLICE-M3	3	LOW AIR ALARM
1276	SPLICE-G5	3	SPEEDOMETER
1276	SPLICE-L1	3	PARKING BRAKE
1276	SPLICE-L2	3	LOW AIR
1276	SPLICE-L35	3	EMERGENCY STEERING
1276	SPLICE-L36	3	LOW HYDR OIL
1276	SPLC-SPLC	3	
1276	SPLICE-L5	3	XMSN CHECK
1276	SPLICE-L8	3	HIGH WATER TEMP
1276	SPLICE-L9	3	LOW OIL PSI
1276	SPLICE-G3	3	FUEL GAUGE
1276	SPLICE-G6	3	VOLTMETER 12V
1276	SPLICE-G1	3	WATER TEMP GAUGE
1276	SPLICE-G2	3	OIL PRESSURE GAUGE
1276	SPLICE-G4	3	TACHOMETER
1276	SPLICE-G10	3	XMSN OIL TEMP GAUGE
1276	SPLICE-M18	3	ALARM
1277	MC115-SPLC	5	
1277	MC8-SPLICE	5	
1278	M20-M79	5	
1278	MC8-SPLICE	5	

CODE SORT

CODE	ROUTING	SH	DESCRIPTION
1279	PS14-1277	5	
1279	MC115-PS14	5	
1279	M64-1280	5	
1280	CB21-R26	4	
1280	1281-R26	5	
1281	1280-MC47	5	
1281	R27-M81	5	
1281	1281-1281	5	
1292	MC4-S6	3	
1292	CB4-MC2	4	
1292	MC2-MC4	3	
1292	MC4-S12	3	
1314	1118-S7	3	
1318	MC3-MC8	3	
1318	MC3-G3	3	FUEL GAUGE
1318	MC3-SU5	6	FUEL LEVEL
1320	SU1-MC2	5	WATER TEMP SNDG UN
1320	G1-MC8	3	WATER TEMP
1320	MC8-MC21	3	
1340	CB15-MC14	4	SWING FIRE
1344	M20-MC22	5	
1362	R27-M64	5	
1371	MC8-PS5	3	
1371	L1-MC8	3	
1409	MC8-MC1	3	
1409	L5-MC8	3	
1409	MC1-R9	4	
1413	CB3-SPLICE	4	
1413	SPLICE-R6	4	
1430	R28-SH5	4/5	
1430	1832-R28	5	
1431	MC3-S2	3	
1431	MC3-M6	6	BATTERIES
1431	MC3-M6	6	BATTERIES
1431	MC1-MC119	4	
1431	MC119-R32	4	
1431	R32-S29	4	ARCTIC PUMP
1431	MC119-CB20	4	
1435	MC78-MC124	6	
1435	MC124-M78	6	
1435	MC77-MC124	6	
1435	MC85-MC86	7	
1435	MC86-MC87	7	
1435	MC33-MC84	7	
1435	GROUND	3	
1435	MC81-MC82	7	
1435	MC84-MC83	7	
1435	MC81-MC82	7	
1435	MC108-GND	5	
1435	GND	5	
1435	MC22-GND	5	
1435	M52-R26	4	
1435	M52-R28	4	
1435	R27-GND	5	
1435	MC125-GND	3	
1449	MC8-MC21	3	
1449	G10-MC8	3	TRANS OIL TEMP

CODE SORT

CODE	ROUTING	SH	DESCRIPTION
1449	SU2-MC21	5	TRANS TEMP SNDG UN
1454	MC81-MC82	7	
1460	MC81-MC82	7	
1461	MC86-MC87	7	
1461	MC85-MC86	7	
1462	MC81-MC82	7	
1463	MC81-MC82	7	
1464	MC81-MC82	7	
1465	MC81-MC82	7	
1466	MC85-MC86	7	
1466	MC86-MC87	7	
1467	MC81-MC82	7	
1468	MC81-MC82	7	
1469	MC81-MC82	7	
1469	MC86-MC87	7	
1469	MC85-MC86	7	
1470	MC86-MC87	7	
1470	MC85-MC86	7	
1471	MC85-MC86	7	
1471	MC86-MC87	7	
1471	MC81-MC82	7	
1472	MC85-MC86	7	
1472	MC81-MC82	7	
1472	MC86-MC88	7	
1475	MC85-MC86	7	
1475	MC86-MC87	7	
1480	MC84-MC93	7	
1480	MC84-MC83	7	
1481	MC84-MC83	7	
1481	MC84-MC93	7	
1482	MC84-MC93	7	
1482	MC84-MC83	7	
1483	MC83-MC84	7	
1483	MC84-MC93	7	
1484	MC83-MC84	7	
1484	MC84-MC93	7	
1485	MC84-MC94	7	
1485	MC83-MC84	7	
1486	MC84-MC94	7	
1486	MC83-MC84	7	
1487	MC1-S25	3	
1487	MC1-CB15	4	
1487	MC83-MC84	7	
1487	MC84-MC94	7	
1488	MC84-MC94	7	
1488	MC83-MC84	7	
1489	MC83-MC84	7	
1489	MC84-MC94	7	
1490	MC84-MC94	7	
1490	MC83-MC84	7	
1491	L16-1008	3	
1491	L14-1008	3	
1517	PS8-MC11	5	ATEC OIL PSI SWITCH
1517	MC11-R9	4	

CODE SORT

CODE	ROUTING	SH	DESCRIPTION
1519	MC8-MC35	3	CTI OVERSPEED
1519	MC3-MC8	3	SPEEDOMETER
1519	MC8-MC35	3	CTI OVERSPEED
1519	G5-MC8	3	SPEEDOMETER
1519	MC3-SU4	6	SPEEDOMETER
1519	G5-MC8	3	SPEEDOMETER
1519	MC3-MC8	3	SPEEDOMETER
1519	MC3-SU4	6	SPEEDOMETER
1525	M16-PS4	3	
1534	MC107-M9	6	FUEL/WATER SEP
1534	MC2-SPLICE	4	
1534	SPLICE-CB8	4	
1534	MC3-MC107	6	
1534	MC2-MC3	3	
1534	MC3-S22	3	T-CASE LOCK-UP
1534	CB15-M76	4	
1538	MC97-M13	6	AIR DRYER
1538	MC25-MC97	6	
1538	MC25-CB15	4	
1538	MC25-MC98	6	
1538	MC99-M11	6	AFTER COOLER
1538	MC98-M14	6	AIR DRYER
1538	MC25-MC99	6	
1538	MC25-MC73	6	FAN CONTROL
1538	M76-MC25	4	
1640	MC119-SPLC	4	
1640	SPLICE-R26	4	
1640	SPLICE-MC44	4	
1640	MC44-S2	3	
1640	MC119-R32	4	
1644	MC119-R33	4	
1644	R33-R33	4	
1644	MC119-S29	4	ARCTIC PUMP
1644	R33-S29	4	ARCTIC PUMP
1644	MC119-MC25	4	
1644	MC25-MC120	6	
1644	MC120-M80	6	ARCTIC PUMP
1645	S29-R33	4	ARCTIC PUMP
1665C	MC25-MC15	6	TRAILER CONN 24VDC
1665C	MC25-CB20	4	
1674	S11-S10	3	
1674	S11-S9	3	
1676	R17-R16	4	
1676	R16-R15	4	
1676	R14-R3	4	
1676	R15-R14	4	
1676	CB20-R17	4	
1678	MC3-MC78	6	
1678	MC1-SPLICE	3	
1678	MC78-L24	6	LH B.O. STOP LIGHT

FIGURE FO-1. ELECTRICAL SYSTEM SCHEMATIC
FOLDOUT 5 OF 35
ENGINEERING DWG 1878290 SHEET 2
FP-9/FP-10 BLANK

REVISION V
CN 24138
11-24-92

CODE SORT

CODE	ROUTING	SH	DESCRIPTION
1678	MC78-L22	6	RH B.O. STOP LIGHT
1678	SPLICE-MC3	3	
1678	MC1-R13	4	
1678	SPLICE-MC4	3	
1678	MC4-S9	3	
1678C	MC25-R13	4	B.O. STOP LIGHT
1678C	MC25-MC15	6	TRAILER CONN 24VDC
1679	L15-MC4	3	
1679	MC4-S11	3	
1680	MC3-SPLICE	3	
1680	SPLICE-MC1	3	
1680	SPLC-SPLC	3	
1680	SPLICE-MC4	3	
1680	SPLC-SPLC	3	
1680	SPLC-SPLC	3	
1680	SPLICE-L19	3	
1680	SPLICE-L19	3	
1680	MC3-MC78	6	
1680	MC4-S10	3	
1680	MC78-L24	6	LH B.O. TAIL LIGHT
1680	MC1-R17	4	B.O. LIGHTS
1680	MC78-L22	6	RH B.O. TAIL LIGHT
1680C	MC25-MC15	6	TRAILER CONN 24VDC
1680C	MC25-MC15	6	TRAILER CONN 24VDC
1680C	MC25-R17	4	B.O. TAIL LIGHTS
1680C	MC25-MC15	6	TRAILER CONN 24VDC
1702	MC44-MC34	3	
1702	MC34-G7	3	
1702	MC44-R26	4	
1708	M32-1709	3	PASSENGER AIR HTR
1709	MC58-S19	3	GAS PART FILTER SW
1709	MC58-M30	3	
1710	M31-1709	3	DRIVER AIR HEATER
1711	CB11-R7	4	
1712	MC1-CB7	4	ENGINE BRAKE
1712	MC4-MC1	3	
1713	MC53-L37	3	
1713	MC4-MC1	3	
1713	S16-MC4	3	ENGINE BRAKE
1713	MC1-R7	4	TRANSMISSION
1713	S16-MC53	3	
1714	MC1-1716	4	
1714	MC4-MC1	3	ENGINE BRAKE
1714	S16-MC4	3	ENGINE BRAKE
1715	MC4-MC1	3	ENGINE BRAKE
1715	S16-MC4	3	ENGINE BK RH COILS
1715	MC11-MC1	4	
1715	MC11-M21	5	LH ENGINE BRAKE
1716	MC11-R5	4	RETARDER
1716	MC11-M22	5	RH ENGINE BRAKE
1717	MC44-S20	3	CHEMICAL ALARM SW
1717	MC44-CB19	4	
1718	M76-M77	6	BACK-UP ALARM
1722	MC34-1734	3	

CODE SORT

CODE	ROUTING	SH	DESCRIPTION
1722	L26-MC34	3	
1722	MC33-MC84	7	
1722	MC84-MC83	7	
1723	MC44-S18	3	SELF RECOVERY WN SW
1723	MC44-CB18	4	
1724	MC112-SPLC	3	
1724	SPLICE-MC33	3	
1724	MC33-MC93	7	
1724	L27-MC112	3	
1724	M67-SPLICE	3	
1724	SPLC-MC112	3	
1724	M67-MC33	3	
1725	L28-MC112	3	
1725	MC84-MC83	7	
1725	MC33-MC84	7	
1725	MC112-MC33	3	
1726	MC33-MC84	7	
1726	MC84-MC83	7	
1726	MC112-MC33	3	
1726	L29-MC112	3	
1729	MC31-S18	3	SELF RECOVERY WINCH
1729	MC31-MC55	6	
1729	MC55-MC121	6	SELF RECOVERY WINCH
1730	MC31-S18	3	SELF RECOVERY WINCH
1730	MC55-MC122	6	SELF RECOVERY WINCH
1730	MC31-MC55	6	
1731	MC3-S4	3	SELF RECOVERY WINCH
1731	MC3-S4	3	SELF RECOVERY WINCH
1731	MC3-MC29	6	CRANE
1732	MC55-MC123	6	SELF RECOVERY WINCH
1732	S4-MC31	3	SELF RECOVERY WINCH
1732	MC31-MC55	6	
1733	MC31-M67	3	
1733	MC31-M51	6	
1734	M67-SPLICE	3	
1734	SPLC-SPLC	3	
1734	SPLICE-MC31	3	
1734	MC31-M10	6	
1736	MC39-MC39	5	
1737	MC31-MC1	3	
1737	MC1-R22	4	CRANE HI IDLE
1737	MC31-MC29	6	CRANE
1738	MC44-1755	4	
1738	MC44-MC31	3	
1738	MC31-MC29	6	CRANE
1739	MC44-CB21	4	

CODE SORT

CODE	ROUTING	SH	DESCRIPTION
1739	MC44-S19	3	GAS PARTICULATE SW
1744	S4-M67	3	
1745	MC103-S20	3	CHEMICAL ALARM
1746	MC103-M29	3	CHEMICAL ALARM
1747	MC103-M29	3	CHEMICAL ALARM
1755	MC84-MC83	7	
1755	MC44-CB18	4	
1755	MC33-MC84	7	
1755	MC33-MC44	3	
1765	MC3-MC113	6	
1765	L35-MC8	3	
1765	MC3-MC8	3	
1809	MC41-MC65	5	PULSE TACH DRIVE
1809	MC65-MC39	5	STE/ICE
1809	MC41-M40	5	PULSE TACH DRIVE
1810	MC65-MC39	5	STE/ICE
1810	MC41-M40	5	PULSE TACH DRIVE
1810	MC41-MC65	5	PULSE TACH DRIVE
1811	MC42-M41	5	DIFFERENTIAL PSI
1811	MC42-MC39	5	STE/ICE
1812	MC42-M41	5	DIFFERENTIAL PSI
1812	MC42-MC39	5	STE/ICE
1813	MC39-M6	5	
1814	MC39-M6	5	BATTERIES
1815	MC39-MC24	5	
1815	MC24-MC114	5	
1815	MC24-M20	5	
1816	MC39-MC65	5	STE/ICE
1816	MC39-M7	5	STARTER

CODE SORT

CODE	ROUTING	SH	DESCRIPTION
1818	MC39-M7	5	STARTER
1818	MC39-MC65	5	STE/ICE
1819	MC39-M7	5	
1820	MC24-M20	5	
1820	MC24-M20	5	
1820	MC39-MC24	5	
1821	MC39-M6	5	
1822	MC39-M6	5	BATTERIES
1824	SPLICE-MC67	5	
1824	MC66-M70	5	
1824	MC68-M72	5	
1824	SPLICE-MC70	5	
1824	SPLICE-MC71	5	
1824	MC65-MC39	5	STE/ICE
1824	SPLICE-MC68	5	
1824	MC67-M71	5	
1824	MC43-M42	5	FUEL PSI
1824	MC69-M73	5	
1824	MC70-M74	5	
1824	MC71-M75	5	
1824	SPLICE-MC69	5	
1824	MC66-SPLICE	5	
1824	SPLICE-MC65	5	
1824	SPLICE-MC43	5	
1825	MC68-MC69	5	
1825	MC70-MC71	5	
1825	MC65-MC43	5	
1825	MC43-MC67	5	
1825	MC67-MC68	5	
1825	MC70-M74	5	
1825	MC69-MC70	5	
1825	MC41-MC65	5	
1825	MC68-M72	5	
1825	MC66-M70	5	TURBO OUTLET PSI
1825	MC65-MC39	5	STE/ICE
1825	MC69-M73	5	
1825	MC67-M71	5	
1825	MC39-MC40	5	STE/ICE MODULE
1825	MC43-M42	5	FUEL PSI
1825	MC71-M75	5	
1825A	MC39-MC40	5	STE/ICE MODULE
1826	MC40-MC39	5	
1827	MC40-MC39	5	
1828	MC39-M48	5	SHUNT
1829	MC39-M48	5	SHUNT
1835	R2-CB2	4	
1839	R7-R8	4	
1860	MC39-MC24	5	
1860	MC24-MC114	5	
1861	MC24-MC114	5	

FIGURE FO-1. ELECTRICAL SYSTEM SCHEMATIC
FOLDOUT 6 OF 35
ENGINEERING DWG 1878290 SHEET 2
FP-11/FP-12 BLANK

REVISION V
CN 24138
11-24-92

CODE SORT

CODE	ROUTING	SH	DESCRIPTION
1861	MC39-MC24	5	
1866	CB12-M6	4	
1866	M6-CB12	4/3	
1867	R19-CB12	4	
1871	MC11-CB11	4	DDEC TRANS
1871	PS8-MC11	5	ATEC OIL PSI SWITCH
1871	MC11-R8	4	
1871	MC11-R11	4	
1871	MC11-R10	4	
1871	MC11-R18	4	
1872	R19-MC44	4	
1872	MC44-R18	4	DDEC
1872	MC44-1020	3	
1875	CB14-R19	4	
1880	MC4-MC35	3	
1880	MC44-CB17	4	CTI
1882	MC52-R21	4	
1882	MC52-SPLICE	4	
1882	MC52-R20	4	
1883	S26-L40	3	TC LOCK-UP LIGHT
1883	S26-M49	3	TC LOCK-UP
1884	MC1-R20	4	INTER AXLE
1884	MC1-M39	4	
1884	MC1-MC105	3	
1885	MC1-M39	4	
1885	MC1-MC105	3	
1885	R23-R21	4	
1885	MC1-R23	4	
1888	CB16-R21	4	DIFFERENTIAL LOCK
1888	CB16-R20	4	INTER AXLE
1889	MC44-R20	4	INTER AXLE
1889	MC44-M50	3	INTER AXLE LOCK
1890	MC44-M51	3	DIFFERENTIAL LOCK
1890	MC44-R21	4	DIFFERENTIAL LOCK
1891	MC52-SPLICE	4	
1891	MC52-R10	4	REVERSE
1916	S8-MC4	3	
1916	MC5-M2	3	WIPER MOTOR
1916	MC5-MC4	3	WIPER MOTOR
1917	MC5-M2	3	
1917	MC5-MC4	3	
1917	S8-MC4	3	
1919	MC2-MC5	3	
1919	MC5-M2	3	
1919	MC5-1118	3	
1919	MC2-CB10	4	
1920	MC2-1008	3	
1920	MC2-R2	4	CLEARANCE LIGHTS
1921	S7-MC4	3	
1921	M1-MC4	3	

CODE SORT

CODE	ROUTING	SH	DESCRIPTION
1926	MC56-MC23	5	ETHER START
1927	R1-CB1	4	HEADLIGHTS
1928	MC34-MC31	3	
1928	L38-MC34	3	
1928	MC31-MC30	6	TRAILER
1929	MC31-MC30	6	TRAILER
1929	MC34-MC31	3	
1932	MC128-MC61	6	WATER TEMP
1932	MC61-TS3	6	WATER TEMP
1932	MC59-MC63	6	
1932	MC63-MC128	6	
1933	MC61-TS3	6	WATER TEMP
1933	MC63-MC61	6	
1933	MC59-MC63	6	
1935	MC76-M45	6	FAN CONTROL VALVE
1935	MC59-MC76	6	
1935	MC76-M45	6	FAN CONTROL VALVE
1935	MC59-MC76	6	
1938	MC70-M74	5	
1938	MC70-MC65	5	
1938	MC65-MC39	5	
1938B	MC39-S22	5	STE/ICE ZEROING
1939	MC71-M75	5	ENGINE WATER TEMP
1939	MC65-MC39	5	STE/ICE
1939	MC71-MC65	5	
1939B	MC39-S22	5	STE/ICE ZEROING
1940	MC71-MC65	5	
1940	MC71-M75	5	ENGINE WATER TEMP
1940	MC65-MC39	5	STE/ICE
1940B	MC39-S22	5	STE/ICE ZEROING
1941	MC43-M42	5	FUEL PSI
1941	MC43-MC65	5	
1941	MC65-MC39	5	STE/ICE
1942	MC43-MC65	5	
1942	MC65-MC39	5	
1942	MC43-M42	5	FUEL PSI
1943	MC65-MC39	5	STE/ICE
1943	MC66-M70	5	TURBO OUTLET PSI
1943	MC66-MC65	5	TURBO OUTLET PSI
1944	MC66-M70	5	
1944	MC65-MC39	5	STE/ICE
1944	MC66-MC65	5	TURBO OUTLET PSI
1945	MC68-MC65	5	
1945	MC68-M72	5	AIR BOX PSI
1945	MC65-MC39	5	STE/ICE
1946	MC67-M71	5	

CODE SORT

CODE	ROUTING	SH	DESCRIPTION
1946	MC65-MC39	5	STE/ICE
1946	MC68-M72	5	AIR BOX PSI
1946	MC68-MC65	5	
1947	MC67-MC65	5	
1947	MC65-MC39	5	STE/ICE
1947	MC67-M71	5	AIR CLEANER
1948	MC67-MC65	5	
1948	MC65-MC39	5	STE/ICE
1949	MC69-MC65	5	FUEL RETURN
1949	MC69-MC65	5	
1949	MC65-MC39	5	STE/ICE
1950	MC5-MC4	3	
1950	S8-MC4	3	
1951	MC65-MC39	5	STE/ICE
1951	MC69-M73	5	FUEL RETURN
1951	MC69-MC65	5	
1952	MC65-MC39	5	
1952	MC70-M74	5	ENGINE OIL TEMP
1952	MC70-MC65	5	
1952B	MC39-S22	5	STE/ICE ZEROING
1953	MC39-MC24	5	
1953	MC24-MC114	5	
1953	MC24-M20	5	
1955	M67-MC21	3	FAN SPEED CONTROL
1956	MC127-MC44	3	FAN SPEED CONTROL
1957	MC127-MC21	3	FAN SPEED CONTROL
SHIELD	MC32-MC64	6	CTI AUX MANIFOLD
SHIELD	MC32-MC109	6	CTI POWER MANIFOLD

FIGURE FO-1. ELECTRICAL SYSTEM SCHEMATIC
FOLDOUT 7 OF 35
ENGINEERING DWG 1878290 SHEET 2
FP-13/FP-14 BLANK

REVISION P
CN 23873
5-14-92

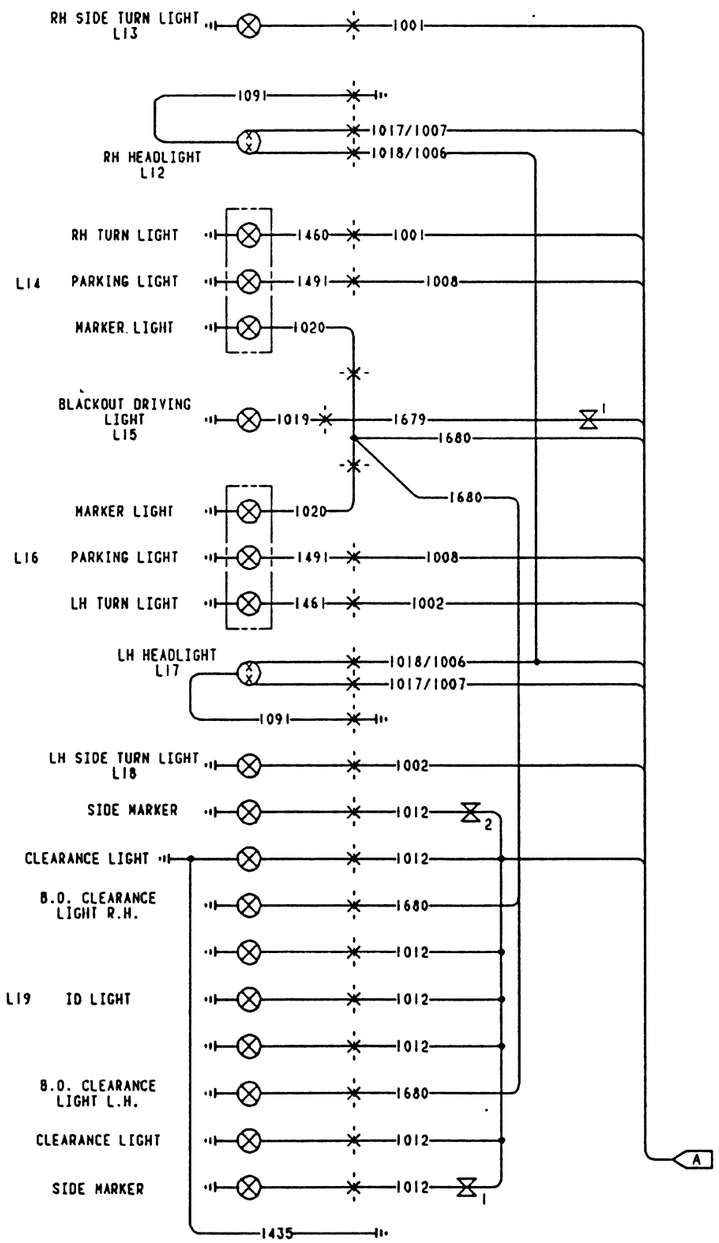

FIGURE FO-1. ELECTRICAL SYSTEM SCHEMATIC
FOLDOUT 8 OF 35
ENGINEERING DWG 1878290 SHEET 3
FP-15/FP-16 BLANK

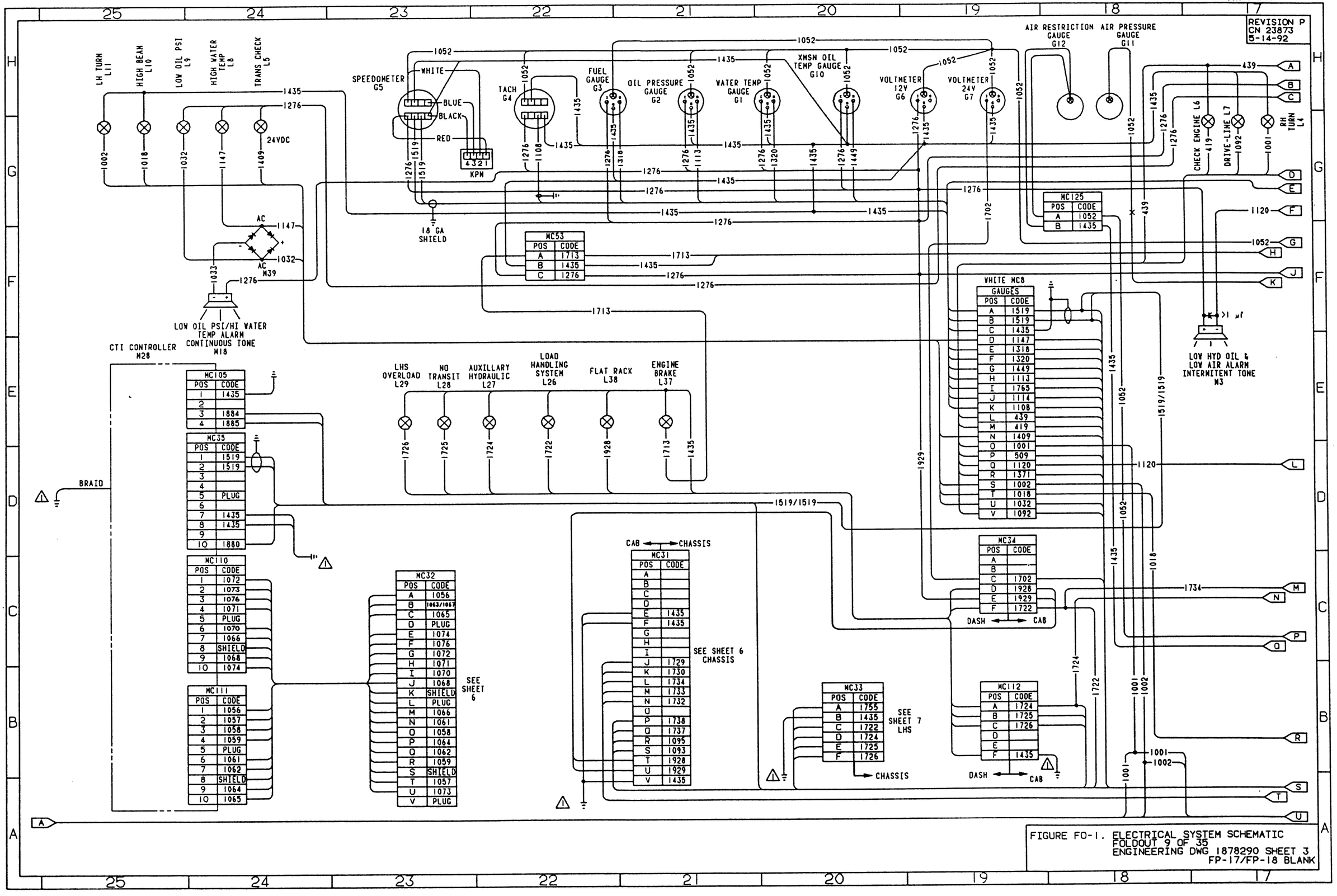

FIGURE FO-1. ELECTRICAL SYSTEM SCHEMATIC
FOLDOUT 9 OF 35
ENGINEERING DWG 1878290 SHEET 3
FP-17/FP-18 BLANK

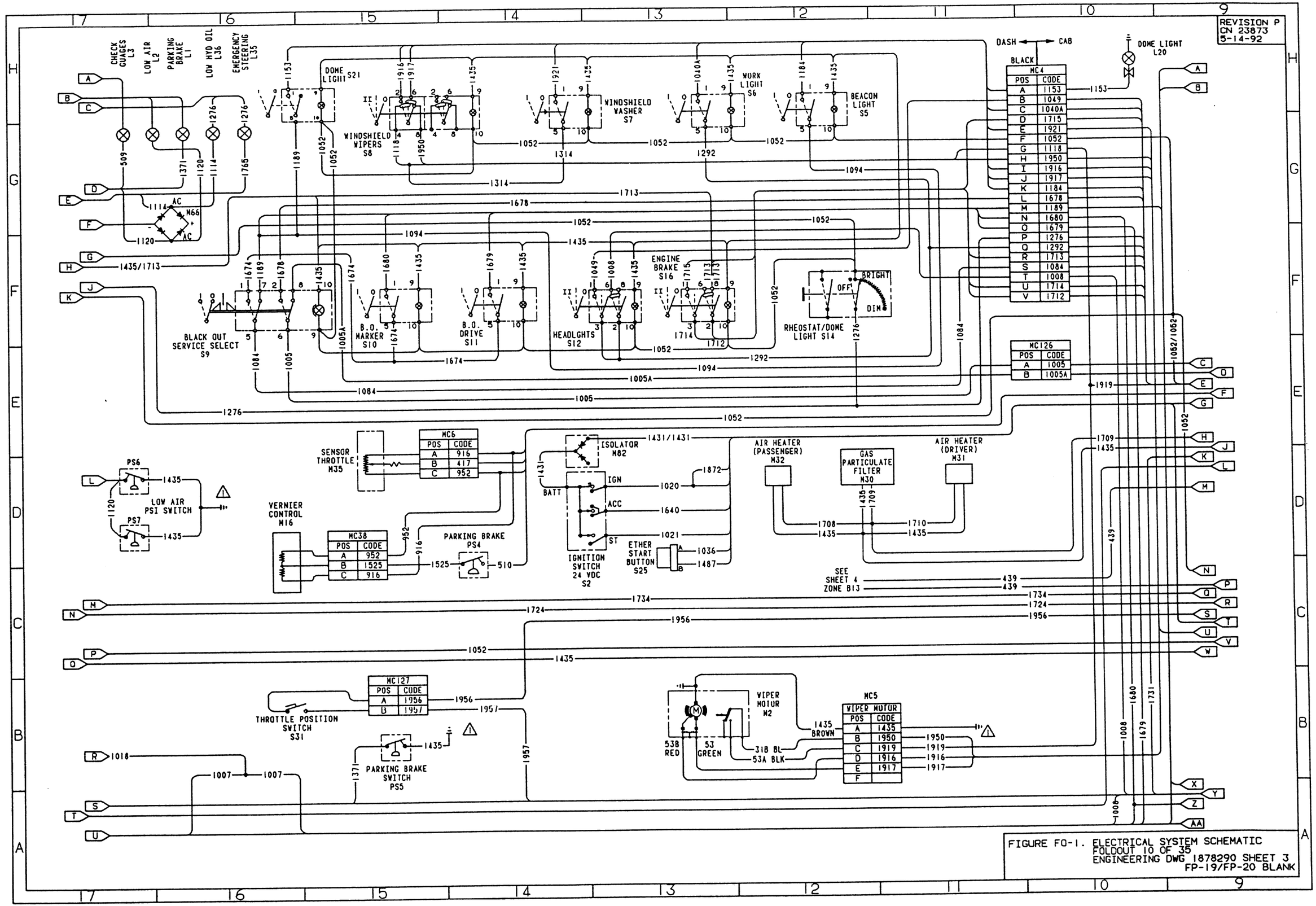

FIGURE FO-1. ELECTRICAL SYSTEM SCHEMATIC
FOLDOUT 10 OF 35
ENGINEERING DWG 1878290 SHEET 3
FP-19/FP-20 BLANK

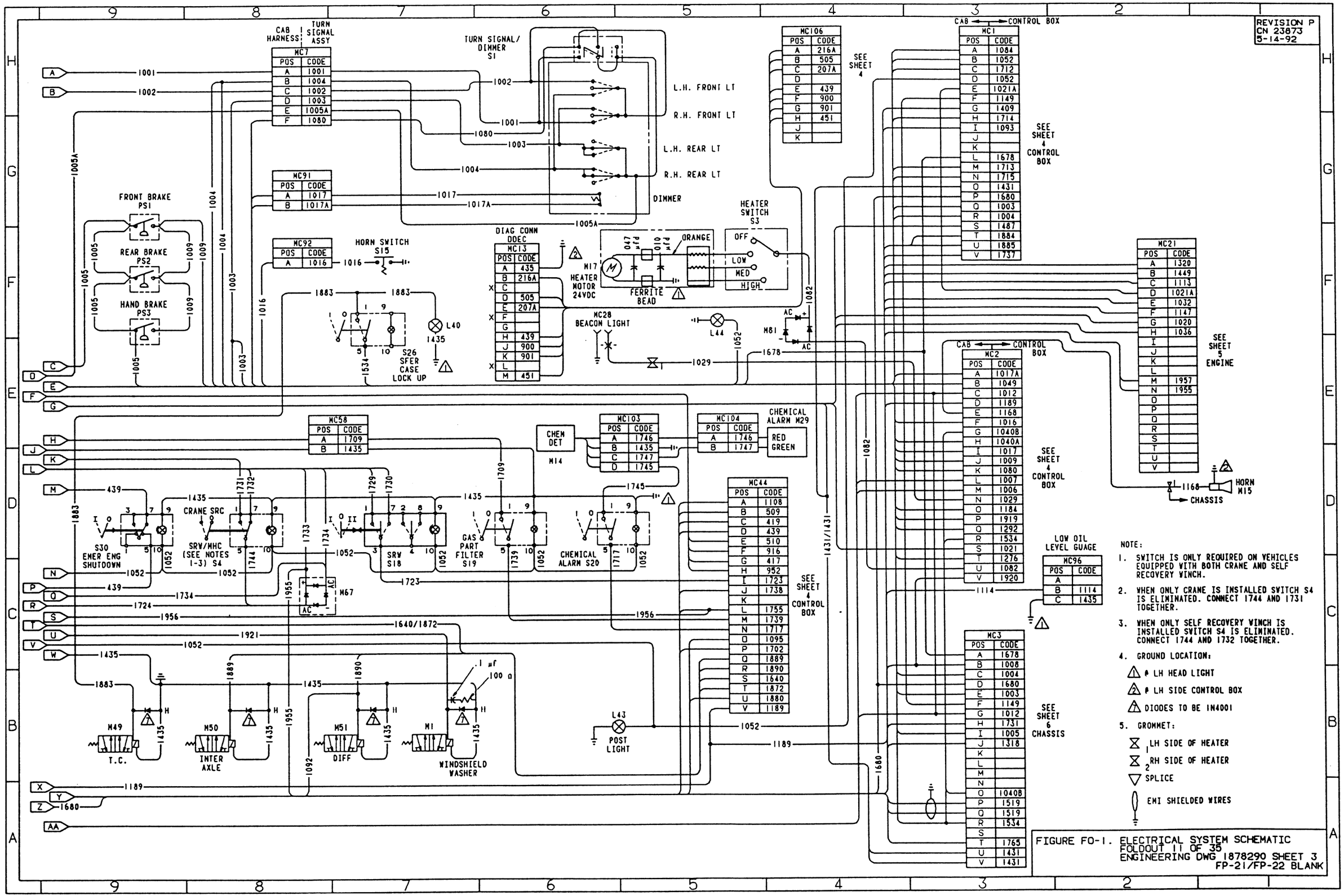

FIGURE FO-1. ELECTRICAL SYSTEM SCHEMATIC
FOLDOUT 11 OF 35
ENGINEERING DWG 1878290 SHEET 3
FP-21/FP-22 BLANK

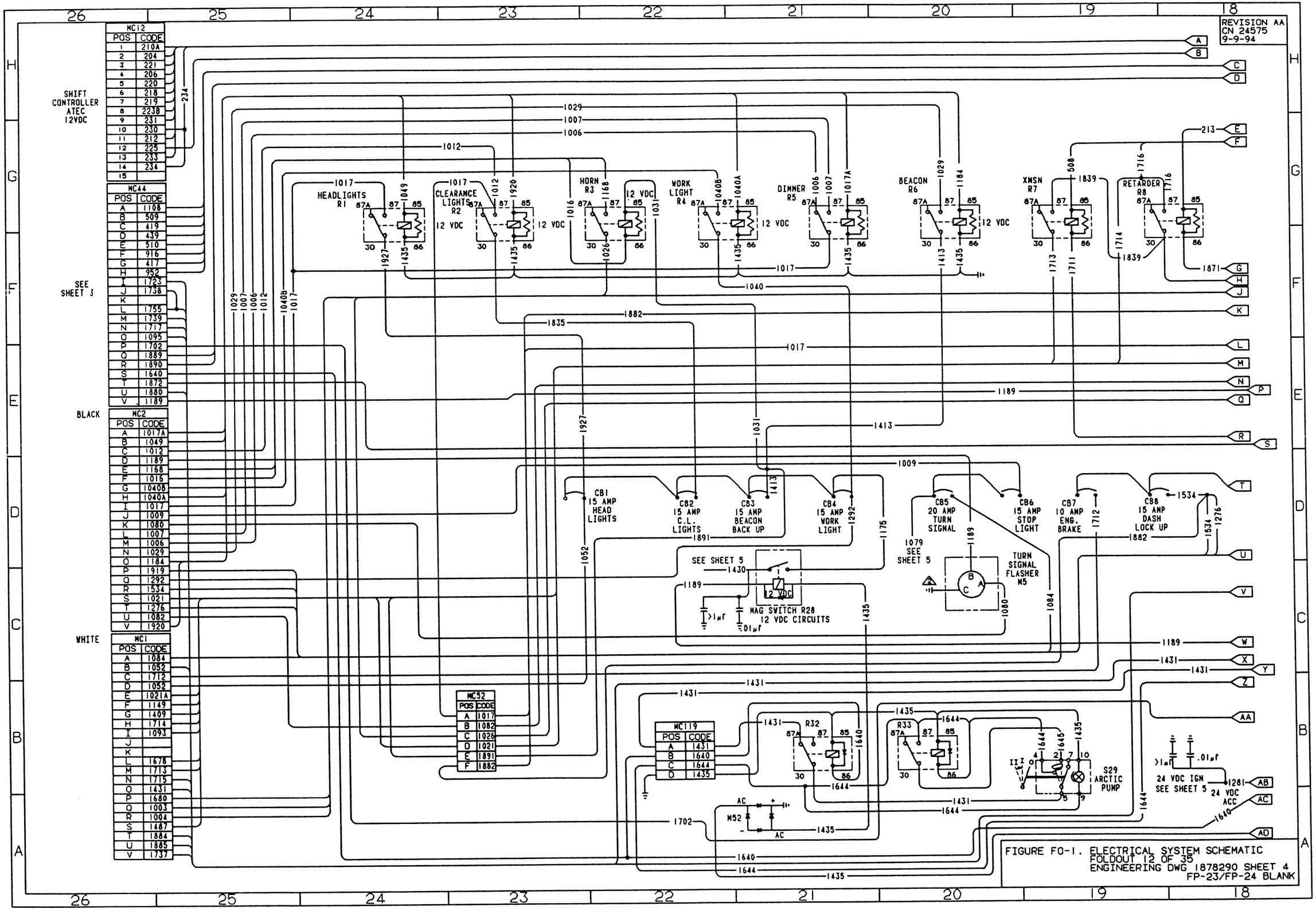

FIGURE FO-1. ELECTRICAL SYSTEM SCHEMATIC
FOLDOUT 12 OF 35
ENGINEERING DWG 1878290 SHEET 4

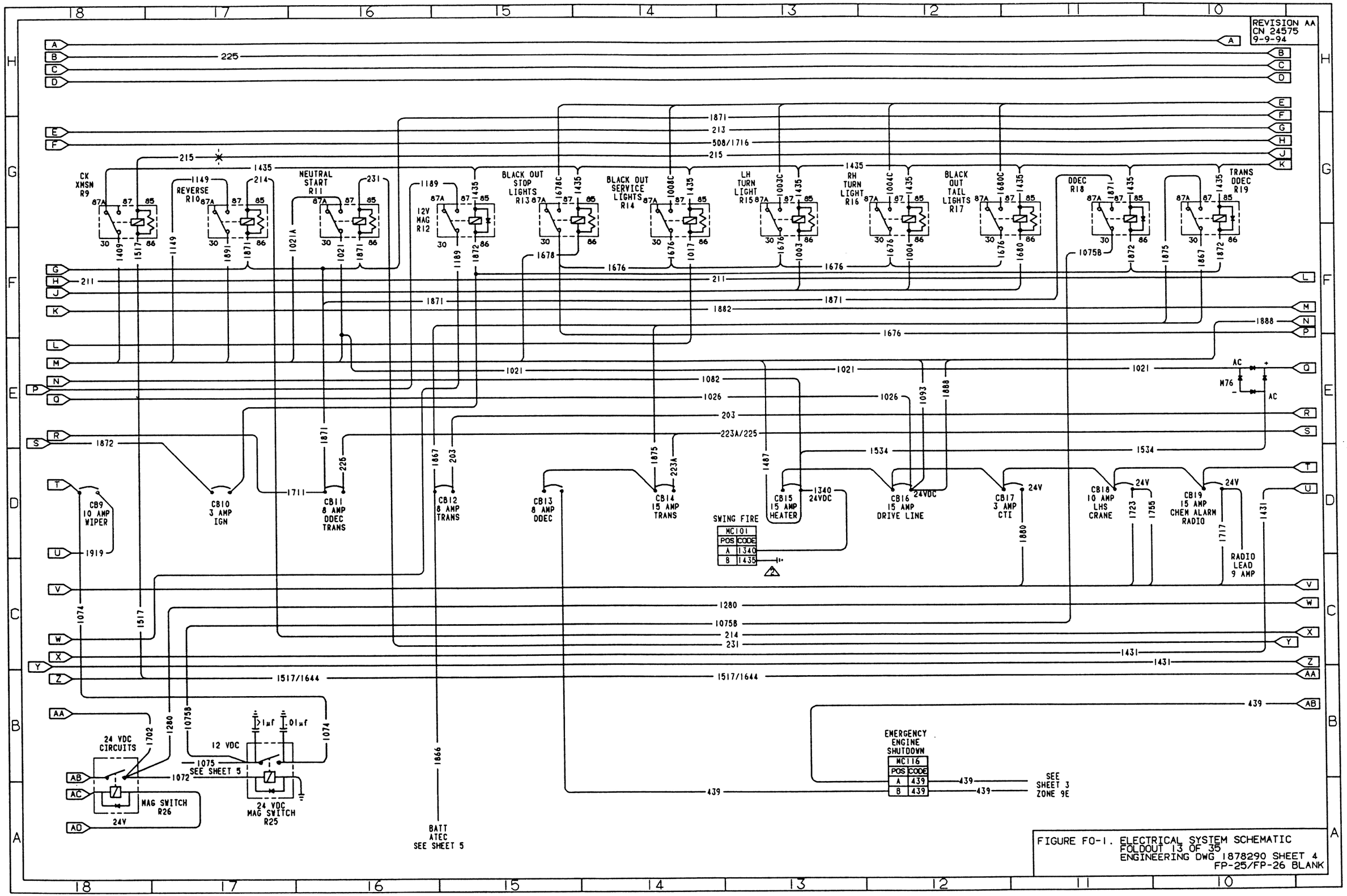

FIGURE FO-1. ELECTRICAL SYSTEM SCHEMATIC
FOLDOUT 13 OF 35
ENGINEERING DWG 1878290 SHEET 4
FP-25/FP-26 BLANK

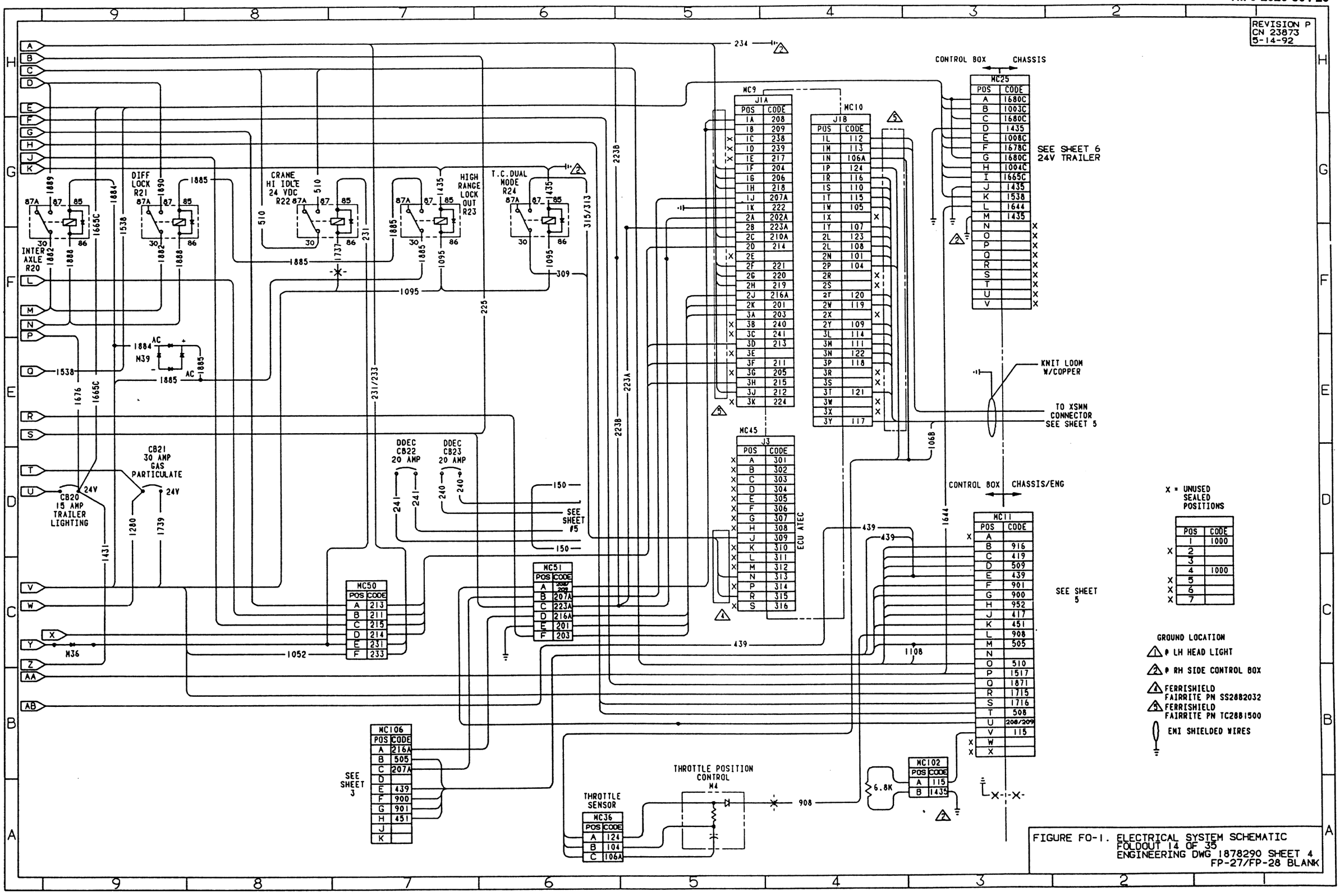

FIGURE FO-1. ELECTRICAL SYSTEM SCHEMATIC
FOLDOUT 14 OF 35
ENGINEERING DWG 1878290 SHEET 4
FP-27/FP-28 BLANK

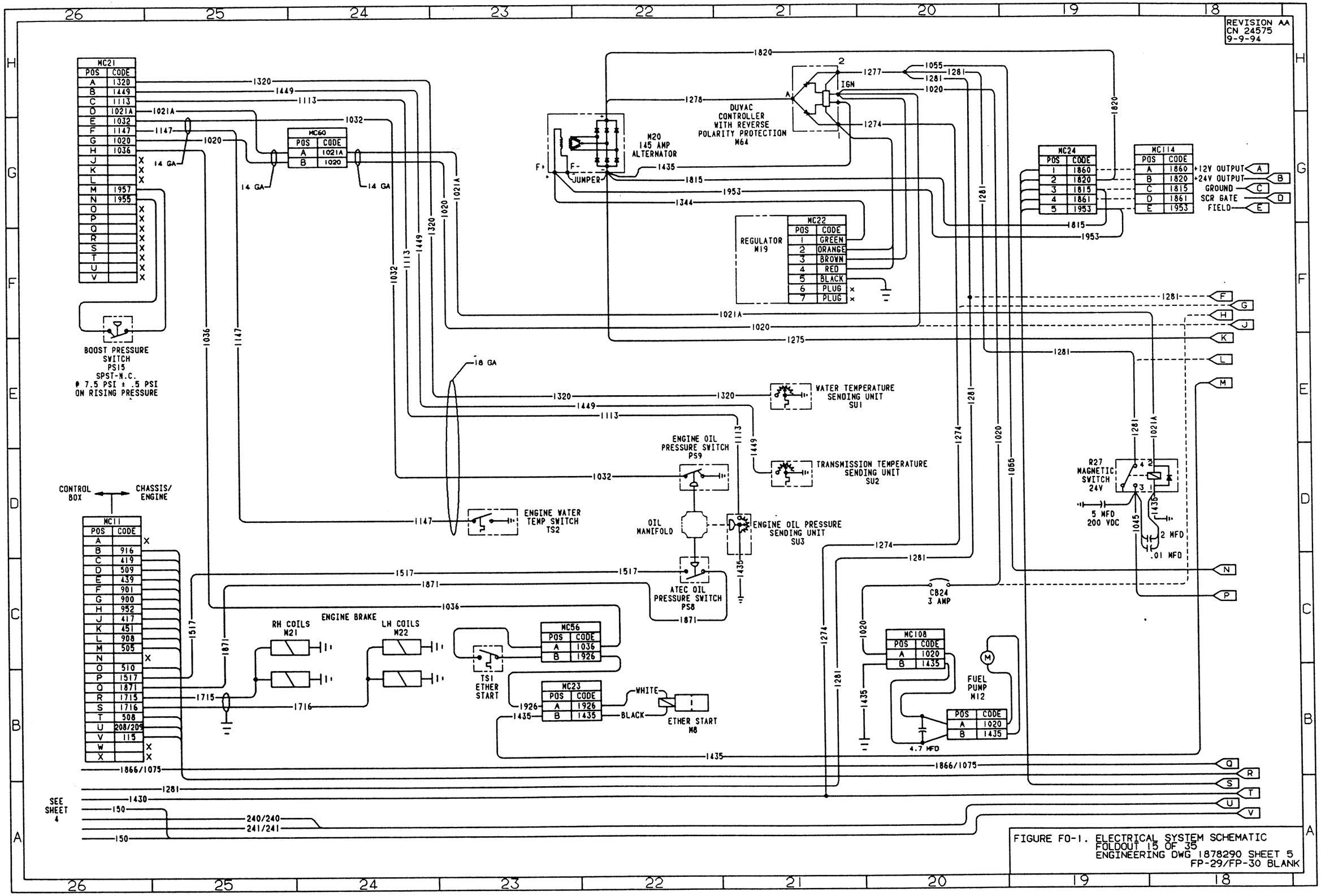

FIGURE FO-1. ELECTRICAL SYSTEM SCHEMATIC
FOLDOUT 15 OF 35
ENGINEERING DWG 1878290 SHEET 5
FP-29/FP-30 BLANK

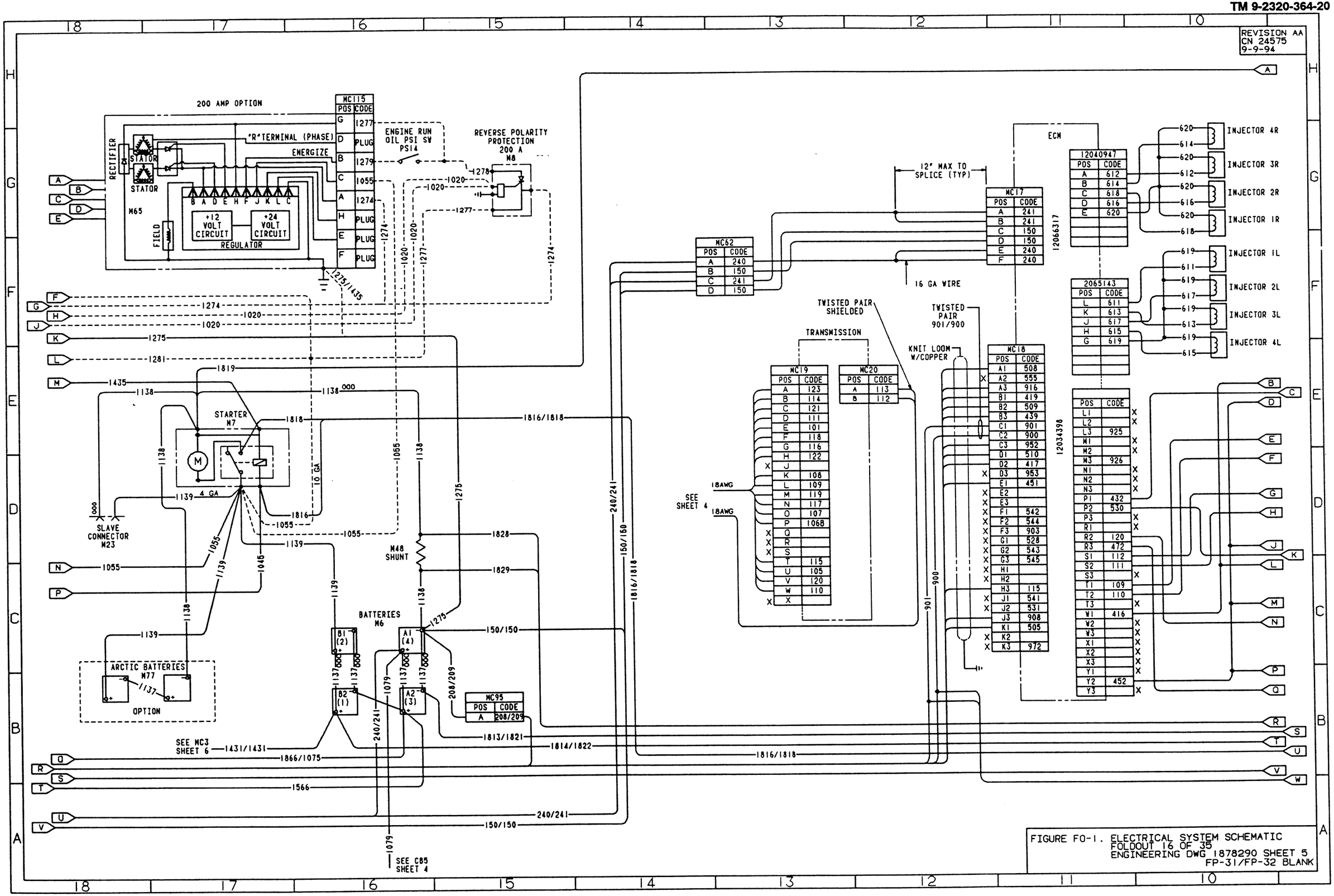

FIGURE FO-1. ELECTRICAL SYSTEM SCHEMATIC
FOLDOUT 16 OF 35
ENGINEERING DWG 1878290 SHEET 5
FP-31/FP-32 BLANK

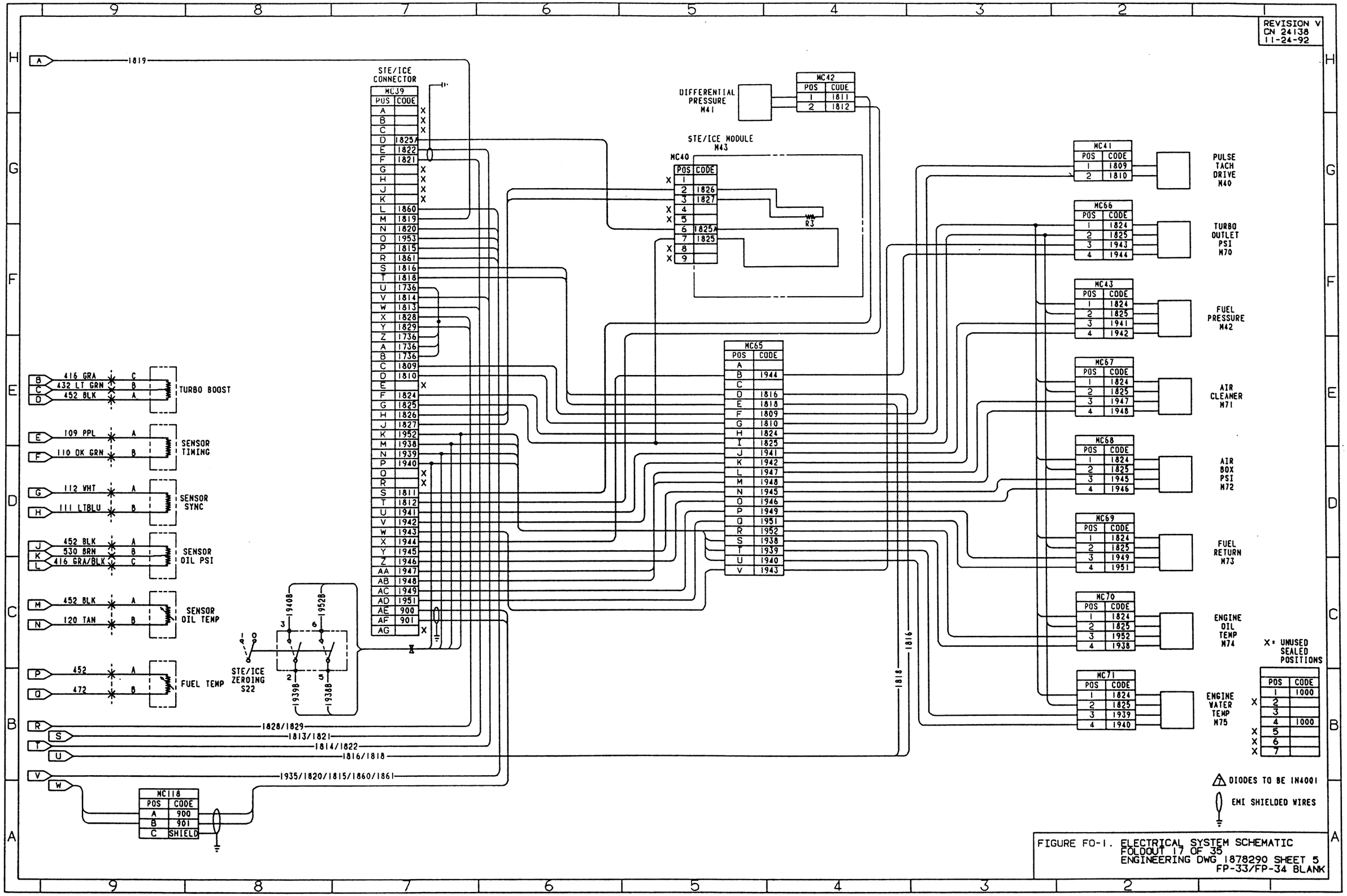

FIGURE FO-1. ELECTRICAL SYSTEM SCHEMATIC
FOLDOUT 17 OF 35
ENGINEERING DWG 1878290 SHEET 5
FP-33/FP-34 BLANK

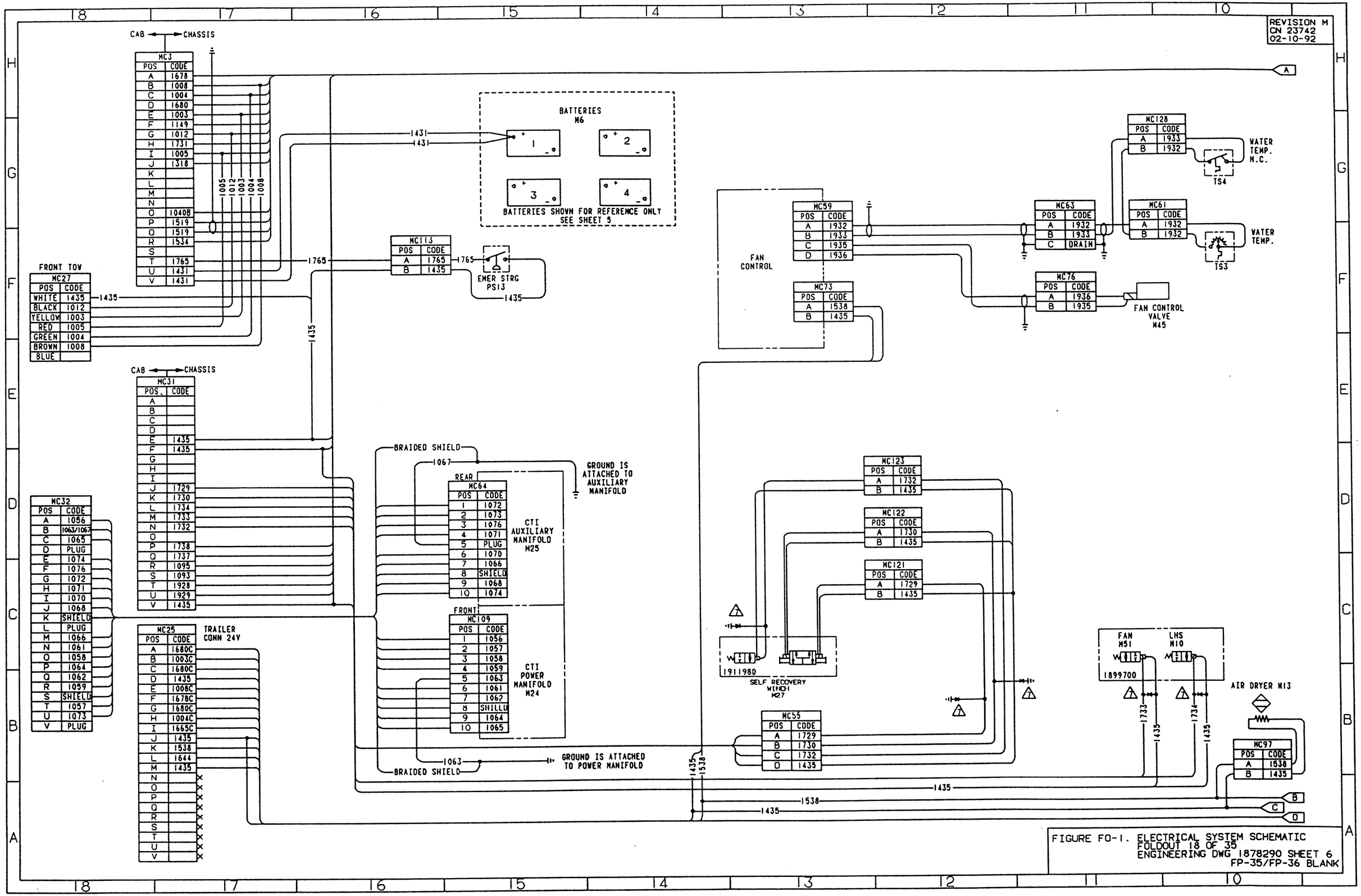

FIGURE FO-1. ELECTRICAL SYSTEM SCHEMATIC
FOLDOUT 18 OF 35
ENGINEERING DWG 1878290 SHEET 6
FP-35/FP-36 BLANK

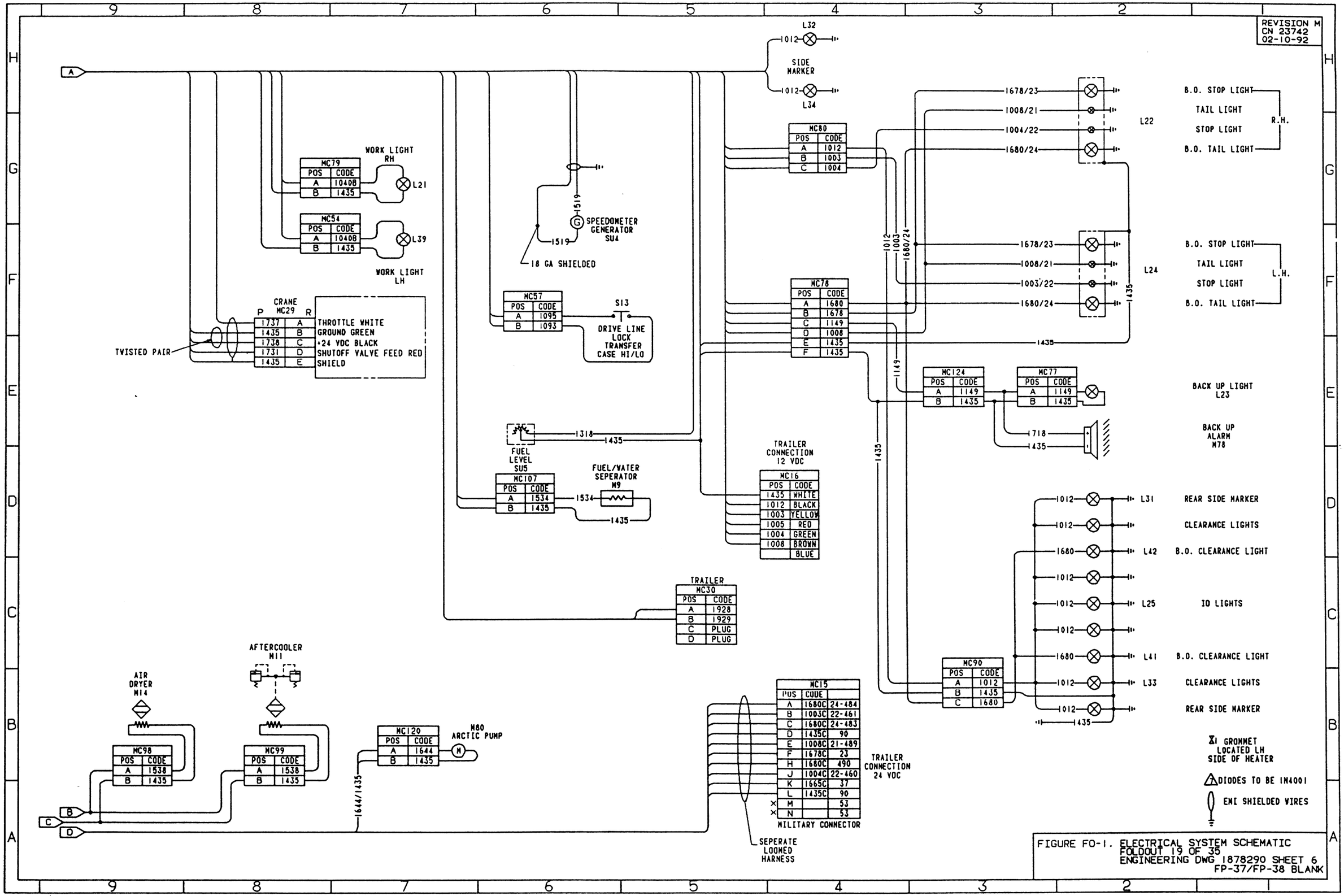

FIGURE FO-1. ELECTRICAL SYSTEM SCHEMATIC
FOLDOUT 19 OF 35
ENGINEERING DWG 1878290 SHEET 6
FP-37/FP-38 BLANK

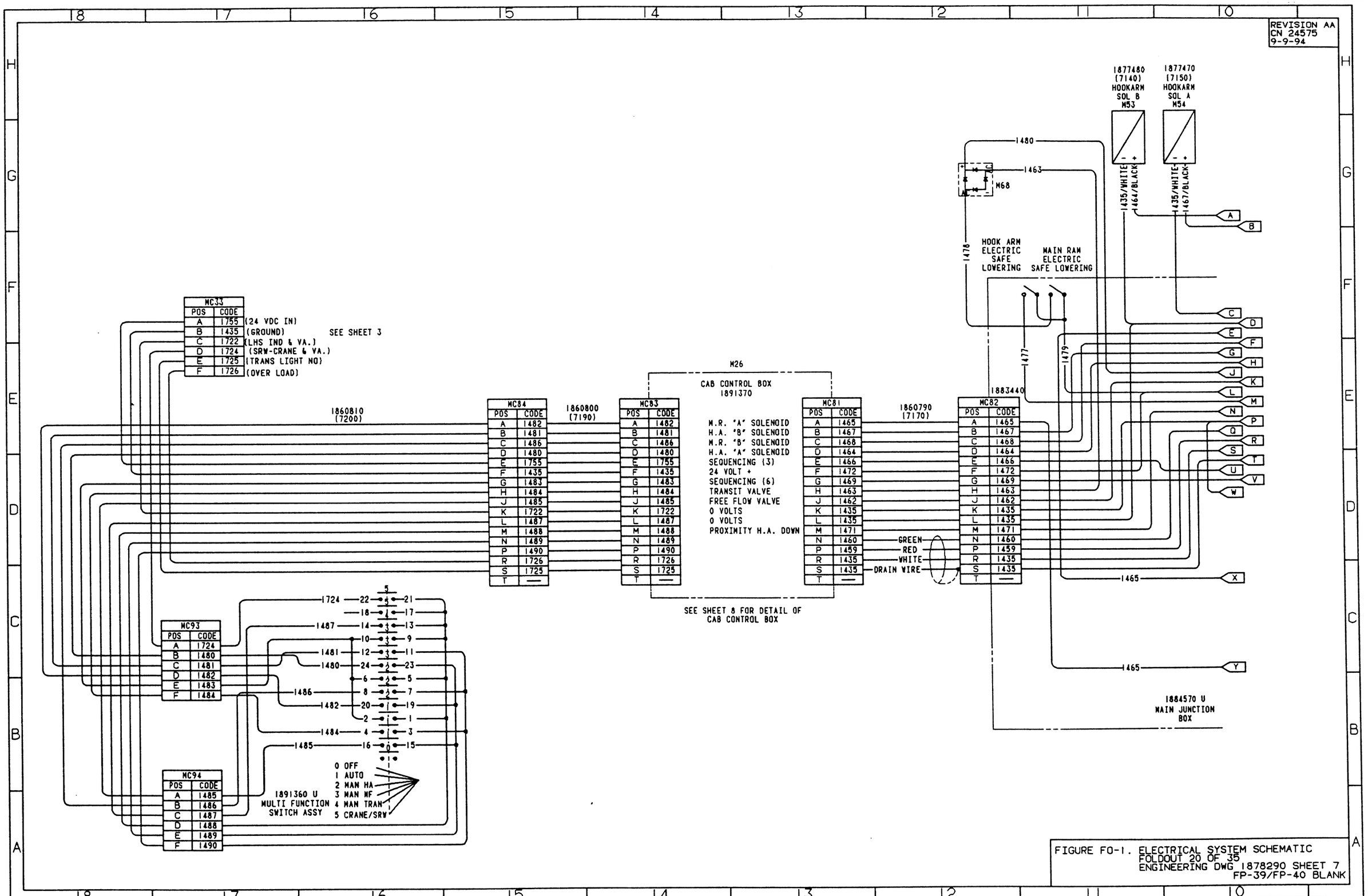

FIGURE FO-1. ELECTRICAL SYSTEM SCHEMATIC
FOLDOUT 20 OF 35
ENGINEERING DWG 1878290 SHEET 7
FP-39/FP-40 BLANK

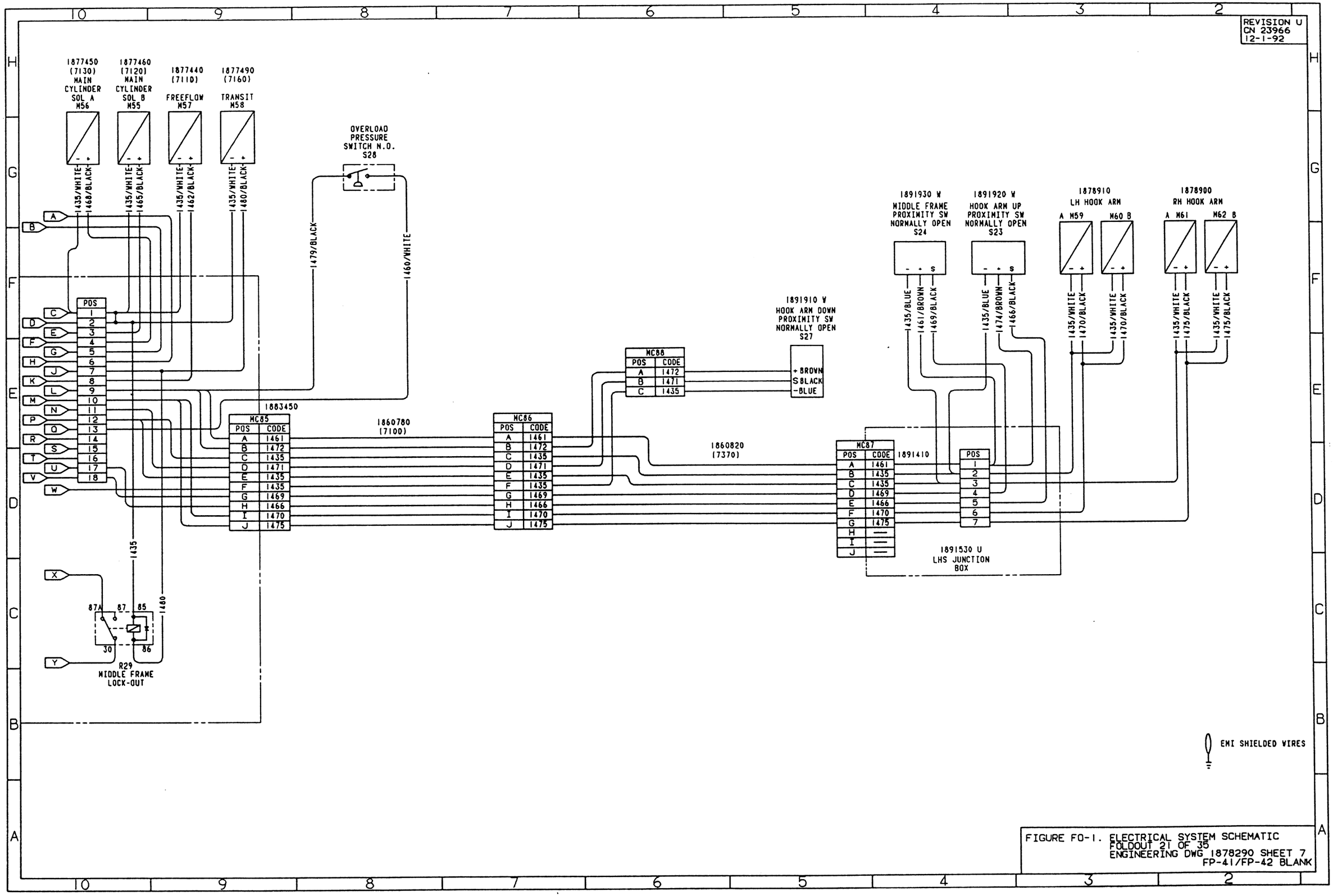

FIGURE FO-1. ELECTRICAL SYSTEM SCHEMATIC
FOLDOUT 21 OF 35
ENGINEERING DWG 1878290 SHEET 7
FP-41/FP-42 BLANK

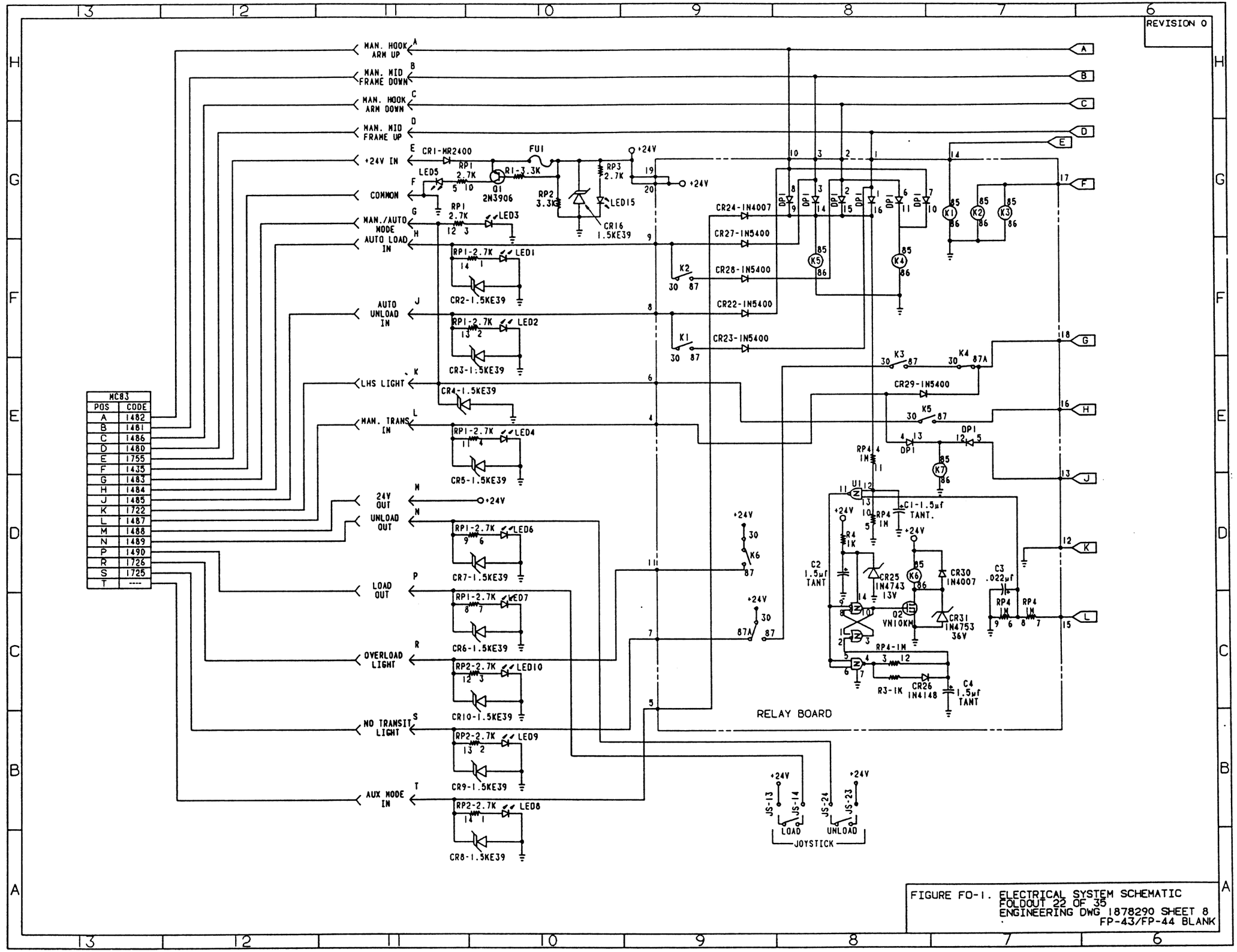

FIGURE FO-1. ELECTRICAL SYSTEM SCHEMATIC
FOLDOUT 22 OF 35
ENGINEERING DWG 1878290 SHEET 8
FP-43/FP-44 BLANK

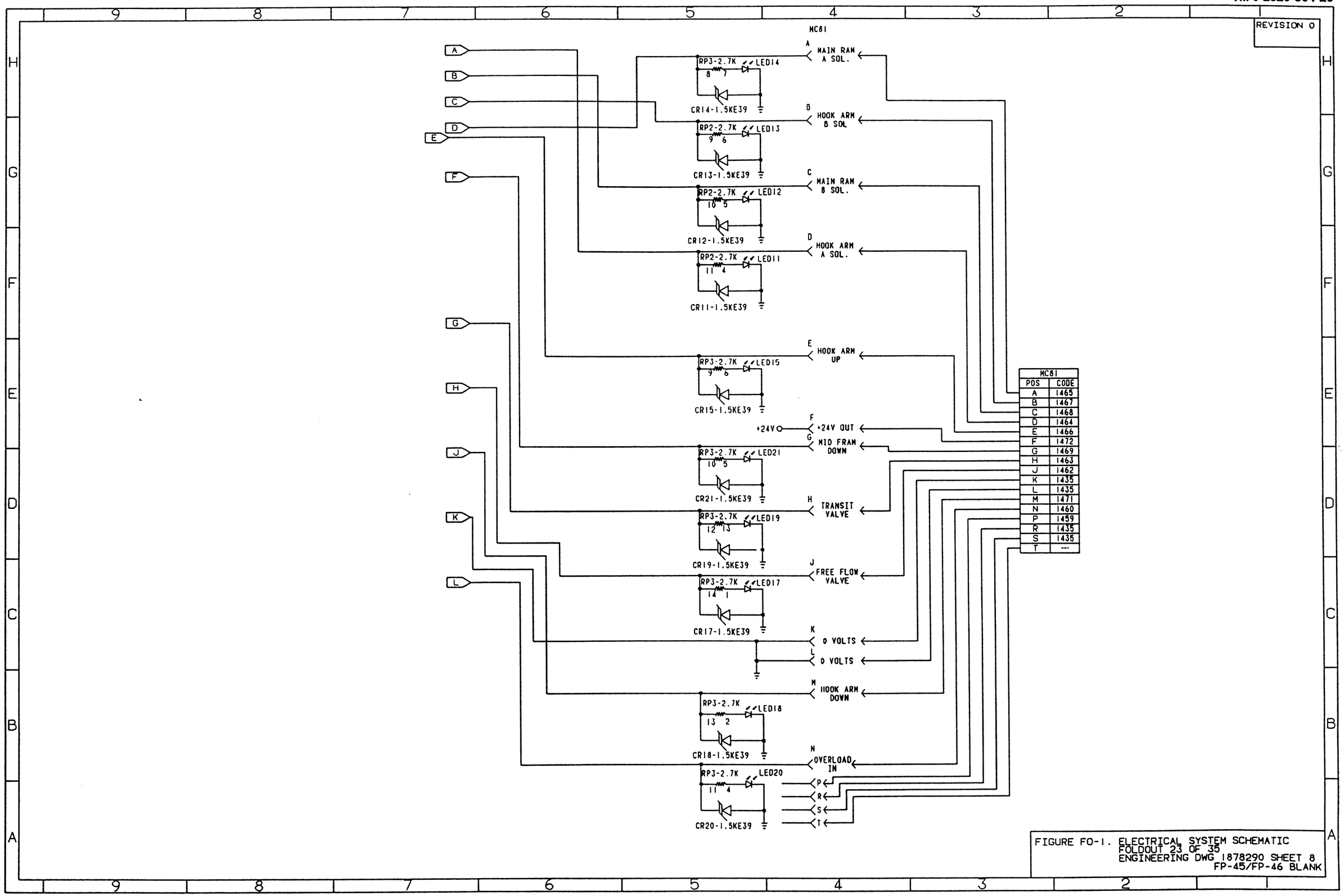

FIGURE FO-1. ELECTRICAL SYSTEM SCHEMATIC
FOLDOUT 23 OF 35
ENGINEERING DWG 1878290 SHEET 8
FP-45/FP-46 BLANK

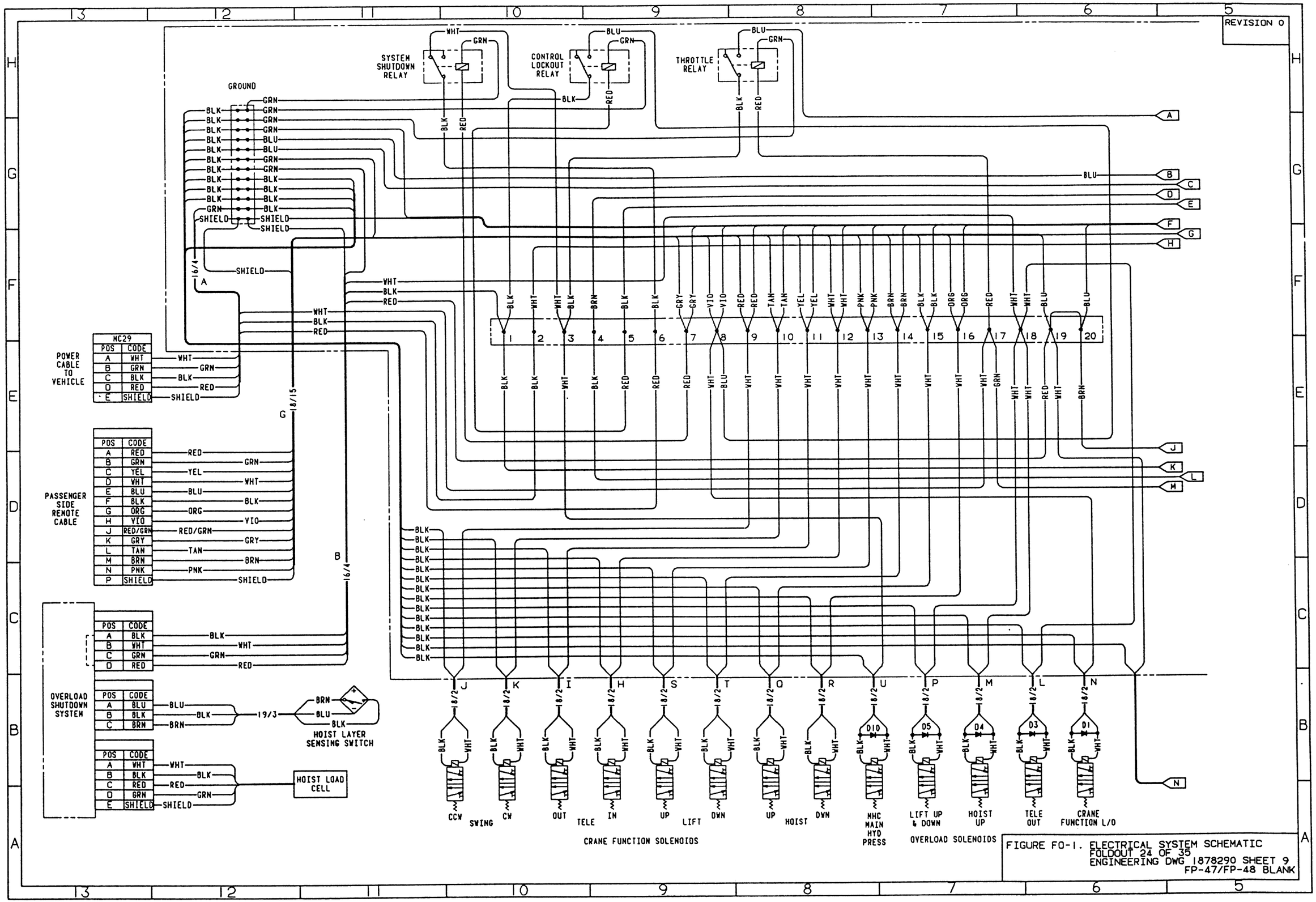

FIGURE FO-1. ELECTRICAL SYSTEM SCHEMATIC
FOLDOUT 24 OF 35
ENGINEERING DWG 1878290 SHEET 9
FP-47/FP-48 BLANK

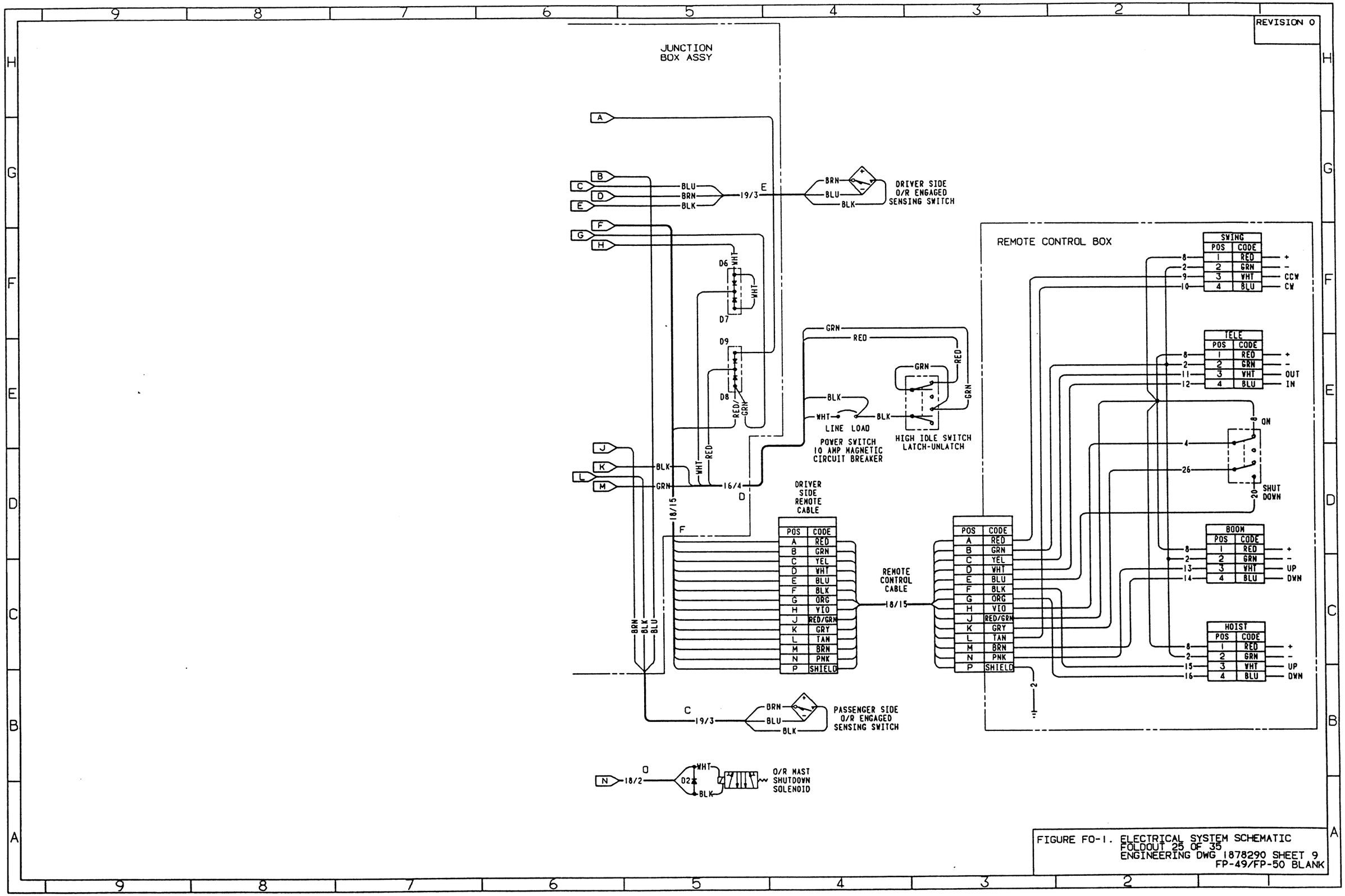

FIGURE FO-1. ELECTRICAL SYSTEM SCHEMATIC
FOLDOUT 25 OF 35
ENGINEERING DWG 1878290 SHEET 9
FP-49/FP-50 BLANK

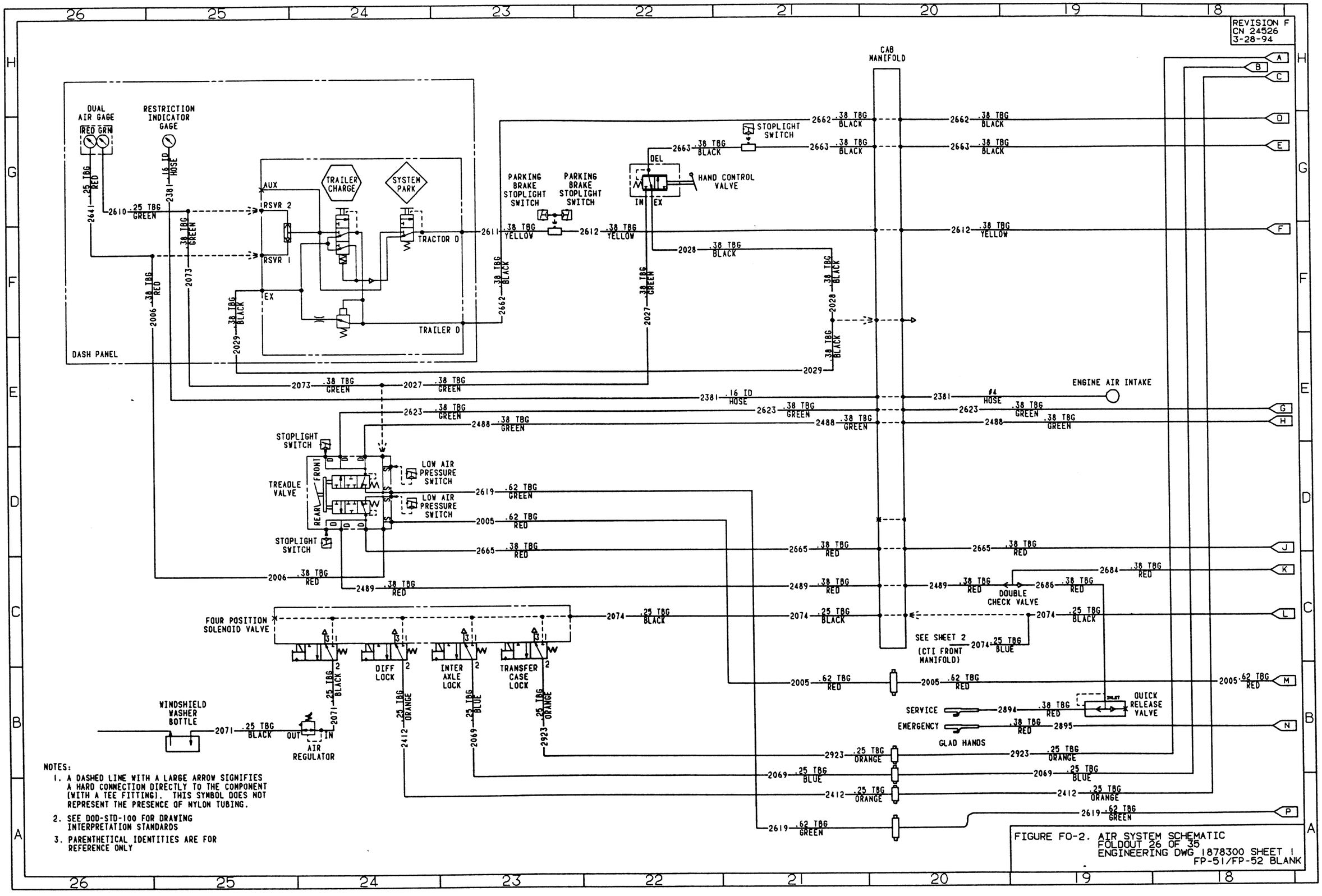

NOTES:

1. A DASHED LINE WITH A LARGE ARROW SIGNIFIES A HARD CONNECTION DIRECTLY TO THE COMPONENT (WITH A TEE FITTING). THIS SYMBOL DOES NOT REPRESENT THE PRESENCE OF NYLON TUBING.
2. SEE DOD-STD-100 FOR DRAWING INTERPRETATION STANDARDS
3. PARENTHETICAL IDENTITIES ARE FOR REFERENCE ONLY

FIGURE FO-2. AIR SYSTEM SCHEMATIC
FOLDOUT 26 OF 35
ENGINEERING DWG 1878300 SHEET 1
FP-51/FP-52 BLANK

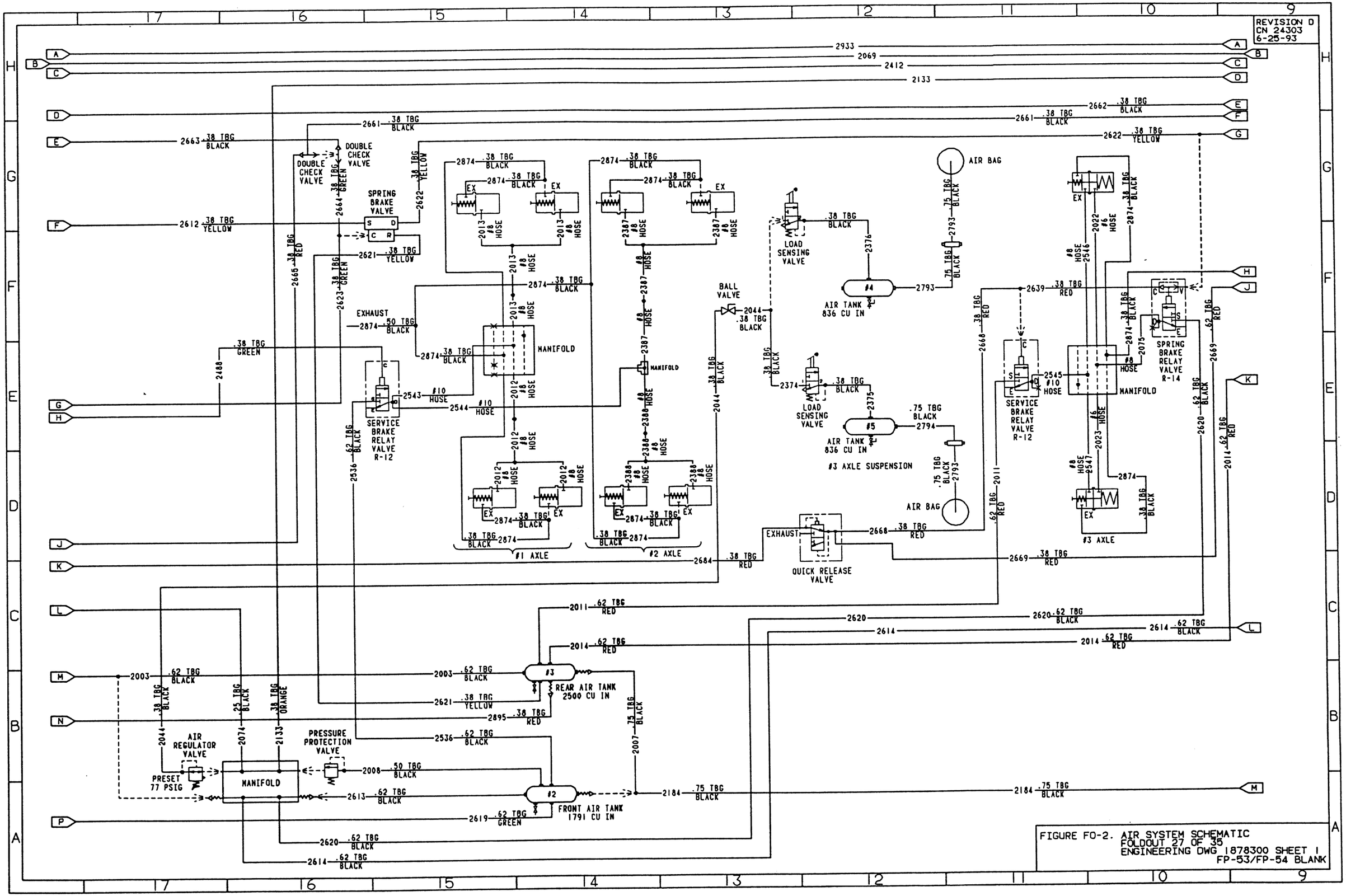

FIGURE FO-2. AIR SYSTEM SCHEMATIC
FOLDOUT 27 OF 35
ENGINEERING DWG 1878300 SHEET 1
FP-53/FP-54 BLANK

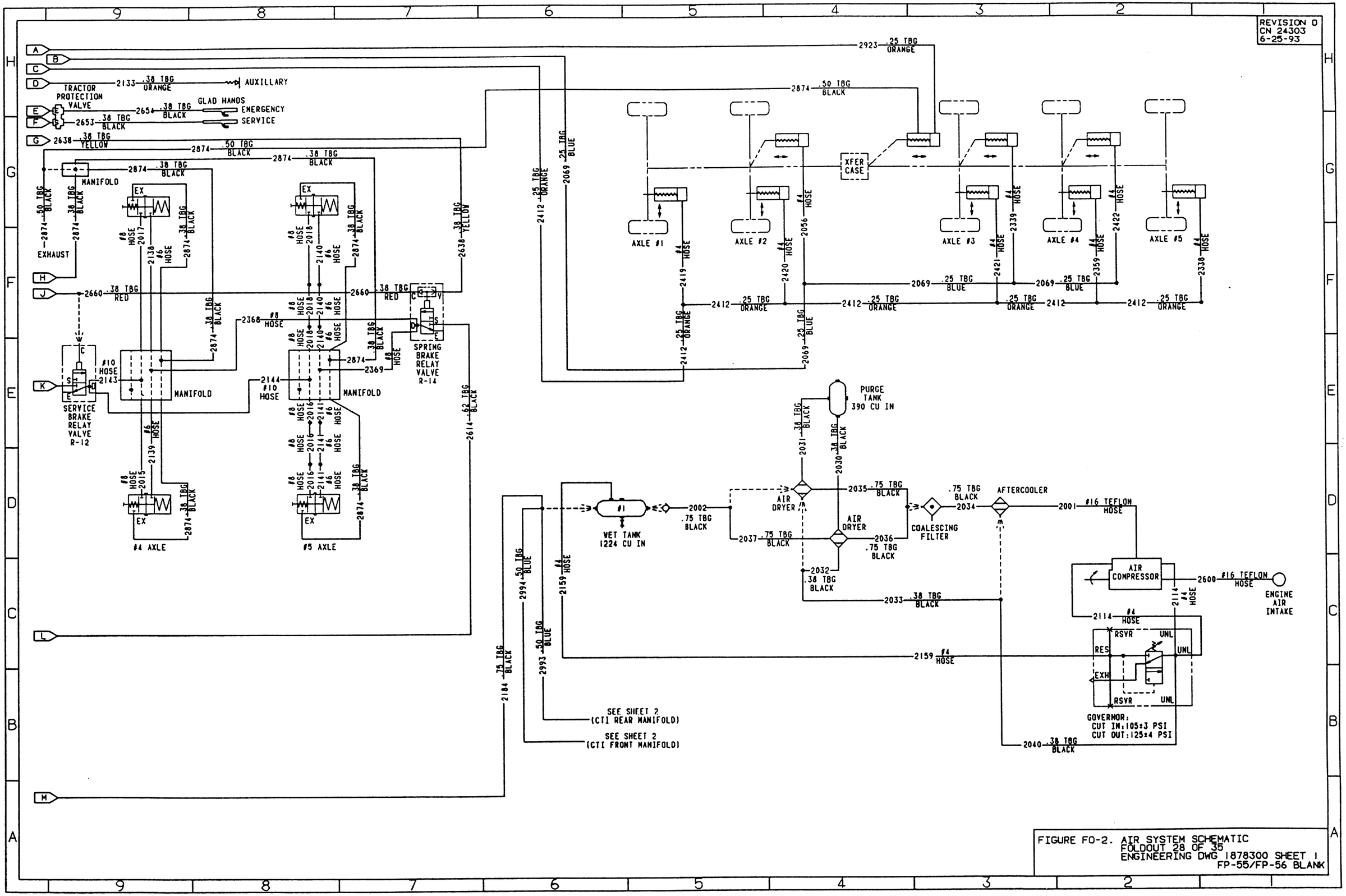

FIGURE FO-2. AIR SYSTEM SCHEMATIC
FOLDOUT 28 OF 35
ENGINEERING DWG 1878300 SHEET 1
FP-55/FP-56 BLANK

REVISION B
CN 23468
8-8-91

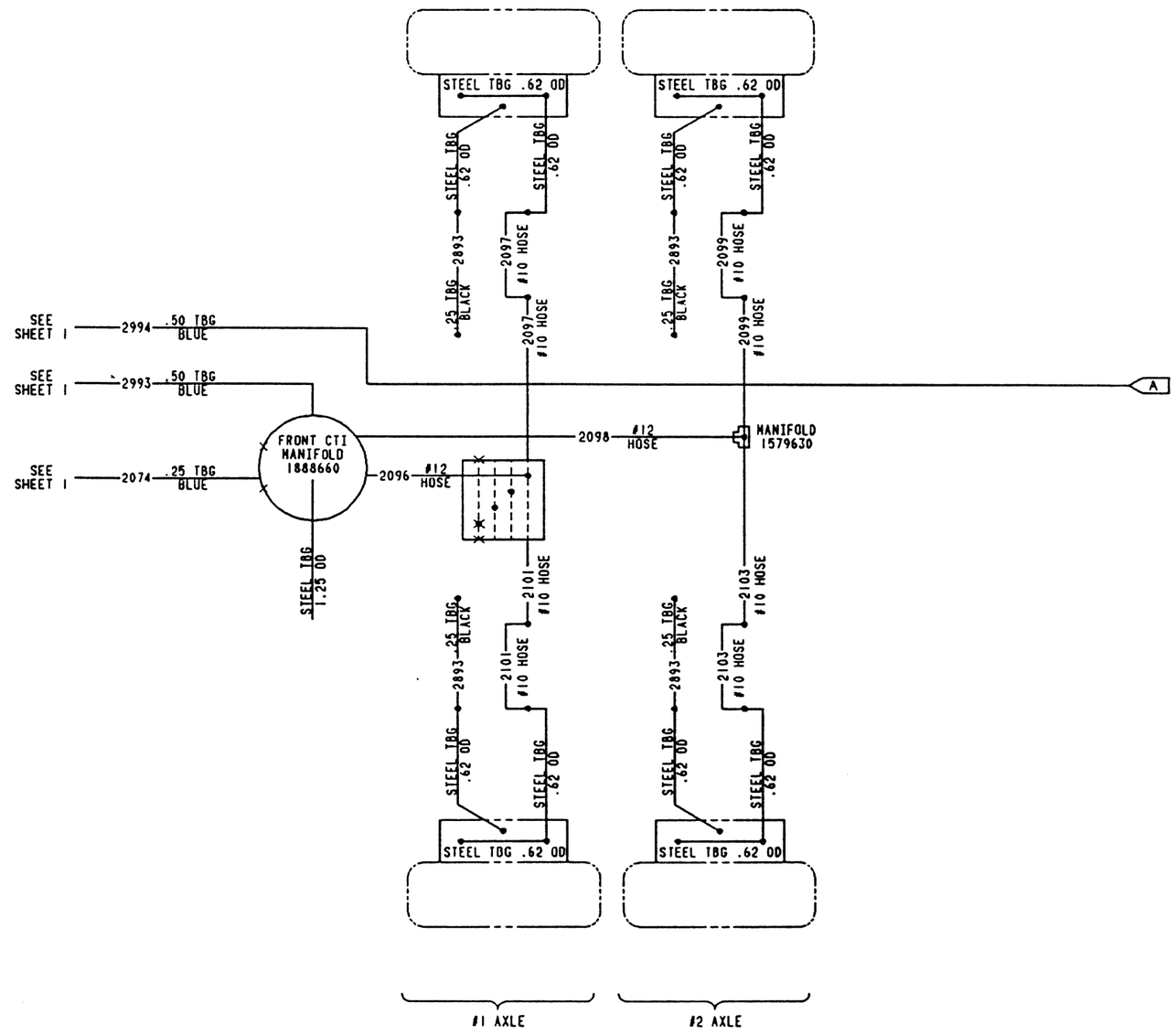

FIGURE FO-2. AIR SYSTEM SCHEMATIC
FOLDOUT 29 OF 35
ENGINEERING DWG 1878300 SHEET 2
FP-57/FP-58 BLANK

REVISION B
CN 23468
8-8-91

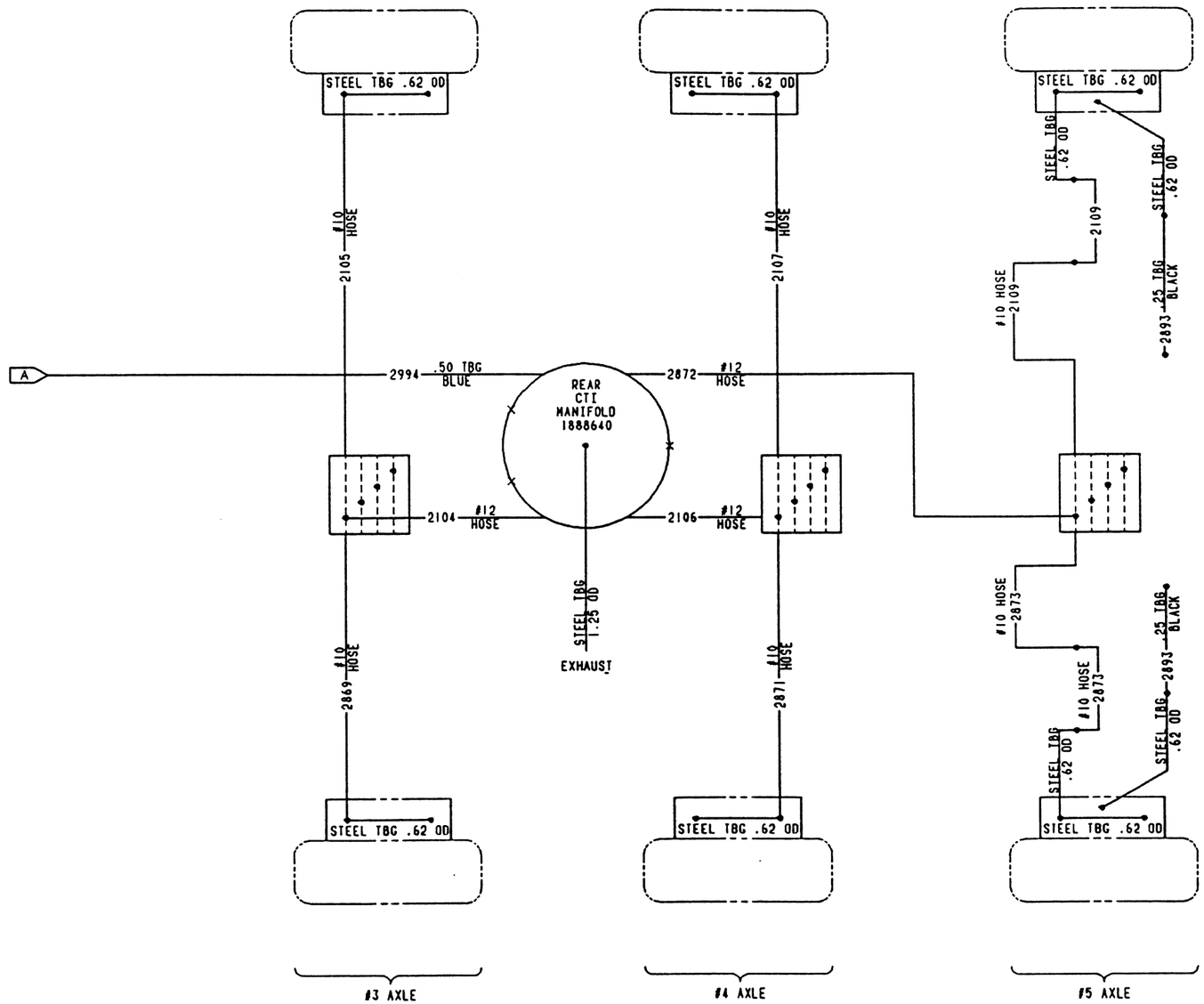

FIGURE FO-2. AIR SYSTEM SCHEMATIC
FOLDOUT 30 OF 35
ENGINEERING DWG 1878300 SHEET 2
FP-59/FP-60 BLANK

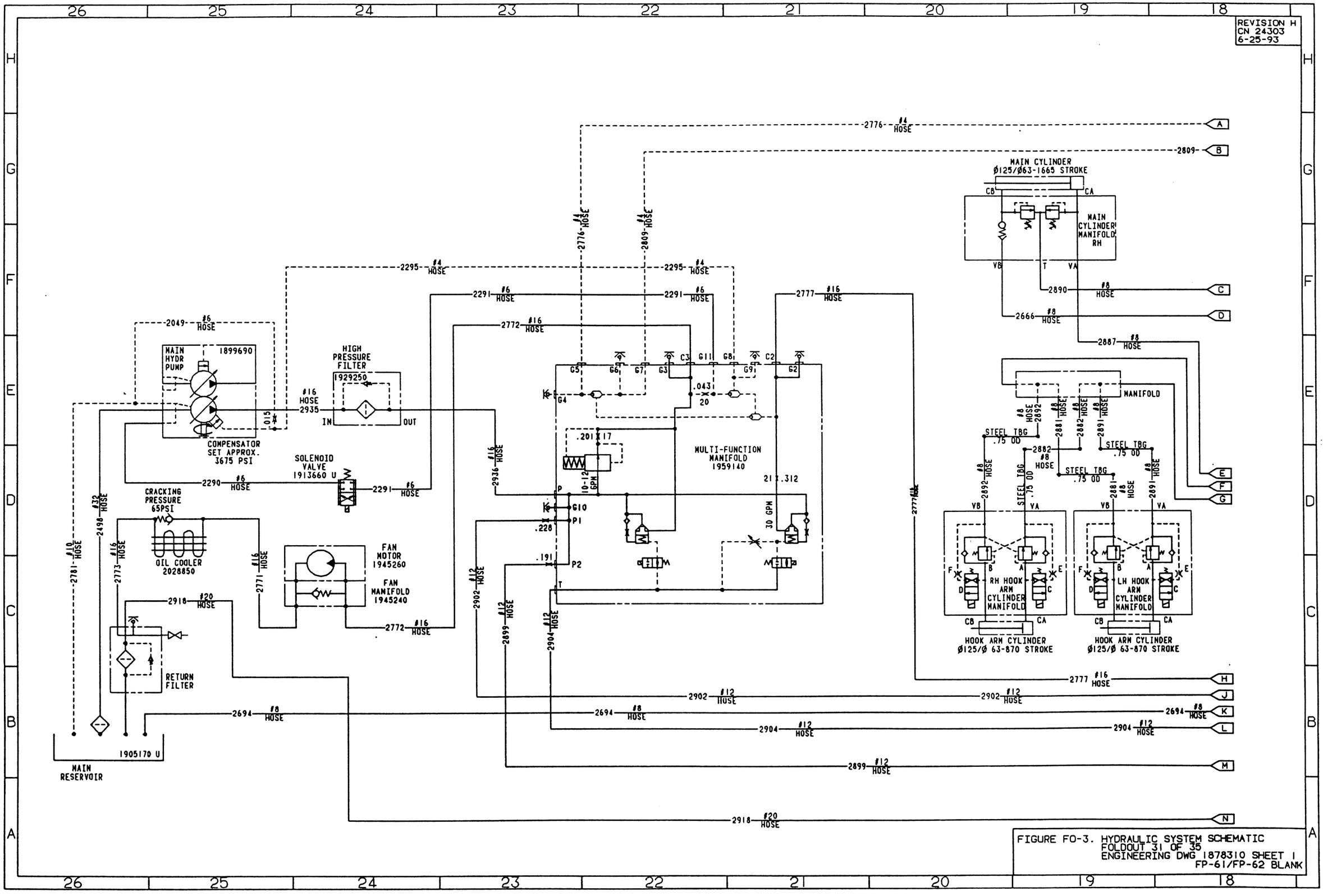

FIGURE FO-3. HYDRAULIC SYSTEM SCHEMATIC
FOLDOUT 31 OF 35
ENGINEERING DWG 1878310 SHEET 1
FP-61/FP-62 BLANK

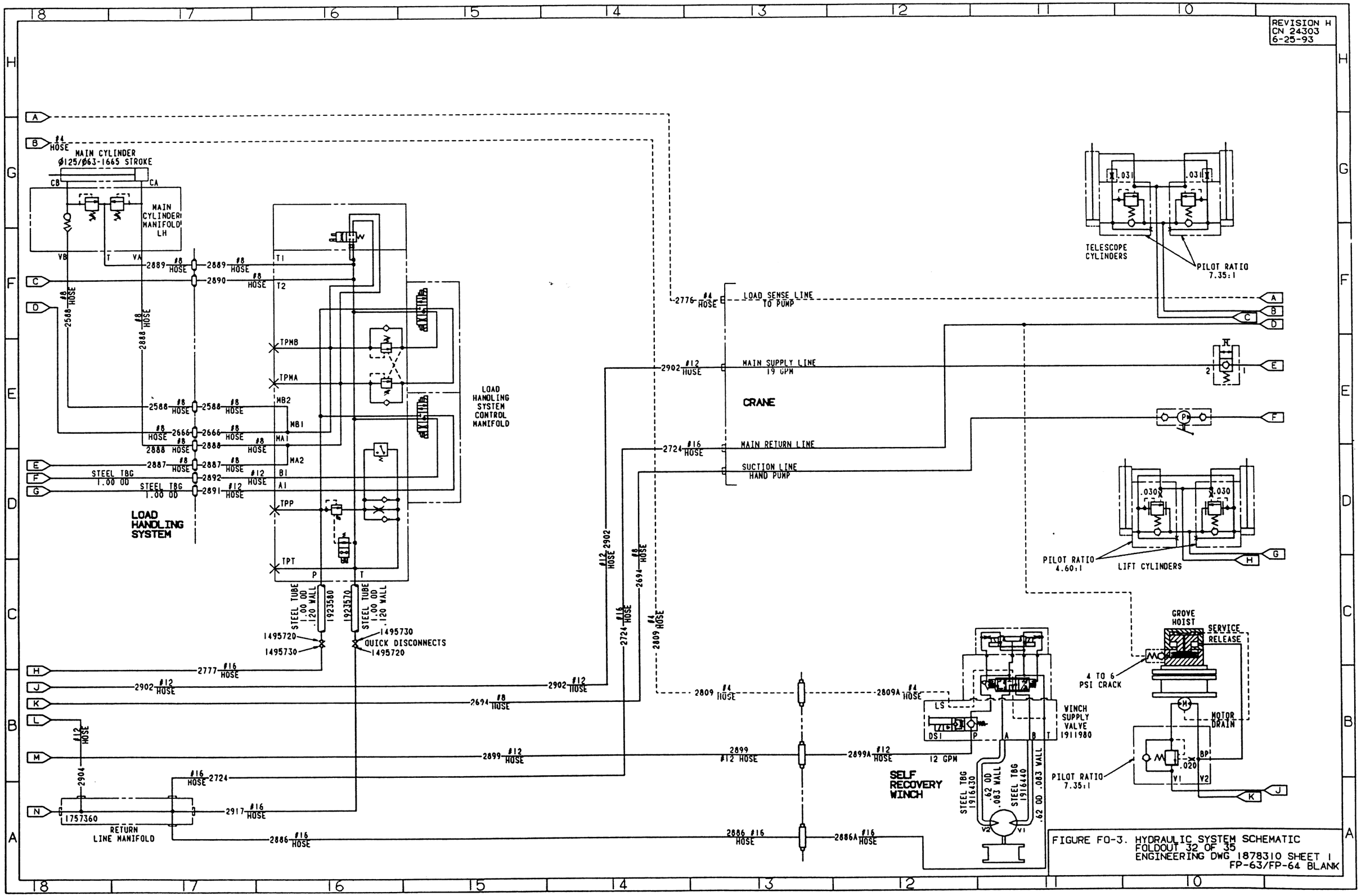

FIGURE FO-3. HYDRAULIC SYSTEM SCHEMATIC
FOLDOUT 32 OF 35
ENGINEERING DWG 1878310 SHEET 1
FP-63/FP-64 BLANK

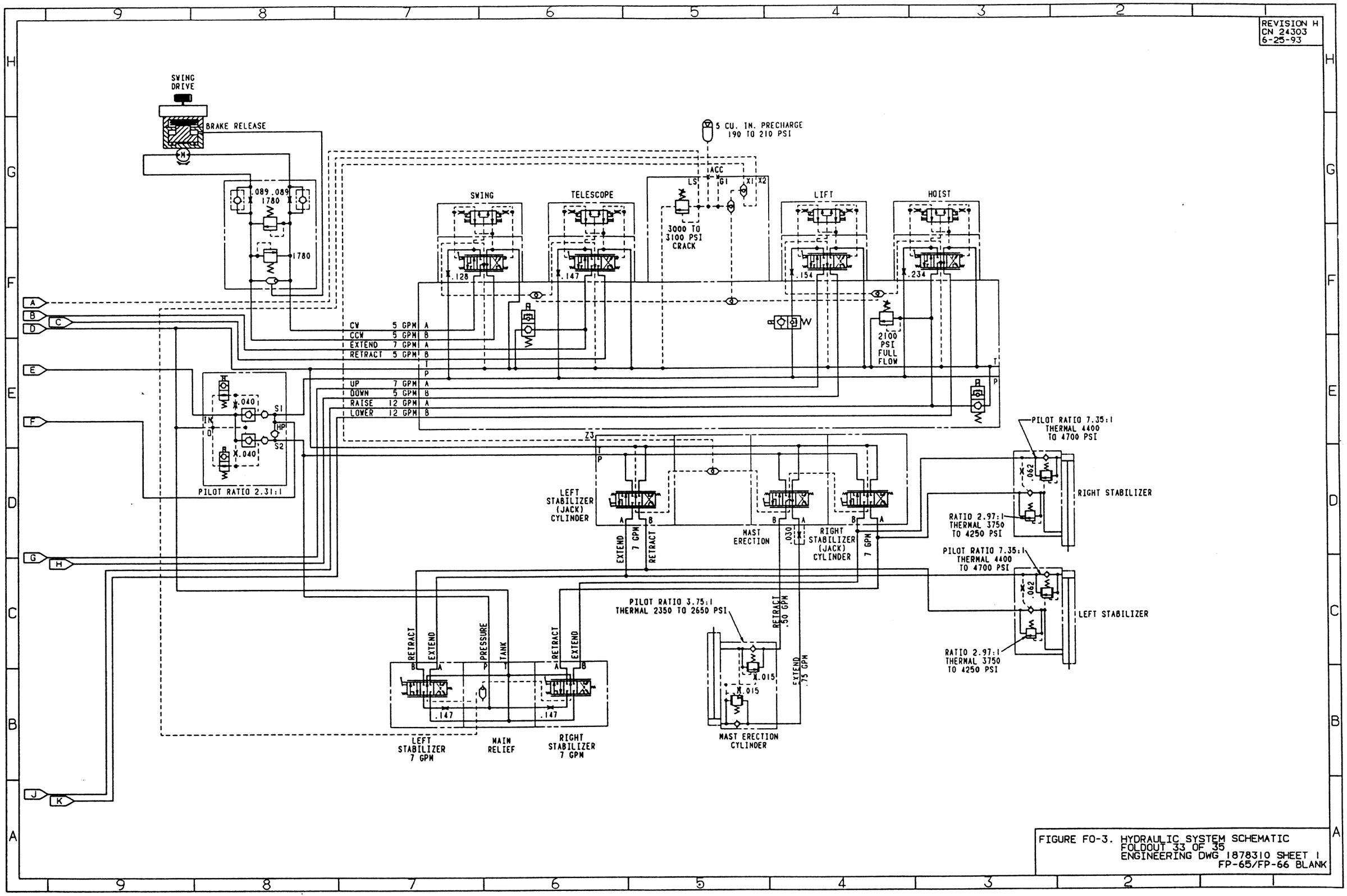

FIGURE FO-3. HYDRAULIC SYSTEM SCHEMATIC
FOLDOUT 33 OF 35
ENGINEERING DWG 1878310 SHEET 1
FP-65/FP-66 BLANK

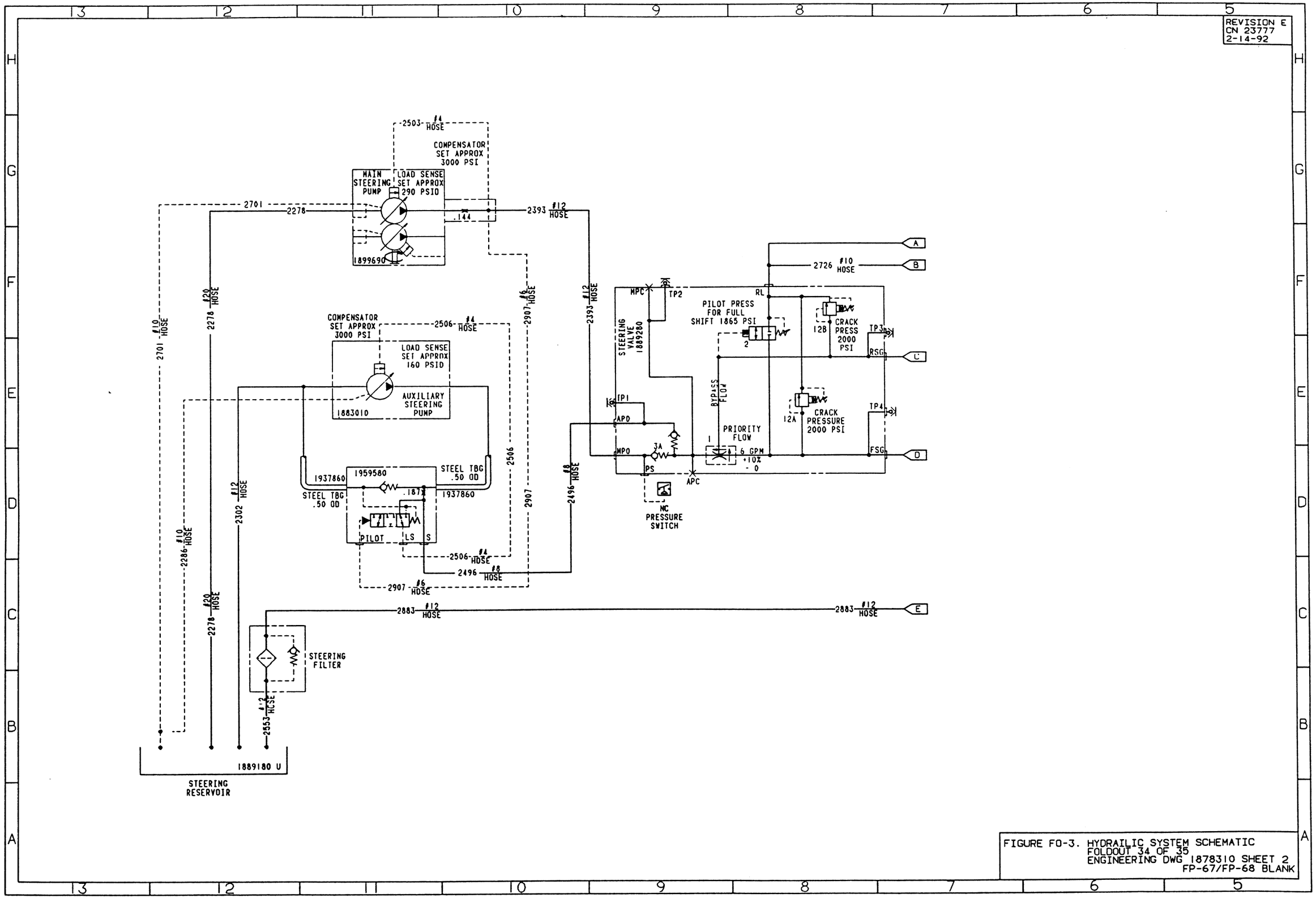

FIGURE FO-3. HYDRAILIC SYSTEM SCHEMATIC
FOLDOUT 34 OF 35
ENGINEERING DWG 1878310 SHEET 2
FP-67/FP-68 BLANK

REVISION E
CN 23777
2-14-92

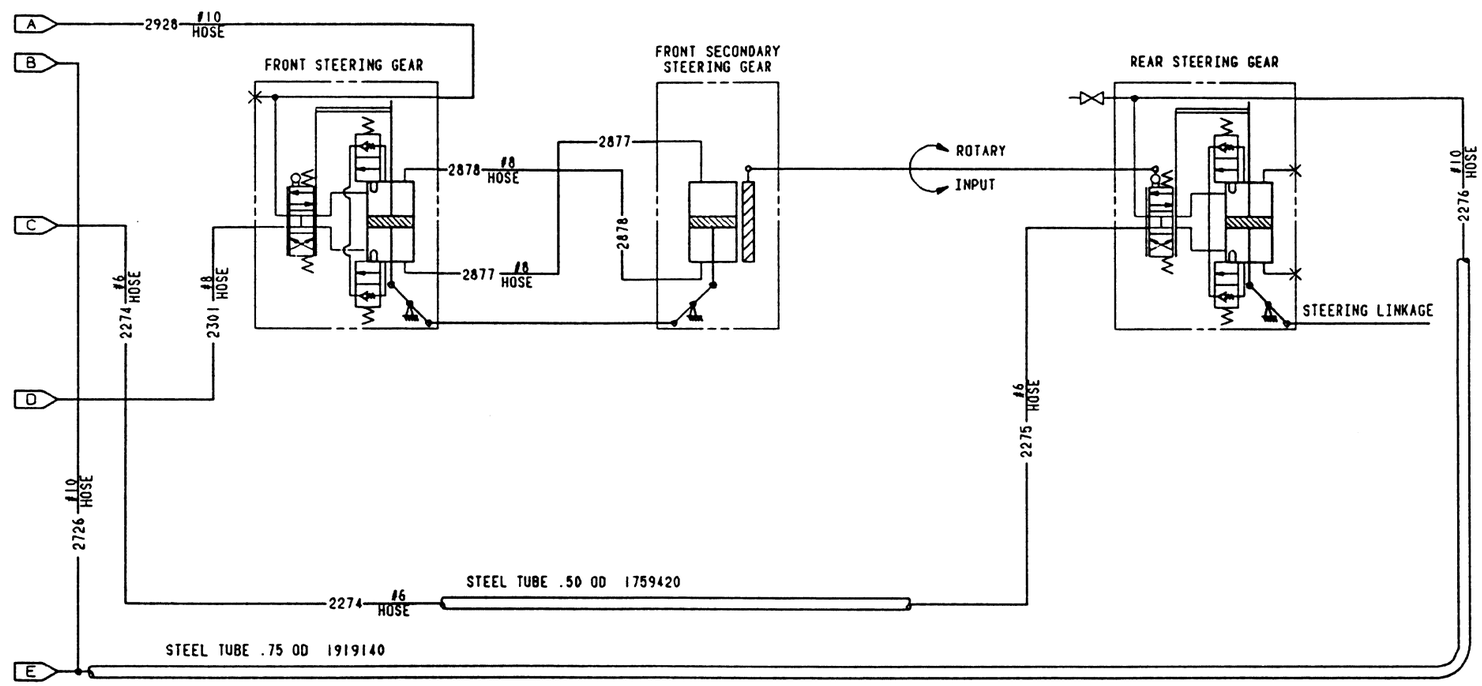

FIGURE FO-3. HYDRAULIC SYSTEM SCHEMATIC
FOLDOUT 35 OF 35
ENGINEERING DWG 1878310 SHEET 2
FP-69/FP-70 BLANK

SCHEMATICS

Section II. 200 AMP ALTERNATOR AND DDEC III ENGINE.

Section II contains the schematics for trucks equipped with the 200 amp alternator and the DDEC III engine.

REVISION D
CN 15194
12/23/97

MULTIPLE CONNECTORS

NUMBER	ZONE	SH	DESCRIPTION
MC1	H3	3	CAB/ELECTRICAL BOX
MC1	C26	4	CAB/ELECTRICAL BOX
MC2	D3	3	CAB/ELECTRICAL BOX
MC2	D26	4	CAB/ELECTRICAL BOX
MC3	C3	3	CHASSIS
MC3	H17	6	CHASSIS
MC4	G10	3	SWITCHES
MC5	B12	3	WIPER MOTOR
MC6	D15	3	THROTTLE SENSOR
MC7	H8	3	TURN SIGNAL
MC8	F19	3	GAUGES
MC9	G4	4	ECU ATEC
MC10	G4	4	ECU ATEC
MC11	D3	4	DDEC
MC11	D26	5	DDEC
MC12	H26	4	SHIFT CONT ATEC
MC13	F6	3	DIGN CONN DDEC
MC14	B4	4	DDEC SIGNAL GROUND
MC15	B4	6	MILITARY CONNECTOR
MC16	D4	6	TRAILER
MC17	G11	5	DDEC
MC18	E11	5	DDEC
MC19	E13	5	TRANSMISSION
MC20	E12	5	TRANSMISSION
MC21	E2	3	ENGINE SENSOR
MC21	H26	5	ENGINE SENSOR
MC23	B23	5	ETHER START
MC24	G19	5	ALTERNATOR
MC25	C17	6	TRAILER 24VDC
MC27	F18	6	FRONT TOW
MC28	E6	3	BEACON LIGHT
MC29	F8	6	CRANE
MC30	C5	6	TRAILER
MC31	B21	3	CAB/CHASSIS
MC32	B23	3	CTI CHASSIS
MC33	F17	7	LHS CAB
MC34	C19	3	24V METERS
MC35	D24	3	CTI
MC36	A5	4	THROTTLE SENSOR
MC38	C15	3	VERNIER CONTROL
MC39	H7	5	STE/ICE
MC40	G5	5	STE/ICE MODULE
MC41	G2	5	PULSE TACH DRIVE
MC42	H4	5	DIFFERENTIAL PRESS
MC43	F2	5	FUEL PRESSURE
MC44	C5	3	CAB/TRANSMISSION
MC44	F26	4	CAB/TRANSMISSION
MC45	D5	4	ECU ATEC

MULTIPLE CONNECTORS

NUMBER	ZONE	SH	DESCRIPTION
MC50	C7	4	RELAYS/ATEC
MC51	C6	4	ECU ATEC
MC52	B23	4	HEATER/DIMMER
MC53	F23	3	ENGINE BRAKE
MC54	F8	6	WORK LIGHT
MC55	B13	6	SELF RECOVERY WINCH
MC56	C23	5	ETHER THERMOSTAT
MC57	F6	6	DRIVE LINE LOCK
MC58	E7	3	GAS PART FILTER
MC59	G13	6	FAN CONTROL
MC60	G24	5	REVERSE PLRT PROTR
MC61	G10	6	FAN CONTL WTR TEMP
MC62	F13	5	DDEC ENGINE POWER
MC63	G11	6	FAN CONTROL
MC64	D15	6	AUXILIARY CTI MANF
MC65	E5	5	STE/ICE ENGINE
MC66	G2	5	TURBO OUTLET PSI
MC67	E2	5	AIR CLEANER
MC68	D2	5	AIR BOX PSI
MC69	D2	5	FUEL RETURN
MC70	C2	5	ENGINE OIL TEMP
MC71	B2	5	ENGINE WATER TEMP
MC73	F13	6	FAN CONTROL
MC76	F11	6	FAN CONTROL VALVE
MC77	E3	6	BACK UP LIGHT
MC78	F4	6	REAR LIGHT GROUP
MC79	G7	6	WORK LIGHT
MC80	G4	6	REAR LIGHT GROUP
MC81	E13	7	LHS
MC82	E12	7	LHS
MC83	E14	7	LHS
MC84	E15	7	LHS
MC85	E9	7	LHS
MC86	E7	7	LHS
MC87	D5	7	LHS
MC88	E6	7	LHS
MC90	C3	6	REAR LIGHT GP HARN
MC91	G8	3	STRN COL.-CAB HARN
MC92	F8	3	STRG COL.-CAB HARN
MC93	C17	7	LHS
MC94	B17	7	LHS
MC95	B15	5	DDEC BATTERY POWER
MC96	C2	3	LOW HYD OIL
MC97	B10	6	AIR DRYER
MC98	B9	6	AIR DRYER
MC99	B8	6	AFTER COOLER
MC102	A3	4	DDEC 6.8K RESISTOR
MC103	E5	3	CHEM DETECTOR
MC104	E5	3	CHEM ALARM

MULTIPLE CONNECTORS

NUMBER	ZONE	SH	DESCRIPTION
MC105	E24	3	CTI ACCESS OUTPUT
MC106	H4	3	DDEC DIAGNOSTIC
MC107	D6	6	FUEL WATER SEP
MC108	C20	5	FUEL PUMP
MC109	C15	6	CTI POWER MANIFOLD
MC110	C24	3	CTI AUX MANF CAB
MC111	B24	3	CTI POWER MANF CAB
MC112	B19	3	LHS LIGHTS
MC113	F16	6	EMERGENCY STEER SW
MC116	B12	4	EMER ENG SHUT DOWN
MC118	A9	5	STE/ICE
MC119	B22	4	ARCTIC PUMP
MC120	B7	6	ARCTIC PUMP
MC121	C12	6	SELF RECOVERY WINCH
MC122	D12	6	SELF RECOVERY WINCH
MC123	D12	6	SELF RECOVERY WINCH
MC124	E3	6	BACK-UP LIGHT/ALARM
MC125	G18	3	AIR RESTRICTION LT
MC126	E11	3	STOP LIGHTS
MC127	B15	3	THROTTLE POSN SW
MC128	G10	6	AUX WATER TEMP SW

LIGHTS

NUMBER	ZONE	SH	DESCRIPTION
L1	G16	3	PARKING BRAKE IND
L2	G17	3	LOW AIR INDICATOR
L3	G17	3	CHECK GAUGES IND
L4	G17	3	RH TURN INDICATOR
L5	G24	3	TRANS CHECK IND
L6	G18	3	CHECK ENGINE IND
L7	G17	3	DRIVE LINE LOCK IND
L8	G24	3	HI WATER TEMP IND
L9	G24	3	LOW OIL PSI IND
L10	G25	3	HI BEAM INDICATOR
L11	G28	3	LH TURN INDICATOR
L12	F27	3	RH HEADLIGHT
L13	G27	3	RH SIDE TURN SIGNAL
L14	F27	3	RH COMPOSITE
L15	E27	3	BLACKOUT DRIVE
L16	D27	3	LH COMPOSITE
L17	C27	3	LH HEADLIGHT
L18	C27	3	LH SIDE TURN SIGNAL
L19	B27	3	ID & CLEARANCE
L20	H10	3	DOME
L21	G7	6	RH WORK LIGHT
L22	G2	6	RH REAR COMPOSITE
L23	G2	6	BACK UP
L24	F2	6	LH REAR COMPOSITE
L25	C2	6	ID/CLEARANCE REAR
L26	E22	3	LHS INDICATOR
L27	E22	3	AUXILLARY HYDR IND
L28	E23	3	TRANSIT INDICATOR
L29	E23	3	LHS OVERLOAD IND
L31	D2	6	RH REAR S MKR (RED)
L32	H4	6	RH SIDE MKR (AMBER)
L33	B2	6	LH SIDE MKR (AMBER)
L34	H4	6	LH REAR S MKR (RED)
L35	G16	3	EMERGENCY STEERING
L36	G16	3	LOW HYD OIL
L37	D21	3	ENGINE BRAKE
L38	D21	3	FLAT RACK
L39	F7	6	LH WORK LIGHT
L40	F7	3	T.C. LOCKUP
L41	C2	6	L.H. B.O. CL LIGHT
L42	D2	6	R.H. B.O. CL LIGHT
L43	B5	3	POST LIGHT
L44	F5	3	HEATER PANEL LIGHT

SWITCHES

NUMBER	ZONE	SH	DESCRIPTION
S1	H6	3	TURN SIGNAL/DIMMER
S2	E13	3	IGNITION
S3	F5	3	HEATER
S4	D8	3	SELF RECOVERY CRANE
S5	H12	3	BEACON LIGHT
S6	H13	3	WORK LIGHT
S7	H14	3	WINDSHIELD WASHER
S8	G15	3	WINDSHIELD WIPER
S9	F16	3	BLACK OUT SVCE SEL
S10	F54	3	BLACK OUT MARKER
S11	F14	3	BLACK OUT DRIVE
S12	F14	3	HEADLIGHTS
S13	F5	6	DRIVE LINE LOCK
S14	F12	3	RHEOSTAT
S15	F7	3	HORN
S16	F13	3	ENGINE BRAKE
S17	F7	3	DIAGNOSTIC REQUEST
S18	D7	3	SELF RECOVERY WINCH
S19	D6	3	GAS PARTIULATE FLTR
S20	D5	3	CHEMICAL ALARM
S21	H15	3	DOME LIGHT
S22	C8	5	STE/ICE ZEROING
S23	C22	7	PROX SW HOOK ARM UP
S24	C23	7	PROX SW MDL FR DOWN
S25	D13	3	ETHER START
S26	F7	3	TC LOCKUP
S27	E5	7	HOOK ARM DOWN
S28	G8	7	OVERLOAD PSI
S29	B19	4	ARCTIC PUMP
S30	E9	3	EMER ENG SHUT DOWN
S31	C16	3	THROTTLE POSITION

PRESSURE SWITCHES

NUMBER	ZONE	SH	DESCRIPTION
PS1	G9	3	FRONT BRAKE
PS2	F9	3	REAR BRAKE
PS3	F9	3	HAND BRAKE
PS4	C14	3	PARKING BRAKE
PS5	B15	3	PARKING BRAKE SW
PS6	D17	3	LOW AIR PRESSURE
PS7	D17	3	LOW AIR PRESSURE
PS8	C22	5	ATEC OIL PRESSURE
PS9	D22	5	ENGINE OIL
PS10			GOVERNOR PRESSURE
PS11			GOVERNOR PRESSURE
PS13	F15	6	EMERGENCY STEER
PS12	D23	5	ALTER. OIL PRESSURE
PS15	F26	5	BOOST PRESSURE

TEMPERATURE SWITCHES

NUMBER	ZONE	SH	DESCRIPTION
TS1	C23	5	ETHER START
TS2	D23	5	ENGINE WATER
TS3	F10	6	ENGINE WATER
TS4	G10	6	ENGINE WATER

RELAYS

NUMBER	ZONE	SH	DESCRIPTION
R1	G24	4	HEADLIGHTS
R2	G23	4	ID/CLEARANCE LIGHTS
R3	G22	4	HORN
R4	G21	4	WORK LIGHTS
R5	G20	4	DIMMER
R6	G19	4	BEACON LIGHTS
R7	G18	4	TRANSMISSION
R8	G18	4	RATARDER
R9	G18	4	CK TRANSMISSION
R10	G17	4	REVERSE
R11	G16	4	NEUTRAL START
R12	G15	4	12 V MAG SWITCH
R13	G15	4	B.O. STOP
R14	G14	4	BO SERVICE TAIL LTS
R15	G13	4	LH TURN SIGNAL
R16	G12	4	RH TURN SIGNAL
R17	G12	4	BLACK OUT TAIL LTS
R18	G11	4	DDEC
R19	G10	4	TRANS DDEC
R20	G9	4	INTER AXLE
R21	G9	4	DIFFERENTIAL LOCK
R22	G8	4	CRANE HI IDLE
R23	G7	4	HIGH RANGE LOCKOUT
R24	G6	4	T.C. DUAL MODE
R25	B17	4	MAGNETIC SWITCH
R26	B18	4	MAGNETIC SWITCH
R27	D19	5	MAGNETIC SWITCH
R28	C21	4	MAGNETIC SWITCH
R29	C10	7	MIDDLE FR LOCKOUT
R32	B21	4	ARCTIC PUMP
R33	B20	4	ARCTIC PUMP
R40	G5	10	CRANE/SRW RELAY

SENDING UNIT

NUMBER	ZONE	SH	DESCRIPTION
SU1	E21	5	WATER TEMPERATURE
SU2	D21	5	TRANSMISSION TEMP
SU3	D21	5	ENGINE OIL PRESSURE
SU4	F6	6	SPEEDOMTER
SU5	D6	6	FUEL LEVEL

FIGURE FO-1. ELECTRICAL SYSTEM SCHEMATIC
FOLDOUT 1 OF 26
ENGINEERING DWG 3053493 SHEET 1
FP-1/FP-2 BLANK

REVISION D
CN 15194
12/23/97

CIRCUIT BREAKERS

NUMBER	ZONE	SH	DESCRIPTION
CB1	D22	4	15 AMP
CB2	D22	4	15 AMP
CB3	D21	4	15 AMP
CB4	D21	4	15 AMP
CB5	D20	4	20 AMP
CB6	D20	4	15 AMP
CB7	D19	4	10 AMP
CB8	D19	4	15 AMP
CB9	D18	4	10 AMP
CB10	D17	4	3 AMP
CB11	D16	4	8 AMP
CB12	D16	4	8 AMP
CB13	D15	4	8 AMP
CB14	D14	4	15 AMP
CB15	D13	4	15 AMP
CB16	D12	4	15 AMP
CB17	D12	4	3 AMP
CB18	D11	4	10 AMP
CB19	D10	4	15 AMP
CB20	D9	4	15 AMP
CB21	D9	4	30 AMP
CB22	D7	4	20 AMP
CB23	D7	4	20 AMP
CB24	C20	5	3 AMP
CB25	A14	4	15 AMP
CB26	A13	4	15 AMP

GAUGES

NUMBER	ZONE	SH	DESCRIPTION
G1	G20	3	WATER TEMPERATURE
G2	G21	3	OIL PRESSURE
G3	G22	3	FUEL LEVEL
G4	G22	3	TACHOMETER
G5	G23	3	SPEEDOMTER
G6	G19	3	VOLTMETER 12V
G7	G19	3	VOLTMETER 24V
G10	G20	3	XMSN OIL TEMP
G11	G18	3	AIR PRESSURE
G12	H18	3	AIR RESTRICTION

MISCELLANEOUS

NUMBER	ZONE	SH	DESCRIPTION
M1	B6	3	WINDSHIELD WSHR SOL
M2	B13	3	WIPER MOTOR
M3	E17	3	LOW OIL & AIR ALARM
M4	A5	4	THROTTLE POSN CONT
M5	C20	4	FLASHER
M6	C16	5	BATTERIES
M7	E17	5	STARTER
M8	B22	5	ETHER START
M9	D6	6	FUEL/WATER SEP
M10	C10	6	LHS SOLENOID VALVE
M11	C8	6	AFTERCOOLER
M12	C20	5	FUEL PUMP
M13	B10	6	AIR DRYER
M14	E6	3	CHEMICAL DETECTOR
M14	B9	6	AIR DRYER
M15	D1	3	HORN
M16	D16	3	VERNIER CONTROL
M17	F5	3	HEATER MOTOR
M18	F24	3	LOW OIL PRESS ALARM
M20	G22	5	ALTERNATOR,STD
M21	C25	5	RH SIDE ENG BK COIL
M22	C24	5	LH SIDE ENG BK COIL
M23	D18	5	SLAVE CONNECTER
M24	B15	6	CTI POWER MANIFOLOD
M25	D15	6	CTI AUXILIARY MANF
M26	E13	7	LHS CAB CONTROLLER
M27	B13	6	SELF RECOVERY WINCH
M28	E25	3	CTI CONTROLLER
M29	G14	7	CHEMICAL ALARM
M30	D11	3	GAS PART FILTER
M31	D11	3	AIR HEATER DRIVER
M32	D12	3	AIR HEATER PASS
M33	D3	7	SRW SOLENOID VALVE
M35	E15	3	THROTTLE POSITIONER
M36	C9	4	DIODE
M39	F9	4	RECTIFIER
M40	G2	5	PULSE TACH DRIVE
M41	H5	5	DIFFERENTIAL PRESS
M42	F2	5	FUEL PRESSURE
M43	G5	5	STE/ICE MODULE
M45	F10	6	FAN CONTROL VALVE
M48	D16	5	SHUNT
M49	B9	3	XFR CASE LKUP SOL
M50	B8	3	INTER AXLE SOL V
M51	B8	3	DIFF SOLENOID VALVE
M51	C11	6	FAN
M52	A21	4	RECTIFIER
M53	G11	7	LHS HOOK ARM B
M54	G10	7	LHS HOOK ARM A
M55	G10	7	LHS MAIN CYLINDER B
M56	G10	7	LHS MAIN CYLINDER A

MISCELLANEOUS

NUMBER	ZONE	SH	DESCRIPTION
M57	G9	7	LHS FREEFLOW
M58	G9	7	LHS TRANSIT
M59	F3	7	LHS LH HOOK ARM A
M60	F3	7	LHS LH HOOK ARM B
M61	F2	7	LHS RH HOOK ARM A
M62	F2	7	LHS RH HOOK ARM B
M64	C19	5	POLARITY PROTECTION
M66	G16	3	RECTIFIER
M67	C8	3	RECTIFIER
M68	G12	7	RECTIFIER
M70	F2	5	TURBO OUTLET PSI
M71	E2	5	AIR CLEANER
M72	D2	5	AIR BOX PSI
M73	C2	5	FUEL RETURN
M74	C2	5	ENGINE OIL TEMP
M75	B2	5	ENGINE WATER TEMP
M76	E10	4	RECTIFIER
M77	B17	5	ARCTIC BATTERIES
M78	E2	6	BACK-UP ALARM
M80	B7	6	ARCTIC PUMP
M81	F4	3	RECTIFIER
M83	F3	10	LHS FUSE - 5 AMP

CODE SORT

CODE	ROUTING	SH	DESCRIPTION
104	MC36-M4	4	THROTTLE SENSOR
104	MC10-MC36	4	THROTTLE SENSOR
105	MC10-MC19	4/5	ATEC
106A	MC10-MC36	4	THROTTLE SENSOR
106A	MC36-M4	4	THROTTLE SENSOR
106A	MC10-106B	4/5	ATEC
106B	106A-MC19	4/5	ATEC
107	MC10-MC19	4/5	ATEC
108	MC10-MC19	4/5	ATEC
109	MC10-MC19	4/5	ATEC
110	MC10-MC19	4/5	ATEC
111	MC10-MC19	4/5	ATEC
112	MC10-MC20	4/5	ATEC
113	MC10-MC20	4/5	ATEC
114	MC10-MC19	4/5	ATEC
115	MC11-MC18	5	ECM
115	MC11-MC102	4	6.8K RESISTOR
115	MC10-MC19	4/5	ATEC
116	MC10-MC19	4/5	ATEC
117	MC10-MC19	4/5	ATEC
118	MC10-MC19	4/5	ATEC
119	MC10-MC19	4/5	ATEC
120	MC10-MC19	4/5	ATEC
121	MC10-MC19	4/5	ATEC
122	MC10-MC19	4/5	ATEC
123	MC10-MC19	4/5	ATEC
124	MC36-M4	4	THROTTLE SENSOR
124	MC10-MC36	4	THROTTLE SENSOR
150	MC62-MC62	5/4	
150	MC17-MC62	5	
195	MC5-M2	3	
201	MC51-GROUND	4	
201	MC9-MC51	4	
202A	MC9-SPLICE	4	
203	MC9-MC51	4	
203	MC51-CB12	4	
204	MC9-MC12	4	ATEC
206	MC9-MC12	4	ATEC
207A	MC51-MC106	4	ATEC
207A	MC9-MC51	4	ATEC
207A	MC106-MC13	4	
208/209	MC11-SPLICE	4	
208/209	SPLICE-MC51	4	
208/209	M6-MC95	5	
208/209	MC95-MC11	5	
208/209	MC51-MC9	4	
210A	MC9-MC12	4	
211	R8-MC50	4	
211	MC50-R8	4	RETARDER
211	MC9-MC50	4	

CODE SORT

CODE	ROUTING	SH	DESCRIPTION
212	MC9-MC12	4	
213	MC50-R8	4	RETARDER
213	MC9-MC50	4	
214	MC50-R10	4	REVERSE
214	MC9-MC50	4	
215	MC9-MC50	4	
215	MC50-R9	4	CHECK TRANSMISSION
216A	MC106-MC13	3	
216A	MC9-MC51	4	ATEC
216A	MC51-MC106	4	ATEC
218	MC9-MC12	4	ATEC
219	MC9-MC12	4	ATEC
220	MC9-MC12	4	ATEC
221	MC9-MC12	4	ATEC
222	MC9-GROUND	4	ATEC
223A	MC51-CB14	4	TRANSMISSION
223A	MC51-SPLICE	4	
223A	SPLC-SPLC	4	
223A	SPLC-SPLC	4	
223A	SPLC-SPLC	4	
223A	SPLICE-MC9	4	
223B	MC12-SPLICE	4	
225	CB11-MC12	4	
230	MC12-234	4	
231	MC50-MC12	4	
231	MC50-R22	4	CRANE HI IDLE
231	MC50-M36	4	
231	M36-R11	4	NEUTRAL START
233	MC50-MC12	4	
234	MC12-GROUND	4	
240	MC62-CB23	5/4	
240	CB23-M6	4/5	
240	MC17-MC62	5	
240	MC62-M6	5	
241	MC62-CB22	5/4	
241	MC62-M6	5	
241	MC17-MC62	5	
241	CB22-M6	4/5	
309	MC45-R24	4	TC DUAL MODE
313	MC45-R24	4	TC DUAL MODE
315	MC45-R24	4	TC DUAL MODE
417	MC6-M35	3	
417	MC11-MC44	4	
417	MC11-MC18	5	ECM
417	MC44-MC6	3	THROTTLE SENSOR
419	MC11-MC18	5	ECM
419	MC11-MC44	4	
419	MC44-MC8	3	
419	MC8-L6	3	CHECK ENGINE LIGHT

FIGURE FO-1. ELECTRICAL SYSTEM SCHEMATIC
FOLDOUT 2 OF 26
ENGINEERING DWG 3053493 SHEET 1
FP-3/FP-4 BLANK

REVISION D
CN 15194
12/23/97

CODE SORT

CODE	ROUTING	SH	DESCRIPTION
439	MC116-MC106	4	EMERGENCY ENG STOP
439	MC116-S30	3	EMERGENCY ENG STOP
439	MC116-S30	3	EMERGENCY ENG STOP
439	MC116-CB13	4	DDEC
439	MC106-MC13	3	
439	SPLC-MC106	4	
439	MC11-MC18	5	ECM
439	MC8-L6	3	CHECK ENGINE LIGHT
439	MC8-L3	3	ENGINE STOP LIGHT
439	MC44-MC8	3	
439	MC11-SPLICE	4	
439	SPLICE-MC44	4	
439	SPLC-MC116	4	
505	MC44-MC8	3	TACHOMETER
505	MC11-MC44	4	
505	MC8-G4	3	
505	MC11-MC18	5	
509	MC11-MC18	5	ECM
509	MC8-L3	3	ENGINE STOP LIGHT
509	MC44-MC8	3	
509	MC11-MC44	4	
510	MC11-MC18	5	ECM
510	MC44-PS4	3	PARKING BRAKE
510	R22-MC44	4	
510	MC11-R22	4	
528	MC11-MC18	5	DIAG. REQ.
528	MC106-S17	3	
528	MC11-MC106	4	
900	MC11-MC106	4	
900	MC11-MC18	5	ECM
900	MC106-MC13	3	
901	MC11-MC18	5	ECM
901	MC106-MC13	3	
901	MC11-MC106	4	
908	MC11-MC18	5	ECM
908	MC11-M4	4	THROTTLE POSN CONT
916	MC44-MC6	3	
916	MC11-MC44	4	
916	MC38-M16	3	
916	MC6-MC38	3	VERNIER CONTROL
916	MC6-M35	3	THROTTLE SENSOR
916	MC11-MC18	5	ECM
952	MC38-M16	3	
952	MC11-MC44	4	
952	MC44-MC6	3	THROTTLE SENSOR
952	MC11-MC18	5	ECM
952	MC6-MC38	3	VERNIER CONTROL
953	M6-MC14	5	DDEC SIGNAL GROUND
953	MC14-SPLICE	4	
953	SPLICE-MC102	4	
953	SPLICE-R22	4	
953	SPLICE-MC106	4	
953	MC106-S17	3	
953	S17-MC13	3	
988	MC11-R7	4	TRANSMISSION
988	MC11-MC18	5	ECM
1001	MC8-L4	3	

CODE SORT

CODE	ROUTING	SH	DESCRIPTION
1001	MC7-SPLICE	3	
1001	MC8-SPLICE	3	
1001	SPLICE-L13	3	
1001	SPLICE-L14	3	
1001	S1-MC7	3	RH HEADLIGHT
1002	S1-MC7	3	LH HEADLIGHT
1002	MC8-L11	3	
1002	MC7-SPLICE	3	
1002	SPLICE-MC8	3	
1002	SPLICE-L18	3	
1002	SPLICE-L16	3	
1003	MC7-MC3	3	
1003	S1-MC7	3	LH RR TURN SIGNAL
1003	MC3-MC80	6	
1003	MC3-MC16	6	TRAILER CONN 12VDC
1003	MC1-R15	4	LH TURN LIGHT
1003	MC80-L24	6	LH STOP LIGHT
1003	MC27-MC3	6	FRONT TOW
1003	MC7-MC1	3	
1003C	MC25-R17	4	LH TURN LIGHT
1003C	MC25-MC15	6	TRAILER CONN 12VDC
1004	MC7-MC1	3	
1004	MC7-MC3	3	
1004	S1-MC7	3	
1004	MC3-MC80	6	
1004	MC80-L22	6	RH STOP LIGHT
1004	MC27-MC3	6	
1004	MC3-MC78	6	
1004	MC3-MC16	6	
1004	MC1-R16	4	
1004C	MC25-R16	4	RH TURN LIGHT
1004C	MC25-MC15	6	TRAILER CONN 24VDC
1005	MC126-S9	3	
1005	PS3-MC3	3	
1005	MC3-MC16	6	TRAILER CONN 24VDC
1005	MC126-PS1	3	
1005	PS2-PS3	3	
1005	MC27-MC3	6	FRONT TOW
1005	PS1-PS2	3	
1005A	MC7-MC126	3	
1005A	MC126-S9	3	
1005A	S1-MC7	3	TURN SIGNAL/DIM SW
1006	MC2-SPLICE	3	
1006	SPLICE-L12	3	
1006	SPLICE-L17	3	
1006	MC2-R5	4	DIMMER
1007	MC2-R5	4	DIMMER
1007	MC2-SPLICE	3	
1007	SPLICE-L12	3	
1007	SPLICE-L17	3	
1008	MC3-MC78	6	
1008	MC4-S12	3	HEADLIGHTS

CODE SORT

CODE	ROUTING	SH	DESCRIPTION
1008	MC27-MC3	6	FRONT TOW
1008	MC3-SPLICE	3	
1008	MC3-MC4	3	
1008	MC3-MC16	6	TRAILER CONN 12VDC
1008	MC78-L22	6	RH TAIL LIGHT
1008	MC78-L24	6	LH TAIL LIGHT
1008C	MC25-MC15	6	TRAILER CONN 24VDC
1008C	MC25-R14	4	B.O. SERVICE
1009	PS2-PS3	3	
1009	PS1-PS2	3	
1009	MC2-PS1	3	
1009	MC2-CB6	4	STOP LIGHT
1012	MC3-SPLICE	3	
1012	SPLC-SPLC	3	
1012	MC2-SPLICE	3	
1012	SPLC-SPLC	3	
1012	SPLICE-L19	3	
1012	MC2-R2	4	CLEARANCE LIGHTS
1012	MC3-SPLICE	6	
1012	SPLICE-MC27	6	
1012	SPLICE-MC80	6	
1012	SPLICE-L32	6	RH SIDE MARKER
1012	SPLICE-L34	6	LH SIDE MARKER
1012	MC90-L31	6	RR SIDE MARKER
1012	MC90-L25	6	ID LIGHTS
1012	MC80-MC90	6	
1012	MC90-L33	6	RR SIDE MARKER
1016	MC92-MC2	3	
1016	S15-MC92	3	
1016	MC2-R3	4	HORN
1017	SPLICE-R5	4	
1017	MC52-R14	4	
1017	R2-MC52	4	
1017	MC2-SPLICE	4	
1017	SPLICE-R1	4	
1017	MC91-MC2	3	
1017	S1-MC91	3	
1017A	MC91-MC2	3	
1017A	S1-MC91	3	
1017A	MC2-R5	4	
1018	MC8-L10	3	HIGH BEAM
1018	MC8-1007	3	
1019	L15-1679	3	
1020	L14-L16	3	
1020	S2-MC21	3	
1020	MC60-CB24	5	
1020	MC21-MC60	5	
1020	M12-MC60	5	
1020A	CB24-PS12	5	
1020B	PS12-ENG	5	ALTERNATOR
1021	MC2-S2	3	
1021	MC2-R11	4	
1021	R11-M76	4	
1021A	R11-MC1	4	
1021A	MC1-MC21	3	
1021B	MC21-MC60	5	
1021B	MC60-R27	5	

FIGURE FO-1. ELECTRICAL SYSTEM SCHEMATIC
FOLDOUT 3 OF 26
ENGINEERING DWG 3053493 SHEET 1
FP-5/FP-6 BLANK

REVISION D

CODE SORT

CODE	ROUTING	SH	DESCRIPTION
1021	MC52-R11	4	FRONT TOW
1021A	R11-MC1	4	
1021A	MC1-MC21	3	
1021A	MC21-MC60	5	
1021A	MC60-R27	5	
1026	MC52-CB16	4	
1029	MC2-R6	4	BEACON
1029	MC2-MC28	3	
1031	R3-SPLICE	4	
1032	MC8-MC21	3	
1032	M39-L9	3	LOW OIL PSI
1032	MC8-M39	3	
1032	PS9-MC21	5	ENGINE OIL PSI SW
1033	M39-M18	3	OIL PSI/H WTR ALM
1036	MC23-M8	5	
1036	MC23-M7	5	
1036	MC21-MC56	5	ETHER START
1036	MC21-S25	3	
1040	CB4-R4	4	WORKLIGHT
1040A	S6-MC4	3	
1040A	MC2-R4	4	WORKLIGHT
1040A	MC4-MC2	3	
1040B	MC3-MC79	6	RH WORKLIGHT
1040B	MC2-MC3	3	
1040B	MC2-R4	4	WORKLIGHT
1040B	MC3-MC54	6	LH WORKLIGHT
1045	R27-M7	5	
1049	MC2-R1	4	HEADLIGHTS
1049	MC4-MC2	3	
1049	S12-MC4	3	
1052	S20-S19	3	CHEM ALM-GPF
1052	S19-S18	3	GAS PART FLTR-SRW
1052	S18-S4	3	SRW-SRW/MHC
1052	S4-S30	3	SRW/MHC-EMER ENG S D
1052	S30-SPLICE	3	EMER ENG SHUT DOWN
1052	SPLICE-G11	3	AIR PRESSURE GAUGE
1052	MC4-SPLICE	3	
1052	SPLICE-L44	3	HEATER PANEL LIGHT
1052	S5-S6	3	BEACON LT-WORK LT
1052	S6-S7	3	WORK LT-WSHLD WSHR
1052	S7-S8	3	WSHLD WASHER-WIPERS
1052	S8-S21	3	WIPERS-DOME LIGHT
1052	S21-S9	3	DOME LT-B.O.SERV SEL
1052	S9-S10	3	BO SERV SEL-BO MKR
1052	S10-S11	3	B.O. MARKER-B.O. DR
1052	S11-S12	3	B.O. DRIVE-HEADLTS
1052	S12-S16	3	HEADLIGHTS-ENG BK
1052	S16-S14	3	ENG BRAKE-RHEO/DOME
1052	S14-SPLICE	3	RHEOSTAT/DOME
1052	SPLICE-G6	3	VOLTMETER 12V
1052	SPLC-SPLC	3	
1052	SPLICE-G10	3	XMSN OIL TEMP GAUGE
1052	SPLICE-G1	3	WATER TEMP GAUGE
1052	SPLICE-G2	3	OIL PRESSURE GAUGE
1052	SPLICE-G4	3	TACHOMETER
1052	SPLICE-G5	3	SPEEDOMETER
1052	SPLICE-G3	3	FUEL GAUGE

CODE SORT

CODE	ROUTING	SH	DESCRIPTION
1052	MC1-SPLICE	3	
1052	SPLICE-L43	3	POST LIGHT
1052	SPLC-MC125	3	
1052	MC125-G12	3	AIR RESTRICTION GA
1052	MC1-SPLICE	3	
1052	MC1-CB1	4	15 AMP HEADLIGHT
1052	MC50-MC1	4	
1055	M7-R27	5	
1056	MC111-MC32	3	
1056	MC32-MC109	6	CTI POWER MANIFOLD
1057	MC111-MC32	3	
1057	MC32-MC109	6	CTI POWER MANIFOLD
1058	MC32-MC109	6	CTI POWER MANIFOLD
1058	MC111-MC32	3	
1059	MC32-MC109	6	CTI POWER MANIFOLD
1059	MC111-MC32	3	
1061	MC22-MC109	6	CTI POWER MANIFOLD
1061	MC111-MC32	3	
1062	MC32-MC109	6	CTI POWER MANIFOLD
1062	MC111-MC32	3	
1063	MC32-MC109	6	CTI POWER MANIFOLD
1064	MC32-MC109	6	CTI POWER MANIFOLD
1064	MC111-MC32	3	
1065	MC32-MC109	6	CTI POWER MANIFOLD
1065	MC111-MC32	3	
1066	MC32-MC64	6	CTI AUX MANIFOLD
1066	MC110-MC32	3	
1067	MC32-MC64	6	CTI AUX MANIFOLD
1068	MC32-MC64	6	CTI AUX MANIFOLD
1068	MC110-MC32	3	
1070	MC32-MC64	6	CTI AUX MANIFOLD
1070	MC110-MC32	3	
1071	MC110-MC32	3	
1071	MC32-MC64	6	CTI AUX MANIFOLD
1072	R26-R25	3	
1072	MC110-MC32	3	
1072	MC32-MC64	6	CTI AUX MANIFOLD
1073	MC32-MC64	6	CTI AUX MANIFOLD
1073	MC110-MC32	3	
1074	MC110-MC32	3	
1074	R25-CB10	4	
1074	MC32-MC64	6	CTI AUX MANIFOLD
1075	M6-R25	4/3	
1075B	R25-R18	4	
1076	MC110-MC32	3	
1076	MC32-MC64	6	CTI AUX MANIFOLD
1079	CB5-M6	4	HAZARD LIGHTS
1080	MC7-MC2	3	

CODE SORT

CODE	ROUTING	SH	DESCRIPTION
1080	MC2-M5	4	TURN SIGNAL/FLASHER
1082	MC2-MC52	4	
1082	MC2-M81	3	
1082	M81-S3	3	
1082	MC52-CB15	4	HEATER
1084	MC1-CB5	4	B.O. LIGHTS
1084	MC4-MC1	3	
1084	MC4-S9	3	
1091	L17-GROUND	3	
1092	L7-MC8	3	
1092	MC8-M51	3	
1093	MC31-MC57	6	
1093	MC1-MC31	3	
1093	MC1-CB16	4	
1093	MC57-S13	6	DRIVE LINE LOCK-UP
1094	S5-S14	3	
1095	R23-R24	4	
1095	MC44-R23	4	
1095	MC31-MC44	3	
1095	MC57-S13	6	DRIVE LINE LOCK-UP
1095	MC31-MC57	6	
1113	MC8-MC21	3	
1113	G2-MC8	3	OIL PSI GAUGE
1113	SU3-MC21	5	ENG OIL PSI SNDG UN
1114	M66-MC8	3	
1114	MC96-MC8	3	LOW OIL LEVEL LIGHT
1114	MC8-L36	3	
1114	L36-M66	3	
1118	MC4-1919	3	
1118	S8-MC4	3	
1120	M66-MC8	3	
1120	M66-M3	3	
1120	PS6-PS7	3	
1120	PS6-MC8	3	
1120	L2-M66	3	
1137	M6(1)-M6(2)	5	
1137	M6(3)-M6(4)	5	
1138	M48-M7	5	SHUNT
1138	M7-M23	5	SLAVE
1138	M6-M48	5	SHUNT
1138	M77-M7	5	ARCTIC BATTERIES
1139	M7-M23	5	SLAVE
1139	M6-M7	5	
1139	M77-M7	5	ARCTIC BATTERIES
1147	TS2-MC21	5	ENG WTR TEMP SNDG UN
1147	M39-L8	3	HIGH WATER TEMP
1147	MC8-MC21	3	
1147	MC8-M39	3	
1149	MC1-R10	4	REVERSE
1149	MC3-MC78	6	
1149	MC1-MC124	3	
1149	MC78-MC77	6	REVERSE LIGHT
1149	MC124-MC77	6	

FIGURE FO-1. ELECTRICAL SYSTEM SCHEMATIC
FOLDOUT 4 OF 26
ENGINEERING DWG 3053493 SHEET 2
FP-7/FP-8 BLANK

REVISION B
CN 13985
8/28/97

CODE SORT

CODE	ROUTING	SH	DESCRIPTION
1153	S21-MC4	3	
1153	MC4-L20	3	DOME LIGHT
1168	MC2-R3	4	HORN
1168	MC2-M15	3	
1174	BUS BAR	4	
1175	R28-CB5	4	
1176	MC113-PS13	6	EMERGENCY STEER
1184	S5-MC4	3	
1184	MC2-R6	4	
1184	MC2-MC4	3	
1189	MC4-S9	3	
1189	MC44-R28	4	
1189	MC4-SPLICE	3	
1189	MC4-S21	3	
1189	MC2-SPLICE	3	
1189	MC2-M5	4	
1189	SPLICE-MC44	3	
1274	M20-M6	5	
1274	M8-SPLICE	5	
1275	M6-M20	5	
1276	MC2-MC4	3	
1276	MC2-CB8	3	
1276	SPLICE-S14	3	
1276	SPLICE-MC53	3	
1276	MC4-SPLICE	3	
1276	MC2-SPLICE	4	
1276	MC53-SPLICE	3	
1276	SPLC-SPLC	3	
1276	SPLC-SPLC	3	
1276	SPLICE-M3	3	LOW AIR ALARM
1276	SPLICE-G5	3	SPEEDOMETER
1276	SPLICE-L1	3	PARKING BRAKE
1276	SPLICE-L2	3	LOW AIR
1276	SPLICE-L35	3	EMERGENCY STEERING
1276	SPLICE-L36	3	LOW HYDR OIL
1276	SPLC-SPLC	3	
1276	SPLICE-L5	3	XMSN CHECK
1276	SPLICE-L8	3	HIGH WATER TEMP
1276	SPLICE-L9	3	LOW OIL PSI
1276	SPLICE-G3	3	FUEL GAUGE
1276	SPLICE-G6	3	VOLTMETER 12V
1276	SPLICE-G1	3	WATER TEMP GAUGE
1276	SPLICE-G2	3	OIL PRESSURE GAUGE
1276	SPLICE-G4	3	TACHOMETER
1276	SPLICE-G10	3	XMSN OIL TEMP GAUGE
1276	SPLICE-M18	3	ALARM
1279	PS14-1277	5	
1279	MC115-PS14	5	
1279	M64-1280	5	

CODE SORT

CODE	ROUTING	SH	DESCRIPTION
1280	CB21-R26	4	
1280	1281-R26	5	
1281	1280-MC47	5	
1281	R27-M81	5	
1281A	M20-M6	5	BATTERIES
1281A	M6-M64	5	
1292	MC4-S6	3	
1292	CB4-MC2	4	
1292	MC2-MC4	3	
1292	MC4-S12	3	
1314	1118-S7	3	
1318	MC3-MC8	3	
1318	MC3-G3	3	FUEL GAUGE
1318	MC3-SU5	6	FUEL LEVEL
1320	SU1-MC2	5	WATER TEMP SNDG UN
1320	G1-MC8	3	WATER TEMP
1320	MC8-MC21	3	
1340	CB15-MC14	4	SWING FIRE
1344	M20-MC22	5	
1362	R27-M64	5	
1371	MC8-PS5	3	
1371	L1-MC8	3	
1409	MC8-MC1	3	
1409	L5-MC8	3	
1409	MC1-R9	4	
1413	CB3-SPLICE	4	
1413	SPLICE-R6	4	
1430	R28-SH5	4/5	
1430	1832-R28	5	
1431	MC3-S2	3	
1431	MC3-M64	5/6	POLARITY PROTECTION
1431	MC3-M64	5/6	POLARITY PROTECTION
1431	MC1-MC119	4	
1431	MC119-R32	4	
1431	R32-S29	4	ARCTIC PUMP
1431	MC119-CB20	4	
1435	MC78-MC124	6	
1435	MC124-M78	6	
1435	MC77-MC124	6	
1435	MC85-MC86	7	
1435	MC86-MC87	7	
1435	MC33-MC84	7	
1435	GROUND	3	
1435	MC81-MC82	7	
1435	MC84-MC83	7	
1435	MC81-MC82	7	
1435	MC108-GND	5	
1435	GND	5	
1435	MC22-GND	5	
1435	M52-R26	4	
1435	M52-R28	4	
1435	R27-GND	5	
1435	MC125-GND	3	
1435	MC23-M7	5	
1435	MC23-M8	5	EITHER START

CODE SORT

CODE	ROUTING	SH	DESCRIPTION
1449	MC8-MC21	3	
1449	G10-MC8	3	TRANS OIL TEMP
1449	SU2-MC21	5	TRANS TEMP SNDG UN
1454	MC81-MC82	7	
1460	MC81-MC82	7	
1461	MC86-MC87	7	
1461	MC85-MC86	7	
1462	MC81-MC82	7	
1463	MC81-MC82	7	
1464	MC81-MC82	7	
1465	MC81-MC82	7	
1466	MC85-MC86	7	
1466	MC86-MC87	7	
1467	MC81-MC82	7	
1468	MC81-MC82	7	
1469	MC81-MC82	7	
1469	MC86-MC87	7	
1469	MC85-MC86	7	
1470	MC86-MC87	7	
1470	MC85-MC86	7	
1471	MC85-MC86	7	
1471	MC86-MC87	7	
1471	MC81-MC82	7	
1472	MC85-MC86	7	
1472	MC81-MC82	7	
1472	MC86-MC88	7	
1475	MC85-MC86	7	
1475	MC86-MC87	7	
1480	MC84-MC93	7	
1480	MC84-MC83	7	
1481	MC84-MC83	7	
1481	MC84-MC93	7	
1482	MC84-MC93	7	
1482	MC84-MC83	7	
1483	MC83-MC84	7	
1483	MC84-MC93	7	
1484	MC83-MC84	7	
1484	MC84-MC93	7	
1485	MC84-MC94	7	
1485	MC83-MC84	7	
1486	MC84-MC94	7	
1486	MC83-MC84	7	
1487	MC1-S25	3	
1487	MC1-CB15	4	
1487	MC83-MC84	7	
1487	MC84-MC94	7	
1488	MC84-MC94	7	
1488	MC83-MC84	7	
1489	MC83-MC84	7	
1489	MC84-MC94	7	
1490	MC84-MC94	7	
1490	MC83-MC84	7	
1491	L16-1008	3	
1491	L14-1008	3	
1517	PS8-MC11	5	ATEC OIL PSI SWITCH
1517	MC11-R9	4	

CODE SORT

CODE	ROUTING	SH	DESCRIPTION
1519	MC8-MC35	3	CTI OVERSPEED
1519	MC3-MC8	3	SPEEDOMETER
1519	MC8-MC35	3	CTI OVERSPEED
1519	G5-MC8	3	SPEEDOMETER
1519	MC3-SU4	6	SPEEDOMETER
1519	G5-MC8	3	SPEEDOMETER
1519	MC3-MC8	3	SPEEDOMETER
1519	MC3-SU4	6	SPEEDOMETER
1525	M16-PS4	3	
1534	MC107-M9	6	FUEL/WATER SEP
1534	MC2-SPLICE	4	
1534	SPLICE-CB8	4	
1534	MC3-MC107	6	
1534	MC2-MC3	3	
1534	MC3-S22	3	T-CASE LOCK-UP
1534	CB15-M76	4	
1538	MC97-M13	6	AIR DRYER
1538	MC25-MC97	6	
1538	MC25-CB15	4	
1538	MC25-MC98	6	
1538	MC99-M11	6	AFTER COOLER
1538	MC98-M14	6	AIR DRYER
1538	MC25-MC99	6	
1538	MC25-MC73	6	FAN CONTROL
1538	M76-MC25	4	
1640	MC119-SPLC	4	
1640	SPLICE-R26	4	
1640	SPLICE-MC44	4	
1640	MC44-S2	3	
1640	MC119-R32	4	
1644	MC119-R33	4	
1644	R33-R33	4	
1644	MC119-S29	4	ARCTIC PUMP
1644	R33-S29	4	ARCTIC PUMP
1644	MC119-MC25	4	
1644	MC25-MC120	6	
1644	MC120-M80	6	ARCTIC PUMP
1645	S29-R33	4	ARCTIC PUMP
1665C	MC25-MC15	6	TRAILER CONN 24VDC
1665C	MC25-CB20	4	
1674	S11-S10	3	
1674	S11-S9	3	
1676	R17-R16	4	
1676	R16-R15	4	
1676	R14-R3	4	
1676	R15-R14	4	
1676	CB20-R17	4	
1678	MC3-MC78	6	
1678	MC1-SPLICE	3	
1678	MC78-L24	6	LH B.O. STOP LIGHT

FIGURE FO-1. ELECTRICAL SYSTEM SCHEMATIC
FOLDOUT 5 OF 26
ENGINEERING DWG 3053493 SHEET 2
FP-9/FP-10 BLANK

REVISION 0

CODE SORT

CODE	ROUTING	SH	DESCRIPTION
1678	MC78-L22	6	RH B.O. STOP LIGHT
1678	SPLICE-MC3	3	
1678	MC1-R13	4	
1678	SPLICE-MC4	3	
1678	MC4-S9	3	
1678C	MC25-R13	4	B.O. STOP LIGHT
1678C	MC25-MC15	6	TRAILER CONN 24VDC
1679	L15-MC4	3	
1679	MC4-S11	3	
1680	MC3-SPLICE	3	
1680	SPLICE-MC1	3	
1680	SPLC-SPLC	3	
1680	SPLICE-MC4	3	
1680	SPLC-SPLC	3	
1680	SPLC-SPLC	3	
1680	SPLICE-L19	3	
1680	SPLICE-L19	3	
1680	MC3-MC78	6	
1680	MC4-S10	3	
1680	MC78-L24	6	LH B.O. TAIL LIGHT
1680	MC1-R17	4	B.O. LIGHTS
1680	MC78-L22	6	RH B.O. TAIL LIGHT
1680C	MC25-MC15	6	TRAILER CONN 24VDC
1680C	MC25-MC15	6	TRAILER CONN 24VDC
1680C	MC25-R17	4	B.O. TAIL LIGHTS
1680C	MC25-MC15	6	TRAILER CONN 24VDC
1702	MC44-MC34	3	
1702	MC34-G7	3	
1702	MC44-R26	4	
1708	M32-1709	3	PASSENGER AIR HTR
1709	MC58-S19	3	GAS PART FILTER SW
1709	MC58-M30	3	
1710	M31-1709	3	DRIVER AIR HEATER
1711	CB11-R7	4	
1712	MC1-CB7	4	ENGINE BRAKE
1712	MC4-MC1	3	
1713	MC53-L37	3	
1713	MC4-MC1	3	
1713	S16-MC4	3	ENGINE BRAKE
1713	MC1-R7	4	TRANSMISSION
1713	S16-MC53	3	
1714	MC1-1716	4	
1714	MC4-MC1	3	ENGINE BRAKE
1714	S16-MC4	3	ENGINE BRAKE
1715	MC4-MC1	3	ENGINE BRAKE
1715	S16-MC4	3	ENGINE BK RH COILS
1715	MC11-MC1	4	
1715	MC11-M21	5	LH ENGINE BRAKE
1716	MC11-R5	4	RETARDER
1716	MC11-M22	5	RH ENGINE BRAKE
1717	MC44-S20	3	CHEMICAL ALARM SW
1717	MC44-CB19	4	
1718	M76-M77	6	BACK-UP ALARM
1722	MC34-1734	3	

CODE SORT

CODE	ROUTING	SH	DESCRIPTION
1722	L26-MC34	3	
1722	MC33-MC84	7	
1722	MC84-MC83	7	
1723	MC44-S18	3	SELF RECOVERY WN SW
1723	MC44-CB18	4	
1724	MC112-SPLC	3	
1724	SPLICE-MC33	3	
1724	MC33-MC93	7	
1724	L27-MC112	3	
1724	M67-SPLICE	3	
1724	SPLC-MC112	3	
1724	M67-MC33	3	
1725	L28-MC112	3	
1725	MC84-MC83	7	
1725	MC33-MC84	7	
1725	MC112-MC33	3	
1726	MC33-MC84	7	
1726	MC84-MC83	7	
1726	MC112-MC33	3	
1726	L29-MC112	3	
1729	MC31-S18	3	SELF RECOVERY WINCH
1729	MC31-MC55	6	
1729	MC55-MC121	6	SELF RECOVERY WINCH
1730	MC31-S18	3	SELF RECOVERY WINCH
1730	MC55-MC122	6	SELF RECOVERY WINCH
1730	MC31-MC55	6	
1731	MC3-S4	3	SELF RECOVERY WINCH
1731	MC3-S4	3	SELF RECOVERY WINCH
1731	MC3-MC29	6	CRANE
1732	MC55-MC123	6	SELF RECOVERY WINCH
1732	S4-MC31	3	SELF RECOVERY WINCH
1732	MC31-MC55	6	
1733	MC31-M67	3	
1733	MC31-M51	6	
1734	M67-SPLICE	3	
1734	SPLC-SPLC	3	
1734	SPLICE-MC31	3	
1734	MC31-M10	6	
1736	MC39-MC39	5	
1737	MC31-MC1	3	
1737	MC1-R22	4	CRANE HI IDLE
1737	MC31-MC29	6	CRANE
1738	MC44-1755	4	
1738	MC44-MC31	3	
1738	MC31-MC29	6	CRANE
1739	MC44-CB21	4	

CODE SORT

CODE	ROUTING	SH	DESCRIPTION
1739	MC44-S19	3	GAS PARTICULATE SW
1744	S4-M67	3	
1745	MC103-S20	3	CHEMICAL ALARM
1746	MC103-M29	3	CHEMICAL ALARM
1747	MC103-M29	3	CHEMICAL ALARM
1755	MC84-MC83	7	
1755	MC44-CB18	4	
1755	MC33-MC84	7	
1755	MC33-MC44	3	
1765	MC3-MC113	6	
1765	L35-MC8	3	
1765	MC3-MC8	3	
1809	MC41-MC65	5	PULSE TACH DRIVE
1809	MC65-MC39	5	STE/ICE
1809	MC41-M40	5	PULSE TACH DRIVE
1810	MC65-MC39	5	STE/ICE
1810	MC41-M40	5	PULSE TACH DRIVE
1810	MC41-MC65	5	PULSE TACH DRIVE
1811	MC42-M41	5	DIFFERENTIAL PSI
1811	MC42-MC39	5	STE/ICE
1812	MC42-M41	5	DIFFERENTIAL PSI
1812	MC42-MC39	5	STE/ICE
1813	MC39-M6	5	
1814	MC39-M6	5	BATTERIES
1815	MC39-MC24	5	
1815	MC24-MC114	5	
1815	MC24-M20	5	
1816	MC39-MC65	5	STE/ICE
1816	MC39-M7	5	STARTER

CODE SORT

CODE	ROUTING	SH	DESCRIPTION
1818	MC39-M7	5	STARTER
1818	MC39-MC65	5	STE/ICE
1819	MC39-M7	5	
1820	MC24-M20	5	
1820	MC24-M20	5	
1820	MC39-MC24	5	
1821	MC39-M6	5	
1822	MC39-M6	5	BATTERIES
1824	SPLICE-MC67	5	
1824	MC66-M70	5	
1824	MC68-M72	5	
1824	SPLICE-MC70	5	
1824	SPLICE-MC71	5	
1824	MC65-MC39	5	STE/ICE
1824	SPLICE-MC68	5	
1824	MC67-M71	5	
1824	MC43-M42	5	FUEL PSI
1824	MC69-M73	5	
1824	MC70-M74	5	
1824	MC71-M75	5	
1824	SPLICE-MC69	5	
1824	MC66-SPLICE	5	
1824	SPLICE-MC65	5	
1824	SPLICE-MC43	5	
1825	MC68-MC69	5	
1825	MC70-MC71	5	
1825	MC65-MC43	5	
1825	MC43-MC67	5	
1825	MC67-MC68	5	
1825	MC70-M74	5	
1825	MC69-MC70	5	
1825	MC41-MC65	5	
1825	MC68-M72	5	
1825	MC66-M70	5	TURBO OUTLET PSI
1825	MC65-MC39	5	STE/ICE
1825	MC69-M73	5	
1825	MC67-M71	5	
1825	MC39-MC40	5	STE/ICE MODULE
1825	MC43-M42	5	FUEL PSI
1825	MC71-M75	5	
1825A	MC39-MC40	5	STE/ICE MODULE
1826	MC40-MC39	5	
1827	MC40-MC39	5	
1828	MC39-M48	5	SHUNT
1829	MC39-M48	5	SHUNT
1835	R2-CB2	4	
1839	R7-R8	4	
1860	MC39-MC24	5	
1860	MC24-MC114	5	
1861	MC24-MC114	5	

FIGURE FO-1. ELECTRICAL SYSTEM SCHEMATIC
FOLDOUT 6 OF 26
ENGINEERING DWG 3053493 SHEET 2
FP-11/FP-12 BLANK

REVISION 0

CODE SORT

CODE	ROUTING	SH	DESCRIPTION
1861	MC39-MC24	5	
1866	CB12-M6	4	
1866	M6-CB12	4/3	
1867	R19-CB12	4	
1871	MC11-CB11	4	DDEC TRANS
1871	PS8-MC11	5	ATEC OIL PSI SWITCH
1871	MC11-R8	4	
1871	MC11-R11	4	
1871	MC11-R10	4	
1871	MC11-R18	4	
1872	R19-MC44	4	
1872	MC44-R18	4	DDEC
1872	MC44-1020	3	
1875	CB14-R19	4	
1880	MC4-MC35	3	
1880	MC44-CB17	4	CTI
1882	MC52-R21	4	
1882	MC52-SPLICE	4	
1882	MC52-R20	4	
1883	S26-L40	3	TC LOCK-UP LIGHT
1883	S26-M49	3	TC LOCK-UP
1884	MC1-R20	4	INTER AXLE
1884	MC1-M39	4	
1884	MC1-MC105	3	
1885	MC1-M39	4	
1885	MC1-MC105	3	
1885	R23-R21	4	
1885	MC1-R23	4	
1888	CB16-R21	4	DIFFERENTIAL LOCK
1888	CB16-R20	4	INTER AXLE
1889	MC44-R20	4	INTER AXLE
1889	MC44-M50	3	INTER AXLE LOCK
1890	MC44-M51	3	DIFFERENTIAL LOCK
1890	MC44-R21	4	DIFFERENTIAL LOCK
1891	MC52-SPLICE	4	
1891	MC52-R10	4	REVERSE
1916	S8-MC4	3	
1916	MC5-M2	3	WIPER MOTOR
1916	MC5-MC4	3	WIPER MOTOR
1917	MC5-M2	3	
1917	MC5-MC4	3	
1917	S8-MC4	3	
1919	MC2-MC5	3	
1919	MC5-M2	3	
1919	MC5-1118	3	
1919	MC2-CB10	4	
1920	MC2-1008	3	
1920	MC2-R2	4	CLEARANCE LIGHTS
1921	S7-MC4	3	
1921	M1-MC4	3	

CODE SORT

CODE	ROUTING	SH	DESCRIPTION
1926	MC56-MC23	5	ETHER START
1927	R1-CB1	4	HEADLIGHTS
1928	MC34-MC31	3	
1928	L38-MC34	3	
1928	MC31-MC30	6	TRAILER
1929	MC31-MC30	6	TRAILER
1929	MC34-MC31	3	
1932	MC128-MC61	6	WATER TEMP
1932	MC61-TS3	6	WATER TEMP
1932	MC59-MC63	6	
1932	MC63-MC128	6	
1933	MC61-TS3	6	WATER TEMP
1933	MC63-MC61	6	
1933	MC59-MC63	6	
1935	MC76-M45	6	FAN CONTROL VALVE
1935	MC59-MC76	6	
1935	MC76-M45	6	FAN CONTROL VALVE
1935	MC59-MC76	6	
1938	MC70-M74	5	
1938	MC70-MC65	5	
1938	MC65-MC39	5	
1938B	MC39-S22	5	STE/ICE ZEROING
1939	MC71-M75	5	ENGINE WATER TEMP
1939	MC65-MC39	5	STE/ICE
1939	MC71-MC65	5	
1939B	MC39-S22	5	STE/ICE ZEROING
1940	MC71-MC65	5	
1940	MC71-M75	5	ENGINE WATER TEMP
1940	MC65-MC39	5	STE/ICE
1940B	MC39-S22	5	STE/ICE ZEROING
1941	MC43-M42	5	FUEL PSI
1941	MC43-MC65	5	
1941	MC65-MC39	5	STE/ICE
1942	MC43-MC65	5	
1942	MC65-MC39	5	
1942	MC43-M42	5	FUEL PSI
1943	MC65-MC39	5	STE/ICE
1943	MC66-M70	5	TURBO OUTLET PSI
1943	MC66-MC65	5	TURBO OUTLET PSI
1944	MC66-M70	5	
1944	MC65-MC39	5	STE/ICE
1944	MC66-MC65	5	TURBO OUTLET PSI
1945	MC68-MC65	5	
1945	MC68-M72	5	AIR BOX PSI
1945	MC65-MC39	5	STE/ICE
1946	MC67-M71	5	

CODE SORT

CODE	ROUTING	SH	DESCRIPTION
1946	MC65-MC39	5	STE/ICE
1946	MC68-M72	5	AIR BOX PSI
1946	MC68-MC65	5	
1947	MC67-MC65	5	
1947	MC65-MC39	5	STE/ICE
1947	MC67-M71	5	AIR CLEANER
1948	MC67-MC65	5	
1948	MC65-MC39	5	STE/ICE
1949	MC69-MC65	5	FUEL RETURN
1949	MC69-MC65	5	
1949	MC65-MC39	5	STE/ICE
1950	MC5-MC4	3	
1950	S8-MC4	3	
1951	MC65-MC39	5	STE/ICE
1951	MC69-M73	5	FUEL RETURN
1951	MC69-MC65	5	
1952	MC65-MC39	5	
1952	MC70-M74	5	ENGINE OIL TEMP
1952	MC70-MC65	5	
1952B	MC39-S22	5	STE/ICE ZEROING
1953	MC39-MC24	5	
1953	MC24-MC114	5	
1953	MC24-M20	5	
1955	M67-MC21	3	FAN SPEED CONTROL
1956	MC127-MC44	3	FAN SPEED CONTROL
1957	MC127-MC21	3	FAN SPEED CONTROL
SHIELD	MC32-MC64	6	CTI AUX MANIFOLD
SHIELD	MC32-MC109	6	CTI POWER MANIFOLD

FIGURE FO-1. ELECTRICAL SYSTEM SCHEMATIC
FOLDOUT 7 OF 26
ENGINEERING DWG 3053493 SHEET 2
FP-13/FP-14 BLANK

REVISION 0

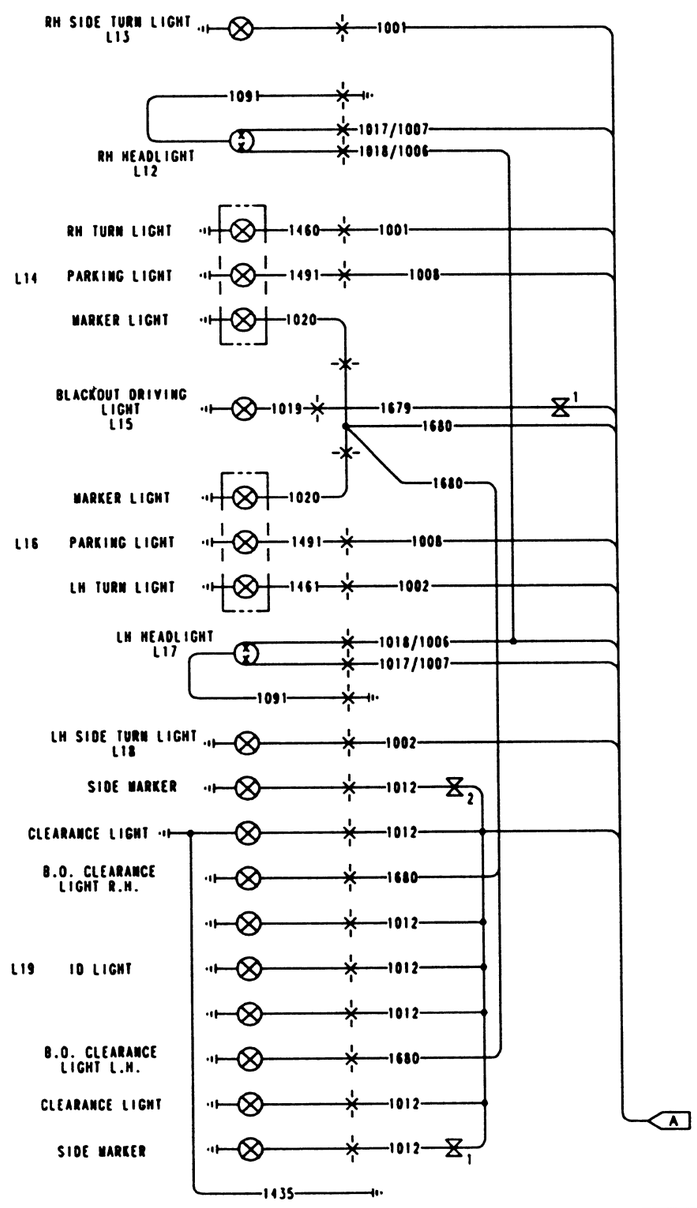

FIGURE FO-1. ELECTRICAL SYSTEM SCHEMATIC
FOLDOUT 8 OF 26
ENGINEERING DWG 3053493 SHEET 3
FP-15/FP-16 BLANK

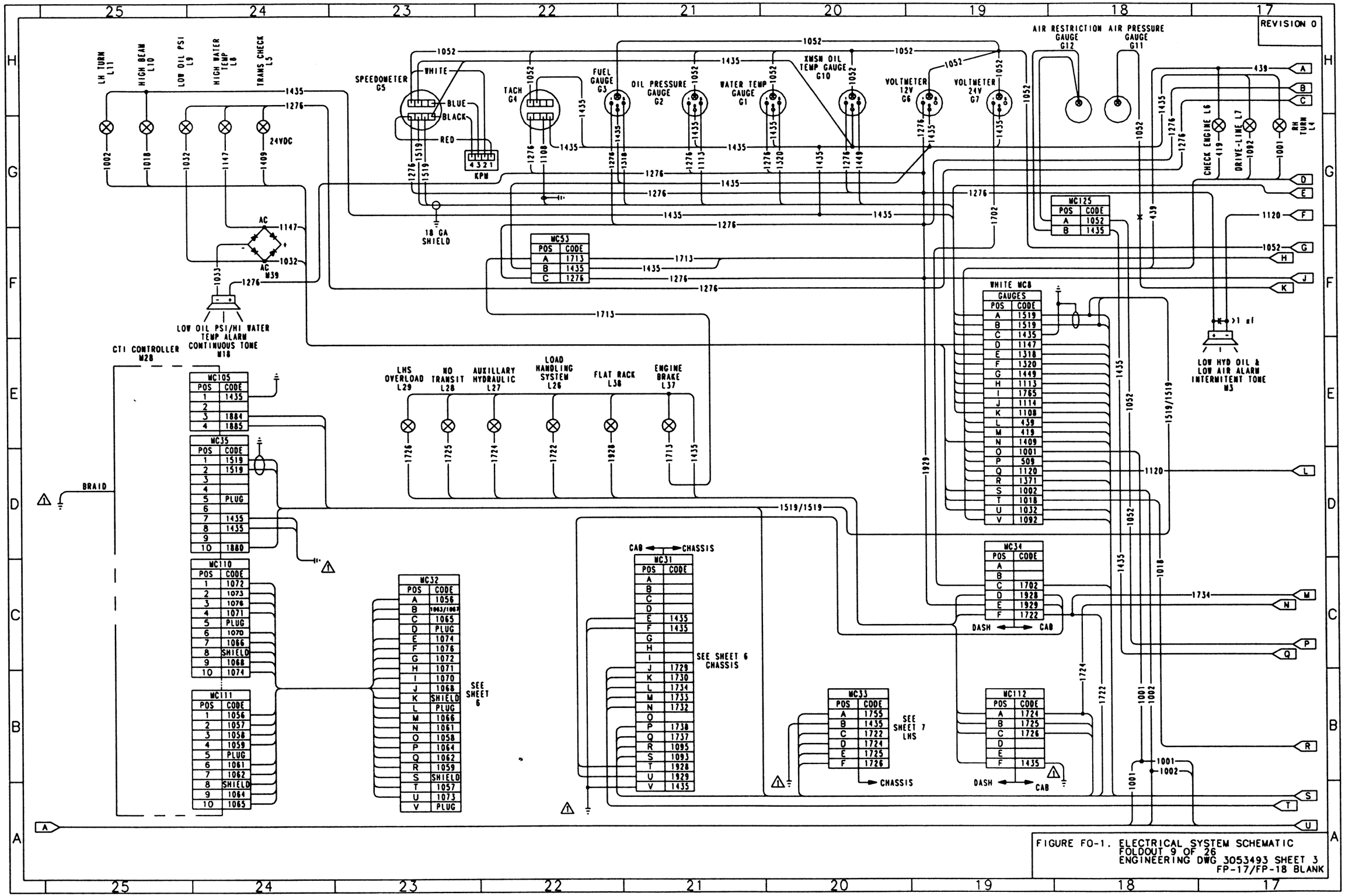

FIGURE FO-1. ELECTRICAL SYSTEM SCHEMATIC
FOLDOUT 9 OF 26
ENGINEERING DWG 3053493 SHEET 3
FP-17/FP-18 BLANK

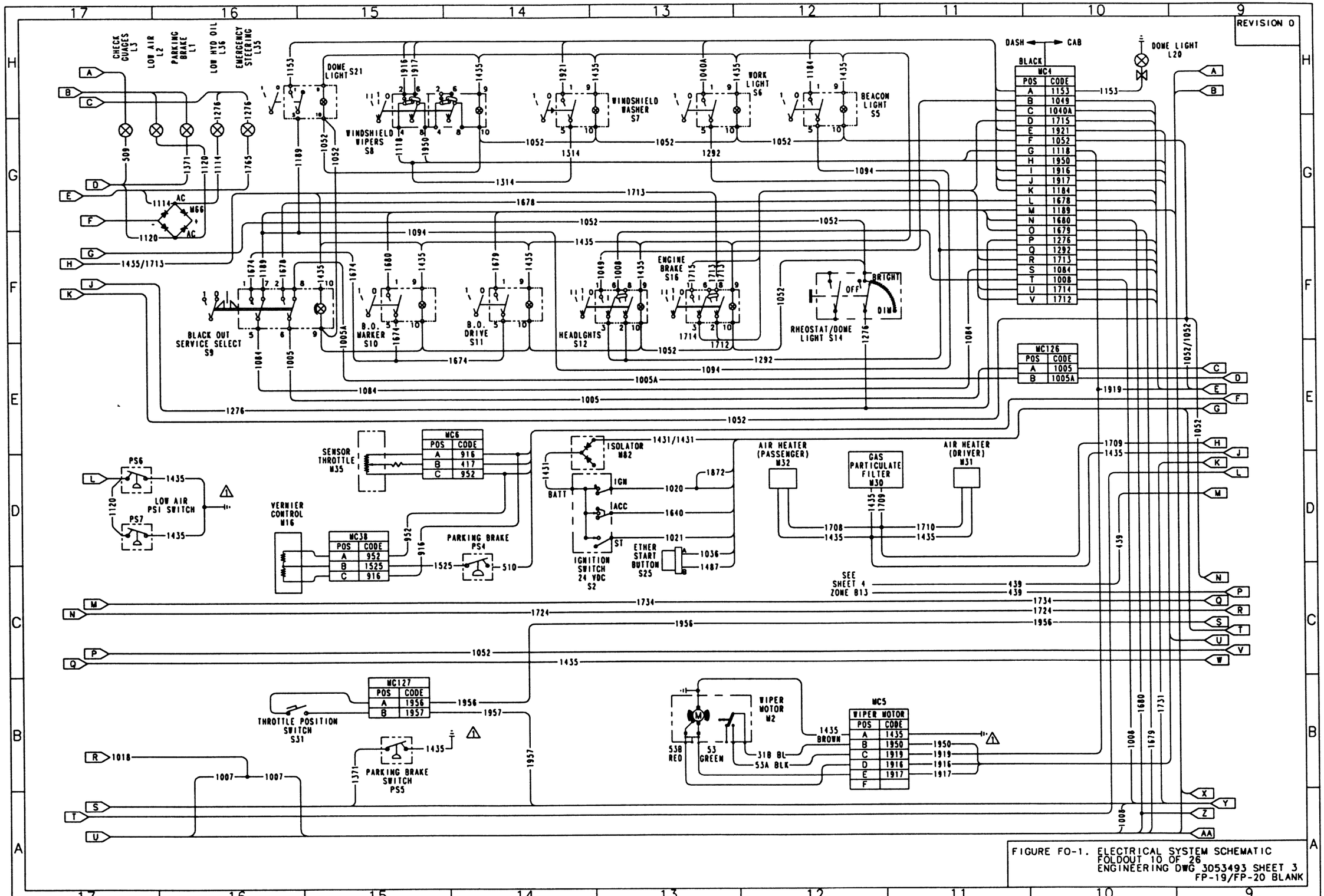

FIGURE FO-1. ELECTRICAL SYSTEM SCHEMATIC
FOLDOUT 10 OF 26
ENGINEERING DWG 3053493 SHEET 3
FP-19/FP-20 BLANK

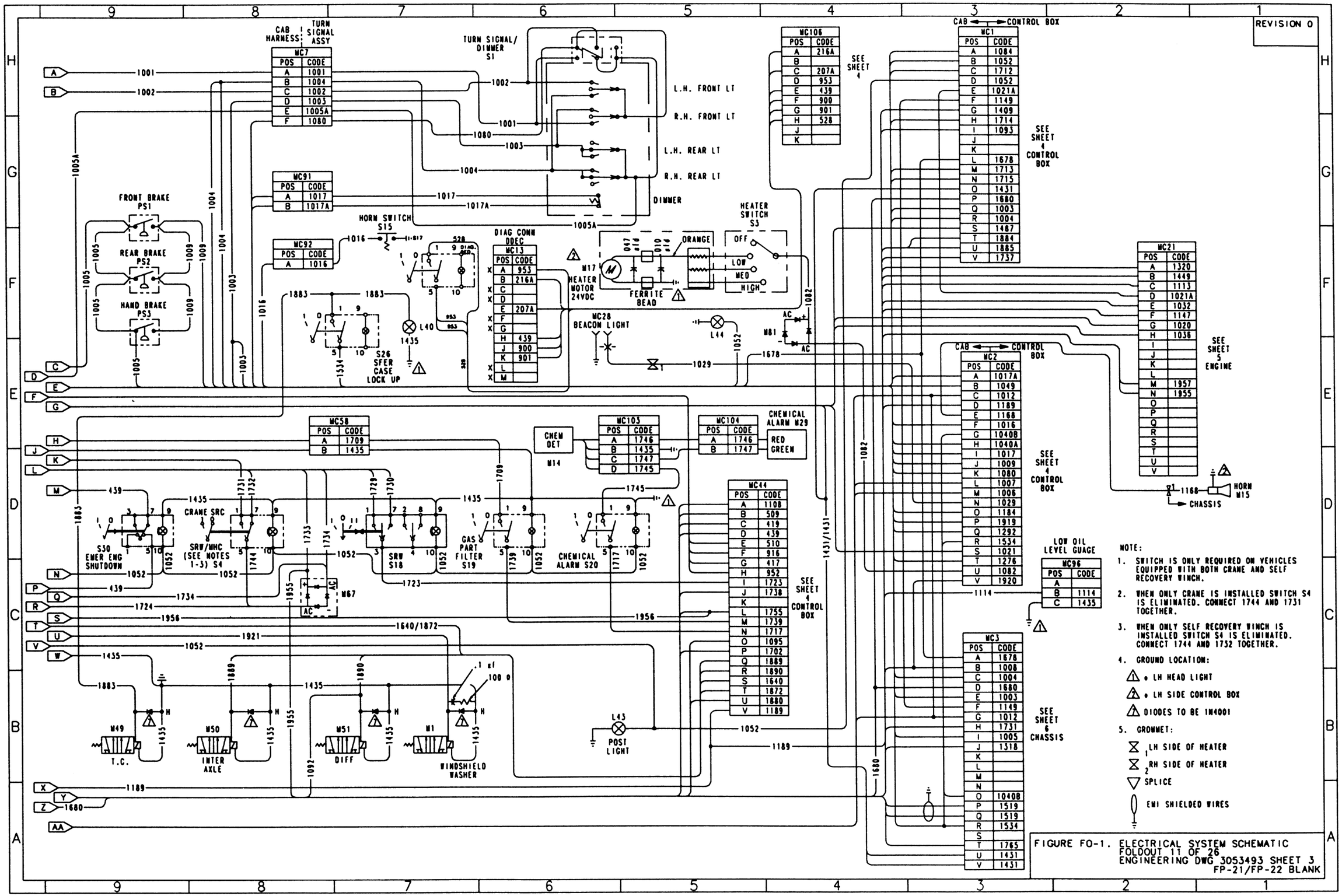

FIGURE FO-1. ELECTRICAL SYSTEM SCHEMATIC
FOLDOUT 11 OF 26
ENGINEERING DWG 3053493 SHEET 3
FP-21/FP-22 BLANK

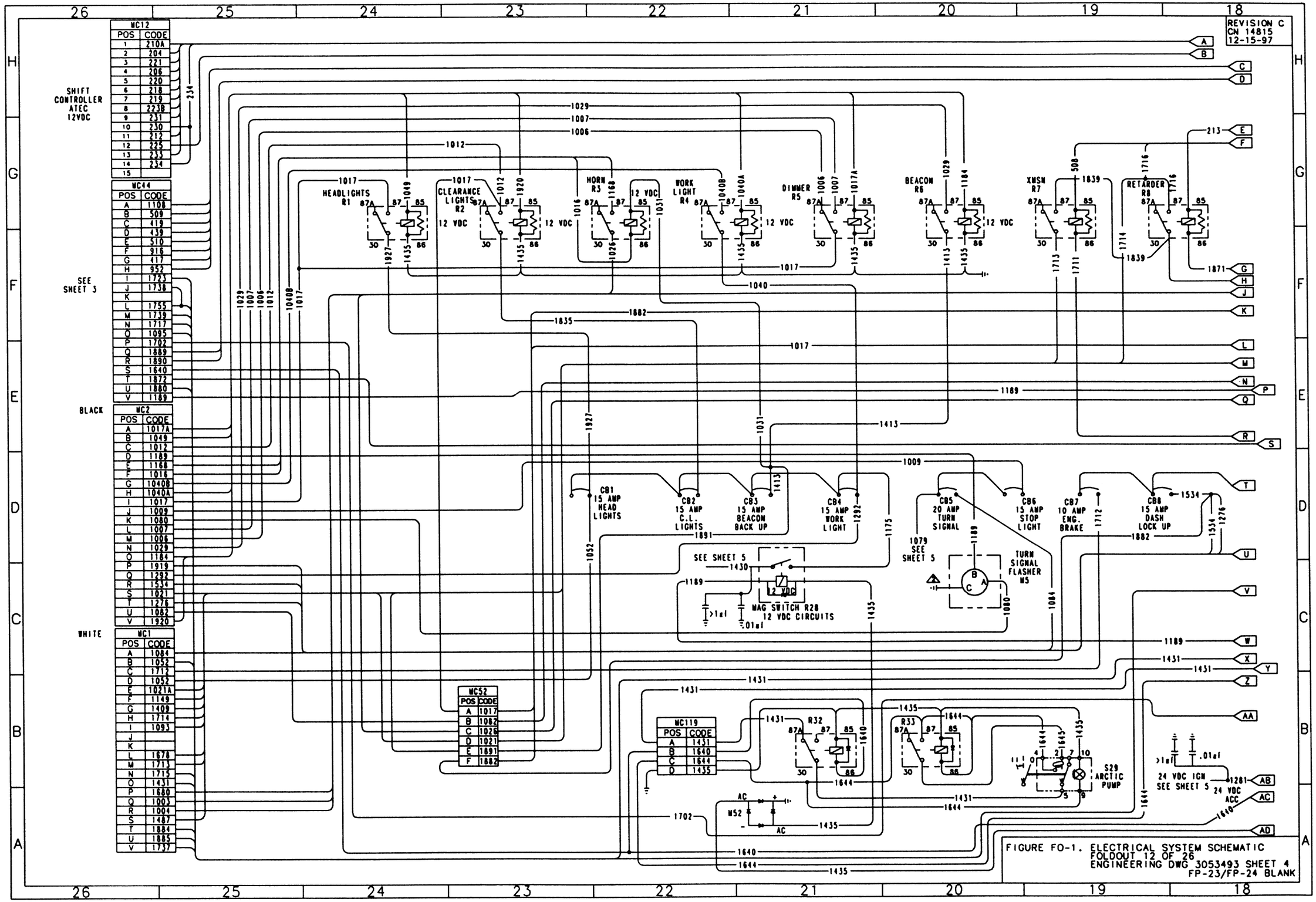

FIGURE FO-1. ELECTRICAL SYSTEM SCHEMATIC
FOLDOUT 12 OF 26
ENGINEERING DWG 3053493 SHEET 4

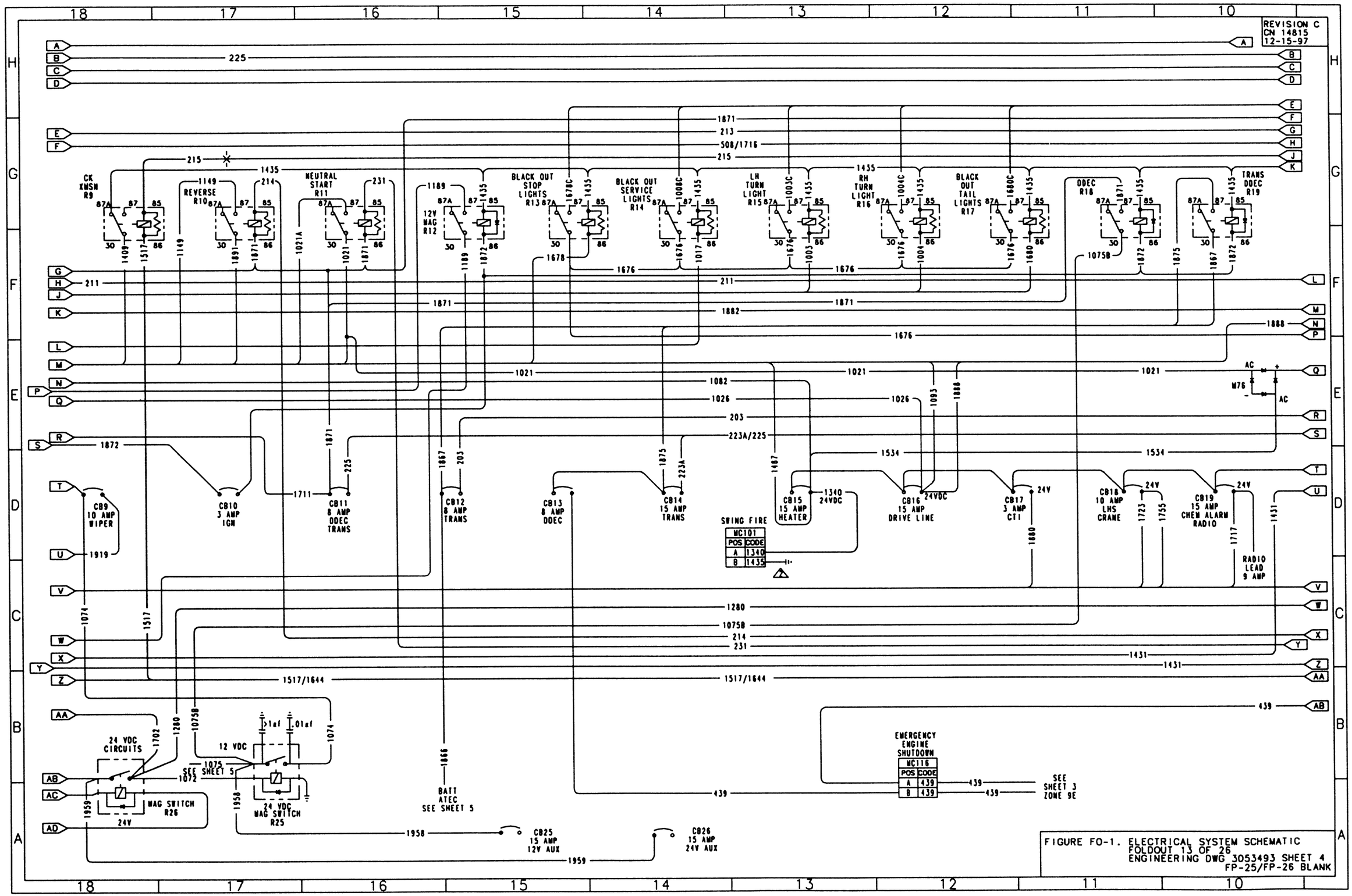

FIGURE FO-1. ELECTRICAL SYSTEM SCHEMATIC
FOLDOUT 13 OF 26
ENGINEERING DWG 3053493 SHEET 4
FP-25/FP-26 BLANK

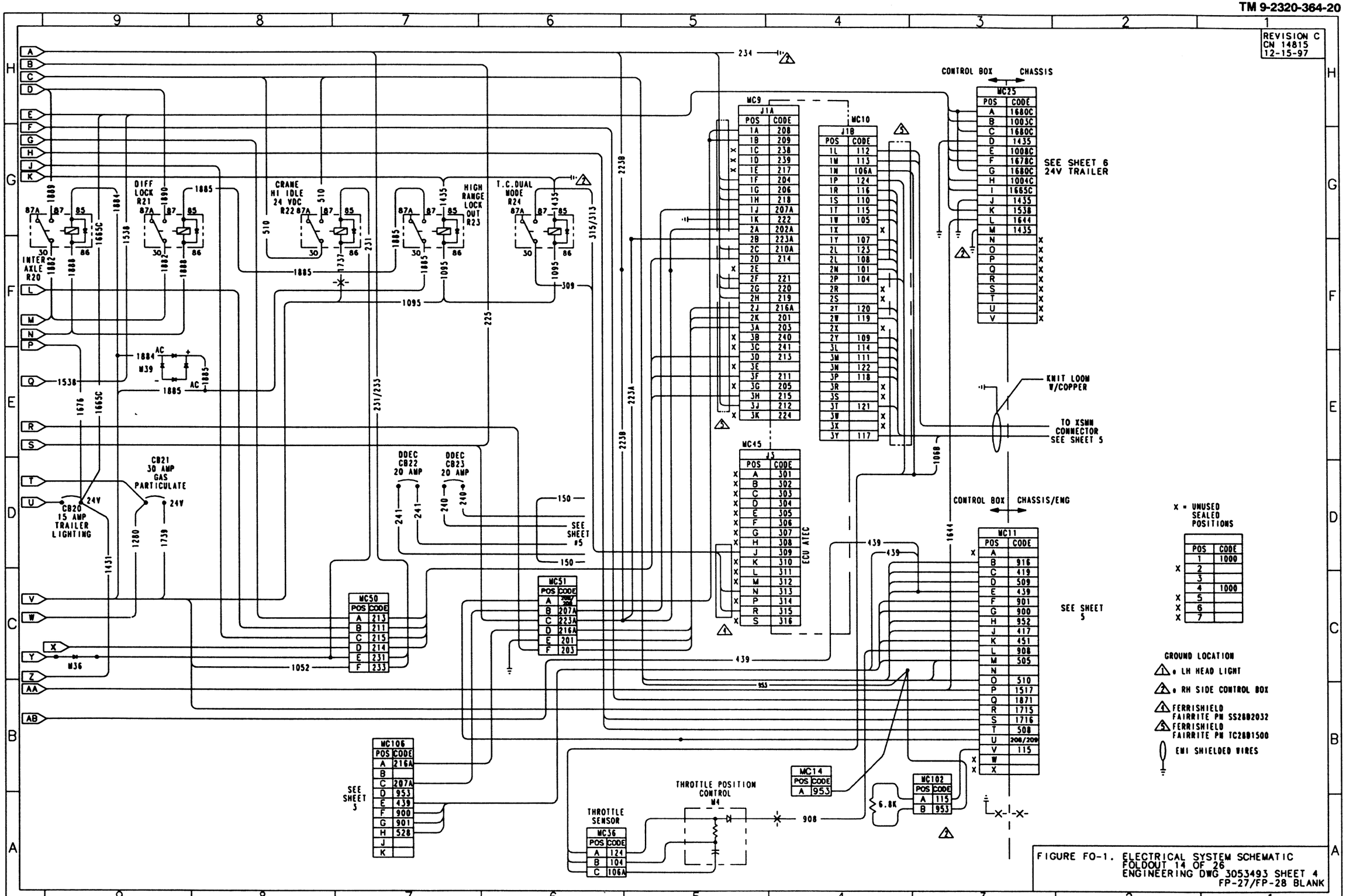

FIGURE FO-1. ELECTRICAL SYSTEM SCHEMATIC
FOLDOUT 14 OF 26
ENGINEERING DWG 3053493 SHEET 4
FP-27/FP-28 BLANK

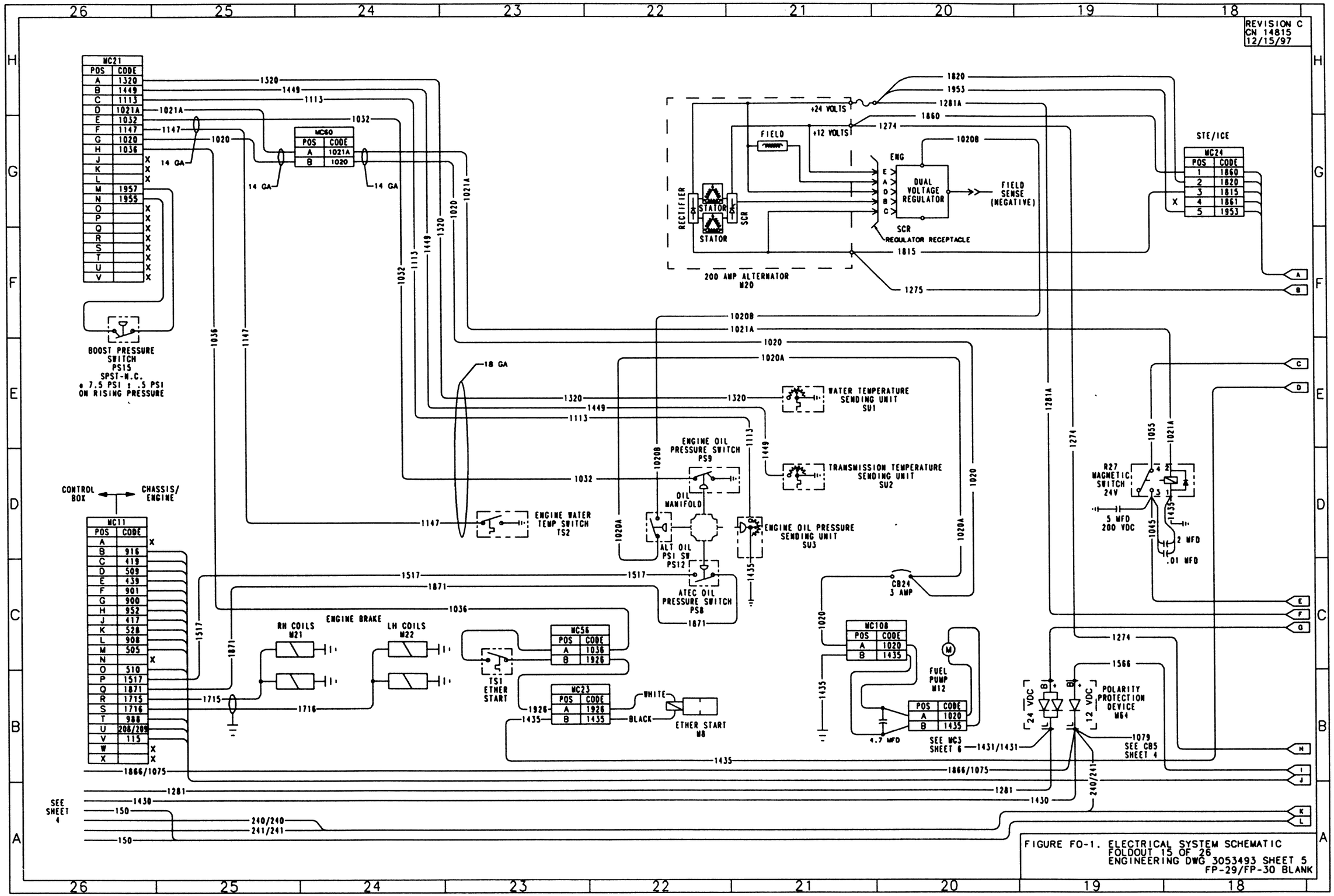

FIGURE FO-1. ELECTRICAL SYSTEM SCHEMATIC
FOLDOUT 15 OF 26
ENGINEERING DWG 3053493 SHEET 5
FP-29/FP-30 BLANK

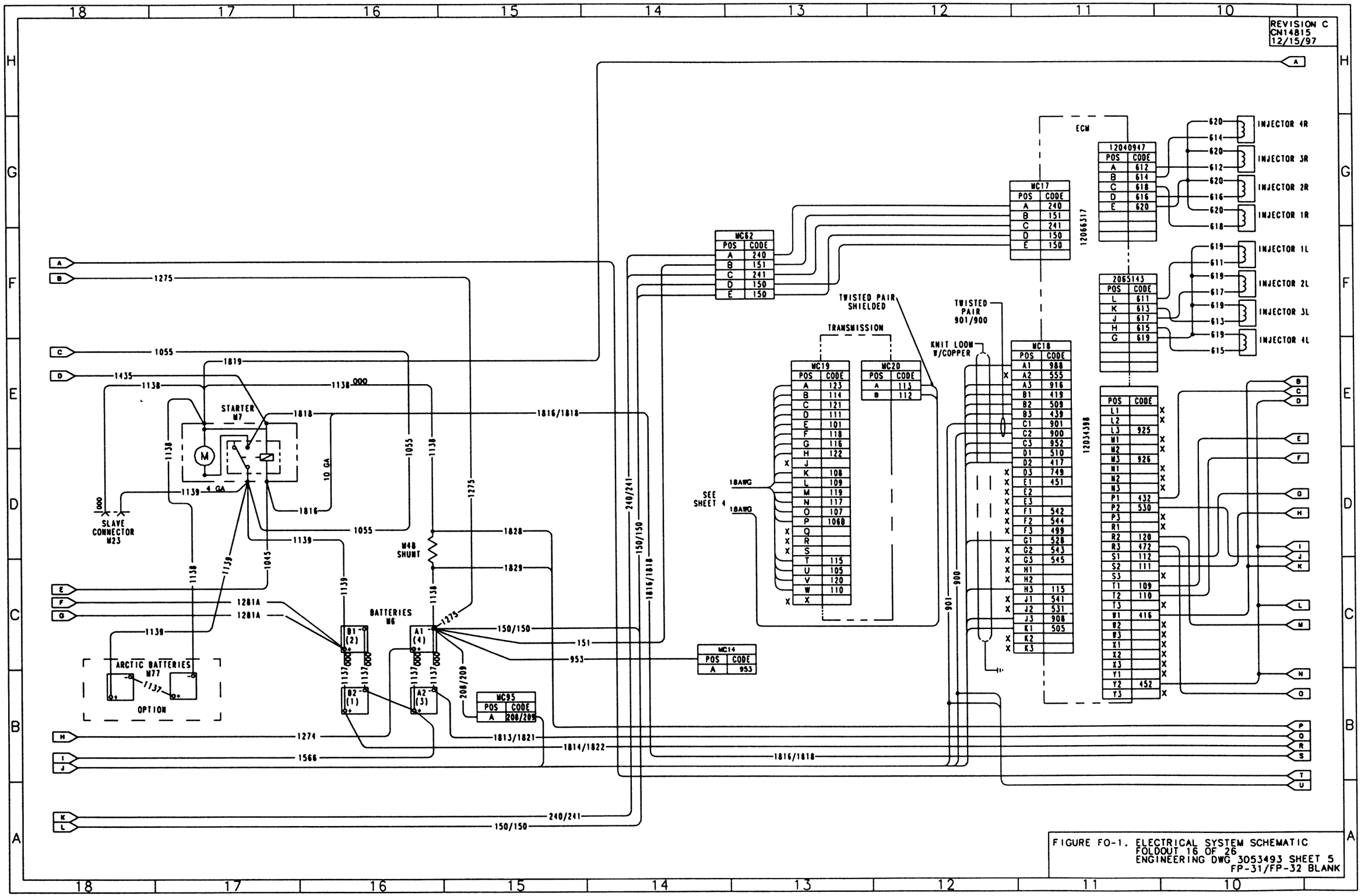

FIGURE FO-1. ELECTRICAL SYSTEM SCHEMATIC
FOLDOUT 16 OF 26
ENGINEERING DWG 3053493 SHEET 5
FP-31/FP-32 BLANK

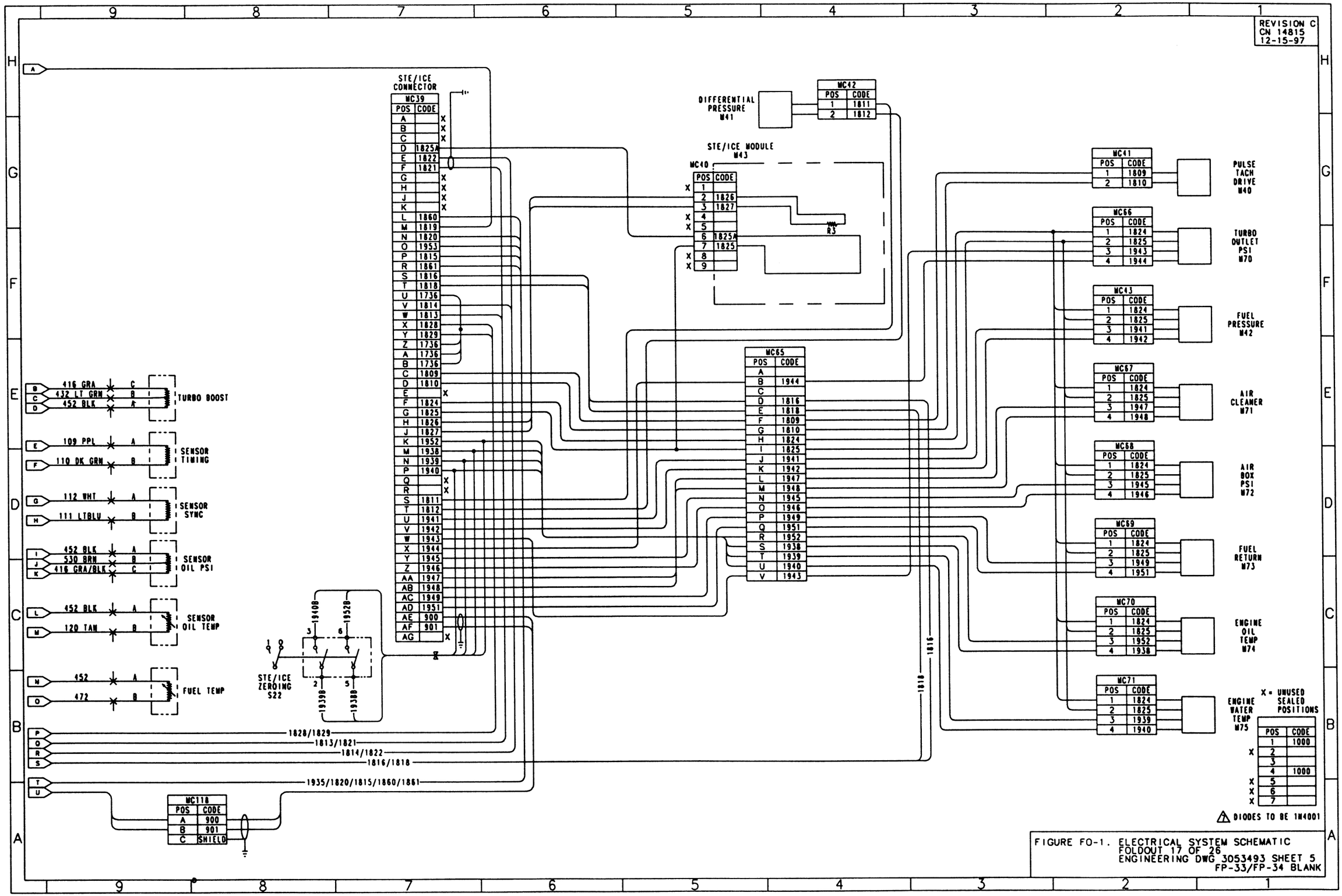

FIGURE FO-1. ELECTRICAL SYSTEM SCHEMATIC
FOLDOUT 17 OF 26
ENGINEERING DWG 3053493 SHEET 5
FP-33/FP-34 BLANK

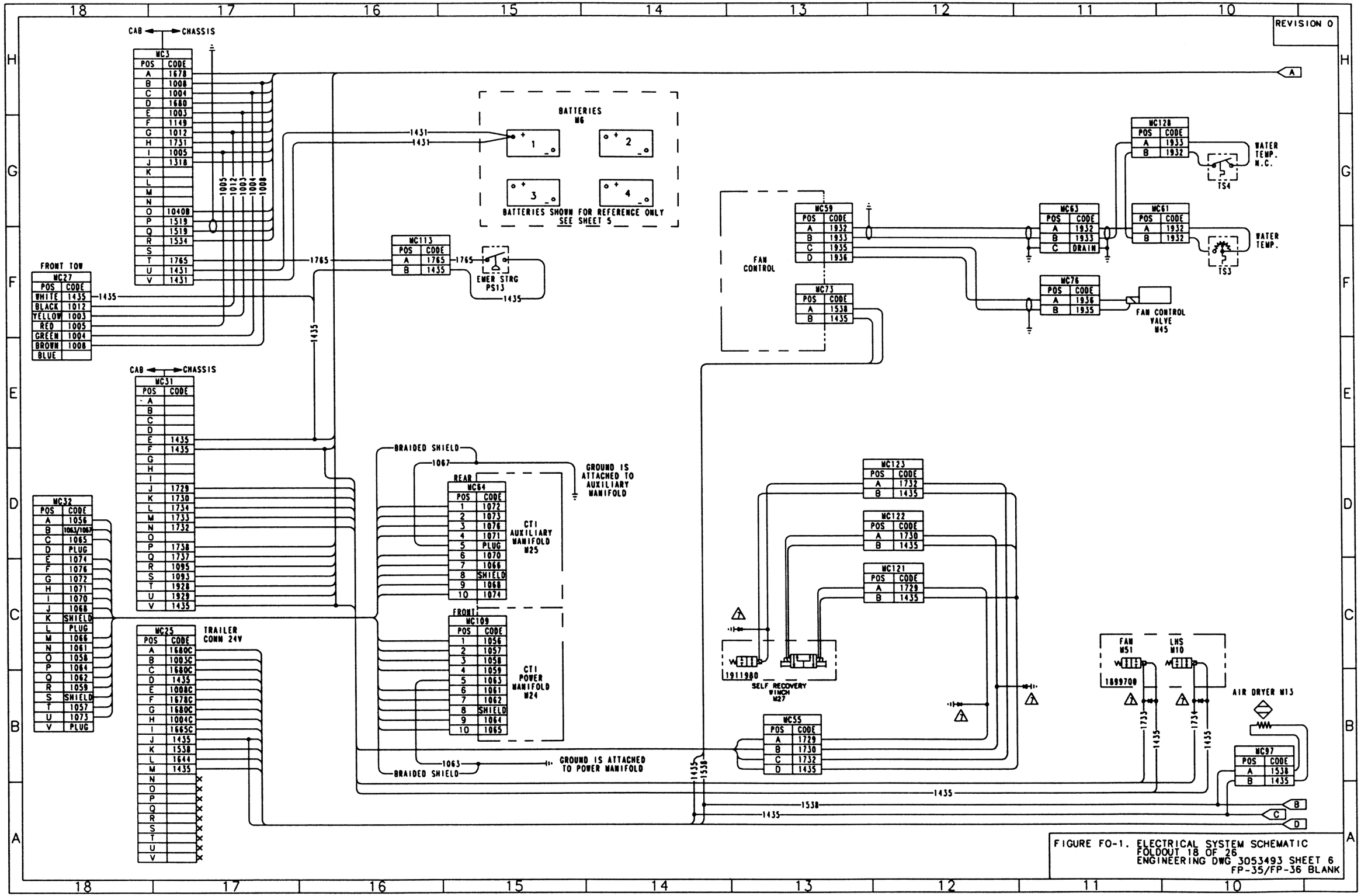

FIGURE FO-1. ELECTRICAL SYSTEM SCHEMATIC
FOLDOUT 18 OF 26
ENGINEERING DWG 3053493 SHEET 6
FP-35/FP-36 BLANK

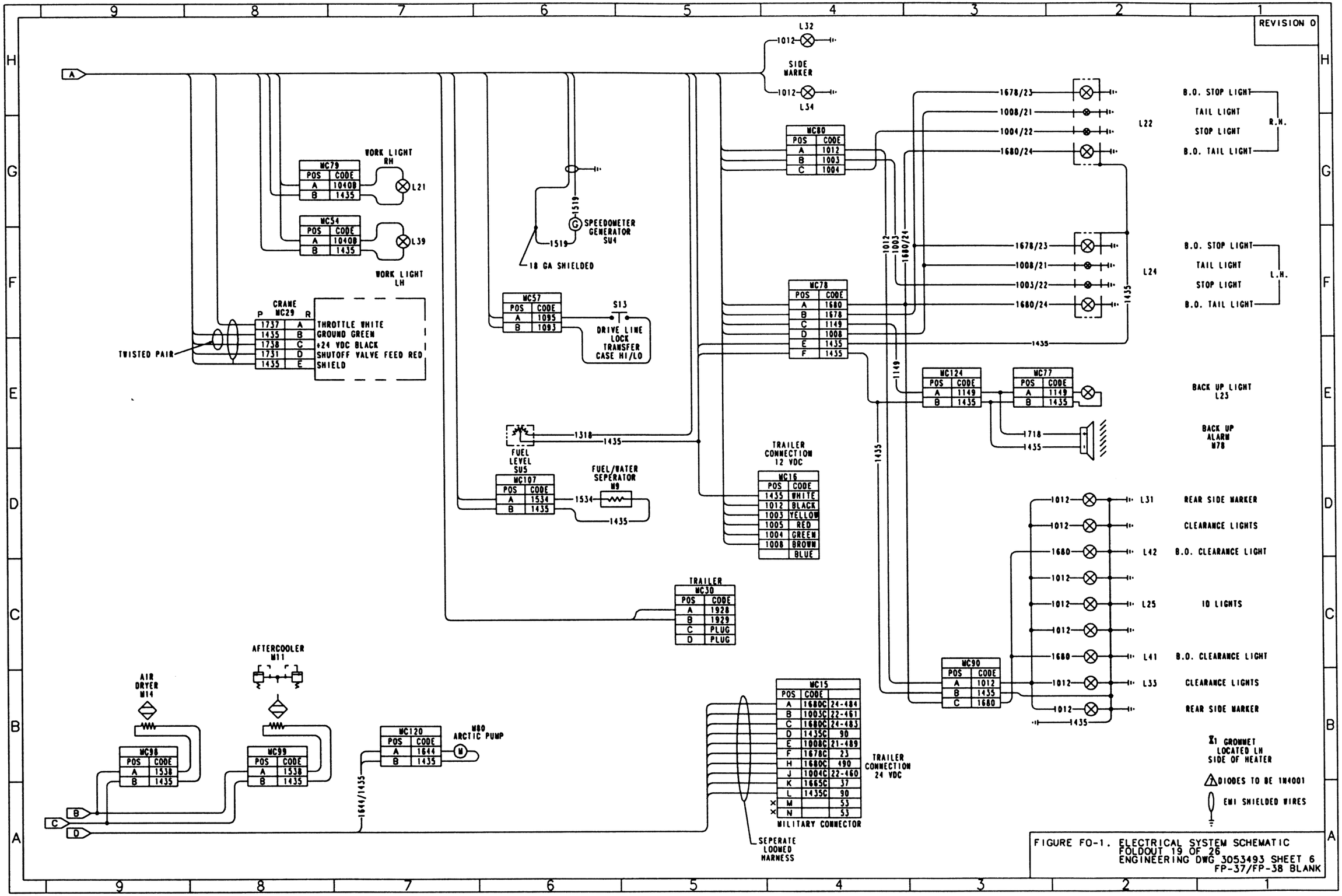

FIGURE FO-1. ELECTRICAL SYSTEM SCHEMATIC
FOLDOUT 19 OF 26
ENGINEERING DWG 3053493 SHEET 6
FP-37/FP-38 BLANK

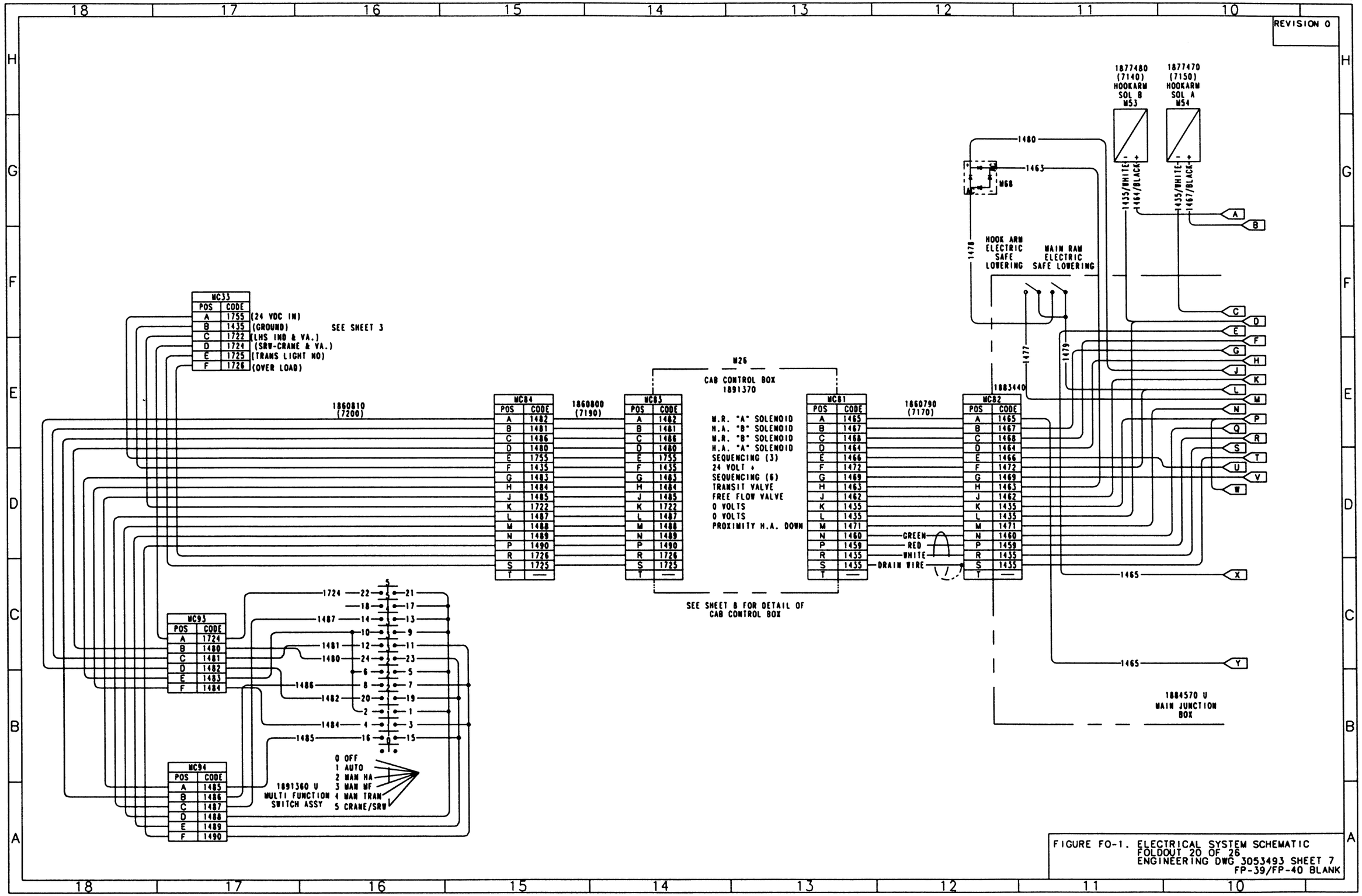

FIGURE FO-1. ELECTRICAL SYSTEM SCHEMATIC
FOLDOUT 20 OF 26
ENGINEERING DWG 3053493 SHEET 7
FP-39/FP-40 BLANK

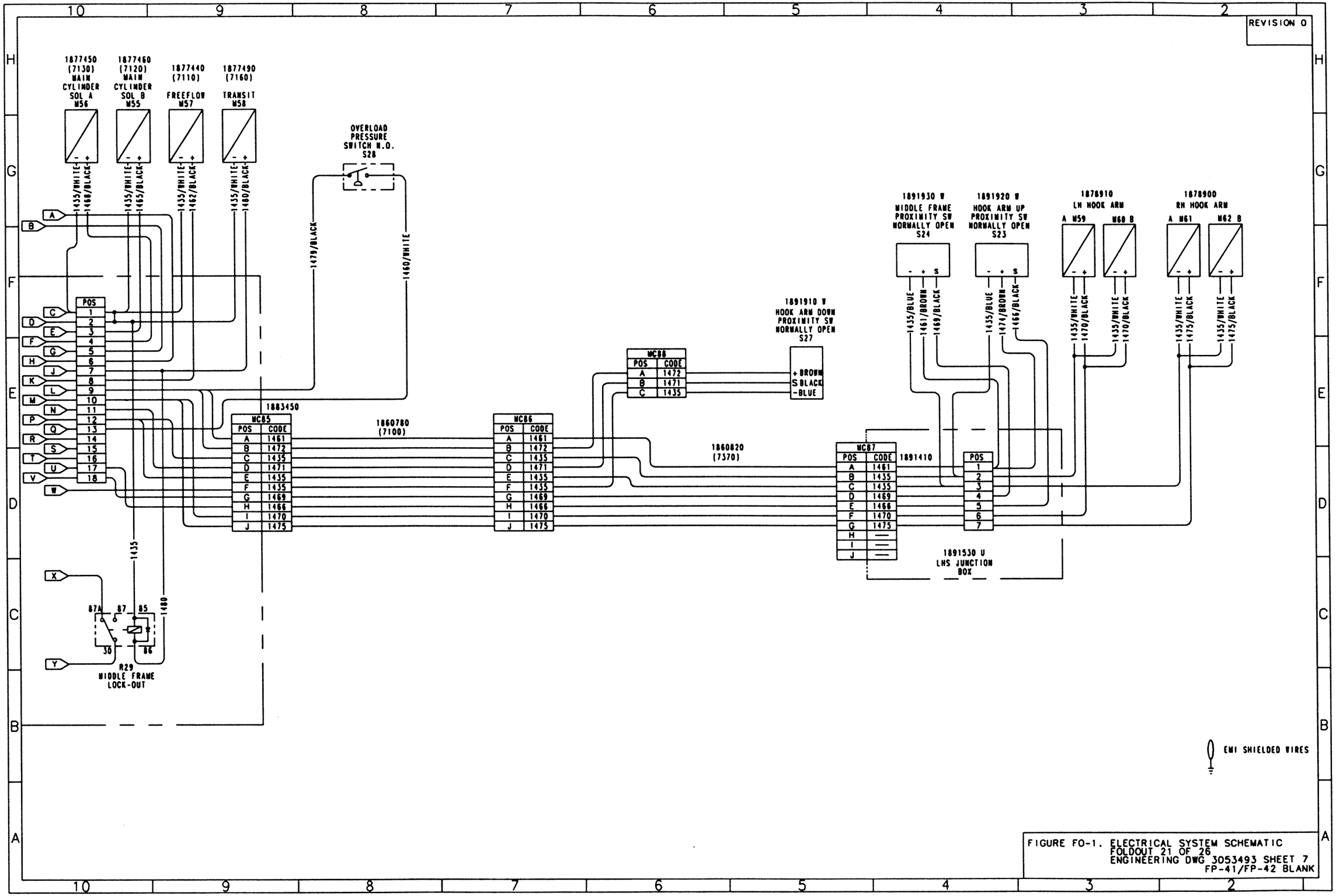

FIGURE FO-1. ELECTRICAL SYSTEM SCHEMATIC
FOLDOUT 21 OF 26
ENGINEERING DWG 3053493 SHEET 7
FP-41/FP-42 BLANK

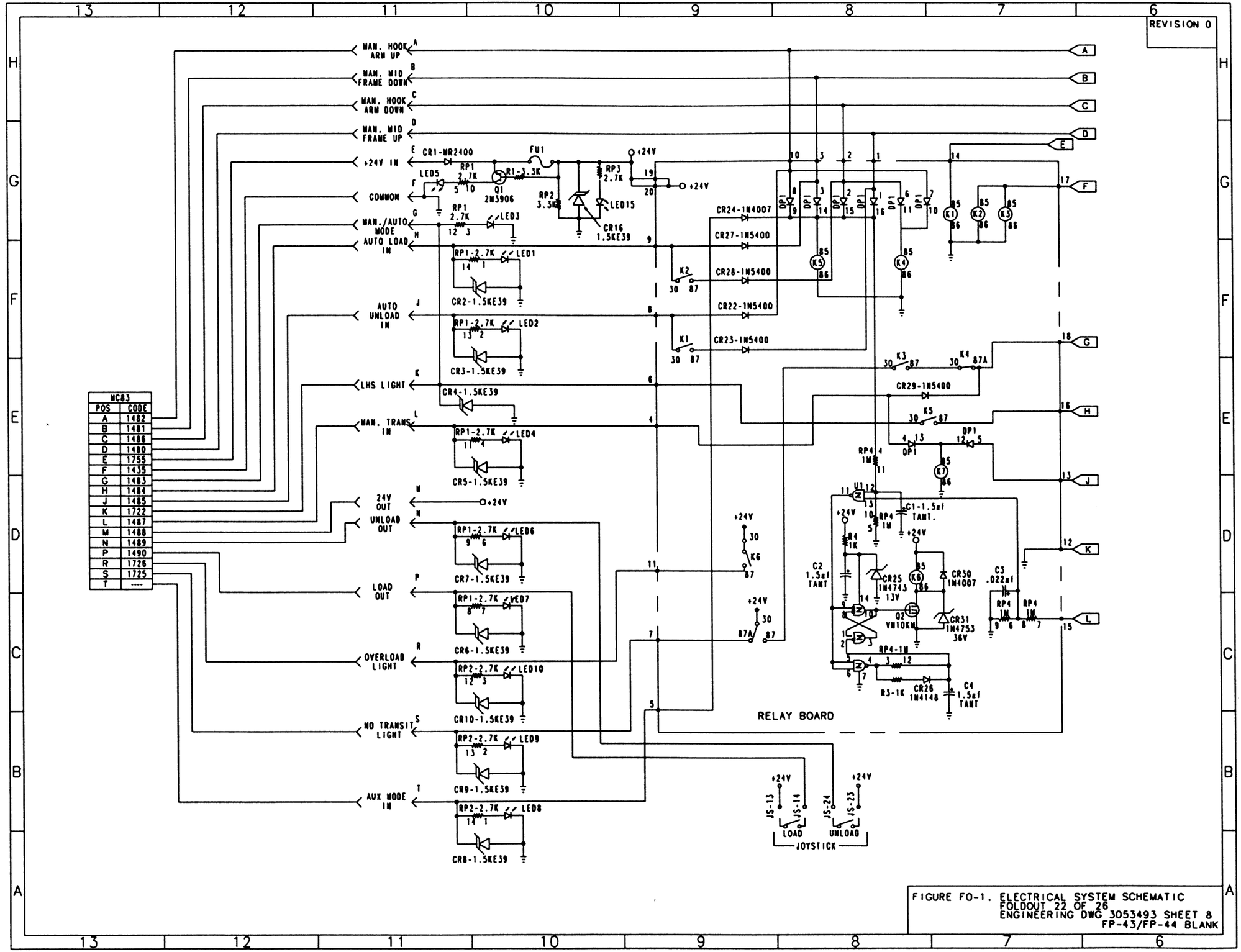

FIGURE FO-1. ELECTRICAL SYSTEM SCHEMATIC
FOLDOUT 22 OF 26
ENGINEERING DWG 3053493 SHEET 8
FP-43/FP-44 BLANK

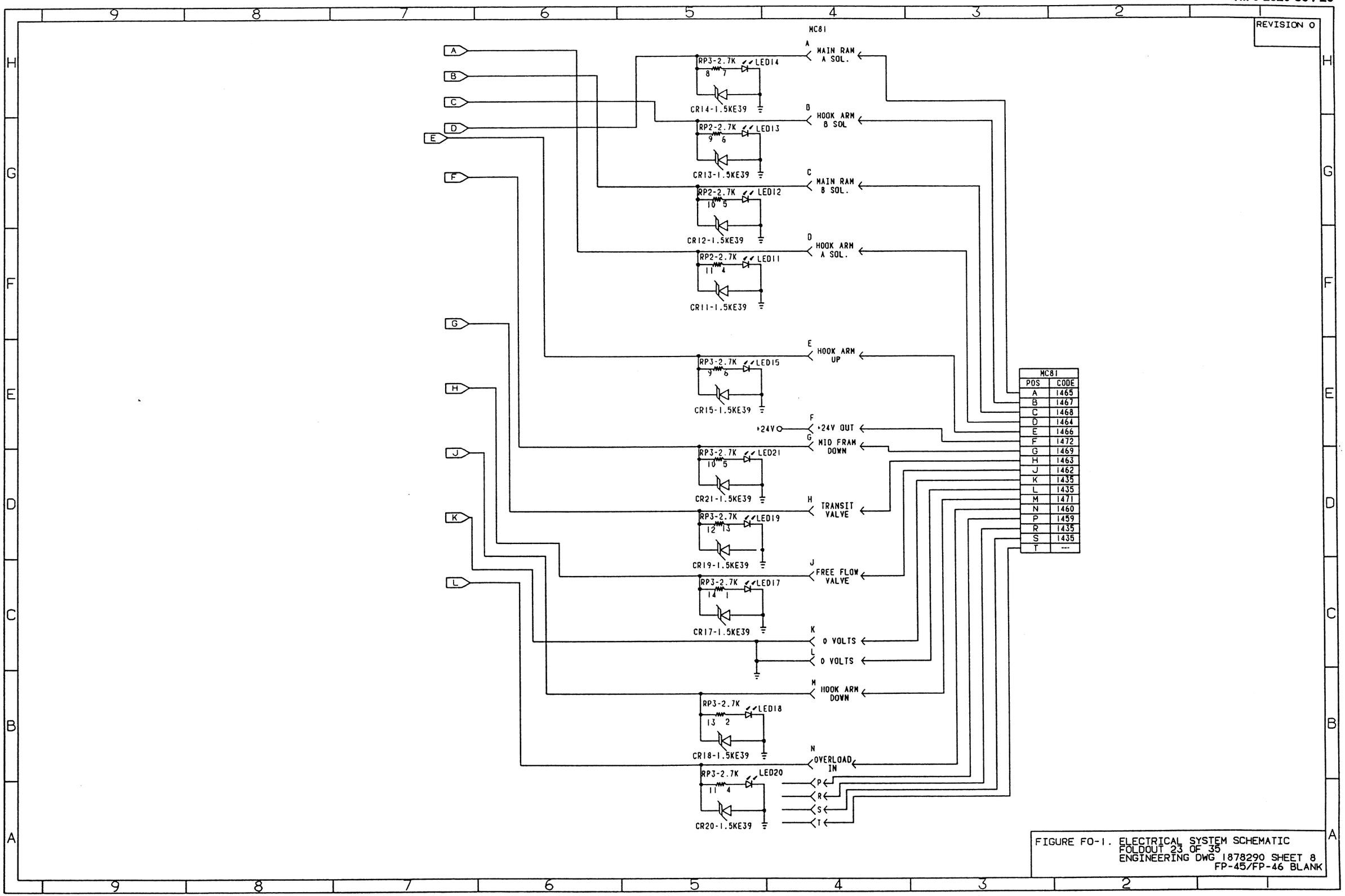

MC81	
POS	CODE
A	1465
B	1467
C	1468
D	1464
E	1466
F	1472
G	1469
H	1463
J	1462
K	1435
L	1435
M	1471
N	1460
P	1459
R	1435
S	1435
T	---

FIGURE FO-1. ELECTRICAL SYSTEM SCHEMATIC
FOLDOUT 23 OF 35
ENGINEERING DWG 1878290 SHEET 8
FP-45/FP-46 BLANK

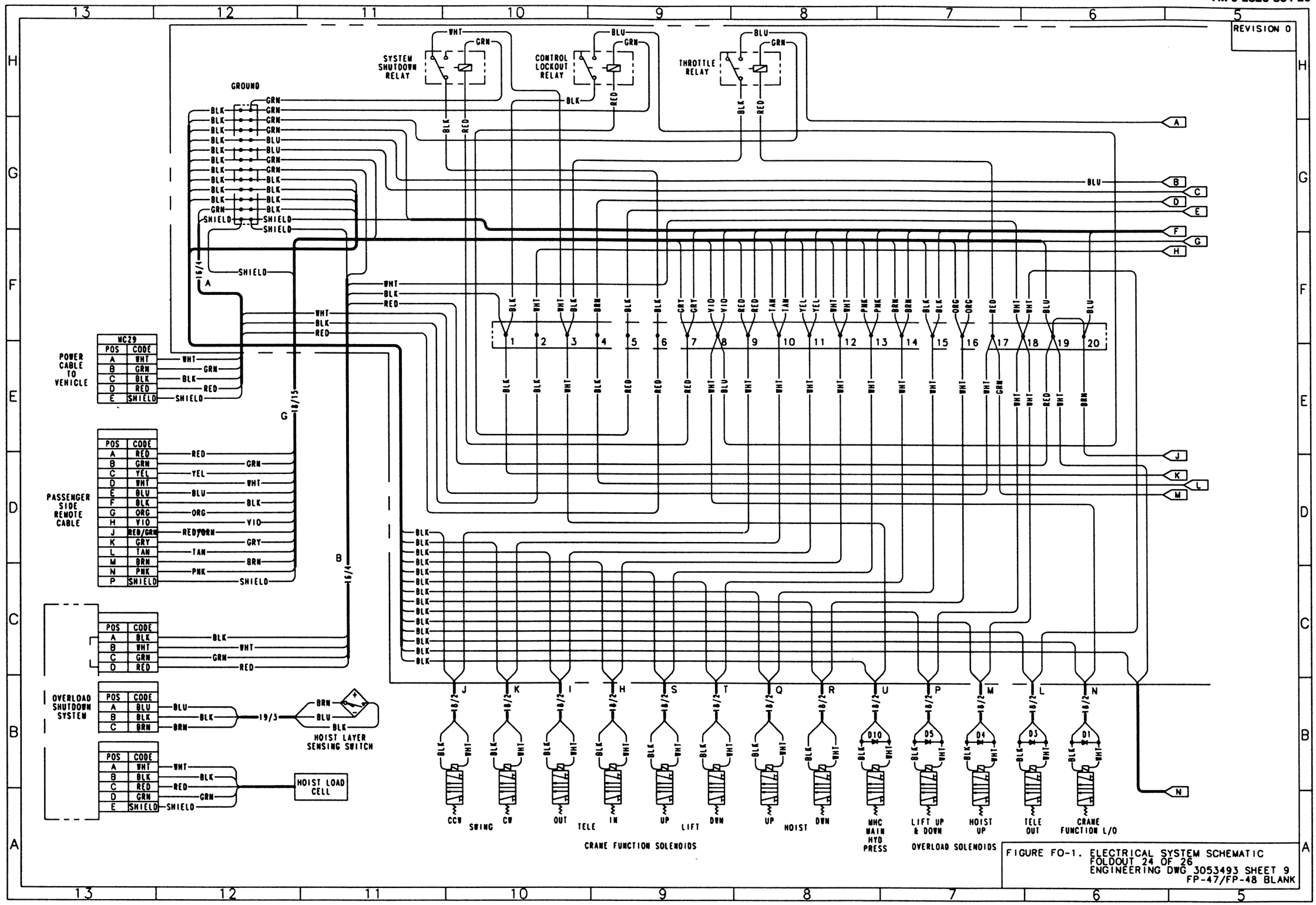

FIGURE FO-1. ELECTRICAL SYSTEM SCHEMATIC
FOLDOUT 24 OF 26
ENGINEERING DWG 3053493 SHEET 9
FP-47/FP-48 BLANK

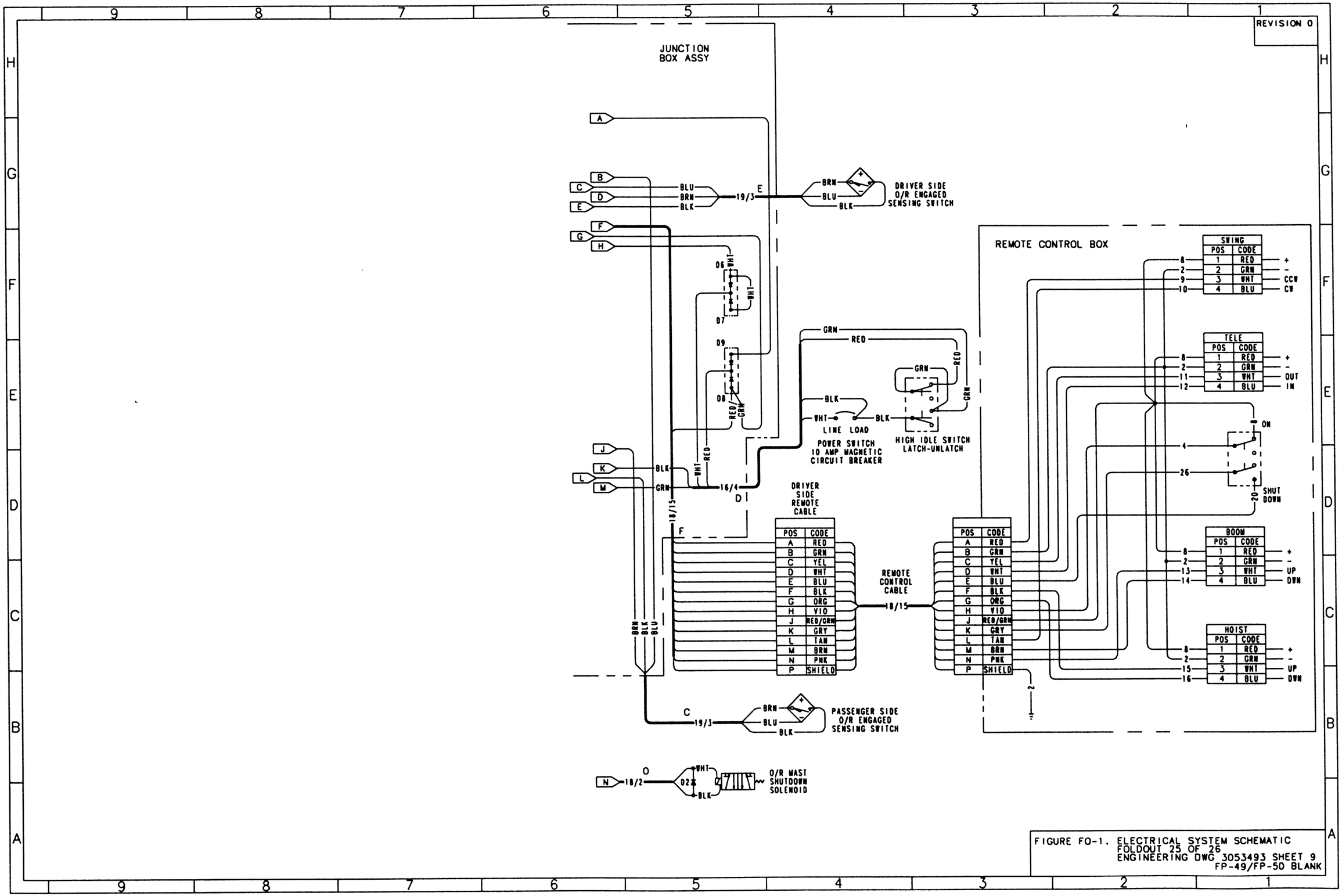

FIGURE FO-1. ELECTRICAL SYSTEM SCHEMATIC
FOLDOUT 25 OF 26
ENGINEERING DWG 3053493 SHEET 9
FP-49/FP-50 BLANK

REVISION 0

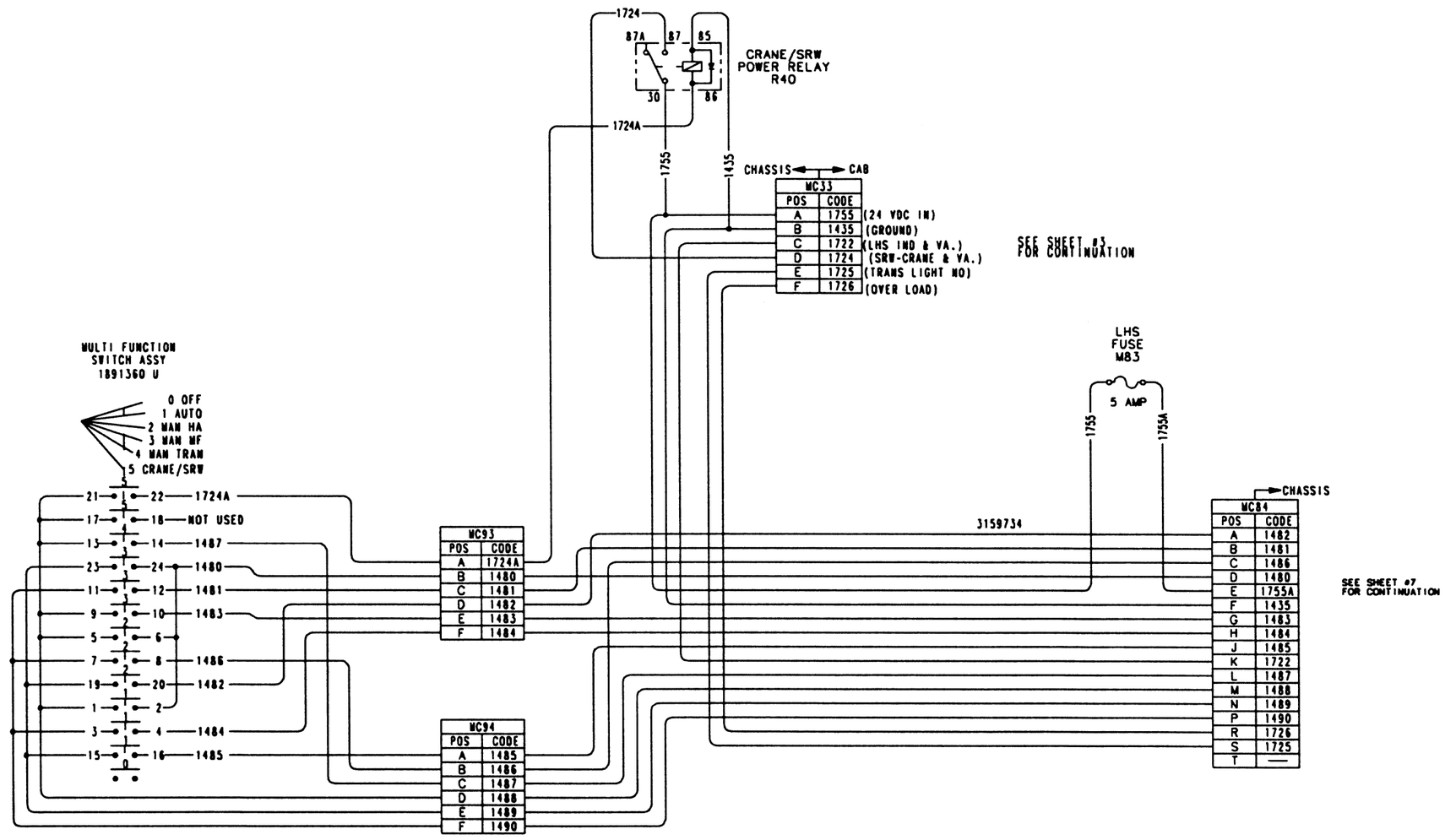

FOR LHS CIRCUIT
PROTECTION CONFIGURATION

FIGURE FO-1. ELECTRICAL SYSTEM SCHEMATIC
FOLDOUT 26 OF 26
ENGINEERING DWG 3053493 SHEET 10
FP-51/FP-52 BLANK

RECOMMENDED CHANGES TO EQUIPMENT TECHNICAL PUBLICATIONS

SOMETHING WRONG WITH THIS PUBLICATION?

FROM: (PRINT YOUR UNIT'S COMPLETE ADDRESS)

Enter your mailing address

DATE SENT

Date you filled out this form

PUBLICATION NUMBER	PUBLICATION DATE	PUBLICATION TITLE
TM 9-2320-364-20	Date of TM	Title of TM

BE EXACT. . .PIN-POINT WHERE IT IS

PAGE NO	PARA-GRAPH	FIGURE NO.	TABLE NO
3		2	
109		51	

IN THIS SPACE TELL WHAT IS WRONG AND WHAT SHOULD BE DONE ABOUT IT:

Item 10. Change illustration. Reason: Tube end shown assembled on wrong side of lever cam.

Item 3. The NSN and P/N are not listed on the AMDF nor the MCRL. Request correct NSN and P/N be furnished.

SAMPLE

PRINTED NAME, GRADE OR TITLE, AND TELEPHONE NUMBER

Your title and telephone number

SIGN HERE:

Your signature

DA FORM 1 JUL 79 2028-2

PREVIOUS EDITIONS ARE OBSOLETE.

P.S.--IF YOUR OUTFIT WANTS TO KNOW ABOUT YOUR RECOMMENDATION MAKE A CARBON COPY OF THIS AND GIVE IT TO YOUR HEADQUARTERS.

REVERSE OF DA FORM 2028-2

FILL IN YOUR UNIT'S ADDRESS

FOLD BACK

DEPARTMENT OF THE ARMY

OFFICIAL BUSINESS

SAMPLE

U.S. MAIL

NOTE:
Apply Stamp

TEAR ALONG PERFORATED LINE

Commander
U.S. Army Tank-automotive and Armaments Command
ATTN: AMSTA-AC-NML
Rock Island, IL 61299-7630

RECOMMENDED CHANGES TO EQUIPMENT TECHNICAL PUBLICATIONS

SOMETHING WRONG WITH THIS PUBLICATION?

FROM: (PRINT YOUR UNIT'S COMPLETE ADDRESS)

DATE SENT

PUBLICATION NUMBER	PUBLICATION DATE	PUBLICATION TITLE
TM 9-2320-364-20		Palletized Load System Unit Maintenance Manual

BE EXACT. . .PIN-POINT WHERE IT IS

PAGE NO	PARA-GRAPH	FIGURE NO.	TABLE NO

IN THIS SPACE TELL WHAT IS WRONG AND WHAT SHOULD BE DONE ABOUT IT:

PRINTED NAME, GRADE OR TITLE, AND TELEPHONE NUMBER

SIGN HERE:

DA FORM 1 JUL 79 2028-2

PREVIOUS EDITIONS ARE OBSOLETE.

P.S.--IF YOUR OUTFIT WANTS TO KNOW ABOUT YOUR RECOMMENDATION MAKE A CARBON COPY OF THIS AND GIVE IT TO YOUR HEADQUARTERS.

REVERSE OF DA FORM 2028-2

FILL IN YOUR
UNIT'S ADDRESS

FOLD BACK

TEAR ALONG PERFORATION LINE

DEPARTMENT OF THE ARMY

OFFICIAL BUSINESS

Commander
U.S. Army Tank-automotive and Armaments Command
ATTN: AMSTA-AC-NML
Rock Island, IL 61299-7630

RECOMMENDED CHANGES TO EQUIPMENT TECHNICAL PUBLICATIONS

SOMETHING WRONG WITH THIS PUBLICATION?

FROM: (PRINT YOUR UNIT'S COMPLETE ADDRESS)

DATE SENT

PUBLICATION NUMBER	PUBLICATION DATE	PUBLICATION TITLE
TM 9-2320-364-20		Palletized Load System Unit Maintenance Manual

BE EXACT. . .PIN-POINT WHERE IT IS

PAGE NO	PARA-GRAPH	FIGURE NO.	TABLE NO

IN THIS SPACE TELL WHAT IS WRONG AND WHAT SHOULD BE DONE ABOUT IT:

PRINTED NAME, GRADE OR TITLE, AND TELEPHONE NUMBER

SIGN HERE:

DA FORM 1 JUL 79 2028-2

PREVIOUS EDITIONS ARE OBSOLETE.

P.S.--IF YOUR OUTFIT WANTS TO KNOW ABOUT YOUR RECOMMENDATION MAKE A CARBON COPY OF THIS AND GIVE IT TO YOUR HEADQUARTERS.

REVERSE OF DA FORM 2028-2

FILL IN YOUR
UNIT'S ADDRESS

FOLD BACK

TEAR ALONG PERFORATION LINE

DEPARTMENT OF THE ARMY

OFFICIAL BUSINESS

Commander
U.S. Army Tank-automotive and Armaments Command
ATTN: AMSTA-AC-NML
Rock Island, IL 61299-7630

RECOMMENDED CHANGES TO EQUIPMENT TECHNICAL PUBLICATIONS

SOMETHING WRONG WITH THIS PUBLICATION?

FROM: (PRINT YOUR UNIT'S COMPLETE ADDRESS)

DATE SENT

PUBLICATION NUMBER	PUBLICATION DATE	PUBLICATION TITLE
TM 9-2320-364-20		Palletized Load System Unit Maintenance Manual

BE EXACT. . .PIN-POINT WHERE IT IS

PAGE NO	PARA-GRAPH	FIGURE NO.	TABLE NO

IN THIS SPACE TELL WHAT IS WRONG AND WHAT SHOULD BE DONE ABOUT IT:

PRINTED NAME, GRADE OR TITLE, AND TELEPHONE NUMBER

SIGN HERE:

DA FORM 1 JUL 79 2028-2

PREVIOUS EDITIONS ARE OBSOLETE.

P.S.--IF YOUR OUTFIT WANTS TO KNOW ABOUT YOUR RECOMMENDATION MAKE A CARBON COPY OF THIS AND GIVE IT TO YOUR HEADQUARTERS.

REVERSE OF DA FORM 2028-2

FILL IN YOUR
UNIT'S ADDRESS

FOLD BACK

TEAR ALONG PERFORATION LINE

DEPARTMENT OF THE ARMY

OFFICIAL BUSINESS

Commander
U.S. Army Tank-automotive and Armaments Command
ATTN: AMSTA-AC-NML
Rock Island, IL 61299-7630

By Order of the Secretary of the Army:

ERIC K. SHINSEKI
General, United States Army
Chief of Staff

Official:

JOEL B. HUDSON
Administrative Assistant to the
Secretary of the Army
9911901

DISTRIBUTION:

To be distributed in accordance with the initial distribution number (IDN) 380898, requirements for TM 9-2320-364-20-5.

★U.S. GOVERNMENT PRINTING OFFICE: 1997 545–010/60527

THE METRIC SYSTEM AND EQUIVALENTS

LINEAR MEASURE
1 Centimeter=10 Millimeters=0.01 Meters=0.3937 Inches
1 Meter=100 Centimeters=1000 Millimeters=39.37 Inches
1 Kilometer=1000 Meters=0.621 Miles

WEIGHTS
1 Gram=0.001 Kilograms=1000 Milligrams=0.035 Ounces
1 Kilogram=1000 Grams=2.2 Lb
1 Metric Ton=1000 Kilograms=1 Megagram=1.1 Short Tons

LIQUID MEASURE
1 Milliliter=0.001 Liters=0.0338 Fluid Ounces
1 Liter=1000 Milliliters=33.82 Fluid Ounces

SQUARE MEASURE
1 Sq Centimeter=100 Sq Millimeters=0.155 Sq Inches
1 Sq Meter=10,000 Sq Centimeters=10.76 Sq Feet
1 Sq Kilometer=1,000,000 Sq Meters=0.386 Sq Miles

CUBIC MEASURE
1 Cu Centimeter=1000 Cu Millimeters=0.06 Cu Inches
1 Cu Meter=1,000,000 Cu Centimeters=35.31 Cu Feet

TEMPERATURE
5/9 (°F − 32) = °C
212° Fahrenheit is equivalent to 100° Celsius
90° Fahrenheit is equivalent to 32.2° Celsius
32° Fahrenheit is equivalent to 0° Celsius
9/5 C° + 32 = F°

APPROXIMATE CONVERSION FACTORS

TO CHANGE	TO	MULTIPLY BY
Inches	Centimeters	2.540
Feet	Meters	0.305
Yards	Meters	0.914
Miles	Kilometers	1.609
Square Inches	Square Centimeters	6.451
Square Feet	Square Meters	0.093
Square Yards	Square Meters	0.836
Square Miles	Square Kilometers	2.590
Acres	Square Hectometers	0.405
Cubic Feet	Cubic Meters	0.028
Cubic Yards	Cubic Meters	0.765
Fluid Ounces	Milliliters	29.573
Pints	Liters	0.473
Quarts	Liters	0.946
Gallons	Liters	3.785
Ounces	Grams	28.349
Pounds	Kilograms	0.454
Short Tons	Metric Tons	0.907
Pound-Feet	Newton-Meters	1.356
Pounds/Sq Inch	Kilopascals	6.895
Miles per Gallon	Kilometers per Liter	0.425
Miles per Hour	Kilometers per Hour	1.609

TO CHANGE	TO	MULTIPLY BY
Centimeters	Inches	0.394
Meters	Feet	3.280
Meters	Yards	1.094
Kilometers	Miles	0.621
Sq Centimeters	Square Inches	0.155
Square Meters	Square Feet	10.764
Square Meters	Square Yards	1.196
Square Kilometers	Square Miles	0.386
Sq Hectometers	Acres	2.471
Cubic Meters	Cubic Feet	35.315
Cubic Meters	Cubic Yards	1.308
Milliliters	Fluid Ounces	0.034
Liters	Pints	2.113
Liters	Quarts	1.057
Liters	Gallons	0.264
Grams	Ounces	0.035
Kilograms	Pounds	2.205
Metric Tons	Short Tons	1.102
Newton-Meters	Pound-Feet	0.738
Kilopascals	Pounds per Sq Inch	0.145
Km per Liter	Miles per Gallon	2.354
Km per Hour	Miles per Hour	0.621

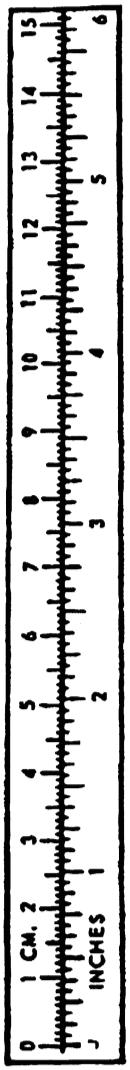

PIN: 077309-000