ARMY TECHNICAL MANUAL TM 5-4610-228-13
MARINE CORPS TECHNICAL MANUAL TM 08846A-13/1

TECHNICAL MANUAL

OPERATOR'S, ORGANIZATIONAL, AND DIRECT SUPPORT MAINTENANCE MANUAL

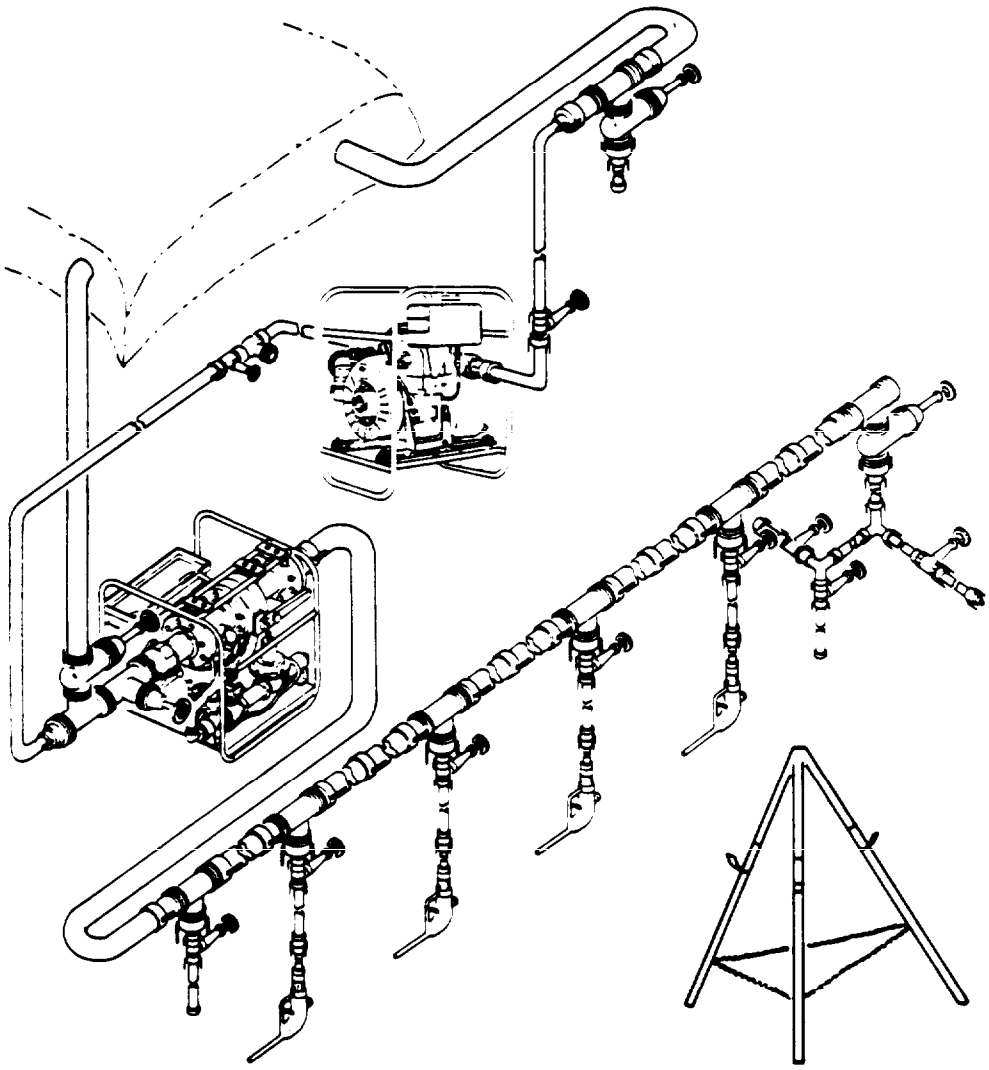

INTRODUCTION

OPERATING INSTRUCTIONS

OPERATOR MAINTENANCE INSTRUCTIONS

ORGANIZATIONAL MAINTENANCE INSTRUCTIONS

DIRECT SUPPORT MAINTENANCE INSTRUCTIONS

APPENDIX A REFERENCES

APPENDIX B MAINTENANCE ALLOCATION CHART

APPENDIX C EXPENDABLE SUPPLIES AND MATERIALS LIST

APPENDIX D TORQUE LIMITS

WATER DISTRIBUTION SYSTEM

Model WDS 20K	4610-01-114-1452
Model WDS 40K	4610-01-114-1450
Model WDS 300K	4610-01-114-1453
Model WDS 800K	4610-01-114-1451
Model WDS 1,000K	4610-01-120-7529

HEADQUARTERS, DEPARTMENT OF THE ARMY

30 MAY 1986

CHANGE

NO. 2

HEADQUARTERS
DEPARTMENT OF THE ARMY AND
HEADQUARTERS, U.S. MARINE CORPS
WASHINGTON, D.C., 10 May 1991

Operator's, Organizational, and Direct Support
Maintenance Manual

WATER DISTRIBUTION SYSTEM

Model WDS 20K	4610-01-120-7529
Model WDS 40K	4610-01-114-1451
Model WDS 300K	4610-01-114-1453
Model WDS 800K	4610-01-114-1450
Model WDS 1,000K	4610-01-114-1452

Approved for public release; distribution is unlimited.

TM 5-4610-228-13/TM 08846A-13/1, 30 May 1986, is changed as follows:

1. Title is changed as shown above.

2. Remove and insert pages as indicated below. New or changed text material is indicated by a vertical bar in the margin. An illustration change is indicated by a miniature pointing hand.

Remove pages	Insert pages
1-7 through 1-10	1-7 through 1-10
1-15 through 1-17/(1-18 Blank)	1-15 through 1-17/(1-18 Blank)
2-7 and 2-8	2-7 and 2-8
—	2-8.1 and (2-8.2 Blank)
2-35 through 2-38	2–35 through 2–38
2-41 through 2-46	2-41 through 2-46
4-7/(4-8 Blank)	4-7/(4-8 Blank)
—	4-8.1 and 4-8.2
4-9 through 4-12	4-9 through 4-12
—	4-18.1 through 4-18.4
4-19/(4-20 Blank)	4-19/(4-20 Blank)
5-15 through 5-19/(5-20 Blank)	5-15 through 5-21/(5-22 Blank)
A-1 and A-2	A-1 and A-2
B-3 and B-4	B-3 and B-4

3. Retain this sheet in front of manual for reference purposes.

C 2

By Order of the Secretaries of the Army and Navy (Including the Marine Corps):

CARL E. VUONO
General, United States Army
Chief of Staff

Official:

PATRICIA P. HICKERSON
Colonel, United States Army
The Adjutant General

DAVID E. BOTTORFF
Rear Admiral, CEC, US Navy
Commander
Navy Facilities Engineering Command

H.E. REESE
Deputy for Support
Marine Corps Research, Development and
Acquisition Command, U.S. Marine Corps

DISTRIBUTION:
To be distributed in accordance with DA Form 12-25A, (qty rqr block nos. 2476,2477, 2478)

CHANGE NO. 1

HEADQUARTERS, DEPARTMENT OF THE ARMY, AND
HEADQUARTERS, U.S. MARINE CORPS
WASHINGTON, D.C., 21 March 1988

Operator's, Organizational, and Direct Support
Maintenance Manual

WATER DISTRIBUTION SYSTEM

Model WDS 20K	4610-01-120-7529
Model WES 40K	4610-01-114-1451
Model WDS 300K	4610-01-114-1453
Model WDS 800K	4610-01-114-1450
Model WDS 1,000K	4610-01-114-1452

TM 5-4610-228-13/TM 08846A-13/1, 30 May 1986, is changes as follows:

1. Title is changed as shown above.

2. Remove and insert pages as indicated below. New or changed text material is indicated by a vertical bar in the margin. An illustration change is indicated by a miniature pointing hand.

Remove pages	Insert pages
i and ii	i and ii
1-1 through 1-4	1-1 through 1-4
----	1-4.1/1-4.2
1-7 and 1-8	1-7 and 1-8
1-17/1-18	1-17/1-18
2-3 and 2-4	2-3 and 2-4
2-7 and 2-8	2-7 and 2-8
2-11 and 2-12	2-11 and 2-12
2-19 and 2-20	2-19 and 2-20
2-27 and 2-28	2-27 and 2-28
2-55 through 2-58	2-55 through 2-58
2-59/2-60	2-59/2-60
3-1 and 3-2	3-1 and 3-2
3-5 through 3-8	3-5 through 3-8
4-1 through 4-6	4-1 through 4-6
5-1 and 5-2	5-1 and 5-2
5-15 through 5-18	5-15 through 5-18
A-1 and A-2	A-1 and A-2
Index 1 and Index 2	Index 1 and Index 2

By Order of the Secretaries of the Army and the Marine Corps

CARL E. VUONO
General, United States Army
Chief of Staff

Official:

R. L. DILWORTH
Brigadier General, United States Army
The Adjutant General

H.E. REESE
Marine Corps Research, Development and Acquisition Command

DISTRIBUTION:
To be distributed in accordance with DA Form 12-25A, Operator, Organizational, Direct Support and General Support Maintenance requirements for Water Purification Unit, Reverse Osmosis, Trailer Mounted, 600 HPH (ROWPU 600-1)

TECHNICAL MANUAL

No. 5-4610-228-13

HEADQUARTERS, DEPARTMENT OF THE ARMY
AND HEADQUARTERS, U.S. MARINE CORPS
WASHINGTON, D.C., 30 May 1986

OPERATOR'S, ORGANIZATIONAL, AND DIRECT SUPPORT MAINTENANCE MANUAL

WATER DISTRIBUTION SYSTEM

Model WDS 20K	4610-01-120-7529
Model WDS 40K	4610-01-114-1451
Model WDS 300K	4610-01-114-1453
Model WDS 800K	4610-01-114-1450
Model WDS 1,000K	4610-01-114-1452

REPORTING ERRORS AND RECOMMENDING IMPROVEMENTS

You can help improve this manual. If you find any mistakes or if you know of a way to improve the procedures, please let us know. Mail your letter, DA Form 2028 (Recommended Changes to Publications and Blank Forms), or DA Form 2028-2 located in the back of this manual directly to: Commander US Army Troop Support Command, ATTN: AMSTR-MCTS, 4300 Goodfellow Boulevard, St. Louis, MO 63120-1798. A reply will be furnished directly to you. Marine Corps personnel should submit NAVMC 10772 forms to the Commanding General, Marine Corps Logistics Base, Code 850, Albany, Georgia 37104-5000. A reply will be furnished directly to you.

TABLE OF CONTENTS

			Para	Page
CHAPTER 1	INTRODUCTION			
	Section I.	General Information	1-1	1-1
	Section II.	Equipment Description	1-7	1-3
	Section III.	Technical Principles of Operations	1-18	1-17
CHAPTER 2	OPERATING INSTRUCTIONS			
	Section I.	Description and Use of Operator's Controls and Indicators	2-1	2-1
	Section II.	Preventive Maintenance Checks and Services (PMCS)	2-3	2-4
	Section III.	Operation Under Usual Conditions	2-5	2-8
	Section IV.	Operation Under Unusual Conditions	2-14	2-59
CHAPTER 3	OPERATOR MAINTENANCE INSTRUCTIONS			
	Section I.	Lubrication Instructions	3-1	3-1
	Section II.	Troubleshooting	3-2	3-1
	Section III.	Maintenance Procedures	3-3	3-2
CHAPTER 4	ORGANIZATIONAL MAINTENANCE INSTRUCTIONS			
	Section I.	Service Upon Receipt of Equipment	4-1	4-1
	Section II.	Repair Parts, Special Tools, TMDE, and Support Equipment	4-3	4-5
	Section III.	Preventive Maintenance Checks and Services (PMCS)	4-6	4-5
	Section IV.	Troubleshooting	4-8	4-5

		Para	Page
Section V.	Maintenance Procedures	4-10	4-7
Section VI.	Preparation for Storage of Shipment	4-13	4-19

CHAPTER 5 DIRECT SUPPORT MAINTENANCE INSTRUCTIONS

Section I.	Repair Parts, Special Tools, TMDE, and Support Equipment	5-1	5-1
Section II.	Troubleshooting	5-4	5-1
Section III.	Maintenance Procedures	5-6	5-3

APPENDIX

APPENDIX A.	References	A-1
APPENDIX B.	Maintenance Allocation Chart...	B-1
APPENDIX C.	Expendable/Durable Supplies and Materials List	C-1
APPENDIX D.	Torque Limits	D-1
INDEX	Alphabetical Index	Index 1

WARNING

Do not fill the fuel tank while the engine is running. Gasoline spilled on a hot engine may explode and cause serious injury to personnel.

WARNING

Fumes from the hypochlorination unit can cause sickness or even death. These fumes are increased when hypochlorite solution is subject to extreme heat. Be sure that the unit is in a well ventilated area.

WARNING

If an unpleasant taste or odor is present, rinse the hoses with a solution of 100 parts per million calcium hypochlorite and water prior to initial use. (See TM 5-700, Section III, Paragraph 48).

WARNING

Dry-cleaning solvent, P-D-680, used to clean parts is potentially dangerous to personnel and property. Avoid inhalation of fumes and repeated or prolonged skin exposure. Wash exposed skin thoroughly with soap and water. Use in well ventilated area away from open flame or excessive heat. Flash point is 100°F (38°C).

WARNING

Never operate the centrifugal pump in an enclosed area unless the exhaust gases are piped to the outside. Exhaust gases contain carbon monoxide which is a colorless, odorless, and poisonous gas.

WARNING

Make sure spark plug leads are disconnected before performing maintenance on the pump.

WARNING

Avoid breathing smoke when using a fire extinguisher.

CHAPTER 1
INTRODUCTION
Section I. GENERAL INFORMATION

1-1. SCOPE.

Type of Manual: Operator, Organizational, and Direct Support Maintenance Manual.

Model Number and Equipment Name: Models WDS20K, WDS40K, WDS300K, WDS800K, and WDS1,000K.

Purpose of Equipment: Stores and distributes potable water at different levels of command.

WDS20K - Stores and distributes 20,000 gallons of potable water for hospital use.

WDS40K - Stores and distributes 40,000 gallons of potable water at Brigade level.

WDS300K - Stores and distributes 300,000 gallons of potable water at Division level.

WDS800K - Stores and distributes 800,000 gallons of water.

WDS1,000K - Stores and distributes 1,000,000 gallons of water.

1-2. MAINTENANCE FORMS AND RECORDS.

Department of the Army forms and procedures used for equipment maintenance will be those prescribed by DA PAM 738-750, The Army Maintenance Management System (TAMMS). Marine Corps personnel will use forms and records as prescribed by TM 4700-15/1.

1-3. HAND RECEIPT (-HR) MANUALS. Not Applicable.

1-4. REPORTING EQUIPMENT IMPROVEMENT RECOMMENDATIONS (EIR'S).

If your Water Distribution System (WDS) needs improvement, let us know. Send us an EIR. You, the user, are the only one who can tell us what you don't like about your equipment. Let us know why you don't like the design or performance. Put it on an SF 368 (Quality Deficiency Report). Mail it to us at Commander, U.S. Army Troop Support Command, ATTN: AMSTR-QX, 4300 Goodfellow Boulevard, St. Louis, MO 63120-1798. Marine Corps users are encouraged to submit EIRs in accordance with MCO 1650.17.

1-5. NOMENCLATURE, CROSS-REFERENCE LIST

This list includes the nomenclature and cross-references used in this manual.

Common Name	*Official Nomenclature*
350 GPM Pump	Pumping Assy, Wheel Mounted, 4-Inch, 350 GPM at 275-Foot
350 GPM Pump Connection Kit	Connection Kit, 350 GPM Pump
125 GPM Pump	Pumping Assy, 2-Inch, 125 GPM at 50-Foot
125 GPM Pump Connection Kit	Connection Kit, 125 GPM Pump
Hypochlorination Unit	Hypochlorination Unit, Water Purification, Frame Mounted, Automatically Controlled with Bypass, 2 to 400 GPM Flow

Cornmon Name	Official Nomenclature
50K Water Tank	Water Tank, Collapsible Fabric, 50,000 Gallon
Double Connection Kit	Connection Kit, Dual Tank
20K Water Tank	Water Tank, Collapsible Fabric, 20,000 Gallon
Single Connection Kit	Connection Kit, Single Tank
4-Inch Gate Valve and Tee Connector Assy	Valve and Tee Assy 4-Inch Flanged
4-Inch Tee Connector Assy	Flanged, Tee Assy, 4-Inch
4-Inch Gate Valve Assy	Valve, Gate, Flanged, 4-Inch
2-Inch Gate Valve Assy	Valve, Gate, Flanged, 2-Inch
2-Inch Check Valve Assy	Valve, Check, 2-Inch
2-Inch Ball Valve Assy	Valve, Ball, 2-Inch
2-Inch Butterfly Valve Assy	Valve, Butterfly, Flanged, 2-Inch
2-Inch Connectors	Connection, Quick-Disconnect, 2-Inch
Stand Assy	Stand Assy, Water
Nozzle Connection Kit	Connection Kit, Hose Nozzle
Bag Filler Connection Kit	Connection Kit, Bag Filler
Hospital Connection Kit	Connection, Hospital
4-Inch by 20-Foot Discharge Hose Assy	Hose Assy, Rubber, Smooth Bore, Potable Water Discharge, 4-Inch by 20-Foot Long W/Quick Disconnect Cam-Locking Fittings
4-Inch by 20-Foot Suction Hose Assy	Hose Assy, Rubber, Smooth Bore, Potable Water Suction, 4-Inch by 20-Foot Long W/Quick Disconnect Cam-Locking Fittings
4-Inch by 10-Foot Discharge Hose Assy	Hose Assy, Rubber, Smooth Bore, Potable Water Discharge, 4-Inch by 10-Foot Long W/Quick Disconnect Cam-Locking Fittings
4-Inch by 10-Foot Suction Hose Assy	Hose Assy, Rubber, Smooth Bore, Potable Water Suction, 4-Inch by 10-Foot Long W/Quick Disconnect Cam-Locking Fittings
4-Inch Hose Connection Kit	Connection Kit, 4-Inch Hose
2-Inch by 20-Foot Discharge Hose Assy	Hose Assy, Rubber, Smooth Bore, Potable Water Discharge, 2-Inch by 20-Foot Long W/Quick Disconnect Cam-Locking Fittings
2-Inch by 20-Foot Suction Hose Assy	Hose Assy, Rubber, Smooth Bore, Potable Water Suction, 2-Inch by 20-Foot Long W/Quick Disconnect Cam-Locking Fittings

Common Name	*Official Nomenclature*
2-Inch by 10-Foot Discharge Hose Assy	Hose Assy, Rubber, Smooth Bore, Potable Water Discharge, 2-Inch by 10-Foot Long W/Quick Disconnect Cam-Locking Fittings
2-Inch Hose Connection Kit	Connection Kit, 2-Inch Hose
1½-Inch by 25-Foot Discharge Hose Assy	Hose Assy, Rubber, Smooth Bore Potable Water Discharge, 1½-Inch by 25-Foot Long W/Quick Disconnect Cam-Locking Fittings
4-Inch to 2-Inch Reducers	Reducers, Female by Male Quick Disconnect Cam-Locking, 4-Inch to 2-Inch Reducers
2-Inch to 4-Inch Reducers	Reducers, Female by Male Quick Disconnect Cam-Locking, 2-Inch to 4-Inch Reducers
2-Inch to 1 ½-Inch Reducers	Reducers, Female by Male Quick Disconnect Cam-Locking, 2-Inch to 1½-Inch Reducers

1-6. LIST OF ABBREVIATIONS

This list includes the abbreviations used in this manual:

Assy	Assembly
DA PAM	Department of Army Pamphlet
GFE	Government Furnished Equipment
GPM	Gallons Per Minute
NTP	Normal Pressure and Temperature
PMCS	Preventive Maintenance Checks and Services
PPM	Parts Per Minute
WDS	Water Distribution System

Section II. EQUIPMENT DESCRIPTION

1-7. EQUIPMENT CHARACTERISTICS, CAPABILITIES, AND FEATURES

Characteristics

- Portable
- Self contained
- Adaptable to meet different water supply demands

Capabilities and Features

- Easily and quickly set up in the field
- Needs no tools to set up
- Automatically chlorinates water at different flow rates
- Interchangeability of couplings and hoses increases reliability
- No Outside power requirements needed

1-8. DESTRUCTION OF ARMY MATERIEL TO PREVENT ENEMY USE

Refer to TM 750-244-3 for methods and procedures to destroy Army materiel to prevent enemy use.

1-9. PREPARATION FOR STORAGE OR SHIPMENT

a. Placement of equipment in administrative storage should be for short periods of time when a shortage of maintenance effort exists. Items should be in mission readiness within 24 hours or within the time factors as determined by the directing authority. during the storage period appropriate maintenance records will be kept.

b. Before placing equipment in administrative storage, current maintenance services and equipment serviceable criteria (ESC) evaluations should be completed, shortcomings and deficiencies should be corrected, and all modification work orders (MWO's) should be applied.

c. Storage site selection. Inside storage is preferred for items selected for administrative storage. If inside storage is not available, trucks, vans, conex containers and other containers may be used.

d. Marine Corps personnel should refer to MCO 4450.7.

1-10. LOCATION AND DESCRIPTION OF WDS20K SYSTEM COMPONENTS (Figure 1-1).

20,000 GALLON WATER TANK (1). Stores potable water. Assumes pillow shape when filled. Handles on sides of tank moves and positions the tank when empty. When not in use the tank may be folded or rolled and stored for shipping.

SINGLE TANK CONNECTION KIT (2). Contains hoses, valves, and couplings needed to connect one water tank.

PUMP CONNECTION KIT (3). Contains components necessary to connect 125 GPM pump to WDS20K system.

125 GPM PUMP, W/ENGINE (4). Supplies water under pressure to the WDS20K system.

HYPOCHLORINATION UNIT (5). Supplies hypochlorite solution to the water in direct proportion to the flow rate, purifying the water in the WDS20K system.

HOSE CONNECTOR KIT (6). Contains hose connections for the WDS20K system.

NOZZLE CONNECTION KIT (7). Contains connections for the WDS20K system nozzles.

HOSPITAL CONNECTION KIT (8). Connects the hospital-nozzles to the WDS20K system.

1-11. LOCATION AND DESCRIPTION OF WDS40K SYSTEM COMPONENTS (Figure 1-2).

125 GPM PUMP CONNECTION KIT (1). Contains components necessary to connect 125 GPM pump to WDS40K system.

125 GPM PUMP (2). Supplies water under pressure to the WDS40K system

DUAL TANK CONNECTION KIT (3). Contains hoses, valves, and couplings needed to connect two water tanks.

20,000 GALLON WATER TANK (4). Stores potable water. Assumes pillow shape when filled. Handles on sides of tank moves and positions the tank when empty. When not in use, the tank may be folded or rolled and stored for shipping.

350 GPM PUMP CONNECTION (5). Connects components of the 350 GPM pump to WDS40K system.

350 GPM PUMP (6). Supplies water under pressure to the WDS40K system.

HYPOCHLORINATION UNIT (7). Supplies hypochlorite solution to the water in direct proportion to the flow rate, purifying the water in the WDS40K system.

2-INCH HOSE CONNECTION KIT (8). Contains 2-inch hose connections for the WDS40K system.

HOSE NOZZLE CONNECTION KIT (9). Contains connections for the WDS40K system nozzles.

BAG FILLER CONNECTION KIT (10). Connects filler bags to hose-nozzle connection kit on WDS40K system.

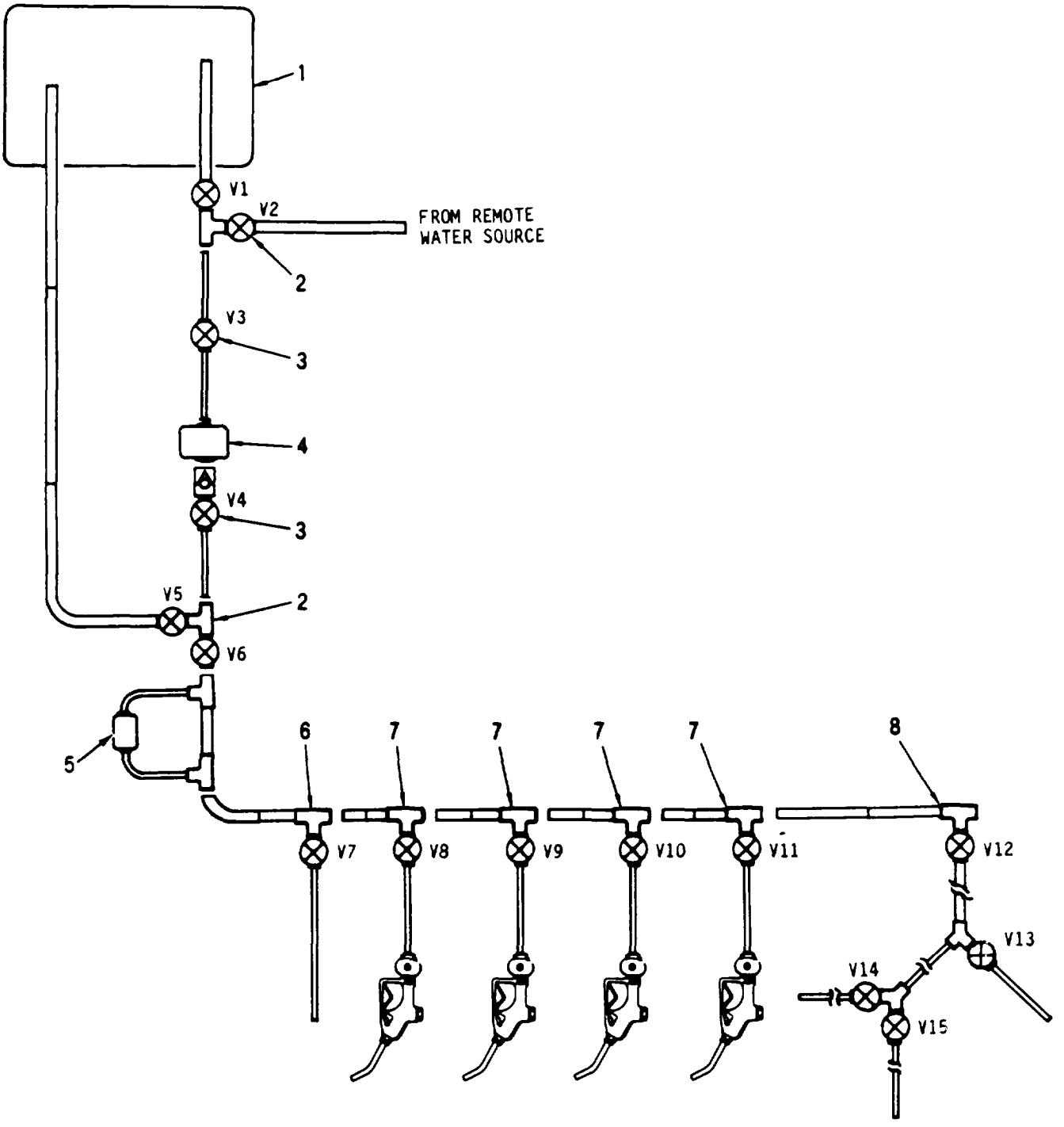

Figure 1-1. 20K Water Distribution System

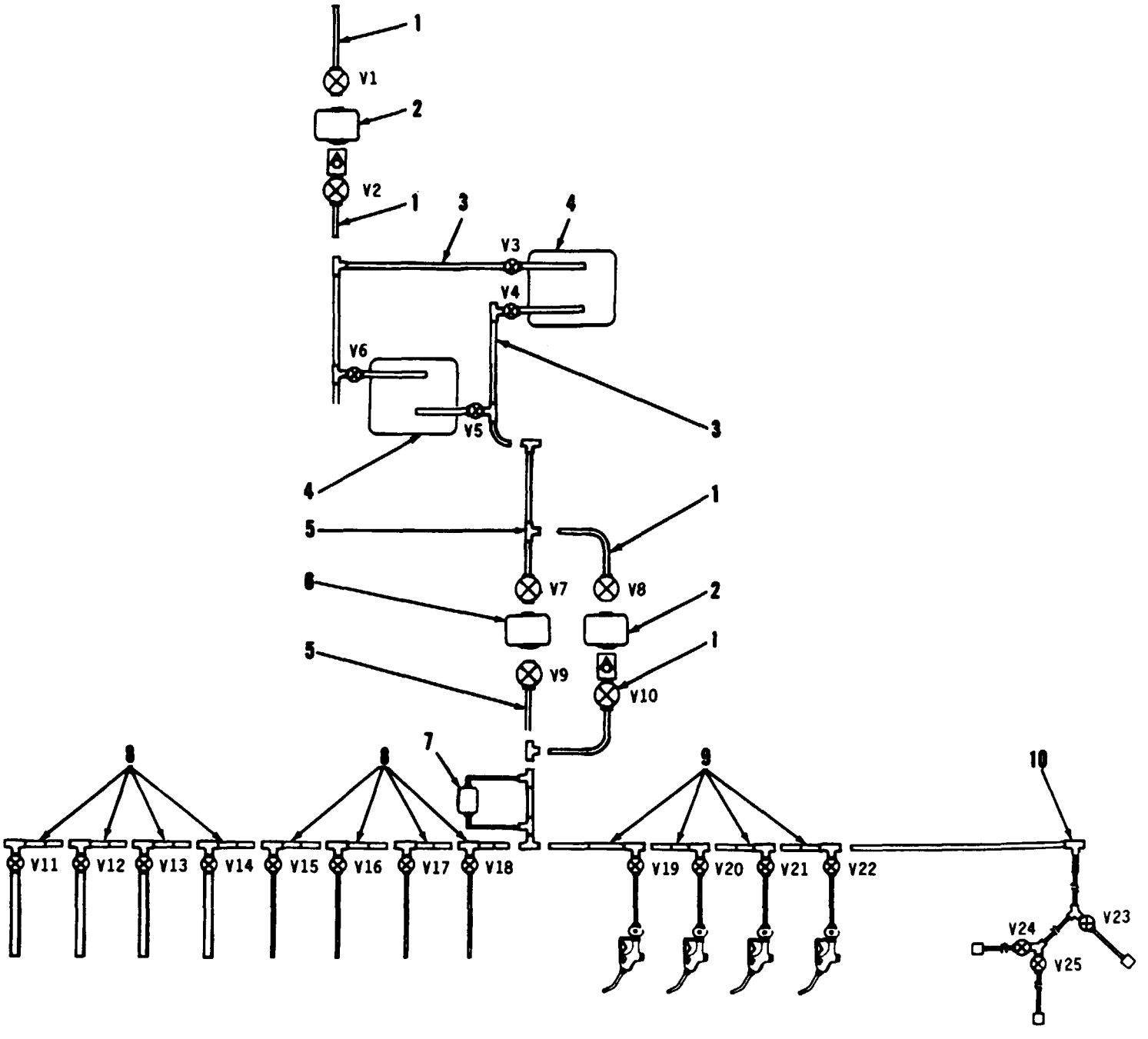

Figure 1-2. 40K Water Distribution System

1-12. LOCATION AND DESCRIPTION OF WDS300K SYSTEM COMPONENTS (FIGURE 1-3).

DISCHARGE CONNECTION KIT (1). Connects discharge side of storage tanks to the WDS300K water system.

SUCTION CONNECTION KIT (2). Connects suction side of storage tanks to WDS300K water system.

[NTERCONNECTION KIT (3). Connects all (discharge sections) of the WDS300K system.

350 GPM PUMP CONNECTION KIT (4). Connects components of the 350 CPM pump to the WDS300K system.

125 GPM PUMP W/ENGINE (5). Supplies water under pressure to the WDS300K water system. 350 CPM PUMP ASSY (6). Supplies water under pressure to the WDS300K water system.

HOSE NOZZLE CONNECTION KIT (7). Contains nozzle connections for the WDS300K system.

2-INCH HOSE CONNECTION KIT (8). Contains 2-inch hose connections for the WDS300K system.

4-INCH HOSE CONNECTION KIT (9). Contains 4-inch hose connections for the WDS300K system.

HYPOCHLORINATION UNIT (10). Supplies hypochloride solution to the water in direct proportion to the flow rate, purifying the water in the WDS300K system.

20,000 GALLON TANK (11). Stores potable water. Assumes pillow shape when filled. Handles on sides of tank moves and positions the tank when empty. When not in use, the tank may be folded or rolled and stored for shipping.

BAG FILLER CONNECTION KIT (12). Connects tiller bags to hose-nozzle connection kit on WDS300K system.

125 GPM PUMP CONNECTION KIT (13). Contains components necessary to connect the 125 GPM pump to the WDS300K system.

TRICON CONTAINER. (Not Shown). Stores equipment for the WDS300K system components.

1-13. LOCATION AND DESCRIPTION OF WDS800K SYSTEM COMPONENTS (FIGURE 1-4).

DISCHARGE CONNECTION KIT (1). Connects discharge side of storage tanks to the WDS800K water system.

SUCTION CONNECTION KIT (2). Connects suction side of storage tanks to the WDS800K water system.

INTERCONNECTION KIT (3). Connects all discharge sections of the WDS800K system.

350 GPM PUMP CONNECTION KIT (4). Connects components of the 350 GPM pump to the WDS800K system.

125 GPM PUMP W/ENGINE (5). Supplies water under pressure to the WDS800K water system.

350 GPM PUMP ASSY (6). Supplies water under pressure to the WDS800K water system.

HOSE NOZZLE CONNECTION KIT (7). Contains nozzle connections for the WDS800K system.

2-INCH HOSE CONNECTION KIT (8). Contains 2-inch hose connections for the WDS800K system.

4-INCH HOSE CONNECTION KIT (9). Contains 4-inch hose connections for the WDS800K system.

HYPOCHLORINATION UNIT (10). Supplies hypochloride solution to the water in direct proportion to the flow rate, purifying the water in the WDS800K system.

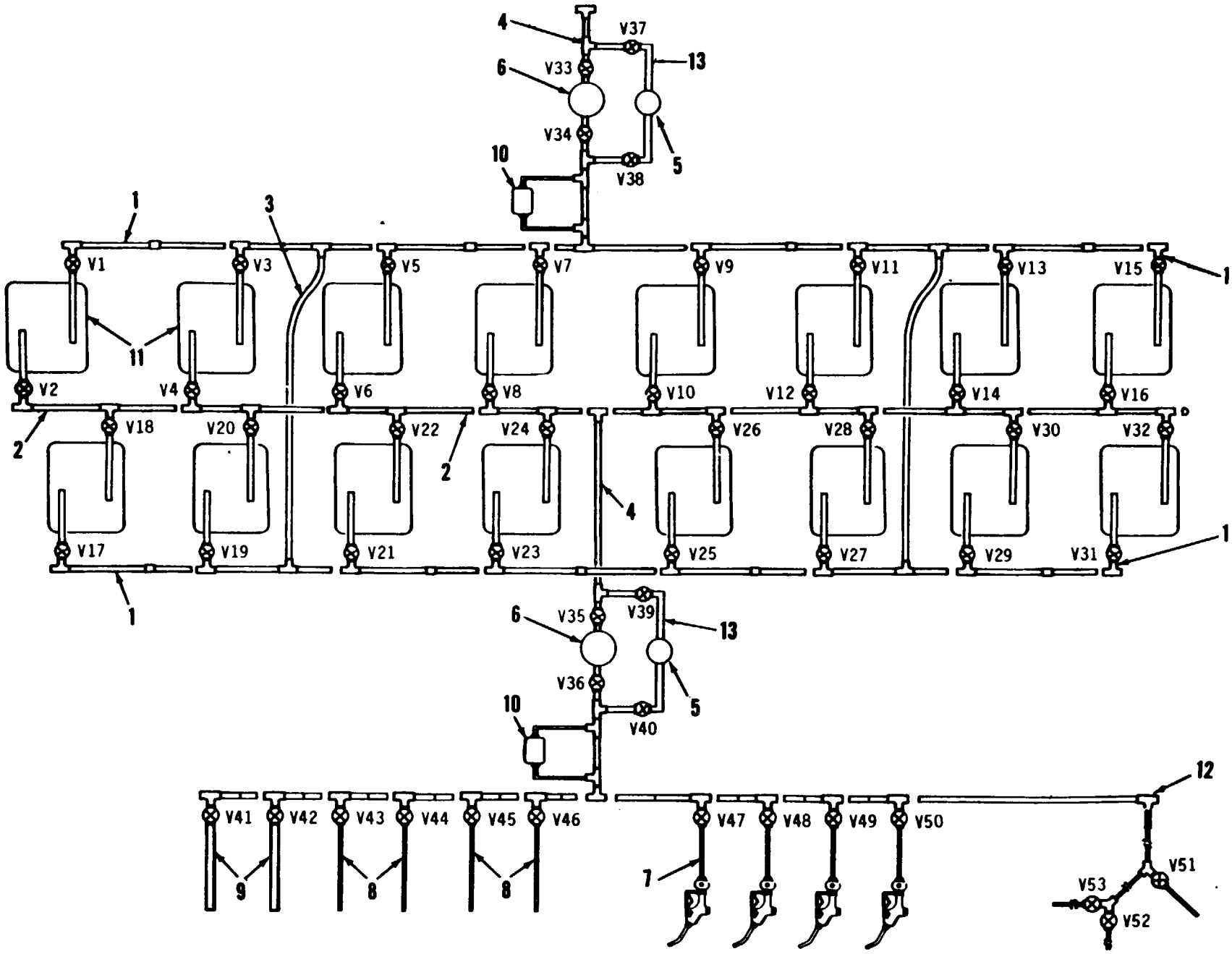

Figure 1-3. 300K Water Distribution System

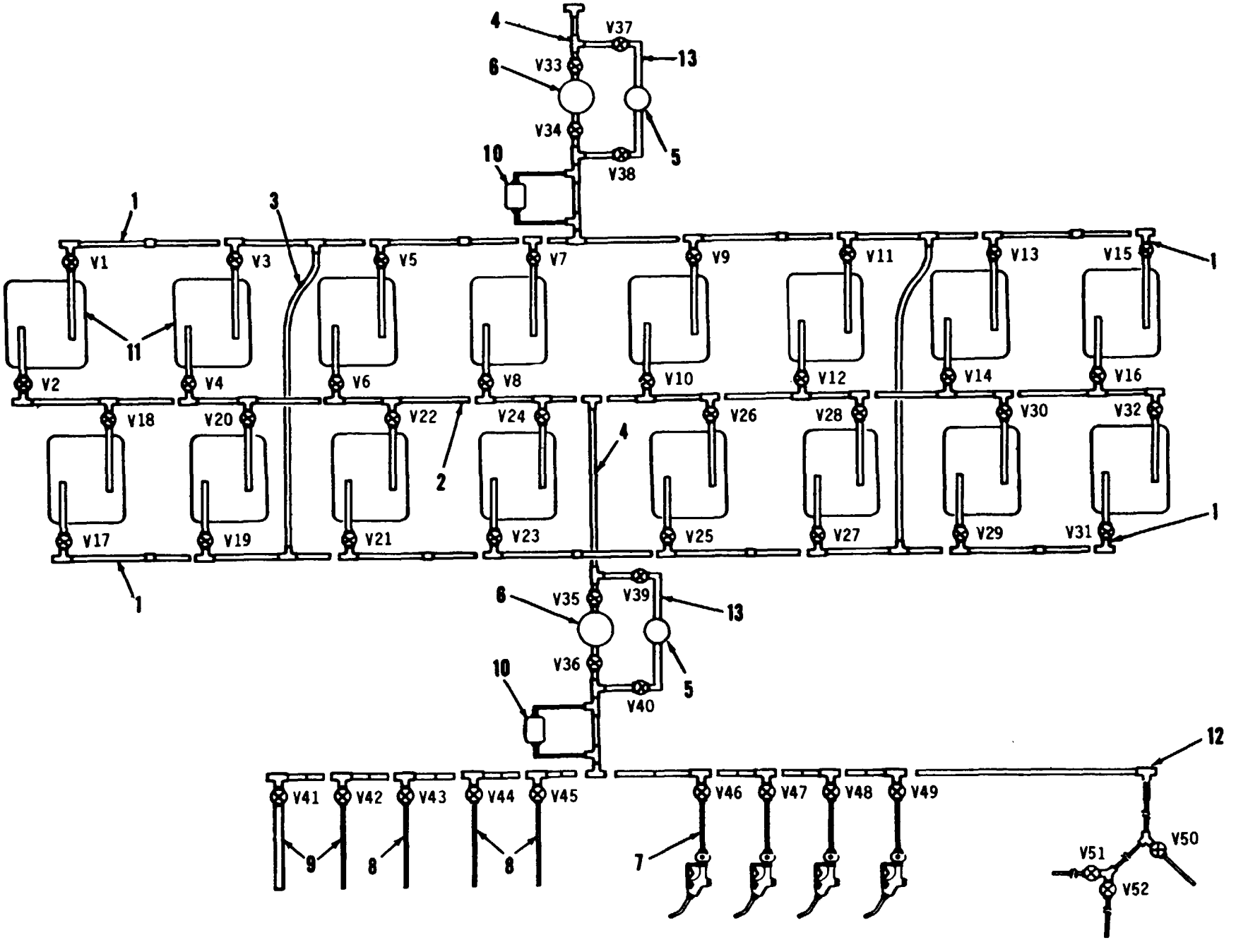

Figure 1-4. 800K Water Distribution System

50,000 GALLON TANK (11). Stores potable water. Assumes pillow shape when filled. Handles on sides of tank moves and positions the tank when empty. When not in use tank may be folded or rolled and stored for shipping.

BAG FILLER CONNECTION KIT (12). Connects filler bags to hose-nozzle connection kit on the WDS800K system.

125 GPM PUMP CONNECTION KIT (13). Contains components necessary to connect the 125 GPM pump to the WDS800K system.

TRICON CONTAINER. (Not Shown). Stores equipment for the WDS800K system components.

1-14. LOCATION AND DESCRIPTION OF WDS1,000K SYSTEM COMPONENTS (FIGURE 1-5).

DISCHARGE CONNECTION KIT (1). Connects discharge side of storage tanks to the WDS1,000K water system.

SUCTION CONNECTION KIT (2). Connects suction side of storage tanks to the WDS1,000K water system.

INTERCONNECTION KIT (3). Connects all discharge sections of the WDS1,000K system.

350 GPM PUMP CONNECTION KIT (4). Connects components of the 350 GPM pump to the WDS1,000K water system.

125 GPM PUMP W/ENGINE (5). Supplies water under pressure to the WDS1,000K water system.

350 GPM PUMP ASSY (6). Supplies water under pressure to the WDS1,000K system.

HOSE NOZZLE CONNECTION KIT (7). Contains nozzle connections for the WDS1,000K system

2-INCH HOSE CONNECTION KIT (8). Contains 2-inch hose connections for the WDS1,000K system.

4-INCH HOSE CONNECTION KIT (9). Contains 4-inch hose connections for the WDS1,000K system.

HYPOCHLORINATION UNIT (10). Supplies hypochloride solution to the water in direct proportion to the flow rate, purifying the water in the WDS1,000K system.

50,000 GALLON TANK (11). Stores potable water. Assumes pillow shape when filled. Handles on sides of tank moves and position tank may be folded or rolled and stored for shipping.

BAG FILLER CONNECTION KIT (12). Connects filler bags to hose-nozzle connection kit on the WDS1,000K system.

125 GPM PUMP CONNECTION KIT (13). Contains components necessary to connect the 125 GPM pump to the WDS1,000K system.

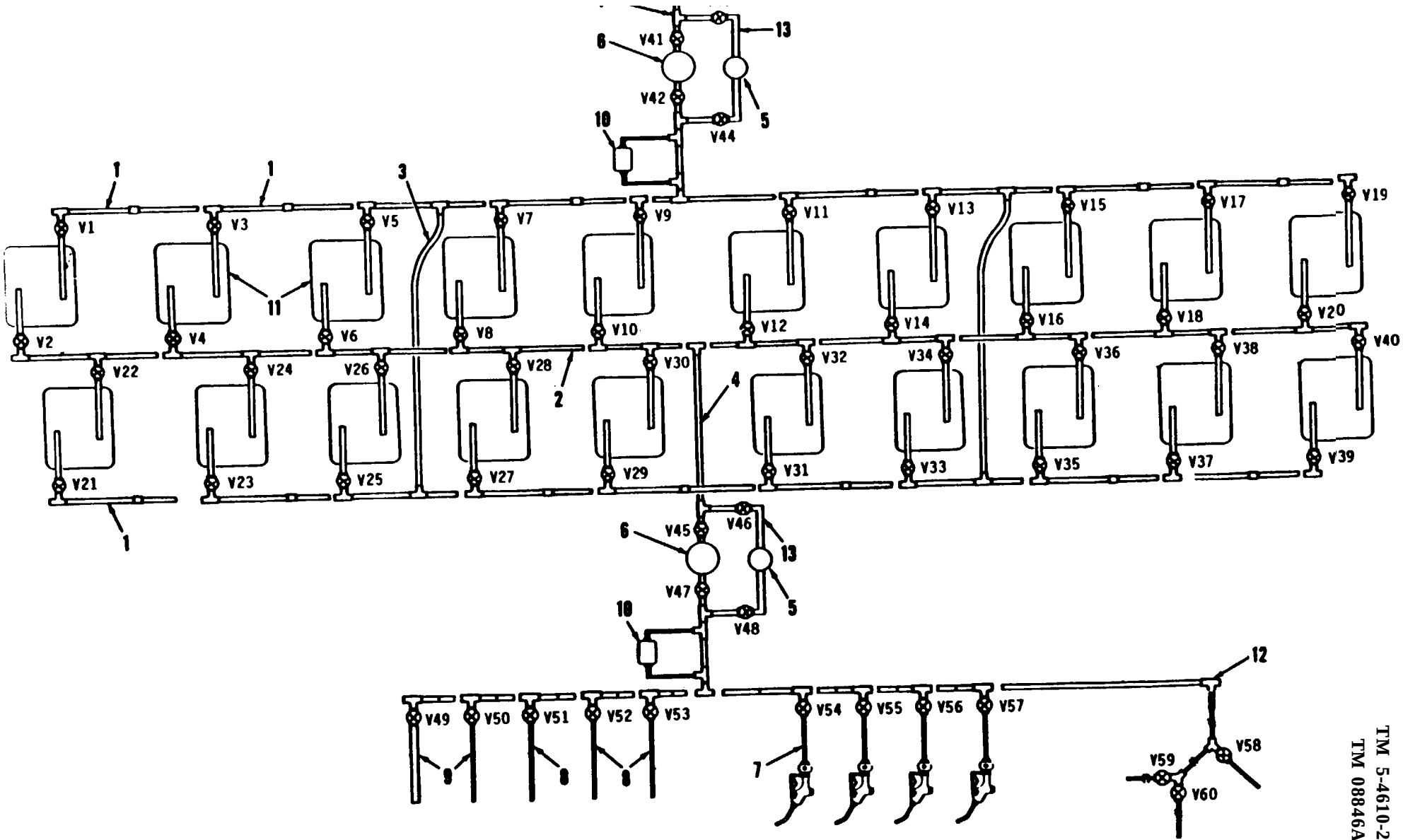

Figure 1-5. 1,000K Water Distribution System

1-15. LOCATION AND DESCRIPTION OF WATER SYSTEM MAJOR ASSEMBLY COMPONENTS

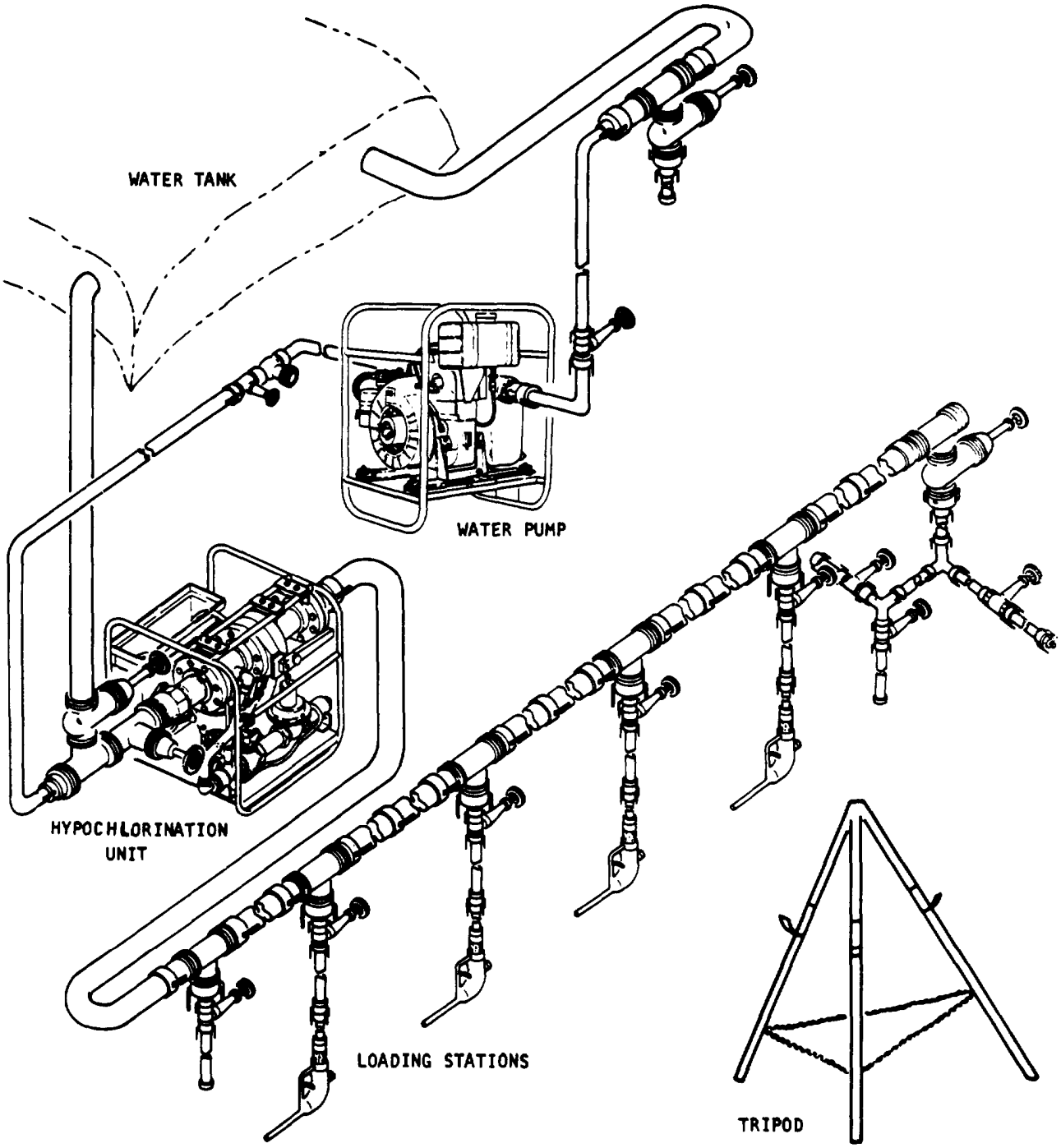

Figure 1-6. Water Distribution System Major Components

a. 350 GPM Pump Assy. The 350 GPM pump assy is described in TM 5-4320-226-14.

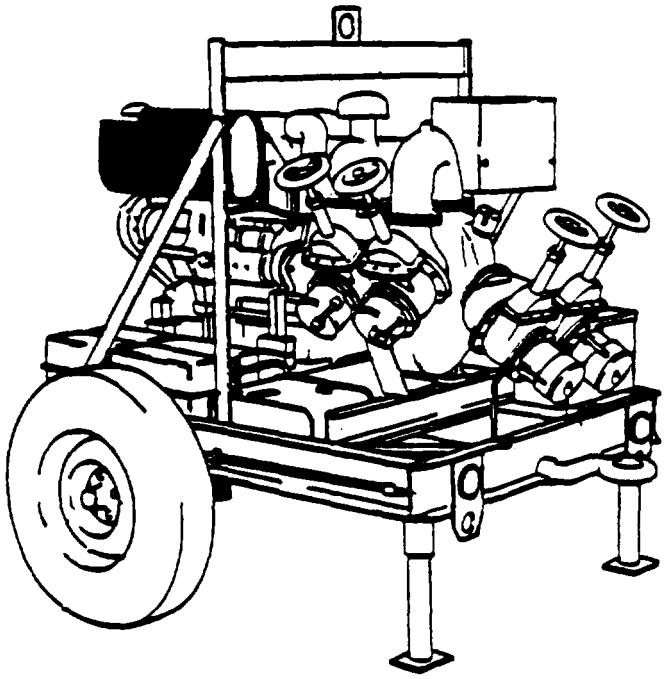

Figure 1-7. 350 GPM Pump Assembly

b. 125 GPM Pump Assy. The 125 GPM pump assy is described in TM 5-2805-257-14 and TM 5-4320-208-12&P.

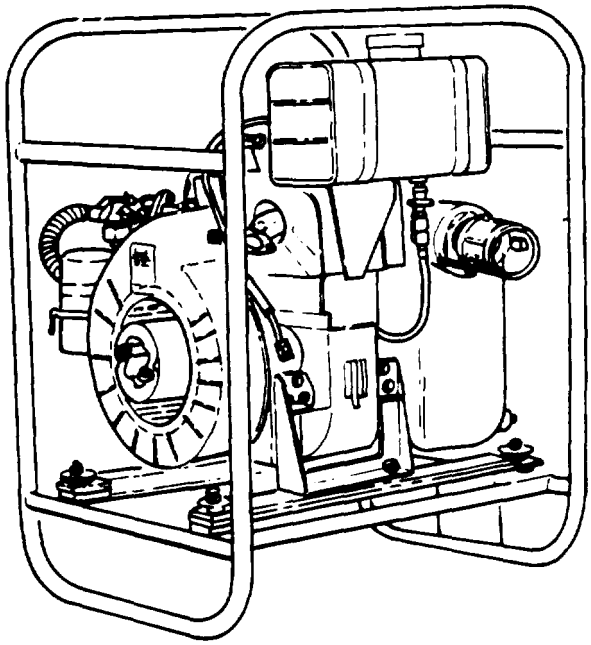

Figure 1-8. 125 GPM Pump Assembly

c. **Hypochlorination Unit.** The Hypochlorination Unit has five major components as follows.

4-Inch Bypass Manifold: Has inlet and outlet water connections to 4-inch water line.

Water Pressure Meter. Measures water flow rate.

Flow Rate Valve. Changes the rotary motion of the water meter into a reciprocating pilot valve motion which controls the hypochlorinator motor.

Hypochlorinator Pump Stroke Adjustment. Feeds hypochlorite solution to water line in proportion to flow of water in the line.

Reservoir Solution Tank. Stores hypochlorite solution for use by the Hypochloration Unit.

d. **Water Tank (20K and 50K).** The water tank stores potable water. The unit consists of the collapsible tank, (constructed of one ply nylon fabric impregnated with chlorobutyl), vent and drain assys, a 1/2-inch drain hose and control valve assy. When filled, the tank assumes a pillow shape. Handles are provided along all sides of the tank for moving and positioning while empty. When not in use, the tank may be folded or rolled and stored in the shipping container.

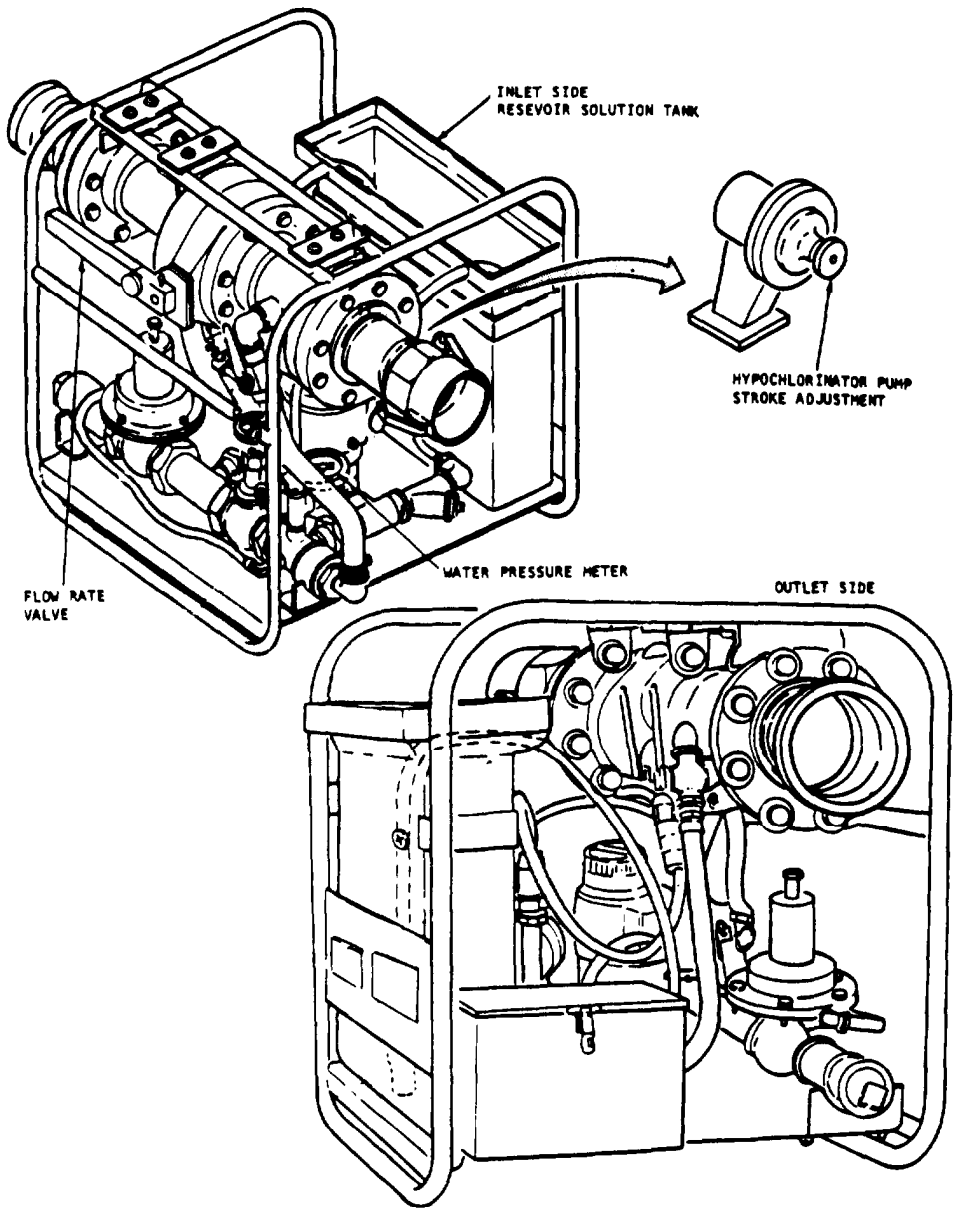

e. Valve Assys and Y-Connectors. Valve assys and Y-connectors control flow of water during installation, operation and disassembly of 20K WDS, 40K WDS, 300K WDS, 800K WDS, 1,000K WDS.

NOTE

The valves and Y-Connectors supplied with the 20K WDS, 40K WDS, 300K WDS, 800K WDS, 1,000K WDS have a male and female quick-disconnect camlocking connector. These connectors were installed at the factory and allow the valves to be quickly installed or removed from the system.

f. Stand Assy. Stand assys are used to hang nozzle assys on when not in use.

g. Nozzle Connection Kit. Nozzle connection kits are supplied with the system for dispensing water. Each nozzle connection kit has a quick-disconnect connector and a swivel for ease of operation.

h. Bag Filler Connection Kit. A bag filler connection kit is supplied with each system. The primary function is for extra storage of water in hospital connection kit. A hospital connection kit is supplied with each system.

1-16. DIFFERENCES BETWEEN MODELS.

	WDS20K	WDS40K	WDS300K	WDS800K	WDS1,000K
125 GPM Pump	1	2	2	2	1
350 GPM Pump Assy		1	3	3	3
Hypochlorination Unit	1	1	2	2	2
125 GPM Pump Connection Kit	1	2	2	2	2
250 GPM Pump Connection Kit		1	2	2	2
Hose Nozzle Connection Kit	4	4	4	4	4
4-inch Hose Connection Kit			2	2	2
2-Inch Hose Connection Kit	1	8	4	6	6
20,000 Gallon Tank	1	3	16		
50,000 Gallon Tank				16	20
Interconnection Kit			2	2	2
Dual Tank Connection Kit		1	8	8	10
Bag Filler Connection Kit	1	1	1	1	1
20,000 Gallon Accessory Kit	1	1	1		
50,000 Gallon Accessory Kit				1	1
Fuel Drum Adapter Kit	1	3	5	5	5
Single Tank Connection Kit	1				
Hospital Connection Kit	1	1	1	1	1

1-17 EQUIPMENT DATA.

a. **350 GPM Water Pump and Engine.** Refer to TM 5-4320-226-14.

b. **125 GPM Water Pump and Engine.** Refer to TM 5-2805-257-14 for engine data and TM 5-4320-208-12 & P for pump data.

c. **Hypochlorination Unit.**

Weight and Dimensions	
Weight	375 lbs (20.0 cu ft)
Length	26 inch (660.4 mm.)
Width	26 inch (660.4 mm.)
Height	28 inch (711.2 mm.)
Flow Rate	0 to 350 GPM (22.0 liters/sec)
Reservoir Capacity	5 gallons (18.9 liters)

d. **50,000 Gallon Collapsible Water Tank.**

Weights and Dimensions	
Weight (empty)	1400 lbs (635.0 Kg.)
Dimensions (dry)	25 x 65 ft (7,620 X 19,812 mm.)
Dimensions (filled)	5 ft 8 in x 23 ft x 63 ft (1,727 X 19,202 mm.)
Capacity	50,000 gallons (189,250 liters)

e. **20,000 Gallon Collapsible Water Tank.**

Weights and Dimensions	
Weight (empty)	3,750 lbs (520.0 cu ft)
Dimensions (dry)	28 x 24 ft (8,534 X 7,315 mm.)
Dimensions (filled)	26.5 x 22.5 x 5.5 ft (8,077 X 6,858 X 1,676 mm.)
Capacity	20,000 gallons (75,700 liters)

Section III. TECHNICAL PRINCIPLES OF OPERATION

1-18. DESCRIPTION AND OPERATION.

The water distribution system illustrated in this technical manual show configurations for maximum storage and distribution capacities. To increase storage and distribution capacities beyond the capabilities of one system, additional water distribution systems may be connected to the existing system. To reduce storage capability, turn off valves to unwanted storage tanks.

a. WDS20K Operation. The 125 GPM pump (paragraph 1-10) fills the 20,000 gallon water tank by opening valves V2, V3, V4, and V5 and closing valve V1. To discharge water from the system, close valves V2 and V5 and open V1, V3, and V4. The amount of water discharged through the nozzles or hospital connection kit varies with demand up to the 125 GPM capacity of the pump. the Hypochlorination Unit mixes a hypochloride solution with the water in the correct proportion to water flow.

b. WDS40K Operation. The WDS40K system (paragraph 1-11) has two 125 GPM pumps and one 350 GPM pump. One 125 GPM pump fills one or two 20,000 gallon tanks by opening valves VI through V6. The 350 GPM and remaining 125 GPM discharges water from the two tanks on demand at the rate determined by the nozzles, discharge hoses or bag filler connections. If discharge demand is less than the capacity of one pump, the remaining pump can be shut down and the associated pump valves closed. The Hypochlorination Unit mixes a hypochloride solution with the water in the correct proportion to water flow.

c. WDS300K Operation. The WDS300K system (paragraph 1-12) has two 125 GPM and three 350 GPM water pumps. One 125 GPM and 350 GPM pump combination fills the storage tanks and the other three pumps discharge the tanks. By filling one 20,000 gallon water tank at a time, the system can discharge water almost immediately after setting up. One Hypochlorination Unit is connected to the discharge side of each water pump combination unit.

d. WDS800K and WDS1,000K Operation. Operation of the WDS800K and WDS1,000K are identical to the WDS300K system (paragraphs 1-13 and 1-14) except the WDS800K and WDS1,000K systems have more storage capacity than the WDS300K system.

CHAPTER 2

OPERATOR INSTRUCTIONS

Section I. DESCRIPTION AND USE OF OPERATOR'S CONTROLS AND INDICATORS.

2-1. GENERAL.

This section contains descriptions of operator controls and indicators for WDS20K, WDS40K, WDS300K, WDS800K, and WDS1,000K water distribution systems. Controls and indicators for the 350 GPM pump are described in TM 5-4320-226-14. Controls and indicators for the 125 GPM pump are described in TM 5-2805-257-14 and TM 5-4320-208-12&P. Operation of valves and nozzles used in the five water systems is described in Section III.

2-2. HYPOCHLORINATION UNIT CONTROLS AND INDICATORS.

This section contains descriptions of operator controls and indicators for the Hypochlorination Unit, and their functions which are used in all five water distribution systems. To ensure that the equipment is ready for operation at all times it must be inspected (as outlined in Section II of this chapter) before operation, during operation, and after operation so that defects may be discovered and corrected before they result in serious damage or failure of the unit. The necessary preventive maintenance checks and services will be performed before operation. Defects discovered during operation of the unit will be noted for future correction, to be made as soon as operation has ceased. Stop operation immediately if a deficiency is noted during operation which would damage the equipment if operation were continued. After operation, preventive maintenance checks and services (PMCS) will be performed at intervals based on the normal operations of the equipment. Reduce the interval to compensate for abnormal conditions. Report defects or unsatisfactory operating characteristics beyond the scope of the operator at organizational maintenance at the earliest opportunity.

Control or Indicator	Function
Water Pressure Regulator Valve	Adjust water flow through water pressure meter.
Flow Regulator Valve	Controls water flow rate through water meter (14 GPM).
Water Injection Valve	Controls water flow from 4-inch manifold to hypochlorination them-o-feeder assy.
Pressure Regulator Valve	Controls water flow rate in 2 to 100 GPM mode.
Flow Rate Valve	Controls water flow rate in 100 to 400 GPM mode.
Pump Stroke Adjustment	Sets stroke rate of hypochlorite pump.
Water Pressure Meter	Monitors water pressure for the system.

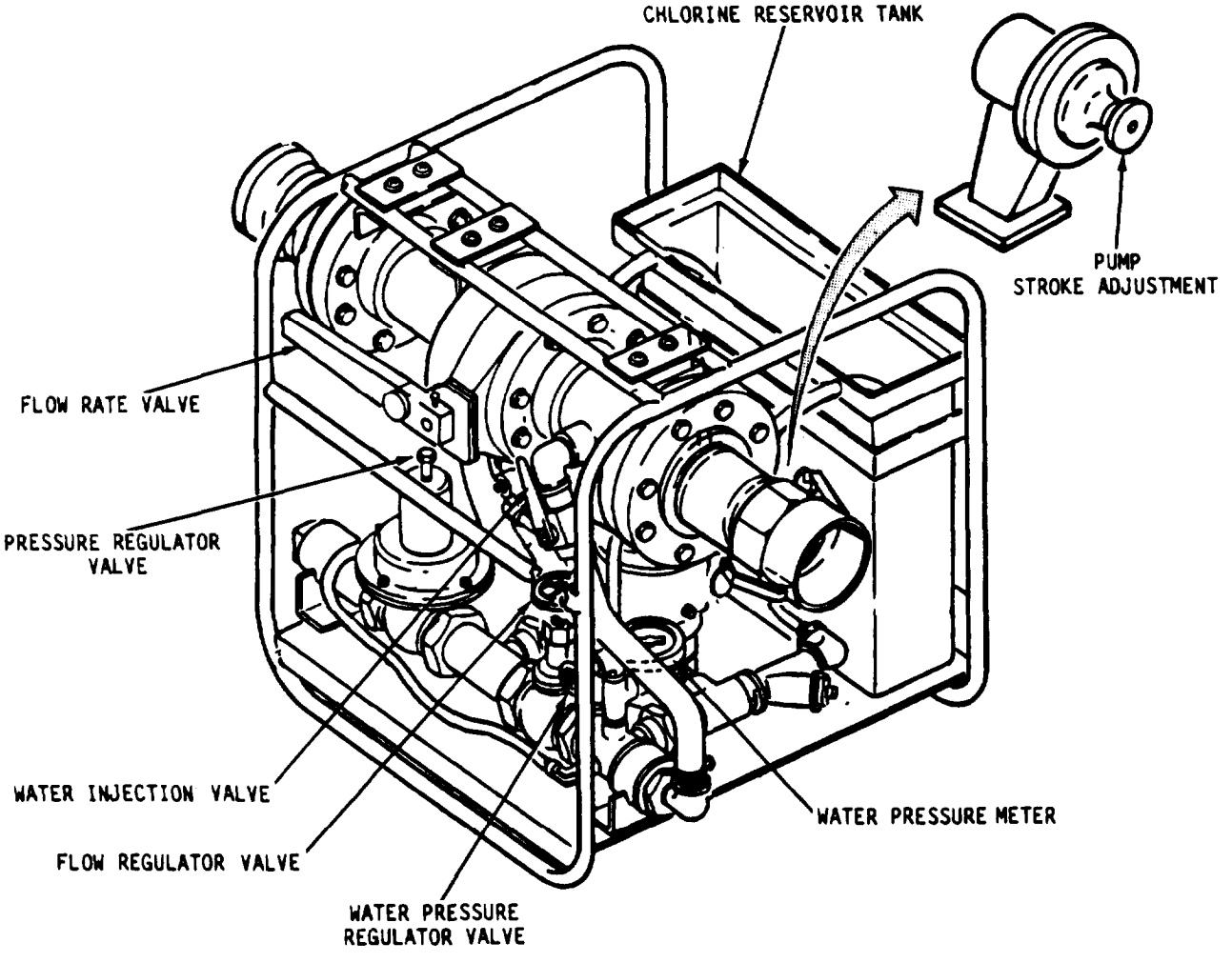

Control or Indicator	Function
Chlorine Injection Valve	Controls amount of chlorine solution being injected into main water supply.
Water Return Valve	Controls water returned to main water supply.
Water Meter	Monitors water flow rate through hypochlorinator.

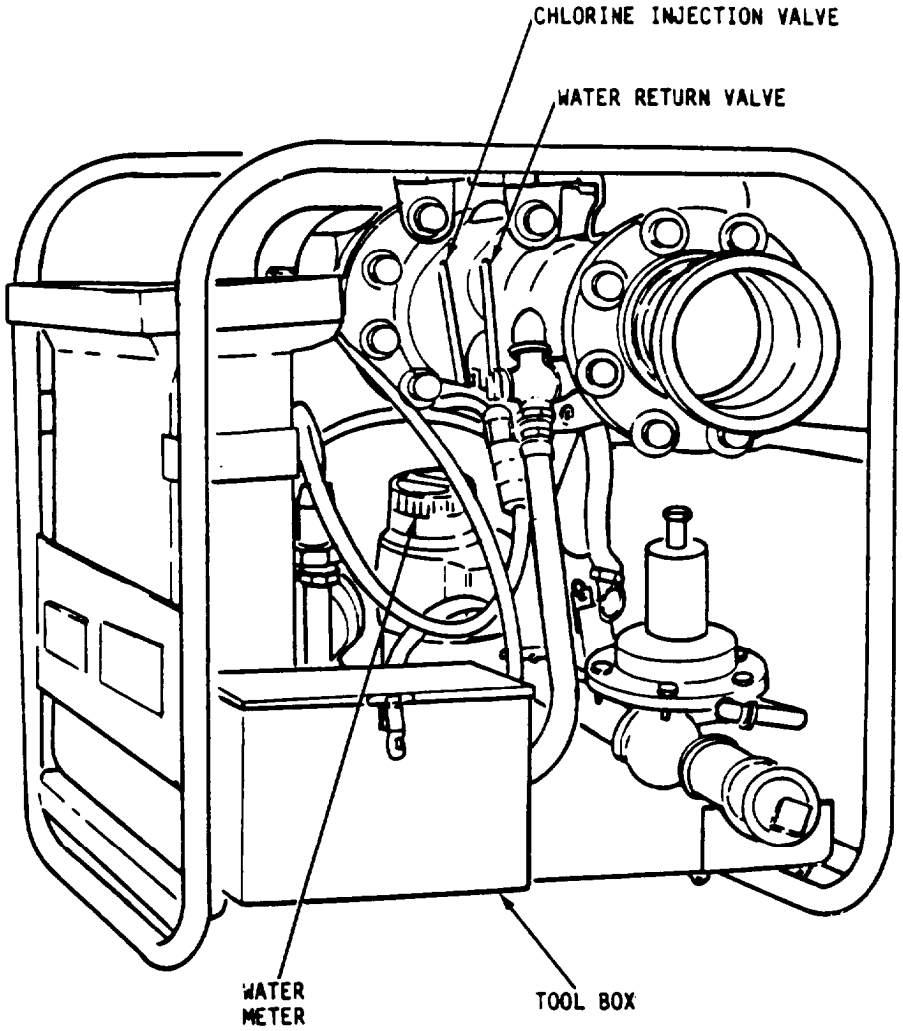

Section II. OPERATOR'S PREVENTIVE MAINTENANCE CHECKS AND SERVICES (PMCS)

2-3. GENERAL.

2-3.1 Before You Operate the Water Distribution System. Always keep in mind the CAUTIONS and WARNINGS. Perform your "before" (B) PMCS.

2-3.2 While You Operate. Always keep in mind the CAUTIONS and WARNINGS. Perform your "during" (D) PMCS.

2-3.3 After You Operate. Be sure to perform your after (A) PMCS.

2-3.4 If Your Equipment Fails to Operate. Troubleshoot with proper equipment. Report any deficiencies using DA Form 2407, see DA PAM 738-750. Marine Corp personnel refer to MCO 4855.10 for correct reporting procedures.

2-4. PMCS PROCEDURES.

2-4.1 General. The PMCS procedures are contained in table 2-1. They are arranged in logical sequence requiring a minimum amount of time and motion on the part of the persons performing them.

2-4.2 Item Number Column. Checks and services are numbered in chronological order regardless of interval. This column is used as a source of item numbers for the "TM Number" column on DA Form 2404, Equipment Inspection and Maintenance Worksheet, in recording results of PMCS.

2-4.3 Internal Columns. The columns headed "B", "D", and "A" contain a dot (Ž) opposite the appropriate check. Thus, if a given check is performed before operation, a dot is placed opposite the checks in the "B" column, if the check is performed after operation, a dot is placed in the column headed "A", and if the same check is made in two or more periods, a dot is placed in each applicable column.

2-4.4 Item To Be Inspected Column. The items to be inspected are identified by a few words, usually the common name.

2-4.5 Procedures Column. This column contains a brief description of the procedure by which the check is to be performed. It contains all the information required to accomplish the checks and services, including tolerances, adjustment limits, and instrument and gage readings.

2-4.6 Equipment Is Not Ready/Available If: Column. This column contains the criteria which will cause the equipment to be classified as not ready or not available because of inability to perform its primary mission.

Table 2-1. Preventive Maintenance Checks and Services

B - Before Operation D - During Operation A - After Operation

Item No.	Interval B	Interval D	Interval A	Item To Be Inspected	Procedure Inspect For And Have Repaired Or Replaced As Necessary	Equipment Is Not Ready/ Available If:
1	•	•	•	HYPOCHLORINATION UNIT	a. Check valves for freedom of movement. b. Check reservoir for hypochloride solution. c. Check flow rate meter for proper flow rate.	No solution in reservoir; flow meter broken.
2	•	•	•	HOSE ASSY	a. Check hose assys for cuts, leaks and deterioration. b. Check female coupling half for cracks, leaks and damaged or missing gasket. c. Check male coupling half for cracks, leaks, and damaged or missing parts. d. Replace defective hoses and couplings.	Leaking or damaged hose; missing or damaged gaskets, or protective plugs.

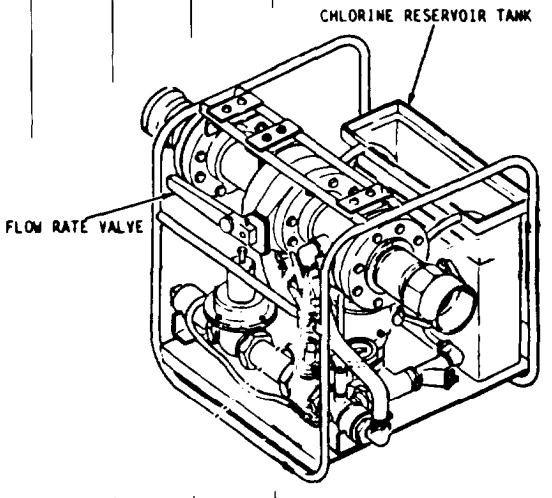

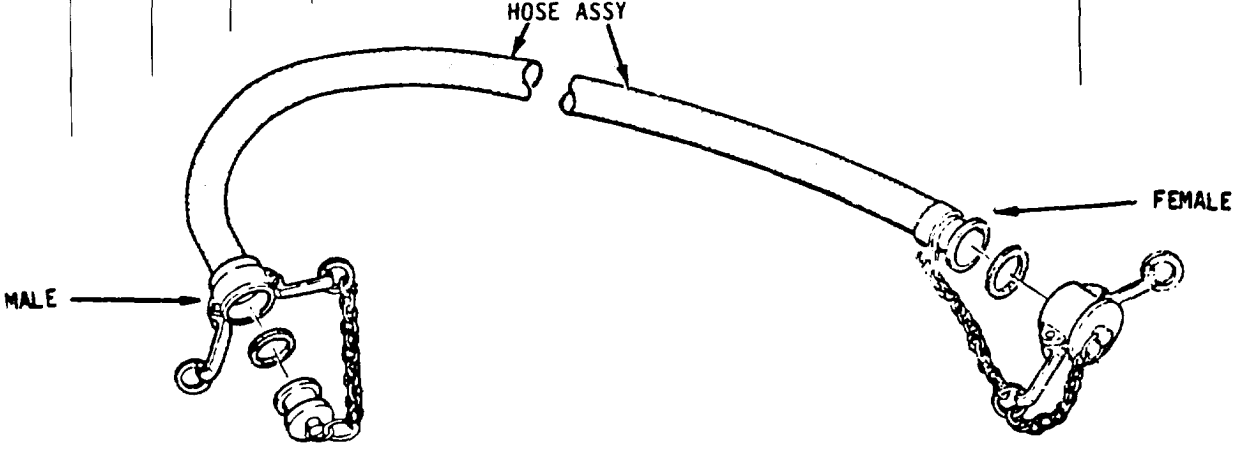

Table 2-1. Preventive Maintenance Checks and Services (Continued)

B - Before Operation **D - During Operation** **A - After Operation**

Item No.	Interval B	Interval D	Interval A	Item To Be Inspected	Procedure Inspect For And Have Repaired Or Replaced As Necessary	Equipment Is Not Ready/ Available If:
3	•	•	•	VALVE ASSY	a. Inspect control handle of valve sssy for operation. b. Inspect female coupling for cracks, leaks damaged or missing gasket. c. Inspect male coupling for cracks, leaks and dents. d. Replace defective valve assy.	Lever inoperable gasket leaking.
4	•	•	•	Y-CONNECTOR	a. Check "Y"-connector for leaks, cracks, or missing gaskets. b. Check female coupling for damaged or missing gasket. c. Replace defective Y-connector.	Leaks, cracks or missing gaskets

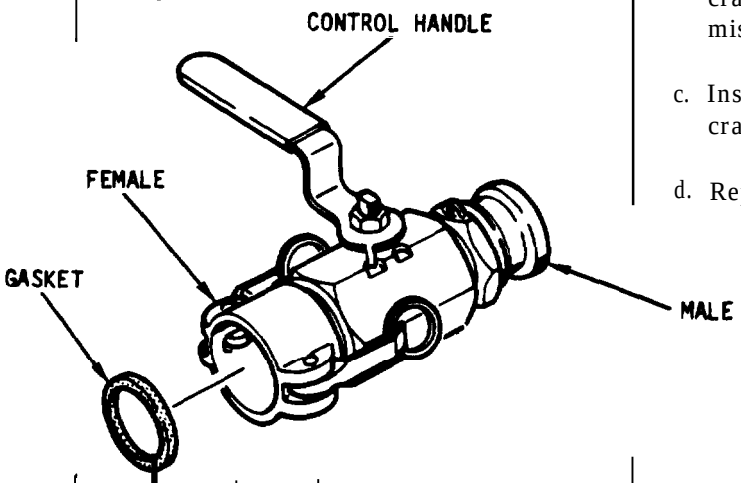

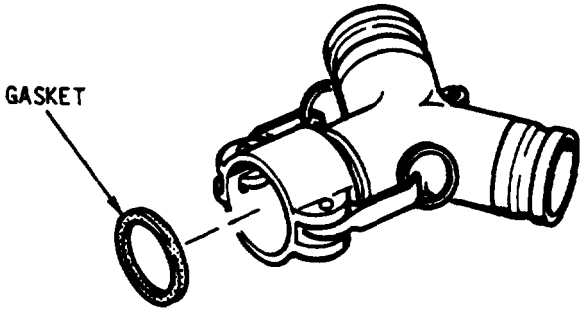

Table 2-1. Preventive Maintenance Checks and Services (Continued)

B - Before Operation | D - During Operation | A - After Operation

Item No.	Interval B	Interval D	Interval A	Item To Be Inspected	Procedure Inspect For And Have Repaired Or Replaced As Necessary	Equipment Is Not Ready/ Available If:
5	•	•	•	WATER DISTRIBUTION NOZZLE ASSY	a. Inspect nozzle body for cracks, leaks, and damaged or missing parts. b. Check control handle for proper operation. c. Check swivel for freedom of movement. d. Check female quick-disconnect for damaged or missing gaskets. e. Replace defective nozzle assy.	Handle inoperable; gasket leaking.
6	•	•	•	STAND ASSY	a. Inspect stand assy for bent legs and missing parts. b. Replace defective stand assy.	Missing legs.

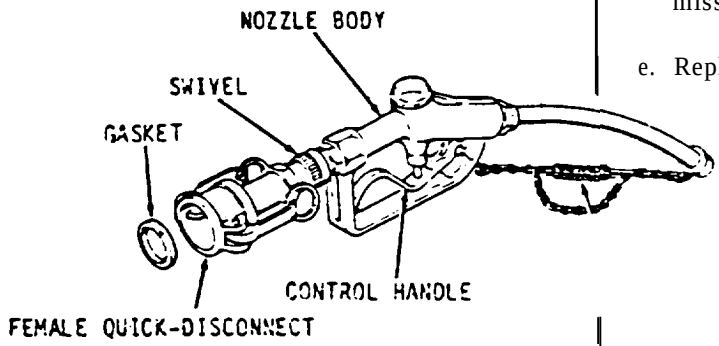

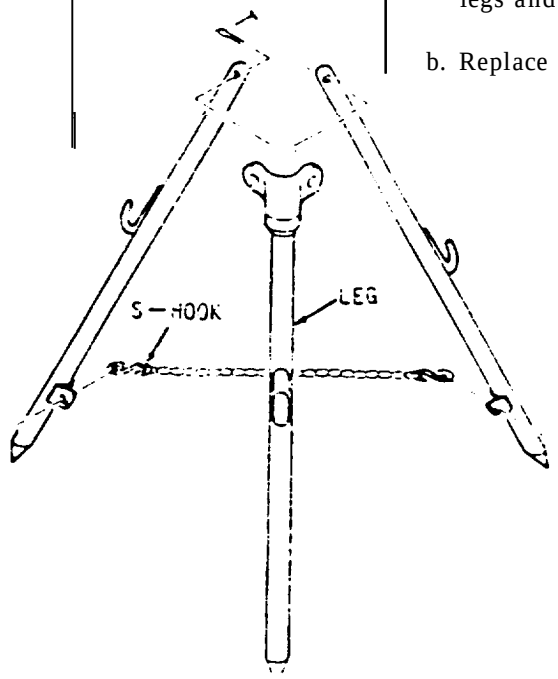

Table 2-1. Preventive Maintenance Checks and Services (Continued)

B - Before Operation **D - During Operation** **A - After Operation**

Item No.	Interval B	Interval D	Interval A	Item To Be Inspected	Procedure Inspected for and Have Repaired Or Replaced As Necessary	Equipment Is Not Ready/ Available If:
7	●			WATER METER ASSEMBLY	a. Inspect meter indicator for damage, moisture on inside of glass cover, and loose or missing screws.	Indicator cracked.
	●		●		b. Check for loose or missing bolts and nuts.	Hardware missing.
	●		●		c. Inspect couplings for cracks and bent or broken locking arms. Inspect for cut, torn or missing coupling gaskets. Check for missing dust caps and plugs.	Coupling or gasket damaged. Gasket missing.

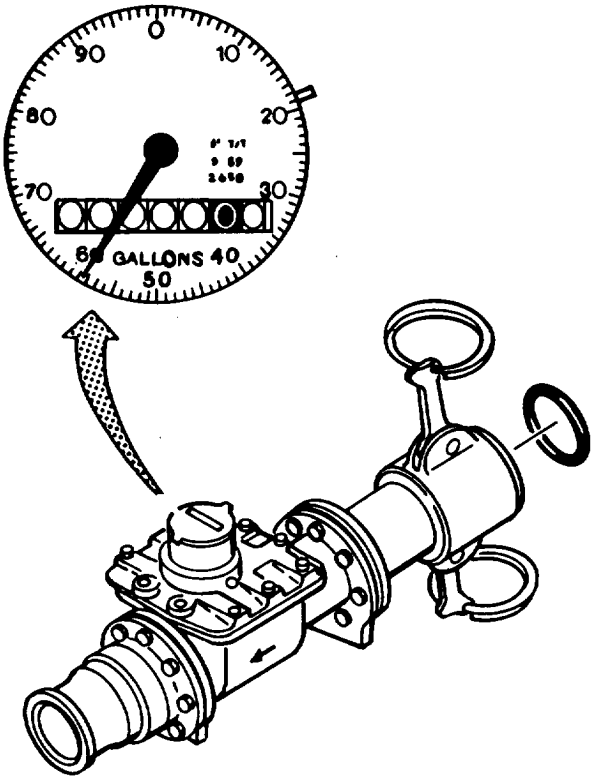

Section III. OPERATION UNDER USUAL CONDITIONS

2-5. ASSEMBLY AND PREPARATION FOR USE

2-6. GENERAL

These procedures describe the operation, assembly, and preparation of the WDS20K, WDS40K, WDS300K, WDS800K, and WDS1,000K water distribution systems in the fill and discharge modes of operation. The fill mode of operation tills the water storage tank and the discharge mode draws water from the water storage tank. In all but the WSDS20K system the fill mode and discharge mode can occur at the same time. Each water distribution system has four elements that make up the system: water pumps, water storage tank(s), Hypochlorination Unit, and a water distribution system consisting of distribution stations. Before attempting to operate your water distribution system, become thoroughly familiar with the operation of all elements.

2-7. INITIAL INSPECTION

Inspect the equipment for any damage incurred during shipment. Report any problems to your supervisor.

2-8. ASSEMBLY PROCEDURE

a. Selection and Preparation of Assembly Site.

(1) Select a level, debris free area.

(2) Place the pump(s) in position with the female quick-disconnect facing toward the water tanks and male toward site chosen for distribution of water

CAUTION

Prior to assembly of hoses ensure rigid hoses (suction) only are installed between pump and water drums. If this is not done, damage to hoses and pump can occur.

2-9. ASSEMBLY PROCEDURE

2-9.1 Set-up 20K WDS for Operation as follows:

CAUTION

Failure to follow set-up instructions could permit contaminants to enter the tank. If either a suction hose or discharge hose for any of the tank is ever detached, be sure to seal the unconnected end of the quick-disconnect elbow with the plug which is chained to the elbow.

a. Position 20,000 gallon tank (see Goodyear Aerospace publications 5-19-19, dated 1981). A drain fitting is located in the bottom of each tank, directly below the discharge port of the tank. Remove the plug which is threaded into the drain. Retain this plug for use during system disassembly. Attach the drain hose assy furnished with the tank to the drain fitting. Run the drain hose assy out past the side of the tank so that free drainage will occur when the tank is emptied and before the tank is folded for repacking. Be sure that the gate wheel on the drain hose assy is turned to the fully closed position.

b. Place the 125 GPM pump assy (13) above and as shown in (item 4, figure 1-1).

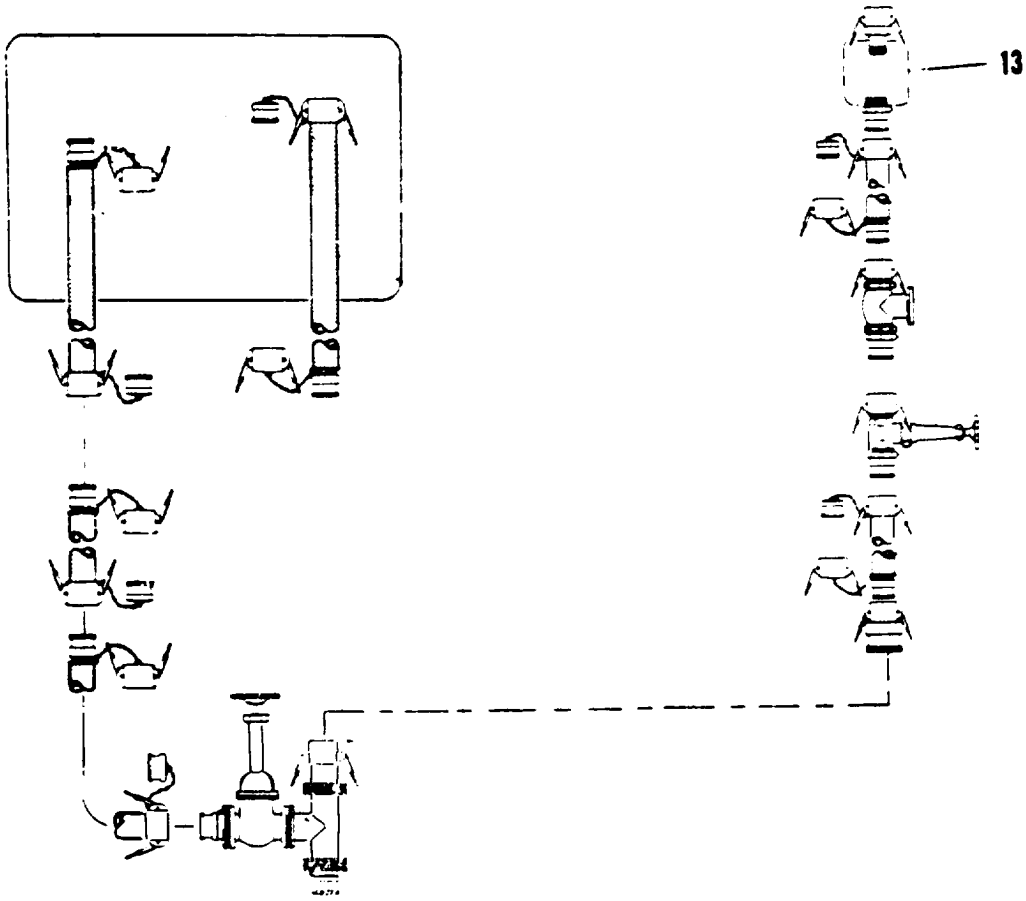

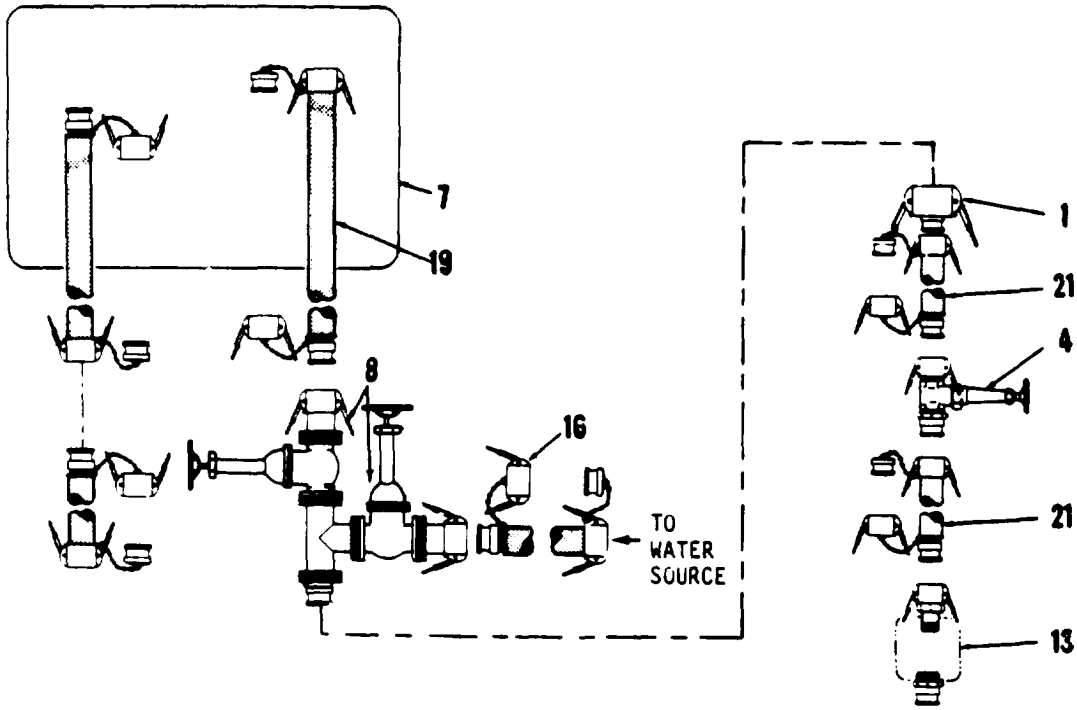

NOTE

The side of the 125 GPM pump (13) with the male connector should face towards the Hypochlorination Unit (item 7, figure 1-2).

c. Unroll hose assy (19) toward water tank (7).

d. Connect gate valve assy (4) to suction hose assy (21). Unroll hose assy toward water tank (7).

e. Connect suction hose assy (21) to female to male reducer (1).

f. Position gate valve and tee assy (8) so that male end of tee assy connects female to male reducer (1).

g. Connect gate valve end of gate valve and tee assy (8), nearest the water tank (7) suction hose assy (19).

h. Connect suction hose assy (19) to connector on water tank (7).

i. Assemble second gate valve (8), on gate valve and tee assy (8), in the same manner.

j. Connect male end of suction hose assy (16) to gate valve assy (8).

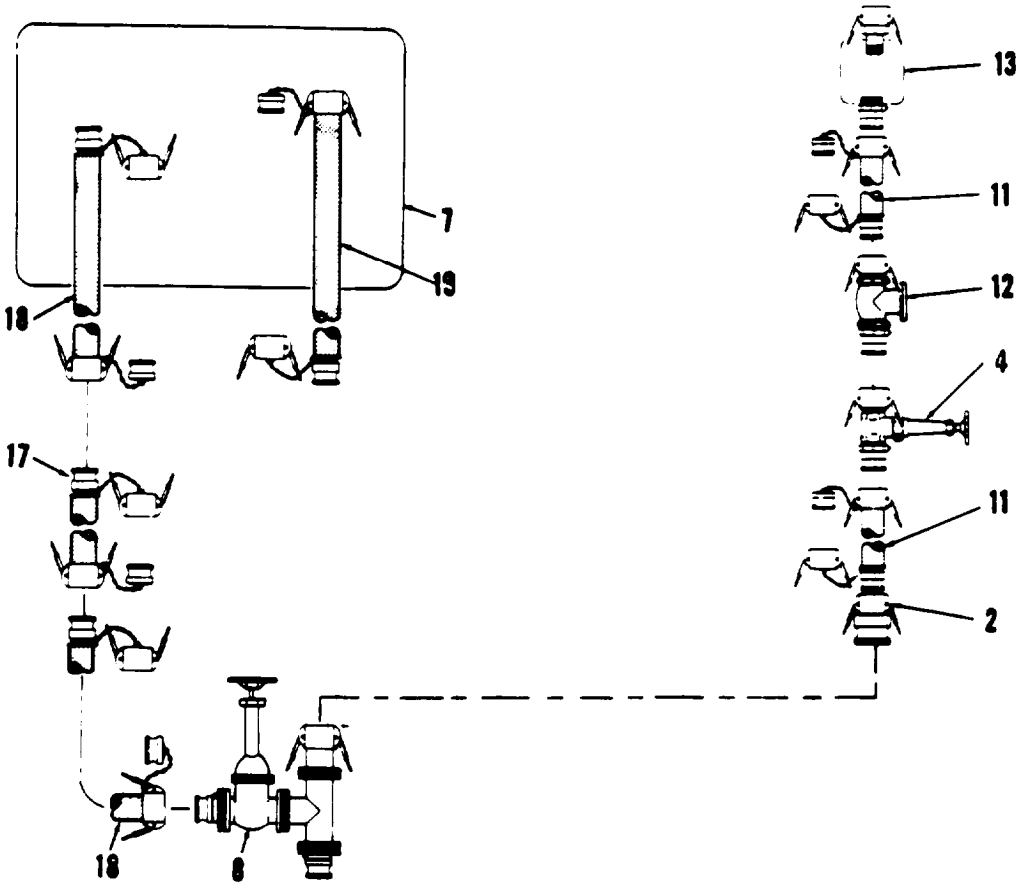

k. Connect discharge hose assy(11) to 125 GPM pump (13).

1. Connect male side of check valve (12) to gate valve assy (4) and female side of check valve (12) to discharge hose assy (11).

m. Connect gate valve assy (4) to discharge hose assy (11).

n. Connect hoseassy(11) to female to male reducer (2),

o. Connect female-to-male reducer (2) to female end, of gate valve and tee assy (8).

p. Connect male end of gate valve and tee assy (8) to discharge hose assy (18).

q. Connect discharge hose assy (18), to discharge hoseassy(17). Repeat preceding step and make final connections. Connect hose assy (18), to water tank (7).

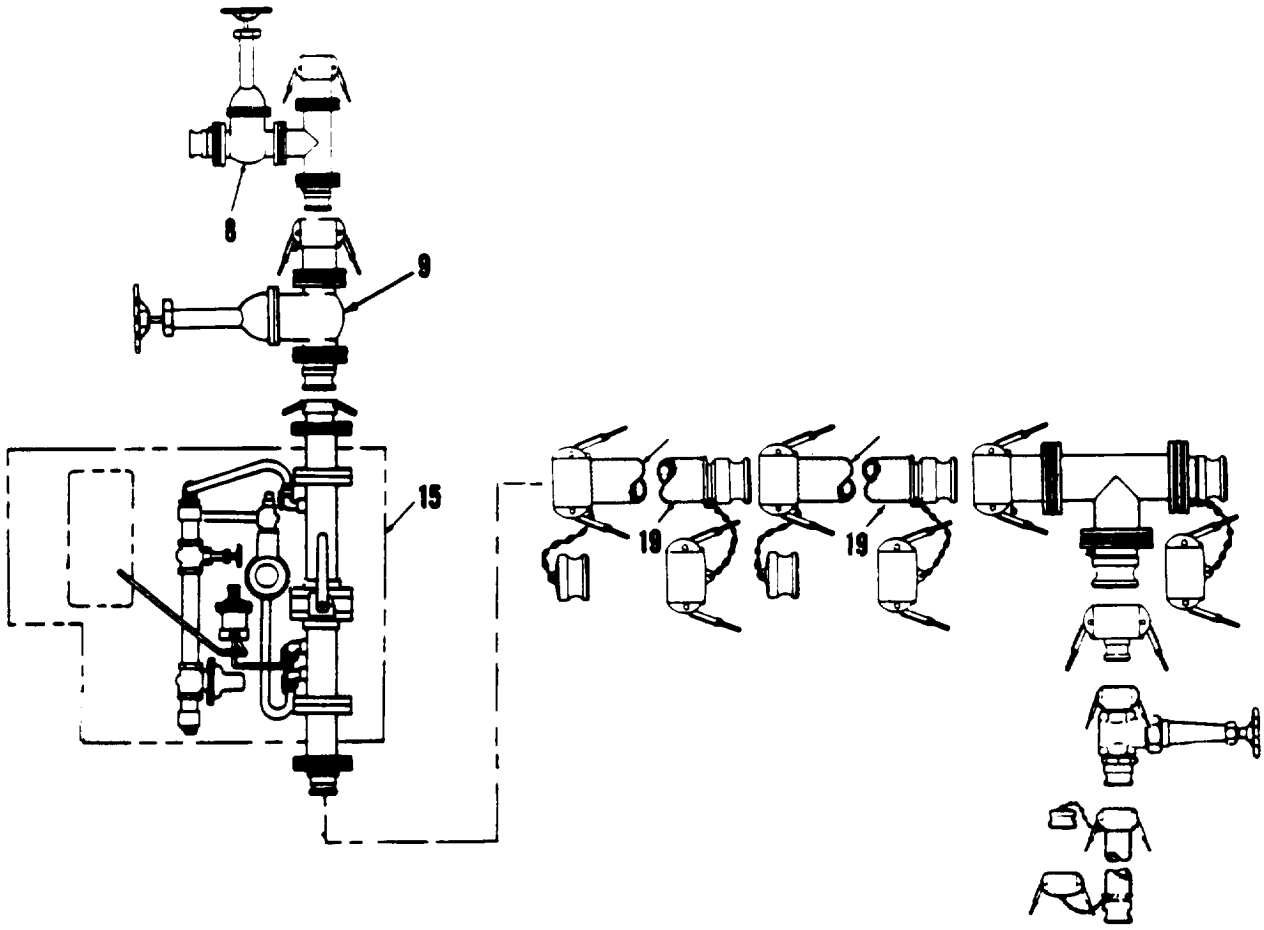

r. Connect tee assy (8) to gate valve (9). Position Hypochlorination Unit (15) with female end towards gate valve and tee assy (8).

s. Insert gate valve assy (9), between the gate valve and tee assy (8) and the Hypochlorination Unit (15), connect gate valve (9) to male portion of tee on gate valve and tee assy (8).

CAUTION

Prior **to** connecting gate valve (9) to Hypochlorination Unit ensure all protective paper and tape has been removed from quick-disconnects as this could contaminate or cause damage to the unit.

t. Connect gate valve (9) to Hypochlorination Unit (15).

NOTE

Item 19 consists of two (2) identical inter-connected hose assys. Simplify assembly by connecting the hoses before performing next step.

u. Connect discharge hose assy (19) to Hypochlorination Unit (15).

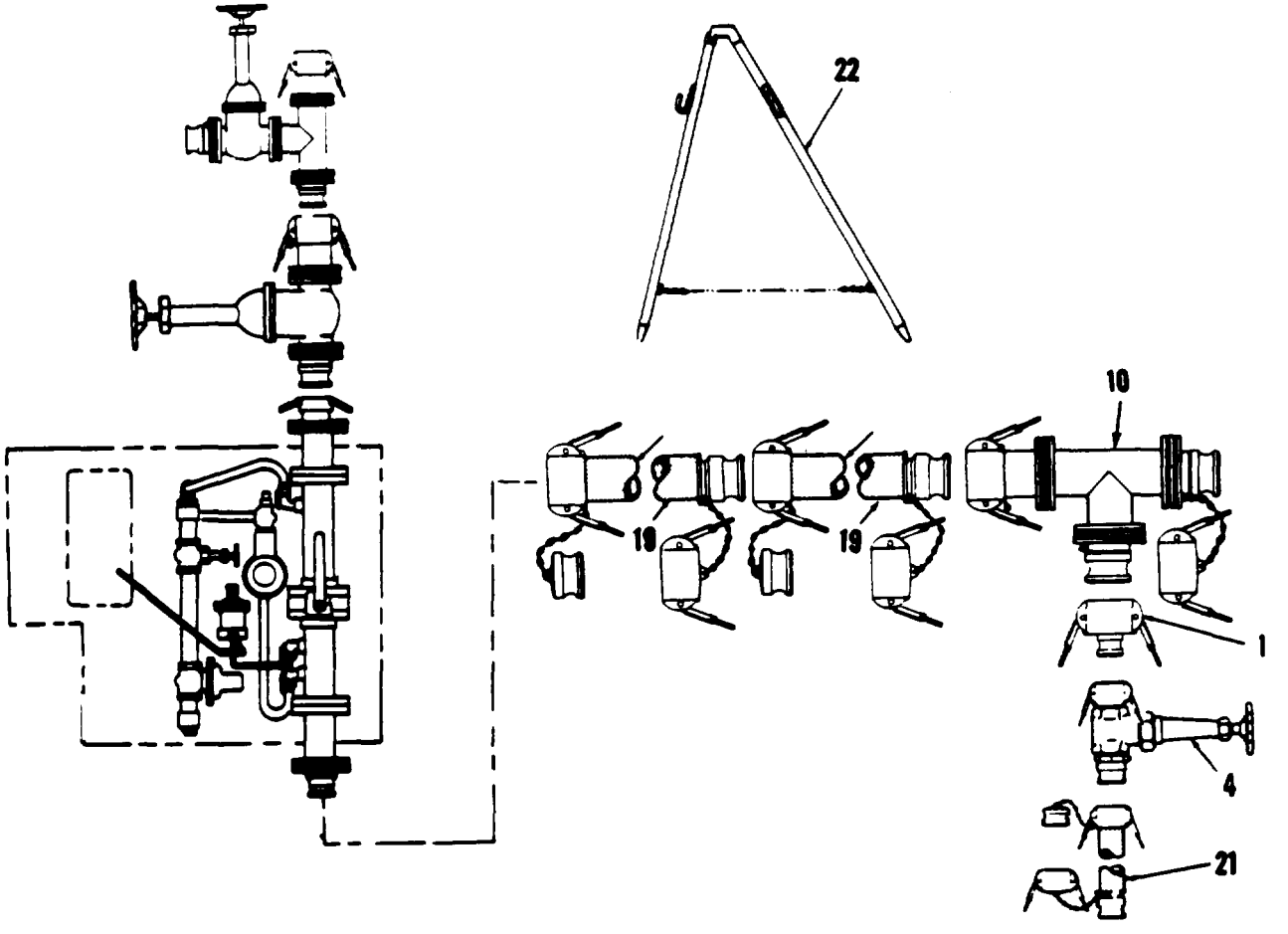

2-9.1.1 **Assemble Hose Connection Kit**

a. Connect hose assy (19) to tee assy (10).

b. Connect tee assy (10) to female to male reducer (1).

c. Connect female to male reducer (1) to gate valve assy (4), place valve in upright position.

d. Connect gate valve assy (4) to discharge hose assy (21). Unfold nozzle stand assy (22) and attach hose assy (21) to bracket on stand.

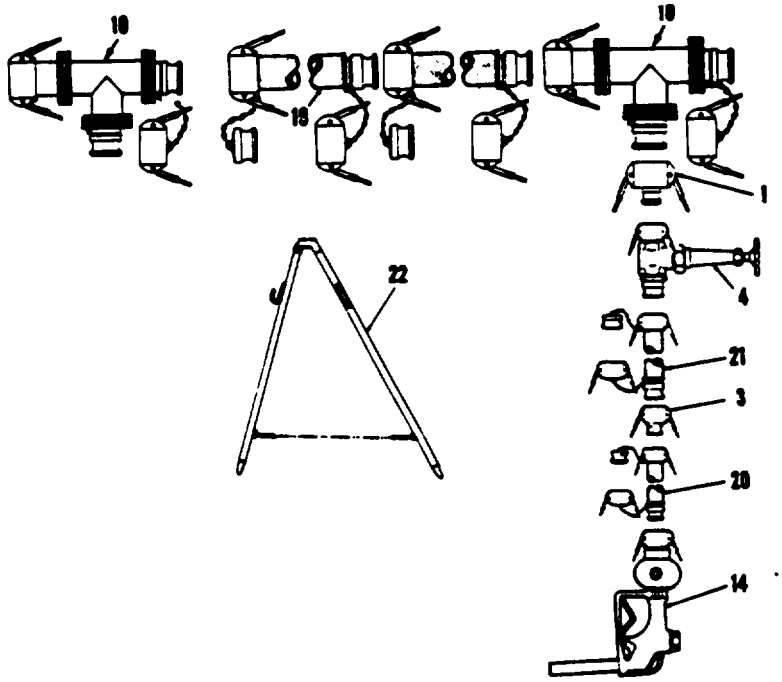

2-9.1.2 **Assemble Nozzle Kits**

NOTE

Item 19 consists of two (2) identical inter-connected hose assys. Simpliy assy by connecting the hoses before performing next step.

a. Connect tee assy (10), to discharge hose assy (19).

b. Connect hose assy (19) to tee assy (10).

c. Connect tee assy (10) to female to male reducer (1).

d. Connect gate valve assy (4), to reducer (1).

e. Connect gate valve assy (4) to discharge hose assy (21).

f. Connect female to male reducer (3), to hose assy (21).

g. Connect discharge hose assy (20) to reducer (3).

h. Place spray nozzle assy (14) in position, and connect to discharge hose assy (20). Unfold nozzle stand assy (22) and attach nozzle assy (14) to bracket on stand. Assemble three remaining nozzle connection kits and nozzle stand assys in the same manner.

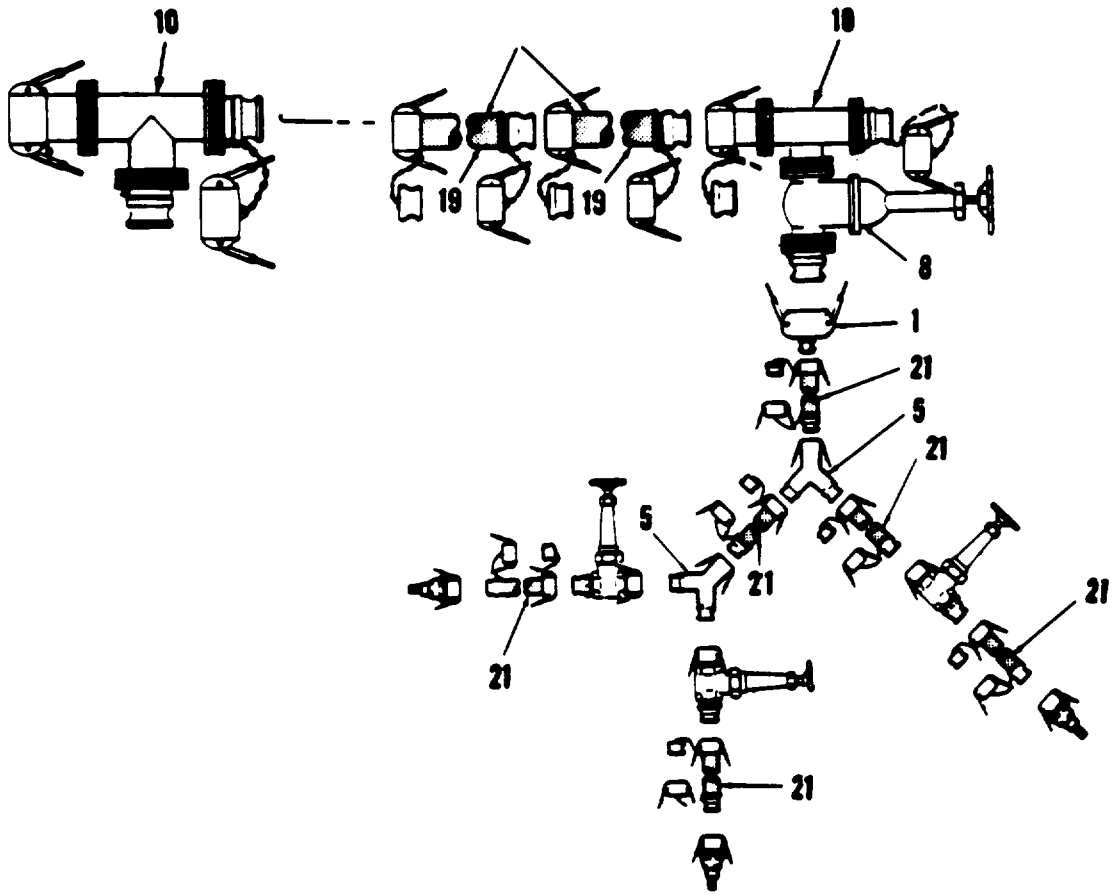

2-9.1.3 **Assemble Hospital Connection Kit**

NOTE

Item 19 consists of two (2) identical inter-connected hose assys. Simplify assy by connecting the hoses before performing next step.

a. Remove plug from tee assy (10) of Nozzle Connection Kit and connect discharge hose assys (19) to tee assy (10).

b. Connect male end of tee assy (10) to gate valve assy (8), place gate valve assy in upright position.

c. Connect male end of tee assy (8) to female to male reducer (1).

d. Connect discharge hose assy (21), to reducer (1).

e. Connect hose assy (21) to “Y” assy (5).

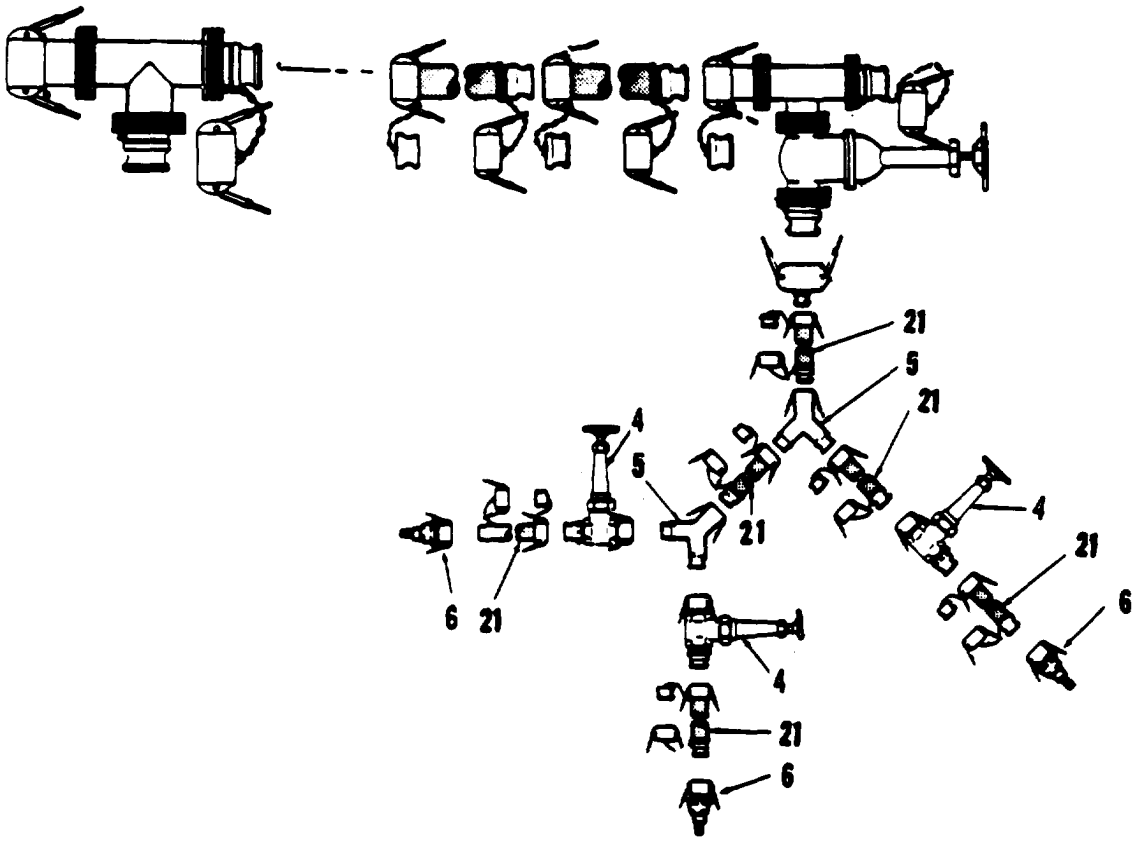

f. Connect hose assy (21) to left leg, of “Y” assy (5).

g. Connect “Y” assy (5) and two gate valve assys (4) to hose assy (21) on left leg of “Y” assy (5).

h. Connect two discharge hose assys (21) and two bag connectors (6) to the gate valve assys (4).

i. Connect right leg of “Y” assy mentioned in step (e) in the same manner as left leg disregarding step (g).

j. Connect three bag connectors to source desired.

2-9.2 **Set-up 40K WDS for operation as follows:**

a. Position two 20,000 gallon tanks (see Goodyear Aerospace publication 5-19-19, dated 1981); tank should be placed approximately as directed in figure on next page. A drain fitting is located in the bottom of the tank directly below the discharge ports the tank. Remove the plug which is threaded into this drain. Retain this plug for use during system disassembly. Attach the drain hose assy furnished with the tank to the drain fitting. Run the drain hose assy out past the side of the tank so that free drainage will occur when tank is emptied and before tank is refolded for repacking. Be sure that the gate wheel on the drain hose assy is turned to the fully closed position.

CAUTION

If either a suction or discharge hose for the tank is ever detached, be sure to seal the unconnected end of the quick-disconnect elbow with the plug which is chained to the elbow. Failure to do so could permit contaminants to enter the tank.

NOTE

Install all gate valves with control handles in upright and closed position.

b. Connect suction hose assy (2), to female side of 125 GPM pump assy.

c. Connect suction hose assy (2) to gate valve assy (3).

d. Connect suction hose assy (2) to reducer (1). Connect reducer (1) to water source.

e. Connect 125 GPM pump assy to discharge hose (4).

f. Connect discharge hose assy (4) to check valve (5). Connect check valve (5) to gate valve assy (3).

g. Connect gate valve assy (3) to discharge hose assy (4).

h. Connect discharge hose (4) to reducer (6). Connect reducer (6) to tee assy (7).

i. Connect tee assy (7) to discharge hose (8),

j. Connect hose assy (8) to discharge hose assy (9).

k. Connect discharge hose assy (9) to female end of gate valve and tee assy (10).

l. Connect hose assy (8) to water tank (13),

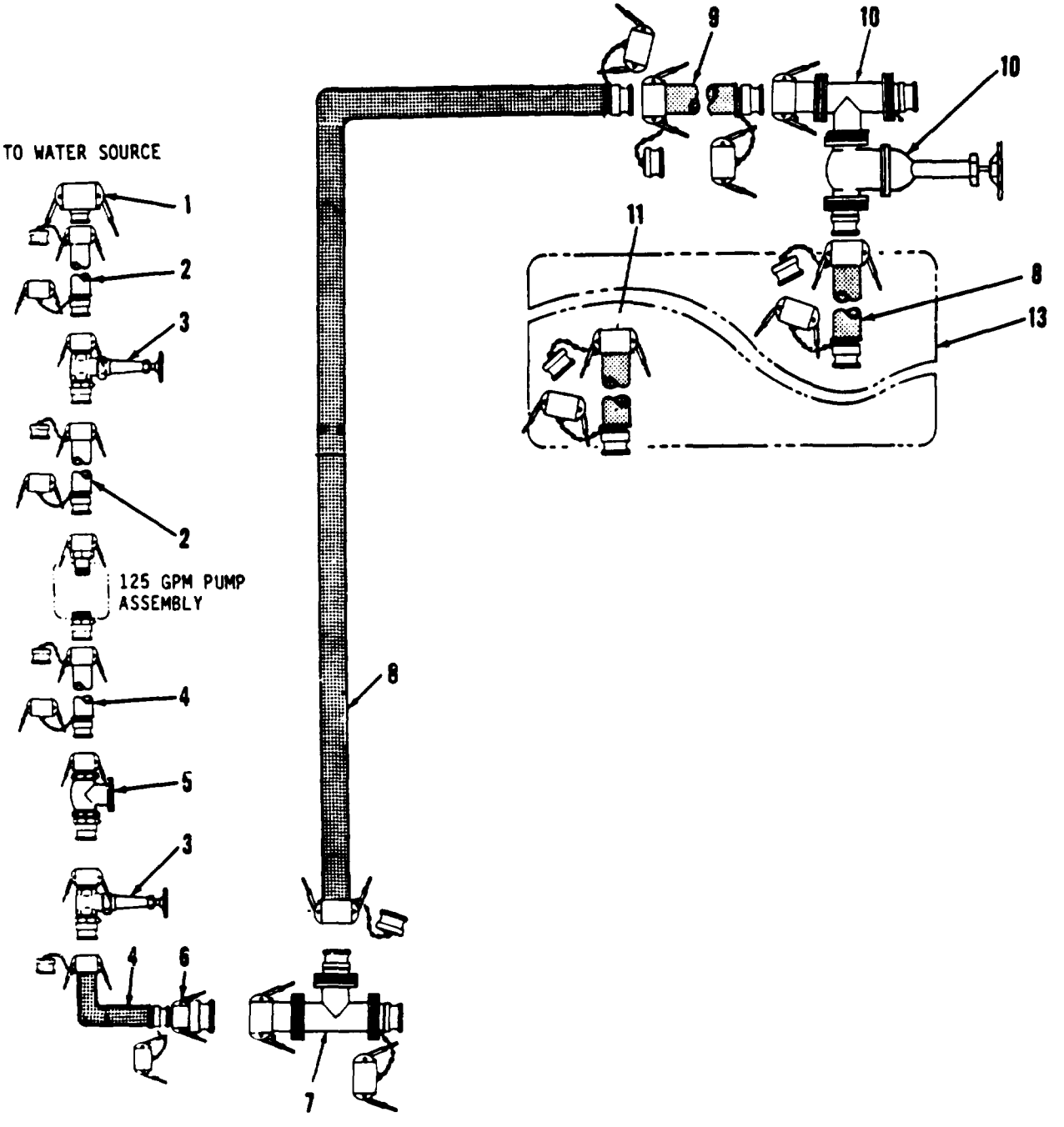
TO WATER SOURCE
1
2
3
2
125 GPM PUMP
ASSEMBLY
4
5
3
4
6
7
8
9
10
10
11
8
13

40-K WDS

2-9.2.1 **Assemble Dual Tank Connection Kit**

a. Connect suction hose assy (11) to water tank (13).

b. Connect hose assy (11) to female end of gate valve and tee assy (10).

NOTE

Item (9) consists of two (2) identical inter-connected hose assys. Simplify assy by connecting the hoses before performing next step.

c. Connect female end of tee assy (7) to 125 GPM pump and male end of tee assy (7) to discharge hose assy (8).

d. Connect hose assy (8) to hose assy (9).

e. Connect hose assy (9) to gate valve and tee assy (10).

f. Connect male end of gate valve and tee assy (10), to discharge hose assy (8).

g. Connect hose assy (8) to water tank (13).

h. Connect suction hose assy (11) to other end of tank.

i. Connect hose assy (11) to female end of gate valve and tee assy (10).

j. Connect female side of gate valve and tee assy (10) to suction hose assy (11).

k. Connect hose assy (12) to tee assy (14).

l. Connect male end of tee assy on gate valve and tee assy (10) to suction hose assy (12).

m. Connect hose assy (12) to tee assy (14).

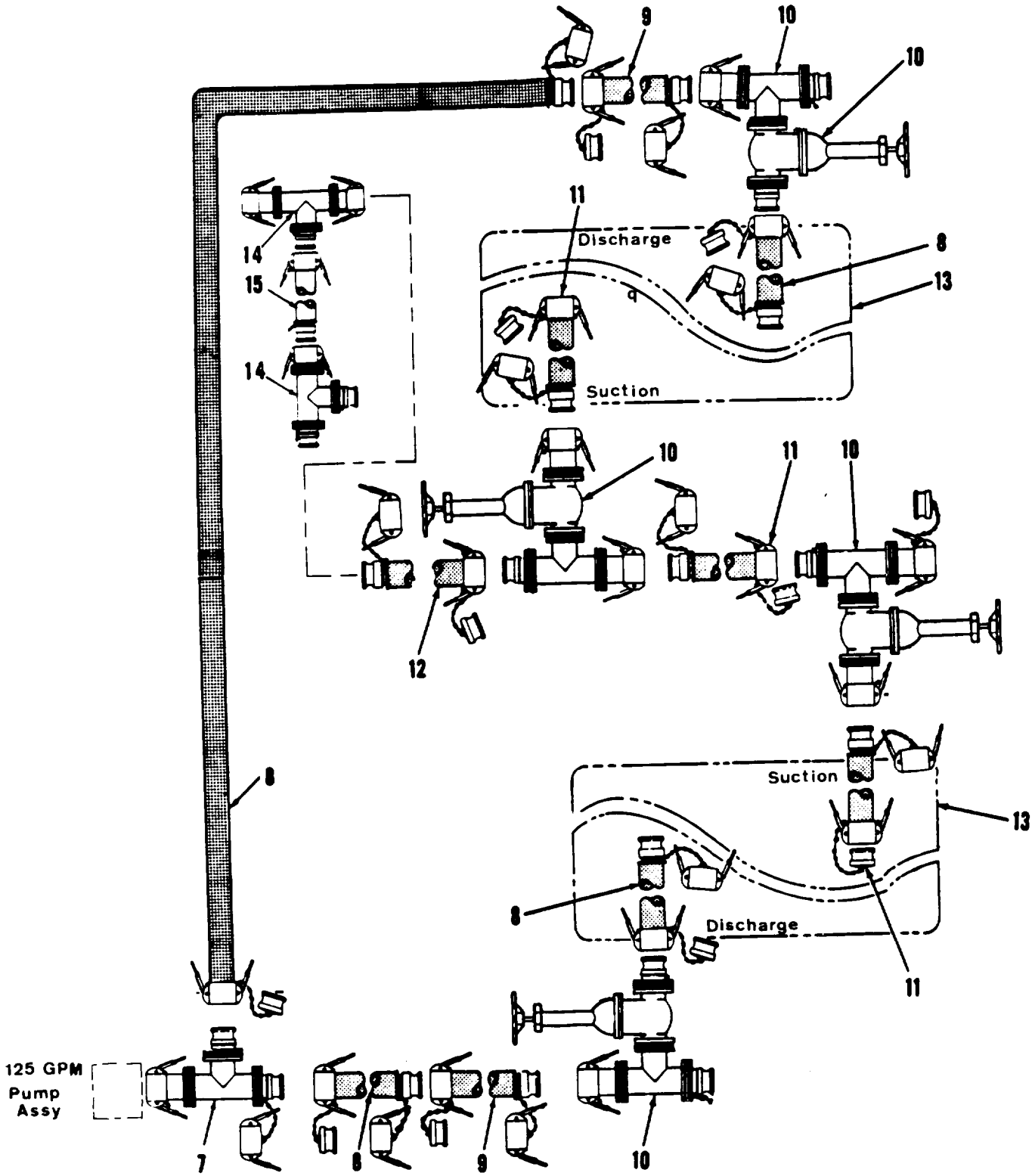

Dual Tank Connection Kit

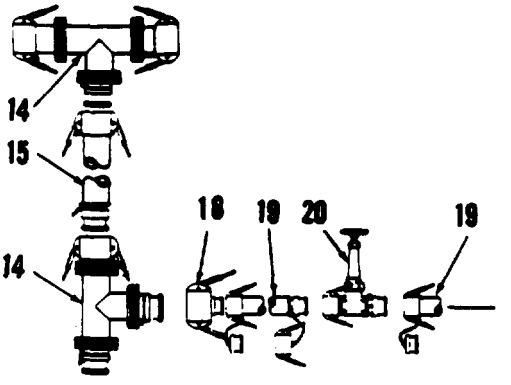

2-9.2.2 **125 GPM Pump Assembly Connection Kit**

a. Connect tee assy (14) to suction hose assy (15).

b. Connect hose assy (15) to tee assy (14).

c. Connect tee assy (14) to reducer (18).

d. Connect reducer (18) to suction hose assy (19).

e. Connect hose assy (19) to gate valve assy (20).

f. Connect gate valve assy (20) to suction hose assy (19).

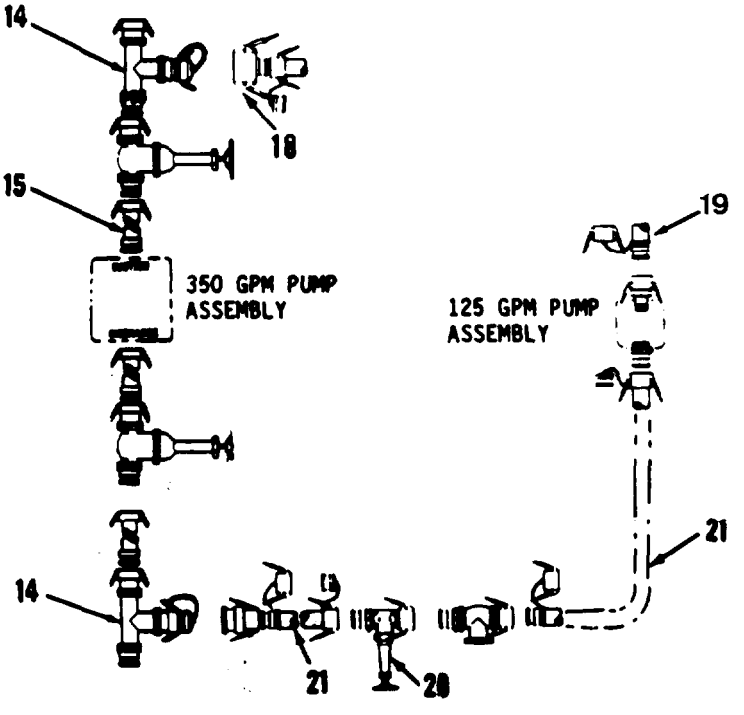

g. Connect hose assy (19) with 125 GPM pump assy.

h. Connect discharge hose assy (21) to 125 GPM pump assy.

i. Connect hose to check valve (22).

j. Connect check valve (22) to gate valve assy (20).

2-9.2.3 **350 GPM Pump Assembly Connection Kit**

a. Connect tee assy (14) ta discharge hose assy (17).

b. Connect hose assy (17) to gate valve assy (16).

c. Connect gate valve assy (16) to discharge hose (17).

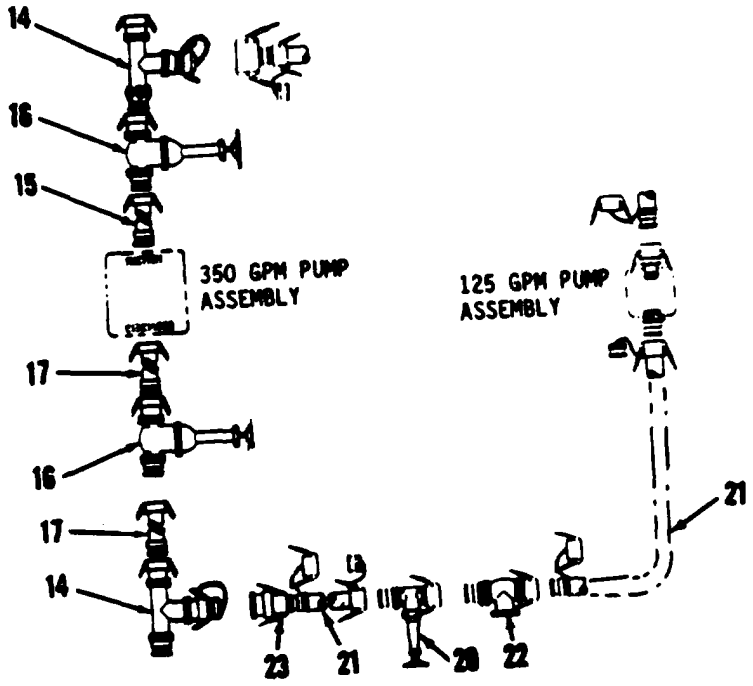

d. Connect discharge hose assy (17) with 350 GPM pump assy.

e. Connect suction hose assy (15) to connector of 350 GPM pump assy.

f. Connect suction hose (15) to gate valve assy (16) and to tee assy (14).

g. Connect tee assy (14) on the discharge side of 350 GPM pump to reducer (23).

h. Connect hose assy (21) to reducer (23).

i. Connect gate valve assy (20) to discharge hose assy (21).

j. Connect reducer (22) to discharge hose assy (21).

k. Position Hypochlorination Unit next to tee assy (14) on the discharge side of 350 GPM pump assy and connect.

NOTE

Remove protective paper and tape from female end of Hypochlorination Unit and attach to male end of tee assy (14). Remove protective paper and tape from male end of Hypochlorination Unit and attach to female end, plug removed, of tee assy (14).

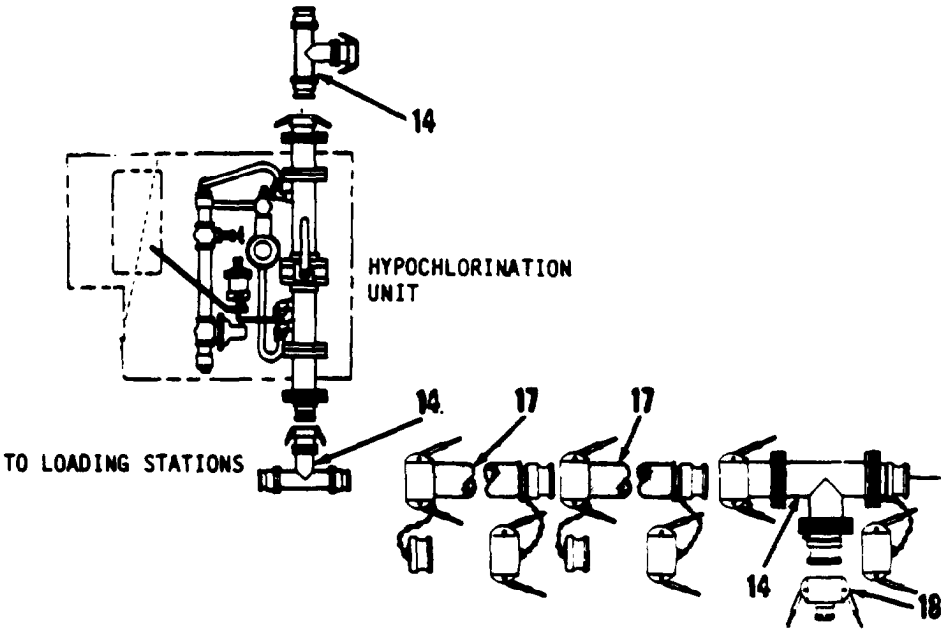

2-9.2.4 **Assemble Nozzle Connection Kits**

a. Connect tee assy (14) to discharge hose assy (17).

b. This is followed by another hose connected in the same manner.

c. Connect hose assy (17) to tee assy (14).

d. Connect tee assy (14) to reducer (18).

e. Connect reducer (18) to gate valve assy (20).

f. Connect valve assy (20) to discharge hose assy (21).

g. Connect hose assy (21) to reducer (25).

h. Connect discharge hose assy (26) to reducer (25).

i. Connect hose assy (26) to nozzle assy (27).

j. Unfold nozzle stand assy (30) and attach nozzle assy (27) to bracket on stand. Assemble three remaining nozzle connection kits and stand assys in the same manner.

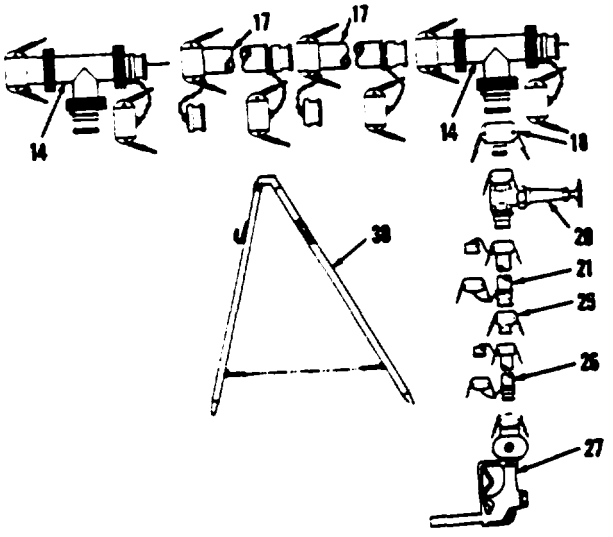

2-9.2.5 **Assemble Hospital Connection Kit**

a. Connect discharge hose (17) to tee assy (14) on fourth hose assy.

b. This is connected to another hose in a similar manner.

c. Connect hose (17) to tee assy (14).

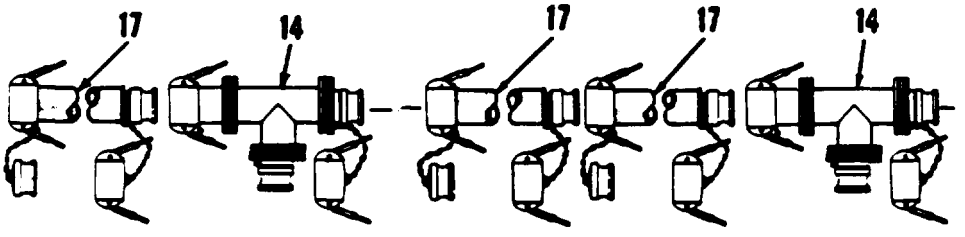

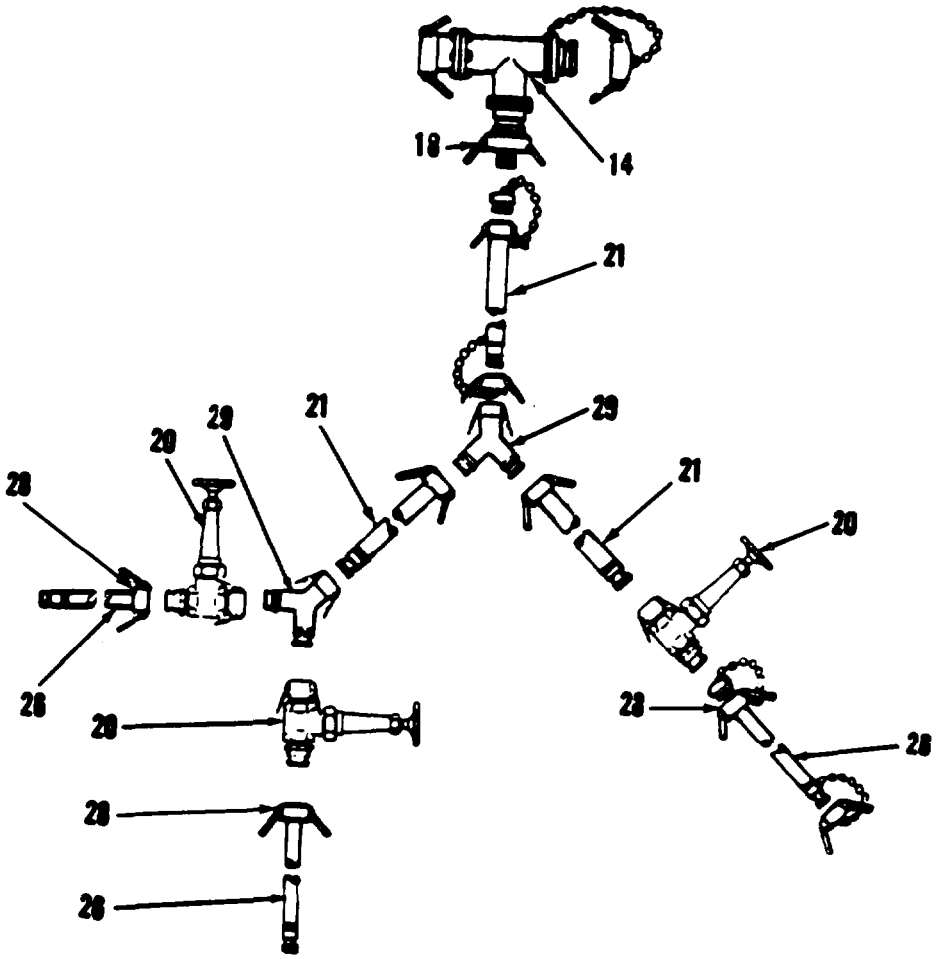

d. Connect tee assy (14) to reducer (18).

e. Connect reducer (18) to discharge hose assy (21).

f. Connect hose assy (21) to Y-connector (29).

g. Connect Y-connector (29) to two discharge hose assys (21).

h. Connect hose assy (21) to Y-connector (29) on left.

i. Connect Y-connector (29) to two gate valves (20).

j. Connect two gate valve assys (20) to two reducers (28).

k. Connect two reducers (28) to two discharge hoses (26).

l. Connect hose to hose nozzle kit. Remaining end of Y-connectors (29) are assembled in the same manner.

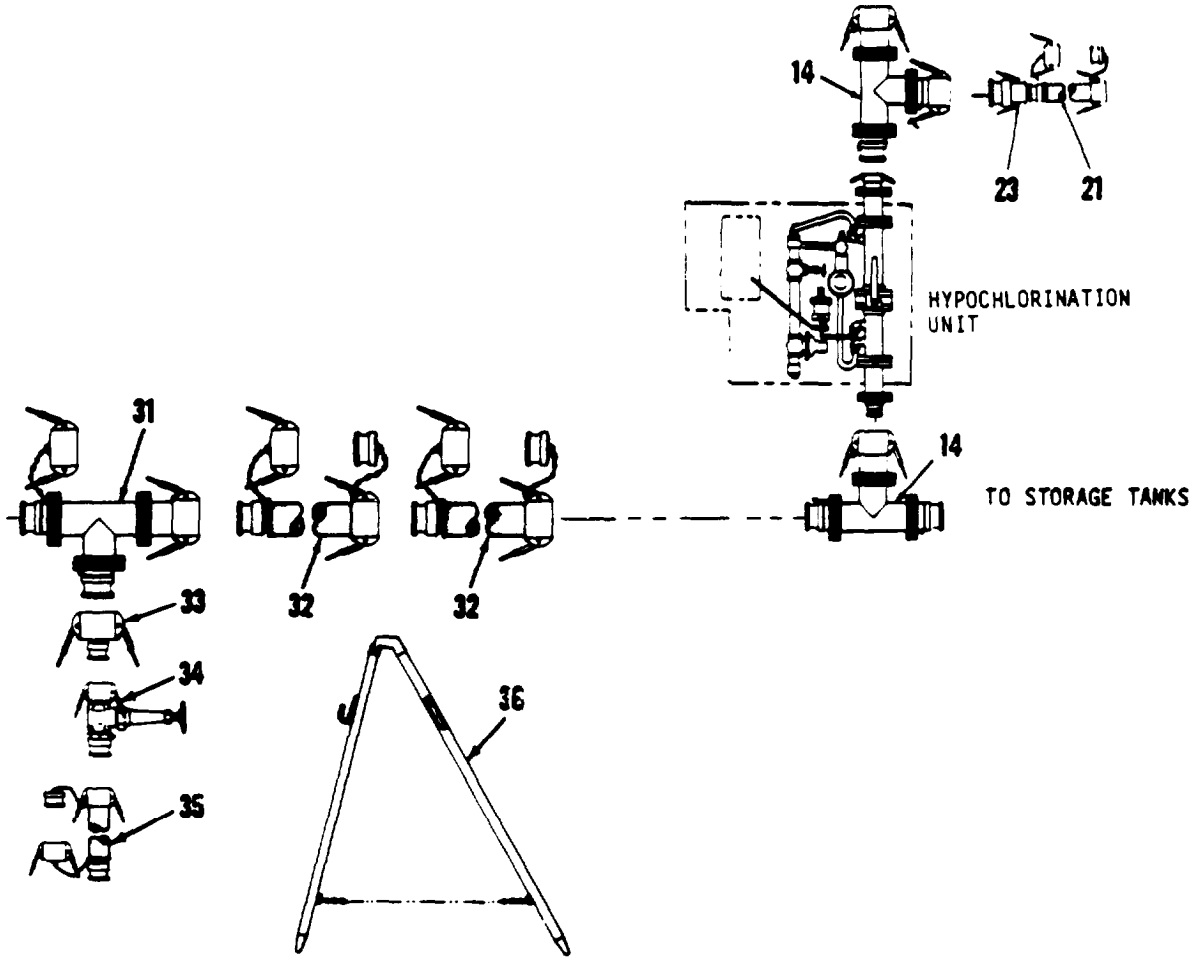

2-9.2.6 Assemble Hose Connection Kit

a. Connect tee assy (14), coming off HypocMorination Unit, to dscharge hose assy (32).

b. Connect hose assy (32) to tee assy (31).

c. Connect tee assy (31) to reducer (33).

d. Connect male end of reducer (33) to female end of gate valve (34).

e. Connect male end of gate valve (34) to female end of discharge hose assy (35). Unroll hose assy.

f. Hang hose on bracket of nozzle stand assy (36), leaving male end of hose capped until ready for use.

g. There are seven remaining hose assys assembled in the same manner. Each has a stand assy (36).

2-9.3 Set-up 300K, 1,000K WDS for operation as follows:

a. For the 300K WDS position the 16 each 20,000 gallon tanks in two rows (see Goodyear publications 5-19-12 dated 1981); tanks should be placed approximately as indicated on page 2-29. For the 800K WDS, consisting of 16 each 50,000 gallon tanks refer to Uniroyal Manual CM63504-3-49. Be sure to leave about ten feet between the two rows, and about five feet between each tank in the two rows to facilitate hose connection. A drain fitting is located in the bottom of each tank, directly below the discharge port of the tank. Remove the plug which is threaded into this drain. Retain this plug for use during system disassembly. Attach the 3/4-inch drain hose assy furnished with the tank to the drain fitting. Run the drain hose assy out past the side of the tank so that free drainage will occur when the tank is emptied and before the tank is folded for repacking. Be sure that the gate wheel on the drain hose assy is turned to the fully closed position. Perform this operation for each of the tanks.

CAUTION

If either a suction or discharge hose for any of the 16 tanks is removed, be sure to seal the unconnected end of the quick-disconnect elbow with the plug which is chained to the elbow. Failure to do so could permit contaminants to enter the tank.

NOTE

The tanks and attaching hardware shown in the following illustrations and assembly instructions are only for assisting personnel in the set-up of the water distribution system. If parts are damaged or require replacement, refer to TM 5-4610-228-23P.

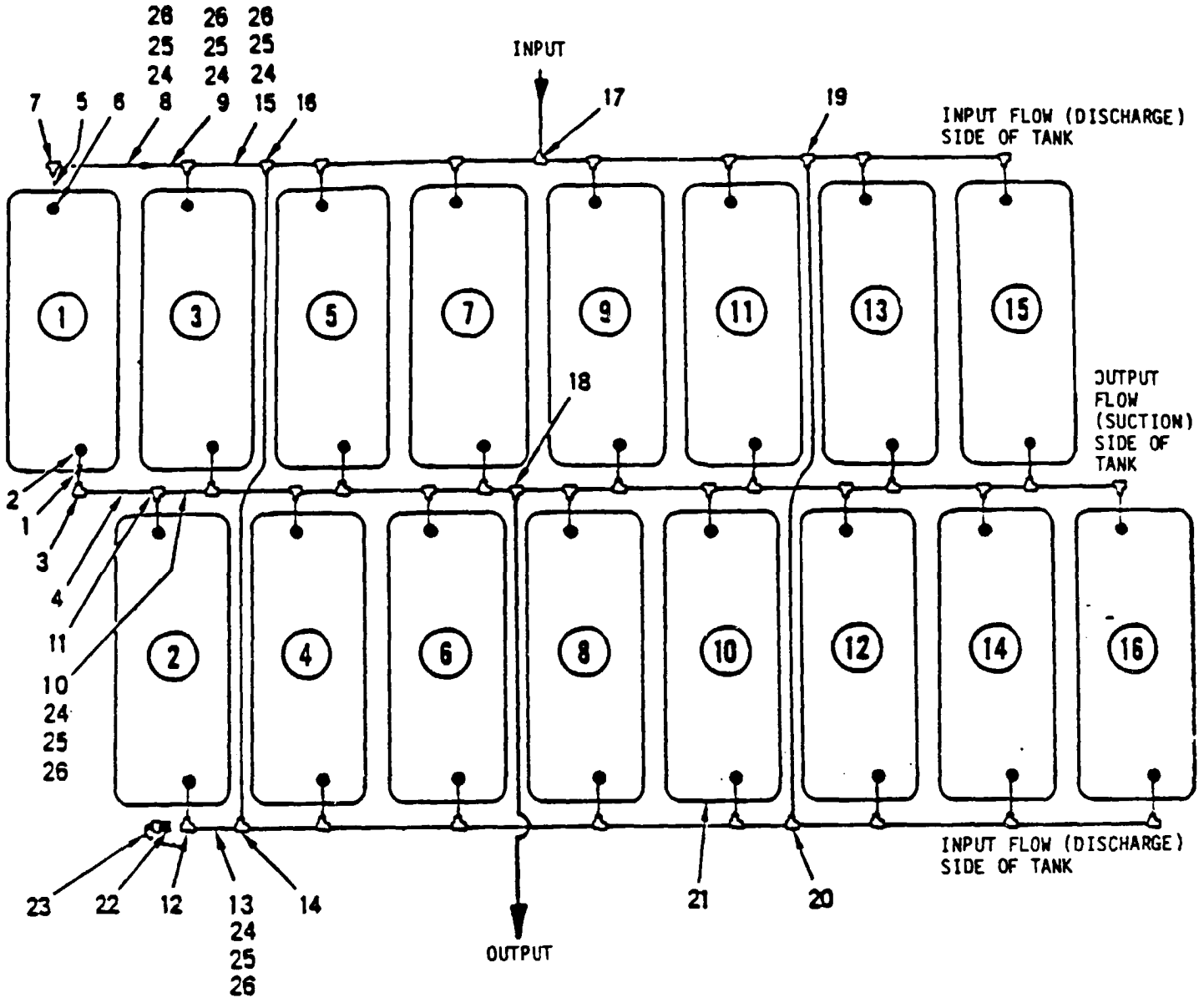

Tank Set-up for 300K, 800K, 1,000K WDS

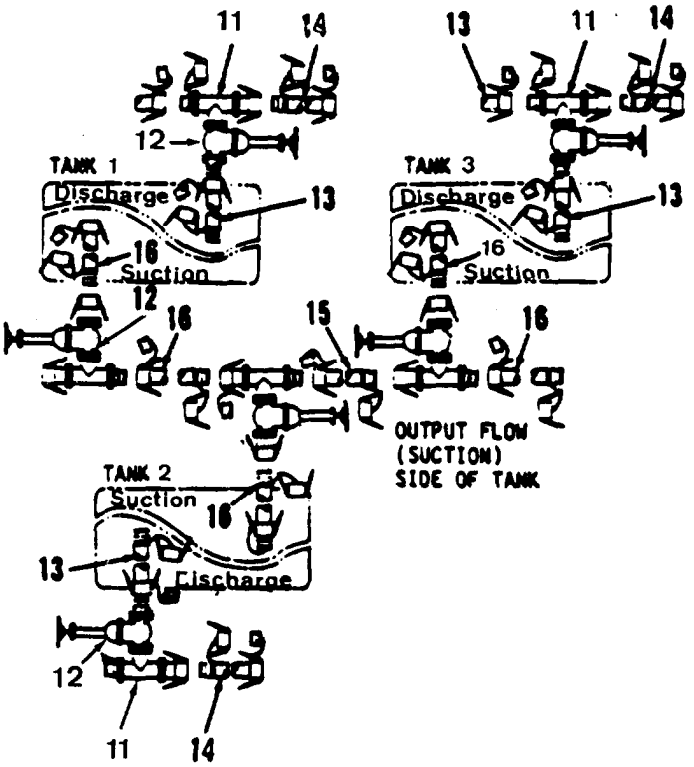

b. Remove input flow (discharge) side of tank protective cap from the quick-disconnect male nipple on suction side port of tank numbered 1 on page 2-29. Retain cap for use during system disassembly. Connect the quick-disconnect female fitting furnished with tank to male nipple on tank.

CAUTION

Prior to connecting any hoses, be sure to inspect all female quick-disconnect fittings to insure that required gaskets are present and serviceable. Install/replace gaskets as required.

NOTE

Install all gate valves with control handles in upright and closed position.

c. Connect suction hose assy (16) to suction side port male nipple of tanks installed in step b, above.

d. Connect valve and tee assy (12) to hose assy (16).

e. Remove protective cap from left-hand side of valve and tee assy (12).

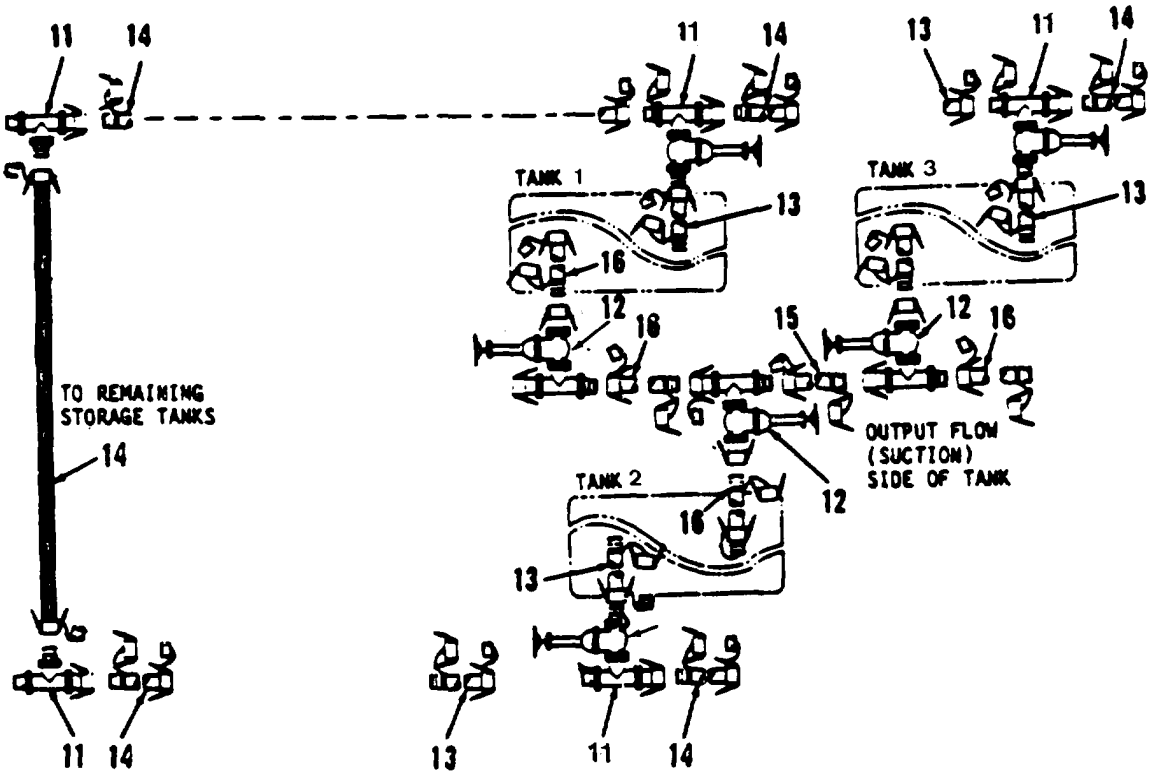

f. Remove protective cap from quick-disconnect male nipple on the discharge side port of tank 1 on page 2-29. retain this cap for use during system disassembly. Then, attach one of the two quick-disconnect fittings furnished with each tank to this nipple.

g. Connect discharge hose (13) to discharge side port fittings, installed in step f, above, and discharge hose assy (13) to valve and tee assy (11).

h. Connect valve and tee assy (11) to hose assy (14).

i. Remove protective cap from left-hand side of valve and tee assy (11).

j. Connect two discharge hose assys (14) to two valve and tee assys (11). Position the hose as shown on page 2-29.

k. Connect discharge hose (13) to discharge hose (14). Position the hoses as shown on page 2-29.

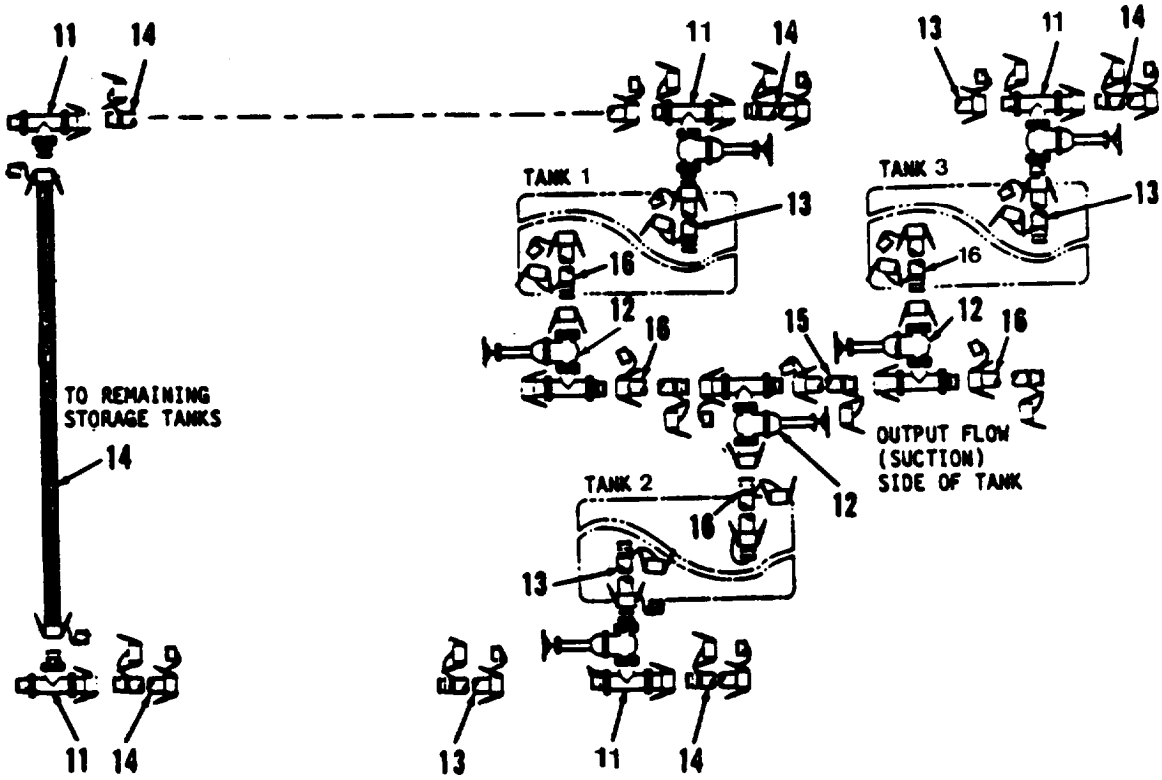

l. Repeat steps b, c, d, and e above, for the suction side of the tank numbered 2 on page 2-29.

m. Connect two valve and tee assys (12) to two suction hose assys (16).

n. Connect suction hose assy (15) to right side of valve and tee assy (12).

o. Repeat steps, g, h, i and j, above, for the discharge side of tank numbered 2 on page 2-29.

p. Connect discharge hose assy (13) to the left side of valve and tee assy (11) and discharge hose assy (13) to discharge hose assy (14).

q. Repeat steps b, c, d, and e, above, for the suction side of tank 3 on page 2-29.

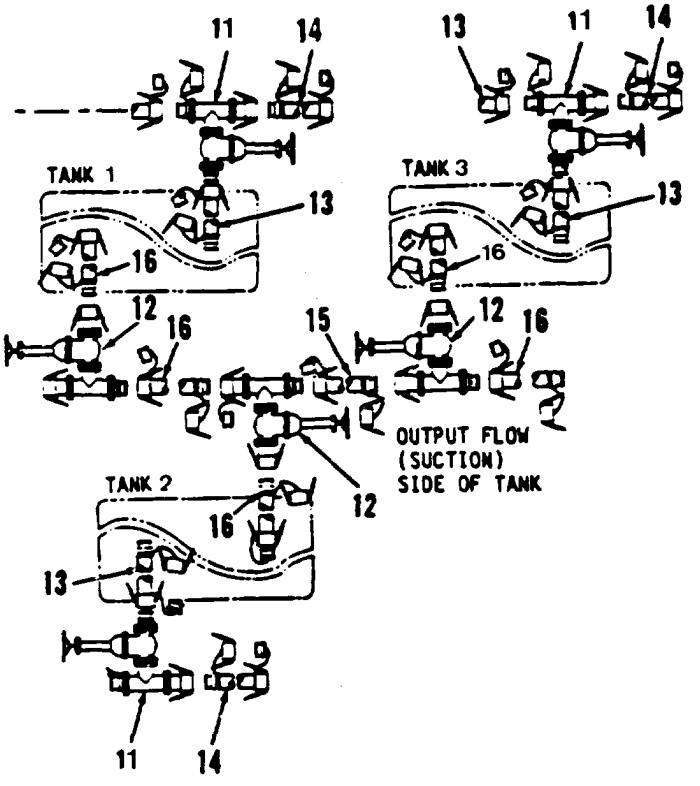

r. Connect suction hose assy (15) to the left-hand side of valve and tee assy (12) on the suction side of tank numbered 3 on page 2-29; then attach the unconnected end of this hose to the adjacent valve and tee assy.

s. Repeat steps f, g, h, and i, above, for the input side of tank labeled 3 on page 2-29.

t. Attach the unconnected end of discharge hose assy (13) to left-hand side of valve and tee assy (11) and discharge hose assy (13) to discharge hose assy (14).

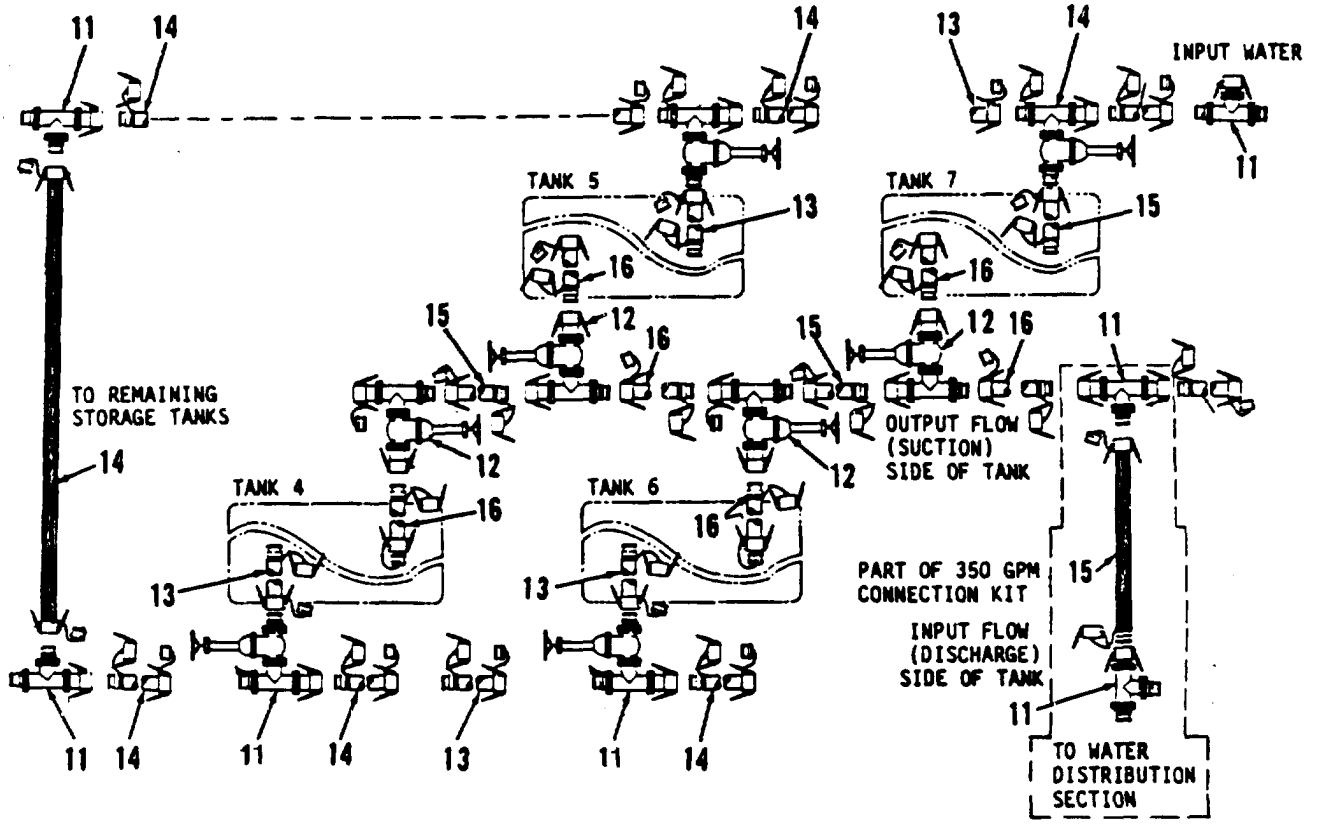

2-9.3.1 Discharge (Fill) Hose Interconnection Kit.

a. Remove protective plug and cap on tee assy (19, page 2-29). Attach tee assy(11) to discharge hose assy (13, page 2-29) for the bottom row of tanks so that the tee assy is connected as shown by the callout number (14, on page 2-29).

b. Remove protective plug and cap from tee assy (12). Connect tee assy (11) to discharge hose assy (15, page 2-29) for top row of tanks.

c. Connect female end of one of the ten 20-foot discharge hose assys to tee assys (16, page 2-29) which are used for the top row of tanks. Position the hoses as shown on page 2-29.

d. Connect the female end of the second 20-foot discharge hose to the male end of the hose referenced in step c. Position hoses as shown on page 2-29.

e. Connect and position remaining eight discharge hoses (15, page 2-29) as accomplished in step d.

f. Connect the male end of discharge hose (14) to tee assy (11), which are used for the bottom row of tanks.

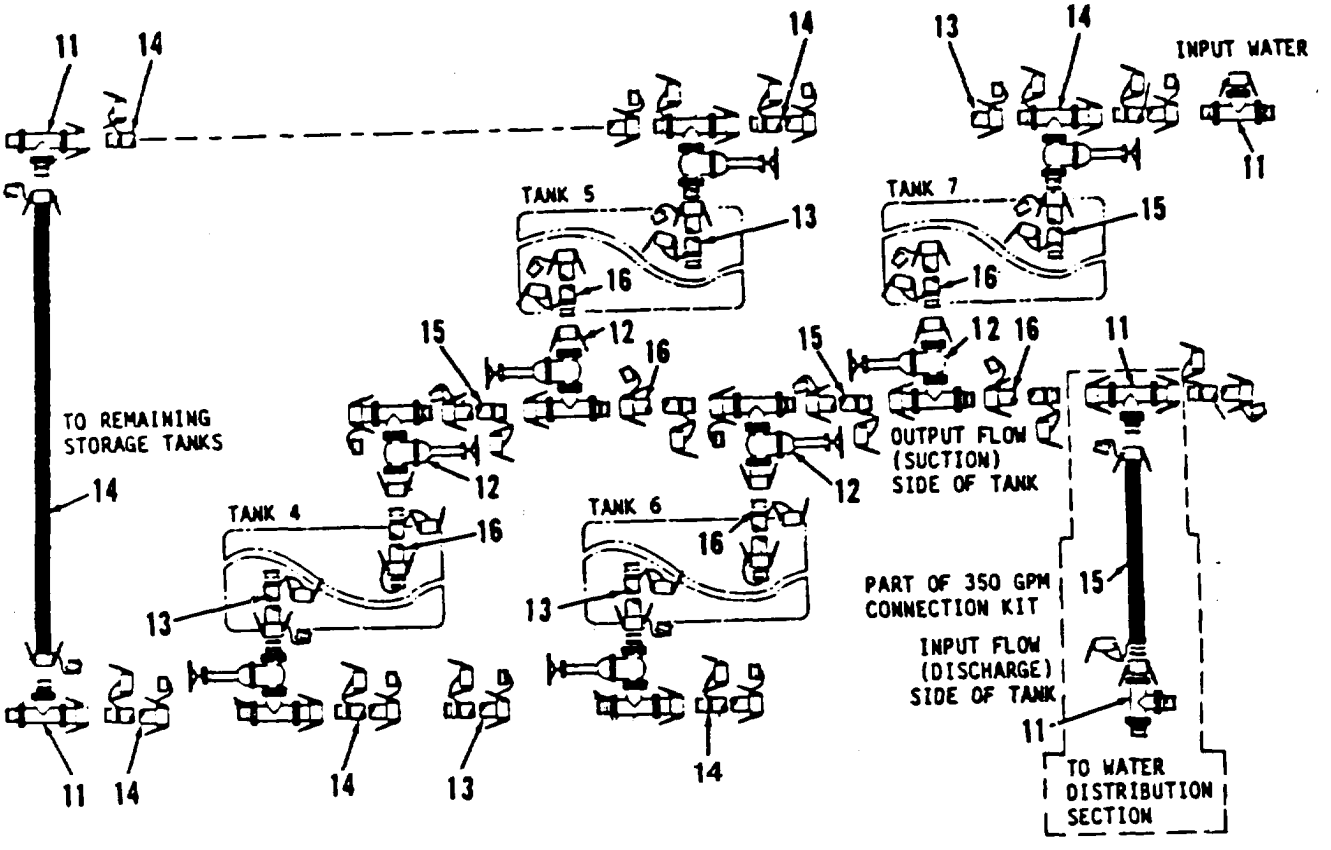

2-9.3.2 Water Storage and Dispensing Tanks. Continue with the water storage and dispensing tank setup procedures which were begun. Attach hoses and valve and tee assys for tanks 4 through 7 (see page 2-30). Remember that in every case for tanks 4 through 7, 20-foot hoses will be alternated with 10-foot hoses, and that hose assy is periodically interrupted with water tank valve and tee assys.

2-9.3.3 350 GPM Pump Connection Kit - Input Flow Side. Perform the following after the hoses and valve and tee assys for tanks 1 thorugh 7 have been attached, and after the left-hand discharge hose interconnection kit (indicated by tee assys 14 and 16, page 2-29) have been installed. See TM 5-4320-226-14/24P.

a. Begin at the input flow side of the tanks in the top row. Attach the end of the discharge hose which is fastened to the valve and tee assy for tank 7 (see page 2-29) to the end of the tee assy (17) (page 2-29) provided with the 350 GPM pump connection kit. Position these items as shown on page 2-29.

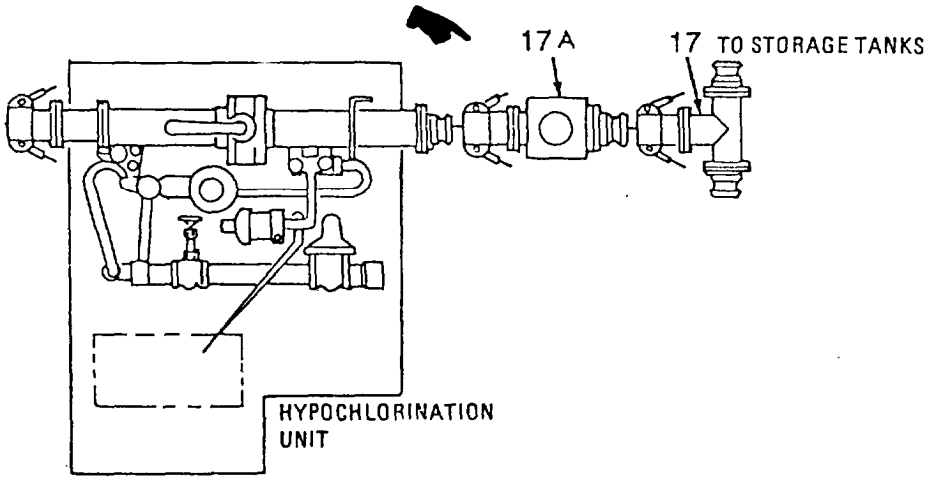

b. Connect water meter assembly (17A) on tee assy (17).

c. Position hypochlorination unit in line with water meter assembly (17A) and connect water meter assembly (17A) on hypochlorination unit.

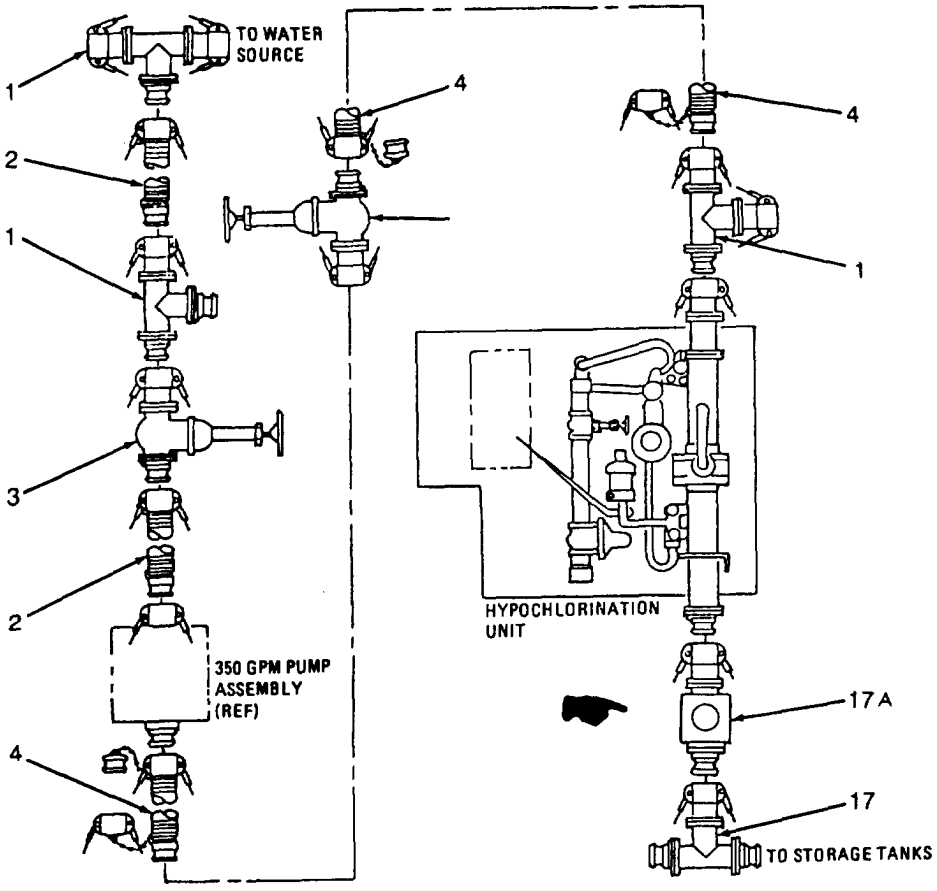

d. Connect tee assembly (1) on hypochlorination unit.

e. Connect Discharge hose assy (4) to tee assy (1).

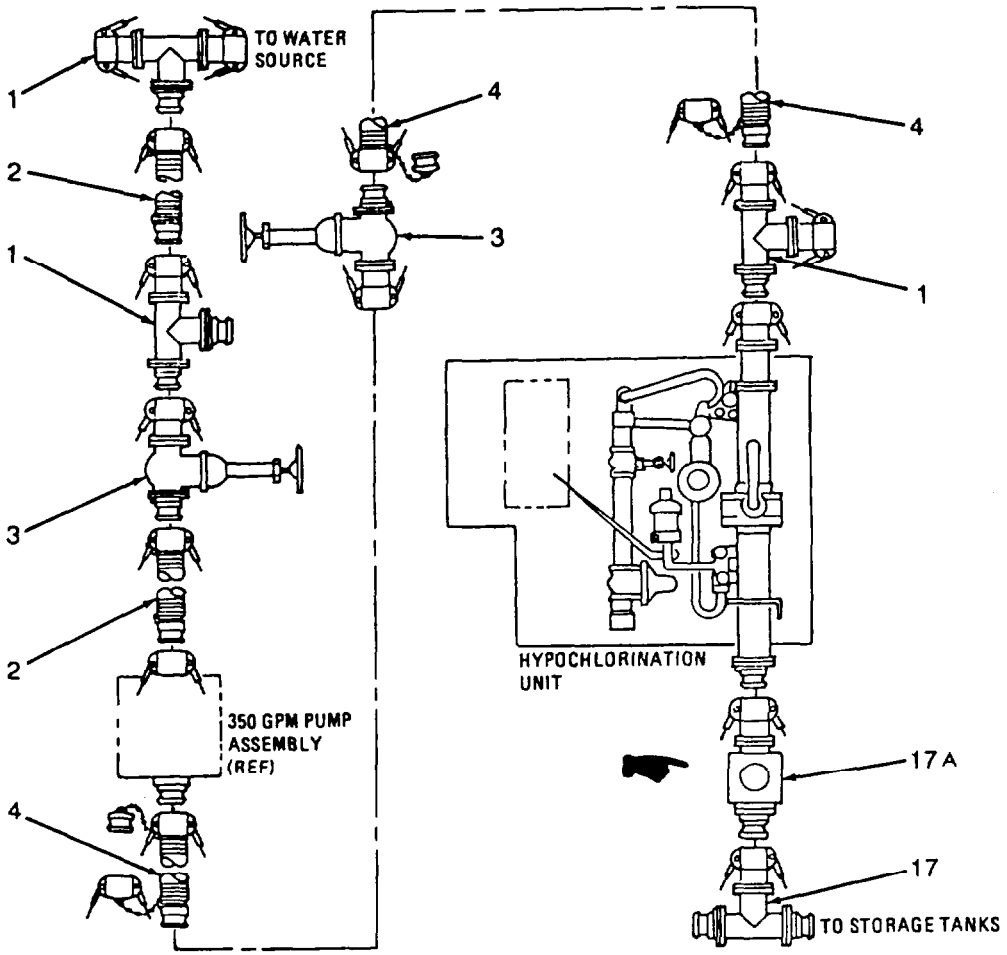

NOTE

All gate valves shall be installed in a upright and closed position.

f. Connect gate valve assy (3) to hose assy (4). Position gate valve assy.

g. Connect hose assy (4) to gate valve assy (3). Position hose.

h. Position 350 GPM pump in line with the assembled elements of the pump connection kit. Connect discharge hose assy (4) to the discharge fitting on pump.

i. Connect suction hose assy (2) to suction fitting on the 350 GPM pump.

j. Connect gate valve assy (3) to hose assy (2).

k. Connect tee assy (1) to gate valve assy (3).

l. Connect one (1) of four suction hose assys (2) to tee assys (1).

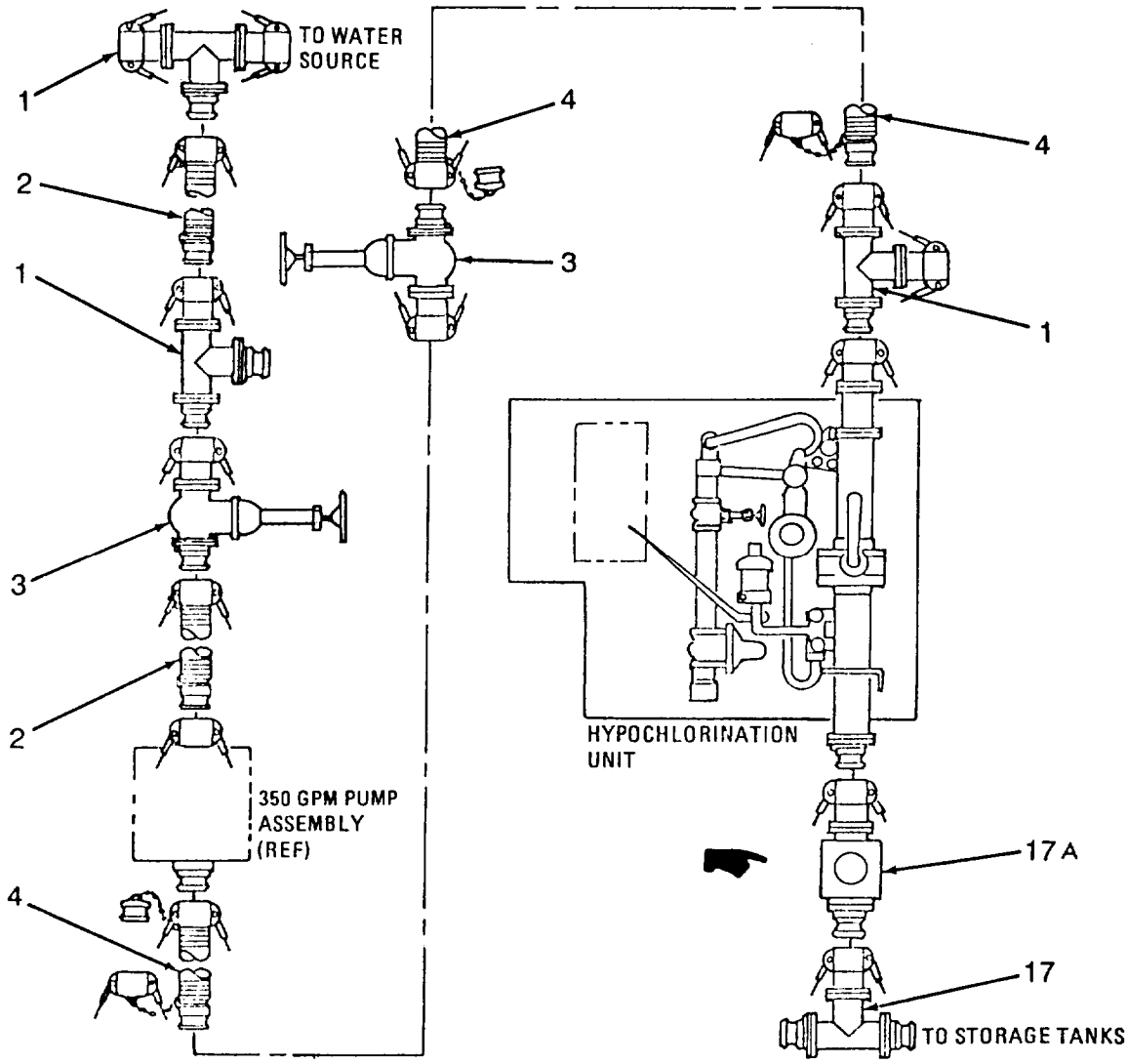

m. Connect second hose assy to hose assy referenced in step 1, above.

n. Connect and position the remaining two hose assys as specified in step m, above.

o. Connect female end of the fourth hose assys to tee assy (1).

p. Connect two tee assy (1) to remote water supply for system.

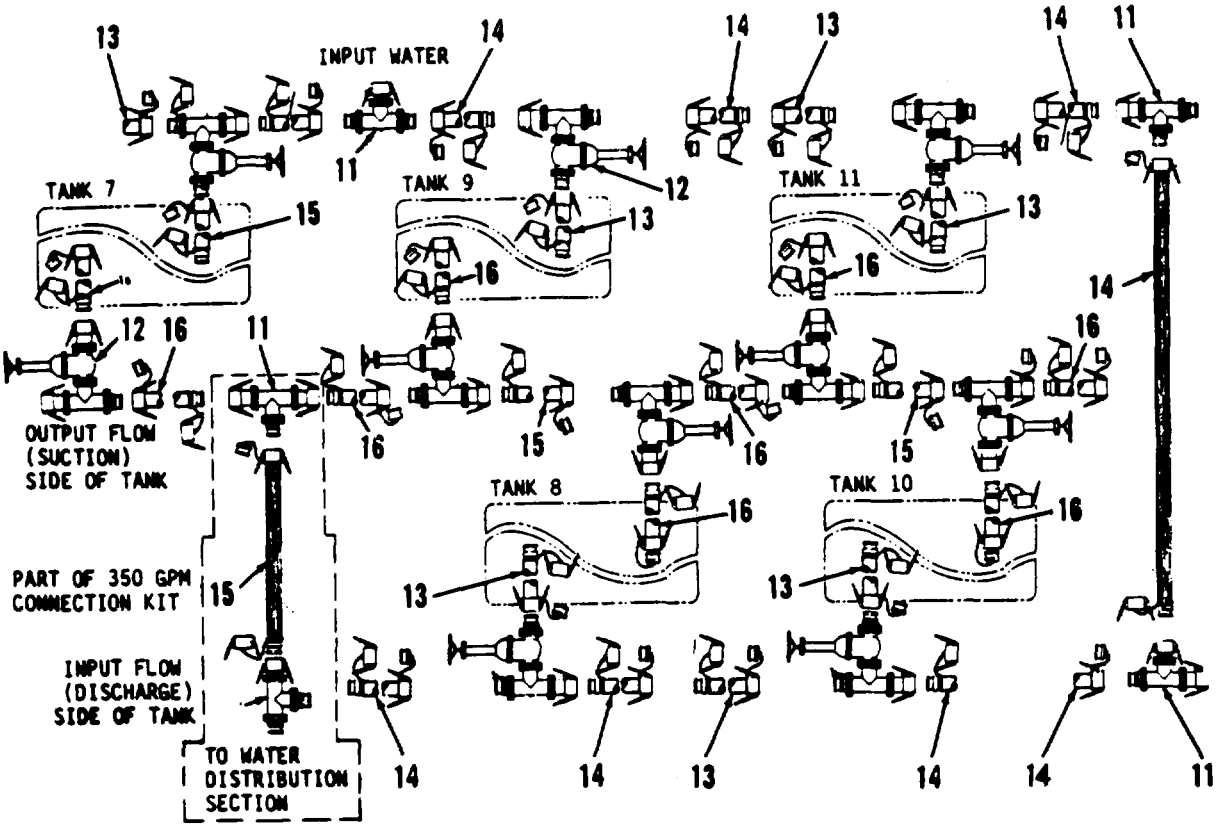

2-9.3.4 **Water Storage and Dispensing Tanks - Continued.**

Continue with the water storage and dispensing tank setup procedures which *were* begun in previous paragraphs.

NOTE

Excepting the ends of the input and output flow hoses which were connected to the tanks, all male and female connections which were referenced when setting up hoses and valve and tee assys for tanks 1 through 7 will be reversed for the setup of the tanks numbered 8 through 16; for instance, what was referred to as the male end of a hose when setting up tank 2 will be referred to as the female end when setting up tank 12.

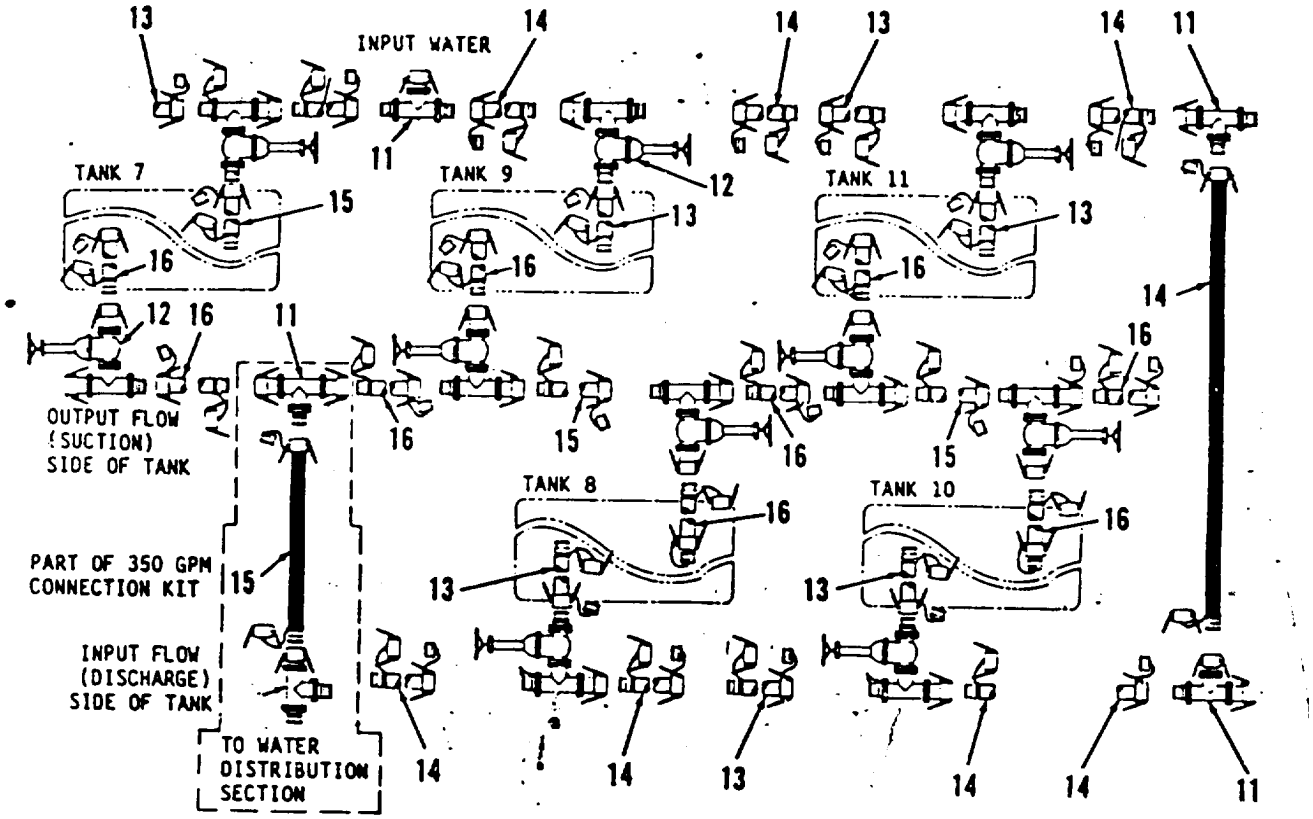

2-9.3.5 **350 GPM Pump Connection Kit - Output Flow Side**

Attach the tee assy for the output side 350 GPM pump connection kit. Attach hoses and valve and tee assys for tanks 8 through 16. Following installation of the valve and tee assys on the suction side of the tank numbered 8 and on the input side of the tank numbered 9, a 10-foot hose should be installed between the valve and tee assy for the water tank and the tee assy for each of the 3.50 GPM pump connection kits (17 and 18, page 2-29). Remember to install tee assys (19 and 20) for the second discharge hose interconnection kit as specified and to connect the ten 20-foot discharge hoses in the position shown on page 2-29. AFter installing the hoses, valves, and tee assys for tanks 15 and 16, be sure to attach a protective cap to the right-hand end of the two valves and tee assys for these tanks.

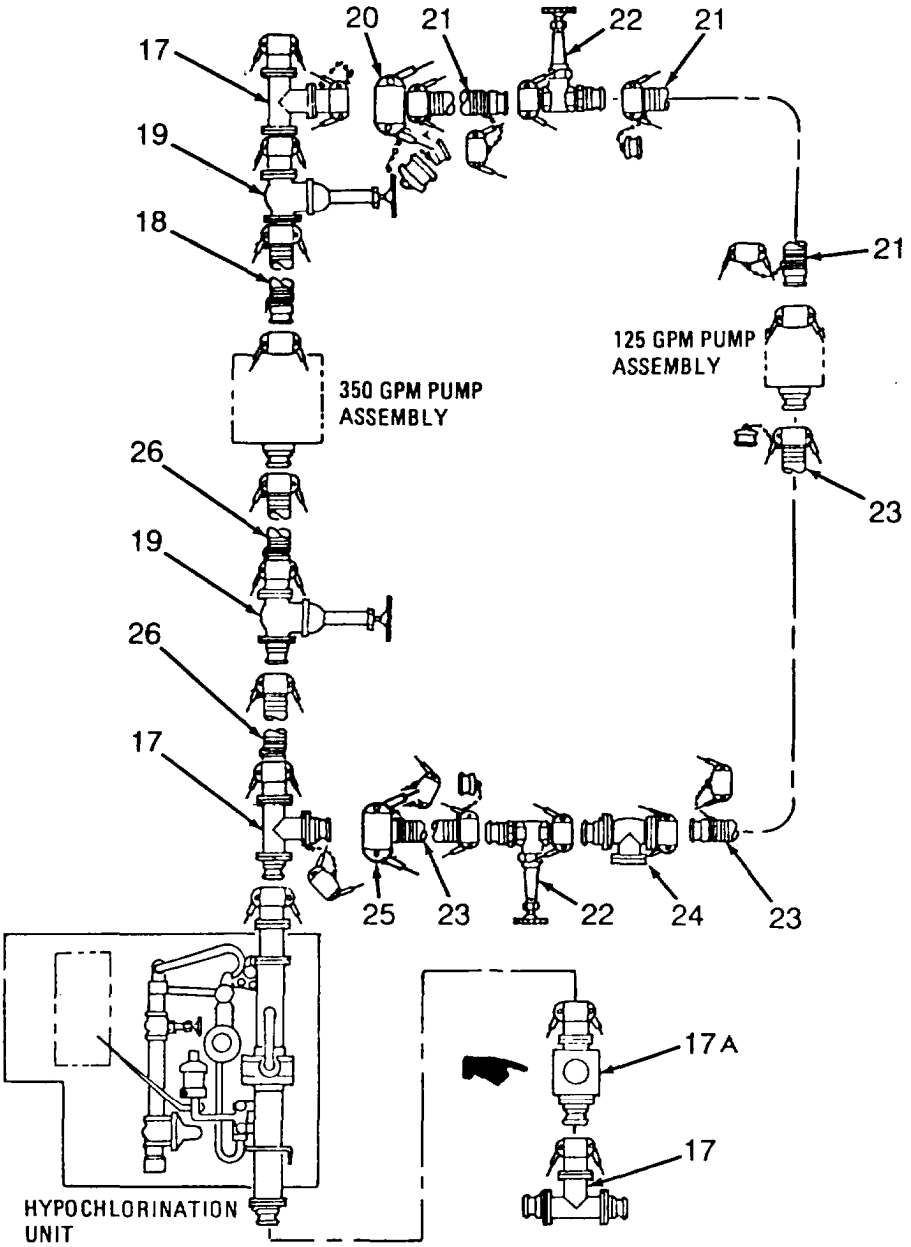

NOTE

The 125 GPM pump is normally issued equipped with two each two-inch 11-1/2 NPT X 11-1/2 NPSH hose adapters. Before starting to assemble the 125 GPM pump connection kit, check the pump to be sure that these fittings have been replaced with one each coupling half, male quick disconnect (96906) MS27022-11 on the discharge side and one each coupling half, quick disconnect, female (96906) MS27021-11 on the suction side.

2-9.3.6 **125 GPM Pump Connection Kit–Input Flow Side.** Perform the following after the 350 GPM pump connection kit has been completely set up on input side of system, as described in paragraph 2.10.3.3. See TM 5-4320-208-12/20P.

a. Remove protective cap from male quick-disconnect on tee assy (17) on the 350 GPM pump connection kit.

b. Connect reducer (20) to tee assy (17).

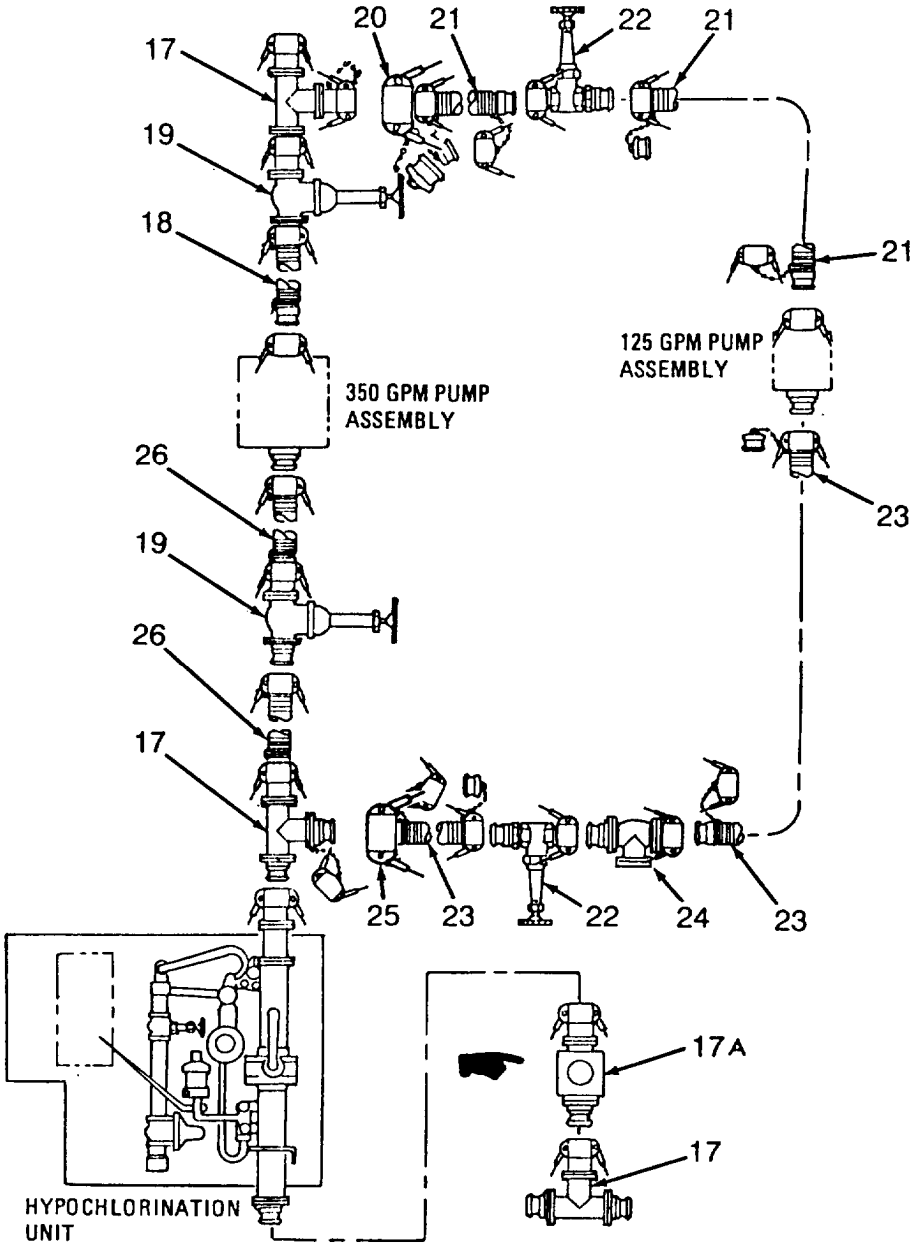

c. Connect suction hose assy (21) to reducer (20).

d. Connect suction hose assy (21) to gate valve assy (22).

e. Connect suction hose assy (21) to coupling on suction side of 125 GPM centrifugal pump.

f. Connect discharge hose assy (23) to fitting on the discharge side of the 125 CPM centrifugal pump.

g. Connect hose to (23) check valve (24).

h. Connect gate valve assy (22) check valve (24)

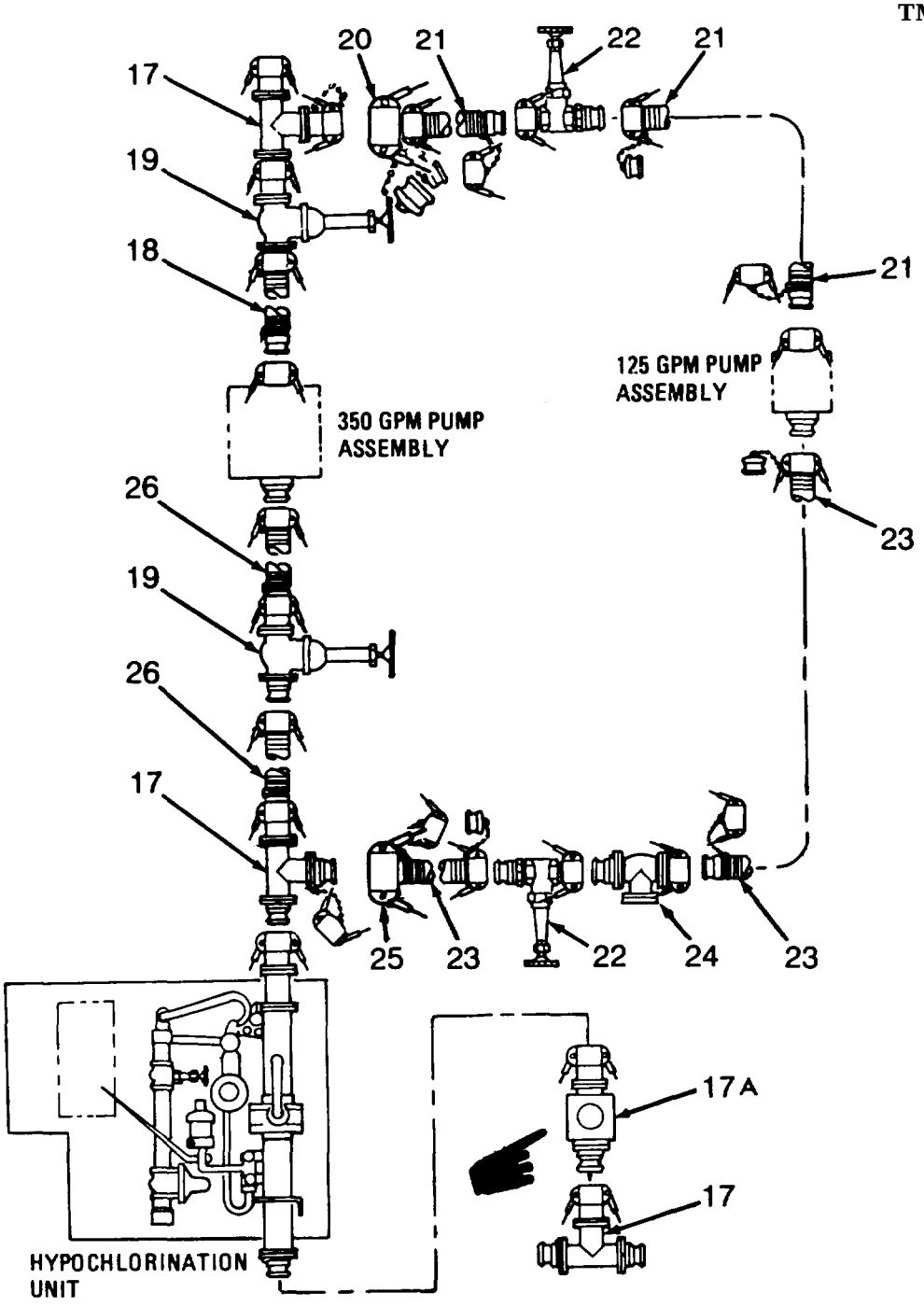

i. Connect discharge hose assy (23) to adapter on gate valve assy (22).

j. Remove protective cap from the "T" coupling (17) on the 350 GPM pump connection kit.

k. Connect reducer (25) to tee assy (17).

l. Connect hose assy (23) to reducer (25).

2-9.3.7 **350 CPM Pump Connection Kit– Output Flow Side.** Assembly of the 350 GPM pump connection kit for the output side of the system will be in reverse order of instructions given for input side of the system.

2-9.3.8 **125 CPM Pump Connection Kit - Output Flow Side.** Assembly of the 350 GPM pump connection kit for the output side of the system will be in reverse order of instructions given for input side of the system.

2-9.3.9 **Loading Stations.** Four different types of loading station connection kits are provided, as follows:

- Hose nozzle connection kit; four kits are provided for each system.
- Two-inch hose connection kit; three kits are provided for each system.
- Four-inch hose connection kit; two kits are provided for each system.
- Bag filler connection kit; one kit is provided for each system.

These stations are supplied with water by the output flow side 350 GPM pump connection kit, and are positioned in series along the output flow side of the system, Assembly and setup instructions are given below:

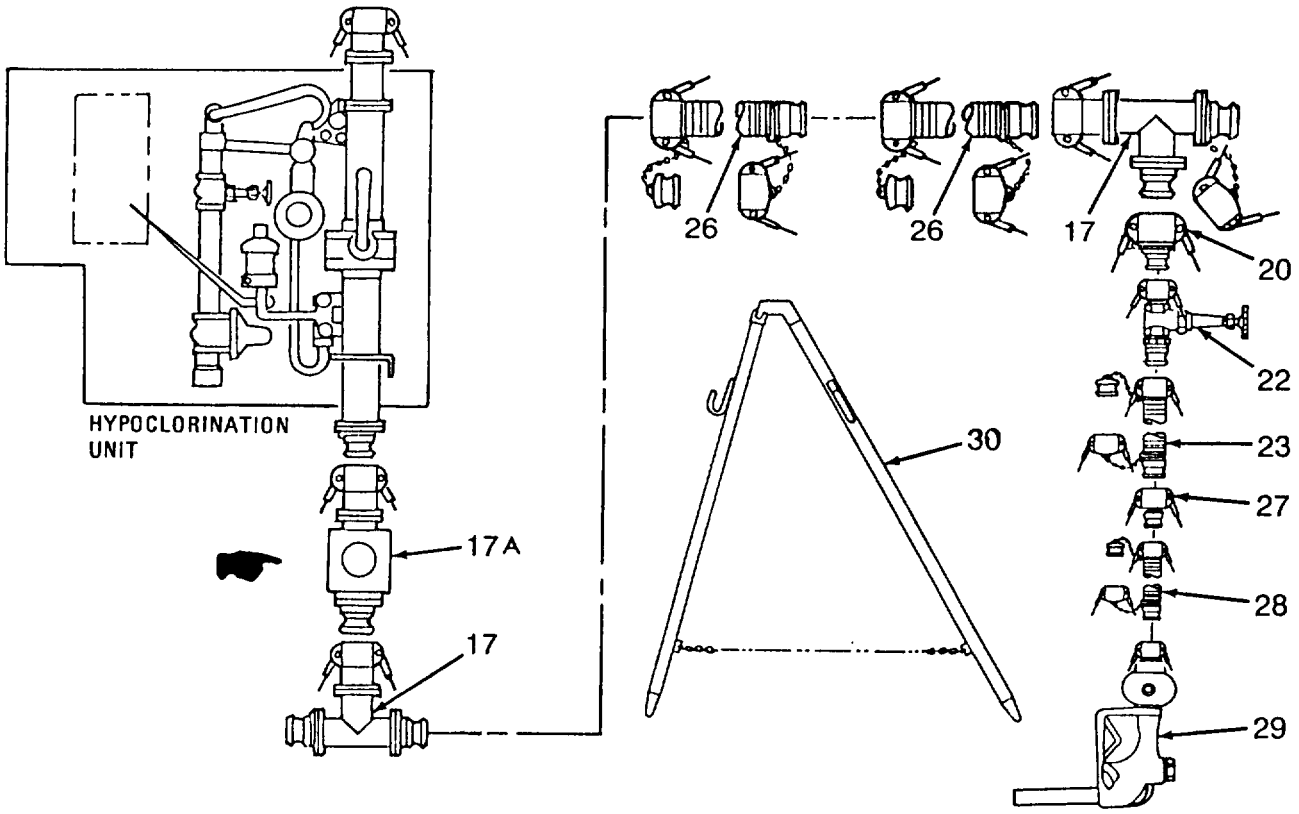

2-9.3.9.1 **Assemble Nozzle Kit**

NOTE

Item 26 consists of identical inter-connected hose assys. Simplify assembly by connecting the hose before performing next step.

a. Connect hose assy (26) to tee assy (17) of the third location standard connection kit.

b. Connect the second hose assy (26) to hose installed in step (a), above.

c. Connect tee assy (17) to the second hose assembly (26).

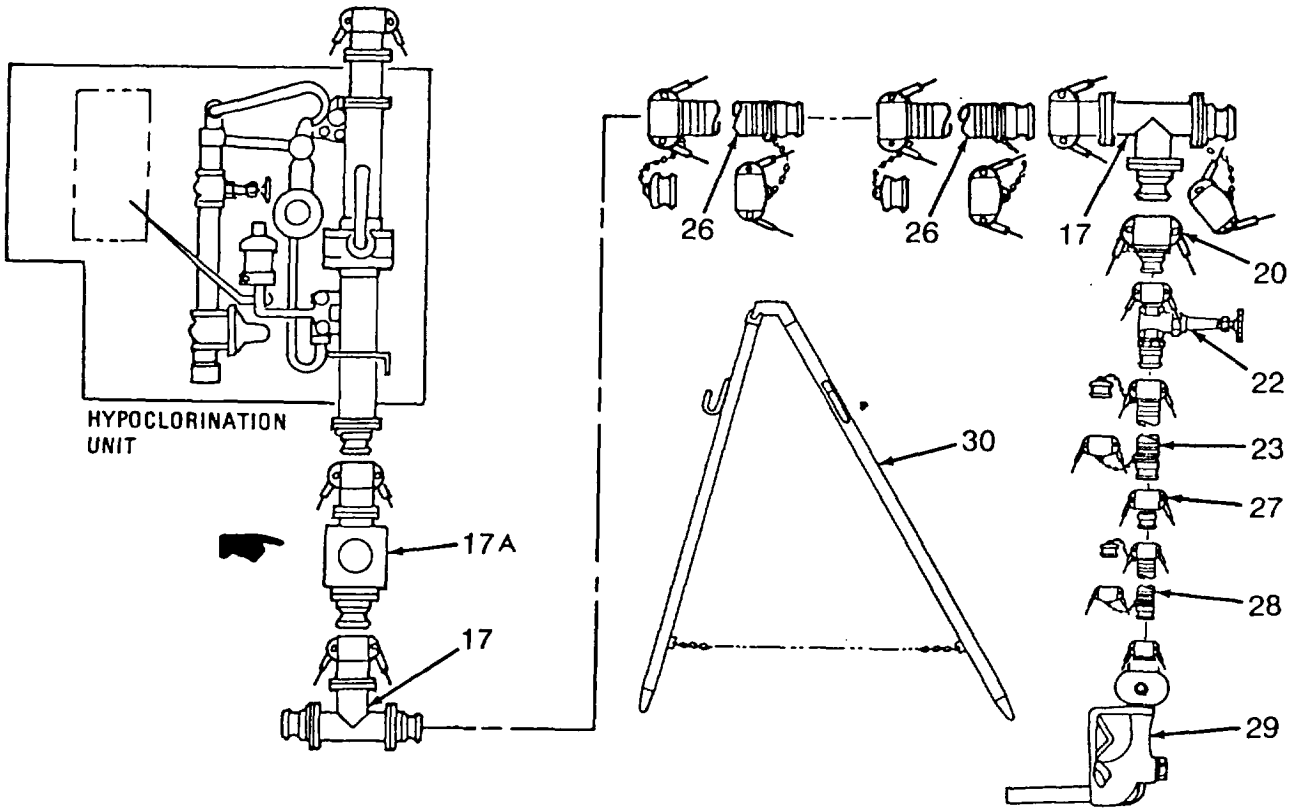

d. Connect gate valve assy (22) to reducer (20) on the tee assy (17).

e. Connect discharge hose assy (23) to gate valve assy (22).

f. Connect discharge hose assy (23) to reducer (27).

g. Connect hose assy (28) to reducer (27).

h. Unfold and setup nozzle stand assy (30).

CAUTION

To avoid clogging, never place a distribution nozzle assy directly on the ground.

i. Connect nozzle assy (29) to hose assy (28).

j. Hang distribution nozzle (29) from the hook located on the stand assy (30).

k. Remove cap from tee assy (17).

l. Repeat steps (a) through (k), above, for the remaining three hose nozzle connection kits.

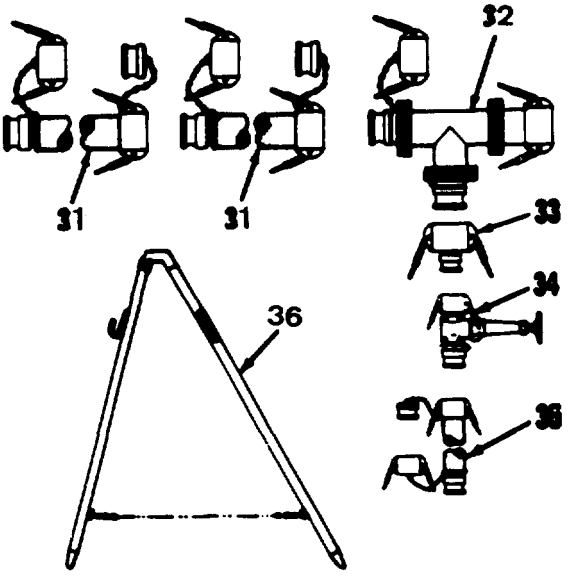

2-9.3.9.2 **Two-Inch Hose Connection Kit**

NOTE

Item 31 consists of identical inter-connected hose assys. Simplify assembly by connecting the hose before performing next step.

a. Connect hoses (31) to tee assy (32) of the output flow side 350 GPM pump connection kit. Position a hose.

b. Connect tee assy (32), reducer (33), valve assy (34) and discharge hose assy (35).

c. Unfold and setup stand assy (36).

d. Remove cap from discharge hose assy (35) and hang from hook located on the stand assy (36).

e. Remove cap from tee assy (32).

f. Repeat steps (a) through (h), above, for the remaining hose connection kits. There should be a total of 4 hose connection kits in the 300K WDS system. There should be a total of 6 hose connection kits in the 800K and 1,000K WDS systems.

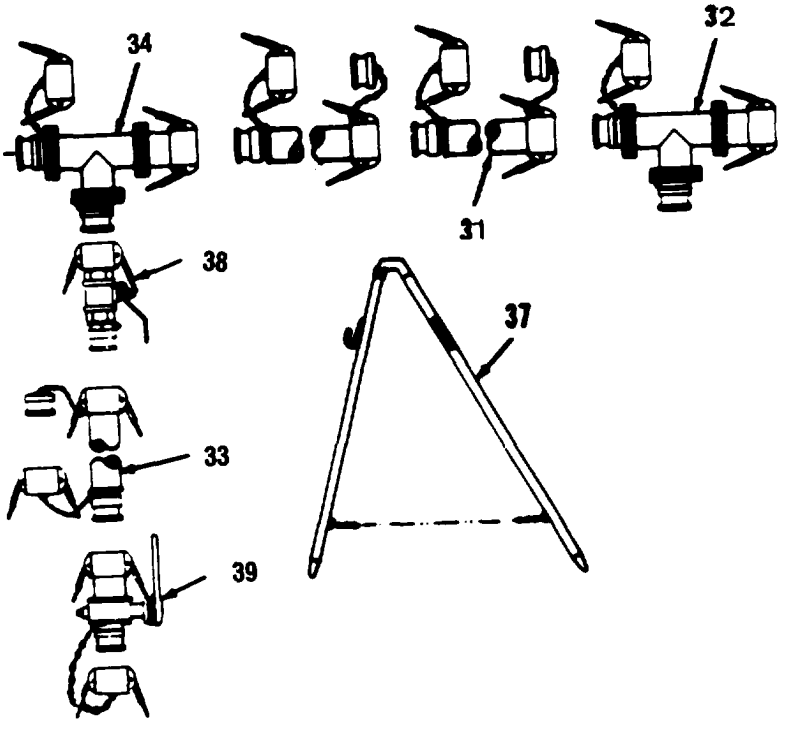

2-9.3.9.3 **Four-Inch Hose Connection Kit**

NOTE

Item 31 consists of identical inter-connected hose assys. Simplify assembly by connecting the hose before performing next step.

a. Connect female side of hose (31) to tee assy (32).

b. Connect hoses (31) to each other.

c. Connect hose assys (31) to second tee assy (34).

d. Connect quick-acting ball valve assy (38) to tee assy (34).

e. Unfold and set up the stand assy (37).

f. Connect discharge hose assy (33) to butterfly valve assy (39).

g. Hang from hook located on the stand assy (37).

h. Remove cap from tee assy (34).

i. Repeat steps (a) through (h), above, for the remaining hose connection kit.

2-9.3.9.4 **Bag Filler Connection Kit**

NOTE

Item 26 consists of identical inter-connected hose assys. Simplify assembly by connecting the hose before performing next step.

a. Remove plug and attach hose (26) to tee assy (17) of the fourth hose nozzle connection kit. Position a hose assy (27).

b. Connect second hose (26) to the hose installed in step (a).

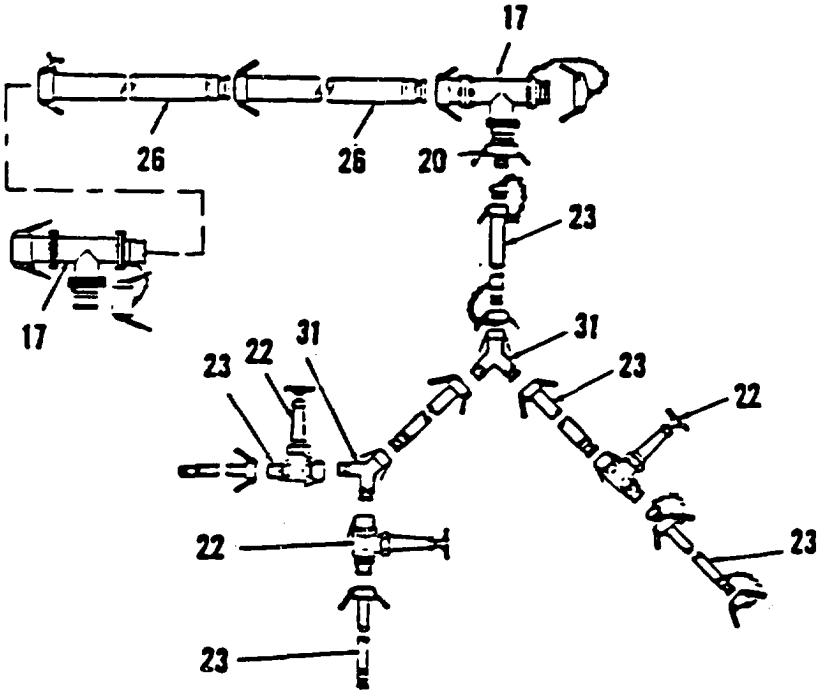

c. Connect tee assy (17) to the second hose to be installed.

d. Connect hose (23) to reducer (20) on the tee assy, and position a hose.

e. Connect “Y” connections (31) to the gate valves (22).

f. Connect two remaining hoses (23) to "Y" connection (31) installed in step above. Position hoses.

g. Connect remaining "Y" connection (31) to the left-hand hose assy.

h. Connect one of the three gate valve assys (22) to the right-hand hose assy (23).

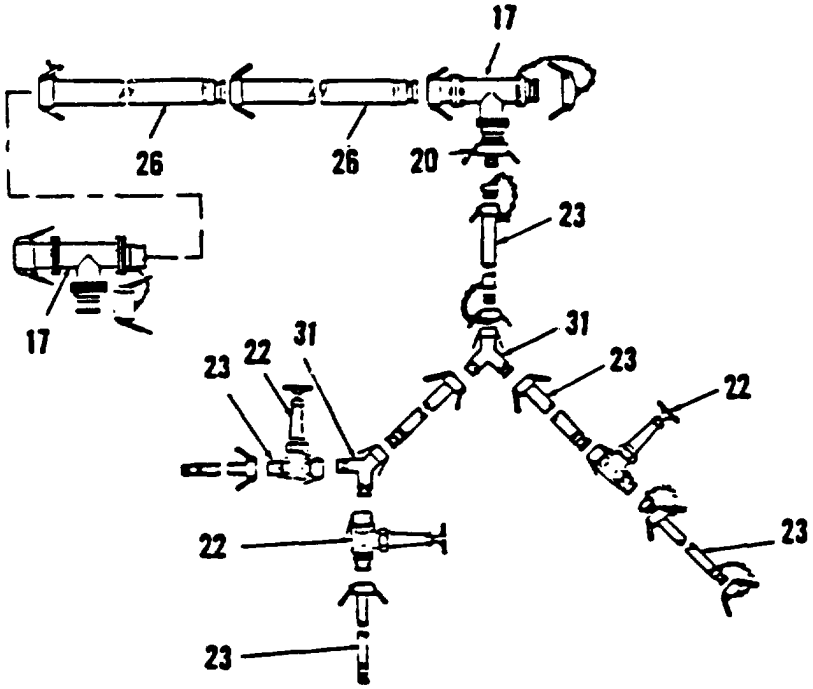

i. Connect each of the two remaining gate valve assys (22) to the two unconnected ends of the second "Y" connection (31) to be installed.

j. Connect each of the three hose assys (23) to each of the three gate valve assys (22) installed in steps (h) and (i), above.

k. Connect male ends of hoses (23) to bag filler connection kits.

CAUTION

If an unpleasant taste or odor is present, rinse the hoses with a solution of 100 parts per million calcium hypochlorite and water prior to initial use. (See TM 5-700, Section III, Paragraph 48.)

NOTE

Do not remove the cap from the tee assy.

2-10. 125 GPM PUMP AND ENGINE OPERATION.

The 125 GPM pump operation is contained in TM 5-4320-208-12. The 3-horse power engine that drives the pump is covered in TM 5-2805-257-14.

2-11. 350 GPM PUMP ASSEMBLY OPERATION.

Refer to TM 5-4320-226-14 for operation of the 350 GPM pump assembly.

2-12. HYPOCHLORINATION UNIT OPERATION.

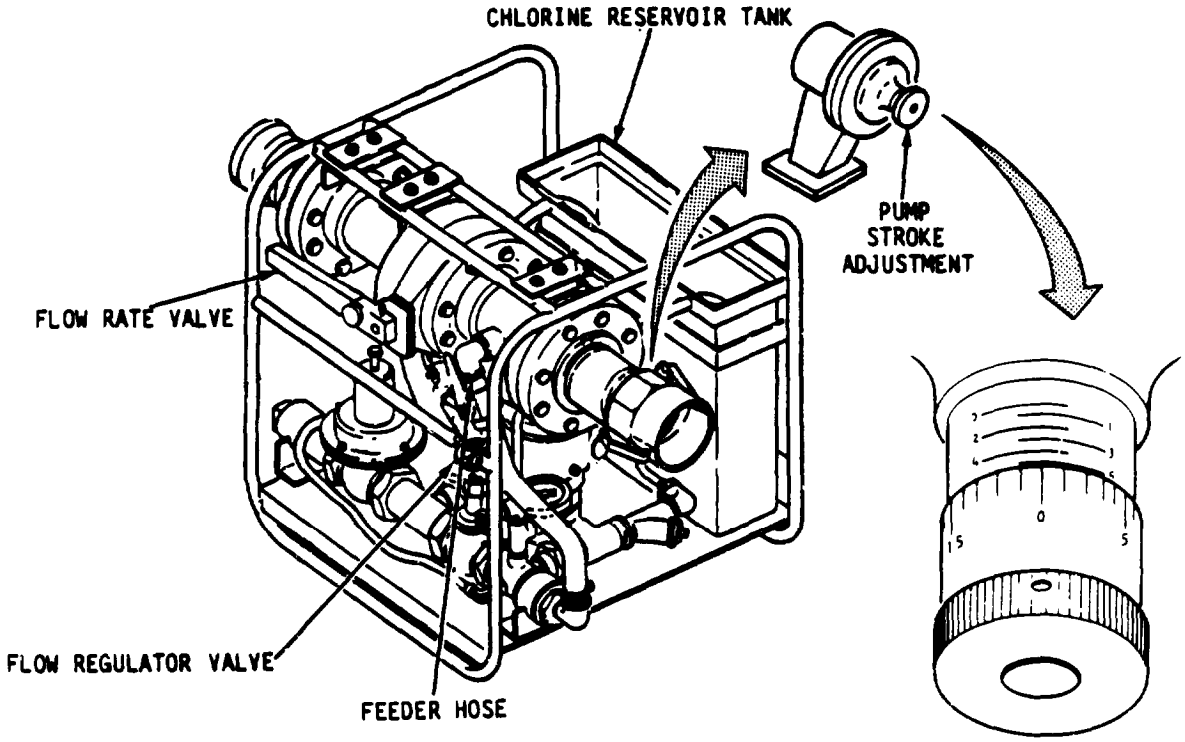

a. Fill reservoir with five gallons of clear water and add calcium hypochlorite per instructions on instruction plate. Mix until dissolved.

b. Set pump stroke adjustment control at 50%.

c. Loosen nozzle tube nut and, with hand, move foot valve up and down rapidly to prime suction line. Tighten injection nozzle tube nut.

d. Set flow rate valve to position 5 and slightly open flow regulator valve until proper reading is obtained.

(1) Using 350 GPM pump open regulator valve until meter reads 14 GPM.

(2) Using 125 GPM pump open regulator valve until meter reads 5 GPM.

(3) Using a stopwatch listen to Hypochlorinator pump. Within one minute it should make approximately 24 strokes which is coverted to 14 GPM.

NOTE

Do not reset valves. Flow rate changes automatically with change in inlet flow rate.

CAUTION

Hypochlorite solution can bleach clothing. Do not stand in front of the feeder when clearing air from the feeder.

e. If feeder becomes air-bound loosen feeder hose at upper connection point temporarily turn in stroke adjustment clockwise to fully closed position (100%). Allow air to escape from small vent hole in top of pump and reset stroke adjustment to 50%.

NOTE

Initial stroke setting of pump should be approximately 50%. Allow unit to operate a few minutes and then take a water chlorine residual test. If chlorine level is too high or low, perform the following steps.

f. Turn stroke adjustment down to 30% and allow unit to operate several minutes. Repeat chlorine level test and dilute solution with untreated water and repeat chlorine level test.

g. If chlorine level is too low, increase stroke adjustment to 70% and repeat chlorine level test. Continue to adjust stroke setting and testing until proper level is achieved.

NOTE

Unit instruction plate is based on the use of calcium hypochlorite (70% available chlorine). If not available 65% or 85% may be used in the same quantity as specified on the instruction plate, but pump stroke setting will change.

h. If 65% available chlorine is used set pump stroke to 54% and if 85% available chlorine is used set pump stroke to 42%.

HYPOCHLORINATOR PUMP ON

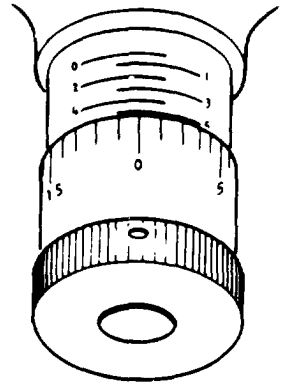

U. S. ARMY

HYPOCHLORINATION UNIT, WATER PURIFICATION
WITH BYPASS

MODEL	1955-2	CONTR. NO	DAAJ09-81-C-1752				
SER	92392-16	CAPACITY	2-400 GPM				
MAX. OPER. PSI	100	GVW	260	LB	LG	33	IN
NSN	4610-01-154-1213	DATE MFD			HGT	28	IN
ENG SER	B & R 71229	SHIP WT	320	LB	W	26	IN
WARRANTY		MO		MI	CUBE	11	FT
DATE SHIPPED		DATE INSP.			INSP STAMP.		

MFD. BIF, A UNIT OF GENERAL SIGNAL
BY WEST WARWICK, RI 02893

INSTRUCTIONS

1 FILL RESERVOIR TANK WITH 5 GALLONS OF WATER.
2 SELECT THE REQUIRED DOSAGE IN PARTS PER MILLION (PPM).
3 SELECT THE REQUIRED OUNCES OF CALCIUM HYPOCHLORITE FROM TABLE BELOW. (BASED ON 350 GPM FLOW RATE.)
4 ADD CALCIUM HYPOCHLORITE TO RESERVOIR TANK.
5 MIX UNTIL DISSOLVED. TANK FEED TIME 2 HOURS.
6 SET SOLUTION FEED PUMP ADJUSTING KNOB AT 50%.
7 START MAINLINE FLOW. CAUTION, MAINLINE VALVE MUST BE OPEN.
8 ADJUST MAINLINE VALVE TO BYPASS 14 GPM FLOW THRU WATER METER.

DOSAGE PPM	1	2	3	4	5	6	7	8	9	10
OUNCES HYPO	8.75	17.5	26	35	44	52	61	70	78.5	87

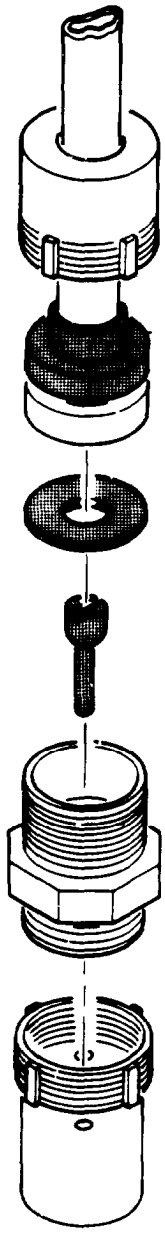

FOOT VALVE ASSEMBLY

2-12.1 **ESTABLISHED SOLUTION STRENGTH, RANGE CONTROL, AND PUMP SETTING.**

a. The first step is to estimate the flow rate to be expected, based on pumping capacity, filter flow, etc. This need only be an approximate figure to determine if flow is to be less than 10, or over 100 GPM at the start, but is it important to know if flow can be expected to increase or decrease considerably from the starting value.

b. Establish a tentative dosage to produce the residual desired. This is a function of "chlorine demand", or the amount of contaminants in the water. Again, this need not be exact, as dosage and solution can be increased more conveniently and reliably than it can reduced, it is customary to start with a PPM dosage for a 1 PPM residual and by means of residual test make the necessary final adjustment.

c. Curves have been prepared to assist in this process. For example, suppose it is known the water pump has capacity of 70 GPM. This is in the intermediate range of the system. Use 1 PPM as the tentative dosage and refer to Figure 21 of manual overpacked with equipment. At 70 GPM and 1 PPM a daily feed rate of about 20 ounces of 70% calcium hypochlorite will be required.

d. The mid-range capacity of the hypochlorinator is 2-1/3 GPH and in the lower section of Figure 21 the required amount of chemical would be fed at this capcity by making up a 0.175% solution. One and three-quarter ounces of calcium hypochlorite in five gallons of water will give this concentration.

e. Best procedure for establishing range control setting is to consider whether the nominal 60 GPM will be a maximum or not. Usually transfer of water by pump from detention to storage gives increasing total dynamic head on the pump as the supply level falls and discharge level rises. This means the maximum flow at the start, unless the system has multiple pumps and/or storage system. If the starting rate is known to be maximum, the range control valve is gradually closed until the pump is making 24 strokes per minute, or register shows 14 gallons flow in one minute. The system will now correct itself automatically as it slows down.

f. Following this procedure, the pump is set at approximately 50% stroke and the results of the residual test are used to increase or decrease dosage as required. Once the correct residual is reached, the treatment will vary automatically in proportion to flow over approximately, 10:1 range without further adjustment of the pump or the range control valve.

g. Supposing chlorine demand is abnormally heavy and the desired residual is not found at maximum stroke. For example, at 50% setting there might be only 0.2 residual. An increase in solution strength is indicated to increase dosage by 0.8 PPM. If flow range and pump are correct, they should not be changed and the range control valve is left alone. In the example given to get 0.8 PPM more at 70 GPM would require about sixteen more ounces of 70% calcium hypochlorite per day which corresponds to an *increase* in solution strength of 0.15% for a 2-1/3 GPH rate. To increase by this amount, 1.5 ounces of dry chemical would be added per 5 gallons of original solution. This should restore the correct residual at close to the 50% nominal stroke setting.

h. Most reliable operation of the equipment calls for midcapacity stroke length settings and stroking rates. This keeps the pump primed, minimizes effects of sediment and impurities in the solution, and gives maximum mixing and distributions of active chlorine in the water system.

i. Under normal conditions, it will be necessary to make up fresh solution about every two hours. Mixing of dilute solutions is easier than for highly concentrated solutions and less precipitation of impurities from hard water will occur. It is recommended that 60 gallons of solution be made up at a time.

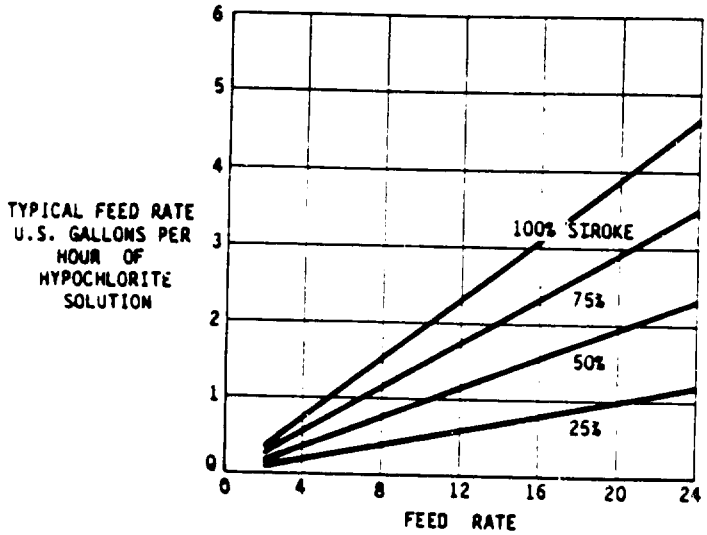

Figure 1. Pump Speed and Pump Stroke Setting

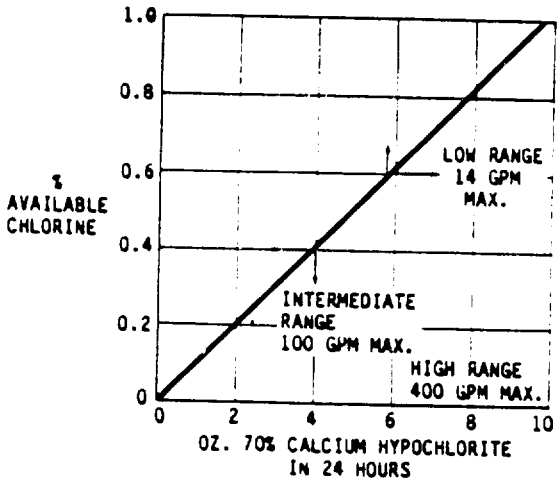

Figure 2. Solution Make-up

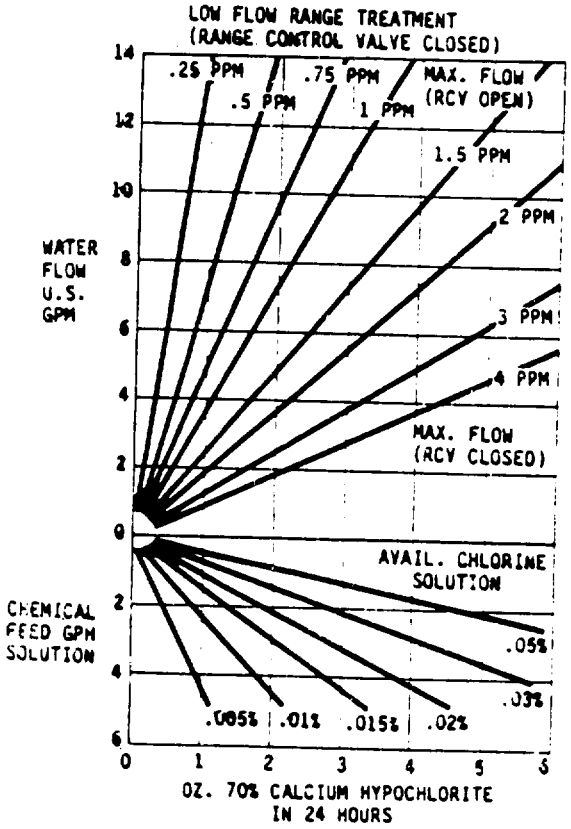

Figure 3. Dosage and Flow

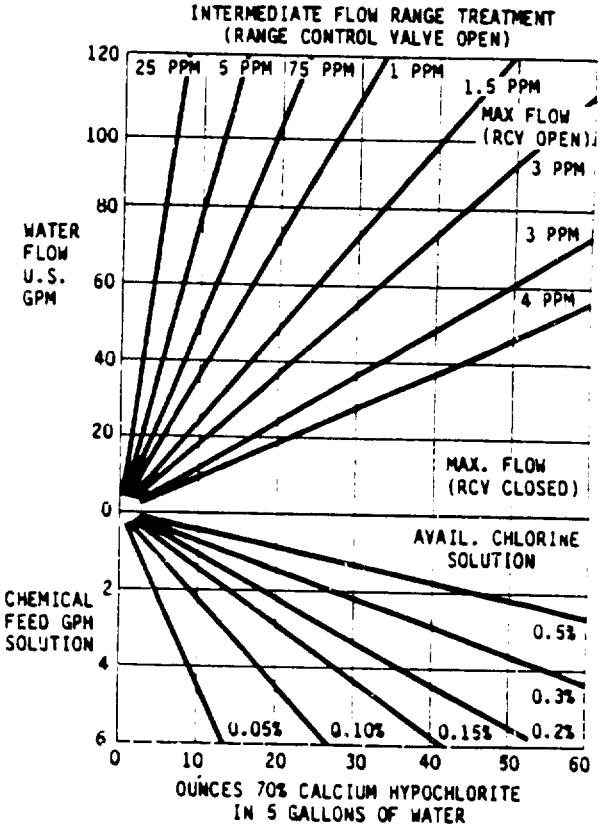

Figure 4. Dosage and Flow

2-12.2 LOW FLOW (2-100 GPM) CONVERSION INSTRUCTIONS.

NOTE

When using Hypochlorinator Unit for the low flow range (2-100 GPM) the bypass manifold is not used. Line connections to the unit are made directly to the inlet and outlet connections of the lower manifold. These connections are 2” NPT and the following changes to the unit are required.

a. Disconnect inlet hose from the bypass manifold at the lower manifold inlet. Remove reducing bushing and elbow assembly from the lower manifold and place it into tool box for storage.

b. Remove the pipe plug from lower manifold outlet connection and place in tool box for storage.

c. Disconnect outlet hose from the bypass manifold at the meter outlet tee on lower manifold.

d. Disconnect the pump injection nozzle at the bypass manifold and install it into the meter outlet tee on the lower manifold.

e. Connect line to be treated to the inlet connection (2” NPT) of the lower manifold.

f. Connect outlet connection (2” NPT) of the lower manifold to the line leading to distribution or storage.

NOTE

Instructions nameplate attached to unit is not applicable to this low flow range. Solutions strength, range control and pump setting are to be selected from paragraph 2-12.1, steps (a) thru (i) and Curves Figure 1, Figure 2, Figure 3, and Figure 4.

2-12.3 REMOVE HYHPOCHLORINATOR FROM SERVICE.

a. Disconnect INLET and OUTLET hose assemblies.

b. Flush unit by disconnecting outlet fitting first allowing water to flow to waste.

c. Remove foot valve assy from hypochlorite reservoir and insert in container of untreated water. Allow feeder to operate several minutes as this will flush all lines.

d. Disconnect inlet connection.

e. Disconnect all clear plastic hoses and drain and reinstall.

f. Store Hypochlorinator Unit.

2-13. WATER SYSTEMS OPERATION.

These procedures describe the operation of the WDS20K, WDS40K, WDS300K, WDS800K, and WDS1000K water distribution systems. The WDS300K, WDS800K, and WDS1000K water distribution system operation is identical except the storage capacity is not the same. Operation of all systems have a fill mode and a discharge mode. In the discharge mode, water is discharged from the storage tanks by the water distribution system. In all systems except the WDS20K the system can operate in the fill mode and discharge mode at the same time.

a. *WDS20K Operation.*

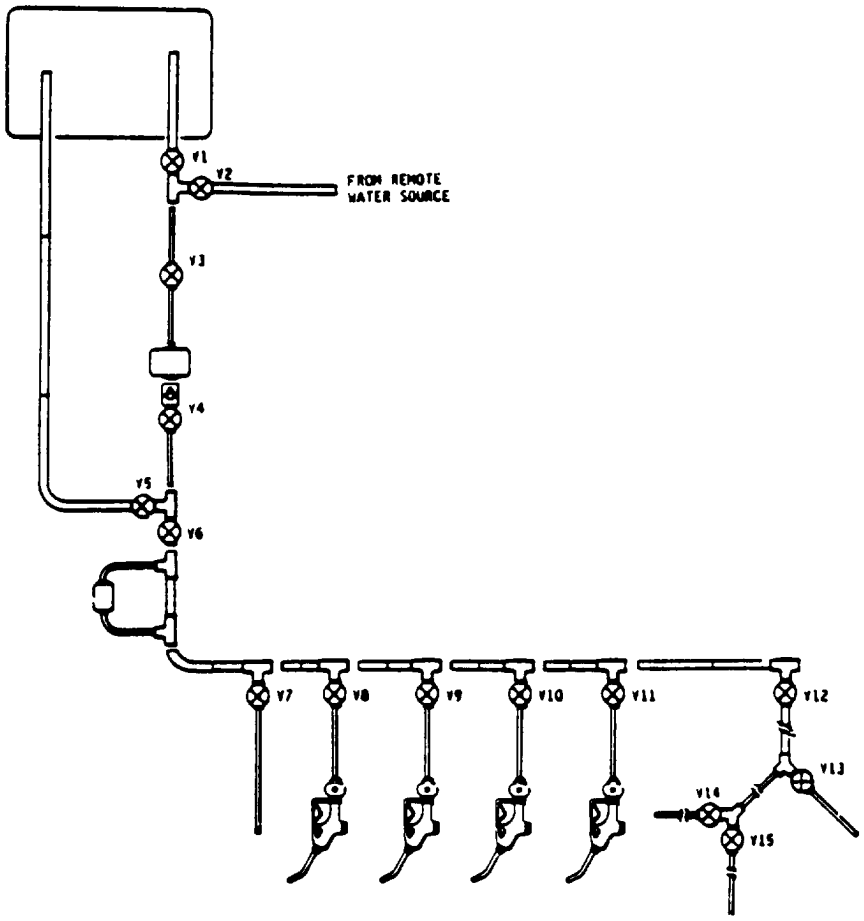

(1) Fill storage tank with water by turning off valves V1 and V6 and turning on valves V2, V3, V4, and V5. Start pump.

(2) Discharge water from storage tank with pump operating, by turning off valves V2 and V5 and turn on valves V1, V3, V4, and V6. Operate Hypochlorination Unit (paragraph 2-12). Open discharge valves V7, V8, V9, V10, V11, or V12 as necessary to discharge water. Valves V13, V14, or V15 discharge water to hospital discharge hoses.

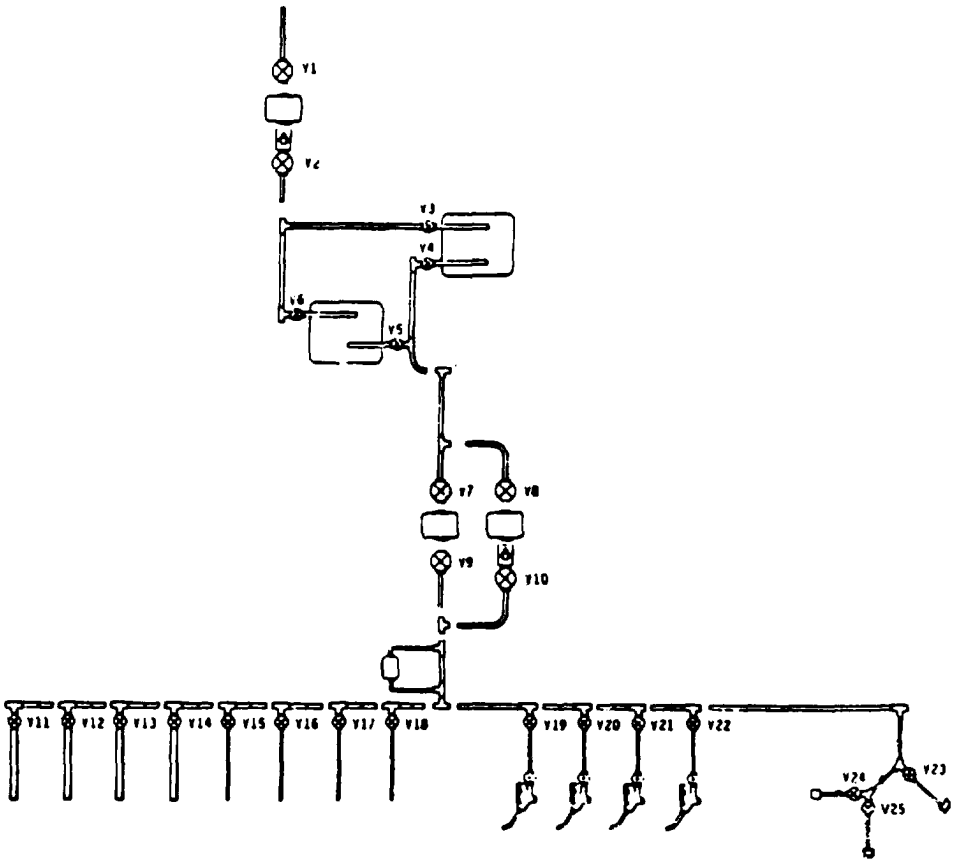

b. **WDS40K Operation.**

(1) Fill storage tanks by opening valves VI, V2, V3 and V6. Start 125 GPM pump and pump water from source.

NOTE

One tank may be filled at a time by closing either valve V3 or V6.

(2) Discharge water from either storage tank by opening valve V4 or V5, start either 350 pump or 125 pump. Open valves V7 and V9 with pump operating and open valves V8 and V10 with pump operating.

(3) Operate Hypochlorination Unit (paragraph 2-12).

(4) Discharge water from 2-inch hoses by opening valves V11, V12, V13, or V14.

(5) Discharge water from 1 ½ inch hoses by opening valves V15, V16, V17, or V18.

(6) Discharge water from nozzle assys by opening valves V19, V20, V21, or V22.

(7) Discharge water from bag filler connections by opening valves V23, V24, or V25.

c. *WDS300K, WDS800K, and WDS1000K Operation.*

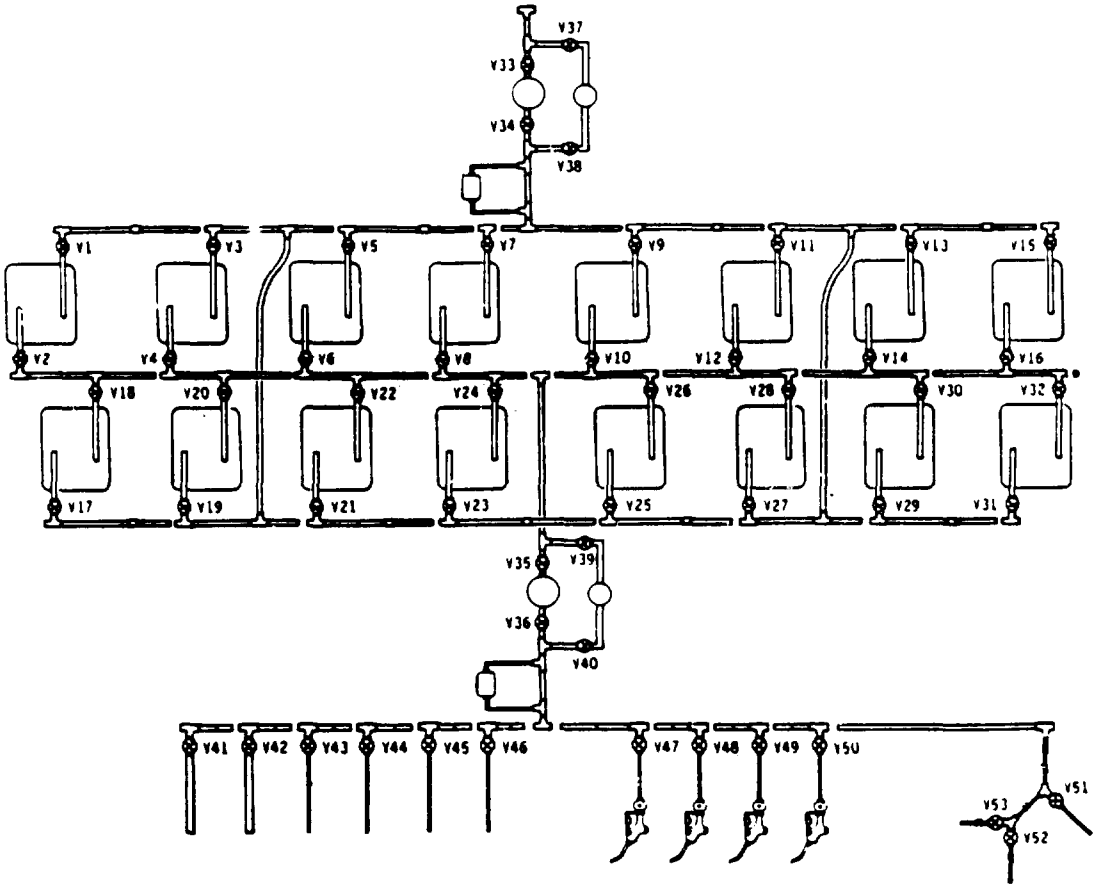

(1) Fill storage tank by opening odd numbered valves V1 through V31. Start 350 GPM pump or 125 GPM pump. Open valves V33 and V34 with 350 GPM pump operating and open valves V37 and V38 with 125 GPM pump operating.

(2) Operate Hypochlorination Unit (paragraph 2.12).

(3) Discharge water from any filled tank by opening even numbered valves V2 through V32. Start 350 GPM pump or 125 GPM pump. Open valves V35 and V36 with 350 GPM pump operating and open valves V39 and V40 with 125 GPM pump operating.

(4) Operate Hypochlorination Unit (paragraph 2.12).

(5) Discharge water from 2-inch hoses by opening valves V41, or V42.

(6) Discharge water from 1-1/2-inch hoses by opening valves V43, V44, V45, or V46.

(7) Discharge water from nozzle assys by opening valves V47, V48, V49, or V50.

(8) Discharge water from bag filler connections by opening valves V51, V52, or V53.

Section IV. OPERATION UNDER UNUSUAL CONDITIONS

2-14. This section has instructions for operation of the WDS20K, WDS40K, WDS300K, WDS800K, and WDS1,000K water distribution systems in arctic conditions, extreme heat, and dusty or sandy areas.

2-14.1 350 GPM Pump Assembly. Refer to TM 5-4320-226-14 for operation under arctic conditions, extreme heat and dusty or sandy areas.

2-14.2 125 GPM Pump and Engine. Refer to TM 5-4320-208-12&P and TM 5-2805-257-14 for operation of the 125 GPM and engine under arctic conditions, extreme heat, and dusty or sandy areas.

2-14.3 Water Hoses 20,000 and 50,000 Gallon Water Storage Tanks.

a. **Arctic Operation.** Store water hoses and tanks in a heated area to avoid freezing. Remove snow, sleet or ice from tanks before installing couplers. Be careful to prevent cracking tanks if frozen. Wear arctic mittens when handling hardware associated with the hoses and tanks.

b. **Operation in Extreme Heat.** Protect water hoses and tanks from extreme heat by covering with tarpaulin, burlap, or shade with trees. Ventilate area around the tanks to allow cooling air circulation.

c. **Operation in Dusty or Sandy Areas.** Keep dust caps in place on water hoses and tanks until ready to connect fittings. Inspect couplings for presence of dirt before connecting hose fittings to tanks.

2-14.4 HYPOCHLORINATION UNIT.

a. **Arctic Operation.**

WARNING

To prevent hands from freezing to the metal, wear arctic mittens when handling hardware associated with the hoses and tanks.

WARNING

Fumes from the Hypochlorination Unit can cause sickness or even death. Be sure that the unit is in a well ventilated area.

CAUTION

To prevent damaging the Hypochlorination Unit due to freezing, heat with forced air.

b. **Operation in Extreme Heat.**

WARNING

Fumes from the Hypochlorination Unit can cause sickness or even death. These fumes are increased when hypochlorite solution is subject to extreme heat. Be sure that the unit is in a well ventilated area.

c. **Operation in Dusty or Sandy Areas.** Keep Hypochlorination Unit reservoir covered to prevent water system from becoming contaminated by blowing dust or sand, Do not remove caps and plugs from fittings until hose connections are ready to be made.

CHAPTER 3
OPERATOR MAINTENANCE

Section I. LUBRICATION INSTRUCTIONS

3-1. GENERAL LUBRICATION INSTRUCTIONS.

The engine assys used with the 125 and 350 GPM pumps are all that require lubrication in the WDS20K, WDS40K, WDS300K, WDS800K and WDS1,000K water distribution systems. The pump assys use prelubricated sealed ball bearings that require no lubrication. For lubrication of the engine assy used on the 125 GPM pump, Refer to LO 5-2308-275-14 and TM 5-2805-275-14. For lubrication of the engine assy used on the 350 GPM pump, refer to LO 5-4320-226-12.

Section II. OPERATOR TROUBLESHOOTING

3-2. GENERAL.

a. This section contains troubleshooting information for locating and correcting most of the operating troubles which may develop in water distribution systems. The troubleshooting procedures are listed in table 3-1. The table lists common malfunctions which you may find during operation or maintenance of the water distribution systems or its components. Perform the tests/inspection and corrective actions in the order listed. Each malfunction for an individual component, unit, or system is followed by a list of tests or inspections which will help you determine corrective actions to take.

b. This manual cannot list all possible malfunctions that may occur, nor all tests or inspections and corrective actions. If a malfunction is not listed (except where malfunction and cause are obvious) or is not corrected by listed corrective action, notify your supervisor.

Table 3-1. Operator Troubleshooting

MALFUNCTION TEST OR INSPECTION CORRECTIVE ACTION
1. Low water pressure at output nozzles.
Step 1. Check for loose water hose fittings (leaks).
Tighten loose fittings.
step *2.* Check for water valve in line partially closed.
Open all valves in series with pump.
Step *3.* Check water pump output pressure.
Open water line at pump and check discharge water pressure
Notify higher maintenance.
2. Collapsible Tank Leaks.
Step 1. Inspect tanks for punctures or cuts.
Notify higher maintenance if disassembly is required.

Table 3-1. Operator Troubleshooting (Continued)

MALFUNCTION TEST OR INSPECTION CORRECTIVE ACTION
3. **Collapsible Tank Vent Pipe Leaks.**
Step 1. Inspect relief caps, vent pipes and cap screws for looseness, cracks or damaged gaskets.
Torque loose cap screws to 30 inch pounds.
Notify higher maintenance if disassembly is required.
4. **Hypochlorination Unit Fails to Perform Per Instruction in Paragraph 2.12.**
Step 1. Check unit instruction plate to ensure unit is properly serviced
If unit still malfunctions, notify higher maintenance.

Section III. OPERATOR MAINTENANCE PROCEDURES

3-3. INTRODUCTION.

Operator maintenance consists of daily inspections when the water distribution system is set up for use, replacement of water hoses and hose fittings. Replacement of defective units or components is beyond the scope of operator maintenance and requires the services of organizational maintenance.

3-4. HYPOCHLORINATION UNIT, INSPECT/SERVICE

LOCATION/ITEM	ACTION	REMARKS

INSPECT

Inspect Hypochlorination Unit for water flow at flow rate meter (1).

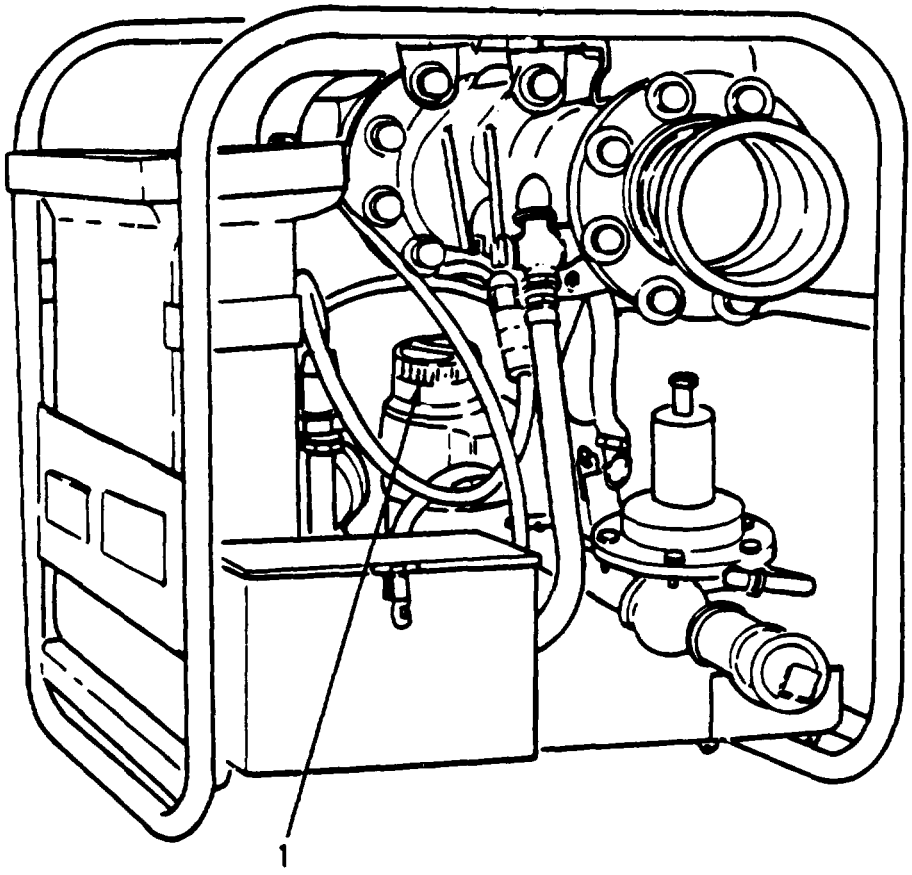

SERVICE

See paragraph 2.12 for detailed servicing instructions.

3-5. HOSE ASSYS, INSPECT/REPLACE

LOCATION/ITEM	ACTION	REMARKS

NOTE

These procedures are applicable for the Dual Tank Interconnection Kit 20-foot discharge hose, 10-foot suction hose, 20-foot suction hose, 10-foot discharge hose, the Interconnection Kit 4-inch hose, the 350 GPM Pump Connection Kit 20-foot hose, the 125 GPM Pump Connection Kit 2-inch hose, the Hose Nozzle Connection Kit 4-inch by 20-foot hose, 2-inch by 20-foot hose, 1-1/2 inch hose, the 2-inch Hose Connection Kit 4-inch hose, 2-inch hose, the 4-inch Hose Connection Kit 4-inch hose, the Bag Filler Connection Kit 4-inch by 20-foot hose, 1-1/2 by 25-foot hose, the Single Tank Connection Kit 4-inch by 20-foot suction hose, 4-inch by 10-foot suction hose, 4-inch by 20-foot discharge hose, 4-inch by 10-foot discharge hose, 4-inch discharge hose, and the Hospital Connection 4-inch by 20-foot hose and 2-inch by 20-foot hose assemblies.

REMOVAL

a. Remove hose assy from system by disconnecting male and female coupling halves.

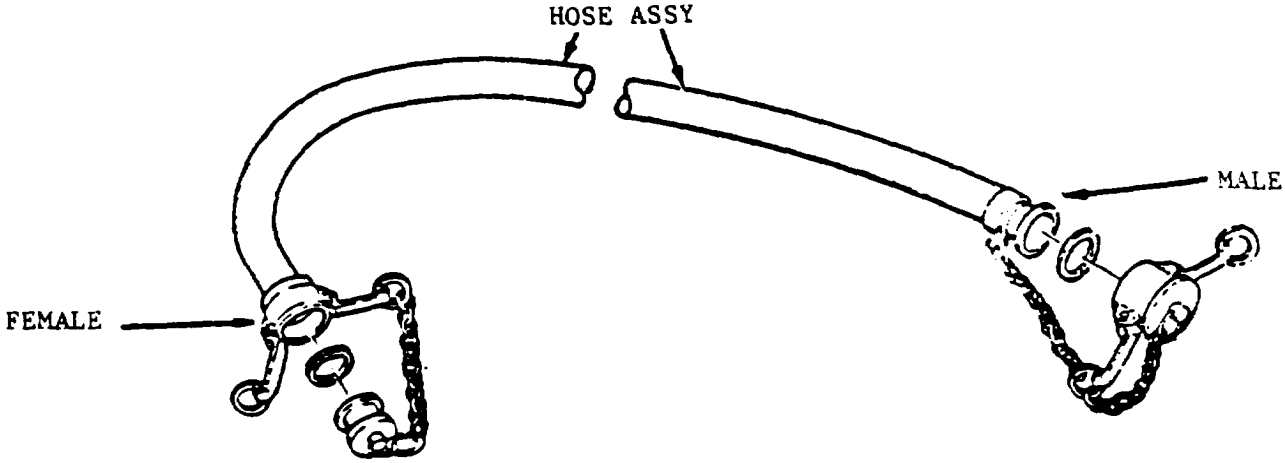

INSPECT AND CLEANING

a. Wash the hose and couplings in a mild soap and water solution. Rinse in clean water and dry with a clean lint free cloth.

b. Inspect hose and coupling assys in accordance with PMCS.

INSTALLATION

Install serviceable hose assy.

3-6. VALVE ASSY, INSPECT/REPLACE

NOTE

These procedures are applicable to the 125 GPM Pump Connection Kit 2-inch gate valve, 2-inch check valve, the Hose Nozzle Connection Kit 2-inch gate valve, the 2-inch Hose Connection Kit 2-inch gate valve, the 4-inch Hose Connection Kit quick acting valve and butterfly valve, the Bag Filler Connection Kit 2-inch gate valve, the Single Tank Connection Kit gate valve, and the Hospital Connection Kit 2-inch gate valve assembly.

LOCATION/ITEM	ACTION	REMARKS

REMOVAL

Using pipe wrench, remove female coupling (2), and male coupling (3) from valve assy (1).

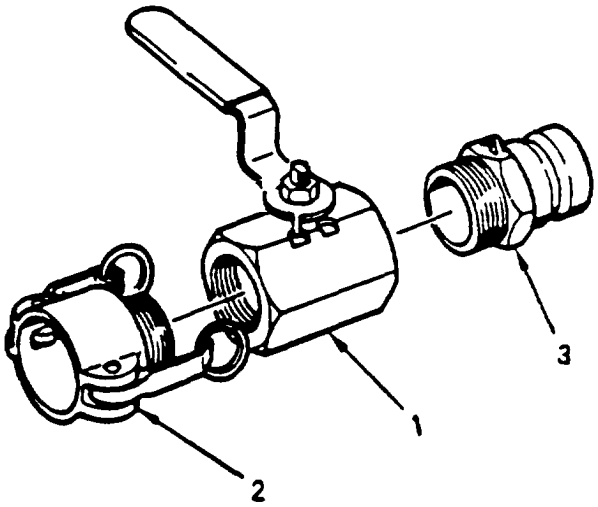

INSPECT AND CLEANING

a. Remove all tape residue from valve body and couplings.

b. Wash all parts in mild soap and water solution and dry with clean lint-free cloth.

3-6. VALVE ASSY, INSPECT/REPLACE (CONT.)

LOCATION/ITEM	ACTION	REMARKS

c. Inspect for damaged body (1), and control handle (4).

d. Replace valve body (1) or handle (4) if damage is found.

e. Inspect couplings (2 and 3) for cracks, burns or damaged surface.

f. Replace couplings (2 and 3) if damage is found.

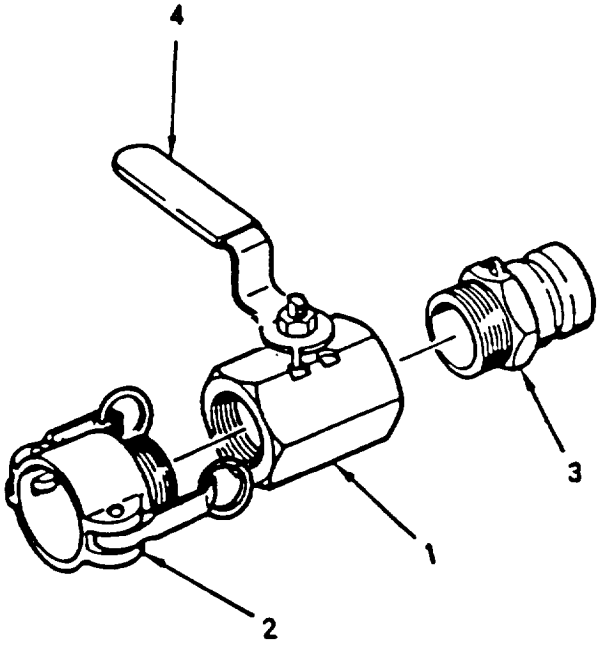

INSTALLATION

a. Install male coupling (3), and female coupling (2) onto valve assy (1).

b. Return valve to service.

3-7. NOZZLE ASSY, INSPECT/REPLACE.

LOCATION/ITEM	ACTION	REMARKS

REMOVAL

Remove female quick-disconnect reducer (2) from hose assy.

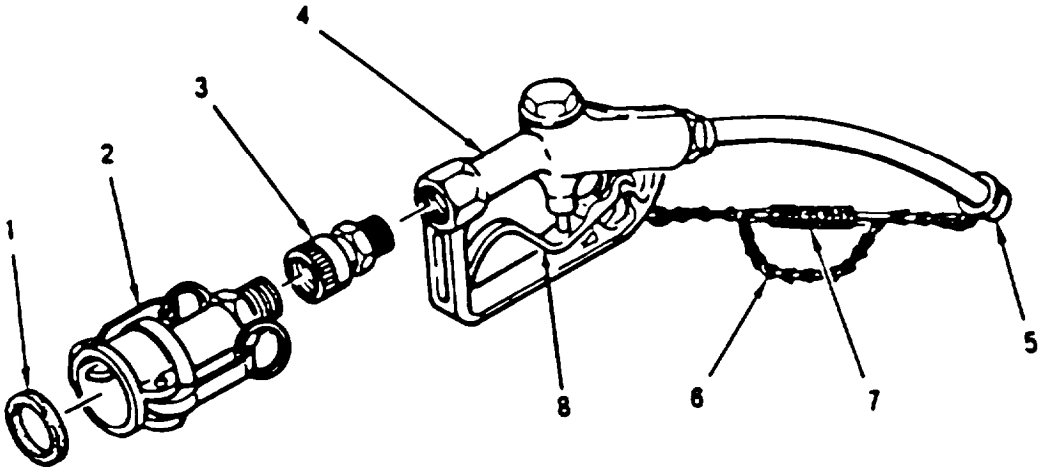

INSPECT AND CLEANING

a. Wash the nozzle in a mild soap and water solution. Rinse in clean water and dry with a clean lint-free cloth.

b. Inspect for missing gasket (1).

c. Inspect for missing protective cap (5) chain (6) or spring (7).

d. Inspect control handle (8), female quick-disconnect reducer (2), or swivel (3).

INSTALLATION

Install female quick-disconnect reducer (2) to hose assy.

3-8. NOZZLE STAND ASSY INSPECT/REPLACE

LOCATION/ITEM	ACTION	REMARKS

REMOVAL

Remove stand assy from system by folding up.

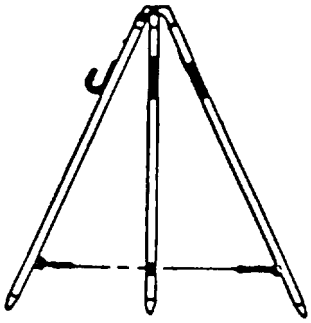

INSPECT AND CLEANING

WARNING

Dry-cleaning solvent, P-D-680, used to clean parts is potentially dangerous to personnel and property. Avoid inhalation of fumes and repeated or prolonged skin exposure. Wash exposed skin thoroughly with soap and water. Use in well ventilated area away from open flame or excessive heat. Flash point is 100°F (38°C).

a. Wash all parts in cleaning solvent P-D-680 to remove all dirt and foreign matter. Dry with clean lint free cloth.

b. Inspect nozzle stand assy in accordance with PMCS.

3-8. **NOZZLE STAND ASSY INSPECT/REPLACE (CONT)**

LOCATION/ITEM	ACTION	REMARKS
c. Using proper tools, straighten any bent legs or brackets. Weld any minor cracks or breaks that were detected during inspection. Replace any leg or bracket that is damaged beyond repair.		
d If either chain is damaged, cut a new one approximately 10-inches in length from bulk chain **(P/N RRC-271).**		
e. Replace any remaining parts that are damaged or defective.		

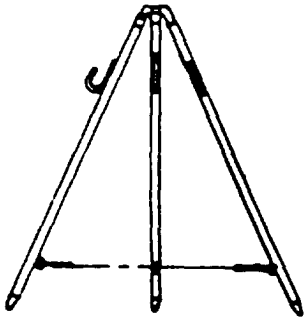

INSTALLATION

Install serviceable stand assy into system.

CHAPTER 4

ORGANIZATIONAL MAINTENANCE INSTRUCTIONS

Section I. SERVICE UPON RECEIPT

4-1. GENERAL.

The five water distribution systems are shipped in reusable wooden crates of various sizes (figure 4-1). Use care when uncrating equipment to avoid unnecessary damage of shipping crates. Refer to Chapter 1, Section II for identification of particular water distribution system (WDS) components and kits to be used for your system. When uncrating equipment, it is important to remember that the system is based on a modular concept. The systems described in this manual are dealt within general terms. When for instance, the 1,000K WDS is described as consisting of 20, 50,000 gallon water tanks and associated equipment, this is not meant to imply that all 20 water tanks must be used. Uncrate only the amount of equipment necessary to perform your particular operation. Uncrate equipment as follows.

CAUTION

Use care when removing hoses to avoid puncturing hoses with sharp objects as nails.

4-2. SITING AND UNCRATING.

- Select a level, debris free area for setting up the WDS.

- Remove top of wooden shipping crate (figure 4-1). An equipment shipping list is supplied with each system. Remove equipment shipping bags from shipping container one at a time.

- Inspect the equipment for damage incurred during shipment. If the equipment has been damaged, report the damage on DD Form 6, Packaging Improvement Report. Marine Corps users refer to MCO 4610.19.

- Check the equipment against the packing slip to see if the shipment is complete. Report all discrepancies in accordance with the instructions of DA PAM 738-750. Marine Corps personnel submit SF-364 forms in accordance with MCO 4430-3.

- Check to see whether the equipment has been modified.

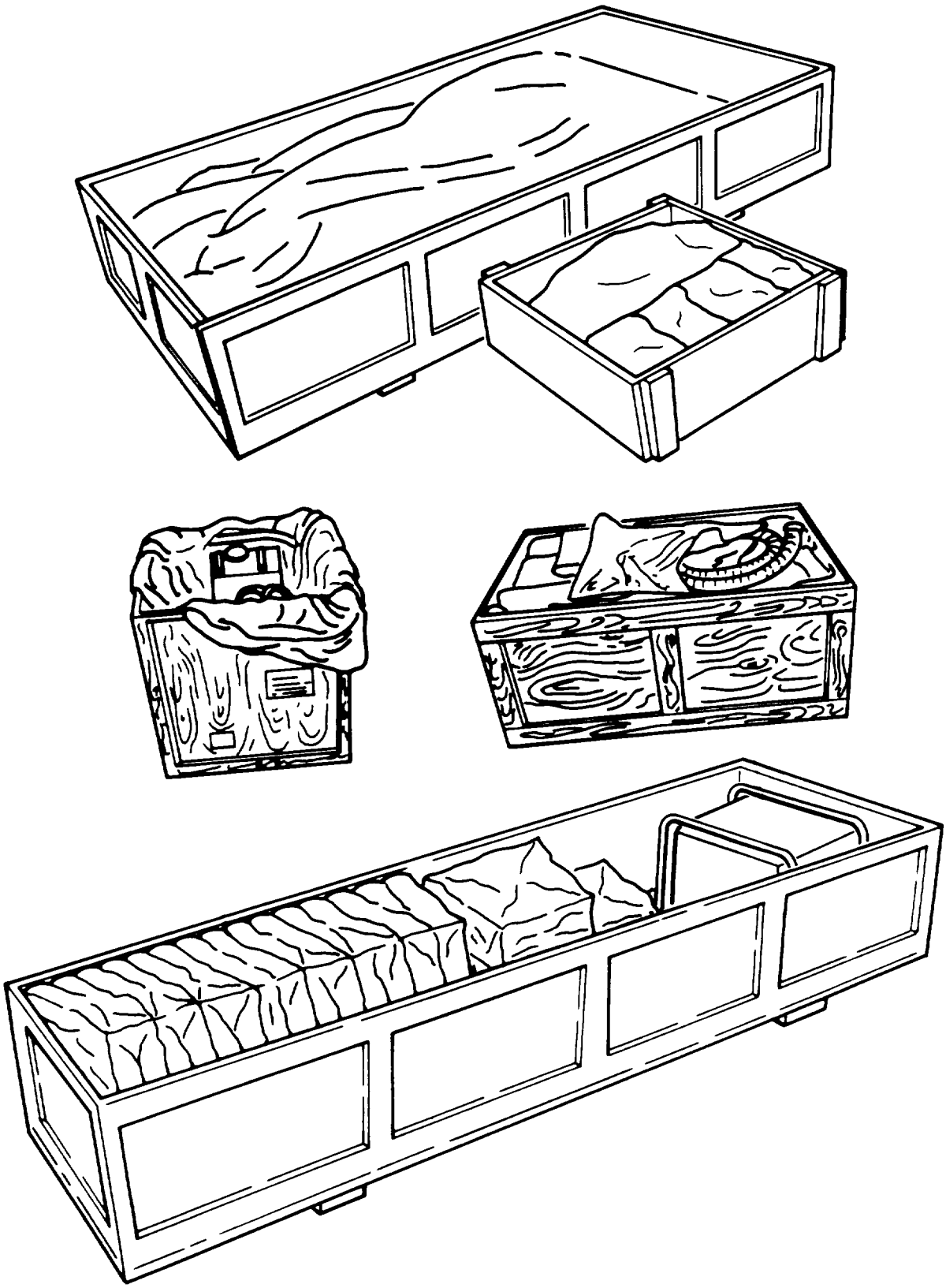

Figure 4-1. WDS Shipping Crates

a. **50 GPM Wheel Mounted Pump Assembly.**

{1) Cut and remove steel bands securing shipping crate to frame assy.

(2) Carefuly remove shipping crate from 350 GPM pump.

(3) Store crate for reuse.

(4) Remove protective tape from filter intake, dust ejector, cooling air intake, exhaust spark arrestor, dipstick, oil filler cap, breather tube, and oil pump sump filler.

b. **125 GPM Pump Assembly.**

(1) Remove top of shipping crate.

(2) Remove 125 GPM pump assy from shipping crate.

(3) Remove overpack kit from shipping crate.

(4) Check equipment in overpack kit against the packing slip to see if the shipment is complete. Report all discrepancies in accordance with instruction contained in DA PAM 738-750. Marine Corps users submit SF-364 in accordance with MCO 4430-3.

c. **Hypochlorination Unit.**

(1) Remove top of shipping crate.

(2) Remove Hypochlorination Unit from shipping crate.

(3) Remove top of plastic chlorine reservoir and remove manual and overpack kit.

(4) Check contents against packing slip to ensure all items are accounted for. Report all discrepancies in accordance with instrucitons contained in DA PAM 738-750. Marine Corps users submit SF-364 in accordance with MCO 4430-3.

d. **Hoses.**

(1) Carefully remove top of shipping crate to avoid possibility of nails puncturing hose assys.

(2) Remove required number of hoses from shipping crate.

(3) Check hose assys against packing slip to ensure correct quantity was shipped. Report all discrepancies in accordance with instructions contained in DA PAM 738-750. Marine Corps users submit SF-364 in accordance with MCO 4430-3.

e. **Kits and GFE Equipment.** Various kit and GFE equipment are contained in the five water distribution systems.

(1) *General.* All equipment is preserved, packaged, and crated to meet military requirements. Each kit is shipped with all attachments and equipment necessary for normal operation.

(2) *Unloading Instructions.* You may lift crated equipment by using a forklift, crane, or other lifting device capable of lifting 600 pounds safely. If a crane is used, arrange slings under packing crate carefully to ensure crate will not tip. If a fork lift is used, slide fork lift blades directly under crate between skid blocks.

(3) *Uncrating.* Carefully uncrate equipment, being sure not to damage components. If the equipment is to be recrated, exercise care to prevent damage to crating material.

(4) *Unpacking.* Unpack all small components packaged and stored around the larger components. These components can easily be lifted and removed from the packing skid by one or two workmen.

NOTE

Be sure all components are accounted for. Check all packaging material for loose parts before discarding.

(5) *Servicing.* Remove all protective compounds and covering such as waxed paper, waterproof tape, and barrier material and tape. Using dry wiping cloths, remove all preservatives and greases from unpainted, threaded, or exposed surfaces.

(6) *Inspection.*

(a) Unwrap and examine separately wrapped items to ensure they are in serviceable condition.

(b) Visually inspect all components for damage. Check for dents, cracks, broken parts, and loose or kinked connections. Report damaged items on DD Form 6, Packaging Improvement Report. Marine Corps users shall report damaged shipments in accordance with MCO P4600.14.

(c) Check bill of lading to ensure that all parts have been supplied. Report all discrepancies in accordance with instructions contained in DA PAM 738-750. Marine personnel refer to MCO P4610.19.

4-3. **SET-UP.** Prepare the equipment contained in the five water distribution systems for use as follows.

NOTE

Disregard instructions for equipment not contained in your particular equipment configuration. Refer to table 4-1.

a. **350 GPM Pump Assembly.** Prepare the 350 GPM pump assy for operation in accordance with instructions contained in TM 5-4320-226-14.

b. **125 GPM Pump Assembly.** The 125 GPM pump assy consists of a 3-horsepower engine and a 125 GPM pump.

(1) Prepare 3-horsepower engine for operation in accordance with instructions contained in TM 5-2805-257-14.

(2) Prepare 125 GPM pump for operation in accordance with instructions contained in TM 5-4320-208-12.

c. **Hypochlorination Unit.** The Hypochlorination Unit is ready for use following uncrating. Instructions for mixing chlorine solution are on the instruction plate. Prepare the Hypochlorination Unit for operation in accordance with instructions on the instruction plate.

d. **50,000-Gallon Water Tanks.** Prepare the 50,000-gallon water tanks for use in accordance with instructions contained in Uniroyal Technical Manual CM 63504-3-49.

e. **20,000-Gallon Water Tanks.** Prepare the 20,000-gallon water tanks for use in accordance with instructions contained in Goodyear Aerospace Publication 5-19-19.

f. **Kit, Valves, and Hose Assemblies.** All kits, valves and hose assys are ready for use following uncrating, Do not remove the protective plugs and caps until installation. Ensure all valve assys are closed prior to installation in the system.

Section II. REPAIR PARTS, SPECIAL TOOLS, TMDE, AND SUPPORT EQUIPMENT

4-4. COMMON TOOLS AND EQUIPMENT.

Refer to the Modified Table of Organization and Equipment (MTOE) applicable to your unit.

4-5. SPECIAL TOOLS, TMDE, AND SUPPORT EQUIPMENT.

No special tools, TMDE, or support equipment are required for the five water distribution systems.

4-6. REPAIR PARTS.

Repair parts are listed in TM 5-4610-228-23P.

Section III. PREVENTIVE MAINTENANCE CHECKS AND SERVICES (PMCS)

4-7. INTRODUCTION.

Organization preventative maintenance checks and services (PMCS) are found to be non-existent.

Section IV. ORGANIZATIONAL TROUBLESHOOTING PROCEDURES

4-8. GENERAL.

This section contains troubleshooting information for locating and correcting most of the operating troubles which may develop in your WDS. The troubleshooting procedures are listed in table 4-1. The table lists common malfunctions which you may find during operation or maintenance of the water distribution systems or its components. You should perform the tests/inspections and corrective actions in the order listed. Each malfunction for an individual component, unit, or system is followed by a list of tests or inspections which will help you determine corrective actions to take,

4-9. TROUBLESHOOTING PROCEDURES.

The symptom index lists the common malfunctions which you may find during the operation or maintenance of the water distribution system. Use the symptom index for quick access to the troubleshooting procedures. This manual cannot list all possible malfunctions that may occur, nor all tests or inspections and corrective actions. If a malfunction is not listed (except where malfunction and cause are obvious) or is not corrected by listed corrective action, notify your supervisor.

Table 4-1. Troubleshooting

MALFUNCTION	TEST OR INSPECTION	CORRECTIVE ACTION
1. **Hose Leaks.**		
	Step 1. Inspect for cut or cracked hose.	
		Replace or repair hose assy.
2. **Hose Assy Coupling Halves Leak.**		
	Step 1. Inspect for damaged or missing coupling half gasket.	
		Install serviceable coupling half gasket.
	Step 2. Inspect for cracked coupling half.	
		Install a serviceable coupling half.

Table 4-1. Troubleshooting

MALFUNCTION
TEST OR INSPECTION
CORRECTIVE ACTION

3. **Valve Assy Leaks.**

Step 1. Inspect control handle shaft for leaks and proper operation.

Replace with serviceable 2-inch valve assy.

4. **Collapsible Tanks Leak.**

Step 1. Inspect tanks for punctures or tears.

Repair punctures or tears in accordance with (CM63504-3-49).

5. **Collapsible Tank Vent Pipe Assy Leaks.**

Step 1. Inspect relief cap, quick disconnect couplings and capscrews.

Remove the relief cap and replace the gasket.

Remove the flanged quick disconnect coupling and replace the o-ring.

Remove the vent pipe and replace it with a new one.

Replace all missing capscrews and torque screws to 30 inch pounds.

6. **Pressure Relief Valve Remains Open.**

Step 1. Inspect relief cap for a broken or bent pivot pin.

Remove and replace relief valve.

7. **Filter and Discharge Assy Leaks Between Oval Closure Plate and Tank Fitting.**

Step 1. Inspect for missing or loose hexagon head capscrews or washers.

Replace all missing screws and washers.

Torque screws to 30 inch pounds.

Step 2. Inspect o-ring gasket between oval closure and tank fitting for nicks, breaks, and compression.

Replace o-ring gasket.

8. **Filter and Discharge Assy Leaks Between The Oval Closure Plate and The Flanged Adapter.**

Step 1. Inspect for missing or loose hexagon head capscrews.

Replace all missing screws and washers.

Torque screws to 30 inch pounds.

Step 2. Check round flange of gasket for damage or breaks.

Remove the flanged adaptor and replace gasket.

Table 4-1. Troubleshooting (Continued)

MALFUNCTION TEST OR INSPECTION CORRECTIVE ACTION

9. Water Meter Leaks

Step 1. Check for damaged or missing coupling gaskets,

Replace gaskets

step 2. Check for cracked quick disconnect coupling.

Replace couplings

NOTE

If leak cannot be corrected, replace water meter.

Section V. ORGANIZATIONAL MAINTENANCE PROCEDURES

4-10. HOSE ASSYS, REPAIR

NOTE

These procedures are applicable for the Dual Tank Interconnection Kit 20-foot discharge hose, 10-foot suction hose, 20-foot suction hose, 10-foot discharge hose, the Interconnection Kit 4-inch hose, the 350 GPM Pump Connection Kit 20-foot hose, the 125 GPM Pump Connection Kit 2-inch hose, the Hose Nozzle Connection Kit 4-inch by 20-foot hose, 2-inch by 20-foot hose, 1-1/2 inch hose, the 2-inch Hose Connection Kit 4-inch hose, 2-inch hose, the 4-inch Hose Connection Kit 4-inch hose, the Bag Filler Connection Kit 4-inch by 20-foot hose, 1-1/2 by 25-foot hose, the Single Tank Connection Kit 4-inch by 20-foot suction hose, 4-inch by 10-foot suction hose, 4-inch by 20-foot discharge hose, 4-inch by 10-foot discharge hose, 4-inch discharge hose, and the Hospital Connection 4-inch by 20-foot hose and 2-inch by 20-foot hose assemblies.

LOCATION/ITEM	ACTION	REMARKS

REMOVAL

a. Remove damaged hose assy (1) from system.

b. Remove cap (6) and plug (7) connection on system components.

c. Remove gasket (5) from cap (6).

d. Remove gasket (8) from female coupling (9).

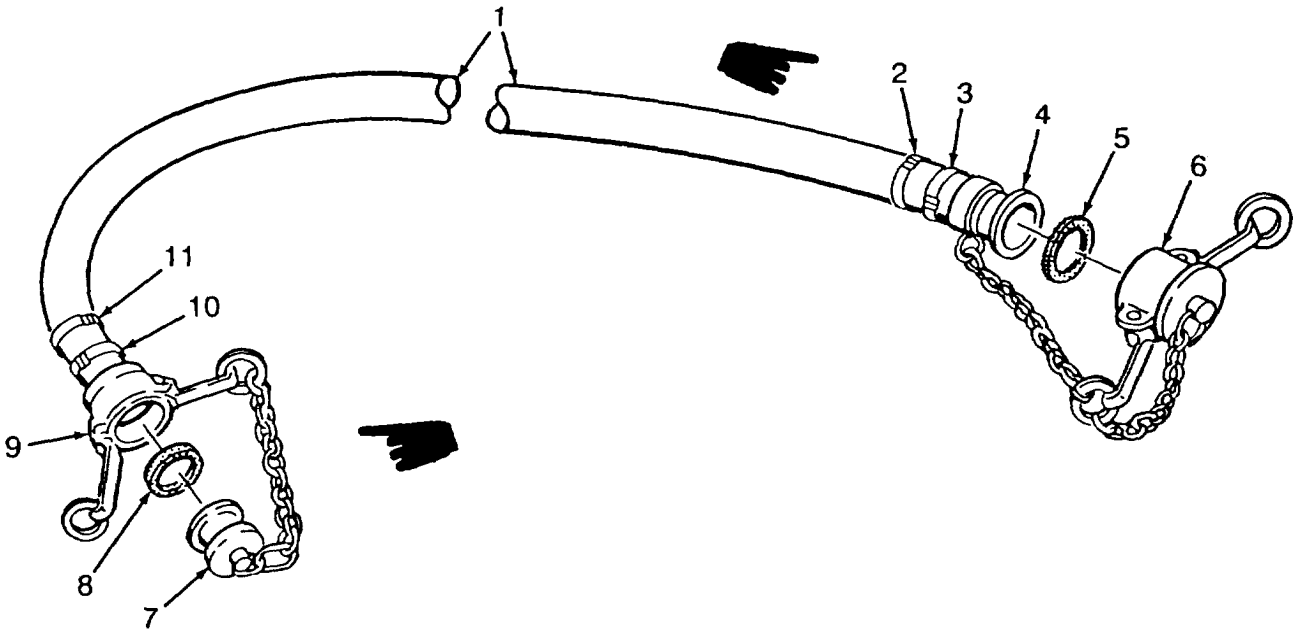

4-10. HOSE ASSYS, REPAIR (CONT).

LOCATION/ITEM	ACTION	REMARKS

e. Cut strap clamps (10 and 11) from hose (1). Pull female coupling (9) from hose.

f. Cut strap clamps (2 and 3) from hose (1). Pull male coupling (4) from hose.

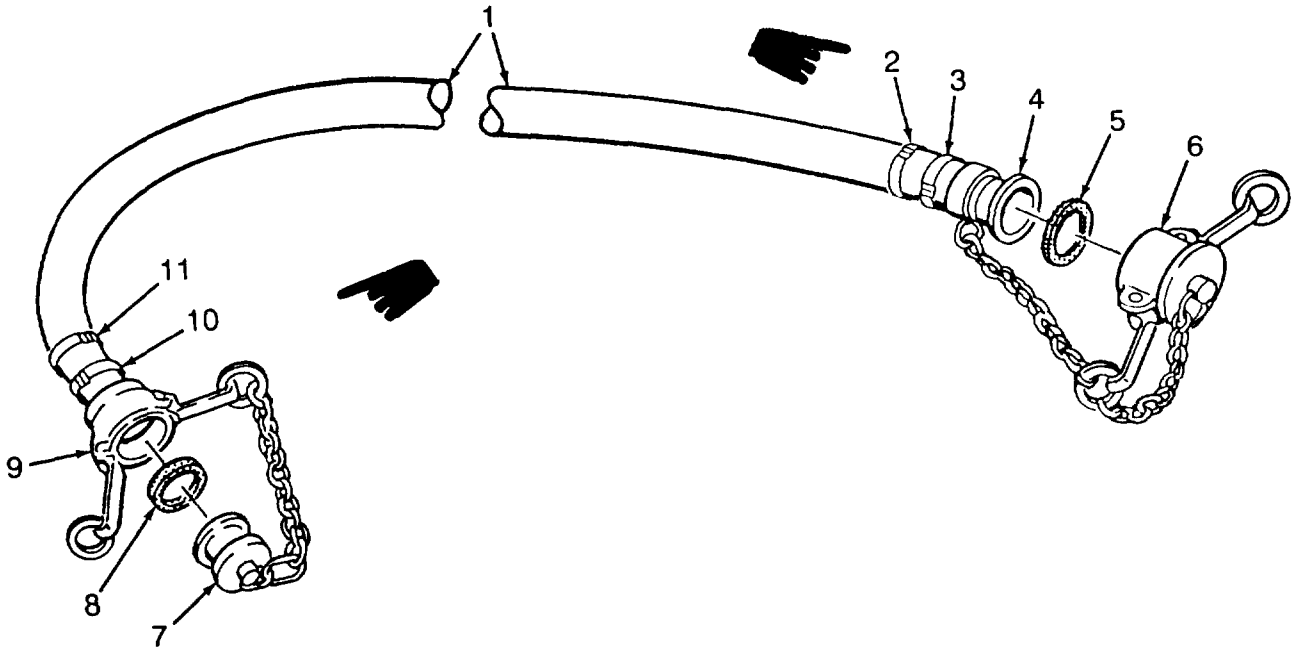

CLEANING AND INSPECTION

a. Inspect female coupling (9) and plug (7) for cracks, corrosion, and damaged locking arms.

b. Inspect male coupling (4) and cap (6) for cracks and corrosion.

c. Inspect hose (1) for cuts, tears, punctures, delamination and peeling.

d. Wash hose (1) and couplings (4) and (9) in a mild soap and water solution. Rinse in clean water with a clean lint free cloth.

4-10. HOSE ASSYS, REPAIR (CONT).

LOCATION/ITEM	ACTION	REMARKS

INSTALLATION

a. For reassembly use clamping tool, P/N C001 (70847 supplied with the system kit

b. Push male coupling (4) and/or female coupling (9) into hose (1). Cut a band of strapping that will extend 8 to 10 inches beyond end of buckle toothed slot.

c. Hook the band over top of buckle between the prongs (4) bringing over end around hose and thrugh buckle.

d. Insert band end into tool slots. Nose of tool should fit snug against buckle (5).

e. Apply tension on tool handle and gripper lever and position as required. Tool will self-lock when proper tension is applied (6).

CAUTION

Band may break if operator releases tension handle before backing off entire length of bend.

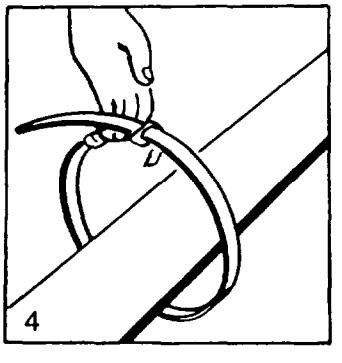

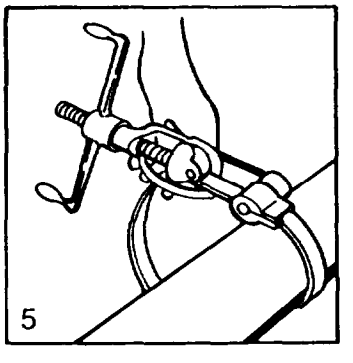

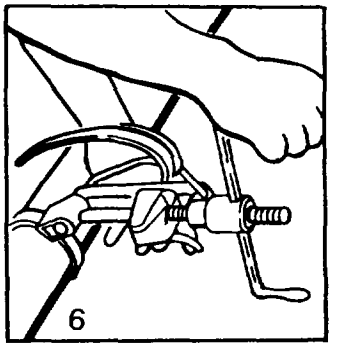

4-10. HOSE ASSYS, REPAIR (CONT).

LOCATION/ITEM	ACTION	REMARKS
f. Bend band back over buckle teeth and release tension handle.		
g. Cut band with tools cutting handle (1) while holding end of band down with thumb (2).		
h. Secure stub by tapping prongs of buckle down with a hammer (3).		
i. Repeat steps a through h for each clamp installed.		

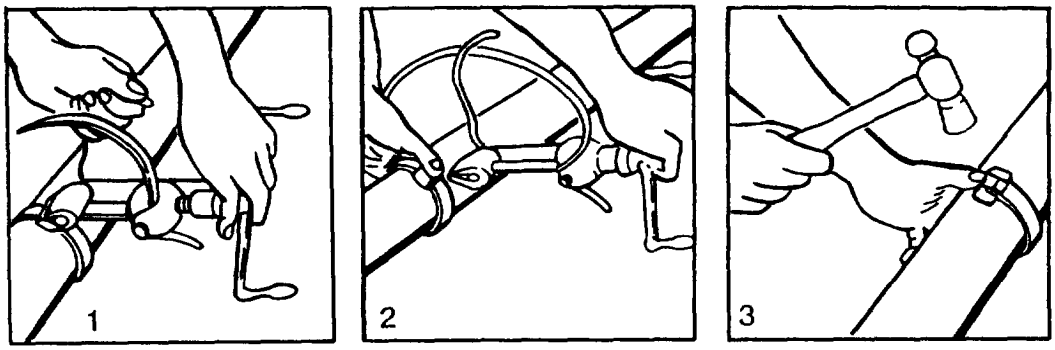

j. Install new gasket (5) in cap (6).		
k. Install new gasket (8) in female coupling(9).		
l. Remove protective caps and plugs from hose assy.		
m. Reinstall in water distribution system in the reverse order of removal.		
n. Repair of the hose assy is limited to replacement of defective parts.		

4-11. VALVE ASSY, 4-INCH/REPAIR

LOCATION/ITEM	ACTION	REMARKS

REMOVAL

a. Install valve in bench vice with protective pads. Using a wrench, remove nut (1) and handwheel (2) from stem (17).

b. Remove stuff nut (3) from bonnet (10).

c. Remove gland spring (4), gland (5) and packing (6).

d. Using two 1/2 inch wrenches, loosen and remove eight nuts (7), lockwashers (8) and bolts (9).

e. Remove bonnet (10) and gasket (11).

f. Remove stem (17), pull nuts (15) and disc assys (12) and (13) from body (16).

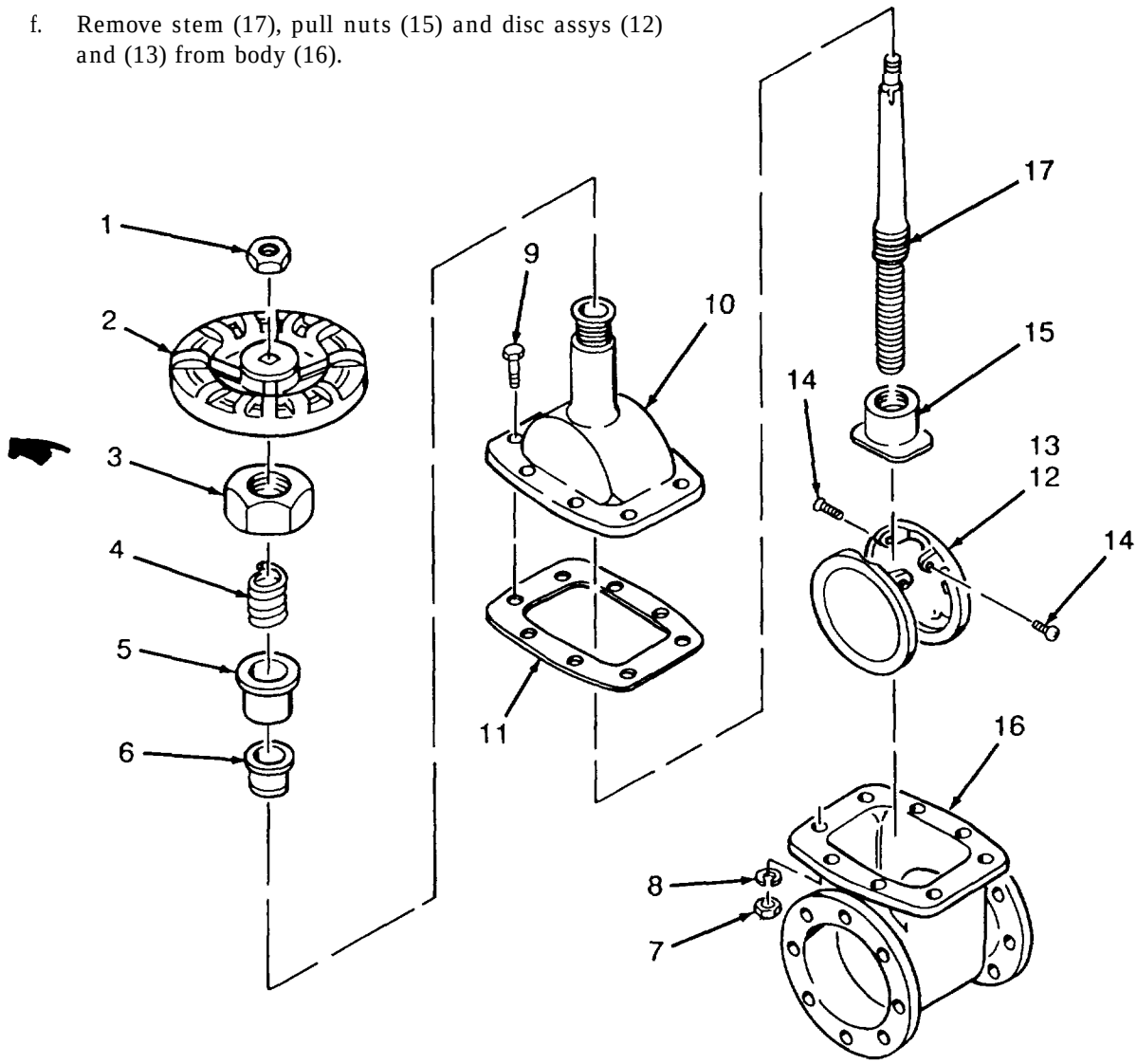

4-12. VALVE ASSY, 4-INCH/REPAIR (CONT).

LOCATION/ITEM	ACTION	REMARKS

INSTALLATION

a. Install new gasket (11).

b. Install disc assys (12 and 13), pull nut (15) and stem (17) into body (16).

c. Install bonnet and install eight bolts (9), lockwashers (8) and nuts (7).

d. Install new packing (6), gland (5) and gland spring (4).

e. Install stuff nut (3) on bonnet (10).

f. Install handwheel (2) and nut (1). Tighten snugly.

g. Return valve to service.

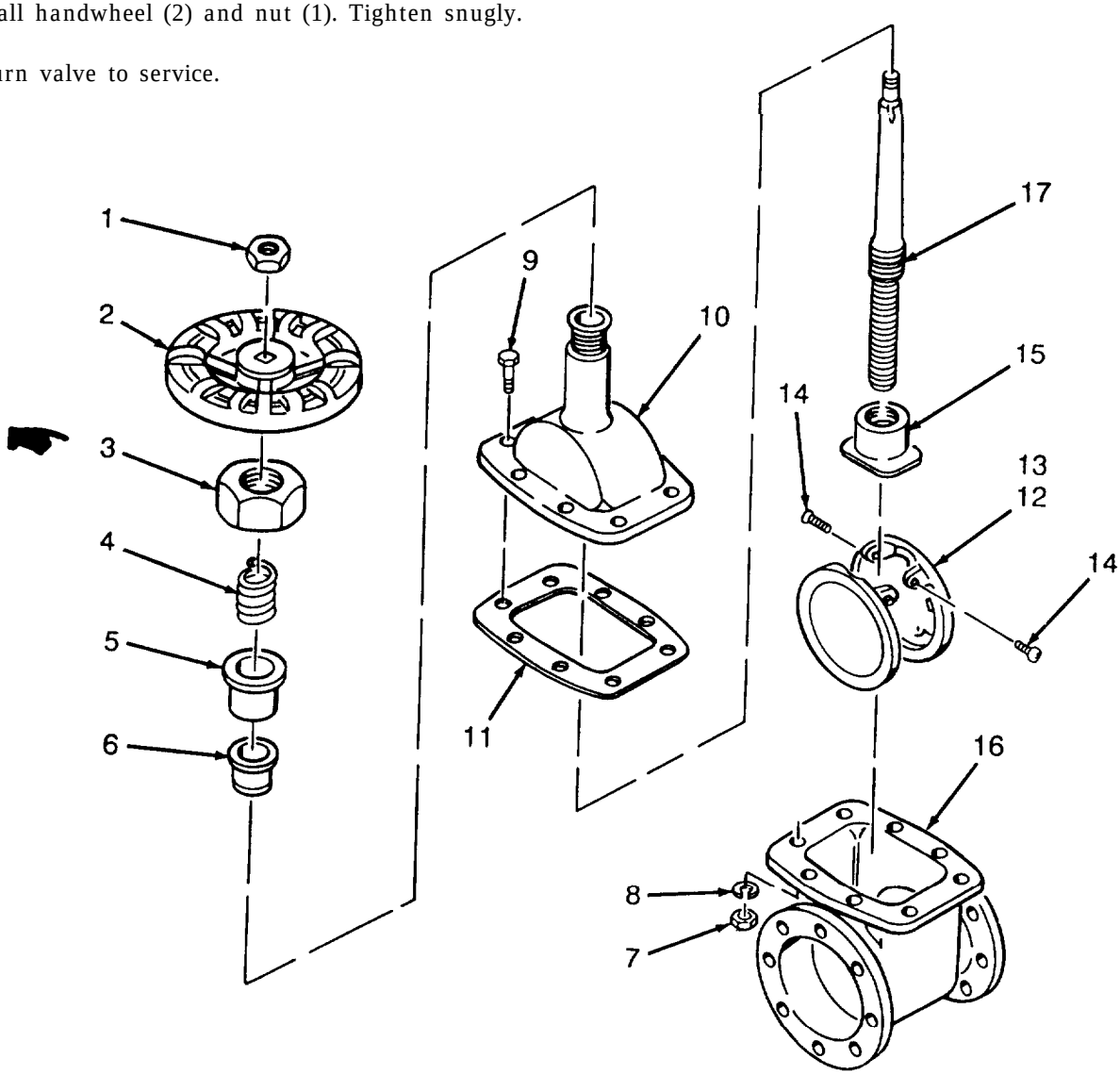

4-13. VALVE ASSY, REPAIR

NOTE

These procedures are applicable to the 125 GPM Pump Connection Kit 2-inch gate valve, 2-inch check valve, the Hose Nozzle Connection Kit 2-inch gate valve, the 2 inch Hose Connection Kit 2-inch gate valve, the 4-inch Hose Connection Kit quick acting valve and butterfly valve, the Bag Filler Connection Kit 2-inch gate valve, the Single Tank Connection Kit gate valve, and the Hospital Connection Kit 2-inch gate valve assembly.

LOCATION/ITEM	ACTION	REMARKS
REMOVAL		
a. Mount valve body (2) in bench vice with protective pads.		
b. Using pipe wrench remove female (1) and male (3) couplings.		
c. Remove nut (5) from shaft (6) and disengage control handle (4).		

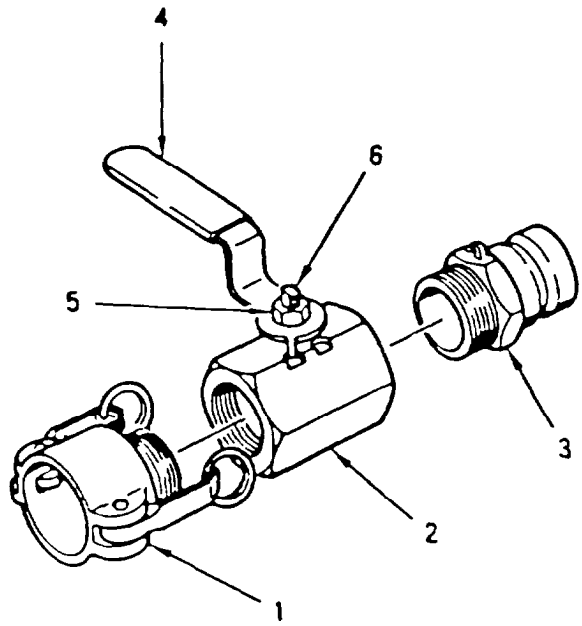

4-13. VALVE ASSY, REPAIR (CONT).

LOCATION/ITEM	ACTION	REMARKS

INSTALLATION

a. Wrap threads of couplings (1 and 3) with one layer of teflon tape ST410.

b. Install couplings (1 and 3) in valve body (2) and tighten with pipe wrench until snug against body.

c. Install handle on shaft (6) with nut (5) and tighten until snug.

d. Return valve to service.

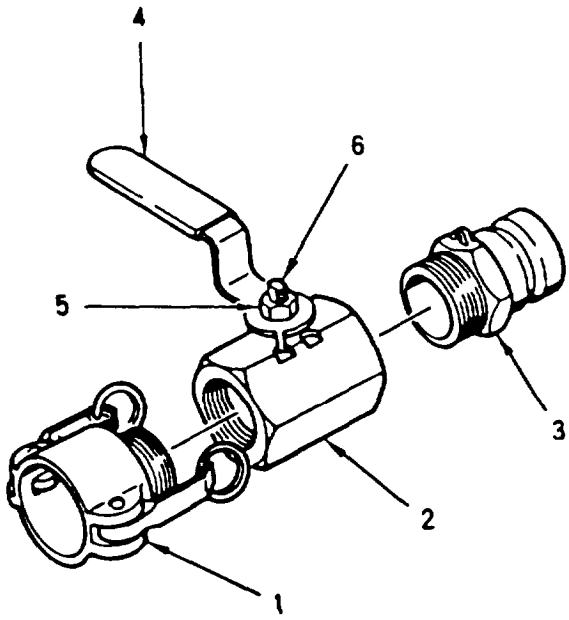

4-14. NOZZLE ASSY, REPLACE

LOCATION/ITEM	ACTION	REMARKS

REMOVAL

a. Remove damaged female quick-disconnect reducer (2) from swivel (3).

b. Remove all tape residue from swivel (3).

c. Remove damaged swivel (3) from nozzle body (4), using wrench.

d. Remove all tape residue from nozzle body (4) and threaded end of female quick-disconnect reducer (2).

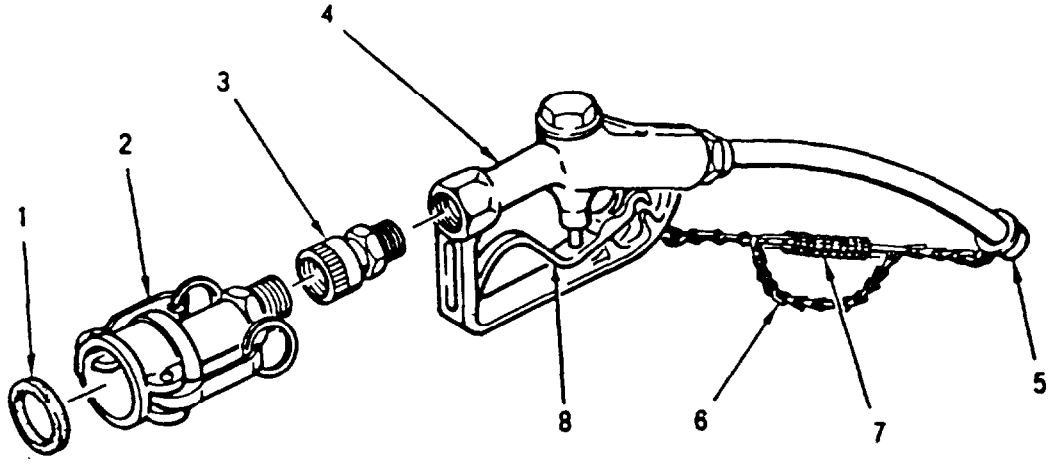

4-14. **NOZZLE ASSY, REPLACE (CONT)**

LOCATION/ITEM	ACTION	REMARKS

INSTALLATION

a. If nozzle body (4) is cracked or damaged replace water distribution nozzle.

b. Wrap threaded end of swivel (3) with one layer of teflon tape ST410.

c. Wrap threaded end of female quick-disconnect reducer (2) with one layer of teflon tape ST410.

d. Install female quick-disconnect and reducer (2) in swivel (3).

e. Install swivel (3) in threaded end of nozzle body (4).

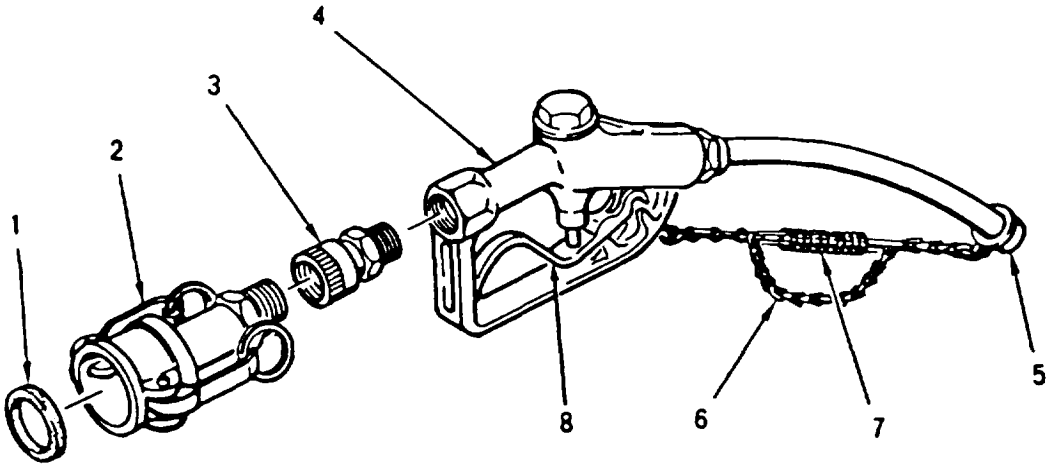

4-15. **NOZZLE STAND ASSY/REPAIR**

LOCATION/ITEM	ACTION	REMARKS

REMOVAL

a. Remove stand assy from system by folding up and replacing with serviceable stand. Ensure cap is on end of nozzle when hanging on new stand.

NOTE

Only disassemble the parts of stand that require repair or replacement.

b. With a common screwdriver pry open three s-hooks (1) on chain ends and remove from sash chains (2) and legs (3) and (5).

c. Remove two cotter pins (6) from clevis pins (4) in legs (3).

d. Remove pins (6) and separate legs (5) from upper connection point.

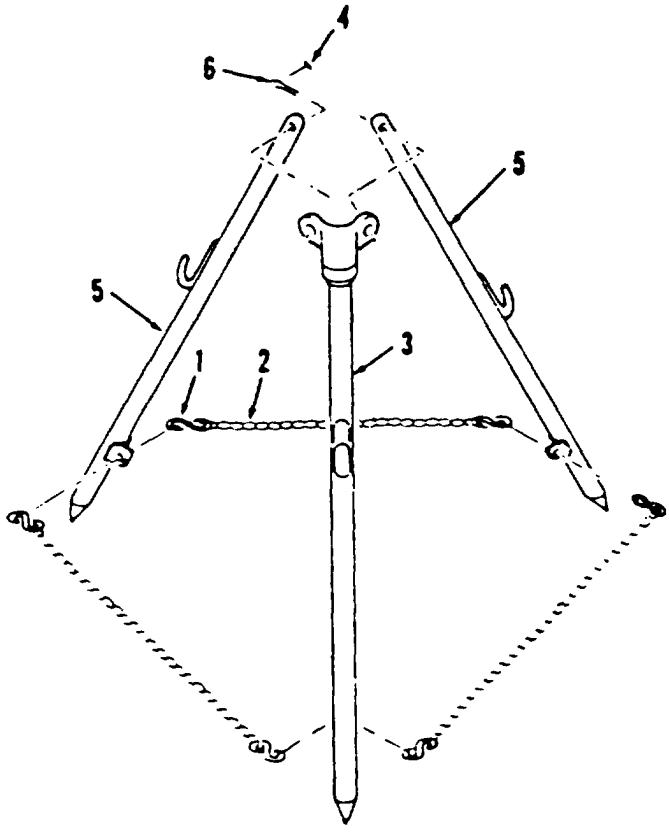

4-15. **NOZZLE STAND ASSY/REPAIR (CONT).**

LOCATION/ITEM	ACTION	REMARKS

INSTALLATION

a. Install two legs (5) in clevis leg (3) inserting clevis pins (4) through holes in clevis.

b. Install two cotter pins (6) and bend back around heads so they will not snag on clothing or hoses.

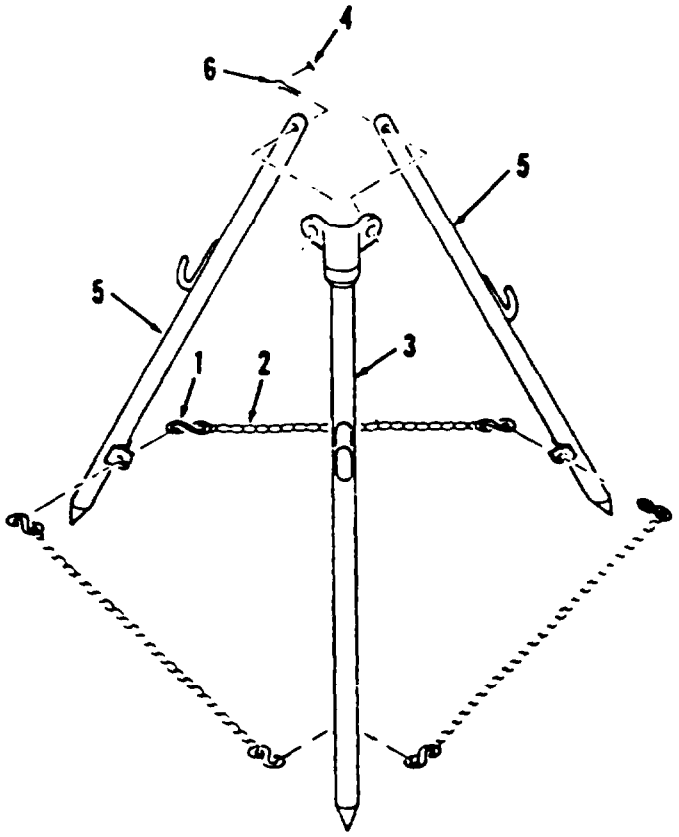

c. Install new or repaired sash chains (2) with s-hooks (1) to stand legs (3) and (5).

d. Bend s-hook inward with a pair of common pliers and return stand to service.

e. Install stand assy back in system.

4-16 WATER METER ASSEMBLY MAINTENANCE.

LOCATION/ITEM	ACTION	REMARKS

REMOVAL

a. Disconnect water meter from water system.

b. Disconnect ring (7) from coupling half (4). Remove dust plug (8).

c. Remove eight lock nuts (9) and screws (5).

d. Separate coupling half (4) and gasket (3) from maincase (10).

e. Remove gasket (6) from coupling half (4).

f. Disconnect ring (13) from coupling half (15). Remove dust cap (12).

g. Remove gasket (11) from dust cap (12).

h. Remove eight lock nuts (17) and screws (14).

i. Separate coupling half (15) and gasket (16) from maincase (10).

j. Remove ten bolts (1).

k. Lift cover assembly (2) and attached parts from maincase (10).

l. Remove gasket (18) from maincase (14).

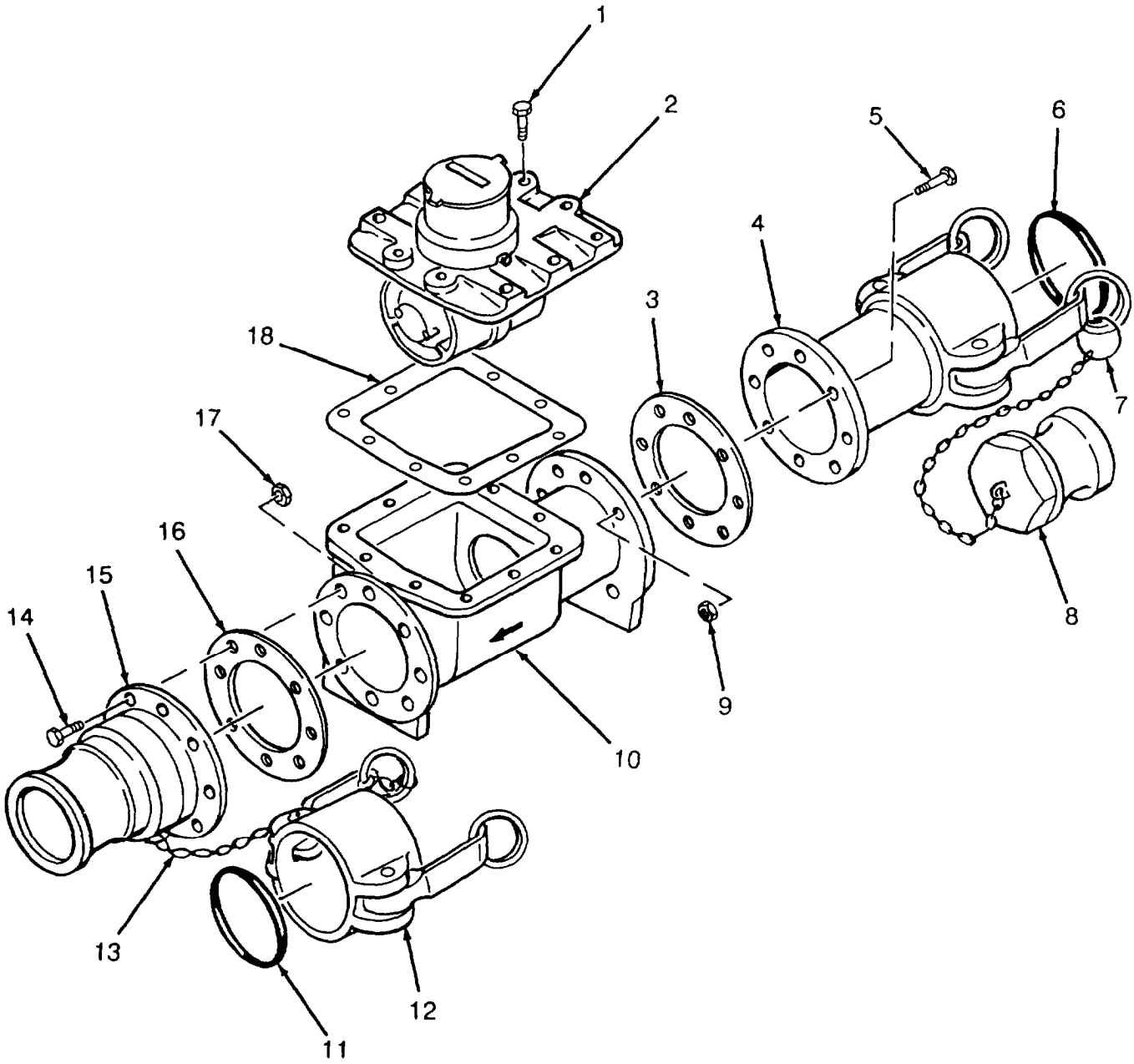

Water Meter Assembly

4-16 WATER METER ASSEMBLY MAINTENANCE (CONT).

LOCATION/ITEM	ACTION	REMARKS

CLEANING

a. Clean all components with clean water and detergent.

b. Rinse components in clean water and dry with wiping rag.

INSPECTION

a. Inspect coupling halves (4 and 15), dust plug (8), and dust cap (12) for cracks.

b. Inspect maincase (10) for cracks and corrosion.

c. Inspect cover assembly (2) for cracks, damage, and corrosion.

INSTALLATION

a. Position gasket (18) on maincase (10).

b. Lower cover assembly (2) and attached parts onto maincase (10).

c. Install ten bolts (1).

d. Position gasket (16) and coupling half (15) on maincase (10).

e. Install eight screws (14) and lock nuts (17).

NOTE

Ensure gasket is fully seated in groove of dust cap.

f. Install gasket (11) in dust cap (12).

g. Connect dust cap (12) to coupling half (15) with ring (13).

h. Position gsket (3) and coupling half(4) on maincase (10).

i. Install eight screws (5) and lock nuts (9).

j. Connect dust plug (8) to coupling half(4) with ring (7).

NOTE

Ensure gasket is fully seated in groove of coupling half.

k. Install gasket (6) in coupling half (4).

l. Connect water meter to water system.

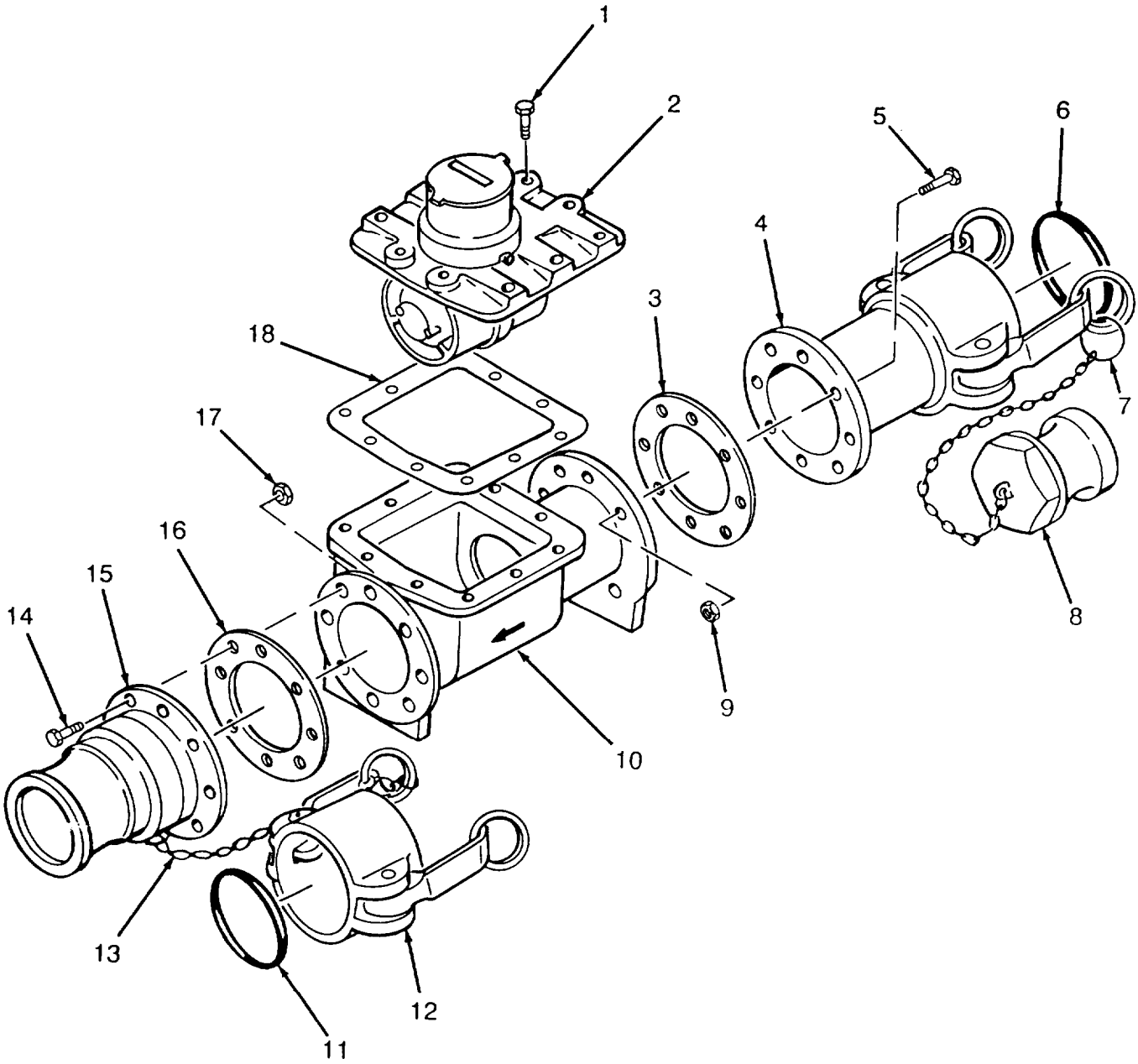

Water Meter Assembly

Section VI. PREPARATION FOR STORAGE FOR SHIPMENT

4-17. DISASSEMBLY AND REPACKAGING

Disassemble this system in reverse order of assembly. Perform the following prior to repackaging:

a. Drain, dry, and then cap and plug all hose assys.

b. Drain and dry all metal assys, such as valve and tee assys. Cap and plug these items, as applicable.

c. Remove and retain the two quick-disconnect elbows from the suction and discharge side port nipples on the top of each of the water storage and dispensing tanks. Then, attach a protective cap to each of these two nipples.

d. Drain each tank by turning the gate wheel on the drain hose assy, which is attached to the drain fitting in the tank bottom. Then, remove the drain hose assy and thread the protective plug into the tank drain fitting.

e, Drain, collapse and fold each of the tanks.

NOTE

The tanks are now ready to be placed in suitable carrier or container.

f. Remove drain plug on 125-CPM and 350 GPM pumps and engine assys, drain water from pumps. Install drain plug after water has been drained from Pumps.

g. Scrub inside of 36-gallon water bag with water chlorine solution. Use one ampule-tube of calcium hypochlorite (NSN 6810-00-266-6979) for each gallon of water. Rinse bag several times with potable water and dry completely. Fold bag compactly and store in dry, clean place. For short-term storage, it is best to hang bag up for drying after each field use.

h. All components placed in a Tricon container must be blocked and braced

CHAPTER 5

DIRECT SUPPORT MAINTENANCE

Section I. REPAIR PARTS, SPECIAL TOOLS, TMDE, AND SUPPORT EQUIPMENT

5-1. COMMON TOOLS AND EQUIPMENT.

Refer to the Modified Table of Organization and Equipment (MTOE) applicable to your unit.

5-2. SPECIAL TOOLS, TMDE, AND SUPPORT EQUIPMENT.

No special tools, TMDE, or support equipment are required for the WDS system.

5-3. REPAIR PARTS.

Repair parts are listed in TM 5-4610-228-23P/TM 0-8846A-23P/2.

Section II. DIRECT SUPPORT MAINTENANCE TROUBLESHOOTING TABLE

5-4. GENERAL.

a. This section contains troubleshooting information for locating and correcting most of the operating troubles which may develop in your water distribution systems. The troubleshooting procedures are listed in table 5-1. The table lists the common malfunctions which you may find during operation or maintenance of the water distribution systems or its components. Perform the tests/inspections and corrective actions in the order listed. Each malfunction for an individual component, unit, or system is followed by a list of tests or inspections which will help you determine corrective actions to take.

b. The manual cannot list all possible malfunctions that may occur, nor all tests or inspections and corrective actions. If a malfunction is not listed (except where malfunction and cause is obvious) or is not corrected by listed corrective action, notify your supervisor.

Table 5-1. DS and GS Troubleshooting

MALFUNCTION
TEST OR INSPECTION
CORRECTIVE ACTION

1. **Hypochlorite Level In Water Low.**

Step 1. Check suction hose and fittings for air leaks.

Tighten loose connections.

Replace suction hose assy in accordance with para. 5-9.

Step 2. Remove and inspect impulse diaphragm for damage.

If diaphragm is damaged replace in accordance with para. 5-9.

Step 3. Check solution level in reservoir in accordance with operating instructions in chapter 2.

If solution level is low, add solution.

2. **Hypochlorinator Pump Shaft Not Rotating.**

Step 1. Check setting on stroke adjustment knob and ensure flow meter is operating in accordance with chapter 2.

If meter not operating, remove and replace meter.

Remove unit housing and check for worn or damaged parts in accordance with para. 5-9.

Step 2. Check bypass valve ensuring that flow is not being blocked.

If valve is clogged or blocked, remove blockage.

3. **No Flow In Reagent Head Assy.**

Step 1. Inspect suction and discharge check valves.

Remove check valves from assy. Inspect valve seats for smoothness and cleanliness in accordance with para. 5-8.

If valve stems or bodies are damaged, replace with serviceable vakes in accordance with para. 5-8.

Step 2. Inspect suction and discharge hose assys for leaks or obstructions.

Clear any stoppages in hose assys.

Replace hose assys and gaskets in accordance with para. 5-8.

Section III. DIRECT SUPPORT MAINTENANCE PROCEDURES

5-5. PRESSURE REGULATOR ASSY, HYPOCHLORINATION UNIT/REPAIR

LOCATION/ITEM	ACTION	REMARKS

REMOVAL

a. Remove drain plug (14) from end of manifold with large pipe wrench and drain water from unit.

b. Remove regulator adjustment bolt (1) from upper housing (3) by loosening nut (2).

c. Using 9/16" socket and rachet break six bolts (5) hold six nuts (6) with 9/16" box wrench.

d. Hold down upper housing (3) and remove six bolts (5) and nuts (6).

e. Remove upper housing (3).

f. Using small punch and hammer tap lightly on upper housing (3) to remove spring seat (7).

g. Remove spring (8) and unscrew diaphragm (9) from disc (10) in lower housing.

h. Unscrew diaphragm from piston assy (11) and remove diaphragm (12) from piston plate (13).

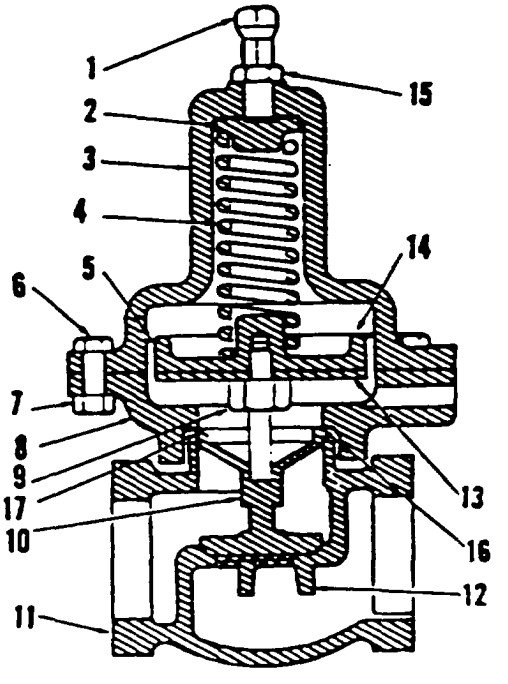

5-5. **PRESSURE REGULATOR ASSY, HYPOCHLORINATION UNIT/REPAIR (CONT).**

LOCATION/ITEM	ACTION	REMARKS

INSTALLATION

a. Install new diaphragm (12) on piston plate (13).

b. Screw piston plate (13) into piston assy (11).

c. Screw piston assy (11) into disc (10) in lower housing.

d. Install spring (8) and spring seat (7).

e. Install upper housing (3) with six bolts (5) and nuts (6).

f. Using a 9/16" box end wrench and 9/16" socket and a rachet tighten nuts and bolts snugly.

g. Install regulator adjustment bolt (1) and tighten jam nut (2).

h. Install drain plug (14) and tighten snugly with pipe wrench.

i. Return unit to service.

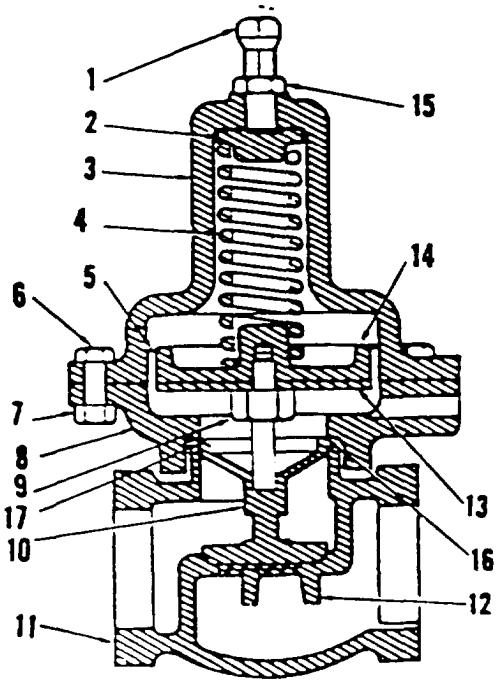

5-6. FLOW REGULATOR ASSY, HYPOCHLORINATION UNIT/REPAIR

LOCATION/ITEM	ACTION	REMARKS

REMOVAL

a. Remove nut (1) with 9/16" wrench and lift off handwheel (2).

b. Remove packing nut (3) and packing (4).

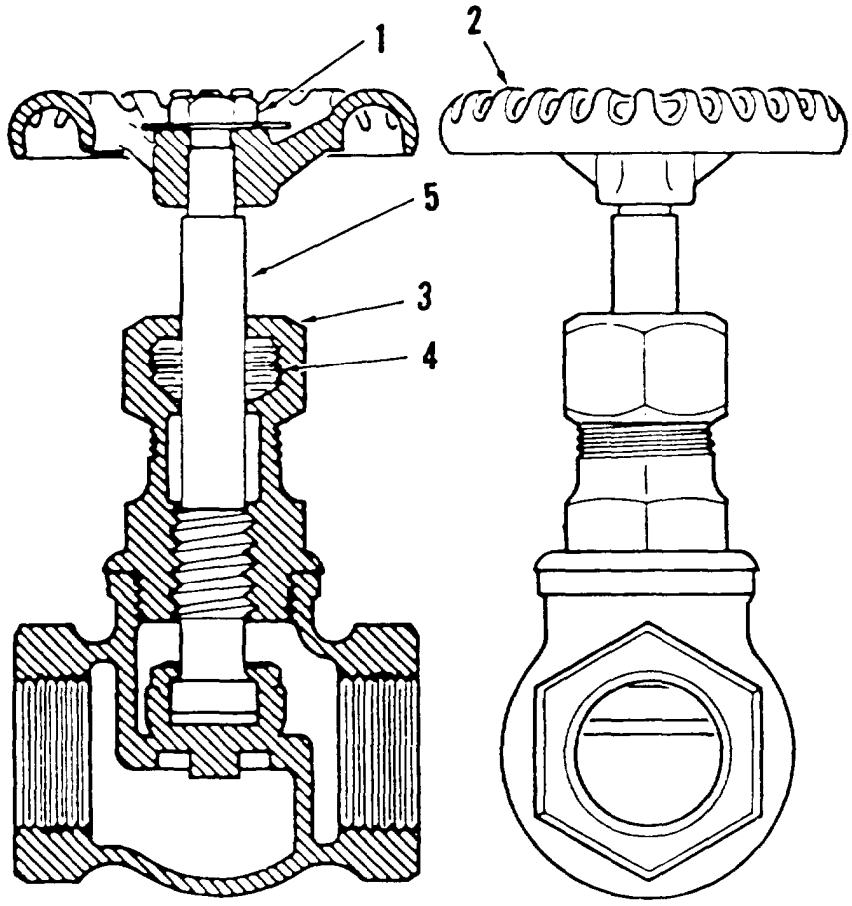

5-6. **FLOW REGULATOR ASSY, HYPOCHLORINATION UNIT/REPAIR (CONT).**

LOCATION/ITEM	ACTION	REMARKS

INSTALLATION

a. Install new packing (4) in gland.

b. Install packing nut (3) and tighten snugly.

c. Install handwheel (2) and nut (1) on stem (5) and tighten snugly.

d. Return valve to service.

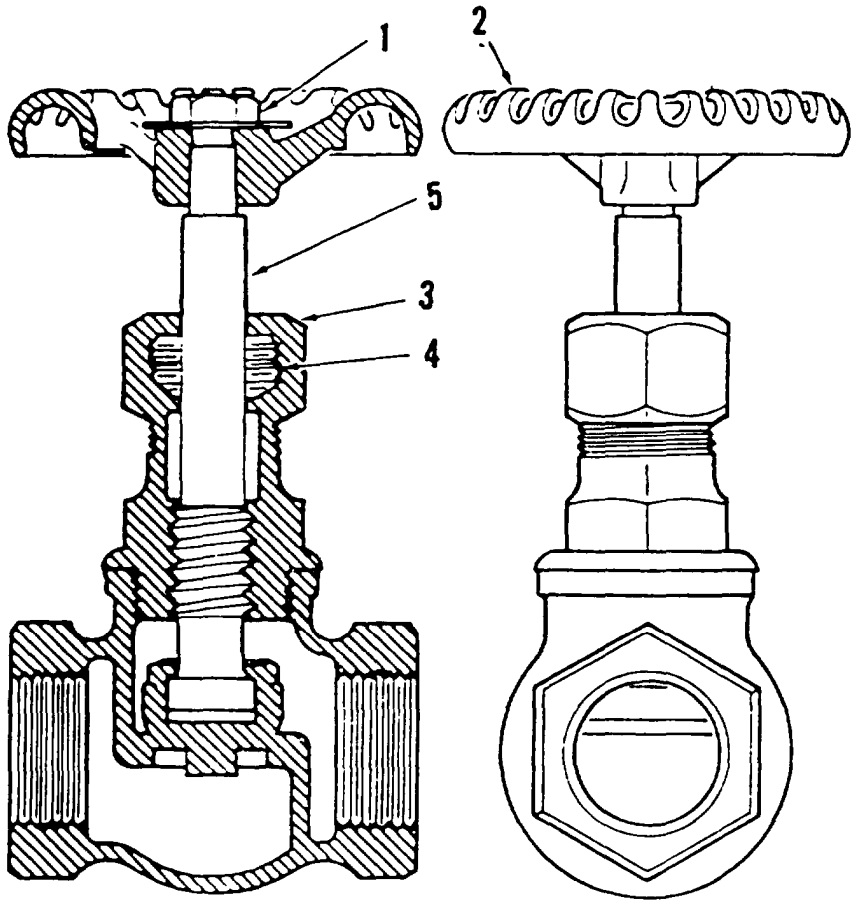

5-7. PILOT VALVE ASSY, HYPOCHLORINATION UNIT/REPAIR

LOCATION/ITEM	ACTION	REMARKS

REMOVAL

a. Remove four screws (1) and end cap (2).

b. Remove yoke cover (3) and loosen valve rod locknut (4).

c. Unscrew valve rod (5) from spring link coupling (6). Turn rod end counterclockwise.

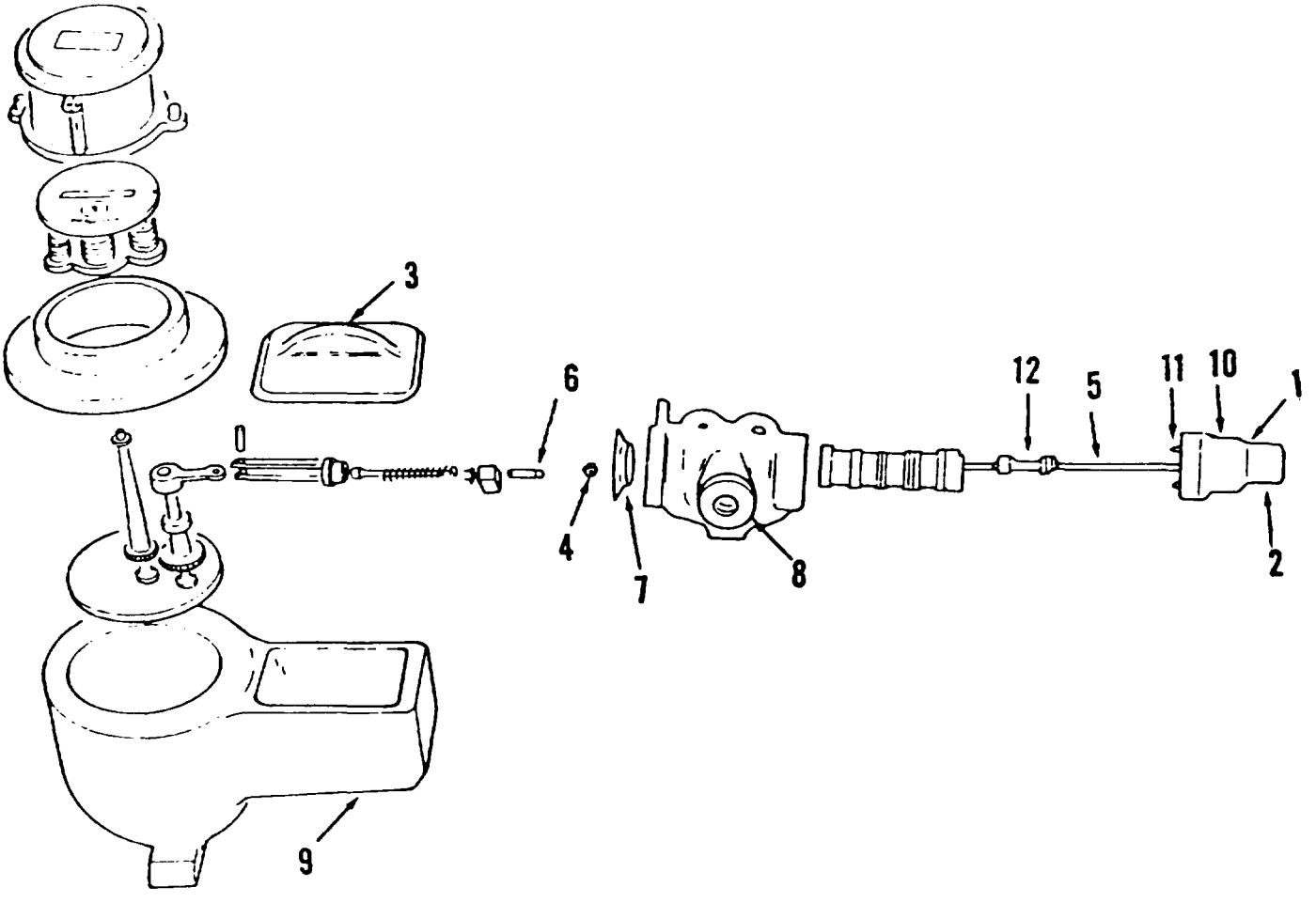

5-7. PILOT VALVE ASSY, HYPOCHLORINATION UNIT/REPAIR (CONT).

LOCATION/ITEM	ACTION	REMARKS
d. Remove four screws (7) securing valve housing (8) to gearbox (9).		
e. Remove four screws (7) from valve housing cap (10).		
f. Remove two screws (11) from loading spring cap (10).		
g. Slide valve rod (5) and slug assy (12) out of valve housing (8).		

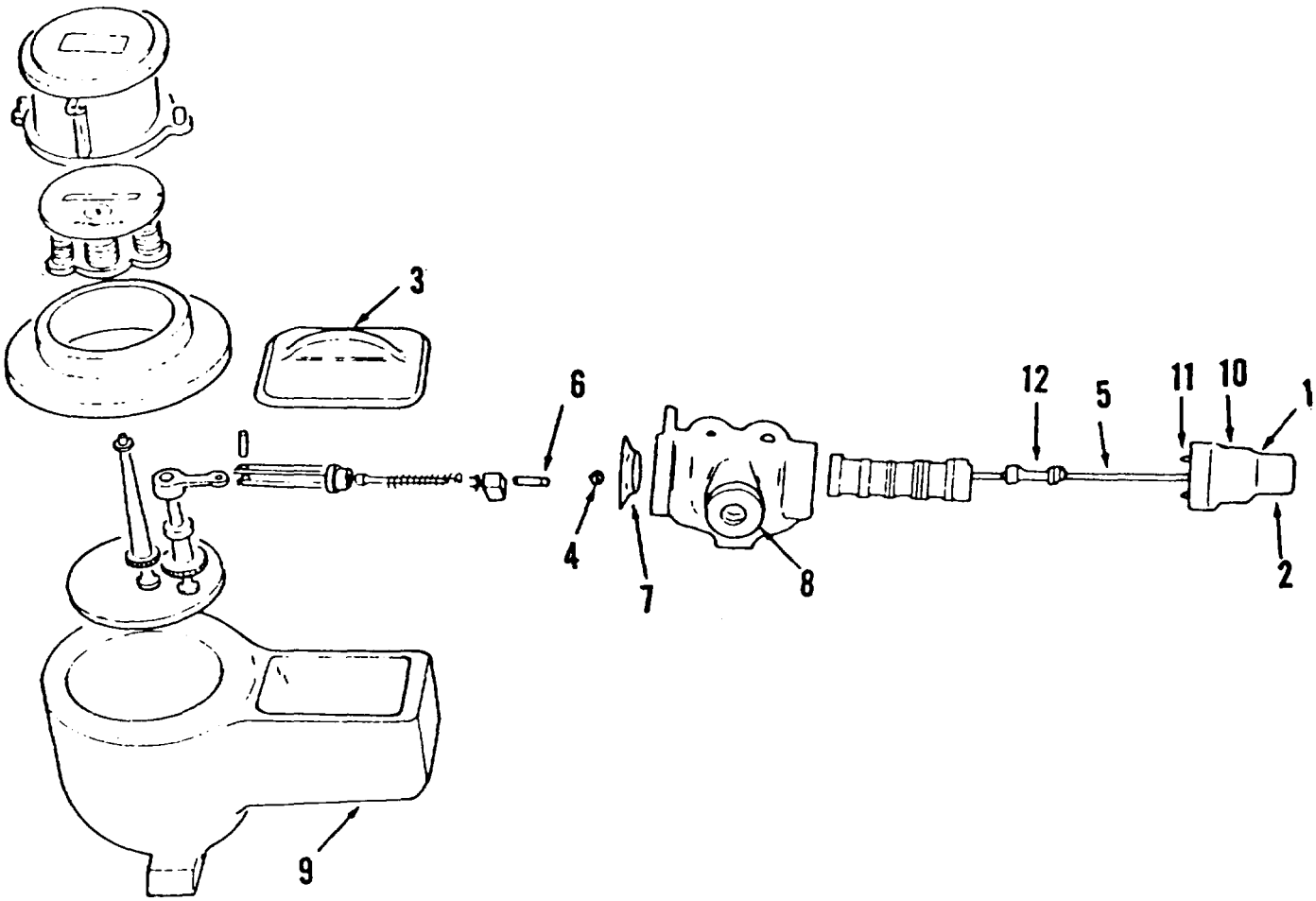

INSTALLATION

a. Replace all parts in reverse order of disassembly.

5-8. REAGENT HEAD ASSY, HYPOCHLORINATION UNIT/REPAIR

LOCATION/ITEM	ACTION	REMARKS

REMOVAL

a. Remove two tube nuts (6), from two check valve bodies (5).

b. Disconnect suction hose assy (12) and discharge hose assy (7) from top and bottom valve bodies (5).

c. Remove eight screws (1), and washers (2) from liquid head (4).

d. Remove liquid head (4), from reagent head assy.

e. Turn diaphragm (3), counterclockwise and remove hypochlorinator.

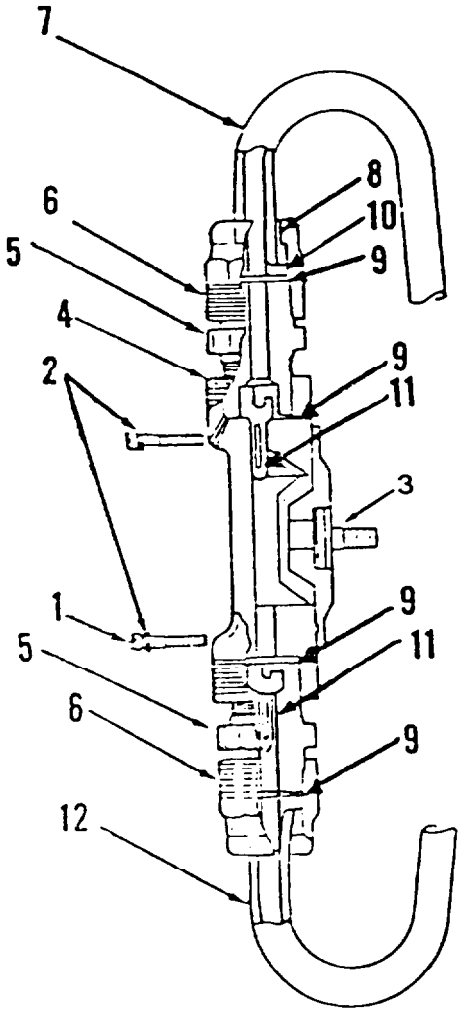

5-8. **REAGENT HEAD ASSY, HYPOCHLORINATION UNIT/REPAIR (CONT).**

LOCATION/ITEM	ACTION	REMARKS
f. Remove upper check valve body (5), from liquid head (4). Remove flaring nipple (10), from check valve body (5).		
g. Remove check valve stem (11), and check valve washer (9), from liquid head (4).		
h. Remove lower check valve body (5), from liquid head (4). Remove flaring nipple (10), from lower check valve body (5).		
i. Remove lower check valve stem(11) and valve washer (9), from liquid head (4).		

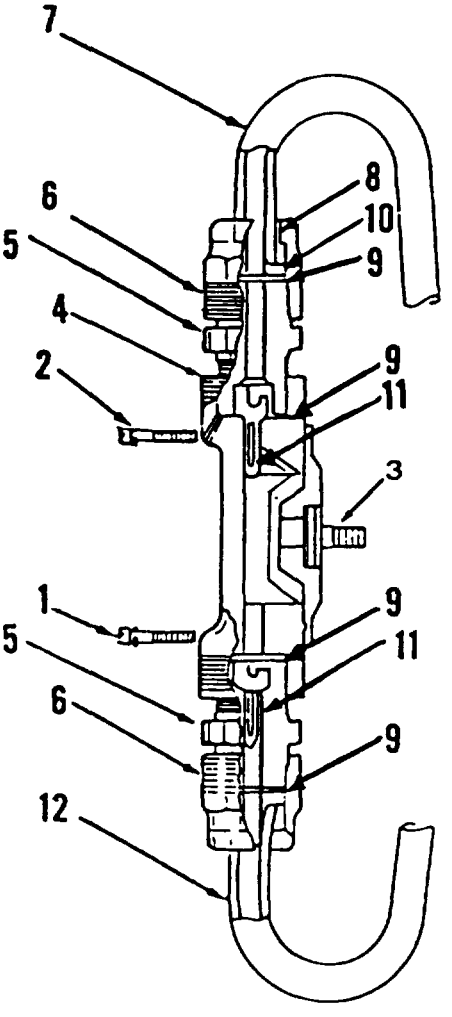

5-8. **REAGENT HEAD ASSY, HYPOCHLORINATION UNIT/REPAIR (CONT).**

LOCATION/ITEM	ACTION	REMARKS

INSTALLATION

a. Install diaphragm (3), in back of hypochlorinator, turning clockwise.

b. Install washer (9), in top and bottom of liquid head (4).

c. Install check valve stem (11), in bottom check valve body (5).

d. Install bottom check valve body (5), in liquid head (4), with check valve stem (11), pointing down.

e. Install check valve stem (11), in top of liquid head (4).

f. Install washer (9), in top and bottom tube nut (6).

g. Connect discharge hose assy (7), and suction hose assy (12), to top and bottom valve bodies (5).

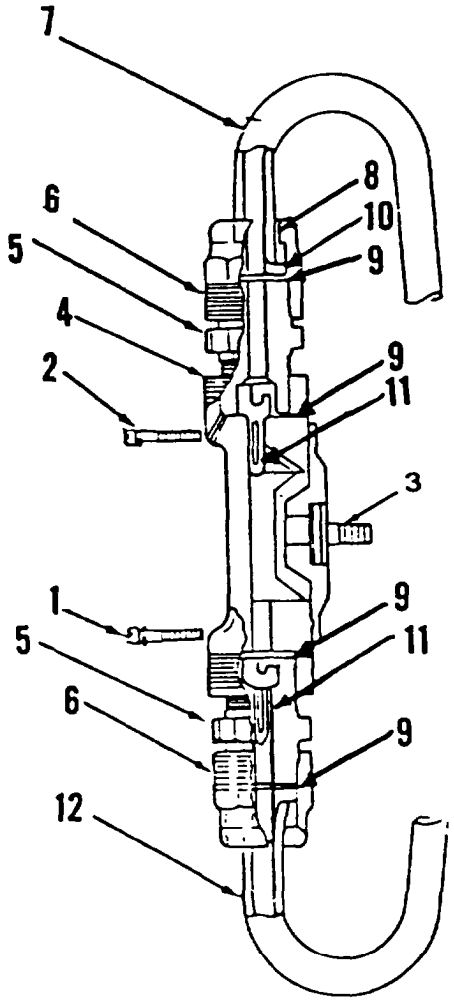

5-9. HYPOCHLORINATOR PUMP/REPAIR

LOCATION/ITEM	ACTION	REMARKS

REMOVAL

a. Remove discharge hose assy (7) and suction hose assy (12) from upper and lower check valve bodies (5).

b. Remove input hose assy from hose connector on diaphragm cap (13).

c. Remove three bolts (19), washers (20), lockwashers (21), and nuts (22), from Hypochlorinator Unit housing assy.

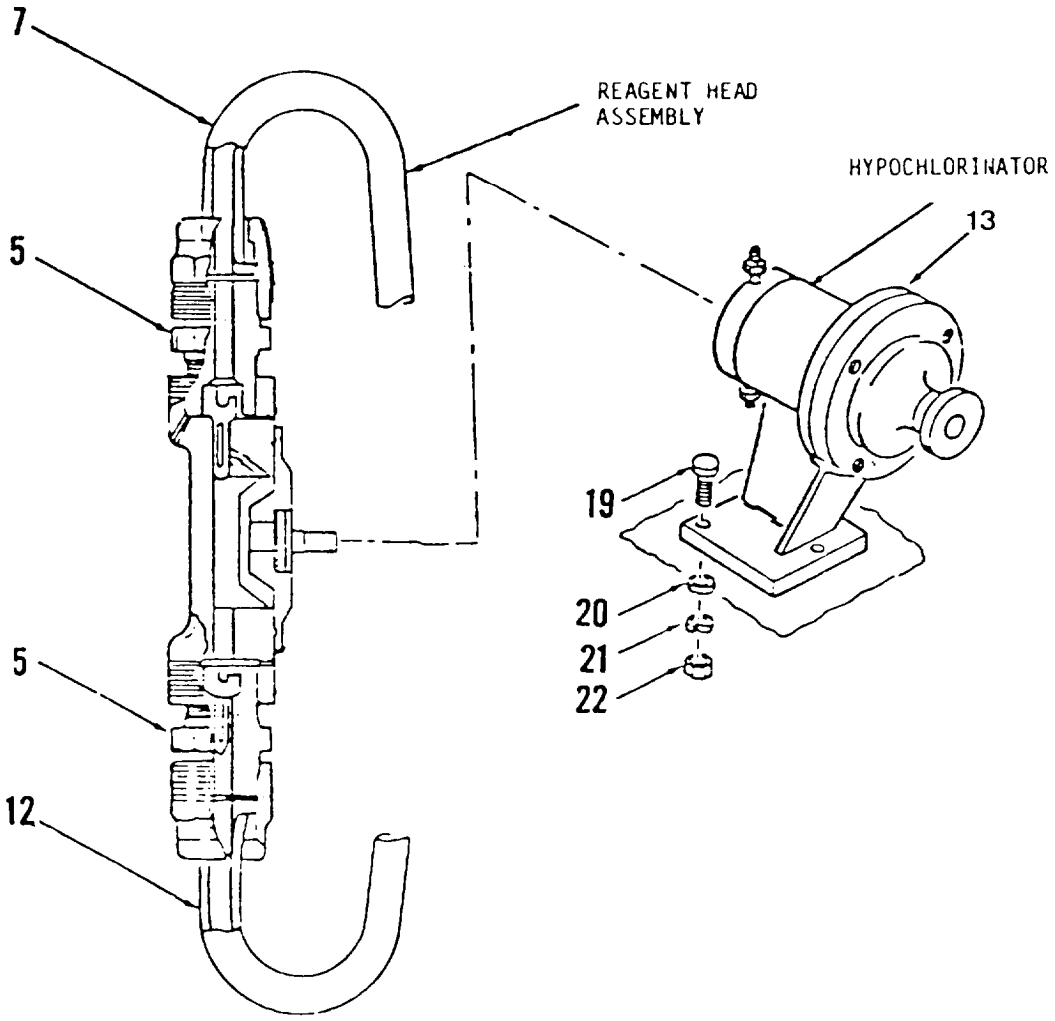

5-9. **HYPOCHLORINATOR PUMP/REPAIR (CONT).**

LOCATION/ITEM	ACTION	REMARKS

d. Remove hypochlorinator housing assy (3) from Hypochlorination Unit and place hypochlorinator housing assy (3) on suitable work surface.

e. Remove stroke adjustment knob (14) from diaphragm cap (13) turning counterclockwise.

f. Remove four hexhead screws (17), nuts (18) and diaphragm cap (13).

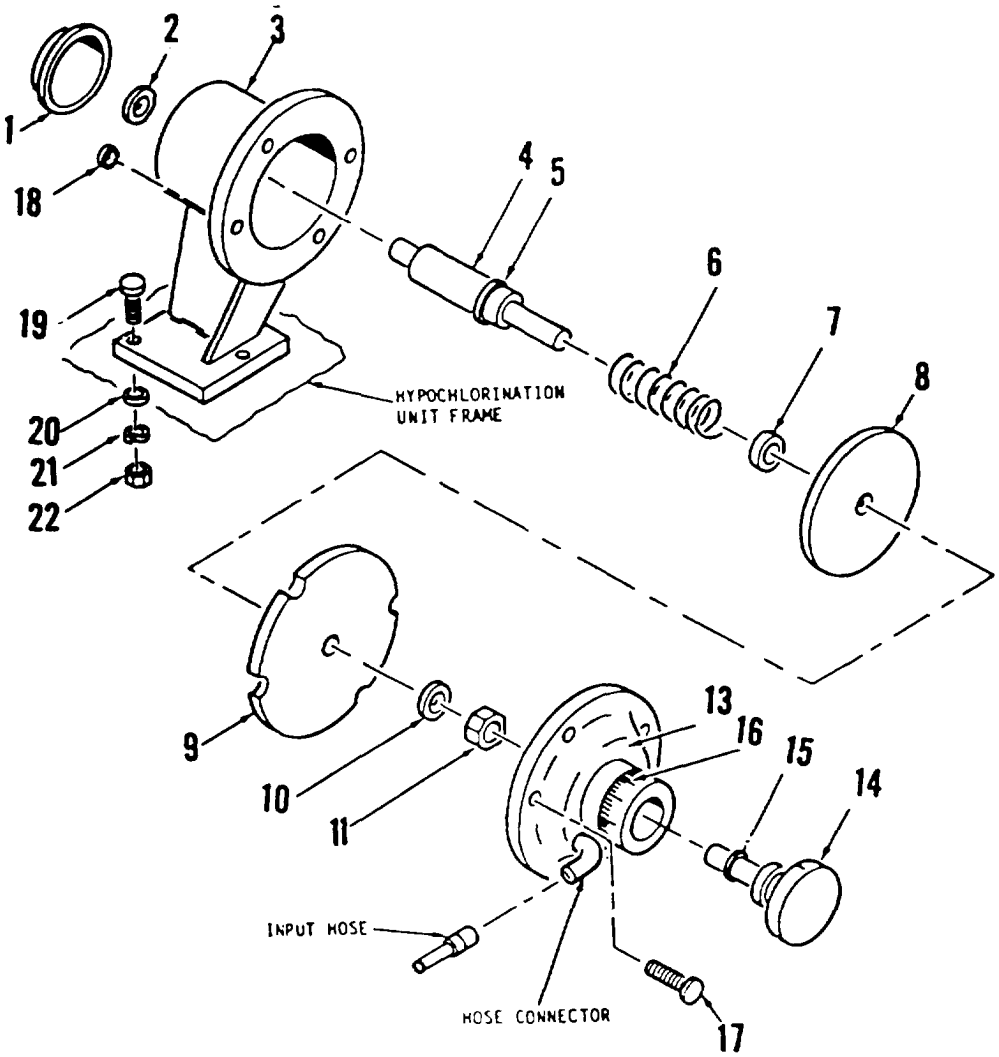

g. Press firmly against impulse diaphragm (9), remove nut (11) and washer (10). Slowly release pressure on impulse diaphragm (9), and remove rod (4).

h. Remove diaphragm clamping washer(s), spring washer (7), and spring (6), from push rod (4).

i. Remove eight screws and washers . Remove reagent head assy from back of hypochlorinator housing assy.

5-9. **HYPOCHLORINATOR PUMP/REPAIR (CONT).**

LOCATION/ITEM	ACTION	REMARKS
j. Turn diaphragm (3) counterclockwise and remove from back of Hypochlorination Unit.		
k. Turn push rod(4) countercloctise and remove diaphragm push plate (1), and washer (2), from hypochlorinator.		

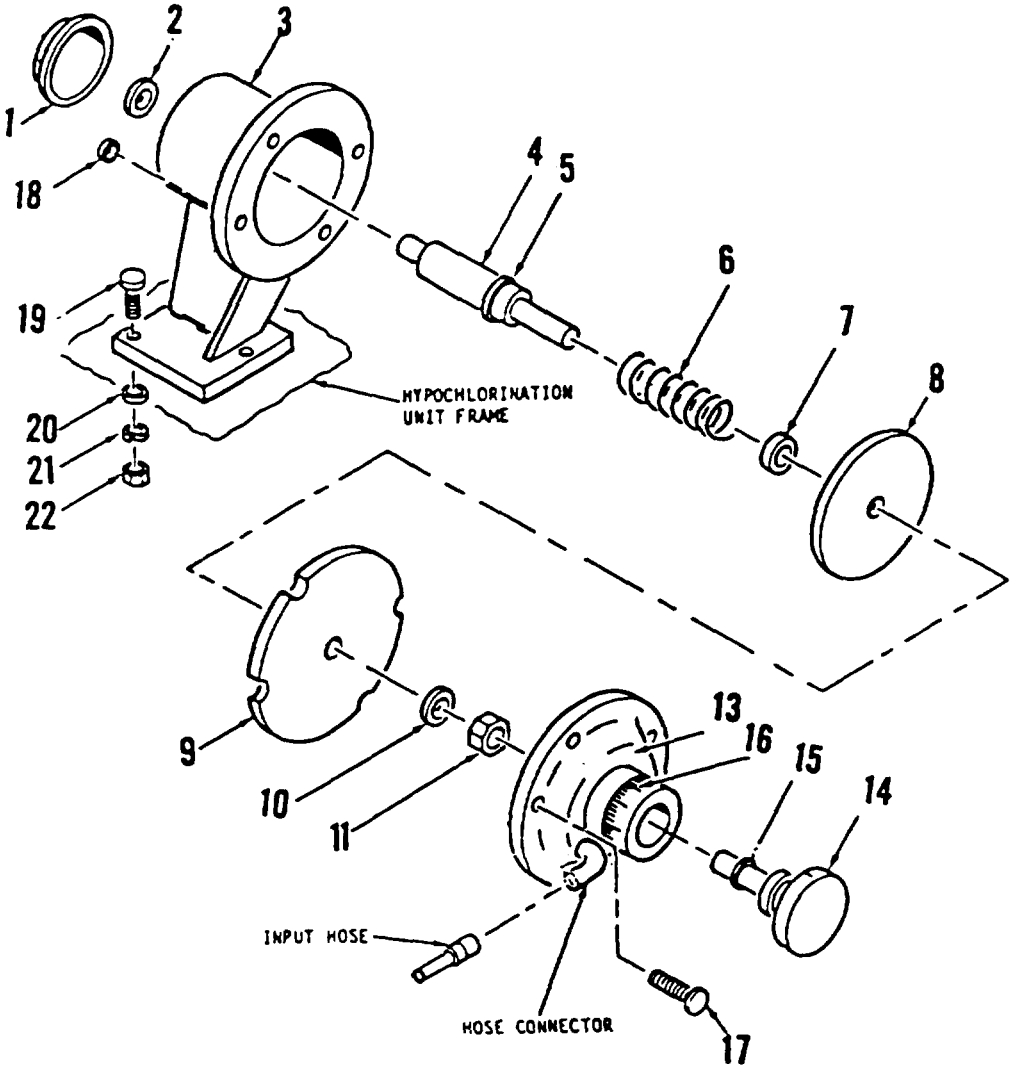

INSTALLATION

a. Place serviceable o-ring (5) on push rod (4).

5-9. HYPOCHLORINATOR PUMP/REPAIR (CONT).

LOCATION/ITEM	ACTION	REMARKS
b. Insert Push rod (4) in hypochlorinator housing assembly. Place washer (2) on push rod (4), press firmly in place over threads of push rod (4).		
c. Place spring (6), spring spacer (7) and diaphragm clamping washer (8), on push rod (4), press firmly in place over threads of push rod (4).		
d. While holding diaphragm clamping washer (8) in place, install impulse diaphragm (9), and wssher (10) on push rod (4) with nut (11).		
e. Aline slots of impulse diaphragm (9), with holes in hypochlorinator housing assembly (3).		
f. Aline diaphragm cap (12), with holes in hypochlorinator housing (3), and secure in place with four hex head screws (17) and nuts (18).		
g. Install stroke adjustment knob (14), in diaphragm cap (12) by turning stroke adjustment (14), clockwise.		
h. Screw diaphragm (3) into back of hypochlonnator by turning diaphragm (3), clockwise.		
i. Place liquid head in position on back of hypochlorinator and secure in place with eight screws and washers (2).		
j. Place hypochlorinator in position on Hypochlorinator Unit frame, and aline with three holes in tie.		

5-9 **HYPOCHLORINATOR PUMP/REPAIR (CONT).**

LOCATION/ITEM	ACTION	REMARKS
k. Secure hypochlorinator to hypochlorinator frame with three bolts (19), washers (20), lockwashers (21), and nuts (22).		
l. Connect input hose to hose connector on diaphragm cap (12).		
m. Connect discharge hose assy (7) and suction hose assy (12) to reagent head assy (4) with two tube nuts (6).		

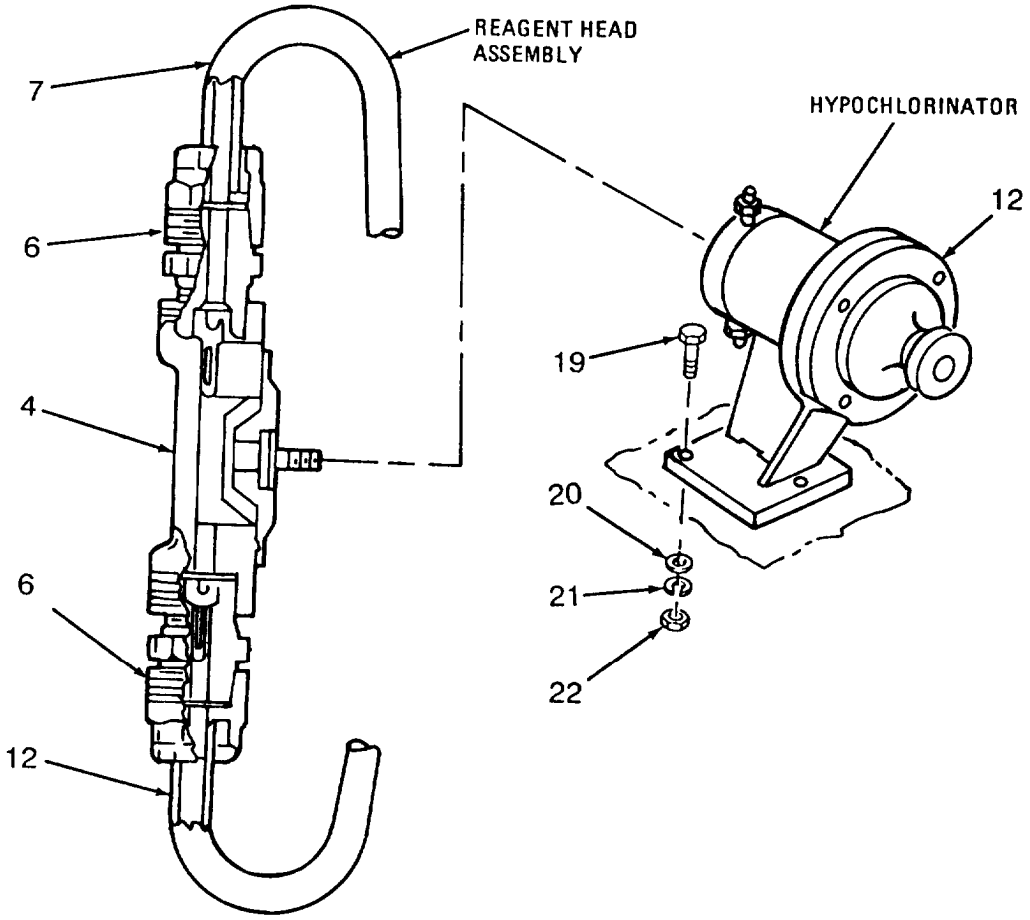

5-10 NOZZLE ASSY/REPAIR

LOCATION/ITEM	ACTION	REMARKS

REMOVAL

a. Disconnect S-hook (22) from guard (21).

b. Remove S-hook (22) from chain (23).

c. Remove tube cap (25) and S-hook (24) from chain (23). Disconnect S-hook from tube cap.

d. Drive out hollow pins (18 and 20). Remove guard (17) from body (3)

e. Drive out hollow pin (19) and remove lever (16) from guard (21).

f. Remove gasket (11) from coupling half (10).

g. Remove swivel (9) and coupling half (10) from body (3).

h. Unscrew coupling half (10) from swivel (9).

i. Remove packing nut (14).

j. Pull stem (15) from body (3).

k. Remove packing gland (13) and packing ring (12).

WARNING

Remove cap (8) slowly. Spring tensionmay cause cap (8) to fly off.

l. Remove cap (8) and spring (7).

m Remove poppet (6), disc (5) and disc nut (4) from body (3) and disassemble.

n. Remove jam nut (2) and tube (1) from body (3).

o. Remove jam nut (2) from tube (1).

CLEANING

a. Clean all components with clean water and detergent.

b. Rinse components in clean water and dry with wiping rag.

INSPECTION

a. Inspect body (3) for cracks and stripped *or* damaged threads.

b. Inspect guard (21) and lever (16) for cracks.

c. Inspect tube(1) for bends, cracks, and deformation.

5-10. NOZZLE ASSY REPAIR (CONT).

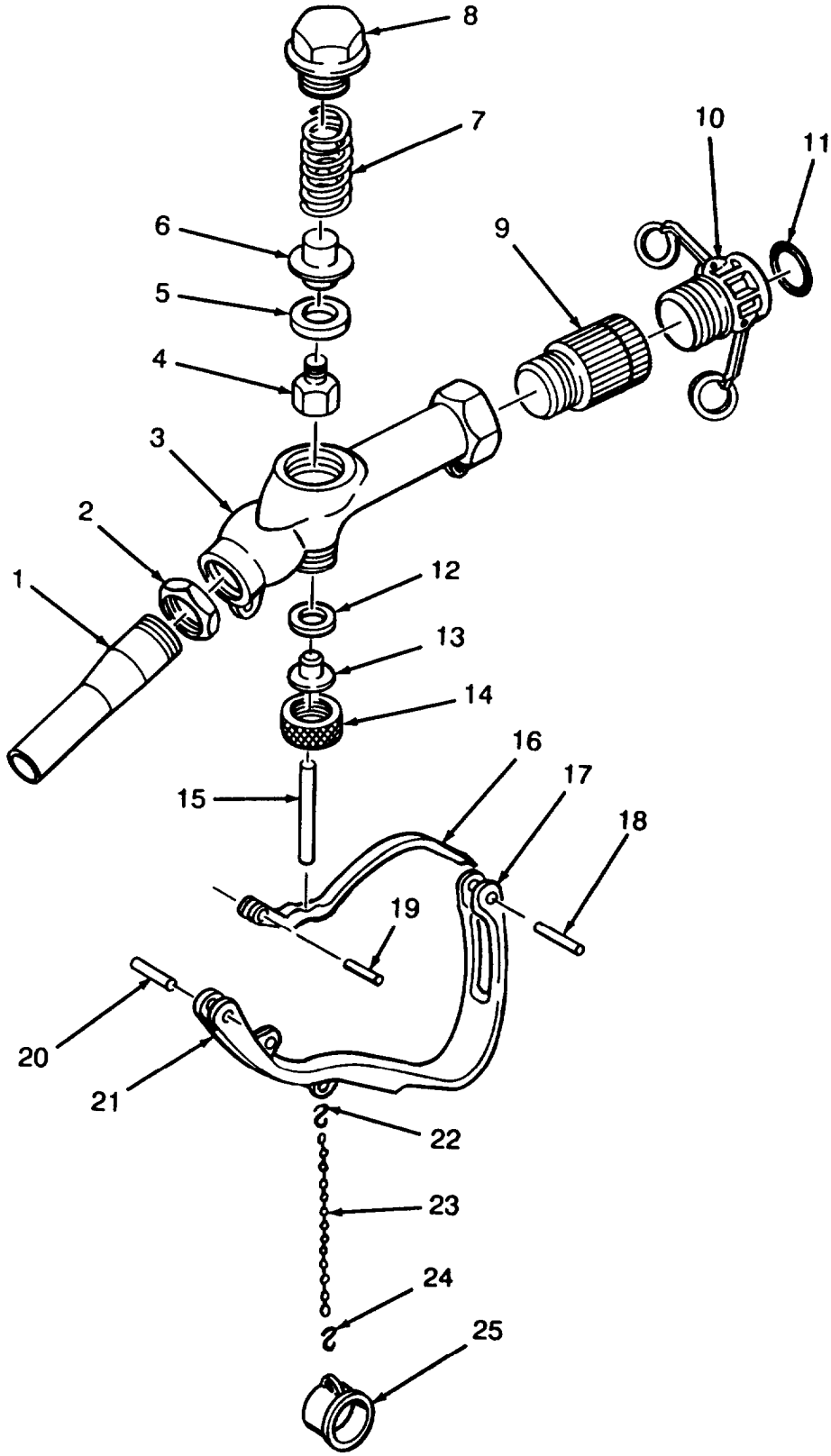

Distribution Nozzle

5-10 NOZZLE ASSY/REPAIR (CONT).

LOCATION/ITEM	ACTION	REMARKS

INSTALLATION

a. Install jam nut (2) on tube (1).

b. Install tube (1) in body (3) and tighten jam nut (2).

c. Assemble disc nut (4), disc (5) and poppet (6) and install in body (3).

d. Install spring (7) and cap (8).

e. Install packing ring (12) and packing gland (13).

f. Push stem (15) into body (3).

g. Install packing nut (14).

h. Apply anti-seize tape to threads of coupling half (10). Screw coupling into swivel (9).

i. Apply anti-seize tape to threads of swivel (9). Screw swivel and attached coupling half (10) into body (3).

NOTE

Ensure gasket is fully eated in groove of coupling,

j. Install gasket (11) in coupling half (10).

NOTE

Hollow pin (18) is longer than hollow pin (20).

k. Position lever (16) on guard (21) and install hollow pin (19).

l. Position guard (21) on body (3) and install two hollow pins (18 and 20).

m. Connect tube cap (25) to chain (23) with S-hook (24).

n. Connect chain (23) to body (3) with S-hook (22).

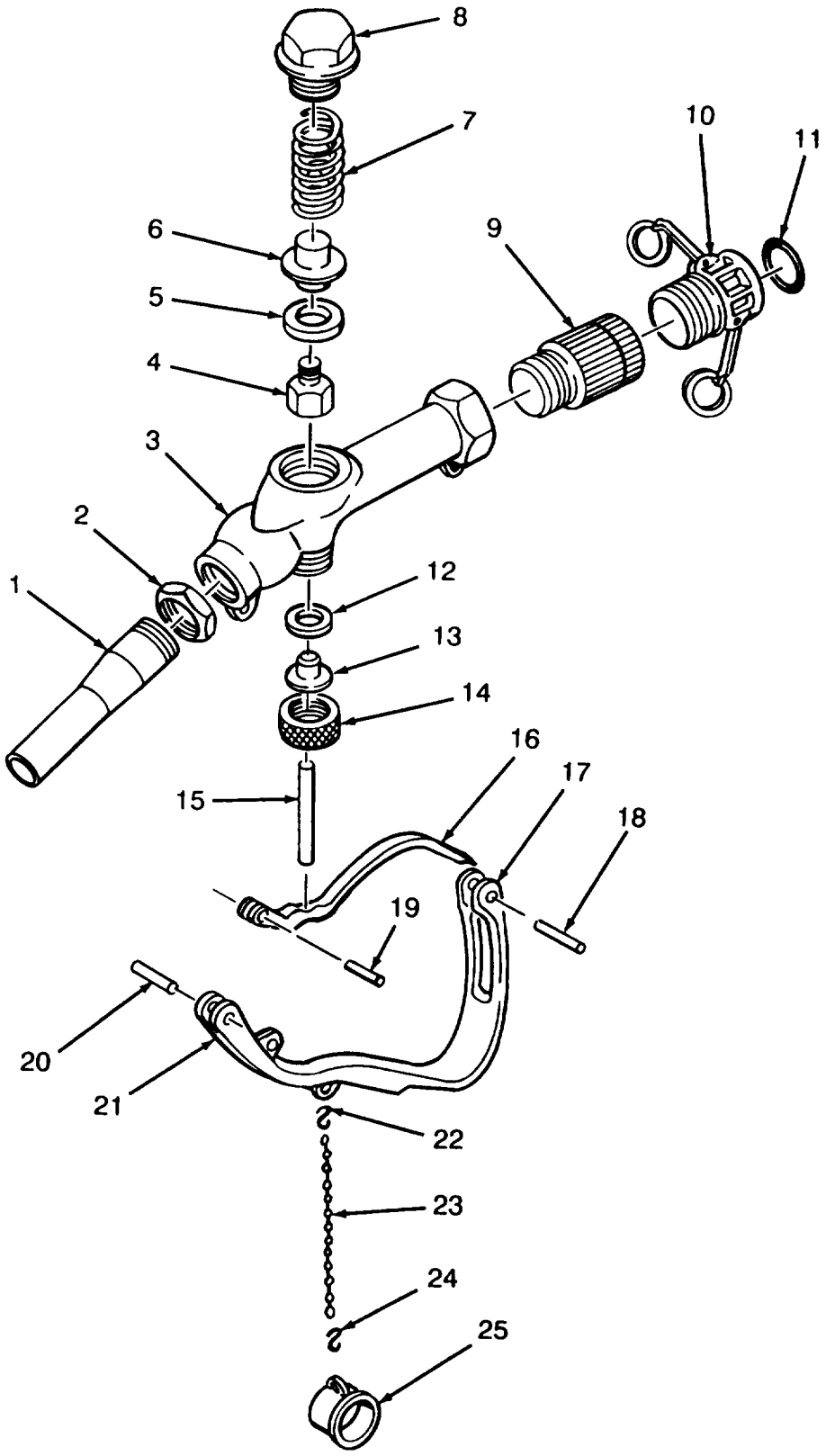

Distribution Nozzle

5-11 TRICON CONTAINER

LOCATION/ITEM	ACTION	REMARKS

For repair and maintenance of Tricon container refer to T.M. 55-8145-200-13&P.

APPENDIX A

REFERENCES

A-1. FORMS

DA Form 2028-2	Recommended Changes to Publications and Blank Forms
MCO 1650.17	MC Military Incentive Awards Program
MCO 4855.10	Quality Deficiency Report
MCO 4430.3	Report of Item Packaging Discrepancies
NAVMC Form 10772	Recommended Changes to Technical Publications
SF 368	Quality Deficiency Report

A-2. PUBLICATIONS:

DA Pamphlet 738-750	The Army Maintenance Management System (TAMMS)
FM 10-564	Air Drop of Supplies and Equipment
LO 5-2805-257-14	Lubrication of 125 GPM pump engine assembly
LO 5-4320-226-12	Description of 350 GPM pump engine assembly
MCO P4610.19	Discrepancy in Shipment Report
MCO 4450.7	MC Warehousing Manual
MCO 4600.14	Military Traffic Mgmt

SB 740-99-1	Storage Service Standard
TM 5-700	Field Water Supply
TM 5-2805-257–14	General Support Maintenance: Engine, Gasoline, 3 HP, Military Standard Models
TM 5-4320-208-12&P	Organizational Maintenance: Pump, Centrifugal, Gasoline Engine Driven, Frame Mtd., 2-Inch, 125 GPM, 50-Foot Head
TM 5-4320-226-14	Description of 350 GPM engine assembly
TM 5-4610-228-23P/ TM 08846A-23P/2	Repair Parts and Special Tools List, Water Distribution System
TM 10-1101	Petroleum Handling Equipment and Operation
TM 10-8400-201-23	General Repair Procedures for Clothing and Equipment
TM 55-8145-200-13&P	Tricon Container
TM 740-90-1	Administrative Storage of Equipment
TM 750-244-3	Destruction of Equipment to Prevent Enemy Use
TM 4700-15/1	Equipment Record Procedures
CM 63504-349 (Uniroyal Manual)	Description of the 50K tank assembly
Goodyear Aerospace Publication (5-19-19)	Description of the 20K tank assembly

APPENDIX B

MAINTENANCE ALLOCATION CHART

SECTION I. INTRODUCTION

B-1. **GENERAL.**

a. This section provides a general explanation of all maintenance and repair functions authorized at various maintenance categories.

b. The Maintenance Allocation Chart (MAC) in Section II designates overall responsibility for the performance of maintenance functions on the identified end item or component. The implementation of the maintenance functions upon the end item or component will be consistent with the assigned maintenance functions.

c. Section III lists the special tools and test equipment required for each maintenance function as referenced from Section II (Not Applicable).

d. Section IV contains supplemental instructions and explanatory notes for a particular maintenance function (Not Applicable).

B-2. **MAINTENANCE FUNCTIONS.**

a. **Inspect.** To determine the serviceability of an item by comparing its physical, mechanical, and/or electrical characteristics with established standards through examination.

b. **Test.** To verify serviceability and detect incipient failure by measuring the mechanical or electrical characteristics of an item and comparing those characteristics with prescribed standards.

c. **Service.** Operations required periodically to keep an item in proper operating condition, i.e., to clean (decontaminate), to preserve, to drain, to paint, or to replenish fuel, lubricants, hydraulic fluids, or compressed air supplies.

d. **Adjust.** To maintain, within prescribed limits, by bringing into proper or exact position, or by setting the operating characteristics to specified parameters.

e. **Align.** To adjust specified variable elements of an item to bring about optimum or desired performance.

f. **Calibrate.** To determine and cause corrections to be made or to be adjusted on instruments or test measuring and diagnostic equipments used in precision measurement. Consists of comparisons of two instruments, one of which is a certified standard of known accuracy, to detect and adjust any discrepancy in the accuracy of the instrument being compared.

g. **Install.** The act of emplacing, seating, or fixing into position an item, part, or module (component or assembly) in a manner to allow the proper functioning of an equipment or system.

h. **Replace.** The act of substituting a serviceable like type part, subassembly, or module (component or assembly) for an unserviceable counterpart.

i. **Repair.** The application of maintenance services (inspect, test, adjust, align, calibrate, or replace) or other maintenance actions (welding, grinding, riveting, straightening, facing, remachining, or resurfacing) to restore serviceability to an item by correcting specific damage, fault, malfunction, or failure in a part, subassembly, module (component or assembly), end item, or system.

j. **Overhaul.** That maintenance effort (service/action) necessary to restore an item to a completely serviceable/operational condition as prescribed by maintenance standards (i.e., DMWR) in appropriate technical

publications. Overhaul is normally the highest degree of maintenance performed by the Army. Overhaul does not normally return an item to like new condition.

k. **Rebuild.** Consists of those services/actions necessary for the restoration of unserviceable equipment to a like new condition in accordance with original manufacturing standards. Rebuild is the highest degree of material maintenance applied to Army equipment. The rebuild operation includes the act of returning to zero those age measurements (hours/miles, etc.) considered in classifying Army equipment/components.

B-3. **COLUMN ENTRIES USED IN THE MAC.**

a. **Column 1, Group Number—Column** 1 lists group numbers, the purpose of which is to identify components, assemblies, subassemblies, and modules with the next higher assembly.

b. **Column 2, Component/Assembly-Column** 2 contains the name of components, assemblies, subassemblies, and modules for which maintenance is authorized.

c. **Column 3, Maintenance Function—Column** 3 lists the functions to be performed on the item listed in column 2. (For detailed explanation of these functions, refer to paragraph B-2.)

d. **Column 4, Maintenance Level-Column** 4 specifies, by the listing of a work time figure in the appropriate subcolumn(s), the lowest level of maintenance authorized to perform the function listed in column 3. This figure represents the active time required to perform that maintenance function at the indicated category of maintenance. If the number or the complexity of the tasks within the listed maintenance function vary at different maintenance categories, appropriate work time figures will be shown for each level. The number of manhours spectiled by the work time figure represents the average time required to restore an item (assembly, subassembly, component, module, end item, or system) to a serviceable condition under typical field operating conditions. This time includes preparation, troubleshooting time, and quality assurance/quality control time in addition to the time required to perform the specific tasks identified for the maintenance functions authorized in the maintenance allocation chart. The symbol designations for the various maintenance categories are as follows:

C – Operator or Crew
O – Organizational Maintenance
F – Direct Support Maintenance
H – General Support Maintenance
D – Depot Maintenance

e. **Column 5, Tools and Equipment—Column** 5 specifies, by code, those common tool sets (not individual tools) and special tools, and support equipment required to perform the designated function.

f. **Column 6, Remarks–This** column shall contain a letter code, in alphabetic order, which shall be keyed to the remarks contained in section IV.

Section II. MAINTENANCE ALLOCATION CHART

Group no.	Component/ Assembly	Maintenance Function	Maintenance Category C	O	F	H	D	Tools & Equip.	Remarks
01	Hypochlorination Unit Assy	Inspect	0.2						
		Service	1.0						
		Replace	0.3						
		Repair			3.0				
	Pressure Regulator Valve Assy	Inspect	0.1						
		Replace		0.1					
		Repair			1.0				
	Flow Regulator Valve Assy	Inspect	0.1						
		Replace		0.5					
		Repair			1.0				
	Pilot Valve Assy	Inspect	0.1						
		Replace		0.5					
		Repair			2.0				
	Reagent Head Assy	Inspect	0.1						
		Replace		0.3					
		Repair			0.5				
	Hypochlorinat.m Pump Assy	Inspect	0.1						
		Replace		0.5					
		Repair			1.0				
02	Hose Assys								
	Discharge Assy	Inspect	0.1						
		Replace	0.2						
		Repair		0.3					
	Suction Assy	Inspect	0.1						
		Replace	0.2						
		Repair		0.3					
03	Valve Assys								
	4-In Gate Valves	Inspect	0.1						
		Replace	0.2						
		Repair		1.0					
	2-In Gate Valves	Inspect	0.1						
		Replace	0.2						
		Repair		0.3					
	2-In Check Valve	Inspect	0.1						
		Replace	0.1						
		Repair		0.1					

Group no.	Component Assembly	Maintenance Function	Maintenance Category C	O	F	H	D	Tools & Equip.	Remarks
	Quick Acting Valve Assy	Inspect	0.1						
		Replace	0.2						
		Repair		1.0					
	Butterfly Valve Assy	Inspect	0.1						
		Replace	0.2						
		Repair		1.0					
05	Nozzle Assy	Inspect	0.1						
		Replace		0.2					
		Repair			0.5				
06	Stand Assy	Inspect	0.1						
		Replace	0.2						
		Repair		1.5					
07	Water Meter Assy	Inspect	0.1						
		Replace		1.5					

*US. GOVERNMENT PRINTING OFFICE: 1991 - 554-030/40076

APPENDIX C
EXPENDABLE/DURABLE SUPPLIES AND MATERIALS LIST

SECTION I. INTRODUCTION

C-1. SCOPE

This appendix lists expendable/durable supplies and materials you will need to operate and maintain the water distributionsystem.

C-2. EXPLANATION OF COLUMNS

a. **Column 1, Item Number.** This number is assigned to the entry in the listing and is referenced in the narrative instructions to identify the material (e.g., "Use cleaning compound, item 5, Appendix C).

b. **Column 2, Level.** This column identifies the lowest level of maintenance that requires the listed item.

C–Operator/Crew
O–Organizational Maintenance
F–Direct Support Maintenance
H–General Support Maintenance

c. **Column 3, National Stock Number.** This is the National stock number assigned to the item; use it to request or requisition the item.

d. **Column 4, Description.** Indicates the Federal item name and, if required, a description to identify the item. The last line for each item indicates the part number followed by the Federal Supply Code for Manufacturer (FSCM) in parentheses, if applicable.

e. **Column 5, Unit of Measure (U/M).** Indicates the measure used in performing the actual maintenance function. This measure is expressed by a two-character alphabetical abbreviation (e.g., ea., in., pr.). If the unit of measure differs from the unit of issue requisition the lowest unit of issue that will satisfy your requirements.

SECTION II. EXPENDABLE SUPPLIES AND MATERIALS

Item No.	Level	National Stock Number	Description	U/M
1		5120-00-278-9925	Clamping Tool	
2		6810-00-266-6979	Calcium Hypochlorite	
3		8030-00-889-3535	Tap	
4		6850-00-637-6135	Dry-Cleaning Solvent (Stoddard Solvent)	

APPENDIX D
TORQUE LIMITS

Table D-1. SELF-LOCKING NUT BREAKAWAY TORQUE VALUES

Thread Size	Minimum Breakaway Torque (IN. -LBS)	Thread Size	Minimum Breakaway Torque (IN. -LBS)
10-32	2.0	5/8-18	32.0
1/4-28	3.5	3/4-16	50.0
5/16-24	6.5	7/8-14	70.0
3/8-24	9.5	1-12	90.0
7/16-20	14.0	1-1/8-12	117.00
9/16-18	24.0		

NOTE

To determine breakaway torque, thread into screw or bolt until at least two threads stick out. Nut shall not make contact with a mating part. Stop the nut. Torque necessary to begin turning nut again is the breakaway torque. Do not reuse self-locking nuts that do not meet minimum breakaway torque.

INDEX

PARA./TABLE NUMBER

– A –

Abbreviations 1-6
Assembly and Preparation for Use 2-5
Assembly Procedures 2-8

– C –

Cross-References 1-5
Common Tools and Equipment 4-3

– D –

Description and Operation. 1-7
Destruction of Army Material to Prevent Enemy Use. 1-8
Differences Between Models. 1-18
Disassembly and Repackaging. . . . . 4-13.

– E –

Equipment Data 1-17

– H –

Hypochlorination Unit Controls and Indicators. 2-2

- L -

Location and Description of Major Components 1-10
Lubrication Instructions 3-1

– M –

Maintenance Forms and Records 1-2
Maintenance Procedures 3-3

– N –

Nomenclature, Cross-Reference List 1-5

– O –

Operating Under Unusual Conditions 2-14
Operating Under Usual Conditions 2-5
Operator/CrewPMCS 2-4

– P –

Preparation for Storage or Shipment 1-9

PARA./TABLE NUMBER

– R –

Repair Parts 4-5
Repair 4-Inch Valve Assy..... 5-5
Repair Nozzle Distribution Assy 5-11
Reporting Equipment Improvement Recommendations (EIR) 1-1

– S –

Special Tools, TMDE, and Support Equipment 4-5
System Controls and Indicators 2-2

– T –

Technical Principles of Operation 1-18
TroubleshootingTable 3-1

– U –

Uncrating and Preparation For Use 4-1

– W –

Water Systems Operation 2-13

*US. GOVERNMENT PRINTING OFFICE: 1988 - 554-033/80224

PIN: 060373-001

By Order of the Secretaries of the Army and Marine Corps:

JOHN A. WICKHAM, JR.
General, United States Army
Chief of Staff

Official:

R. L. DILWORTH
Brigadier General, United States Army
The Adjutant General

GEORGE B. CRIST
Lieutenant General, USMC
Deputy Chief of Staff for Installationa and Logistics

DISTRIBUTION:
To be distributed in accordance with DA Form 12-25A, Operator, Organizational, Direct Support and General Support Maintenance Requirements for Water Purification Unit, Reverse Osmosis, Trailer Mounted, 600 HPH (ROWPU 600-1).

***U.S. GOVERMENT PRINTING OFFICE, 1986 652-126/20210**

RECOMMENDED CHANGES TO EQUIPMENT TECHNICAL PUBLICATIONS

SOMETHING WRONG WITH THIS PUBLICATION?

FROM: (PRINT YOUR UNIT'S COMPLETE ADDRESS)
PFC JOHN DOE
COA, 3d ENGINEER BN
FT. LEAVENWORTH, MO 63108

DATE SENT

PUBLICATION NUMBER	PUBLICATION DATE	PUBLICATION TITLE
TM 5-4610-228-13/ TM 08846A-13/1	30 May 86	Water Distribution System

BE EXACT. PIN-POINT WHERE IT IS

PAGE NO	PARA-GRAPH	FIGURE NO	TABLE NO
6	2-1 a		
81		4-3	
125	line 20		

IN THIS SPACE TELL WHAT IS WRONG AND WHAT SHOULD BE DONE ABOUT IT:

In line 6 of paragraph 2-1a the manual states the engine has 6 Cylinders. The engine on my set only has 4 Cylinders. Change the manual to show 4 Cylinders.

Callout 16 on figure 4-3 is pointing at a bolt. In key to figure 4-3, item 16 is called a shim - Please correct one or the other.

I ordered a gasket, item 19 on figure B-16 by NSN 2910-00-762-3001. I got a gasket but it doesn't fit. Supply says I got what I ordered, so the NSN is wrong. Please give me a good NSN

PRINTED NAME, GRADE OR TITLE, AND TELEPHONE NUMBER
JOHN DOE, PFC (268) 317-7111

SIGN HERE John Doe
JOHN DOE

DA FORM 1 JUL 79 2028-2

PREVIOUS EDITIONS ARE OBSOLETE.

DRSTS-M Overprint 1, 1 Nov 80

PS--IF YOUR OUTFIT WANTS TO KNOW ABOUT YOUR RECOMMENDATION MAKE A CARBON COPY OF THIS AND GIVE IT TO YOUR HEADQUARTERS

TEAR ALONG PERFORATED LINE

REVERSE OF DA FORM 2028-2 Reverse of DRSTS-M Overprint 2, 1 Nov 80

TEAR ALONG PERFORATED LINE

FILL IN YOUR UNIT'S ADDRESS

FOLD BACK

DEPARTMENT OF THE ARMY

POSTAGE AND FEES PAID
DEPARTMENT OF THE ARMY
DOD 314

U.S. MAIL

OFFICIAL BUSINESS
PENALTY FOR PRIVATE USE $300

COMMANDER
U S ARMY TROOP SUPPORT COMMAND
ATTN: AMSTR-MCTS
4300 GOODFELLOW BOULEVARD
ST. LOUIS, MO 63120-1798

RECOMMENDED CHANGES TO EQUIPMENT TECHNICAL PUBLICATIONS

THEN. . JOT DOWN THE DOPE ABOUT IT ON THIS FORM, CAREFULLY TEAR IT OUT, FOLD IT AND DROP IT IN THE MAIL!

SOMETHING WRONG WITH THIS PUBLICATION?

FROM: (PRINT YOUR UNIT'S COMPLETE ADDRESS)

DATE SENT

PUBLICATION NUMBER	PUBLICATION DATE	PUBLICATION TITLE
TM 5-4610-228-13/ TM 08846A-13/1	30 May 86	Water Distribution System

BE EXACT. PIN-POINT WHERE IT IS

PAGE NO	PARA-GRAPH	FIGURE NO	TABLE NO

IN THIS SPACE TELL WHAT IS WRONG AND WHAT SHOULD BE DONE ABOUT IT:

PRINTED NAME, GRADE OR TITLE, AND TELEPHONE NUMBER

SIGN HERE

DA FORM 1 JUL 79 2028-2

PREVIOUS EDITIONS ARE OBSOLETE.

DRSTS-M Overprint 2, 1 Nov 80.

P.S.--IF YOUR OUTFIT WANTS TO KNOW ABOUT YOUR RECOMMENDATION MAKE A CARBON COPY OF THIS AND GIVE IT TO YOUR HEADQUARTERS.

TEAR ALONG PERFORATED LINE

REVERSE OF DA FORM 2028-2 Reverse of DRSTS-M Overprint 2, 1 Nov 80

TEAR ALONG PERFORATED LINE

FILL IN YOUR UNIT'S ADDRESS

FOLD BACK

DEPARTMENT OF THE ARMY

POSTAGE AND FEES PAID
DEPARTMENT OF THE ARMY
DOD 314

U.S. MAIL

OFFICIAL BUSINESS
PENALTY FOR PRIVATE USE $300

COMMANDER
U S ARMY TROOP SUPPORT COMMAND
ATTN: AMSTR-MCTS
4300 GOODFELLOW BOULEVARD
ST. LOUIS, MO 63120-1798

TEAR ALONG PERFORATED LINE

RECOMMENDED CHANGES TO EQUIPMENT TECHNICAL PUBLICATIONS

THEN. . JOT DOWN THE DOPE ABOUT IT ON THIS FORM, CAREFULLY TEAR IT OUT, FOLD IT AND DROP IT IN THE MAIL!

SOMETHING WRONG WITH THIS PUBLICATION?

FROM: (PRINT YOUR UNIT'S COMPLETE ADDRESS)

DATE SENT

PUBLICATION NUMBER	PUBLICATION DATE	PUBLICATION TITLE
TM 5-4610-228-13/ TM 08846A-13/1	30 May 86	Water Distribution System

BE EXACT. PIN-POINT WHERE IT IS

PAGE NO	PARA-GRAPH	FIGURE NO	TABLE NO

IN THIS SPACE TELL WHAT IS WRONG AND WHAT SHOULD BE DONE ABOUT IT:

PRINTED NAME, GRADE OR TITLE, AND TELEPHONE NUMBER

SIGN HERE:

DA FORM 1 JUL 79 2028-2

PREVIOUS EDITIONS ARE OBSOLETE.

DRSTS-M Overprint 2, 1 Nov 80.

P.S.--IF YOUR OUTFIT WANTS TO KNOW ABOUT YOUR RECOMMENDATION MAKE A CARBON COPY OF THIS AND GIVE IT TO YOUR HEADQUARTERS.

REVERSE OF DA FORM 2028-2 Reverse of DRSTS-M Overprint 2, 1 Nov 80

FILL IN YOUR UNIT'S ADDRESS

FOLD BACK

DEPARTMENT OF THE ARMY

POSTAGE AND FEES PAID
DEPARTMENT OF THE ARMY
DOD 314

U.S. MAIL

OFFIC /SINESS
PENALTY FC VATE USE $300

COMMANDER
U S ARMY TROOP SUPPORT COMMAND
ATTN: AMSTR-MCTS
4300 GOODFELLOW BOULEVARD
ST. LOUIS, MO 63120-1798

TEAR ALONG PERFORATED LINE

RECOMMENDED CHANGES TO EQUIPMENT TECHNICAL PUBLICATIONS

THEN. . JOT DOWN THE DOPE ABOUT IT ON THIS FORM, CAREFULLY TEAR IT OUT, FOLD IT AND DROP IT IN THE MAIL!

SOMETHING WRONG WITH THIS PUBLICATION?

FROM: (PRINT YOUR UNIT'S COMPLETE ADDRESS)

DATE SENT

PUBLICATION NUMBER	PUBLICATION DATE	PUBLICATION TITLE
TM 5-4610-228-13/ TM 08846A-13/1	30 May 86	Water Distribution System

BE EXACT PIN-POINT WHERE IT IS

PAGE NO	PARA-GRAPH	FIGURE NO	TABLE NO

IN THIS SPACE TELL WHAT IS WRONG AND WHAT SHOULD BE DONE ABOUT IT:

PRINTED NAME, GRADE OR TITLE, AND TELEPHONE NUMBER

SIGN HERE

TEAR ALONG PERFORATED LINE

DA FORM 1 JUL 79 2028-2

PREVIOUS EDITIONS ARE OBSOLETE.

DRSTS-M Overprint 2, 1 Nov 80.

P.S.--IF YOUR OUTFIT WANTS TO KNOW ABOUT YOUR RECOMMENDATION MAKE A CARBON COPY OF THIS AND GIVE IT TO YOUR HEADQUARTERS.

REVERSE OF DA FORM 2028-2 Reverse of DRSTS-M Overprint 2, 1 Nov 80

FILL IN YOUR UNIT'S ADDRESS

FOLD BACK

DEPARTMENT OF THE ARMY

POSTAGE AND FEES PAID
DEPARTMENT OF THE ARMY
DOD 314

U.S. MAIL

OFFICIAL BUSINESS
PENALTY FOR PRIVATE USE $300

COMMANDER
U S ARMY TROOP SUPPORT COMMAND
ATTN: AMSTR-MCTS
4300 GOODFELLOW BOULEVARD
ST. LOUIS, MO 63120-1798

TEAR ALONG PERFORATED LINE

RECOMMENDED CHANGES TO EQUIPMENT TECHNICAL PUBLICATIONS

THEN. . JOT DOWN THE DOPE ABOUT IT ON THIS FORM, CAREFULLY TEAR IT OUT, FOLD IT AND DROP IT IN THE MAIL!

SOMETHING WRONG WITH THIS PUBLICATION?

FROM: (PRINT YOUR UNIT'S COMPLETE ADDRESS)

DATE SENT

PUBLICATION NUMBER	PUBLICATION DATE	PUBLICATION TITLE
TM 5-4610-228-13/ TM 08846A-13/1	30 May 86	Water Distribution System

BE EXACT. PIN-POINT WHERE IT IS

PAGE NO	PARA-GRAPH	FIGURE NO	TABLE NO

IN THIS SPACE TELL WHAT IS WRONG AND WHAT SHOULD BE DONE ABOUT IT:

PRINTED NAME, GRADE OR TITLE, AND TELEPHONE NUMBER

SIGN HERE

TEAR ALONG PERFORATED LINE

DA FORM 1 JUL 79 2028-2

PREVIOUS EDITIONS ARE OBSOLETE.

DRSTS-M Overprint 2, 1 Nov 80.

P.S.--IF YOUR OUTFIT WANTS TO KNOW ABOUT YOUR RECOMMENDATION MAKE A CARBON COPY OF THIS AND GIVE IT TO YOUR HEADQUARTERS.

REVERSE OF DA FORM 2028-2 Reverse of DRSTS-M Overprint 2, 1 Nov 80

FILL IN YOUR UNIT'S ADDRESS

FOLD BACK

DEPARTMENT OF THE ARMY

POSTAGE AND FEES PAID
DEPARTMENT OF THE ARMY
DOD 314

U.S. MAIL

OFFICIAL BUSINESS
PENALTY FOR PRIVATE USE $300

COMMANDER
U S ARMY TROOP SUPPORT COMMAND
ATTN: AMSTR-MCTS
4300 GOODFELLOW BOULEVARD
ST. LOUIS, MO 63120-1798

TEAR ALONG PERFORATED LINE

RECOMMENDED CHANGES TO EQUIPMENT TECHNICAL PUBLICATIONS

THEN. . JOT DOWN THE DOPE ABOUT IT ON THIS FORM, CAREFULLY TEAR IT OUT, FOLD IT AND DROP IT IN THE MAIL!

SOMETHING WRONG WITH THIS PUBLICATION?

FROM: (PRINT YOUR UNIT'S COMPLETE ADDRESS)

DATE SENT

PUBLICATION NUMBER	PUBLICATION DATE	PUBLICATION TITLE
TM 5-4610-228-13/ TM 08846A-13/1	30 May 86	Water Distribution System

BE EXACT. PIN-POINT WHERE IT IS

PAGE NO	PARA-GRAPH	FIGURE NO	TABLE NO

IN THIS SPACE TELL WHAT IS WRONG AND WHAT SHOULD BE DONE ABOUT IT:

PRINTED NAME, GRADE OR TITLE, AND TELEPHONE NUMBER

SIGN HERE

DA FORM 1 JUL 79 2028-2

PREVIOUS EDITIONS ARE OBSOLETE.

DRSTS-M Overprint 2, 1 Nov 80.

P.S.--IF YOUR OUTFIT WANTS TO KNOW ABOUT YOUR RECOMMENDATION MAKE A CARBON COPY OF THIS AND GIVE IT TO YOUR HEADQUARTERS.

TEAR ALONG PERFORATED LINE

REVERSE OF DA FORM 2028-2 Reverse of DRSTS-M Overprint 2, 1 Nov 80

FILL IN YOUR UNIT'S ADDRESS

FOLD BACK

DEPARTMENT OF THE ARMY

POSTAGE AND FEES PAID
DEPARTMENT OF THE ARMY
DOD 314

U.S. MAIL

OFFICIAL BUSINESS
PENALTY FOR PRIVATE USE $300

COMMANDER
U S ARMY TROOP SUPPORT COMMAND
ATTN: AMSTR-MCTS
4300 GOODFELLOW BOULEVARD
ST. LOUIS, MO 63120-1798

TEAR ALONG PERFORATED LINE

The Metric System and Equivalents

Linear Measure

1 centimeter = 10 millimeters = .39 inch
1 decimeter = 10 centimeters = 3.94 inches
1 meter = 10 decimeters = 39.37 inches
1 dekameter = 10 meters = 32.8 feet
1 hectometer = 10 dekameters = 328.08 feet
1 kilometer = 10 hectometers = 3,280.8 feet

Weights

1 centigram = 10 milligrams = .15 grain
1 decigram = 10 centigrams = 1.54 grains
1 gram = 10 decigram = .035 ounce
1 dekagram = 10 grams = .35 ounce
1 hectogram = 10 dekagrams = 3.52 ounces
1 kilogram = 10 hectograms = 2.2 pounds
1 quintal = 100 kilograms = 220.46 pounds
1 metric ton = 10 quintals = 1.1 short tons

Liquid Measure

1 centiliter = 10 milliters = .34 fl. ounce
1 deciliter = 10 centiliters = 3.38 fl. ounces
1 liter = 10 deciliters = 33.81 fl. ounces
1 dekaliter = 10 liters = 2.64 gallons
1 hectoliter = 10 dekaliters = 26.42 gallons
1 kiloliter = 10 hectoliters = 264.18 gallons

Square Measure

1 sq. centimeter = 100 sq. millimeters = .155 sq. inch
1 sq. decimeter = 100 sq. centimeters = 15.5 sq. inches
1 sq. meter (centare) = 100 sq. decimeters = 10.76 sq. feet
1 sq. dekameter (are) = 100 sq. meters = 1,076.4 sq. feet
1 sq. hectometer (hectare) = 100 sq. dekameters = 2.47 acres
1 sq. kilometer = 100 sq. hectometers = .386 sq. mile

Cubic Measure

1 cu. centimeter = 1000 cu. millimeters = .06 cu. inch
1 cu. decimeter = 1000 cu. centimeters = 61.02 cu. inches
1 cu. meter = 1000 cu. decimeters = 35.31 cu. feet

Approximate Conversion Factors

To change	*To*	*Multiply by*
inches	centimeters	2.540
feet	meters	.305
yards	meters	.914
miles	kilometers	1.609
square inches	square centimeters	6.451
square feet	square meters	.093
square yards	square meters	.836
square miles	square kilometers	2.590
acres	square hectometers	.405
cubic feet	cubic meters	.028
cubic yards	cubic meters	.765
fluid ounces	milliliters	29,573
pints	liters	.473
quarts	liters	.946
gallons	liters	3.785
ounces	grams	28.349
pounds	kilograms	.454
short tons	metric tons	.907
pound-feet	newton-meters	1.356
pound-inches	newton-meters	.11296

To change	*To*	*Multiply by*
ounce-inches	newton-meters	.007062
centimeters	inches	.394
meters	feet	3.280
meters	yards	1.094
kilometers	miles	.621
square centimeters	square inches	.155
square meters	square feet	10.764
square meters	square yards	1.196
square kilometers	square miles	.386
square hectometers	acres	2.471
cubic meters	cubic feet	35.315
cubic meters	cubic yards	1.308
milliliters	fluid ounces	.034
liters	pints	2.113
liters	quarts	1.057
liters	gallons	.264
grams	ounces	.035
kilograms	pounds	2.205
metric tons	short tons	1.102

Temperature (Exact)

°F	Fahrenheit temperature	5/9 (after subtracting 32)	Celsius temperature	°C